September 2026

Revision 26C

NAC-LWT

Legal Weight Truck Cask System

SAFETY ANALYSIS REPORT

TPBAR Changes

NON-PROPRIETARY VERSION

Docket No. 71-9225

NAC INTERNATIONAL

Atlanta Corporate Headquarters: 2 Sun Court, Suite 220, Peachtree Corners, Georgia 30092 USA
Phone 770-447-1144, www.nacintl.com

Enclosure 1

Proposed Certificate of Compliance Changes for Revision 80

NAC-LWT SAR, Revision 26C

September 2026

U.S. NUCLEAR REGULATORY COMMISSION

NRC FORM 618
(8-2000)
10 CFR 71

CERTIFICATE OF COMPLIANCE
FOR RADIOACTIVE MATERIAL PACKAGES

1. a. CERTIFICATE NUMBER	b. REVISION NUMBER	c. DOCKET NUMBER	d. PACKAGE IDENTIFICATION NUMBER	PAGE		PAGES
9225	80	71-9225	USA/9225/B(U)F-96	1	OF	36

PREAMBLE

2
a. This certificate is issued to certify that the package (packaging and contents) described in Item 5 below meets the applicable safety standards set forth in Title 10, Code of Federal Regulations, Part 71, "Packaging and Transportation of Radioactive Material."

b. This certificate does not relieve the consignor from compliance with any requirement of the regulations of the U.S. Department of Transportation or other applicable regulatory agencies, including the government of any country through or into which the package will be transported.

3. THIS CERTIFICATE IS ISSUED ON THE BASIS OF A SAFETY ANALYSIS REPORT OF THE PACKAGE DESIGN OR APPLICATION

a. ISSUED TO *(Name and Address)*

NAC International, Inc.
Atlanta Corporate Headquarters
2 Sun Court, Suite 220
Peachtree Corners, GA 30092

b. TITLE AND IDENTIFICATION OF REPORT OR APPLICATION

NAC International, Inc., consolidated application dated February 4, 2025

4. CONDITIONS

This certificate is conditional upon fulfilling the requirements of 10 CFR Part 71, as applicable, and the conditions specified below.

5.

(a) Packaging

(1) Model No.: NAC-LWT

(2) Description

The NAC-LWT is a steel-encased, lead-shielded shipping cask. The cask is designed to transport various radioactive contents as listed in 5.(b)(1). The overall dimensions of the package, with impact limiters, are 232 inches long by 65 inches in diameter. The cask body is approximately 200 inches in length and 44 inches in diameter. The cask cavity is 178 inches long and 13.4 inches in diameter. The volume of the cavity is approximately 14.5 cubic feet.

The cask body consists of a 0.75-inch-thick stainless steel inner shell, a 5.75-inch-thick lead gamma shield, a 1.2-inch-thick stainless steel outer shell, and a neutron shield tank. The inner and outer shells are welded to a 4-inch-thick stainless steel bottom end forging. The cask bottom consists of a 3-inch-thick, 20.75-inch-diameter lead disk enclosed by a 3.5-inch-thick stainless steel plate and bottom end forging. The cask lid is 11.3-inch-thick stainless steel stepped design, secured to a 14.25-inch-thick ring forging with twelve 1-inch diameter bolts. The cask seal is a metallic O-ring. A second teflon O-ring and a test port are provided to leak test the seal. Other penetrations in the cask cavity include the fill and drain ports, which are sealed with port covers and O-rings.

The neutron shield tank consists of a 0.24-inch-thick stainless steel shell with 0.50-inch-thick end plates. The neutron shield region is 164 inches long and 5 inches thick. The neutron shield tank contains an ethylene glycol/water solution that is 1% boron by weight.

The cask is equipped with aluminum honeycomb impact limiters. The top impact limiter has an outside diameter of 65.25 inches and a maximum thickness of 27.8 inches. The bottom impact limiter has an outside diameter of 60.25 inches and maximum thickness of 28.3 inches. Both impact limiters extend 12 inches along the side of the cask body.

The maximum weight of the package is 52,000 pounds and the maximum weight of the contents and basket is 4,000 pounds.

5.(a) Packaging (continued)

(3) Drawings

(i) The packaging is constructed in accordance with the following Nuclear Assurance Corporation Drawings:

LWT 315-40-01, Rev. 7	Cask Assembly
LWT 315-40-02, Rev. 25 (Sheets 1-2)	Body Assembly
LWT 315-40-03, Rev. 23 (Sheets 1-7)*	Transport Cask Body
LWT 315-40-04, Rev. 12	Cask Lid Assembly
LWT 315-40-05, Rev. 10	Upper Impact Limiter
LWT 315-40-06, Rev. 10	Lower Impact Limiter
LWT 315-40-08, Rev. 18 (Sheets 1-5)	Cask Parts Detail

* Packaging Unit Nos. 1, 2, 3, 4, and 5 are constructed in accordance with Drawing No. LWT 315-40-03, Rev. 6 (Sheets 1-6).

(ii) The fuel assembly baskets are constructed in accordance with the following Nuclear Assurance Corporation and NAC International Drawings:

LWT 315-40-09, Rev. 2	PWR Basket Spacer
LWT 315-40-10, Rev. 9 (Sheets 1-2)	PWR Basket
LWT 315-40-11, Rev. 2	BWR Basket Assembly
LWT 315-40-12, Rev. 3	Metal Fuel Basket Assembly
LWT 315-40-045, Rev. 6	42 MTR Element Base Module
LWT 315-40-046, Rev. 6	42 MTR Element Intermediate Module
LWT 315-40-047, Rev. 6	42 MTR Element Top Module
LWT 315-40-048, Rev. 3	42 MTR Element Cask Assembly
LWT 315-40-049, Rev. 6	28 MTR Element Base Module
LWT 315-40-050, Rev. 6	28 MTR Element Intermediate Module
LWT 315-40-051, Rev. 6	28 MTR Element Top Module
LWT 315-40-052, Rev. 3	28 MTR Element Cask Assembly
LWT 315-40-070, Rev. 9	Weldment, 7 Cell Basket TRIGA Base Module
LWT 315-40-071, Rev. 9	Weldment, 7 Cell Basket TRIGA Intermediate Module
LWT 315-40-072, Rev. 9	Weldment, 7 Cell Basket TRIGA Top Module
LWT 315-40-079, Rev. 6	Transport Cask Assembly, 120 TRIGA Fuel Elements or 480 Cluster Rods
LWT 315-40-080, Rev. 4	7 Cell Poison Basket TRIGA Base Module
LWT 315-40-081, Rev. 4	7 Cell Poison Basket TRIGA Intermediate Module
LWT 315-40-082, Rev. 4	7 Cell Poison Basket TRIGA Top Module
LWT 315-40-083, Rev. 0	Spacer, LWT Cask Assembly TRIGA Fuel
LWT 315-40-084, Rev. 4	LWT Transport Cask Assy, 140 TRIGA Elements

5.(a)(3)(ii) Drawings (continued)

LWT 315-40-085, Rev. 1	Axial Fuel and Cell Block Spacers, MTR, and TRIGA Fuel Baskets
LWT 315-40-086, Rev. 1	Assembly, Sealed Fuel Can, TRIGA Fuel
LWT 315-40-087, Rev. 7	Canister Lid Assembly, Sealed Fuel Can, TRIGA Fuel
LWT 315-40-088, Rev. 3	Canister Body Assembly, Sealed Failed Fuel Can, TRIGA Fuel
LWT 315-40-090, Rev. 4	35 MTR Element Base Module
LWT 315-40-091, Rev. 4	35 MTR Element Intermediate Module
LWT 315-40-092, Rev. 4	35 MTR Element Top Module
LWT 315-40-094, Rev. 4	35 MTR Element Cask Assembly
LWT 315-40-096, Rev. 3	Fuel Cluster Rod Insert, TRIGA Fuel
LWT 315-40-098, Rev. 6 (Sheets 1-3)	PWR/BWR Rod Transport Canister Assembly
LWT 315-40-099, Rev. 3 (Sheets 1-3)	Can Weldment, PWR/BWR Transport Canister
LWT 315-40-100, Rev. 4 (Sheets 1-5)	Lids, PWR/BWR Rod Transport Canister
LWT 315-40-101, Rev. 0	4 x 4 Insert, PWR/BWR Transport Canister
LWT 315-40-102, Rev. 2	5 x 5 Insert, PWR/BWR Transport Canister
LWT 315-40-103, Rev. 0	Pin Spacer, PWR/BWR Transport Canister
LWT 315-40-104, Rev. 6 (Sheets 1-3)	LWT Cask Assembly, PWR/BWR Rod Transport Canister
LWT 315-40-105, Rev. 3 (Sheets 1-2)	PWR Insert, PWR/BWR Transport Canister
LWT 315-40-106, Rev. 2 (Sheets 1-3)	MTR Plate Canister, LWT Cask
LWT 315-40-108, Rev. 1 (Sheets 1-3)	7 Cell Basket, Top Module, DIDO Fuel
LWT 315-40-109, Rev. 1 (Sheets 1-3)	7 Cell Basket, Intermediate Module, DIDO Fuel
LWT 315-40-110, Rev.1 (Sheets 1-3)	7 Cell Basket, Base Module, DIDO Fuel
LWT 315-40-111, Rev. 2	LWT Transport Cask Assy DIDO Fuel
LWT 315-40-113, Rev. 0	Spacer, Top Module DIDO Fuel
LWT 315-40-120, Rev. 2 (Sheets 1-3)	Top Module, General Atomics IFM, LWT Cask
LWT 315-40-123, Rev. 1 (Sheets 1-2)	Spacer, General Atomics IFM, LWT Cask
LWT 315-40-124, Rev. 1	Transport Cask Assembly, General Atomics IFM, LWT Cask
LWT 315-40-125, Rev. 3 (Sheets 1-3)	Transport Cask Assembly, Framatome/EPRI, LWT Cask
LWT 315-40-126, Rev. 2 (Sheets 1-2)	Weldment, Framatome/EPRI, LWT Cask
LWT 315-40-127, Rev. 2 (Sheets 1-2)	Spacer Assembly, TPBAR Shipment
LWT 315-40-128, Rev. 5 (Sheets 1-2)	Transport Cask Assy., TPBAR Shipment
LWT 315-40-129, Rev. 2	Canister Body Assembly, Failed Fuel Can, PULSTAR
LWT 315-40-130, Rev. 2	Assembly, Fail ed Fuel Can, PULSTAR

5.(a)(3)(ii) Drawings (continued)

LWT 315-40-133, Rev. 2 (Sheets 1-2)	Transport Cask Assembly, PULSTAR Shipment, LWT Cask
LWT 315-40-134, Rev. 2	Body Weldment, Screened Fuel Can, PULSTAR Fuel
LWT 315-40-135, Rev. 1	Assembly, Screened Fuel Can, PULSTAR Fuel
LWT 315-40-139, Rev. 1	Transport Cask Assembly, ANSTO Fuel
LWT 315-40-140, Rev. 1 (Sheets 1-2)	Weldment, 7 Cell Basket, Top Module, ANSTO Fuel
LWT 315-40-141, Rev. 1 (Sheets 1-2)	Weldment, 7 Cell Basket, Intermediate Module, ANSTO Fuel
LWT 315-40-142, Rev. 1 (Sheets 1-2)	Weldment, 7 Cell Basket, Base Module, ANSTO Fuel
LWT 315-40-145, Rev. 0	Irradiated Hardware, Lid Spacer, LWT Cask
LWT 315-40-148, Rev. 0	LWT Transport Cask Assembly, ANSTO-DIDO Combination Basket
LWT 315-40-156, Rev. 3 (Sheets 1-4)	Canister Assembly SLOWPOKE Fuel
LWT 315-40-158, Rev. 0	Legal Weight Truck Transport Cask Assy, SLOWPOKE Fuel
LWT 315-40-170, Rev. 1	LWT Transport Cask Assy., AECL NRU/NRX Components
LWT 315-40-172, Rev. 2 (Sheets 1-2)	Lid Assembly, NRU/NRX
LWT 315-40-173, Rev. 2 (Sheets 1-2)	Basket Weldment, NRU/NRX
LWT 315-40-174, Rev. 0	Basket Spacer, NRU/NRX
LWT 315-40-175, Rev. 2 (Sheets 1-2)	Caddy Assembly, NRU/NRX
LWT 315-40-185, Rev. 0	LWT Transport Cask Assembly, SLOWPOKE Contents
LWT 315-40-186, Rev. 2 (Sheets 1-2)	Fuel Core Basket Assembly, SLOWPOKE
LWT 315-40-187, Rev. 1 (Sheets 1-2)	Basket Lid Assembly, SLOWPOKE
LWT 315-40-188, Rev. 2P (Sheets 1-2)	LWT Transport Cask Shipping Configuration, LANL MOX
LWT 315-40-189, Rev 3P (Sheets 1-2)	Transfer Tube Details, LANL MOX
LWT 315-40-190, Rev 0P	LWT Transport Cask Shipping Configuration, WESF Capsules, Zeno
LWT 315-40-191, Rev 2P	WESF Capsules Basket Assembly, Zeno LWT
LWT 315-40-192, Rev 2P	WESF Capsules Container Assembly, Zeno LWT
LWT 315-40-193, Rev 1P	LWT Lid Spacer, WESF Capsules, Zeno
LWT 315-40-195, Rev 1P	LWT Transport Cask Shipping Configuration, BUP-500, Zeno
LWT 315-40-196, Rev 2P	BUP-500 Basket Assembly, Zeno
LWT 315-40-197, Rev 1P	BUP-500 Cavity Spacer, Zeno

5.(a)(3) Drawings (continued)

(iii) The high enriched uranyl nitrate inner containers are constructed in accordance with the following NAC International Drawings:

LWT 315-40-180, Rev. 4P	LWT Transport Cask Assembly, HEUNL Contents
LWT 315-40-181, Rev. 6P (Sheets 1-2)	Container Assembly, HEUNL
LWT 315-40-182, Rev. 3P (Sheets 1-2)	Container Spacer, HEUNL
LWT 315-40-183, Rev. 1P	Container Guide, HEUNL

(iv) The General Atomics (GA) Irradiated Fuel Material (IFM) enclosures are constructed in accordance with the following GA Drawings:

GA 32334 - 032230, Rev. A	RERTR Secondary Enclosure
GA 32334 - 032231, Rev. A	HTGR Secondary Enclosure
GA 32334 - 032236, Rev. B	RERTR Primary Enclosure
GA 32334 - 032237, Rev. B	HTGR Primary Enclosure

(v) The Universal Capsule Sleeve (UCS) assemblies are constructed in accordance with the following NAC International Drawings

LWT 315-40-198 Rev 1P	LWT Transport Cask, Shipping Configuration, UCS, Zeno
LWT 315-40-199 Rev 0P	UCS Basket Assembly, Zeno
LWT 315-40-200 Rev 2P	LWT Lid Spacer, UCS, Zeno
LWT 315-40-201 Rev 0P	Universal Capsule Sleeve (UCS) Assembly
LWT 315-40-202 Rev 1P	UCS and Capsules Spacers Assemblies

5.(b) Contents

(1) Type and form of material

All contents listed include both unirradiated and irradiated conditions.

(i) PWR fuel assemblies. The maximum fuel assembly weight is 1650 pounds, the maximum average burnup is 35,000 MWd/MTU, the minimum cool time is 2 years, and the maximum initial fuel pin pressure at 70°F is 565 psig. The fuel assemblies consist of uranium dioxide pellets within zirconium alloy type cladding, with the specifications listed below, and with fuel rod pitch, rod diameter, clad thickness, and pellet diameter as described in Table 1.2-5, of the application.

Fuel Type	No. Fuel Rods	Max. Initial Uranium Enrichment (wt % ^{235}U)	Max. Initial Uranium Mass (MTU)	Max. Active Fuel Length (in.)
B&W 15x15	208	3.5	0.4750	144.0
B&W 17x17	264	3.5	0.4658	143.0
CE 14x14	176	3.7	0.4037	137.0
CE 16x16	236	3.7	0.4417	150.0
WE 14x14 Std	179	3.7	0.4144	145.2
WE 14x14 OFA	179	3.7	0.3612	144.0
WE 15x15	204	3.5	0.4646	144.0
WE 17x17 Std	264	3.5	0.4671	144.0
WE 17x17 OFA	264	3.5	0.4282	144.0
Ex/ANF 14x14 WE	179	3.7	0.3741	144.0
Ex/ANF 14x14 CE	176	3.7	0.3814	134.0
Ex/ANF 15x15 WE	204	3.7	0.4410	144.0
Ex/ANF 17x17 WE	264	3.5	0.4123	144.0

5.(b)(1) Type and form of material (Continued)

(ii) BWR fuel assemblies. The maximum fuel assembly weight is 750 pounds, the maximum average burnup is 30,000 MWd/MTU, the minimum cool time is 2 years, and the maximum initial fuel pin pressure at 70°F is 565 psig. The fuel assemblies consist of uranium dioxide pellets within zirconium alloy type cladding, with the specifications listed below, and with fuel rod pitch, rod diameter, clad thickness, and pellet diameter as described in Table 1.2-6, of the application.

Fuel Type	No. Fuel Rods	No. Water Rods	Max. Initial Uranium Enrichment (wt % ^{235}U)	Max. Initial Uranium Mass (MTU)	Max. Active Fuel Length (in.)
GE 7x7	49	0	4.0	0.1923	146
GE 8x8-1	63	1	4.0	0.1880	146
GE 8x8-2	62	2	4.0	0.1847	150 (1)
GE 8x8-4	60	4	4.0	0.1787	150 (1,2)
GE 9x9	74	2	4.0	0.1854	150 (1,3,4)
	79	2	4.0	0.1979	150 (1,4)
Ex/ANF 7x7	49	0	4.0	0.1960	144
Ex/ANF 8x8-1	63	1	4.0	0.1764	145.2
Ex/ANF 8x8-2	62	2	4.0	0.1793	150
Ex/ANF 9x9	79	2	4.0	0.1779	150
	74	2	4.0	0.1666	150 (3)

Notes:
(1) Six-inch natural uranium blankets on top and bottom.
(2) One large water hole - 3.2 cm ID, 0.1 cm thickness.
(3) Two large water holes occupying seven fuel rod locations - 2.5 cm ID, 0.07 cm thickness.
(4) Shortened active fuel length in some rods.

(iii) Deleted.

(iv) MTR fuel elements. MTR fuel elements composed of U-Al, U_3O_8-Al, or U_3Si_x-Al positioned within the MTR fuel basket specified in 5.(a)(3)(ii). Loose fuel plates must meet the requirements of the MTR fuel element content tables and must be loaded into an MTR plate canister prior to shipment. The fuel elements are composed of aluminum clad plates, with initial uranium enrichment up to 94.0 weight percent ^{235}U. The maximum burnup and the minimum cool time shall be consistent with the decay heat limits in Item 5.(b)(2)(iv) and shall be determined using the operating procedures in Section 7.1.5 of the application.

5.(b)(1)(iv) Type and form of material - MTR fuel elements. (Continued)

NISTR MTR fuel elements specifications are listed in Item 5.(b)(1)(iv)(a), generic MTR fuel elements are listed in Item 5.(b)(1)(iv)(b), and expanded fuel specifications applicable to LEU MTR fuel (up to 25.0 wt %^{235}U) are listed in Items 5.(b)(1)(iv)(c) and 5.(b)(1)(iv)(d).

(a) NISTR MTR Fuel Content Description

Parameter	Plate	Plate (cut in half)
Enrichment, wt % ^{235}U	≤94	
Number of fuel plates	≤17	≤34
^{235}U content per plate	22	≤11
Plate thickness (cm)	≥0.115	
Clad Thickness (cm)	≥0.02	
Active fuel width (cm)	≤6.6	
Active fuel height (cm)	≥54 cm	27 to 30
Maximum ^{235}U content per element (g)	≤380	

(b) Generic MTR Fuel Content Description

Parameter	Limiting Values[2,3]					
Enrichment, wt. % ^{235}U	≤94					
Number of fuel plates	≤23	≤19	≤23[1]	≤17	≤19	≤23
^{235}U content per plate	≤18	≤20	≤20[1]	≤21	≤21	≤16.5
Plate thickness (cm)	≥0.115	≥0.115	≥0.123[1]	≥0.115	≥.200	≥0.115
Clad Thickness (cm)	≥0.02					
Active fuel width (cm)	≤6.6	≤6.6	≤6.6	≤6.6	≤6.6	≤7.3
Active fuel height (cm)	≥56					
^{235}U content per element (g)	≤380[2]					

Notes:

1. HEU (>90 wt% ^{235}U enriched) MTR fuel having 23 plates with up to 20 g of ^{235}U per plate, with a minimum plate thickness of 0.123 cm, must have at least 2.0 cm of non-fuel material at the ends of each element. This fuel may also be loaded up to 460 g ^{235}U per element.
2. At enrichments ≤25 wt% ^{235}U, MTR fuel elements with extended fuel characteristics may be loaded with the specifications defined in 5.(b)(1)(iv)(c).
3. Reduced active fuel height is permissible for loading provided that the ^{235}U content per plate and ^{235}U content per assembly is proportionally reduced (e.g., a ≤ 7.3 cm active fuel width element is authorized for loading at a minimum of 42 cm active fuel height provided the maximum ^{235}U content per plate is ≤ 12.375 g, 16.5 × 42/56 and ^{235}U content per assembly is ≤ 285 g, 380 × 42/56).

5.(b)(1)(iv) Type and form of material - MTR fuel elements. (Continued)

(c) Expanded LEU MTR Fuel Content Description

Parameter	Base	≤7.0 cm Active Fuel Width				≤7.1 cm Active Fuel Width		≤7.15 cm Active Fuel Width		
Enrichment, wt. % ^{235}U	≤25	≤25				≤25		≤25		
Number of fuel plates	≤23	≤23				≤17	≤23	≤22	≤23	≤23
^{235}U content per plate	≤22	≤22	≤22	≤21.5	≤23.5	≤22		≤22	≤21.5	≤22
Plate thickness (cm)	≥0.115	≥0.119	≥0.115	≥0.115	≥0.130	≥0.115	≥0.200	≥0.119		
Clad Thickness (cm)	≥0.02									
Active fuel width (cm)	≤6.6	≤7.0				≤7.1		≤7.15		
Active fuel height (cm)	≥56	≥56	≥63	≥56		≥56		≥56	≥56	≥61
^{235}U content per element (g)	≤490	≤490				≤490		≤490		

(d) Expanded LEU MTR Fuel Content Description for High Fissile Material Mass

Parameter	Limiting Value
Enrichment, wt.% ^{235}U	≤25
Number of fuel plates	≤23
^{235}U content per plate (g)	≤32
Plate thickness (cm)	≥0.115
Clad thickness (cm)	≥0.02
Active fuel width (cm)	≤7.3
Active fuel height (cm)	≥56
^{235}U content per element (g)	≤640

5.(b)(1) Type and form of material (Continued)

(v) Metallic fuel rods containing natural enrichment uranium pellets with aluminum cladding 0.080-inches thick. The fuel pellet diameter is 1.36 inches and the maximum fuel rod length is 120.5 inches. The maximum weight of uranium per rod is 54.5 kg with a maximum average burnup of 1,600 MWd/MTU and a minimum cooling time of one year.

(vi) TRIGA damaged and undamaged fuel elements. TRIGA fuel elements that have a cladding breach that allows the escape of gas or intrusion of water are considered damaged and will be loaded and transported in a sealed damaged fuel can.

(a) TRIGA fuel elements acceptable for loading in the poisoned TRIGA basket and meeting the following specifications:

	TRIGA HEU (Notes 1, 2, 6, & 7)	**TRIGA LEU (Notes 1, 2, 6, & 7)**	**TRIGA LEU (Notes 1, 2, 6, & 7)**
Fuel Form	Clad U-ZrH rod	Clad U-ZrH rod	Clad U-ZrH rod
Maximum Element Weight, lbs	13.2	13.2	13.2
Maximum Element Length, in	47.74	47.74	47.74
Element Cladding	Stainless Steel	Stainless Steel	Aluminum
Clad Thickness, in	0.02	0.02	0.03
Active Fuel Length, in	15	15	14-15 (Note 4)
Element Diameter, in	1.478 max.	1.478 max.	1.47 max.
Fuel Diameter, in	1.435 max.	1.435 max.	1.41 max.
Maximum Initial U Content/Element, kilograms	0.196	0.845	0.205
Maximum Initial ^{235}U Mass, grams	137	169	41
Maximum Initial ^{235}U Enrichment, weight percent	70	20	20
Zirconium Mass, grams (Note 5)	2060	1886 – 2300	2300
Hydrogen to Zirconium Ratio, max. (Note 5)	1.6	1.7	1.0
Maximum Average Burnup, MWd/MTU	460,000 (80% ^{235}U)	151,100 (80% ^{235}U)	151,100 (80% ^{235}U)
Minimum Cooling Time	90 days (Note 3)	90 days (Note 3)	90 days (Note 3)

Notes:
1. Mixed TRIGA LEU and HEU contents authorized.
2. TRIGA Standard, instrumented and fuel follower control rod type elements authorized.
3. Maximum decay heat of any element is 7.5 watts.
4. Aluminum clad fuel with 14 inch active fuel is solid and has no central hole with a zirconium rod.
5. Zirconium mass and H/Zr ratio apply to the fuel material (U-Zr-H_x) and do not include the center zirconium rod.
6. Listed TRIGA fuel elements have a 0.225-inch diameter zirconium rod in the center.
7. Dimensions listed are as-fabricated (unirradiated) nominal values.

5.(b)(1)(vi) Type and form of material - TRIGA damaged and undamaged fuel elements. (Continued)

(b) TRIGA fuel elements acceptable for loading in the nonpoisoned TRIGA basket and meeting the following specifications:

	TRIGA HEU (Notes 1, 2, & 6)	**TRIGA LEU (Notes 1, 2, & 6)**	**TRIGA LEU (Notes 1, 2, & 6)**
Fuel Form	Clad U-ZrH rod (Note 4)	Clad U-ZrH rod (Note 4)	Clad U-ZrH rod (Note 4)
Maximum Element Weight, lbs	13.2	13.2	13.2
Maximum Element Length, in	47.74	47.74	47.74
Element Cladding	Stainless Steel	Stainless Steel	Aluminum
Minimum Clad Thickness, in	0.01	0.01	0.01
Maximum Element Diameter, in	1.5 max.	1.5 max.	1.5 max.
Active Fuel Length, in	15	15	15
Maximum Initial U Content/Element, kilograms	0.196	0.845	0.205
Maximum Initial ^{235}U Mass, grams	137	169	41
Maximum Initial ^{235}U Enrichment, weight percent	70	20	20
Hydrogen to Zirconium Ratio, max. (Note 5)	2.0	2.0	2.0
Maximum Average Burnup, MWd/MTU	460,000 (80% ^{235}U)	11,100 (80% ^{235}U)	151,100 (80% ^{235}U)
Minimum Cooling Time	90 days (Note 3)	90 days (Note 3)	90 days (Note 3)

Notes:
1. Mixed TRIGA LEU and HEU contents authorized.
2. TRIGA Standard, instrumented and fuel follower control rod type elements authorized.
3. Maximum decay heat of any element is 7.5 watts.
4. Element may contain a zirconium rod in the center.
5. H/Zr ratio applies to the fuel material (U-Zr-H_x) and does not include the center zirconium rod.
6. Dimensions listed are as-fabricated (unirradiated) nominal values.

5.(b)(1)(vi) Type and form of material - TRIGA damaged and undamaged fuel elements. (Continued)

(c) General Atomics TRIGA fuel elements acceptable for loading in the nonpoisoned TRIGA basket and meeting the following specifications:

	TRIGA HEU (Notes 1, 2, & 6)		**TRIGA LEU (Notes 1, 2, & 6)**		**TRIGA LEU (Notes 1, 2, & 6)**
Fuel Form	Clad U-ZrH rod (Note 4)		Clad U-ZrH rod (Note 4)		Clad U-ZrH rod (Note 4)
Maximum Element Weight, lbs	13.2		13.2		13.2
Maximum Element Length, in	47.74		47.74		47.74
Element Cladding	Stainless Steel		Stainless Steel		Aluminum
Minimum Clad Thickness, in	0.01		0.01		0.01
Maximum Element Diameter, in	1.5 max.		1.5 max.		1.5 max.
Active Fuel Length, in	15		15		15
Maximum Initial U Content/Element, kilograms	0.198	0.186	0.845	1.447	0.205
Maximum Initial ^{235}U Mass, grams	138	175[7,8]	169	275[7,8]	41
Maximum Initial ^{235}U Enrichment, weight percent	71	95[7,8]	25	25[7,8]	25
Hydrogen to Zirconium Ratio, max. (Note 5)	2.0		2.0		2.0
Maximum Average Burnup, MWd/MTU	460,000 (80% ^{235}U)	583,000 (80% ^{235}U)	151,100 (80% ^{235}U)		151,100 (80% ^{235}U)
Minimum Cooling Time	90 days (Note 3)		90 days (Note 3)		90 days (Note 3)

Notes:
1. Mixed TRIGA LEU and HEU fuel elements and LEU and HEU TRIGA fuel cluster rod contents authorized.
2. TRIGA Standard, instrumented and fuel follower control rod type elements authorized.
3. Maximum decay heat of any element is 7.5 watts.
4. Element may contain a zirconium rod in the center.
5. H/Zr ratio applies to the fuel material (U-Zr-H_x) and does not include the center zirconium rod.
6. Dimensions listed are as-fabricated (unirradiated) nominal values.
7. Limited to loading in top and bottom basket modules only.
8. Limited to a maximum of three elements per basket module cell.

5.(b)(1) Type and form of material (Continued)

(vii) TRIGA fuel cluster rods.

(a) TRIGA fuel cluster rods. TRIGA HEU fuel cluster rods have a maximum average burnup of 600,000 MWd/MTU (80% ^{235}U depletion) and a minimum cooling time of 90 days. TRIGA LEU fuel cluster rods have a maximum average burnup of 140,000 MWd/MTU (80% ^{235}U depletion) and a minimum cooling time of 90 days. TRIGA fuel cluster rods must meet the following specifications prior to irradiation:

	TRIGA Fuel Cluster Rods	
	HEU	**LEU**
Fuel Form	Clad U-ZrH rod	
Maximum Rod Weight, lbs	1.5	
Maximum Rod Length, in	31	
Rod Cladding	Incoloy 800	
Minimum Clad Thickness, in	0.015	
Maximum Active Fuel Length, in	22.5	
Maximum Fuel Pellet Diameter, in	0.53	
Maximum U Content/Rod, grams	48.6	289.5
Maximum ^{235}U Mass, grams	45.4	55.0
Maximum ^{235}U Enrichment, weight percent	93.3	20
Maximum Zirconium Mass, grams	421	357
Hydrogen to Zirconium Ratio, max.	1.7	

NOTE: TRIGA fuel cluster rods that have a cladding breach that allows the escape of gas or intrusion of water are considered damaged and will be loaded and transported in a sealed damaged fuel can.

5.(b)(1)(vii) Type and form of material - TRIGA fuel cluster rods. (Continued)

(b) General Atomics TRIGA fuel cluster rods. TRIGA HEU fuel cluster rods have a maximum average burnup of 600,000 MWd/MTU (80% ^{235}U depletion) and a minimum cooling time of 90 days. TRIGA LEU fuel cluster rods have a maximum average burnup of 140,000 MWd/MTU (80% ^{235}U depletion) and a minimum cooling time of 90 days. TRIGA fuel cluster rods must meet the following specifications prior to irradiation:

	TRIGA Fuel Cluster Rods	
	HEU	**LEU**
Fuel Form	Clad U-ZrH rod	
Maximum Rod Weight, lbs	1.5	
Maximum Rod Length, in	31	
Rod Cladding	Incoloy 800	
Minimum Clad Thickness, in	0.015	
Maximum Active Fuel Length, in	22.5	
Maximum Fuel Pellet Diameter, in	0.53	
Maximum U Content/Rod, grams	48.6	289.5
Maximum ^{235}U Mass, grams	46.5	55.0
Maximum ^{235}U Enrichment, weight percent	93.3	20
Maximum Zirconium Mass, grams	421	357
Hydrogen to Zirconium Ratio, max.	1.7	

NOTE: TRIGA fuel cluster rods that have a cladding breach that allows the escape of gas or intrusion of water are considered damaged and will be loaded and transported in a sealed damaged fuel can.

(viii) PWR rods, consisting of uranium dioxide pellets within zirconium alloy type or non-zircaloy cladding (FeCrAl based alloy) cladding. The maximum uranium enrichment is 5 weight percent ^{235}U, the maximum active fuel length is 150 inches, and the maximum pellet diameter is 0.3765 inches. The maximum burnup is 80,000 MWd/MTU, and the minimum cool time is 150 days. Non-zircaloy clad fuel rods, and non-fueled, non-zirconium rod sections, require an additional 90-day cool time beyond the indicated zircaloy based value.

5.(b)(1) Type and form of material (continued)

(ix) BWR rods, consisting of uranium dioxide pellets within zirconium alloy type or non-zircaloy cladding (FeCrAl based alloy). The maximum uranium enrichment is 5 weight percent ^{235}U, the maximum active fuel length is 150 inches, and the maximum pellet diameter is 0.490 inch. The maximum burnup is 80,000 MWd/MTU and the minimum cool time is between 150 - 270 days, as specified in the table below:

BWR Fuel Type Array Size	Burnup, b (GWd/MTU)	Minimum Cool Time (days)[2]
7 x 7	b ≤ 60 60 < b ≤ 70 70 < b ≤ 80	210 240 270
8 x 8[1]	b ≤ 80	150

Note 1: Includes rods from all larger BWR assembly arrays (e.g., 9 x 9, 10 x 10)
Note 2: Non-zircaloy clad (FeCrAl) fuel rods, and non-fueled non-zirconium rod sections, require an additional 90-day cool time beyond the indicated zircaloy based value.

(x) Intact or degraded clad DIDO fuel elements composed of U-Al, U_3O_8-Al, or U_3Si_x-Al plates fabricated into four concentric tubes of varying diameters. The fuel elements have an initial enrichment up to 94.0 weight percent ^{235}U. Maximum degraded clad allowable per element is ≤ 5% surface area. Degraded clad DIDO fuel elements are to be loaded into an aluminum damaged fuel can (DFC) per Figure 1.2.3-18 of the application. The fuel elements shall have the specifications listed below:

Parameter	LEU(1)	MEU(1)	HEU(1)
Maximum ^{235}U content per Element	≤ 190 g	≤ 190 g	≤ 190 g
Maximum Uranium content per Element	≤ 1000 g	≤ 475.0 g	≤ 211.1g
Minimum Fuel Tube Thickness	0.130 cm	0.130 cm	0.130 cm
Minimum Clad Thickness	0.025 cm	0.025 cm	0.025 cm
Maximum Outer Diameter	9.535 cm	9.535 cm	9.535 cm
Minimum Inner Diameter	5.88 cm	5.88 cm	5.88 cm
Minimum Initial Enrichment	19 wt% ^{235}U	40 wt% ^{235}U	90 wt% ^{235}U

Notes:
1 The maximum burnup and minimum cool time shall be consistent with the decay heat limits in Item 5.(b)(2)(xi)(a) and (b) and shall be determined using the operating procedures in Section 7.1.4 of the application.

5.(b)(1) Type and form of material (Continued)

(xi) General Atomics (GA) Irradiated Fuel Material (IFM) consisting of two separate types of fuel materials: (a) High Temperature Gas Cooled Reactor (HTGR); and (b) Reduced-Enrichment Research and Test Reactor (RERTR) type TRIGA fuel entities.

(a) GA HTGR IFM comprised of four forms: fuel particles (kernels), fuel particles (coatings), fuel compacts (rods), and fuel pebbles. Fuel particles (kernels) are solid, spheroidized, high-temperature sintered fully-densified, ceramic kernel substrate, composed of UO_2, UCO_2, $(Th,U)C_2$, or $(Th,U)O_2$. Fuel particles (coatings) are solid , spheridized, isotropic, discrete multi-layered fuel particle coatings with chemical composition including pyrolitic-carbon (PyC) and silicon carbide (SiC). Fuel compacts (rods) are multi-coated ceramic fuel particles, bound in solid, cylindrical, injection molded, high-temperature heat-treated compacts which are composed of carbonized graphite shim, coke, and graphite powder. Fuel pebbles are multi-coated fuel particles, bound in solid, spherical injection-molded, high-temperature heat-treated pebbles composed of carbonized graphite shim, coke and graphite powder. Initial enrichment of the HTGR IFM varies from 10.0 to 93.15 wt% ^{235}U.

(b) GA RERTR IFM comprised of irradiated TRIGA fuel elements which contain three distinct mass loadings of uranium of 20, 30, and 45 wt% U. The average mass of the fuel portion of the elements is 551 g with a maximum initial enrichment of 19.7 wt% ^{235}U.

GA IFM content description:

	GA HTGR IFM	GA RERTR IFM
Fuel material	UC_2, UCO, UO_2 $(Th,U)C_2$, $(Th,U)O_2$	U-ZrH metal alloy
Maximum fuel weight, lbs	23.52	23.73
Maximum overall length, in	n/a	29.92
Maximum active fuel length, in	n/a	22.05
Fuel rod cladding	n/a	Incoloy 800
Maximum Uranium, kg U	0.21	3.86
Maximum initial ^{235}U, wt%	93.15	19.7
Maximum Activity, Ci	483	2920

5.(b)(1) Type and form of material (continued)

(xii) Tritium-producing burnable absorber rods (TPBARs), as described in Section 1.2.3.6 of the application. Each TPBAR is approximately 153 inches in length and 0.381 inches in diameter and is stainless steel clad. The TPBARs contain lithium aluminate annular pellets, with an inner zircaloy liner and an outer nickel-plated zircaloy tube. Each TPBAR contains a maximum of 1.8 grams tritium. The minimum cool time is 30 days. Depending on the cask hydrostatic pressure test, total tritium content, as a function of the maximum number of pre-failed TPBARs, is specified below.

Hydrostatic Pressure Test [psig]	Max. Tritium Per Cask [g]	
	2 Pre-Failed Rods	3 Pre-Failed Rods
≥450	425.5	403.7
≥650	540.0	540.0

(xiii) Intact or damaged PULSTAR fuel elements, including fuel debris, pieces and nonfuel components of PULSTAR fuel assemblies as specified below.

Description	Value
Maximum Pellet Diameter (inch)	0.423
Minimum Element (Rod) Cladding Thickness (inch)	0.0185
Minimum Element (Rod) Diameter (inch)	0.470
Maximum Active Fuel Height (inch)	24.1
Nominal Element (Rod) Length (inch)	26.2
Nominal Assembly Length (inch)	38
Maximum Assembly or Loaded Can Weight (lb)	80
Maximum PULSTAR Can Content Weight (lb)	39.6
Maximum Enrichment (wt % ^{235}U)	6.5
Maximum ^{235}U Content per Element (g)	33
No. of Elements (Rods) per Assembly	25
No. of Elements (Rods) per Can[1]	≤25
Maximum Depletion (% ^{235}U)	45
Minimum Cooling Time (yrs)	1.5
Maximum Heat Load per Assembly (W)	30
Maximum Heat Load per Element (W)	1.2

Notes:

1 Damaged PULSTAR fuel elements, including fuel debris, pieces and nonfuel components of PULSTAR fuel assemblies must be loaded into a PULSTAR can. The contents of a PULSTAR can are restricted to the equivalent of the fuel material in 25 intact PULSTAR fuel elements and of the displaced volume of 25 intact PULSTAR fuel elements.

5.(b)(1) Type and form of material (continued)

(xiv) Intact or degraded clad ANSTO fuel consisting of spiral fuel assemblies and MOATA plate bundles. Maximum degraded clad allowable per element is ≤ 5% surface area. Degraded clad ANSTO fuel elements are to be loaded into an aluminum damaged fuel can (DFC) per Figure 1.2.3-18 of the application.

Spiral fuel assemblies consist of 10 curved uranium-aluminum alloy fuel plates between an inner and an outer aluminum shell, with the following fuel parameters:

Parameter	Limiting Values
Number of fuel plates per assembly	10
Maximum ^{235}U content per assembly (g)	160
Maximum enrichment (wt % ^{235}U)	95
Maximum assembly weight (lb)	18
Minimum plate thickness (cm)	0.124
Minimum active fuel height (cm)	59.075

MOATA plate bundles consist of uranium-aluminum alloy fuel plates with aluminum cladding, with the following specifications:

Parameter	Limiting Values
Maximum number of fuel plates per assembly	14
Maximum ^{235}U content per plate (g)	22.3
Maximum enrichment (wt % ^{235}U)	92
Maximum plate spacer thickness (cm)	0.18
Maximum active fuel width (cm)	7.32
Maximum bundle weight (lb)	18

(xv) Segmented TPBARs and associated segmentation debris resulting from post-irradiation examination, as described in Section 1.2.3.6 of the application. Each equivalent TPBAR contains a maximum of 1.8 grams of tritium. The minimum cool time is 30 days.

(xvi) Solid, irradiated and contaminated fuel assembly structural or reactor internal component hardware, which may include fissile material, provided the quantity of fissile material does not exceed a Type A quantity and qualifies as an exempt quantity under 10 CFR 71.15.

5.(b)(1) Type and form of material (continued)

(xvii) PWR MOX (mixed oxide) undamaged fuel rods consisting of uranium and plutonium and plutonium dioxide pellets within zirconium alloy type cladding. The plutonium enrichment is 7.0 weight percent maximum and 2.0 weight percent minimum, the maximum active fuel rod length is 153.5 inches, and the maximum pellet diameter is 0.3765 inch. The maximum burnup is 62,500 MWd/MTU and the minimum cool time is 90 days.

(xviii) Damaged or undamaged SLOWPOKE fuel rods, including fuel pieces and debris as specified below:

Parameter	Limiting Values
Maximum Cask Heat Load (W)	5
Maximum Canister Heat Load (W)	0.625
Payload Limit (lb/canister)	25
Maximum ^{235}U per rod (g)	2.800
Maximum U per rod (g)	3.111
Maximum Enrichment (wt% ^{235}U)	95
Minimum cool time (yr)	14
Maximum burnup (GWd/MTU) or wt% ^{235}U Depletion	30 4.5

(xix) Undamaged or damaged NRU or NRX fuel assemblies as specified below:

Parameter	NRU (HEU)	NRU (LEU)	NRX
Maximum Heat Load per Package (W)	640.0		
Maximum Heat Load per Tube (W)	35.6		
Maximum Weight of Contents per Tube (lb/tube)	20.0		
Maximum Mass ^{235}U per Rod (g)	43.24	43.68	79.05
Maximum Mass U per Rod (g)	48	230	87
Minimum Cool Time (yr)	19	3	18
Maximum Burnup (MWd/assembly or wt% ^{235}U Depletion)	364.0 87.4	363.0 83.6	375.0 85.1

(xx) High Enriched Uranyl Nitrate Liquid as specified below:

Liquid Parameter	Limiting Values
Maximum HEUNL Payload per Inner Container [1.]	58.1 L (15.35 gallons)
Maximum Package Heat Load	4.65 W
Maximum per Inner Container Heat Load	1.16 W
Maximum HEUNL Heat Load	0.02 W/L
Maximum Curie Content (gamma emitters)	9.0 Ci/L
Maximum ^{235}U content	7.4 g/L
Maximum ^{235}U enrichment	93.4 wt%

1. See also Condition 5.(b)(2)(xxi) for the HEUNL Inner Container minimum 1 gallon of headspace.

5.(b)(1) Type and form of material (continued)

(xxi) SLOWPOKE Fuel Core as specified below:

Parameter	Limiting Value
Maximum Cask Heat Load (W)	45
Maximum Weight of SLOWPOKE Fuel Core (lb)	15
Maximum Number of Fuel Rods per Core	298
Maximum Initial ^{235}U per Rod (g)	2.83
Maximum Initial Enrichment (wt% ^{235}U)	95.3
Maximum Initial ^{235}U per core (g)	837
Minimum Initial Enrichment (wt% ^{235}U)	90
Minimum Cool Time	2 Weeks
Maximum Core Average Depletion (% ^{235}U)	2.1%

(xxii) EFN Rods, Booster Rods, and Moly Targets (Short and Double Length)

Parameter	Short Moly	Double Length Moly	EFN	Boosters
Maximum Cask Heat Load (W)	101	101	144	4
Maximum Per Caddy Heat Load (W)	0.3	0.8	8	0.2
Payload Limit (lb/tube)	20			
# Rod/Targets (Equivalent)	20	36	36	16
Maximum ^{235}U per rod (g)	1.1	2.41	13	18.1
Minimum Cool Time (yr)	38	8	23	37
Maximum ^{235}U Depletion (%)	94.8	30.4	87.4	2.9
Maximum Enrichment wt% ^{235}U	94			

(xxiii) SrF_2 Capsules

Parameter	WESF capsules	BUP 500 capsules
Maximum Cask Heat Load (W)	2400	2200
Maximum per Capsule Heat Load (W)	400	1100
Maximum Heat Load (W) Per UCS	800	--
Maximum Activity per Cask (Ci Sr-90)	1.062E+06	3.52E+05
Payload Limit (lb)	396	300

5.(b)(1) Type and form of material (continued)

(xxiv) Los Alamos National Laboratory Mixed Oxide Fuel Rods

Mixed oxide fuel rods as specified in the table below:

Parameter	PNNL	EXXON	UO_2	ROD 063	530-000	NIS5
Max. rod OD (inch)	0.565	0.451	0.229	0.55	0.63	0.5
Min. wall thick. (inch)	0.035	0.035	0.015	0.015	0.015	0.015
Rod material	Zr Alloy	Zr Alloy	SS304	Zr Alloy	Zr Alloy	SS316
Max. active length (inch)	35.6	70	36.1	47.913	18	13.5
Max. pellet OD (inch)	0.486	0.372	0.1988	0.48	0.56	0.31
Max. # of rods per transfer tube	4	2	8	3	1	3
Max. # of tubes per cask	16	16	16	6	1	4
Fuel form	Oxide	Oxide	Oxide	Oxide	Oxide or Carbide	Carbide
^{235}U wt%	0.712	0.712	94	0	0	94
^{240}Pu wt%[1]	16	16	0	10	10	4
Pu wt%	5.36	6.31	0	100	100	20
U-235 (g/rod)	6.76	7.71	159.9	0	0	159.58
U (g/rod)	949.85	1083.44	170.11	0	0	169.76
Pu (g/rod)	56.29	76.35	0	1378.77	922.01	42.38
Total U/Pu (g/rod)	1006.14	1159.79	170.11	1378.77	922.01	212.14

1. Fissile Pu-239 and Pu-241 comprise the remaining plutonium. A 9 to 1 ratio of Pu-239 to Pu-241 bounds the range of Pu-240 weight fractions analyzed herein.
2. Maximum number of tubes for ROD1063 and NIS5 is governed by the damaged fuel evaluation.

5.(b)(2) Maximum quantity of material per package

Not to exceed 4,000 pounds, including contents and fuel assembly basket or other internal support structure.

(i) For the contents described in Item 5.(b)(1)(i): one PWR assembly positioned within the PWR fuel assembly basket. Maximum decay heat not to exceed 2.5 kilowatts per PWR assembly.

(ii) For the contents described in Item 5.(b)(1)(ii): two BWR assemblies positioned within the BWR fuel assembly basket. Maximum decay heat not to exceed 1.1 kilowatts per BWR assembly.

(iii) Deleted.

5.(b)(2) Maximum quantity of material per package (continued)

(iv) For MTR fuel elements as described in Item 5.(b)(1)(iv):

Up to 42 fuel elements positioned within the MTR fuel assembly basket (7 fuel elements per basket module). Each of the MTR basket cell openings may contain a loose plate canister. The contents of each loose plate canister are limited to the number of fuel plates, dimensions, and masses that are equivalent to an intact MTR fuel element, as specified in Item 5.(b)(1)(iv).

(a) The maximum decay heat is not to exceed 1.26 kilowatts per package, with each MTR fuel assembly basket module not to exceed 210 watts.

(b) LEU MTR fuel elements with decay heat not exceeding 40 watts per element, and MEU and HEU fuel elements with decay heat not exceeding 30 watts per element, may be loaded in any basket position.

(c) Mixed HEU, MEU, and LEU MTR contents, with decay heat limits as specified above, are authorized.

(d) MTR fuel elements with degraded or mechanically damaged cladding are authorized, provided the total surface area of through-clad corrosion and/or mechanical damage does not exceed 5% of the total surface area of the damaged element.

(e) For HEU-MTR fuel elements only, the center fuel element in any basket module is not to exceed 120 watts. The two exterior fuel elements vertically in-line with the center assembly for transport are not to exceed 70 watts.

(f) MTR fuel elements containing more than 23.5 g ^{235}U per plate (490 g ^{235}U per element) are limited to up to four elements loaded in basket positions 4, 5, 6, and 7 of a seven-element basket per Figure 7.1-1 of the application. Basket positions 1, 2, and 3 are to be blocked by spacer hardware.

(v) For the contents described in Item 5.(b)(1)(v): up to 15 intact metallic fuel rods positioned within the appropriate basket. Maximum decay heat not to exceed 0.036 kilowatts per rod. Total weight of all rods not to exceed 1,805 pounds.

(vi) For failed metallic fuel rods of the type described in Item 5.(b)(1)(v):

(a) Up to six canisters containing one defective metallic fuel rod per canister. The canisters are 2.75-inch I.D. failed fuel rod canisters as shown on Nuclear Assurance Corporation Drawing No. 340-108-D2, Rev. 10, and are placed in a six-hole liner as shown on Nuclear Assurance Corporation Drawing No. 315-040-43, Rev. 1. The maximum decay heat load for a defective metallic fuel rod is limited to 5 watts; or

5.(b)(2)(vi) Maximum quantity of material per package (continued)

(b) Up to three canisters containing either up to three defective metallic fuel rods per canister or up to 10 failed fuel filters per canister. The canisters are 4.00-inch I.D. failed fuel rod canisters as shown on Nuclear Assurance Corporation Drawing No. 340-108-D1, Rev. 10, and are placed in a three-hole basket as shown on Nuclear Assurance Corporation Drawing No. LWT 315-40-12. The weight of the filters is limited to 125 pounds per canister. For canisters containing fuel rods, the maximum decay heat load is 15 watts per canister; and for canisters containing filters, the maximum decay heat load is 5 watts per canister.

(vii)(a) For TRIGA fuel elements as described in Item 5.(b)(1)(vi)(a):

Up to 140 intact fuel elements in the TRIGA fuel package with poisoned baskets. Up to four fuel elements per basket cell and up to seven cells per basket may be loaded. Damaged TRIGA fuel elements or fuel element debris (up to a total of two equivalent elements) shall be transported in a sealed damaged fuel can (one damaged fuel can per cell). The sealed cans are to be in accordance with NAC International Drawing Nos. LWT 315-40-086, LWT 315-40-087, and LWT 315-40-088.

Mixed intact and damaged fuel contents and fuel debris are authorized. Base and top fuel basket modules may contain intact fuel elements or sealed damaged fuel cans containing damaged fuel and fuel debris. A maximum of seven damaged fuel cans is authorized per top and base basket modules with a maximum of 14 per package. Intermediate fuel basket modules may contain only intact TRIGA fuel elements.

The maximum decay heat shall not exceed 7.5 watts per TRIGA fuel element (or equivalent for damaged fuel) and 1050 watts per package. The cask and baskets must be configured as shown in NAC International Drawing Nos. LWT 315-40-084, LWT 315-40-080, LWT 315-40-081, and LWT 315-40-082.

(vii)(b) For TRIGA fuel elements as described in Item 5.(b)(1)(vi)(b):

Up to 120 intact fuel elements in the TRIGA fuel package with non-poisoned basket. Up to four fuel elements per basket cell only loaded in the six periphery cells. TRIGA fuel elements or sealed cans may not be loaded in the center cell of the non-poisoned basket. Damaged TRIGA fuel elements or fuel debris (up to two equivalent elements) shall be transported in a sealed damaged fuel can (one damaged fuel can per cell). The sealed cans are to be in accordance with NAC International Drawing Nos. LWT 315-40-086, LWT 315-40-087, and LWT 315-40-088.

Mixed intact and damaged fuel contents and fuel debris are authorized. Base and top fuel basket modules may contain intact fuel elements or sealed damaged fuel cans containing damaged fuel or fuel debris. A maximum of six damaged fuel cans is authorized only in the periphery cells per top and base basket modules with a maximum of 12 per package. Intermediate fuel basket modules may contain only intact TRIGA fuel elements.

5.(b)(2) Maximum quantity of material per package (continued)

Maximum decay heat not to exceed 7.5 watts per TRIGA fuel element (or equivalent for damaged fuel) and 900 watts per package. Fuel may not be loaded in the center cell of the non-poisoned TRIGA fuel basket. The cask and baskets must be configured as shown in NAC International Drawing Nos. LWT 315-40-070, LWT 315-40-071, LWT 315-40-072, and LWT 315-40-079.

(c) For General Atomics TRIGA fuel elements as described in Item 5.(b)(1)(vi)(c):

Up to 120 intact fuel elements in the TRIGA fuel package with non-poisoned basket. Up to four fuel elements per basket cell only loaded in the six periphery cells. TRIGA fuel elements or sealed cans may not be loaded in the center cell of the non-poisoned basket. Damaged TRIGA fuel elements or fuel debris (up to two equivalent elements of maximum 1.5 inch diameter) shall be transported in a sealed damaged fuel can (one damaged fuel can per cell). The sealed cans are to be in accordance with NAC International Drawing Nos. LWT 315-40-086, LWT 315-40-087, and LWT 315-40-088.

Loading of TRIGA HEU and LEU fuel elements having >138 g and >169 g initial ^{235}U mass contents, respectively, are limited to top and bottom basket modules and up to three rods per basket cell. A minimum of one TRIGA dummy rod per NAC Drawing No. LWT 315-40-085 shall be installed in place of a TRIGA fuel element to limit the maximum number of rods per cell to three.

Mixed loading in separate cells of TRIGA fuel elements and TRIGA fuel cluster rods [per 5.(b)(1)(vii)(b)] is authorized in fuel basket modules with the content quantities limited in accordance with the other conditions and limitations of 5.(b)(2)(vii)(c) and 5.(b)(2)(viii)(b).

Maximum decay heat not to exceed 7.5 watts per TRIGA fuel element (or equivalent for damaged fuel) and 900 watts per package. Fuel may not be loaded in the center cell of the non-poisoned TRIGA fuel basket. The cask and baskets must be configured as shown in NAC International Drawing No. LWT 315-40-079.

(viii)(a) For TRIGA fuel cluster rods as described in Item 5.(b)(1)(vii)(a):

Maximum decay heat not to exceed 1.875 watts per TRIGA fuel cluster rod (or equivalent for failed fuel) and 1050 watts per package. TRIGA fuel cluster rods must be positioned in either the non-poisoned TRIGA fuel basket or in the poisoned TRIGA fuel basket. Fuel may not be loaded in the center cell of the non-poisoned TRIGA fuel basket. The non-poisoned basket must be configured as shown in NAC International Drawing Nos. LWT 315-40-070, LWT 315-40-071, and LWT 315-40-072, and the poisoned basket must be configured as shown in NAC International Drawing Nos. LWT 315-40-080, LWT 315-40-081, and LWT 315-40-082.

5.(b)(2)(viii)(a) Maximum quantity of material per package (continued)

Up to 480 intact cluster rods per package in the non-poisoned TRIGA fuel baskets (up to six periphery cells loaded with 16 cluster rods each), and up to 560 intact cluster rods per package in the poisoned TRIGA fuel baskets (up to 7 total cells loaded with 16 cluster rods each). TRIGA fuel cluster rods must be positioned within the fuel rod inserts as shown on NAC International Drawing No. LWT 315-40-096.

Damaged TRIGA fuel cluster rods or cluster rod debris (up to six equivalent rods) shall be transported in a sealed damaged fuel can. The sealed cans are to be in accordance with NAC International Drawing Nos. LWT 315-40-086, LWT 315-40-087, and LWT 315-40-088.

Mixed intact and damaged fuel contents and fuel debris are authorized. Base and top fuel basket modules may contain intact fuel cluster rods or sealed DFCs. Intermediate fuel basket modules may contain only intact fuel cluster rods.

(viii)(b) For TRIGA fuel cluster rods as described in Item 5.(b)(1)(vii)(b):

Maximum decay heat not to exceed 1.875 watts per TRIGA fuel cluster rod (or equivalent for failed fuel) and 1050 watts per package. TRIGA fuel cluster rods must be positioned in the non-poisoned TRIGA fuel basket. Fuel may not be loaded in the center cell of the non-poisoned TRIGA fuel basket. The non-poisoned basket must be configured as shown in NAC International Drawing Nos. LWT 315-40-070, LWT 315-40-071, and LWT 315-40-072.

Up to 480 intact cluster rods per package in the non-poisoned TRIGA fuel baskets (up to six periphery cells loaded with 16 cluster rods each), and up to 560 intact cluster rods per package in the poisoned TRIGA fuel baskets (up to 7 total cells loaded with 16 cluster rods each). TRIGA fuel cluster rods must be positioned within the fuel rod inserts as shown on NAC International Drawing No. LWT 315-40-096.

Damaged TRIGA fuel cluster rods or cluster rod debris (up to six equivalent rods) shall be transported in a sealed damaged fuel can. The sealed cans are to be in accordance with NAC International Drawing Nos. LWT 315-40-086, LWT 315 40-087, and LWT 315-40-088.

Mixed intact and damaged fuel contents and fuel debris are authorized. Base and top fuel basket modules may contain intact fuel cluster rods or sealed DFCs. Intermediate fuel basket modules may contain only intact fuel cluster rods.

Mixed loading in separate cells of TRIGA fuel elements [per 5.(b)(1)(vi)(c)] and TRIGA fuel cluster rods [per 5.(b)(1)(vii)(b)] is authorized in fuel basket modules with the content quantities limited in accordance with the other conditions and limitations of 5.(b)(2)(vii)(c) and 5.(b)(2)(viii)(b).

5.(b)(2)(ix) Maximum quantity of material per package (continued)

(ix) For PWR fuel rods, as described in Item 5.(b)(1)(viii): up to 25 fuel rods. Maximum decay heat not to exceed 2.3 kilowatts per package.

Intact individual rods may be placed either in an irradiated or unirradiated fuel assembly lattice (skeleton) or in a fuel rod insert. The PWR fuel assembly lattice must be transported in the PWR basket.

Up to 14 of the 25 fuel rods may be classified as damaged. Damaged fuel rods may include fuel debris, particles, loose pellets, and fragmented rods, or unfueled rods/rod segments in addition to the fuel rods. Fuel rods may be composed of segments. Damaged fuel rods and iron clad fuel rods must be placed in a fuel rod insert. Damaged fuel rods may also be placed in individual failed fuel rod capsules, as shown in Figure 1.2.3-11 of the application, prior to placement in the fuel rod insert. Guide/instrument tubes and tube segments may be placed in the fuel rod insert. The fuel rod insert must be transported in a PWR/BWR transport canister, which is positioned in the PWR insert in the PWR basket. No more than 14 fueled or unfueled iron clad rods may be loaded. ^{60}Co impurity is limited to 1.2 g/kg in iron clad rods.

(x) For BWR fuel rods, as described in Item 5.(b)(1)(ix): up to 25 fuel rods. Maximum decay heat not to exceed 2.1 kilowatts per package.

Intact individual rods may be placed either in a fuel assembly lattice or in a fuel rod insert. The BWR fuel assembly lattice must be transported in the PWR insert in the PWR basket.

Up to 14 of the 25 fuel rods may be classified as damaged. Damaged fuel rods may include fuel debris, particles, loose pellets, and fragmented rods or unfueled rods/rod segments in addition to the fuel rods. Fuel rods may be composed of segments. Damaged fuel rods must be placed in a fuel rod insert. Damaged fuel rods and iron clad rods may also be placed in individual failed fuel rod capsules, as shown in Figure 1.2.3-11 of the application, prior to placement in the fuel rod insert. Water rods and inert rods may be placed in the fuel rod insert. The fuel rod insert must be transported in a PWR/BWR transport canister, which is positioned in the PWR insert in the PWR basket. No more than 14 fueled or unfueled iron clad rods can be loaded. ^{60}Co impurity is limited to 1.2 g/kg in iron clad rods.

(xi) For DIDO fuel as described in Item 5.(b)(1)(x):

(a) Up to 42 DIDO fuel elements with a maximum decay heat not to exceed 25 watts per DIDO fuel element, provided the top basket fuel element active fuel region is spaced a minimum 3.7 inches from the bottom of the cask lid. Spacing of the active fuel may be accomplished by fuel element hardware, lid spacer, or a combination thereof. Maximum decay heat is 1.05 kilowatts per package. At a top basket active fuel region to cask lid spacing of less than 3.7 inches, the maximum decay heat not to exceed 18 watts per DIDO fuel element and a total of 756 watts per package. The DIDO fuel elements are to be loaded into a DIDO basket configured as shown in NAC International Drawing No. LWT 315-40-111.

5.(b)(2) Maximum quantity of material per package (continued)

(xi)(b) A mixed fuel load of up to 42 DIDO fuel elements and spiral and MOATA fuel assemblies [per item 5.(b)(1)(xiv)] in an ANSTO-DIDO combination basket configured as shown in NAC International Drawing No. LWT 315-40-148, consisting of a top ANSTO basket module per NAC International Drawing No. LWT 315-40-140; four intermediate DIDO basket modules per NAC International Drawing No. 315-40-109; and one bottom DIDO basket module per NAC International Drawing No. LWT 315-40-110. DIDO fuel elements loaded into intermediate and bottom basket modules are limited to ≤18 Watts. Up to seven degraded clad DIDO, spiral, and/or MOATA fuel assemblies in DFCs per Figure 1.2.3-18 of the application, or intact DIDO, spiral, and/or MOATA assemblies may be loaded in the top ANSTO module. The per element or DFC heat load limits for the top ANSTO module are: DIDO fuel element with or without DFC is 10 Watts; spiral fuel element in DFC is 10 Watts and 15.7W without DFC; and MOATA fuel element in DFC is 1 Watt and 3 Watts without DFC. Maximum heat load per package is 753 Watts.

(xii) For GA IFM as described in Item 5.(b)(1)(xi):

(a) Mixture of fuel particles (kernels and coatings), fuel compacts (rods), and fuel pebbles, packaged in its own Fuel Handling Unit (FHU).

GA HTGR FHU consists of two redundant canisters. GA HTGR IFM is packaged inside a primary canister with welded closure, as shown in General Atomics Drawing No. 032237, Rev. B, “HTGR Primary Enclosure.” The primary canister is packaged inside a secondary canister with welded closure, as shown in General Atomics Drawing No. 032231, Rev. A, “HTGR Secondary Enclosure.”

GA HTGR FHU total maximum decay heat not to exceed 2.05 watts, and maximum loaded weight not to exceed 71.5 lbs.

(b) Twenty irradiated TRIGA fuel elements; 13 of the elements are intact, and the remaining 7 are sectioned. GA RERTR IFM is packaged in its own FHU.

GA RERTR FHU consists of two redundant canisters. GA RERTR IFM is packaged inside a primary canister with welded closure, as shown in General Atomics Drawing No. 032236, Rev. B, “RERTR Primary Enclosure.” The GA RERTR IFM primary canister is packaged inside a secondary canister with welded closure, as shown in General Atomics Drawing No. 032230, Rev. A, “RERTR Secondary Enclosure.”

GA RERTR FHU total maximum decay heat not to exceed 11 watts, and maximum loaded weight not to exceed 76.0 lbs.

5.(b)(2) Maximum quantity of material per package (continued)

(xiii) For TPBARs as described in Item 5.(b)(1)(xii):

Up to 300 TPBARs, including a maximum of 3 damaged rods, positioned within a consolidation canister, as shown in Figure 1.2.3-10 of the application. The consolidation canister is transported in a TPBAR basket assembly. The maximum decay heat is 3.54 watts per rod and 1063 watts per package. The maximum weight of the TPBARs and the consolidation canister is 1,000 pounds. Consolidation canisters with fewer than 300 TPBARs may also contain stainless steel spacers of various geometries. The total weight and volume of the reduced TPBAR contents plus the spacers must be less than or equal to the weight and volume of 300 TPBARs.

Up to 25 TPBARS, including a maximum of 3 prefailed rods, positioned within a PWR/BWR Rod Transport Canister. The PWR/BWR Rod Transport Canister is transported in a TPBAR basket assembly. The maximum decay heat is 3.54 watts per rod and 89 watts per package.

(xiv) For PULSTAR fuel as described in Item 5.(b)(1)(xiii):

Up to 700 intact or damaged PULSTAR fuel elements in either assembly or element form, including fuel debris, pellets, pieces and nonfuel components of PULSTAR fuel assemblies. The contents of a PULSTAR can are restricted to the equivalent of the fuel material in 25 intact PULSTAR fuel elements and of the displaced volume of 25 intact PULSTAR fuel elements.

(xv) For ANSTO fuel as described in Item 5.(b)(1)(xiv):

(a) Up to 42 spiral fuel assemblies, MOATA plate bundles, or any combination of spiral fuel assemblies and MOATA plate bundles. ANSTO fuel must be loaded within ANSTO basket modules. Spiral fuel assemblies may be cropped by removing nonfuel-bearing hardware to fit the ANSTO basket modules. Fuel assemblies that are cropped, but are otherwise intact, may be considered intact. For spiral fuel assemblies, the maximum decay heat per assembly is 15.7 watts. The minimum cool time as a function of burnup shall be consistent with the maximum decay heat limit and shall be determined using the procedures for medium enriched DIDO fuel in Section 7.1.4 of the application; the minimum cool time may not be less than 270 days. For MOATA plate bundles, the maximum heat load per bundle is 3 watts, and the minimum cool time is 10 years.

(b) A mixed fuel load of up to 42 spiral and MOATA fuel assemblies and DIDO fuel elements [per item 5.(b)(1)(x)] in an ANSTO basket configured as shown in NAC International Drawing No. LWT 315-40-139. Degraded clad elements placed in DFCs per Figure 1.2.3-18 of the application or intact DIDO fuel elements are limited to loading in the top ANSTO basket module. Maximum heat load per DIDO element is 10W. Degraded clad spiral and MOATA fuel assemblies in DFCs are also limited to loading in the top ANSTO basket module. Spiral fuel assemblies placed into DFCs are limited to a maximum of 10W and MOATA plate bundles loaded in DFCs are limited to 1W. Spiral fuel elements not placed in DFCs are limited to 15.7W and MOATA plate bundles not placed in DFCs are limited to a maximum of 3W with a minimum cool time of 10 years.

5.(b)(2) Maximum quantity of material per package (continued)

(xvi) For segmented TPBARs as described in Item 5.(b)(1)(xv):

Up to 55 equivalent TPBARs as segments and segmentation debris, placed within a welded waste container, as shown in Figure 1.2.3-16 of the application. The waste container is transported in a TPBAR basket assembly. The maximum decay heat is 3.54 watts per equivalent TPBAR and 195 watts per package. The maximum weight of the segmented TPBARs and the TPBAR waste container is 700 pounds.

(xvii) For solid irradiated hardware as described in Item 5.(b)(1)(xvi):

Up to 4,000 pounds, including spacers, dunnage and containers, and meeting the gamma source defined in Table 1.2-13 of the application. An irradiated hardware spacer source, per NAC Drawing No. LWT 315-40-145, shall be installed.

(xviii) For intact PWR MOX fuel rods as described in Item 5.(b)(1)(xvii):

Up to 16 undamaged irradiated PWR MOX rods or a combination of PWR MOX and high burnup PWR fuel rods as described in Item 5.(b)(1)(viii). Maximum decay heat not to exceed 2.3 kW per package. Individual PWR MOX and PWR UO_2 fuel rods shall be placed in a 5x5 insert loaded into a screened or free flow rod canister in accordance with NAC International Drawing No. LWT 315-40-104, for transport. Up to nine nonstainless burnable poison rods (BPRs) may be loaded in the spare locations in the 5x5 insert. The PWR/BWR fuel rod canister shall be transported in the PWR basket and the PWR insert installed in the cask cavity.

(xix) For the SLOWPOKE fuel described in Item 5.(b)(1)(xviii):

Up to 100 SLOWPOKE fuel rods (or the equivalent quantity of damaged material) may be loaded per SLOWPOKE canister in accordance with NAC Drawing No. LWT 315-40-156, utilizing either a 4x4 or 5x5 tube array or any combination thereof. Up to 4 SLOWPOKE canisters may be loaded within a 28 MTR fuel basket module with the three center fuel cells blocked. Only the top and top intermediate fuel basket modules may be loaded with SLOWPOKE fuel. Cask configuration is to be in accordance with NAC Drawing No. LWT 315-40-158.

(xx) For NRU/NRX fuel described in item 5.(b)(1)(xix):

Up to 18 undamaged or damaged NRU or NRX fuel assemblies (or the equivalent number of loose rods) may be loaded per NRU/NRX fuel basket in accordance with NAC Drawing Nos. LWT 315-40-172, LWT 315-40-173, LWT 315-40-174, and LWT 315-40-175. Package configuration to be in accordance with NAC Drawing No. LWT 315-40-170. The NRU/NRX Caddy Plug described in drawing LWT 315-40-175, Assembly 98, is not required for NRU/NRX fuel shipments. Maximum decay heat not to exceed 0.64 kW per package.

5.(b)(2) Maximum quantity of material per package (continued)

The following are the payload specific configuration requirements for NRU/NRX fuel:

(a) NRU and NRX fuel may not be comingled within a single package.
(b) Undamaged and damaged NRX fuel may be comingled within a single package provided they are not comingled in a single fuel tube location.
(c) Undamaged and damaged NRU fuel may be comingled within a single package provided they are not comingled in a single fuel tube location.
(d) Undamaged and damaged NRX fuel assemblies, loose rods, or rod segments shall be placed in the fuel caddy.
(e) Undamaged and damaged NRU loose rods or rod segments shall be placed in the fuel caddy. Loading undamaged and/or damaged NRU fuel assemblies in a caddy is optional.
(f) NRU/NRX fuel assemblies cropped by removing non-fuel bearing components of the fuel assemblies are considered undamaged provided the integrity of the rod array is maintained.
(g) NRU fuel assemblies with exposed fuel material from the cropping process are considered damaged but do not require the use of a caddy provided loose, fuel containing, rod segments are not loaded into the same basket opening as a cropped assembly.
(h) NRX fuel assemblies with exposed fuel material from the cropping process are considered damaged and shall be placed in the fuel caddy.
(i) Fuel tube locations that have damaged fuel loaded must use fuel basket lid mesh screens. The fuel basket lid mesh screens are optional for undamaged fuel.
(j) Each NRU/NRX basket fuel tube may contain unirradiated metallic dunnage provided the total payload weight in the basket fuel tube does not exceed 20 pounds.
(k) Each NRU/NRX fuel caddy may contain unirradiated metallic dunnage provided the total loaded weight of the fuel caddy does not exceed 20 pounds.
(l) Damaged NRU and NRX fuel assemblies are limited to no more than 2% clad removed from the fueled surface area.

(xxi) For the HEUNL material described in Item 5.(b)(1)(xx):

Up to a maximum of 58.1 liters (15.35 gallons) may be loaded per inner container; each inner container must have a minimum of 1 gallon of headspace (ullage). A total of four inner containers must be loaded in each package and shall be in accordance with NAC Drawing Nos. LWT 315-40-181, LWT 315-40-182, and LWT 315-40-183. Package configuration with HEUNL inner containers shall be in accordance with NAC Drawing No. LWT 315-40-180.

(xxii) For the SLOWPOKE Core as described in 5.(b)(1)(xxi):

One undamaged SLOWPOKE fuel core may be loaded into a SLOWPOKE fuel core basket. The SLOWPOKE fuel core shall contain up to 298 fuel rods, upper and lower plates and the center tube. A single loaded SLOWPOKE fuel core basket, shall be accompanied by intermediate MTR-42 baskets and a bottom MTR-42 basket, such that the SLOWPOKE fuel core basket is adjacent to the NAC-LWT lid, as shown in NAC Drawing No. LWT 315-40-185, may be transported in the NAC-LWT. Beryllium is not authorized for transport with the SLOWPOKE fuel core.

5.(b)(2) Maximum quantity of material per package (continued)

(xxiii) For EFN Rods, Booster Rods, and Moly Targets (Short and Double Length), as described in Item 5.(b)(1)(xxii):

Up to eighteen (18) NRU/NRX caddies loaded with EFN rods, Booster rods, or Moly targets, may be loaded per NRU/NRX fuel basket in accordance with NAC Drawing Nos. LWT 315-40-172, LWT 315-40-173, LWT 315-40-174, and LWT 315-40-175. Package configuration to be in accordance with NAC Drawing No. LWT 315-40-170. Maximum heat loads not to exceed 144W for EFN rods (8 W per caddy), 101 W for EFN/Moly mixed basket (8W per caddy for EFN rods and 0.8 W per caddy for Moly targets), 4W for Booster rods (0.2 W per caddy).

NRU/NRX caddies are limited to 36 EFN rods, 16 Booster rods, 20 Short Moly Targets, or 36 double length Moly targets or the equivalent number in rod/target segments or fragments. All materials must be placed in a caddy. One single fuel type may be loaded into one NRU/NRX caddy. EFN and Moly targets may be loaded into a single package. Booster rod caddies may not be mixed with EFN rod or Moly target caddies in a single package. Undamaged and damaged material is permitted for transport. Only a limited amount of cladding integrity is credited for full basket loads of EFN rods. Therefore, there are no cladding damage limits except for full cask loads of EFN rods which require the equivalent of 30% clad (fueled surface area), which represents an equivalent of a 0.02 cm thick cladding layer. Complete loss of clad is permitted for damaged Booster rods and Moly targets or when loading of damaged EFN rods is limited to the outer 12 basket locations (with or without Moly targets loaded). Small fragmented rods/targets require the use of the NRU/NRX caddy plug. Larger rod segments are retained axially within the caddy by the NRU/NRX basket tube and basket lid structure.

(xxiv) For SrF_2 Capsules, as described in Item 5.(b)(1)(xxiii):

Up to eighteen (18) WESF capsules may be loaded in the WESF capsule container assemblies or in the Universal Capsule Sleeve (UCS) assemblies.

WESF capsules loaded using the WESF Capsules Basket Assembly are in accordance with NAC Drawing Nos. LWT 315-40-190, LWT 315-40-191, LWT 315-40-192, and LWT 315-40-193. Package configuration to be in accordance with NAC Drawing No. LWT 315-40-190 for WESF capsules. WESF capsules must be loaded in the WESF capsule container assemblies with a maximum of one capsule per container opening. The LWT WESF lid spacer and all six (6) WESF container assemblies must be installed. Each WESF capsule container assembly is limited to a maximum heat load of 400 W. Each WESF capsule is limited to a maximum heat load of 400W.The maximum decay heat for WESF capsule shipments shall not to exceed 2.4 kW per package.

WESF capsules loaded using the Universal Capsule Sleeve (UCS) assemblies are in accordance with NAC Drawing Nos. LWT 315-40-198, LWT 315-40-10, LWT 315-40-199, LWT 315-40-200, LWT 315-40-201 and LWT 315-40-202. Package configuration to be in accordance with NAC Drawing No. LWT 315-40-198 for WESF capsules loaded in a UCS. The UCS assemblies are loaded in the UCS Basket Assembly, consisting of a PWR Basket and UCS Insert Assembly. The UCS Basket Assembly is loaded with a maximum of three (3) UCSs or one (1) or more UCSs with up to two (2) UCS Spacer Assemblies. Within each UCS, up to six (6) capsule spacers may be used. Capsule spacers shall be placed in empty UCS locations above or below a WESF capsule, as needed, to maintain position of the WESF capsule in the intended elevation within the UCS. The UCS LWT lid spacer must be installed. Each UCS assembly is limited to a maximum heat load of 800 W with a maximum heat load not to exceed 2.4 kW per package.".

Up to two (2) BUP 500 capsules may be loaded using the BUP-500 Basket Assembly in accordance with NAC Drawing Nos. LWT 315-40-195, LWT 315-40-196, and LWT 315-40-197. Package configuration to be in accordance with NAC Drawing No. LWT 315-40-195 for BUP-500 capsules. BUP-500 capsules must be loaded in the BUP-500 basket assembly. A single BUP-500 capsule may be loaded with a short spacer installed in place of the second BUP-500 capsule. Each BUP-500 capsule is limited to a maximum heat load of 1100 W. The maximum decay heat for BUP 500 capsule shipments shall not to exceed 2.2 kW per package.

(xxv) For LANL MOX Fuel Rods, as described in item 5.(b)(1)(xxiv):

Up to 16 transfer tubes filled with LANL MOX fuel rods can be loaded in the PWR/BWR transport can assembly. Different LANL MOX fuel types may be loaded in the same package but only one fuel type may be loaded into any one transfer tube (up to 16 transfer tubes containing PNNL, EXXON, or UO2 fuel rods may be mix loaded into a cask; up to 6 transfer tubes containing ROD1063 fuel rods may loaded into a cask but shall not be mix loaded with other materials in the cask; up to 4 transfer tubes of NIS5 and up to one transfer tube of 530-000 may be mixed loaded in a cask). If needed for operational convenience a divider assembly may be used to segregate transfer tubes. A transfer tube spacer is required at the top and bottom end of any transfer tube loaded with fuel rods. transfer tube spacers may be used to separate contents but are not required. As required, empty transfer tubes with or without spacers shall be loaded such that there are a total of 16 transfer tubes in the PWR/BWR transport can assembly. The maximum total heat load per cask is limited to 25 watts.

5.(c) Criticality Safety Index (CSI)

For PWR fuel assemblies described in 5.(b)(1)(i) and limited in 5(b)(2)(i)	100
For BWR fuel assemblies described in 5.(b)(1)(ii) and limited in 5(b)(2)(ii)	5.0
For MTR fuel elements described in 5.(b)(1)(iv) and limited in 5(b)(2)(iv)	0.0
For metallic fuel rods described in 5.(b)(1)(v) and limited in 5(b)(2)(v) and (vi)	0.0
For TRIGA fuel elements (in poisoned TRIGA fuel baskets) described in 5.(b)(1)(vi)(a) and limited in 5(b)(2)(vii)(a)	0.0
For TRIGA fuel elements (in nonpoisoned TRIGA fuel baskets) described in 5.(b)(1)(vi)(b) and 5.(b)(1)(vi)(c) and limited in 5.(b)(2)(vii)(b) and 5.(b)(2)(vii)(c), respectively	12.5
For mixed loads of TRIGA fuel elements described in 5.(b)(1)(vi)(c) and limited in 5.(b)(2)(vii)(c), and TRIGA fuel cluster rods described in 5.(b)(1)(vii)(b) and limited in 5.(b)(2)(viii)(b)	12.5
For TRIGA fuel cluster rods described in 5.(b)(1)(vii) and limited in 5.(b)(2)(viii)	0.0
For PWR rods described in 5.(b)(1)(viii) and limited in 5.(b)(2)(ix)	0.0
For BWR rods described in 5.(b)(1)(ix) and limited in 5.(b)(2)(x)	0.0
For DIDO fuel elements described in 5.(b)(1)(x) and limited in 5.(b)(2)(xi)	12.5
For General Atomic Irradiated Fuel Material (GA IFM) described in 5.(b)(1)(xi) and limited in 5.(b)(2)(xii)	0.0
For TPBARS and segmented TPBARS described in 5.(b)(1)(xii) and 5.(b)(1)(xv) and limited in 5.(b)(2)(xiii) and 5.(b)(2)(xvi)	0.0
For intact (uncanned) PULSTAR fuel described in 5.(b)(1)(xiii) and limited in 5.(b)(2)(xiv)	0.0
For (canned) PULSTAR fuel described in 5.(b)(1)(xiii) and limited in 5.(b)(2)(xiv) – for a package with any number of PULSTAR cans	33.4
For ANSTO fuel described in 5.(b)(1)(xiv) and limited in 5.(b)(2)(xv)	0.0
For solid irradiated hardware described in 5.(b)(1)(xvi) and limited in 5.(b)(2)(xvii)	0.0
For PWR MOX rods described in 5.(b)(1)(xvii) and limited by 5.(b)(2)(xviii)	0.0
For a mixed fuel load of DIDO and ANSTO fuel elements described in 5.(b)(1)(x) and 5.(b)(1)(xiv) and limited by 5.(b)(2)(xi)(b) and 5.(b)(2)(xv)(b)	0.0
For (canned) SLOWPOKE fuel described in 5.(b)(1)(xviii) and limited by 5.(b)(2)(xix)	0.0

5.(c) Criticality Safety Index (CSI)

For the NRU/NRX fuel described in 5.(b)(1)(xix) and limited by 5.(b)(2)(xx)	100.0
For HEUNL contents as described in 5.(b)(1)(xx) and limited in 5.(b)(2)(xxi)	0.0
For the SLOWPOKE fuel core described in 5.(b)(1)(xxi) and limited in 5.(b)(2)(xxii)	100
For, EFN rods, Booster rods, and Moly targets described in 5.(b)(1)(xxii) and limited in 5.(b)(2) (xxviii)	100
For, SrF_2 Capsules (WESF or BUP) described in 5.(b)(1)(xxiii) and limited in 5.(b)(2) (xxiv)	0.0
For, LANL MOX Fuel Rods described in 5.(b)(1)(xxiv) and limited in 5.(b)(2)(xxv)	25.0

Packages having a CSI of 100 must be transported in exclusive use mode.

6. Known or suspected damaged fuel assemblies (rods) or elements, and fuel with cladding defects greater than pin holes and hairline cracks are not authorized, except as described in Items 5.(b)(1)(x); 5.(b)(1)(xiv); 5.(b)(1)(xviii); 5.(b)(2)(iv)(d); 5.(b)(2)(vi); 5.(b)(2)(vii)(a); 5.(b)(2)(vii)(b); 5.(b)(2)(viii); 5.(b)(2)(ix); 5.(b)(2)(x); 5.(b)(2)(xi); 5.(b)(2)(xiv); 5.(b)(2)(xv); and 5.(b)(2)(xix).

7. The cask must be dry (no free water) when delivered to a carrier for transport.

8. Bolt torque: The cask lids bolts must be torqued to 260 +/- 20 ft-lbs. The bolts used to secure the alternate vent and drain port covers must be torqued to 100 +/- 10 inch-lbs. The bolts used to secure the Alternate B port covers must be torqued to 285 +/- 15 inch-lbs.

9. Prior to each shipment, the package must be leak tested to 1×10^{-3} std cm^3/sec, except that replaced seals must be leak tested to 2.0×10^{-7} std cm^3/sec (He). Prior to first use, and at least once within the 12-month period prior to each subsequent use, the package must be leak tested to 2.0×10^{-7} std cm^3/sec (He).

10. In addition to the requirements of Subpart G of 10 CFR Part 71:

(a) The metallic O-ring lid seal must be replaced prior to each shipment; and

(b) Each package must meet the Acceptance Tests and Maintenance Program of Chapter 8 of the application, as supplemented; and

(c) The package shall be prepared for shipment and operated in accordance with the Package Operations of Chapter 7 of the application, as supplemented. If the cask is loaded under water or water is introduced into the cask cavity, the cask must be vacuum dried as described in Chapter 7 of the application. The cask cavity must be backfilled with 1.0 atm of helium when shipping PWR or BWR assemblies, individual PWR and BWR rods, or TPBAR contents.

11. When shipping PWR, BWR, PWR MOX, MTR, DIDO assemblies, TRIGA fuel elements, TRIGA fuel cluster rods, high burnup PWR or BWR rods, GA IFM, PULSTAR fuel elements, spiral fuel assemblies, and MOATA plate bundles, the neutron shield tank must be filled with a mixture of water and ethylene glycol which will not freeze or precipitate in a temperature range from -40 °F to 250 °F. The water and ethylene glycol mixture must contain at least 1% boron by weight.

12. A personnel barrier must be used when shipping PWR or BWR assemblies. Shipments of MTR, DIDO fuel assemblies, TRIGA fuel elements, TRIGA fuel cluster rods, high burnup PWR or BWR rods, PWR MOX rods, TPBAR contents, PULSTAR fuel elements, spiral fuel assemblies, MOATA plate bundles, or irradiated hardware must use the ISO container.

13. Packages used to ship metallic fuel rods may be shipped in a closed shipping container provided that the closed container, the cask tie-down and support system and transport vehicle (trailer) meet the applicable requirements of the Department of Transportation. When the cask is shipped in a closed shipping container, the center of gravity of the combined cask, closed shipping container and trailer must not exceed 75 inches.

14. For shipment of TPBAR contents:

    (a) Prior to first use for shipment of TPBAR contents, each packaging must be hydrostatic pressure tested to 450 +15/-0 psig or 650 +15/-0 psig, depending on Tritium content loaded (See Condition 5(b)(1)(xii)), as described in Section 8.1.2 of the application;

    (b) The package must be marked with Package Identification Number USA/9225/B(M)-96;

    (c) The package must be configured as shown in NAC International Drawing No. LWT 315-40-128 (Sheets 1-2), for the applicable TPBAR contents; and

    (d) Prior to each shipment, after loading, each cask containment seal must be tested to show no leakage greater than 2×10^{-7} std-cm^3/s (helium).

15. For shipment of PULSTAR fuel:

    (a) Intact fuel elements may be configured as PULSTAR fuel assemblies, may be placed into a TRIGA fuel rod insert (a 4 x 4 rod holder), or may be loaded into PULSTAR fuel cans. Intact PULSTAR fuel assemblies and PULSTAR fuel elements in a TRIGA fuel rod insert may be loaded in any module of the 28 MTR basket assembly. PULSTAR fuel cans may only be loaded into the top or base module of the 28 MTR basket assembly.

    (b) Damaged PULSTAR fuel elements and nonfuel components of PULSTAR fuel assemblies must be loaded into PULSTAR cans. Damaged PULSTAR fuel, including fuel debris, pellets or pieces, may be placed in an encapsulating rod prior to loading into a PULSTAR fuel can. PULSTAR fuel cans may only be loaded into the top or base module of the 28 MTR basket assembly.

    (c) Loading of modules with mixed PULSTAR payload configuration is allowed.

16. For shipment of HEUNL contents:

(a) Hydrogen concentration can be assumed to be less than 5% provided the package shipment is completed within 3 months of closure of the HEUNL containers.

(b) The maximum cumulative time (service life) an HEUNL container shall contain the HEUNL solution is 15 months.

(c) An HEUNL container that has a cumulative time containing HEUNL solution greater than 12 months is not authorized to be loaded with HEUNL solution.

17. For shipment of NRU\NRX Fuel:

NRU/NRX basket weldment serial numbers (S/N's) 315-391-173-01 and -03 through -06 are authorized for use with exception to the requirement presented in License Drawing No. LWT 315-40-173, Rev. 2, (sheets 1-2) note No. 8. No other NRU/NRX basket weldments are authorized for use with exception to note No. 8, other than the S/N's specified in this condition.

18. For shipment of non-fissile contents, with fissile content in the package not exceeding Type A quantity and qualifying as a fissile exempt quantity under 10 CFR 71.15, the Model No. NAC-LWT shall be designated as Type B(U)F-96, with package identification number USA/9225/B(U)-96.

19. Only two of four Impact Limiter Attachment Lugs; Upper Impact Limiter (LWT 315-40-05) or 315-40-06 (Lower Impact Limiter) are required to ensure that the Impact Limiters remain in place for all conditions of transport.

20. Transport by air is not authorized.

21. Revisions 76, 77, 78, 79 and 80 of this certificate may be used until March 30, 2027.

22. The package authorized by this certificate is hereby approved for use under the general license provisions of 10 CFR 71.17.

23. Expiration Date: April 30, 2030.

REFERENCES

NAC International, Inc., consolidated application dated February 4, 2025 as supplemented on June 26, 2025, July 7, 2025, January 23, 2026, and February 9, 2026.

FOR THE U. S. NUCLEAR REGULATORY COMMISSION

{{signature:yks}}

Yoira Diaz-Sanabria, Chief
Storage and Transportation Licensing Branch
Division of Fuel Management
Office of Nuclear Material Safety
and Safeguards

Dated: {{date:long}}

Enclosure 2

List of Drawing Changes

for

NAC-LWT SAR, Revision 26C

(Docket No. 71-9225)

NAC International

September 2026

List of Drawing Changes, NAC-LWT SAR, Revision 26C

315-40-03, Legal Weight Truck Transport Cask Body Safety Analysis Report, Revision 23

[redacted]

Enclosure 3

Supporting Calculations

for

NAC-LWT SAR, Revision 26C

(Docket No. 71-9225)

NAC International

September 2026

Supporting Calculations, NAC-LWT SAR, Revision 26C

List of Calculations:

1. 14663-315-2001 R2
2. 14663-315-2002 R3
3. 50075-3002 R0
4. 50075-4001 R0
5. 50075-4002 R0
6. 50075-4003 R0
7. 50075-5001 R0
8. 65000419-2000 R2

CALCULATIONS ARE PROPRIETARY AND WITHHELD
IN THEIR ENTIRETY PER 10 CFR 2.390

Enclosure 4

List of SAR Changes

for

NAC-LWT SAR, Revision 26C

(Docket No. 71-9225)

NAC International

September 2026

List of SAR Changes, NAC-LWT SAR, Revision 26C

Chapter 1

- Page 1-iii, editorial corrections, where indicated.
- Page 1-iv, modified text, where indicated.
- Page 1-2, modified text, where indicated.
- Page 1-4, modified text, where indicated.
- Pages 1.1-1 thru 1.1-2, modified text, where indicated.
- Page 1.2-5, modified text, where indicated.
- Page 1.2-13, modified text, where indicated.
- Page 1.2-58, modified text, where indicated.
- Page 1.2-62, modified text, where indicated.
- Page 1.5-1, modified text, where indicated.
- Appendix B – TTQP-1-091, Revision 14, replaced in its entirety.

Chapter 2

- Page 2-iii, editorial correction, where indicated.
- Page 2-vi, editorial correction, where indicated.
- Page 2-viii, editorial correction, where indicated.
- Page 2-xii, editorial correction, where indicated.
- Page 2-xxiv, modified text, where indicated.
- Page 2.6.12-71, modified text, where indicated.
- Page 2.6.12-74, modified text, where indicated.
- Page 2.6.12-77, modified text, where indicated.
- Page 2.7.7-57, modified text, where indicated.
- Page 2.7.7-60, modified text, where indicated.
- Pages 2.10.14-2 thru 2.10.14-4 modified text, where indicated.
- Pages 2.10.14-12 thru 2.10.14-38 modified text, where indicated.
- Page 2.10.16-2, editorial correction, where indicated.

Chapter 3

- Pages 3-i thru 3-ii, modified text, where indicated.
- Page 3-iii, modified text and editorial changes, where indicated.
- Pages 3-iv thru 3-v, modified text, where indicated.
- Pages 3.1-1 thru 3.1-2, modified text, where indicated.
- Pages 3.4-27 thru 3.4-29, modified text, where indicated.
- Pages 3.4-37 thru 3.4-39, modified text, where indicated.
- Page 3.4-47, editorial corrections, where indicated.
- Pages 3.4-60 thru 3.4-65, modified text, where indicated.
- Page 3.4-119, modified text, where indicated.
- Pages 3.5-12 thru 3.5-13, modified text, where indicated.
- Pages 3.5-15 thru 3.5-16, modified text, where indicated.

- Page 3.5-24, modified text, where indicated.
- Page 3.5-52, modified text, where indicated.

Chapter 4

- Page 4.1-2, modified text, where indicated.
- Page 4.2-2, modified text, where indicated.
- Pages 4.3-2 thru 4.3-3, modified text, where indicated.

Chapter 5

- Page 5-viii, editorial correction, where indicated.
- Page 5-xv, editorial correction, where indicated.
- Page 5.1.1-1, modified text, where indicated.
- Page 5.1.1-3, modified text, where indicated.
- Page 5.1.1-11, modified text, where indicated.
- Pages 5.3.11-1 thru 5.3.11-3, editorial correction, where indicated.
- Page 5.3.11-5, editorial correction, where indicated.
- Pages 5.3.12-1 thru 5.3.12-2, editorial correction, where indicated.
- Page 5.3.12-4, editorial correction, where indicated.
- Page 5.3.13-1, modified text, where indicated.
- Pages 5.3.14-1 thru 5.3.14-3, editorial correction, where indicated.
- Page 5.3.17-1, editorial correction, where indicated.
- Page 5.3.17-4, editorial correction, where indicated.
- Page 5.3.17-6, editorial correction, where indicated.
- Page 5.3.18-1 thru 5.3.18-2, editorial correction, where indicated.

Chapter 6

- Page 6-vii, editorial corrections, where indicated.
- Page 6-ix, modified text, where indicated.
- Page 6.2-1, modified text, where indicated.
- Pages 6.7.3-30 thru 6.7.3-32, editorial corrections, where indicated.
- Page 6.5.1-9, replaced figure.
- Page 6.5.1-11, modified text, where indicated.
- Page 6.6-iii, editorial correction, where indicated.

Chapter 7

- Pages 7-i thru 7-ii, editorial corrections, where indicated.
- Page 7.1-43, modified text, where indicated.

Chapter 8

- Page 8.1-2, modified text, where indicated.
- Page 8.1-6, modified text, where indicated.
- Page 8.1-8, modified text, where indicated.

- Page 8.2-1, modified text, where indicated.

Chapter 9

- Page 9-i, editorial correction, where indicated.
- Page 9-11, added text, where indicated.

Enclosure 5

NAC-LWT SAR, Revision 26C

(Docket No. 71-9225)

NAC International

September 2026

September 2026

Revision 26C

NAC-LWT

Legal Weight Truck Cask System

SAFETY ANALYSIS REPORT

NON-PROPRIETARY VERSION

Docket No. 71-9225

NAC INTERNATIONAL

Atlanta Corporate Headquarters: 2 Sun Court, Suite 220, Peachtree Corners, Georgia 30092 USA
Phone 770-447-1144, www.nacintl.com

Table of Contents

1 GENERAL INFORMATION 1-1

1.1 Introduction 1.1-1

1.2 Package Description 1.2-1
1.2.1 Packaging 1.2-1
1.2.2 Operational Features 1.2-4
1.2.3 Contents of Packaging 1.2-5

1.3 Quality Assurance 1.3-1

1.4 License Drawings 1.4-1

1.5 Unclassified DOE Reference Documents and Drawings 1.5-1

Chapter 1 Appendices

Appendix 1-A – TTQP-1-015, "Description of the Tritium-Producing Burnable Absorber Rod for the Commercial Light Water Reactor," Revision 14

Appendix 1-B – TTQP-1-091, "Unclassified TPBAR Releases, Including Tritium," Revision 14

Appendix 1-C – TTQP-1-111, "Unclassified Bounding Source Term, Radionuclide Concentrations, Decay Heat, and Dose Rates for the Production TPBAR," Revision 5

Appendix 1-D – DOE Drawing H-3-307845, "Production TPBAR Reactor Interface Dimensions Watts Bar," Revision 10, Sheet 1 of 2

Appendix 1-E – DOE Drawing H-3-308875, "Production TPBAR Reactor Interface Dimensions Sequoyah," Revision 5, Sheet 1 of 2

Appendix 1-F – DOE Drawing H-3-310568, "Mark 8 Multi-Pencil TPBAR – Watts Bar Reactor Interface," Revision 0, Sheet 1 of 2

Appendix 1-G – PNNL Letter, TTP-06-056, Subject: Exposure of Shipping Casks to Tritium, February 21, 2006

List of Figures

Figure 1.2.3-1 Aluminum Clad TRIGA Fuel Element 1.2-24
Figure 1.2.3-2 Aluminum Clad Instrumented Fuel Element 1.2-25
Figure 1.2.3-3 Stainless Steel Clad TRIGA Fuel Element 1.2-26
Figure 1.2.3-4 Stainless Steel Clad Instrumented Fuel Element 1.2-27
Figure 1.2.3-5 Standard Fuel Follower Control Rod Element 1.2-28
Figure 1.2.3-6 TRIGA Fuel Cluster and Rod Details 1.2-29
Figure 1.2.3-7 HTGR Fuel Handling Unit 1.2-30
Figure 1.2.3-8 RERTR Fuel Handling Unit 1.2-31
Figure 1.2.3-9 Typical TPBAR Assembly 1.2-32
Figure 1.2.3-10 TPBAR Consolidation Canister Sketch 1.2-33
Figure 1.2.3-11 Failed PWR/BWR Fuel Rod Capsule 1.2-34
Figure 1.2.3-12 NAC-LWT with TPBAR Consolidation Canister Payload 1.2-35
Figure 1.2.3-13 PULSTAR Fuel Assembly 1.2-36
Figure 1.2.3-14 Spiral Fuel Assembly Cross-Section Sketch 1.2-37
Figure 1.2.3-15 MOATA Plate Bundle Sketches 1.2-38
Figure 1.2.3-16 TPBAR Waste Container and Extension Weldment Sketch 1.2-39
Figure 1.2.3-17 NAC-LWT with TPBAR Waste Container Payload 1.2-40
Figure 1.2.3-18 ANSTO Damaged Fuel Can (DFC) 1.2-41
Figure 1.2.3-19 SLOWPOKE Fuel Element 1.2-42
Figure 1.2.3-20 NRU and NRX Fuel Assemblies (Before Cropping and Potential Removal of Flow Tube) 1.2-43
Figure 1.2.3-21 HEUNL Container 1.2-44
Figure 1.2.3-22 EFN, Moly and Booster Rod Illustrations 1.2-45
Figure 1.2.3-23 WESF Capsule Illustrations 1.2-46
Figure 1.2.3-24 BUP-500 Capsule Illustrations 1.2-47
Figure 1.2.3-25 LANL MOX Fuel Rod Generic Rod Components 1.2-48

List of Tables

Table 1.1-1 Terminology and Notation 1-4
Table 1.2-1 Characteristics of Design Basis TRIGA Fuel Elements Acceptable for Loading in the Poisoned TRIGA Basket 1.2-49
Table 1.2-2 Characteristics of Design Basis TRIGA Fuel Elements Acceptable for Loading in the Nonpoisoned TRIGA Basket 1.2-50
Table 1.2-3 Characteristics of Design Basis TRIGA Fuel Cluster Rods 1.2-51
Table 1.2-4 Fuel Characteristics 1.2-52
Table 1.2-5 PWR Fuel Characteristics 1.2-55
Table 1.2-6 BWR Fuel Characteristics 1.2-56
Table 1.2-7 Characteristics of General Atomics Irradiated Fuel Material (GA IFM) 1.2-57
Table 1.2-8 Typical Production TPBAR Characteristics 1.2-58
Table 1.2-9 PULSTAR Fuel Characteristics 1.2-59
Table 1.2-10 Spiral Fuel Assembly Characteristics 1.2-60
Table 1.2-11 MOATA Plate Bundle Characteristics 1.2-61
Table 1.2-12 Typical TPBAR Segment Characteristics in Waste Container 1.2-62
Table 1.2-13 Solid, Irradiated Hardware Characteristics 1.2-63
Table 1.2-14 SLOWPOKE Fuel Rods 1.2-64
Table 1.2-15 NRX / NRU Fuel Assemblies / Rods 1.2-65
Table 1.2-16 HEUNL Characteristics 1.2-66
Table 1.2-17 SLOWPOKE Fuel Core 1.2-67
Table 1.2-18 EFN Rods, Booster Rods, and Moly Targets 1.2-68
Table 1.2-19 SrF_2 Capsules 1.2-68
Table 1.2-20 LANL MOX Fuel Rod Characteristics 1.2-69

List of Drawings

315-40-01		Rev 7	Legal Weight Truck Transport Cask Assembly
315-40-02	Sheets 1 – 2	Rev 25	NAC-LWT Cask Body Assembly
315-40-03	Sheets 1 – 6	Rev 6*	NAC-LWT Transport Cask Body
315-40-03	Sheets 1 – 7	Rev 23	NAC-LWT Transport Cask Body
315-40-04		Rev 12	NAC-LWT Transport Cask Lid Assembly
315-40-05	Sheets 1 – 2	Rev 10	NAC-LWT Transport Cask Upper Impact Limiter
315-40-06		Rev 10	NAC-LWT Transport Cask Lower Impact Limiter
315-40-08	Sheets 1 – 5	Rev 18	NAC-LWT Transport Cask Parts Detail
315-40-09		Rev 2	NAC-LWT PWR Basket Spacer
315-40-10	Sheets 1 – 2	Rev 9	NAC-LWT Cask PWR Basket
315-40-11		Rev 2	NAC-LWT BWR Fuel Basket Assembly
315-40-12		Rev 3	NAC-LWT Metal Fuel Basket Assembly
315-40-045		Rev 6	Weldment, 7 Element Basket, 42 MTR Fuel Base Module
315-40-046		Rev 6	Weldment, 7 Element Basket, 42 MTR Fuel Intermediate Module
315-40-047		Rev 6	Weldment, 7 Element Basket, 42 MTR Fuel Top Module
315-40-048		Rev 3	Legal Weight Truck Transport Cask Assembly, 42 MTR Element
315-40-049		Rev 6	Weldment, 7 Element Basket, 28 MTR Fuel Base Module
315-40-050		Rev 6	Weldment, 7 Element Basket, 28 MTR Fuel Intermediate Module
315-40-051		Rev 6	Weldment, 7 Element Basket, 28 MTR Fuel Top Module
315-40-052		Rev 3	Legal Weight Truck Transport Cask Assembly, 28 MTR Element
315-40-070		Rev 9	Weldment, 7 Cell Basket, TRIGA Fuel Base Module
315-40-071		Rev 9	Weldment, 7 Cell Basket, TRIGA Fuel Intermediate Module
315-40-072		Rev 9	Weldment, 7 Cell Basket, TRIGA Fuel Top Module
315-40-079		Rev 6	Legal Weight Truck Transport Cask Assy, 120 TRIGA Fuel Elements or 480 Cluster Rods
315-40-080		Rev 4	Weldment, 7 Cell Poison Basket, TRIGA Fuel Base Module
315-40-081		Rev 4	Weldment, 7 Cell Poison Basket, TRIGA Fuel Intermediate Module
315-40-082		Rev 4	Weldment, 7 Cell Poison Basket, TRIGA Fuel Top Module
315-40-083		Rev 0	Spacer, LWT Cask Assembly, TRIGA Fuel
315-40-084		Rev 4	Legal Weight Truck Transport Cask Assy, 140 TRIGA Elements
315-40-085		Rev 1	Axial Fuel and Cell Block Spacers, MTR and TRIGA Fuel Baskets, NAC-LWT Cask
315-40-086		Rev 1	Assembly, Sealed Failed Fuel Can, TRIGA Fuel
315-40-087		Rev 7	Canister Lid Assembly, Sealed Failed Fuel Can, TRIGA Fuel
315-40-088		Rev 3	Canister Body Assembly, Sealed Failed Fuel Can, TRIGA Fuel
315-40-090		Rev 4	Weldment, 7 Element Basket, 35 MTR Fuel Base Module
315-40-091		Rev 4	Weldment, 7 Element Basket, 35 MTR Fuel Intermediate Module
315-40-092		Rev 4	Weldment, 7 Element Basket, 35 MTR Fuel Top Module
315-40-094		Rev 4	Legal Weight Truck Transport Cask Assembly, 35 MTR Element
315-40-096		Rev 3	Fuel Cluster Rod Insert, TRIGA Fuel
315-40-098	Sheets 1 - 3	Rev 6	PWR/BWR Rod Transport Canister Assembly
315-40-099	Sheets 1 - 3	Rev 3	Can Weldment, PWR/BWR Transport Canister

* Packaging Unit Nos. 1, 2, 3, 4 and 5 are constructed in accordance with this revision of drawing.

List of Drawings (Continued)

315-40-100	Sheets 1 - 5	Rev 4	Lids, PWR/BWR Transport Canister
315-40-101		Rev 0	4 X 4 Insert, PWR/BWR Transport Canister
315-40-102		Rev 2	5 X 5 Insert, PWR/BWR Transport Canister
315-40-103		Rev 0	Pin Spacer, PWR/BWR Transport Canister
315-40-104	Sheets 1 - 3	Rev 6	Legal Weight Truck Transport Cask Assy, PWR/BWR Rod Transport Canister
315-40-105	Sheets 1 - 2	Rev 3	PWR Insert PWR/BWR Transport Canister
315-40-106	Sheets 1 - 3	Rev 2	MTR Plate Canister, LWT Cask
315-40-108	Sheets 1 - 3	Rev 1	Weldment, 7 Cell Basket, Top Module, DIDO Fuel
315-40-109	Sheets 1 - 3	Rev 1	Weldment, 7 Cell Basket, Intermediate Module, DIDO Fuel
315-40-110	Sheets 1 - 3	Rev 1	Weldment, 7 Cell Basket, Base Module, DIDO Fuel
315-40-111		Rev 2	Legal Weight Truck, Transport Cask Assy, DIDO Fuel
315-40-113		Rev 0	Spacers, Top Module, DIDO Fuel
315-40-120	Sheets 1 - 3	Rev 2	Top Module, General Atomics IFM, LWT Cask
315-40-123	Sheets 1 - 2	Rev 1	Spacer, General Atomics IFM, LWT Cask
315-40-124		Rev 1	Transport Cask Assembly, General Atomics IFM, LWT Cask
315-40-125	Sheets 1 - 3	Rev 3	Transport Cask Assembly, Framatome/EPRI, LWT Cask
315-40-126	Sheets 1 - 2	Rev 2	Weldments, Framatome/EPRI, LWT Cask
315-40-127	Sheets 1 - 2	Rev 2	Spacer Assembly, TPBAR Shipment, LWT Cask
315-40-128	Sheets 1 - 2	Rev 5	Legal Weight Truck, Transport Cask Assy, TPBAR Shipment
032230		Rev A	RERTR Secondary Enclosure, General Atomics
032231		Rev A	HTGR Secondary Enclosure, General Atomics
032236		Rev B	RERTR Primary Enclosure, General Atomics
032237		Rev B	HTGR Primary Enclosure, General Atomics
315-40-129		Rev 2	Canister Body Assembly, Failed Fuel Can, PULSTAR
315-40-130		Rev 2	Assembly, Failed Fuel Can, PULSTAR
315-40-133	Sheets 1 - 2	Rev 2	Transport Cask Assembly, PULSTAR Shipment, LWT Cask
315-40-134		Rev 2	Body Weldment, Screened Fuel Can, PULSTAR Fuel
315-40-135		Rev 1	Assembly, Screened Fuel Can, PULSTAR Fuel
315-40-139		Rev 1	Legal Weight Truck Transport Cask Assy, ANSTO Fuel
315-40-140	Sheets 1 - 2	Rev 1	Weldment, 7 Cell Basket, Top Module, ANSTO Fuel
315-40-141	Sheets 1 - 2	Rev 1	Weldment, 7 Cell Basket, Intermediate Module, ANSTO Fuel
315-40-142	Sheets 1 - 2	Rev 1	Weldment, 7 Cell Basket, Base Module, ANSTO Fuel
315-40-145		Rev 0	Irradiated Hardware Lid Spacer, LWT Cask
315-40-148		Rev 0	Legal Weight Truck Transport Cask Assembly, ANSTO-DIDO Combination Basket
315-40-156	Sheets 1 - 4	Rev 3	Canister Assembly SLOWPOKE Fuel
315-40-158		Rev 0	Legal Weight Truck Transport Cask Assy, SLOWPOKE Fuel
315-40-170		Rev 1	LWT Transport Cask Assy., AECL NRU/NRX Components
315-40-172	Sheets 1 – 2	Rev 2	LID Assembly, NRU/NRX
315-40-173	Sheets 1 – 2	Rev 2	Basket Weldment, NRU/NRX
315-40-174		Rev 0	Basket Spacer, NRU/NRX
315-40-175	Sheets 1 – 2	Rev 2	Caddy Assembly, NRU/NRX

List of Drawings (Continued)

315-40-180		Rev 4P Rev 0NP	LWT Transport Cask Assembly, HEUNL Contents
315-40-181	Sheets 1 - 2	Rev 6P Rev 0NP	Container Assembly, HEUNL
315-40-182	Sheets 1 - 2	Rev 3P Rev 0NP	Container Spacer, HEUNL
315-40-183		Rev 1P Rev 0NP	Container Guide, HEUNL
315-40-185		Rev 0	LWT Transport Cask Assembly, SLOWPOKE Contents
315-40-186	Sheets 1 – 2	Rev 2	Fuel Core Basket Assembly, SLOWPOKE
315-40-187	Sheets 1 – 2	Rev 1	Basket Lid Assembly, SLOWPOKE
315-40-188	Sheets 1 – 2	Rev 2P Rev 0NP	LWT Transport Cask Shipping Configuration, LANL MOX
315-40-189	Sheets 1 – 2	Rev 3P Rev 0NP	Transfer Tube Details, LANL MOX
315-40-190		Rev 0P Rev 0NP	LWT Transport Cask Shipping Configuration, WESF Capsules, Zeno
315-40-191		Rev 2P Rev 0NP	WESF Capsules Basket Assembly, Zeno
315-40-192		Rev 2P Rev 0NP	WESF Capsules Container Assembly, Zeno
315-40-193		Rev 1P Rev 0NP	LWT Lid Spacer, WESF Capsules, Zeno
315-40-195		Rev 1P Rev 0NP	LWT Transport Cask Shipping Configuration, BUP-500, Zeno
315-40-196		Rev 2P Rev 0NP	BUP-500 Basket Assembly, Zeno
315-40-197		Rev 1P Rev 0NP	BUP-500 Cavity Spacer, Zeno
315-40-198		Rev 1P Rev 0NP	LWT Transport Cask, Shipping Configuration, UCS, Zeno
315-40-199	Sheets 1 – 2	Rev 0P Rev 0NP	UCS Basket Assembly, Zeno
315-40-200		Rev 2P Rev 0NP	LWT Lid Spacer, UCS, Zeno
315-40-201	Sheets 1 – 3	Rev 0P Rev 0NP	Universal Capsule Sleeve (UCS) Assembly, Zeno
315-40-202	Sheets 1 – 2	Rev 1P Rev 0NP	UCS and Capsules Spacers Assemblies, Zeno

1 GENERAL INFORMATION

This chapter of the NAC International, Legal Weight Truck spent fuel shipping cask (NAC-LWT) Safety Analysis Report (SAR) presents a general introduction to, and description of, the NAC-LWT cask. Terminology used throughout this report is presented in Table 1.1-1.

Shipment of the NAC-LWT cask by truck, ISO container, and/or by railcar, as a Type B(U)F-96 package, as defined in 10 CFR 71.4, is authorized for the following contents:

- PWR and BWR fuel assemblies[1];
- MTR fuel assemblies and plates;
- DIDO fuel assemblies;
- metallic fuel rods;
- 25 high burnup PWR and BWR fuel rods (including up to 14 fuel rods classified as damaged, or having FeCrAl based alloy cladding)[2];
- 16 PWR MOX fuel rods (or mixed load of up to 16 PWR MOX and UO_2 PWR fuel rods) and up to 9 burnable poison rods (BPRs);
- TRIGA fuel elements and TRIGA fuel cluster rods;
- General Atomics (GA) High-Temperature Gas-Cooled Reactor (HTGR) and Reduced-Enrichment Research and Test Reactor (RERTR) Irradiated Fuel Materials (IFM);
- up to 700 PULSTAR fuel elements;
- spiral fuel assemblies;
- MOATA plate bundles;
- up to eight (8) SLOWPOKE Fuel Canisters;
- up to eighteen (18) NRU or NRX Fuel Assemblies (or equivalent number of fuel rods);
- up to eighteen (18) NRU or NRX caddies loaded with EFN rods (Enriched Fast Neutron) rods, Booster rods and Mo-99 (“Moly Targets”);
- HEUNL;
- One SLOWPOKE fuel core;
- Up to eighteen (18) WESF capsules packaged in WESF Capsule Container assemblies or in Universal Capsule Sleeve (UCS) assemblies, or up to two (2) BUP 500 capsules; and
- up to sixteen (16) transfer tubes filled with LANL MOX Fuel Rods.

The authorized contents previously listed, except for HEUNL, include both irradiated and unirradiated forms of the materials.

Irradiated hardware is also authorized to be shipped in the NAC-LWT cask by truck, ISO container, and/or by railcar, as a Type B(U)F-96 package, as defined in 10 CFR 71.4. Irradiated hardware is defined as solid, irradiated and contaminated fuel assembly structural or reactor internal component hardware, which may include fissile material, provided the quantity of fissile

[1] NAC-LWT casks containing PWR and BWR fuel assemblies are to be transported on an open trailer with a personnel barrier.

[2] PWR and BWR fuel rods may be transported in either a fuel assembly lattice (skeleton) or in a fuel rod insert. The fuel rod insert may contain PWR instrument/guide tubes, BWR water/inert rods, or unfueled rods/rod segments in addition to the fuel rods. Fuel rods may be composed of segments.

material does not exceed a Type A quantity and does not exceed the exemptions of 10 CFR 71.15, paragraphs (a), (b) and (c).

Shipment of the NAC-LWT cask by truck, ISO container, and/or by railcar, as a Type B(M)-96 package, as defined in 10 CFR 71.4, is also authorized for the following contents:

- up to 300 Tritium Producing Burnable Absorber Rods (TPBARs), of which up to three can be prefailed; and
- up to 55 TPBARs segmented during post-irradiation examination (PIE), including segmentation debris.

In accordance with 10 CFR 71.59, the NAC-LWT cask is assigned a Criticality Safety Index (CSI) for criticality control of the approved contents as follows:

Approved Contents	CSI
PWR fuel assemblies	100
BWR fuel assemblies	5.0
MTR fuel elements	0.0
Metallic fuel rods	0.0
TRIGA fuel elements (in poisoned TRIGA fuel baskets)	0.0
TRIGA fuel elements (in nonpoisoned TRIGA fuel baskets)	12.5
TRIGA fuel cluster rods	0.0
High burnup PWR rods	0.0
High burnup BWR rods	0.0
PWR MOX rods	0.0
DIDO fuel elements	12.5
General Atomic Irradiated Fuel Material (GA IFM)	0.0
TPBARs and segmented TPBARs	0.0
Intact (uncanned) PULSTAR fuel	0.0
Canned PULSTAR fuel	33.4
ANSTO fuel	0.0
Solid irradiated hardware	0.0
ANSTO-DIDO fuel combination	0.0
SLOWPOKE Fuel Rods in Fuel Canisters	0.0
NRU / NRX Fuel Assemblies, EFN rods, Booster rods, and Moly targets	100
HEUNL containers	0.0
SLOWPOKE Fuel Core	100
SrF_2 (WESF or BUP) Capsules	0.0
LANL MOX Fuel Rods	25.0

TPBARs and SrF_2 capsules do not contain fissile material and criticality assessments are not required. Solid, irradiated and contaminated hardware contents could include fissile material not exceeding a Type A quantity and the exemptions of 10 CFR 71.15, paragraphs (a), (b) and (c). A CSI of 0 is assigned for these contents for documentation purposes.

The estimated Transport Index (TI) for shielding for the prior listed contents is shown in Table 5.1.1-1. The actual TI for individual shipments will be determined in accordance with 10 CFR 71.4 by the licensee.

Table 1.1-1 Terminology and Notation

Cask Model	NAC-LWT
Package	The Packaging with its radioactive contents (payload), as presented for transportation (10 CFR 71.4). Within this report, the Package is denoted as the NAC-LWT cask or simply as the cask.
Packaging	The assembly of components necessary to ensure compliance with packaging requirements (10 CFR 71.4). Within this report, the Packaging is denoted as the NAC-LWT cask.
NAC-LWT Cask	This packaging consists of a spent-fuel shipping cask body and closure lid with energy absorbing impact limiters.
Contents (Payload)	• 1 PWR assembly • up to 2 BWR assemblies • up to 25 PWR or BWR rods (including high burnup fuel rods and up to 14 fuel rods classified as damaged)[1] • up to 16 PWR MOX fuel rods (or mixed contents of up to 16 PWR MOX and UO_2 PWR fuel rods) and up to 9 BPRs • up to 42 MTR fuel elements (including plates) • up to 42 DIDO fuel assemblies • up to 7 degraded clad DIDO fuel assemblies in damaged fuel cans (DFCs) in ANSTO top basket module • up to 15 sound (cladding intact) metallic fuel rods • up to 9 damaged metallic fuel rods or 3 severely damaged metallic fuel rods in filters • up to 140 intact or damaged TRIGA fuel elements/debris • up to 560 intact or damaged TRIGA fuel cluster rods • 2 GA IFM packages • up to 300 TPBARs (including up to 3 prefailed TPBARs) • up to 55 TPBARs segmented into individual segments and segmentation debris • up to 700 intact or damaged PULSTAR fuel elements in either assembly or element form, including fuel debris • up to 42 intact spiral fuel assemblies (also referred to as Mark III spiral fuel), including up to 7 degraded clad spiral fuel assemblies in DFCs. Spiral fuel assemblies may be cropped. • up to 42 intact MOATA plate bundles, including up to 7 MOATA plate bundles in DFCs

[1] PWR and BWR fuel rods may be transported in either a fuel assembly lattice (skeleton) or in a fuel rod insert. The fuel rod insert may contain PWR instrument/guide tubes and BWR water/inert rods in addition to the fuel rods.

Table 1.1-1 Terminology and Notation (Continued)

- any combination of individual ANSTO basket modules containing either spiral fuel assemblies or MOATA plate bundles up to a total of 42 assemblies/bundles, including up to 7 degraded clad DIDO, spiral or MOATA elements/ bundles in DFCs placed in an ANSTO top basket module
- combination ANSTO-DIDO basket assembly (one ANSTO top module and five DIDO intermediate and base basket modules) containing up to 42 DIDO, spiral or MOATA elements/bundles with up to 7 degraded clad elements/bundles in the ANSTO top module in DFCs
- up to eight (8) SLOWPOKE Fuel Canisters each containing up to 100 undamaged and/or damaged SLOWPOKE fuel rods
- up to eighteen (18) NRU or NRX fuel assemblies. Fuel assemblies may be cropped. NRU fuel assemblies have the flow tube removed. NRX fuel assemblies/rods must be placed into the fuel rod caddy assembly as criticality analysis applied the fuel rod caddy as geometry constraints. Note, the use of the caddy plug is not required for NRU or NRX shipments. Each basket tube is limited to the equivalent content of one assembly. One single fuel type may be loaded into one NRU/NRX basket assembly. NRU or NRX undamaged and damaged fuel assemblies/rods will be loaded into an 18 tube basket.
- up to eighteen (18) NRU/NRX caddies loaded with EFN rods, Booster rods, or Moly targets. EFN rods, Booster rods, or Moly targets must be placed into the NRU/NRX caddy as criticality analysis applied the caddy as geometry constraints. There is one caddy per fuel tube. One single fuel type may be loaded into one NRU/NRX caddy. EFN and Moly targets may be loaded into a single package. Booster rods may not be mixed with EFN or Moly rods. Undamaged and damaged material is permitted for transport. Rods/targets or segments/fragments thereof smaller than 6 inches in length require the use of a caddy plug
- 4 HEUNL containers. Containers shall be empty or filled with HEUNL material, such that a minimum under filled cavity void of one gallon exists.
- One SLOWPOKE fuel core. The SLOWPOKE fuel core contains up to 298 undamaged SLOWPOKE fuel rods, the upper and lower plates, and center tube.
- Up to eighteen (18) WESF capsules or up to two (2) BUP-500 capsules.
- up to 4,000 lbs of solid, irradiated and contaminated hardware, which may include fissile material less than a Type A quantity and meeting the exemptions of 10 CFR 71.15, paragraphs (a), (b) and (c). Total allowed mass includes the weight of spacers, shoring and dunnage.

Table 1.1-1 Terminology and Notation (Continued)

	• up to sixteen (16) transfer tubes filled with LANL MOX Fuel Rods. Transfer Tubes must be loaded in the PWR/BWR Transport Can Assembly including the Divider Assembly. Transfer Tube Spacers are required at the top and bottom end of each tube. Transfer Tube Spacers may be used to separate contents but are not required. Empty Transfer Tubes without spacers may be loaded. Different LANL MOX fuel types may be loaded in the same package but only one fuel type may be loaded into any Transfer Tube. Also, only one (1) Transfer Tube containing one (1) 530-000 type rod may be included in the cask payload. See Table 1.2-20 for additional limitations.
Impact Limiters	Aluminum honeycomb energy absorbers located at the ends of the cask.
Intact LWR Fuel (Assembly or Rod)	Spent nuclear fuel that is not Damaged LWR Fuel, as defined herein. To be classified as intact, fuel must meet the criteria for both intact cladding and structural integrity. An intact fuel assembly can be handled using normal handling methods, and any missing fuel rods have been replaced by solid filler rods that displace a volume equal to, or greater than, that of the original fuel rod.
Damaged LWR Fuel (Assembly or Rod)	Spent nuclear fuel that includes any of the following conditions that result in either compromise of cladding confinement integrity or recognition of fuel assembly geometry. 1. The fuel contains known or suspected cladding defects greater than a pinhole leak or a hairline crack that have the potential for release of significant amounts of fuel particles. 2. The fuel assembly: i. is damaged in such a manner as to impair its structural integrity; ii. has missing or displaced structural components such as grid spacers; iii. is missing fuel pins that have not been replaced by filler rods that displace a volume equal to, or greater than, that of the original fuel rod; iv. cannot be handled using normal handling methods. 3. The fuel is no longer in the form of an intact fuel assembly and consists of, or contains, debris such as loose pellets, rod segments, etc.

Table 1.1-1 Terminology and Notation (Continued)

Damaged Fuel (TRIGA)	TRIGA fuel (elements and cluster rods) with known or suspected clad breach (i.e., cladding defects that permit the release of gas from the interior of the rod and/or allow water intrusion into the clad to fuel gap while submerged).
Fuel Debris (TRIGA)	TRIGA damaged fuel that does not maintain its structural integrity, including fuel particles, fuel debris, and broken fuel rods.
Degraded ANSTO Fuel	ANSTO fuel elements (Mark II MOATA, Mark III Spiral, and Mark IV DIDO fuel) that have corrosion, destructive examination and/or mechanical damage to the fuel plates, but are structurally acceptable for transport (i.e., will not result in appreciable fuel debris formation under transport conditions). Fuel elements may be disassembled and plates may contain significant corrosion or mechanical damage in nonfueled plate areas; fuel elements may have sections of the fueled plate removed for examination; or fuel elements may have fuel core exposure due to through-clad corrosion or mechanical damage. The fuel (core material) area exposed may not exceed 5% of the total fueled cross-sectional area of the element.
Undamaged Aluminum-Based Fuel	Aluminum-based reactor fuel plates/elements that are structurally sound, but may have fuel core exposure due to corrosion or mechanical damage of the clad. Through-clad corrosion and/or mechanical damage is limited to 5% of the fueled surface area of the element.
TPBAR	Tritium Producing Burnable Absorber Rod
Irradiated Fuel Material (IFM)	High-Temperature Gas-Cooled Reactor (HTGR/IFM) and Reduced-Enrichment Research and Test Reactor (RERTR/IFM) type TRIGA fuel entities produced by General Atomics.
PULSTAR Fuel Element	PULSTAR fuel rod. May be contained in either assembly, rod holder or can form for shipment. PULSTAR fuel elements may be intact or damaged.
Damaged PULSTAR Fuel Element	PULSTAR fuel rods having cladding failures greater than hairline cracks or pinhole leaks. The damaged fuel definition for PULSTAR fuel elements includes fuel debris. Damaged PULSTAR fuel elements may also be referred to as failed and must be transported in either of two types of PULSTAR cans.

Table 1.1-1 Terminology and Notation (Continued)

Irradiated Hardware	Solid, irradiated and contaminated fuel assembly structural or reactor internal component hardware, which may include fissile material, provided the quantity of fissile material does not exceed a Type A quantity and does not exceed the exemptions of 10 CFR 71.15, paragraphs (a), (b) and (c). Authorized quantity of irradiated hardware and components is limited to 4,000 lbs (including spacers, dunnage and containers) and a gamma source term as defined in Table 1.2-13.
MOX Fuel Rods	The term as used in this SAR is defined as irradiated or unirradiated mixed uranium-plutonium oxide (MOX) fuel rods. The MOX fuel rods can be made with plutonium having various compositions of plutonium isotopes. The evaluated mixes of the various grades of plutonium are defined in the shielding (Chapter 5) and criticality (Chapter 6) evaluations.
Damaged SLOWPOKE Fuel Rods in a SLOWPOKE Fuel Canister	SLOWPOKE fuel rod with visible damage to the clad and fuel debris. Damage to the fuel rods may be the result of through-clad corrosion and/or mechanical damage. Damaged fuel may include any size fuel section, including fuel debris. All SLOWPOKE fuel rods, damaged or undamaged, and fuel debris must be placed into the SLOWPOKE fuel canister. The SLOWPOKE fuel canister maintains a boundary for gross release of fuel material.
Undamaged NRU or NRX Fuel Assembly	NRU HEU and NRX HEU contain uranium aluminum alloy fuel meat. NRU LEU fuel meat is U-Al-Si. Fuel assemblies may be cropped. NRU fuel assemblies have their flow channel removed. Fuel rod clad may show signs of mechanical damage or corrosion provided structural integrity is maintained and that there is no known clad through-wall damage (i.e., fuel exposure). Loose rods, up to the equivalent number of a fuel assembly, are considered to be undamaged provided they retain their structural integrity and meet the clad requirements. Loose rods shall be placed into a caddy. Undamaged fuel may be cropped, i.e., non-fuel bearing components of the fuel assemblies may be removed (integrity of the rod array is maintained).

Table 1.1-1 Terminology and Notation (Continued)

Damaged NRU or NRX Fuel Assembly, Rod, or Rod Segments	Fuel assemblies, loose rods or rod segments that do not meet the structural or clad integrity requirements of the undamaged NRU or NRX fuel assembly are classified as damaged. Loose fuel rods defined as damaged, or rod segments, shall be loaded in the NRU/NRX caddy prior to placement into the NRU/NRX basket. Note, the use of the caddy plug is not required for NRU or NRX shipments. Damaged NRU assemblies may be loaded into the NRU/NRX basket tube without use of a caddy. Damaged NRX assemblies shall be loaded into the NRU/NRX basket tube with the use of a caddy. Note, the use of the caddy plug is not required for NRU or NRX shipments. NRU/NRX basket and basket lid, including screens, provide the gross material boundary for damaged fuel (i.e., gross material is retained in basket tube). Clad through-wall damage is limited to 5% of the fueled surface area. Clad removed (i.e., clad originally associated with the rod but no longer present) is limited to 2% of the fueled surface area. Clad through-wall damage without loss of cladding from the system may occur due to processes such as clad splitting. Fuel assemblies with exposed fuel material resulting from the cropping process are considered damaged but do not require use of a caddy (NRU only) provided loose, fuel containing, rod segments are not loaded into the same basket opening as a cropped assembly.
Damaged and Undamaged EFN Rods, Booster Rods, or Moly Targets	Rods/targets or rod/target segments/fragments must be loaded into NRU/NRX caddies. Only limited amount of cladding integrity is credited for full basket loads of EFN rods. Therefore, there are no cladding damage limits except for full cask loads of EFN rods which require the equivalent of 30% clad (fueled surface area). Rods/targets or segments/fragments thereof smaller than 6 inches in length require the use of the NRU/NRX caddy plug.
HEUNL Container	A stainless steel container for highly enriched uranyl nitrate liquid (HEUNL). The container is comprised of a welded lid, shell, bottom plate structure with lid penetrations for fill and drain operations. HEUNL is a solution containing uranyl nitrates, various other nitrates, and water.

Table 1.1-1 Terminology and Notation (Continued)

Undamaged SLOWPOKE Fuel Rods in the SLOWPOKE Fuel Core	SLOWPOKE fuel rods that are structurally sound, but may have fuel core exposure due to corrosion or mechanical damaged of the clad SLOWPOKE fuel rods that are "Undamaged Aluminum-Based Fuel" therefore limiting through-clad corrosions and/or mechanical damage of the clad to 5% of the fuel surface area of the element.
SrF_2 Capsules	SrF_2 (Strontium Fluoride) capsules are separated into two forms, the WESF capsules, and the BUP-500 capsules. The WESF capsules consist of Sr-90 byproduct material sealed within an inner and an outer capsule. The BUP-500 capsules are the heat source assembly from the BUP-500 Radioisotope Thermoelectric Generator (RTG).
LANL MOX Fuel Rods	Mixed oxide fuel rod variants including those described as PNNL, Exxon, UO_2, ROD1063, 530-000, NIS5, characterized in Table 1.2-20.
Universal Capsule Sleeve Assembly	A stainless steel, cylindrical container that holds up to six (6) WESF capsules in two elevations of three (3) capsules each.

1.1 Introduction

The NAC-LWT spent-fuel shipping cask has been developed by NAC International (NAC) as a safe means of transporting radioactive materials authorized as approved contents. The cask design is optimized for legal weight over the road transport, with a gross weight of less than 80,000 pounds. The cask provides maximum safety during the loading, transport, and unloading operations required for spent-fuel shipment. The NAC-LWT cask assembly is composed of a package that provides a containment vessel that prevents the release of radioactive material. The actual containment boundary provided by the package consists of a 4.0-inch thick bottom plate, a 0.75-inch thick, 13.375-inch inner diameter shell, an upper ring forging, and an 11.3-inch thick closure lid. The cask lid closure is accomplished using twelve, 1-inch diameter bolts. The cask has an outer shell, 1.20 inches thick, to protect the containment shell and also to enclose the 5.75-inch thick lead gamma shield. Neutron shielding is provided by a 5.0-inch thick neutron shield tank with a 0.24-inch (6mm) thick outer wall, containing a water/ethylene glycol mixture and 1.0 minimum weight percent (wt %) boron. The neutron shield tank system includes an expansion tank to permit the expansion and contraction of the shield tank liquid without compromising the shielding or overstressing the shield tank structure. Aluminum honeycomb impact limiters are attached to each end of the cask to absorb kinetic energy developed during a cask drop, and limit the consequences of normal operations and hypothetical accident events.

The NAC-LWT is a legal weight truck cask designed to transport the following contents:

- 1 PWR assembly;
- up to 2 BWR assemblies;
- up to 15 sound metallic fuel rods;
- up to 42 MTR fuel elements;
- up to 42 DIDO fuel assemblies;
- up to 25 high burnup PWR fuel rods (including up to 14 rods classified as damaged, or having FeCrAl based alloy cladding)[1];
- up to 25 high burnup BWR fuel rods (including up to 14 rods classified as damaged, or having FeCrAl based alloy cladding)[1];
- up to 16 PWR MOX fuel rods (or a combination of 16 PWR MOX and UO_2 PWR rods) and up to 9 BPRs
- up to 9 damaged metallic fuel rods;
- up to 3 severely damaged metallic fuel rods in filters;
- up to 140 TRIGA intact or damaged fuel elements/fuel debris ("TRIGA" is a Trademark of General Atomics);
- up to 560 TRIGA intact or damaged fuel cluster rods/fuel debris;
- 2 GA IFM packages;
- up to 300 TPBARs (of which up to three can be prefailed) in a consolidation canister;

[1] PWR and BWR fuel rods may be transported in either a fuel assembly lattice (skeleton) or in a fuel rod insert. The fuel rod insert may contain PWR instrument/guide tubes, BWR water/inert rods, or unfueled rods/rod segments in addition to the fuel rods. Fuel rods may be composed of segments.

- up to 25 TPBARs (of which up to three can be prefailed) in a rod holder;
- up to 55 TPBARs segmented during post-irradiation examination (PIE), including segmentation debris;
- up to 700 PULSTAR fuel elements (intact or damaged);
- up to 42 spiral fuel assemblies;
- up to 42 MOATA plate bundles;
- up to 800 SLOWPOKE undamaged and/or damaged fuel rods contained in up to eight (8) SLOWPOKE fuel canisters (up to 100 fuel rods each);
- up to 18 NRU or NRX undamaged or damaged fuel assemblies (one per flow tube) or the equivalent number of loose rods as an assembly per basket tube (12 rods for NRU or 7 rods for NRX);
- up to eighteen (18) NRU/NRX caddies loaded with EFN rods, Booster rods, or Moly targets;
- 4 HEUNL containers (empty or filled such that a minimum under filled cavity void of one gallon exists);
- One SLOWPOKE fuel core containing up to 298 undamaged SLOWPOKE fuel rods;
- up to 18 WESF capsules, or up to 2 BUP-500 capsules;
- up to 4,000 lbs of solid, irradiated and contaminated hardware, which may include fissile material less than a Type A quantity and meeting the exemptions of 10 CFR 71.15, paragraphs (a), (b) and (c). Total allowed mass includes the weight of spacers, shoring and dunnage; or
- up to sixteen (16) transfer tubes filled with LANL MOX Fuel Rods.

PWR or BWR fuel rods may be placed in a fuel rod insert (also referred to as a rod holder) or in a fuel assembly lattice. The fuel rod holder is composed of a 4×4 or a 5×5 rod array. An alternate 5×5 rod holder is designed to contain an oversize nonfuel-bearing component (e.g., CE guide tube or BWR water rod). The alternative configuration reduces fuel-bearing capacity to a maximum of 21 fuel rods. The lattice may be irradiated or unirradiated. Up to 14 of the fuel rods may be classified as damaged. Damaged fuel rods must be placed in a rod holder. Damaged fuel rods or rod sections may be encapsulated to facilitate handling prior to placement in the rod holder. PWR rods may include Integral Fuel Burnable Absorber (IFBA) rods.

PWR MOX fuel rods (or a combination of PWR MOX and UO_2 PWR fuel rods) are required to be loaded in a screened or free flow PWR/BWR Rod Transport Canister with a 5×5 insert. PWR MOX/UO_2 rods may include Integral Fuel Burnable Absorber (IFBA) rods.

Damaged TRIGA fuel elements, cluster rods and fuel debris are required to be loaded in a sealed damaged fuel canister (DFC).

PULSTAR fuel elements may be configured as intact fuel assemblies, may be placed into a fuel rod insert, i.e., a 4×4 rod holder (intact elements only), or may be loaded into one of two can designs, designated as the PULSTAR screened fuel can or the PULSTAR failed fuel can. Damaged PULSTAR fuel elements and nonfuel components of PULSTAR fuel assemblies must be loaded into cans. PULSTAR fuel cans may only be loaded into the top or base module of the

28 MTR basket assembly. Intact PULSTAR fuel assemblies and intact PULSTAR fuel elements in a TRIGA fuel rod insert may be loaded in any basket module.

SLOWPOKE undamaged or damaged fuel rods will be loaded into 5 x 5 or 4 x 4 tube arrays with four (4) tube arrays placed in each screened SLOWPOKE Canister. A maximum of up to eight (8) SLOWPOKE Canisters may be loaded in two MTR-28 basket modules (top and top intermediate) with three (3) center row cells fitted with cell block spacers. Damaged fuel rods that cannot be accommodated in the 5 x 5 tube array will be loaded into the larger diameter 4 x 4 tube array. Empty lower intermediate and bottom MTR-28 basket modules will be installed as axial spacers for the two loaded basket modules.

NRU or NRX undamaged or damaged fuel assemblies/rods will be loaded into an 18 tube basket. Assemblies or loose fuel rods may be placed into an aluminum caddy which in turn is placed into the basket tube. Note, the use of the caddy plug is not required for NRU or NRX shipments. NRX fuel assemblies/rods must be placed into the fuel rod caddy assembly as criticality analysis applied the fuel rod caddy as geometry constraints. The NRU/NRX basket is spaced to the top of the cask cavity.

EFN rods, Booster rods, and Moly targets must be loaded in the NRU/NRX caddy with one caddy per tube in the NRU/NRX baskets. The NRU/NRX basket is spaced to the top of the cask cavity.

Four HEUNL containers may be loaded directly into the NAC-LWT cask cavity. Each container may be filled to the point when material reaches the vent port during fill operations. Partially filled containers are permitted for transport. A vent/syphon tube is installed and sized at fabrication to provide a minimum 1 gallon free volume during the vertical fill procedure.

One SLOWPOKE fuel core will be loaded into a SLOWPOKE fuel core basket. A spacer is bolted to the basket lid and will locate the fuel core at the bottom of the fuel core basket. The fuel core basket will be placed on top of empty intermediate and bottom MTR-42 basket modules.

WESF capsules must either be loaded in the WESF capsule container assemblies or in the UCS assemblies. The WESF capsule container is loaded within the WESF basket assembly with a maximum of one capsule per container opening. The LWT WESF lid spacer and all six (6) WESF capsule container assemblies must be installed. The UCS assemblies (also referred to as UCSs) are loaded in the UCS basket assembly, which consists of a PWR basket assembly and UCS insert assembly. The UCS basket assembly is loaded with a maximum of three (3) UCSs or one (1) or more UCSs with up to two (2) UCS spacer assemblies. Within each UCS, up to six (6) capsule spacers may be used. Capsule spacers shall be placed in empty UCS locations above or

below a WESF capsule, as needed, to maintain position of the WESF capsule. The UCS LWT lid spacer must be installed.

BUP-500 capsules must be loaded in the BUP-500 basket assembly. A single BUP-500 capsule may be loaded with a short spacer in place of the omitted BUP-500 capsule.

Irradiated hardware may be loaded directly into the NAC-LWT cavity or preloaded into a canister or cage. Stainless steel dunnage may be used to limit the movement of the irradiated hardware within the cask cavity. The maximum gamma source term of the irradiated hardware shall be limited to that defined for the authorized PWR content condition as described in Chapter 5.

The NAC-LWT cask provides a testable containment for the contents during both normal operations and hypothetical accident conditions, satisfying the requirements of 10 CFR 71.51. Any number of NAC-LWT casks may be shipped at one time, each on its own vehicle.

The NAC-LWT has two leaktight configurations as defined by ANSI N14.5. The standard configuration is provided by a closure lid with a metal containment seal and alternate vent and drain port covers provided with Viton® containment O-rings. The second configuration is provided by a closure lid with a metal containment seal and Alternate B vent and drain port covers provided with metal seals. The metal port cover seal containment configuration is required to be utilized for all TPBAR contents and may be used for other contents. The NAC-LWT standard, Viton® O-ring containment configuration is not authorized for TPBAR contents.

NAC-LWT casks may be shipped in a closed International Shipping Organization (ISO) container when containing all fuel contents other than PWR and BWR fuel assemblies. NAC-LWT casks containing PWR and BWR fuel assemblies are to be transported on an open trailer with a personnel barrier.

The terminology of MTR, DIDO and TRIGA fuel elements will be used independent of whether the element contains low, medium or high enriched uranium (i.e., LEU, MEU or HEU), except when required for analysis or loading purposes.

TPBAR contents may be placed into a consolidation canister, waste container or 5×5 rod insert (also referred to as a rod holder) in a PWR/BWR Rod Transport Canister. Segmented TPBARs are only permitted within the waste container. The three TPBAR shipping configurations are individually placed within one of the two TPBAR basket assemblies (one with a 7-inch bottom spacer and the alternative TPBAR basket assembly with a 6.5-inch alternative bottom spacer), depending on container configuration.

LANL MOX Fuel Rods must be loaded in the PWR/BWR transport can assembly using a maximum of sixteen (16) transfer tubes. A Transfer Tube spacer is required at the top and

bottom end of the tube. Transfer Tube spacers may be used to separate contents but are not required. The PWR/BWR Transport Can Assembly may be used with any of the lids and corresponding PWR insert and basket assembly. Different LANL MOX fuel types may be loaded in the same package but only one fuel type may be loaded into any Transfer Tube. Table 1.2-20 provides additional limitations on the number of LANL MOX Fuel Rods allowed in a given transfer tube, along with the maximum number of transfer tubes with a given type of fuel rod allowed in a single package.

1.2 Package Description

This section presents a basic description of the NAC-LWT cask and the contents that may be transported. Drawings of the cask are presented within Section 1.4.

1.2.1 Packaging

1.2.1.1 Gross Weight

Gross shipping weight of the NAC-LWT spent-fuel shipping cask is approximately 52,000 pounds for the package. When mounted on the transport vehicle, the cask and vehicle weight is less than the 80,000-pound maximum for legal weight transport. A summary of overall component weights, detailed in Table 2.2.1-1, is listed below:

Component	Weight (pounds)
Cask Body	43,412
Closure Lid and Bolts	941
Payload and Basket	4,000 maximum
Impact Limiters	2,855
Total	51,208
SAR Analysis Weight	52,000

1.2.1.2 Materials of Construction, Dimensions, and Fabrication

The NAC-LWT cask body consists of Type 304 stainless steel forgings and closure lid with Type XM-19 stainless steel shells. Type XM-19 is a high strength stainless steel and is used in the inner and outer structural shells, which are more highly stressed than other cask components that use the more common Type 304 stainless steel. A lead gamma shield and a borated ethylene glycol/water solution neutron shield are utilized for radiation shielding. The cask provides the containment boundary for the payload and also acts as an environmental barrier. The cask is protected at each end by energy absorbing impact limiters, which consist of crushable aluminum honeycomb material with a thin aluminum shell. The impact limiters also provide thermal insulation, which protects the lid seals during the hypothetical fire transient event, although this thermal protection is conservatively neglected in this report. The cask is passively cooled because of its relatively low maximum heat loading of 2.5 kilowatts (kW). The overall arrangement of the NAC-LWT cask and design details are presented in the drawings within Section 1.4. The cask body, closure lid, and impact limiters are more fully described in the following sections.

1.2.1.2.1 Cask Body

The cask body is fabricated from Type 304 and Type XM-19 stainless steel. A poured lead gamma shield forms an annulus 5.75 inches thick and 174.9 inches long. The lead is enclosed between a 0.75-inch thick, 13.375-inch inner diameter Type XM-19 stainless steel inner shell and a 1.20-inch thick, 28.78-inch outer diameter Type XM-19 stainless steel outer shell. The Type 304 stainless steel bottom end forging of the cask is 4.0 inches thick, and the bottom also contains a 3.0-inch thick, 20.75-inch diameter lead disk enclosed by a 3.5-inch thick Type 304 stainless steel end cover.

As discussed in Chapter 8, installation of the lead into the cask is done in a carefully controlled manner. Temperatures of the inner and outer shells are continuously monitored and controlled during the lead pour and cooldown process. In addition, the welds connecting the inner and outer shells to the bottom end forging are not made until after the cooldown process is complete and the entire cask has reached a uniform temperature. Dimensional checks for straightness and ovality are also made before and after lead pour.

The upper ring forging is a Type 304 stainless steel ring 14.25 inches thick. This forging is machined to accept the closure lid and contains the penetrations to the cask cavity for the vent and fill/drain valves. Four lifting trunnions are welded to the forging to permit cask lifting and handling with a nonredundant or redundant lifting yoke.

Neutron shielding is provided by an ethylene glycol/water jacket that surrounds the 1.20-inch thick Type XM-19 stainless steel outer shell and is designed to axially blanket the active fuel length of the more common light water reactor fuels. The neutron shield region is 5.00 inches thick and 164.0 inches long. The external surface of the shield tank is a 0.24-inch thick Type 304 stainless steel shell with 0.50-inch thick end plates. An expansion tank for the neutron shield is provided to allow for thermal expansion and contraction of the liquid and is connected to the shield tank by a siphon tube. The liquid contains a solution of ethylene glycol/water and 1.0 wt % boron, which is added to reduce the secondary gamma radiation component.

The inner shell, end forgings, and the closure lid establish a cask cavity that is 177.9 inches long and 13.375 inches in diameter.

The weight of the cask body is approximately 43,412 pounds. The overall length of the cask body is 199.8 inches, and the maximum outside diameter is 44.24 inches at the neutron shield expansion tank.

1.2.1.2.2 Closure Lid

The cask closure lid is a Type 304 stainless steel forging 11.3 inches thick. The lid is machined to recess into the upper ring forging when it is installed on the cask. The closure lid and upper end forging are machined to provide a series of steps to prevent radiation streaming through the gap between the components. The closure lid attaches to the cask using 12 bolts with a 1-inch diameter. The containment boundary seal is achieved by a metallic O-ring captured in a groove machined on the underside of the closure lid (a second O-ring is provided to allow seal testing of the containment boundary O-ring). The O-rings mate against a machined sealing surface of the cask upper ring forging.

1.2.1.2.3 Impact Limiters

The impact limiters are fabricated from aluminum. The aluminum "honeycomb" has a crush strength of 3,500 psi. The honeycomb is a multidirectional crushable material that does not actually resemble a hexagonal honeycomb structure. The impact limiter is attached to the cask body at four locations. The outside diameter of the top end impact limiter is 65.25 inches and the bottom end impact limiter has a 60.25-inch diameter. The top and bottom impact limiters are 27.8 and 28.3 inches long, respectively, and both overlap the ends of the cask body by 12.0 inches.

1.2.1.3 Valves and Testing

The closure lid and the alternate and Alternate B drain and vent port covers each have a seal test port. The seal test port accesses the volume between the two O-ring seals on the cover or lid permitting leakage testing to verify proper sealing. The vent and drain valves are not considered part of the containment boundary and are used during in-plant loading operations to access the cask cavity for water filling and draining, vacuum drying, helium backfilling, etc.

1.2.1.4 Heat Dissipation

There are no special devices utilized on the NAC-LWT cask for the transfer or dissipation of heat. The package is passively cooled, which is possible because of its relatively low maximum heat load of 2.5 kW. A more detailed discussion of the package thermal characteristics is provided in Chapter 3.

1.2.1.5 Coolants

There are no coolants utilized within the package other than the normal transportation atmosphere of air or helium, depending on content conditions.

1.2.1.6 Protrusions

There are no outer protrusions on the package other than the four external lifting trunnions, the longitudinal shear ring at the upper end of the cask, and the eight impact limiter attachment lugs, four near each end of the package. All of these protrusions are located within the envelope protected by the impact limiters. The closure lid and valve port covers are recessed into the cask body and do not protrude from the cask surface. Refer to the drawings in Section 1.4 for more detail.

1.2.1.7 Lifting and Tiedown Devices

Of the four trunnions located on the exterior of the package at the upper end forging, two are intended for lifting with a nonredundant lifting yoke and the other two are used with a redundant lifting yoke. The package lifting and tiedown features are described in more detail in Section 2.5.

1.2.1.8 Shielding

A 5.75-inch annulus of lead and 2.19 inches of steel are maintained between the cask contents and the exterior radial surface of the package for the attenuation of radiation. Five inches of borated water are also provided for neutron shielding. The bottom end of the cask provides 7.5 inches of steel and 3.0 inches of lead shielding, and the closure lid provides 11.3 inches of steel shielding. Further detail is provided in Chapter 5.

1.2.2 Operational Features

The NAC-LWT cask is intended to be simple to operate. The cask is designed to be easily loaded and handled at any nuclear facility. The outer surface of the cask is electropolished and the configuration of the exposed surfaces aids in decontamination. An optional sleeving arrangement is available to limit contact between the cask and the contaminated pool water during wet loading and unloading.

The closure lid of the cask and the two valve port covers (alternate and Alternate B designs) are one-piece fixtures designed for ease of handling and to maintain personnel dose rates as low as reasonably achievable (ALARA). The closure lid has built-in alignment grooves (i.e. key ways) to facilitate installation. The alternate and Alternate B port cover designs provide clearance for valves underneath the port cover. The inner O-rings on the closure lid and the vent and drain valve port covers are components of the cask containment boundary. For the transport of TPBAR contents and other contents requiring both leaktight and high-pressure containment capabilities, the cask is required to be configured with Alternate B drain and vent port covers incorporating metallic seals. For all other contents, the leaktight capable (i.e., no credible

leakage) alternate port covers incorporating Viton O-ring seals can be used. The transport arrangement drawings for approved contents are presented in Section 1.4.

An alternative drain tube, including a drain tube alignment ring, is required to be installed and utilized when loading and transporting modular fuel baskets (i.e., not full length) and canisters.

The impact limiters and the personnel barrier are designed to be removed and installed without the aid of supplemental lifting gear or fixtures. All approved content may be transported in an International Shipping Organization (ISO) container, except for PWR and BWR fuel assemblies. All operational features are readily apparent from the drawings provided in Section 1.4. Operational procedures are delineated in Chapter 7.

1.2.3 Contents of Packaging

The NAC-LWT cask is analyzed, as presented in this SAR, for the transport of the contents listed in Table 1.1-1 and Section 1.1.

Shipments in the NAC-LWT package shall not exceed the following limits:

1. The maximum contents weight shall not exceed 4,000 pounds.
2. The limits specified in Table 1.2-1 through Table 1.2-13 for the fuel and other radioactive contents shall not be exceeded.
3. Any number of casks may be shipped at one time, one cask per tractor/trailer vehicle.
4. The maximum decay heat shall not exceed the following: 2.5 kW for PWR fuel assemblies; 2.2 kW for BWR fuel assemblies; 2.3 kW for 25 high burnup PWR fuel rods; 2.1 kW for 25 high burnup BWR fuel rods; 2.3 kW for 16 PWR MOX/UO_2 fuel rods; 1.26 kW for MTR fuel; 1.05 kW for DIDO fuel assemblies with top spacer and 0.756 kW without top spacer; 1.05 kW for TRIGA fuel elements or fuel cluster rods; 13.05 W for GA IFM packages; 1.063 kW for 300 TPBARs; 0.195 kW for TPBAR segments; 0.089 kW for 25 TPBARs; 0.84 kW for the PULSTAR fuel contents; 0.659 kW for spiral fuel assemblies (0.109 kW per basket); 0.126 kW for MOATA plate bundles (21 W per basket); 5.0 W for SLOWPOKE fuel rods; 640 W for NRU/NRX fuel assemblies; 144W for EFN rods (8 W per caddy), 101 W for EFN/Moly mixed basket (8W per caddy for EFN rods and 0.8 W per caddy for Moly targets), 4W for Booster rods (0.2 W per caddy), 4.65 W for HEUNL; 45 W for the SLOWPOKE fuel core; 2.4kW for WESF (0.4kW per container assembly and 0.8kW per UCS with each elevation in the UCS limited to 0.4kW), 2.2kW for BUP-500; and 1.26 kW for solid, nonfissile, irradiated hardware, and 25Wfor LANL MOX Fuel Rods.
5. Radiation levels shall meet the requirements delineated in 10 CFR 71.47 or 49 CFR 173.441. The neutron shield tank may be drained for shipment of metallic fuel rods.
6. Surface contamination levels shall meet the requirements of 10 CFR 71.87(i) or 49 CFR 173.443.
7. Damaged TRIGA fuel elements and fuel debris (up to two equivalent elements) will be shipped in a sealed damaged fuel canister.

8. Damaged TRIGA cluster rod and fuel debris will be transported in a sealed damaged fuel canister (maximum of up to six equivalent fuel cluster rods).
9. MTR fuel elements may consist of any combination of intact or damaged highly enriched uranium (HEU), medium enriched uranium (MEU) or low enriched uranium (LEU) fuel elements that are enveloped by the parameters listed in Table 1.2-4 as supported by information presented in Table 5.1.1-2, Table 6.4.3-21, Table 6.4.3-22, Table 6.4.3-25 and Table 6.4.3-28. MTR fuel elements will be transported in a leaktight configuration NAC-LWT cask.
10. High burnup PWR fuel rods will be shipped in either a sealed, free flow or screened can.
11. High burnup BWR fuel rods will be shipped in either a sealed, free flow or screened can.
12. Up to 25 high burnup PWR or BWR fuel rods in a fuel assembly lattice or rod holder. Up to 14 of the fuel rods in a rod holder may be classified as damaged. Damaged fuel rods or rod sections may be placed into fuel rod capsules prior to placing them in the fuel rod holder. Typical failed fuel rod capsule configuration is shown in Figure 1.2.3-11.
13. Production TPBARs will either be shipped in an open top consolidation canister as shown in Figure 1.2.3-10 and assembled in the cask as shown in Figure 1.2.3-12, or shipped in a PWR/BWR Rod Transport Canister in accordance with License Drawing No. 315-40-104.
14. Intact PULSTAR fuel elements may be loaded into a fuel rod insert or the PULSTAR screened or failed fuel can.
15. Damaged PULSTAR fuel elements and nonfuel components of PULSTAR fuel assemblies shall be loaded into either a PULSTAR failed fuel or screened fuel can, and placed into the top or base module of the 28 MTR fuel basket. Damaged fuel, including fuel debris, may be placed in an encapsulating rod prior to loading in a PULSTAR can.
16. Any combination of spiral fuel assemblies or MOATA plate bundles, each loaded into separate ANSTO basket modules containing up to a total of 42 assemblies/bundles.
17. Segmented TPBARs will be shipped in a sealed, dry Waste Container as shown in Figure 1.2.3-16 and assembled in the cask as shown in Figure 1.2.3-17.
18. Solid, irradiated and contaminated hardware containing less than a Type A quantity of fissile material and meeting the exemptions of 10 CFR 71.15, paragraphs (a), (b) and (c), loaded directly into the cask or contained in a secondary container or basket. The irradiated hardware spacer will be installed to limit the axial movement of the hardware above the lead shielded region of the cask body. As needed, additional secondary containers, dunnage and shoring may be used to limit the movement of the contents during normal and accident conditions of transport.
19. PWR MOX fuel rods (or a combination of PWR MOX and UO_2 PWR fuel rods) are required to be loaded in a screened or free flow PWR/BWR Rod Transport Canister provided with a 5 × 5 insert.
20. Any combination of up to 7 degraded clad DIDO, spiral or MOATA plate elements/ bundles loaded into an aluminum screened DFC as shown Figure 1.2.3-18 placed in an ANSTO top basket module, with remainder of either ANSTO basket modules containing

MOATA plate bundles or spiral fuel elements or ANSTO-DIDO combination basket containing DIDO elements. Degraded aluminum-clad DIDO, spiral or MOATA plate elements/bundles will be transported in a leaktight configuration NAC-LWT cask.

21. Any combination of undamaged or damaged SLOWPOKE Fuel Rods contained in 5 x 5 or 4 x 4 rod insert assemblies loaded into screened aluminum Fuel Canisters (four rod insert assemblies per fuel canister) with a maximum of four (4) SLOWPOKE Canisters per MTR-28 top and upper intermediate basket module (maximum of eight canisters per NAC-LWT cask). Cell block spacers will be installed in the center three fuel cells for the loaded basket modules.
22. Maximum 18 NRU or NRX fuel assemblies or the equivalent number of loose rods. NRX assemblies or rods must be placed into a fuel rod caddy assembly for handling and geometry constraint. NRU fuel rods may be placed in a caddy. Note, the use of the caddy plug is not required for NRU or NRX shipments. Only a single fuel type (NRU or NRX) shall be loaded in a single NRU/NRX fuel basket assembly.
23. Maximum 18 NRU/NRX caddies containing EFN rods, Booster rods, or Moly targets. NRUX/NRX caddies are limited to 36 EFN rods, 16 Booster rods, 20 Short Moly Targets, or 36 double length Moly targets or the equivalent number in rod/target segments or fragments. Rods/targets or segments/fragments thereof smaller than 6 inches in length require the use of the caddy plug. All materials must be placed in a caddy and only a single type is permitted in a caddy. EFN rod and Moly targets caddies may be placed into the same package (EFN rods are limited to exterior basket tubes). Booster rod caddies may not be mixed with EFN rod or Moly target caddies in a single package.
24. Four HEUNL containers. Containers shall be empty or filled with HEUNL material such that a minimum under filled cavity void of one gallon exists.
25. One SLOWPOKE fuel core containing up to 298 undamaged SLOWPOKE fuel rods. The SLOWPOKE fuel core is packaged in the SLOWPOKE fuel core basket.
26. Maximum 18 WESF capsules, in WESF baskets with one WESF capsule per capsule container assembly opening (three capsules per container, six containers per basket).
27. Maximum 18 WESF capsules in three (3) UCSs (up to six capsules per UCS) in the UCS basket assembly.
28. Maximum 2 BUP-500 capsules with spacers on either side. A single BUP-500 capsule may be loaded with a short spacer installed in place of the second BUP-500 capsule.
29. Up to sixteen (16) transfer tubes filled with LANL MOX Fuel Rods subject to the limitations provided in Table 1.2-20. Different LANL MOX fuel types may be loaded in the same package but only one fuel type may be loaded into any Transfer Tube.

1.2.3.1 TRIGA Fuel and Basket Description

Two basic types of TRIGA fuel are to be transported in the NAC-LWT cask: TRIGA fuel elements and smaller fuel rods from TRIGA fuel cluster assemblies. TRIGA fuel elements are approximately 1-1/2 inches in diameter and are described in Section 1.2.3.1.1. TRIGA fuel

cluster rods are smaller; approximately 1/2-inch in diameter and are also described in Section 1.2.3.1.1.

Up to 140 TRIGA fuel elements in the form of: a) standard fuel elements – either aluminum clad or stainless steel clad; b) instrumented fuel elements – similar to standard fuel elements (aluminum clad or stainless steel clad), but containing thermocouple instrumentation; and c) fuel follower control rod elements (aluminum or stainless steel clad) – poison rods with a fuel follower in a single tube may be shipped in the NAC-LWT cask. Up to 560 TRIGA fuel cluster rods may be shipped.

Up to six equivalent TRIGA fuel cluster rods may be loaded and transported in a sealed damaged fuel can (DFC). Up to the equivalent of two TRIGA damaged fuel elements and debris may be loaded and shipped in a sealed DFC. The TRIGA transport baskets and DFCs are described in Section 1.2.3.1.2.

1.2.3.1.1 TRIGA Fuel

TRIGA Fuel Elements

The characteristics of the design basis TRIGA fuel element are presented in Table 1.2-4 and in Table 1.2-1 for the poisoned basket and in Table 1.2-2 for the nonpoisoned basket.

The fuel material in a TRIGA fuel element is a solid, homogeneous mixture of uranium-zirconium hydride alloy, i.e., a metal alloy fuel. Both the aluminum-clad and the stainless steel-clad TRIGA fuel elements are approximately 1.5-inch diameter rods by approximately 30 inches long. The fuel follower control rod elements range in length from 45 inches to 66.5 inches and are cut, as required, to fit the basket length. Instrumented fuel elements are identical to standard fuel elements with the exception of thermocouples and wires and lead-out tubing. The lead-out tubing needs to be detached prior to shipment in order for the instrumented fuel elements to fit into the standard element height envelope. The aluminum-clad TRIGA fuel element and instrumented fuel element, the stainless steel-clad TRIGA fuel element and instrumented fuel element, and the standard fuel follower control rod element are shown in Figure 1.2.3-1 through Figure 1.2.3-5, respectively.

TRIGA Fuel Cluster Rods

The fuel material in TRIGA fuel cluster rods is a solid, homogeneous mixture of uranium-zirconium-erbium hydride alloy, i.e., a metal alloy fuel. Erbium is a burnable neutron poison that is used in the fuel to enhance the flux profile along the length of the fuel rod, and conservatively ignored in the nuclear evaluations. The rods have a nominal diameter of 0.54 inch and are approximately 31 inches long. The rod cladding is Incoloy 800 material and is 0.015-inch thick, minimum. Instrumented rods are identical to the standard rods, with the

exception of thermocouples and wires. A diagram of the TRIGA fuel cluster rods, and the individual fuel pin (cluster rod) making up the cluster, is shown in Figure 1.2.3-6.
The active fuel region of a TRIGA fuel cluster rod is a maximum of 0.53 inch in diameter, 22.5 inches in length, and has an initial uranium enrichment of up to 95 percent for HEU material and 20 percent for LEU material. A compression spring is utilized to fill the space in the plenum region of the rod, and top and bottom plugs are used to seal the fuel within the rod. The design-basis TRIGA fuel cluster rod characteristics are summarized in Table 1.2-3, Table 1.2-4, and Tables 5.1.1-1, 5.1.1-2, 6.2.6-1 and 6.2.6-2. Axial fuel spacers, as shown on Drawing 315-40-085, may be used to axially position the TRIGA fuel elements, fuel inserts and DFCs. The axial spacers do not provide a safety function and are dunnage used to position the fuel elements to facilitate fuel handling. The total weight per basket module cell for the TRIGA fuel elements or cluster rods, inserts, spacer(s) and fuel cans, as applicable, shall be limited to a maximum of 80 pounds.

TRIGA Fuel Classification

The TRIGA fuel contents are divided into three categories based on fuel condition for evaluation, loading configuration and transport in the NAC-LWT:

1. Intact fuel (i.e., no cladding breach) is loaded directly into the TRIGA fuel basket modules (Section 1.2.3.1.2) with a maximum of four TRIGA fuel elements per loading position. Certain high ^{235}U content, LEU and HEU intact stainless steel TRIGA fuel elements, as defined in Table 1.2-2, are restricted to a maximum loading of three fuel elements per basket module cell in a top or bottom basket module only. To ensure that four fuel elements are not loaded into a cell containing high ^{235}U content fuel elements, a dummy TRIGA spacer tube is preinstalled in the basket prior to loading. Up to 16 intact cluster rods are loaded into fuel rod inserts (Drawing 315-40-096) that are inserted into the TRIGA fuel basket module cell openings. Intact TRIGA fuel elements and cluster rods may be loaded into a sealed DFC, if length permits.
2. Damaged TRIGA fuel elements and TRIGA fuel debris (up to the equivalent of two fuel elements) shall be loaded into a sealed DFC (Section 1.2.3.1.2), and then loaded into a top or base basket module.
3. Damaged TRIGA cluster rods and cluster rod fuel debris (up to the equivalent of six cluster rods) shall be loaded into a sealed DFC and then loaded into a top or base basket module.

1.2.3.1.2 TRIGA Fuel Baskets and Damaged Fuel Cans

The TRIGA fuel basket assembly configurations consist of five modules – a base module, three intermediate modules, and a top module. The three intermediate modules are interchangeable, but the base and top modules are required to be in their proper positions. Two basket configurations are available, “nonpoisoned” and “poisoned,” where the poisoned basket configuration utilizes borated steel plates for additional criticality control. Each module has up to seven cells (fuel positions) for loading TRIGA fuel elements or cluster rods. The center cell

of each module of the nonpoisoned basket configuration is blocked by a welded stainless steel baffle that prevents loading of that cell. The nonpoisoned configuration is also referred to as the 24-element basket or the 120-element loading, based on the maximum of 120 intact TRIGA fuel elements that may be loaded into the baskets in this configuration. The nonpoisoned configuration may also be loaded with a mixed loading of TRIGA fuel elements and TRIGA fuel cluster rods in separate cells of the basket module. The poisoned configuration is also referred to as the 28-element basket or the 140-element loading, based on the maximum of 140 intact TRIGA fuel elements that may be loaded into the baskets in this configuration. Additionally, the nonpoisoned configuration can accommodate up to 480 intact TRIGA fuel cluster rods, while the poisoned basket can hold up to 560 intact TRIGA fuel cluster rods.

Each basket module is a Type 304 stainless steel weldment consisting of longitudinal divider plates with circular support plates near each end; the top module also has a support plate at its midpoint due to its longer length. The poisoned basket modules contain four borated stainless steel plates that are seal welded to surfaces of the divider plates in the central region of the basket cross-section. The nonpoisoned basket modules are shown in Drawings 315-40-070, -071, and -072 and the poisoned basket modules are shown in Drawings 315-40-080, -081, and -082.

The nonpoisoned TRIGA fuel basket assembly in the NAC-LWT cask is shown in Drawing 315-40-079. The poisoned basket assembly in the NAC-LWT cask is shown in Drawing 315-40-084. In the poisoned basket configuration, an alternate assembly is presented that utilizes one base module and four intermediate modules, along with a spacer (Drawing 315-40-083). The spacer is utilized to fill the space differential in the cask cavity resulting from the use of an additional intermediate module, rather than a top module. This additional assembly configuration is provided for flexibility in situations where the extra length provided by the top module is not needed. The fuel basket modules are described in further detail in Section 2.6.12.8. Damaged TRIGA fuel and fuel debris shall be loaded into sealed DFCs.

The sealed DFC is a 3.25-inch outside diameter tube with a 0.065-inch thick wall. The bottom of the sealed fuel can includes a check valve and drain plug to facilitate draining of the can. The top of the sealed DFC is closed by a bolted lid that is sealed with a metallic O-ring and includes a diaphragm valve to facilitate draining, drying, and helium backfilling of the can. The sealed DFC is constructed of austenitic stainless steels as shown on Drawings 315-40-086, -087, and-088.

1.2.3.2 MTR and DIDO Fuel and Basket Description

The MTR fuel elements to be shipped are 33 to 57 inches long, including the upper and lower nonfuel-bearing hardware, which may be removed from the element prior to transport. The

MTR element fuel plates consist of a U-Al, U_3O_8-Al, or U_3Si_2-Al fuel meat clad with aluminum. The fuel plates are held in a parallel arrangement with two thick aluminum slotted pieces to form a fuel element. The active fuel region is typically 22.75 inches in height, and the fuel meat is typically 0.023-inch thick. MTR elements/plates may contain cadmium wires. A maximum 100-gram cadmium source is addressed in the shielding evaluations documented in Chapter 5. Axial fuel spacers and plates may be used in the cells of the basket modules to position MTR elements to facilitate fuel unloading and handling. The axial fuel spacers do not perform a safety function and are considered dunnage. The axial fuel spacers and plates are shown on Drawing 315-40-085.

A maximum of 42 MTR fuel elements has been analyzed for transport in the NAC-LWT cask. This configuration consists of up to seven fuel elements placed radially in each of the six axial fuel basket modules. Two alternate configurations of MTR fuel element loading provide for loads of 35 elements in five basket modules or 28 elements in four basket modules. HEU MTR fuel elements having > 380 g ^{235}U, but less than 460 g ^{235}U, shall have a minimum of 2.0 cm (0.8 inch) of nonfuel hardware and/or spacers/plates at both ends of the fuel element. The minimum 2.0 cm nonfuel hardware and/or spacer/plate dimension assures criticality control. The axial fuel spacer and plate design is shown on Drawing 315-40-085. For the shipment of MTR fuel elements (or an equivalent number of plates in a plate canister) having ^{235}U greater than 490 g per element, or greater than 23.5 g per plate (up to a maximum of 640 g per element or 32 g per plate), the maximum quantity of elements per basket module is limited to four, which are to be loaded in basket positions 4, 5, 6 and 7. Cell block spacers shall be installed in basket openings 1, 2 and 3 to block these cells from being inadvertently loaded with fuel elements. The cell block spacer design is shown on Drawing 315-40-085. Therefore, for the transport of elements of greater than 490 g ^{235}U , if only one element exceeds the 490 g (23.5 g per plate) limit, a maximum of four elements shall be loaded into the seven-element basket module and cell block spacers shall be placed in basket opening positions 1, 2 and 3.

Loose MTR fuel plates may be shipped in an MTR plate canister to facilitate handling. The contents of the canister are limited to the number of plates in the original intact fuel assembly, and the fuel plate dimensions and fuel masses must be bounded by the MTR fuel element limits in Table 1.2-4. The total weight per basket module cell for the fuel element, spacer(s) and fuel plate canister, as applicable, shall be limited to a maximum of 80 pounds.

A maximum of 42 DIDO fuel assemblies has been analyzed for transport in the NAC-LWT cask. Again, up to seven fuel assemblies may be placed radially in each of six axial fuel basket modules.

DIDO fuel assemblies are similar to MTR fuel elements in that the fuel bearing hardware consists of plates of fuel meat sandwiched by cladding. However, in DIDO fuel, the plates have

been formed into tubular elements that are arranged in a concentric configuration. Typical DIDO assemblies contain four of the concentric tubes.

MTR and DIDO fuel characteristics are presented in Table 1.2-4.

1.2.3.3 General Atomics Irradiated Fuel Material (GA IFM) and Basket Description

The GA IFM is made up of two separate types of fuel material—the High-Temperature Gas-Cooled Reactor (HTGR) type fuel and the Reduced-Enrichment Research and Test Reactor (RERTR) type fuel. Each type of IFM is packaged in its own unique Fuel Handling Unit (FHU). Figures 1.2-7 and 1.2-8 illustrate the HTGR and RERTR FHUs. Detailed drawings for the GA and IFM FHUs are in Section 1.4.

The HTGR IFM is comprised of fuel in four forms: fuel particles (kernels), fuel particles (coatings), fuel compacts (rods), and fuel pebbles. Fuel kernels are solid, spheridized, high-temperature sintered fully-densified, ceramic kernel substrate, composed of: UC_2, UCO, UO_2, $(Th,U)C_2$, or $(Th,U)O_2$. The as-manufactured enrichment of the HTGR fuel varies from ~10.0 to 93.15 wt % ^{235}U. Fuel coatings are solid, spheridized, isotropic, discrete multi-layered fuel particle coatings with chemical composition including pyrolitic-carbon (PyC) and silicon carbide (SiC). Fuel compacts are multi-coated ceramic fuel particles, bound in solid, cylindrical, injection-molded, high-temperature heat-treated compacts. The fuel compact matrix is composed of carbonized graphite shim, coke, and graphite powder. Fuel pebbles are multi-coated fuel particles, bound in solid, spherical injection-molded, high-temperature heat-treated pebbles. The fully-cured binding matrix is composed of carbonized graphite shim, coke, and graphite powder.

The RERTR IFM is comprised of 20 irradiated TRIGA fuel elements; 13 of the elements are intact and the remaining seven have been previously sectioned for examination purposes. Parameters characterizing the RERTR/TRIGA fuel elements are shown in Table 6.2.9-1. Three distinct mass loadings of uranium were used in the 20 TRIGA elements: 20, 30, and 45 wt % U; the average mass of the fueled portion of these elements is 551g with an enrichment of 19.7 wt % ^{235}U. The RERTR IFM consists of U-ZrH metal alloy fuel material and as a solid meets the requirement of 10 CFR 71.63.

Two GA IFM Fuel Handling Units (FHU) are intended for a single shipment in the NAC-LWT. The first IFM FHU contains HTGR type fuel and the second contains RERTR type fuel. Each IFM FHU consists of stainless steel weld-encapsulated primary and secondary enclosures. The FHUs are filled and sealed with air at atmospheric pressure. The two IFM FHUs are placed in the top of the NAC-LWT cavity with a bottom spacer to facilitate unloading of the IFM packages.

The GA IFM fuel characteristics are presented in Table 1.2-7.

1.2.3.4 PWR Fuel Assembly

The NAC-LWT cask is analyzed for the PWR fuel assemblies listed in Table 1.2-5. This table provides the dimensional and enrichment constraints for the PWR fuel. The burnup and decay heat limits are specified in Table 1.2-4.

The PWR fuel rod cladding is a zirconium alloy type (Zircaloy-2, Zircaloy-4, Zirlo, M-5, etc.). Minor variations of alloy composition have no impact on performance of cladding material.

1.2.3.5 BWR Fuel Assembly

The NAC-LWT cask is analyzed for the BWR fuel assemblies listed in Table 1.2-6. This table provides the dimensional constraints for the BWR fuel. The enrichment, burnup and decay heat limits are specified in Table 1.2-4.

The BWR fuel rod cladding is a zirconium alloy type (Zircaloy-2, Zircaloy-4, Zirlo, M-5, etc.). Minor variations of alloy composition have no impact on performance of cladding material.

1.2.3.6 TPBARs

The NAC-LWT cask is analyzed for the transport of three separate Tritium Producing Burnable Absorber Rod (TPBAR) content configurations.

For the transport of production TPBARs from the reactor facility to the DOE processing facility, an open (i.e., unsealed) stainless steel consolidation canister is utilized to contain up to 300 TPBARs, up to three of which can be prefailed (based on canister hydrostatic acceptance testing test pressure as indicated below). The characteristics of the production TPBARs are listed in Table 1.2-8. The consolidation canister assembly is shown in Figure 1.2.3-10. Up to 25 TPBARs may also be transported within the 5×5 rod holder located within the PWR/BWR Rod Transport Canister. For a TPBAR shipment, the transport canister is located within the TPBAR basket. Up to three of the 25 TPBARs located within the rod holder may be classified as prefailed (based on canister hydrostatic acceptance testing test pressure as indicated below).

Hydrostatic Pressure Test [psig]	Max. Tritium Per Cask [g]	
	2 Prefailed Rods	3 Prefailed Rods
≥450	425.5	403.7
≥650	540.0	540.0

The third transport configuration is for the shipment of segmented TPBARs, following post-irradiation examination (PIE), contained in a welded stainless steel waste container containing segments and debris from up to 55 TPBARs. The characteristics of the TPBAR PIE segments

are provided in Table 1.2-12. The waste container and extension weldment assembly is shown in Figure 1.2.3-16.

TPBARs are similar in size and nuclear characteristics to standard, commercial PWR, stainless steel-clad burnable absorber rods. The exterior of a typical TPBAR is a stainless steel clad tube. The internal components of the TPBAR are designed and selected to produce and retain tritium. Internal configurations differ for various TPBAR designs (see DOE reports provided in the Chapter 1 Appendices). The internal components of a typical TPBAR include a plenum spacer tube (getter tube), a spring clip or a plenum (compression) spring, pellet stack assemblies (pencils), and a bottom spacer tube. A pencil consists of a zirconium alloy liner around which lithium aluminate absorber pellets are stacked and then confined in a getter tube as shown in Figure 1.2.3-9. The unclassified design details of the various TPBAR designs are provided in the unclassified DOE documents and drawings provided in the Chapter 1 Appendices.

The transport assembly arrangements for the consolidation canister and waste container TPBAR content configurations are identical and include a closure lid spacer assembly, a TPBAR basket and Alternate B port covers with bolting installed. The detailed requirements for the NAC-LWT assembly are provided in license drawing 315-40-128 in Section 1.4. The overall payload arrangement for the NAC-LWT with the consolidation canister and waste container are shown in Figure 1.2.3-12 and Figure 1.2.3-17, respectively. For the transport of fewer than 300 TPBARs in the consolidation canister, stainless steel dunnage may be used to align and protect the contents. The weight and volume of the dunnage and the reduced TPBAR contents of the consolidation canister must be less than, or equal to, the weight and volume of 300 TPBARs. Up to 25 TPBPAR rods may also be transported in a PWR/BWR Rod Transport Canister in a NAC-LWT assembly as shown in License Drawing No. 315-40-104 (assembly 95).

The TPBAR content conditions are analyzed and evaluated for compliance with structural, thermal, containment and shielding conditions of the NAC-LWT in the appropriate SAR chapters. TPBARs do not contain fissile material and, therefore, criticality evaluations have not been performed. The operating procedures for the wet and dry loading and dry unloading of the TPBAR contents are provided in Chapter 7. The special leakage and pressure testing requirements for NAC-LWT casks intended for the transport of TPBAR contents are provided in Chapter 8.

1.2.3.7 PWR/BWR Fuel Rods

PWR and BWR fuel rods are transported within the fuel lattice (skeleton) or 4×4 or 5×5 inserts (rod holder). The rod holder is located within a free flow, screened or sealed PWR/BWR transport canister. (The rod holder may also contain a nonfuel-bearing irradiated hardware component [e.g., BWR water rod, PWR instrument/guide tube].)

The PWR and BWR fuel rod cladding is of Zirconium alloy type (Zircaloy-2, Zircaloy-4, Zirlo, M-5, etc.). Minor variations of alloy composition have no impact on performance of cladding material. No clad integrity is required for damaged fuel rods, which are limited to 14 per PWR/BWR transport canister. Sufficient clad structural properties may not be available for non-zirconium alloy-based cladding to justify that fuel rods will maintain undamaged configuration through all normal and accident condition. Therefore, up to 14 fuel rods of Iron-Chromium-Aluminum (FeCrAl) alloy based clad may be loaded in the PWR/BWR transport canister as they can be considered to fail during transport while maintaining evaluated safety margins (note the 14 limit represents the total of damaged zirconium alloy clad fuel rods plus the non-zirconium clad rods).). Chemical composition of the FeCrAl alloy must limit Cobalt-59 (cobalt) content to 1.2-gram Co-59 per kilogram of clad material (i.e., cobalt element limit is a maximum 0.12 wt%).

1.2.3.8 PULSTAR Fuel Element and Transport Configuration Description

PULSTAR fuel elements are transported in the NAC-LWT in the 28 MTR fuel basket assembly, which contains four modules with seven cells per module. The basket assembly is composed of a top module, a base module, and two intermediate modules (Dwgs 315-40-051, -049, and -050, respectively).

PULSTAR fuel elements may be loaded into the module cells in one of four configurations: a) intact PULSTAR fuel assemblies b) intact PULSTAR fuel elements loaded into the 4×4 TRIGA fuel rod insert (Dwg. 315-40-096); c) intact or damaged PULSTAR fuel elements, fuel debris and nonfuel-bearing components of PULSTAR fuel assemblies in the PULSTAR screened can (Dwg. 315-40-135); or d) intact or damaged PULSTAR fuel elements, fuel debris and nonfuel-bearing components of PULSTAR fuel assemblies in the PULSTAR sealed can (Dwg. 315-40-130). The contents of either can type are restricted to a quantity of fissile material and a total volume of material equivalent to 25 PULSTAR fuel elements. The sealed cask contents are restricted to the displaced volume of 25 intact PULSTAR fuel elements. The total cask payload shall not exceed 700 PULSTAR fuel elements. Loading of modules with mixed PULSTAR payload configurations is allowed, but PULSTAR cans, either screened or sealed, are restricted to loading in the base and top modules.

PULSTAR fuel elements are low enriched (< 7 wt %) uranium oxide rods, with zirconium alloy cladding. During reactor operation, 25 PULSTAR fuel elements are arranged in a rectangular 5×5 lattice, surrounded by a zirconium alloy box, and capped by top- and bottom-end fittings to form a PULSTAR fuel assembly. The nonfuel components of a PULSTAR fuel assembly are primarily aluminum and zirconium alloy and do not contain a significant activation source. A sketch of a PULSTAR fuel assembly is provided in Figure 1.2.3-13. Key physical, radiation

protection and thermal characteristics of the PULSTAR fuel assembly/elements are listed in Table 1.2-9.

The sealed and screened PULSTAR cans are stainless steel containers that: a) minimize the dispersal of gross fuel particles that may escape from damaged fuel element cladding and/or fuel debris; b) facilitate retrieval of the contents from the transportation cask; and c) confine damaged fuel and/or debris within a known volume to facilitate criticality control, maintain dose limits, and control thermal loads within the cask. PULSTAR fuel pellets, pieces, and debris may be placed in an encapsulating rod for handling purposes prior to placement into either a sealed or screened can. The encapsulating rod is not required and has no safety significance. In addition to fuel elements, the cans may contain fuel assembly hardware up to the total content weight limit specified in Table 1.2-9. For operational/retrievability purposes, stainless steel rod inserts may be used to position the PULSTAR fuel elements within the fuel rod insert. Total content weight shall not exceed the total weight limit specified in Table 1.2-9. The fuel rod insert is composed of a 4×4 grid of 0.75-inch OD × 0.065-inch wall stainless steel tubes. The tubes provide structural support for individual intact PULSTAR fuel elements during transport in the NAC-LWT.

Spacers may be used to axially position PULSTAR fuel contents near the top of the module for ease of loading and unloading operations. The spacers are provided for ease of operations and do not provide a safety function.

1.2.3.9 ANSTO Basket and Payload Description

Three basic fuel types are to be transported in the ANSTO baskets within the NAC-LWT cask: spiral fuel assemblies, MOATA plate bundles and DIDO elements. Spiral fuel assemblies are composed of cylindrical aluminum inner and outer shells connected by curved metallic fuel plates. Further detail on the spiral fuel assemblies is provided in Section 1.2.3.9.1. MOATA plate bundles are comprised of up to 14 MTR fuel plates. Further detail on the plate bundles is provided in Section 1.2.3.9.2. DIDO elements are described in Section 1.2.3.2. The spiral fuel assemblies, MOATA plate bundles and DIDO elements may be intact or may have degraded cladding and be disassembled. Note that spiral assemblies may be cropped by removing nonfuel-bearing hardware to fit within the basket tubes. Cropped spiral fuel assemblies are classified as intact fuel. Spiral, MOATA and DIDO having degraded cladding or disassembled may be placed in aluminum DFCs as shown on Figure 1.2.3-18 prior to loading into the top ANSTO basket module or assembly to facilitate handling during loading and unloading operations. DFCs containing fuel elements shall be limited to loading in the 7 cells of the top ANSTO basket module of a standard six-module ANSTO basket assembly or in the top ANSTO basket module of the ANSTO-DIDO combination basket assembly. The ANSTO-DIDO combination basket is an assembly of a top ANSTO module, four intermediate DIDO modules and one base DIDO

module. As the interfaces, weight and overall dimensions of the ANSTO and DIDO basket modules are essentially identical, the combination basket assembly is bounded by the structural, thermal and criticality analyses for the separate DIDO and ANSTO basket assemblies.

Up to 42 spiral fuel assemblies or 42 MOATA plate bundles may be loaded in an ANSTO basket assembly. Up to 7 intact DIDO, spiral or MOATA plate elements/bundles and/or degraded clad DIDO, spiral or MOATA plate elements/bundles in DFCs may be loaded in an ANSTO top module in either the standard ANSTO basket assembly or in the ANSTO-DIDO combination basket assembly. DIDO fuel elements loaded into an ANSTO top module in either the ANSTO basket assembly or the ANSTO-DIDO combination basket assembly will be limited to a maximum decay heat load of 10 W per element whether with or without a DFC. Spiral fuel elements loaded into DFCs shall be limited to a maximum decay heat load of 10 W per element. MOATA plate bundles loaded into DFCs shall be limited to a maximum decay heat of 1 W per bundle. The remaining 35 cells of the ANSTO-DIDO combination basket may be loaded with up to 35 intact DIDO fuel elements.

A full cask load of either the ANSTO basket assembly or the ANSTO-DIDO combination basket assembly contains 6 baskets of up to 7 fuel assemblies or plate bundles per basket. The mixed loading of ANSTO and ANSTO-DIDO combination basket assemblies as described previously containing spiral fuel assemblies, MOATA plate bundles or DIDO elements is authorized.

1.2.3.9.1 Spiral Fuel Assemblies

The design basis characteristics of spiral fuel assemblies are presented in Table 1.2-10. The fuel material in spiral fuel assembly plates is a solid, homogeneous mixture of uranium-aluminum alloy, i.e., a metal alloy fuel. The fuel meat of each plate is clad in aluminum. A set of 10 curved fuel plates is located between an inner and outer cylindrical aluminum shell. Fuel elements are cropped to fit axially within the basket envelope. Fuel material is not cut during the cropping operation. The fuel plates are located in a spiral pattern, maintaining a constant pitch between fuel plate centers. A sketch of the assembly cross-section is provided in
Figure 1.2.3-14.

1.2.3.9.2 MOATA Plate Bundles

The design basis characteristics of MOATA plate bundles are presented in Table 1.2-4. The fuel material in the plate bundle is a solid, homogeneous mixture of uranium-aluminum alloy, i.e., a metal alloy fuel. Each plate is clad in aluminum. A plate bundle is comprised of up to 14 fuel plates. Two thick (0.635 cm) aluminum nonfuel side plates support the fuel plate stack from two sides, making a possible total of 16 plates per bundle. At each axial end, the plates in the stack are connected by a pin. Spacing between plates is maintained by disk spacers placed onto the top

and bottom pins between each fuel plate and the aluminum side plates. A sketch of a typical MOATA plate bundle is provided in Figure 1.2.3-15.

1.2.3.10 Solid, Irradiated and Contaminated Hardware

The design basis characteristics of the solid, irradiated and contaminated hardware are provided in Table 1.2-13. As described in the content definition, the solid, irradiated and contaminated hardware may contain small quantities of fissile materials. Fissile materials in the irradiated hardware contents are acceptable if the quantity of fissile material does not exceed a Type A quantity and does not exceed the exemptions of 10 CFR 71.15, paragraphs (a), (b) and (c).

The irradiated hardware may be directly loaded into the NAC-LWT cask cavity, or may be contained in a secondary container or basket. As needed, appropriate component spacers, dunnage and shoring may be used to limit the movement of the contents during normal and accident conditions of transport.

To ensure that the movement of the irradiated hardware contents above the lead shielded length of the NAC-LWT cask body (i.e., the approximately upper 6.25 inches of the cavity length) is precluded, an Irradiated Hardware Lid Spacer as shown on Drawing No. 315-40-145 shall be installed for all irradiated hardware content configurations. The total installed height of the spacer is 6.5 inches. Therefore, the available cavity length for the irradiated hardware is approximately 171 inches. The NAC-LWT cask shall be assembled for transport as shown on NAC Drawing No. 315-40-01 with the irradiated hardware spacer installed on the lid.

A comparative shielding evaluation for a conservatively selected irradiated hardware transport configuration (i.e., a single line source with no self-shielding) or consideration of the additional shielding provided by additional spacers, dunnage, inserts or secondary containers is presented in Chapter 5. The evaluations show that the regulatory dose rate requirements per 10 CFR 71.47 for normal conditions of transport, or 10 CFR 71.51(b) under hypothetical accident conditions, are not exceeded.

1.2.3.11 PWR MOX Fuel Rods

The NAC-LWT cask is analyzed and evaluated for the transport of up to 16 PWR MOX fuel rods (or a combination of up to 16 PWR MOX and UO_2 fuel rods) loaded into a 5 × 5 insert placed in a screened or free flow PWR/BWR Rod Transport Canister. The authorized characteristics of the evaluated PWR MOX fuel rods are provided in Table 1.2-4. For mixed PWR MOX and UO_2 PWR fuel rod combinations, the UO_2 PWR fuel rods may have the identical heat load, burnup and cool time characteristics as the PWR MOX fuel rods.

In addition to the 16 PWR MOX fuel rods (or a combination of PWR MOX and UO_2 PWR fuel rods), up to 9 burnable poison rods (BPRs) may be loaded in the remaining openings in the 5 × 5 insert in the PWR/BWR Rod Transport Canister.

1.2.3.12 SLOWPOKE Fuel Rods in a SLOWPOKE Canister

SLOWPOKE fuel rods are transported in the NAC-LWT in the 28 MTR fuel basket assembly, which consists of four modules with seven cells per module. The basket assembly is composed of a top module, a base module, and two intermediate modules. Fuel load is limited to a maximum of four loaded cells per basket module, with fuel only loaded in the top and top intermediate modules. The lower intermediate and bottom modules are used as axial spacers and are not loaded. The center row of three cells within the basket modules containing fuel are not loaded and contain a blocking device in each opening to prevent inadvertent loading. Therefore, a cask load for SLOWPOKE fuel rods is limited to eight loaded cells per cask.

SLOWPOKE fuel rods must be loaded into a canister. The canister is a screened boundary providing gross particle control for damaged fuel material. Damaged and undamaged fuel may be mixed when loaded into the canister. Canister content is composed of 4x4 or 5x5 aluminum tube arrays that are stacked four high within the canister. Mixed load of 4x4 and 5x5 tube arrays are permitted in a canister. Based on the 5x5 tube arrays and four tube arrays per canister, the maximum content per canister is 100 SLOWPOKE fuel rods (or the equivalent quantity of damaged material).

SLOWPOKE fuel rods are composed of highly enriched (> 90 wt %) uranium-aluminum alloy fuel meat within aluminum cladding. During reactor operation ~300 rods form a reactor core. Criticality in a SLOWPOKE core is achieved by the use of a thick beryllium neutron reflector surrounding the core. A sketch of a SLOWPOKE fuel rod is provided in Figure 1.2.3-19. Key physical, radiation protection and thermal characteristics of the SLOWPOKE fuel rods are listed in Table 1.2-14.

The SLOWPOKE canister is constructed primarily of aluminum. A limited quantity of stainless steel is located within the canister lid structure. The canister is designed to: a) minimize the dispersal of gross fuel particles that may escape from damaged fuel rod cladding and/or fuel debris (note that metallic fuel is not expected to release significant gross particulate even with severe clad damaged); b) facilitate retrieval of the contents from the transportation cask; and, c) confine damaged fuel and/or debris within a known volume to facilitate criticality control, maintain dose limits, and control thermal loads within the cask. SLOWPOKE fuel pieces and debris may be placed into an aluminum tube structure located within the canister. The aluminum tubes provide structural support for individual fuel rods/pieces during transport in the NAC-LWT but are not required within the analysis to maintain safety limits.

1.2.3.13 NRU/NRX Fuel Assemblies or Fuel Rods

NRU/NRX fuel assemblies and fuel rods are transported in the NAC-LWT in an 18 tube basket. The basket assembly is composed of 18 fuel tubes arranged in two concentric rings. The basket is spaced towards the top of the cask cavity by a bottom basket spacer.

NRX fuel assemblies or loose fuel rods must be loaded into a fuel rod caddy assembly. Loose NRU fuel rods may be loaded into a caddy. Note, the use of the caddy plug is not required for NRU or NRX shipments. Mixed loading of NRU and NRX assemblies in a basket is not permitted. NRX assemblies are composed of (7) fuel rods and the NRU assemblies are composed of (12) fuel rods.

NRU/NRX HEU fuel rods are composed of highly enriched (> 90 wt%) uranium-aluminum alloy fuel meat within aluminum cladding. NRU LEU fuel meat is composed of <20% wt% ^{235}U enriched material composed of uranium-aluminum-silicon. NRU and NRX rods have a fin structure attached to the clad. The NRX rods have spiral fins to retain rod spacing. NRU assemblies in addition to the fins have a set of spacer disks assuring that rod pitch is maintained. A sketch of both NRU and NRX fuel assemblies is provided in Figure 1.2.3-20. Key physical, radiation protection and thermal characteristics of the NRU and NRX fuel assemblies are listed in Table 1.2-15.

NRU/NRX fuel assemblies, loose rods, or rod segments that do not meet the structural or clad integrity requirements of the undamaged NRU or NRX fuel assembly are classified as damaged. Loose fuel rods defined as damaged, or rod segments, must be loaded in the NRU/NRX caddy prior to placement into the NRU/NRX basket. Damaged NRU assemblies may be loaded into the NRU/NRX basket tube without use of a caddy. Note, the use of the caddy plug is not required for NRU or NRX shipments. Damaged NRX assemblies shall be loaded into the NRU/NRX basket tube with the use of a caddy. NRU/NRX basket and basket lid, including screens, provide the gross material boundary for damaged fuel (i.e., gross material is retained in basket tube). Clad through-wall damage is limited to 5% of the fueled surface area. Clad removed (i.e., clad originally associated with the rod but no longer present) is limited to 2% of the fueled surface area. Clad through-wall damage without loss of cladding from the system may occur due to processes such as clad splitting. Fuel assemblies with exposed fuel material resulting from the cropping process are considered damaged but do not require use of a caddy (NRU only) provided loose, fuel containing, rod segments are not loaded into the same basket opening as a cropped assembly. To address these definitions the “up to a fuel assembly” quantity of material is further evaluated. Analysis are also included to address loss of cladding (through-wall clad damage).

The NRU/NRX caddy is constructed of aluminum. The aluminum caddy provides geometry constraint to fuel rod movement. Due to the increased reactivity of NRX fuel relative to high

enriched NRU fuel, only NRX criticality evaluations credited this constraint. Note, the use of the caddy plug is not required for NRU or NRX shipments.

1.2.3.14 EFN Rods, Booster Rods or Moly Targets (Short and Double Length)

EFN Rods, Booster Rods, and Moly Targets are transported in the NAC-LWT in an 18 tube basket (NRU/NRX basket) in NRU/NRX caddies. Short and Double Length Moly targets are simply referred to as Moly targets unless otherwise noted.

Mixed loading of EFN rod caddies and Moly target caddies is permitted. Booster rod caddies are not allowed for loading with EFN rod caddies or Moly target caddies. Each payload type may not be mixed in a caddy.

EFN Rods, Booster Rods, and Moly Targets are composed of highly enriched (> 90 wt%) uranium-aluminum alloy fuel meat within aluminum cladding. Rods/targets have a fin structure attached to the clad. The EFN rods and Booster Rods were a component of an assembly prior to disassembly. Moly targets were part of a rod with multiple targets axially connected. Sketches of payload type are provided in Figure 1.2.3-22. Key physical, radiation protection, and thermal characteristics of the are listed in Table 1.2-18.

A distinction between undamaged and damaged material is not required as all rods/targets were evaluated considering complete or majority loss of clad with the damaged evaluation bounding undamaged (no significant clad through damage) condition. Segments/fragments of the rods/targets are permitted for loading providing total equivalent quantity limits in Table 1.2-18 are maintained. Rods/targets or segments/fragments thereof smaller than 6 inches in length require the use of the caddy plug.

1.2.3.15 HEUNL Containers

HEUNL material packaged in HEUNL containers may be directly loaded into the NAC-LWT cavity. Four containers must be packaged in the NAC-LWT for transport. The containers may be partially filled. [redacted] A sketch of the HEUNL container is provided in Figure 1.2.3-21. The container design is presented in NAC drawing 315-40-181. All hardware indicated on drawing 315-40-181 has been determined to be “Important to Safety” and has been evaluated, characterized and will be controlled in accordance with NAC’s QA Program as described in Section 1.3.

[redacted]

[redacted]

HEUNL material consists of a solution of uranyl nitrate, various other nitrates (primarily aluminum nitrate), and water. The solution may contain uranyl nitrates with up to 7.40 g/L ^{235}U. Key physical, radiation protection, and thermal characteristics of the HEUNL material are provided in Table 1.2.3-16.

1.2.3.16 SLOWPOKE Fuel Core

One SLOWPOKE fuel core containing up to 298 undamaged SLOWPOKE fuel rods may be transported in the NAC-LWT. The SLOWPOKE fuel core is packaged in the SLOWPOKE fuel core basket. A spacer is attached to the SLOWPOKE fuel core basket lid locating the fuel core at the bottom of the basket. The basket is transported with empty intermediate and bottom MTR-42 basket modules to provide axial spacing. The SLOWPOKE fuel core basket is therefore located next to the NAC-LWT cask lid.

The SLOWPOKE fuel core primary components are up to 298 undamaged SLOWPOKE fuel rods, a center tube, and upper and lower plates. SLOWPOKE fuel rods are composed of highly enriched uranium-aluminum alloy fuel meat within aluminum cladding. As discussed in Section1.2.3.12, criticality in a SLOWPOKE core during reactor operations is achieved by the use of a thick beryllium neutron reflector surrounding the core. The beryllium reflector is not part of the packaged contents. A sketch of a SLOWPOKE fuel rod is provided in Figure 1.2.3-19. Key physical, radiation protection and thermal characteristics of the SLOWPOKE fuel core, i.e., parameters documented in the analytical chapters to be safely transported, are listed in Table 1.2-17.

1.2.3.17 SrF_2 Capsules

There are two types of SrF_2 capsules, the WESF capsules, and the BUP-500 capsules.

For packages configured with capsule container assemblies; the WESF capsules must be loaded into the WESF capsule container assemblies prior to being loaded into the WESF basket assembly within the NAC-LWT cavity. The WESF LWT lid spacer and all six (6) WESF capsule container assemblies must be installed. A sketch of the WESF capsules is provided in Figure 1.2.3-23. The WESF capsule basket assembly design is presented in NAC drawing 315-40-191. The BUP-500 capsules must be loaded into the BUP-500 basket assembly within the

NAC-LWT cavity. One spacer must be installed on either side of a capsule. A single BUP-500 capsule may be loaded with a short spacer installed in place of the second BUP-500 capsule. A sketch of the BUP-500 capsule is provided in Figure 1.2.3-24. The BUP-500 basket assembly design is presented in NAC drawing 315-40-196.

For packages configured with UCS assemblies; WESF capsules must be loaded into UCSs prior to placement in the LWT cavity. Three (3) UCSs must be installed in the UCS basket assembly, however, a UCS spacer may be used in lieu of up to any two (2) UCSs. The UCS lid spacer must be installed. The UCS basket assembly drawing is presented in NAC drawing 315-40-199. The UCS assembly drawing is presented in NAC drawing 315-40-201.

Key physical, radiation protection, and thermal characteristics of the SrF_2 capsules are listed in Table 1.2-19. Chapter 3 thermal evaluations consider a maximum heat load of 400W per elevation. i.e., 400W per WESF container assembly or 800W per UCS assembly (for two elevations) for a total of 2400W. Each elevation (for both configurations) may consist of a single capsule up to 400W or up to three (3) capsules totaling up to 400W. Chapter 5 shielding evaluations conservatively consider three (3) capsules per elevation at a heat load of 395W each (1185W per elevation), which bounds the thermal evaluation.

1.2.3.18 LANL MOX Fuel Rods

The NAC-LWT cask is analyzed and evaluated for the transport of up to 16 Transfer Tubes. Transfer Tubes must be loaded in the PWR/BWR transport can assembly. As needed, stainless steel dunnage may also be inserted into the PWR/BWR transport can assembly to provide additional configuration control as indicated in NAC drawing 315-40-189. The evaluated characteristics for the authorized LANL MOX Fuel Rods are provided in Table 1.2-20. Different LANL MOX fuel types may be loaded in the same package, subject to the limitations provided in Table 1.2-20, but only one fuel type may be loaded into any single Transfer Tube. Additional restrictions are as follows:

- PNNL, EXXON, and UO2 rods may be mix loaded into a cask – all 16 transfer tubes may be loaded.
- ROD1063 rods may not be mix loaded with other materials – only 6 transfer tubes may be loaded (10 empty in a shipment).
- NIS5 rods and the 530-000 rod may be mix loaded with a limit of 4 tubes of NIS5 and one tube of 530-000 (11 empty tubes to be loaded).

A sketch of a generic LANL MOX Fuel Rod is provided in Figure 1.2.3-25.

Figure 1.2.3-1 Aluminum Clad TRIGA Fuel Element

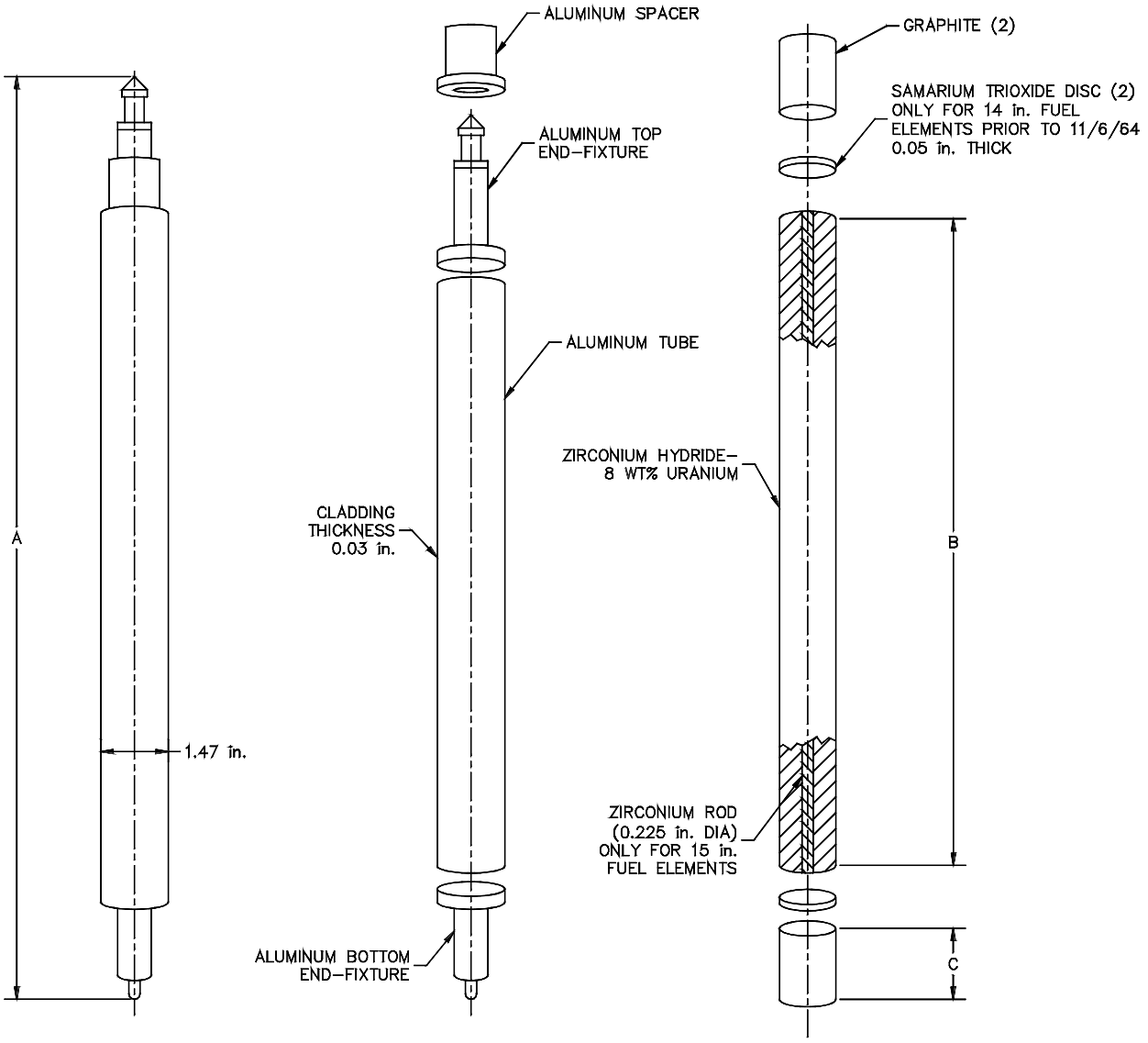

Figure 1.2.3-2 Aluminum Clad Instrumented Fuel Element

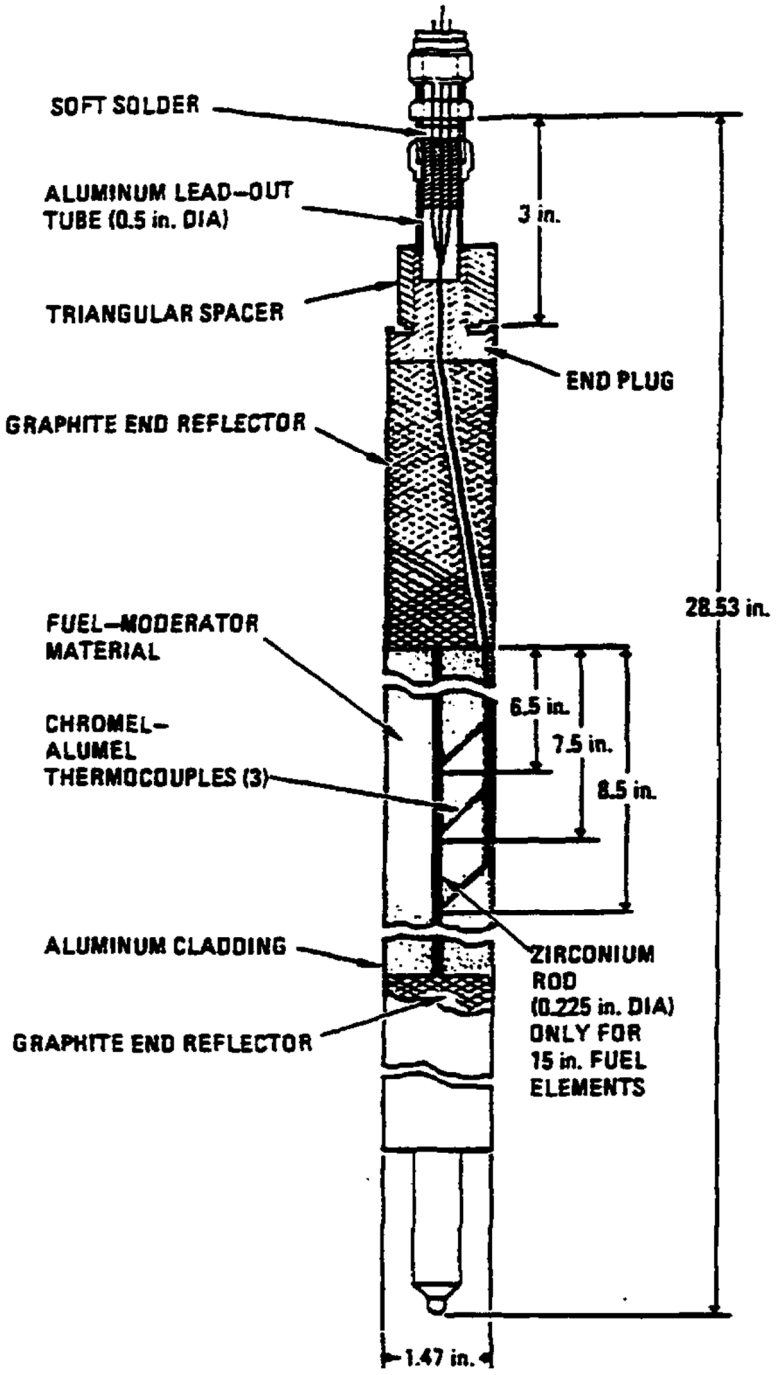

Figure 1.2.3-3 Stainless Steel Clad TRIGA Fuel Element

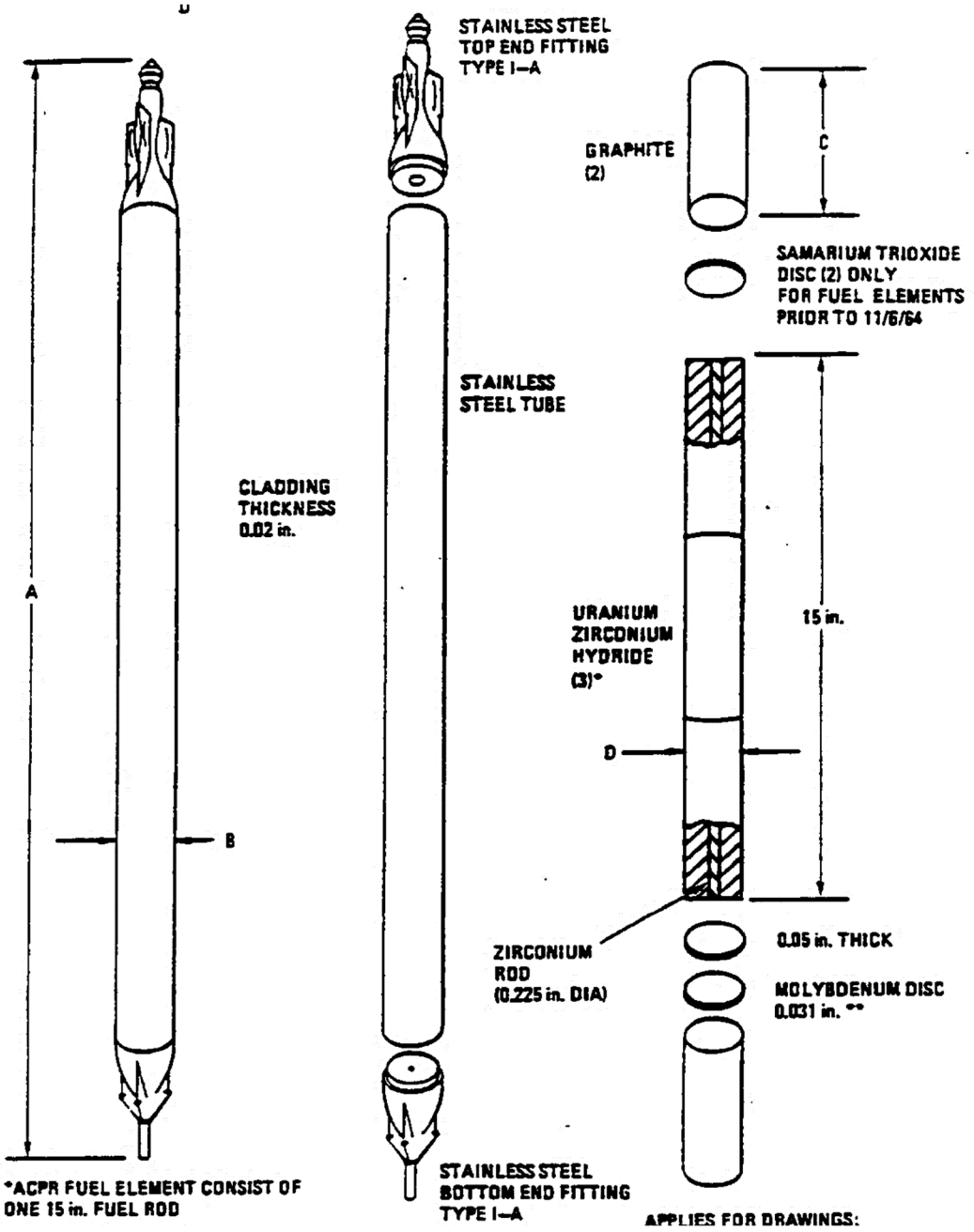

Figure 1.2.3-4 Stainless Steel Clad Instrumented Fuel Element

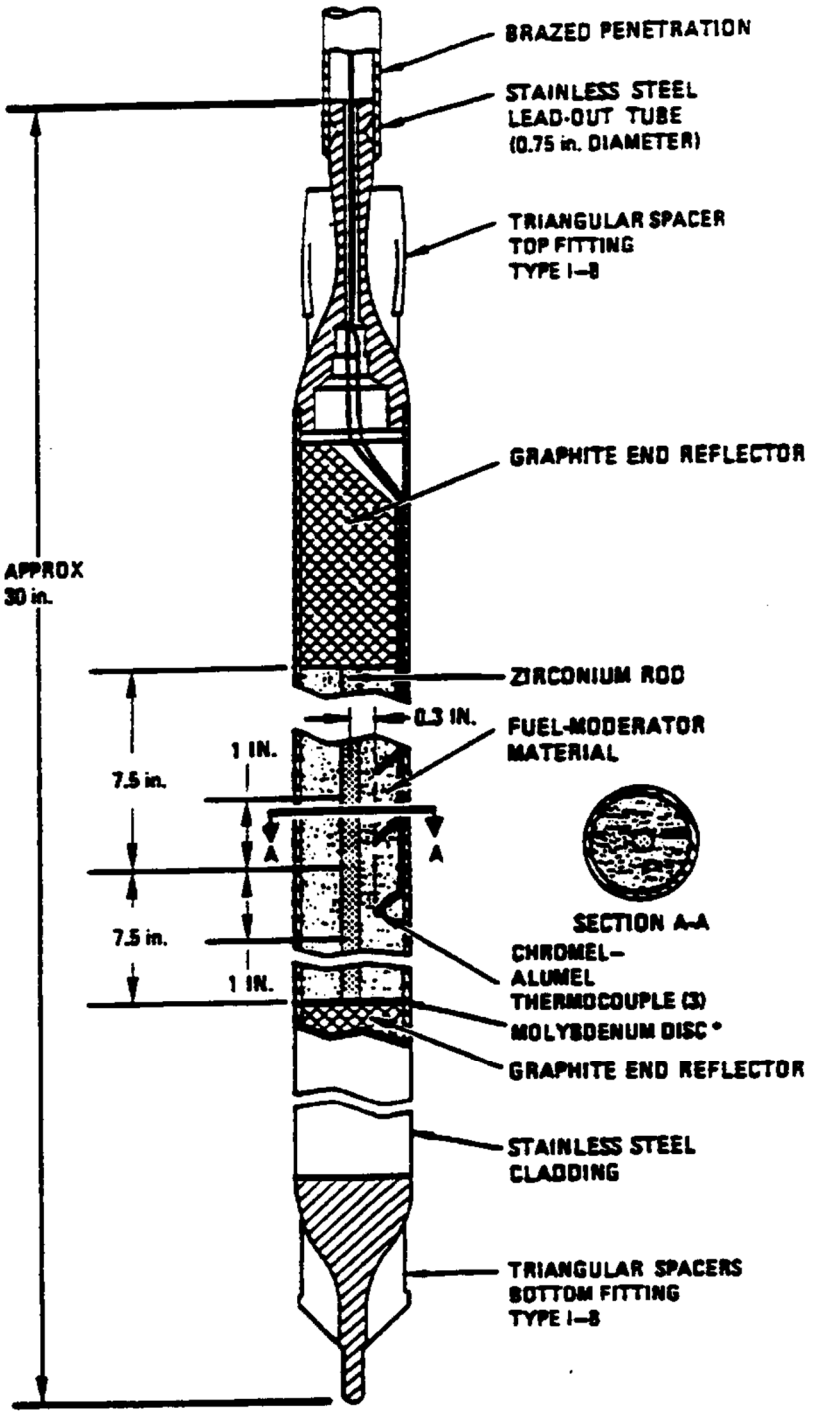

Figure 1.2.3-5 Standard Fuel Follower Control Rod Element

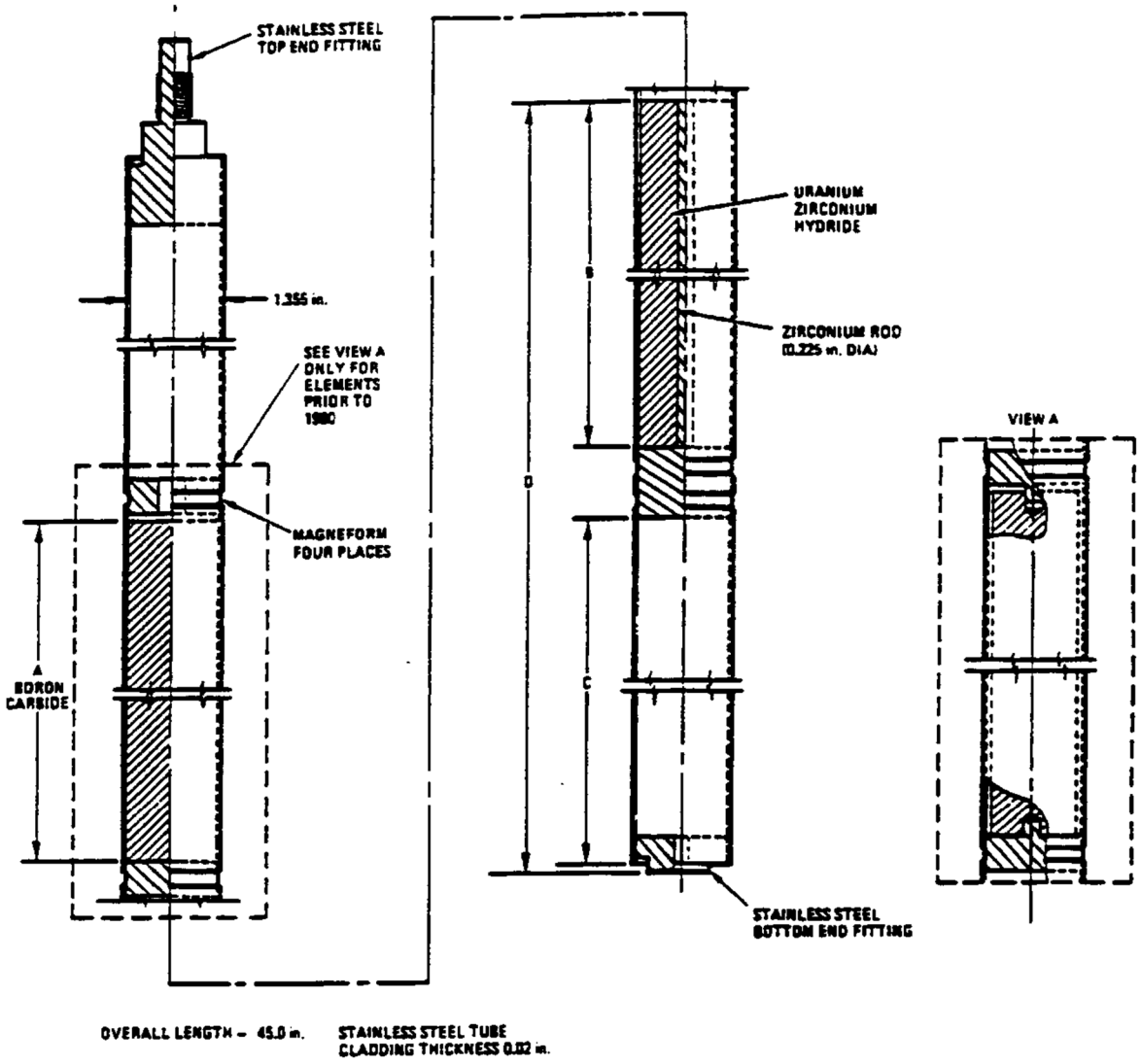

Figure 1.2.3-6 TRIGA Fuel Cluster and Rod Details

TRIGA *FUEL CLUSTER*

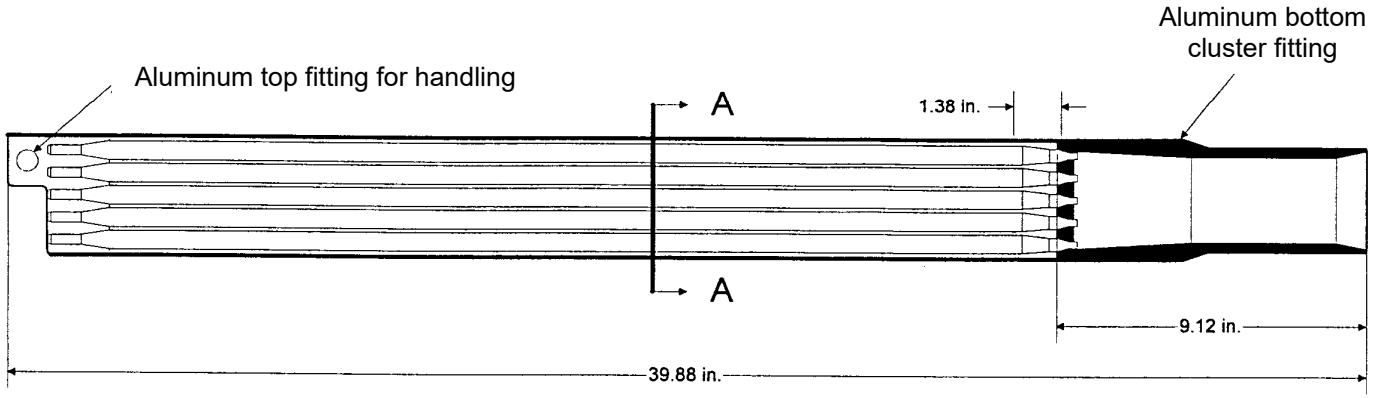

FUEL ROD

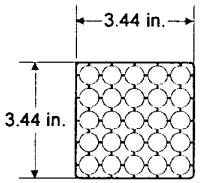

SECTION A:A

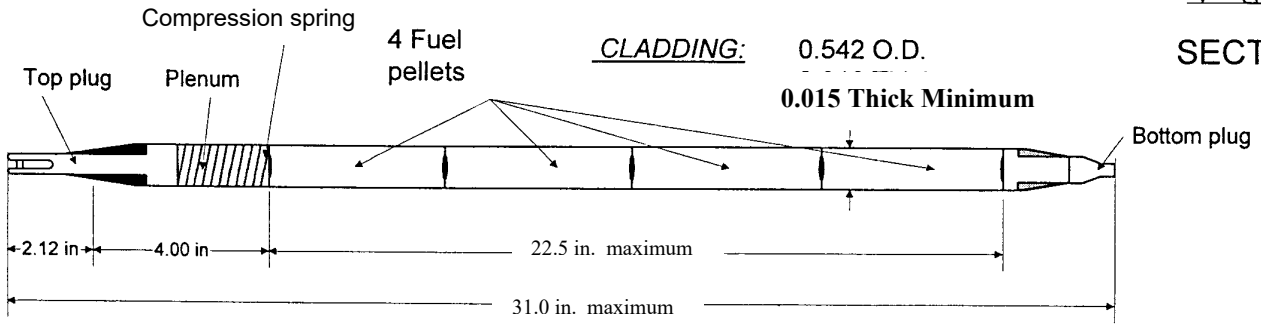

Fuel bundle and fuel element

Figure 1.2.3-7 HTGR Fuel Handling Unit

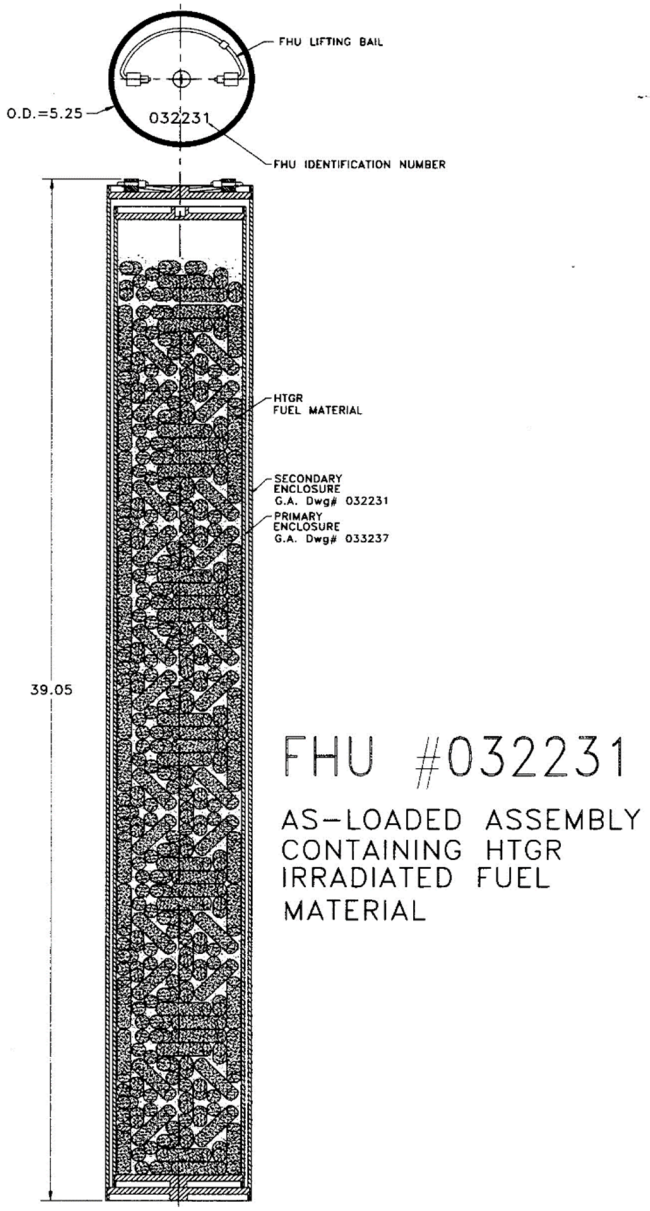

Figure 1.2.3-8 RERTR Fuel Handling Unit

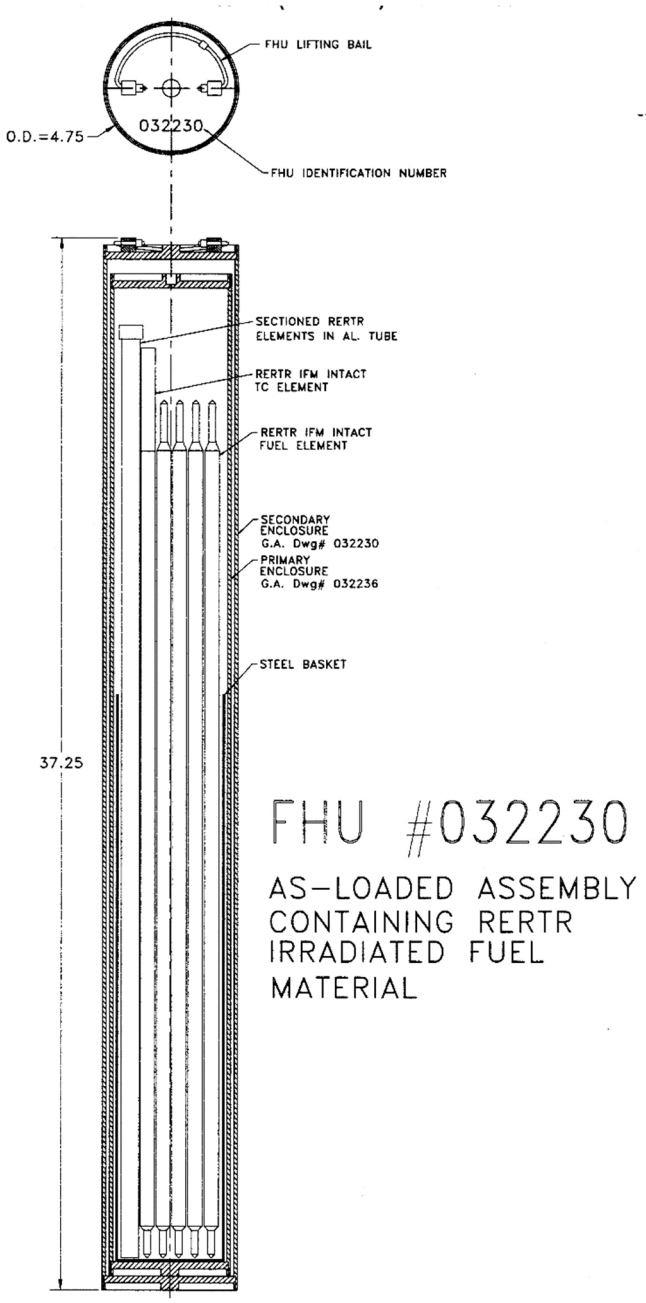

Figure 1.2.3-9 Typical TPBAR Assembly

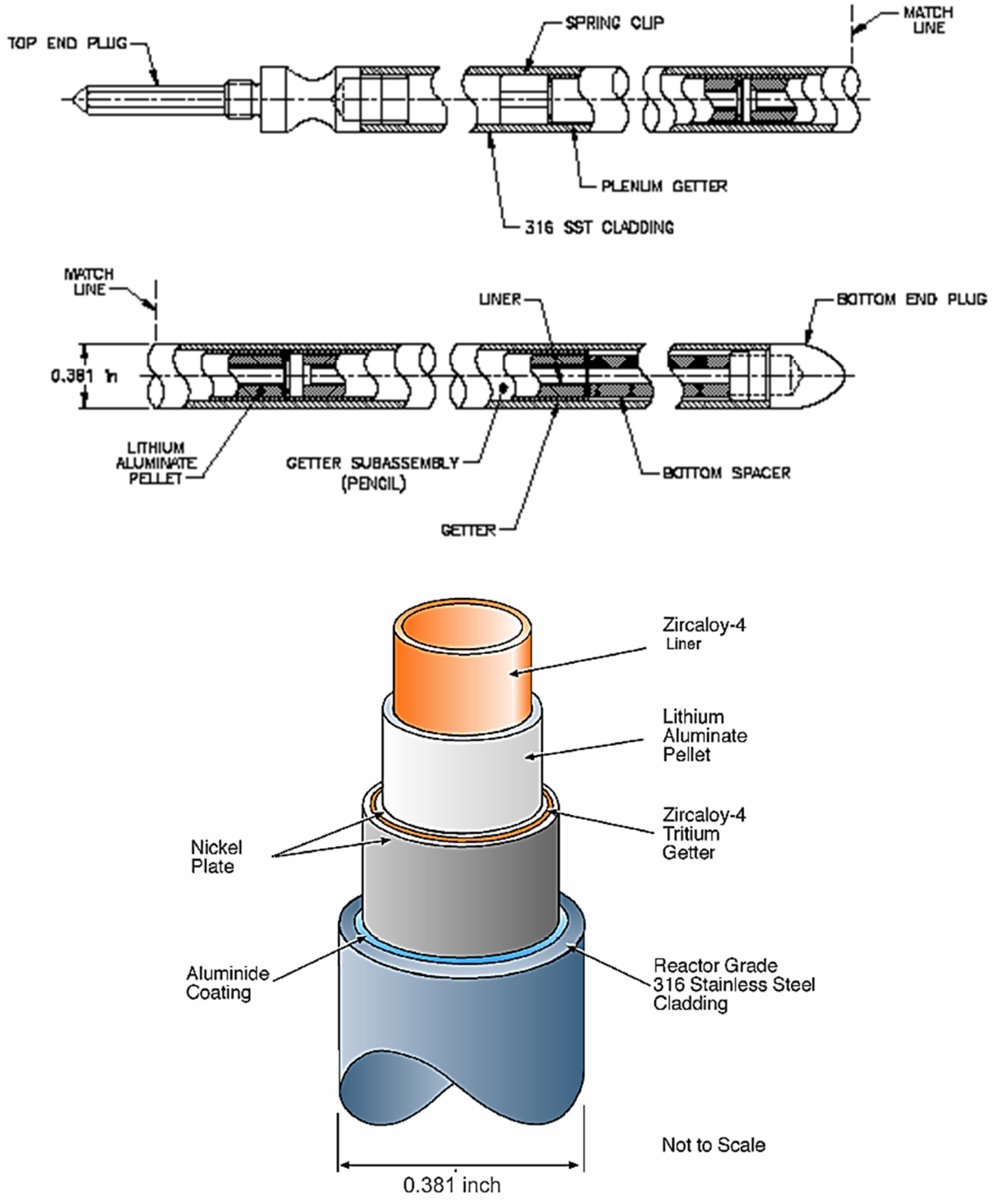

Figure 1.2.3-10 TPBAR Consolidation Canister Sketch

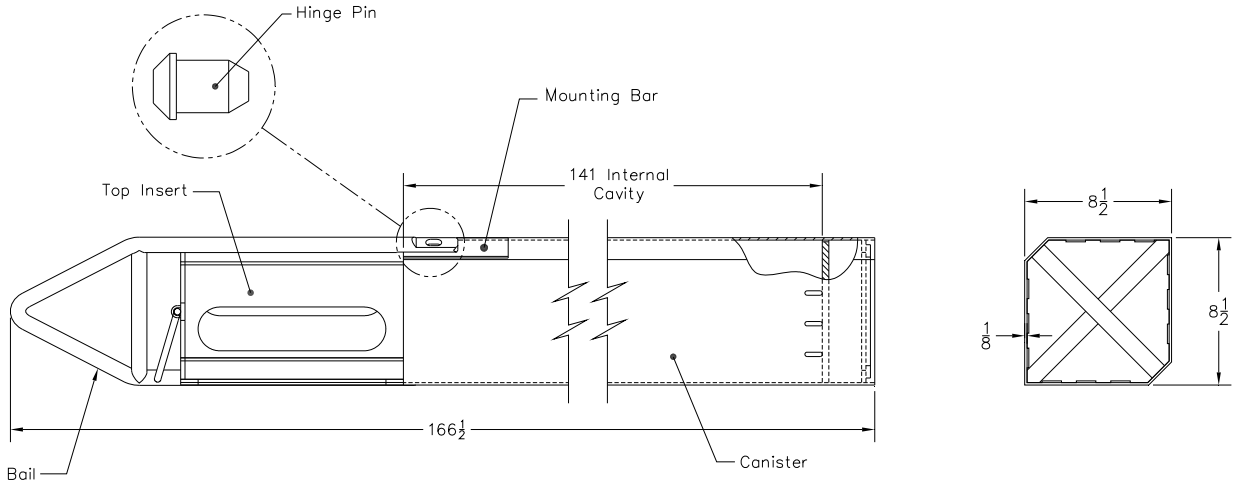

Note: Material of construction is stainless steel.

Figure 1.2.3-11 Failed PWR/BWR Fuel Rod Capsule

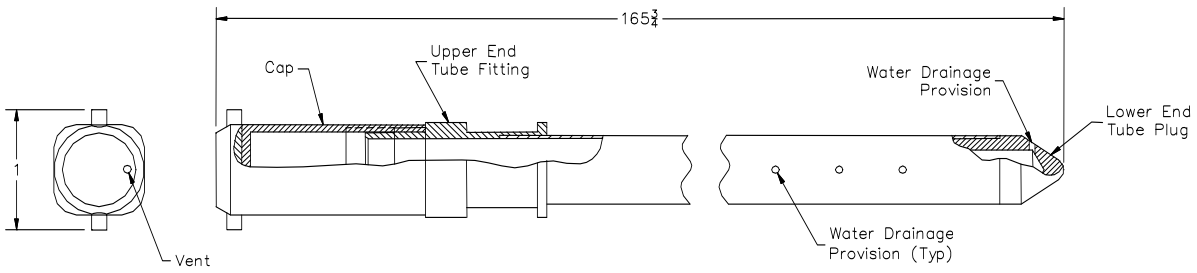

Failed Fuel Rod Capsule Conceptual Layout

All Dimensions Approximate

Note: Material of construction is stainless steel.

Figure 1.2.3-12 NAC-LWT with TPBAR Consolidation Canister Payload

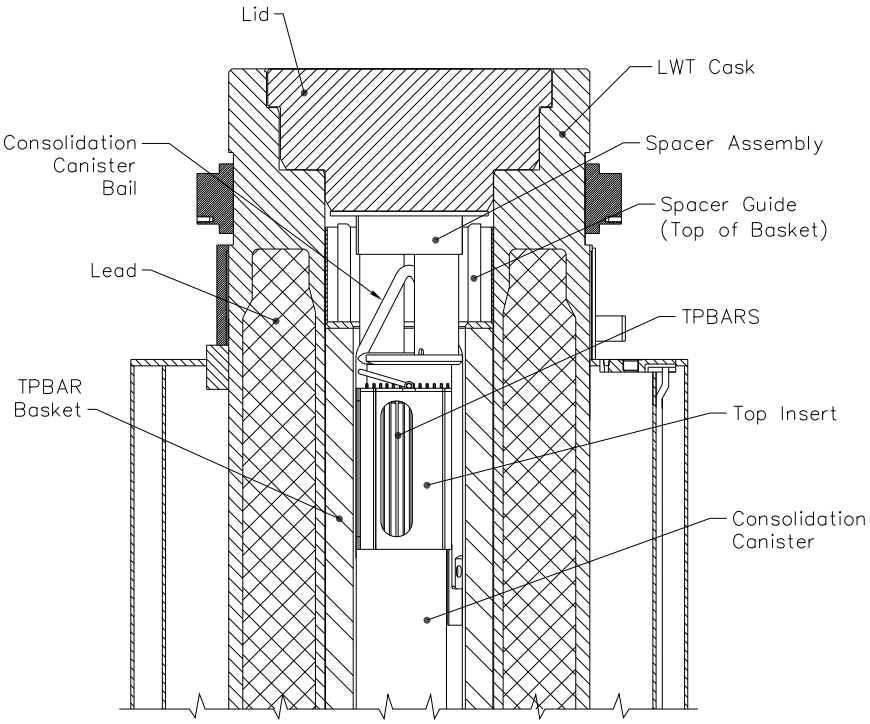

Figure 1.2.3-13 PULSTAR Fuel Assembly

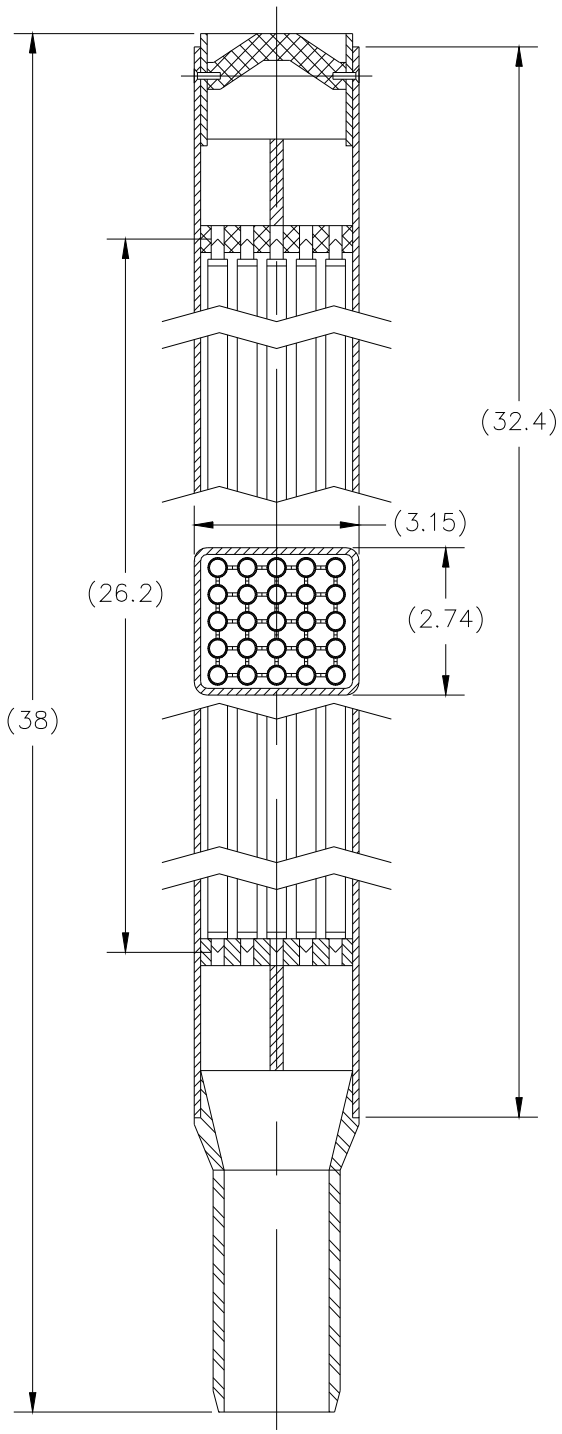

Figure 1.2.3-14 Spiral Fuel Assembly Cross-Section Sketch

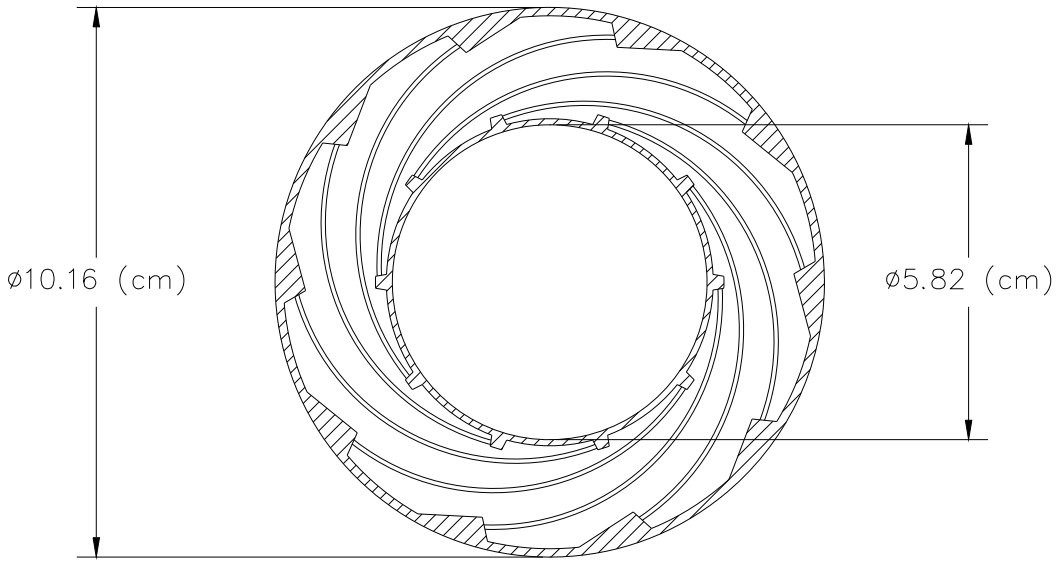

Note: Nominal dimensions

Figure 1.2.3-15 MOATA Plate Bundle Sketches

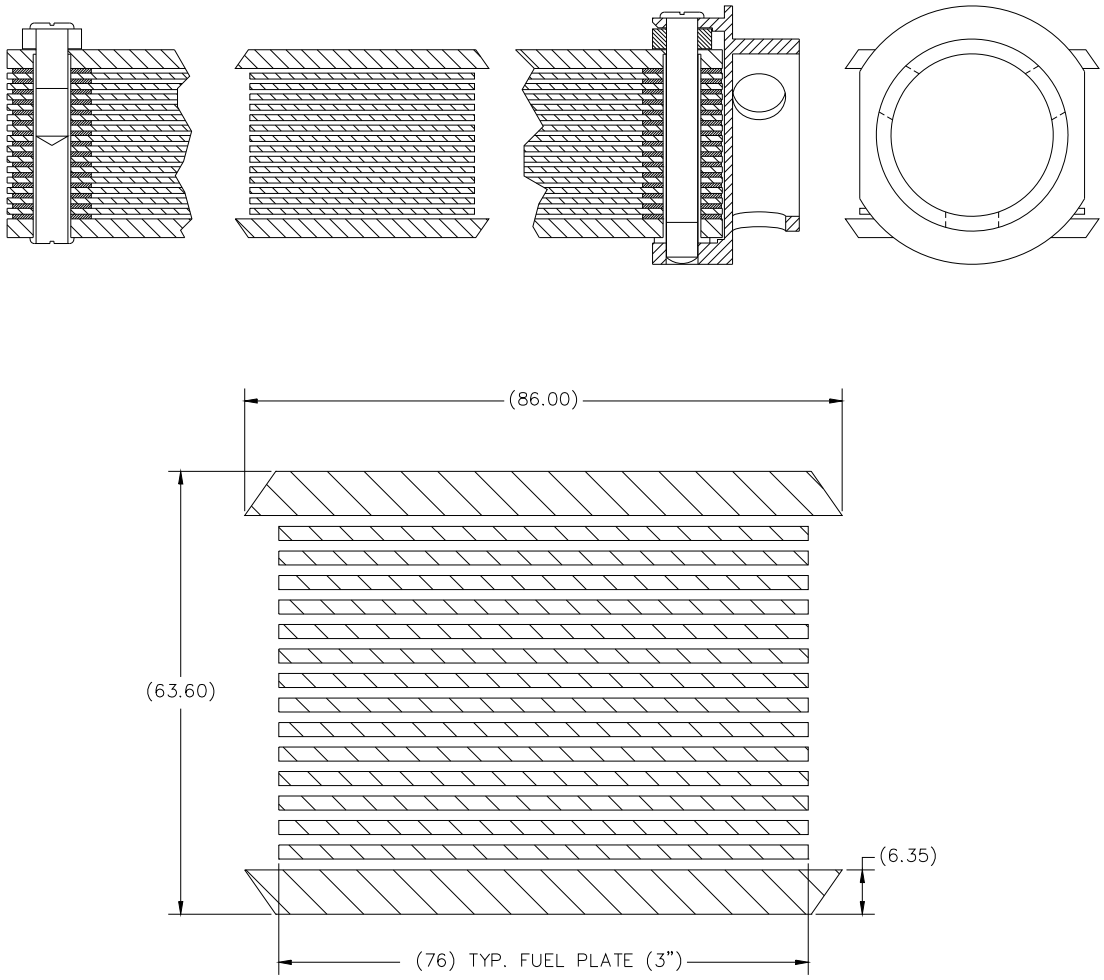

Note: 14-plate bundle configuration. Dimensions are reference values. Bundles with a reduced number of plates retain the plate pitch and compensate by wider side plates and outside spacers to retain overall bundle dimensions.

Figure 1.2.3-16 TPBAR Waste Container and Extension Weldment Sketch

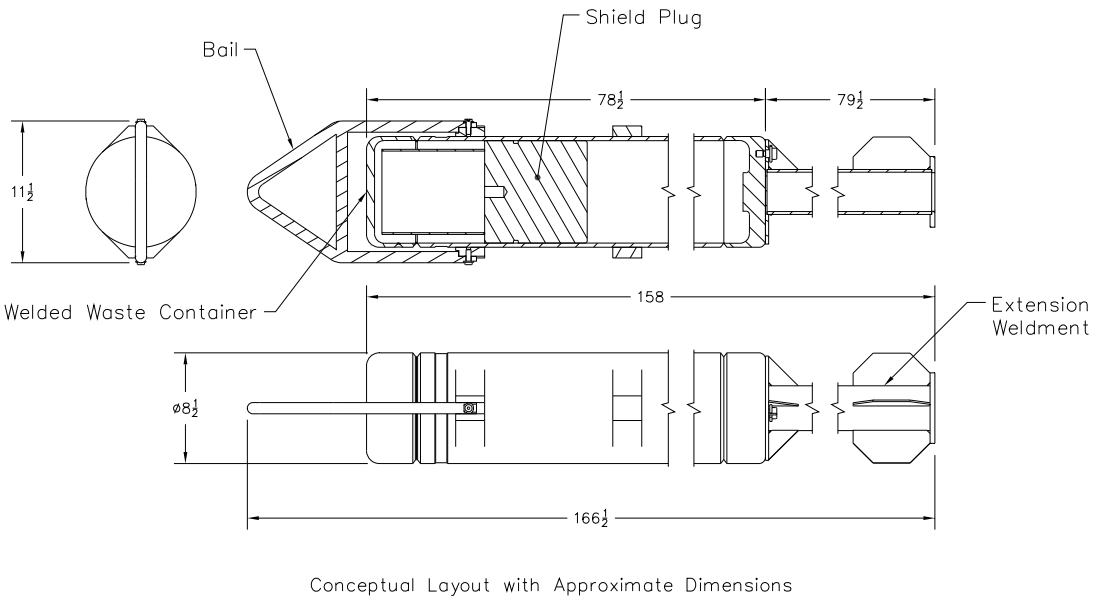

Note: Material of construction is stainless steel.

Figure 1.2.3-17 NAC-LWT with TPBAR Waste Container Payload

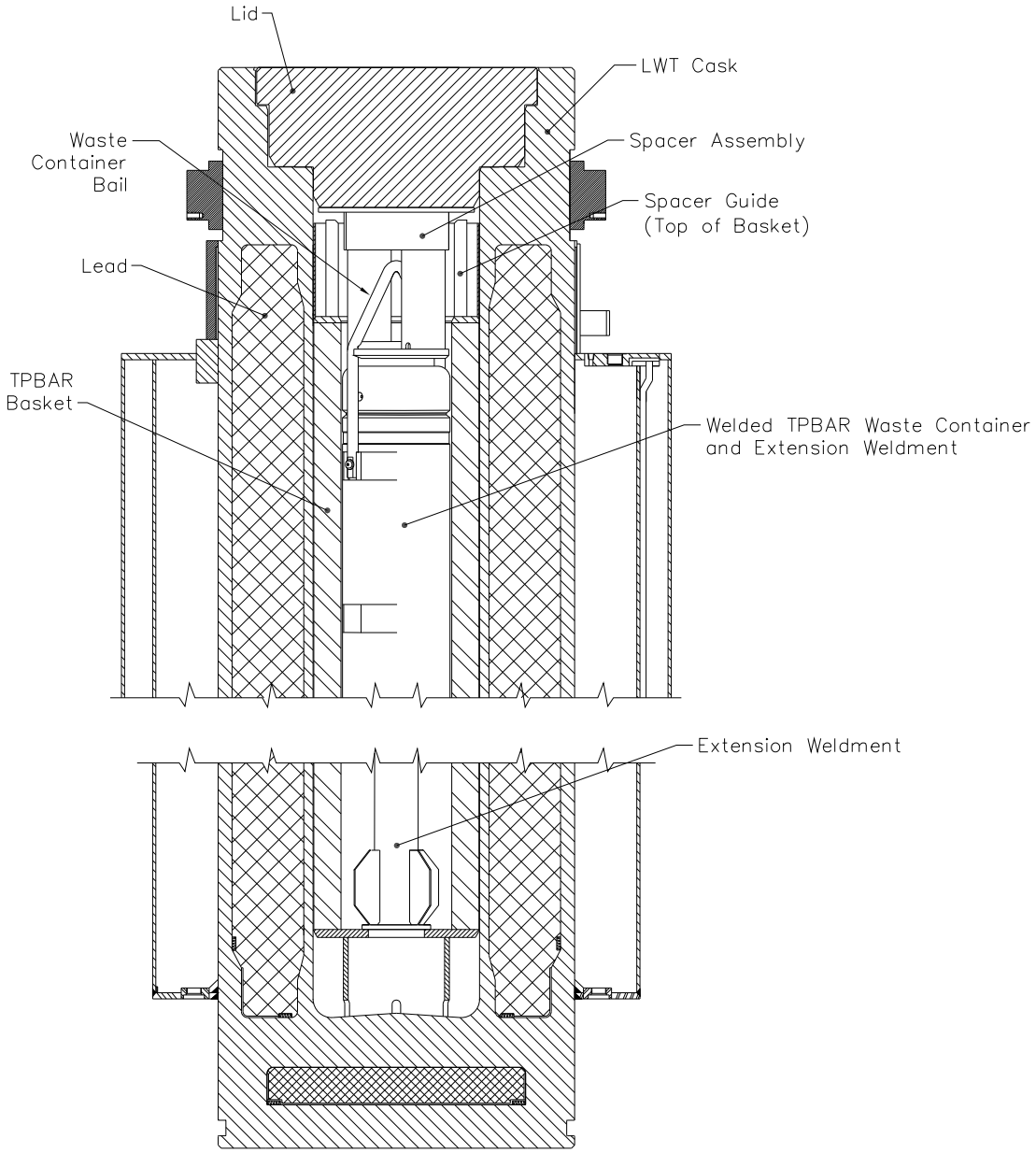

Figure 1.2.3-18 ANSTO Damaged Fuel Can (DFC)

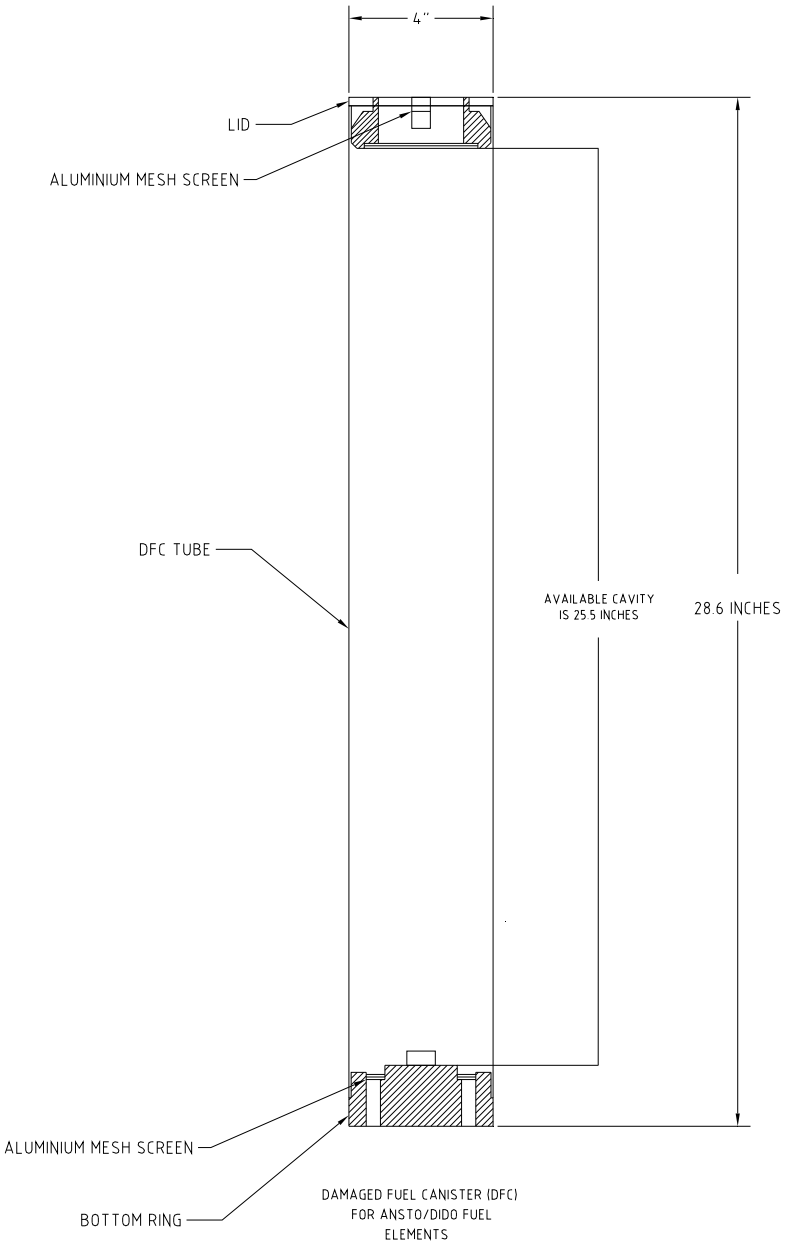

NOTES:
1. DFC MATERIAL - 6061 ALUMINIUM
2. DIMENSIONS NOMINAL

Figure 1.2.3-19 SLOWPOKE Fuel Element

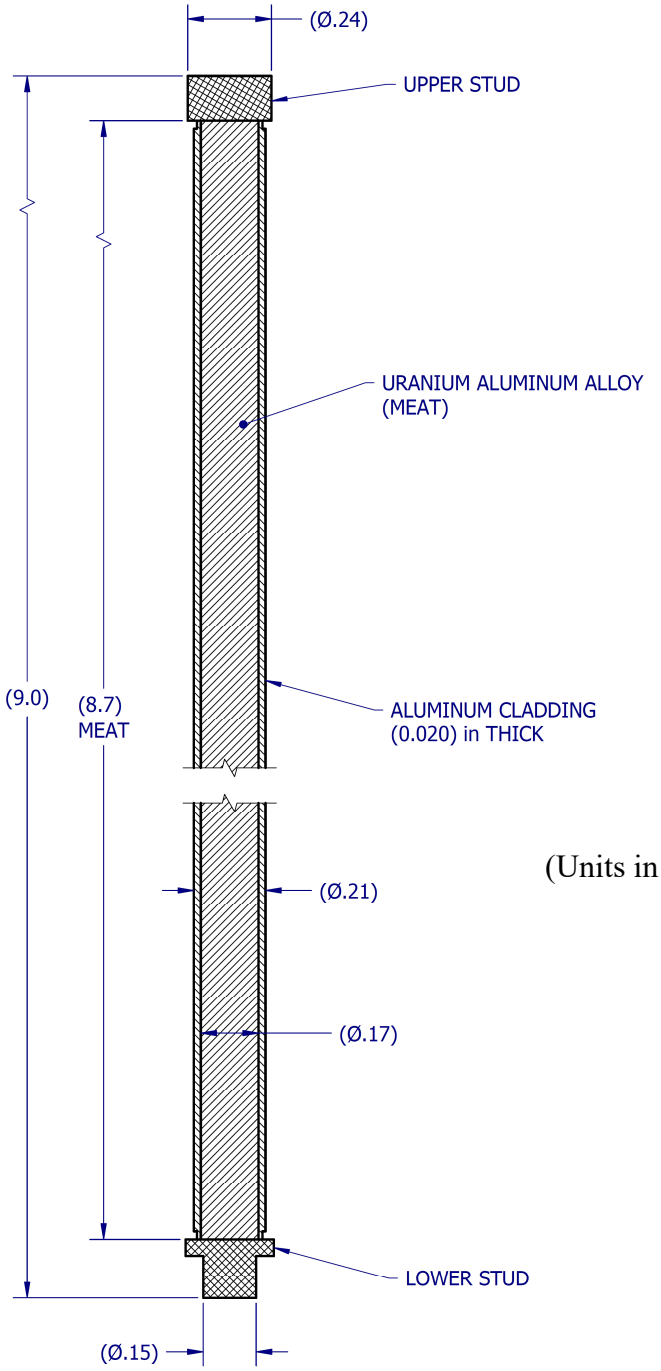

(Units in inches)

Figure 1.2.3-20 NRU and NRX Fuel Assemblies
(Before Cropping and Potential Removal of Flow Tube)

NRU

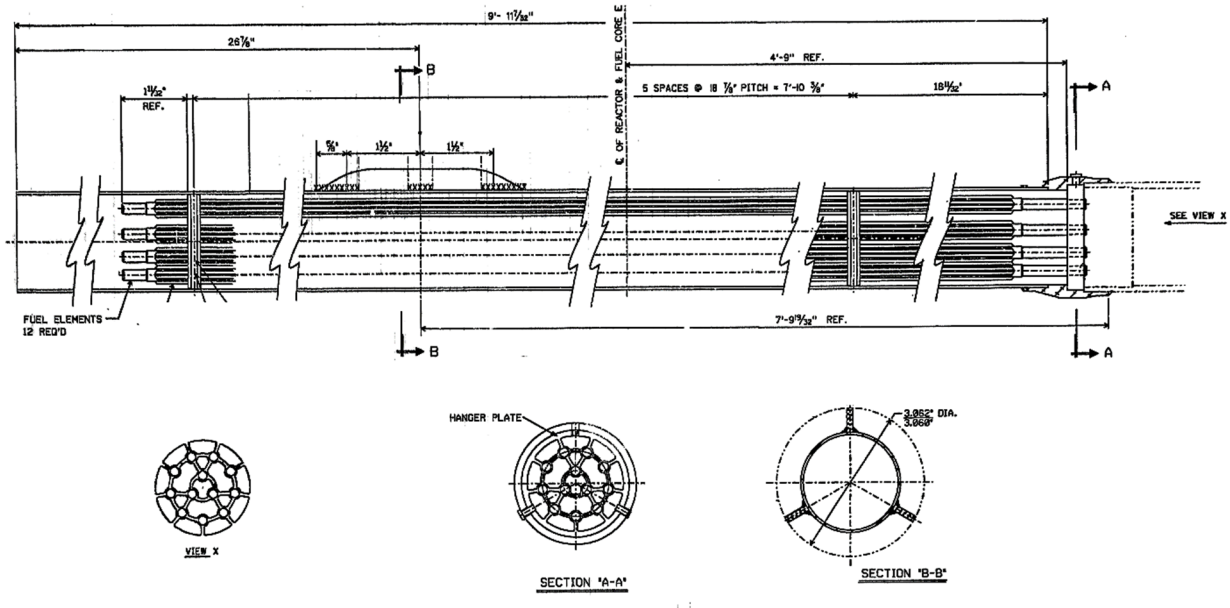

NRX

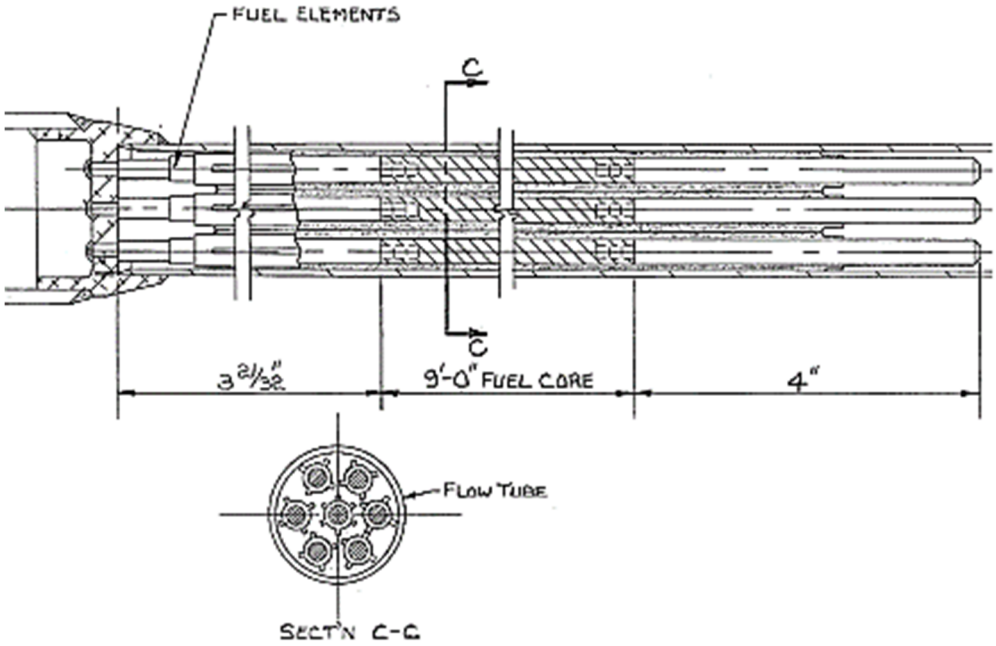

(Units in inches)

Figure 1.2.3-21 HEUNL Container

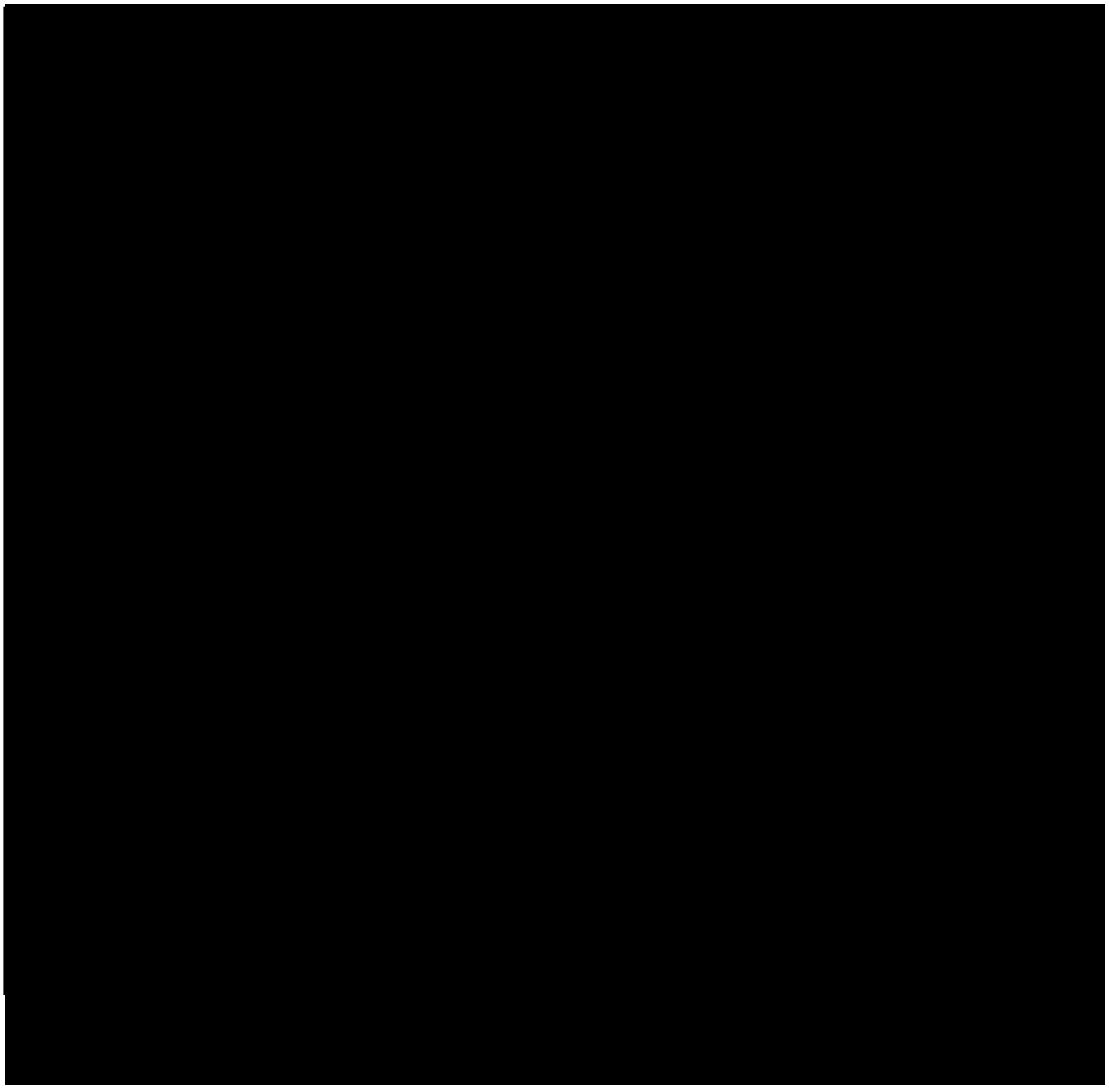

Figure 1.2.3-22 EFN, Moly and Booster Rod Illustrations

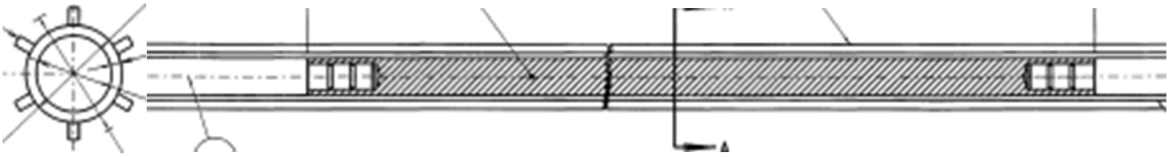

EFN Rod

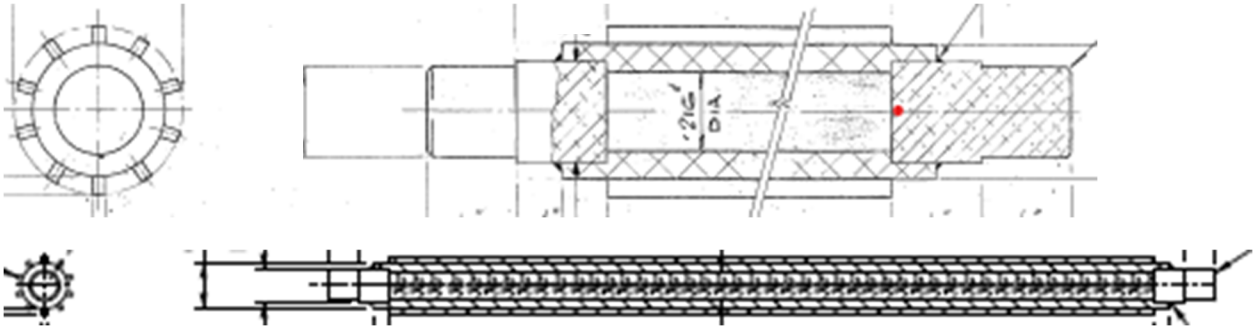

Moly Target(s)



Booster Rod

Note: Illustration are for general layout of the various rod/target designs. Moly sketch represents short Moly target. Axial detail varies for double length target.

Figure 1.2.3-23 WESF Capsule Illustrations



Figure 1.2.3-24 BUP-500 Capsule Illustrations

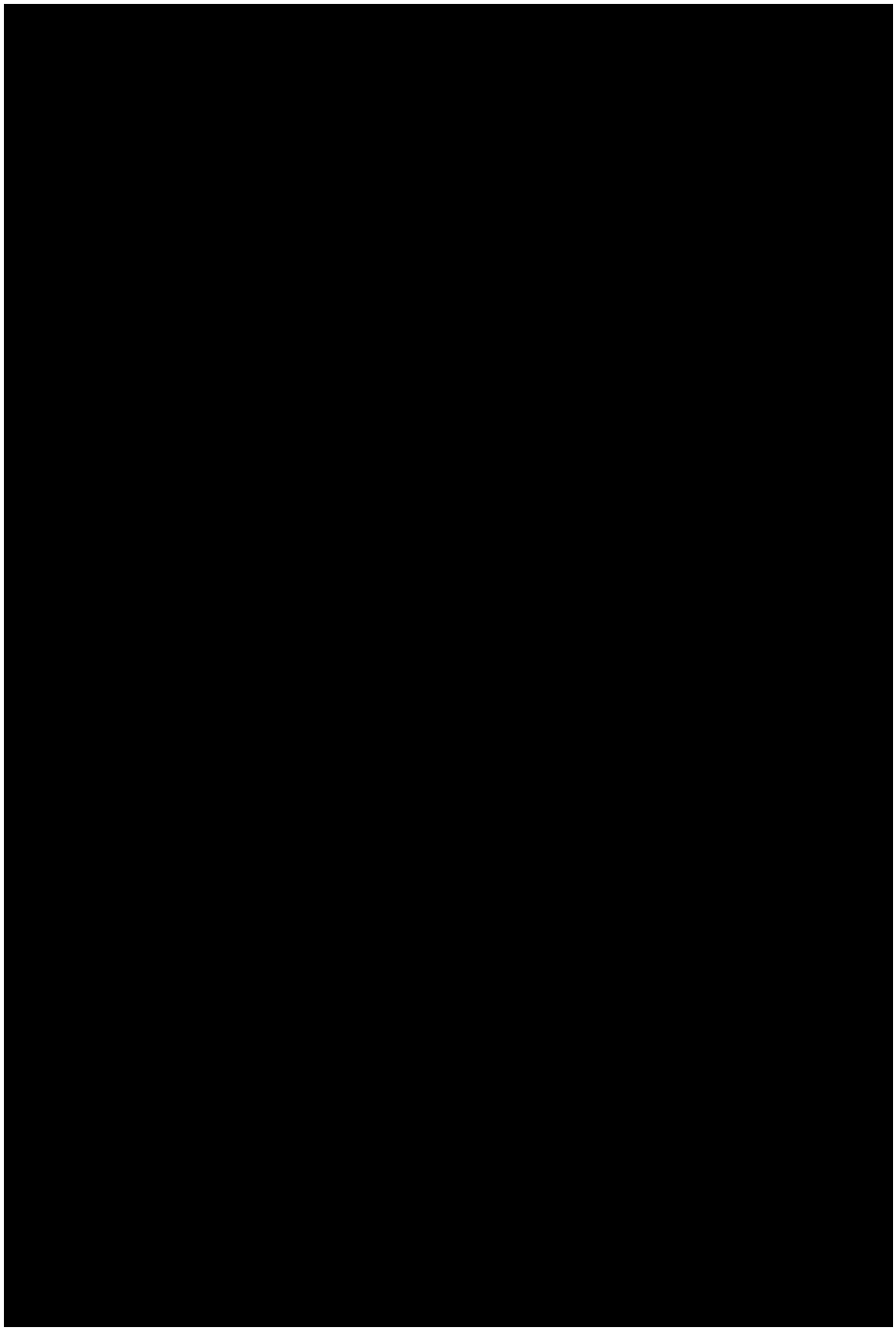

Figure 1.2.3-25 LANL MOX Fuel Rod Generic Rod Components

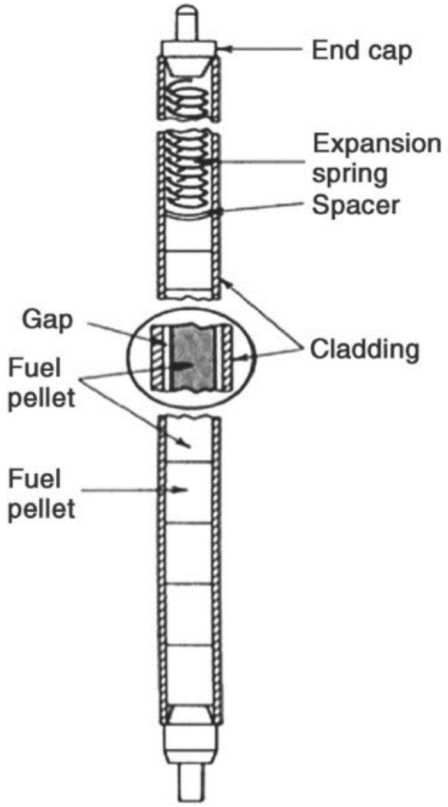

Table 1.2-1 Characteristics of Design Basis TRIGA Fuel Elements Acceptable for Loading in the Poisoned TRIGA Basket

	TRIGA HEU (Notes 1, 2, 6 & 7)	TRIGA LEU (Notes 1, 2, 6 & 7)	TRIGA LEU (Notes 1, 2, 6 & 7)
Fuel Form	Clad U-ZrH rod	Clad U-ZrH rod	Clad U-ZrH rod
Maximum Element Weight, lbs	13.2	13.2	13.2
Maximum Element Length, in	47.74	47.74	47.74
Element Cladding	Stainless Steel	Stainless Steel	Aluminum
Clad Thickness, in	0.02	0.02	0.03
Active Fuel Length, in	15	15	14-15 (Note 4)
Element Diameter, in	1.478 max.	1.478 max.	1.47 max.
Fuel Diameter, in	1.435 max.	1.435 max.	1.41 max.
Maximum Initial U Content/Element, kilograms	0.196	0.845	0.205
Maximum Initial ^{235}U Mass, grams	137	169	41
Maximum Initial ^{235}U Enrichment, weight percent	70	20	20
Zirconium Mass, grams (Note 5)	2060	1886-2300	2300
Hydrogen to Zirconium Ratio, max. (Note 5)	1.6	1.7	1.0
Maximum Average Burnup, MWd/MTU	460,000 (80% ^{235}U)	151,100 (80% ^{235}U)	151,100 (80% ^{235}U)
Minimum Cooling Time	90 days (Note 3)	90 days (Note 3)	90 days (Note 3)

Notes:

1. Mixed TRIGA LEU and HEU contents authorized.
2. TRIGA Standard, instrumented and fuel follower control rod type elements authorized.
3. Maximum decay heat of any element is 7.5 watts.
4. Aluminum clad fuel with 14-inch active fuel is solid and has no central hole with a zirconium rod.
5. Zirconium mass and H/Zr ratio apply to the fuel material (U-Zr-H_x) and do not include the center zirconium rod.
6. Listed TRIGA fuel elements have a 0.225-inch diameter zirconium rod in the center.
7. Dimensions listed are as-fabricated (unirradiated) nominal values.

Table 1.2-2 Characteristics of Design Basis TRIGA Fuel Elements Acceptable for Loading in the Nonpoisoned TRIGA Basket

	TRIGA HEU (Notes 1, 2, 6)		TRIGA LEU (Notes 1, 2, 6)		TRIGA LEU (Notes 1, 2, 6)
Fuel Form	Clad U-ZrH rod (Note 4)		Clad U-ZrH rod (Note 4)		Clad U-ZrH rod (Note 4)
Maximum Element Weight, lbs	13.2		13.2		13.2
Maximum Element Length, in	47.74		47.74		47.74
Element Cladding	Stainless Steel		Stainless Steel		Aluminum
Minimum Clad Thickness, in	0.01		0.01		0.01
Active Fuel Length, in	(Note 5)		(Note 5)		(Note 5)
Maximum Element Diameter, in	1.5 max.		1.5 max.		1.5 max.
Fuel Diameter, in	(Note 5)		(Note 5)		(Note 5)
Maximum Initial U Content/Element, kilograms	0.198	0.186	0.845	1.447	0.205
Maximum Initial ^{235}U Mass, grams	138	175 (Notes 7, 8)	169	275 (Notes 7, 8)	41
Maximum Initial ^{235}U Enrichment, weight percent	71	95 (Notes 7, 8)	25	25 (Notes7, 8)	25
Zirconium Mass, grams	(Note 5)		(Note 5)		(Note 5)
Hydrogen to Zirconium Ratio, max.	(Note 5)		(Note 5)		(Note 5)
Maximum Average Burnup, MWd/MTU	460,000	583,000 (80% ^{235}U)	151,100 (80% ^{235}U)		151,100 (80% ^{235}U)
Minimum Cooling Time	90 days (Note 3)		90 days (Note 3)		90 days (Note 3)

Notes:

1. Mixed LEU and HEU TRIGA fuel element, and LEU and HEU TRIGA fuel cluster rod, as defined in Table 1.2-3, contents authorized.
2. TRIGA Standard, instrumented and fuel follower control rod type elements authorized.
3. Maximum decay heat of any element is 7.5 watts.
4. Element may contain zirconium rod in the center.
5. See criticality analyses in Chapter 6, Section 6.4.5.6, for the evaluations determining critical fuel characteristics.
6. Dimensions listed are as-fabricated (unirradiated) nominal values.
7. Elements limited to loading in top and bottom basket module only.
8. Elements limited to a maximum of three per basket module cell.

Table 1.2-3 Characteristics of Design Basis TRIGA Fuel Cluster Rods

Element Type	TRIGA Fuel Cluster Rod
Max. Rod Length (in)	31.0
Max. Active Length (in)	22.5
Clad Material	Incoloy 800
Min. Clad Thickness (in)	0.015
Fuel Material	U-ZrH
Max. Pellet Diameter (in)	0.53
Max. Rod Weight (kg)	0.65
Min. U in U-ZrH (wt %)	43.0 (LEU) or 9.5 (HEU)[1]
Max. ^{235}U in U (wt %)	19.9 to 93.3
^{235}U Mass (g)	55.0 (LEU) or 46.5 (HEU)
Max. H to Zr Ratio	1.7

[1] Equivalent to a maximum zirconium mass of 357 g for LEU fuel and 457 g for HEU fuel material. Lower weight percents are permitted, provided the maximum zirconium mass limits are not exceeded.

Table 1.2-4 Fuel Characteristics

Parameter	PWR Fuel Assembly	BWR Fuel Assembly	PWR Rods	High Burnup PWR Rods	PWR MOX Fuel Rods[6]	High Burnup BWR Rods 7 × 7	High Burnup BWR Rods[1] 8 × 8[2]
Maximum Number of Assemblies, Elements or Rods	[1]	[2]	25 rods	25 rods	16 rods	25 rods	25 rods
Maximum Overall Weight, lbs	1650	750	N/A	N/A	N/A	N/A	N/A
Maximum Overall Length, in	178.25	176.1	162	162	162	176.1	176.1
Maximum Active Fuel Length, in	150	150	150	150	153.5	150	150
Fuel Rod Cladding	Zirc	Zirc	Zirc	Zirc	Zirc	Zirc	Zirc
Maximum Uranium, kg U	475	198	58.2	65.6	41.6[7]	198	198
Maximum Initial ^{235}U, wt %	*See below*[3]	4.0	5.0	5.0	7.0 max/2.0 min, fissile Pu[8]	5.0	5.0
Maximum Burnup, MWd/MTU	35,000	30,000	60,000[4]	80,000	62,500	60,000 - 80,000	80,000
Maximum Unit Decay Heat, kW	2.5	1.1	0.564	0.92	0.143	0.84	0.84
Maximum Cask Decay Heat, kW	2.5	2.2	1.41	2.3	2.3	2.1	2.1
Minimum Cool Time, yr	2	2	150 days	150 days	90 days	210 - 270 days[5, 9]	150 days[9]

[1] High burnup rods are loaded in a fuel assembly lattice or rod holder. Up to 14 rods, loaded in a rod holder, may be classified as damaged. The lattice may be irradiated.
[2] Includes rods from all larger BWR assembly arrays.
[3] See Table 1.2-5 for maximum PWR fuel enrichment by fuel type.
[4] Up to 2 of the 25 PWR rods may have a maximum burnup of 65,000 MWd//MTU.
[5] Minimum cool time for high burnup BWR 7×7 rods is determined by extent of burnup. See Section 5.3.8 and Table 5.3.8-23.
[6] Up to 16 PWR MOX fuel rods or a combination of up to 16 MOX PWR and UO_2 PWR fuel rods can be loaded.
[7] Maximum fuel mass is 2.6 kg HM/rod.
[8] Maximum 5.0 wt % ^{235}U for UO_2 rods.
[9] Up to 14 Fuel Rods may be loaded damaged, including potential for loading loose fuel material, or may contain fuel rods with non-zircaloy type clad. Non-zircaloy clad fuel rods, and non-fueled non-zirconium rod sections, require an additional 90-day cool time beyond the indicated zircaloy based value.

Table 1.2-4 Fuel Characteristics (Continued)

Parameter	Metallic Fuel	Metallic Fuel	Metallic Fuel	MTR HEU	MTR MEU	MTR LEU	TRIGA LEU Element	TRIGA HEU Element	TRIGA Cluster Rod
Maximum Number of Assemblies, Elements or Rods	15 rods (sound)	9 rods (failed)	3 rods (severely failed in filters)	42[1]	42	42[2]	140	140	560
Maximum Overall Weight, lbs	1805	1805	1805	30 (max)[3]	30 (max)[3]	30 (max)[3]	13.2 (max)[3]	8.82 (nom.) 13.2 (max)[3]	1.5[3]
Maximum Overall Length, in	120.5	120.5	120.5	25.4[4]	26.1[4]	26.1[4]	47.74[5]	47.74[5]	31.0
Maximum Active Fuel Length, in	120.0	120.0	120.0	24.8	25.6	25.6	15	15	22.5
Fuel Rod Cladding	Al	Al	Al	Al	Al	Al	Al or SS	Al or SS	Incoloy 800
Maximum Uranium, kg U	54.5	54.5	54.5	0.422 0.511	0.950	3.368[2]	0.824	0.196	0.0505 (HEU) 0.2894 (LEU)
Maximum Initial ^{235}U, wt %	Natural	Natural	Natural	94	94[6]	25	20	70	95 (HEU)/20 (LEU)
Maximum Burnup, MWd/MTU	1,600	1,600	1,600	Variable up to 660,000[7]	Variable up to 293,300	Variable up to 139,300	151,100 (80% ^{235}U)	460,000 (80% ^{235}U)	600,000 (HEU)/ 139,300 (LEU) (80% ^{235}U)
Maximum Unit Decay Heat, kW	0.036	0.036	0.036	Variable[8]	0.030[8]	0.030[8, 10]	0.0075	0.0075	0.001875
Maximum Cask Decay Heat, kW	0.54	0.54	0.54	1.26	1.26	1.26	1.05	1.05	1.05
Minimum Cool Time, yr	1	1	1	Variable[8]	Variable[8]	Variable[8]	Variable[9]	Variable[9]	Variable[9]

[1] For NISTR fuel, 42 assemblies may be cut in half, producing 84 fuel-bearing pieces. Each fuel-bearing piece may contain up to 0.211 kgU.

[2] MTR fuel elements having ^{235}U content >490 g (>23.5 g per plate) are limited to a total of 4 elements in a 7-element basket. Basket openings 1, 2 and 3 shall be blocked by cell block spacers to ensure that MTR elements are not loaded in these openings. Therefore, depending on the number of such 4-element baskets, the maximum number of elements per cask will be reduced accordingly.

[3] Maximum weight of fuel element(s), spacer(s) and fuel can, as applicable, per basket module cell shall be 80 pounds.

[4] For MTR fuel elements, which are cut to remove nonfuel-bearing hardware prior to transport, a nominal 0.28 inch of nonfuel or spacer hardware will remain above and below the active fuel region to allow for fuel handling operations. The HFBR element, with an element length of 57.24 inches, must be cut prior to shipment. For HEU MTR elements having >380 g ^{235}U but less than 460 g ^{235}U, a minimum of 2.0 cm (0.8 inch) of nonfuel hardware and/or spacers/plates shall be provided at the ends of the element.

[5] Permissible fuel element length is limited to basket cavity length, which is a minimum 47.74 inches for the basket top module, 30.94 inches for the intermediate modules, and 32.64 inches for the bottom module.

[6] Typical MEU enrichment is 45 wt% ^{235}U. Criticality analysis supports up to 94 wt% under the MEU fuel definition.

[7] Maximum burnup is 660,000 MWd/MTU for 380g ^{235}U and 577,500 MWd/MTU for 460g ^{235}U.

[8] Minimum cool times for MTR fuel, down to 90 days, shall be determined using the procedure presented in Section 7.1.5.

[9] Minimum cool times for TRIGA fuel elements and fuel cluster rods, down to 90 days, are determined so that the maximum decay heat of any element to be shipped is ≤ 7.5 watts and any fuel cluster rod is ≤ 1.875 watts.

[10] Up to five LEU MTR fuel assemblies with ≤ 40 W may be loaded per basket module with total heat load for the basket module ≤ 210 W. Fuel assembly selection shall be determined using the procedure presented in Section 7.1.5.

Table 1.2-4 Fuel Characteristics (Continued)

Parameter	DIDO HEU	DIDO MEU	DIDO LEU
Number of Fuel Cylinders per Assembly	4	4	4
Maximum Overall Weight (lb)[1]	15	15	15
Minimum Plate Thickness, in	0.051	0.051	0.051
Minimum Clad Thickness (Al), in	0.00984	0.00984	0.00984
Maximum ^{235}U per Element, g	190	190	190
Maximum Initial ^{235}U, wt %	94	94	94
Minimum Initial ^{235}U, wt %	90	40	19
Maximum Uranium, kg U	0.2111	0.4750	1.0000
Minimum Active Fuel Height, in	23.13	23.13	23.13
Minimum Element Height[2], in	24.21	24.21	24.21
Maximum Burnup, MWd/MTU	577,460	256,650	121,910
Maximum Unit Decay Heat[3], kW	0.025	0.025	0.025
Maximum Cask Decay Heat, kW	1.05	1.05	1.05
Minimum Cool Time[4], yr	Variable	Variable	Variable

1 Maximum weight of fuel element(s), spacer(s) and fuel can, as applicable, per basket module cell shall be 80 pounds.

2 Element height provides for spacing of fissile material. An optional spacer may be used to maintain spacing if the element is cut shorter than 24.21 inches.

3 Maximum unit decay heat of 0.025 kW allowed only in conjunction with spacers for top basket (see Section 7.1.4). The per element heat load is limited to 0.018 kW with no top basket spacer. For DIDO fuel elements loaded into a top ANSTO basket module, the maximum decay heat load is limited to 0.010 kW per element (with or without DFC).

4 Minimum cool times for DIDO fuel assemblies, down to 180 days, shall be determined using the procedure presented in Section 7.1.4.

Table 1.2-5 PWR Fuel Characteristics

Fuel Type	No. of Fuel Rods	Max. Assembly Length (in.)	Max. Assembly Weight (lb)	Max. Enrich. (wt %)	Max. MTU	Pitch (in.)	Rod Dia. (in.)	Clad Thick. (in.)	Pellet Dia.(in.)	Max. Active Length (in.)
B&W 15 × 15	208	165.63	1515	3.5	0.4750	0.5680	0.430	0.0265	0.3686	144.0
B&W 17 × 17	264	165.72	1505	3.5	0.4658	0.5020	0.379	0.0240	0.3232	143.0
CE 14 × 14	176	157.00	1270	3.7	0.4037	0.5800	0.440	0.0280	0.3765	137.0
CE 16 × 16	236	178.25	1430	3.7	0.4417	0.5060	0.382	0.0250	0.3250	150.0
WE 14 × 14 Std	179	159.71	1302	3.7	0.4144	0.5560	0.422	0.0225	0.3674	145.2
WE 14 × 14 OFA	179	159.71	1177	3.7	0.3612	0.5560	0.400	0.0243	0.3444	144.0
WE 15 × 15	204	159.71	1472	3.5	0.4646	0.5630	0.422	0.0242	0.3659	144.0
WE 17 × 17 Std	264	159.77	1482	3.5	0.4671	0.4960	0.374	0.0225	0.3225	144.0
WE 17 × 17 OFA	264	160.10	1373	3.5	0.4282	0.4960	0.360	0.0225	0.3088	144.0
Ex/ANF 14 × 14 WE	179	160.13	1271	3.7	0.3741	0.5560	0.424	0.0300	0.3505	144.0
Ex/ANF 14 × 14 CE	176	157.24	1292	3.7	0.3814	0.5800	0.440	0.0310	0.3700	134.0
Ex/ANF 15 × 15 WE	204	159.70	1433	3.7	0.4410	0.5630	0.424	0.0300	0.3565	144.0
Ex/ANF 17 × 17 WE	264	159.71	1348	3.5	0.4123	0.4960	0.360	0.0250	0.3030	144.0

Table 1.2-6 BWR Fuel Characteristics

Fuel Type	No. of Fuel Rods	No. of Water Rods	Max. Assembly Length (in.)	Max. Assembly Weight (lb)	Max. MTU	Pitch (in.)	Rod Dia. (in.)	Clad Thick. (in.)	Pellet Dia. (in.)	Max. Active Length (in.)
GE 7 x 7	49	0	175.9	678.9	0.1923	0.738	0.563	0.037	0.477	146
GE 8 x 8-1	63	1	175.9	681.0	0.1880	0.640	0.493	0.034	0.416	146
GE 8 x 8-2	62	2	175.9	681.0	0.1847	0.640	0.483	0.032	0.410	150[1]
GE 8 x 8-4	60	4	176.1	665.0	0.1787	0.640	0.484	0.032	0.410	150[1,2]
GE 9 x 9	74	2[3]	176.1	646.0	0.1854	0.566	0.441	0.028	0.376	150[1,4]
	79	2	176.1	646.0	0.1979	0.566	0.441	0.028	0.376	150[1,4]
Ex/ANF 7 x 7	49	0	171.3	619.1	0.1960	0.738	0.570	0.036	0.490	144
Ex/ANF 8 x 8-1	63	1	171.3	562.3	0.1764	0.641	0.484	0.036	0.4045	145.2
Ex/ANF 8 x 8-2	62	2	176.1	587.8	0.1793	0.641	0.484	0.036	0.4045	150
Ex/ANF 9 x 9	79	2	176.1	575.3	0.1779	0.572	0.424	0.03	0.3565	150
	74	2[3]	176.1	575.3	0.1666	0.572	0.424	0.03	0.3565	150

[1] 6" natural uranium blankets on top and bottom.
[2] May have 1 large water hole - 3.2 cm ID, 0.1 cm thickness.
[3] 2 large water holes occupying 7 fuel rod locations - 2.5 cm ID, 0.07 cm thickness.
[4] Shortened active fuel length in some rods.

Table 1.2-7 Characteristics of General Atomics Irradiated Fuel Material (GA IFM)

Parameter	RERTR	HTGR
Maximum Number of Assemblies, Elements or Rods	13 intact; 7 sectioned	N/A
Maximum Loaded Enclosure Weight, lbs	76.0	71.5
Maximum Fuel Weight, lbs	23.73	23.52
Maximum Overall Length, in	29.92	N/A
Maximum Active Fuel Length, in	22.05	N/A
Fuel Material	U-ZrH	UC_2, UCO, UO_2, $(Th,U)C_2$, $(Th,U)O_2$
Fuel Rod Cladding	Incoloy 800	N/A
Maximum Uranium, kg U	3.86	0.21
Maximum Initial ^{235}U, wt %	19.7	93.15
Maximum Burnup, MWd/MTU	N/A	N/A
Maximum Unit Decay Heat, W	11.0	2.05
Maximum Cask Decay Heat, W	13.05	13.05
Earliest Shipment Date	1/1/96	1/1/96
Maximum Activity, Ci	2920	483

Table 1.2-8 Typical Production TPBAR Characteristics[1]

Parameter Description	Value
Maximum Number of TPBARs per Consolidation Canister	300
Number of Consolidation Canisters per Cask	1
TPBAR Clad Material	316 L Stainless Steel
Rod Length[2], in	153.04
Rod Diameter[2], in	0.381
Maximum Rod Heat Load, W	3.54
Maximum Cask Heat Load, kW	1.063
Maximum Tritium Content per Rod, gram	1.8
Maximum Activity per Cask[3], Ci	5.20×10^6
Loaded TPBAR Consolidation Canister Maximum Weight, pounds[4]	1,000
Maximum Event Failed Tritium Release (Ci/rod)	<55
Minimum Cooling Time, days	30

1 Refer to Section 1.5, Chapter 1 Appendices, Unclassified DOE Reference Documents and Drawings.
2 Beginning of life, nominal, unirradiated dimensions.
3 Primary dose contribution: 1.1×10^4 Ci ^{60}Co/cask
4 The bounding weight employed in the structural analysis.

Table 1.2-9 PULSTAR Fuel Characteristics

Description	Value
Maximum Pellet Diameter (inch)	0.423
Minimum Element (Rod) Cladding Thickness (inch)	0.0185
Minimum Element (Rod) Diameter (inch)	0.470
Maximum Active Fuel Height (inch)	24.1
Element (Rod) Length (inch)	26.2
Rod Pitch (inch)	0.525×0.607
Assembly Length (inch)	38
Box Outside Width (inch)	2.745×3.155
Box Thickness (inch)	0.06
Maximum Assembly or Loaded Can Weight (lb) [1]	80
Maximum PULSTAR Can Content Weight (lb)[2]	39.6
Maximum Enrichment (wt % ^{235}U)	6.5
Maximum ^{235}U Content per Element (g)	33
No. of Elements (Rods) per Assembly	25
No. of Elements (Rods) per Can[2]	25
Maximum Depletion (%^{235}U)	45
Minimum Cool Time (yrs)	1.5
Maximum Heat Load per Assembly (W)	30
Maximum Heat Load per Element (W)	1.2

[1] Listed weight is the maximum weight evaluated for the structural calculation to bound all payload configurations, including loaded cans, and spacers. Nominal PULSTAR assembly weight is 45 pounds.

[2] The contents of a PULSTAR can are restricted to the equivalent of the fuel material in 25 PULSTAR fuel elements and of the displaced volume of 25 intact PULSTAR fuel elements. Fuel material may be in damaged form including fuel debris. The listed weight represents the can content limit established by the structural analyses.

Table 1.2-10 Spiral Fuel Assembly Characteristics

Parameter	Value
Number of elements per assembly	10
Fuel element type	Curved plate
Nominal dimensions of element (cm)	0.147 × 7.33 × 63.5 (individual plate)
Chemical form of fuel meat	U-Al_x-alloy
Cladding material	Aluminum
Nominal over-all dimensions (cm)	63.818 (height) × 10.16 diameter[1]
Max total weight of ^{235}U (g)	160 (total per assembly)
Maximum enrichment (wt % ^{235}U)	95
Side plate material	Aluminum (inner and outer tubes)
Nominal side plate – dimensions (cm)	Inner 6.045 OD, 5.82 ID × 63.818 Outer 10.16 OD, 9.85 ID × 63.818[2]
Max. assembly weight (lb)	18[3]
Assembly maximum heat load (W)	15.7[4]
Burnup/cool time limit	Variable[5]

[1] Cropped to fit within ANSTO fuel basket module nominal height of 28.3 inches.

[2] Criticality evaluations reduced inner and outer shell thickness to 0.01 cm to provide additional moderator within the assembly.

[3] Typical assembly weight is 7.9 pounds. Bounding structural analysis weight is listed. Bounding weight includes DFC and fuel plates.

[4] Thermal and shielding evaluation employed 18 W per element. Based on cool time constraint, 15.7 W represents maximum heat load. Spiral fuel elements with degraded cladding loaded into aluminum DFCs shall be limited to a maximum decay heat of 10 W per element.

[5] Spiral fuel is constrained to DIDO MEU cool time limits as a function of burnup. Minimum cool times for the spiral assembly, down to 270 days, shall be determined using the procedure presented in Section 7.1.4 for 18 W DIDO MEU fuel.

Table 1.2-11 MOATA Plate Bundle Characteristics

Parameter	Value
Maximum number of elements per assembly	14
Nominal dimensions of element (cm)	66 cm long, 7.6 cm wide and 0.203 cm thick
Nominal dimensions of fuel meat (cm)	58.4 cm long, 6.99 cm wide and 0.1016 cm thick (bounding active fuel width evaluated to a maximum of 7.32 cm)
Chemical form of fuel meat	U-Al_x-alloy
Cladding material	Aluminum
Nominal clad thickness (cm)	0.05 cm (evaluated to 0.01 cm minimum)
Plate spacer thickness (cm)	0.147 min, 0.152 max (evaluated to 0.18 maximum)
Maximum weight of ^{235}U (g) per plate	22.3
Maximum enrichment (wt % ^{235}U)	92
Nominal side plate thickness (cm)	0.635 (bounding evaluation replaced by cavity moderator)
Max. assembly weight (lb)	18[1]
Maximum heat load per assembly (W)[2]	3 (total for 14 fuel plates)
Maximum burnup	30,000 MWd/MTU or 4.1 % depletion ^{235}U
Minimum cool time (years)	10

[1] Typical assembly weight is 13.6 pounds. Bounding structural analysis weight is listed. Bounding weight includes DFC and fuel plates.

[2] Actual heat load at limiting burnup and cool time < 1 Watt. Thermal evaluations at 3 Watt per bundle.

Table 1.2-12 Typical TPBAR Segment Characteristics in Waste Container

Parameter/Description	Value
Maximum Number of TPBAR Segments and Debris per Waste Container, equivalent number of TPBARs	55
Number of Waste Containers per Cask	1
Waste Container Material	316L Stainless Steel
Maximum Tritium Content per TPBAR equivalent, gram	1.8
Maximum Activity per Cask, Ci	6.66 ×10+5
Maximum Heat Load per Waste Container, watts	195
Maximum Loaded Waste Container Weight, pounds	700[1]
Minimum Cooling Time, days	90

[1] Design basis weight of a loaded waste container is 700 pounds. Applying a maximum payload of 55 TPBARs, with storage canister, yields a maximum weight of 662 pounds. Use of shrouds to contain segments and/or TPBAR debris reduces overall waste container weight due to a reduction in TPBAR payload capacity resulting from the reduced container free volume.

Table 1.2-13 Solid, Irradiated Hardware Characteristics[1]

Parameter	Value
Maximum Content Weight	4,000 pounds [2]
Maximum Content Length	171.5 inches [3]
Hardware Material	Solid, irradiated and contaminated fuel assembly structural or reactor internal component hardware [4]
Maximum Cask Heat Load	1.0 KW
Maximum Activity per Cask, Ci	6.0 x 10E+6
Maximum Source Term, gamma/sec	6.0 x 10E+15
Maximum Source Term, MeV/sec	1.0 x 10E+15

1 Maximum content weight includes any spacers, containers or dunnage loaded in the cavity with the irradiated hardware.

2 Length of cavity is limited to 171.5 inches by the installation and use of an irradiated hardware spacer bolted to the underside of the closure lid.

3 Appropriate secondary containers will be used to prevent any contact and cross-contamination between the carbon steel contents and the stainless steel internals of the cask cavity.

4 The irradiated hardware contents may contain fissile material, provided the quantity of fissile material does not exceed a Type A quantity and does not exceed the mass limits of 10 CFR 71.53.

Table 1.2-14 SLOWPOKE Fuel Rods

Parameter	Value
Maximum Cask Heat Load	5 W
Maximum Canister Heat Load	0.625W
Payload Limit (lb/canister)	25
Maximum ^{235}U per rod (g)	2.800
Maximum U per rod (g)	3.111
Minimum Cool Time	14 yr
Maximum Burnup (GWd/MTU or wt% ^{235}U Depletion)	30 GWd/MTU 4.5 wt% ^{235}U

Notes:

1.) Heat load limit established by thermal analysis.
2.) Fissile material (^{235}U) mass limit established by criticality analysis.
3.) Fuel (U) mass, cool time, burnup/depletion limit established by shielding analysis.
4.) Payload weight limit established by structural analysis and includes both fuel and canister weight.

Table 1.2-15 NRX / NRU Fuel Assemblies / Rods

Parameter	NRU (HEU)	NRU (LEU)	NRX
Maximum Cask Heat Load	640 W		
Maximum Per Tube Heat Load	35.6 W		
Payload Limit (lb/tube)	20		
Maximum ^{235}U per rod (g)	43.24	43.68	79.05
Maximum U per rod (g)	48.0	230	87.0
Minimum Cool Time (yr)	19	3	18
Maximum Burnup (MWd)	364	363	375
Maximum ^{235}U Depletion (%)	87.4	83.6	85.1

Notes:

1.) Heat load limit established by thermal analysis.
2.) Fissile material (^{235}U) mass limit established by criticality analysis.
3.) Fuel (U) mass, cool time, burnup/depletion limit established by shielding analysis.
4.) Payload weight limit established by structural analysis and includes both fuel, caddy weight and dunnage.

Table 1.2-16 HEUNL Characteristics

Parameter	Value
Maximum HEUNL payload per Container	15.35 gal
Maximum Cask Heat Load	4.65 W
Maximum Per Container Heat Load	1.16 W
Maximum HEUNL Heat Load	0.02 W/L
Maximum Curie Content (gamma emitters) [1]	9.0 Ci/L
Maximum ^{235}U content[2]	7.4 g ^{235}U/L
Maximum ^{235}U enrichment [2]	93.4 wt%

[1] Maximum Curie content defined by source term and shielding evaluations.
[2] Maximum ^{235}U content and enrichment defined by criticality evaluation.

Table 1.2-17 SLOWPOKE Fuel Core

Parameter	Value
Maximum Cask Heat Load (W)	45
Payload Limit (lb)	15
Maximum Number of Rods per Core	298
Maximum Initial ^{235}U per rod (g)	2.83
Maximum Initial Enrichment (wt % ^{235}U)	95.3
Maximum Initial ^{235}U per core (g)	837
Minimum Initial Enrichment (wt% ^{235}U)	90
Minimum Cool Time	2 weeks
Maximum Core Average Depletion (%^{235}U)	2.1%

Notes:

[1] Heat load limit established by thermal analysis.

[2] Maximum number of rods per core, fissile material (^{235}U) initial mass per rod limit, and maximum initial enrichment established by criticality analysis.

[3] Fissile material (^{235}U) initial mass per fuel core, minimum initial enrichment, depletion percentage, and cool time established by shielding analysis.

[4] Payload weight limit established by structural analysis.

Table 1.2-18 EFN Rods, Booster Rods, and Moly Targets

Parameter	Short Moly	Double Length Moly	EFN	Boosters
Maximum Per Caddy Heat Load (W)	0.3	0.8	8	0.2
Payload Limit (lb/tube)	20			
# Rod/Targets (Equivalent)	20	36	36	16
Maximum ^{235}U per rod (g)	1.1	2.41	13	18.1
Minimum Cool Time (yr)	38	8	23	37
Maximum ^{235}U Depletion (%)	94.8	30.4	87.4	2.9
Maximum Initial Enrichment (wt% ^{235}U)	94			

Notes:

1.) Fissile material (^{235}U) mass limit established by criticality and shielding analysis.

2.) Cool time, burnup/depletion limit established by shielding analysis.

3.) Payload weight limit established by structural analysis and includes both fuel, caddy/caddy plug weight and dunnage.

4.) Depletion percentage may be generated on a per assembly basis for EFN rods and Booster rods and on a rod basis for the Moly Targets. Assemblies are disassembled into rods/rods segments prior to loading into caddy. Moly rods are disassembled into the component targets.

Table 1.2-19 SrF_2 Capsules

Parameter	WESF Capsules	BUP-500 Capsules
Maximum Cask Heat Load (W)	2400	2200
Maximum Per Capsule Heat Load (W)	400	1100
Maximum Activity per Cask (Ci ^{90}Sr)	1.062E+06	3.52E+05
Payload Limit (lb)	396	300

Table 1.2-20 LANL MOX Fuel Rod Characteristics

Parameter	PNNL	EXXON	UO_2	ROD 1063	530-000	NIS5
Max. rod OD (inch)	0.565	0.451	0.229	0.55	0.63	0.5
Min. wall thick. (inch)	0.035	0.035	0.015	0.015	0.015	0.015
Rod material	Zr Alloy	Zr Alloy	SS304	Zr Alloy	Zr Alloy	SS316
Max. active length (inch)	35.6	70	36.1	47.913	18	13.5
Max. pellet OD (inch)	0.486	0.372	0.1988	0.48	0.56	0.31
Max. # of rods per transfer tube	4	2	8	3	1	3
Max. # of tubes per cask	16	16	16	6	1	4
Fuel form	Oxide	Oxide	Oxide	Oxide	Oxide or Carbide	Carbide
^{235}U wt%	0.712	0.712	94	0	0	94
^{240}Pu wt%	16	16	0	10	10	4
Pu wt%	5.36	6.31	0	100	100	20
U-235 (g/rod)	6.76	7.71	159.9	0	0	159.58
U (g/rod)	949.85	1083.44	170.11	0	0	169.76
Pu (g/rod)	56.29	76.35	0	1378.77	922.01	42.38
Total U/Pu (g/rod)	1006.14	1159.79	170.11	1378.77	922.01	212.14

Note:

1.) Fissile Pu-239 and Pu-241 comprise the remaining plutonium. A 9 to 1 ratio of Pu-239 to Pu-241 bounds the range of Pu-240 weight fractions analyzed herein.

2.) Maximum number of tubes for ROD1063 and NIS5 is governed by the damaged fuel evaluation.

1.3 Quality Assurance

The Nuclear Regulatory Commission (NRC) has assigned Approval Number 18 to the Nuclear Assurance Corporation Quality Assurance program that satisfies the provisions of Subpart H of 10 CFR 71.

The Quality Assurance program provides control over all activities that are important to safety that are applicable to the design, fabrication, assembly, testing, maintenance, repair, modification, and use of the packaging for transportation of radioactive materials. The program applies controls to the various activities in a graded approach, such that the effort expended on an activity is consistent with its importance to safety. The program is consistent in approach and method with Regulatory Guide 7.10 and satisfies the specific requirements of 10 CFR 71.101 (a), (b), and (c).

In accordance with the requirements of 10 CFR 71.37(a), the approved Quality Assurance program has been applied to the design, analysis, package fabrication, assembly, testing, maintenance, and repair or modification of the NAC-LWT package. An equivalent NRC approved program maintained by a Registered User would be applied to use of the package.

1.4 License Drawings

This section contains the license drawings pertinent to the NAC-LWT cask (refer to the List of Drawings in the Table of Contents for Chapter 1).

R-2016406

REV	CHANGE
0	INITIAL ISSUE
1	INC DCR 0A,0B
2	INC DCR 1A,1B
3	INC DCR 2A
4	INC DCR 3A
5	INC DCR 4A
6	INC DCR 5A
7	INC DCR 6A

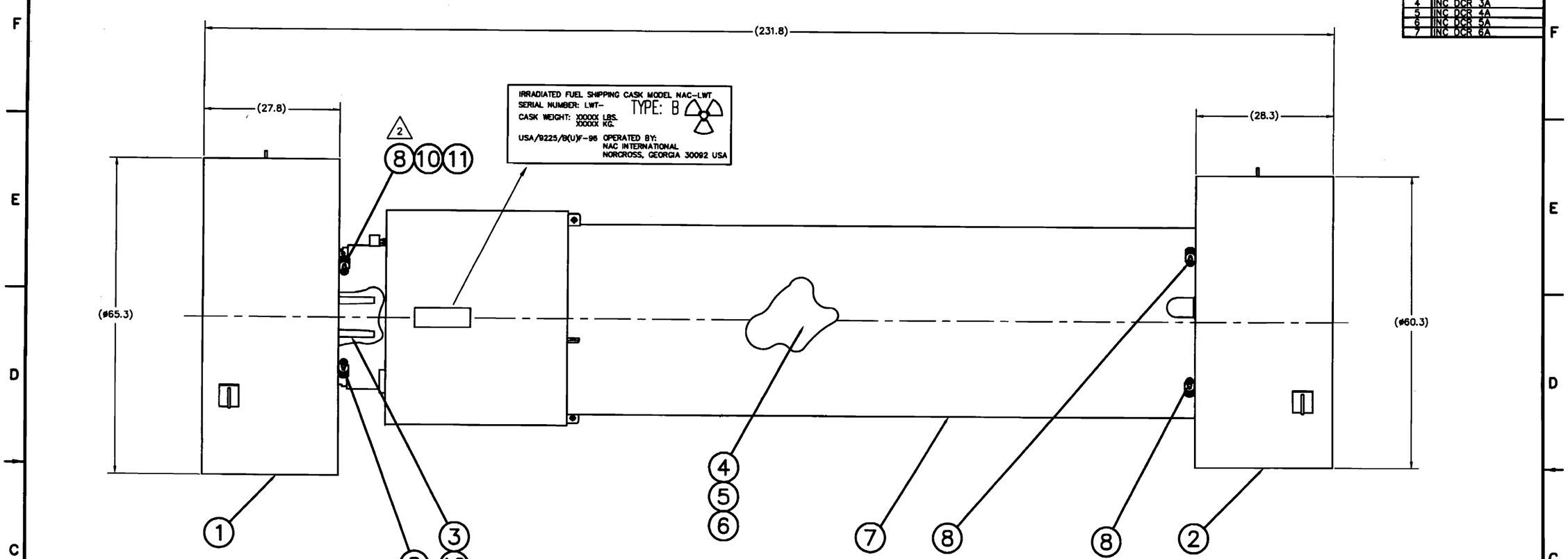

99 CASK ASSEMBLY

98 CASK ASSEMBLY

97 CASK ASSEMBLY

			ITEM	NAME	MATERIAL	SPEC	DRAWING No.	DESCRIPTION
		4	13	LOCK WASHER	18-8	COML		1/2 NOMINAL
		4	12	HEX HEAD BOLT	18-8	COML		1/2-13 UNC X 1-1/4
1	1	1	11	TAMPER INDICATING DEVICE (TID)		COML		
A/R	A/R	A/R	10	WIRE	ST STL	COML		
			9	(DELETED)				
8	8	8	8	BALL-LOK PIN	17-4PH	AMS 5643		ø1/2, 2.0 MINIMUM GRIP LENGTH
1	1	1	7	CASK BODY ASS'Y			315-40-02-99	
1			6	METAL FUEL BASKET			315-40-12-99	
	1		5	BWR BASKET			315-40-11-99	
		1	4	PWR BASKET			315-40-10-99	
		1	3	SPACER			315-40-09-99	
1	1	1	2	IMPACT LIMITER			315-40-06-99	
1	1	1	1	IMPACT LIMITER			315-40-05-99	
97	98	99						
ASSY	ASSY	ASSY						
QUANTITY								

2 DRILL ø1/16 HOLE THRU SHAFT OF ITEM 8 (BALL-LOK PIN) APPROXIMATELY 1/4" FROM THE CHAMFERED END OF PIN. MINIMUM ONE PIN PER CASK ASSEMBLY.

1 (DELETED)

NOTES:

UNLESS OTHERWISE STATED

DIMENSIONING AND TOLERANCING SHALL BE PER ASME Y14.5M-94. UNSPECIFIED DIMENSIONAL TOLERANCES ARE SHOWN BELOW.

ALL THREAD DEPTH CALLOUTS ARE TO BE CONSIDERED AS A MIN. DEPTH OF PERFECT THREADS. THE ACTUAL DEPTH OF THE THREADS IS NOT SUBJECT TO TOLERANCE CONTROLS.

.XXX	UNDER 3	±.003
	3-12	±.005
	OVER 12	±.010
.XX	UNDER 6	±.02
	6-10	±.03
	OVER 10	±.05
.X	ALL	±.1
FRACTIONAL		±1/8
ANGLES		±0.5°

WEIGHTS ARE APPROXIMATE AND ARE TO BE USED FOR HANDLING PURPOSES ONLY

ALL DIMENSIONS ARE IN INCHES

BORDER SIZE: F (40 X 28)

ALL UNSPECIFIED TOOL RADII: .015 - .030

BREAK ALL SHARP CORNERS .015 - .030

MACHINED SURFACES TO BE ▽ OR BETTER

NEXT ASSEMBLY:

DRAWING TYPE: LICENSE

GROUP	NAME	DATE
PREPARER		10/2/07
CHECKER		12/7/07
PROJECT MANAGER		12/7/07
ENGINEERING		12/17/07
LICENSING		12/18/07
QUALITY		12/24/07

NAC INTERNATIONAL

LEGAL WEIGHT TRUCK TRANSPORT CASK ASSEMBLY SAFETY ANALYSIS REPORT

PROJECT 315-40 | DRAWING 01 | REV 7

SCALE | WEIGHT | SH 1 OF 1 | TEMPLATE 10-31-2007

R-225273

REV	CHANGE
0	INITIAL ISSUE
1	INC DCR 0A,0B,0C,0D,0E,0F
2	INC DCR 1A
3	INC DCR 2A,2B
4	INC DCR 3A
5	INC DCR 4A
6	INC DCR 5B
7	INC DCR 6A
8	INC DCR 7A
9	INC DCR 8A
10	INC DCR 9A
11	INC DCR 10A
12	INC DCR 11A
13	INC DCR 12A
14	INC DCR 13A
15	INC DCR 14A
16	INC DCR 15A
17	INC DCR 16A
18	INC DCR 17A
19	INC DCR 18A
20	INC DCR 19A
21	DOE PACKAGE ONLY
22	INC DCR 21A
23	INC DCR 22A
24	INC DCR 23A
25	INC DCR 24A

16 ASSEMBLY 96 TO BE UTILIZED FOR THE DRY LOADING AND UNLOADING OF CONTENTS WHEN WATER IS NOT INTRODUCED INTO THE CAVITY AND A DRAIN TUBE IS NOT REQUIRED.

15 ITEMS 12 AND 13 TO BE USED AS REQUIRED FOR A SPECIFIC BASKET LOADING CONFIGURATION FOR PLANNED UNLOADING METHODS AND EQUIPMENT.

14 (DELETED)

13 (DELETED)

12 TORQUE TO 285±15 INCH LBS.

11 ITEM 32 (ALT. B PORT COVER) MAY BE SUBSTITUTED FOR ITEM 31 (ALT. PORT COVER) ON ASSY. 99, 98 AND 96.

10 DRILL ⌀.13 THRU ITEM 30 CENTERED ON END.

9 SET TO CRACK AT 165±10 PSIG.

25 8 THE NEUTRON SHIELD TANK IS FILLED WITH A WATER/ETHYLENE GLYCOL/ POTASSIUM TETRA-BORATE MIXTURE THAT WILL NOT FREEZE AT -40°F (MIN) AND CONTAINS AT LEAST 1 WT. % BORON.

7 A .0002" TO .0005" PLATING OF HIGH QUALITY CHROMIUM IS OPTIONAL AS AN AID IN PREVENTING GALLING DURING CASK OPERATIONS. IF CHROME PLATING IS APPLIED, THE PRODUCT WILL BE PROCESSED, INSPECTED AND TESTED AS NECESSARY TO ENSURE THAT THE PLATED ITEM IS NOT HINDERED IN PERFORMING ITS DESIGN FUNCTION.

6 TORQUE TO 300±30 INCH LBS.

5 TORQUE TO 600±60 INCH LBS.

4 TORQUE TO 60±6 INCH LBS.

3 TORQUE TO 100±10 INCH LBS

2 TORQUE TO 260±20 FT-LBS

1 TORQUE TO 100±5 INCH LBS.

NOTES:

95 ASSY QUANTITY	96 ASSY QUANTITY	97 ASSY QUANTITY	98 ASSY QUANTITY	99 ASSY QUANTITY	ITEM	NAME	MATERIAL	SPEC	DRAWING No.	DESCRIPTION
	A/R	2	A/R	A/R	32	ALT. B PORT COVER			315-40-08-92	
	2		2	2	31	ALT. PORT COVER			315-40-08-93	
	1	1	1	1	30	PIPE CAP	ST. STL.	COML		
		1	1	1	29	ADAPTER	ST. STL.	COML		
					28	(DELETED)				
					27	(DELETED)				
	A/R	A/R		A/R	26	SHIELD FLUID	ETHYLENE GLYCOL	COML		SEE DELTA NOTE 8
	1	1	1	1	25	CASK BODY			315-40-03-99	
	2	4	4	4	24	SOC.HD.CAP.SCRW.	18-8 ST. STL.	COML		1/4-20UNC X 1 LG.
					23	(DELETED)				
					22	(DELETED)				
		1	1	1	21	ADAPTER			315-40-08-96	
	5	5	5	5	20	O-RING	VITON	COML		
	5	5	5	5	19	PLUG	ST. STL.			
		1	1	1	18	GASKET			315-40-08-3	
	4	4	4	4	17	TRUNNION BSHN.			315-40-08-7	
	4	4	4	4	16	TRUNNION CVR.			315-40-08-6	
	1	1	1	1	15	RELIEF VLV.	ST. STL.	COML		
	12	12	12	12	14	LID BOLTS			315-40-08-12	
		A/R	A/R	A/R	13	DRAIN ALIGN. RING			315-40-08-94	
		A/R	A/R	A/R	12	DRAIN TUBE			315-40-08-95	
	1	1	1	1	11	LID			315-40-04-99	
	2	2	2	2	10	GUIDE			315-40-08-99	
					9	(DELETED)				
	2	2	2	2	8	O-RING	VITON	COML		
	2	2	2	2	7	QUICK DISC.	ST. STL.	COML		
	7	7	7	7	6	O-RING	VITON	COML		
	6	6	6	6	5	PLUG	ST. STL.	COML		
					4	(DELETED)				
	A/R		6	6	3	SOC.HD.CAP.SCRW			315-40-08-9	
	12	12	12	12	2	FLT.SOC.HD.CAP.SCRW	18-8 ST. STL.	COML		1/2-13UNC X 3/4 LG.
					1	(DELETED)				

UNLESS OTHERWISE STATED	GROUP	NAME	DATE
DIMENSIONING AND TOLERANCING SHALL BE PER ASME Y14.5M-94	PREPARED	Dan W	5/15/14
ALL THREAD DEPTH CALLOUTS ARE TO BE CONSIDERED AS A MIN. DEPTH OF PERFECT THREADS.	CHECKED	[illegible]	5-20-14
	PROJECT MANAGER	[illegible]	5-20-14
	ENGINEERING	[illegible]	5-20-14
ALL DIMENSIONS ARE IN INCHES	LICENSING	[illegible]	5/20/14
MACHINED SURFACES TO BE ▽ OR BETTER	QUALITY	B Barnett	5/21/14
NEXT ASSEMBLY: 315-40-01			
DRAWING TYPE: LICENSE			

NAC INTERNATIONAL

LEGAL WEIGHT TRUCK CASK BODY ASSEMBLY SAFETY ANALYSIS REPORT

PROJECT	DRAWING	REV
315-40	02	25
	SH 1 OF 2	10:50 AM 05-15-2014

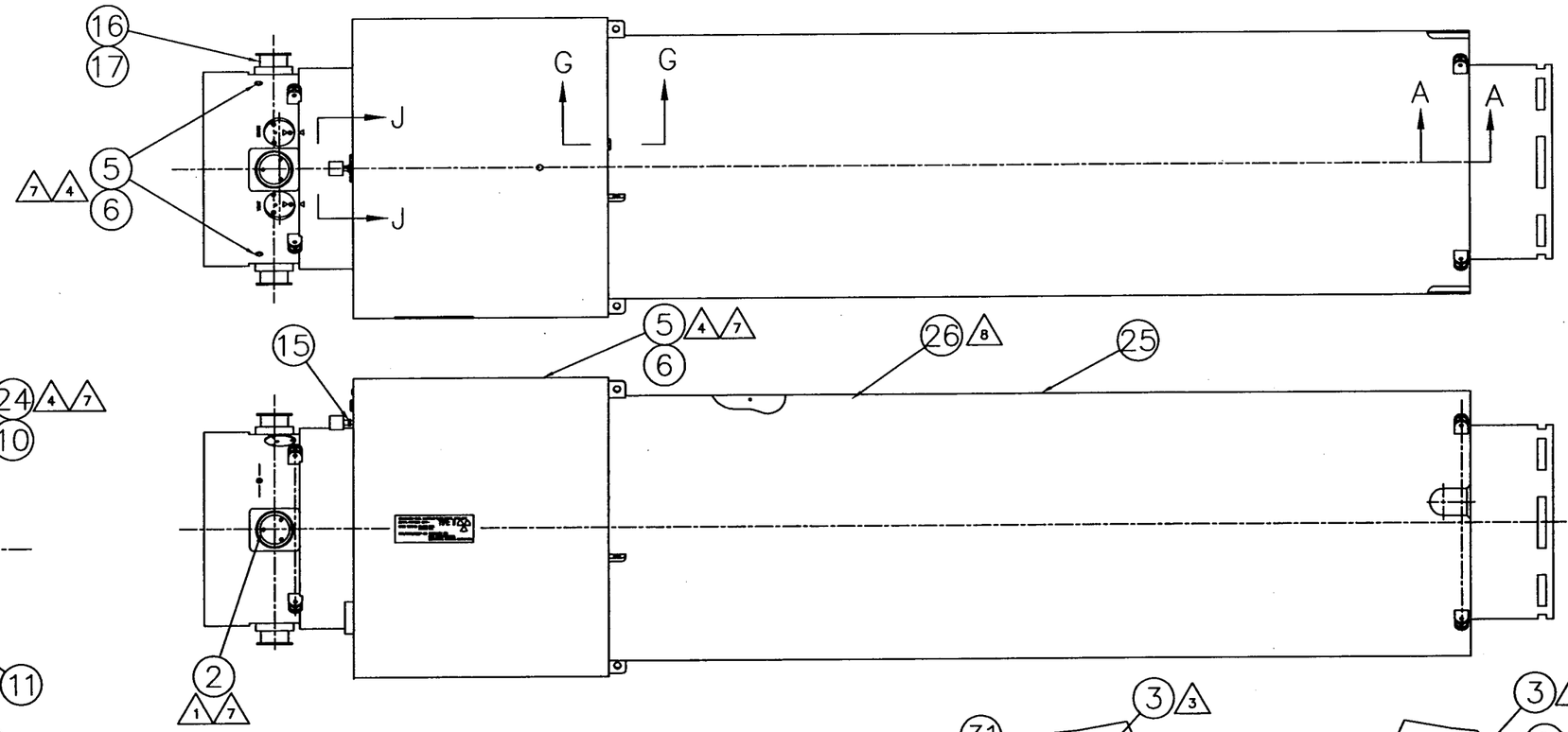

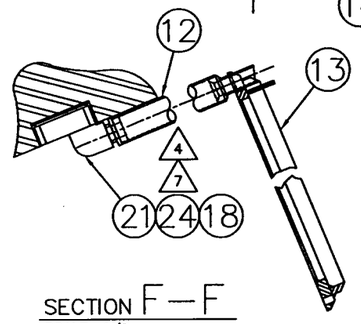

SECTION F—F
SCALE: 1/2
DRAIN TUBE CONFIGURATION

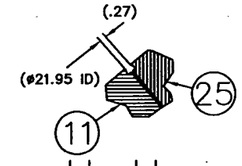

SECTION H—H
SCALE: 1/2

99	LEGAL WEIGHT TRUCK CASK
98	LEGAL WEIGHT TRUCK CASK WITHOUT NEUTRON SHIELDING
97	LEGAL WEIGHT TRUCK CASK ALT. B PORT COVER CONFIGURATION
16 96	LEGAL WEIGHT TRUCK CASK

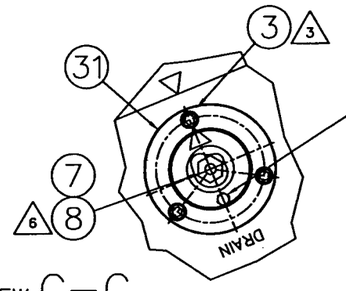

VIEW C—C
SCALE: 1/2

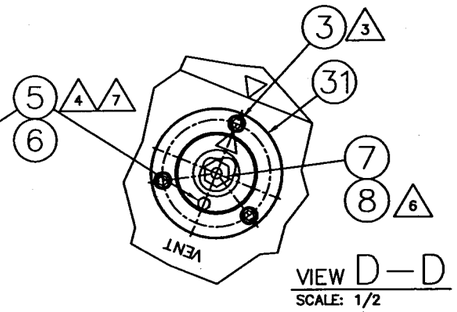

VIEW D—D
SCALE: 1/2

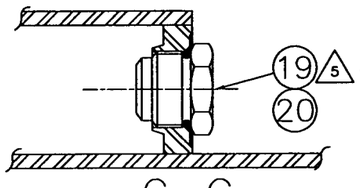

SECTION G—G
SCALE: 1/1

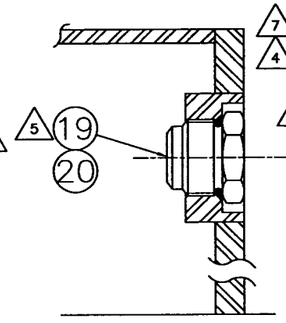

SECTION A—A
SCALE: 1/1

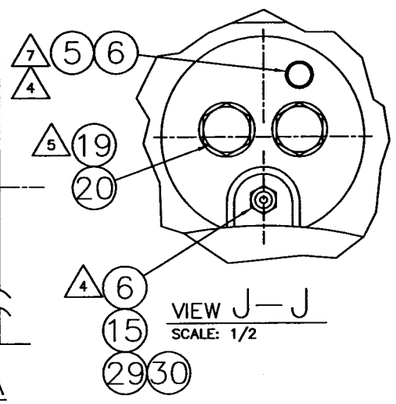

VIEW J—J
SCALE: 1/2

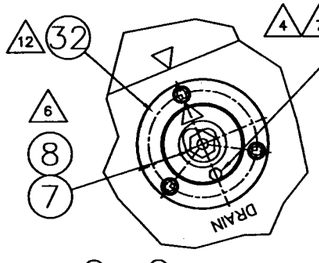

VIEW C—C
SCALE: 1/2
WITH ALT. B PORT COVER ASSEMBLY

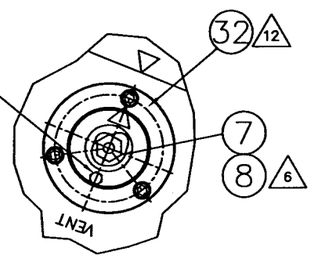

VIEW D—D
SCALE: 1/2
WITH ALT. B PORT COVER ASSEMBLY

NAC INTERNATIONAL

LEGAL WEIGHT TRUCK CASK
BODY ASSEMBLY
SAFETY ANALYSIS REPORT

PROJECT	DRAWING	REV
315-40	02	25
	SH 2 OF 2	10:50 AM 05-15-2014

R-12/336

NO	REVISION	BY	APPROVED BY	DATE
1	INC DCR 0A			
2	INC DCR 1A			
3	INC DCR 2A&2B			
4	INC DCR 3A,B,C,D, &E			
5	INC DCR 4A			
6	INC DCR 5A			

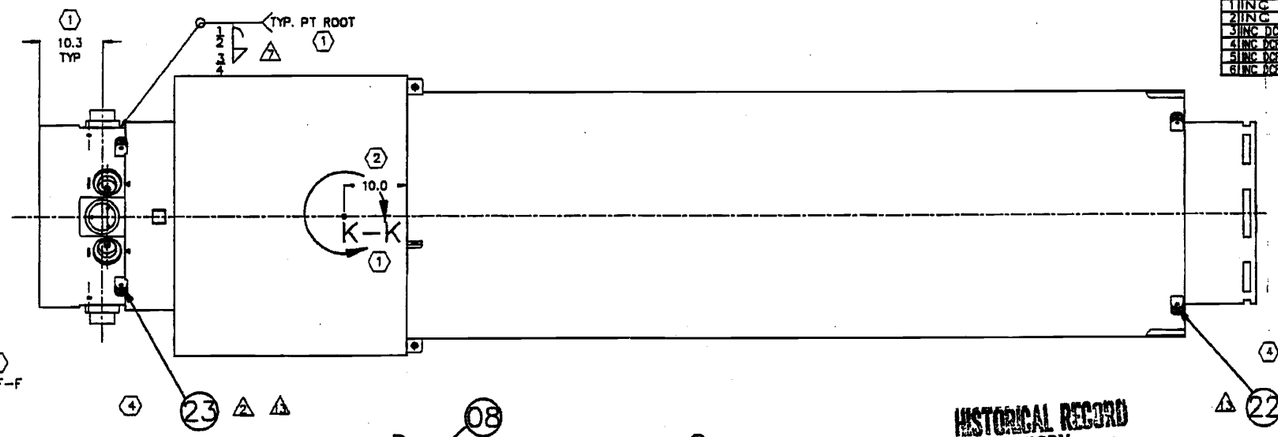

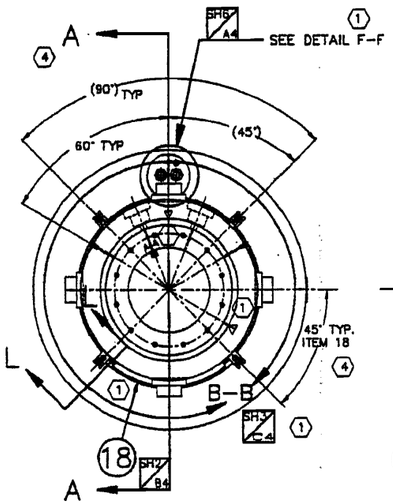

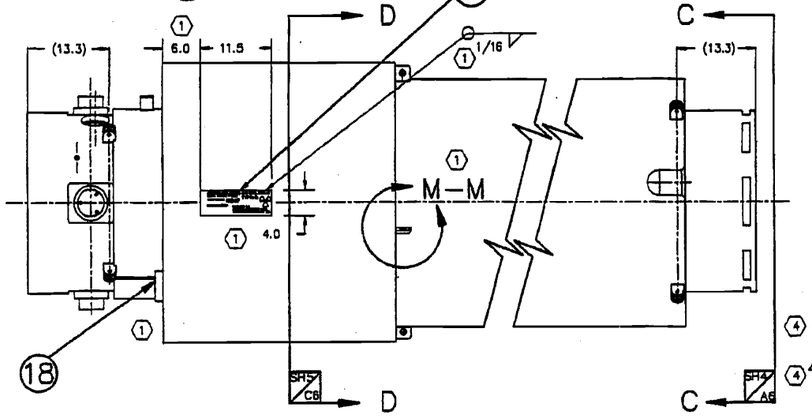

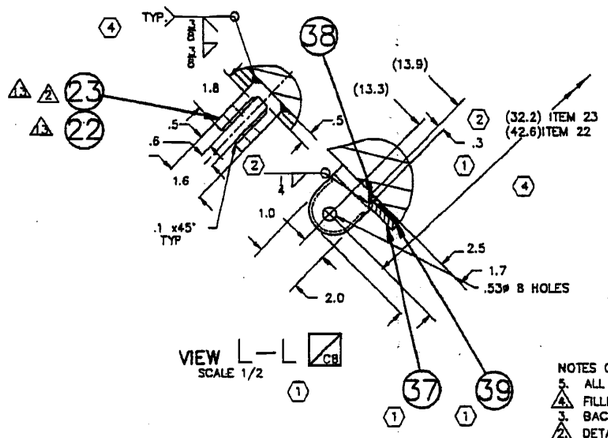

VIEW L–L
SCALE 1/2

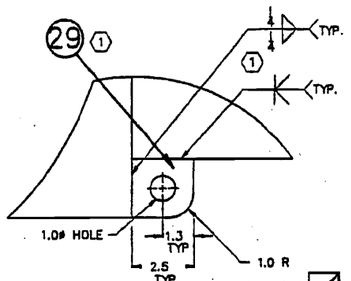

DETAIL M–M
SCALE 1/2
ROTATED TO PLANE OF PAPER

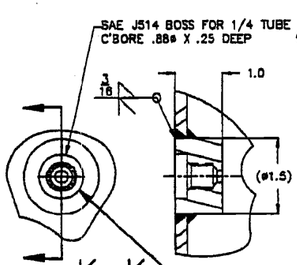

DETAIL K–K
SCALE: FULL

NOTES CONTINUED ON SH2

5. ALL EXPOSED WELDS TO BE GROUND FLUSH TO BASE METAL OR SMOOTH FILLET
4. FILLET WELD OF THESE JOINTS ARE TO BE MADE TOGETHER
3. BACK UP BARS TACK WELDED IN PLACE EXCEPT WHERE SHOWN
2. DETAIL 22 AND 23 ARE THE SAME EXCEPT FOR CUT AROUND 37 AND 38, SEAL WELD AS REQUIRED
1. ALL EXTERIOR SURFACES TO BE 125 RMS OR BETTER

NOTE:

HISTORICAL RECORD COPY
DO NOT REMOVE

ITEM	QTY	NO	NOMENCLATURE	MATERIAL SPEC	GRADE	DRAWING NO.	DESCRIPTION
	1	41	COVER	SS 316 PLATE	AISI		.040
	1	40	BOSS	SS 304 PLATE	ASME SA182		1-1/2ø BAR
	AS REQD	39	INSUL FOAM		DIMELOCK(PFC) or EQUAL		BISCO PROD. INC. 1/8 THK
	1	38	STRIP	SS 304 PLATE	AISI		1/2 x 3/16 BAR
	1	37	HEAT SHIELD	SS 316 PLATE	AISI		.236 (6mm)
	1	36	SUPPORT	SS 316 PLATE	ASTM A240		1 PLATE
	1	35	STRIP	SS 316 PLATE	AISI		.236 (6mm)
	1	34	BAFFLE	SS 316 PLATE	AISI		.236 (6mm)
	15	33	STRIP	SS 316 PLATE	AISI		.236 (6mm)
	1	32	GUARD	SS 316 PLATE	AISI		.236 (6mm)
	1	31	ADAPTER	SS 304 PLATE	ASME SA240		1 PLATE
		30					
	4	29	LUG	SS 316 PLATE	ASTM A240		1/2 PLATE
	8	28	BAFFLE	SS 316 PLATE	AISI		.315 (8mm)
	8	27	STRIP	SS 316 PLATE	AISI		.236 (6mm)
	7	26	BAFFLE	SS 316 PLATE	AISI		.236 (6mm)
	7	25	STRIP	SS 316 PLATE	AISI		.236 (6mm)
	15	24	GUSSET	SS 304 PLATE	AISI		.236 (6mm) PLATE
	4	23	LUG	SS 304 PLATE	ASTM A240		1-3/4 PLATE
	4	22	LUG	SS 304 PLATE	ASTM A240		1-3/4 PLATE
	1	21	BOTTOM	SS 304 PLATE	ASME SA182		18ø FORGING
	1	20	BOTTOM	SS 316 PLATE	ASME SA182		3-1/2 FORGING
	1	19	SUPPORT	SS 304 PLATE	ASME SA240		1 PLATE
	1	18	STOP	SS 304 PLATE	ASME SA240		1 3/4 PLATE
	8	17	N/S TANK SKIN	SS 316 PLATE	ASME SA240		.236 (6mm) PLATE; 2B FINISH
	2	16	FITTING	SS 316 PLATE	ASME SA240		1 PLATE
	1	15	SOCKET	SS 316 PLATE	ASME SA182		9 X 8 BAR
	1	14	SOCKET	SS 316 PLATE	ASME SA182		9 X 8 BAR
	4	13	TRUNNIONS			315-40-08-9	
	12	12	INSERT		COML		HEL.-COIL 1185-18CN2000
	6	11	INSERT		COML		HEL.-COIL 1185-6CN0938
	2	10	INSERT		COML		HEL.-COIL 1185-4CN0500
	1	09	PERCOLATOR TUBE	SS 304 PLATE	ASTM A213		1/2 OD X .035 WALL
	1	08	NAME PLATE	SS 304 PLATE	ASME SA240		12 GA. SHEET 2B FINISH
	AS REQD	07	END	SS 304 PLATE	ASME SA240		1/2 PLT.
	AS REQD	06	SHIELDING	PB	ASTM B29		CHEMICAL GRADE
	8	05	EX. TANK SKIN	SS 316 PLATE	ASME SA240		.315 (8mm) PLATE, 2B FINISH
	1	04	TOP FORGING	SS 304 PLATE	ASME SA182		FORGING
	1	03	BOTTOM FORGING	SS 304 PLATE	ASME SA182		FORGING
	1	02	INNER SHELL	SS 304 PLATE	ASME SA240		3/4 THK. PLT.
	1	01	OUTER SHELL	SS 304 PLATE	ASME SA240		1 1/4 PLATE

NO	NO ITEMS	NAME	MATERIAL SPEC	DRAWING NO.	DESCRIPTION
ASSY QUANTITY	ASSY QUANTITY				

NUCLEAR ASSURANCE CORPORATION
ENGINEERING SERVICE DIVISION
NORCROSS, GEORGIA 30092

SYM	GEOMETRY	UNLESS OTHERWISE SPECIFIED	GROUP	NAME	DATE
	FLATNESS	3 PLACE DEC. TOL. / 2 PLACE DEC. TOL.	DRAWN		
	STRAIGHTNESS	UNDER 3 A.005 / UNDER 6 A.01	DESIGN ENGINEER		
	ANGULARITY	3-12 A.005 / 6-12 A.03	ENGINEER		
	PERPENDICULARITY	OVER 12 A.005 / OVER 18 A.05	PROJECT		
	PARALLELISM	1 PLACE DEC. ±.1 / FILLETS .015 TO .030	TECHNICAL		
	CONCENTRICITY	OVER (-)-10-020 MED 30 / ANGLES ±.2°	MANAGER		
	TRUE POSITION	TOLERANCE-DIMEN (2.30-10)	QUALITY		
		BREAK CORNERS .015-.030	NEXT ASSY		
		TYPE OF DRAWING: SAFETY ANALYSIS REPORT		315-40-02	

LEGAL WEIGHT TRUCK TRANSPORT CASK BODY SAFETY ANALYSIS REPORT

PROJECT	DESIGN ORGANIZATION	DRAWING	REV
LWT	315-40	03	8
SCALE 1/8 & NOTED	WEIGHT	SH 1 OF 6	LOC

A-12336

DETAIL ITEM 36 (1)

SEE DETAIL P-P

SEE DETAIL ZONE F8

NOTCH ITEM 7,24,37 & 26 TO CLEAR ITEM 18

SECTION A-A SH 1 C 8

SEAL WELD TYP

1.0

(1) DETAIL P-P CB

SCALE 1/1

9. REFERENCE TO ASME CODE IS TO INCLUDE THE 1986 EDITION THRU THE A87 ADDENDUM.

8. WELDS MARKED "RT" TO BE RADIOGRAPHIC EXAMINED PER ASME SECT V ARTICLE 2, WITH ACCEPTANCE PER ASME SECTION III, ARTICLE NB-5320 AS MODIFIED BY CODE CASE N493.

7. FINISHED SURFACES OF ALL WELDS TO BE LIQUID PENETRANT EXAMINED PER ASME SECT. V, ARTICLE 6. THE ACCEPTANCE STANDARD TO BE SECT. VIII, DIV. 1, APPENDIX 8 EXCEPT WELDS MARKED "PT ROOT" and "RT" TO BE ACCEPTED PER SECTION III, ARTICLE NB-5350.

6. ALL WELDING TO BE IN ACCORDANCE WITH SECTION IX OF ASME PRESSURE VESSEL CODE.

CONTINUATION OF NOTES (SEE SH 1)

4 13 ITEMS 22 & 23 (LUGS) SHALL BE LOCATED BY USING ASSEMBLIES 315-40-05-99 AND 315-40-06-99 (IMPACT LIMITERS) AS ALIGNMENT FIXTURES.

6 1 12 A FLAIRING OFFSET ALLOWED BETWEEN ITEMS 01 AND 03 OR 04 PER NB-4230, ASME BOILER AND PRESSURE VESSEL CODE.

1 11 TYPICAL FOR OUTER SHELL ONLY. (ITEM 01)

1 10 TYPICAL FOR END FORGINGS ONLY. (ITEMS 03 & 04)

HISTORICAL RECORD COPY
DO NOT REMOVE

NUCLEAR ASSURANCE CORPORATION

LEGAL WEIGHT TRUCK TRANSPORT CASK BODY SAFETY ANALYSIS REPORT

PROJECT	DESIGN PACKAGE	DRAWING	REV.
LWT	315-40	03	6

SCALE 1/4 & NOTED | WEIGHT | SHT. 2 OF 8 | LOC.

R-12336

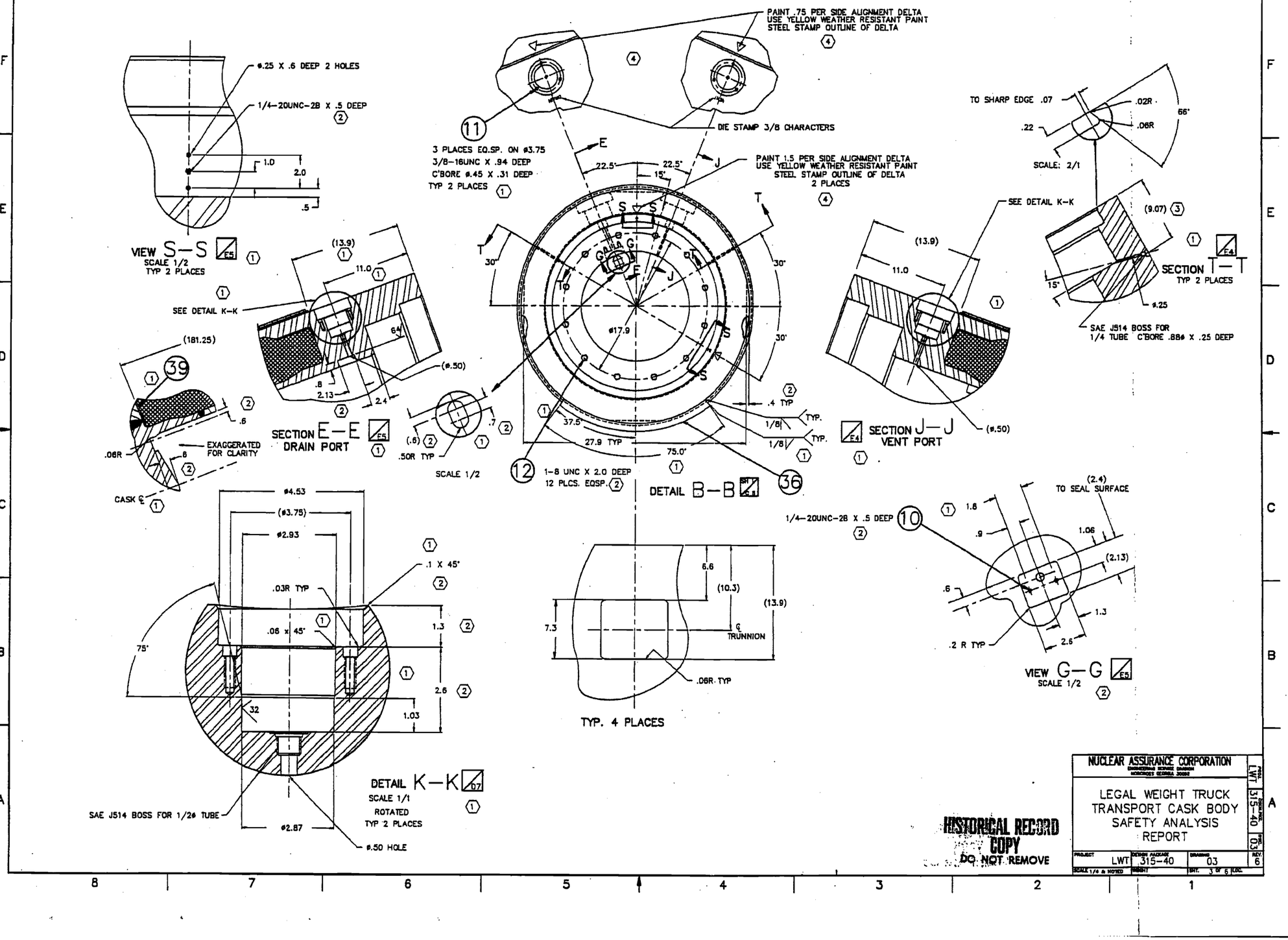

HISTORICAL RECORD COPY
DO NOT REMOVE

NUCLEAR ASSURANCE CORPORATION			
LEGAL WEIGHT TRUCK TRANSPORT CASK BODY SAFETY ANALYSIS REPORT			
PROJECT LWT	DESIGN AGENCY 315–40	DRAWING 03	REV. 6
SCALE 1/4 & NOTED	WEIGHT	SHT. 3 OF 6	LOC.

R-121 336

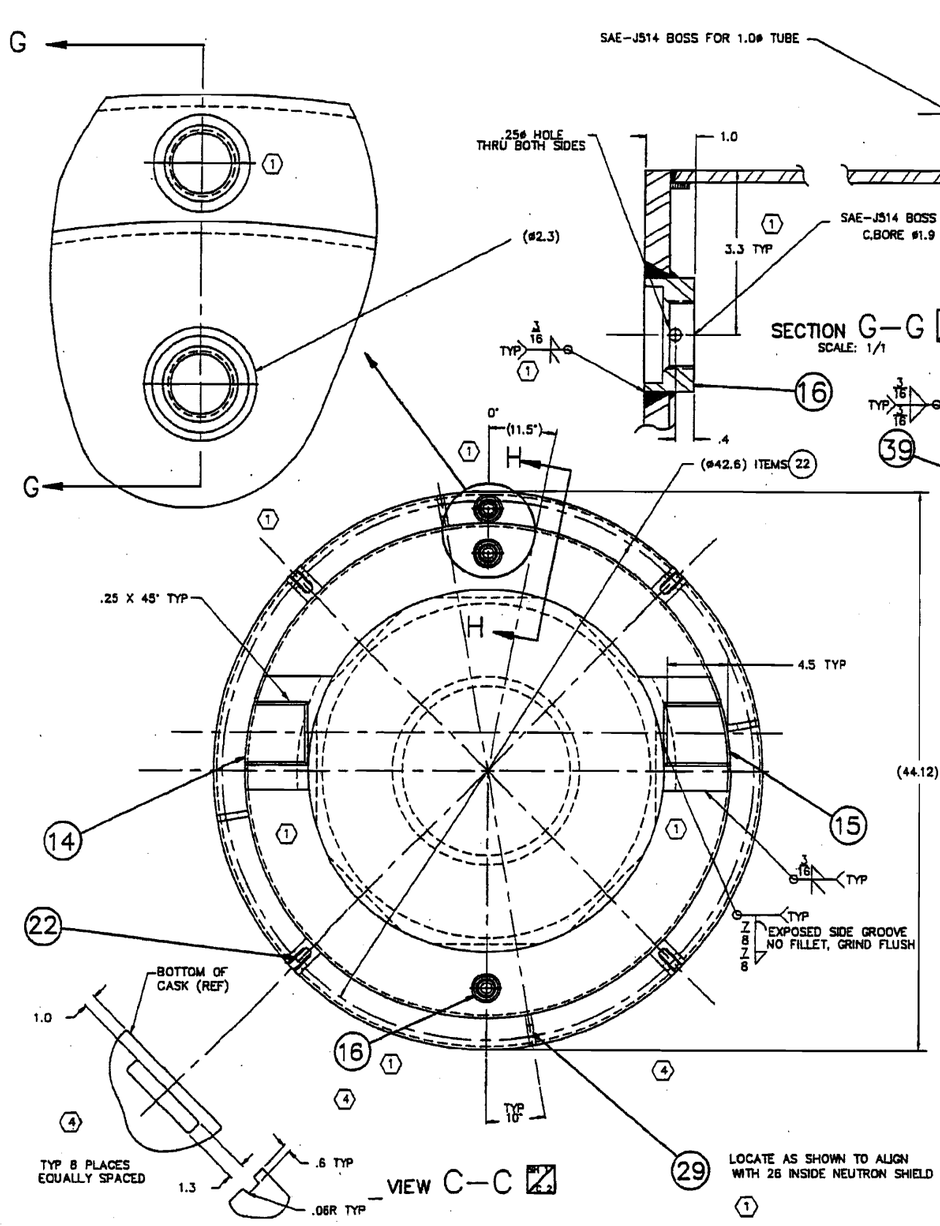

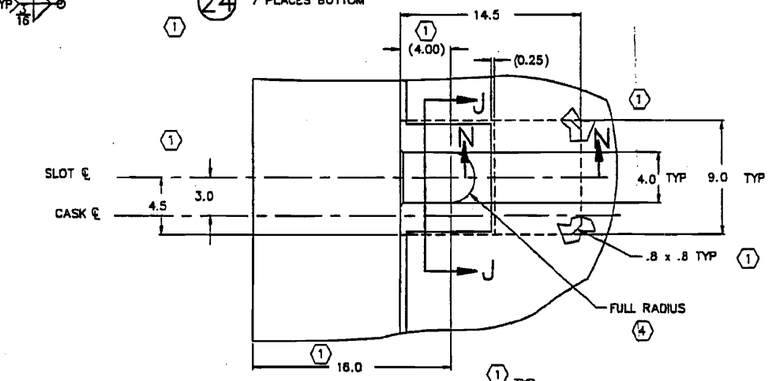

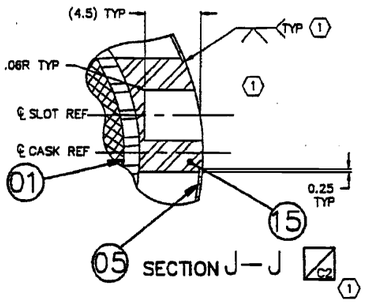

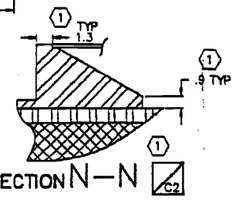

HISTORICAL RECORD COPY
DO NOT REMOVE

NUCLEAR ASSURANCE CORPORATION

LEGAL WEIGHT TRUCK TRANSPORT CASK BODY SAFETY ANALYSIS REPORT

PROJECT	DESIGN PACKAGE	DRAWING	REV.
LWT	315–40	03	6

SCALE: 1/4 & NOTED SHT. 4 OF 6

A12/336

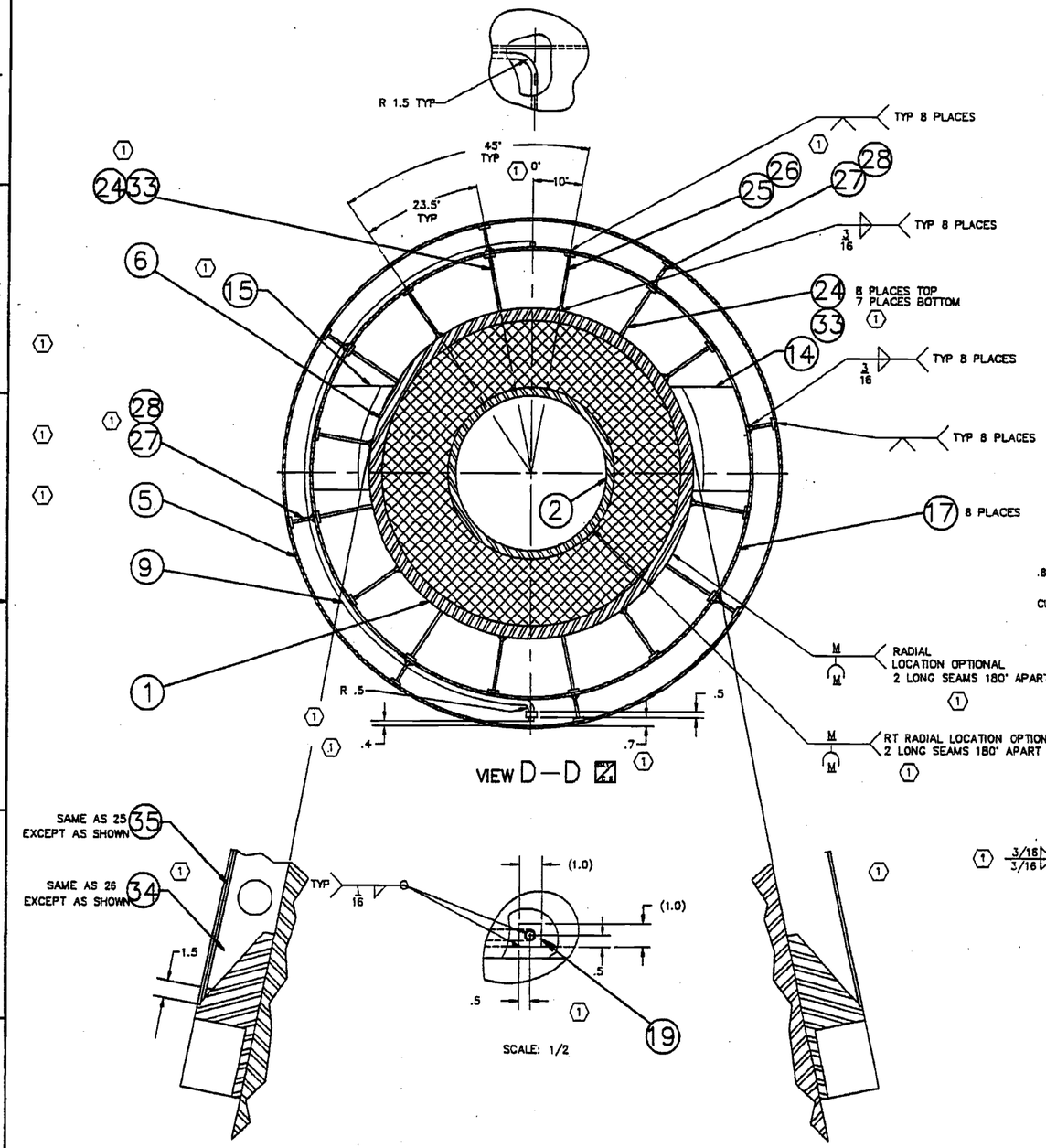

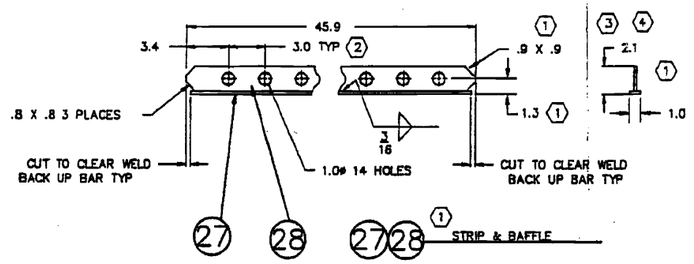

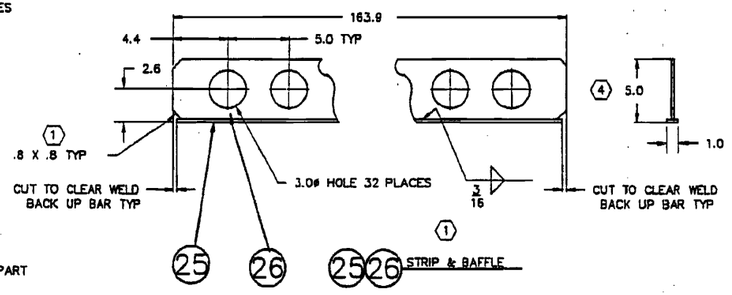

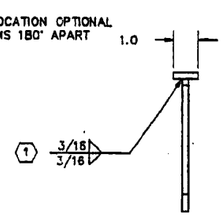

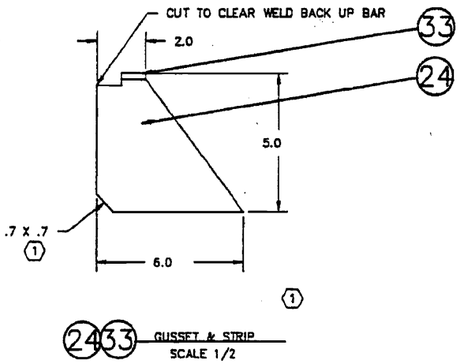

HISTORICAL RECORD COPY
DO NOT REMOVE

NUCLEAR ASSURANCE CORPORATION
ENGINEERING SERVICE DIVISION
NORCROSS GEORGIA 30092

LEGAL WEIGHT TRUCK
TRANSPORT CASK BODY
SAFETY ANALYSIS
REPORT

PROJECT	DESIGN	PACKAGE	DRAWING	REV.
LWT		315-40	03	6

SCALE 1/4 & NOTED | WEIGHT | SHT. 5 OF 6 | DRC

LWT 315-40 03 6

B-11336

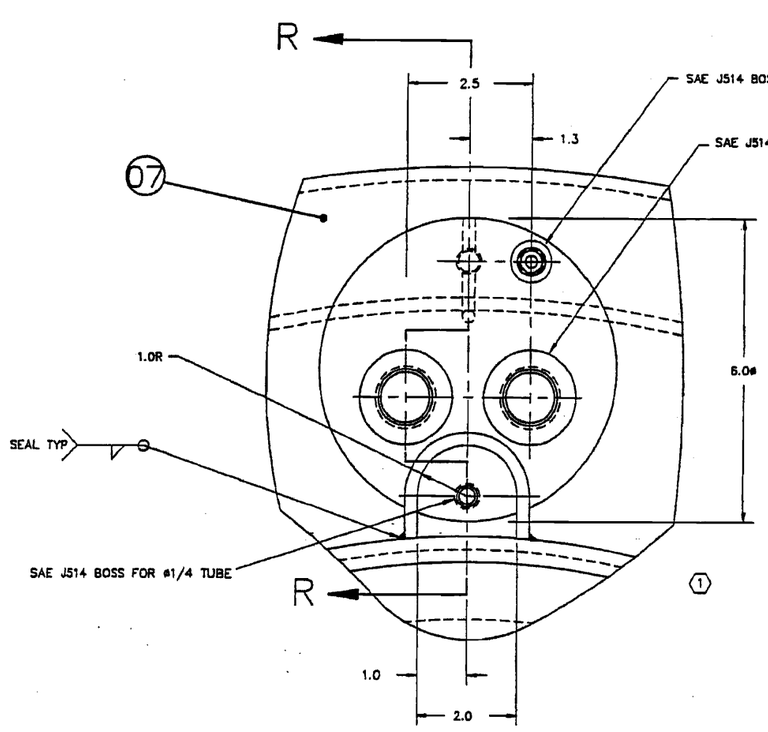

DETAIL F–F SH7 F7

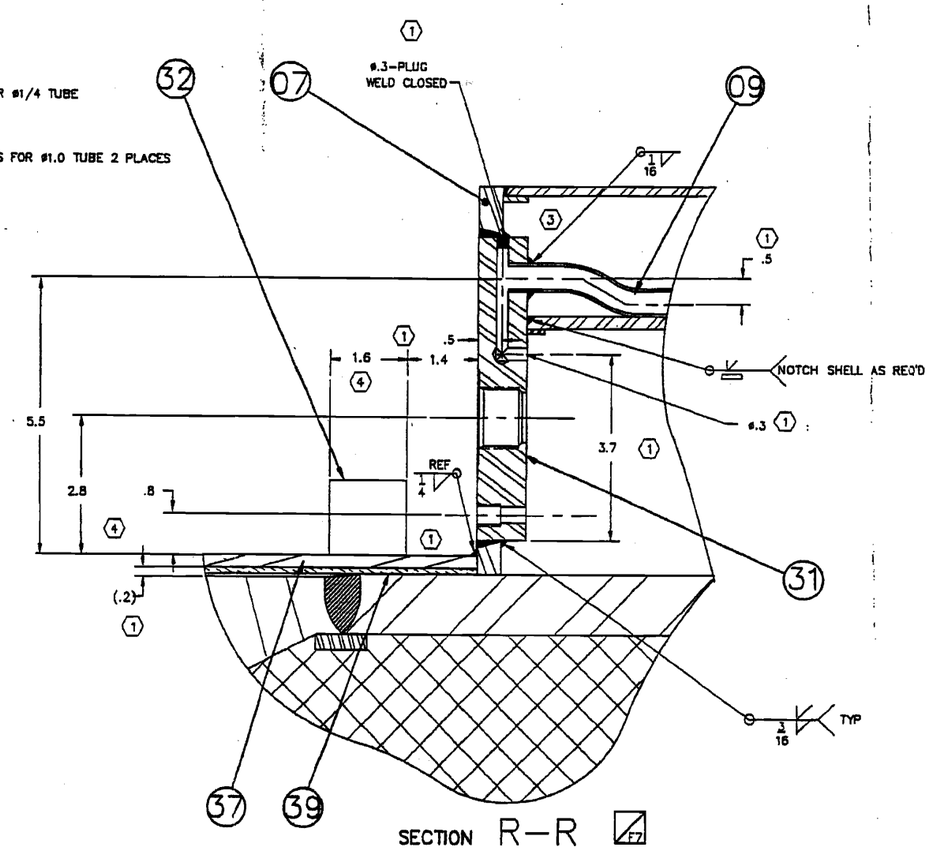

SECTION R–R F7

HISTORICAL RECORD COPY
DO NOT REMOVE

NUCLEAR ASSURANCE CORPORATION			
LEGAL WEIGHT TRUCK TRANSPORT CASK BODY SAFETY ANALYSIS REPORT			
PROJECT LWT	DESIGN PACKAGE 315-40	DRAWING 03	REV. 6
SCALE 1/1	WEIGHT	SHT. 6 OF 6	CAD

REV	CHANGE
0	INITIAL ISSUE
1	INC DCR 0A
2	INC DCR 1A
3	INC DCR 2A,2B
4	INC DCR 3A,3B,3C,3D,3E
5	INC DCR 4A
6	INC DCR 5A
7	INC DCR 6A
8	INC DCR 7A
9	INC DCR 8A
10	INC DCR 9A
11	INC DCR 10A,10B
12	INC DCR 11A
13	INC DCR 12A
14	INC DCR 13A
15	INC DCR 14A,14B,14C
16	INC DCR 15A
17	INC DCR 16A
18	INC DCR 17A
19	INC DCR 18A
20	INC DCR 19A
21	INC DCR 20A
22	INC DCR 21A
23	INC DCR 22A

△20 BISCO INSULATION FOAM APPLIES TO CASKS NO. 1, 2, 3, 4, & 5 ONLY.

△19 INSTALLATION OF THE THERMAL INSULATOR, ITEM 42, MAY BE FACILITATED BY USING A TWO SIDED HIGH TEMPERATURE (>500F) GLASS CLOTH TAPE (APPROX. .007–.009 THICK, WIDTH AS REQUIRED).

△18 PT ROOT AND EACH 1/2 INCH THICK LAYER OF DEPOSITED WELD. EXAMINE PER ASME SECTION V, ARTICLE 6. ACCEPTANCE PER SECTION VIII, DIVISION I, APPENDIX B.

△17 ULTRASONIC EXAMINE PER ASME SECTION V, ARTICLE 5 WITH ACCEPTANCE PER SECTION VIII, DIVISION 1, ARTICLE UW–53.

△16 RADIOGRAPHIC EXAMINE PER ASME SECTION V, ARTICLE 2 WITH ACCEPTANCE PER SECTION VIII, DIVISION 1, ARTICLE UW–51.

△15 PT ROOT AND FINAL PASS. EXAMINE PER SECTION V, ARTICLE 6 WITH ACCEPTANCE PER SECTION III, ARTICLE NB–5350.

14. ONLY PREVIOUSLY FABRICATED UNIT No's 2,3,4 AND 5 WERE RADIOGRAPHICALLY EXAMINED AND ACCEPTED PER ASME SECTION III, ARTICLE NB–5320 AS MODIFIED BY CODE CASE N–493. NO FUTURE APPLICATION OF CODE CASE N–493 SHALL BE AUTHORIZED.

△13 ITEMS 22 & 23 (LUGS) SHALL BE LOCATED BY USING ASSEMBLIES 315–40–05–99 AND 315–40–06–99 (IMPACT LIMITERS) AS ALIGNMENT FIXTURES.

△12 OFFSET ALLOWED BETWEEN ITEMS 01 AND 03 OR 04 PER NB–4230, ASME BOILER AND PRESSURE VESSEL CODE.

△11 TYPICAL FOR OUTER SHELL ONLY. (ITEM 01)

△10 TYPICAL FOR END FORGINGS ONLY. (ITEMS 03 & 04)

△9 REFERENCE TO ASME CODE IS TO INCLUDE THE 1986 EDITION THRU THE A87 ADDENDUM.

△8 RADIOGRAPHIC EXAMINED PER ASME SECTION V ARTICLE 2 WITH ACCEPTANCE PER SECTION III, ARTICLE NB–5320.

7. FINISHED SURFACES OF ALL WELDS TO BE LIQUID PENETRANT EXAMINED PER ASME SECT. V, ARTICLE 6. THE ACCEPTANCE STANDARD TO BE SECT. VIII, DIV. 1, APPENDIX 8 EXCEPT WHERE NOTED OTHERWISE.

6. ALL WELDING TO BE IN ACCORDANCE WITH SECTION IX OF ASME PRESSURE VESSEL CODE.

5. ALL EXPOSED WELDS TO BE GROUND FLUSH TO BASE METAL OR SMOOTH FILLET

△4 FILLET WELD OF THESE JOINTS ARE TO BE MADE TOGETHER

3. BACK UP BARS TACK WELDED IN PLACE EXCEPT WHERE SHOWN.

△2 DETAIL 22 AND 23 ARE THE SAME EXCEPT FOR CUT AROUND 37 AND 38, SEAL WELD AS REQUIRED

1. ALL EXTERIOR SURFACES TO BE 125 RMS OR BETTER

NOTES:

23 △26 (DELETED)

23 △25 FOR TPBAR SHIPMENTS, CASKS SHALL HAVE 16 RMS NOMINAL SURFACE FINISH, BE PRESSURE TESTED TO 150% OF MNOP AND HAVE A CORRESPONDING TYPE B(M) NAMEPLATE.

△24 INSTALL ITEMS 10, 11, AND 12 (HELI–COIL INSERTS) PER MANUFACTURERS INSTRUCTIONS.

△23 COPE ITEM 24, GUSSET, AND ITEM 26, BAFFLE, AS NECESSARY TO ELIMINATE INTERFERENCE WITH ADJACENT WELD JOINTS.

△22 CASKS MAY HAVE NEW NAMEPLATE(S) PERMANENTLY ATTACHED OVER EXISTING NAMPLATE(S).

21. FIBERFRAX 550J, 970J, OR 880J.

97 ASSY	98 ASSY	99 ASSY	ITEM	NAME	MATERIAL	SPEC	DRAWING No.	DESCRIPTION
QUANTITY								
		A/R	42	INSULATION	SEE NOTE 21	COML		UNIFRAX CORPORATION 1/8" THK
		1	41	COVER	304 ST. STL.	AISI		.040
		1	40	BOSS	304 ST. STL.	ASME SA479		1–1/2ø BAR
		A/R	39	INSUL. FOAM		FIREBLOCK (FPC) SILICONE FOAM		1/8 THK BISCO PROD. INC.
		1	38	STRIP	304 ST. STL.	AISI		1/2 x 3/16 BAR
		1	37	HEAT SHIELD	304 ST. STL.	AISI		.236 (6mm)
		1	36	SUPPORT	304 ST. STL.	ASTM A240		1 PLATE
		1	35	STRIP	304 ST. STL.	AISI		.236 (6mm)
		1	34	BAFFLE	304 ST. STL.	AISI		.236 (6mm)
		15	33	STRIP	304 ST. STL.	AISI		.236 (6mm)
		1	32	GUARD	304 ST. STL.	AISI		.236 (6mm)
		1	31	ADAPTER	304 ST. STL.	ASME SA240		1 PLATE
			30					
		4	29	LUG	304 ST. STL.	ASTM A240		1/2 PLATE
		8	28	BAFFLE	304 ST. STL.	AISI		.315 (8mm)
		8	27	STRIP	304 ST. STL.	AISI		.236 (6mm)
		7	26	BAFFLE	304 ST. STL.	AISI		.236 (6mm)
		7	25	STRIP	304 ST. STL.	AISI		.236 (6mm)
		15	24	GUSSET	304 ST. STL.	AISI		.236 (6mm) PLATE
		4	23	LUG	304 ST. STL.	ASTM A240		1–3/4 PLATE
		4	22	LUG	304 ST. STL.	ASTM A240		1–3/4 PLATE
		1	21	BOTTOM	304 ST. STL.	ASME SA182		18ø FORGING
		1	20	BOTTOM	304 ST. STL.	ASME SA182		3–1/2 FORGING
		1	19	SUPPORT	304 ST. STL.	ASME SA240		1 PLATE
		1	18	STOP	304 ST. STL.	ASME SA240		1 3/4 PLATE
		8	17	N/S TANK SKIN	304 ST. STL.	ASME SA240		.236 (6mm) PLATE, 2B FINISH
		2	16	FITTING	304 ST. STL.	ASME SA240		1 PLATE
		1	15	SOCKET	304 ST. STL.	ASME SA182		9 X 8 BAR
		1	14	SOCKET	304 ST. STL.	ASME SA182		9 X 8 BAR
		4	13	TRUNNION			315–40–08–98	
		12	12	INSERT	ST. STL.	COML		HELI–COIL 1185–16CN2000
		6	11	INSERT	ST. STL.	COML		HELI–COIL 1185–6CN0938
		2	10	INSERT	ST. STL.	COML		HELI–COIL 1185–4CN0500
		1	9	PERCOLATOR TUBE	304 ST. STL.	ASTM A213		1/2 OD X .035 WALL
		1	8	NAME PLATE	304 ST. STL.	ASME SA240		12 GA. SHEET 2B FINISH
		A/R	7	END	304 ST. STL.	ASME SA240		1/2 PLT.
		A/R	6	SHIELDING	PB	ASTM B29		CHEMICAL COPPER GRADE
		8	5	EX. TANK SKIN	304 ST. STL.	ASME SA240		.315 (8mm) PLATE, 2B FINISH
		1	4	TOP FORGING	304 ST. STL.	ASME SA182		FORGING
		1	3	BOTTOM FORGING	304 ST. STL.	ASME SA182		FORGING
		1	2	INNER SHELL	XM–19 ST. STL.	ASME SA240		3/4 THK. PLT.
		1	1	OUTER SHELL	XM–19 ST. STL.	ASME SA240		1 1/4 PLATE

UNLESS OTHERWISE STATED
DIMENSIONING AND TOLERANCING SHALL BE PER ASME Y14.5M–94
ALL THREAD DEPTH CALLOUTS ARE TO BE CONSIDERED AS A MIN. DEPTH OF PERFECT THREADS.

ALL DIMENSIONS ARE IN INCHES
MACHINED SURFACES TO BE 63 OR BETTER
NEXT ASSEMBLY: 315–40–02
DRAWING TYPE: LICENSE

GROUP	NAME	DATE
PREPARER	Thomas Hadaway (Sep 21, 2026 16:28:54 EDT)	
CHECKER	Kevin Klein (Sep 21, 2026 16:32:13 EDT)	
PROJECT MANAGER	Jimmy Tabuena (Sep 21, 2026 17:42:26 EDT)	
ENGINEERING	Kevin Klein (Sep 21, 2026 16:32:13 EDT)	
LICENSING	Heath Baldner (Sep 22, 2026 07:43:39 EDT)	
QUALITY	David Jensen (Sep 22, 2026 15:48:23 EDT)	

NAC INTERNATIONAL

LEGAL WEIGHT TRUCK TRANSPORT CASK BODY SAFETY ANALYSIS REPORT

PROJECT 315–40 | DRAWING 03 | REV 23 | SH 1 OF 7

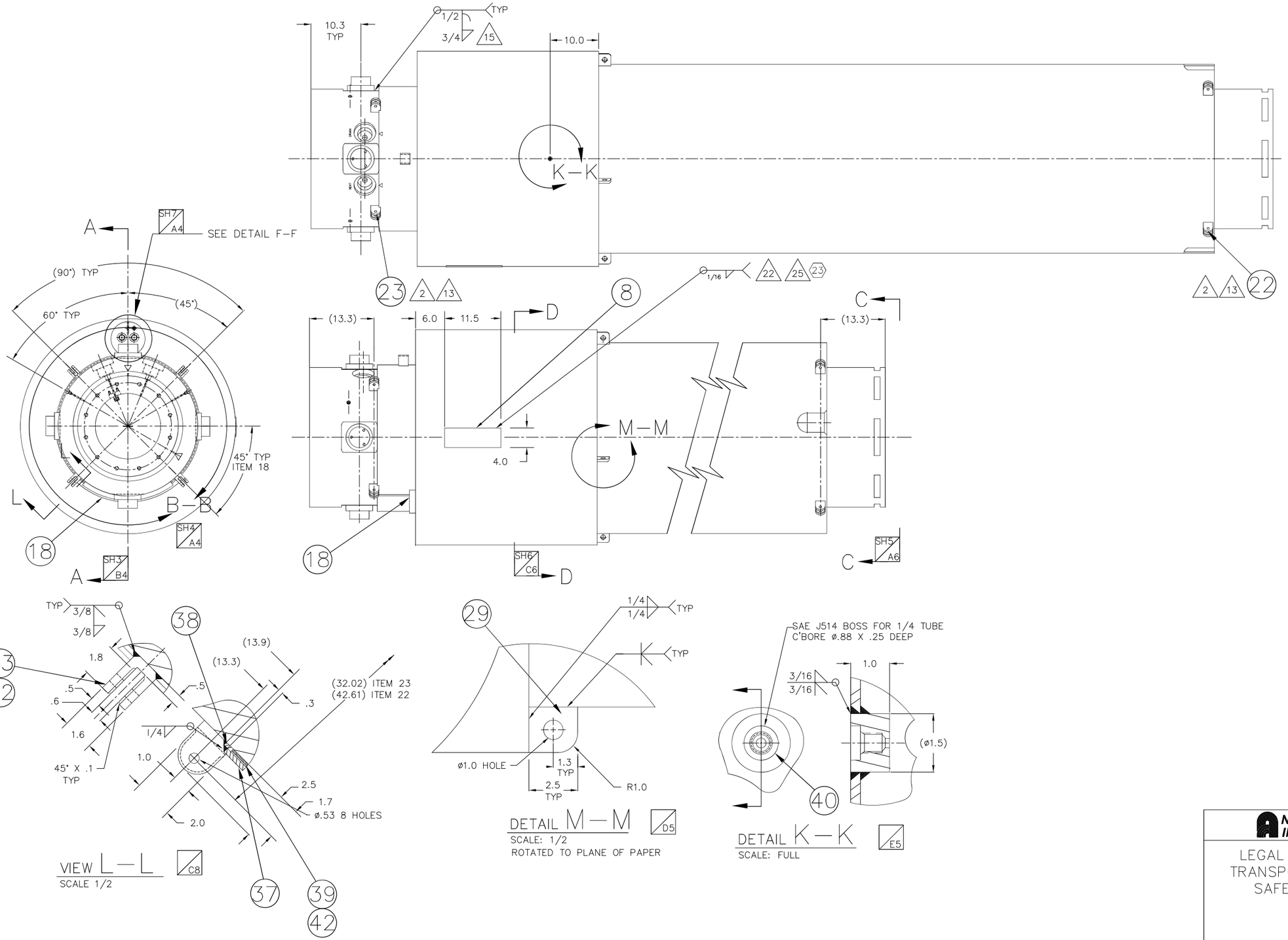

NAC INTERNATIONAL

LEGAL WEIGHT TRUCK
TRANSPORT CASK BODY
SAFETY ANALYSIS
REPORT

PROJECT	DRAWING	REV
315–40	03	23
	SH 2 OF 7	

DETAIL ITEM 36

SECTION A—A

DETAIL P—P
SCALE: 1/1

NOTCH ITEM 7,24,37 & 26 TO CLEAR ITEM 18

SEE DETAIL WD-1
SEE DETAIL WD-2
SEE DETAIL WD-3
SEE DETAIL P-P
SEE DETAIL ZONE F8

SEAL WELD TYP

NAC INTERNATIONAL

LEGAL WEIGHT TRUCK
TRANSPORT CASK BODY
SAFETY ANALYSIS
REPORT

PROJECT 315-40 | DRAWING 03 | REV 23 | SH 3 OF 7

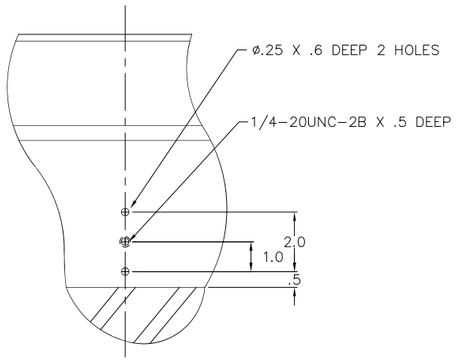

VIEW S–S
SCALE 1/2
TYP 2 PLACES
E5

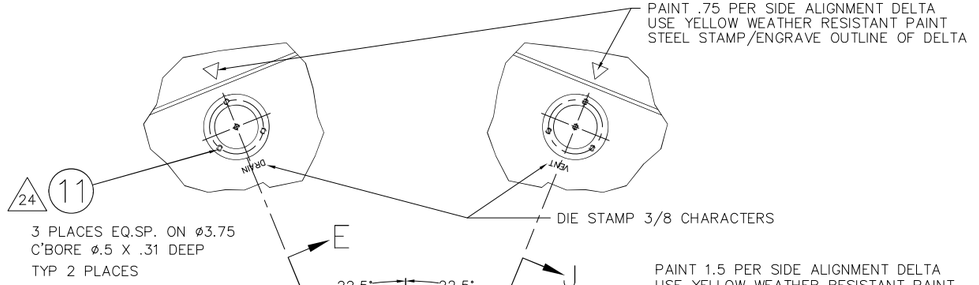

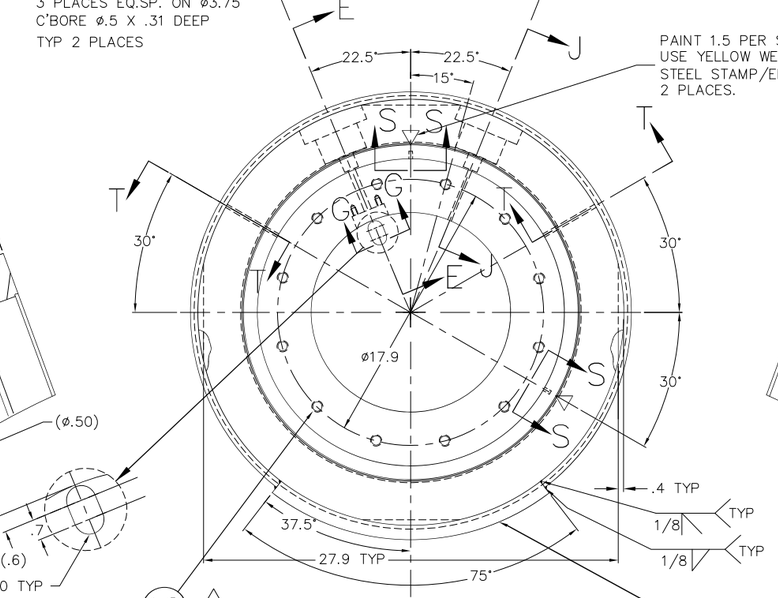

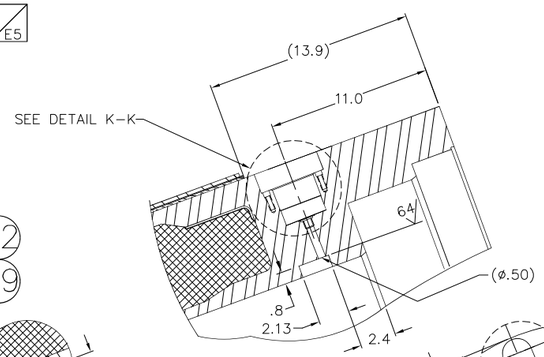

SECTION E–E
DRAIN PORT
E5

SCALE: 1/2

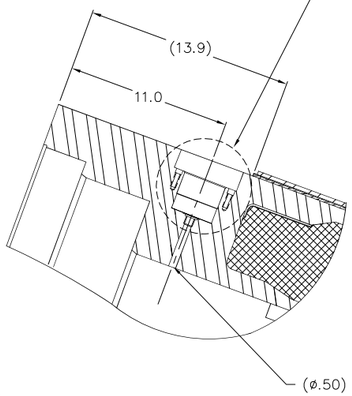

SECTION J–J
VENT PORT
E4

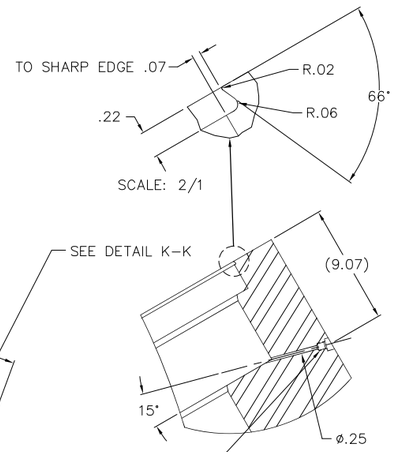

SECTION T–T
TYP 2 PLACES
E4

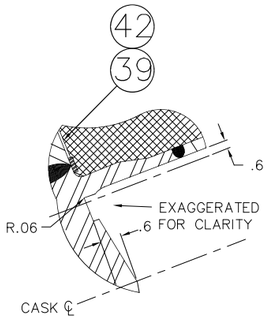

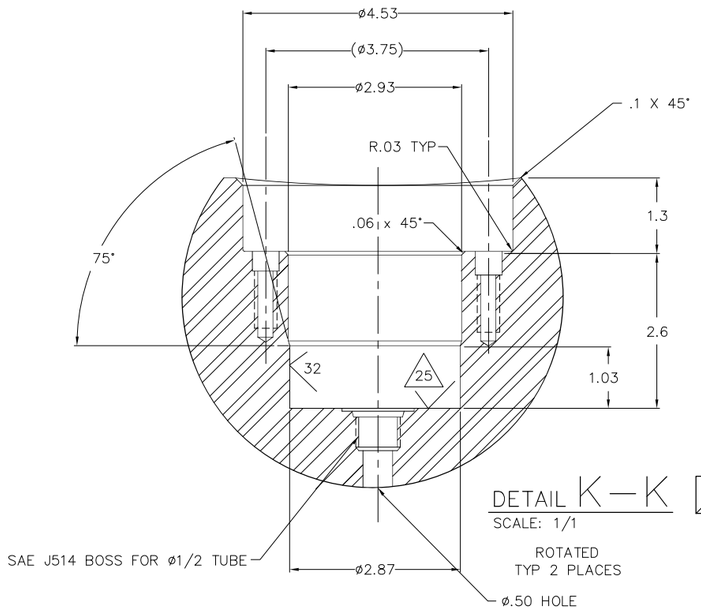

DETAIL K–K
SCALE: 1/1
ROTATED
TYP 2 PLACES
D7

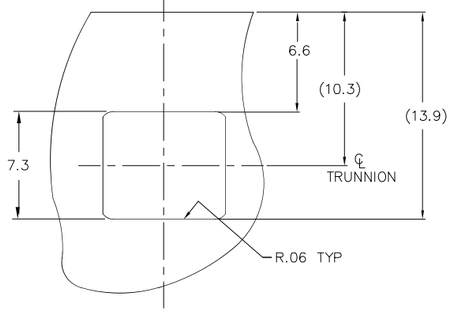

TYP 4 PLACES

DETAIL B–B
SH2
C8

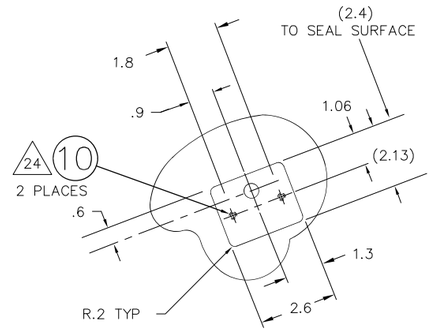

VIEW G–G
SCALE 1/2
E5

NAC INTERNATIONAL

LEGAL WEIGHT TRUCK
TRANSPORT CASK BODY
SAFETY ANALYSIS
REPORT

PROJECT	DRAWING	REV
315–40	03	23
	SH 4 OF 7	

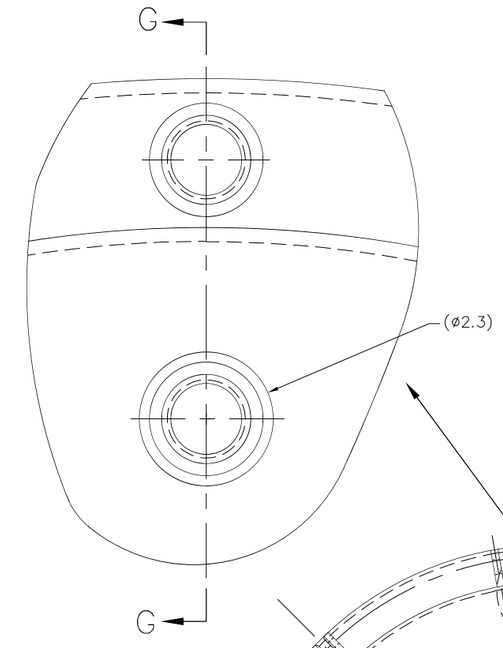

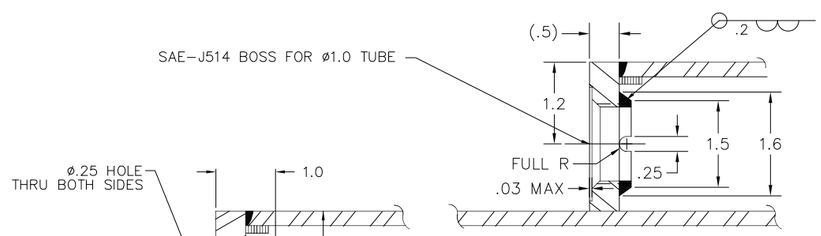

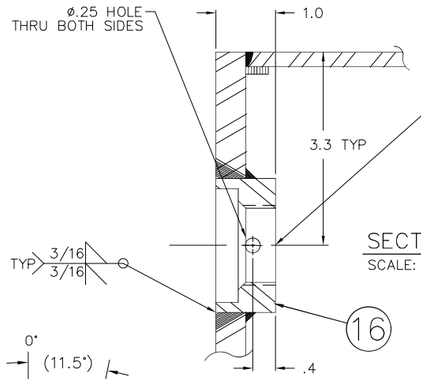

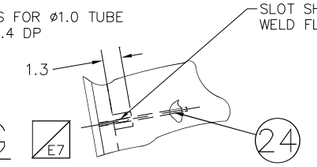

SECTION G–G
SCALE: 1/1

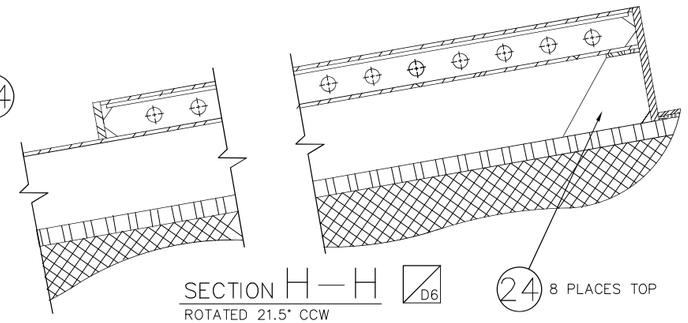

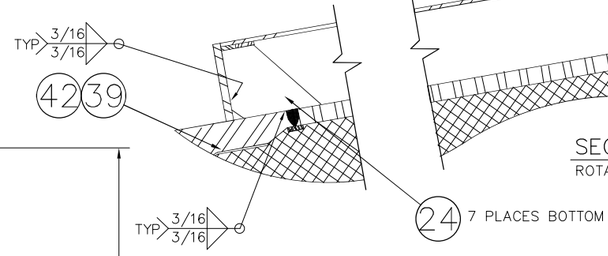

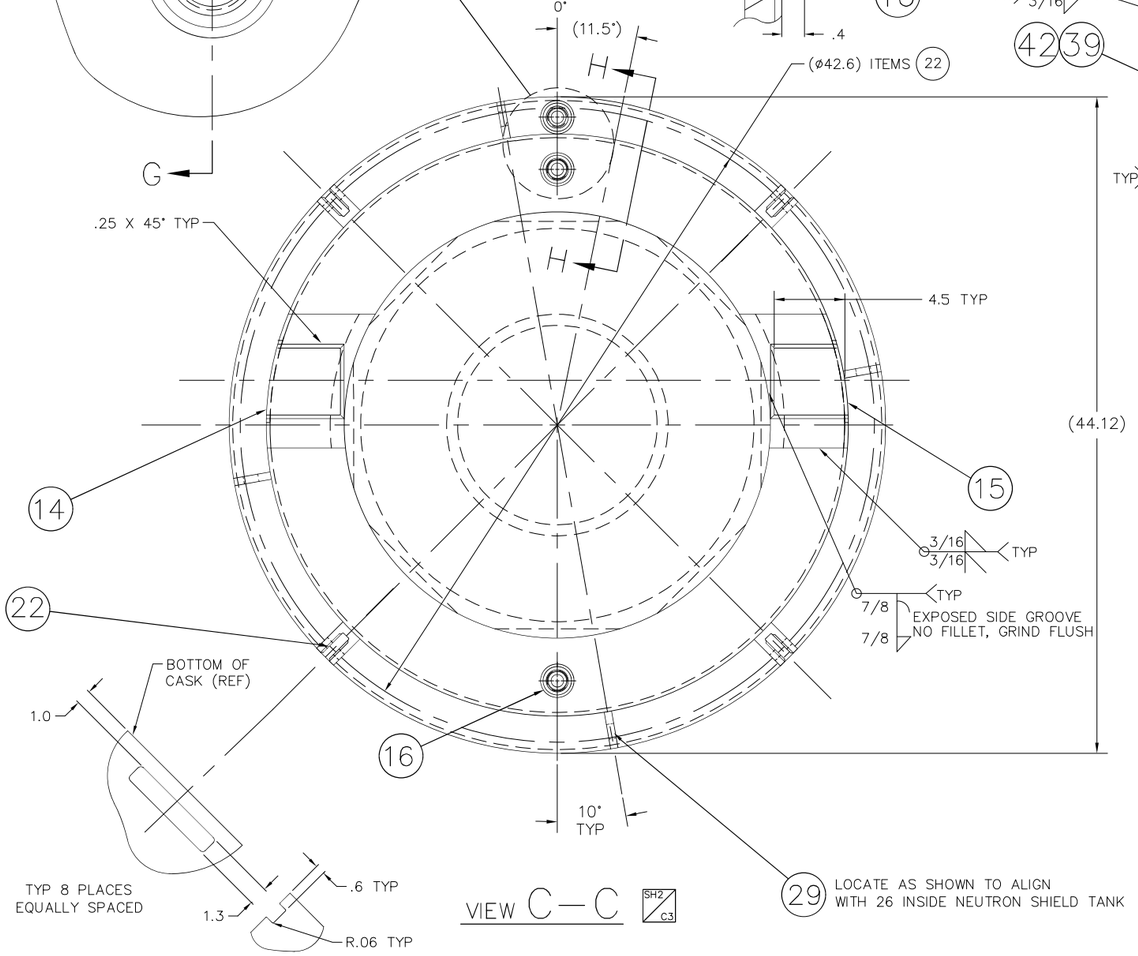

VIEW C–C SH2/C3

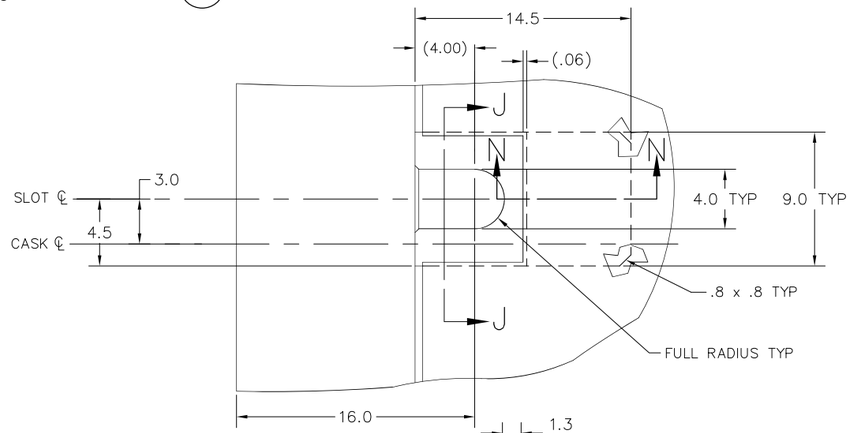

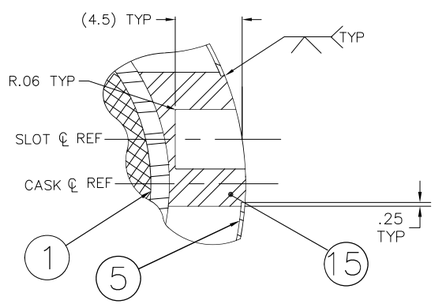

SECTION J–J C2

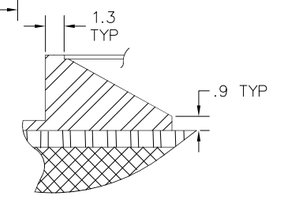

SECTION N–N C2

NAC INTERNATIONAL

LEGAL WEIGHT TRUCK
TRANSPORT CASK BODY
SAFETY ANALYSIS
REPORT

PROJECT	DRAWING	REV
315–40	03	23
	SH 5 OF 7	

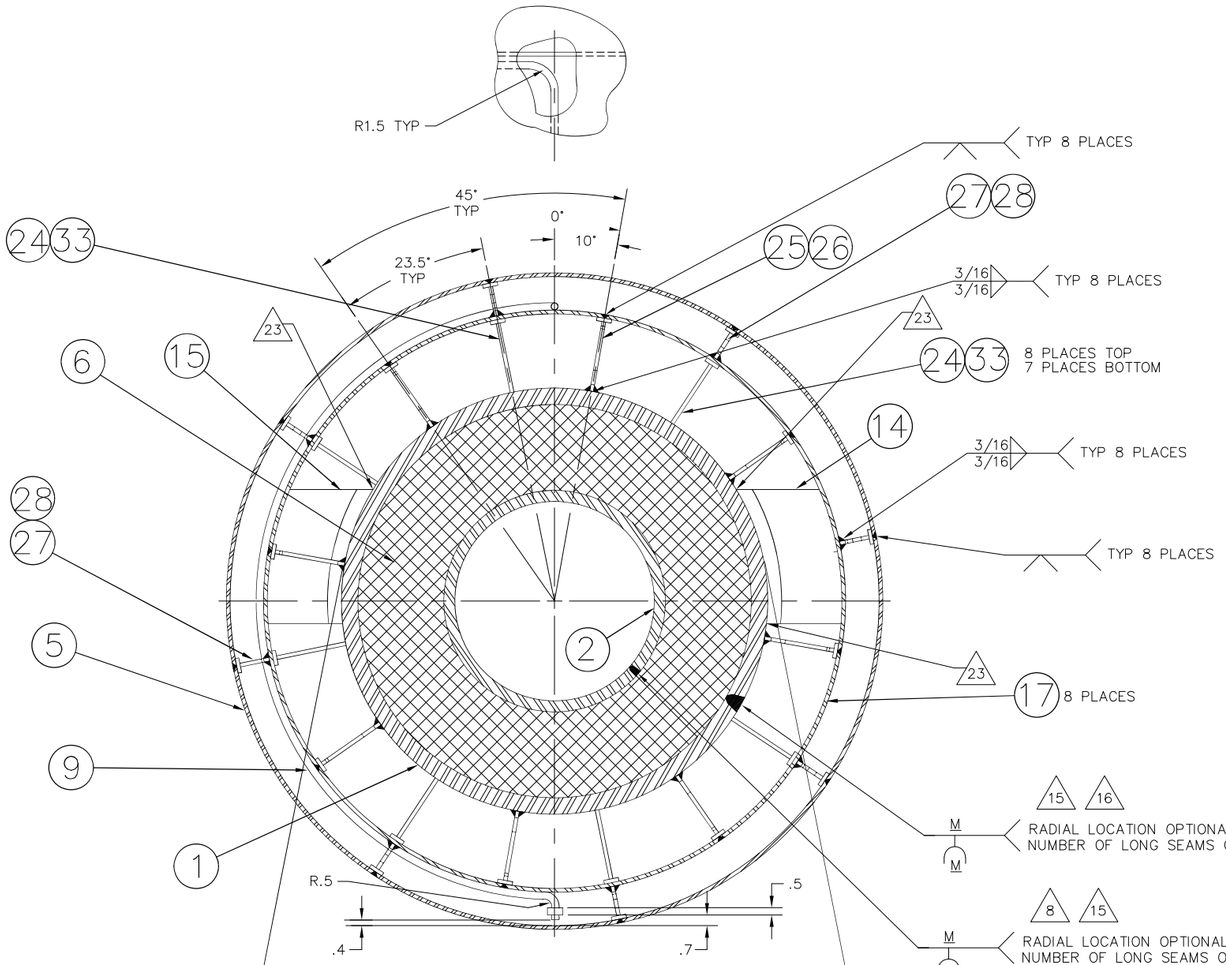

SECTION D—D SH2 C5

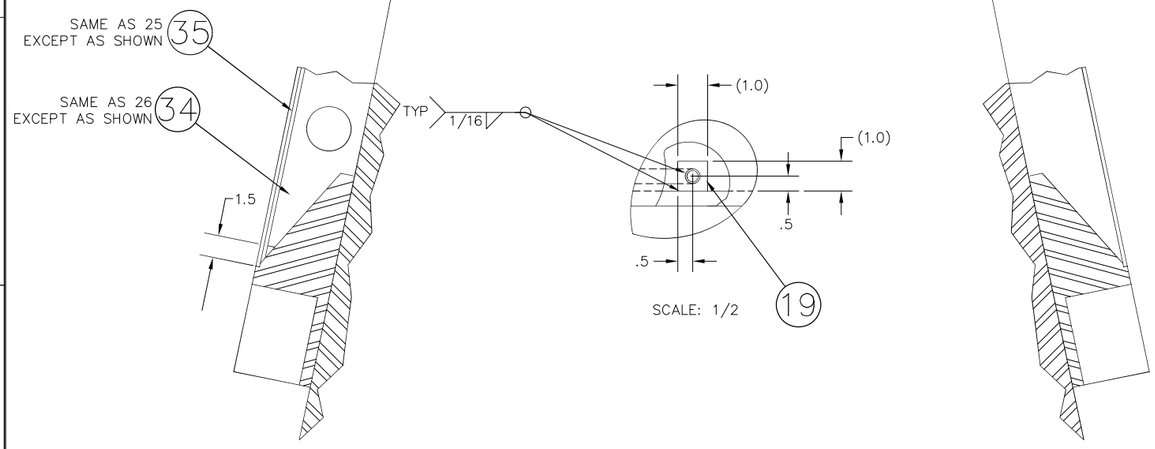

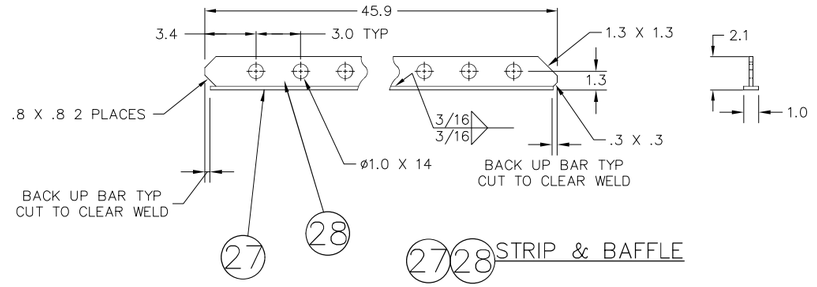

27 28 STRIP & BAFFLE

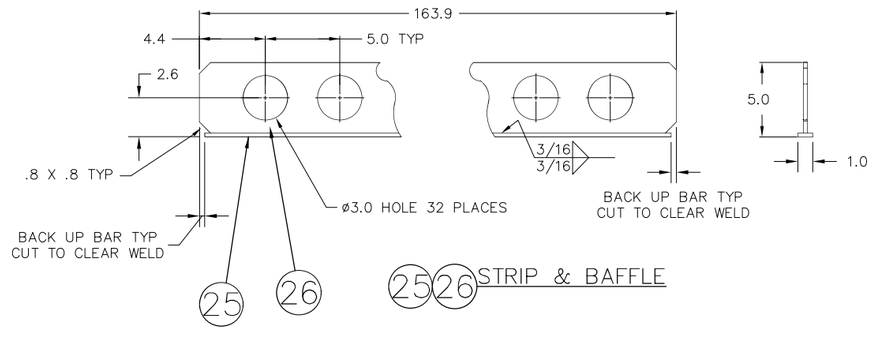

25 26 STRIP & BAFFLE

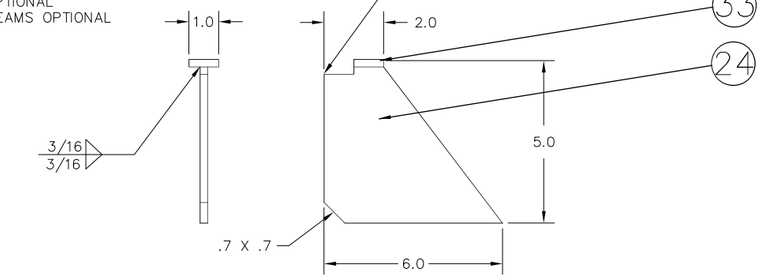

24 33 GUSSET & STRIP
SCALE: 1/2

NAC INTERNATIONAL

LEGAL WEIGHT TRUCK
TRANSPORT CASK BODY
SAFETY ANALYSIS
REPORT

PROJECT	DRAWING	REV
315-40	03	23
	SH 6 OF 7	

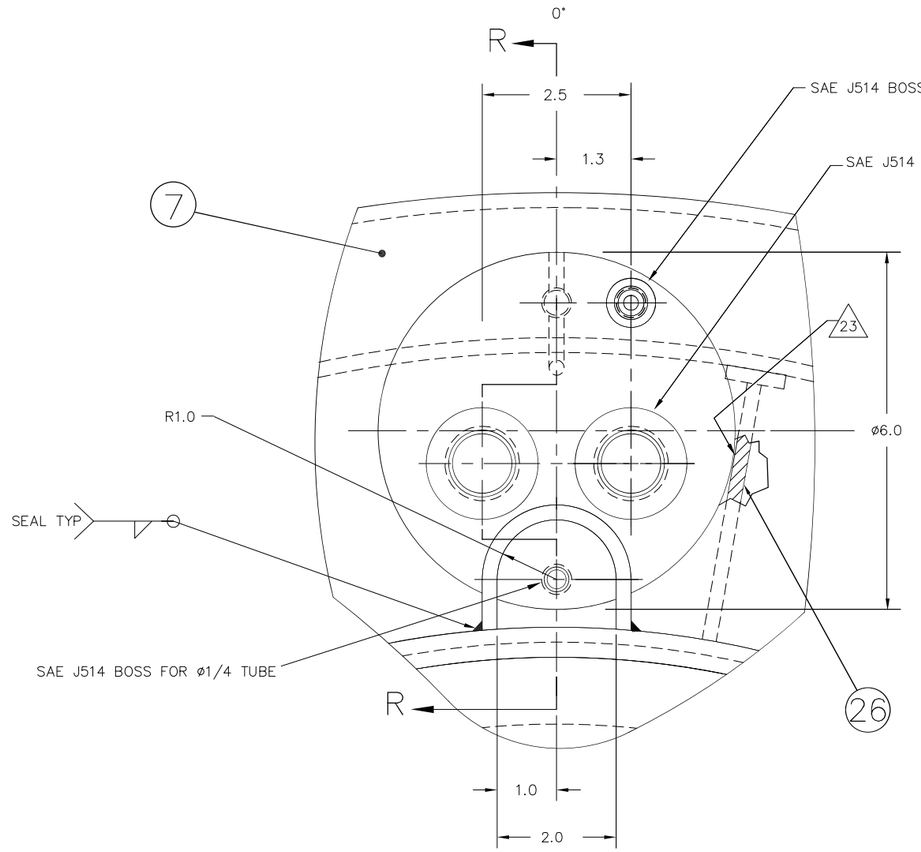

DETAIL F—F SH2 E7

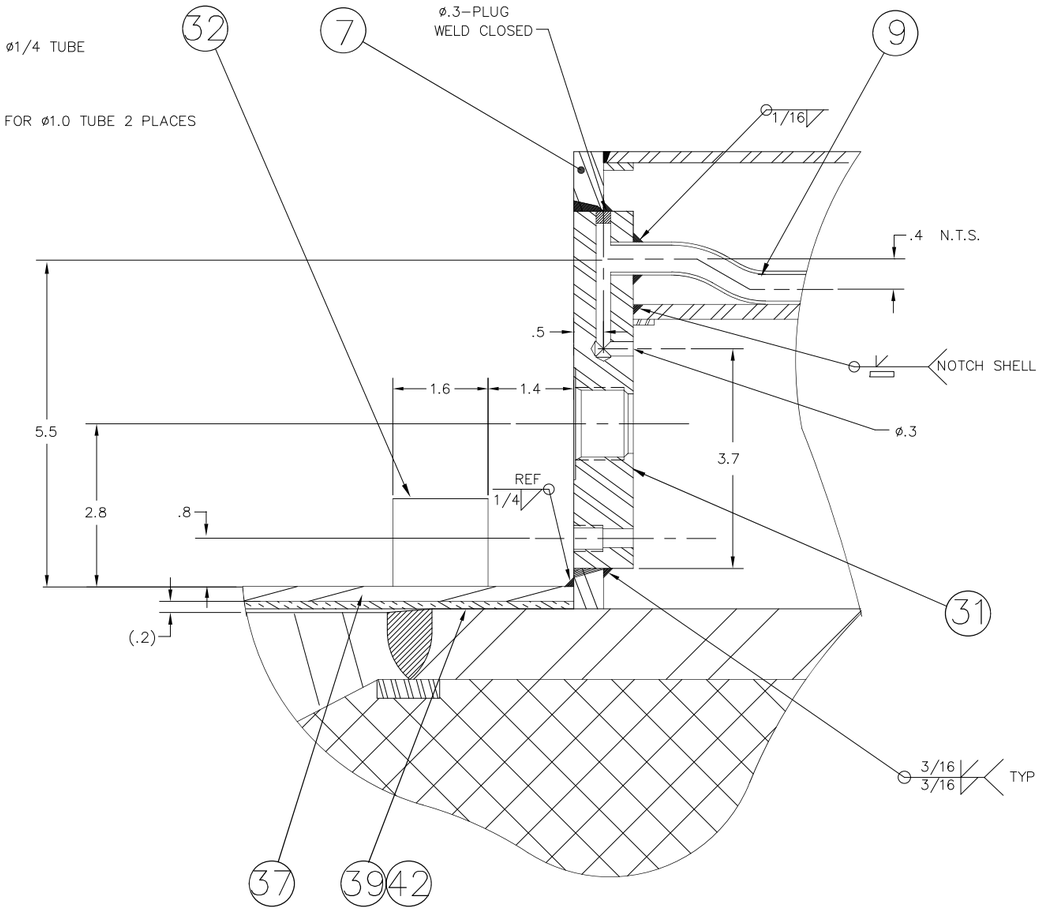

SECTION R—R F7

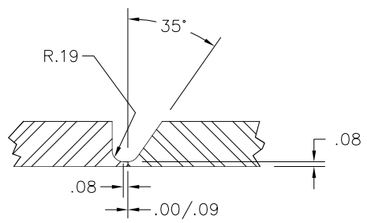

DETAIL WD—1 SH3 D6

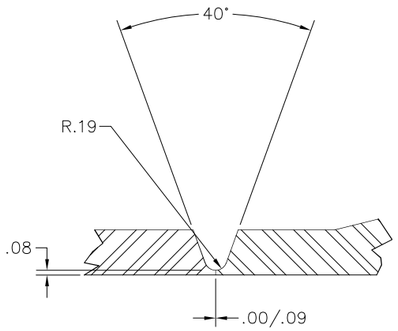

DETAIL WD—2 SH3 D4

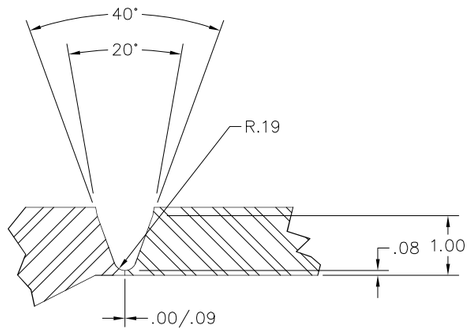

DETAIL WD—3 SH3 E7 SH3 B4

NAC INTERNATIONAL

LEGAL WEIGHT TRUCK
TRANSPORT CASK BODY
SAFETY ANALYSIS
REPORT

PROJECT	DRAWING	REV
315—40	03	23
	SH 7 OF 7	

R-217277

DCR No.	REVISION
0	INITIAL ISSUE
1	INC.DCR.0A,0B,0C
2	INC DCR 1A
3	INC DCR 2A & 2B
4	INC DCR 3A
5	INC DCR 4A
6	INC DCR 5A & 5B
7	INC DCR 6A
8	INC DCR 7A
9	INC DCR 8A
10	INC DCR 9A
11	INC DCR 10A
12	INC DCR 11A, 11B

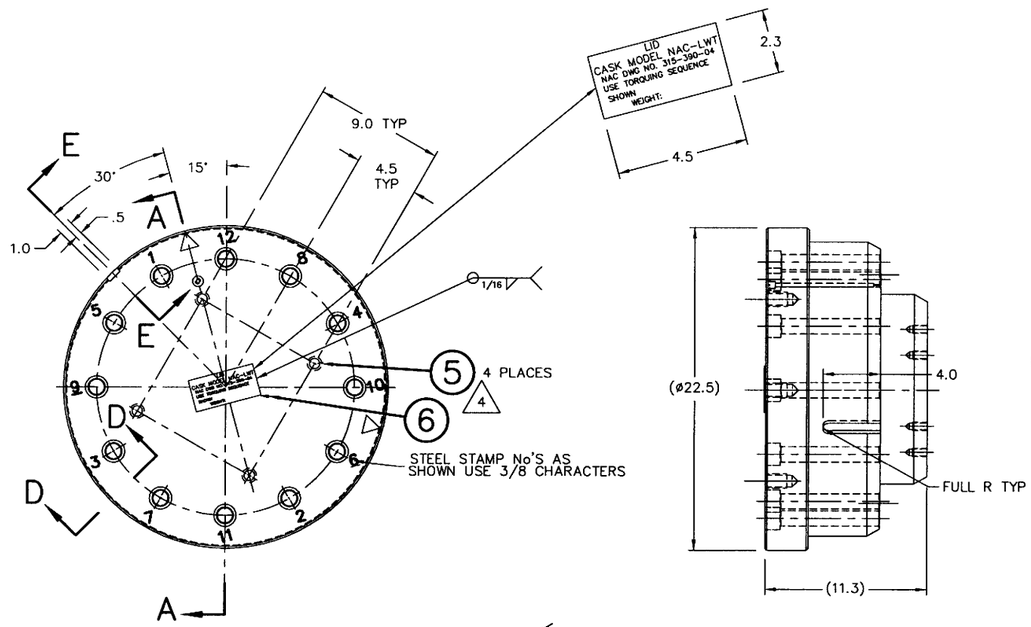

90 TRANSPORT CASK LID

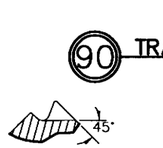

SECTION E–E
SCALED 12

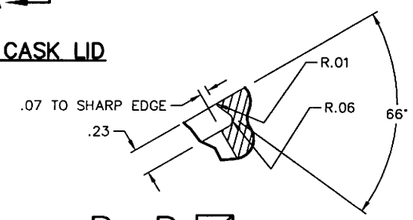

SECTION D–D
SCALED 12

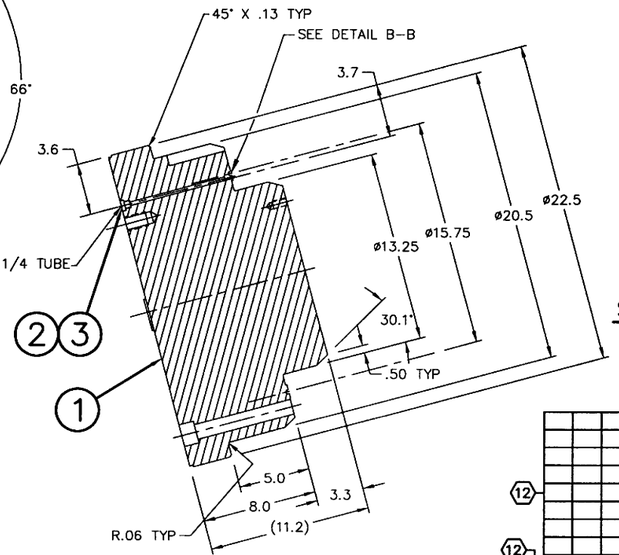

SECTION A–A
SCALED 12

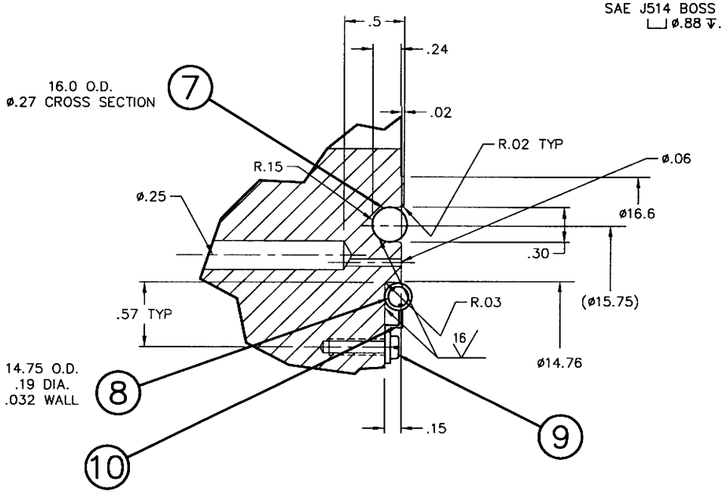

DETAIL B–B
SCALED 12

				3	11	THREAD INSERT	STSTL	COML		HELICOIL 1185–06CN–0.207
				3	10	CLIP	STSTL	COML		FLUOROCARBON U–700726
				3	9	SCREW	STSTL	COML		FLUOROCARBON U260247
				1	8	O–RING	X–750	COML		HELICOFLEX U200159
				1	7	O–RING	TEFLON	COML		SHAMBAN S11214–0460
				1	6	NAME PLATE	304 ST. STL.	ASTM A240		12 GA. SHEET 2B FINISH
				4	5	THREAD INSERT	STSTL			HELICOIL 1185–16CN1500
				4	4	THREAD INSERT			315–40–08–13	
				1	3	"O" RING			315–40–02–6	
				1	2	PLUG			315–40–08–19	
				1	1	LID FORGING	304 ST. STL.	ASME SA182		11.50 THICK X 23ø
95	98	97	98	99	ITEM	NAME	MATERIAL	SPEC	DRAWING No.	DESCRIPTION
ASSY	ASSY	ASSY	ASSY	ASSY	QUANTITY					

4 INSTALL ITEMS 4, 5, AND 11 (HELI–COIL INSERTS) PER MANUFACTURERS INSTRUCTIONS.

3 TORQUE TO 60 +/–6 INCH–LBS.

2 A .0002" TO .0005" PLATING OF HIGH QUALITY CHROMIUM IS OPTIONAL AS AN AID IN PREVENTING GALLING DURING CASK OPERATIONS. IF CHROME PLATING IS APPLIED, THE PRODUCT WILL BE PROCESSED, INSPECTED AND TESTED AS NECESSARY TO ENSURE THAT THE PLATED ITEM IS NOT HINDERED IN PERFORMING ITS DESIGN FUNCTION.

1 63 FINISH ALL OVER EXCEPT AS SHOWN.

NOTE:

DIMENSIONING AND TOLERANCING SHALL BE PER ANSI Y14.5–94
UNSPECIFIED DIMENSIONS AND TOLERANCES SHOWN BELOW.
DIMENSIONS ARE IN INCHES. FRACTIONAL TOLERANCE: ±1/8

SYM.	GEOMETRY	.XXX	TOL.	.XX	TOL.
	FLATNESS	UNDER 3		UNDER 6	±.04
		3–12		6–18	±.06
	STRAIGHTNESS	OVER 12		OVER 18	±.09
	ANGULARITY	.X	±.1	ANGLES	±.5°
		ALL UNSPECIFIED TOOL RADII: .01 – .03			
	PERPENDICULARITY	BREAK ALL SHARP CORNERS .01 – .03			
	PARALLELISM	ALL UNSPECIFIED MACHINED SURFACES SHALL BE ▽ OR BETTER			
	CONCENTRICITY	NEXT ASSEMBLY: 315–40–02			
	TRUE POSITION	DRAWING TYPE: LICENSE			

GROUP	NAME	DATE
PREPARER		12/29/11
CHECKER		12-29-11
PROJECT MANAGER		1-24-12
ENGINEERING		12-29-11
LICENSING		12/29/11
QUALITY		1/25/12

NAC INTERNATIONAL

LEGAL WEIGHT TRUCK TRANSPORT CASK LID ASSY SAFETY ANALYSIS REPORT

PROJECT 315–40 | DRAWING 04 | REV 12

SCALE N.T.S. 12 | EST.WT. 12 | SH 1 OF 1 | 11:07AM 12–28–2011

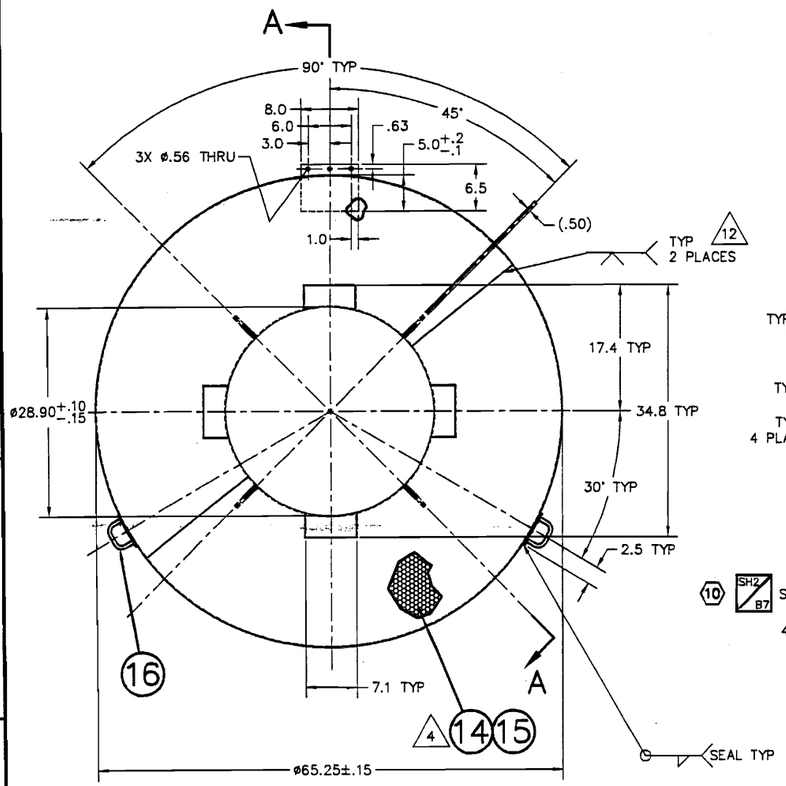

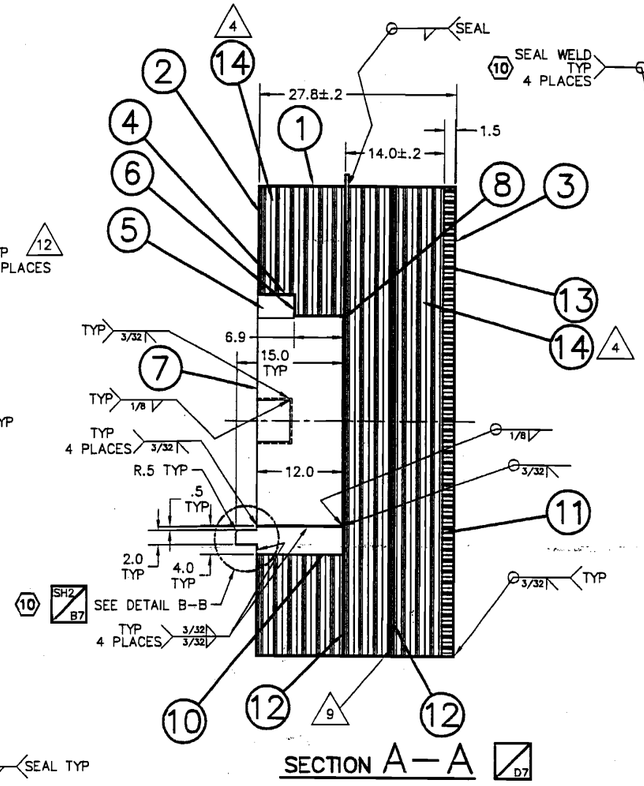

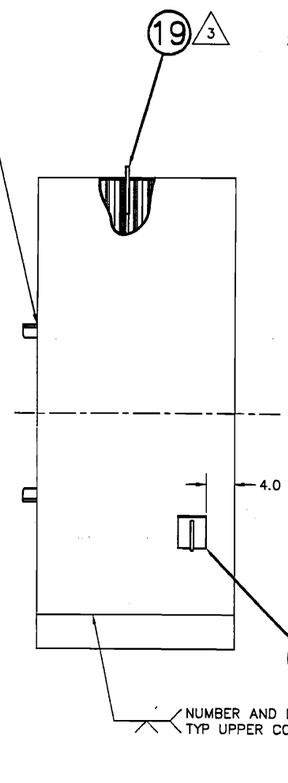

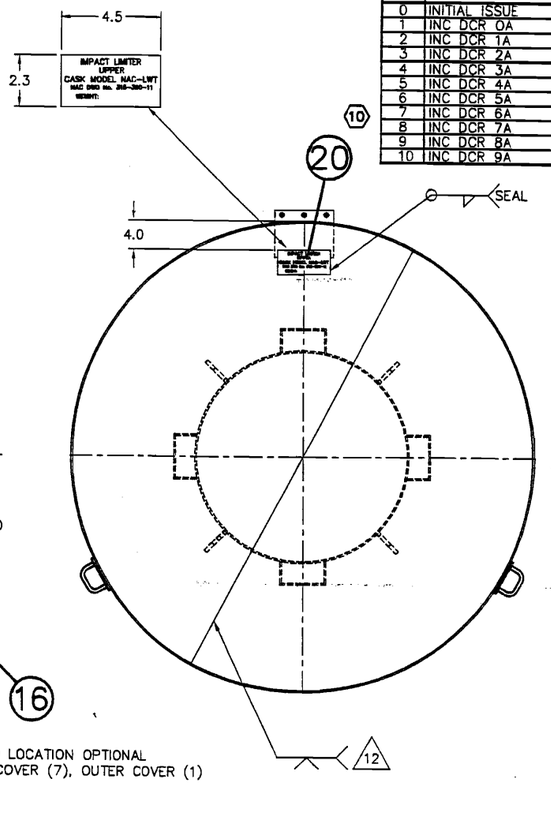

REV	CHANGE
0	INITIAL ISSUE
1	INC DCR 0A
2	INC DCR 1A
3	INC DCR 2A
4	INC DCR 3A
5	INC DCR 4A
6	INC DCR 5A
7	INC DCR 6A
8	INC DCR 7A
9	INC DCR 8A
10	INC DCR 9A

12 LOCATION OPTIONAL, MAY BE OMITTED IF ENDS, ITEMS 2 AND 3, ARE OF ONE PIECE.

11. A .25 RADIAL GAP IS PERMITTED BETWEEN HONEYCOMB, ITEMS 13 & 14, AND OUTER COVER, ITEM 1.

10 SEPARATORS MAY BE MULTIPLE PIECES BUT GAPS ARE NOT PERMITTED BETWEEN PIECES.

9 NUMBER OF HONEYCOMB JOINTS OPTIONAL

8. FINISHED SURFACE OF ALL WELDS TO BE LIQUID PENETRANT EXAMINED PER ASME B & PV CODE, SECT. V, ARTICLE 6 WITH ACCEPTANCE PER SECT. VIII, DIV. 1, APPENDIX 8 OR PER ANSI/AWS D1.2,SECT. 5, PART 2 WITH ACCEPTANCE PER PARAGRAPH 6.17.

7. ALL WELDING TO BE PER SECT. IX OF ASME B & PV CODE OR ANSI/AWS D1.2 STRUCTURAL WELDING CODE-ALUMINUM.

6 3500 PSI +5%/-10% DYNAMIC CRUSH STRENGTH IN RADIAL AND AXIAL DIRECTION. PRECRUSHING REQ'D IN AXIAL DIRECTION.

5 250 PSI +/- 10% DYNAMIC CRUSH STRENGTH IN AXIAL DIRECTION. PRECRUSHING REQ'D

4 HONEYCOMB, ITEM 14 TO BE BONDED TO EACH OTHER IN TWELVE (12) PIE SHAPED SECTIONS USING ADHESIVE ITEM 15 HALF SEGMENTS MAY BE BONDED TOGETHER TO FORM A 30° SECTION BUT THE MAXIMUM DEVIATION OF THE SECTION FROM THE RADIAL DIRECTION SHALL NOT EXCEED 15°

3 ATTACH WITH ADHESIVE MIL-A-25463 OR MMM-A-132

2. BOND HONEYCOMB WHEREVER POSSIBLE WITH ADHESIVE PER MIL-A-25463 OR MMM-A-132

1. SHELL MUST BE LIQUID TIGHT. SEE WELD JOINT DETAILS

NOTE:

10 14 GUSSET ITEM 10, MAY BE TWO PIECES JOINED AS SHOWN, OR MAY BE PARTIAL WELD REPAIRED.

13. LOCALIZED ABRASIONS, SCRATCHES, OR GOUGES IN THE OUTER SHELL HAVING A DEPTH OF .060 INCHES OR LESS ARE ACCEPTABLE. THE OUTER SHELL CONSISTS OF ITEMS 1, 2, 3, 4, 5, 6, 7 AND 8. THESE LOCALIZED AREAS MAY, OR MAY NOT, BE REPAIRED IN ORDER TO RESTORE APPEARANCES AND/OR SURFACE FINISH. ACCEPTABLE REPAIR METHODS INCLUDE BLENDING OF THE AFFECTED SHELL AREA AND/OR FILLING OF AREA USING AN ENGINEERING APPROVED MATERIAL THAT IS COMPATIBLE WITH THE BASE MATERIAL AND PROVIDES A COMPARABLE SURFACE FINISH. 10

			ITEM	NAME	MATERIAL	SPEC	DRAWING No.	DESCRIPTION
		1	20	NAMEPLATE	6061-T6 AL. ALY	ASTM B209		.100 SHEET
		1	19	LUG	6061-T651 AL. ALY	ASTM B209		1/2 PLATE
	1		18	GRIP	6061-T6 AL. ALY	ASTM B211		1/2ø BAR
	1		17	BASE	6061-T651 AL. ALY	ASTM B-209		1/4 PLATE
		2	16	HANDLE			98	
		AS REQ'D	15	ADHESIVE		MIL-A-25463 OR MMM-A-132		
4		AS REQ'D	14	HONEYCOMB	AL.ALY	8		MULTI DIRECTIONAL
		AS REQ'D	13	HONEYCOMB	AL.ALY	8		UNI DIRECTIONAL
10		AS REQ'D	12	SEPARATOR	6061-T6 AL. ALY	ASTM B-209 OR QQ-A-250		.010\.016
		1	11	SEPARATOR	5052-H32 OR H34	ASTM B-209 OR QQ-A-250		.032 SHEET
		4	10	GUSSET	6061-T651 AL. ALY	ASTM B-209 OR QQ-A-250		1/2 PLATE
			9					
		1	8	COVER	6061-T6 AL. ALY	ASTM B-209 OR QQ-A-250		.125 SHEET
		1	7	UPPER COVER	6061-T6 AL. ALY	ASTM B-209 OR QQ-A-250		.125 SHEET
		4	6	PLATE	6061-T6 AL. ALY	ASTM B-209 OR QQ-A-250		.125 SHEET
		8	5	PLATE	6061-T6 AL. ALY	ASTM B-209 OR QQ-A-250		.125 SHEET
		4	4	PLATE	6061-T6 AL. ALY	ASTM B-209 OR QQ-A-250		.125 SHEET
		1	3	END	6061-T6 AL. ALY	ASTM B-209 OR QQ-A-250		.125 SHEET
		1	2	END	6061-T6 AL. ALY	ASTM B-209 OR QQ-A-250		.125 SHEET
		1	1	OUTER COVER	6061-T6 AL. ALY	ASTM B-209 OR QQ-A-250		.125 SHEET

97	98	99
ASSY	ASSY	ASSY
QUANTITY		

DIMENSIONING AND TOLERANCING SHALL BE PER ASME Y14.5-94
UNSPECIFIED DIMENSIONS AND TOLERANCES SHOWN BELOW.
DIMENSIONS ARE IN INCHES. FRACTIONAL TOLERANCE: ±1/8

SYM		XXX	TOL.	XX	TOL.
	GEOMETRY				
	FLATNESS	UNDER 3	±.003	UNDER 6	±.02
		3-12	±.005	6-18	±.03
	STRAIGHTNESS	OVER 12	±.010	OVER 18	±.06
	ANGULARITY	.X	±.1	ANGLES ±0.5°	
	PERPENDICULARITY	ALL UNSPECIFIED TOOL RADII .015 - .030			
		BREAK ALL SHARP CORNERS .015 - .030			
//	PARALLELISM	ALL UNSPECIFIED MACHINED SURFACES SHALL BE ▽ OR BETTER			
◎	CONCENTRICITY	NEXT ASSEMBLY: 315-40-01			
⊕	TRUE POSITION	DRAWING TYPE: LICENSE			

GROUP	NAME	DATE
PREPARER	V. Shtylman	10/26/09
CHECKER	[illegible]	10/29/09
PROJECT MANAGER	[illegible]	10/29/09
ENGINEERING	[illegible]	10/27/09
LICENSING	[illegible]	10/29/09
QUALITY	[illegible]	10/30/09

NAC INTERNATIONAL

LEGAL WEIGHT TRUCK TRANSPORT CASK UPPER IMPACT LIMITER SAFETY ANALYSIS REPORT

PROJECT	315-40	DRAWING	05	REV 10
SCALE N.T.S.	EST.WT.1535 LBS.	SH 1 OF 2	8.5"x11" 10-22-2009	

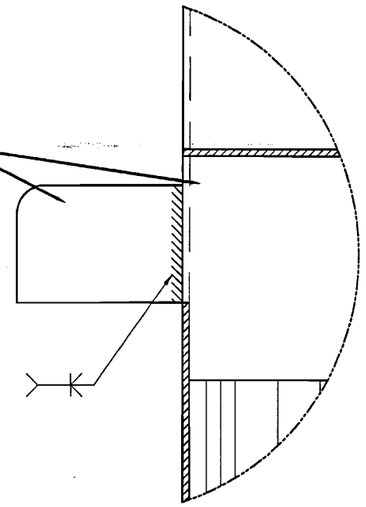

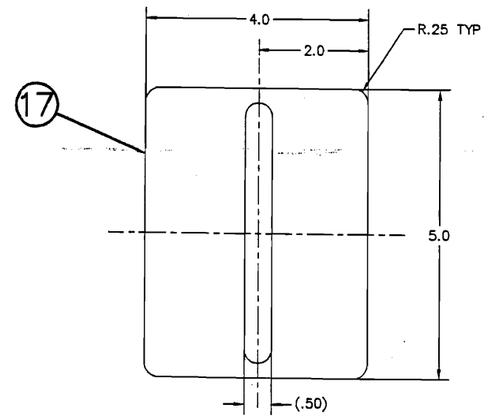

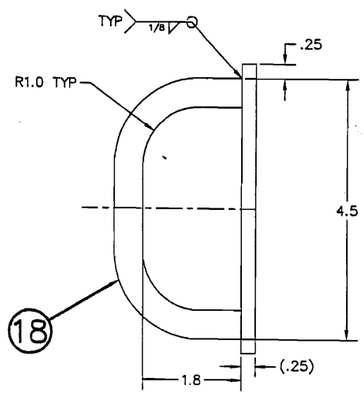

98 HANDLE

10

DETAIL B–B SH1 D6

10 ALTERNATE REPAIRED GUSSET CONFIGURATION TYP UP TO 4 PLACES 14

10

NAC INTERNATIONAL

LEGAL WEIGHT TRUCK
TRANSPORT CASK
UPPER IMPACT LIMITER
SAFETY ANALYSIS
REPORT

PROJECT	315–40	DRAWING	05	REV 10
SCALE N. T. S.	WEIGHT AS NOTED	SH 2 OF 2	9:57AM 10-22-2009	

REV	CHANGE
0	INITIAL ISSUE
1	INC DCR 0A
2	INC DCR 1A
3	INC DCR 2A & 2B
4	INC DCR 3A
5	INC DCR 4A
6	INC DCR 5A
7	INC DCR 6A
8	INC DCR 7A
9	INC DCR 8A
10	INC DCR 9A

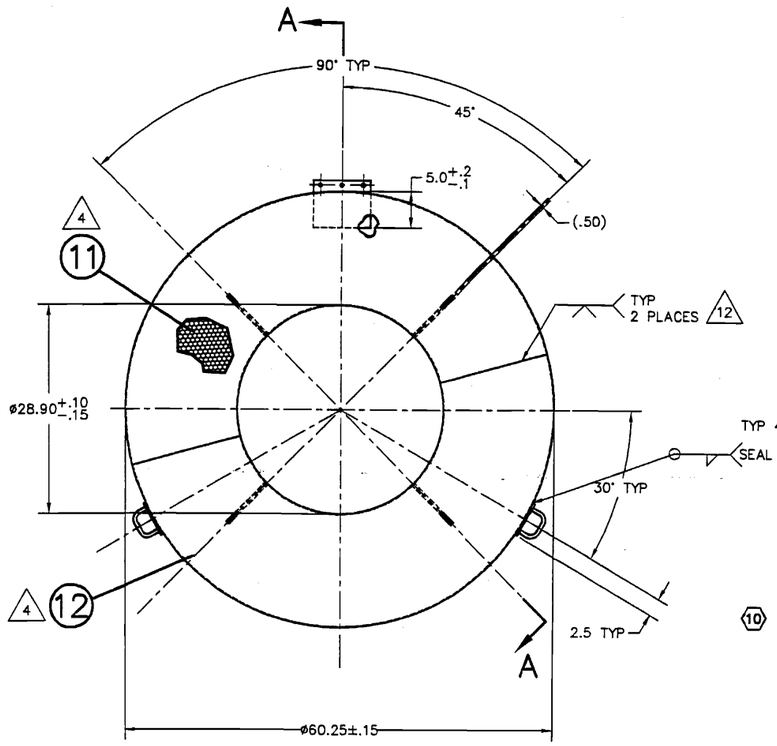

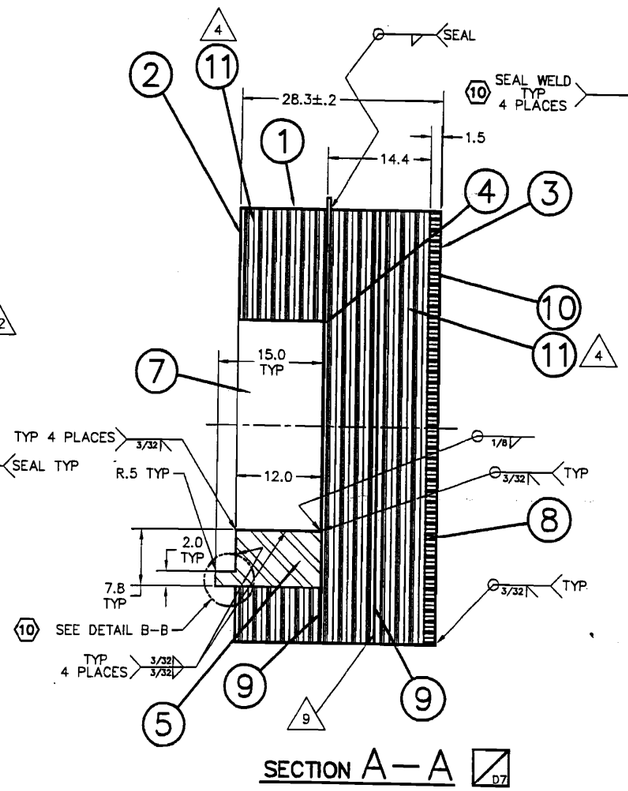

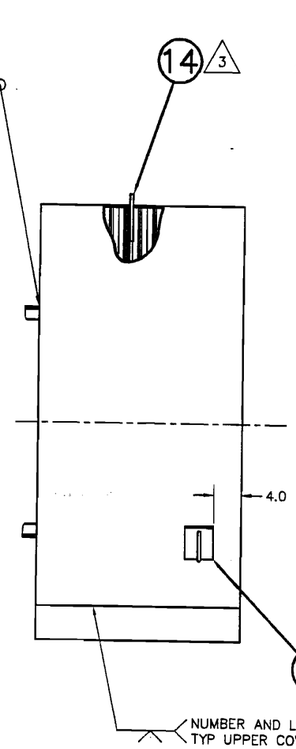

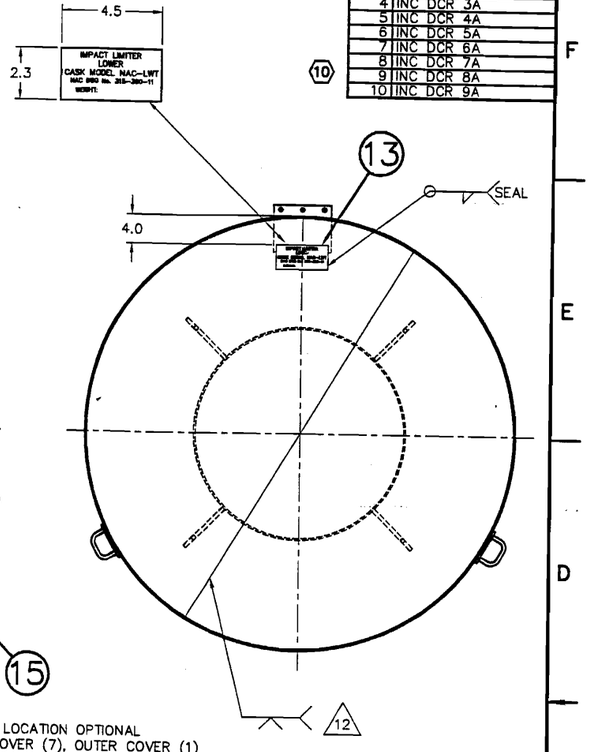

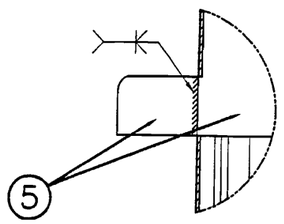

10 DETAIL B-B
ALTERNATE REPAIRED GUSSET CONFIGURATION TYP UP TO 4 PLACES 14

12 LOCATION OPTIONAL, MAY BE OMITTED IF ENDS, ITEMS 2 AND 3, ARE OF ONE PIECE.

11. A .25 RADIAL GAP IS PERMITTED BETWEEN HONEYCOMB, ITEMS 10 & 11, AND OUTER COVER, ITEM 1.

10 SEPARATORS MAY BE MULTIPLE PIECES BUT GAPS ARE NOT PERMITTED BETWEEN PIECES.

9 NUMBER OF HONEYCOMB JOINTS OPTIONAL

8. FINISHED SURFACE OF ALL WELDS TO BE LIQUID PENETRANT EXAMINED PER ASME B & PV CODE, SECT. V, ARTICLE 6 WITH ACCEPTANCE PER SECT. VIII, DIV. 1, APPENDIX 8 OR PER ANSI/AWS D1.2,SECT. 5, PART 2 WITH ACCEPTANCE PER PARAGRAPH 6.17.

7. ALL WELDING TO BE PER SECT. IX OF ASME B & PV CODE OR ANSI/AWS D1.2 STRUCTURAL WELDING CODE-ALUMINUM.

6 3500 PSI +5%/-10% DYNAMIC CRUSH STRENGTH IN RADIAL AND AXIAL DIRECTION. PRECRUSHING REQ'D IN AXIAL DIRECTION.

5 250 PSI +/- 10% DYNAMIC CRUSH STRENGTH IN AXIAL DIRECTION. PRECRUSHING REQ'D

4 HONEYCOMB, ITEM 11 TO BE BONDED TO EACH OTHER IN TWELVE (12) PIE SHAPED SECTIONS USING ADHESIVE ITEM 12 HALF SEGMENTS MAY BE BONDED TOGETHER TO FORM A 30° SECTION BUT THE MAXIMUM DEVIATION OF THE SECTION FROM THE RADIAL DIRECTION SHALL NOT EXCEED 15°

3 ATTACH WITH ADHESIVE MIL-A-25463 OR MMM-A-132

2. BOND HONEYCOMB WHEREVER POSSIBLE WITH ADHESIVE PER MIL-A-25463 OR MMM-A-132

1. SHELL MUST BE LIQUID TIGHT. SEE WELD JOINT DETAILS

NOTES:

10 14 GUSSET ITEM 5, MAY BE TWO PIECES JOINED AS SHOWN, OR MAY BE PARTIAL WELD REPAIRED.

13. LOCALIZED ABRASIONS, SCRATCHES, OR GOUGES IN THE OUTER SHELL HAVING A DEPTH OF .060 INCHES OR LESS ARE ACCEPTABLE. THE OUTER SHELL CONSISTS OF ITEMS 1, 2, 3, 4, AND 7. THESE LOCALIZED AREAS MAY, OR MAY NOT, BE REPAIRED IN ORDER TO RESTORE APPEARANCES AND/OR SURFACE FINISH. ACCEPTABLE REPAIR METHODS INCLUDE BLENDING OF THE AFFECTED SHELL AREA AND/OR FILLING OF AREA USING AN ENGINEERING APPROVED MATERIAL THAT IS COMPATIBLE WITH THE BASE MATERIAL AND PROVIDES A COMPARABLE SURFACE FINISH.

			ITEM	NAME	MATERIAL	SPEC	DRAWING No.	DESCRIPTION
		2	15	HANDLE			315-40-05-98	
		1	14	LUG			315-40-05-19	
		1	13	NAMEPLATE	6061-T6 AL. ALY	ASTM B209		.100 SHEET
		AS REQ'D	12	ADHESIVE		MIL-A-25463 OR MMM-A-132		
4		AS REQ'D	11	HONEYCOMB	AL. ALY	6		MULTI DIRECTIONAL
10		AS REQ'D	10	HONEYCOMB	AL. ALY	6		UNI DIRECTIONAL
		1	9	SEPARATOR	6061-T6 AL. ALY	ASTM B-209 OR QQ-A-250		.010/.016 SHEET
		1	8	SEPARATOR	5052-H32 OR H34	ASTM B-209 OR QQ-A-250		.032 SHEET
		1	7	UPPER COVER	6061-T6 AL. ALY	ASTM B-209 OR QQ-A-250		.125 SHEET
			6					
		4	5	GUSSET	6061-T651 AL. ALY	ASTM B-209 OR QQ-A-250		1/2 PLATE
		1	4	COVER	6061-T6 AL. ALY	ASTM B-209 OR QQ-A-250		.125 SHEET
		1	3	END	6061-T6 AL. ALY	ASTM B-209 OR QQ-A-250		.125 SHEET
		1	2	END	6061-T6 AL. ALY	ASTM B-209 OR QQ-A-250		.125 SHEET
		1	1	OUTER COVER	6061-T6 AL. ALY	ASTM B-209 OR QQ-A-250		.125 SHEET

97 ASSY | 98 ASSY | 99 ASSY | QUANTITY

DIMENSIONING AND TOLERANCING SHALL BE PER ASME Y14.5-94
UNSPECIFIED DIMENSIONS AND TOLERANCES SHOWN BELOW.
DIMENSIONS ARE IN INCHES. FRACTIONAL TOLERANCE: ±1/8

SYM.	GEOMETRY	.XXX	TOL.	.XX	TOL.
	FLATNESS	UNDER 3	±.003	UNDER 6	±.02
		3-12	±.005	6-18	±.03
	STRAIGHTNESS	OVER 12	±.010	OVER 18	±.06
	ANGULARITY	.X	±.1	ANGLES ±0.5°	
	PERPENDICULARITY	ALL UNSPECIFIED TOOL RADII: .015 - .030			
	PARALLELISM	BREAK ALL SHARP CORNERS .015 - .030			
	CONCENTRICITY	ALL UNSPECIFIED MACHINED SURFACES SHALL BE ▽ OR BETTER			
	TRUE POSITION	NEXT ASSEMBLY: 315-40-01			
		DRAWING TYPE: LICENSE			

GROUP	NAME	DATE
PREPARED	V. Shtylerman	10/26/09
CHECKED	Anil L Patel	10/29/09
PROJECT MANAGER	[signature]	10/29/09
ENGINEERING	[signature]	10-29-09
LICENSING	Anil L Patel	10/29/09
QUALITY	Ray L Bass	10/30/09

NAC INTERNATIONAL

LEGAL WEIGHT TRUCK TRANSPORT CASK LOWER IMPACT LIMITER SAFETY ANALYSIS REPORT

PROJECT	315-40	DRAWING	06	REV 10
SCALE	N.T.S.	EST.WT. 1320 LBS	SH 1 OF 1	10:08AM 10-22-2009

R-20,7531

No.	REVISION	BY	APPROVED BY	DATE
1.	INC DCR 0A			
2.	INC DCR 1A			
3.	INC DCR 2A & 2B			
4.	INC DCR 3A,3B,3C			
5.	INC DCR 4A			
6.	INC DCR 5B			
7.	INC DCR 6A			
8.	INC DCR 7A			
9.	INC DCR 8A			
10.	INC DCR 9A,9B			
11.	INC DCR 10A			
12.	INC DCR 11A			
13.	INC DCR 12A			
14.	INC DCR 13A			
15.	INC DCR 14A			
16.	INC DCR 15A			
17.	INC DCR 16A			
18.	INC DCR 17A			

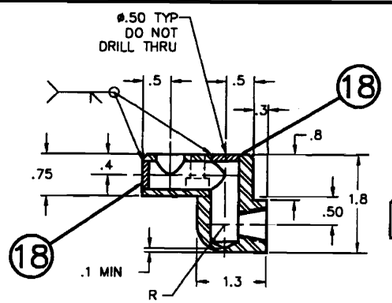

SECTION J—J

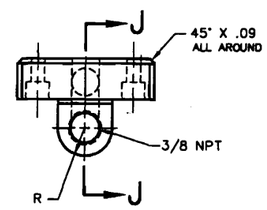

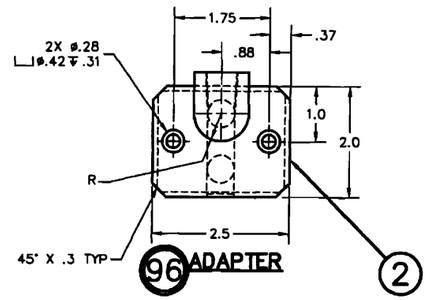

ADAPTER

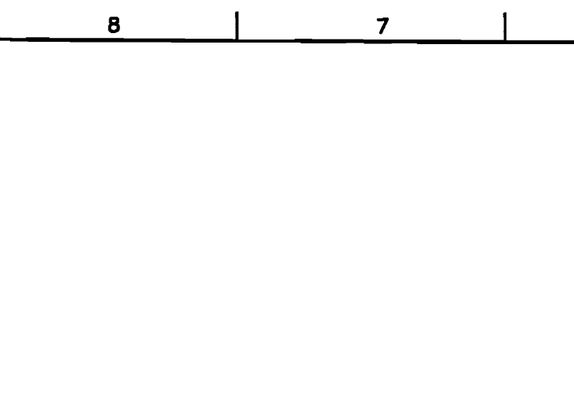

GUIDE

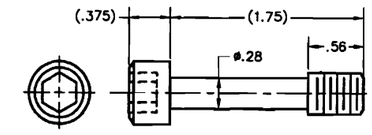

SOCKET HEAD CAP SCREW
SCALE: 2/1

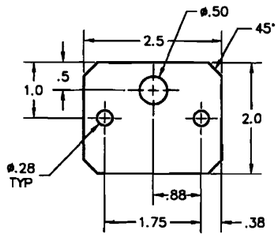

GASKET

5 INSTALL ITEM 13 (HELI-COIL INSERTS) PER MANUFACTURERS INSTRUCTIONS.

4 ASME SA564 OR ASME SA705

3 A .0002" TO .0005" PLATING OF HIGH QUALITY CHROMIUM IS OPTIONAL AS AN AID IN PREVENTING GALLING DURING CASK OPERATIONS. IF CHROME PLATING IS APPLIED, THE PRODUCT WILL BE PROCESSED, INSPECTED AND TESTED AS NECESSARY TO ENSURE THAT THE PLATED ITEM IS NOT HINDERED IN PERFORMING ITS DESIGN FUNCTION.

2 REMOVED

1 HEAT TREAT TO COND H 1150

NOTES:

								ITEM	NAME	MATERIAL	SPEC	DRAWING No.	DESCRIPTION
								35	METAL FACE SEAL	HNV000 SEE NOTE	COML		HELICOFLEX #H-308210
							1	34	POLYMER FACE SEAL	VITON	COML		PARKER #2-229VM835-75
							1	33	FACE SEAL	VITON	COML		PARKER #2-227VM835-75
							1	32	BORE SEAL	VITON	COML		PARKER #2-231VM835-75
							1	31	ALT. PORT COVER BODY	TYPE 630 CONDA			ø4-1/2 BAR
					1			30	END TUBING	304 ST STL	ASTM A249 OR A270 A269		5/8 O.D. X .065 WALL TUBING
					1			29	REDUCER	304 ST STL	ASTM A276		ø1 BAR
					1			28	DRAIN TUBE	304 ST STL	ASTM A249 OR A270 A269		1 O.D. X .065 WALL TUBING
					1			27	END BAR	304 ST STL	ASTM A276		ø1 BAR
			1					26	LOCATING LUG	304 ST STL	ASTM A240		1/8 PLATE
			1					25	LOCATING RING	304 ST STL	ASTM A240		3/8 PLATE
			1					24	SUPPORT RING	304 ST STL	ASTM A240		1/4 PLATE
								23	(DELETED)				
								22					
								21					
								20	PLUG	ST STL	COML		MAKE FROM MS51518B16S
								19	PLUG	ST STL	COML		MAKE FROM MS51518B4S
				2				18	PLUG	304 ST STL	AISI		0.12 SHEET
								17	(DELETED)				
								16	(DELETED)				
								15	(DELETED)				
								14	(DELETED)				
							3	13	INSERT	ST STL	COML		HELI-COIL 1185-8CN-1000
								12	SOC.HD.CAP.SCR.	CARBON STEEL 4.6	ASME SA453		1-8UNC X 9 LONG
							3	11	ALT. B PORT COVER BOLT	MICRO ALLOY STEEL	ASME SB637 OR N07718		3/8-16UNC X 1-3/4 LONG
							1	10	ALT. B PORT COVER BODY	316 STAINLESS STEEL	ASME SA479		BAR
								9	SOC.HD.CAP.SCR.	316 STAINLESS STEEL	SA193 GR86		3/8-16UNC X 1-3/4 LONG
						1		8	LID GUIDE	TYPE 630 CONDA			3/4 X 3/4 BAR
								7	BUSHING	TYPE 630 CONDA			ø4-3/4 BAR
								6	PLATE	304 ST.STL.	ASTM A240		
					1			5	TRUNNION	304 ST.STL.	ASME SA240		3 THICK PLATE
						2		4	DOWEL PIN	ST STL	COML		ø1/4 X 1 LONG
								3	GASKET	MICRO-PHENE	COML		1/16 THICK 60 DUROMETER
				1				2	ADAPTER	304 ST.STL.	ASTM A276 OR A240		2 X 2 1/4 BAR OR PLATE
								1	(DELETED)				
92 ASSY	93 ASSY	94 ASSY	95 ASSY	96 ASSY	97 ASSY	98 ASSY	99 ASSY	ITEM	NAME	MATERIAL	SPEC	DRAWING No.	DESCRIPTION

QUANTITY

SYM.	GEOMETRY	TOLERANCES UNLESS OTHERWISE SPECIFIED				GROUP	NAME	DATE
	FLATNESS	3 PLACE DEC.	TOL.	2 PLACE DEC.	TOL.	PREPARED		
	STRAIGHTNESS	UNDER 3	±.003	UNDER 6	±.02	CHECKED		
	ANGULARITY	3-12	±.005	6-18	±.03	PROJECT MANAGER		
	PERPENDICULARITY	OVER 12	±.010	OVER 18	±.05	ENGINEERING		
	PARALLELISM	1 PLACE DEC.	±.1	FILLETS .015 TO .030		MODELING		
	CONCENTRICITY	FINISH (√) AA-125 MICRO IN.		ANGLES ±.5°		QUALITY		
	TRUE POSITION	THREADS-UNIFIED CLASS 3B				18		
		BREAK CORNERS .015-.030						
		TYPE OF DRAWING: SAFETY ANALYSIS REPORT				NEXT ASSEMBLY 315-40-02&03		

NUCLEAR ASSURANCE CORPORATION
ENGINEERING SERVICE DIVISION
NORCROSS GEORGIA 30092

LEGAL WEIGHT TRUCK TRANSPORT CASK PARTS DETAIL SAFETY ANALYSIS REPORT

PROJECT	DESIGN PACKAGE	DRAWING	REV
LWT	315-40	08	18
SCALE 1/1	WEIGHT	SH 1 OF 5	LOC

PROJECT LWT | PACKAGE 315-40 | TYPE 08

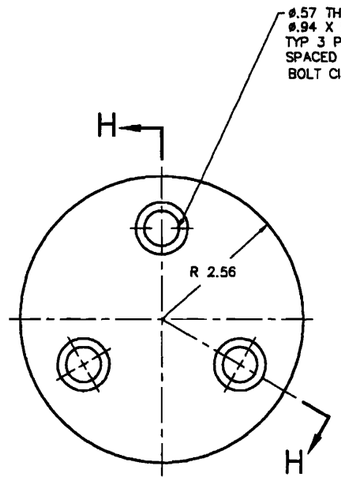

(6) PLATE

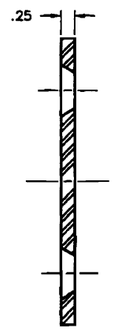

SECTION H–H

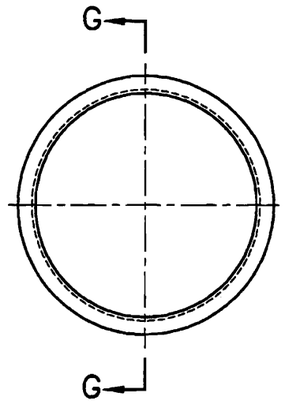

(7) BUSHING

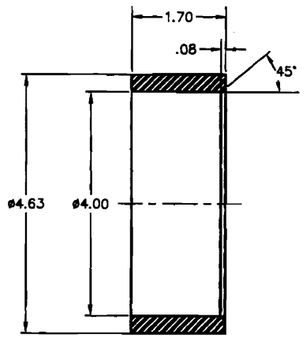

SECTION G–G

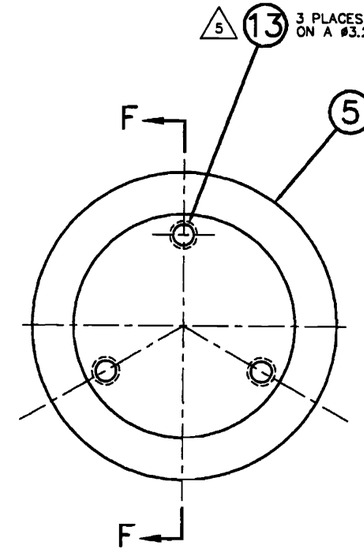

98 TRUNNION

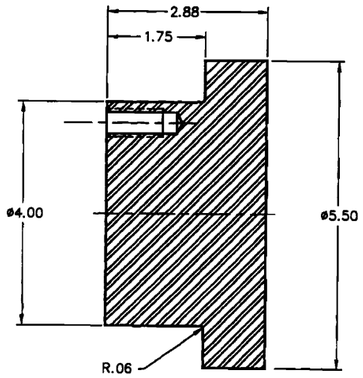

SECTION F–F

(12) SOCKET HEAD CAP SCREW

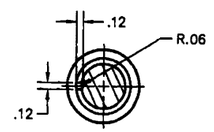

SECTION E–E

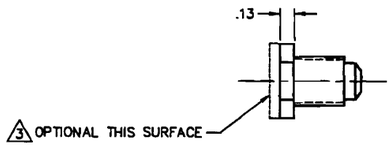

△3 (19) PLUG
SCALE: 2/1

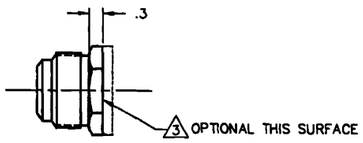

△3 (20) PLUG

NUCLEAR ASSURANCE CORPORATION
ENGINEERING SERVICE DIVISION
NORCROSS GEORGIA 30092

LEGAL WEIGHT TRUCK
TRANSPORT CASK
PARTS DETAIL
SAFETY ANALYSIS REPORT

PROJECT LWT	DESIGN PACKAGE 315-40	DRAWING 08	REV. 12
SCALE 1/1	WEIGHT	SHT. 2 OF 5	LOC.

PROJ. LWT
DESIGN PACKAGE 315-40
DRAWING 08
REV. 12

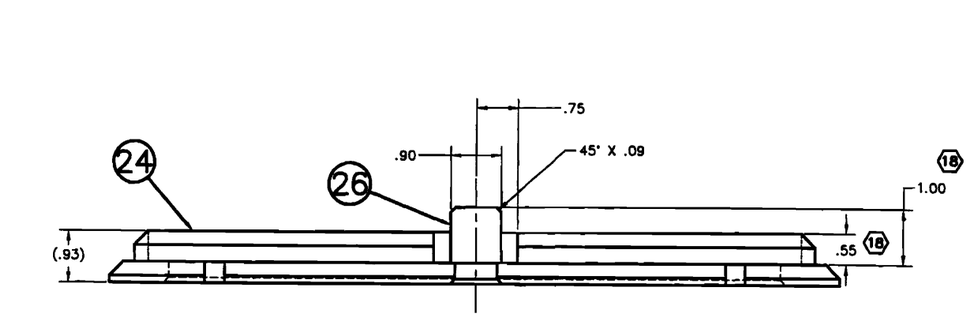

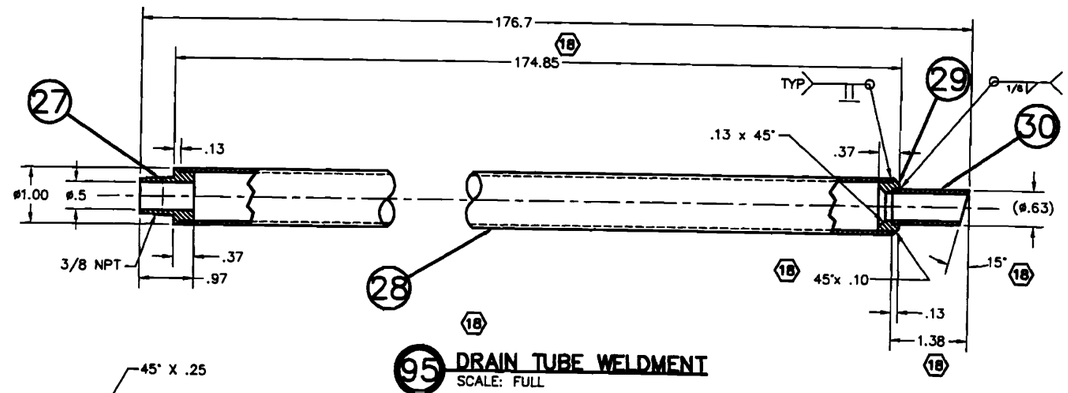

95 DRAIN TUBE WELDMENT
SCALE: FULL

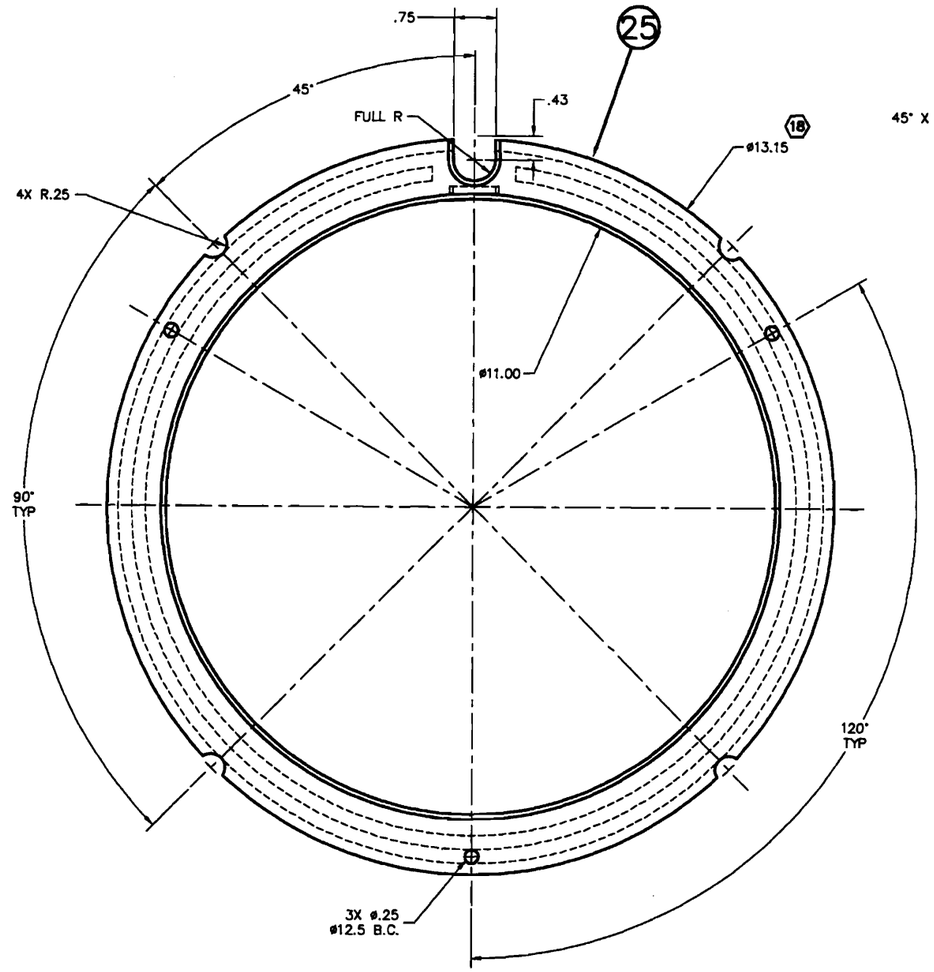

94 DRAIN ALIGNMENT RING

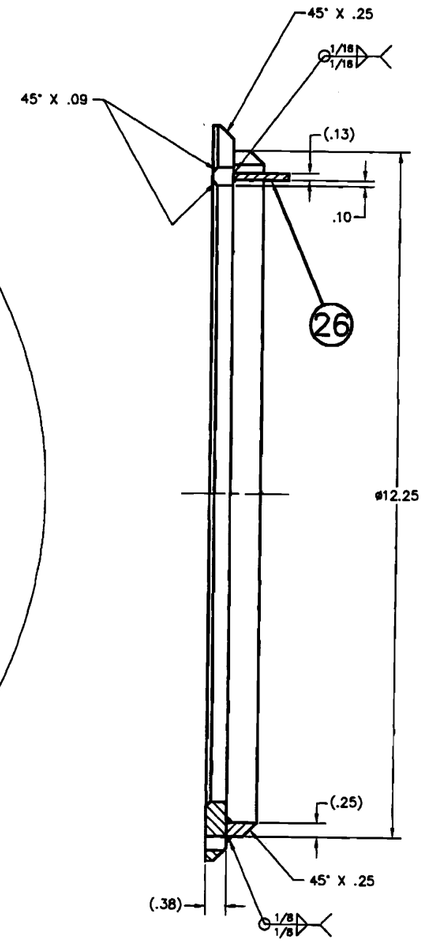

18

NUCLEAR ASSURANCE CORPORATION ENGINEERING SERVICE DIVISION NORCROSS, GEORGIA 30092	PROJ. LWT
LEGAL WEIGHT TRUCK TRANSPORT CASK PARTS DETAIL SAFETY ANALYSIS REPORT	DESIGN PACKAGE 315-40
	DRAWING 08
PROJECT LWT	REV. 18
SCALE 1/1	WEIGHT
SHT. 3 OF 5	DOC.

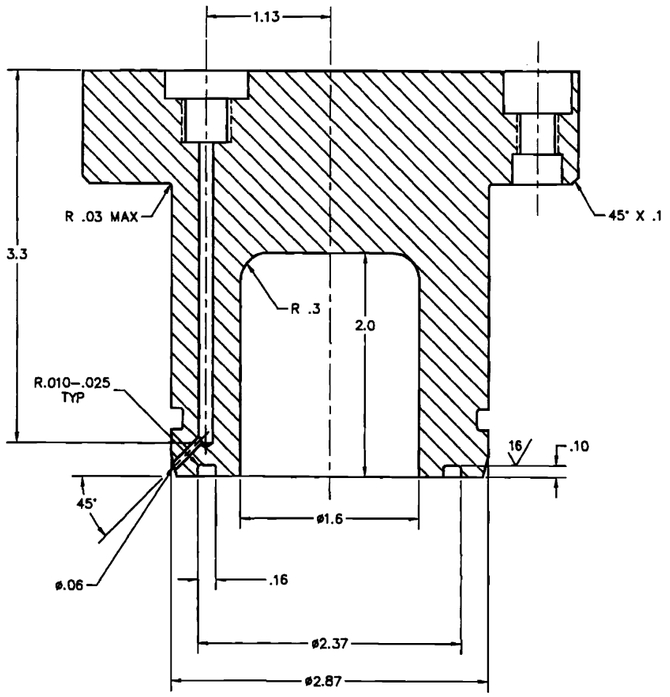

SECTION K-K
(ROTATED 90°)
SCALE: 2/1

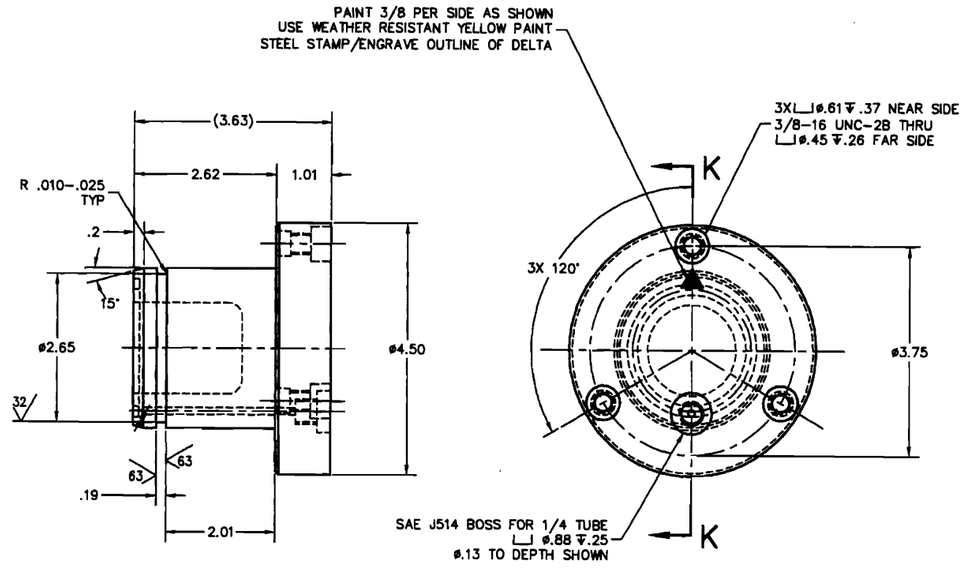

31 ALTERNATE PORT COVER BODY

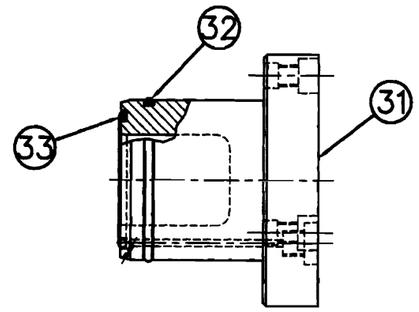

93 ALTERNATE PORT COVER ASSEMBLY

NUCLEAR ASSURANCE CORPORATION ENGINEERING SERVICE DIVISION NORCROSS GEORGIA 30092			PROJECT LWT
LEGAL WEIGHT TRUCK TRANSPORT CASK PARTS DETAIL SAFETY ANALYSIS REPORT			DRAWING 315-40
			DWG. NO. 08
PROJECT LWT	DESIGN PACKAGE 315-40	DRAWING 08	REV. 18
SCALE 1/1	WEIGHT	SHT. 4 OF 5	DOC.

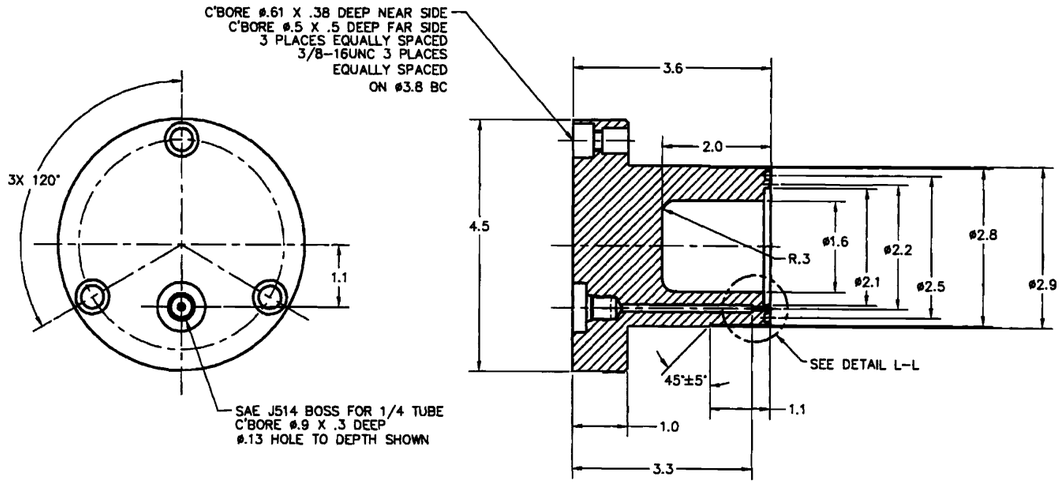

(10) ALT. B PORT COVER BODY

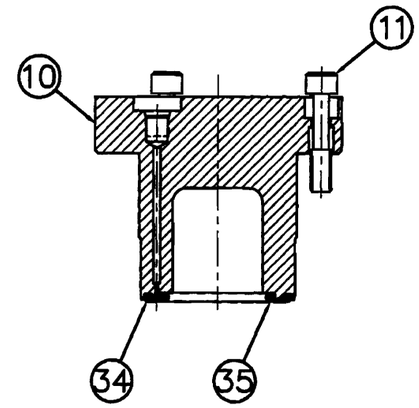

(92) ALT. B PORT COVER ASSEMBLY

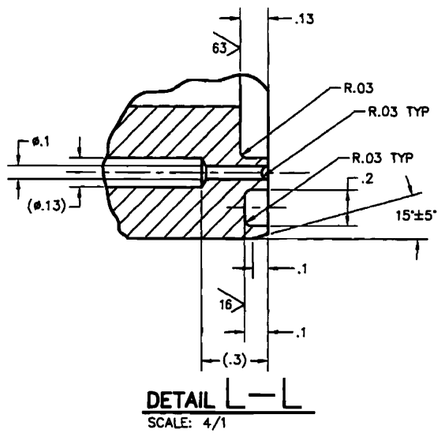

DETAIL L—L
SCALE: 4/1

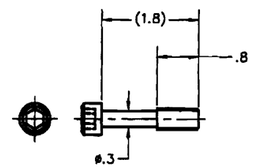

(11) ALT. B PORT COVER BOLT

NUCLEAR ASSURANCE CORPORATION ENGINEERING SERVICE DIVISION NORCROSS GEORGIA 30092			TOOL LWT
LEGAL WEIGHT TRUCK TRANSPORT CASK PARTS DETAIL SAFETY ANALYSIS REPORT			DWG. NO. 315-40 REV. 08
PROJECT LWT	DESIGN PACKAGE 315-40	DRAWING 08	REV. 18
SCALE 1/1	WEIGHT	SHT. 5 OF 5	

No.	REVISION	BY	APPROVED BY	DATE
1.	INC. DCR. 0A			
2	INC DCR 1A			

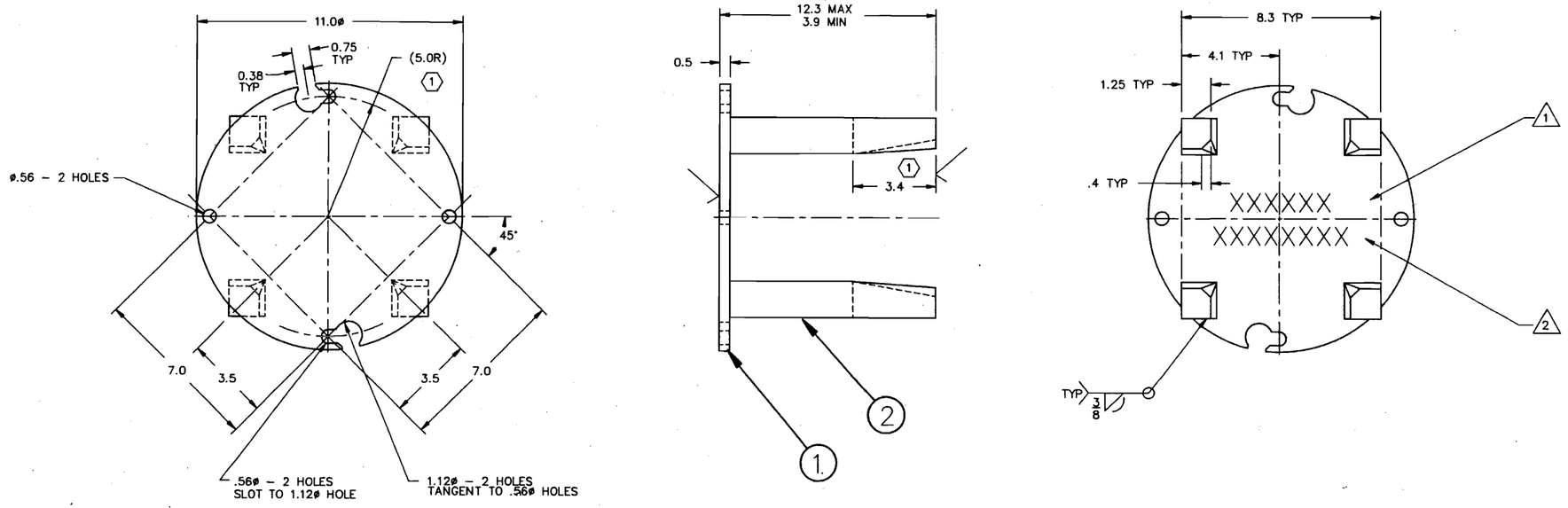

1 3. WELD PER ASME B & PV CODE SECT. IX & LIQUID PENETRANT EXAMINE PER SECTION V, ARTICLE 6 ACCEPTANCE PER SECT. VIII, DIV 1, APPENDIX 8

2. STEEL STAMP PART No. IN 3/8" HIGH CHARACTERS

1. STEEL STAMP FUEL TYPE IN 3/8" HIGH CHARACTERS

NOTE:

ITEM	NAME	MATERIAL	SPEC	DRAWING No.	DESCRIPTION
4	LEG	304 SS/TL 304	ASTM A276		1-1/2 X 1-1/2 BAR
1	FLANGE	304 SS/TL 304	ASTM A240		1/2 PLATE

ASSY	ASSY	ASSY
QUANTITY		

SYM.	GEOMETRY
▱	FLATNESS
—	STRAIGHTNESS
∠	ANGULARITY
⊥	PERPENDICULARITY
//	PARALLELISM
◎	CONCENTRICITY
⊕	TRUE POSITION

TOLERANCES UNLESS OTHERWISE SPECIFIED

3 PLACE DEC.	TOL.	2 PLACE DEC.	TOL.
UNDER 3	±.003	UNDER 6	±.02
3–12	±.005	6–16	±.03
OVER 12	±.010	OVER 16	±.08
1 PLACE DEC.	±.1	FILLETS .015 TO .030	
FINISH (√) 64–125 MICRO IN		ANGLES ±.5°	
THREADS–UNIFIED CLASS–3B			

BREAK CORNERS .015–.030

TYPE OF DRAWING: SAFETY ANALYSIS REPORT

GROUP	NAME	DATE
DRAWN	Bergholz	9-10-99
CHECK		9-10-99
DESIGN ENGINEERING		8-11-99
STRUCTURE		8/11/99
PROJECT		8/11/99
THERMAL		8/11/99
NUCLEAR		8/11/99
QUALITY		8/11/99
NEXT ASSY	315-40-01	

NUCLEAR ASSURANCE CORPORATION
ENGINEERING SERVICE DIVISION
NORCROSS GEORGIA 30092

LEGAL WEIGHT TRUCK TRANSPORT CASK PWR BASKET SPACER SAFETY ANALYSIS REPORT

PROJECT	DESIGN PACKAGE	DRAWING	REV
LWT	315-40	09	2
SCALE 1/2	WEIGHT 34 LBS	SH 1 OF 1	LOC

PROJ LWT
DESIGN PACK 315-40
DWG 09

NAC DCRM 01

REV	CHANGE
0	INITIAL ISSUE
1	INC DCR 0A
2	INC DCR 1A
3	INC DCR 2A
4	INC DCR 3A
5	INC DCR 4A
6	INC DCR 5A
7	INC DCR 6A
8	INC DCR 7A
9	INC DCR 8A

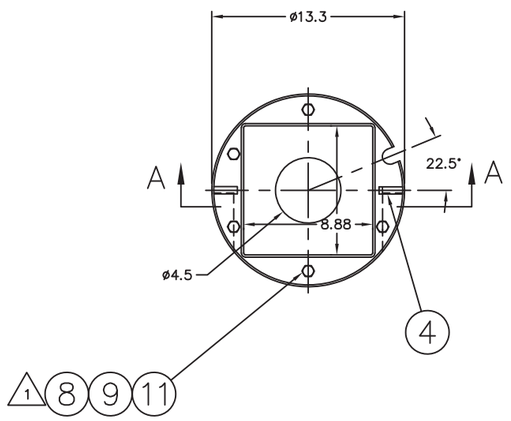

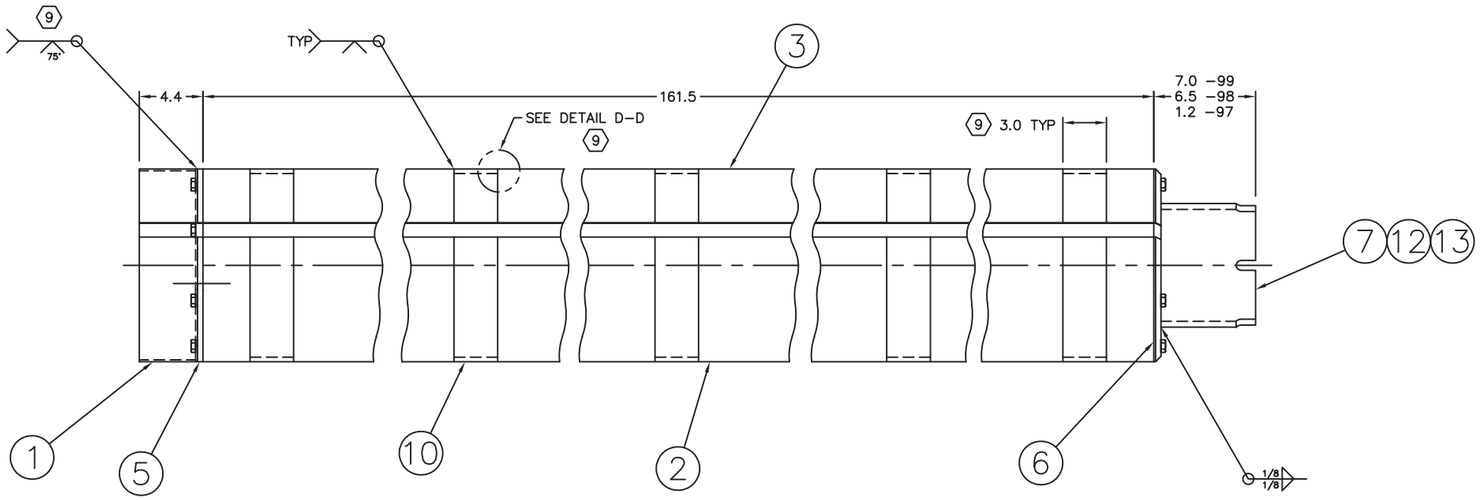

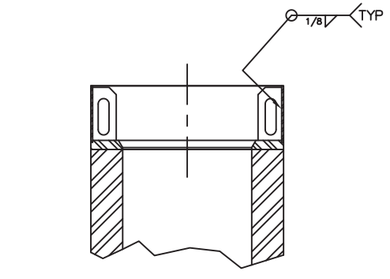

SECTION A–A (9)

(99) PWR BASKET
(98) PWR BASKET
(97) PWR BASKET

(9) 3. ITEM 10 (BAND) MAY BE TWO–PIECE CONSTRUCTION WITH A COMPLETE JOINT PENETRATION WELD. ALUMINUM ASTM MATERIAL THAT MEETS OR EXCEEDS THE YIELD AND ULTIMATE STRENTH REQUIREMENTS OF ASTM B211 6061–T651 MAY BE USED.

(9) 2. ALL WELDING PROCEDURES AND QUALIFICATIONS TO BE IN ACCORDANCE WITH ASME SECTION IX. LIQUID PENETRANT EXAMINE STAINLESS STEEL WELDS PER ASME SECTION V, ARTICLE 6. ACCEPTANCE PER ASME SECTION VIII, DIV. 1, APPENDIX 8 OR PER ASME SECTION III, ARTICLE NG–5350.

(1) TORQUE TO 20 FT–LBS

NOTES:

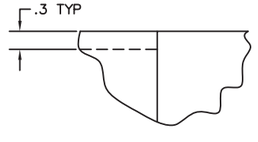

(9) DETAIL D–D
SCALE: 1/1

95 ASSY	96 ASSY	97 ASSY	98 ASSY	99 ASSY	ITEM	NAME	MATERIAL	SPEC	DRAWING No.	DESCRIPTION
		QUANTITY								
4	4				14	SPACER GUIDE	304 ST. STL.	ASTM A240/A276		1 PLATE/BAR
		1			13	ALTERNATE SPACER–B	304 ST. STL.	ASTM A312		8" SCH 80
1			1		12	ALTERNATE SPACER	304 ST. STL.	ASTM A312		8" SCH 80
10	10	10	10	10	11	LOCK WASHER	18–8	COML		1/2 REGULAR
(9) 5	5	5	5	5	10	BAND	SEE NOTE 3	SEE NOTE 3		BAR/PLATE
10	10	10	10	10	9	THREAD INSERT	ST. STL.	COML		3585–8CN1000 HELI–COIL
(1) 10	10	10	10	10	8	HEX HD BOLT	18–8	COML		1/2–13 UNC X 1–1/2 LG
	1			1	7	SPACER	304 ST. STL.	ASTM A312		8" SCH 80
1	1	1	1	1	6	FLANGE	304 ST. STL.	ASTM A240		7/8 PLATE
1	1	1	1	1	5	FLANGE	304 ST. STL.	ASTM A240		5/8 PLATE
2	2	2	2	2	4	LUG	304 ST. STL.	ASTM A276		1/2 X 1–5/8 BAR
2	2	2	2	2	3	SIDE	6061–T651	ASTM B209		2–1/2 PLATE
2	2	2	2	2	2	SIDE	6061–T651	ASTM B209		2–1/2 PLATE
(9) 1	1	1	1	1	1	RING	304 ST. STL.	ASTM A240		1/4 PLATE

UNLESS OTHERWISE STATED
DIMENSIONING AND TOLERANCING SHALL BE PER ASME Y14.5M–94, UNSPECIFIED DIMENSIONAL TOLERANCES ARE SHOWN BELOW.
ALL THREAD DEPTH CALLOUTS ARE TO BE CONSIDERED AS A MIN. DEPTH OF PERFECT THREADS. THE ACTUAL DEPTH OF THE THREADS IS NOT SUBJECT TO TOLERANCE CONTROLS.

.XXX	UNDER 3	±.003
	3–12	±.005
	OVER 12	±.010
.XX	UNDER 6	±.02
	6–18	±.03
	OVER 18	±.06
.X	ALL	±.1
FRACTIONAL		±1/8
ANGLES		±0.5°

WEIGHTS ARE APPROXIMATE AND ARE TO BE USED FOR HANDLING PURPOSES ONLY
ALL DIMENSIONS ARE IN INCHES
BORDER SIZE: F (40 X 28)
ALL UNSPECIFIED TOOL RADII: .015 – .030
BREAK ALL SHARP CORNERS .015 – .030
MACHINED SURFACES TO BE 125 OR BETTER
NEXT ASSEMBLY: 315–40–01
DRAWING TYPE: LICENSE

GROUP	NAME	DATE
PREPARER	Thomas Hadaway — Digitally signed by Thomas Hadaway Date: 2021.08.24 08:32:16 -04'00'	
CHECKER	Kevin Klein — Digitally signed by Kevin Klein Date: 2021.08.24 08:35:45 -04'00'	
PROJECT MANAGER	Jimmy Toliuszis FOR Jeff England — Digitally signed by Jimmy Toliuszis Date: 2021.08.24 09:49:04 -04'00'	
ENGINEERING	Kevin Klein — Digitally signed by Kevin Klein Date: 2021.08.24 08:36:09 -04'00'	
LICENSING	Wren Fowler — Digitally signed by Wren Fowler Date: 2021.08.24 10:12:31 -04'00'	
QUALITY	David M. Jensen — Digitally signed by David M. Jensen Date: 2021.08.31 15:59:24 -04'00'	

NAC INTERNATIONAL

LWT CASK PWR BASKET SAFETY ANALYSIS REPORT

PROJECT	DRAWING	REV
315–40	10	9
1/4 NOTED	SH 1 OF 2	

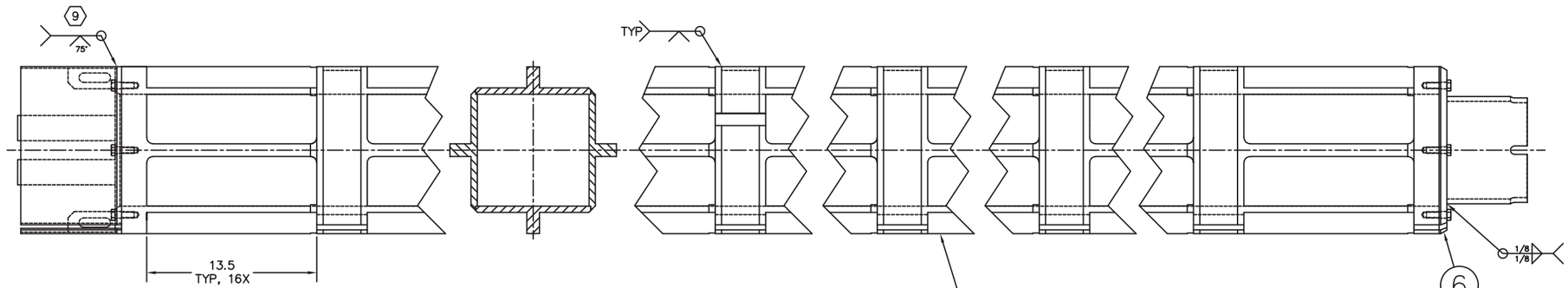

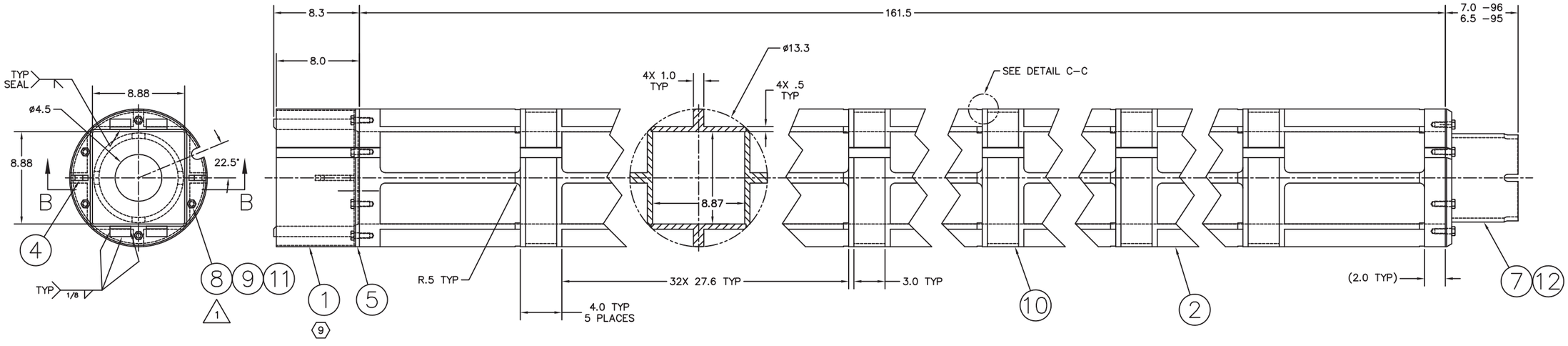

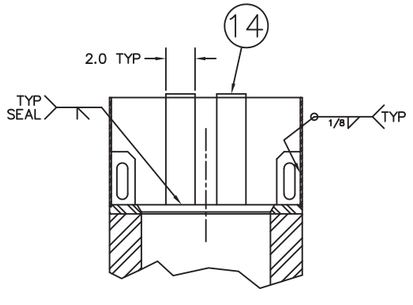

SECTION B−B

96 TPBAR BASKET ASSEMBLY

95 ALT. TPBAR BASKET ASSEMBLY

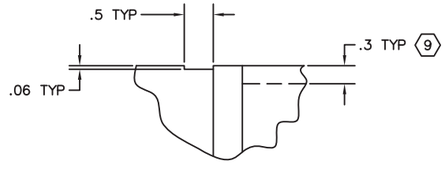

DETAIL C−C
SCALE: 1/1

NAC INTERNATIONAL

LWT CASK
PWR BASKET
SAFETY ANALYSIS
REPORT

PROJECT	DRAWING	REV
315−40	10	9
1/4 NOTED	SH 2 OF 2	

Q-131995

No.	REVISION	BY	APPROVED BY	DATE
0	INITIAL ISSUE			
1	INC DCR 0A & 0B			
2	INC DCR 1A			

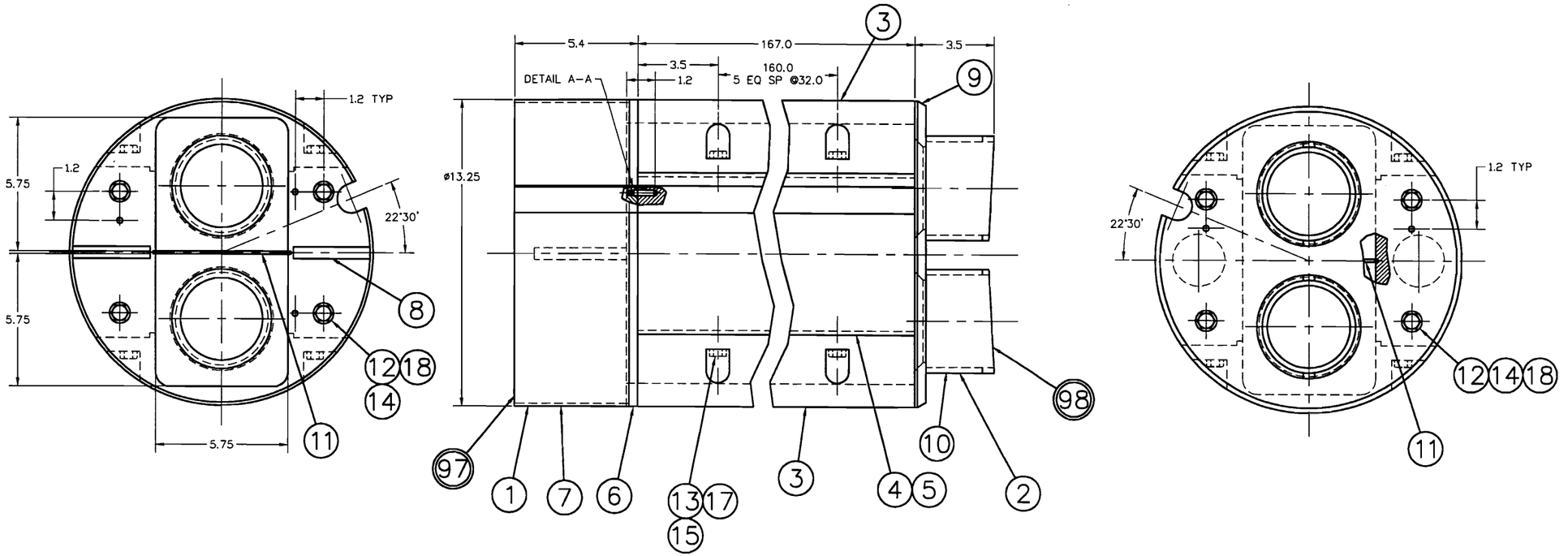

99 BWR FUEL BASKET ASSEMBLY

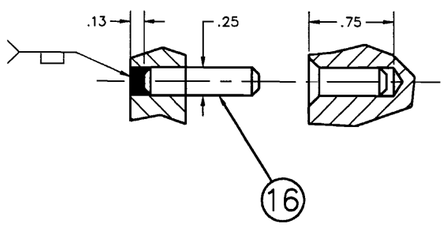

DETAIL A–A ⟨2⟩
SCALE: 2/1
TYP 5 PLACES ⟨2⟩

98 ASSY QUANTITY	99 ASSY QUANTITY	ITEM	NAME	MATERIAL	SPEC	DRAWING No.	DESCRIPTION
	8	18	PLAIN WASHER	18-8	COML		1/2,TYPE B,SERIES N
	24	17	PLAIN WASHER	18-8	COML		3/8,TYPE B,SERIES N
	5	16	DOWEL	304 ST.STL	ASTM A276		1/4 DIA X 1 LG
	24	15	THREAD INSERT	ST.STL.	COML		HELICOIL #3585-6CN0750
	8	14	THREAD INSERT	ST.STL.	COML		HELICOIL #3585-8CN1000
	24	13	HEX HD. BOLT	18-8	COML		3/8-16 UNC X 1 1/2 LG
	8	12	HEX HD. BOLT	18-8	COML		1/2-13 UNC X 1 1/4 LG
	1	11	DIVIDER	6061-T6 AL ALY	ASTM B209		1/8 THICK
2		10	PIPE	304 ST.STL	ASTM A312		4 SCH 40
1		9	PLATE	304 ST.STL	ASTM A240		5/8 PLATE
2		8	LUG	304 ST.STL	ASTM A240		1/2 PLATE
1		7	PLATE	304 ST.STL	ASTM A240		1/4 PLATE
1		6	PLATE	304 ST.STL	ASTM A240		5/8 PLATE
	1	5	BOTTOM EXTRUSION	6061-T6 AL ALY			
	1	4	TOP EXTRUSION	6061-T6 AL ALY			
	2	3	SIDE EXTRUSION	6061-T6 AL ALY			
	1	2	BOTTOM COVER			315-40-11-98	
	1	1	TOP COVER			315-40-11-97	

2 TORQUE ITEM 13 TO 15 FT-LBS

1 TORQUE ITEM 12 TO 20 FT-LBS

NOTE:

SYM.	GEOMETRY	TOLERANCES UNLESS OTHERWISE SPECIFIED				
	FLATNESS	3 PLACE DEC.	TOL.	2 PLACE DEC	TOL.	
—	STRAIGHTNESS	UNDER 3	±.003	UNDER 6	±.02	
∠	ANGULARITY	3–12	±.005	6–18	±.03	
⊥	PERPENDICULARITY	OVER 12	±.010	OVER 18	±.06	
//	PARALLELISM	1 PLACE DEC.	±.1	FILLETS .015 TO .030		
◎	CONCENTRICITY	FINISH (√)–AA–125 MICRO IN		ANGLES ±.5°		
⊕	TRUE POSITION	THREADS–UNIFIED CL2A–2B				
		BREAK CORNERS .015–.030				
		TYPE OF DRAWING: LISCENSING				

GROUP	NAME	DATE
PREPARER	MAK	9/21/98
CHECKER	R.Rawlins	10/2/98
PROJECT MANAGER		10/2/98
DIRECTOR DESIGN AND ANALYSIS		10/2/98
DIRECTOR, LISCENSING		10/2/98
VICE PRESIDENT QUALITY		10/2/98
NDIT ASSEMBLY		

NUCLEAR ASSURANCE CORPORATION
ENGINEERING SERVICE DIVISION
NORCROSS GEORGIA 30092

BWR FUEL BASKET ASSEM
LWT CASK
SAFETY ANALYSIS REPORT

PROJ: LWT
DESCRIPT#: 315-390
DWG#: 16
REV: 2

PROJECT	DESIGN PACKAGE	DRAWING	
LWT	315-40	11	
SCALE 1/2	WEIGHT 1124 LBS.	SH 1 OF 1	LOC

NAC DCRM 67

R-100504

No.	REVISION	BY	APPROVED BY	DATE
1	INC. DCR. OA			
2	INC DCR 1A			
3	INC DCR 2A			

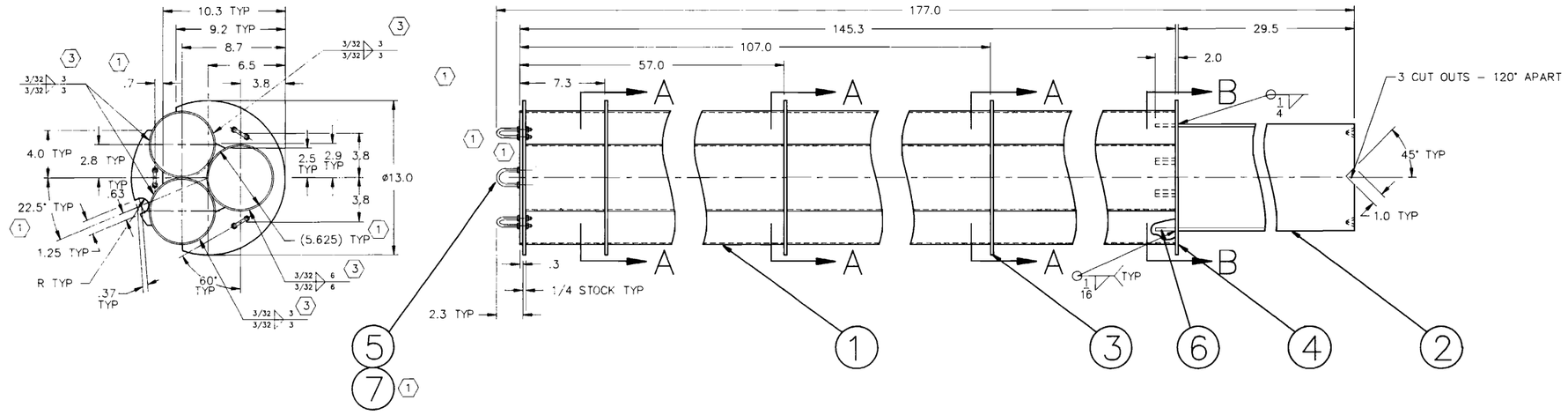

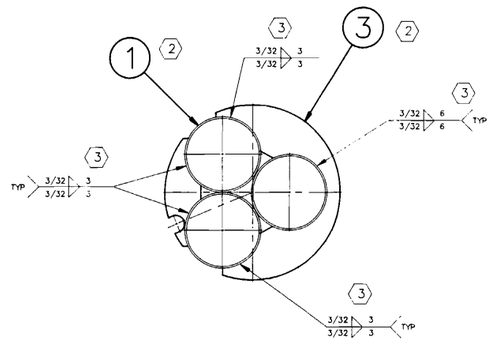

VIEW A–A E4
3 PLACES

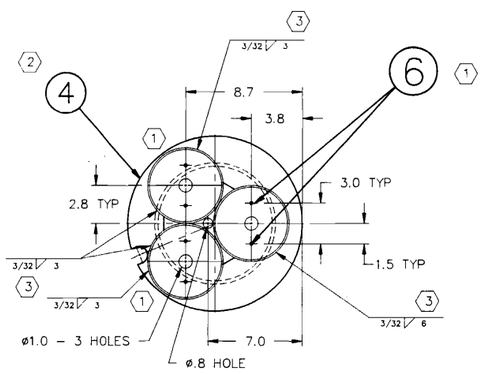

VIEW B–B E3

NOTE:
1. WELD PER ASME B & PV CODE, SECT. IX & LIQUID PENETRANT EXAMINE PER SECT. V, ARTICLE 6. ACCEPTANCE PER SECT. VIII, DIV. 1, APPENDIX 8.

ITEM	QUANTITY	NAME	MATERIAL	SPEC	DRAWING No.	DESCRIPTION
98	12	LOCKWASHER	18-8	COML		1/4 REGULAR
99	6	PIN	STSTL	COML		1/4ø ROD
1	3	BAIL	STSTL	COML		McMASTER CARR 8889T42
2	1	BULKHEAD	6061-T651 ALALY	ASTM B209		1/4 PLATE
3	4	BULKHEAD	6061-T651 ALALY	ASTM B209		1/4 PLATE
4	1	TUBE	6061-T6 ALALY	ASTM B210		9 OD – 1/4 WALL
5	3	TUBE	6061-T6 ALALY	ASTM B210		5-5/8 OD – 1/8 WALL

SYM	GEOMETRY	TOLERANCES UNLESS OTHERWISE SPECIFIED				
	FLATNESS	3 PLACE DEC.	TOL.	2 PLACE DEC.	TOL.	
	STRAIGHTNESS	UNDER 3	±.003	UNDER 6	±.02	
	ANGULARITY	3–12	±.005	6–18	±.03	
	PERPENDICULARITY	OVER 12	±.010	OVER 18	±.08	
	PARALLELISM	1 PLACE DEC.	±.1	FILLETS .015 TO .030		
	CONCENTRICITY	FINISH (√)=AA-125 MICRO IN		ANGLES ±.5°		
	TRUE POSITION	THREADS-UNIFIED CL2A-2B				
		BREAK CORNERS .015–.030				
		TYPE OF DRAWING = SAFETY ANALYSIS REPORT				

GROUP	NAME	DATE
DRAWN		9/24/90
CHECK		9/24/90
DESIGN ENGINEERING		
STRUCTURE		9/24/90
PROJECT		9/24/90
THERMAL		9/24/90
NUCLEAR		9/24/90
QUALITY		
NEXT ASSEMBLY 315-40-01		

NUCLEAR ASSURANCE CORPORATION
ENGINEERING SERVICE DIVISION
NORCROSS GEORGIA 30092

LWT CASK METAL FUEL BASKET ASSEMBLY SAFETY ANALYSIS REPORT

PROJECT 315 | DESIGN PACKAGE 40 | DRAWING 12 | REV
SCALE 1/4 | WEIGHT 128 LBS | SH 1 OF 1 | LOC

PROJ 315 | DESIG PAC 40 | DWG 12 | REV

R-209014

No.	REVISION	BY	APPROVED BY	DATE
0	INITIAL ISSUE			
1	INC DCR 0A			
2	INC DCR 1A			
3	INC DCR 2A			
4	INC DCR 3A			
5	INC DCR 4A			
6	INC DCR 5A			

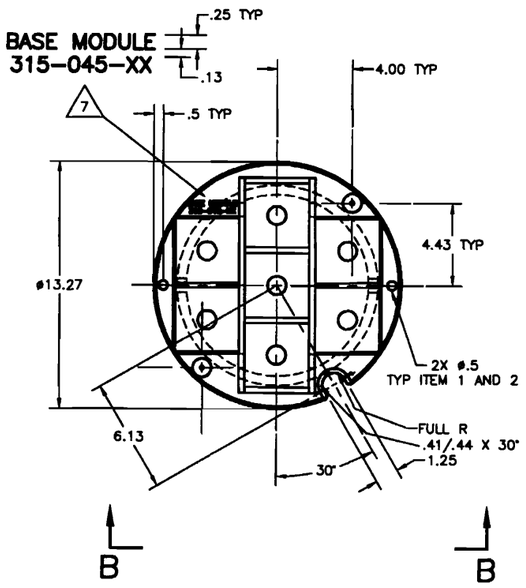

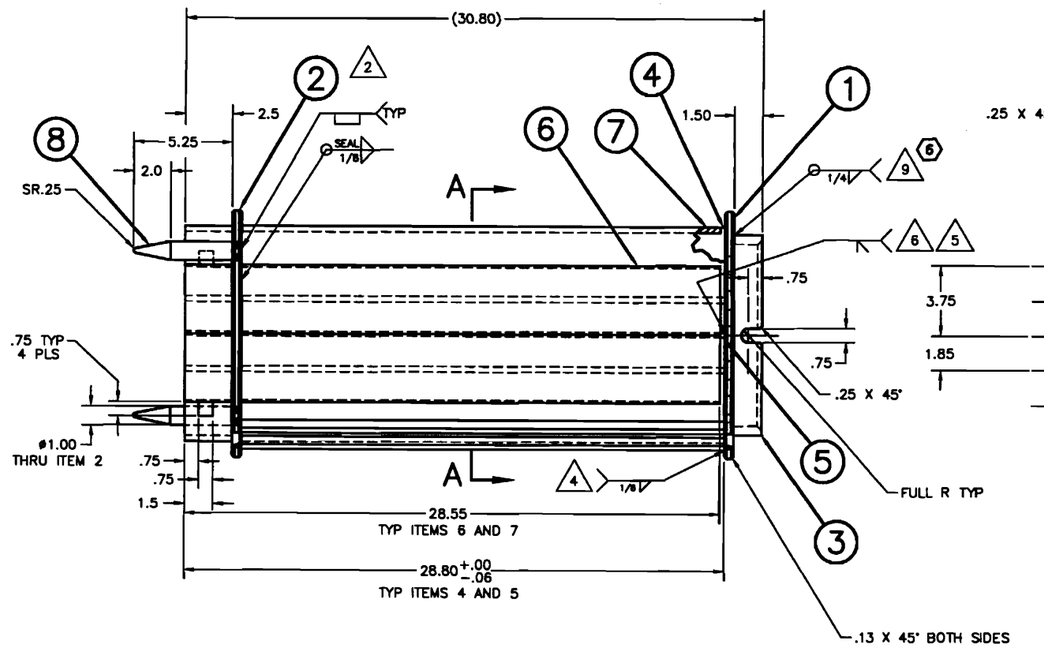

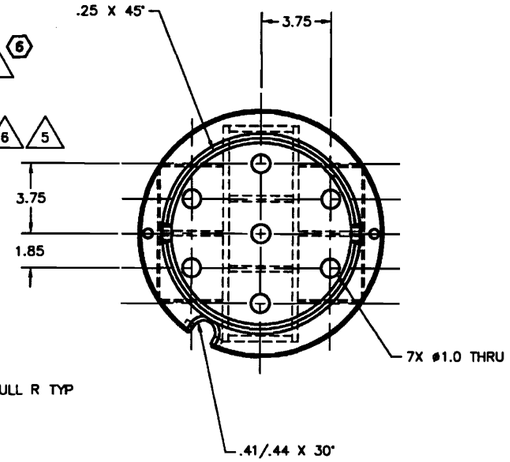

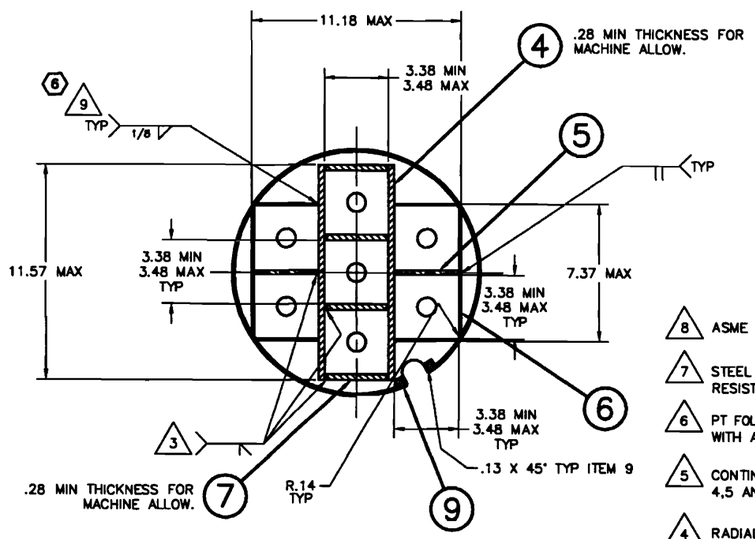

SECTION A—A

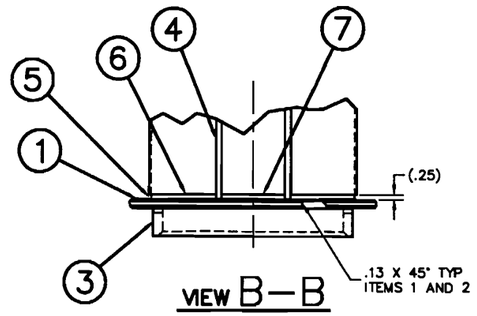

VIEW B—B

8 ASME SA479 MATERIAL MAY BE SUBSTITUTED FOR ASME SA240 FOR THIS ITEM.

7 STEEL STAMP/ENGRAVE .03 DEEP X .25 HIGH. FILL WITH BLACK WEATHER RESISTANT PAINT. SERIALIZE MULTIPLE UNITS STARTING WITH 01.

6 PT FOLLOWING LOAD TEST. EXAMINE PER ASME SECTION V, ARTICLE 6, WITH ACCEPTANCE PER SECTION III, ARTICLE NG-5350.

5 CONTINUOUS FULL PENETRATION GROOVE WELD BETWEEN ITEMS 4,5 AND ITEM 1. WELD PRIOR TO ATTACHMENT OF ITEM 6.

4 RADIAL INSIDE SURFACE, SEAL WELD PLATE OUTER EDGE, BOTH ENDS ITEM 9.

3 MIN 1/4 INCH PENETRATION CONTINUOUS.

2 ITEM 2 MAY BE FABRICATED FROM MULTIPLE PIECES.

1. UNLESS OTHERWISE NOTED, WELDING TO BE IN ACCORDANCE WITH SECTION IX OF ASME PRESSURE VESSEL CODE.

NOTES:

6 9 SEAL WELD IN LOCATIONS WHERE DEFINED WELD IS NOT ACHIEVABLE DUE TO COMPONENT GEOMETRY.

		2	9	GUIDE	304 ST.STL.	ASME SA479		1/2 SQ BAR
		2	8	GUIDE PIN	304 ST.STL.	ASME SA479		1 DIA BAR
8		4	7	DIVIDER	304 ST.STL.	ASME SA240		5/16 PLATE
		4	6	SM. SIDE	304 ST.STL.	ASME SA240		11 GA SHEET
		2	5	DIVIDER	304 ST.STL.	ASME SA240		1/4 PLATE
8		2	4	WEB	304 ST.STL.	ASME SA240		5/16 PLATE
		1	3	BASE	304 ST.STL.	ASME SA312		10 SCH.80S PIPE
		1	2	SUPPORT PLATE	304 ST.STL.	ASME SA240		1/2 PLATE
		1	1	BASE PLATE	304 ST.STL.	ASME SA240		1/2 PLATE
ST	SG	SG	ITEM	NAME	MATERIAL	SPEC	DRAWING No.	DESCRIPTION
ASSY	ASSY	ASSY	QUANTITY					

NAC INTERNATIONAL

WELDMENT,
7 ELEMENT BASKET,
42 MTR FUEL BASE MODULE
SAFETY ANALYSIS REPORT

TOLERANCES UNLESS OTHERWISE SPECIFIED				
3 PLACE DEC.	TOL.	2 PLACE DEC	TOL.	
UNDER 3		UNDER 6	±.04	
3-12		6-18	±.08	
OVER 12		OVER 18	±.09	
1 PLACE DEC.	±.1	FILLETS .03		
FROM (-)-55-125 MICRO IN		ANGLES ±.5°		
MACHINE-SURFACE CLEAN-TOP		CORNERS R.03		

	NAME	DATE
PREPARED		
CHECKED		
PROJECT MANAGER		
ENGINEERING		
LICENSING		
QUALITY		

NEXT ASSEMBLY:
DRAWING TYPE: LICENSE

PROJECT	DESIGN PACKAGE	DRAWING	REV
315	40	045	6
SCALE 1/3	EST.WT. 174#	SH 1 OF 1	11:23AM 4-14-2009

No.	REVISION	BY	APPROVED BY	DATE
0	INITIAL ISSUE			
1	INC DCR 0A			
2	INC DCR 1A			
3	INC DCR 2A			
4	INC DCR 3A			
5	INC DCR 4A			
6	INC DCR 5A			

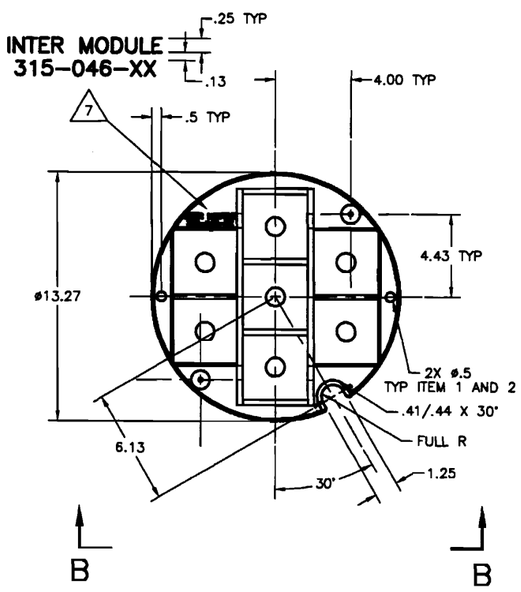

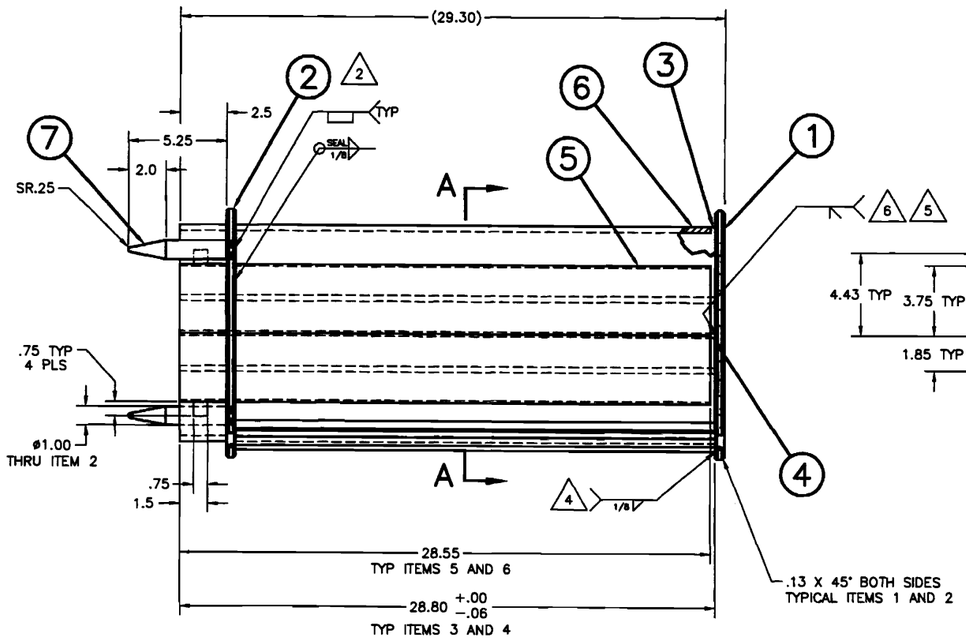

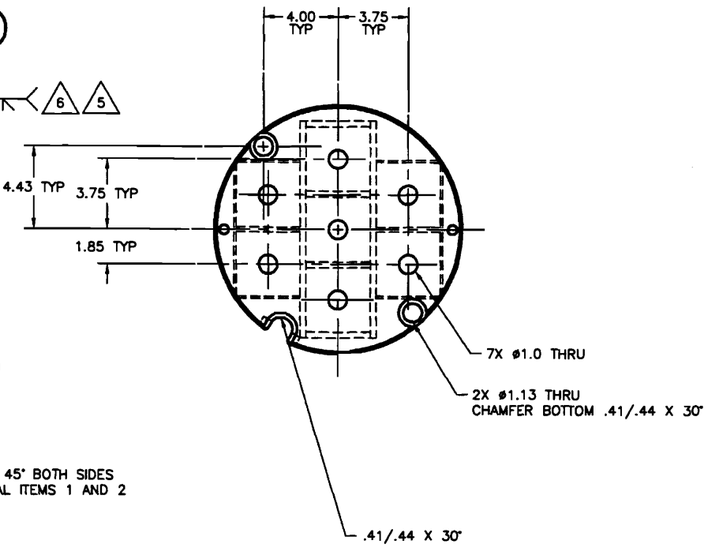

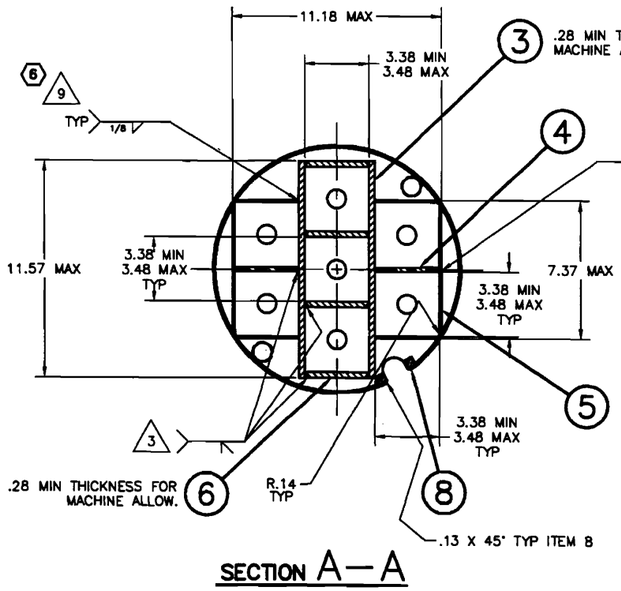

SECTION A–A

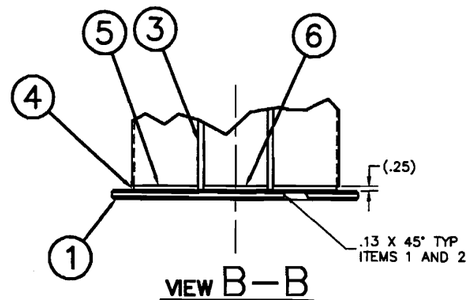

VIEW B–B

8 ASME SA479 MATERIAL MAY BE SUBSTITUTED FOR ASME SA240 FOR THIS ITEM.

7 STEEL STAMP/ENGRAVE .03 DEEP X .25 HIGH. FILL WITH BLACK WEATHER RESISTANT PAINT. SERIALIZE MULTIPLE UNITS STARTING WITH 01.

6 PT FOLLOWING LOAD TEST. EXAMINE PER ASME SECTION V, ARTICLE 6, WITH ACCEPTANCE PER SECTION III, ARTICLE NG-5350.

5 CONTINUOUS FULL PENETRATION GROOVE WELD BETWEEN ITEMS 3,4 AND ITEM 1. WELD PRIOR TO ATTACHMENT OF ITEM 5.

4 RADIAL INSIDE SURFACE, SEAL WELD PLATE OUTER EDGE, BOTH ENDS ITEM 8.

3 MIN 1/4 INCH PENETRATION CONTINUOUS.

2 ITEM 2 MAY BE FABRICATED FROM MULTIPLE PIECES.

1. UNLESS OTHERWISE NOTED, WELDING TO BE IN ACCORDANCE WITH SECTION IX OF ASME PRESSURE VESSEL CODE.

6 9 SEAL WELD IN LOCATIONS WHERE DEFINED WELD IS NOT ACHIEVABLE DUE TO COMPONENT GEOMETRY.

87	88	89	ITEM	NAME	MATERIAL	SPEC	DRAWING No.	DESCRIPTION
			2	8 GUIDE	304 ST.STL.	ASME SA479		1/2 SQ BAR
			2	7 GUIDE PIN	304 ST.STL.	ASME SA479		1 DIA BAR
			4	6 DIVIDER	304 ST.STL.	ASME SA240		5/16 PLATE
			4	5 SM. SIDE	304 ST.STL.	ASME SA240		11 GA SHEET
			2	4 DIVIDER	304 ST.STL.	ASME SA240		1/4 PLATE
			2	3 WEB	304 ST.STL.	ASME SA240		5/16 PLATE
			1	2 SUPPORT PLATE	304 ST.STL.	ASME SA240		1/2 PLATE
			1	1 BASE PLATE	304 ST.STL.	ASME SA240		1/2 PLATE

8 8

ASSY ASSY ASSY QUANTITY

NAC INTERNATIONAL

SYM GEOMETRY — TOLERANCES UNLESS OTHERWISE SPECIFIED

	3 PLACE DEC.	TOL.	2 PLACE DEC.	TOL.
FLATNESS	UNDER 3		UNDER 6	±.04
STRAIGHTNESS	3-12		6-18	±.09
ANGULARITY	OVER 12		OVER 18	±.09
PERPENDICULARITY	1 PLACE DEC.	±.1	FILLETS	.03
PARALLELISM	[illegible]		ANGLES	±.5°
CONCENTRICITY	[illegible]		CORNERS	R.03
TRUE POSITION	NEXT ASSEMBLY:			
	DRAWING TYPE:	LICENSE		

GROUP	NAME	DATE
PREPARED	Kevin Jones	6-14-09
CHECKED	[illegible]	6/14/09
PROJECT MANAGER	[illegible]	6/14/09
ENGINEERING	[illegible]	6/14/09
LICENSING	[illegible]	6/14/09
QUALITY	Rick Beers	6/14/09

WELDMENT,
7 ELEMENT BASKET, 42
MTR FUEL INTERMEDIATE MODULE,
SAFETY ANALYSIS REPORT

PROJECT	DESIGN PACKAGE	DRAWING	REV
315	40	046	6
SCALE 1/3	EST.WT. 165#	SH 1 OF 1	11SIZE 4-14-2009

R-20190 16

No.	REVISION	BY	APPROVED BY	DATE
0	INITIAL ISSUE			
1	INC DCR 0A			
2	INC DCR 1A			
3	INC DCR 2A			
4	INC DCR 3A			
5	INC DCR 4A			
6	INC DCR 5A			

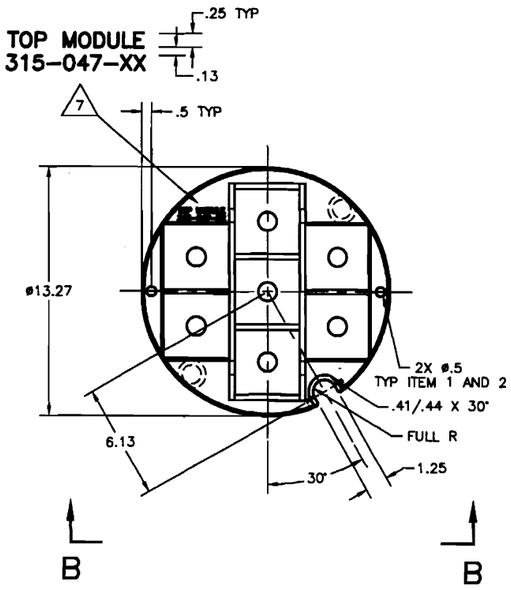

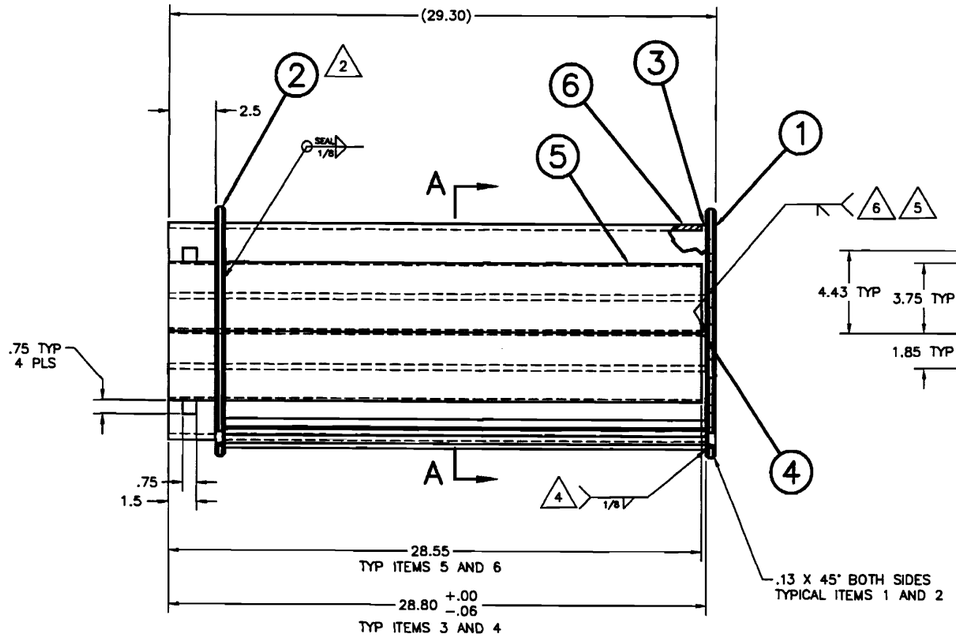

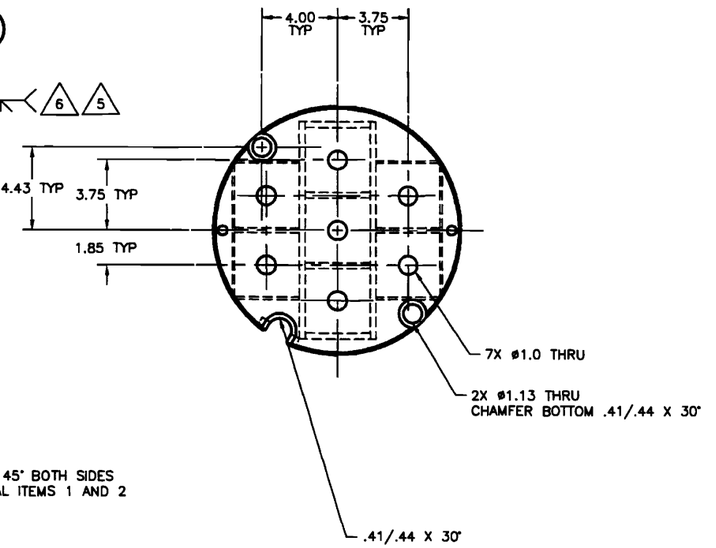

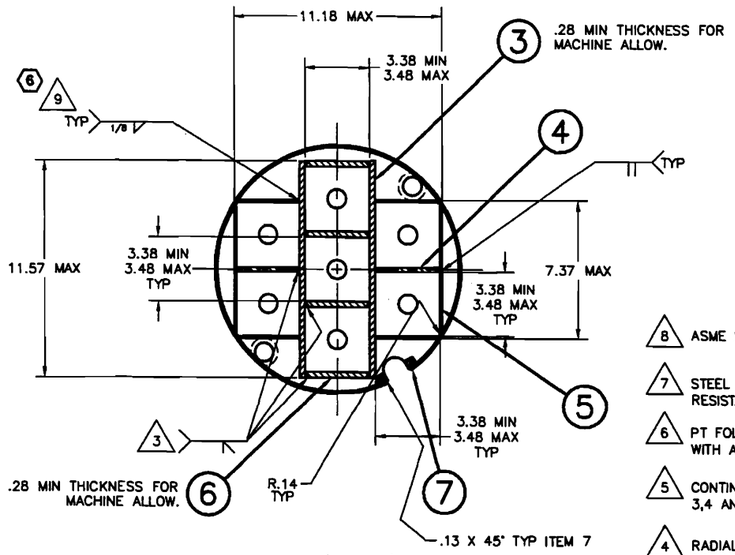

SECTION A—A

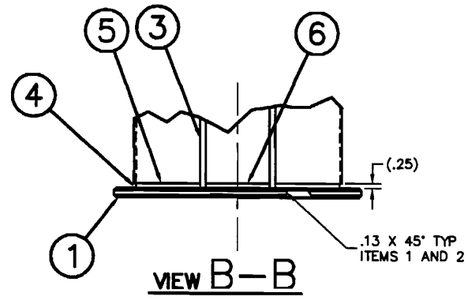

VIEW B—B

8 ASME SA479 MATERIAL MAY BE SUBSTITUTED FOR ASME SA240 FOR THIS ITEM.

7 STEEL STAMP/ENGRAVE .03 DEEP X .25 HIGH. FILL WITH BLACK WEATHER RESISTANT PAINT. SERIALIZE MULTIPLE UNITS STARTING WITH 01.

6 PT FOLLOWING LOAD TEST. EXAMINE PER ASME SECTION V, ARTICLE 6 WITH ACCEPTANCE PER SECTION III, ARTICLE NG-5350.

5 CONTINUOUS FULL PENETRATION GROOVE WELD BETWEEN ITEMS 3,4 AND ITEM 1. WELD PRIOR TO ATTACHMENT OF ITEM 5.

4 RADIAL INSIDE SURFACE, SEAL WELD PLATE OUTER EDGE, BOTH ENDS ITEM 7.

3 MIN 1/4 INCH PENETRATION CONTINUOUS.

2 ITEM 2 MAY BE FABRICATED FROM MULTIPLE PIECES.

1. UNLESS OTHERWISE NOTED, WELDING TO BE IN ACCORDANCE WITH SECTION IX OF ASME PRESSURE VESSEL CODE.

6 9 SEAL WELD IN LOCATIONS WHERE DEFINED WELD IS NOT ACHIEVABLE DUE TO COMPONENT GEOMETRY.

ASSY	ASSY	ASSY	ITEM	NAME	MATERIAL	SPEC	DRAWING No.	DESCRIPTION
		2	7	GUIDE	304 ST.STL.	ASME SA479		1/2 SQ BAR
		4	6	DIVIDER	304 ST.STL.	ASME SA240		5/16 PLATE
		4	5	SM. SIDE	304 ST.STL.	ASME SA240		11 GA SHEET
		2	4	DIVIDER	304 ST.STL.	ASME SA240		1/4 PLATE
		2	3	WEB	304 ST.STL.	ASME SA240		5/16 PLATE
		1	2	SUPPORT PLATE	304 ST.STL.	ASME SA240		1/2 PLATE
		1	1	BASE PLATE	304 ST.STL.	ASME SA240		1/2 PLATE

8 8

QUANTITY

SYM	GEOMETRY	TOLERANCES UNLESS OTHERWISE SPECIFIED				GROUP	NAME	DATE
	FLATNESS	3 PLACE DEC.	TOL.	2 PLACE DEC.	TOL.	PREPARED		
	STRAIGHTNESS	UNDER 3		UNDER 6	±.01	CHECKED		
		3-12		6-18	±.03	PROJECT ENGINEER		
	ANGULARITY	OVER 12		OVER 18	±.09	ENGINEERING		
	PERPENDICULARITY	1 PLACE DEC.	±.1	FILLETS	.03	LICENSING		
	PARALLELISM	[illegible]		ANGLES	±.5°	QUALITY		
	CONCENTRICITY	[illegible]		CORNERS	R.03			
	TRUE POSITION	NEXT ASSEMBLY:						
		DRAWING TYPE: LICENSE						

NAC INTERNATIONAL

WELDMENT, 7 ELEMENT BASKET, 42 MTR FUEL TOP MODULE, SAFETY ANALYSIS REPORT

PROJECT	DESIGN PACKAGE	DRAWING	REV
315	40	047	6
SCALE 1/3	EST.WT. 165#	SH 1 OF 1	11:08AM 4-14-2009

e-206257

REV	CHANGE
0	INITIAL ISSUE
1	INC DCR 0A
2	INC DCR(L) 0A
3	INC DCR(L) 2A

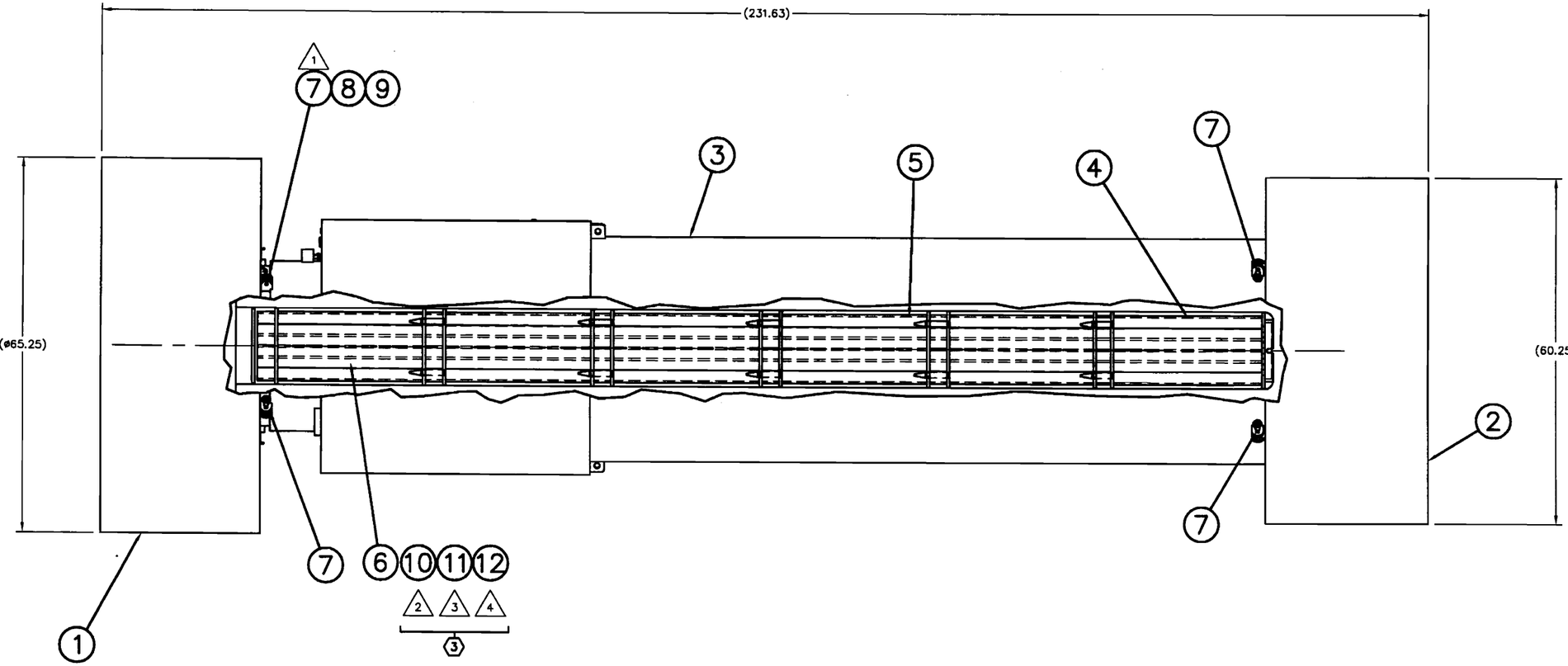

3 5. MAXIMUM WEIGHT OF FUEL ASSEMBLY, SPACERS AND DAMAGED FUEL CANS, AS APPLICABLE, SHALL BE 80 LB. PER BASKET MODULE CELL.

3 4 INSTALL PLATE SPACERS AT BASE AND TOP OF BASKET MODULE CELL AS REQUIRED TO ENSURE HEU MTR FUEL ELEMENTS (>380g ^{235}U/ELEMENT) HAVE A MINIMUM OF 2.0 cm (0.8 inch) OF NON-FUEL MATERIAL AT THE ENDS OF EACH ELEMENT.

3 3 INSTALL AXIAL FUEL SPACERS IN BASKET MODULE CELLS TO ADJUST FUEL ELEMENT HEIGHT AS REQUIRES TO FACILITATE FUEL ELEMENT HANDLING.

3 2 INSTALL CELL BLOCK SPACERS IN BASKET MODULE CELL POSITION #'s 1,2 AND 3 FOR THE TRANSPORT OF MTR FUEL ELEMENTS HAVING GREATER THAN 470g ^{235}U PER ELEMENT (OR > 22g/PLATE).

1 AT LEAST 1 OUT OF 8 ITEM 7 (BALL-LOK PIN) TO BE MODIFIED PER DWG. 315-40-01.

NOTES:

3 4 3 2 1

		A/R	12	PLATE SPACER			315-40-85-99	
		A/R	11	AXIAL FUEL SPACER			315-40-85-98	
		A/R	10	CELL BLOCK SPACER			315-40-85-97	
		1	9	SEAL			315-40-01-11	
		A/R	8	WIRE			315-40-01-10	
		8	7	BALL-LOK PIN			315-40-01-8	
		1	6	TOP BASKET			315-40-47-99	
		4	5	INTER. BASKET			315-40-46-99	
		1	4	BASE BASKET			315-40-45-99	
		1	3	CASK ASSEMBLY			315-40-02-99	
		1	2	IMPACT LIMITER			315-40-06-99	
		1	1	IMPACT LIMITER			315-40-05-99	
07	08	09	ITEM	NAME	MATERIAL	SPEC	DRAWING No.	DESCRIPTION
ASSY	ASSY	ASSY						
QUANTITY								

UNLESS OTHERWISE STATED
DIMENSIONING AND TOLERANCING SHALL BE PER ASME Y14.5M-94, UNSPECIFIED DIMENSIONAL TOLERANCES ARE SHOWN BELOW.
ALL THREAD DEPTH CALLOUTS ARE TO BE CONSIDERED AS A MIN. DEPTH OF PERFECT THREADS. THE ACTUAL DEPTH OF THE THREADS IS NOT SUBJECT TO TOLERANCE CONTROLS.

XXX	
UNDER 3	±.005
3-12	±.010
OVER 12	±.030
XX	
UNDER 6	±.05
6-18	±.10
OVER 18	±.25
X	
ALL	±.1
FRACTIONAL	±1/8
ANGLES	±0.5°

WEIGHTS ARE APPROXIMATE AND ARE TO BE USED FOR HANDLING PURPOSES ONLY.
ALL DIMENSIONS ARE IN INCHES
BORDER SIZE: F (40 X 28)
ALL UNSPECIFIED TOOL RADII .015 - .030
BREAK ALL SHARP CORNERS .015 - .030
MACHINED SURFACES TO BE 125 OR BETTER
NEXT ASSEMBLY:
DRAWING TYPE: LICENSE

GROUP	NAME	DATE
PREPARED		10/11/07
CHECKED		10/11/07
PROJECT ENGINEER		10/11/07
ENGINEERING		10/11/07
LICENSING		10/11/07
QUALITY		10/12/07

NAC INTERNATIONAL

LEGAL WEIGHT TRUCK TRANSPORT CASK ASSY 42 MTR ELEMENT SAFETY ANALYSIS REPORT

PROJECT	315-40	DRAWING	048	REV 3
SCALE		WEIGHT	SH 1 OF 1	11:49 AM 10-11-2007

M:\ACADFILE\315\License\31544831.dwg

R-209017

No.	REVISION	BY	APPROVED BY	DATE
0	INITIAL ISSUE			
1	INC DCR 0A			
2	INC DCR 1A			
3	INC DCR 2A			
4	INC DCR 3A			
5	INC DCR 4A			
6	INC DCR 5A			

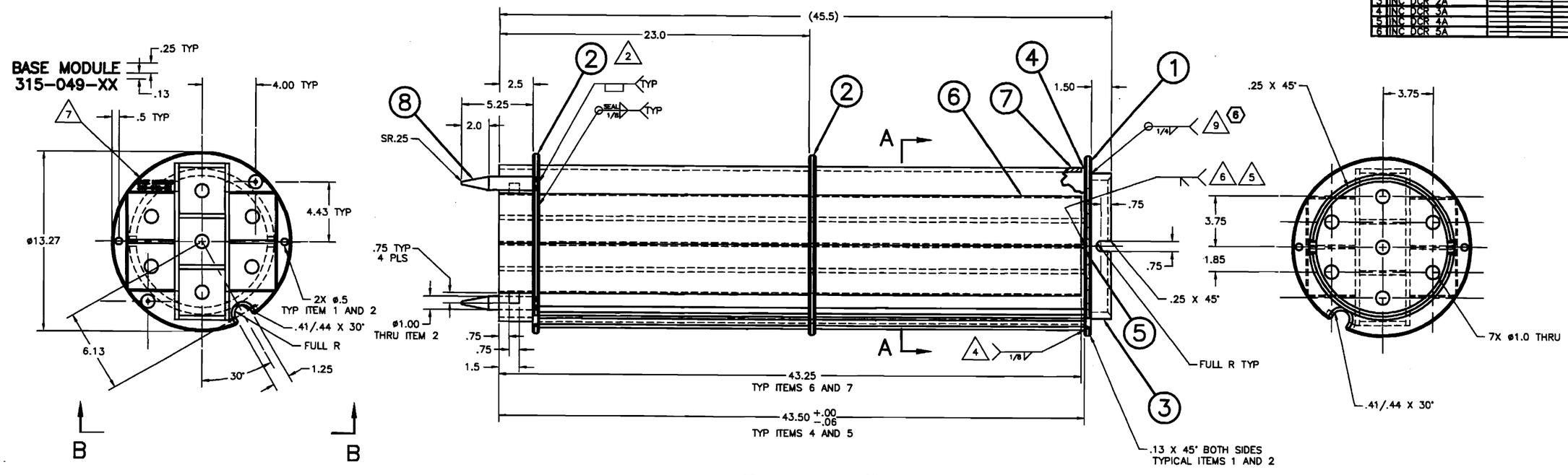

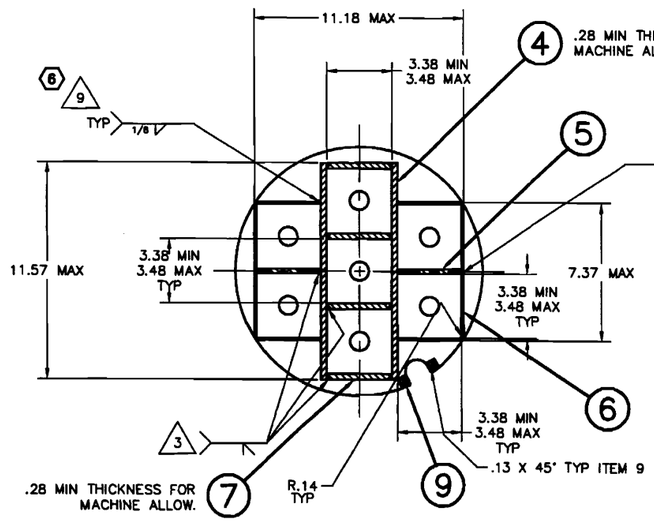

SECTION A—A

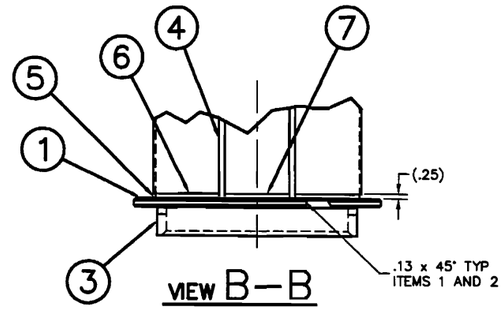

VIEW B—B

8 ASME SA479 MATERIAL MAY BE SUBSTITUTED FOR ASME SA240 FOR THIS ITEM.

7 STEEL STAMP/ENGRAVE .03 DEEP X .25 HIGH. FILL WITH BLACK WEATHER RESISTANT PAINT. SERIALIZE MULTIPLE UNITS STARTING WITH 01.

6 PT FOLLOWING LOAD TEST. EXAMINE PER ASME SECTION V, ARTICLE 6 WITH ACCEPTANCE PER SECTION III, ARTICLE NF-5350.

5 CONTINUOUS FULL PENETRATION GROOVE WELD BETWEEN ITEMS 4,5 AND ITEM 1. WELD PRIOR TO ATTACHMENT OF ITEM 6.

4 RADIAL INSIDE SURFACE. SEAL WELD PLATE OUTER EDGE, BOTH ENDS ITEM 9.

3 MIN 1/4 INCH PENETRATION CONTINUOUS.

2 ITEM 2 MAY BE FABRICATED FROM MULTIPLE PIECES.

1. UNLESS OTHERWISE NOTED, WELDING TO BE IN ACCORDANCE WITH SECTION IX OF ASME PRESSURE VESSEL CODE.

6 9 SEAL WELD IN LOCATIONS WHERE DEFINED WELD IS NOT ACHIEVABLE DUE TO COMPONENT GEOMETRY.

			ITEM	NAME	MATERIAL	SPEC	DRAWING No.	DESCRIPTION
		2	9	GUIDE	304 ST.STL.	ASME SA479		1/2 SQ BAR
		2	8	GUIDE PIN	304 ST.STL.	ASME SA479		1 DIA BAR
		4	7	DIVIDER	304 ST.STL.	ASME SA240		5/16 PLATE
		4	6	SM. SIDE	304 ST.STL.	ASME SA240		11 GA SHEET
		2	5	DIVIDER	304 ST.STL.	ASME SA240		1/4 PLATE
		2	4	WEB	304 ST.STL.	ASME SA240		5/16 PLATE
		1	3	BASE	304 ST.STL.	ASME SA312		10 SCH.80S PIPE
		2	2	SUPPORT PLATE	304 ST.STL.	ASME SA240		1/2 PLATE
		1	1	BASE PLATE	304 ST.STL.	ASME SA240		1/2 PLATE

8 8

ASSY | ASSY | ASSY — QUANTITY

NAC INTERNATIONAL

WELDMENT,
7 ELEMENT BASKET,
28 MTR FUEL BASE MODULE
SAFETY ANALYSIS REPORT

PROJECT	DESIGN PACKAGE	DRAWING	REV
315	40	049	6

SCALE 1/3 | EST. WT. 250# | SH 1 OF 1 | 13-DSPM 4-14-2009

TOLERANCES UNLESS OTHERWISE SPECIFIED: 3 PLACE DEC. ± .10; 2 PLACE DEC. ± .04; UNDER 3 ± .04; 3–12 ± .06; OVER 12 ± .08; 1 PLACE DEC. ± .1; FRACS (+/-) ANGLES ± .5°; MACH. SURFS 63 RMS CORNERS R.03

GEOMETRY: FLATNESS, STRAIGHTNESS, ANGULARITY, PERPENDICULARITY, PARALLELISM, CONCENTRICITY, TRUE POSITION

NEXT ASSEMBLY:

DRAWING TYPE: LICENSE

GROUP | NAME | DATE
PREPARED: Kimberly Lampert 4/14/09
CHECKED: [illegible] 4/14/09
PROJECT MANAGER: [illegible] 4/14/09
SUBCONTRACT: [illegible] 4/14/09
LICENSING: [illegible] 4/14/09
QUALITY: Rob Boss 4/14/09

R- 209018

No.	REVISION	BY	APPROVED BY	DATE
0	INITIAL ISSUE			
1	INC DCR 0A			
2	INC DCR 1A			
3	INC DCR 2A			
4	INC DCR 3A			
5	INC DCR 4A			
6	INC DCR 5A			

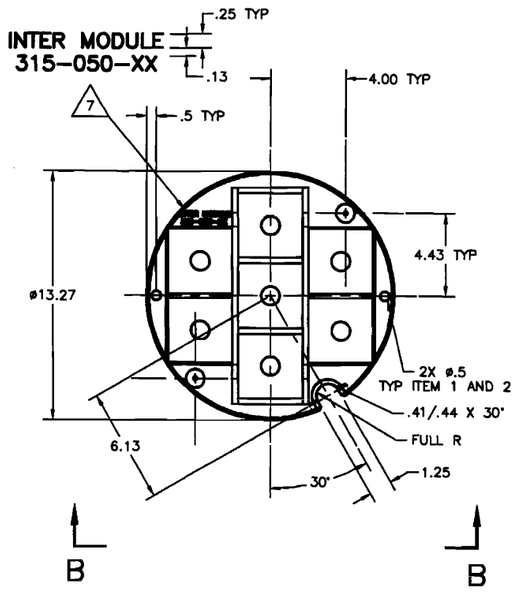

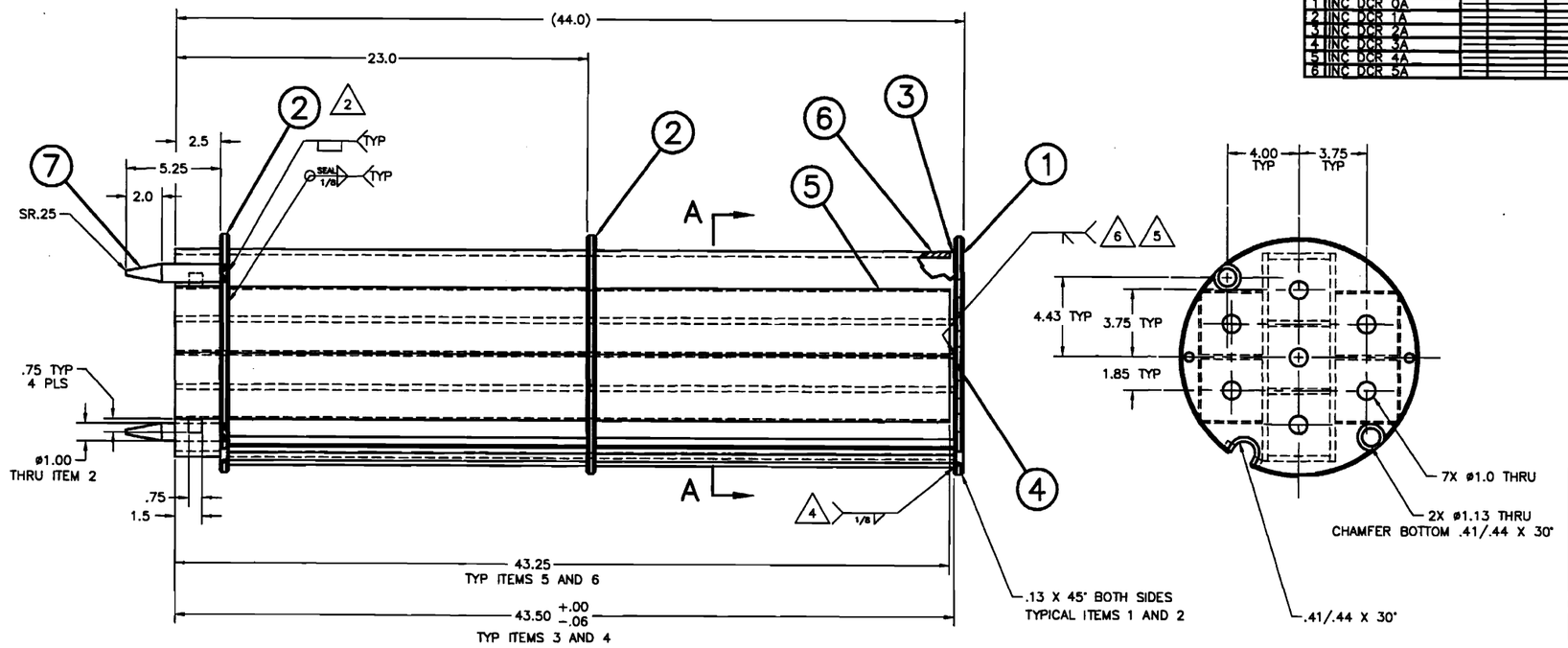

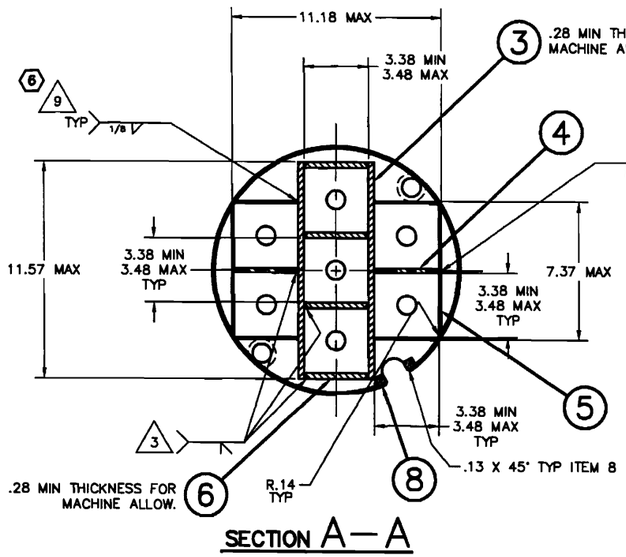

SECTION A–A

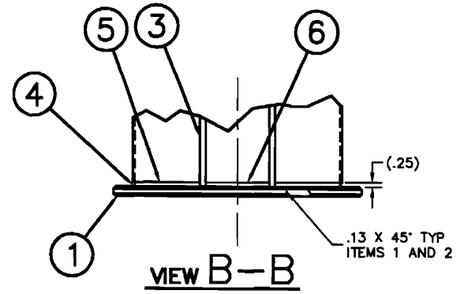

VIEW B–B

8. ASME SA479 MATERIAL MAY BE SUBSTITUTED FOR ASME SA240 FOR THIS ITEM.

7. STEEL STAMP/ENGRAVE .03 DEEP X .25 HIGH. FILL WITH BLACK WEATHER RESISTANT PAINT. SERIALIZE MULTIPLE UNITS STARTING WITH 01.

6. PT FOLLOWING LOAD TEST. EXAMINE PER ASME SECTION V, ARTICLE 6, WITH ACCEPTANCE PER SECTION III, ARTICLE NF-5350.

5. CONTINUOUS FULL PENETRATION GROOVE WELD BETWEEN ITEMS 3,4 AND ITEM 1. WELD PRIOR TO ATTACHMENT OF ITEM 5.

4. RADIAL INSIDE SURFACE, SEAL WELD PLATE OUTER EDGE, BOTH ENDS ITEM 8.

3. MIN 1/4 INCH PENETRATION CONTINUOUS.

2. ITEM 2 MAY BE FABRICATED FROM MULTIPLE PIECES.

1. UNLESS OTHERWISE NOTED, WELDING TO BE IN ACCORDANCE WITH SECTION IX OF ASME PRESSURE VESSEL CODE.

6 9 SEAL WELD IN LOCATIONS WHERE DEFINED WELD IS NOT ACHIEVABLE DUE TO COMPONENT GEOMETRY.

			ITEM	NAME	MATERIAL	SPEC	DRAWING No.	DESCRIPTION
		2	8	GUIDE	304 ST.STL.	ASME SA479		1/2 SQ BAR
		2	7	GUIDE PIN	304 ST.STL.	ASME SA479		1 DIA BAR
		4	6	DIVIDER	304 ST.STL.	ASME SA240		5/16 PLATE
		4	5	SM. SIDE	304 ST.STL.	ASME SA240		11 GA SHEET
		2	4	DIVIDER	304 ST.STL.	ASME SA240		1/4 PLATE
		2	3	WEB	304 ST.STL.	ASME SA240		5/16 PLATE
		2	2	SUPPORT PLATE	304 ST.STL.	ASME SA240		1/2 PLATE
		1	1	BASE PLATE	304 ST.STL.	ASME SA240		1/2 PLATE

8 8

SYM	GEOMETRY	TOLERANCES UNLESS OTHERWISE SPECIFIED				GROUP	NAME	DATE
	FLATNESS	3 PLACE DEC.	TOL.	2 PLACE DEC.	TOL.	PREPARED		
	STRAIGHTNESS	UNDER 3	±.04	UNDER 6	±.04	CHECKED		
	ANGULARITY	3–12	±.06	6–18	±.06	PROJECT ENGINEER		
	PERPENDICULARITY	OVER 12	±.08	OVER 18	±.08	ENGINEERING		
	PARALLELISM	1 PLACE DEC.	±.1	FILLETS	.03			
	CONCENTRICITY	THICK (t) - AA-125 MICRO IN		ANGLES	±.5°	LICENSING		
	TRUE POSITION	THICKNESS - USERED 0.24-.36		CORNERS	R.03	QUALITY		
		NEXT ASSEMBLY:						
		DRAWING TYPE: LICENSE						

ASSY | ASSY | ASSY
QUANTITY

NAC INTERNATIONAL

WELDMENT,
7 ELEMENT BASKET, 28
MTR FUEL INTERMEDIATE MODULE
SAFETY ANALYSIS REPORT

PROJECT	DESIGN PACKAGE	DRAWING	REV
315	40	050	6
SCALE 1/3	EST.WT. 240#	SH 1 OF 1	13:27PM 6-14-2006

e-209019

No.	REVISION	BY	APPROVED BY	DATE
0	INITIAL ISSUE			
1	INC DCR 0A			
2	INC DCR 1A			
3	INC DCR 2A			
4	INC DCR 3A			
5	INC DCR 4A			
6	INC DCR 5A			

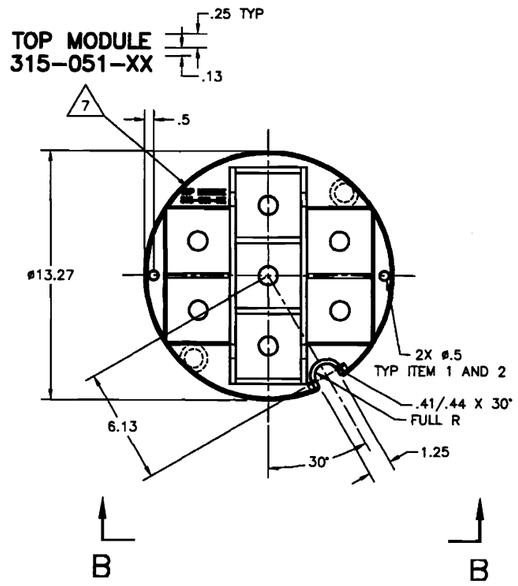

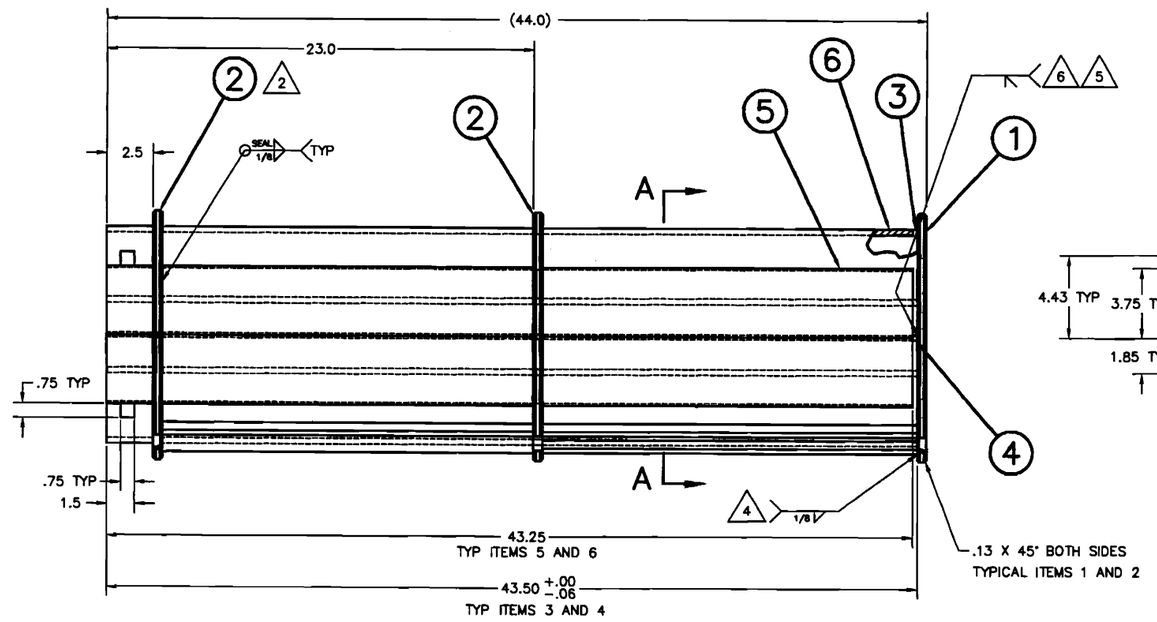

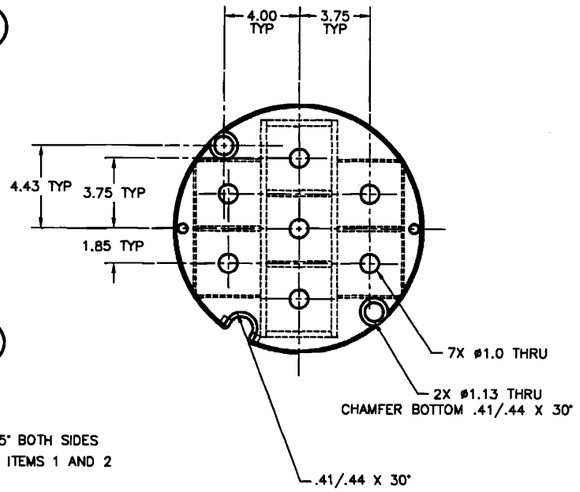

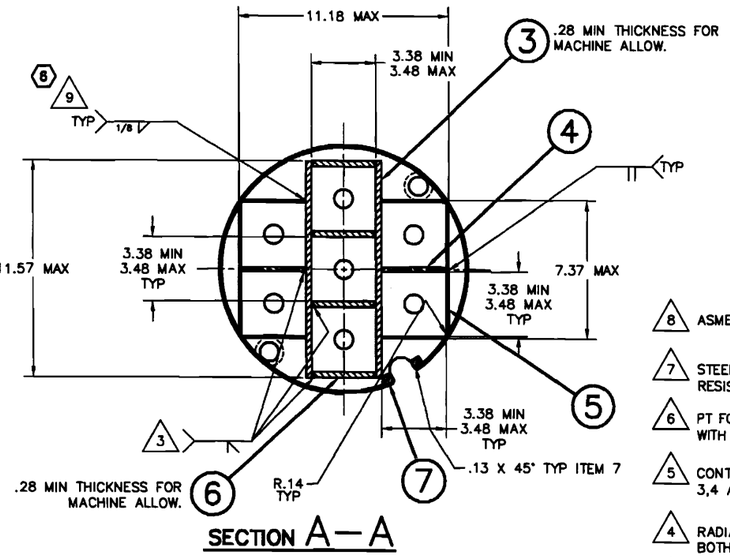

SECTION A–A

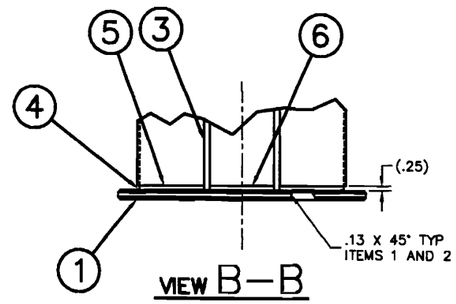

VIEW B–B

8 ASME SA479 MATERIAL MAY BE SUBSTITUTED FOR ASME SA240 FOR THIS ITEM.

7 STEEL STAMP/ENGRAVE .03 DEEP X .25 HIGH. FILL WITH BLACK WEATHER RESISTANT PAINT. SERIALIZE MULTIPLE UNITS STARTING WITH 01.

6 PT FOLLOWING LOAD TEST. EXAMINE PER ASME SECTION V, ARTICLE 6 WITH ACCEPTANCE PER SECTION III, ARTICLE NG-5350.

5 CONTINUOUS FULL PENETRATION GROOVE WELD BETWEEN ITEMS 3,4 AND ITEM 1. WELD PRIOR TO ATTACHMENT OF ITEM 5.

4 RADIAL INSIDE SURFACE, SEAL WELD PLATE OUTER EDGE, BOTH ENDS ITEM 7.

3 MIN 1/4 INCH PENETRATION CONTINUOUS.

2 ITEM 2 MAY BE FABRICATED FROM MULTIPLE PIECES.

1. UNLESS OTHERWISE NOTED, WELDING TO BE IN ACCORDANCE WITH SECTION IX OF ASME PRESSURE VESSEL CODE.

6 9 SEAL WELD IN LOCATIONS WHERE DEFINED WELD IS NOT ACHIEVABLE DUE TO COMPONENT GEOMETRY.

			ITEM	NAME	MATERIAL	SPEC	DRAWING No.	DESCRIPTION
	2	7		GUIDE	304 ST.STL.	ASME SA479		1/2 SQ BAR
	4	6		DIVIDER	304 ST.STL.	ASME SA240		5/16 PLATE
	4	5		SM. SIDE	304 ST.STL.	ASME SA240		11 GA SHEET
8	2	4		DIVIDER	304 ST.STL.	ASME SA240		1/4 PLATE
8	2	3		WEB	304 ST.STL.	ASME SA240		5/16 PLATE
	2	2		SUPPORT PLATE	304 ST.STL.	ASME SA240		1/2 PLATE
	1	1		BASE PLATE	304 ST.STL.	ASME SA240		1/2 PLATE

97 | 98 | 99 ASSY | ASSY | ASSY QUANTITY

NAC INTERNATIONAL

WELDMENT,
7 ELEMENT BASKET,
28 MTR FUEL TOP MODULE,
SAFETY ANALYSIS REPORT

SYM	GEOMETRY	UNLESS OTHERWISE SPECIFIED	TOL.	3 PLACE DEC.	TOL.
	FLATNESS	3 PLACE DEC.	TOL.	2 PLACE DEC.	TOL.
	STRAIGHTNESS	UNDER 3		UNDER 6	±.04
		3-12		6-18	±.08
	ANGULARITY	OVER 12		OVER 18	±.09
	PERPENDICULARITY	1 PLACE DEC.	±.1	FILLETS	.03
	PARALLELISM	OVER (+)-M-125 (ISO 8)		ANGLES	±.5°
		BREAKS UNFED 0.34-39		CORNERS	R.03
	CONCENTRICITY	NEXT ASSEMBLY:			
	TRUE POSITION	DRAWING TYPE:	LICENSE		

GROUP	NAME	DATE
PREPARED		4.14.09
CHECKED		4/14/09
PROJECT ENGINEER		4/14/09
ENVIRONMENTAL		4/14/09
LICENSING		4/14/09
QUALITY		4/14/09

PROJECT	DESIGN PACKAGE	DRAWING	REV
315	40	051	6
SCALE 1/3	EST. WT. 240#	SH 1 OF 1	12:28PM 4-14-2009

REV	CHANGE
0	INITIAL ISSUE
1	INC DCR(L) 0A
2	INC DCR(L) 1A
3	INC DCR(L) 2A

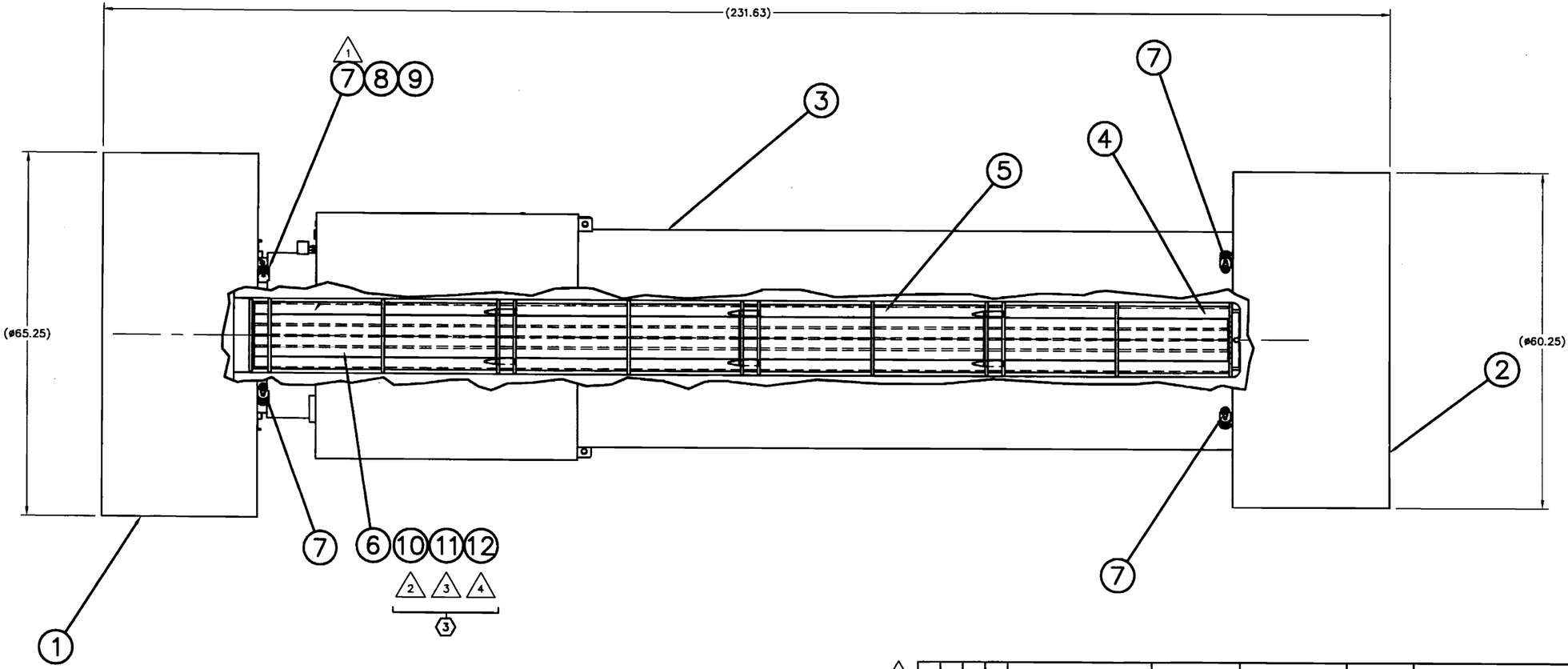

3 5. MAXIMUM WEIGHT OF FUEL ASSEMBLY, SPACERS AND DAMAGED FUEL CANS, AS APPLICABLE, SHALL BE 80 LB. PER BASKET MODULE CELL.

3 4 INSTALL PLATE SPACERS AT BASE AND TOP OF BASKET MODULE CELL AS REQUIRED TO ENSURE HEU MTR FUEL ELEMENTS (>380g ^{235}U/ELEMENT) HAVE A MINIMUM OF 2.0 cm (0.8 inch) OF NON-FUEL MATERIAL AT THE ENDS OF EACH ELEMENT.

3 3 INSTALL AXIAL FUEL SPACERS IN BASKET MODULE CELLS TO ADJUST FUEL ELEMENT HEIGHT AS REQUIRES TO FACILITATE FUEL ELEMENT HANDLING.

3 2 INSTALL CELL BLOCK SPACERS IN BASKET MODULE CELL POSITION #'s 1,2 AND 3 FOR THE TRANSPORT OF MTR FUEL ELEMENTS HAVING GREATER THAN 470g ^{235}U PER ELEMENT (OR > 22g/PLATE).

1 AT LEAST 1 OUT OF 8 ITEM 7 (BALL-LOK PIN) TO BE MODIFIED PER DWG. 315-40-01.

NOTES:

97 ASSY	98 ASSY	99 ASSY	ITEM QUANTITY	NAME	MATERIAL	SPEC	DRAWING No.	DESCRIPTION
		A/R	12	PLATE SPACER			315-40-85-99	
		A/R	11	AXIAL FUEL SPACER			315-40-85-98	
		A/R	10	CELL BLOCK SPACER			315-40-85-97	
		1	9	SEAL			315-40-01-11	
		AR	8	WIRE			315-40-01-10	
		8	7	BALL-LOK PIN			315-40-01-8	
		1	6	TOP BASKET			315-40-51-99	
		2	5	INTER. BASKET			315-40-50-99	
		1	4	BASE BASKET			315-40-49-99	
		1	3	CASK ASSEMBLY			315-40-02-99	
		1	2	IMPACT LIMITER			315-40-06-99	
		1	1	IMPACT LIMITER			315-40-05-99	

UNLESS OTHERWISE STATED
DIMENSIONING AND TOLERANCING SHALL BE PER ASME Y14.5M-94, UNSPECIFIED DIMENSIONAL TOLERANCES ARE SHOWN BELOW.
ALL THREAD DEPTH CALLOUTS ARE TO BE CONSIDERED AS A MIN. DEPTH OF PERFECT THREADS. THE ACTUAL DEPTH OF THE THREADS IS NOT SUBJECT TO TOLERANCE CONTROLS.

DEC		INCH
	UNDER 3	±.002
	3-12	±.005
	OVER 12	±.010
FRAC	UNDER 6	±.02
	6-18	±.03
	OVER 18	±.06
	ALL	±.1
FRACTIONAL ±1/8		
ANGLES ±0.5°		

WEIGHTS ARE APPROXIMATE AND ARE TO BE USED FOR HANDLING PURPOSES ONLY
ALL DIMENSIONS ARE IN INCHES
BORDER SIZE: F (40 X 28)
ALL UNSPECIFIED TOOL RADII: .015 - .030
BREAK ALL SHARP CORNERS .015 - .030
MACHINED SURFACES TO BE 125 OR BETTER
NEXT ASSEMBLY:
DRAWING TYPE: LICENSE

GROUP	NAME	DATE
PREPARED	Lingyu Jacuzzo	10/11/07
CHECKED	Ronald Ladd	10/11/07
PROJECT ENGINEER	Ronald Ladd	10/11/07
ENGINEERING	Frank Palmer	10/10/07
LICENSING	Anthony L Pate	10/11/07
QUALITY	Royce Bass	10/12/07

NAC INTERNATIONAL

LEGAL WEIGHT TRUCK TRANSPORT CASK ASSY 28 MTR ELEMENT SAFETY ANALYSIS REPORT

PROJECT 315-40 | DRAWING 052 | REV 3
SCALE | WEIGHT | SH 1 OF 1 | 11:40AM 10-11-2007

M:\ACADFILE\315\License\31545231.dwg

R-267153

DCR No.	REVISION
0	INITIAL ISSUE
1	INC DCR 0A
2	INC DCR 1A
3	INC DCR 2A
4	INC DCR 3A
5	INC DCR 4A
6	INC DCR 5A
7	INC DCR 6A
8	INC DCR 7A
9	INC DCR 8A

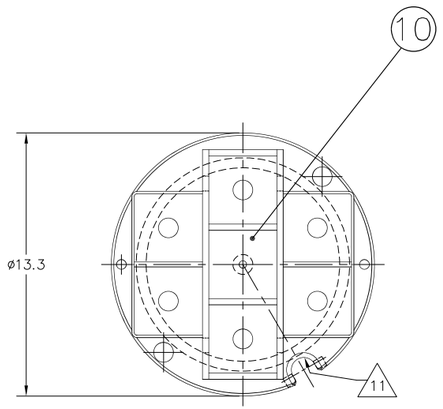

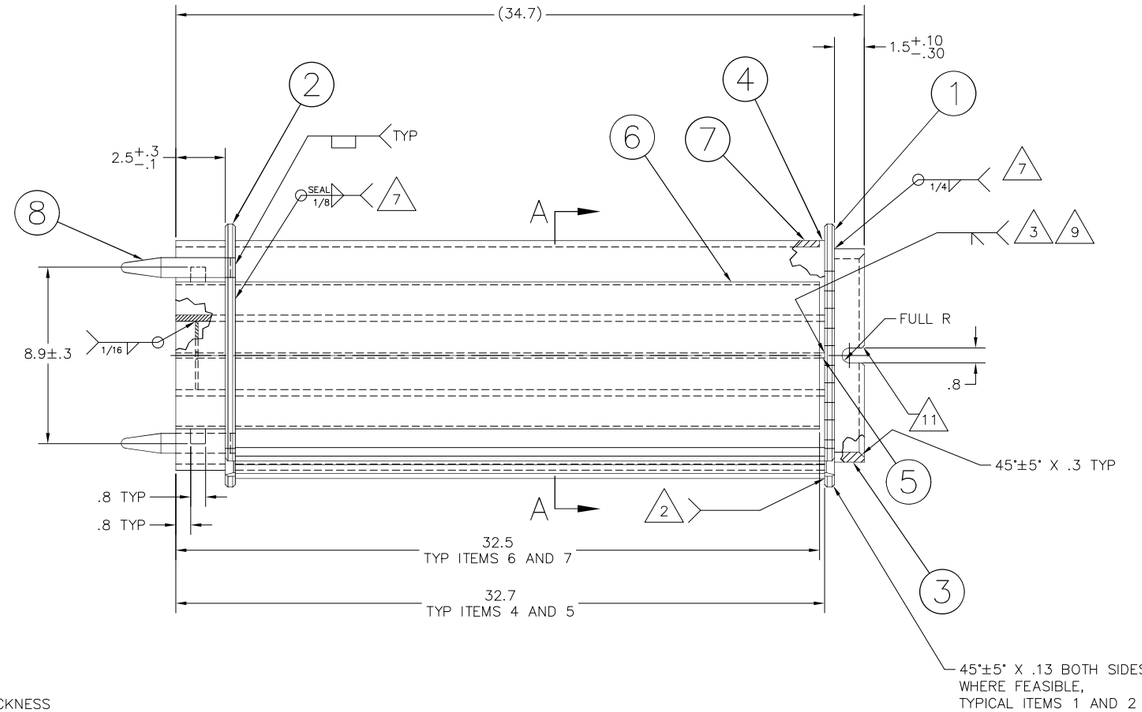

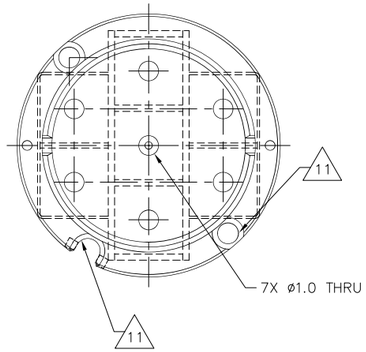

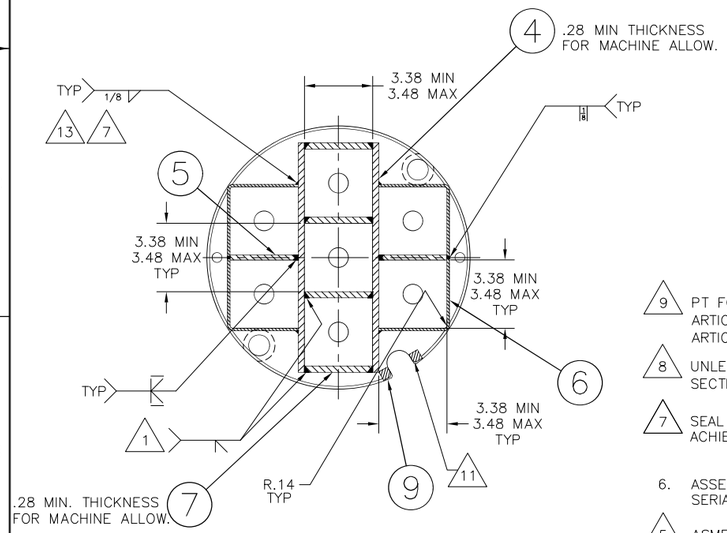

SECTION A—A

9 13 ALTERNATE 3/32" GROOVE WELD IS PERMITTED. NO WELD REQUIRED AROUND LIFT HOLE FEATURES, SEAL WELD PERMITTED ABOVE.

12 REDUCE CHAMFER SIZE AS NECESSARY IN THE REGIONS NEAR THE CORNERS OF SM. SIDES (ITEM 6).

11 ALIGNMENT FEATURES MAY BE CHAMFERED AS NECESSARY.

10. CORNER OF ITEM 6 SHALL NOT PROTRUDE BEYOND OD OF ITEM 1 OR 2.

9 PT FOLLOWING LOAD TEST. EXAMINE PER ASME SECTION V, ARTICLE 6, WITH ACCEPTANCE PER SECTION III, ARTICLE NG-5350.

8 UNLESS OTHERWISE NOTED, WELDING TO BE IN ACCORDANCE WITH SECTION IX OF THE ASME PRESSURE VESSEL CODE.

7 SEAL WELD IN LOCATIONS WHERE DEFINED WELD IS NOT ACHIEVABLE DUE TO COMPONENT GEOMETRY.

6. ASSEMBLY MAY BE DURABLY MARKED WITH INFORMATION (e.g., SERIAL NUMBER, WEIGHT, ETC.) AS DESIRED.

5 ASME SA479 MATERIAL MAY BE SUBSTITUTED FOR ASME SA240 FOR THIS ITEM.

4 ITEM 2 MAY BE FABRICATED FROM MULTIPLE PIECES.

3 CONTINUOUS FULL PENETRATION GROOVE WELD BETWEEN ITEMS 4, 5 AND ITEM 1. WELD PRIOR TO ATTACHMENT OF ITEM 6.

2 WELD ALL AROUND. MINIMUM 1/8" FILLET OR 1/8" BEVEL FOR ONE SIDE, SEAL WELD OTHER SIDES. TYPICAL FOR WELDS BETWEEN GUIDES (ITEM 9) AND BASE PLATE (ITEM 1) AND SUPPORT PLATE (ITEM 2).

1 MIN 1/4 INCH PENETRATION CONTINUOUS.

NOTE:

					ITEM	NAME	MATERIAL	SPEC	DRAWING No.	DESCRIPTION
				1	10	BAFFLE	304 ST. STL.	ASME SA240		11 GA SHEET
				2	9	GUIDE	304 ST. STL.	ASME SA479		1/2 SQ BAR
				2	8	GUIDE PIN	304 ST. STL.	ASME SA479		1 DIA BAR
				4	7	DIVIDER	304 ST. STL.	ASME SA240		5/16 PLATE
				4	6	SM. SIDE	304 ST. STL.	ASME SA240		11 GA SHEET
5				2	5	DIVIDER	304 ST. STL.	ASME SA240		1/4 PLATE
5				2	4	WEB	304 ST. STL.	ASME SA240		5/16 PLATE
				1	3	BASE	304 ST. STL.	ASME SA312		10 SCH.80S PIPE
4				1	2	SUPPORT PLATE	304 ST. STL.	ASME SA240		1/2 PLATE
				1	1	BASE PLATE	304 ST. STL.	ASME SA240		1/2 PLATE

95	96	97	98	99
ASSY	ASSY	ASSY	ASSY	ASSY

QUANTITY

DIMENSIONING AND TOLERANCING SHALL BE PER ANSI Y14.5-82
UNSPECIFIED DIMENSIONS AND TOLERANCES SHOWN BELOW.
DIMENSIONS ARE IN INCHES. FRACTIONAL TOLERANCE: ±1/8

SYM.	GEOMETRY
	FLATNESS
	STRAIGHTNESS
	ANGULARITY
	PERPENDICULARITY
//	PARALLELISM
	CONCENTRICITY
	TRUE POSITION

.XXX	TOL.	.XX	TOL.
UNDER .3		UNDER 6	±.04
3–12		6–18	±.06
OVER 12		OVER 18	±.09
.X	±.1	ANGLES	±.5°

ALL UNSPECIFIED TOOL RADII: .01 – .03
BREAK ALL SHARP CORNERS .01 – .03
ALL UNSPECIFIED MACHINED SURFACES SHALL BE 63 OR BETTER
NEXT ASSEMBLY:
DRAWING TYPE: LICENSE

GROUP	NAME	DATE
PREPARER	Thomas Haldeman (Jun 25, 2026 14:15:05 EDT)	
CHECKER	Kevin Klein (Jun 25, 2026 14:53:49 EDT)	
PROJECT MANAGER	David Oliver (Jun 25, 2026 17:10:58 EDT)	
ENGINEERING	Kevin Klein (Jun 25, 2026 14:53:49 EDT)	
LICENSING	Heath Baldner (Jun 25, 2026 15:16:30 EDT)	
QUALITY	David Jensen (Jun 29, 2026 08:57:09 EDT)	

NAC INTERNATIONAL

WELDMENT, 7 CELL BASKET, TRIGA FUEL BASE MODULE

PROJECT	DRAWING	REV
315-40	070	9
SCALE 1/3	EST.WT. 197 LBS	SH 1 OF 1
		6-25-2026

R-267155

DCR No.	REVISION
0	INITIAL ISSUE
1	INC DCR 0A
2	INC DCR 1A
3	INC DCR 2A
4	INC DCR 3A
5	INC DCR 4A
6	INC DCR 5A
7	INC DCR 6A
8	INC DCR 7A
9	INC DCR 8A

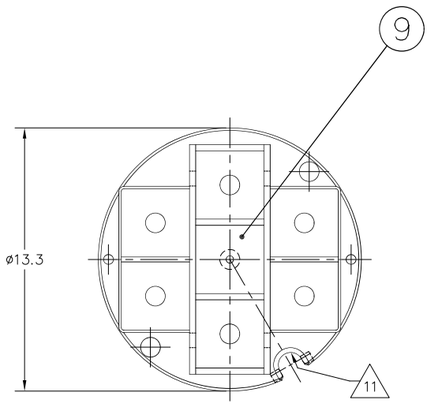

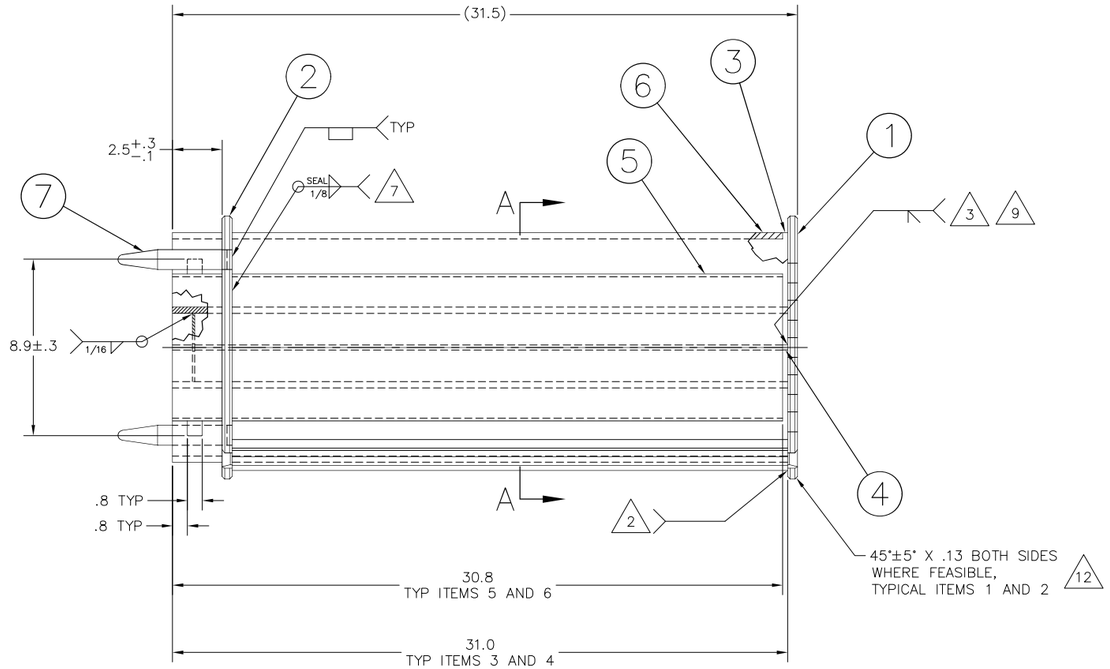

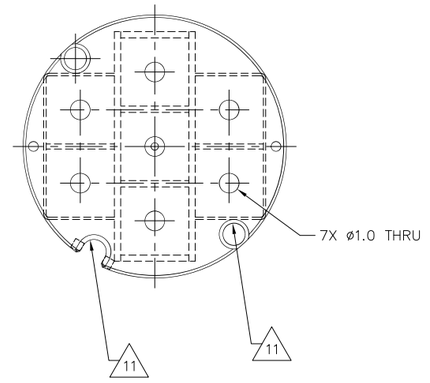

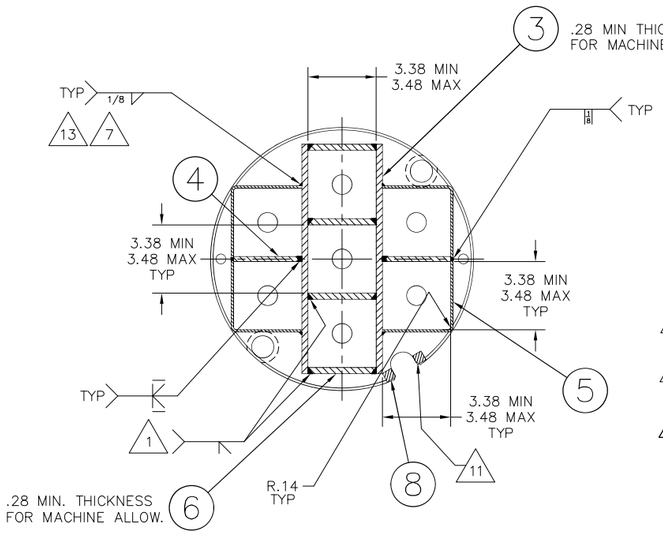

SECTION A—A

9 13 ALTERNATE 3/32" GROOVE WELD IS PERMITTED. NO WELD REQUIRED AROUND LIFT HOLE FEATURES, SEAL WELD PERMITTED ABOVE.

12 REDUCE CHAMFER SIZE AS NECESSARY IN THE REGIONS NEAR THE CORNERS OF SM. SIDES (ITEM 5).

11 ALIGNMENT FEATURES MAY BE CHAMFERED AS NECESSARY.

10. CORNER OF ITEM 5 SHALL NOT PROTRUDE BEYOND OD OF ITEM 1 OR 2.

9 PT FOLLOWING LOAD TEST. EXAMINE PER ASME SECTION V, ARTICLE 6, WITH ACCEPTANCE PER SECTION III, ARTICLE NG-5350.

8 UNLESS OTHERWISE NOTED, WELDING TO BE IN ACCORDANCE WITH SECTION IX OF THE ASME PRESSURE VESSEL CODE.

7 SEAL WELD IN LOCATIONS WHERE DEFINED WELD IS NOT ACHIEVABLE DUE TO COMPONENT GEOMETRY.

6. ASSEMBLY MAY BE DURABLY MARKED WITH INFORMATION (e.g., SERIAL NUMBER, WEIGHT, ETC.) AS DESIRED.

5 ASME SA479 MATERIAL MAY BE SUBSTITUTED FOR ASME SA240 FOR THIS ITEM.

4 ITEM 2 MAY BE FABRICATED FROM MULTIPLE PIECES.

3 CONTINUOUS FULL PENETRATION GROOVE WELD BETWEEN ITEMS 3, 4 AND ITEM 1. WELD PRIOR TO ATTACHMENT OF ITEM 5.

2 WELD ALL AROUND. MINIMUM 1/8" FILLET OR 1/8" BEVEL FOR ONE SIDE, SEAL WELD OTHER SIDES. TYPICAL FOR WELDS BETWEEN GUIDES (ITEM 8) AND BASE PLATE (ITEM 1) AND SUPPORT PLATE (ITEM 2).

1 MIN 1/4 INCH PENETRATION CONTINUOUS.

NOTE:

					ITEM	NAME	MATERIAL	SPEC	DRAWING No.	DESCRIPTION
				1	9	BAFFLE	304 ST. STL.	ASME SA240		11 GA SHEET
				2	8	GUIDE	304 ST. STL.	ASME SA479		1/2 SQ BAR
				2	7	GUIDE PIN	304 ST. STL.	ASME SA479		1 DIA BAR
				4	6	DIVIDER	304 ST. STL.	ASME SA240		5/16 PLATE
				4	5	SM. SIDE	304 ST. STL.	ASME SA240		11 GA SHEET
5				2	4	DIVIDER	304 ST. STL.	ASME SA240		1/4 PLATE
5				2	3	WEB	304 ST. STL.	ASME SA240		5/16 PLATE
4				1	2	SUPPORT PLATE	304 ST. STL.	ASME SA240		1/2 PLATE
				1	1	BASE PLATE	304 ST. STL.	ASME SA240		1/2 PLATE
95	96	97	98	99						
ASSY	ASSY	ASSY	ASSY	ASSY						
QUANTITY										

DIMENSIONING AND TOLERANCING SHALL BE PER ANSI Y14.5-82
UNSPECIFIED DIMENSIONS AND TOLERANCES SHOWN BELOW.
DIMENSIONS ARE IN INCHES. FRACTIONAL TOLERANCE: ±1/8

SYM.	GEOMETRY	.XXX	TOL.	.XX	TOL.
	FLATNESS	UNDER 3		UNDER 6	±.04
	STRAIGHTNESS	3–12		6–18	±.06
		OVER 12		OVER 18	±.09
	ANGULARITY	.X	±.1	ANGLES ±.5°	
	PERPENDICULARITY	ALL UNSPECIFIED TOOL RADII: .01 – .03			
	PARALLELISM	BREAK ALL SHARP CORNERS .01 – .03			
	CONCENTRICITY	ALL UNSPECIFIED MACHINED SURFACES SHALL BE ▽ OR BETTER			
	TRUE POSITION	NEXT ASSEMBLY:			
		DRAWING TYPE: LICENSE			

GROUP	NAME	DATE
PREPARER	Thomas Hadovsky (Jun 25, 2026 14:15:30 EDT)	
CHECKER	Kevin Klein (Jun 25, 2026 14:54:27 EDT)	
PROJECT MANAGER	David Oliver (Jun 25, 2026 17:12:29 EDT)	
ENGINEERING	Kevin Klein (Jun 25, 2026 14:54:27 EDT)	
LICENSING	Heath Baldner (Jun 25, 2026 15:16:03 EDT)	
QUALITY	David Jensen (Jun 29, 2026 08:56:34 EDT)	

NAC INTERNATIONAL

WELDMENT, 7 CELL BASKET, TRIGA FUEL INTERMEDIATE MODULE

PROJECT	DRAWING	REV
315-40	071	9
SCALE 1/3	EST.WT. 187 LBS	SH 1 OF 1
		6-25-2026

R-267157

DCR No.	REVISION
0	INITIAL ISSUE
1	INC DCR 0A
2	INC DCR 1A
3	INC DCR 2A
4	INC DCR 3A
5	INC DCR 4A
6	INC DCR 5A
7	INC DCR 6A
8	INC DCR 7A
9	INC DCR 8A

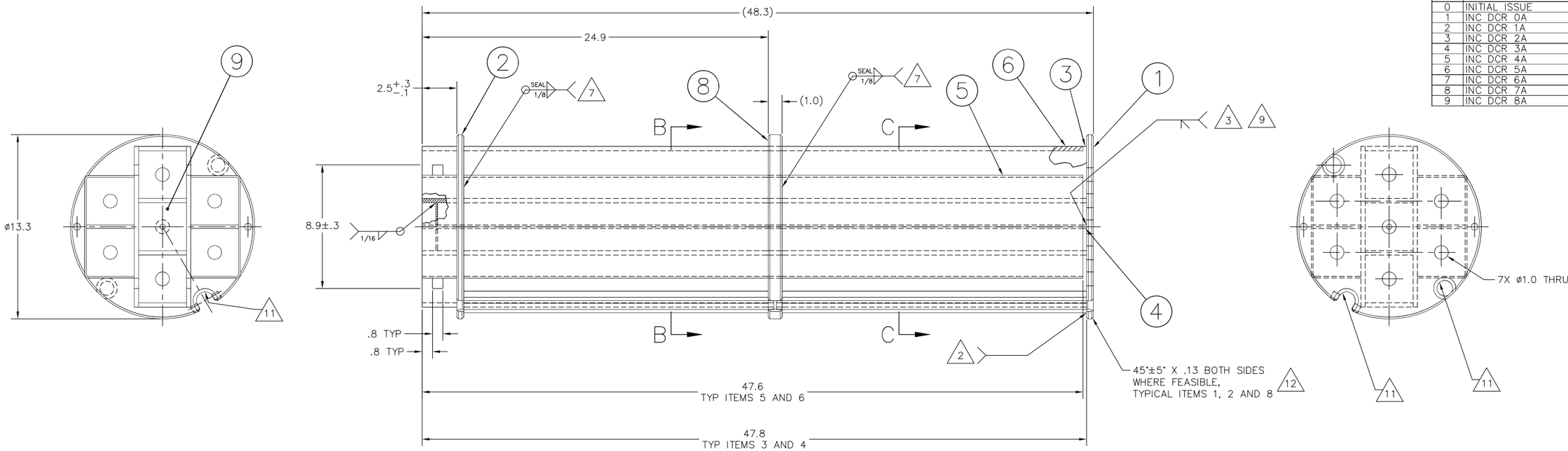

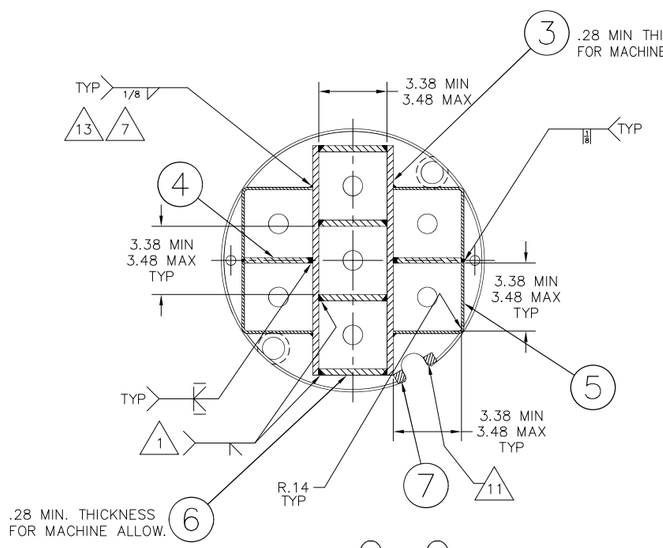

SECTION C—C

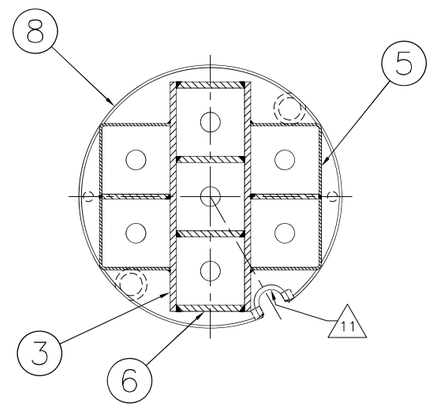

SECTION B—B

9 13 ALTERNATE 3/32" GROOVE WELD IS PERMITTED. NO WELD REQUIRED AROUND LIFT HOLE FEATURES, SEAL WELD PERMITTED ABOVE.

12 REDUCE CHAMFER SIZE AS NECESSARY IN THE REGIONS NEAR THE CORNERS OF SM. SIDES (ITEM 5).

11 ALIGNMENT FEATURES MAY BE CHAMFERED AS NECESSARY.

10. CORNER OF ITEM 5 SHALL NOT PROTRUDE BEYOND OD OF ITEM 1 OR 2.

9 PT FOLLOWING LOAD TEST. EXAMINE PER ASME SECTION V, ARTICLE 6, WITH ACCEPTANCE PER SECTION III, ARTICLE NG-5350.

8 UNLESS OTHERWISE NOTED, WELDING TO BE IN ACCORDANCE WITH SECTION IX OF THE ASME PRESSURE VESSEL CODE.

7 SEAL WELD IN LOCATIONS WHERE DEFINED WELD IS NOT ACHIEVABLE DUE TO COMPONENT GEOMETRY.

6. ASSEMBLY MAY BE DURABLY MARKED WITH INFORMATION (e.g., SERIAL NUMBER, WEIGHT, ETC.) AS DESIRED.

5 ASME SA479 MATERIAL MAY BE SUBSTITUTED FOR ASME SA240 FOR THIS ITEM.

4 ITEM 2 AND ITEM 8 MAY BE FABRICATED FROM MULTIPLE PIECES.

3 CONTINUOUS FULL PENETRATION GROOVE WELD BETWEEN ITEMS 3, 4 AND ITEM 1. WELD PRIOR TO ATTACHMENT OF ITEM 5.

2 WELD ALL AROUND. MINIMUM 1/8" FILLET OR 1/8" BEVEL FOR ONE SIDE, SEAL WELD OTHER SIDES. TYPICAL FOR WELDS BETWEEN GUIDES (ITEM 7) AND BASE PLATE (ITEM 1), MID PLATE (ITEM 8) AND SUPPORT PLATE (ITEM 2). BREAK END OF GUIDE AT KEYHOLE FACE AS NEEDED FOR ANGLED TRANSITION WITH MID PLATE AND CONNECTING WELD.

1 MIN 1/4 INCH PENETRATION CONTINUOUS.

NOTE:

					ITEM	NAME	MATERIAL	SPEC	DRAWING No.	DESCRIPTION
				1	9	BAFFLE	304 ST. STL.	ASME SA240		11 GA SHEET
				1	8	MID PLATE	304 ST. STL.	ASME SA240		1 PLATE
				4	7	GUIDE	304 ST. STL.	ASME SA479		1/2 SQ BAR
				4	6	DIVIDER	304 ST. STL.	ASME SA240		5/16 PLATE
				4	5	SM. SIDE	304 ST. STL.	ASME SA240		11 GA SHEET
				2	4	DIVIDER	304 ST. STL.	ASME SA240		1/4 PLATE
				2	3	WEB	304 ST. STL.	ASME SA240		5/16 PLATE
				1	2	SUPPORT PLATE	304 ST. STL.	ASME SA240		1/2 PLATE
				1	1	BASE PLATE	304 ST. STL.	ASME SA240		1/2 PLATE
95	96	97	98	99						
ASSY QUANTITY	ASSY	ASSY	ASSY	ASSY						

DIMENSIONING AND TOLERANCING SHALL BE PER ANSI Y14.5-82
UNSPECIFIED DIMENSIONS AND TOLERANCES SHOWN BELOW.
DIMENSIONS ARE IN INCHES. FRACTIONAL TOLERANCE: ±1/8

SYM.	GEOMETRY	.XXX	TOL.	.XX	TOL.
	FLATNESS	UNDER 3		UNDER 6	±.04
		3-12		6-18	±.06
	STRAIGHTNESS	OVER 12		OVER 18	±.09
	ANGULARITY	.X	±.1	ANGLES	±.5°
	PERPENDICULARITY	ALL UNSPECIFIED TOOL RADII: .01 - .03			
	PARALLELISM	BREAK ALL SHARP CORNERS .01 - .03			
	CONCENTRICITY	ALL UNSPECIFIED MACHINED SURFACES SHALL BE ▽ OR BETTER			
	TRUE POSITION	NEXT ASSEMBLY:			
		DRAWING TYPE: LICENSE			

GROUP	NAME	DATE
PREPARER	Thomas Hadachek (Jun 25, 2026 14:16:35 EDT)	
CHECKER	Kevin Klein (Jun 25, 2026 14:55:10 EDT)	
PROJECT MANAGER	David Olson (Jun 26, 2026 17:13:03 EDT)	
ENGINEERING	Kevin Klein (Jun 25, 2026 14:55:10 EDT)	
LICENSING	Heath Baldner (Jun 28, 2026 07:49:57 EDT)	
QUALITY	David Jensen (Jun 29, 2026 08:50:54 EDT)	

NAC INTERNATIONAL

WELDMENT, 7 CELL BASKET, TRIGA FUEL TOP MODULE

PROJECT	315-40	DRAWING	072	REV 9
SCALE	1/3	EST.WT.	275 LBS	SH 1 OF 1	6-25-2026

REV	CHANGE
0	INITIAL ISSUE
1	INC DCR 0A
2	INC DCR(L) 1A
3	INC DCR(L) 2A
4	INC DCR(L) 3A
5	INC DCR(L) 4A
6	INC DCR(L) 5A

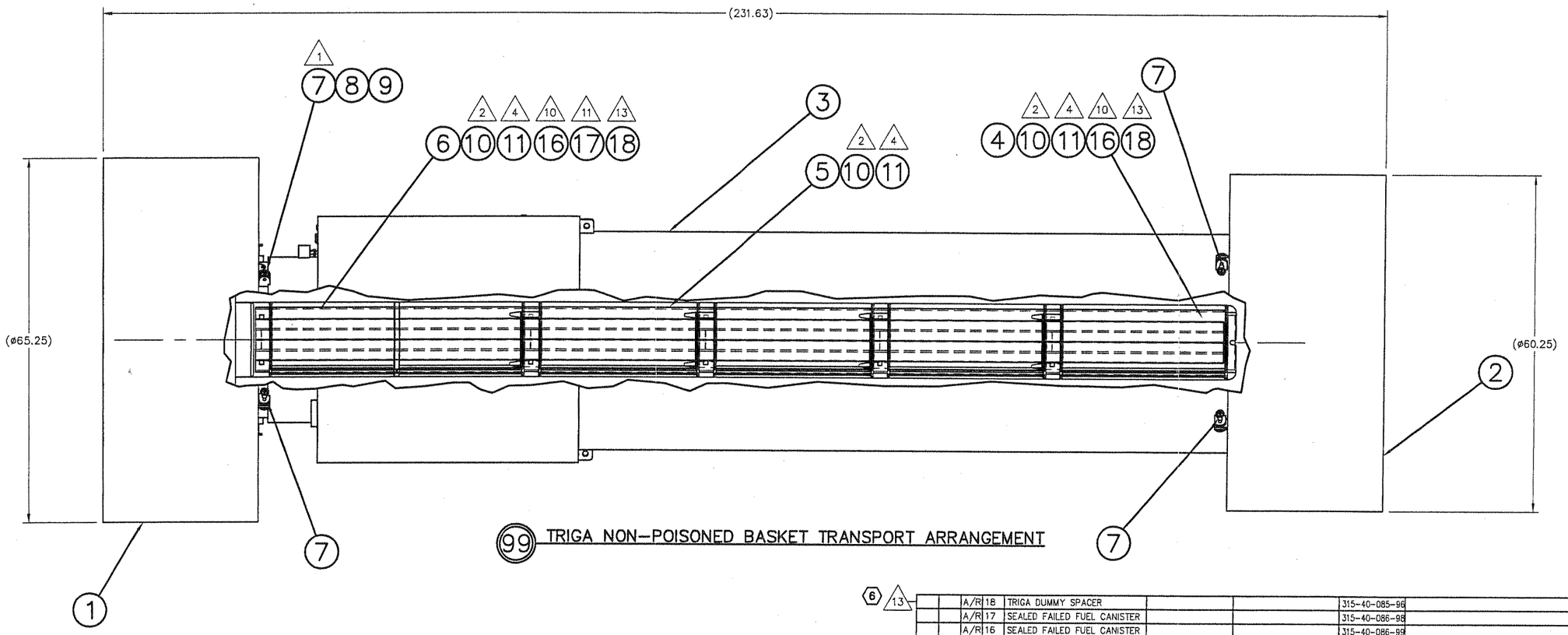

99 TRIGA NON-POISONED BASKET TRANSPORT ARRANGEMENT

9 DELETED

8 DELETED

7 DELETED

6 DELETED

6 5. DELETED

4 ITEM 11 FUEL ROD INSERT, SHALL BE USED FOR THE LOADING OF TRIGA FUEL CLUSTER RODS. AXIAL SPACERS (ITEM 10) ARE REQUIRED IF FUEL ROD INSERTS ARE TO BE INSTALLED IN THE TOP BASKET MODULE (ITEM 6).

3. MAXIMUM WEIGHT OF FUEL ASSEMBLY, SPACERS, INSERTS AND DAMAGED FUEL CANS, AS APPLICABLE, SHALL BE 80 LB. PER BASKET MODULE CELL.

2 INSTALL AXIAL FUEL SPACERS (ITEM 10) IN BASKET MODULE CELLS TO ADJUST FUEL ELEMENT, CANISTER OR CLUSTER ROD INSERT HEIGHT, AS REQUIRED, TO FACILITATE CONTENT HANDLING.

1 AT LEAST 1 OUT OF 8 ITEM 7 (BALL-LOK PIN) TO BE MODIFIED PER DWG. 315-40-01.

NOTES:

6 13 INSTALL TRIGA DUMMY SPACER (ITEM 18) FOR TRIGA FUEL ELEMENTS LIMITED TO A MAXIMUM OF 3 ELEMENTS/CELL.

6 12 DELETED

11 SEALED FAILED FUEL CANISTER (ITEM 17) TO BE LOADED IN TOP MODULE (ITEM 6) ONLY.

10 SEALED FAILED FUEL CANISTER (ITEM 16) TO BE LOADED IN THE BASE MODULE (ITEM 4) OR IN TOP MODULE (ITEM 6) WITH AXIAL SPACER (ITEM 10).

97 ASSY QUANTITY	96 ASSY	99 ASSY	ITEM	NAME	MATERIAL	SPEC	DRAWING No.	DESCRIPTION
		A/R	18	TRIGA DUMMY SPACER			315-40-085-96	
		A/R	17	SEALED FAILED FUEL CANISTER			315-40-086-98	
		A/R	16	SEALED FAILED FUEL CANISTER			315-40-086-99	
		A/R	15	DELETED				
		A/R	14	DELETED				
		A/R	13	DELETED				
		A/R	12	DELETED				
		A/R	11	FUEL ROD INSERT			315-40-096-99	
		A/R	10	AXIAL FUEL SPACER			315-40-085-98	
		1	9	TAMPER INDICATING DEVICE (TID)			315-40-01-11	
		A/R	8	WIRE			315-40-01-10	
		8	7	BALL-LOK PIN			315-40-01-8	
		1	6	TOP BASKET			315-40-72-99	
		3	5	INTER. BASKET			315-40-71-99	
		1	4	BASE BASKET			315-40-70-99	
		1	3	CASK ASSEMBLY			315-40-02-99	
		1	2	IMPACT LIMITER			315-40-06-99	
		1	1	IMPACT LIMITER			315-40-05-99	

UNLESS OTHERWISE STATED
DIMENSIONING AND TOLERANCING SHALL BE PER ASME Y14.5M-94, UNSPECIFIED DIMENSIONAL TOLERANCES ARE SHOWN BELOW.
ALL THREAD DEPTH CALLOUTS ARE TO BE CONSIDERED AS A MIN. DEPTH OF PERFECT THREADS. THE ACTUAL DEPTH OF THE THREADS IS NOT SUBJECT TO TOLERANCE CONTROLS.

XXX	UNDER 3	±.003
	3-12	±.005
	OVER 12	±.010
XX	UNDER 6	±.02
	6-18	±.03
	OVER 18	±.06
X	ALL	±.1
FRACTIONAL ±1/8		
ANGLES ±0.5°		

WEIGHTS ARE APPROXIMATE AND ARE TO BE USED FOR HANDLING PURPOSES ONLY
ALL DIMENSIONS ARE IN INCHES
BORDER SIZE: F (40 X 28)
ALL UNSPECIFIED TOOL RADII .015 - .030
BREAK ALL SHARP CORNERS .015 - .030
MACHINED SURFACES TO BE ▽ OR BETTER
NEXT ASSEMBLY:
DRAWING TYPE: LICENSE

GROUP	NAME	DATE
PREPARER	[signature]	5/26/09
CHECKER	[signature]	5/28/09
PROJECT MANAGER	[signature]	5/28/09
ENGINEERING	[signature]	5.28.09
LICENSING	[signature]	5/29/09
QUALITY	B.A. Bamett for RHS	6/1/09

NAC INTERNATIONAL

LEGAL WEIGHT TRUCK TRANSPORT CASK ASSY, 120 TRIGA FUEL ELEMENTS OR 480 CLUSTER RODS

PROJECT 315-40 | DRAWING 079 | REV 6
SCALE 1/8 | WEIGHT | SH 1 OF 1 | 7:24AM 5-26-2009

R-209023

No.	REVISION	BY	APPROVED BY	DATE
0	INITIAL ISSUE			
1	INC DCR 0A			
2	INC DCR 1A			
3	INC DCR 2A			
4	INC DCR 3A			

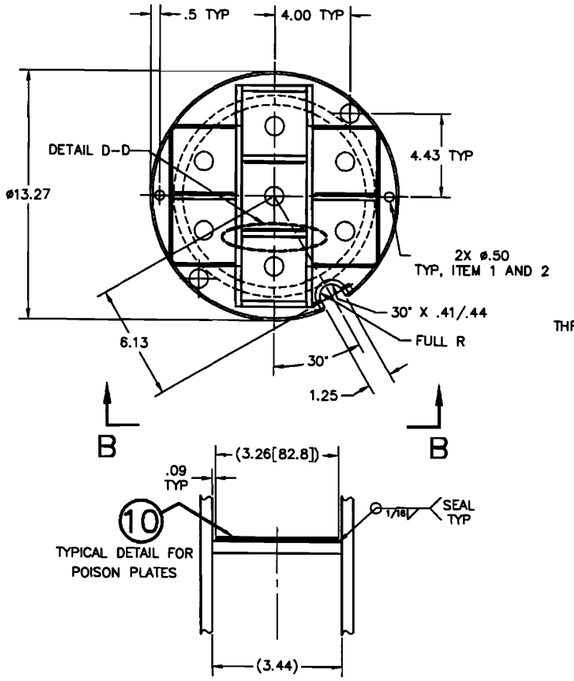

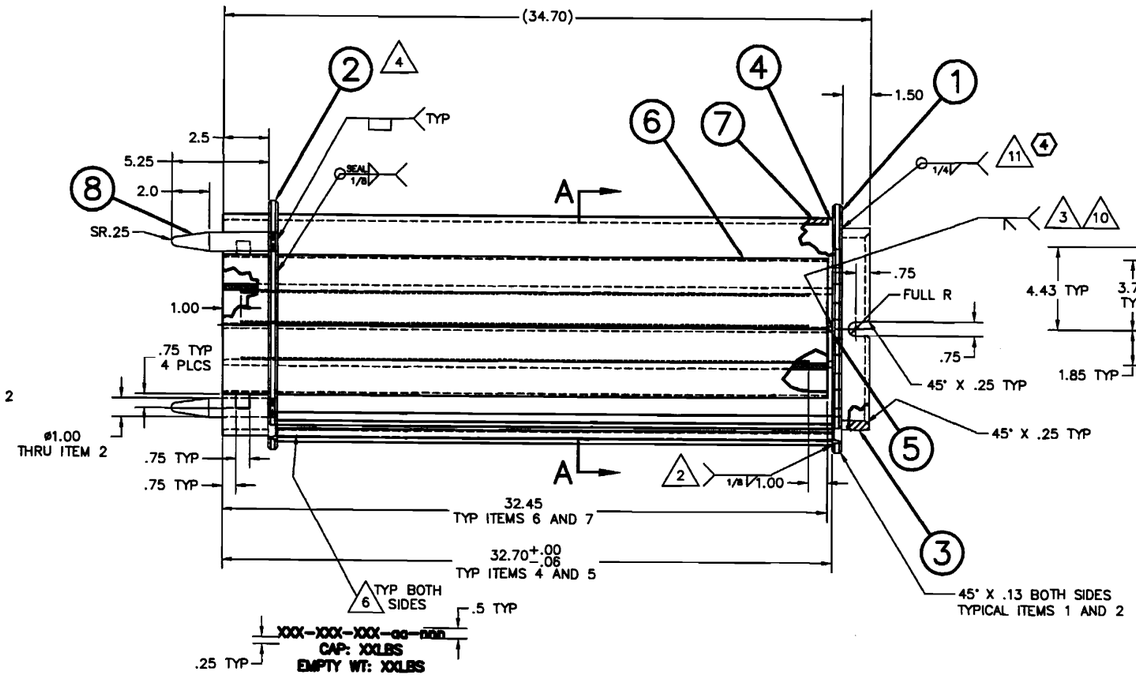

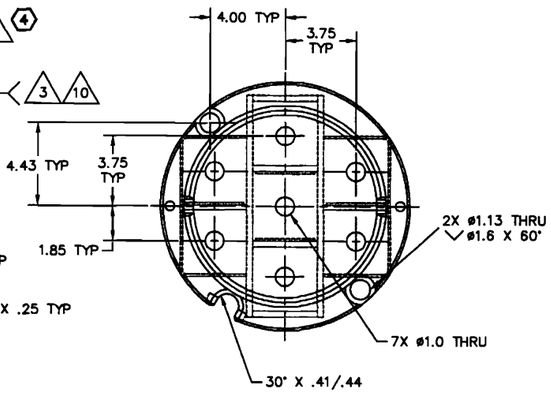

TYPICAL DETAIL FOR POISON PLATES

DETAIL D–D

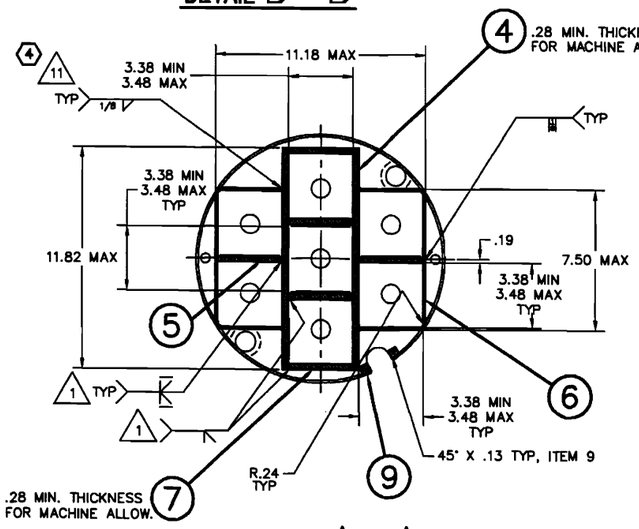

SECTION A–A

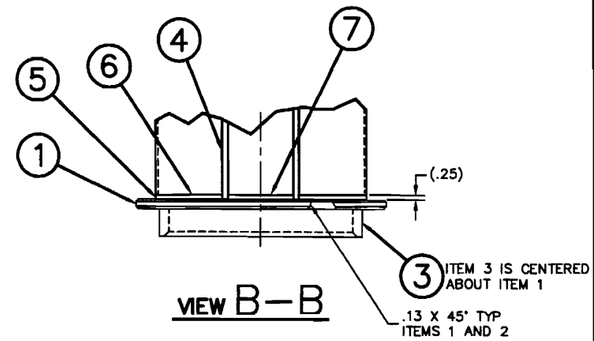

ITEM 3 IS CENTERED ABOUT ITEM 1

VIEW B–B

NOTE:

11 SEAL WELD IN LOCATIONS WHERE DEFINED WELD IS NOT ACHIEVABLE DUE TO COMPONENT GEOMETRY.

10 PT FOLLOWING LOAD TEST. EXAMINE PER ASME SECTION V, ARTICLE 6, WITH ACCEPTANCE PER SECTION III, ARTICLE NG-5350.

9 UNLESS OTHERWISE NOTED, WELDING TO BE IN ACCORDANCE WITH SECTION IX OF THE ASME PRESSURE VESSEL CODE.

8 (DELETED)

7 THE STAINLESS STEEL SHEET SHALL HAVE A MINIMUM OF 1.04 WEIGHT PERCENT ENRICHED BORON CONTENT, WITH ^{10}B BEING A MINIMUM OF 93.88 ATOM PERCENT. THE MINIMUM PLATE THICKNESS SHALL BE 3.175 mm.

6 STEEL STAMP/ENGRAVE APPROX. AS SHOWN. LETTERS .5 HIGH X .03 MAX. DEEP, FILL WITH BLACK WEATHER RESISTANT PAINT. "nnn" SERIALIZES THE COMPONENT AND WILL START WITH 001. "aa" REPRESENTS THE BASKET LENGTH ROUNDED TO THE NEAREST INCH. XXX-XXX-XXX-aa-nnn REPRESENTS CUSTOMER IDENTIFICATION NUMBER.

5 ASME SA479 MATERIAL MAY BE SUBSTITUTED FOR ASME SA240 FOR THIS ITEM.

4 ITEM 2 MAY BE FABRICATED FROM MULTIPLE PIECES.

3 CONTINUOUS FULL PENETRATION GROOVE WELD BETWEEN ITEMS 4, 5 AND ITEM 1. WELD PRIOR TO ATTACHMENT OF ITEM 6.

2 RADIAL INSIDE SURFACE, SEAL WELD PLATE OUTER EDGE, BOTH ENDS ITEM 9.

1 MIN 1/4 INCH PENETRATION CONTINUOUS.

ITEM	QTY	NAME	MATERIAL	SPEC	DRAWING No.	DESCRIPTION
10	4	POISON PLATE	304 ST. STL.	ASTM A887, GRADE B		1/8 SHEET
9	2	GUIDE		ASME SA479		1/2 SQ BAR
8	2	GUIDE PIN	304 ST. STL.	ASME SA479		1 DIA BAR
7	4	DIVIDER	304 ST. STL.	ASME SA240		5/16 PLATE
6	4	SM. SIDE	304 ST. STL.	ASME SA240		11 GA SHEET
5	2	DIVIDER	304 ST. STL.	ASME SA240		1/4 PLATE
4	2	WEB	304 ST. STL.	ASME SA240		5/16 PLATE
3	1	BASE	304 ST. STL.	ASME SA312		10 SCH.80S PIPE
2	1	SUPPORT PLATE	304 ST. STL.	ASME SA240		1/2 PLATE
1	1	BASE PLATE	304 ST. STL.	ASME SA240		1/2 PLATE

ASSY | ASSY | ASSY

QUANTITY

NAC INTERNATIONAL

WELDMENT,
7 CELL POISON BASKET,
TRIGA FUEL BASE MODULE

SYM.	GEOMETRY	TOLERANCES UNLESS OTHERWISE SPECIFIED				GROUP	NAME	DATE
	FLATNESS	3 PLACE DEC.	TOL.	2 PLACE DEC.	TOL.	PREPARED		
	STRAIGHTNESS	UNDER 3		UNDER 6	±.04	CHECKED		
	ANGULARITY	3–12		6–18	±.06	PROJECT MANAGER		
	PERPENDICULARITY	OVER 12		OVER 18	±.09	ENGINEERING		
	PARALLELISM	1 PLACE DEC.	±.1	FILLETS .03		LICENSING		
	CONCENTRICITY	FINISH (µ)-AA-125 MICRO IN		ANGLES ±.5°		QUALITY		
	TRUE POSITION	THREADS-UNIFIED CLS4-2B		CORNERS R.03				

NEXT ASSEMBLY:

DRAWING TYPE: LICENSE

PROJECT	DESIGN PACKAGE	DRAWING	REV
315	40	080	4
SCALE 1/3	EST.WT. 197 LBS	SH 1 OF 1	10-4144 4-14-2009

R-209024

No.	REVISION	BY	APPROVED BY	DATE
0	INITIAL ISSUE			
1	INC DCR 0A			
2	INC DCR 1A			
3	INC DCR 2A			
4	INC DCR 3A			

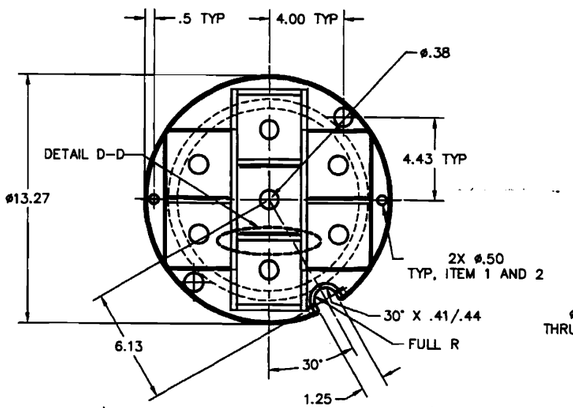

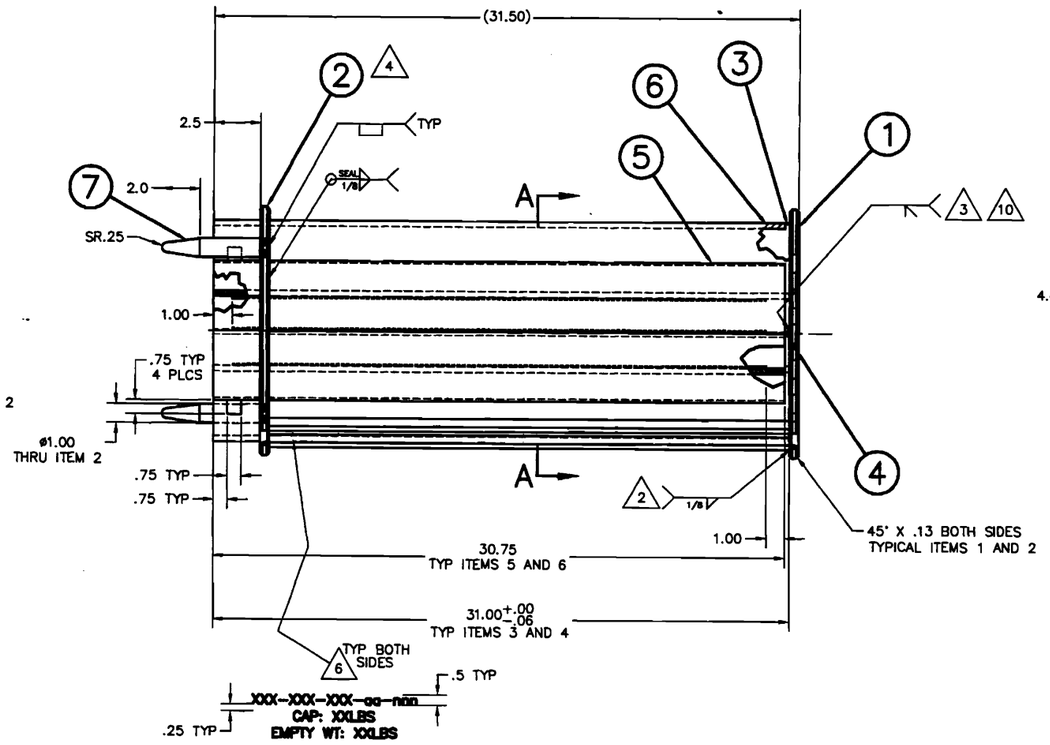

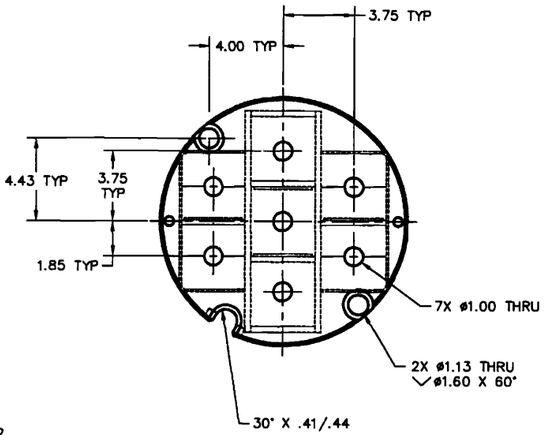

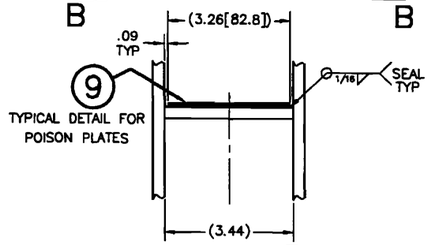

DETAIL D–D

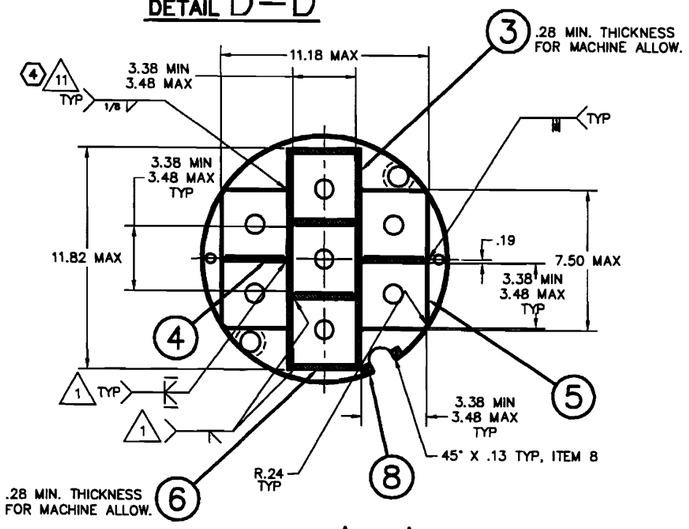

SECTION A–A

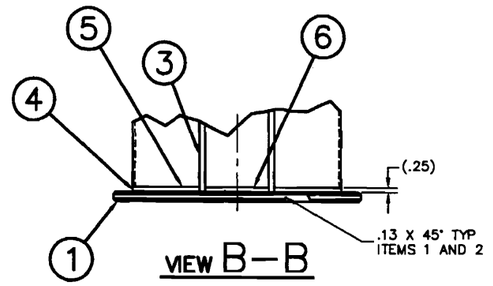

VIEW B–B

4 11 SEAL WELD IN LOCATIONS WHERE DEFINED WELD IS NOT ACHIEVABLE DUE TO COMPONENT GEOMETRY.

10 PT FOLLOWING LOAD TEST. EXAMINE PER ASME SECTION V, ARTICLE 6, WITH ACCEPTANCE PER SECTION III, ARTICLE NG-5350.

9 UNLESS OTHERWISE NOTED, WELDING TO BE IN ACCORDANCE WITH SECTION IX OF THE ASME PRESSURE VESSEL CODE.

8 (DELETED)

7 THE STAINLESS STEEL SHEET SHALL HAVE A MINIMUM OF 1.04 WEIGHT PERCENT ENRICHED BORON CONTENT, WITH ^{10}B BEING A MINIMUM OF 93.88 ATOM PERCENT. THE MINIMUM PLATE THICKNESS SHALL BE 3.175 mm.

6 STEEL STAMP/ENGRAVE APPROX. AS SHOWN. LETTERS .5 HIGH X .03 MAX. DEEP, FILL WITH BLACK WEATHER RESISTANT PAINT. "nnn" SERIALIZES THE COMPONENT AND WILL START WITH 001. "aa" REPRESENTS THE BASKET LENGTH ROUNDED TO THE NEAREST INCH. XXX-XXX-XXX-aa-nnn REPRESENTS CUSTOMER IDENTIFICATION NUMBER.

5 ASME SA479 MATERIAL MAY BE SUBSTITUTED FOR ASME SA240 FOR THIS ITEM.

4 ITEM 2 MAY BE FABRICATED FROM MULTIPLE PIECES.

3 CONTINUOUS FULL PENETRATION GROOVE WELD BETWEEN ITEMS 3, 4 AND ITEM 1. WELD PRIOR TO ATTACHMENT OF ITEM 5.

2 RADIAL INSIDE SURFACE, SEAL WELD PLATE OUTER EDGE, BOTH ENDS ITEM 8.

1 MIN 1/4 INCH PENETRATION CONTINUOUS.

NOTE:

			ITEM	NAME	MATERIAL	SPEC	DRAWING No.	DESCRIPTION
		4	9	POISON PLATE	304 ST. STL.	ASTM A887, GRADE B		1/8 SHEET
		2	8	GUIDE	304 ST. STL.	ASME SA479		1/2 SQ BAR
		2	7	GUIDE PIN	304 ST. STL.	ASME SA479		1 DIA BAR
		4	6	DIVIDER	304 ST. STL.	ASME SA240		5/16 PLATE
		4	5	SM. SIDE	304 ST. STL.	ASME SA240		11 GA SHEET
		2	4	DIVIDER	304 ST. STL.	ASME SA240		1/4 PLATE
		2	3	WEB	304 ST. STL.	ASME SA240		5/16 PLATE
		1	2	SUPPORT PLATE	304 ST. STL.	ASME SA240		1/2 PLATE
		1	1	BASE PLATE	304 ST. STL.	ASME SA240		1/2 PLATE
97	98	99	ITEM	NAME	MATERIAL	SPEC	DRAWING No.	DESCRIPTION
ASSY	ASSY	ASSY						
QUANTITY								

NAC INTERNATIONAL

WELDMENT,
7 CELL POISON BASKET,
TRIGA FUEL INTERMEDIATE MODULE

SYM.	GEOMETRY	UNLESS OTHERWISE SPECIFIED	TOL.		TOL.
	FLATNESS	3 PLACE DEC.	.XXX	2 PLACE DEC	.XX
	STRAIGHTNESS	UNDER 3	.005	UNDER 6	.02
	ANGULARITY	3-12	.010	6-18	.03
	PERPENDICULARITY	OVER 12	.015	OVER 18	.05
	PARALLELISM	1 PLACE DEC.	±.1	FILLETS	.03
	CONCENTRICITY	OVER (+)-30 (020 R		ANGLES	±.5°
	TRUE POSITION	THREAD-UNRD CLS-3B		CORNERS	R.03

	GROUP	NAME	DATE
	PREPARED	Linda Gosa	4-14-09
	CHECKED		
	PROJECT ENGINEER		
	MANAGER		
	LICENSING		
	QA MGR		

NEXT ASSEMBLY:

DRAWING TYPE: LICENSE

PROJECT	DESIGN PACKAGE	DRAWING	REV
315	40	081	4
SCALE 1/3	EST.WT. 187 LBS	SH 1 OF 1	12:43PM 4-14-2009

K-ZU 90Z5

No.	REVISION	BY	APPROVED BY	DATE
0	INITIAL ISSUE			
1	INC DCR 0A			
2	INC DCR 1A			
3	INC DCR 2A			
4	INC DCR 3A			

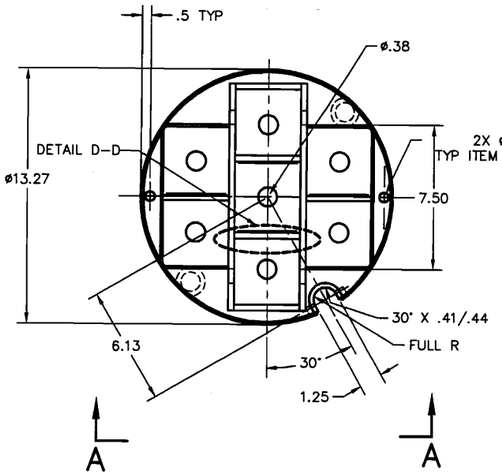

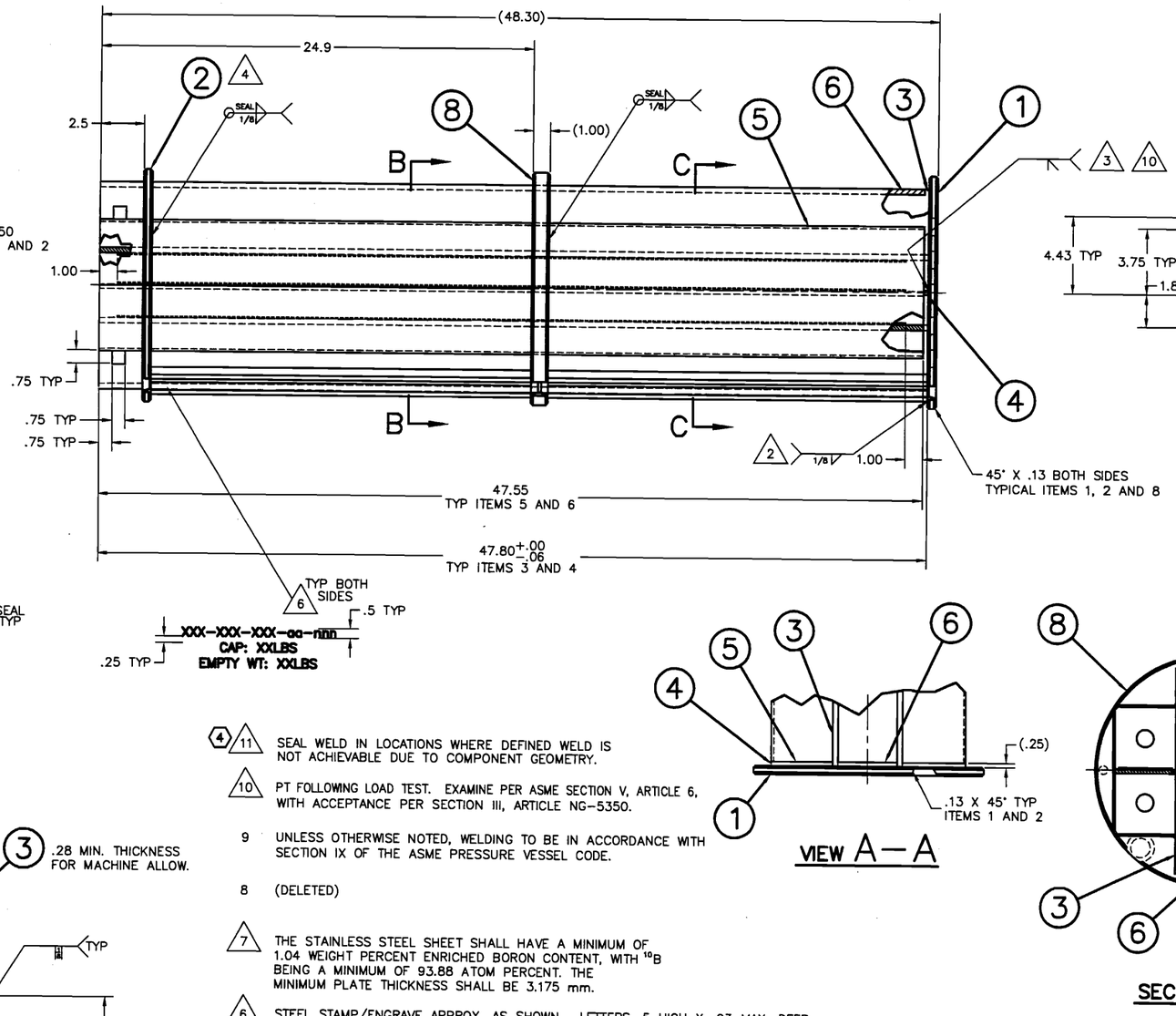

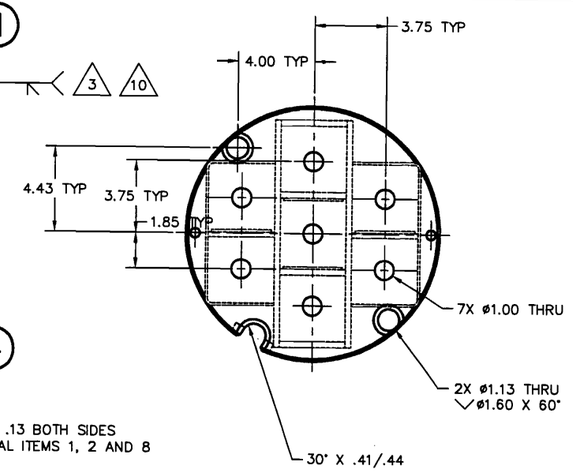

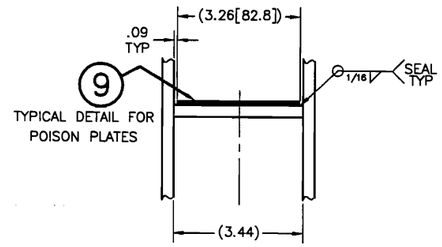

DETAIL D–D

VIEW A–A

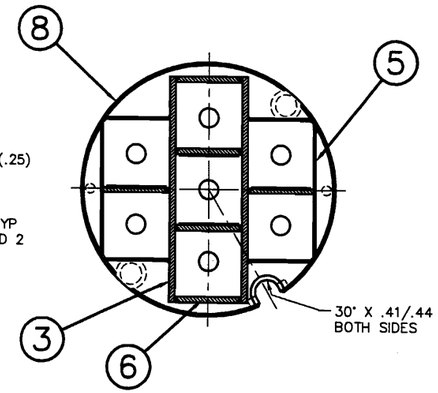

SECTION B–B

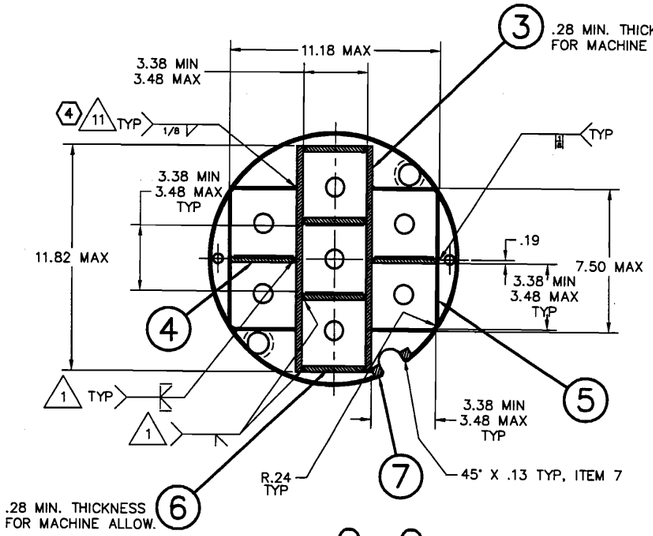

SECTION C–C

4 11 SEAL WELD IN LOCATIONS WHERE DEFINED WELD IS NOT ACHIEVABLE DUE TO COMPONENT GEOMETRY.

10 PT FOLLOWING LOAD TEST. EXAMINE PER ASME SECTION V, ARTICLE 6, WITH ACCEPTANCE PER SECTION III, ARTICLE NG-5350.

9 UNLESS OTHERWISE NOTED, WELDING TO BE IN ACCORDANCE WITH SECTION IX OF THE ASME PRESSURE VESSEL CODE.

8 (DELETED)

7 THE STAINLESS STEEL SHEET SHALL HAVE A MINIMUM OF 1.04 WEIGHT PERCENT ENRICHED BORON CONTENT, WITH ^{10}B BEING A MINIMUM OF 93.88 ATOM PERCENT. THE MINIMUM PLATE THICKNESS SHALL BE 3.175 mm.

6 STEEL STAMP/ENGRAVE APPROX. AS SHOWN. LETTERS .5 HIGH X .03 MAX. DEEP, FILL WITH BLACK WEATHER RESISTANT PAINT. "nnn" SERIALIZES THE COMPONENT AND WILL START WITH 001. "aa" REPRESENTS THE BASKET LENGTH ROUNDED TO THE NEAREST INCH. XXX-XXX-XXX-aa-nnn REPRESENTS CUSTOMER IDENTIFICATION NUMBER.

5 ASME SA479 MATERIAL MAY BE SUBSTITUTED FOR ASME SA240 FOR THIS ITEM.

4 ITEM 2 AND ITEM 8 MAY BE FABRICATED FROM MULTIPLE PIECES.

3 CONTINUOUS FULL PENETRATION GROOVE WELD BETWEEN ITEMS 3, 4 AND ITEM 1. WELD PRIOR TO ATTACHMENT OF ITEM 5.

2 RADIAL INSIDE SURFACE, SEAL WELD PLATE OUTER EDGE, BOTH ENDS ITEM 7.

1 MIN 1/4 INCH PENETRATION CONTINUOUS.

NOTE:

			ITEM	NAME	MATERIAL	SPEC	DRAWING No.	DESCRIPTION
		4	9	POISON PLATE	304 ST. STL.	ASTM A887, GRADE B		1/8 SHEET
		1	8	MID PLATE	304 ST. STL.	ASME SA240		1 PLATE
		4	7	GUIDE	304 ST. STL.	ASME SA479		1/2 SQ BAR
		4	6	DIVIDER	304 ST. STL.	ASME SA240		5/16 PLATE
		4	5	SM. SIDE	304 ST. STL.	ASME SA240		11 GA SHEET
		2	4	DIVIDER	304 ST. STL.	ASME SA240		1/4 PLATE
		2	3	WEB	304 ST. STL.	ASME SA240		5/16 PLATE
		1	2	SUPPORT PLATE	304 ST. STL.	ASME SA240		1/2 PLATE
		1	1	BASE PLATE	304 ST. STL.	ASME SA240		1/2 PLATE

97	98	99
ASSY	ASSY	ASSY
QUANTITY		

SYM.	GEOMETRY	TOLERANCES UNLESS OTHERWISE SPECIFIED				GROUP	NAME	DATE
	FLATNESS	3 PLACE DEC.	TOL.	2 PLACE DEC.	TOL.	PREPARER		
	STRAIGHTNESS	UNDER 3		UNDER 6	±.04	CHECKER		
	ANGULARITY	3–12		6–18	±.06	PROJECT MANAGER		
	PERPENDICULARITY	OVER 12		OVER 18	±.09	ENGINEERING		
	PARALLELISM	1 PLACE DEC.	±.1	FILLETS .03		LICENSING		
	CONCENTRICITY	FINISH (√)-AA-125 MICRO IN		ANGLES ±.5°		QUALITY		
	TRUE POSITION	THREADS-UNIFIED CLASS-2B		CORNERS R.03				
		NEXT ASSEMBLY:						
		DRAWING TYPE: LICENSE						

NAC INTERNATIONAL

WELDMENT, 7 CELL POISON BASKET, TRIGA FUEL TOP MODULE

PROJECT	DESIGN PACKAGE	DRAWING	REV
315	40	082	4
SCALE 1/3	EST.WT. 275 LBS	SH 1 OF 1	12:47PM 4-14-2009

NAC DCRF

R-128690

No.	REVISION	BY	APPROVED BY	DATE
0	INITIAL ISSUE			

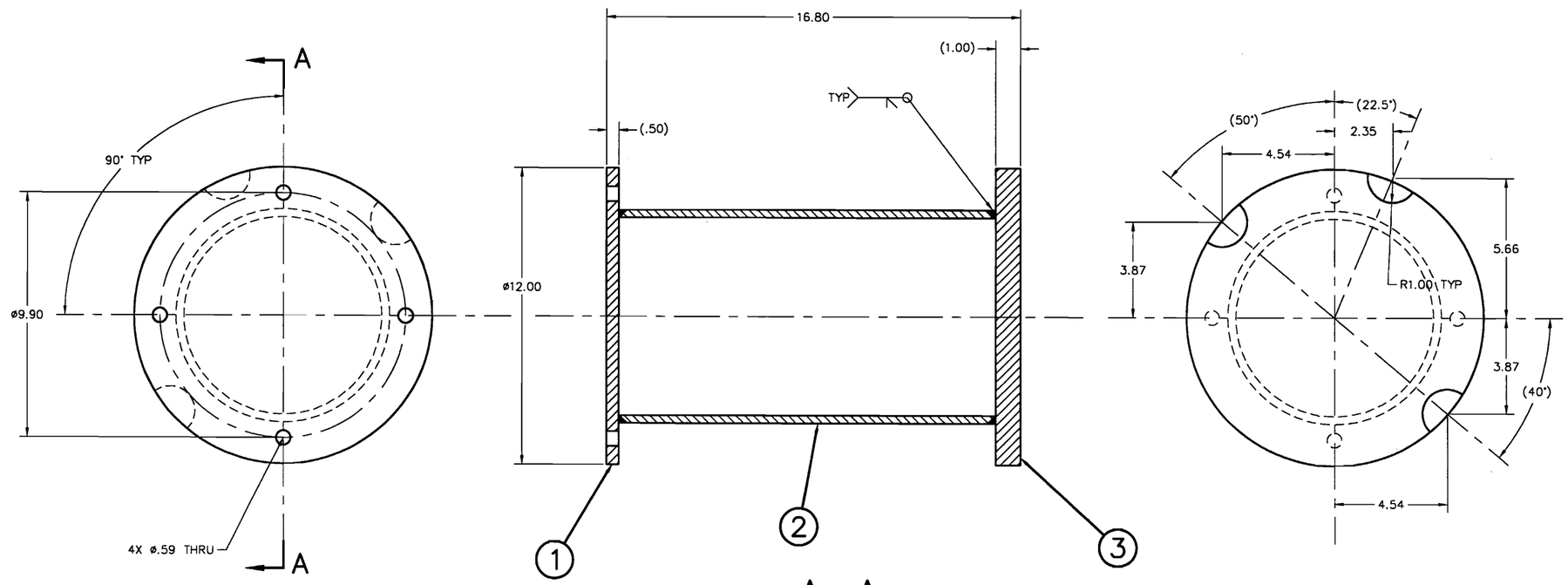

SECTION A–A

07 ASSY	08 ASSY	09 ASSY	ITEM	NAME	MATERIAL	SPEC	DRAWING No.	DESCRIPTION
		1	3	END	304 ST.STL.	ASTM A240		1 PLATE
		1	2	BODY	304 ST.STL.	ASTM A312		8 SCH 40 PIPE
		1	1	BASE	304 ST.STL.	ASTM A240		1/2 PLATE
QUANTITY								

NAC INTERNATIONAL

SPACER,
LWT CASK ASSEMBLY
TRIGA FUEL

SYM.	GEOMETRY	TOLERANCES UNLESS OTHERWISE SPECIFIED			
	FLATNESS	3 PLACE DEC.	TOL.	2 PLACE DEC.	TOL.
	STRAIGHTNESS	UNDER 3		UNDER 6	±.04
		3–12		6–18	±.06
	ANGULARITY	OVER 12		OVER 18	±.09
	PERPENDICULARITY	1 PLACE DEC.	±.1	FILLETS .03	
		FINISH (√)-AA-125 MICRO IN		ANGLES ±.5°	
	PARALLELISM	THREADS-UNIFIED CL2A-2B		CORNERS R.03	
	CONCENTRICITY	NEXT ASSEMBLY: 315-040-84			
	TRUE POSITION	DRAWING TYPE: LICENSE			

	GROUP	NAME	DATE
	PREPARER	R. Hartley	12-4-97
	CHECKER	[illegible]	12-8-97
	PROJECT MANAGER	[illegible]	12/8/97
	VP/CHIEF ENGINEER	[illegible]	12/8/97
	DIRECTOR of PROJECTS	[illegible]	12-8-97
	LICENSING MANAGER	[illegible]	12/8/97
	QUALITY	[illegible]	12/12/97
	SBU VP	[illegible]	12/11/97

PROJECT	DESIGN PACKAGE	DRAWING	REV
315	040	083	0
SCALE 1/2	EST.WT.	SH 1 OF 1	5:21PM 12-11-97

NAC DCRM 01

REV	CHANGE
0	INITIAL ISSUE
1	INC DCR 0A
2	INC DCR 1A
3	INC DCR(L) 2A
4	INC DCR(L) 3A

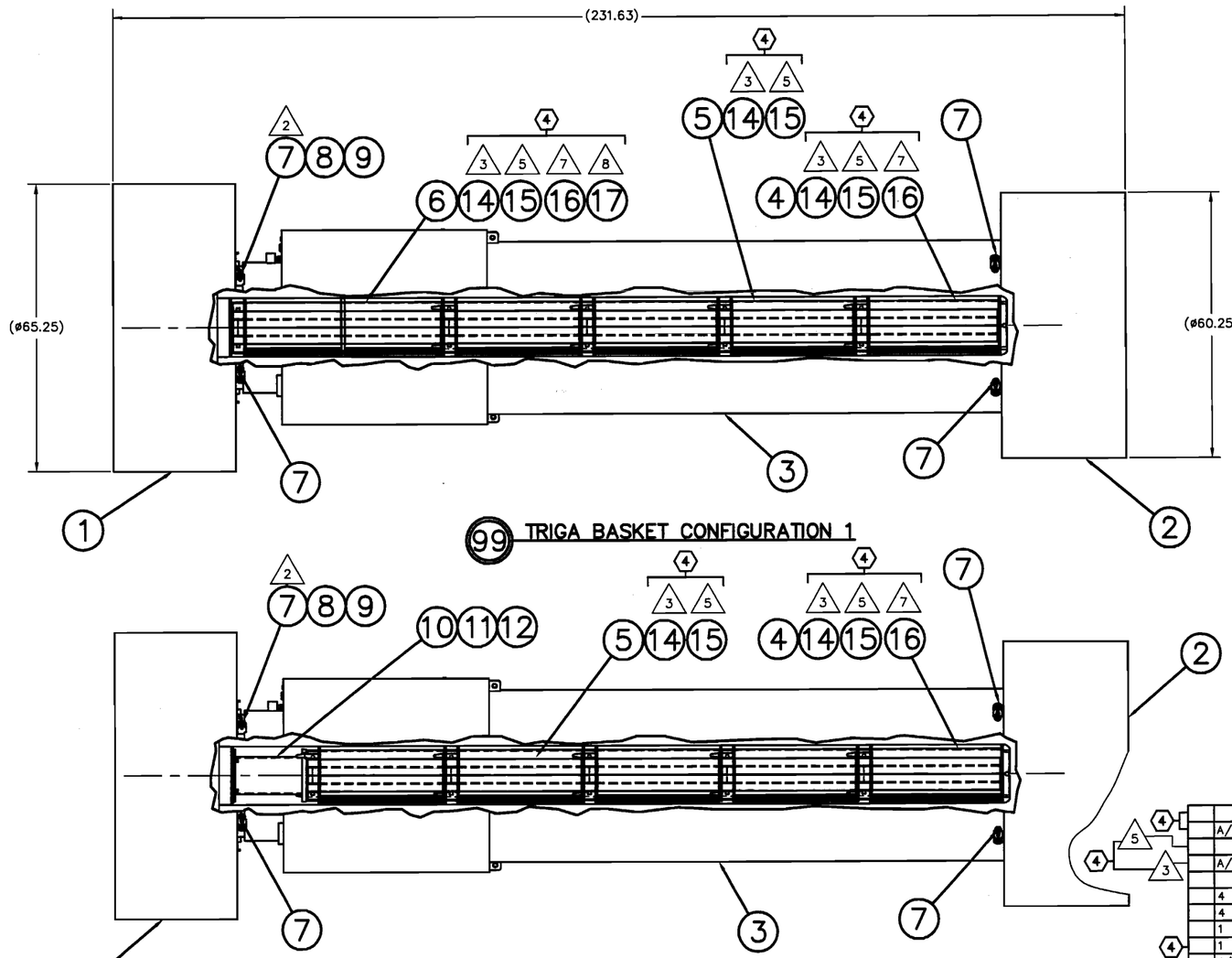

99 TRIGA BASKET CONFIGURATION 1

98 TRIGA BASKET CONFIGURATION 2

07	06	09	ITEM	NAME	MATERIAL	SPEC	DRAWING No.	DESCRIPTION
ASSY	ASSY	ASSY						
QUANTITY								
		A/R	17	SEALED FAILED FUEL CANISTER			315-40-086-98	
	A/R	A/R	16	SEALED FAILED FUEL CANISTER			315-40-086-99	
		A/R	15	CLUSTER ROD INSERT			315-40-096-99	
	A/R	A/R	14	AXIAL FUEL SPACER			315-40-85-98	
			13	(DELETED)				
	4		12	LOCKWASHER	ST. STL.	COML		1/2 STANDARD
	4		11	SOC.HD.CAP SCREW	ST. STL.	ASTM A193, B6		1/2-13UNC-2A X 1.5 LONG
	1		10	SPACER			315-40-83-99	
	1	1	9	TAMPER INDICATING DEVICE (TID)			315-40-01-11	
	A/R	A/R	8	WIRE			315-40-01-10	
	8	8	7	BALL-LOK PIN			315-40-01-8	
		1	6	TOP BASKET			315-40-82-99	
	4	3	5	INTER. BASKET			315-40-81-99	
	1	1	4	BASE BASKET			315-40-80-99	
	1	1	3	CASK ASSEMBLY			315-40-02-99	
	1	1	2	IMPACT LIMITER			315-40-06-99	
	1	1	1	IMPACT LIMITER			315-40-05-99	

5 CLUSTER ROD INSERT (ITEM 15) SHALL BE USED FOR THE LOADING OF TRIGA FUEL CLUSTER RODS. AXIAL SPACERS (ITEM 14) ARE REQUIRED IF CLUSTER ROD INSERTS ARE TO BE INSTALLED IN THE TOP BASKET MODULE (ITEM 6).

4 4. MAXIMUM WEIGHT OF FUEL ASSEMBLY, SPACERS, INSERTS AND DAMAGED FUEL CANS, AS APPLICABLE, SHALL BE 80 LB. PER BASKET MODULE CELL.

3 INSTALL AXIAL FUEL SPACERS (ITEM 14) IN BASKET MODULE CELLS TO ADJUST FUEL ELEMENT, CANISTER OR CLUSTER ROD INSERT HEIGHT, AS REQUIRED, TO FACILITATE CONTENT HANDLING.

2 PER ASSEMBLY, AT LEAST 1 OUT OF 8 ITEM 7 (BALL-LOK PIN) TO BE MODIFIED PER DWG. 315-40-01.

4 1. DELETED

NOTE:

9 CASK ASSEMBLY (ITEM 3) FOR TRANSPORT OF TRIGA DAMAGED FUEL OR FUEL DEBRIS IN SEALED FAILED FUEL CANISTERS SHALL BE PROVIDED WITH A LEAK TIGHT CONTAINMENT BOUNDARY.

8 SEALED FAILED FUEL CANISTER (ITEM 17) TO BE LOADED IN TOP MODULE (ITEM 6) ONLY.

4 7 SEALED FAILED FUEL CANISTER (ITEM 16) TO BE LOADED IN THE BASE MODULE (ITEM 4) CONFIGURATION 1 & 2 OR IN TOP MODULE WITH AXIAL SPACER (ITEM 14) CONFIGURATION 1 ONLY.

6. SEALED FAILED FUEL CANISTER IS NOT AUTHORIZED FOR PLACEMENT IN THE INTERMEDIATE MODULES (ITEM 5).

UNLESS OTHERWISE STATED
DIMENSIONING AND TOLERANCING SHALL BE PER ASME Y14.5M-94
ALL THREAD DEPTH CALLOUTS ARE TO BE CONSIDERED AS A MIN. DEPTH OF PERFECT THREADS.
ALL DIMENSIONS ARE IN INCHES
MACHINED SURFACES TO BE ▽ OR BETTER
NEXT ASSEMBLY:
DRAWING TYPE: LICENSE

GROUP	NAME	DATE
PREPARER	Jerry Sweany	2/21/08
CHECKER	[illegible]	2/21/08
PROJECT MANAGER	[illegible]	2/21/08
ENGINEERING	[illegible]	2.21.08
LICENSING	[illegible]	2/21/08
QUALITY	[illegible]	2.22.08

NAC INTERNATIONAL

LEGAL WEIGHT TRUCK
TRANSPORT CASK ASSY
140 TRIGA ELEMENTS

PROJECT 315-40 | DRAWING 084 | REV 4
1/12 | SH 1 OF 1 | 2:04PM 2-21-2008

REV	CHANGE
0	INITIAL ISSUE
1	INC DCR(L) 0A

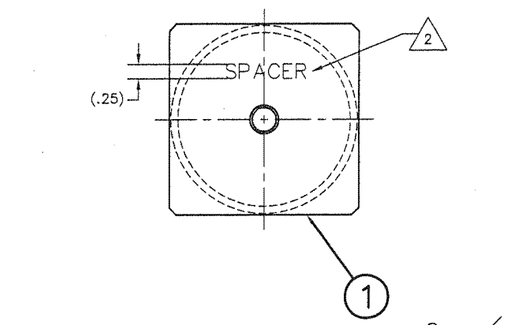

98 AXIAL FUEL SPACER ASSY

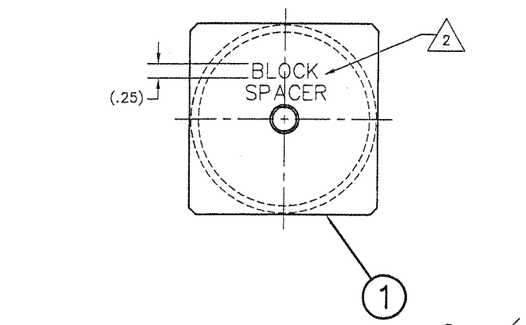

97 CELL BLOCK SPACER ASSY

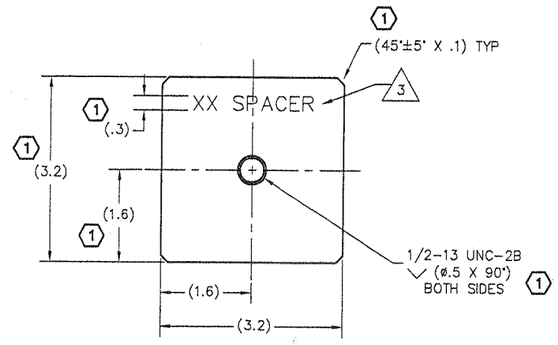

4 99 PLATE SPACER
ALTERNATE FABRICATION

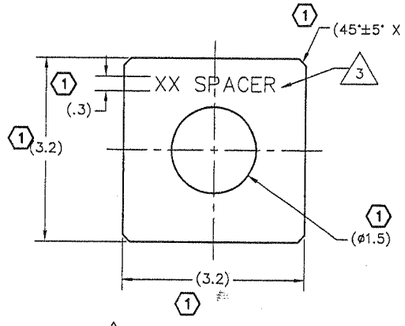

4 99 PLATE SPACER

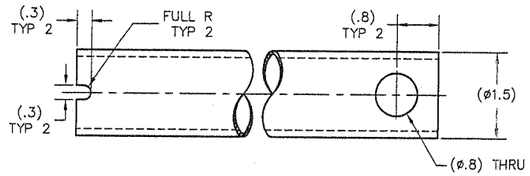

1 4 DUMMY TUBE

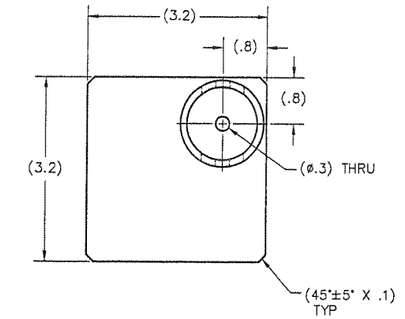

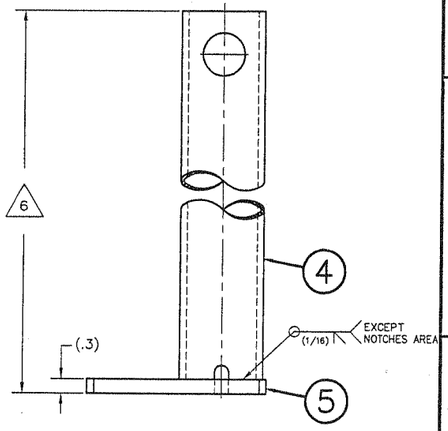

1 96 TRIGA DUMMY SPACER

1

1				5	DUMMY PLATE	304 SS. STL.	ASTM A240			1/4 PLATE/BAR
1				4	DUMMY TUBE	304 SS. STL.	ASTM A249/A269			1 1/2 DIA TUBE X .120 WALL
			1	3	PLATE SPACER	6061-T6 ALUM.	ASTM B209/B221			PLATE/BAR
	1	1		2	SPACER TUBE	6061-T6 ALUM.	ASTM B210/B221/B241			3 1/4 OD X .125 WALL THK TUBE
	1	1		1	END PLATE	6061-T6 ALUM.	ASTM B209/B221			1/4 PLATE/BAR
96	97	98	99	ITEM	NAME	MATERIAL	SPEC		DRAWING No.	DESCRIPTION
ASSY	ASSY	ASSY								
QUANTITY										

2 STEEL STAMP/ENGRAVE APPROX. AS SHOWN. LETTERS .25 HIGH X .03 MAX DEEP, FILL WITH BLACK WEATHER RESISTANT PAINT.

1 LENGTHS AS REQUIRED TO ACCOMMODATE FUEL LENGTH. MODIFY AS REQUIRED.

NOTE:

1 6 LENGTH OF SHORT TRIGA DUMMY SPACER IS 30.0 INCHES AND LONG TRIGA DUMMY SPACER IS 45.0 INCHES.

5 SIZE CELL BLOCK SPACER LENGTH TO ENSURE FUEL ELEMENT CANNOT BE INADVERTENTLY LOADED IN THE BASKET CELL.

4 PLATE THICKNESS REQUIRED TO ACCOMMODATE FUEL LENGTH. MODIFY AS REQUIRED.

3 STEEL STAMP/ENGRAVE APPROX. AS SHOWN. LETTERS .25 HIGH X .03 MAX DEEP, FILL WITH BLACK WEATHER RESISTANT PAINT. "XX" TO BE MATERIAL THICKNESS: 3/8, 1/2, 5/8 OR OTHER.

UNLESS OTHERWISE STATED
DIMENSIONING AND TOLERANCING SHALL BE PER ASME Y14.5M-94, UNSPECIFIED DIMENSIONAL TOLERANCES ARE SHOWN BELOW.
ALL THREAD DEPTH CALLOUTS ARE TO BE CONSIDERED AS A MIN. DEPTH OF PERFECT THREADS. THE ACTUAL DEPTH OF THE THREADS IS NOT SUBJECT TO TOLERANCE CONTROLS.

XXX	UNDER 3	±.003
	3–12	±.005
	OVER 12	±.010
XX	UNDER 6	±.02
	6–18	±.03
	OVER 18	±.06
X	ALL	±.1
FRACTIONAL ±1/6		
ANGLES ±0.5°		

WEIGHTS ARE APPROXIMATE AND ARE TO BE USED FOR HANDLING PURPOSES ONLY
ALL DIMENSIONS ARE IN INCHES
BORDER SIZE: F (40 X 26)
ALL UNSPECIFIED TOOL RADII .015 – .030
BREAK ALL SHARP CORNERS .015 – .030
MACHINED SURFACES TO BE 125 OR BETTER
NEXT ASSEMBLY: N/A
DRAWING TYPE: LICENSE

GROUP	NAME	DATE
PREPARER	[signature]	5.28.09
CHECKER	[signature]	5-28-09
PROJECT MANAGER	[signature]	5-28-09
ENGINEERING	[signature]	5.28.09
LICENSING	[signature]	5/29/09
QUALITY	[signature] for RHS	6/1/09

NAC INTERNATIONAL

AXIAL FUEL AND CELL BLOCK SPACERS, MTR AND TRIGA FUEL BASKETS, NAC-LWT CASK SAR

PROJECT 315-40 | DRAWING 085 | REV 1
SCALE 1/1 | WEIGHT NOTED | SH 1 OF 1 | 7:22AM 5-26-2009

R-203199

REV	CHANGE
0	INITIAL ISSUE
1	INC DCR 0A

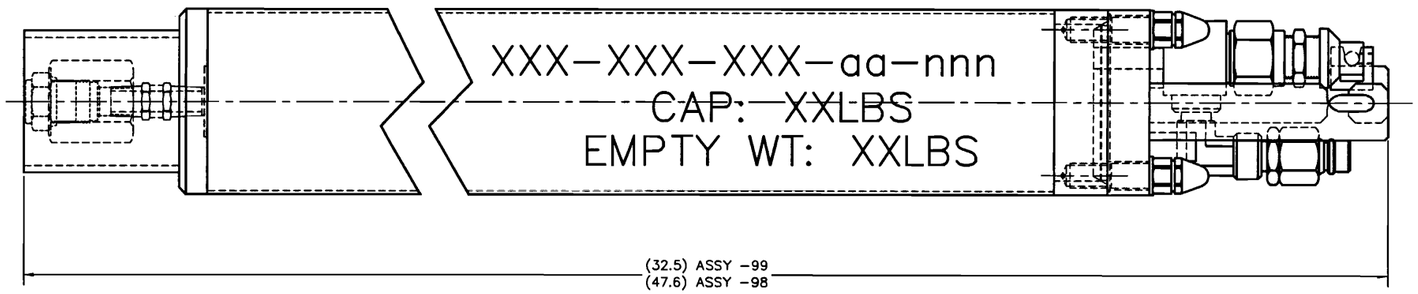

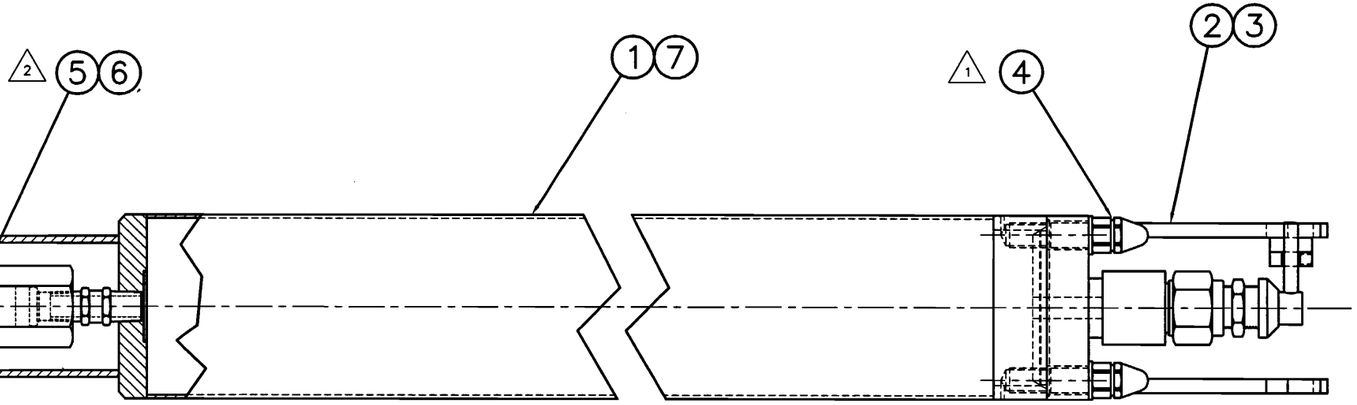

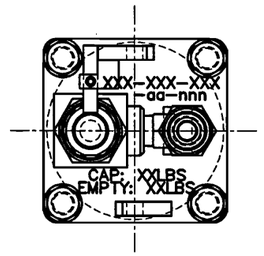

1 99 SEALED FAILED FUEL CAN

1 98 SEALED FAILED FUEL CAN

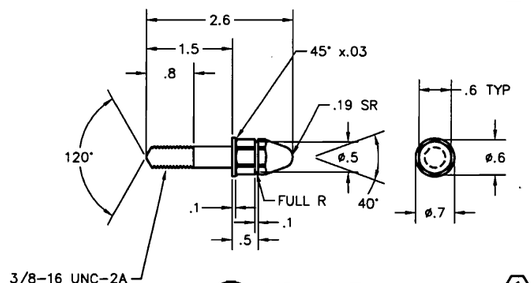

1 4 LID BOLT

1 3. (DELETED)

2 COAT WITH BOSTIK NEVER-SEEZ #NGBT-16 AND TORQUE TO 50±2 FT-LBS.

1 COAT WITH BOSTIK NEVER-SEEZ #NGBT-16 AND TORQUE TO 150±10 IN-LBS.

			ITEM	NAME	MATERIAL	SPEC	DRAWING No.	DESCRIPTION
	1		7	CANISTER BODY			315-088-98	
	1	1	6	SEAL	321 ST. STL.	COML		FURON #10061-08-1-0
	1	1	5	PLUG	316 ST. STL.	COML		CAJON #SS-8-PST
	4	4	4	LID BOLT	NICKEL ALLOY	SB-637, Gr NO7718		BAR
	1	1	3	SEAL	ST. STL.	COML		HELICOFLEX #U2312-03125 NPA
	1	1	2	CANISTER LID			315-087-99	
	1	1	1	CANISTER BODY			315-088-99	
97 ASSY	98 ASSY	99 ASSY						
QUANTITY								

NAC INTERNATIONAL

UNLESS OTHERWISE STATED
DIMENSIONING AND TOLERANCING SHALL BE PER ASME Y14.5M-94
ALL THREAD DEPTH CALLOUTS ARE TO BE CONSIDERED AS A MIN. DEPTH OF PERFECT THREADS.
ALL DIMENSIONS ARE IN INCHES
MACHINED SURFACES TO BE 125 OR BETTER
NEXT ASSEMBLY:
DRAWING TYPE: LICENSE

GROUP	NAME	DATE
PREPARER	R.W. Walton	2-24-05
CHECKER	Ryan Stone	2-24-05
PROJECT MANAGER	K.S. Shaw	2-24-05
ENGINEERING	Alan Ziu	2/24/05
LICENSING	Anthony L Park	2/24/05
QUALITY	J.D. Smith	2-25-05

ASSEMBLY, SEALED FAILED FUEL CAN, TRIGA FUEL

PROJECT 315-40 | DRAWING 086 | REV 1 | SH 1 OF 1 | 2:02PM 2-24-2005

NAC DCRM 01

R-217263

REV	CHANGE
0	INITIAL ISSUE
1	INC DCR 0A
2	INC DCR 1A
3	INC DCR 2A
4	INC DCR 3A
5	INC DCR 4A
6	INC DCR 5A
7	INC DCR 6A

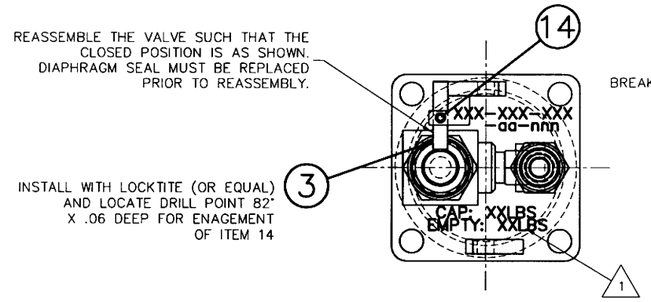

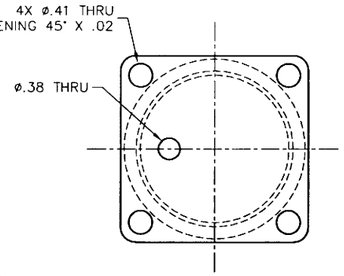

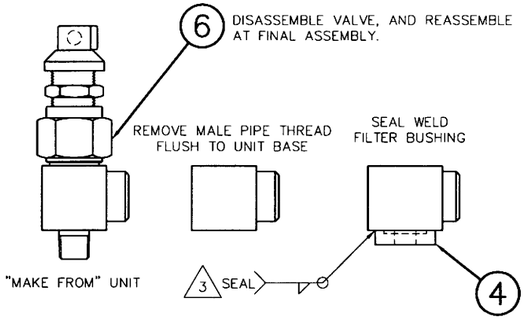

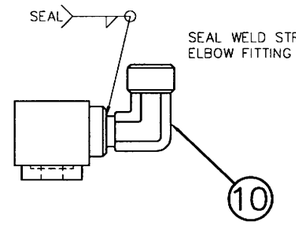

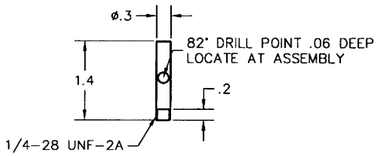

3 HANDLE
SCALE: FULL

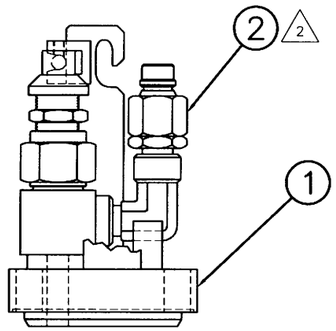

99 LID ASSEMBLY
SCALE: FULL

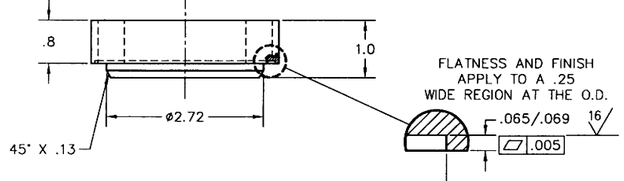

97 MODIFIED VALVE WELDMENT
SCALE: FULL

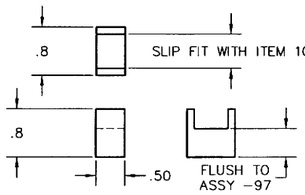

11 SUPPORT
SCALE: FULL

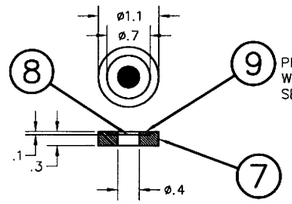

96 FILTER BUSHING
SCALE: FULL

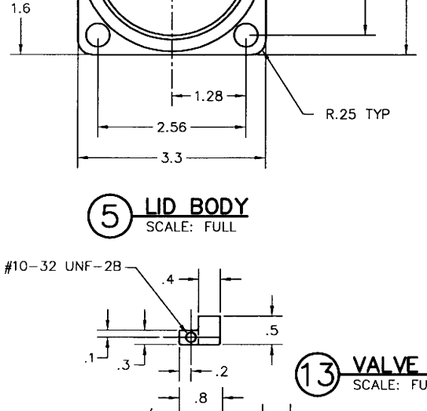

5 LID BODY
SCALE: FULL

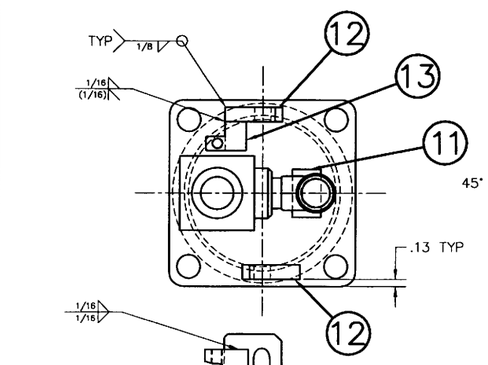

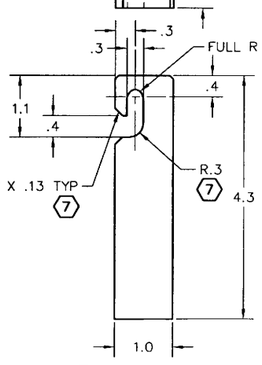

12 LIFT LUG
SCALE: FULL

13 VALVE LOCK
SCALE: FULL

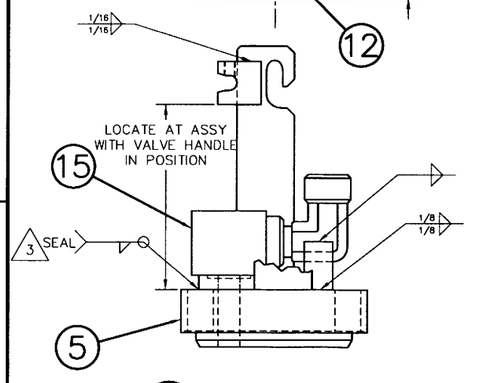

98 LID WELDMENT
SCALE: FULL

4. UNLESS OTHERWISE NOTED, ALL WELDING TO BE IN ACCORDANCE WITH SECTION IX OF THE ASME PRESSURE VESSEL CODE.

7 3 PENETRANT TEST FINAL PASS. EXAMINE PER ASME SECTION V, ARTILCE 6. ACCEPTANCE PER ASME SECTION III, ARTICLE NG-5350.

2 UNVALVED FITTING SNAPTITE #SPEAN4-4M MAY BE SUBSTITUTED.

1 STEEL STAMP/ENGRAVE APPROX. AS SHOWN. LETTERS .25 HIGH X .03 MAX. DEEP, FILL WITH BLACK WEATHER RESISTANT PAINT. XXX-XXX-XXX REPRESENTS CUSTOMER IDENTIFICATION NUMBER. "nnn" SERIALIZES THE COMPONENT "aa" REPRESENTS THE LENGTH ROUNDED TO THE NEAREST INCH.

NOTES: aa-nnn SHALL BE DETERMINED AS SPECIFIED BY THE FAB. SPEC.

96	97	98	99	ITEM	NAME	MATERIAL	SPEC	DRAWING No.	DESCRIPTION
		1		15	MOD. VALVE WELDMENT			315-087-97	
			1	14	SOCKET HD SET SCREW	ST. STL.	COML		10-32 X 3/8 LONG
		1		13	VALVE LOCK	304 ST. STL.	ASTM A276/A240		BAR/PLATE
		2		12	LIFT LUG	304 ST. STL.	ASTM A276/A240		BAR/PLATE
		1		11	SUPPORT	304 ST. STL.	ASTM A276/A240		BAR/PLATE
	1			10	STREET ELBOW	ST. STL.	COML		CAJON #SS-4-SE
1				9	RETAINER	304 ST. STL.	ASTM A276/ASME SA479		BAR/PLATE
1				8	FILTER	ST. STL.	COML		400 MESH
1				7	BUSHING	304 ST. STL.	ASME SA479/SA240		BAR/PLATE
	1			6	DIAPHRAGM VALVE	ST. STL.	COML		
		1		5	LID BODY	304 ST. STL.	ASME SA240		PLATE
	1			4	FILTER BUSHING			315-087-96	
			1	3	HANDLE	304 ST. STL.	ASTM A276		BAR
			1	2	NIPPLE	ST. STL.	COML		SNAPTITE #SVEAN4-4M
			1	1	LID WELDMENT			315-087-98	
ASSY	ASSY	ASSY	ASSY	QUANTITY					

UNLESS OTHERWISE STATED
DIMENSIONING AND TOLERANCING SHALL BE PER ASME Y14.5M-94, UNSPECIFIED DIMENSIONAL TOLERANCES ARE SHOWN BELOW.
ALL THREAD DEPTH CALLOUTS ARE TO BE CONSIDERED AS A MIN DEPTH OF PERFECT THREADS. THE ACTUAL DEPTH OF THE THREADS IS NOT SUBJECT TO TOLERANCE CONTROLS.

XXX	UNDER 3	±.003
	3-12	±.005
	OVER 12	±.010
XX	UNDER 6	±.02
	6-18	±.03
	OVER 18	±.06
X	ALL	±.1
FRACTIONAL ±1/8		
ANGLES ±0.5°		

WEIGHTS ARE APPROXIMATE AND ARE TO BE USED FOR HANDLING PURPOSES ONLY.
ALL DIMENSIONS ARE IN INCHES
BORDER SIZE: F (40 X 28)
ALL UNSPECIFIED TOOL RADII: .015 - .030
BREAK ALL SHARP CORNERS .015 - .030
MACHINED SURFACES TO BE ▽ OR BETTER
NEXT ASSEMBLY: 315-40-086
DRAWING TYPE: LICENSE

GROUP	NAME	DATE
PREPARER	Karin Matthews	12/21/11
CHECKER	Ryan Dunn	12-21-11
PROJECT MANAGER	Kathy Gallegos	12/30/11
ENGINEERING	Will Ryle	12-29-11
LICENSING	Anthony L Pate	12/22/11
QUALITY	Royce Barr	12/29/12

NAC INTERNATIONAL

CANISTER LID ASSEMBLY, SEALED FAILED FUEL CAN, TRIGA FUEL

PROJECT	315-40	DRAWING	087	REV 7
SCALE FULL	WEIGHT 5#	SH 1 OF 1	1:33PM 12-19-2011	

R-217265

DCR No	REVISION
0	INITIAL ISSUE
1	INC DCR 0A
2	INC DCR 1A
3	INC DCR 2A

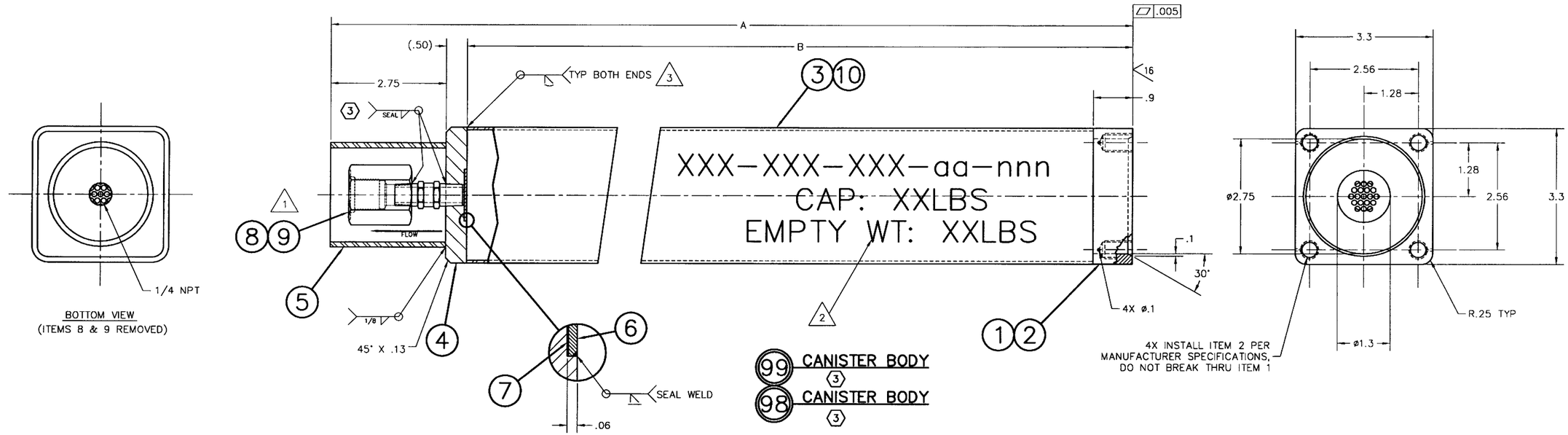

BOTTOM VIEW
(ITEMS 8 & 9 REMOVED)

99 CANISTER BODY 3

98 CANISTER BODY 3

ASSY	A	B
-99	27.5	24.3
-98	42.6	39.4

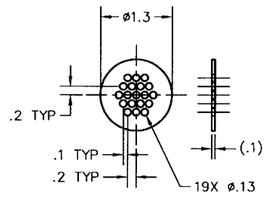

6 COVER PLATE

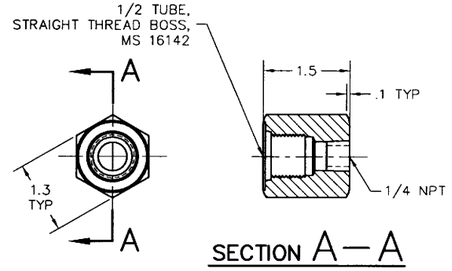

SECTION A-A

8 PLUG ADAPTER

4. UNLESS OTHERWISE NOTED, ALL WELDING TO BE IN ACCORDANCE WITH SECTION IX OF THE ASME PRESSURE VESSEL CODE.

3 3 PENETRANT TEST FINAL PASS. EXAMINE PER ASME SECTION V, ARTICLE 6. ACCEPTANCE PER ASME SECTION III, ARTICLE NG-5350.

2 ENGRAVE APPROX. AS SHOWN. LETTERS .5 HIGH X .03 MAX. DEEP, FILL WITH BLACK WEATHER RESISTANT PAINT. XXX-XXX-XXX REPRESENTS CUSTOMER IDENTIFICATION NUMBER. "nnn" SERIALIZES THE COMPONENT. "aa" REPRESENTS THE LENGTH ROUNDED TO THE NEAREST INCH. aa-nnn SHALL BE DETERMINED AS SPECIFIED BY THE FAB. SPEC.

1 DISASSEMBLE ITEM 9 PRIOR TO WELDING AND MINIMIZE HEAT TO HOUSING.

NOTES

95	96	97	98	99	ITEM	NAME	MATERIAL	SPEC	DRAWING No	DESCRIPTION
ASSY	ASSY	ASSY	ASSY	ASSY	QUANTITY					
			1		10	BODY TUBE	304 ST. STL.	ASME SA249		3 1/4 OD X .065 WALL TUBE
			1	1	9	CHECK VALVE	ST. STL.	COML		NUPRO #SS-4CP2-1
			1	1	8	PLUG ADAPTER	304 ST. STL.	ASME SA240/SA276		PLATE/BAR
			1	1	7	SCREEN	ST. STL.	COML		400 MESH
			1	1	6	COVER PLATE	304 ST. STL.	ASTM A276/ASME SA479		PLATE/BAR
			1	1	5	BOTTOM TUBE	304 ST. STL.	ASTM A269/A249		2 1/2 OD X 1/8 WALL TUBE
			1	1	4	BOTTOM PLATE	304 ST. STL.	ASME SA240/SA276		PLATE/BAR
			1	1	3	BODY TUBE	304 ST. STL.	ASME SA249		3 1/4 OD X .065 WALL TUBE
			4	4	2	HELICAL INSERT	ST. STL.	COML		HELI-COIL #1185-6CNY-0562
			1	1	1	TOP PLATE	304 ST. STL.	ASME SA240/SA276		PLATE/BAR

DIMENSIONING AND TOLERANCING SHALL BE PER ANSI Y14.5-94
UNSPECIFIED DIMENSIONS AND TOLERANCES SHOWN BELOW.
DIMENSIONS ARE IN INCHES. FRACTIONAL TOLERANCE: ±1/8

SYM.	GEOMETRY	.XXX	TOL.	.XX	TOL.
	FLATNESS	UNDER 3		UNDER 6	±.04
		3-12		6-18	±.06
	STRAIGHTNESS	OVER 12		OVER 18	±.09
		.X	±.1	ANGLES ±.5°	
	ANGULARITY	ALL UNSPECIFIED TOOL RADII .01 - .03			
	PERPENDICULARITY	BREAK ALL SHARP CORNERS .01 - .03			
	PARALLELISM	ALL UNSPECIFIED MACHINED SURFACES SHALL BE 63 OR BETTER			
	CONCENTRICITY	NEXT ASSEMBLY: 315-40-086			
	TRUE POSITION	DRAWING TYPE LICENSE			

GROUP	NAME	DATE
PREPARER		12/13/11
CHECKER		12/23/11
PROJECT MANAGER		12/28/11
ENGINEERING		12/28/11
LICENSING		12/28/11
QUALITY		1/22/12

NAC INTERNATIONAL

CANISTER BODY ASSEMBLY, SEALED FAILED FUEL CAN, TRIGA FUEL

PROJECT	DRAWING	REV
315-40	088	3

SCALE N.T.S. 3 | EST WT 3 | SH 1 OF 1 | 1:33PM 12-15-2011

R-209026

DCR No.	REVISION
0	INITIAL ISSUE
1	INC DCR 0A
2	INC DCR 1A
3	INC DCR 2A
4	INC DCR 3A

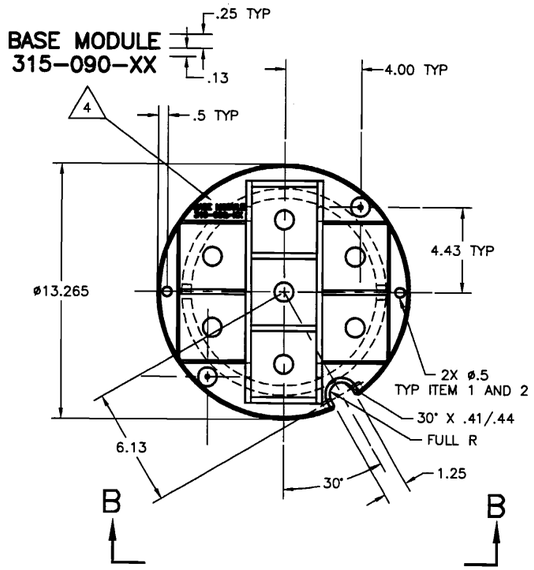

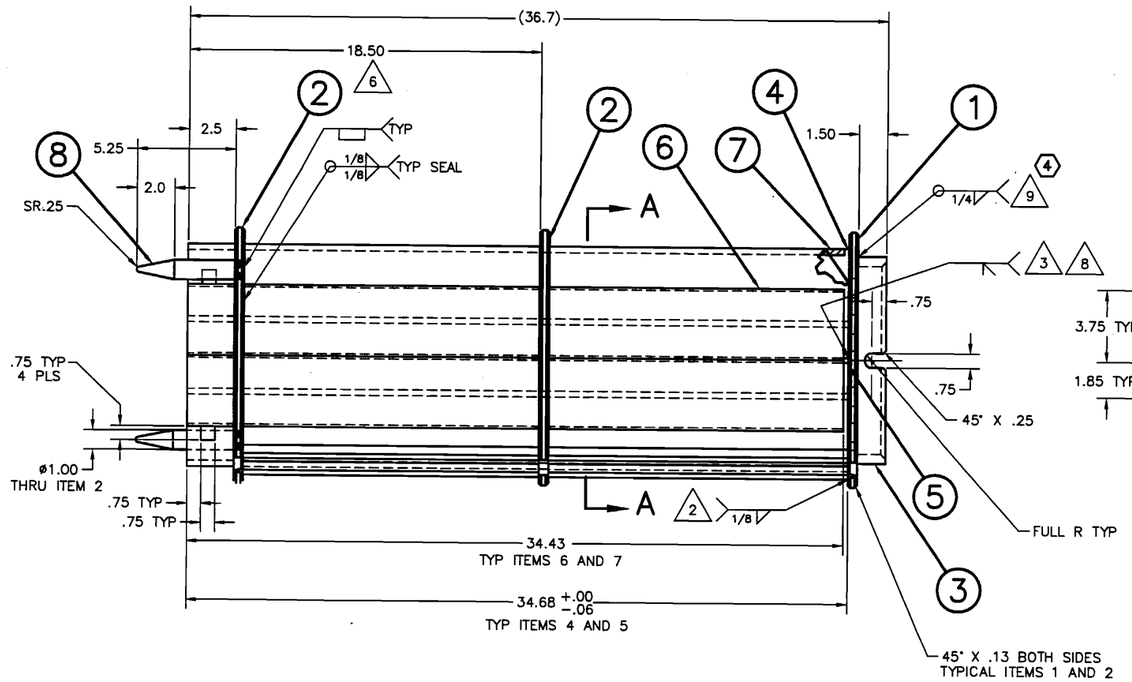

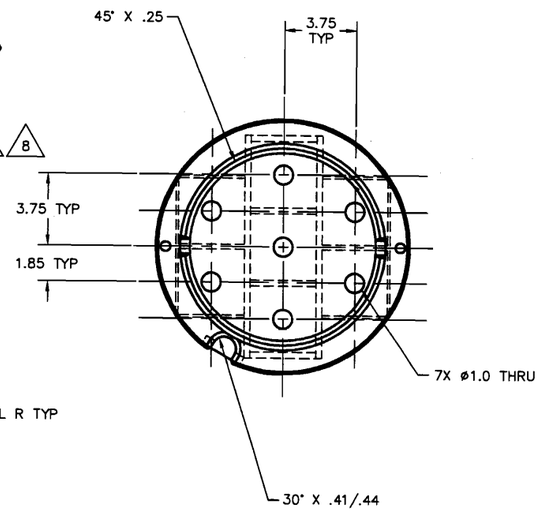

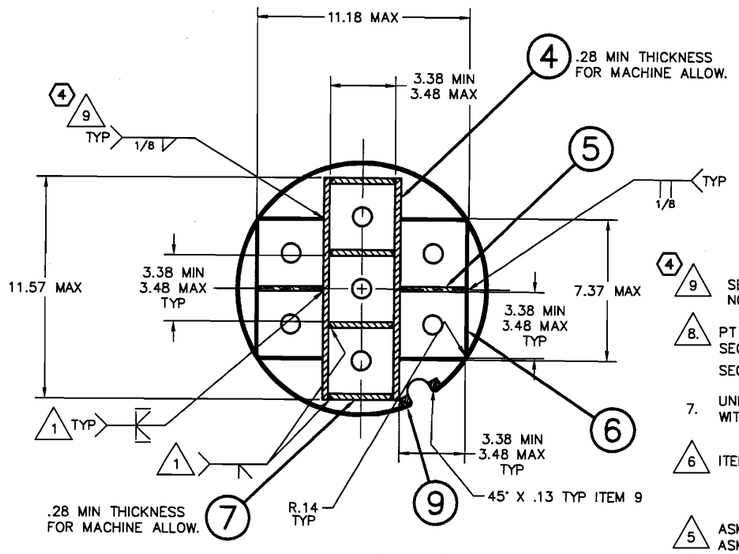

SECTION A—A

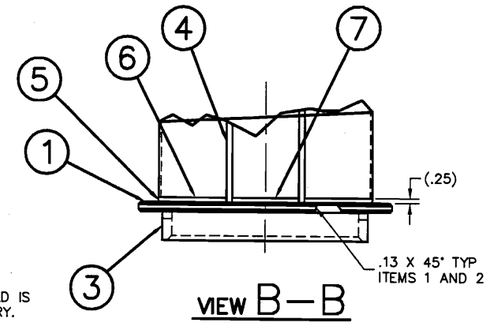

VIEW B—B

4 9 SEAL WELD IN LOCATIONS WHERE DEFINED WELD IS NOT ACHIEVABLE DUE TO COMPONENT GEOMETRY.

8. PT FOLLOWING LOAD TEST. EXAMINE PER ASME SECTION V, ARTICLE 6, WITH ACCEPTANCE PER SECTION III, ARTICLE NG-5350.

7. UNLESS OTHERWISE NOTED, WELDING TO BE IN ACCORDANCE WITH SECTION IX OF THE ASME PRESSURE VESSEL CODE.

6 ITEM 2 MAY BE FABRICATED FROM MULTIPLE PIECES.

5 ASME SA479 MATERIAL MAY BE SUBSTITUTED FOR ASME SA240 FOR THIS ITEM.

4 STEEL STAMP/ENGRAVE .03 DEEP X .25 HIGH. FILL WITH BLACK WEATHER RESISTANT PAINT. SERIALIZE MULTIPLE UNITS STARTING WITH 01.

3 CONTINUOUS FULL PENETRATION GROOVE WELD BETWEEN ITEMS 4,5 AND ITEM 1. WELD PRIOR TO ATTACHMENT OF ITEM 6.

2 RADIAL INSIDE SURFACE, SEAL WELD PLATE OUTER EDGE, BOTH ENDS ITEM 9.

1 MIN 1/4 INCH PENETRATION CONTINUOUS.

NOTES:

ITEM	NAME	MATERIAL	SPEC	DRAWING No.	DESCRIPTION
9	GUIDE	304 ST.STL.	ASME SA479		1/2 SQ BAR
8	GUIDE PIN	304 ST.STL.	ASME SA479		1 DIA BAR
7	DIVIDER	304 ST.STL.	ASME SA240		5/16 PLATE
6	SM. SIDE	304 ST.STL.	ASME SA240		11 GA SHEET
5	DIVIDER	304 ST.STL.	ASME SA240		1/4 PLATE
4	WEB	304 ST.STL.	ASME SA240		5/16 PLATE
3	BASE	304 ST.STL.	ASME SA312		10 SCH.80S PIPE
2	SUPPORT PLATE	304 ST.STL.	ASME SA240		1/2 PLATE
1	BASE PLATE	304 ST.STL.	ASME SA240		1/2 PLATE

95	96	97	98	99
ASSY	ASSY	ASSY	ASSY	ASSY

QUANTITY

DIMENSIONING AND TOLERANCING SHALL BE PER ANSI Y14.5-82
UNSPECIFIED DIMENSIONS AND TOLERANCES SHOWN BELOW.
DIMENSIONS ARE IN INCHES. FRACTIONAL TOLERANCE: ±1/8

SYM.	GEOMETRY	.XXX	TOL.	.XX	TOL.
	FLATNESS	UNDER 3		UNDER 6	±.04
	STRAIGHTNESS	3-12		6-18	±.06
	ANGULARITY	OVER 12		OVER 18	±.09
	PERPENDICULARITY	.X	±.1	ANGLES	±.5°
	PARALLELISM	ALL UNSPECIFIED TOOL RADII: .01 - .03			
	CONCENTRICITY	BREAK ALL SHARP CORNERS .01 - .03			
	TRUE POSITION	ALL UNSPECIFIED MACHINED SURFACES SHALL BE ▽ OR BETTER			

NEXT ASSEMBLY:

DRAWING TYPE: LICENSE

GROUP	NAME	DATE
PREPARER	[signature]	4.14.09
CHECKER	[signature]	4/14/09
PROJECT MANAGER	[signature]	4/14/09
ENGINEERING	[signature]	4/14/09
LICENSING	[signature]	4/14/09
QUALITY	[signature]	4/14/09

NAC INTERNATIONAL

WELDMENT,
7 ELEMENT BASKET,
35 MTR FUEL BASE MODULE,

PROJECT	DRAWING	REV
315-40	090	4

SCALE 1/3 | EST.WT. | SH 1 OF 1 | 12:55PM 4-14-2009

NAC DCR# 03

K-209027

DCR No.	REVISION
0	INITIAL ISSUE
1	INC DCR 0A
2	INC DCR 1A
3	INC DCR 2A
4	INC DCR 3A

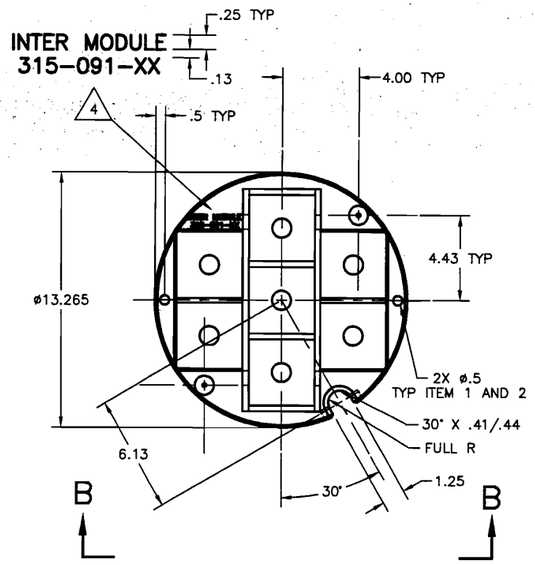

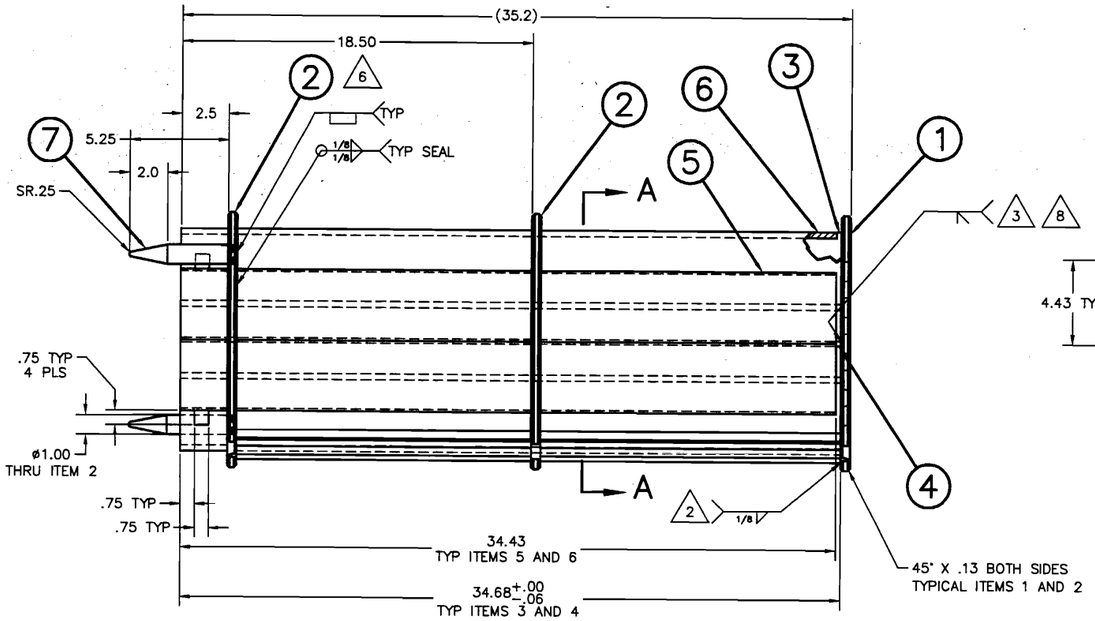

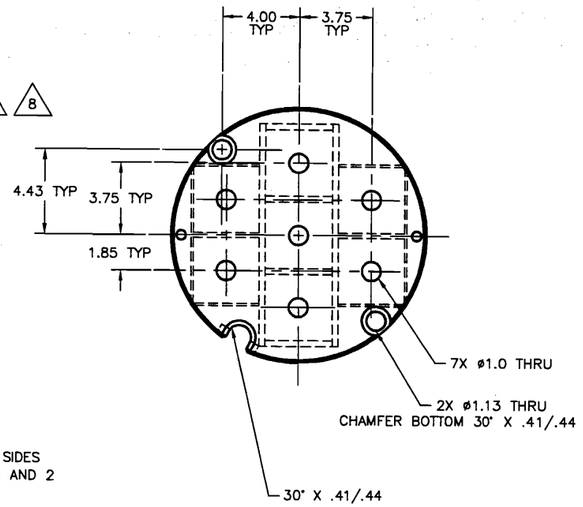

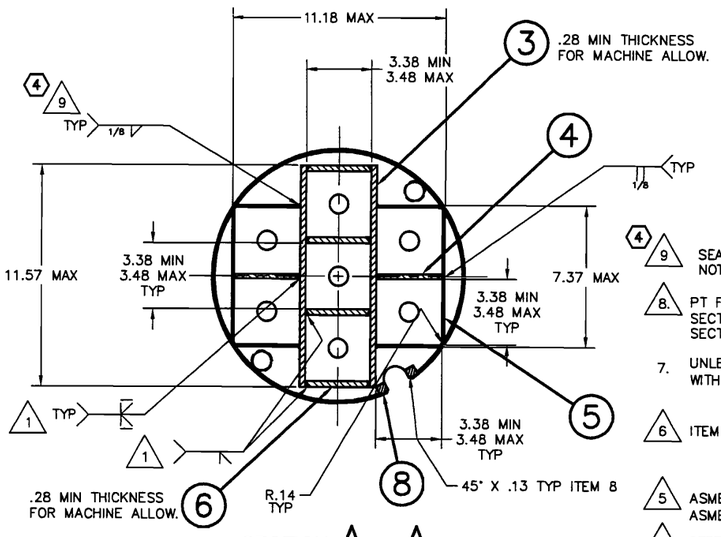

SECTION A–A

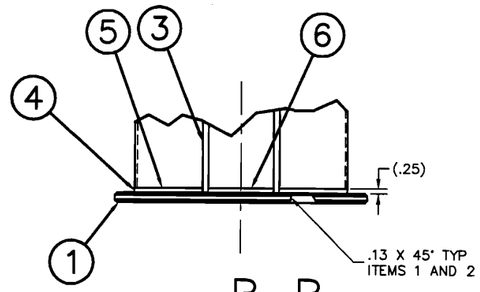

VIEW B–B

9 SEAL WELD IN LOCATIONS WHERE DEFINED WELD IS NOT ACHIEVABLE DUE TO COMPONENT GEOMETRY.

8. PT FOLLOWING LOAD TEST. EXAMINE PER ASME SECTION V, ARTICLE 6, WITH ACCEPTANCE PER SECTION III, ARTICLE NG-5350.

7. UNLESS OTHERWISE NOTED, WELDING TO BE IN ACCORDANCE WITH SECTION IX OF THE ASME PRESSURE VESSAL CODE.

6 ITEM 2 MAY BE FABRICATED FROM MULTIPLE PIECES.

5 ASME SA479 MATERIAL MAY BE SUBSTITUTED FOR ASME SA240 FOR THIS ITEM.

4 STEEL STAMP/ENGRAVE .03 DEEP X .25 HIGH. FILL WITH BLACK WEATHER RESISTANT PAINT. SERIALIZE MULTIPLE UNITS STARTING WITH 01.

3 CONTINUOUS FULL PENETRATION GROOVE WELD BETWEEN ITEMS 3,4 AND ITEM 1. WELD PRIOR TO ATTACHMENT OF ITEM 5.

2 RADIAL INSIDE SURFACE, SEAL WELD PLATE OUTER EDGE, BOTH ENDS ITEM 8.

1 MIN 1/4 INCH PENETRATION CONTINUOUS.

NOTES:

95	96	97	98	99	ITEM	NAME	MATERIAL	SPEC	DRAWING No.	DESCRIPTION
ASSY	ASSY	ASSY	ASSY	ASSY						
QUANTITY										
				4	8	GUIDE	304 ST.STL.	ASME SA479		1/2 SQ BAR
				2	7	GUIDE PIN	304 ST.STL.	ASME SA479		1 DIA BAR
				4	6	DIVIDER	304 ST.STL.	ASME SA240		5/16 PLATE
				4	5	SM. SIDE	304 ST.STL.	ASME SA240		11 GA SHEET
				2	4	DIVIDER	304 ST.STL.	ASME SA240		1/4 PLATE
				2	3	WEB	304 ST.STL.	ASME SA240		5/16 PLATE
				2	2	SUPPORT PLATE	304 ST.STL.	ASME SA240		1/2 PLATE
				1	1	BASE PLATE	304 ST.STL.	ASME SA240		1/2 PLATE

DIMENSIONING AND TOLERANCING SHALL BE PER ANSI Y14.5-82
UNSPECIFIED DIMENSIONS AND TOLERANCES SHOWN BELOW.
DIMENSIONS ARE IN INCHES. FRACTIONAL TOLERANCE: ±1/8

SYM.	GEOMETRY	XXX	TOL.	XX	TOL.
	FLATNESS	UNDER 3		UNDER 6	±.04
		3-12		6-18	±.06
	STRAIGHTNESS	OVER 12		OVER 18	±.09
	ANGULARITY	X	±.1	ANGLES ±.5°	
	PERPENDICULARITY	ALL UNSPECIFIED TOOL RADII .01 - .03			
	PARALLELISM	BREAK ALL SHARP CORNERS .01 - .03			
	CONCENTRICITY	ALL UNSPECIFIED MACHINED SURFACES SHALL BE ▽ OR BETTER			
	TRUE POSITION	NEXT ASSEMBLY:			
		DRAWING TYPE: LICENSE			

GROUP	NAME	DATE
PREPARER	Linda Lefebvre	4.14.09
CHECKER		4/14/09
PROJECT MANAGER		4/14/09
ENGINEERING	Nat Pfeil	4/14/09
LICENSING	Andy Pace	4/14/09
QUALITY	Roy Bass	4/14/09

NAC INTERNATIONAL

WELDMENT,
7 ELEMENT BASKET, 35
MTR FUEL INTERMEDIATE MODULE

PROJECT 315-40 | DRAWING 091 | REV 4
SCALE 1/3 | EST.WT. | SH 1 OF 1 | 1:02PM 4-14-2009

NAC DOCUMENT

K-209028

DCR No.	REVISION
0	INITIAL ISSUE
1	INC DCR 0A
2	INC DCR 1A
3	INC DCR 2A
4	INC DCR 3A

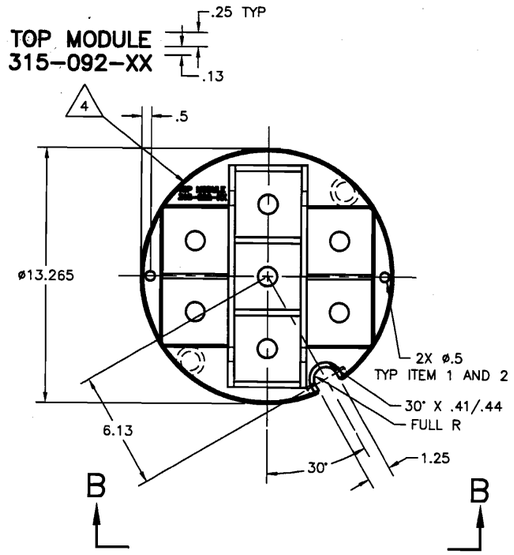

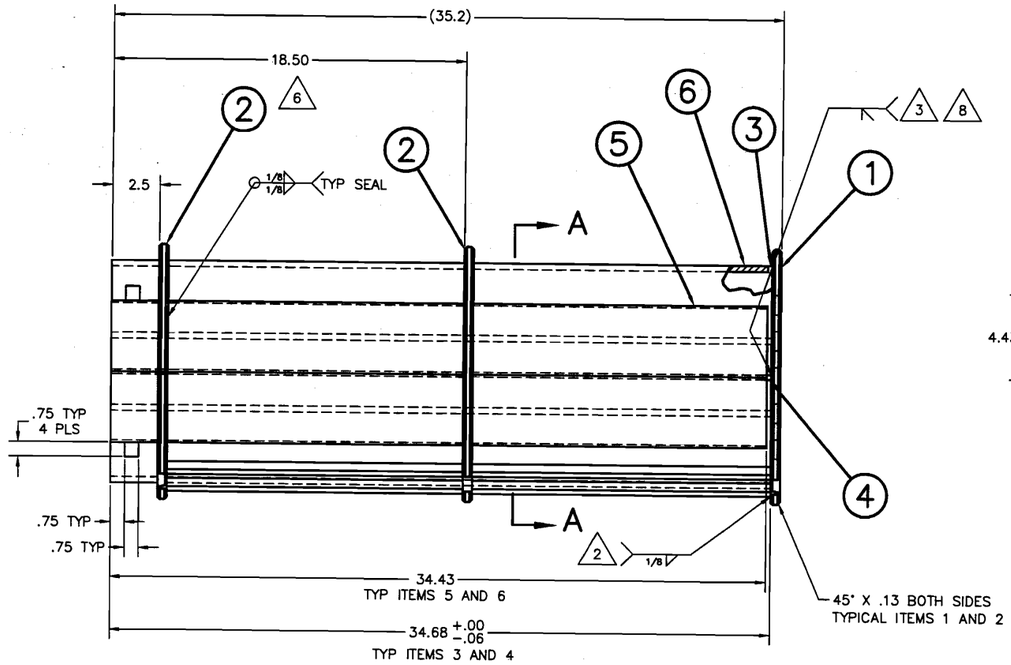

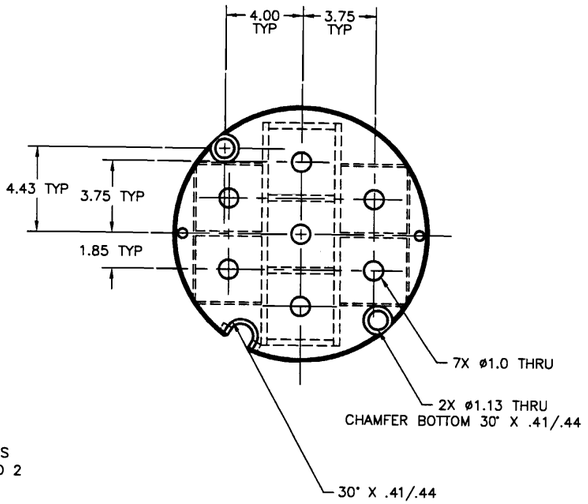

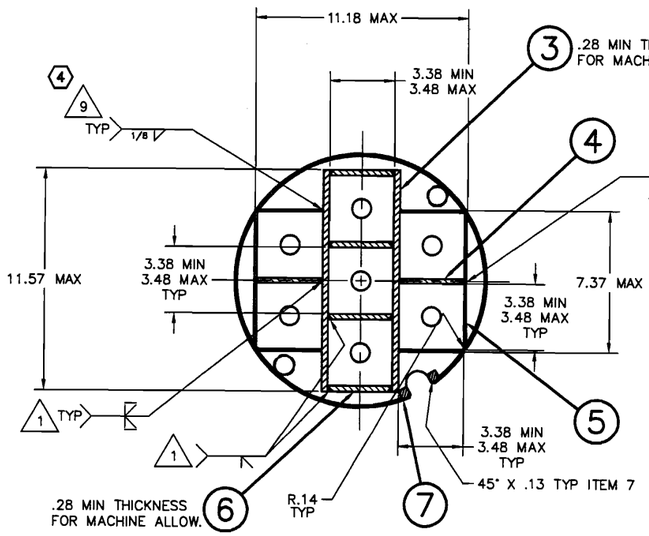

SECTION A—A

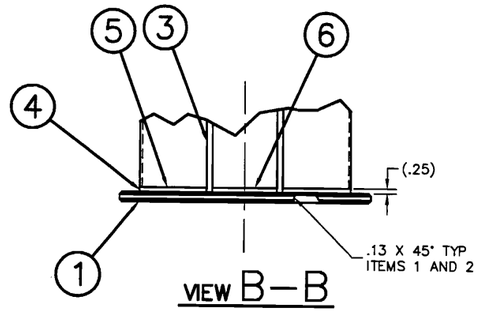

VIEW B—B

4

9 SEAL WELD IN LOCATIONS WHERE DEFINED WELD IS NOT ACHIEVABLE DUE TO COMPONENT GEOMETRY.

8. PT FOLLOWING LOAD TEST. EXAMINE PER ASME SECTION V, ARTICLE 6, WITH ACCEPTANCE PER SECTION III, ARTICLE NG-5350.

7. UNLESS OTHERWISE NOTED, WELDING TO BE IN ACCORDANCE WITH SECTION IX OF THE ASME PRESSURE VESSEL CODE.

6 ITEM 2 MAY BE FABRICATED FROM MULTIPLE PIECES.

5 ASME SA479 MATERIAL MAY BE SUBSTITUTED FOR ASME SA240 FOR THIS ITEM.

4 STEEL STAMP/ENGRAVE .03 DEEP X .25 HIGH. FILL WITH BLACK WEATHER RESISTANT PAINT. SERIALIZE MULTIPLE UNITS STARTING WITH 01.

3 CONTINUOUS FULL PENETRATION GROOVE WELD BETWEEN ITEMS 3,4 AND ITEM 1. WELD PRIOR TO ATTACHMENT OF ITEM 5.

2 RADIAL INSIDE SURFACE, SEAL WELD PLATE OUTER EDGE, BOTH ENDS ITEM 7.

1 MIN 1/4 INCH PENETRATION CONTINUOUS.

NOTES:

				4	7	GUIDE	304 ST.STL.	ASME SA479		1/2 SQ BAR
5				4	6	DIVIDER	304 ST.STL.	ASME SA240		5/16 PLATE
5				4	5	SM. SIDE	304 ST.STL.	ASME SA240		11 GA SHEET
				2	4	DIVIDER	304 ST.STL.	ASME SA240		1/4 PLATE
				2	3	WEB	304 ST.STL.	ASME SA240		5/16 PLATE
				2	2	SUPPORT PLATE	304 ST.STL.	ASME SA240		1/2 PLATE
				1	1	BASE PLATE	304 ST.STL.	ASME SA240		1/2 PLATE
95	96	97	98	99	ITEM	NAME	MATERIAL	SPEC	DRAWING No.	DESCRIPTION
ASSY	ASSY	ASSY	ASSY	ASSY						
QUANTITY										

DIMENSIONING AND TOLERANCING SHALL BE PER ANSI Y14.5-82
UNSPECIFIED DIMENSIONS AND TOLERANCES SHOWN BELOW.
DIMENSIONS ARE IN INCHES. FRACTIONAL TOLERANCE: ±1/8

SYM.	GEOMETRY	.XXX	TOL.	.XX	TOL.
▱	FLATNESS	UNDER 3		UNDER 6	±.04
		3-12		6-18	±.08
	STRAIGHTNESS	OVER 12		OVER 18	±.09
∠	ANGULARITY	.X	±.1	ANGLES ±.5°	
⊥	PERPENDICULARITY	ALL UNSPECIFIED TOOL RADII: .01 - .03			
//	PARALLELISM	BREAK ALL SHARP CORNERS .01 - .03			
◎	CONCENTRICITY	ALL UNSPECIFIED MACHINED SURFACES SHALL BE ▽ OR BETTER			
⌖	TRUE POSITION	NEXT ASSEMBLY:			
		DRAWING TYPE: LICENSE			

GROUP	NAME	DATE
PREPARER	Ramin Bonyadi	4.14.09
CHECKER		4/14/09
PROJECT MANAGER		4/14/09
ENGINEERING		4/14/09
LICENSING		4/14/09
QUALITY		4/14/09

NAC INTERNATIONAL

WELDMENT, 7 ELEMENT BASKET, 35 MTR FUEL TOP MODULE

PROJECT	DRAWING	REV
315-40	092	4
SCALE 1/3	EST.WT.	SH 1 OF 1

1:04PM 4-14-2009

K-206264

REV	CHANGE
0	INITIAL ISSUE
1	INC DCR 0A
2	INC DCR 1A
3	INC DCR(L) 2A
4	INC DCR(L) 3A

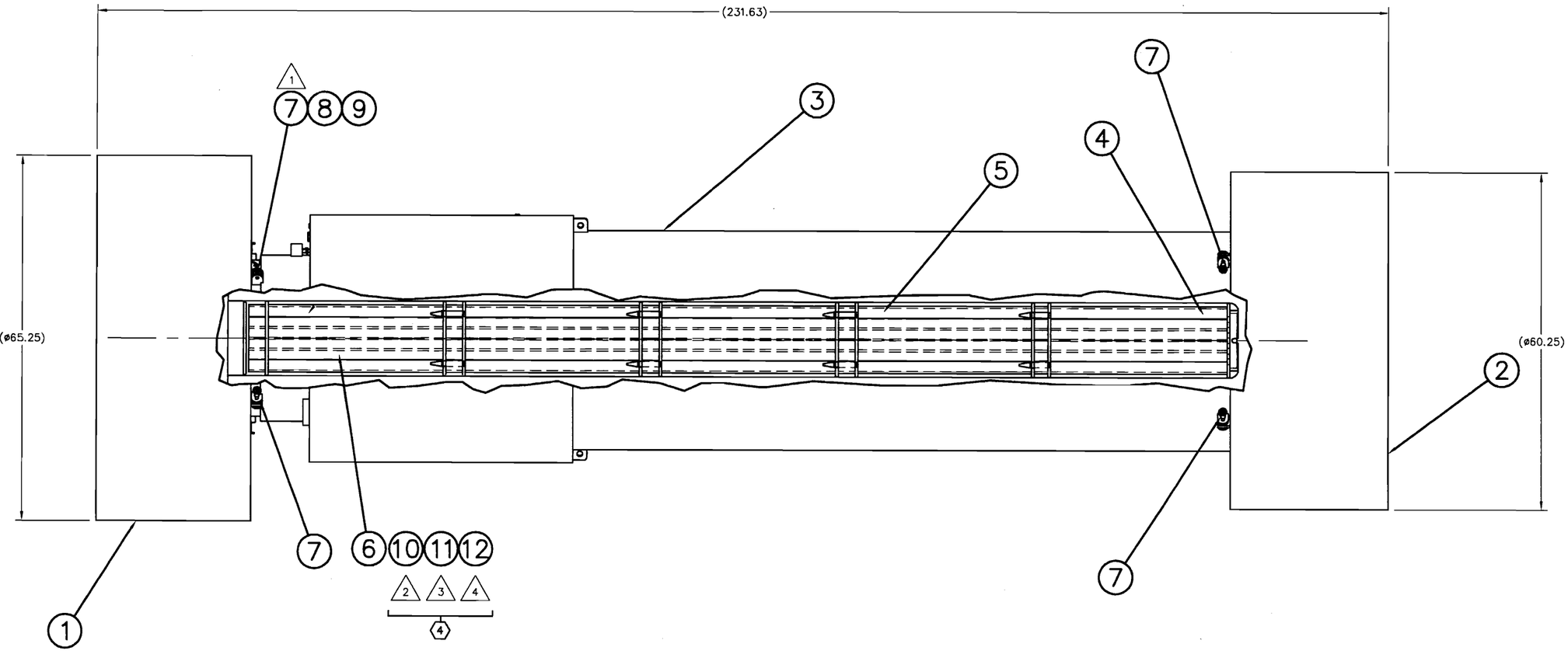

4 5. MAXIMUM WEIGHT OF FUEL ASSEMBLY, SPACERS AND DAMAGED FUEL CANS, AS APPLICABLE, SHALL BE 80 LB. PER BASKET MODULE CELL.

4 4 INSTALL PLATE SPACERS AT BASE AND TOP OF BASKET MODULE CELL AS REQUIRED TO ENSURE HEU MTR FUEL ELEMENTS (>380g ^{235}U/ELEMENT) HAVE A MINIMUM OF 2.0 cm (0.8 inch) OF NON-FUEL MATERIAL AT THE ENDS OF EACH ELEMENT.

4 3 INSTALL AXIAL FUEL SPACERS IN BASKET MODULE CELLS TO ADJUST FUEL ELEMENT HEIGHT AS REQUIRES TO FACILITATE FUEL ELEMENT HANDLING.

4 2 INSTALL CELL BLOCK SPACERS IN BASKET MODULE CELL POSITION #'s 1,2 AND 3 FOR THE TRANSPORT OF MTR FUEL ELEMENTS HAVING GREATER THAN 470g ^{235}U PER ELEMENT (OR >22g/PLATE).

1 AT LEAST 1 OUT OF 8 ITEM 7 (BALL-LOK PIN) TO BE MODIFIED PER DWG. 315-40-01.

NOTES:

97	98	99	ITEM	NAME	MATERIAL	SPEC	DRAWING No.	DESCRIPTION
ASSY	ASSY	ASSY						
QUANTITY								
		A/R	12	PLATE SPACER			315-40-85-99	
		A/R	11	AXIAL FUEL SPACER			315-40-85-98	
		A/R	10	CELL BLOCK SPACER			315-40-85-97	
		1	9	SEAL			315-40-01-11	
		A/R	8	WIRE			315-40-01-10	
		8	7	BALL-LOK PIN			315-40-01-8	
		1	6	TOP BASKET			315-40-92-99	
		3	5	INTER. BASKET			315-40-91-99	
		1	4	BASE BASKET			315-40-90-99	
		1	3	CASK ASSEMBLY			315-40-02-99	
		1	2	LOWER IMPACT LIMITER			315-40-06-99	
		1	1	UPPER IMPACT LIMITER			315-40-05-99	

UNLESS OTHERWISE STATED
DIMENSIONING AND TOLERANCING SHALL BE PER ASME Y14.5M-94, UNSPECIFIED DIMENSIONAL TOLERANCES ARE SHOWN BELOW.
ALL THREAD DEPTH CALLOUTS ARE TO BE CONSIDERED AS A MIN. DEPTH OF PERFECT THREADS. THE ACTUAL DEPTH OF THE THREADS IS NOT SUBJECT TO TOLERANCE CONTROLS.

.XXX	UNDER 3	±.003
	3-12	±.005
	OVER 12	±.010
.XX	UNDER 6	±.02
	6-18	±.03
	OVER 18	±.06
X	ALL	±.1
FRACTIONAL		±1/8
ANGLES		±0.5°

WEIGHTS ARE APPROXIMATE AND ARE TO BE USED FOR HANDLING PURPOSES ONLY.
ALL DIMENSIONS ARE IN INCHES
BORDER SIZE: F (40 X 28)
ALL UNSPECIFIED TOOL RADII .015 - .030
BREAK ALL SHARP CORNERS .015 - .030
MACHINED SURFACES TO BE 63 OR BETTER
NEXT ASSEMBLY:
DRAWING TYPE: LICENSE

GROUP	NAME	DATE
PREPARER	Lingyan Jonsson	10/11/07
CHECKER	[illegible]	10/11/07
PROJECT MANAGER	[illegible]	10/10/07
ENGINEERING	[illegible]	10/10/07
LICENSING	[illegible]	10/11/07
QUALITY	Ray W. Bass	10/12/07

NAC INTERNATIONAL

LEGAL WEIGHT TRUCK TRANSPORT CASK ASSY 35 MTR ELEMENT

PROJECT	DRAWING	REV
315-40	094	4
SCALE 1/8	WEIGHT	SH 1 OF 1

11:44AM 10-11-2007

NAC DCRM 01

M:\ACADFILE\315\License\31549441.dwg

R-206443

REV	CHANGE
0	INITIAL ISSUE
1	INC DCR 0A
2	INC DCR 1A
3	INC DCR 2A

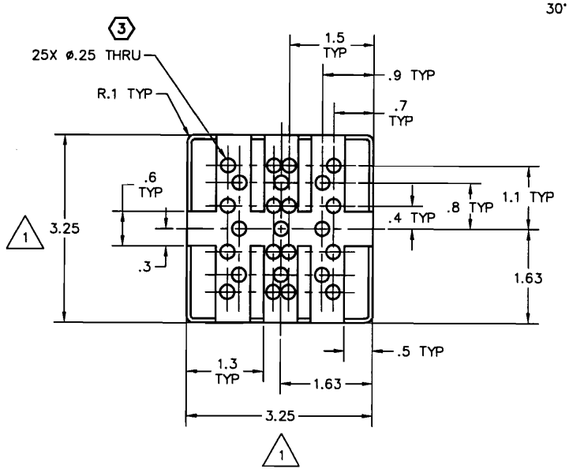

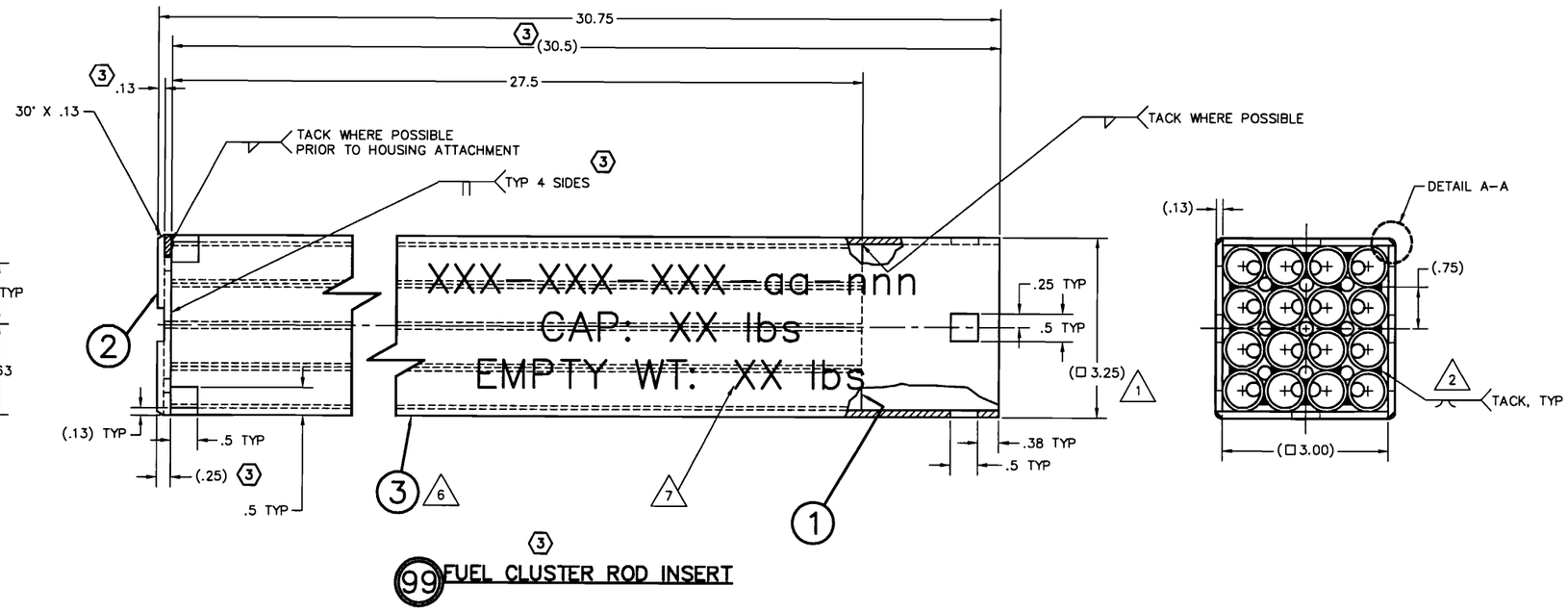

99 FUEL CLUSTER ROD INSERT

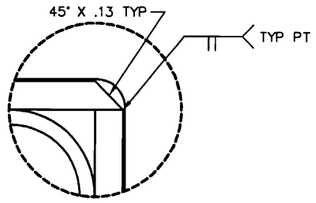

DETAIL A-A
SCALE: 4/1

7 ENGRAVE APPROXIMATELY AS SHOWN. LETTERS .5 HIGH X .03 MAX DEEP, FILL WITH BLACK WEATHER RESISTANT PAINT. XXX-XXX-XXX REPRESENTS CUSTOMER IDENTIFICATION NUMBER. "nnn" SERIALIZES THE COMPONENT. "aa" REPRESENTS THE LENGTH ROUNDED TO THE NEAREST INCH.

6 .09 MINIMUM THICKNESS FOR MACHINE ALLOWANCE.

5. ALL WELDING PROCEDURES AND QUALIFICATIONS ARE TO BE IN ACCORDANCE WITH ASME SECTION IX.

4. WELDS WHICH INDICATE PT ARE TO HAVE FINAL PASS INSPECTED IN ACCORDANCE WITH ASME SECTION V, ARTICLE 6. ACCEPTANCE PER ASME SECTION III, NG-5350.

3. TACK WELDS ARE FOR ASSEMBLY ONLY. WELD EXAMINATIONS ARE NOT REQUIRED.

2 TACK WELD ITEM 1, TUBE(S), TOGETHER ON AT LEAST TWO QUADRANTS OF EACH TUBE. INCLUDE AT LEAST 1" OF WELD FOR EVERY 6" OF MATERIAL ALONG THE LENGTH OF THE TUBE. ENSURE WELDS DO NOT INTERFERE W/ ITEM 3, HOUSING.

1 THE FINISHED INSERT MUST BE INSERTED AND EXTRACTED FREELY FROM A NOMINAL 3.37 SQUARE X 45.0 LONG OPENING.

NOTES:

		4	3	HOUSING	6061-T6 AL	ASTM B209/B221		1/8 PLATE/BAR
3		1	2	BOTTOM	6061-T6 AL	ASTM B209/B221		1/4 PLATE/BAR
		16	1	TUBE	6061-T6 AL	ASTM B210/B221		3/4 OD X .065 WALL
97	98	99	ITEM	NAME	MATERIAL	SPEC	DRAWING No.	DESCRIPTION
ASSY	ASSY	ASSY						
QUANTITY								

UNLESS OTHERWISE STATED

DIMENSIONING AND TOLERANCING SHALL BE PER ASME Y14.5M-94, UNSPECIFIED DIMENSIONAL TOLERANCES ARE SHOWN BELOW.

ALL THREAD DEPTH CALLOUTS ARE TO BE CONSIDERED AS A MIN. DEPTH OF PERFECT THREADS. THE ACTUAL DEPTH OF THE THREADS IS NOT SUBJECT TO TOLERANCE CONTROLS.

XXX	UNDER 3	±.003
	3-12	±.005
	OVER 12	±.010
XX	UNDER 6	±.02
	6-18	±.03
	OVER 18	±.06
X	ALL	±.1
FRACTIONAL ±1/8		
ANGLES ±0.5°		

WEIGHTS ARE APPROXIMATE AND ARE TO BE USED FOR HANDLING PURPOSES ONLY

ALL DIMENSIONS ARE IN INCHES

BORDER SIZE: F (40 X 28)

ALL UNSPECIFIED TOOL RADII: .015 - .030

BREAK ALL SHARP CORNERS .015 - .030

MACHINED SURFACES TO BE ▽ OR BETTER

NEXT ASSEMBLY:

DRAWING TYPE: LICENSE

GROUP	NAME	DATE
PREPARER		1/02/08
CHECKER		1-2-08
PROJECT MANAGER		1/2/08
ENGINEERING		1-2-08
LICENSING		1-2-08
QUALITY		1-3-08

NAC INTERNATIONAL

FUEL CLUSTER ROD INSERT, 3 TRIGA FUEL

PROJECT	315-40	DRAWING	096	REV 3
SCALE FULL	WEIGHT 11#	SH 1 OF 1	2:18PM 1-2-2008	

NAC DCRM 01

M:\ACADFILE\315\License\31549631.dwg

K-208704

REV	CHANGE
0	INITIAL ISSUE
1	INC DCR 0A
2	INC DCR 1A
3	INC DCR 2A
4	INC DCR 3A
5	INC DCR 4A
6	INC DCR 5A

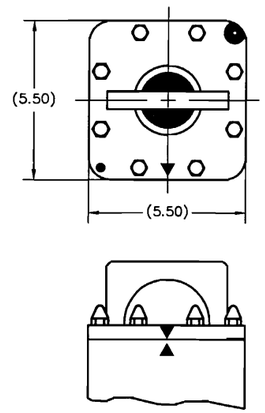

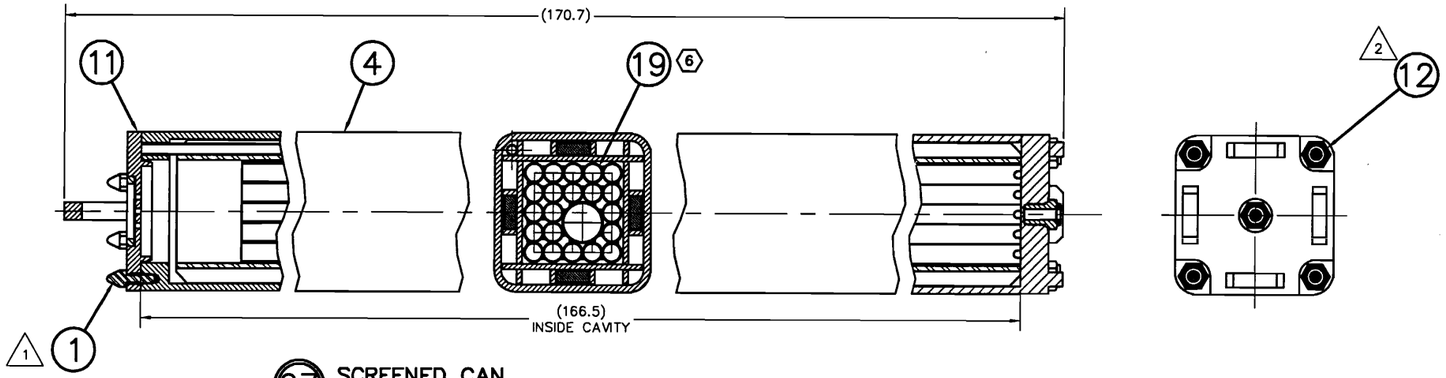

97 SCREENED CAN
(SHOWN WITH 5X5 INSERT W/ WATER ROD) 6

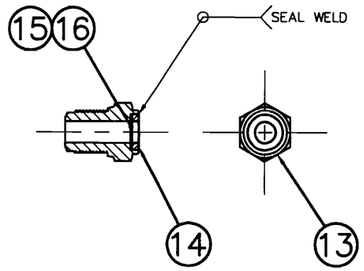

96 SCREENED PLUG ASSEMBLY

	94	95	96	97	98	99	ITEM	NAME	MATERIAL	SPEC	DRAWING No.	DESCRIPTION
	ASSY	ASSY	ASSY	ASSY	ASSY	ASSY		QUANTITY				
6	A/R	A/R		A/R	A/R	A/R	19	5X5 INSERT W/WATER ROD			315-40-102-98	
	1						18	BWR FREE FLOW LID			315-40-100-95	
		1					17	BWR SCREENED LID			315-40-100-96	
			A/R				16	BACKING SCREEN	ST. STL.	COML		
			A/R				15	SCREEN	ST. STL.	COML		
			1				14	SCREEN RETAINER	ST. STL.	COML		
			1				13	PLUG	ST. STL.	COML		
		5		5			12	SCREENED PLUG ASSEMBLY			315-40-098-96	
				1			11	SCREENED LID			315-40-100-97	
					1		10	LID SEAL	VITON	COML		
					2		9	BOSS SEAL	VITON	COML		
	A/R	A/R		A/R	A/R	A/R	8	5X5 INSERT			315-40-102-99	
	A/R	A/R		A/R	A/R	A/R	7	4X4 INSERT			315-40-101-99	
						1	6	FREE FLOW LID			315-40-100-99	
					1		5	SEALED LID			315-40-100-98	
	1	1		1	1	1	4	CAN WELDMENT			315-40-099-99	
					5		3	SEAL	ST. STL.	COML		
					5		2	PLUG	ST. STL.	COML		
	8	8		8	8	8	1	LID BOLT	316 ST. STL.	ASME SA479		1/2 HEX BAR

2 COAT WITH BOSTIK NEVER-SEEZ #NGBT-16 LUBRICANT OR EQUIVALENT AND TORQUE TO 50±2 FT-LBS.

1 TORQUE TO 35±5 IN-LBS

NOTES:

UNLESS OTHERWISE STATED
DIMENSIONING AND TOLERANCING SHALL BE PER ASME Y14.5M-94, UNSPECIFIED DIMENSIONAL TOLERANCES ARE SHOWN BELOW.
ALL THREAD DEPTH CALLOUTS ARE TO BE CONSIDERED AS A MIN. DEPTH OF PERFECT THREADS. THE ACTUAL DEPTH OF THE THREADS IS NOT SUBJECT TO TOLERANCE CONTROLS.

.XXX	UNDER 3	±.003
	3-12	±.005
	OVER 12	±.010
.XX	UNDER 6	±.02
	6-18	±.03
	OVER 18	±.06
.X	ALL	±.1
FRACTIONAL		±1/8
ANGLES		±0.5°

WEIGHTS ARE APPROXIMATE AND ARE TO BE USED FOR HANDLING PURPOSES ONLY
ALL DIMENSIONS ARE IN INCHES
BORDER SIZE: F (40 X 28)
ALL UNSPECIFIED TOOL RADII: .015 - .030
BREAK ALL SHARP CORNERS .015 - .030
MACHINED SURFACES TO BE ▽ OR BETTER
NEXT ASSEMBLY: 315-40-104
DRAWING TYPE: LICENSE

GROUP	NAME	DATE
PREPARER		2/11/09
CHECKER		2/17/09
PROJECT MANAGER		2/17/09
ENGINEERING		2-23-09
LICENSING		2/24/09
QUALITY		2/26/09

NAC INTERNATIONAL

PWR/BWR ROD TRANSPORT CANISTER ASSEMBLY

PROJECT	DRAWING	REV
315-40	098	6
SCALE	WEIGHT	SH 1 OF 3

3 DIPM 2-11-2009

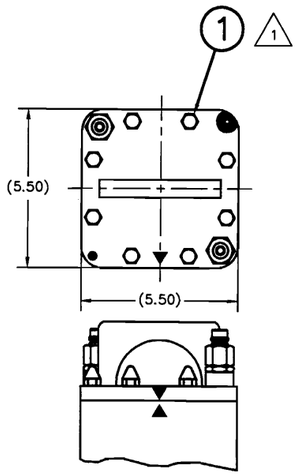

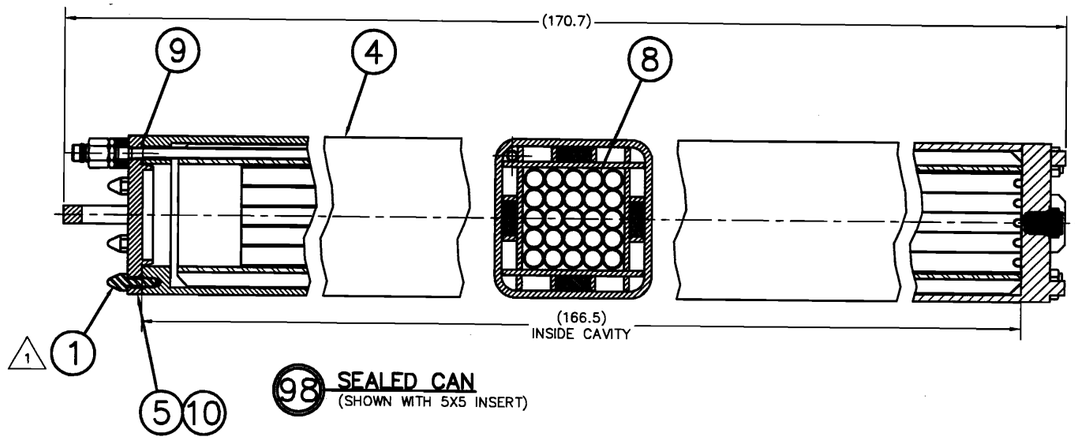

98 SEALED CAN
(SHOWN WITH 5X5 INSERT)

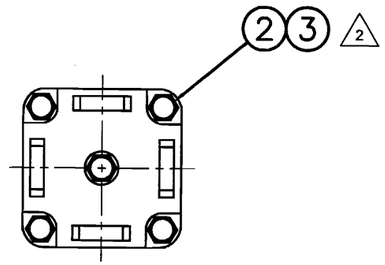

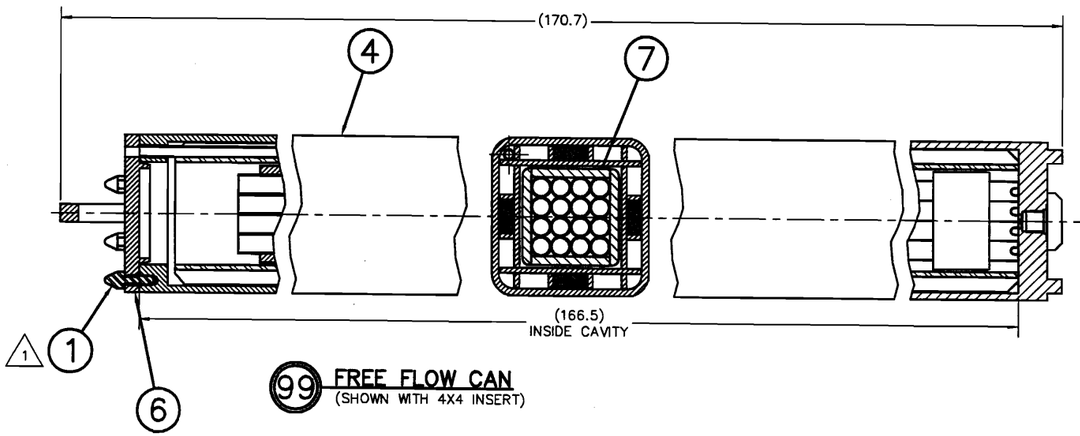

99 FREE FLOW CAN
(SHOWN WITH 4X4 INSERT)

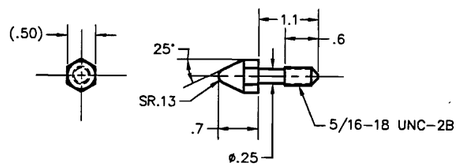

1 LID BOLT

NAC INTERNATIONAL

PWR/BWR ROD
TRANSPORT CANISTER
ASSEMBLY

PROJECT	DRAWING	REV
315-40	098	6
	SH 2 OF 3	1:5MPM 2-11-2000

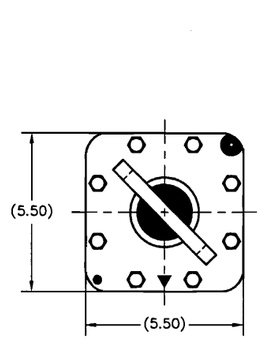

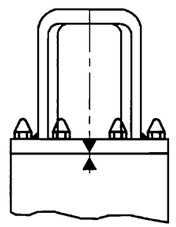

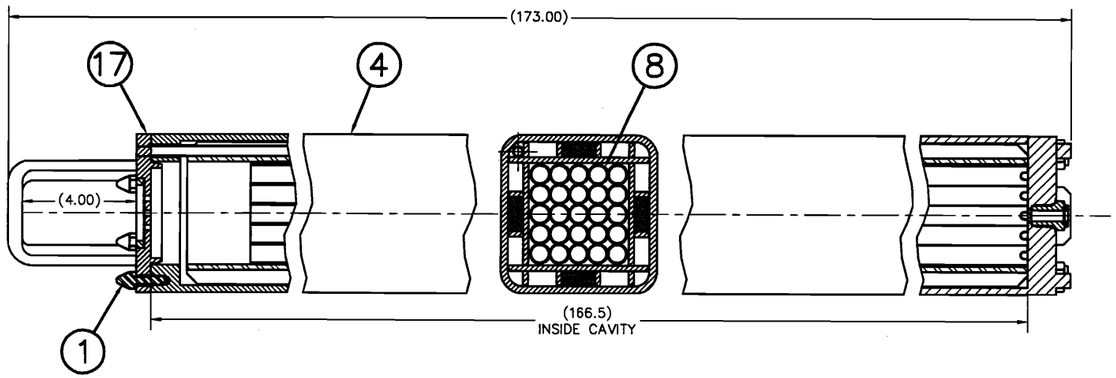

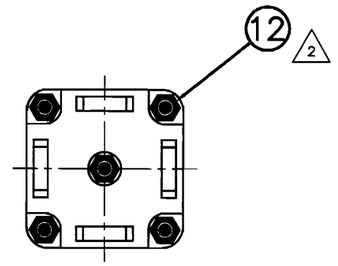

95 BWR SCREENED CAN

(SHOWN WITH 5X5 INSERT)

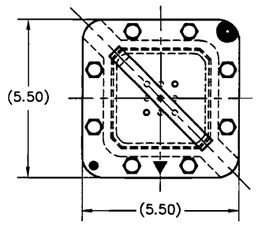

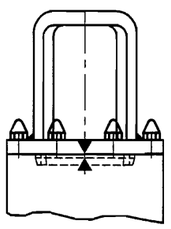

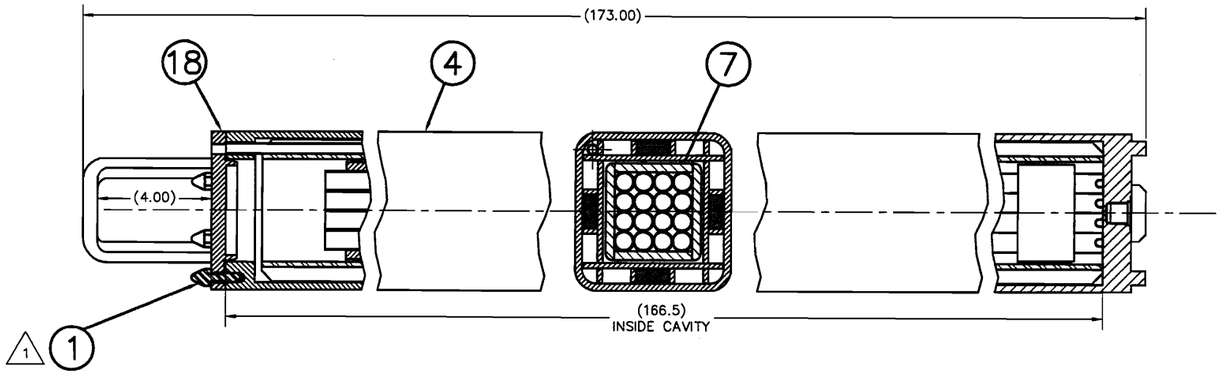

94 BWR FREE FLOW CAN

(SHOWN WITH 4X4 INSERT)

NAC INTERNATIONAL

PWR/BWR ROD
TRANSPORT CANISTER
ASSEMBLY

PROJECT 315-40		DRAWING 098	REV 6
1/2	NOTED	SH 3 OF 3	1:56PM 2-11-2005

Pr 136685

DCR No.	REVISION
0	INITIAL ISSUE
1	INC DCR 0A,0B
2	INC DCR 1A
3	INC DCR 2A

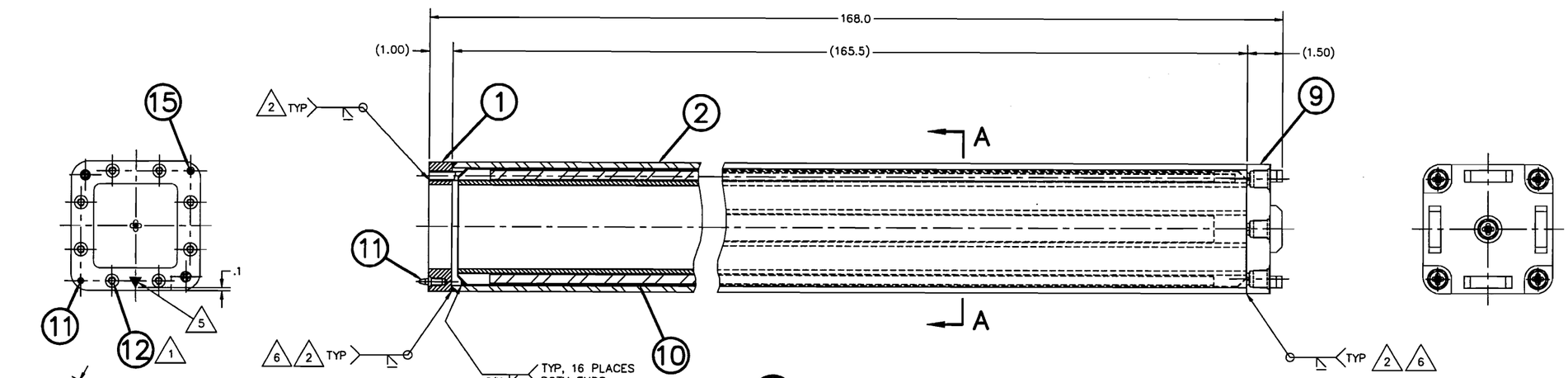

99 CAN WELDMENT
WEIGHT: 485#

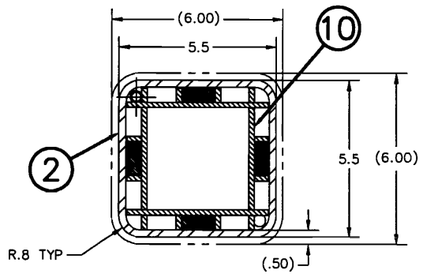

SECTION A–A

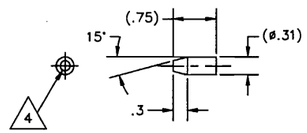

15 GUIDE PIN
SCALE: 1/1

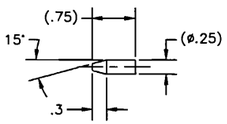

11 GUIDE PIN
SCALE: 1/1

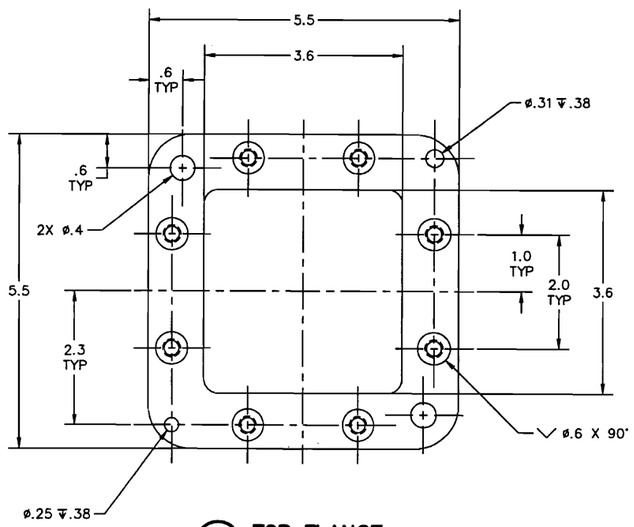

1 TOP FLANGE
SCALE: 1/1

7 ITEMS MAY BE FABRICATED USING MULTIPLE SECTIONS. ALL SEAMS BETWEEN SECTIONS MUST BE SEAL WELDED UPON ASSEMBLY.

6 ULTRASONIC EXAMINE PER ASME CODE SECTION V, ARTICLE 5, WITH ACCEPTANCE PER SECTION III, ARTICLE NB-5330 OR RADIOGRAPHIC EXAMINE PER ASME CODE SECTION V, ARTICLE 2, WITH ACCEPTANCE PER SECTION III, ARTICLE NB-5320

5 ENGRAVE/MACHINE A .5" DELTA MARK APPROX. AS SHOWN, MAX DEPTH .03 AND FILL WITH BLACK WEATHER RESISTANT PAINT.

4 PROFILE END OF GUIDE PIN TO HAVE A CONCAVE SHAPE, AND PAINT WITH BLACK WEATHER RESISTANT PAINT.

3. UNLESS OTHERWISE NOTED, ALL WELDING TO BE IN ACCORDANCE WITH SECTION IX OF THE ASME PRESSURE VESSEL CODE.

2 FINAL WELD SURFACE TO BE LIQUID PENATRANT EXAMINED PER ASME CODE SECTION V, ARTICLE 6 WITH ACCEPTANCE PER SECTION III, ARTICLE NB-5350

1 INSTALL PER MANUFACTURERS INSTRUCTIONS.

NOTES:

					ITEM	NAME	MATERIAL	SPEC	DRAWING No.	DESCRIPTION
			1	15	GUIDE PIN	ST. STL.	COML		5/16 DIA X .75 LONG
		4		14	CLADDING	304 ST. STL.	ASTM A240		26 GAUGE SHEET
		4		13	HEAT SHUNT	6061-T6511 ALUM.	ASTM B221		3/8 BAR
			8	12	INSERT	ST. STL.	COML		HELICOIL# 1185-5CN .469
			1	11	GUIDE PIN	ST. STL.	COML		1/4 DIA X .75 LONG
			1	10	INTERNAL SPACER			315-40-099-98	
			1	9	CAN BASE			315-40-099-97	
		12		8	SPACER RAIL	304 ST. STL.	ASME SA479/ASTM A276		3/16 PLATE/BAR
		2		7	SPACER TOP	304 ST. STL.	ASME SA240/SA479		3/16 PLATE/BAR
		2		6	SPACER SIDE	304 ST. STL.	ASME SA240/SA479		3/16 PLATE/BAR
		1		5	DRAIN TUBE	304 ST. STL.	ASME SA249		3/8 DIA X .035 WALL
	4			4	FOOT	304 ST. STL.	ASME SA240/SA479		1/2 PLATE/BAR
	1			3	BASE	304 ST. STL.	ASME SA240/SA479		1 PLATE/BAR
			1	2	TUBE	304 ST. STL.	ASTM A554/A511		6 X 6 X 1/2 WALL
			1	1	TOP FLANGE	304 ST. STL.	ASME SA240/SA479		1 PLATE/BAR
05	06	07	08	09						
ASSY	ASSY	ASSY	ASSY	ASSY						
QUANTITY										

DIMENSIONING AND TOLERANCING SHALL BE PER ANSI Y14.5-82
UNSPECIFIED DIMENSIONS AND TOLERANCES SHOWN BELOW.
DIMENSIONS ARE IN INCHES. FRACTIONAL TOLERANCE: ±1/8

SYM.	GEOMETRY	.XXX	TOL.	.XX	TOL.
	FLATNESS	UNDER 3		UNDER 6	±.04
	STRAIGHTNESS	3-12		6-18	±.06
	ANGULARITY	OVER 12		OVER 18	±.09
	PERPENDICULARITY	.X	±.1	ANGLES ±.5°	
	PARALLELISM	ALL UNSPECIFIED TOOL RADII: .01 - .03			
	CONCENTRICITY	BREAK ALL SHARP CORNERS .01 - .03			
	TRUE POSITION	ALL UNSPECIFIED MACHINED SURFACES SHALL BE ∇ OR BETTER			

NEXT ASSEMBLY: 315-40-104
DRAWING TYPE: LICENSE

GROUP	NAME	DATE
PREPARER	R. Walker	8-23-00
CHECKER	Tom Kingman	8-23-00
PROJECT MANAGER	[illegible]	8/23/00
DIRECTOR, DESIGN AND ANALYSIS	[illegible]	8-23-00
DIRECTOR, LICENSING	[illegible]	8/23/00
VICE PRESIDENT, QUALITY	[illegible]	8/23/00

NAC INTERNATIONAL

CAN WELDMENT PWR/BWR TRANSPORT CANISTER

PROJECT	DRAWING	REV
315-40	099	3
SCALE 1/2	EST.WT. NOTED	SH 1 OF 3

11:09AM 8-23-2000

NAC DCRM 01

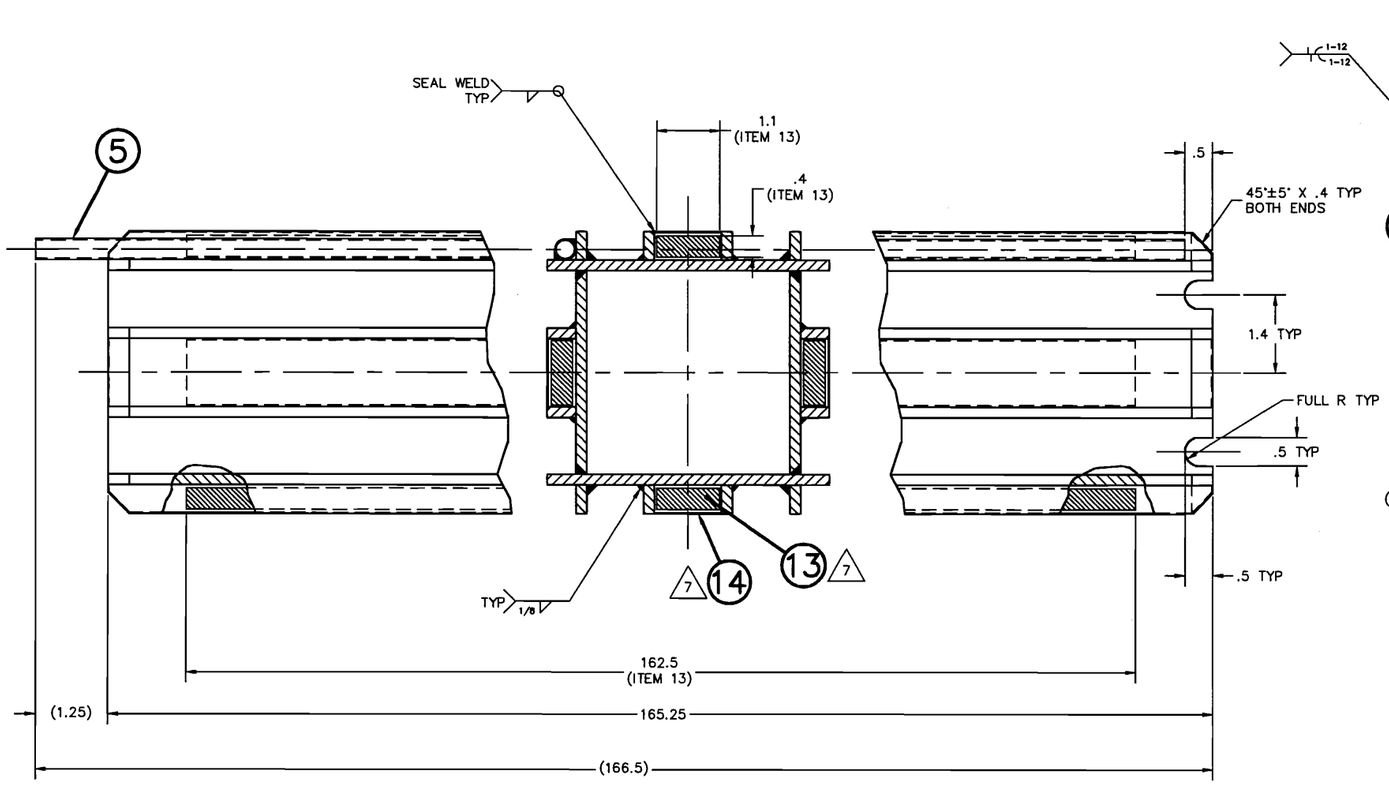

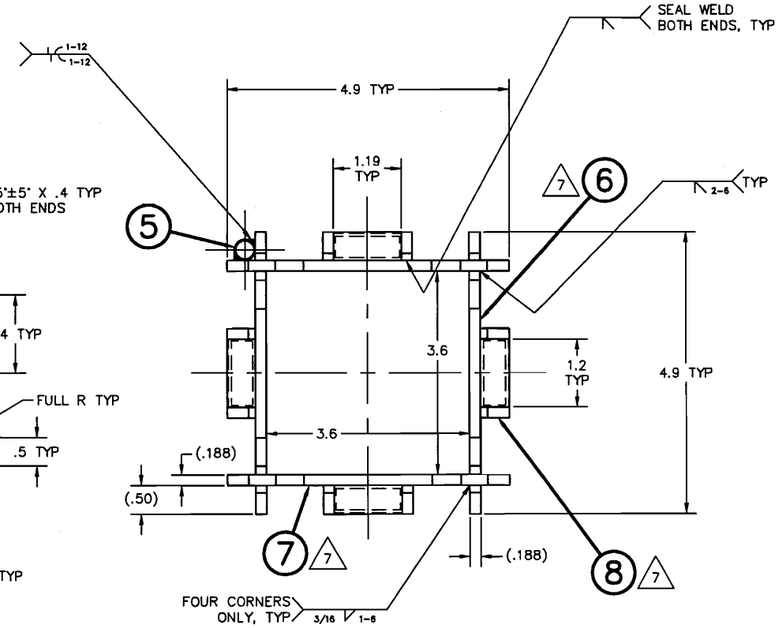

98 **INTERNAL SPACER**
WIEGHT: 230

NAC INTERNATIONAL

CAN WELDMENT
PWR/BWR TRANSPORT
CANISTER

PROJECT 315-40	DRAWING 099	REV 3
SCALE 1/1	EST.WT. NOTED	SH 2 OF 3

11:08AM 8-23-2000

R-13,0655

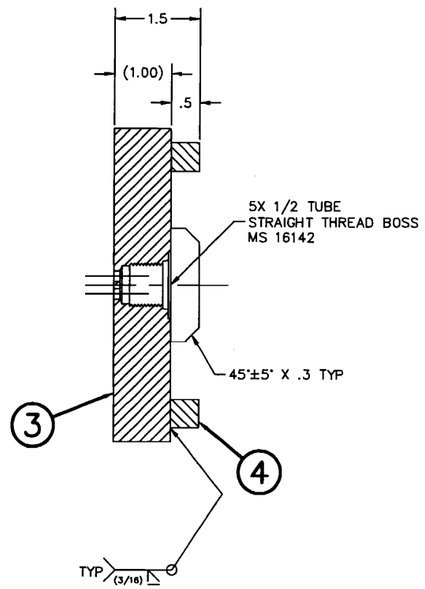

SECTION A–A

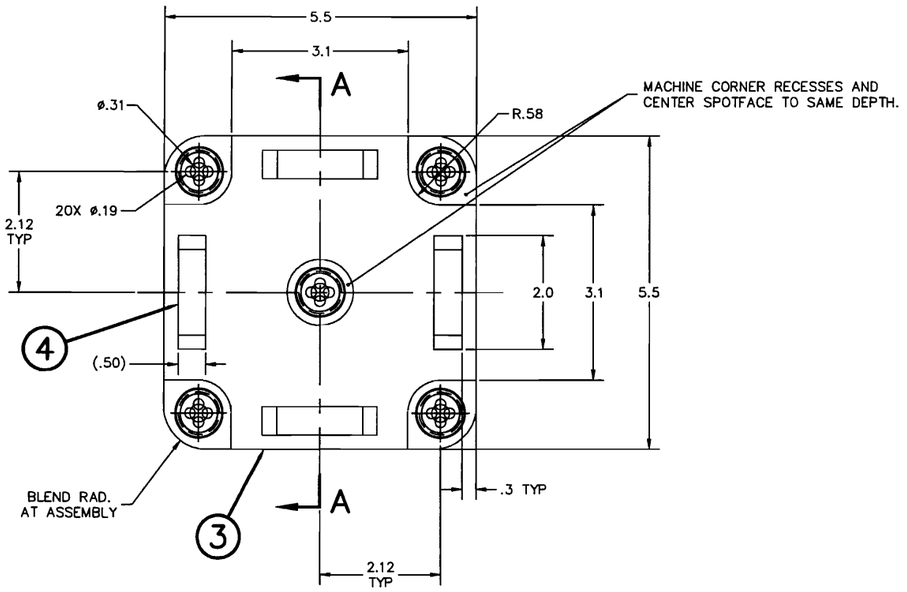

97 CAN BASE
WEIGHT: 9#

NAC INTERNATIONAL

CAN WELDMENT
PWR/BWR TRANSPORT
CANISTER

PROJECT 315-40		DRAWING 099	REV 3
SCALE 1/1	EST.WT. NOTED	SH 3 OF 3	11:10AM 6-23-2000

R-207547

REV	CHANGE
0	INITIAL ISSUE
1	INC DCR 0A
2	INC DCR 1A
3	INC DCR 2A
4	INC DCR 3A

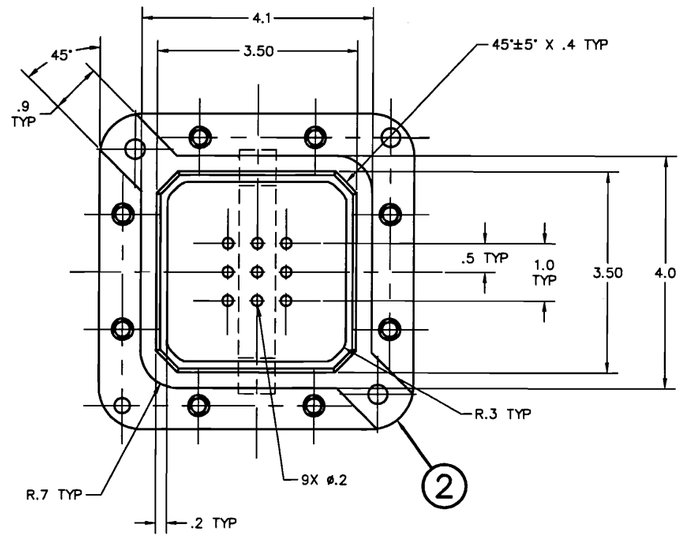

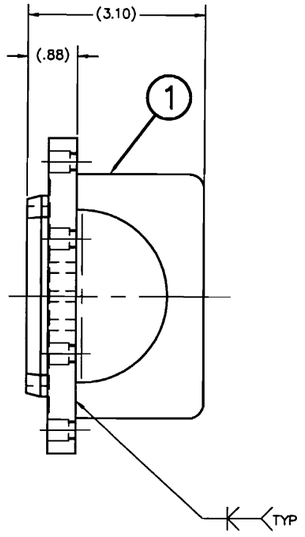

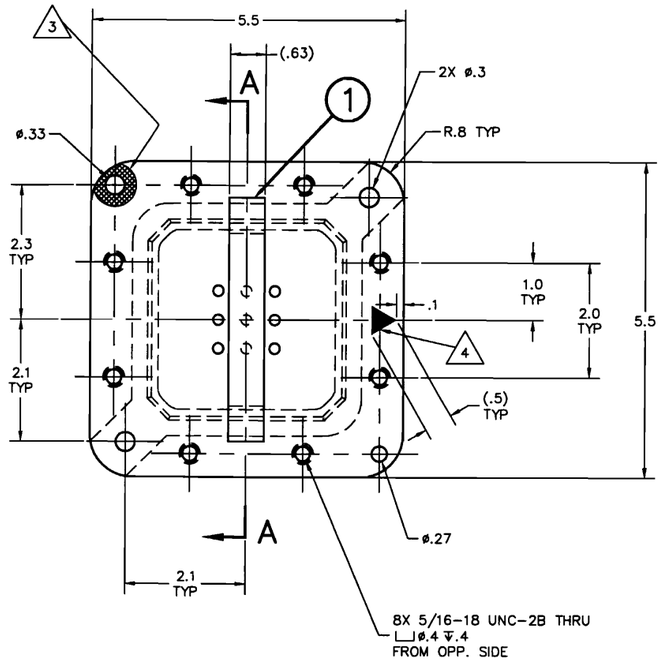

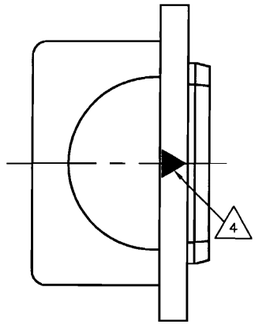

99 FREE FLOW LID

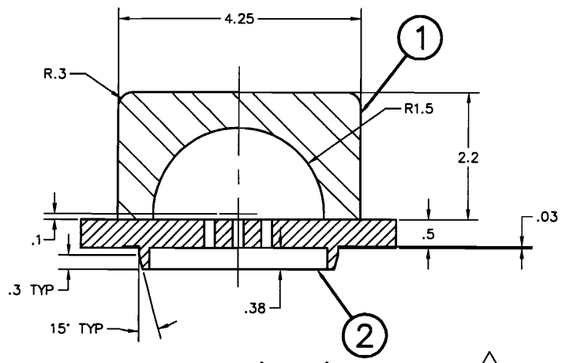

SECTION A–A
ROTATED –90°

△4 ENGRAVE/MACHINE A .5" DELTA MARK APPROX. AS SHOWN, MAX DEPTH .03 AND FILL WITH BLACK WEATHER RESISTANT PAINT.

△3 ENGRAVE/MACHINE A CIRCLE, MAX DEPTH .03, APPROX ø.75 AND FILL WITH BLACK WEATHER RESISTANT PAINT.

2. UNLESS OTHERWISE NOTED, ALL WELDING TO BE IN ACCORDANCE WITH SECTION IX OF THE ASME PRESSURE VESSEL CODE.

△1 PENETRANT TEST FINAL PASS. EXAMINE PER ASME SECTION V, ARTICLE 6. ACCEPTANCE PER ASME SECTION III, ARTICLE NB-5350.

NOTES:

95	96	97	98	99	ITEM	NAME	MATERIAL	SPEC	DRAWING No.	DESCRIPTION
ASSY	ASSY	ASSY	ASSY	ASSY	QUANTITY					
1	1				11	BWR BALE	304 ST. STL.	ASME SA240/SA479		PLATE/BAR
	A/R	A/R			10	BACKING SCREEN	ST. STL.	COML		
	A/R	A/R			9	SCREEN	ST. STL.	COML		
	1	1			8	SCREEN RETAINER	304 ST. STL.	ASME SA240/SA479		PLATE/BAR
	1	1			7	TOP PLATE	304 ST. STL.	ASME SA240/SA479		PLATE/BAR
			2		6	SEAL	VITON	COML		
			2		5	NIPPLE	ST. STL.	COML		
			2		4	BOSS	304 ST. STL.	ASME SA479		DIA BAR
			1		3	TOP PLATE	304 ST. STL.	ASME SA240/SA479		PLATE/BAR
1				1	2	TOP PLATE	304 ST. STL.	ASME SA240/SA479		PLATE/BAR
		1	1	1	1	HANDLE	304 ST. STL.	ASME SA240/SA479		PLATE/BAR

UNLESS OTHERWISE STATED
DIMENSIONING AND TOLERANCING SHALL BE PER ASME Y14.5M–94, UNSPECIFIED DIMENSIONAL TOLERANCES ARE SHOWN BELOW.
ALL THREAD DEPTH CALLOUTS ARE TO BE CONSIDERED AS A MIN. DEPTH OF PERFECT THREADS. THE ACTUAL DEPTH OF THE THREADS IS NOT SUBJECT TO TOLERANCE CONTROLS.

.XXX	UNDER 3	±.003
	3–12	±.005
	OVER 12	±.010
.XX	UNDER 6	±.02
	6–18	±.03
	OVER 18	±.06
X	ALL	±.1
FRACTIONAL ±1/8		
ANGLES ±0.5°		

WEIGHTS ARE APPROXIMATE AND ARE TO BE USED FOR HANDLING PURPOSES ONLY
ALL DIMENSIONS ARE IN INCHES
BORDER SIZE: F (40 X 28)
ALL UNSPECIFIED TOOL RADII: .015 – .030
BREAK ALL SHARP CORNERS .015 – .030
MACHINED SURFACES TO BE ▽ OR BETTER
NEXT ASSEMBLY: 315–40–098
DRAWING TYPE: LICENSE

GROUP	NAME	DATE
PREPARER		7/24/08
CHECKER		8/14/08
PROJECT MANAGER		8/14/08
ENGINEERING		8/14/08
LICENSING		8-8-08
QUALITY		8-11-08

NAC INTERNATIONAL

LIDS,
PWR/BWR ROD TRANSPORT CANISTER 4

PROJECT	DRAWING	REV
315–40	100	4
SCALE	WEIGHT	SH 1 OF 5

1:22PM 7-24-2008

NAC DCRM 01

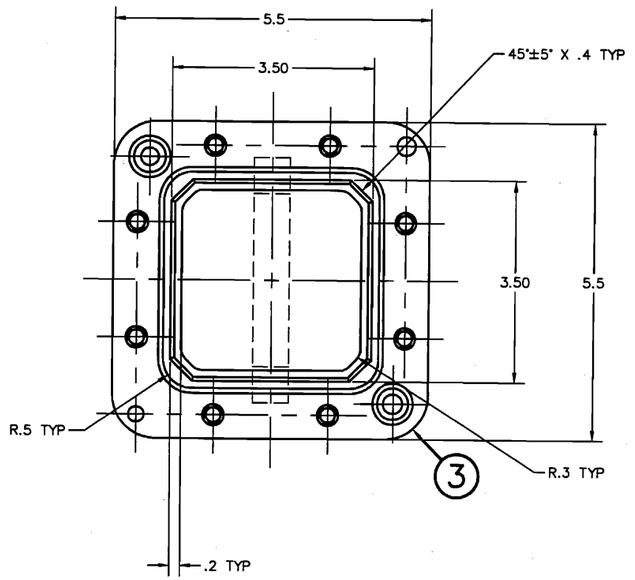

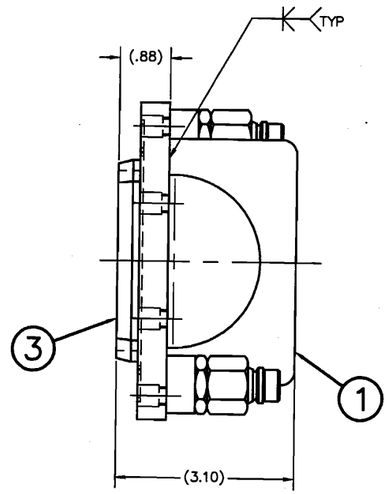

98 SEALED LID

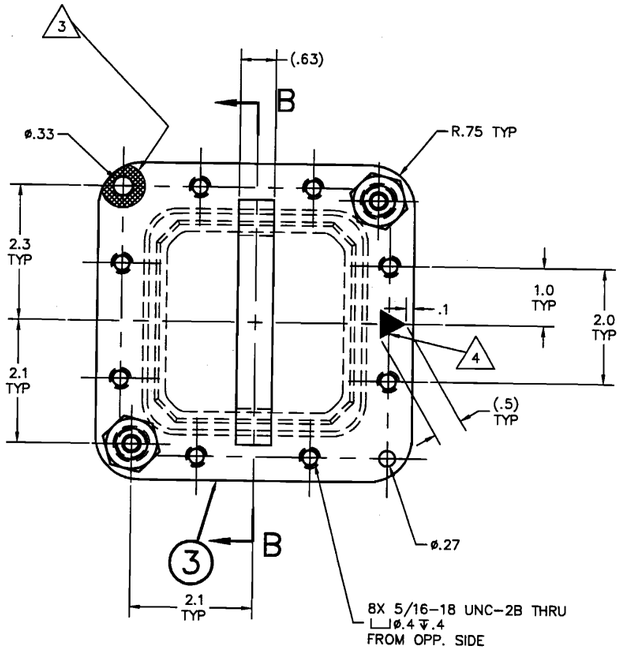

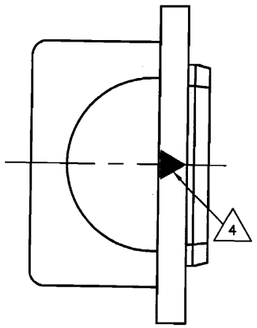

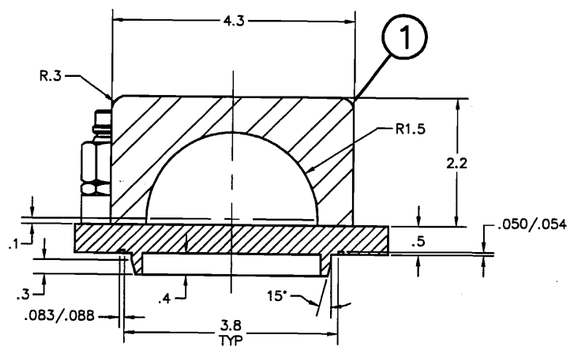

SECTION B–B
ROTATED –90°

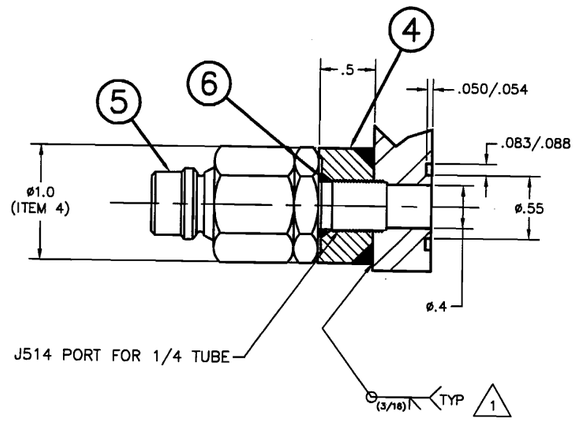

NAC INTERNATIONAL

LIDS,
PWR/BWR ROD TRANSPORT
CANISTER

4

PROJECT	DRAWING	REV
315-40	100	4
	SH 2 OF 5	1:21PM 7-24-2006

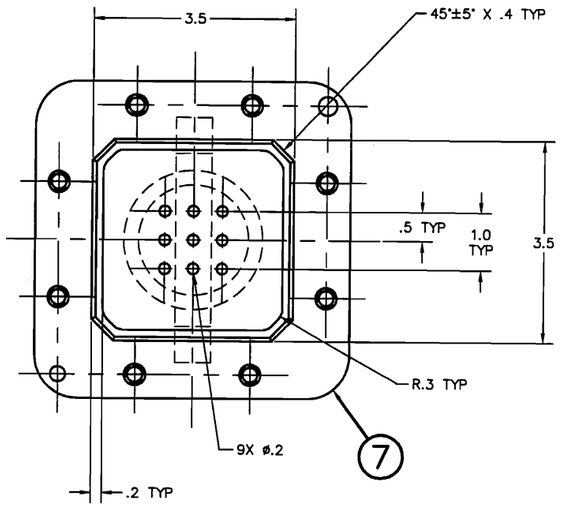

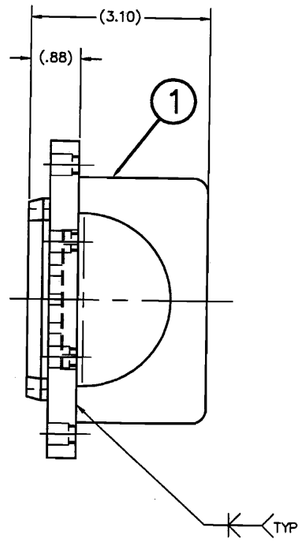

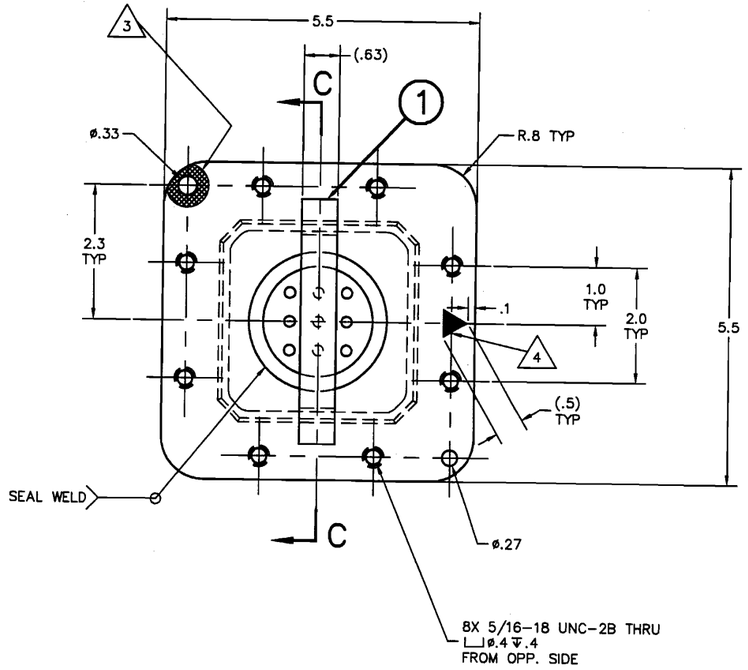

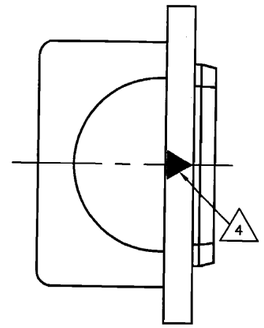

97 SCREENED LID

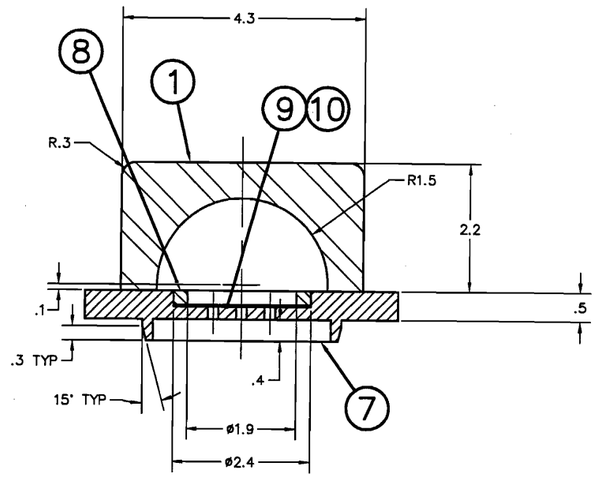

SECTION C—C
(ROTATED 90° CLOCKWISE)

NAC INTERNATIONAL

LIDS,
PWR/BWR ROD TRANSPORT
CANISTER
4

PROJECT	DRAWING	REV
315-40	100	4
	SH 3 OF 5	1:30PM 7-24-2008

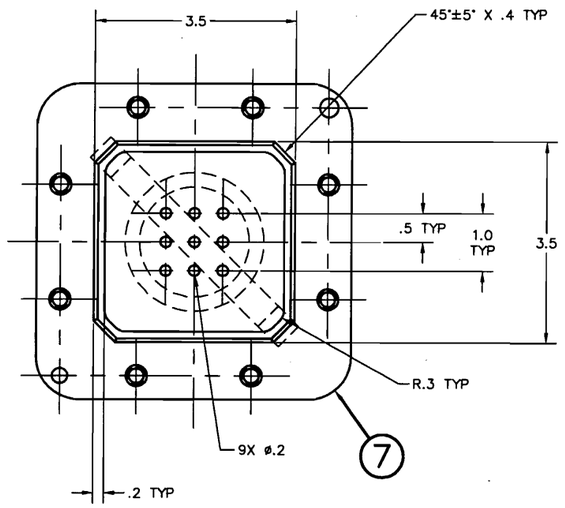

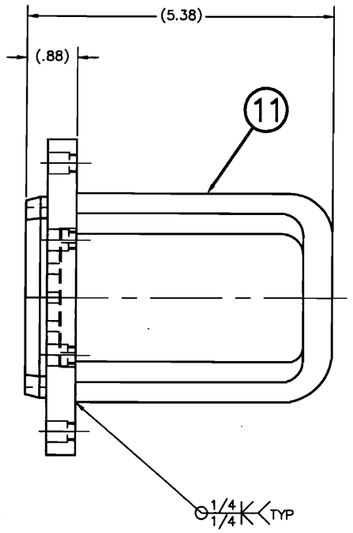

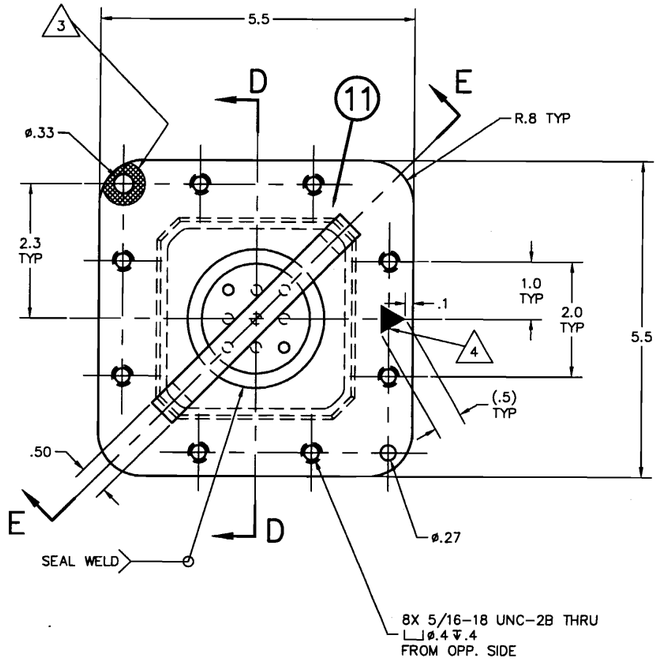

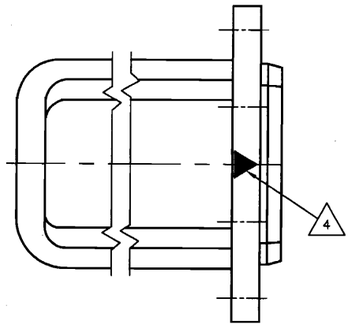

④ 96 BWR SCREENED LID

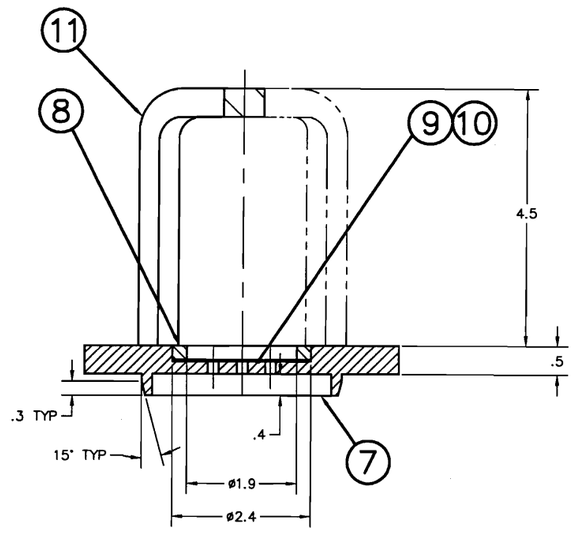

SECTION D–D
(ROTATED 90° CLOCKWISE)

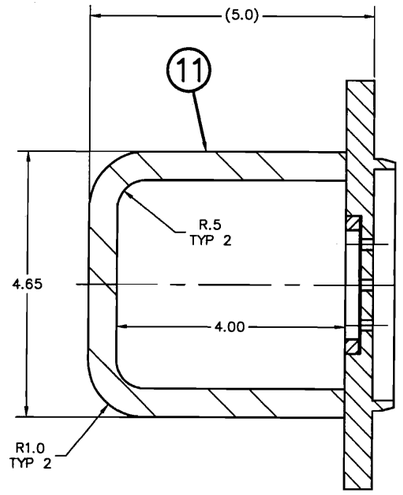

SECTION E–E
SCALE: 1:1

④

NAC INTERNATIONAL

LIDS,
PWR/BWR ROD TRANSPORT
CANISTER

PROJECT	DRAWING	REV
315-40	100	4
	SH 4 OF 5	1:20PM 7-24-2008

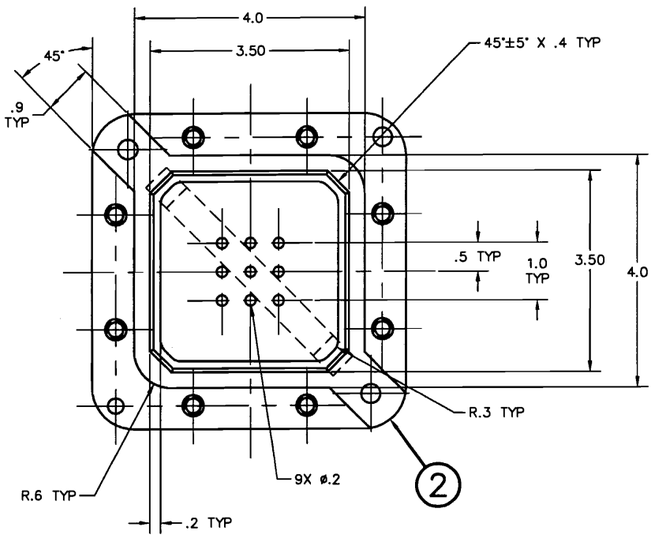

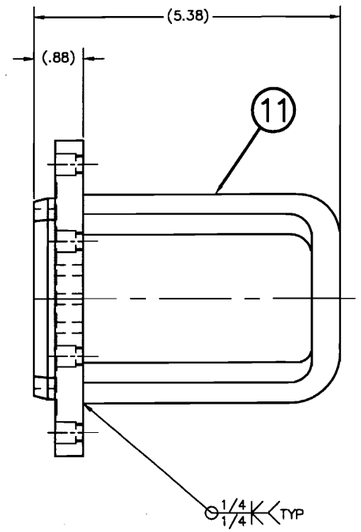

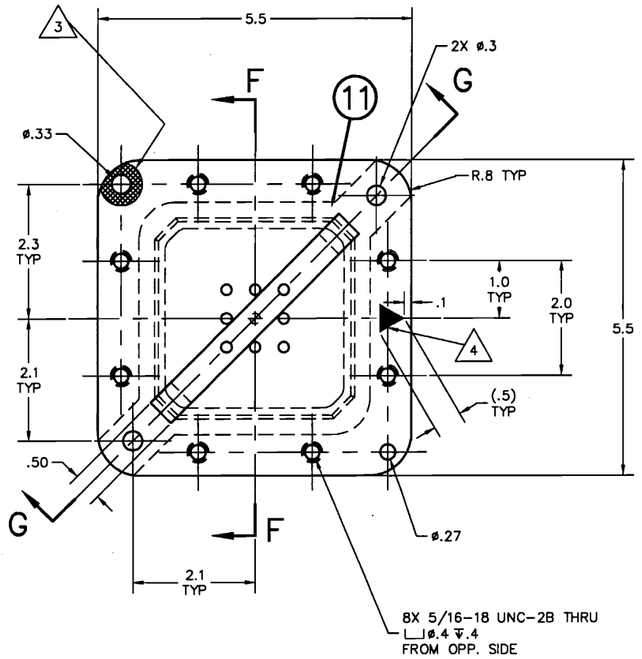

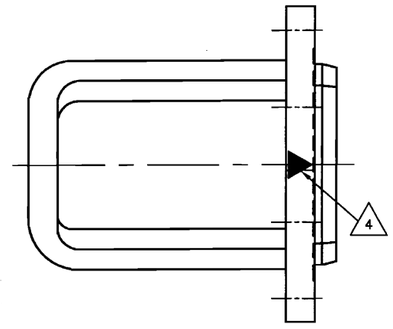

④ 95 BWR FREE FLOW LID

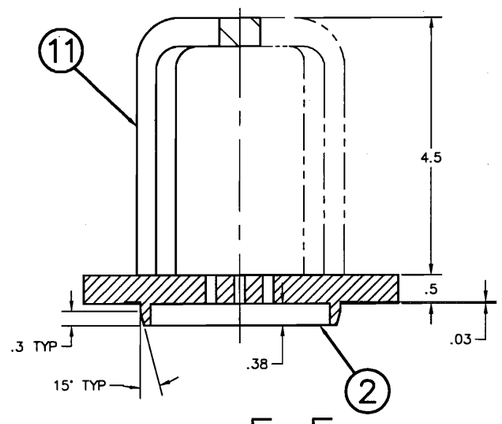

SECTION F–F
ROTATED –90°

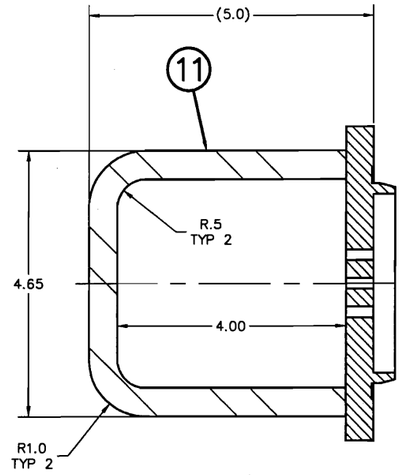

SECTION G–G
SCALE: 1:1

④

NAC INTERNATIONAL

LIDS,
PWR/BWR ROD TRANSPORT
CANISTER

PROJECT	DRAWING	REV
315–40	100	4
	SH 5 OF 5	1:20PM 7-24-2008

K-134700

DCR No.	REVISION
0	INITIAL ISSUE

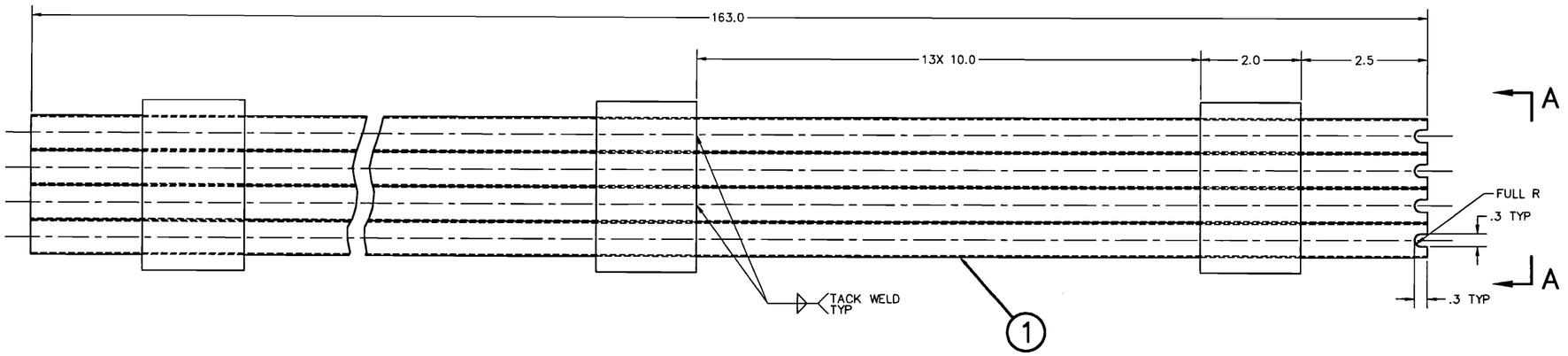

99 4X4 INSERT
WEIGHT: 75#

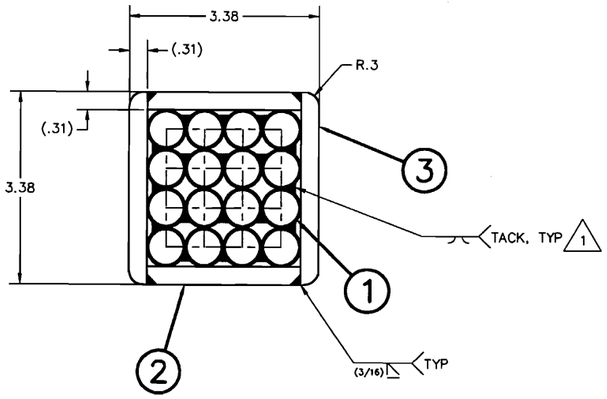

VIEW A–A

2. TACK WELDS ARE FOR ASSEMBLY ONLY. WELD EXAMINATIONS ARE NOT REQUIRED.

1 TACK WELD ITEM 1, TUBE(S), TOGETHER ON AT LEAST TWO QUADRANTS OF EACH TUBE. INCLUDE AT LEAST 1" OF WELD FOR EVERY 12" OF MATERIAL THE LENGTH OF THE TUBE. ENSURE WELDS DO NOT INTERFERE WITH ITEMS 2 AND 3.

NOTES:

05	06	07	08	09	ITEM	NAME	MATERIAL	SPEC	DRAWING No.	DESCRIPTION
				28	3	LONG STRAP	304 ST. STL.	ASME SA240/SA479		PLATE/BAR
				28	2	SHORT STRAP	304 ST. STL.	ASME SA240/SA479		PLATE/BAR
				16	1	PIN TUBE	304 ST. STL.	ASME SA249		11/16 OD TUBE X .028 WALL
ASSY	ASSY	ASSY	ASSY	ASSY	QUANTITY					

DIMENSIONING AND TOLERANCING SHALL BE PER ANSI Y14.5–82
UNSPECIFIED DIMENSIONS AND TOLERANCES SHOWN BELOW.
DIMENSIONS ARE IN INCHES. FRACTIONAL TOLERANCE: ±1/8

SYM.	GEOMETRY	.XXX	TOL.	.XX	TOL.
	FLATNESS	UNDER 3		UNDER 6	±.04
		3–12		6–18	±.06
	STRAIGHTNESS	OVER 12		OVER 18	±.09
	ANGULARITY	.X	±.1	ANGLES ±.5°	
	PERPENDICULARITY	ALL UNSPECIFIED TOOL RADII: .01 – .03			
	PARALLELISM	BREAK ALL SHARP CORNERS .01 – .03			
	CONCENTRICITY	ALL UNSPECIFIED MACHINED SURFACES SHALL BE ∀OR BETTER			
	TRUE POSITION	NEXT ASSEMBLY: 315-40-098			
		DRAWING TYPE: LICENSE			

GROUP	NAME	DATE
PREPARER	R. Walker	2-7-00
CHECKER		2/7/00
PROJECT MANAGER		2/7/00
DIRECTOR DESIGN AND ANALYSES		2/7/00
DIRECTOR, LICENSING		2/7/00
VICE PRESIDENT, QUALITY		2/8/00

NAC INTERNATIONAL

4 X 4 INSERT PWR/BWR TRANSPORT CANISTER

PROJECT	315–40	DRAWING	101	REV 0
SCALE	1/1	EST.WT.	NOTED	SH 1 OF 1

11:39 AM 2-7-2000

NAC DCRM 01

K- 208706

DCR No.	REVISION
0	INITIAL ISSUE
1	INC DCR 0A
2	INC DCR 1A

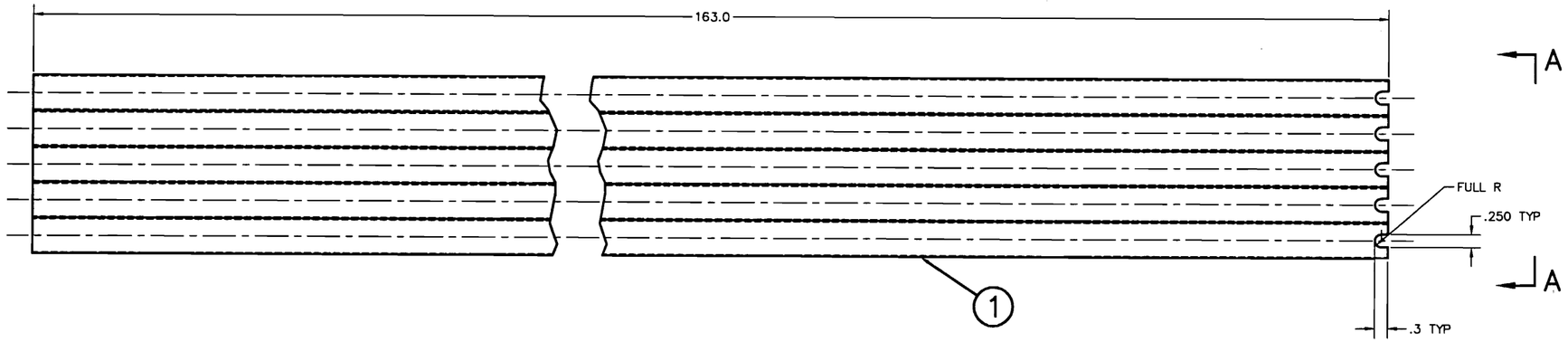

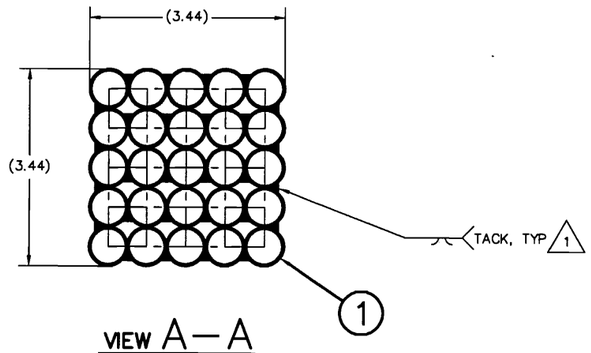

VIEW A—A
(ASSY 99) 2

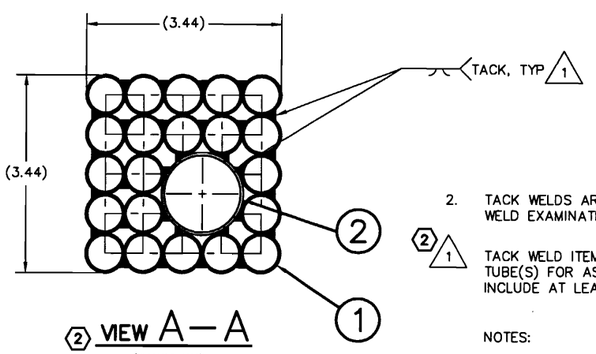

2 VIEW A—A
(ASSY 98)

99 5X5 INSERT
WEIGHT: 70#

2 98 5X5 INSERT WITH WATER ROD
WEIGHT: 68#

2. TACK WELDS ARE FOR ASSEMBLY ONLY.
WELD EXAMINATIONS ARE NOT REQUIRED.

2 1 TACK WELD ITEM 1, PIN TUBE(S), FOR ASSY 99, ITEM 1 & 2 PIN AND WATER ROD TUBE(S) FOR ASSY 98 TOGETHER ON AT LEAST TWO QUADRANTS OF EACH TUBE. INCLUDE AT LEAST 1" OF WELD FOR EVERY 12" OF MATERIAL THE LENGTH OF THE TUBE.

NOTES:

2

					ITEM	NAME	MATERIAL	SPEC	DRAWING No.	DESCRIPTION
		1		2	WATER ROD TUBE	304 ST. STL.	ASME SA249/ASTM A269		1 7/16 OD X .049 WALL TUBE
		21	25	1	PIN TUBE	304 ST. STL.	ASME SA249/ASTM A269		11/16 OD TUBE X .028 WALL
95 ASSY	96 ASSY	97 ASSY	98 ASSY	99 ASSY	QUANTITY				

DIMENSIONING AND TOLERANCING SHALL BE PER ANSI Y14.5-82
UNSPECIFIED DIMENSIONS AND TOLERANCES SHOWN BELOW.
DIMENSIONS ARE IN INCHES. FRACTIONAL TOLERANCE: ±1/8

SYM.	GEOMETRY	XXX TOL.	XX TOL.
	FLATNESS	UNDER 3	UNDER 6 ±.04
		3-12	8-18 ±.08
	STRAIGHTNESS	OVER 12	OVER 18 ±.09
	ANGULARITY	.X ±.1	ANGLES ±.5°
	PERPENDICULARITY	ALL UNSPECIFIED TOOL RADII: .01 - .03	
	PARALLELISM	BREAK ALL SHARP CORNERS .01 - .03	
	CONCENTRICITY	ALL UNSPECIFIED MACHINED SURFACES SHALL BE ▽ OR BETTER	
	TRUE POSITION	NEXT ASSEMBLY: 315-40-098	
		DRAWING TYPE: LICENSE	

GROUP	NAME	DATE
PREPARER		2/25/09
CHECKER		2/25/09
PROJECT MANAGER		2/25/09
ENGINEERING		2/25/09
LICENSING		2/26/09
QUALITY		2/26/09

NAC INTERNATIONAL

5 X 5 INSERT PWR/BWR TRANSPORT CANISTER

PROJECT 315-40 | DRAWING 102 | REV 2
SCALE 1/1 | EST.WT. NOTED | SH 1 OF 1 | 12:28PM 2-25-2009

NAC DCRM 61

M:\ACADFILE\315\License\315410231.dwg, 2/25/2009 12:28:39 PM

K-134702

DCR No.	REVISION
0	INITIAL ISSUE

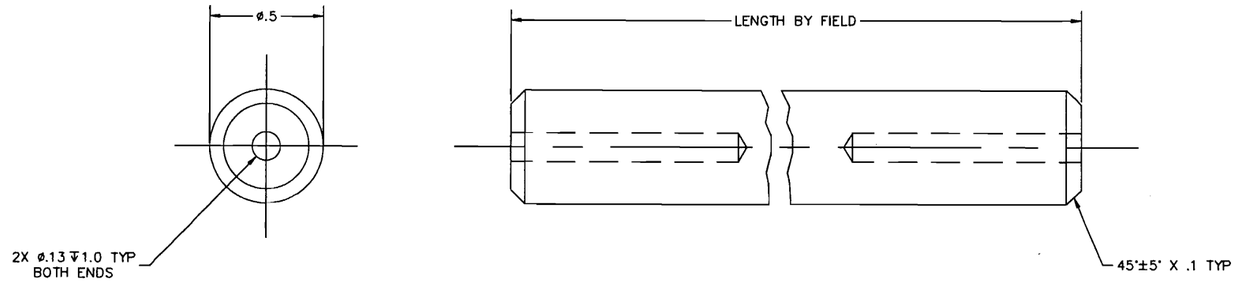

(1) PIN SPACER
SCALE: 2/1

95 ASSY	96 ASSY	97 ASSY	98 ASSY	99 ASSY	ITEM	NAME	MATERIAL	SPEC	DRAWING No.	DESCRIPTION
QUANTITY					1	PIN SPACER	304 ST. STL.	ASME SA479		1/2 DIA BAR

DIMENSIONING AND TOLERANCING SHALL BE PER ANSI Y14.5–82
UNSPECIFIED DIMENSIONS AND TOLERANCES SHOWN BELOW.
DIMENSIONS ARE IN INCHES. FRACTIONAL TOLERANCE: ±1/8

SYM.	GEOMETRY	.XXX	TOL.	.XX	TOL.
▱	FLATNESS	UNDER 3		UNDER 6	±.04
		3–12		6–18	±.08
—	STRAIGHTNESS	OVER 12		OVER 18	±.09
∠	ANGULARITY	.X	±.1	ANGLES	±.5°
⊥	PERPENDICULARITY	ALL UNSPECIFIED TOOL RADII: .01 – .03			
//	PARALLELISM	BREAK ALL SHARP CORNERS .01 – .03			
◎	CONCENTRICITY	ALL UNSPECIFIED MACHINED SURFACES SHALL BE ▽ OR BETTER			
⌖	TRUE POSITION	NEXT ASSEMBLY: 315–40–104			
		DRAWING TYPE: LICENSE			

GROUP	NAME	DATE
PREPARER	R. Walker	2-7-00
CHECKER		2/7/00
PROJECT MANAGER		2/7/00
DIRECTOR, DESIGN AND ANALYSIS		2/7/00
DIRECTOR, LICENSING		2/7/00
VICE PRESIDENT, QUALITY		2/7/00

NAC INTERNATIONAL

PIN SPACER
PWR/BWR TRANSPORT
CANISTER

PROJECT	DRAWING	REV
315–40	103	0
SCALE 2/1	EST.WT.	SH 1 OF 1

11:29 AM 3-7-2000

NAC DCRM 01

R-213234

REV	CHANGE
0	INITIAL ISSUE
1	INC DCR 0A
2	INC DCR 1A
3	INC DCR 2A
4	INC DCR 3A
5	INC DCR 4A
6	INC DCR 5A

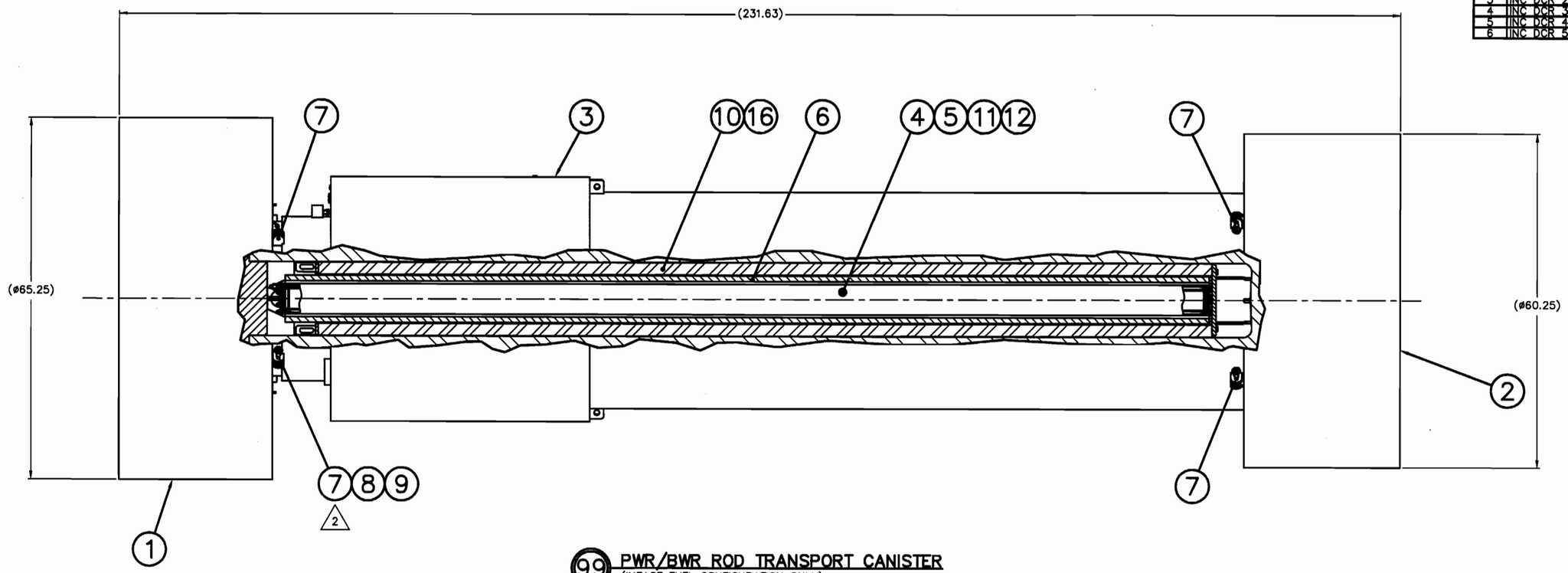

99 PWR/BWR ROD TRANSPORT CANISTER
(INTACT FUEL CONFIGURATION ONLY)

95	96	97	98	99	ITEM	NAME	MATERIAL	SPEC	DRAWING No.	DESCRIPTION
ASSY	ASSY	ASSY	ASSY	ASSY	QUANTITY					
1					21	CASK ASSEMBLY			315-40-02-97	
1					20	ALT. TPBAR BASKET ASSEMBLY			315-40-10-95	
	A/R				19	BWR FREE FLOW CAN			315-40-098-94	
	A/R				18	BWR SCREENED CAN			315-40-098-95	
	1	1	1		17	BASKET ASSEMBLY – PWR			315-40-10-97	
				A/R	16	BASKET ASSEMBLY – PWR			315-40-10-98	
6		4	4		15	LOCK WASHER	ST. STL.	COML		
		4	4		14	HEX HEAD BOLT	ST. STL.	COML		
		1	1		13	ROD TRANSPORT CANISTER SPACER			315-40-126-99	
4	A/R	A/R	A/R	A/R	12	SCREENED CAN			315-40-98-97	
	A/R	A/R	A/R	A/R	11	PIN SPACER			315-40-103-1	
				A/R	10	BASKET ASSEMBLY – PWR			315-40-10-99	
	1	1	1	1	9	TAMPER INDICATING DEVICE (TID)			315-40-01-11	
	A/R	A/R	A/R	A/R	8	WIRE			315-40-01-10	
2	8	8	8	8	7	BALL-LOK PIN			315-40-01-8	
	1	1	1	1	6	PWR INSERT			315-40-105-99	
			A/R	A/R	5	SEALED CAN			315-40-98-98	
4	A/R	A/R	A/R	A/R	4	FREE FLOW CAN			315-40-98-99	
		1	1	1	3	CASK ASSEMBLY			315-40-02-99	
	1	1	1	1	2	IMPACT LIMITER			315-40-06-99	
	1	1	1	1	1	IMPACT LIMITER			315-40-05-99	

4 SCREENED CAN (ITEM 12) OR FREE FLOW CAN (ITEM 4) USED FOR LOADING OF MOX FUEL RODS OR TPBARS SHALL ONLY USE THE 5 X 5 INSERT (315-40-102-99)

3 (DELETED)

2 PER ASSEMBLY, AT LEAST 1 OUT OF 8 ITEM 7 (BALL-LOK PIN) TO BE MODIFIED PER DWG. 315-40-01.

1 PURCHASE OR MODIFY BOLT HEADS TO BE SECURED WITH SAFETY WIRE.

NOTES:

UNLESS OTHERWISE STATED
DIMENSIONING AND TOLERANCING SHALL BE PER ASME Y14.5M-94, UNSPECIFIED DIMENSIONAL TOLERANCES ARE SHOWN BELOW.
ALL THREAD DEPTH CALLOUTS ARE TO BE CONSIDERED AS A MIN. DEPTH OF PERFECT THREADS. THE ACTUAL DEPTH OF THE THREADS IS NOT SUBJECT TO TOLERANCE CONTROLS.

XXX	LINDER 3	±.003
	3-12	±.005
	OVER 12	±.010
XX	UNDER 6	±.02
	6-18	±.03
	OVER 18	±.06
X	ALL	±.1
FRACTIONAL ±1/8		
ANGLES ±0.5°		

WEIGHTS ARE APPROXIMATE AND ARE TO BE USED FOR HANDLING PURPOSES ONLY.
ALL DIMENSIONS ARE IN INCHES
BORDER SIZE: F (40 X 28)
ALL UNSPECIFIED TOOL RADII: .015 – .030
BREAK ALL SHARP CORNERS .015 – .030
MACHINED SURFACES TO BE ▽ OR BETTER
NEXT ASSEMBLY: N/A
DRAWING TYPE: LICENSE

GROUP	NAME	DATE
PREPARER	[signature]	8/20/10
CHECKER	[signature]	9-2-10
PROJECT MANAGER	[signature]	11/9/10
ENGINEERING	[signature]	11-15-10
LICENSING	[signature]	11/15/10
QUALITY	[signature]	11-18-10

NAC INTERNATIONAL

LEGAL WEIGHT TRUCK TRANSPORT CASK ASSY, PWR/BWR ROD TRANSPORT CANISTER

PROJECT	DRAWING	REV
315-40	104	6
SCALE	WEIGHT	SH 1 OF 3

INSPH 6-20-2010

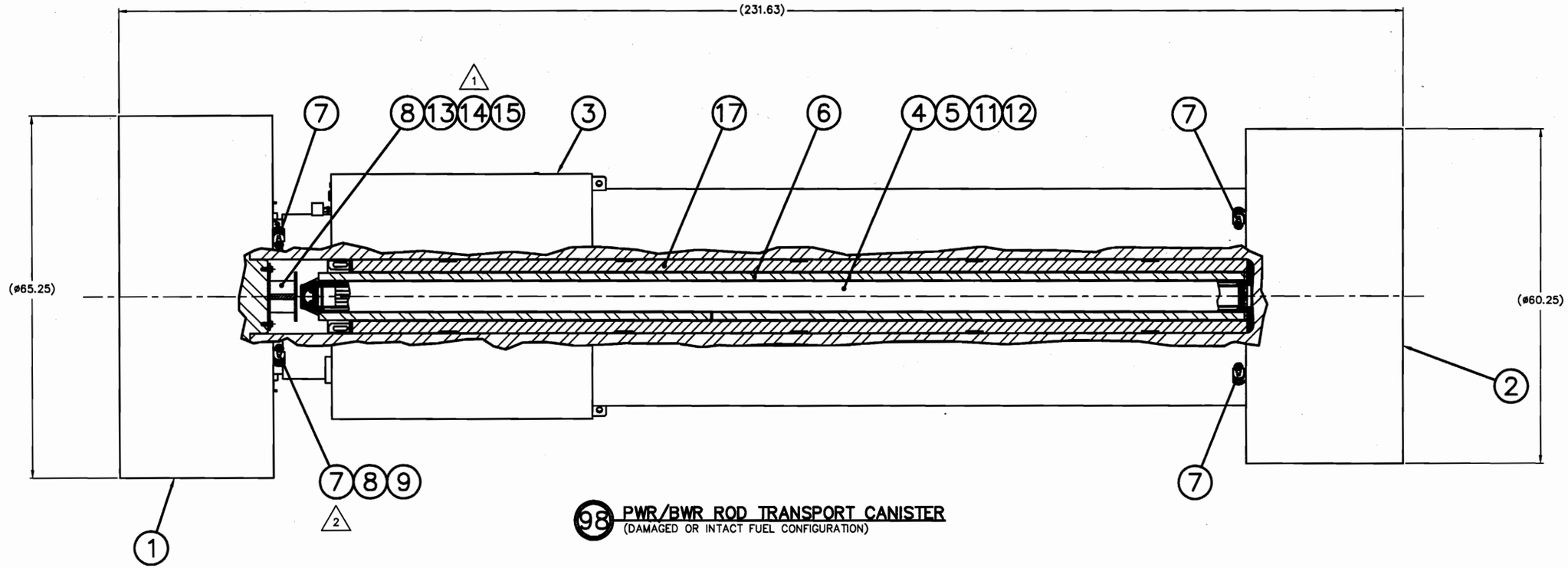

98 PWR/BWR ROD TRANSPORT CANISTER
(DAMAGED OR INTACT FUEL CONFIGURATION)

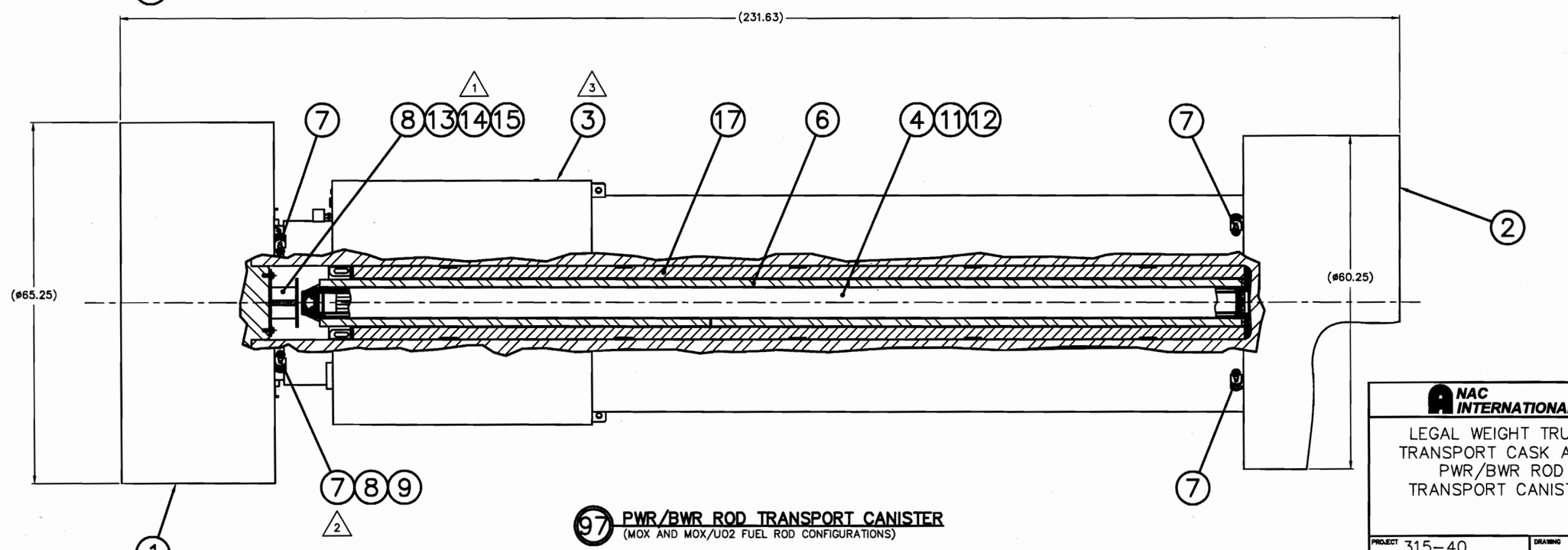

97 PWR/BWR ROD TRANSPORT CANISTER
(MOX AND MOX/UO2 FUEL ROD CONFIGURATIONS)

NAC INTERNATIONAL

LEGAL WEIGHT TRUCK
TRANSPORT CASK ASSY
PWR/BWR ROD
TRANSPORT CANISTER

PROJECT	DRAWING	REV
315-40	104	6
	SH 2 OF 3	ENSPM 8-20-2008

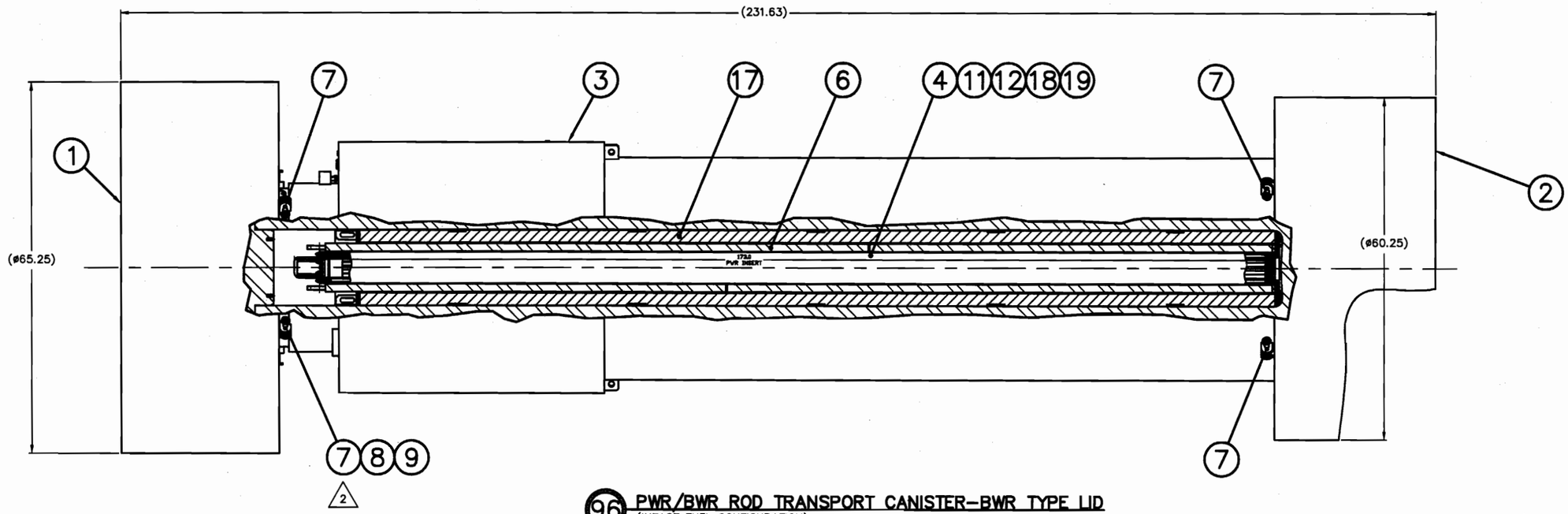

96 PWR/BWR ROD TRANSPORT CANISTER–BWR TYPE LID
(INTACT FUEL CONFIGURATION)

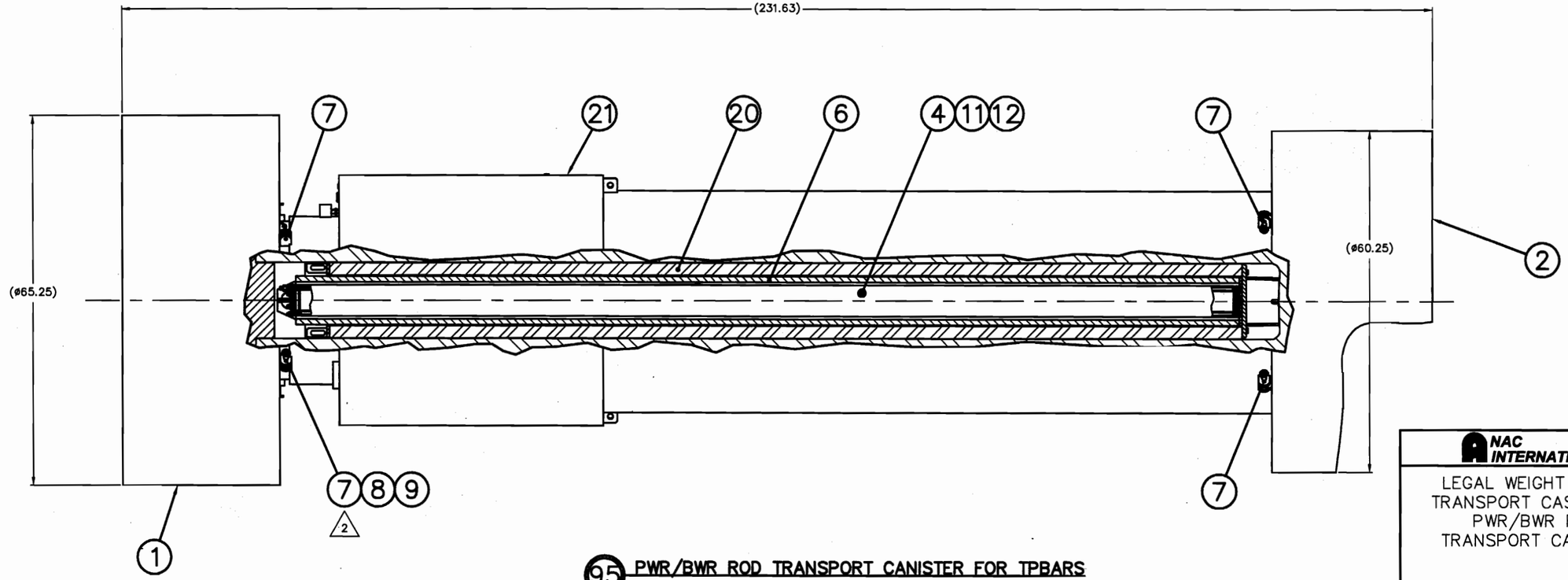

95 PWR/BWR ROD TRANSPORT CANISTER FOR TPBARS

NAC INTERNATIONAL

LEGAL WEIGHT TRUCK
TRANSPORT CASK ASSY
PWR/BWR ROD
TRANSPORT CANISTER

PROJECT	DRAWING	REV
315–40	104	6
	SH 3 OF 3	3:30PM 6-20-2013

DCR No.	REVISION
0	INITIAL ISSUE
1	INC DCR 0A
2	INC DCR 1A
3	INC DCR 2A

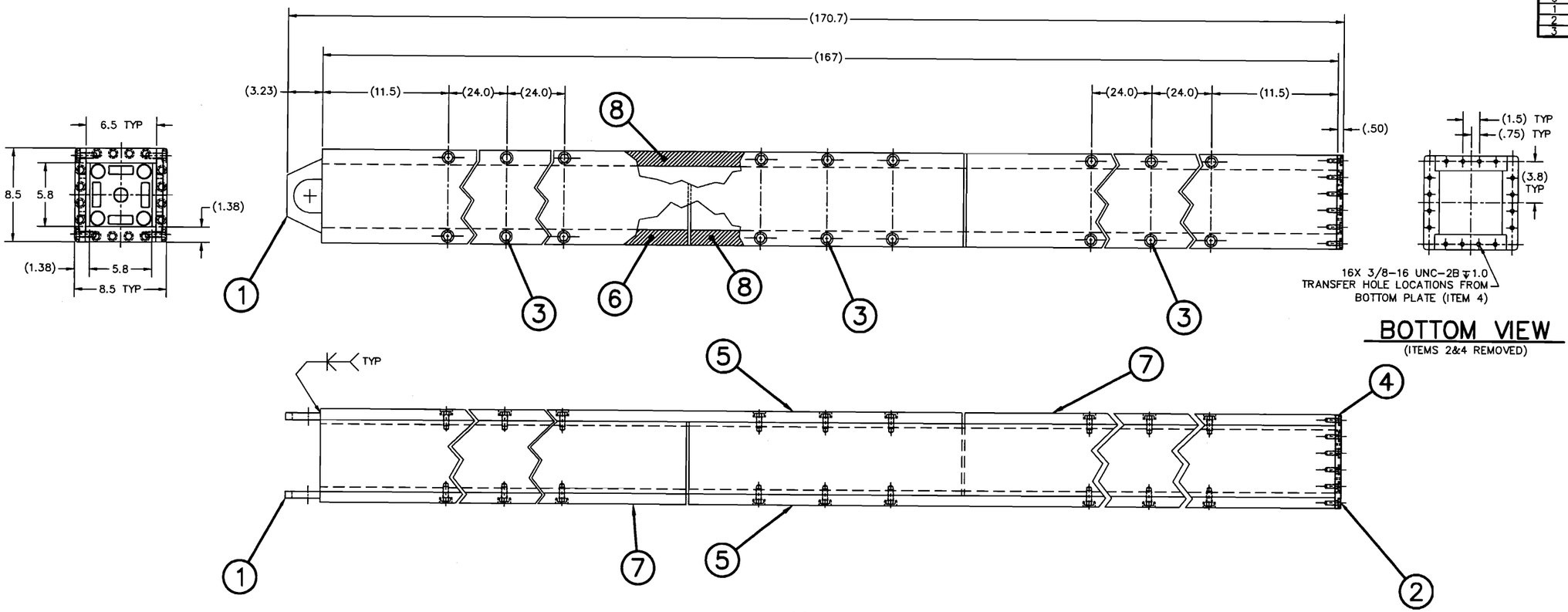

BOTTOM VIEW
(ITEMS 2&4 REMOVED)

99 PWR INSERT
WEIGHT: 650#

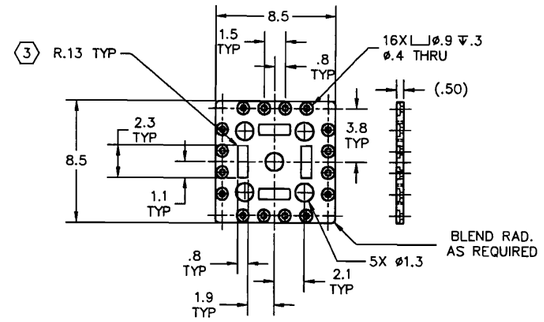

4 BOTTOM PLATE

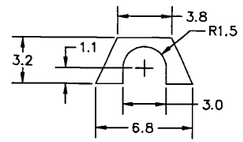

1 LIFT TAB

				2	8	BOTTOM SIDE – B	6061–T651 ALUM	ASME B209		1 3/8 PLATE
				2	7	BOTTOM SIDE – A	6061–T651 ALUM	ASME B209		1 3/8 PLATE
				2	6	TOP SIDE – B	6061–T651 ALUM	ASME B209		1 3/8 PLATE
				2	5	TOP SIDE – A	6061–T651 ALUM	ASME B209		1 3/8 PLATE
				1	4	BOTTOM PLATE	6061–T651 ALUM	ASME B209		1/2 PLATE
				36	3	SIDE BOLT	ST. STL.	COML		1/2–13 UNC–2A X 1.5 LONG
				16	2	BOTTOM BOLT	ST. STL.	COML		3/8–16 UNC–2A X 1.0 LONG
				2	1	LIFT TAB	6061–T651 ALUM	ASME B209		5/8 PLATE/BAR
B5 ASSY	B6 ASSY	B7 ASSY	B8 ASSY	B9 ASSY	ITEM	NAME	MATERIAL	SPEC	DRAWING No.	DESCRIPTION
QUANTITY										

DIMENSIONING AND TOLERANCING SHALL BE PER ANSI Y14.5–82
UNSPECIFIED DIMENSIONS AND TOLERANCES SHOWN BELOW.
DIMENSIONS ARE IN INCHES. FRACTIONAL TOLERANCE: ±1/8

SYM.	GEOMETRY	.XXX	TOL.	.XX	TOL.
	FLATNESS	UNDER 3		UNDER 5	±.04
	STRAIGHTNESS	3–12		6–18	±.06
	ANGULARITY	OVER 12		OVER 18	±.09
	PERPENDICULARITY	.X	±.1	ANGLES ±.5°	
	PARALLELISM	ALL UNSPECIFIED TOOL RADII: .01 – .03			
	CONCENTRICITY	BREAK ALL SHARP CORNERS .01 – .03			
	TRUE POSITION	ALL UNSPECIFIED MACHINED SURFACES SHALL BE 125 OR BETTER			
		NEXT ASSEMBLY: 315–40–104			
		DRAWING TYPE: LICENSE			

GROUP	NAME	DATE
PREPARER	R. McClain	8/16/00
CHECKER	[signature]	8/18/00
PROJECT MANAGER	[signature]	8/18/00
DIRECTOR, DESIGN AND ANALYSIS	[signature]	8-18-00
DIRECTOR, LICENSING	L. C. Thompson	8/21/00
VICE PRESIDENT, QUALITY	[signature]	8/22/00

NAC INTERNATIONAL

PWR INSERT, PWR/BWR TRANSPORT CANISTER

PROJECT	DRAWING	REV
315–40	105	3
SCALE 1/4	EST.WT. NOTED	SH 1 OF 2

3:04PM 8-18-2000

NAC DCRM 01

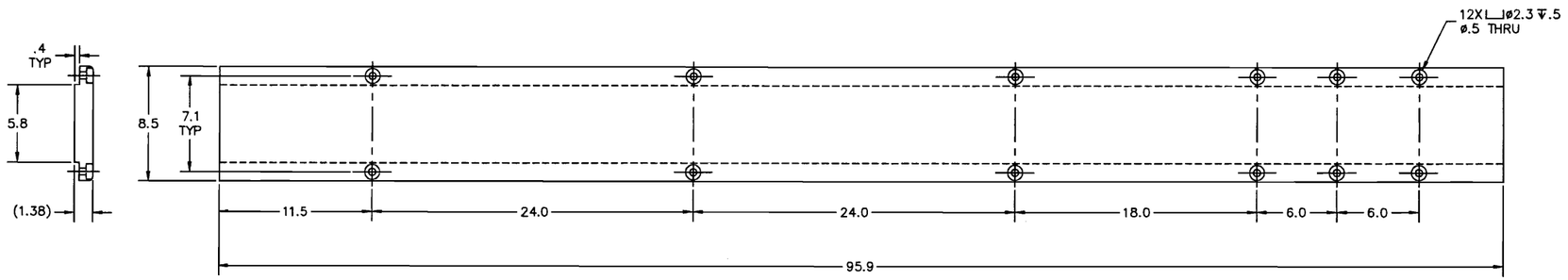

5 TOP SIDE–A
WEIGHT:

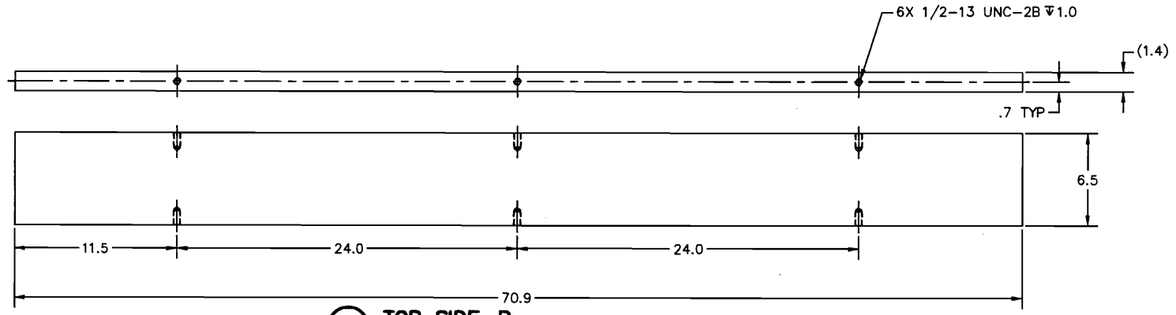

6 TOP SIDE–B
WEIGHT:

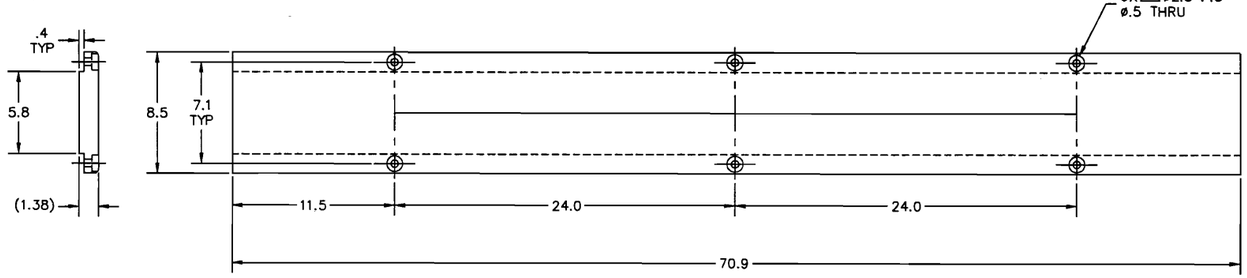

7 BOTTOM SIDE–A
WEIGHT:

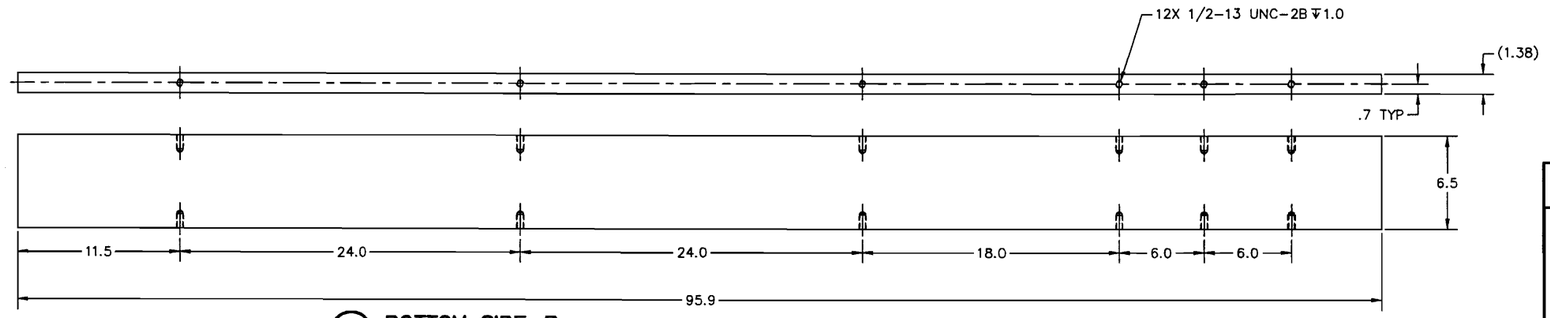

8 BOTTOM SIDE–B
WEIGHT:

NAC INTERNATIONAL

PWR INSERT,
PWR/BWR TRANSPORT
CANISTER

PROJECT 315–40	DRAWING 105	REV 3
SCALE 1/4	EST.WT. NOTED	SH 2 OF 2

3.04PM 8-16-2000

R-217659

DCR No.	REVISION
0	INITIAL ISSUE
1	INC DCR 0A
2	INC DCR 1A

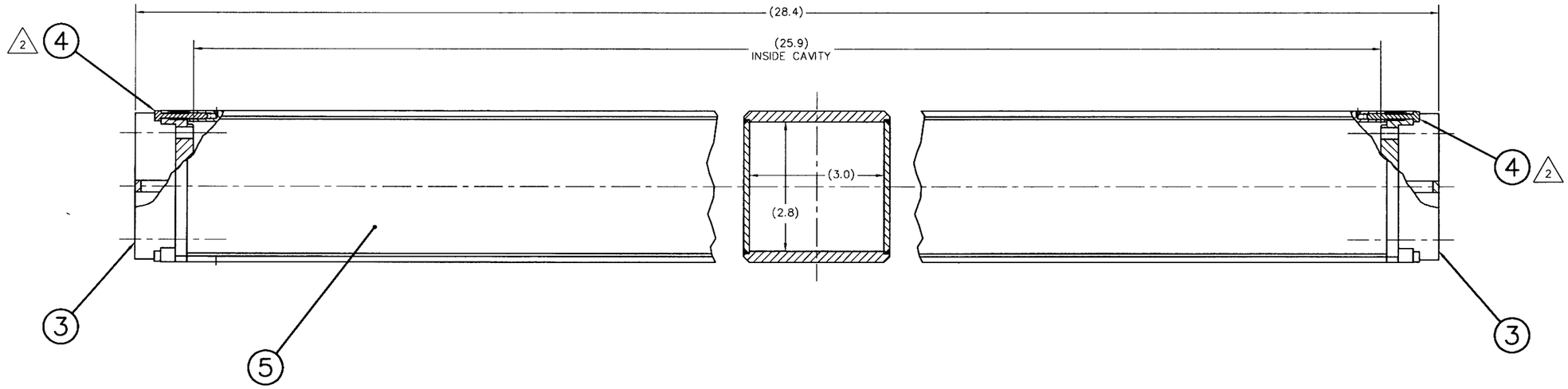

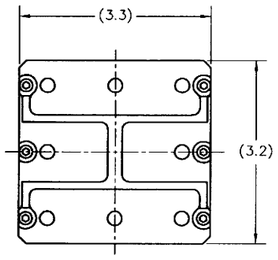

315-391-106-# (2)

MAX GROSS WEIGHT: YY lbs

EMPTY WT: XX lbs

99 MTR PLATE CANISTER (2)

95	96	97	98	99	ITEM	NAME	MATERIAL	SPEC	DRAWING No.	DESCRIPTION
				1	5	CAN BODY WELDMENT			315-40-106-98	
				12	4	LID SCREW	ALUM 6061-T6	ASTM B211/B221		#6-32 UNC-3A X 1 LG - SHCS
				2	3	LID	ALUM 6061-T651	ASTM B211/B209		BAR/PLATE
		2		2	2	PLATE-B	ALUM 6061-T651	ASTM B211/B209		BAR/SHEET
		2		1	1	PLATE-A	ALUM 6061-T651	ASTM B211/B209		BAR/SHEET
ASSY	ASSY	ASSY	ASSY	ASSY	QUANTITY					

2 COAT WITH BOSTIK NEVER-SEEZ #NGBT-16 AND INSTALL TO THE FULLY SEATED POSITION.

1 ENGRAVE APPROXIMATELY AS SHOWN. LETTERS .5 HIGH X .03 MAX DEEP. FILL WITH BLACK WEATHER RESISTANT PAINT. "#" SERIALIZES THE COMPONENT. "#" SHALL BE SPECIFIED (2) AS 01-999. "XX" TO BE AS MEASURED AT FINAL ASSEMBLY. "YY" TO BE SPECIFIED IN THE FABRICATION SPECIFICATION, BUT SHALL BE LESS THAN OR EQUAL TO 30 POUNDS.

NOTES:

DIMENSIONING AND TOLERANCING SHALL BE PER ANSI Y14.5-94
UNSPECIFIED DIMENSIONS AND TOLERANCES SHOWN BELOW.
DIMENSIONS ARE IN INCHES. FRACTIONAL TOLERANCE: ±1/8

SYM.	GEOMETRY	.XXX	TOL.	.XX	TOL.
	FLATNESS	UNDER 3		UNDER 6	±.04
		3-12		6-18	±.06
	STRAIGHTNESS	OVER 12		OVER 18	±.09
	ANGULARITY	.X	±.1	ANGLES ±.5°	
	PERPENDICULARITY	ALL UNSPECIFIED TOOL RADII: .01 - .03			
	PARALLELISM	BREAK ALL SHARP CORNERS .01 - .03			
	CONCENTRICITY	ALL UNSPECIFIED MACHINED SURFACES SHALL BE 63 OR BETTER			
	TRUE POSITION	NEXT ASSEMBLY: N/A			
		DRAWING TYPE: LICENSE			

GROUP	NAME	DATE
PREPARER		2/29/12
CHECKER		2-29-12
PROJECT MANAGER		3/1/12
ENGINEERING		3/1/12
LICENSING		3/2/12
QUALITY		3/2/12

NAC INTERNATIONAL

MTR PLATE CANISTER, LWT CASK

PROJECT	DRAWING	REV
315-40	106	2

SCALE N.T.S. (2) EST.WT. (2) SH 1 OF 3 5:10PM 2-28-2012

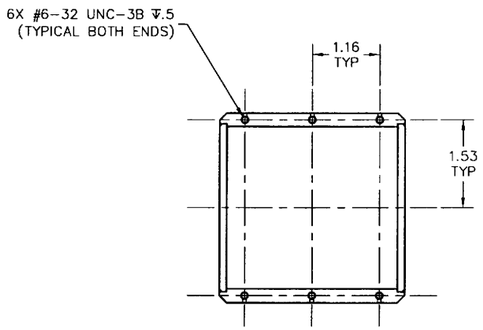

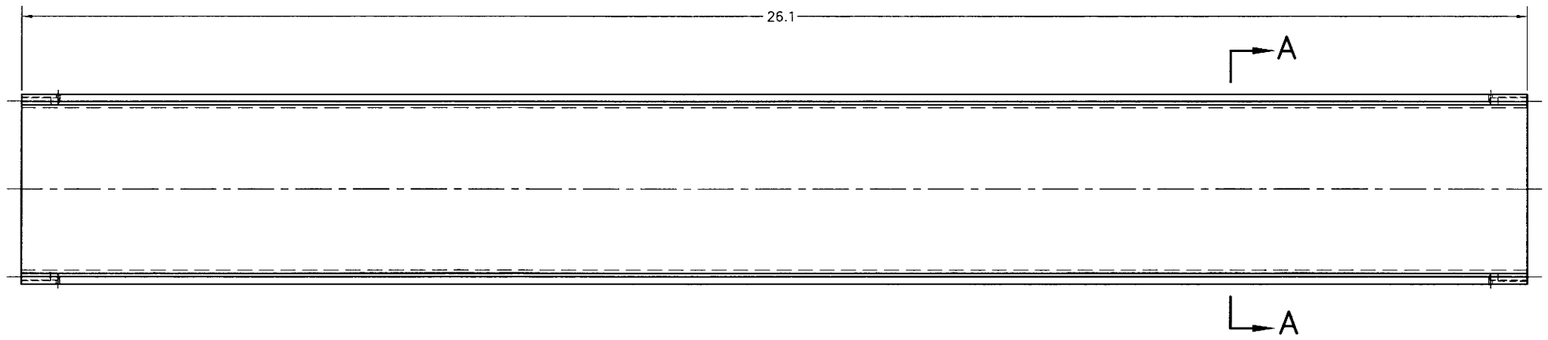

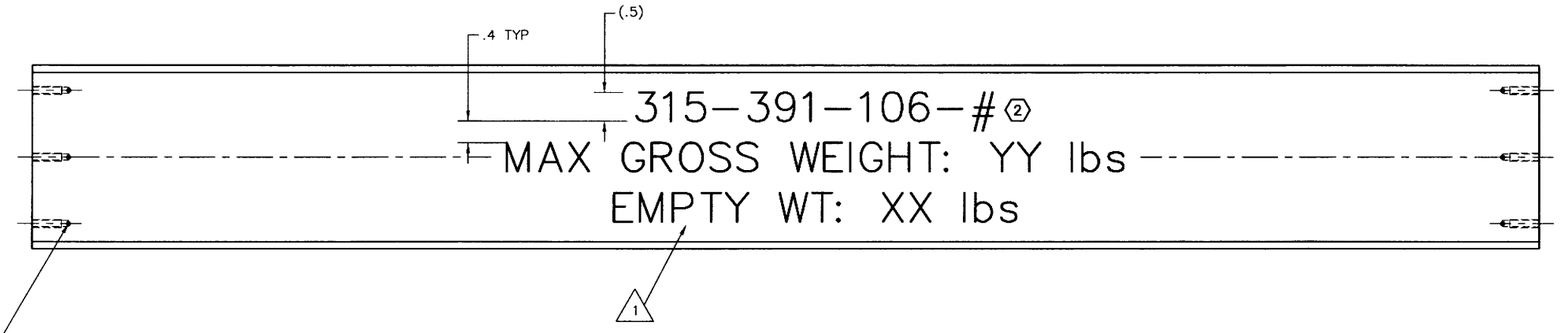

98 CAN BODY WELDMENT

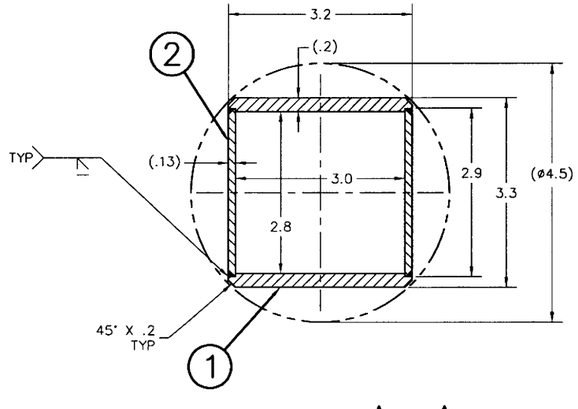

SECTION A-A

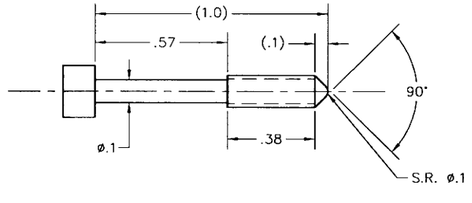

4 LID SCREW ②

②

NAC INTERNATIONAL	
MTR PLATE CANISTER, LWT CASK	
PROJECT 315-40	DRAWING 106 REV 2
SCALE N.T.S. EST WT ②	SH 2 OF 3 5:10PM 2-28-2012

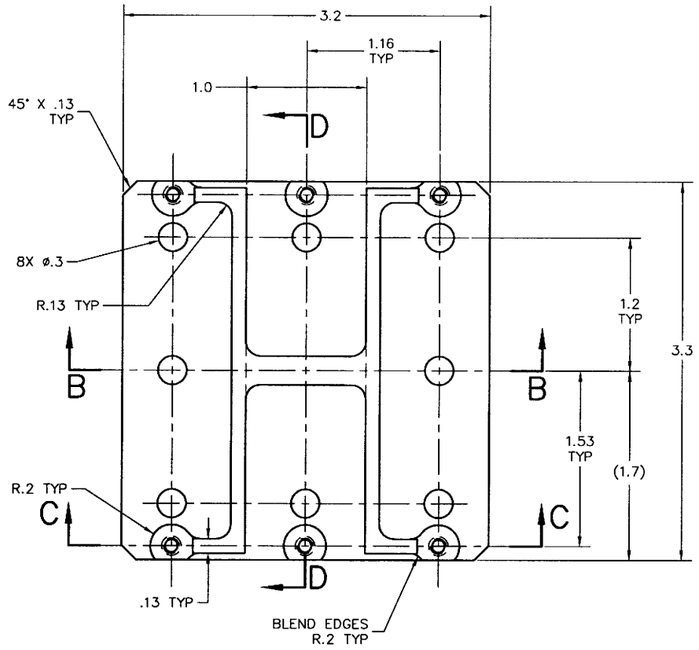

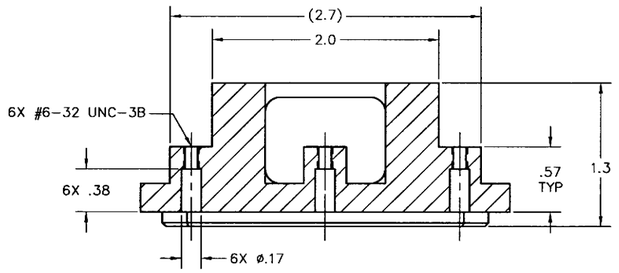

SECTION C—C

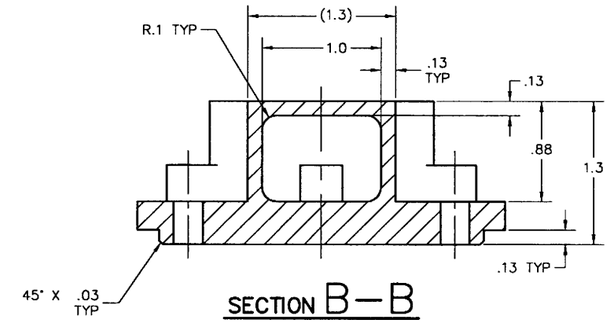

SECTION B—B

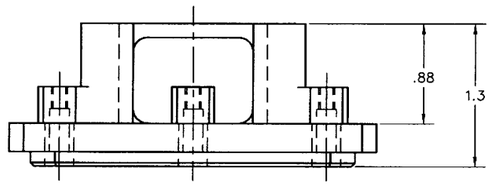

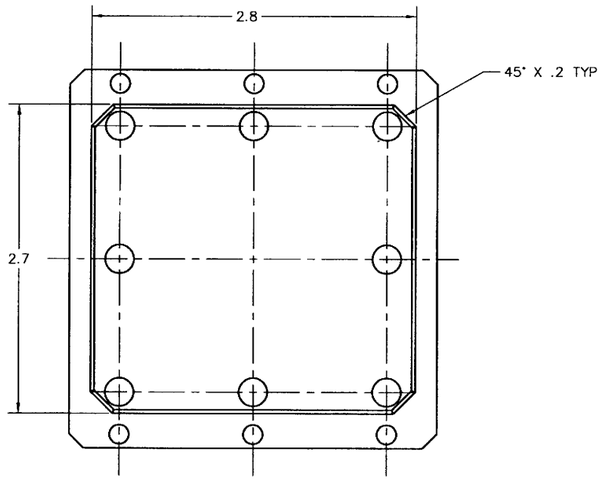

3 LID

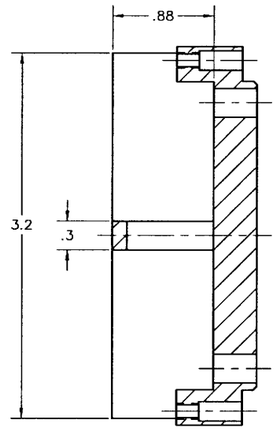

SECTION D—D

NAC INTERNATIONAL

MTR PLATE CANISTER,
LWT CASK

PROJECT 315-40		DRAWING 106	REV 2
SCALE N.T.S.	EST. WT. ⟨2⟩	SH 3 OF 3	5:10PM 2-28-2012

⟨2⟩

R141924

REV	CHANGE
0	INITIAL ISSUE
1	INC DCR 0A

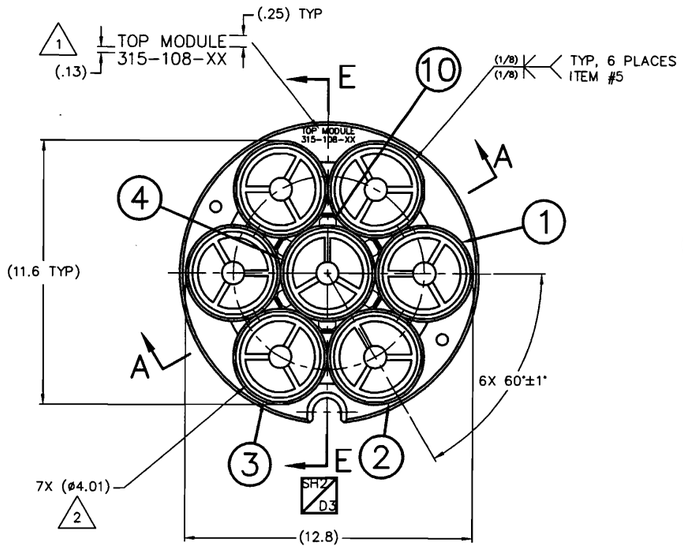

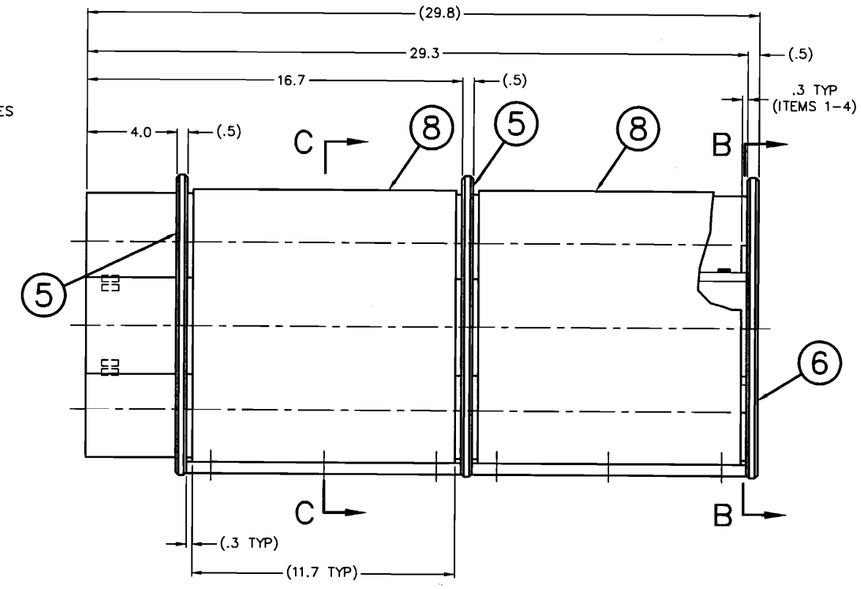

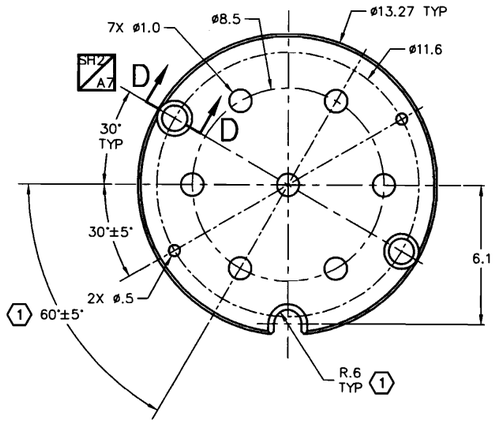

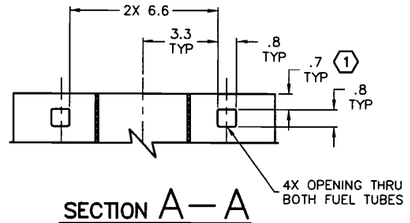

SECTION A—A
(ROTATED 30° CW)

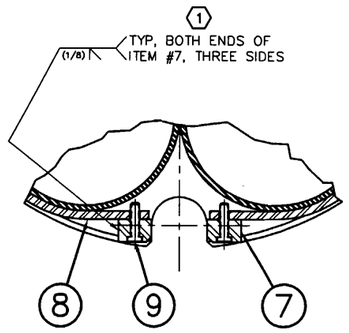

SECTION C—C
SCALE: 1/1.25

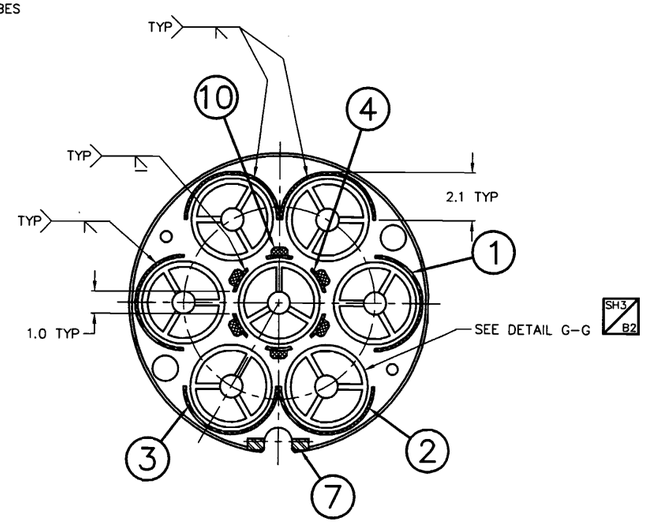

SECTION B—B

1 99 TOP MODULE
WEIGHT: 144#

4. PT FINAL PASS ALL EXCEPT SEAL WELDS. EXAMINE PER ASME SECTION V, ARTICLE 6, WITH ACCEPTANCE PER SECTION III, ARTICLE NG-5350.

3. UNLESS OTHERWISE NOTED, WELDING TO BE IN ACCORDANCE WITH SECTION IX OF THE ASME PRESSURE VESSEL CODE.

2 ALL SEVEN ø4.01 REF OPENINGS TO ACCEPT A ø3.920 GO GAGE THE FULL LENGTH OF THE FUEL TUBE. NO INDIVIDUAL OPENING TO EXCEED ø4.025.

1 STEEL STAMP/ENGRAVE APPROX. AS SHOWN. LETTERS .03 MAX. DEEP, FILL WITH BLACK WEATHER RESISTANT PAINT. SERIALIZE MULTIPLE UNITS STARTING WITH 01.

NOTES:

		12	12	SHUNT RETAINER	304 ST. STL.	ASME SA479/SA240		1/8 BAR/PLATE
		12	11	SHUNT POST	304 ST. STL.	ASME SA479		1/4 DIA BAR
		6	10	HEAT SHUNT	6061-T6511 ALUM.	ASTM B209		3/8 X 3/4 BAR
		12	9	LOW HEAD SHCS	ST. STL.	COML		10-32 UNF-3A X 3/4 LONG
		2	8	HEAT TRANSFER SHELL	6061-T6 ALUM.	ASTM B209		.19 SHEET
		4	7	GUIDE BAR	304 ST. STL.	ASME SA479		1/2 X 3/4 BAR
		1	6	BASE PLATE	304 ST. STL.	ASME SA240		1/2 PLATE
		2	5	SUPPORT PLATE	304 ST. STL.	ASME SA240		1/2 PLATE
		1	4	CENTER FUEL TUBE	304 ST. STL.	ASME SA249		4.25 OD X .12 WALL
		2	3	OUTER FUEL TUBE - C	304 ST. STL.	ASME SA249		4.25 OD X .12 WALL
		2	2	OUTER FUEL TUBE - B	304 ST. STL.	ASME SA249		4.25 OD X .12 WALL
		2	1	OUTER FUEL TUBE - A	304 ST. STL.	ASME SA249		4.25 OD X .12 WALL
97	98	99	ITEM	NAME	MATERIAL	SPEC	DRAWING No.	DESCRIPTION
ASSY	ASSY	ASSY						
QUANTITY								

NAC INTERNATIONAL

DIMENSIONING AND TOLERANCING SHALL BE PER ASME Y14.5-94 UNSPECIFIED DIMENSIONS AND TOLERANCES SHOWN BELOW. DIMENSIONS ARE IN INCHES. FRACTIONAL TOLERANCE: ±1/8

SYM.	GEOMETRY
	FLATNESS
	STRAIGHTNESS
	ANGULARITY
	PERPENDICULARITY
	PARALLELISM
	CONCENTRICITY
	TRUE POSITION

.XXX	TOL.	.XX	TOL.
UNDER 3	±.003	UNDER 6	±.02
3-12	±.006	6-18	±.03
OVER 12	±.010	OVER 18	±.06
.X	±.1	ANGLES	±0.5°

ALL UNSPECIFIED TOOL RADII: .015 - .030
BREAK ALL SHARP CORNERS .015 - .030
ALL UNSPECIFIED MACHINED SURFACES SHALL BE 125 OR BETTER
NEXT ASSEMBLY: 315-40-111
DRAWING TYPE: LICENSE

GROUP	NAME	DATE
PREPARED		9/6/01
CHECKED	R. Weller	9/6/01
PROJECT MANAGER		9/6/01
DIRECTOR DESIGN AND ANALYSIS		9/10/01
DIRECTOR, LICENSING		9/6/01
VICE PRESIDENT, QUALITY	B Barrett for RHS	9/10/01

WELDMENT,
7 CELL BASKET,
TOP MODULE,
DIDO FUEL

PROJECT	DRAWING	REV
315-40	108	1
SCALE 1/2.5	EST.WT. NOTED	SH 1 OF 3

1: SAPM 9-6-2001

NAC DCRM 01

R141924

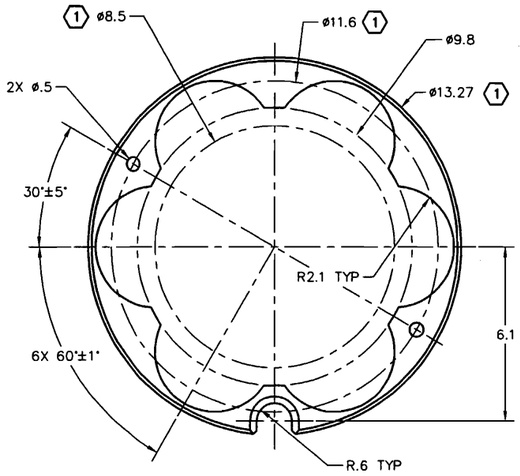

1 5 SUPPORT PLATE
(CHAMFER R.6 NOTCH, TOP PLATE ONLY)

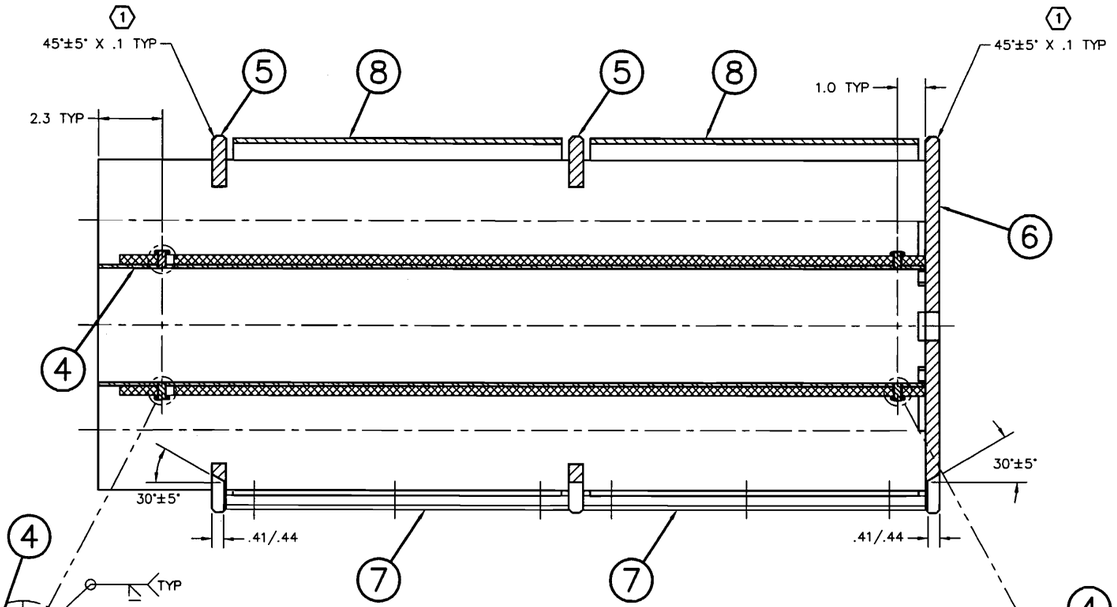

SECTION E—E SH1/D7

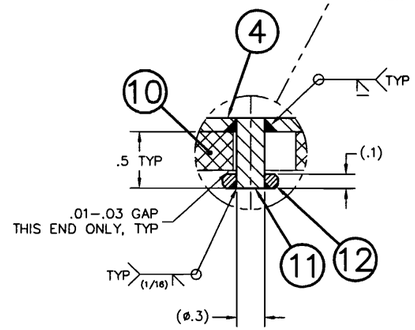

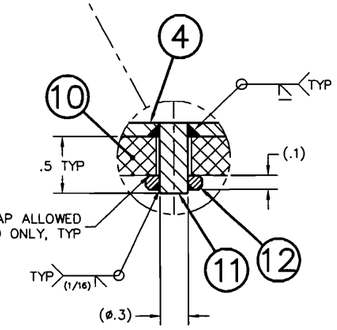

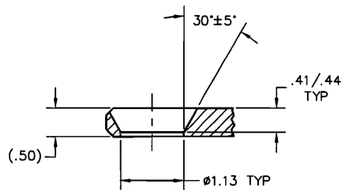

SECTION D—D SH1/E2
ROTATED 30° CCW
SCALE: 1/1

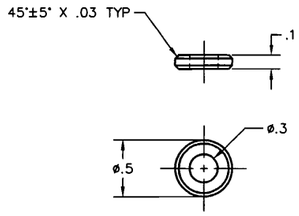

12 SHUNT RETAINER
SCALE: 4/1

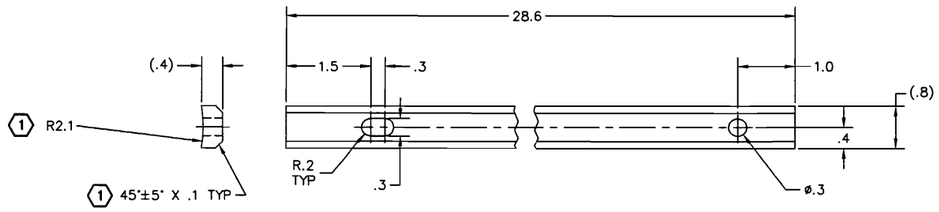

10 HEAT SHUNT
SCALE: 1/1

NAC INTERNATIONAL

WELDMENT,
7 CELL BASKET,
TOP MODULE,
DIDO FUEL

PROJECT 315-40	DRAWING 108	REV 1
SCALE 1/2	EST.WT. NOTED	SH 2 OF 3

1:58PM 9-5-2001

R141924

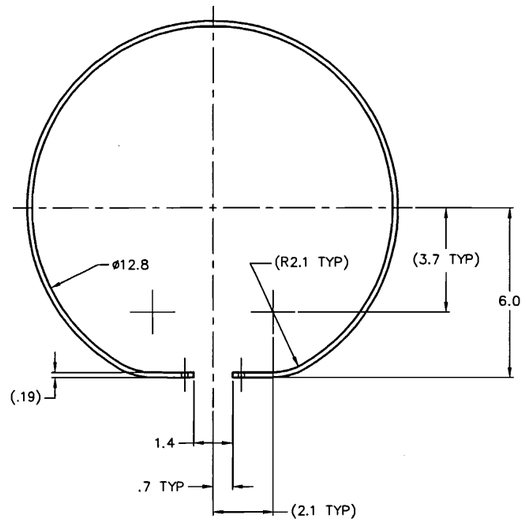

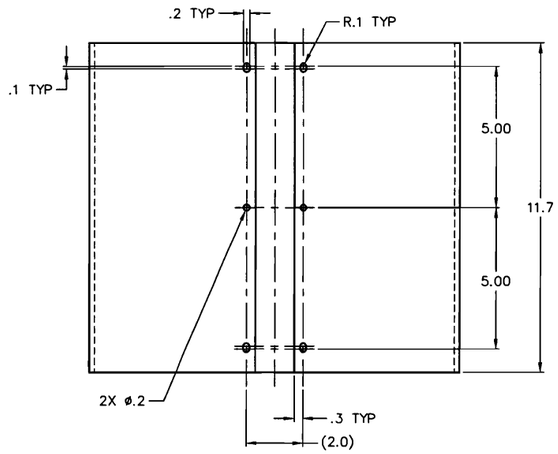

8 HEAT TRANSFER SHELL

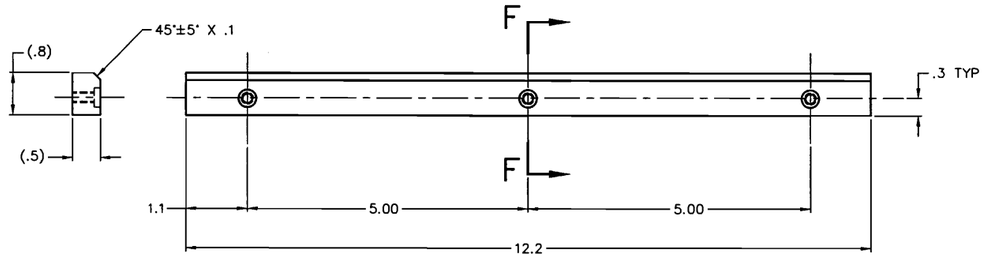

7 GUIDE BAR
SCALE: 1/1

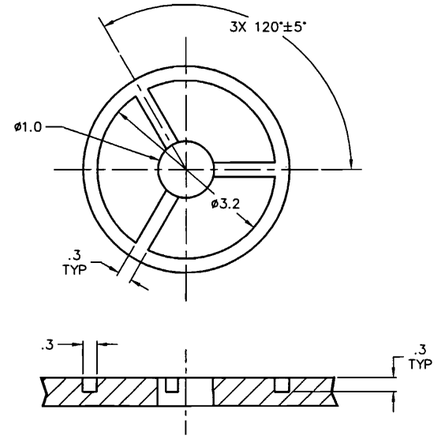

SH1/B4 DETAIL G–G
SCALE: FULL

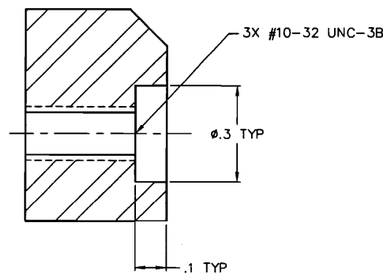

SECTION F–F
SCALE: 10/1

NAC INTERNATIONAL

WELDMENT,
7 CELL BASKET,
TOP MODULE,
DIDO FUEL

PROJECT 315–40	DRAWING 108	REV 1
SCALE 1/2	EST.WT. NOTED	SH 3 OF 3

3:34PM 8-3-2001

μ141925

REV	CHANGE
0	INITIAL ISSUE
1	INC DCR 0A

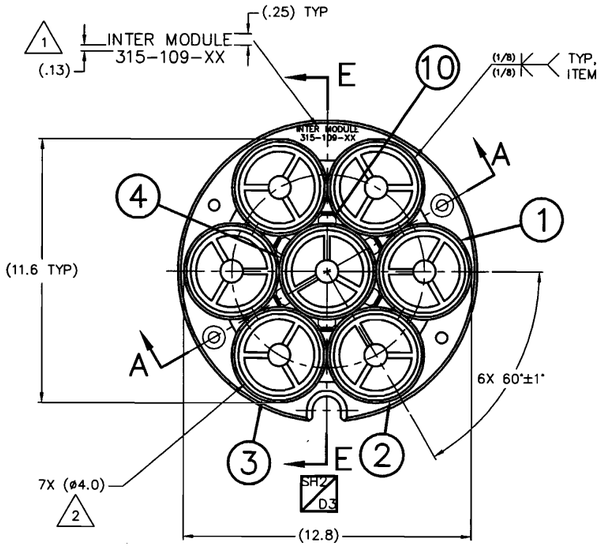

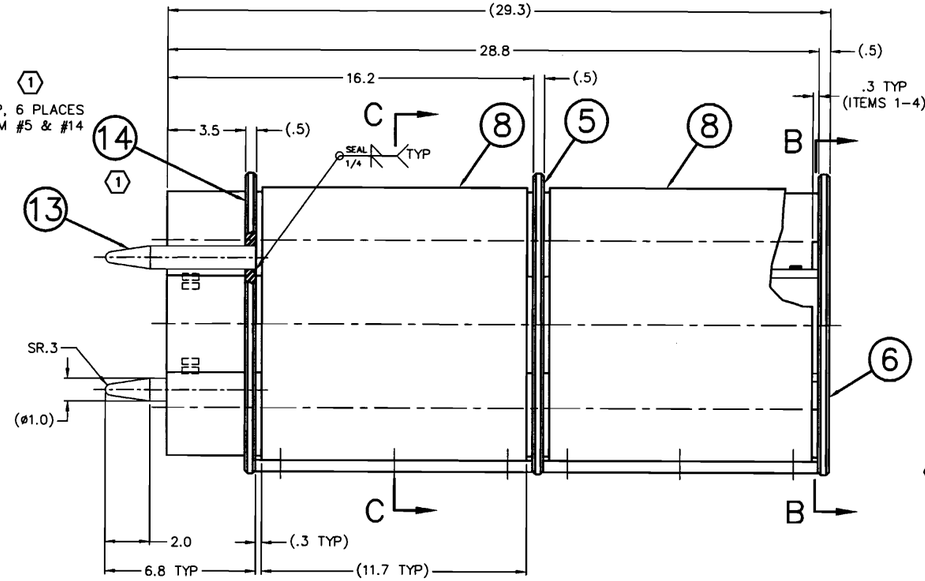

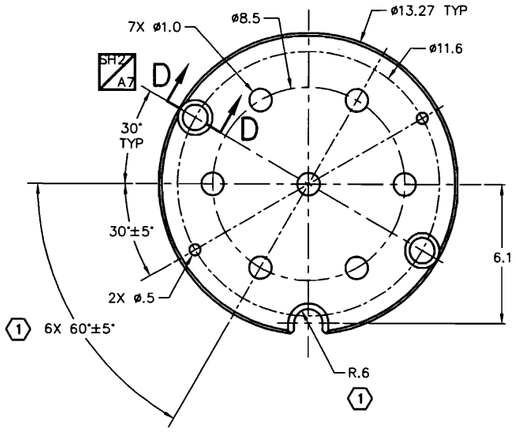

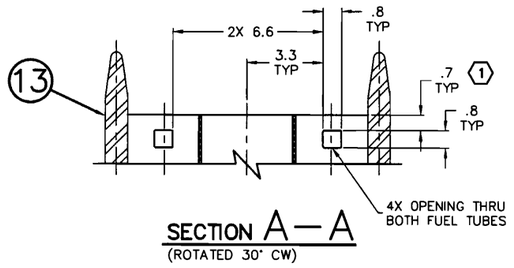

SECTION A—A
(ROTATED 30° CW)

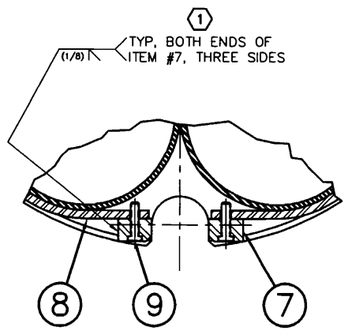

SECTION C—C
SCALE: 1/1.25

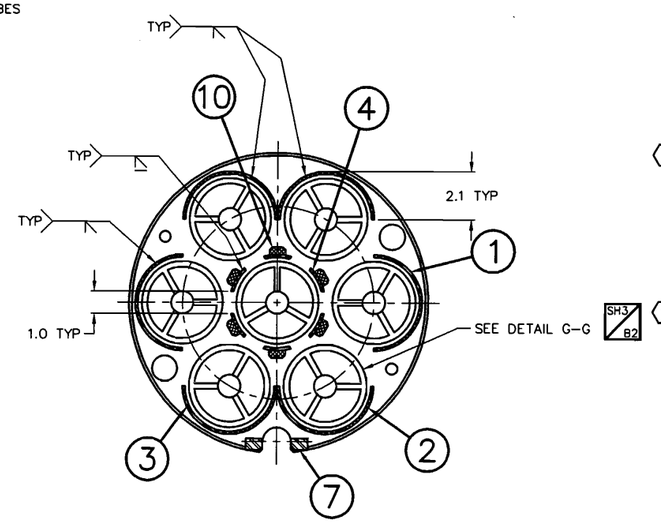

SECTION B—B

99 INTERMEDIATE MODULE
WEIGHT: 147#

4. PT FINAL PASS ALL EXCEPT SEAL WELDS. EXAMINE PER ASME SECTION V, ARTICLE 6, WITH ACCEPTANCE PER SECTION III, ARTICLE NG-5350.

3. UNLESS OTHERWISE NOTED, WELDING TO BE IN ACCORDANCE WITH SECTION IX OF THE ASME PRESSURE VESSEL CODE.

2 ALL SEVEN ø4.01 REF OPENINGS TO ACCEPT A ø3.920 GO GAGE THE FULL LENGTH OF THE FUEL TUBE. NO INDIVIDUAL OPENING TO EXCEED ø4.025.

1 STEEL STAMP/ENGRAVE APPROX. AS SHOWN. LETTERS .03 MAX. DEEP, FILL WITH BLACK WEATHER RESISTANT PAINT. SERIALIZE MULTIPLE UNITS STARTING WITH 01.

NOTES:

97 ASSY	98 ASSY	99 ASSY	ITEM	NAME	MATERIAL	SPEC	DRAWING No.	DESCRIPTION
		1	14	TOP PLATE	304 ST. STL.	ASME SA240		1/2 PLATE
		2	13	GUIDE PIN	304 ST. STL.	ASME SA479		1 DIA BAR
		12	12	SHUNT RETAINER	304 ST. STL.	ASME SA479/SA240		1/8 BAR/PLATE
		12	11	SHUNT POST	304 ST. STL.	ASME SA479		1/4 DIA BAR
		6	10	HEAT SHUNT	6061-T6511 ALUM.	ASTM B209		3/8 X 3/4 BAR
		12	9	LOW HEAD SHCS	ST. STL.	COML		10-32 UNF-3A X 3/4 LONG
		2	8	HEAT TRANSFER SHELL	6061-T6 ALUM.	ASTM B209		.19 SHEET
		4	7	GUIDE BAR	304 ST. STL.	ASME SA479		1/2 X 3/4 BAR
		1	6	BASE PLATE	304 ST. STL.	ASME SA240		1/2 PLATE
		1	5	SUPPORT PLATE	304 ST. STL.	ASME SA240		1/2 PLATE
		1	4	CENTER FUEL TUBE	304 ST. STL.	ASME SA249		4.25 OD X .12 WALL
		2	3	OUTER FUEL TUBE - C	304 ST. STL.	ASME SA249		4.25 OD X .12 WALL
		2	2	OUTER FUEL TUBE - B	304 ST. STL.	ASME SA249		4.25 OD X .12 WALL
		2	1	OUTER FUEL TUBE - A	304 ST. STL.	ASME SA249		4.25 OD X .12 WALL

ASSY QUANTITY

DIMENSIONING AND TOLERANCING SHALL BE PER ASME Y14.5-94 UNSPECIFIED DIMENSIONS AND TOLERANCES SHOWN BELOW. DIMENSIONS ARE IN INCHES. FRACTIONAL TOLERANCE: ±1/8

SYM.	GEOMETRY	.XXX	TOL.	.XX	TOL.
	FLATNESS	UNDER 3	±.003	UNDER 6	±.02
	STRAIGHTNESS	3-12	±.005	6-18	±.03
		OVER 12	±.010	OVER 18	±.06
	ANGULARITY	.X	±.1	ANGLES ±0.5°	
	PERPENDICULARITY	ALL UNSPECIFIED TOOL RADII: .015 - .030			
	PARALLELISM	BREAK ALL SHARP CORNERS .015 - .030			
	CONCENTRICITY	ALL UNSPECIFIED MACHINED SURFACES SHALL BE ▽ OR BETTER			
	TRUE POSITION	NEXT ASSEMBLY: 315-40-111			
		DRAWING TYPE: LICENSE			

GROUP	NAME	DATE
PREPARER		9/6/01
CHECKER	R. Walker	9.6.01
PROJECT MANAGER		9/6/01
DIRECTOR DESIGN AND ANALYSIS		9.10.01
DIRECTOR, LICENSING	SC Thompson	9/6/01
VICE PRESIDENT, QUALITY	CR Bennett for RHS	9/10/01

NAC INTERNATIONAL

WELDMENT,
7 CELL BASKET,
INTERMEDIATE MODULE,
DIDO FUEL

PROJECT	315-40	DRAWING	109	REV 1
SCALE 1/2.5	EST.WT. NOTED	SH 1 OF 3		2:16PM 9-6-2001

NAC DCRM 01

R141923

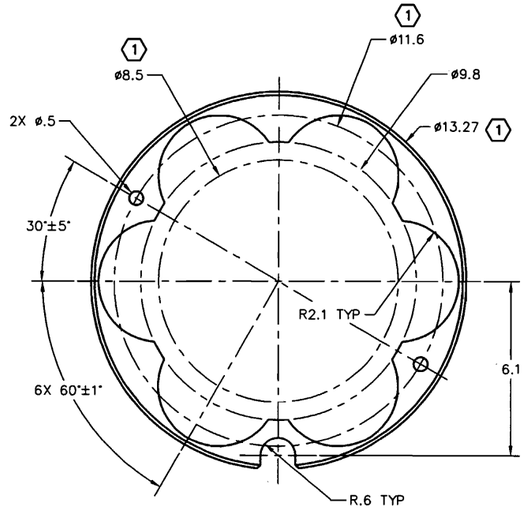

① ⑤ SUPPORT PLATE

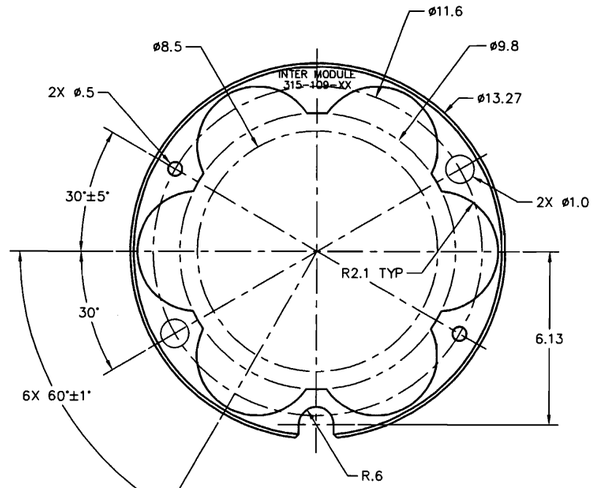

① ⑭ TOP PLATE

SECTION D–D
ROTATED 30° CCW
SCALE: 1/1

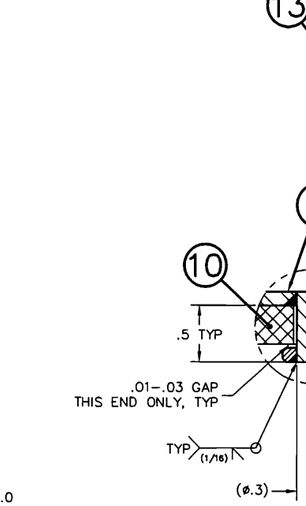

⑫ SHUNT RETAINER
SCALE: 4/1

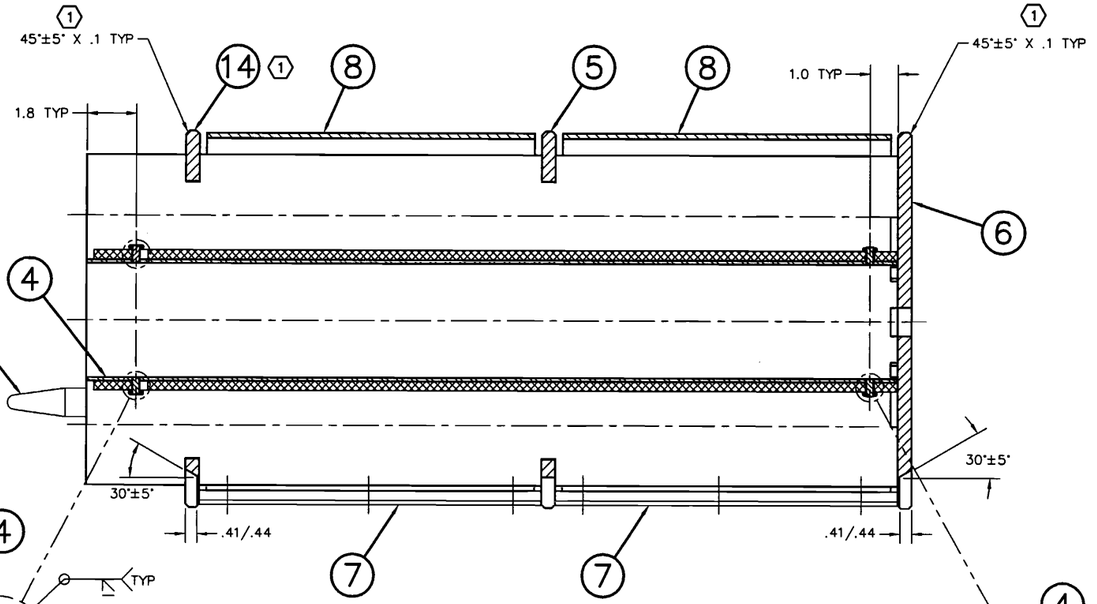

SECTION E–E SHT D7

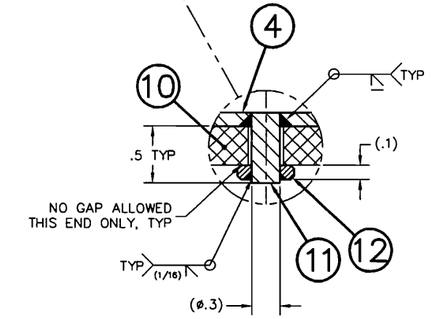

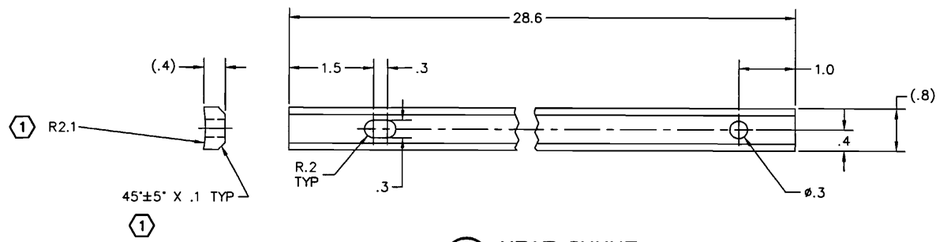

⑩ HEAT SHUNT
SCALE: 1/1

NAC INTERNATIONAL

WELDMENT,
7 CELL BASKET,
INTERMEDIATE MODULE,
DIDO FUEL

PROJECT 315-40	DRAWING 109	REV 1
SCALE 1/2	EST.WT. NOTED	SH 2 OF 3

2:15PM 9-6-2001

R141925

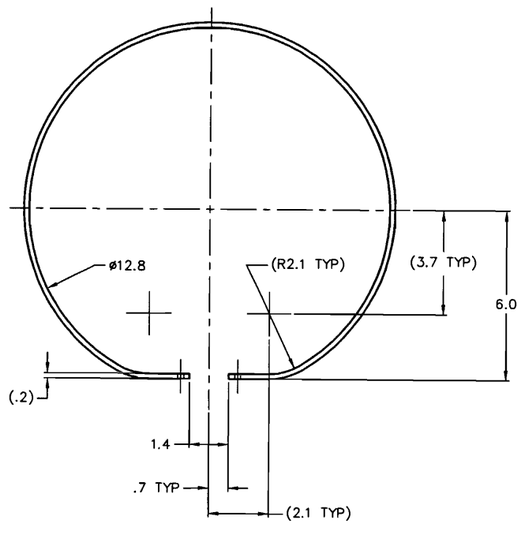

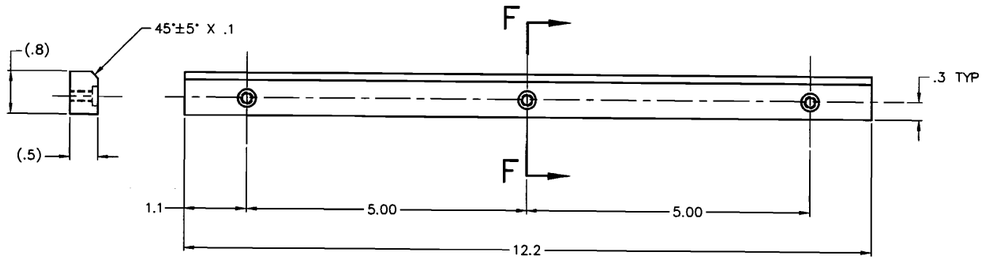

7 GUIDE BAR
SCALE: 1/1

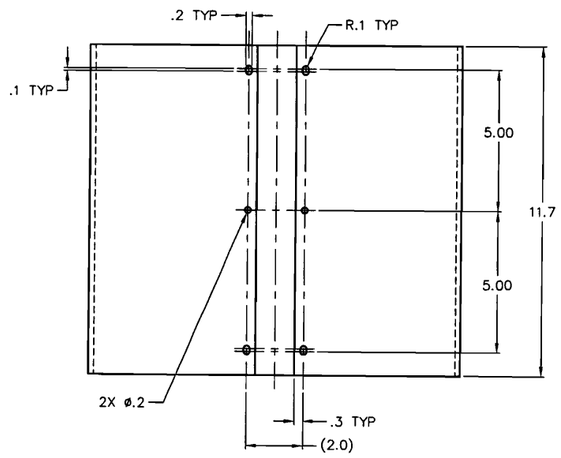

8 HEAT TRANSFER SHELL

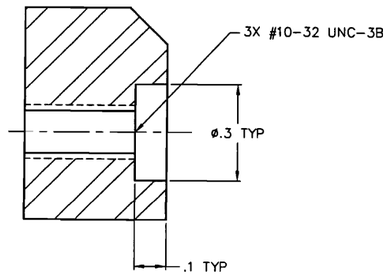

SECTION F—F
SCALE: 10/1

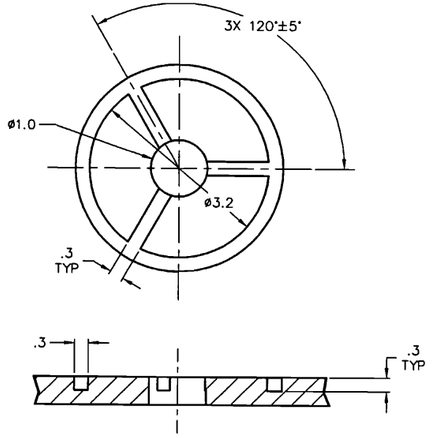

SH1/B4 DETAIL G—G
SCALE: FULL

NAC INTERNATIONAL

WELDMENT,
7 CELL BASKET,
INTERMEDIATE MODULE,
DIDO FUEL

PROJECT	DRAWING	REV
315-40	109	1
SCALE 1/2	EST.WT. NOTED	SH 3 OF 3
		2:17PM 9-6-2001

R141926

REV	CHANGE
0	INITIAL ISSUE
1	INC DCR 0A

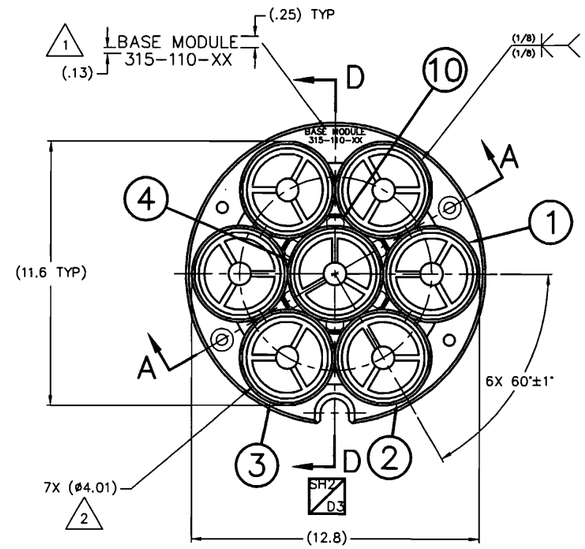

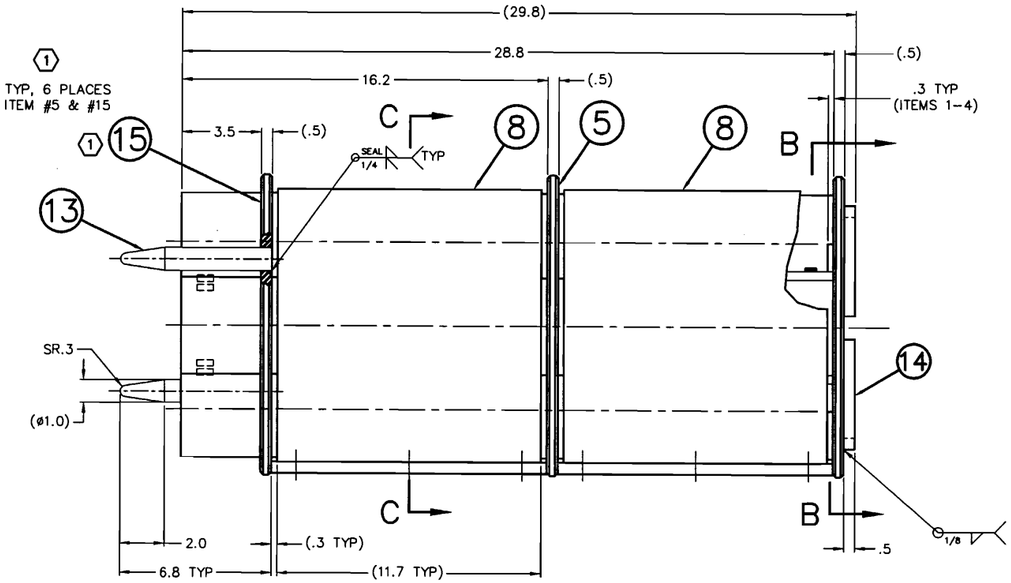

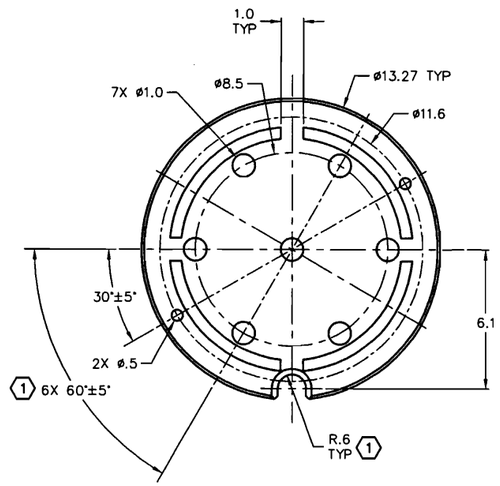

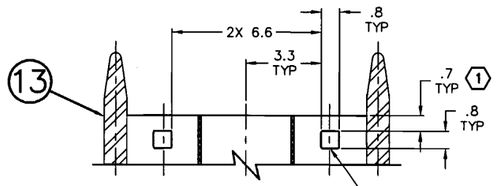

SECTION A–A
(ROTATED 30° CW)

1 99 BASE MODULE
WEIGHT: 154#

4. PT FINAL PASS ALL EXCEPT SEAL WELDS. EXAMINE PER ASME SECTION V, ARTICLE 6, WITH ACCEPTANCE PER SECTION III, ARTICLE NG-5350.

3. UNLESS OTHERWISE NOTED, WELDING TO BE IN ACCORDANCE WITH SECTION IX OF THE ASME PRESSURE VESSEL CODE.

2 ALL SEVEN ø4.01 REF OPENINGS TO ACCEPT A ø3.920 GO GAGE THE FULL LENGTH OF THE FUEL TUBE.
NO INDIVIDUAL OPENING TO EXCEED ø4.025.

1 STEEL STAMP/ENGRAVE APPROX. AS SHOWN. LETTERS .03 MAX. DEEP, FILL WITH BLACK WEATHER RESISTANT PAINT. SERIALIZE MULTIPLE UNITS STARTING WITH 01.

NOTES:

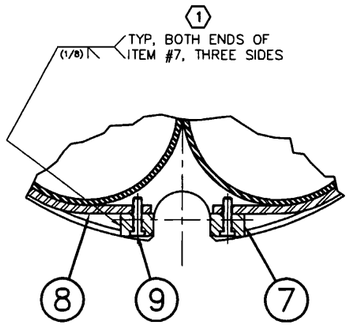

SECTION C–C
SCALE: 1/1.25

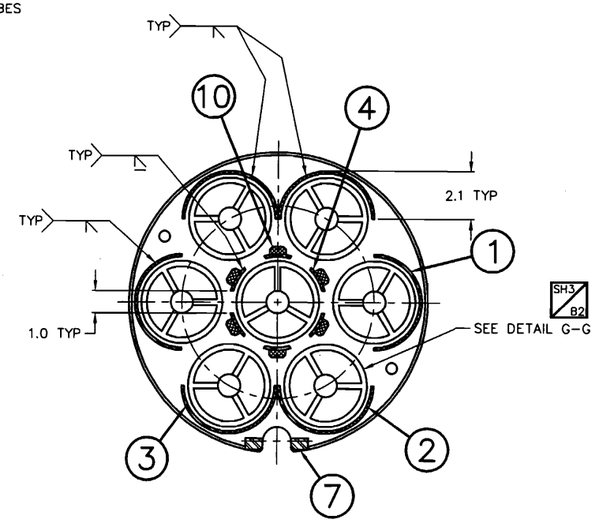

SECTION B–B

97	98	99	ITEM	NAME	MATERIAL	SPEC	DRAWING No.	DESCRIPTION
		1	15	TOP PLATE	304 ST. STL.	ASME SA240		1/2 PLATE
		1	14	BASE	304 ST. STL.	ASME SA312		10 SCH 80S PIPE
		2	13	GUIDE PIN	304 ST. STL.	ASME SA479		1 DIA BAR
		12	12	SHUNT RETAINER	304 ST. STL.	ASME SA479/SA240		1/8 BAR/PLATE
		12	11	SHUNT POST	304 ST. STL.	ASME SA479		1/4 DIA BAR
		6	10	HEAT SHUNT	6061-T6511 ALUM.	ASTM B209		3/8 X 3/4 BAR
		12	9	LOW HEAD SHCS	ST. STL.	COML		10-32 UNF-3A X 3/4 LONG
		2	8	HEAT TRANSFER SHELL	6061-T6 ALUM.	ASTM B209		.19 SHEET
		4	7	GUIDE BAR	304 ST. STL.	ASME SA479		1/2 X 3/4 BAR
		1	6	BASE PLATE	304 ST. STL.	ASME SA240		1/2 PLATE
		1	5	SUPPORT PLATE	304 ST. STL.	ASME SA240		1/2 PLATE
		1	4	CENTER FUEL TUBE	304 ST. STL.	ASME SA249		4.25 OD X .12 WALL
		2	3	OUTER FUEL TUBE – C	304 ST. STL.	ASME SA249		4.25 OD X .12 WALL
		2	2	OUTER FUEL TUBE – B	304 ST. STL.	ASME SA249		4.25 OD X .12 WALL
		2	1	OUTER FUEL TUBE – A	304 ST. STL.	ASME SA249		4.25 OD X .12 WALL

ASSY | ASSY | ASSY QUANTITY

DIMENSIONING AND TOLERANCING SHALL BE PER ASME Y14.5-94
UNSPECIFIED DIMENSIONS AND TOLERANCES SHOWN BELOW.
DIMENSIONS ARE IN INCHES. FRACTIONAL TOLERANCE: ±1/8

SYM.	GEOMETRY	XXX	TOL.	XX	TOL.
	FLATNESS	UNDER 3	±.003	UNDER 6	±.02
		3-12	±.005	6-18	±.03
	STRAIGHTNESS	OVER 12	±.010	OVER 18	±.06
	ANGULARITY	X	±.1	ANGLES ±0.5°	
	PERPENDICULARITY	ALL UNSPECIFIED TOOL RADII: .015 - .030			
		BREAK ALL SHARP CORNERS .015 - .030			
	PARALLELISM	ALL UNSPECIFIED MACHINED SURFACES SHALL BE ▽ OR BETTER			
	CONCENTRICITY	NEXT ASSEMBLY: 315-40-111			
	TRUE POSITION	DRAWING TYPE: LICENSE			

GROUP	NAME	DATE
PREPARER		9/6/01
CHECKER	R. Nelson	9.6.01
PROJECT MANAGER		9/6/01
DIRECTOR DESIGN AND ANALYSIS		9/6/01
DIRECTOR, LICENSING	J.C. Thompson	9/6/01
VICE PRESIDENT, QUALITY	B.J. Bandt for RHS	9/10/01

NAC INTERNATIONAL

WELDMENT,
7 CELL BASKET,
BASE MODULE,
DIDO FUEL

PROJECT	315-40	DRAWING	110	REV 1
SCALE 1/2.5	EST.WT. NOTED	SH 1 OF 3	2.375PM 9-6-2001	

NAC DCRM 01

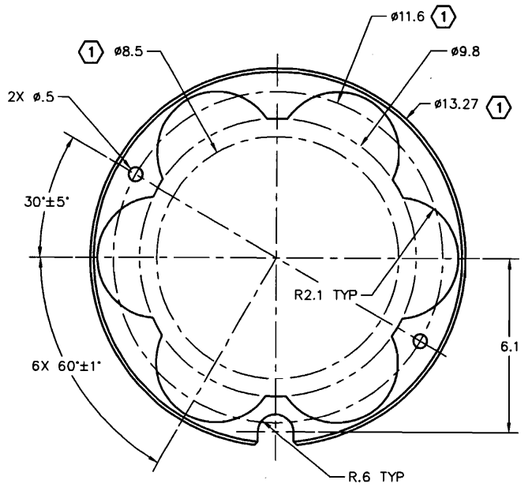

1 5 SUPPORT PLATE

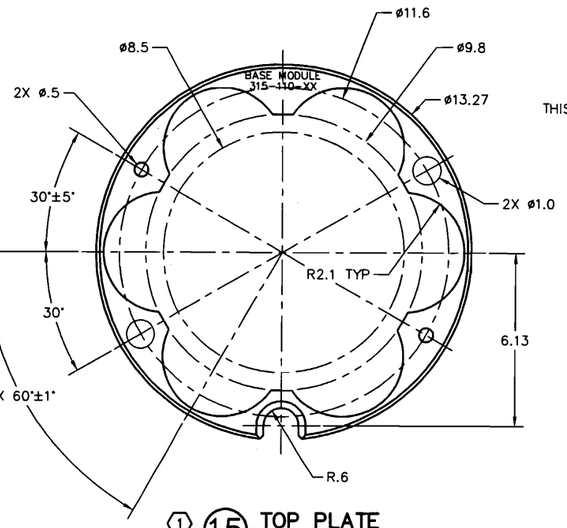

1 15 TOP PLATE

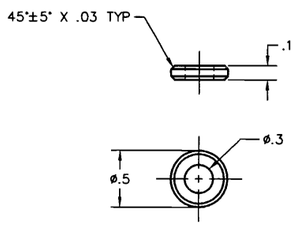

12 SHUNT RETAINER
SCALE: 4/1

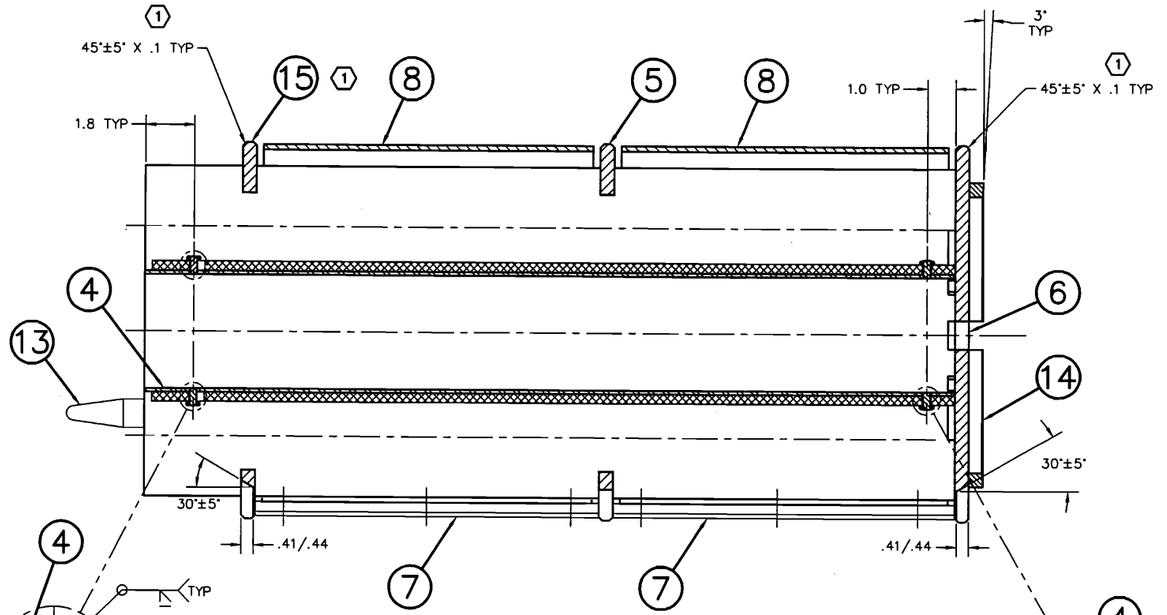

SECTION D–D SH1 D7

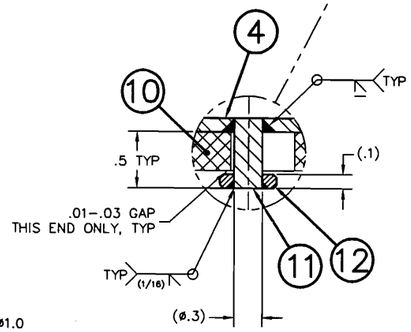

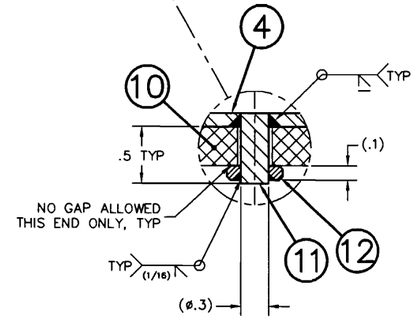

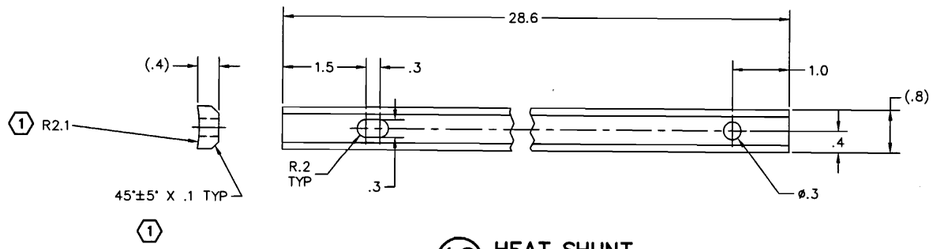

10 HEAT SHUNT
SCALE: 1/1

NAC INTERNATIONAL

WELDMENT,
7 CELL BASKET,
BASE MODULE,
DIDO FUEL

PROJECT 315–40	DRAWING 110	REV 1
SCALE 1/2	EST.WT. NOTED	SH 2 OF 3

2:58PM 9-6-2001

R141926

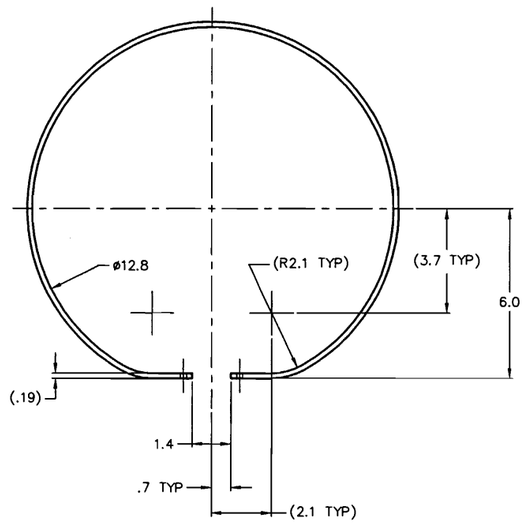

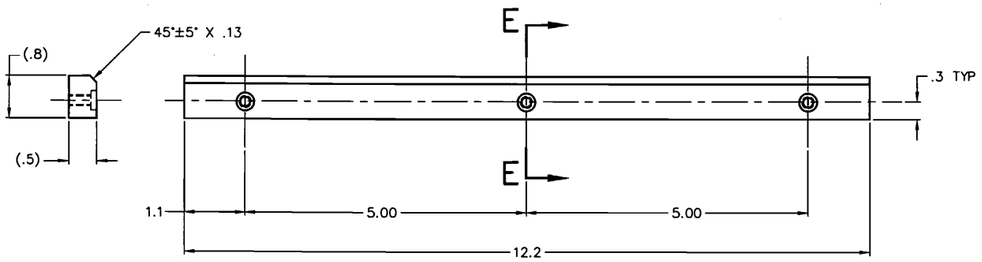

(7) GUIDE BAR
SCALE: 1/1

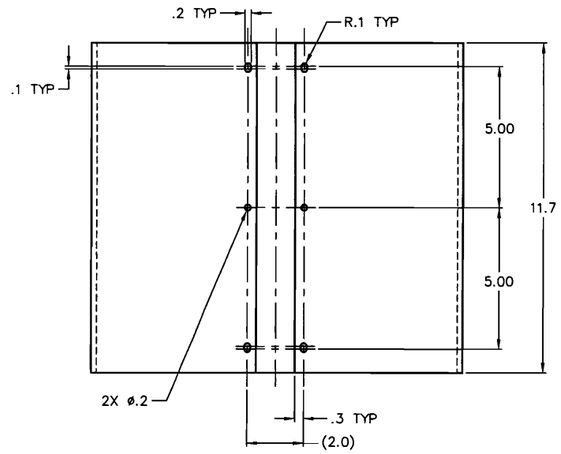

(8) HEAT TRANSFER SHELL

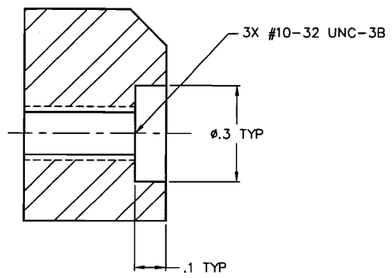

SECTION E—E
SCALE: 10/1

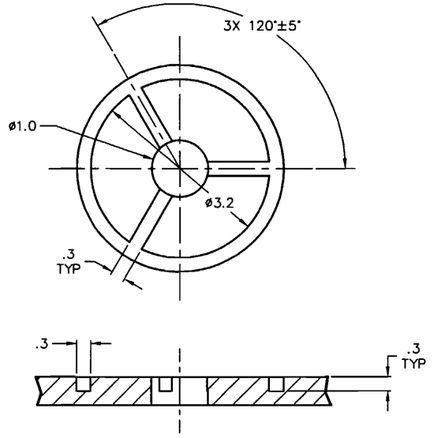

SH1/B4 DETAIL G—G
SCALE: FULL

NAC INTERNATIONAL

WELDMENT,
7 CELL BASKET,
BASE MODULE,
DIDO FUEL

PROJECT 315-40	DRAWING 110	REV 1
SCALE 1/2	EST.WT. NOTED	SH 3 OF 3

2:37PM 8-8-2001

K-27549

REV	CHANGE
0	INITIAL ISSUE
1	INC DCR(L) 0A
2	INC DCR(L) 1A

		2	12	HEX BOLT			315-40-113-8	
		7	11	TUBE SPACER			315-40-113-98	
		1	10	LID SPACER			315-40-113-99	
		1	9	TAMPER INDICATING DEVICE (TID)		COML		
		A/R	8	WIRE	ST. STL.	COML		
		8	7	BALL-LOK PIN			315-40-01-8	
		1	6	TOP BASKET			315-40-108-99	
		4	5	INTER. BASKET			315-40-109-99	
		1	4	BASE BASKET			315-40-110-99	
		1	3	CASK ASSEMBLY			315-40-02-99	
		1	2	IMPACT LIMITER			315-40-06-99	
		1	1	IMPACT LIMITER			315-40-05-99	
97 ASSY	98 ASSY	99 ASSY	ITEM	NAME	MATERIAL	SPEC	DRAWING No.	DESCRIPTION
QUANTITY								

(2)/2 LID SPACER (ITEM 10), HEX. BOLT (ITEM 12) AND TUBE SPACER (ITEM 11) ARE NOT REQUIRED TO BE INSTALLED WHEN MAXIMUM PER ELEMENT DECAY HEAT DOES NOT EXCEED 18 W.

(2)/1 DELETED

NOTES:

NAC DCRM 01

UNLESS OTHERWISE STATED	GROUP	NAME	DATE
DIMENSIONING AND TOLERANCING SHALL BE PER ASME Y14.5M-94	PREPARER		7/29/08
ALL THREAD DEPTH CALLOUTS ARE TO BE CONSIDERED AS A MIN. DEPTH OF PERFECT THREADS.	CHECKER		8/6/08
	PROJECT MANAGER		8/6/08
	ENGINEERING		8/6/08
ALL DIMENSIONS ARE IN INCHES	LICENSING		8-8-08
MACHINED SURFACES TO BE 125 OR BETTER	QUALITY		8-11-08
NEXT ASSEMBLY: N/A			
DRAWING TYPE: LICENSE			

NAC INTERNATIONAL

LEGAL WEIGHT TRUCK
TRANSPORT CASK ASSY
DIDO FUEL

PROJECT	DRAWING	REV
315-40	111	2
	SH 1 OF 1	10:13AM 7-29-2008

K-138692

REV	CHANGE
0	INITIAL ISSUE

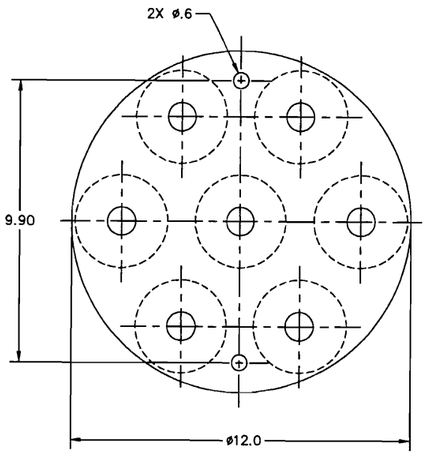

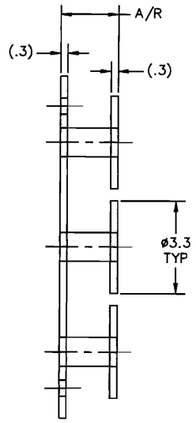

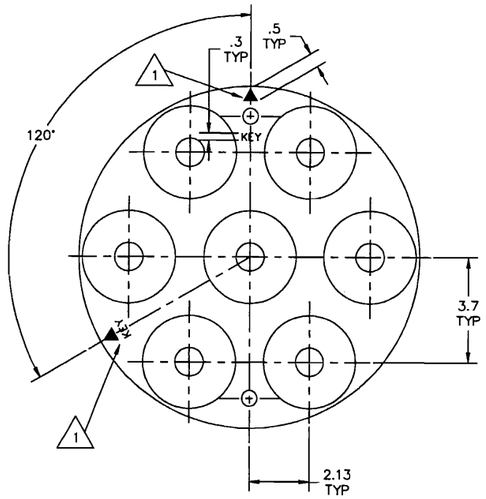

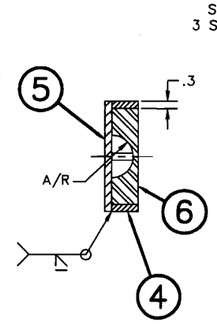

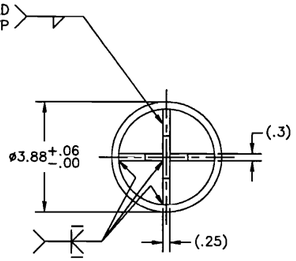

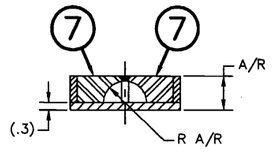

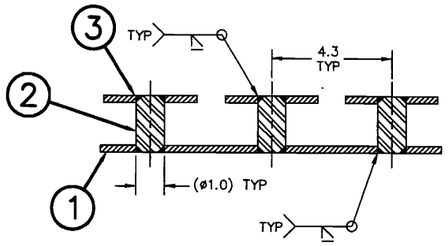

99 LID SPACER
WEIGHT: 15#

98 TUBE SPACER
WEIGHT: 2#

			8	HEX BOLT	ST. STL.	COML		1/2-13 UNC-2A 1.0 LONG
	2		7	TUBE SUPPORT-B	304 ST. STL.	ASME SA240/SA479		1/4 PLATE/BAR
	1		6	TUBE SUPPORT-A	304 ST. STL.	ASME SA240/SA479		1/4 PLATE/BAR
	1		5	TUBE PLATE	304 ST. STL.	ASME SA240/SA479		1/4 PLATE/BAR
	1		4	SPACER TUBE	304 ST. STL.	ASME SA240/SA479		PLATE/BAR
		7	3	TOP DISK	304 ST. STL.	ASME SA240/SA479		1/4 PLATE
		7	2	POST	304 ST. STL.	ASME SA479		1 DIA BAR
		1	1	MOUNTING PLATE	304 ST. STL.	ASME SA240		1/4 PLATE
97 ASSY QUANTITY	98 ASSY	99 ASSY	ITEM	NAME	MATERIAL	SPEC	DRAWING No.	DESCRIPTION

1 STEEL STAMP/ENGRAVE .03 MAX. DEEP CHARACTERS AND DELTA. FILL WITH BLACK WEATHER RESISTANT PAINT. LOCATE APPROX. AS SHOWN.

NOTES:

NAC DCRM 01

DIMENSIONING AND TOLERANCING SHALL BE PER ASME Y14.5-94
UNSPECIFIED DIMENSIONS AND TOLERANCES SHOWN BELOW.
DIMENSIONS ARE IN INCHES. FRACTIONAL TOLERANCE ±1/8

SYM.	GEOMETRY	.XXX	TOL.	.XX	TOL.
	FLATNESS	UNDER 3	±.003	UNDER 6	±.02
	STRAIGHTNESS	3-12	±.005	6-18	±.03
		OVER 12	±.010	OVER 18	±.06
	ANGULARITY	X	±.1	ANGLES ±0.5°	
	PERPENDICULARITY	ALL UNSPECIFIED TOOL RADII: .015 - .030			
	PARALLELISM	BREAK ALL SHARP CORNERS .015 - .030			
	CONCENTRICITY	ALL UNSPECIFIED MACHINED SURFACES SHALL BE ▽ OR BETTER			
	TRUE POSITION	NEXT ASSEMBLY: 315-40-111			
		DRAWING TYPE: LICENSE			

GROUP	NAME	DATE
PREPARER	[signature]	3/5/01
CHECKER	R Walton	3-5-01
PROJECT MANAGER	[signature]	3/5/01
DIRECTOR, DESIGN AND ANALYSIS	[signature]	3-5-01
DIRECTOR, LICENSING	LC Thompson	3/6/01
VICE PRESIDENT, QUALITY	[signature]	3/6/01

NAC INTERNATIONAL

SPACERS,
TOP MODULE
DIDO FUEL

PROJECT	DRAWING	REV
315-40	113	0
SCALE 1/2	EST.WT. NOTED	SH 1 OF 1

12:44PM 3-3-2001

REV	CHANGE
0	INITIAL ISSUE
1	INC DCR 0A
2	INC DCR 1A

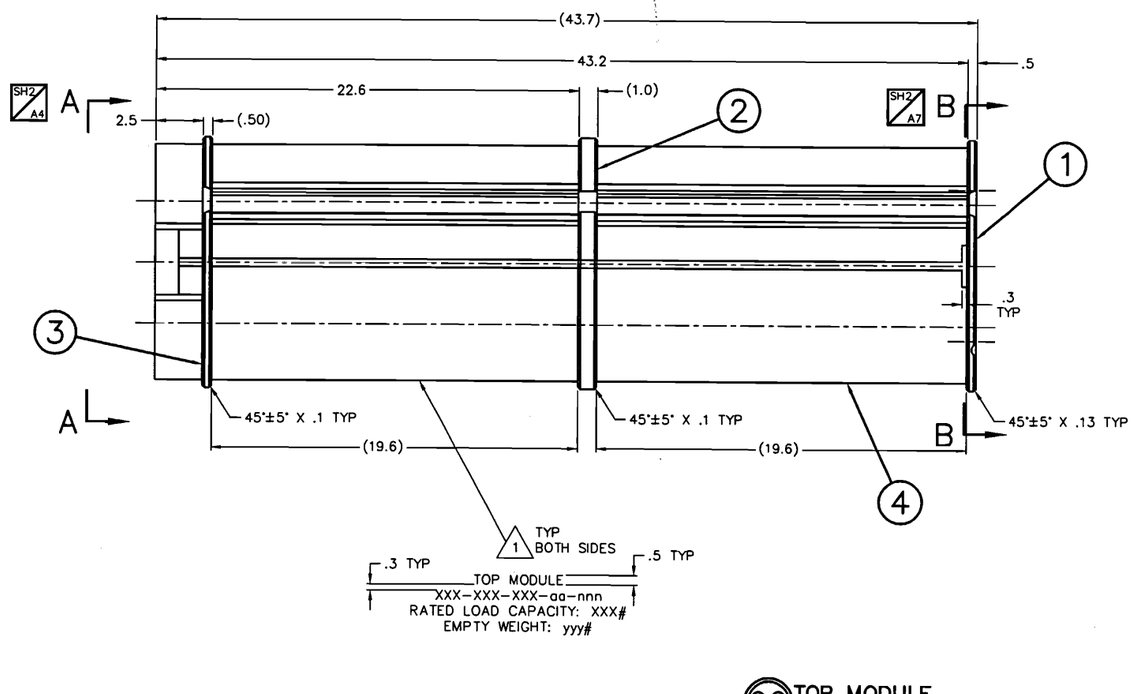

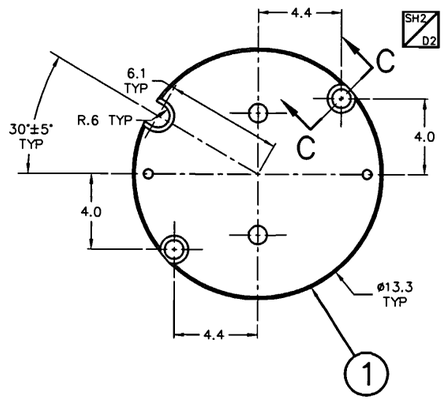

99 TOP MODULE
WEIGHT: 175#
(HIDDEN LINES REMOVED FOR CLARITY)

7. UNLESS OTHERWISE NOTED, WELDING TO BE IN ACCORDANCE WITH SECTION IX OF THE ASME PRESSURE VESSEL CODE.

6. AFTER LOAD TESTING VISUALLY INSPECT (VT) ALL ACCESSIBLE WELDS IN ACCORDANCE WITH NOTE 4.

5. PENETRANT TEST (PT) FINAL PASS ALL WELDS EXCEPT SEAL WELDS. EXAMINE PER ASME SECTION V, ARTICLE 6, WITH ACCEPTANCE PER SECTION III, ARTICLE NG-5350.

4. VISUALLY INSPECT (VT) ALL WELDS. EXAMINE PER ASME SECTION V, ARTICLE 9, WITH ACCEPTANCE PER SECTION III, ARTICLE NG-5360.

3. BASKET SHALL BE LOAD TESTED AT 150% OF RATED LOAD CAPACITY WITH NO PERMANENT DEFORMATION ALLOWED.

△2 EACH ITEM #4 (TUBE) TO ACCEPT A FULL LENGTH, ø5.40 GO GAGE.

△1 STEEL STAMP/ENGRAVE APPROX. AS SHOWN. LETTERS .50 HIGH X .03 MAX. DEEP. FILL WITH KEELER AND LONG POLY-SILICON ENAMEL P SERIES. XXX-XXX-XXX REPRESENTS THE CUSTOMER IDENTIFICATION NUMBER. aa REPRESENTS THE OVERALL LENGTH ROUNDED TO THE NEAREST INCH. nnn REPRESENTS A UNIQUE IDENTIFICATION NUMBER IN ACCORDANCE WITH THE FABRICATION SPECIFICATION. yyy IS THE ACTUAL WEIGHT AT THE TIME OF FABRICATION.

NOTES:

97 ASSY QUANTITY	98 ASSY	99 ASSY	ITEM	NAME	MATERIAL	SPEC	DRAWING No.	DESCRIPTION
1			11	HTGR SPACER TUBE	304 ST. STL.	ASTM A312		4" PIPE, SCH 40
	1		10	RERTR SPACER TUBE	304 ST. STL.	ASTM A312		4" PIPE, SCH 40
2	2		9	PLATE	304 ST. STL.	ASTM A276/A240		1/4 BAR/PLATE
		2	8	GUIDE PLATE	304 ST. STL.	ASTM A240		5/16 PLATE
		2	7	SPACER PLATE	304 ST. STL.	ASTM A240		5/16 PLATE
		4	6	GRAPPLE LIFT PLATE	304 ST. STL.	ASTM A240		5/16 PLATE
		4	5	GUIDE BAR	304 ST. STL.	ASTM A276/A240		1/2 BAR/PLATE
		2	4	TUBE	304 ST. STL.	ASTM A511		6.00 OD X .25 WALL
		1	3	UPPER SUPPORT PLATE	304 ST. STL.	ASME SA240		1/2 PLATE
		1	2	MIDDLE SUPPORT PLATE	304 ST. STL.	ASME SA240		1 PLATE
		1	1	LOWER SUPPORT PLATE	304 ST. STL.	ASME SA240		1/2 PLATE

DIMENSIONING AND TOLERANCING SHALL BE PER ASME Y14.5-94
UNSPECIFIED DIMENSIONS AND TOLERANCES SHOWN BELOW.
DIMENSIONS ARE IN INCHES. FRACTIONAL TOLERANCE: ±1/8

SYM	GEOMETRY	.XXX	TOL.	.XX	TOL.
	FLATNESS	UNDER 3	±.003	UNDER 6	±.02
	STRAIGHTNESS	3-12	±.005	6-18	±.03
	ANGULARITY	OVER 12	±.010	OVER 18	±.06
	PERPENDICULARITY	.X	±.1	ANGLES	±0.5°
	PARALLELISM	ALL UNSPECIFIED TOOL RADII: .015 - .030			
	CONCENTRICITY	BREAK ALL SHARP CORNERS .015 - .030			
	TRUE POSITION	ALL UNSPECIFIED MACHINED SURFACES SHALL BE ▽ OR BETTER			

NEXT ASSEMBLY: 315-40-124
DRAWING TYPE: LICENSE

GROUP	NAME	DATE
PREPARER	R. Walker	4-29-03
CHECKER		4-29-03
PROJECT MANAGER	for RAB	4/29/03
DIRECTOR DESIGN AND ANALYSIS		4-30-03
DIRECTOR, LICENSING		5-1-03
VICE PRESIDENT, QUALITY		5/2/03

NAC INTERNATIONAL

TOP MODULE,
GENERAL ATOMICS IFM,
LWT CASK

PROJECT	DRAWING	REV
315-40	120	2
SCALE 1/3	EST.WT. NOTED	SH 1 OF 3

1:36PM 4-29-2003

NAC DCRM 01

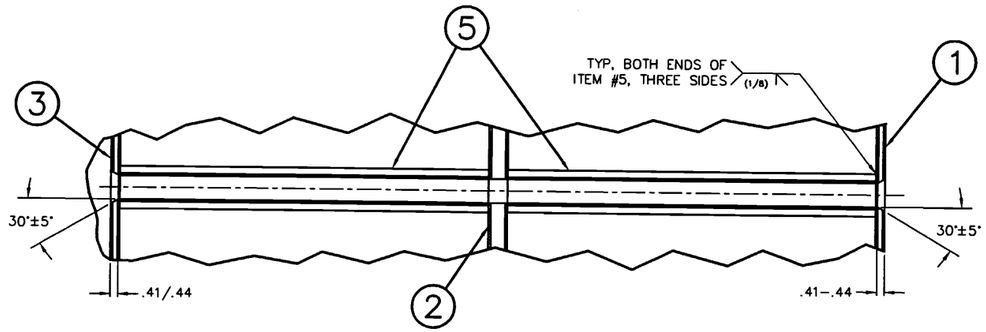

VIEW D-D
ROTATED 30° CW
SCALE: 1/3

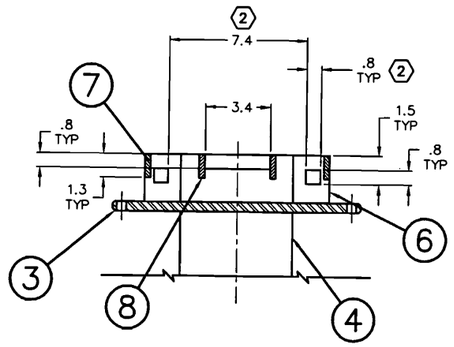

SECTION E-E
SCALE: 1/3

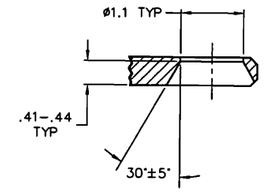

SH1 F2 SECTION C-C
ROTATED 42° CW
SCALE: 1/1

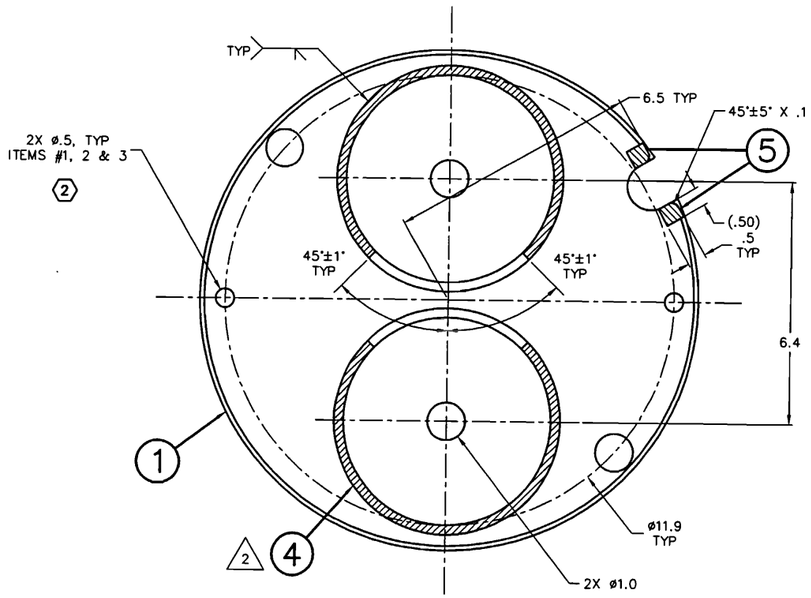

SH1 F4 SECTION B-B
SCALE: 1/1.5

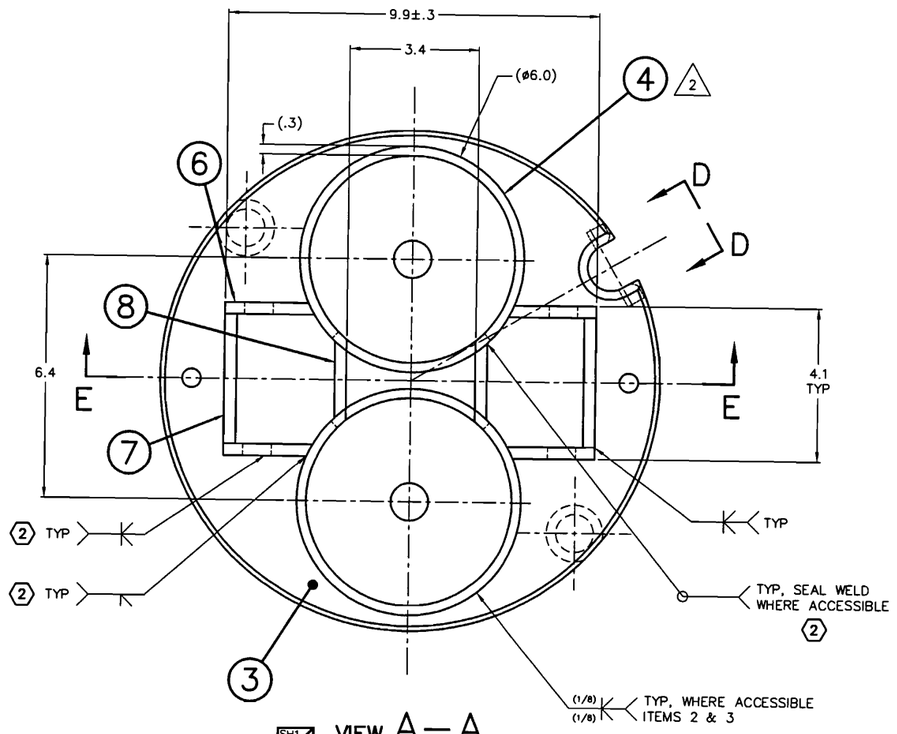

SH1 F7 VIEW A-A
SCALE: 1/1.5

NAC INTERNATIONAL

TOP MODULE,
GENERAL ATOMICS IFM,
LWT CASK

PROJECT 315-40		DRAWING 120	REV 2
SCALE 1/3	EST.WT. NOTED	SH 2 OF 3	1:35PM 4-29-2003

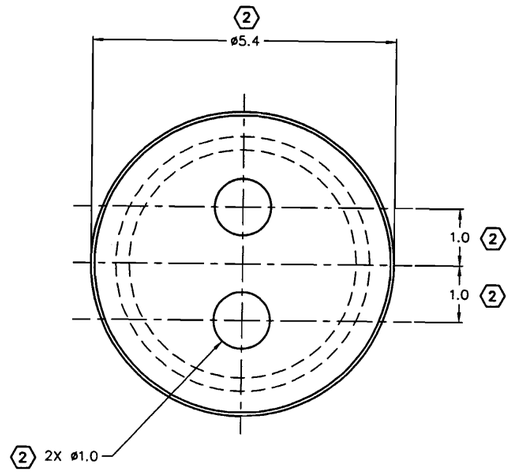

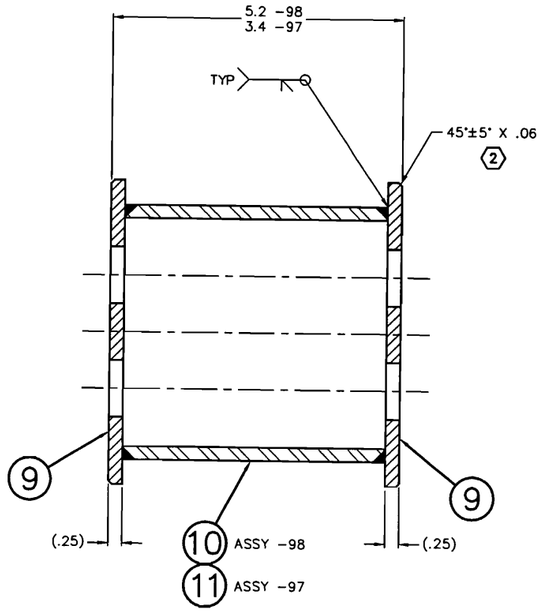



NAC INTERNATIONAL

TOP MODULE,
GENERAL ATOMICS IFM,
LWT CASK

PROJECT 315-40		DRAWING 120	REV 2
SCALE 1/1	CST.WT. NOTED	SH 3 OF 3	1:35PM 4-29-2003

REV	CHANGE
0	INITIAL ISSUE
1	INC DCR 0A

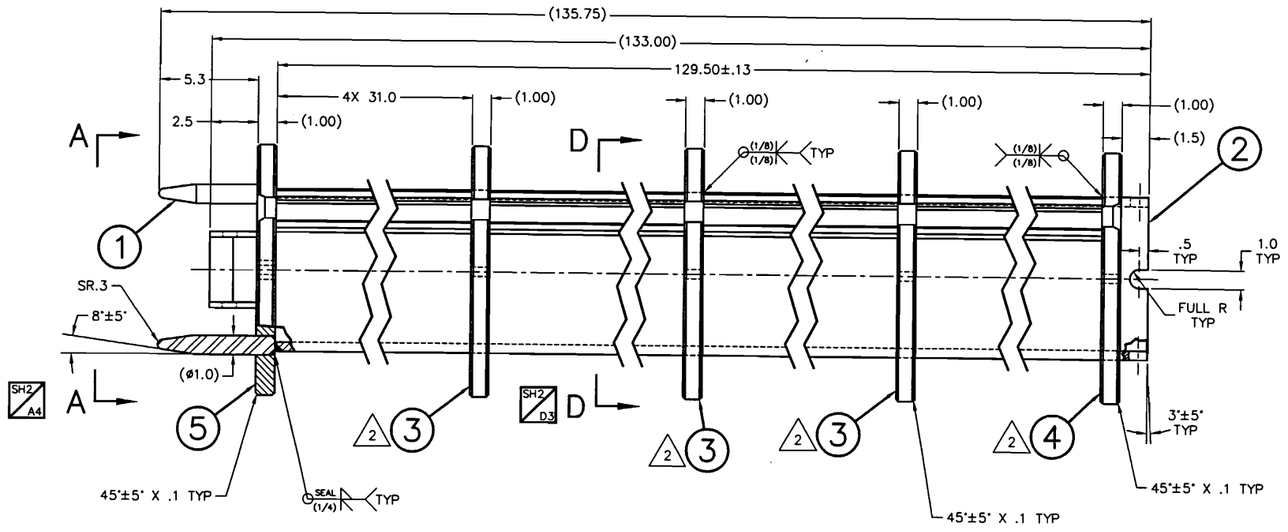

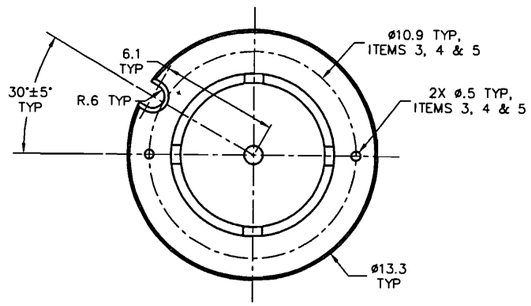

99 SPACER
WEIGHT: 635#

5. VISUALLY INSPECT (VT) ALL WELDS. EXAMINE PER ASME SECTION V, ARTICLE 9, WITH ACCEPTANCE PER SECTION III, ARTICLE NG-5360.

4. PENETRANT TEST (PT) FINAL PASS ALL WELDS EXCEPT SEAL WELDS. EXAMINE PER ASME SECTION V, ARTICLE 6, WITH ACCEPTANCE PER SECTION III, ARTICLE NG-5350.

3. UNLESS OTHERWISE NOTED, WELDING TO BE IN ACCORDANCE WITH SECTION IX OF THE ASME PRESSURE VESSEL CODE.

△2 ITEMS 3 AND 4 MAY BE FABRICATED FROM MULTIPLE PIECES, ALL SEAMS TO BE SEAL WELDED.

△1 STEEL STAMP/ENGRAVE APPROX. AS SHOWN. LETTERS .25 HIGH X .03 MAX. DEEP. FILL WITH KEELER AND LONG POLY-SILICON ENAMEL P SERIES. nnn REPRESENTS A UNIQUE IDENTIFICATION NUMBER IN ACCORDANCE WITH THE FABRICATION SPECIFICATION. "yyy" IS THE ACTUAL WEIGHT AT THE TIME OF FABRICATION.

NOTES:

△2 △1

97 ASSY	98 ASSY	99 ASSY	ITEM	NAME	MATERIAL	SPEC	DRAWING No.	DESCRIPTION
		8	8	GUIDE BAR	304 ST. STL.	ASTM A240/A276		1/2 PLATE/BAR
		4	7	SPACER PLATE	304 ST. STL.	ASTM A240		5/16 PLATE
		2	6	GRAPPLE LIFT PLATE	304 ST. STL.	ASTM A240		5/16 PLATE
		1	5	TOP SUPPORT PLATE	304 ST. STL.	ASME SA240		1 PLATE
		1	4	BOTTOM SUPPORT PLATE	304 ST. STL.	ASME SA240		1 PLATE
		3	3	SUPPORT PLATE	304 ST. STL.	ASME SA240		1 PLATE
		1	2	SPACER TUBE	304 ST. STL.	ASME SA312		8 SCH 80S PIPE
		2	1	GUIDE PIN	304 ST. STL.	ASTM A276		1 DIA
QUANTITY								

DIMENSIONING AND TOLERANCING SHALL BE PER ASME Y14.5-94
UNSPECIFIED DIMENSIONS AND TOLERANCES SHOWN BELOW.
DIMENSIONS ARE IN INCHES. FRACTIONAL TOLERANCE: ±1/8

SYM.	GEOMETRY	.XXX	TOL.	.XX	TOL.
	FLATNESS	UNDER 3	±.003	UNDER 6	±.02
	STRAIGHTNESS	3-12	±.005	6-18	±.03
	ANGULARITY	OVER 12	±.010	OVER 18	±.06
	PERPENDICULARITY	.X	±.1	ANGLES	±0.5°
	PARALLELISM	ALL UNSPECIFIED TOOL RADII: .015 - .030			
	CONCENTRICITY	BREAK ALL SHARP CORNERS .015 - .030			
	TRUE POSITION	ALL UNSPECIFIED MACHINED SURFACES SHALL BE ▽ OR BETTER			

NEXT ASSEMBLY: 315-40-124
DRAWING TYPE: LICENSE

GROUP	NAME	DATE
PREPARER	R.W. Glass	5-3-03
CHECKER	Ryan Dunn	5-5-03
PROJECT MANAGER	[illegible]	5/5/03
DIRECTOR DESIGN & ANALYSIS	[illegible]	5-5-03
DIRECTOR, LICENSING	J.C. Thompson	5-5-03
VICE PRESIDENT, QUALITY	[illegible]	5/6/03

NAC INTERNATIONAL

SPACER,
GENERAL ATOMICS IFM,
LWT CASK

PROJECT	DRAWING	REV
315-40	123	1
SCALE 1/3	EST.WT. NOTED	SH 1 OF 2

11:45AM 5-5-2003

NAC DCRM 01

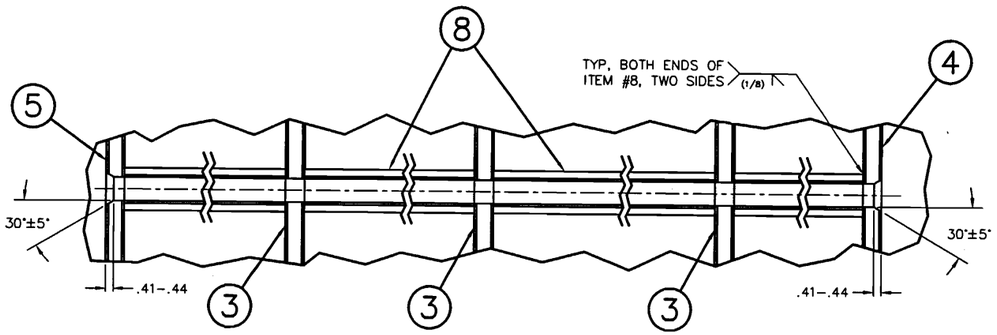

VIEW B–B
ROTATED 30° CW
SCALE: 1/3
(ITEMS REMOVED FOR CLARITY)

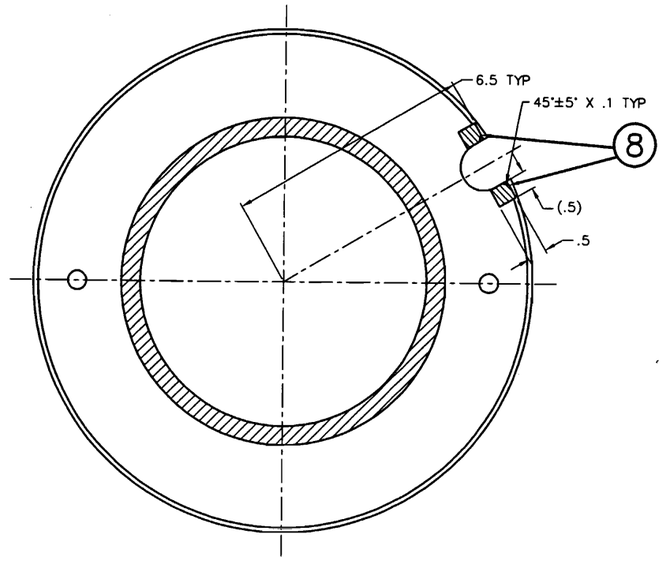

SH1/D8 SECTION D–D
SCALE: 1/1.5

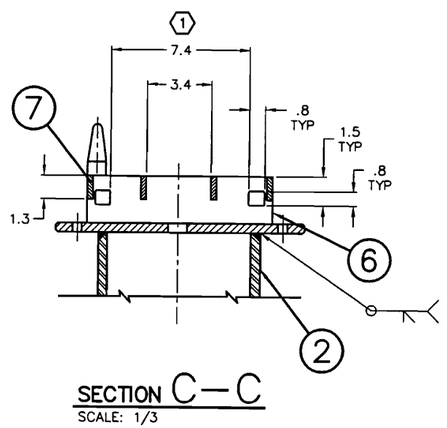

SECTION C–C
SCALE: 1/3

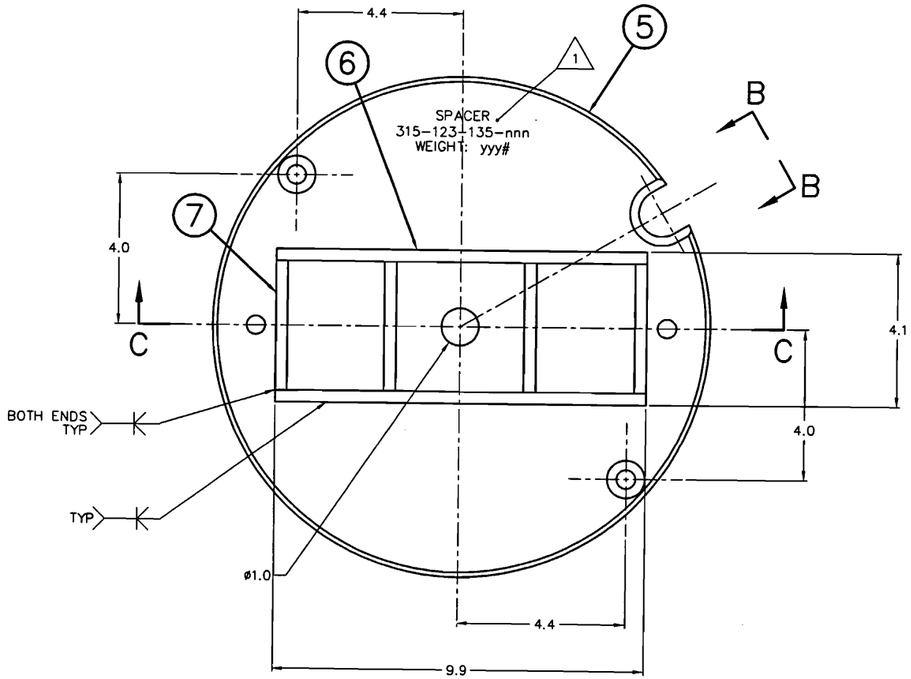

SH1/D8 VIEW A–A
SCALE: 1/1.5

NAC INTERNATIONAL

SPACER,
GENERAL ATOMICS IFM,
LWT CASK

PROJECT 315–40		DRAWING 123	REV 1
SCALE 1/3	EST. WT. NOTED	SH 2 OF 2	11:08AM 4–28–2003

R-204655

REV	CHANGE
0	INITIAL ISSUE
1	INC DCR(L) 0A

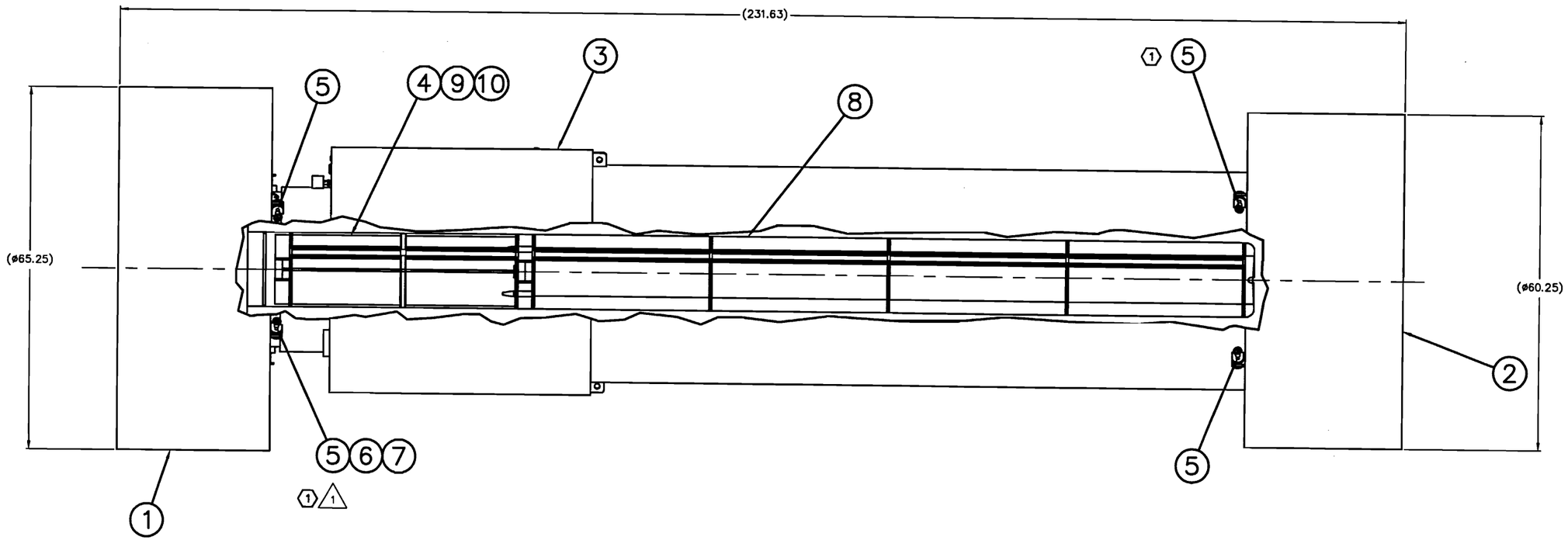

97 ASSY	98 ASSY	99 ASSY	ITEM	NAME	MATERIAL	SPEC	DRAWING No.	DESCRIPTION
		1	10	HTGR SPACER			315-40-120-97	
		1	9	RERTR SPACER			315-40-120-98	
		1	8	SPACER			315-40-123-99	
		1	7	METAL CUP SEAL			315-40-01-11	
		A/R	6	WIRE			315-40-01-10	
		8	5	BALL-LOK PIN			315-40-01-8	
		1	4	TOP MODULE			315-40-120-99	
		1	3	CASK ASSEMBLY			315-40-02-99	
		1	2	IMPACT LIMITER			315-40-06-99	
		1	1	IMPACT LIMITER			315-40-05-99	
QUANTITY								

1 1 AT LEAST 1 OUT OF 8 ITEM 5 (BALL-LOK PIN) TO BE MODIFIED PER DWG. 315-40-01.

NOTES:

UNLESS OTHERWISE STATED
DIMENSIONING AND TOLERANCING SHALL BE PER ASME Y14.5M-94
ALL THREAD DEPTH CALLOUTS ARE TO BE CONSIDERED AS A MIN. DEPTH OF PERFECT THREADS.
ALL DIMENSIONS ARE IN INCHES
MACHINED SURFACES TO BE 125 OR BETTER
NEXT ASSEMBLY: N/A
DRAWING TYPE: LICENSE

GROUP	NAME	DATE
PREPARER		5-19-06
CHECKER		5/19/06
PROJECT ENGINEER		5/19/06
ENGINEERING		5/22/06
LICENSING		5.22.06
QUALITY		5.23.06

NAC INTERNATIONAL

TRANSPORT CASK ASSEMBLY, GENERAL ATOMICS IFM, LWT CASK

PROJECT	DRAWING	REV
315-40	124	1
1/8 N/A	SH 1 OF 1	8:54AM 5-16-2006

NAC DCRM 01

R-204656

REV	CHANGE
0	INITIAL ISSUE
1	INC DCR 0A
2	INC DCR 1A
3	INC DCR(L) 2A

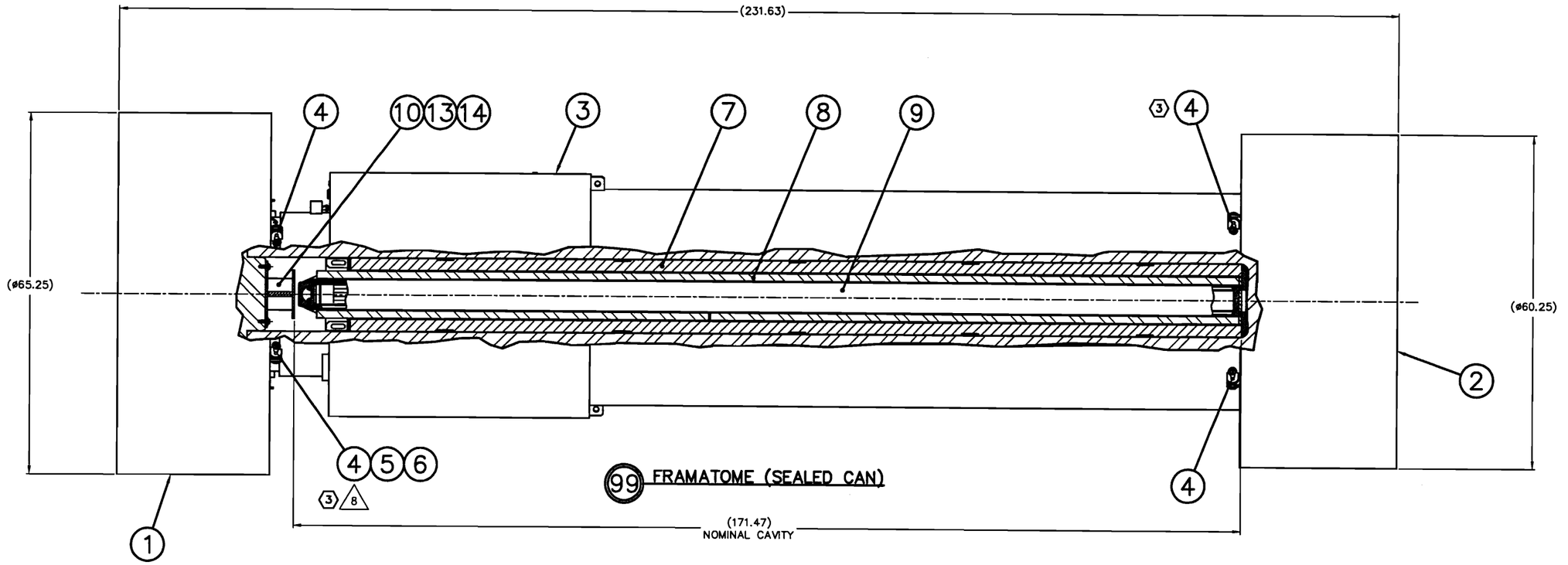

3 8 PER ASSEMBLY, AT LEAST 1 OUT OF 8 ITEM 4 (BALL-LOK PIN) TO BE MODIFIED PER DWG. 315-40-01.

7. SAFETY WIRE ALL ACCESSIBLE BOLTS, IN ACCORDANCE WITH STANDARD COMMERCIAL PRACTICES. BOLTS NEED TO BE CROSS DRILLED ø.060-.063, OR PURCHASED PRE-DRILLED FOR SAFETY WIRING.

6. PT FINAL PASS ALL EXCEPT SEAL WELDS. EXAMINE PER ASME SECTION V, ARTICLE 6, WITH ACCEPTANCE PER SECTION III, ARTICLE NG-5350.

5. UNLESS OTHERWISE NOTED, WELDING TO BE IN ACCORDANCE WITH SECTION IX OF THE ASME PRESSURE VESSEL CODE.

4 FOR ASSEMBLY -98 ONLY, ANY PWR BASKET 315-40-09, ASSEMBLY (99, 98, 97) MAY BE USED, AS DETERMINED BY THE ACTUAL SHIPPING REQUIREMENTS.

3 DELETED

2 DELETED

1 FOR ASSEMBLY -97, REMOVE THE BOTTOM PLATE FROM ITEM #8, PWR INSERT. PLUG THE MOUNTING HOLES WITH ITEM #15, SET SCREW, PRIOR TO USE.

NOTES:

98 ASSY	97 ASSY	96 ASSY	95 ASSY	ITEM	NAME	MATERIAL	SPEC	DRAWING No.	DESCRIPTION
					QUANTITY				
		16		15	SET SCREW	ST. STL.	COML		3/8-16 UNC-2B 1 LG
		4	4	14	LOCK WASHER	ST. STL.	COML		DIA 1/2
		4	4	13	HEX HEAD BOLT	ST. STL.	COML		1/2-13 UNC-2B 1 1/4 LG
		1		12	PWR BASKET SPACER			315-40-126-98	
			1	11	PWR SPACER			315-40-09-99	
				1	10	CAN & INSERT SPACER			315-40-126-99
				1	9	CAN ASSEMBLY (SEALED)			315-40-98-98
		1		1	8	PWR INSERT			315-40-105-99
		1	1	1	7	PWR BASKET			315-40-10-97
		1	1	1	6	METAL CUP SEAL			315-40-01-11
		A/R	A/R	A/R	5	WIRE			315-40-01-10
		8	8	8	4	BALL-LOK PIN			315-40-01-8
		1	1	1	3	CASK ASSEMBLY			315-40-02-99
		1	1	1	2	IMPACT LIMITER			315-40-06-99
		1	1	1	1	IMPACT LIMITER			315-40-05-99

2 8

NAC INTERNATIONAL

UNLESS OTHERWISE STATED
DIMENSIONING AND TOLERANCING SHALL BE PER ASME Y14.5M-94
ALL THREAD DEPTH CALLOUTS ARE TO BE CONSIDERED AS A MIN. DEPTH OF PERFECT THREADS.
ALL DIMENSIONS ARE IN INCHES
MACHINED SURFACES TO BE ▽ OR BETTER
NEXT ASSEMBLY: N/A
DRAWING TYPE: LICENSE

GROUP	NAME	DATE
PREPARER		5-18-06
CHECKER		5/19/06
INDEPENDENT REVIEWER		5/19/06
ENGINEERING		5/22/06
LICENSING		5/22/06
QUALITY		5-23-06

TRANSPORT CASK ASSEMBLY, FRAMATOME/EPRI, LWT CASK

PROJECT 315-40 | DRAWING 125 | REV 3 | SH 1 OF 3 | B 544M 5-18-2006

NAC DCRM 01

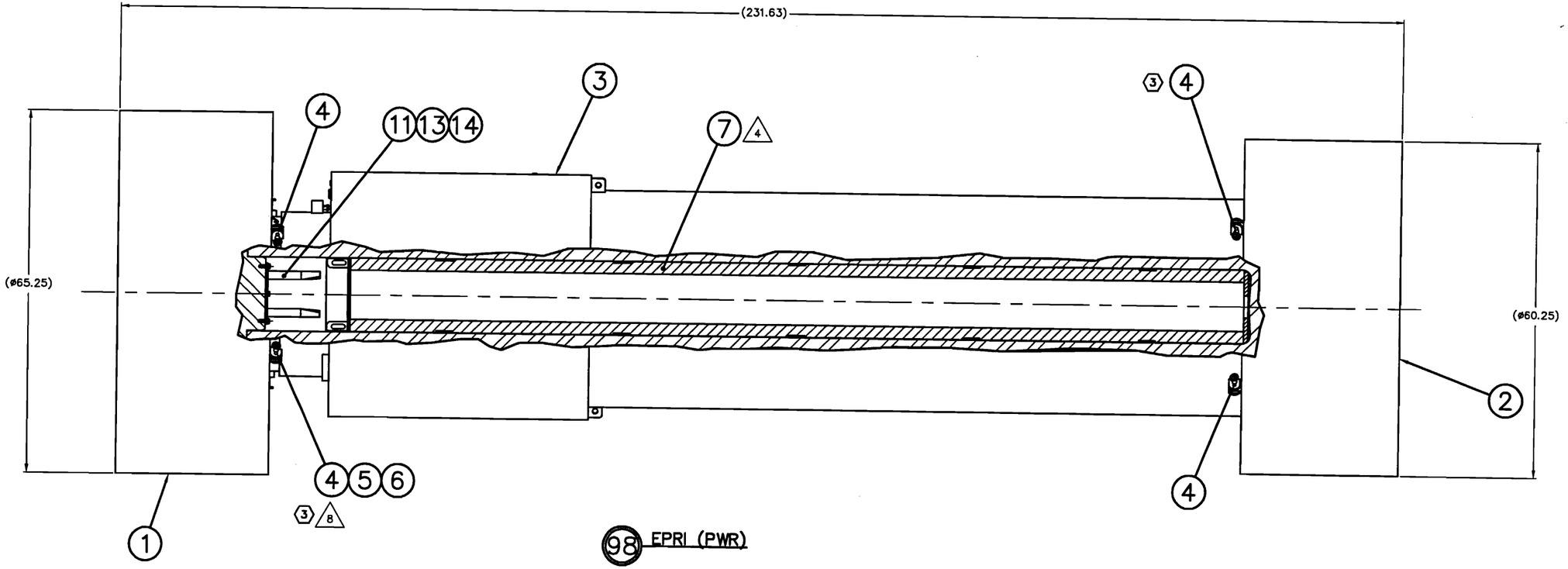

98 EPRI (PWR)

NAC INTERNATIONAL	
TRANSPORT CASK ASSEMBLY, FRAMATOME/EPRI, LWT CASK	
PROJECT 315-40	DRAWING 125 REV 3
	SH 2 OF 3 9:55AM 5-16-2008

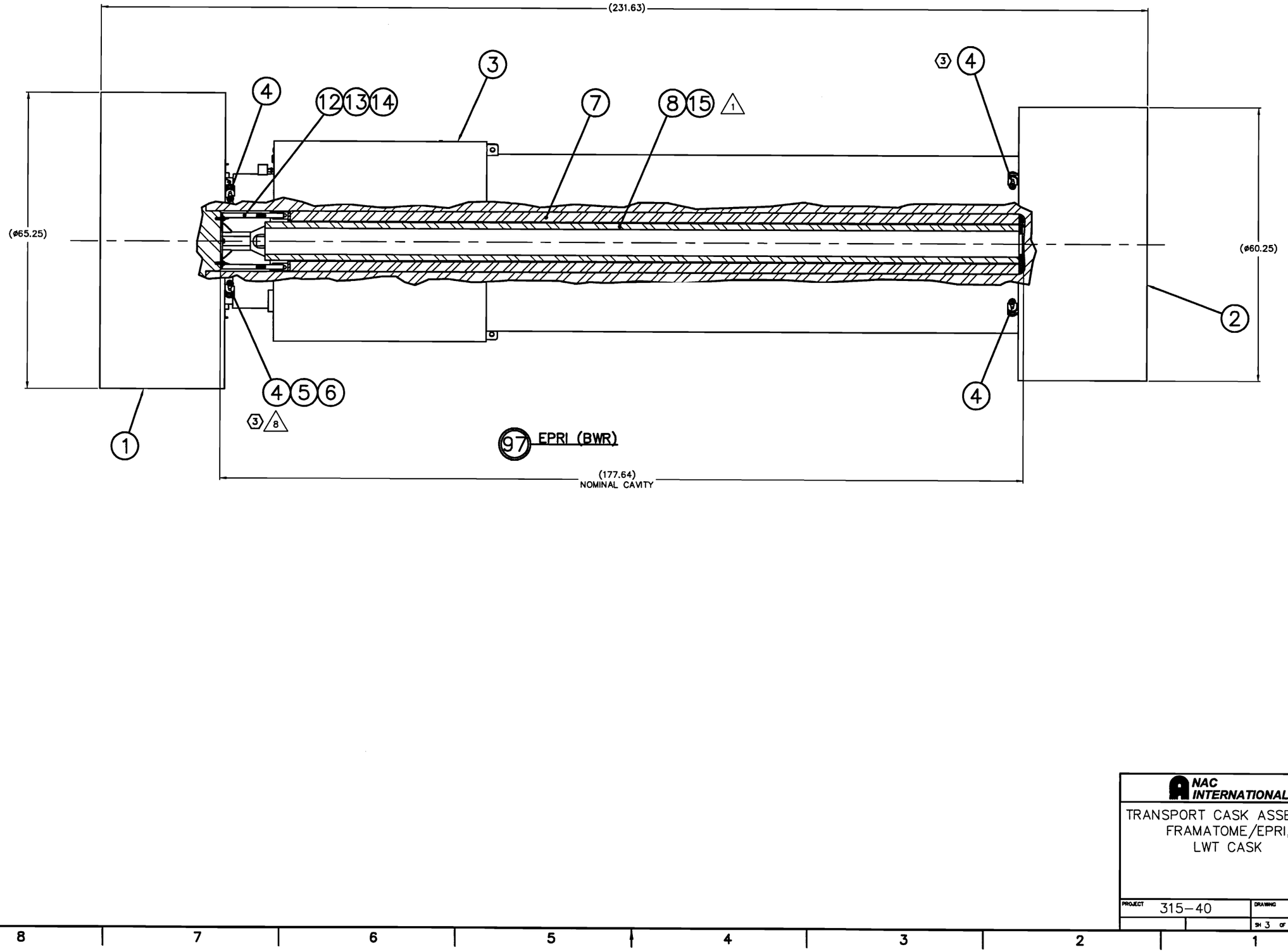

NAC INTERNATIONAL

TRANSPORT CASK ASSEMBLY,
FRAMATOME/EPRI,
LWT CASK

PROJECT	DRAWING	REV
315-40	125	3
	SH 3 OF 3	8:30AM 5-18-2005

K-201516

REV	CHANGE
0	INITIAL ISSUE
1	INC DCR 0A
2	INC DCR 1A

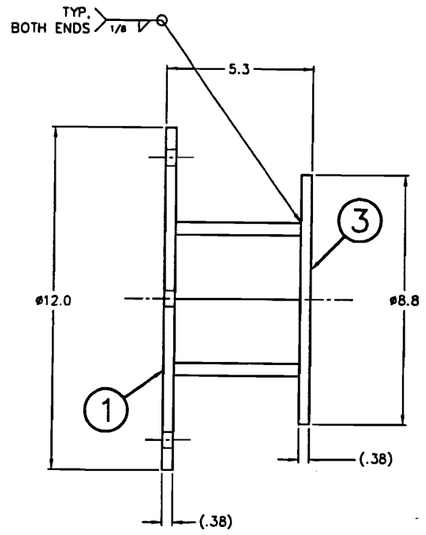

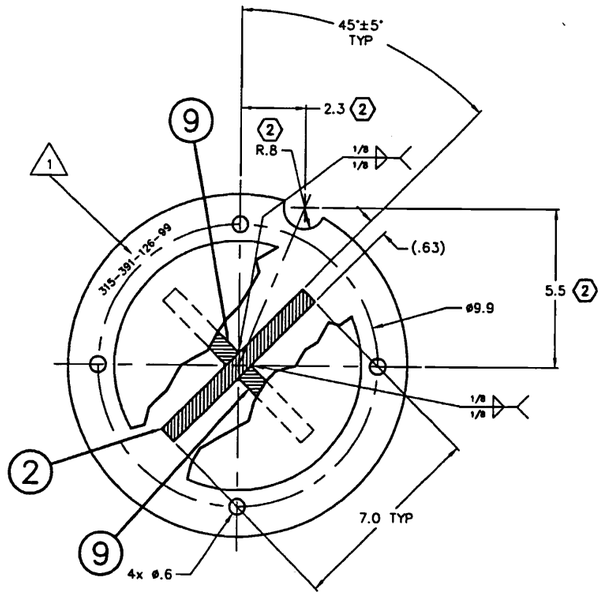

99 CAN & INSERT SPACER
WEIGHT: 30#

		2	2	SPACER	304 ST. STL.	ASTM A240		5/8 PLATE
	2		8	SPACER-B	304 ST. STL.	ASTM A240/A276		3/8 PLATE/BAR
	2		7	SPACER-A	304 ST. STL.	ASTM A240/A276		3/8 PLATE/BAR
	7		6	GUSSET	304 ST. STL.	ASTM A240/A276		3/8 PLATE/BAR
	8		5	POST	304 ST. STL.	ASTM A276		DIA 1
	1		4	PLATE	304 ST. STL.	ASTM A240		3/8 PLATE
		1	3	TOP PLATE	304 ST. STL.	ASTM A240		3/8 PLATE
		1	2	SPACER	304 ST. STL.	ASTM A240		5/8 PLATE
		1	1	BASE PLATE	304 ST. STL.	ASTM A240		3/8 PLATE
97 ASSY	98 ASSY	99 ASSY	ITEM	NAME	LATERIAL	SPEC	DRAWING No.	DESCRIPTION
QUANTITY								

1 STEEL STAMP OR ENGRAVE, APPROX. AS SHOWN AND FILL WITH WEATHER RESISTANT PAINT. THE TEXT IS .3 TALL AND THE DELTA IS .5 TALL.

NOTES:

NAC DCRM 02

DIMENSIONING AND TOLERANCING SHALL BE PER ASME Y14.5-94
UNSPECIFIED DIMENSIONS AND TOLERANCES SHOWN BELOW.
DIMENSIONS ARE IN INCHES. FRACTIONAL TOLERANCE: ±1/8

SYM.	GEOMETRY	XXX	TOL.	XX	TOL.
	FLATNESS	UNDER 3	±.003	UNDER 6	±.02
	STRAIGHTNESS	3-12	±.005	6-18	±.03
	ANGULARITY	OVER 12	±.010	OVER 18	±.06
	PERPENDICULARITY	X	±.1	ANGLES ±0.5°	
	PARALLELISM	ALL UNSPECIFIED TOOL RADII: .015 - .030			
	CONCENTRICITY	BREAK ALL SHARP CORNERS .015 - .030			
	TRUE POSITION	ALL UNSPECIFIED MACHINED SURFACES SHALL BE ▽ OR BETTER			

NEXT ASSEMBLY: 315-40-125
DRAWING TYPE: LICENSE

GROUP	NAME	DATE
PREPARED	R. Walker	9-23-03
CHECKED		9-23-03
PROJECT MANAGER		9/23/03
DIRECTOR DESIGN AND ANALYSIS		9-23-03
DIRECTOR, LICENSING	J.C. Thomasson	9/23/03
VICE PRESIDENT, QUALITY		9-23-03

NAC INTERNATIONAL

WELDMENTS,
FRAMATOME/EPRI,
LWT CASK

PROJECT 315-40 | DRAWING 126 | REV 2
SCALE 1/2 | EST.WT. NOTED | SH 1 OF 2 | 2:16PM 9-23-2003

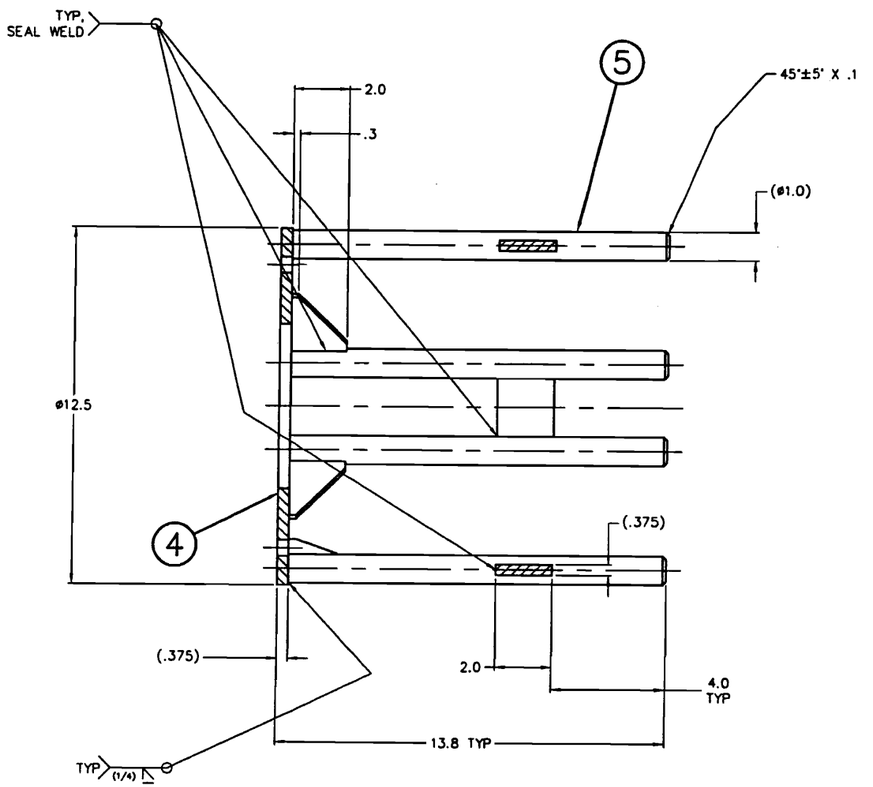

SECTION A–A

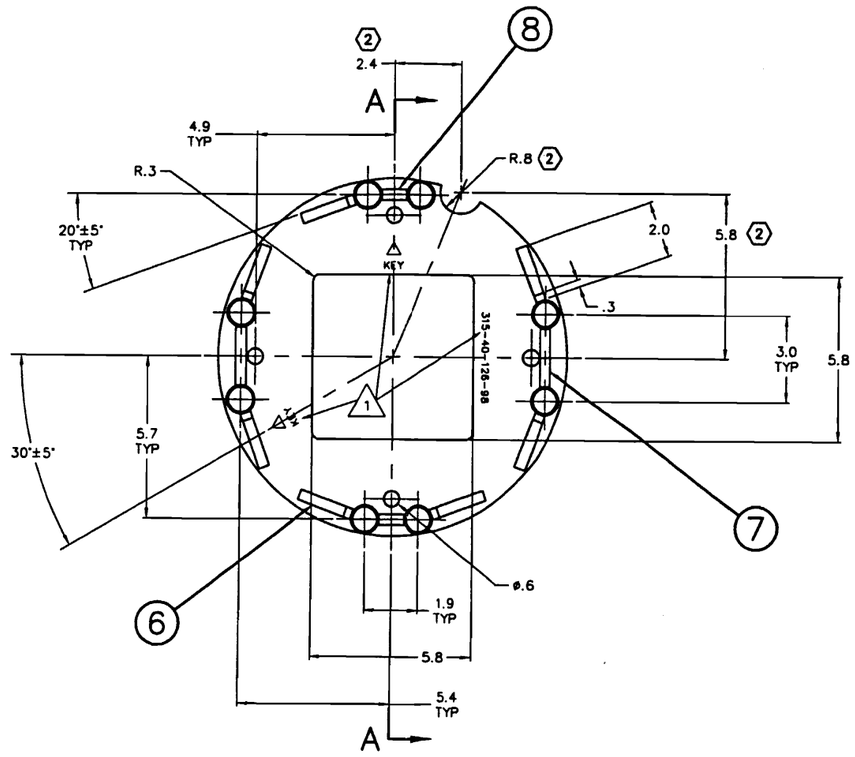

98 PWR BASKET SPACER
WEIGHT: 37#

NAC INTERNATIONAL

WELDMENTS,
FRAMATOME/EPRI,
LWT CASK

PROJECT 315-40	DRAWING 126	REV 2
SCALE 1/2	EST.WT. NOTED	SH 2 OF 2	2:30PM 6-23-2003

R-204657

REV	CHANGE
0	INITIAL ISSUE
1	INC DCR 0A
2	INC DCR 1A

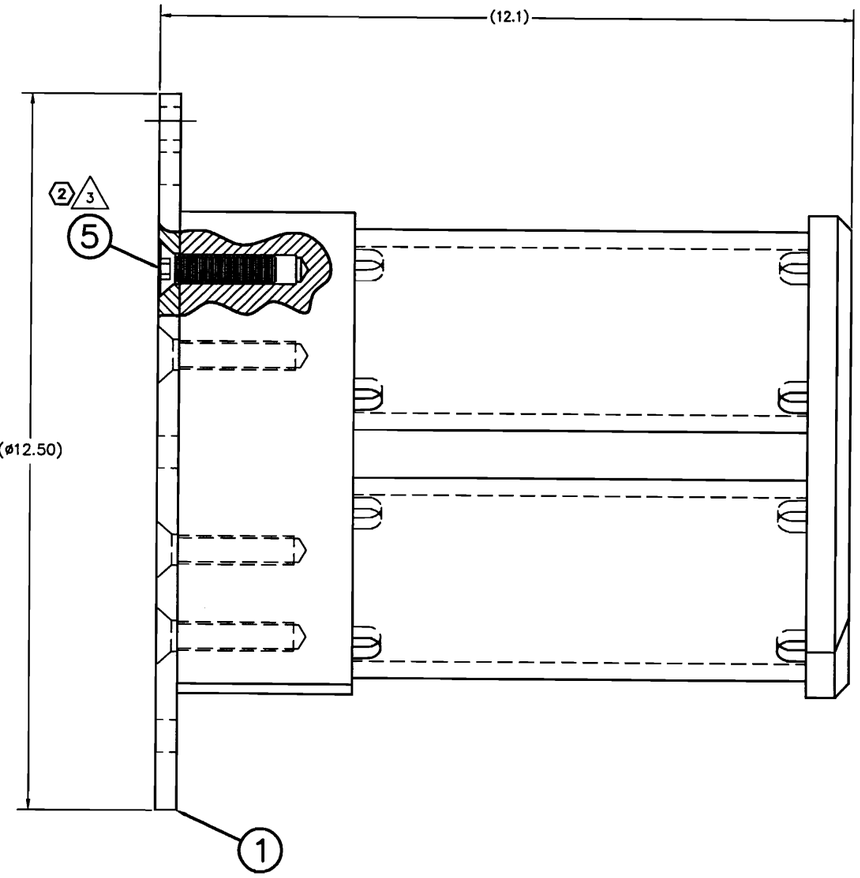

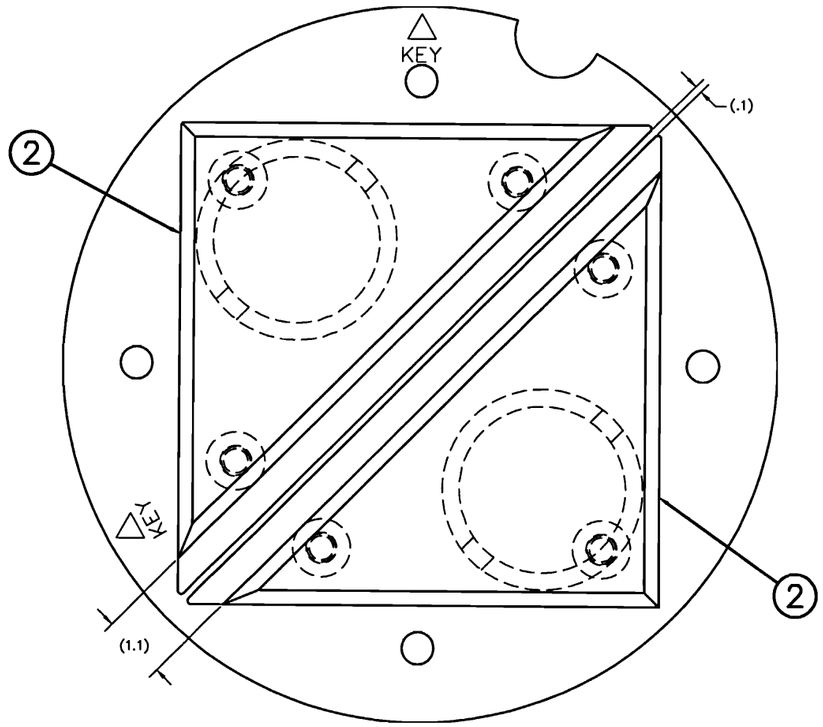

99 SPACER ASSEMBLY

2 3 TIGHTEN TO 100±20 IN-LBS

2. WELD PER ASME B & PV CODE SECT. IX & LIQUID PENETRANT EXAMINE PER SECTION V, ARTICLE 6 ACCEPTANCE PER SECT. VIII, DIV 1, APPENDIX 8

1 STEEL STAMP OR ENGRAVE, APPROX. AS SHOWN, 1/4 HIGH CHARACTERS AND FILL WITH WEATHER RESISTANT PAINT.

NOTES:

97 ASSY	98 ASSY	99 ASSY	ITEM QUANTITY	NAME	MATERIAL	SPEC	DRAWING No.	DESCRIPTION
		1	6	PIPE	ST. STL.	ASTM A312		3 SCH 80 PIPE
		6	5	FLAT HEAD CAP SCREW	304 ST. STL.	ASTM A193 B8		1/2-13 UNC-3A 2 LG
	1		4	TOP PLATE	304 ST. STL.	ASTM A240		3/4 PLATE
	1		3	SPACER BASE	304 ST. STL.	ASTM A240/A276		PLATE/BAR
		2	2	SPACER			315-127-98	
		1	1	BASE PLATE	304 ST. STL.	ASTM A240		3/8 PLATE

2 3

NAC INTERNATIONAL

UNLESS OTHERWISE STATED	GROUP	NAME	DATE
DIMENSIONING AND TOLERANCING SHALL BE PER ASME Y14.5M-94	PREPARER		5-19-06
ALL THREAD DEPTH CALLOUTS ARE TO BE CONSIDERED AS A MIN. DEPTH OF PERFECT THREADS.	CHECKER		5/19/06
	PROJECT MANAGER		5/19/06
ALL DIMENSIONS ARE IN INCHES	ENGINEERING		5/22/06
MACHINED SURFACES TO BE ▽ OR BETTER	LICENSING		5/22/06
NEXT ASSEMBLY: N/A	QUALITY		5-24-06
DRAWING TYPE: LICENSE			

SPACER ASSEMBLY, TPBAR SHIPMENT, LWT CASK

PROJECT 315-40 | DRAWING 127 | REV 2 | SH 1 OF 2 | 8:13AM 5-19-2006

NAC DCRM 01

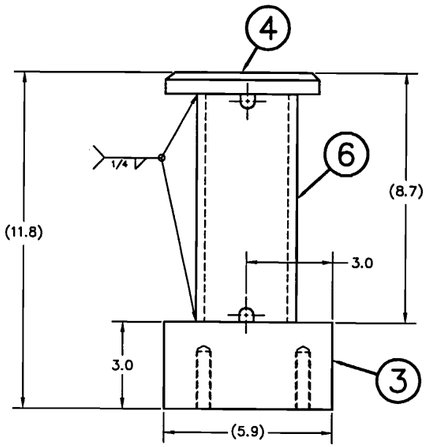

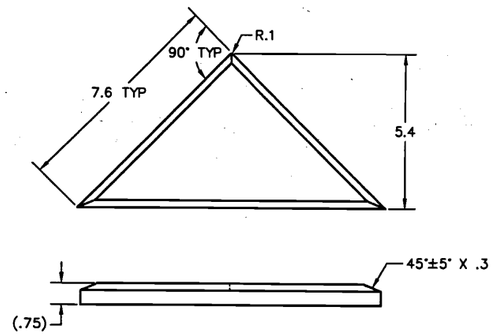

4 TOP PLATE

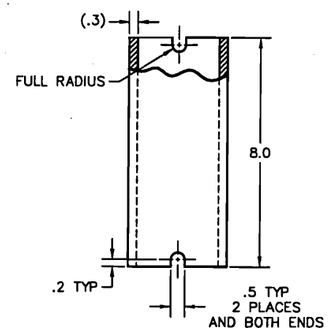

6 PIPE

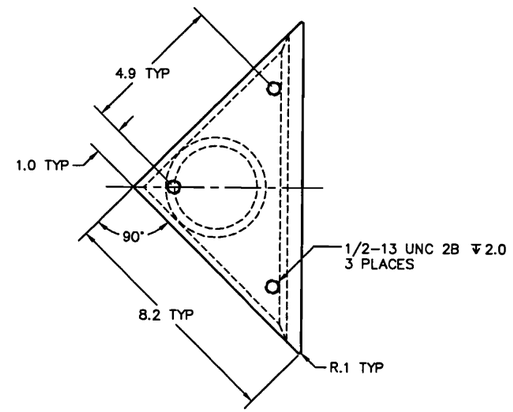

98 SPACER

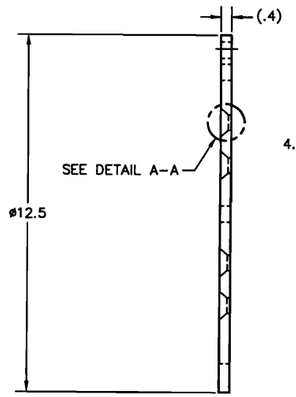

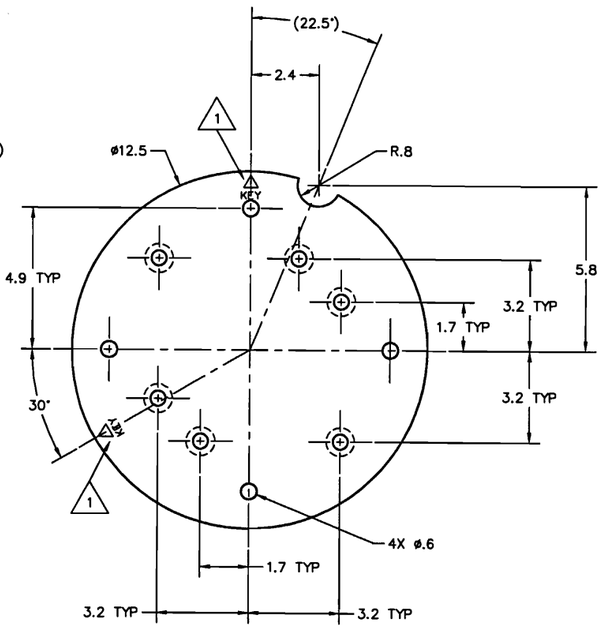

1 BASE PLATE

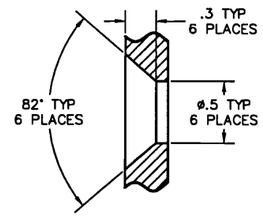

DETAIL A—A

NAC INTERNATIONAL

SPACER ASSEMBLY,
TPBAR SHIPMENT,
LWT CASK

PROJECT	DRAWING	REV
315-40	127	2
	SH 2 OF 2	8:36AM 5-24-2006

R-256132

REV	CHANGE
0	INITIAL ISSUE
1	INC DCR 0A
2	INC DCR 1A
3	INC DCR 2A
4	INC DCR 3A
5	INC DCR 4A

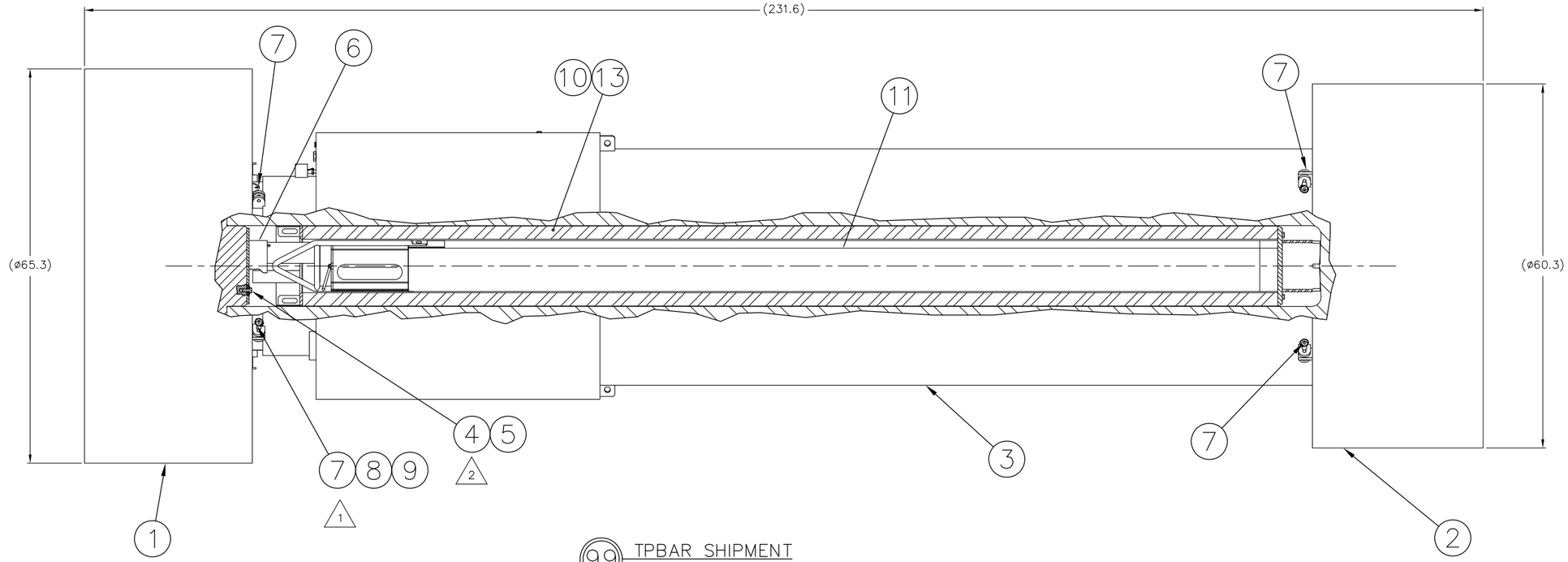

		A/R	13	ALT. TPBAR BASKET ASSEMBLY			315-40-10-95	
	1		12	TPBAR WASTE CONTAINER	ST. STL.			
		1	11	CONSOLIDATION CANISTER	ST. STL.			
	1	A/R	10	TPBAR BASKET ASSEMBLY			315-40-10-96	
	1	1	9	METAL CUP SEAL			315-40-01-11	
	A/R	A/R	8	WIRE			315-40-01-10	
1	8	8	7	BALL-LOK PIN			315-40-01-8	
	1	1	6	SPACER ASSEMBLY			315-40-127-99	
	4	4	5	LOCK WASHER	ST. STL.	COML		DIA 1/2
5 2	4	4	4	HEX HEAD BOLT	304 ST. STL.	ASTM A193 B8		1/2-13 UNC-2A 1 1/4 LG
	1	1	3	CASK ASSEMBLY			315-40-02-97	
	1	1	2	IMPACT LIMITER			315-40-06-99	
	1	1	1	IMPACT LIMITER			315-40-05-99	
97	98	99	ITEM	NAME	MATERIAL	SPEC	DRAWING No.	DESCRIPTION
ASSY	ASSY	ASSY						
QUANTITY								

2 TIGHTEN TO 200±20 IN-LBS

1 AT LEAST 1 OUT OF 8 ITEM 7 (BALL-LOK PIN) TO BE MODIFIED PER DWG. 315-40-01.

NOTES:

UNLESS OTHERWISE STATED	GROUP	NAME	DATE
DIMENSIONING AND TOLERANCING SHALL BE PER ASME Y14.5M-94	PREPARER	Perry Street (Mar 29, 2023 13:47 EDT)	
ALL THREAD DEPTH CALLOUTS ARE TO BE CONSIDERED AS A MIN. DEPTH OF PERFECT THREADS.	CHECKER	(Mar 29, 2023 14:18 EDT)	
	PROJECT MANAGER	Jimmy Tallassee (Mar 29, 2023 15:15 EDT)	
	ENGINEERING	Kevin Klein (Mar 29, 2023 15:22 EDT)	
ALL DIMENSIONS ARE IN INCHES			
MACHINED SURFACES TO BE 125 OR BETTER	LICENSING	Heath Baldner (Mar 29, 2023 15:36 EDT)	
NEXT ASSEMBLY: N/A	QUALITY	(Mar 30, 2023 10:03 EDT)	
DRAWING TYPE: LICENSE			

NAC INTERNATIONAL

LEGAL WEIGHT TRUCK TRANSPORT CASK ASSY TPBAR SHIPMENT SAFETY ANALYSIS REPORT

PROJECT	DRAWING	REV
315-40	128	5
N.T.S.	SH 1 OF 2	3-28-2023

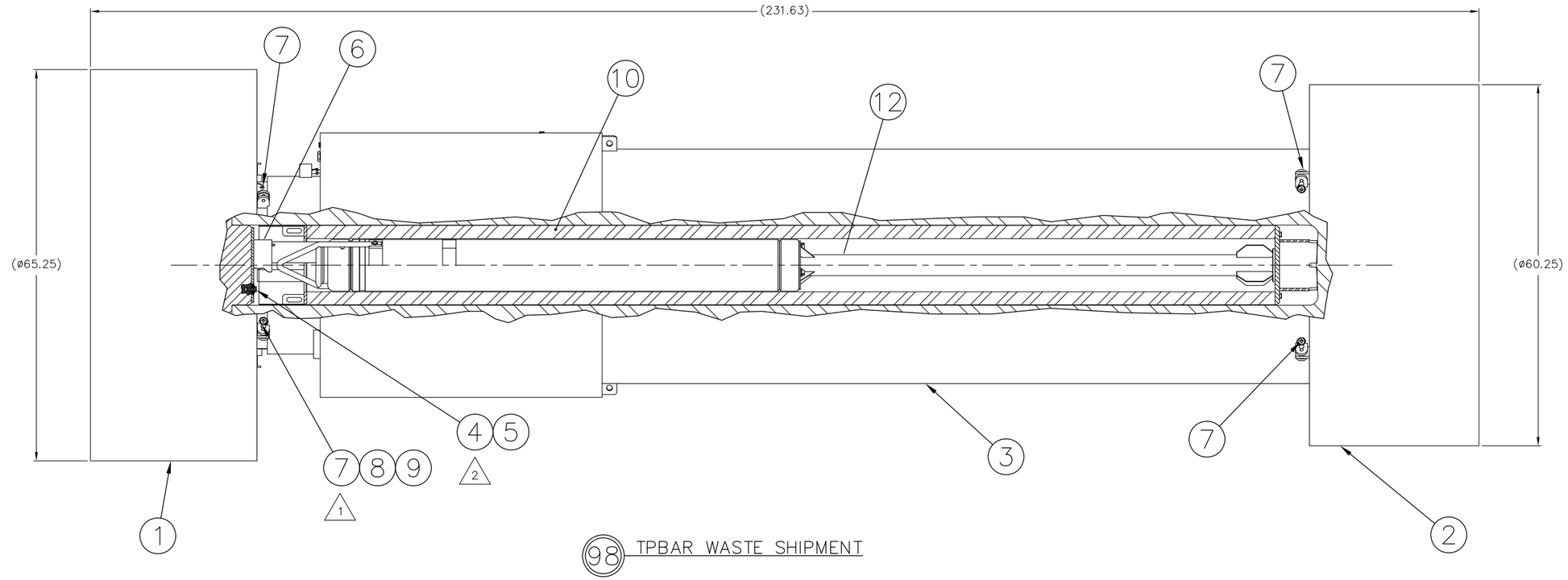

98 TPBAR WASTE SHIPMENT

NAC INTERNATIONAL

LEGAL WEIGHT TRUCK
TRANSPORT CASK ASSY
TPBAR SHIPMENT
SAFETY ANALYSIS REPORT

PROJECT 315-40		DRAWING 128	REV 5
SCALE N.T.S.	EST.WT.	SH 2 OF 2	3-28-2023

R-202644

DB/LB NAME AUTOCAD | CAE NUMBER
CELL NAME 032230A.DWG | DATE 5th Jan 1996

REVISIONS										
REV	DATE	ZONE	DESCRIPTION	DR	CHK	ENG	APVD	APPD	QA	APVD
N/C			INITIAL RELEASE	ACL						
A	JAN 05 1996		INCORPORATE CN006484	ACL		JSL				

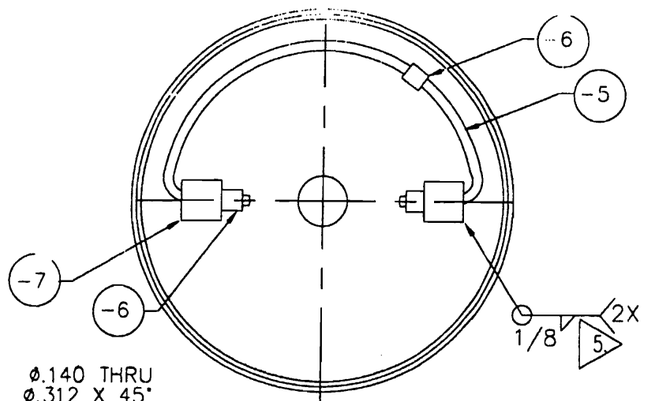

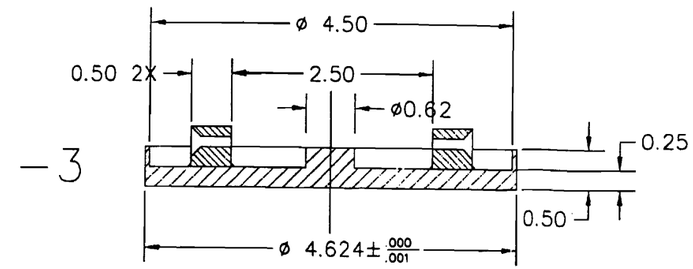

TUBE END DETAIL
TYPICAL BOTH ENDS

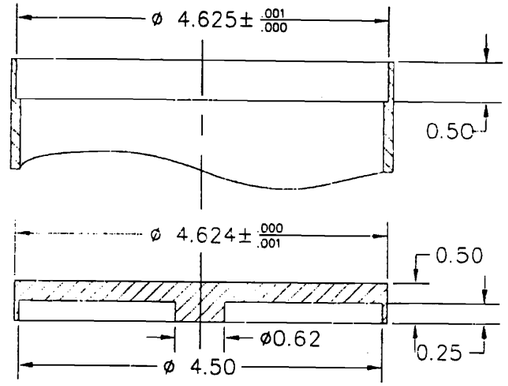

NOTES:
1. REMOVE ALL BURRS PRIOR TO WELDING.
2. ONE END CAP TO BE WELDED AND HELIUM LEAK CHECKED PER QDI LTH-S-3801 OR EQUIVALENT.
3. END CAPS MUST BE MADE FROM PLATE TO ASSURE PROPER DIRECTION OF STRINGERS.
4. OTHER END CAP TO BE WELDED REMOTELY IN HOT CELL FACILITY. VISUAL INSPECTION REQUIRED.
5. WELD MATERIAL TO BE INCONEL 625.
6. AVAILABLE FROM JACK RUBIN & SONS 1212 CROSBY ST. SAN DIEGO CA 92113
7. TOP END CAP TO BE SERIALIZED.
8. MATERIALS TO BE PURCHASED TO QAL 1C.

QTY REQD	ITEM NO	PART NO	DESCRIPTION	MAT'L/SPEC	SHT NO
2	7	-7	0.50 SQ. STK.	ST. STEEL	1
3	6	-6	STOP SLEEVE ø1/8 NICOPRESS	COPPER	1
A/R	5	-5	CABLE ø1/8 7X19	ST. STEEL	1
1	4	-4	END CAP 4.75DiaX0.5	N06600/SB168	1
1	3	-3	END CAP 4.75DiaX0.5	N06600/SB168	1
1	2	-2	TUBE 4.75 OD X 0.120 WALL	304/A-269	1
XX		-1	ASSEMBLY		1

PARTS LIST

PART DASH NO	NEXT ASSY	USED ON
	HCP-6-6	
	APPLICATION	

GA PROPRIETARY INFORMATION
THIS DOCUMENT IS THE PROPERTY OF GA TECHNOLOGIES INC. ANY TRANSMITTAL OF THIS DOCUMENT OUTSIDE GA SHALL BE IN CONFIDENCE. EXCEPT WITH THE WRITTEN CONSENT OF GA TECHNOLOGIES THIS DOCUMENT MAY NOT BE COPIED IN WHOLE OR IN PART AND WILL BE RETURNED UPON REQUEST OR WHEN NO LONGER NEEDED BY RECIPIENT AND ITS INFORMATION CONTAINED HEREIN MAY NOT BE COMMUNICATED TO OTHERS AND NOT BE USED BY RECIPIENT ONLY FOR THE PURPOSE FOR WHICH IT WAS TRANSMITTED.

PROJECT 7340
SYSTEM N/A
APPVL 2 | EC/SC N/A | DISC N | SETS N/A | TYPE DGE | ELEC N/A
☐ R&D ☐ IN'LS ☒ DESIGN

UNLESS OTHERWISE SPECIFIED DIMENSIONS ARE IN INCHES
NO BURRS OR SHARP EDGES
DIMENSIONS PER ANSI-Y-14.5M
TOLERANCES ARE
FRACTIONS DECIMALS ANGLES
± - .x ± 0.1 ±0.05
.xx ± 0.01
.xxx ± 0.001 125
ALL MACHINED SURFACES
CALC WT
DO NOT SCALE DRAWING

GENERAL ATOMICS
SAN DIEGO, CALIFORNIA

TITLE RERTR SECONDARY ENCLOSURE

SIZE C | FSCM NO 32334 | DWG NO 032230 | REV A
SCALE 1=1 | QAL 1B | SHEET 1 OF 1

032230 REV A SH 1

NAC DCRM 01

R-202645

CAD NAME: AUTOCAD
CELL NAME: 032231A.DWG
CAE NUMBER:
DATE: 5, Jan 1996

REVISIONS										
REV	DATE	ZONE	DESCRIPTION	DR	CHK	ENG	APVD	APPD	QA	APVD
N/C			INITIAL RELEASE	ACL						
A	JAN 0 9 1996		INCORPORATE CN006484	ACL		JSL				

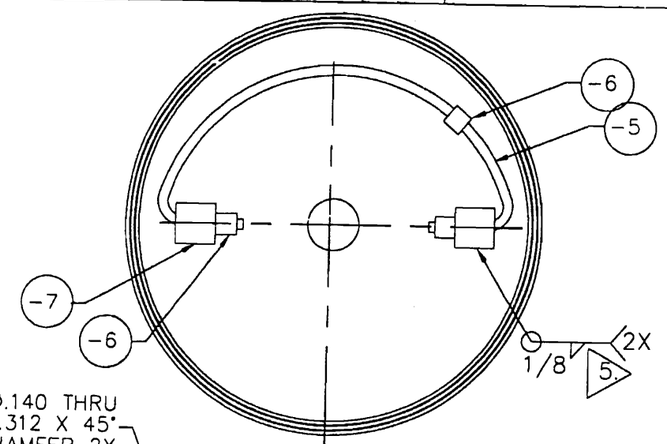

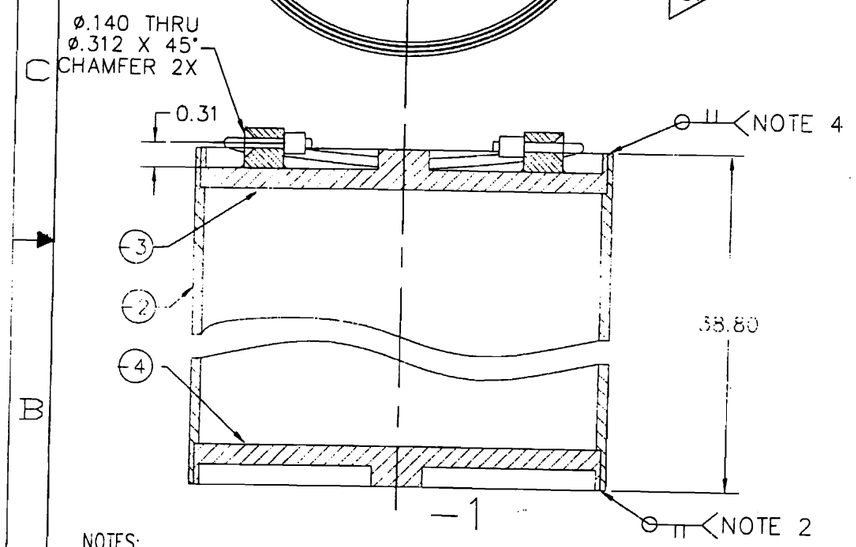

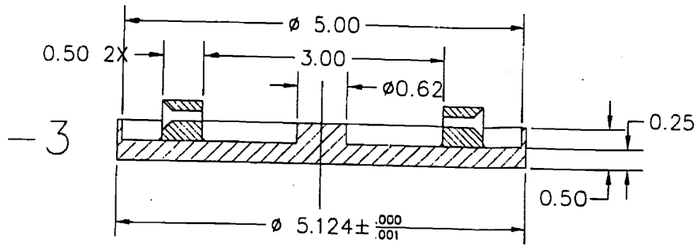

TUBE END DETAIL
TYPICAL BOTH ENDS

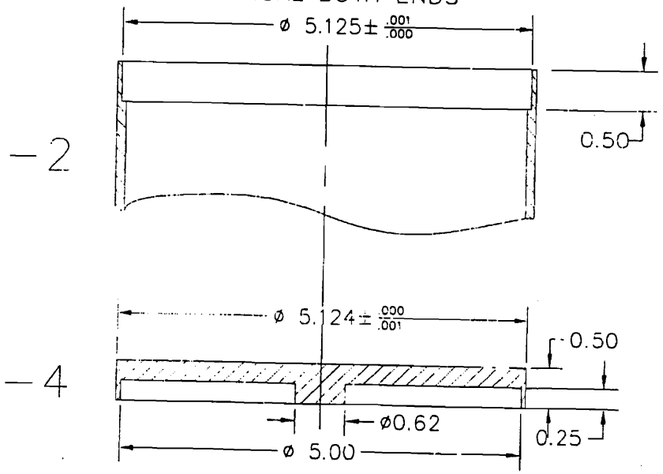

NOTES:
1. REMOVE ALL BURRS PRIOR TO WELDING.
2. ONE END CAP TO BE WELDED AND HELIUM LEAK CHECKED PER QDI LTH-S-3801 OR EQUIVALENT.
3. END CAPS MUST BE MADE FROM PLATE TO ASSURE PROPER DIRECTION OF STRINGERS.
4. OTHER END CAP TO BE WELDED REMOTELY IN HOT CELL FACILITY. VISUAL INSPECTION REQUIRED.
5. WELD MATERIAL TO BE INCONEL 625.
6. AVAILABLE FROM JACK RUBIN & SONS 1212 CROSBY ST. SAN DIEGO CA 92113
7. TOP END CAP TO BE SERIALIZED.
8. MATERIALS TO BE PURCHASED TO QAL 1C.

PARTS LIST

ITEM NO	QTY REQD	PART NO	DESCRIPTION	MAT'L/SPEC	SHT NO
7	2	-7	0.50 SQ. STK.	ST. STEEL	1
6	3	-6	STOP SLEEVE Ø NICOPRESS	COPPER	1
5	A/R	-5	CABLE Ø1/8 7X19	ST. STEEL	1
4	1	-4	END CAP 5.25Dia X0.5	N06600/SB168	1
3	1	-3	END CAP 5.25Dia X0.5	N06600/SB168	1
2	1	-2	TUBE 5.25 OD X 0.120 WALL	304/A-269	1
1	XX	-1	ASSEMBLY		1

PART DASH NO	NEXT ASSY	USED ON
	HCP-6-6	
	APPLICATION	

GA PROPRIETARY INFORMATION
THIS DOCUMENT IS THE PROPERTY OF GA TECHNOLOGIES INC. ANY TRANSMITTAL OF THIS DOCUMENT OUTSIDE GA, ITS AFFILIATES IN CONFIDENCE, EXCEPT WITH THE WRITTEN CONSENT OF GA, ITS AFFILIATES THIS DOCUMENT MAY NOT BE COPIED IN WHOLE OR IN PART AND WILL BE RETURNED UPON REQUEST OR WHEN NO LONGER NEEDED BY RECIPIENT AND ITS INFORMATION CONTAINED HEREIN MAY NOT BE COMMUNICATED TO OTHERS AND MAY BE USED BY RECIPIENT ONLY FOR THE PURPOSE FOR WHICH IT WAS TRANSMITTED.

PROJECT	7340
SYSTEM	N/A
APPVL	2
EC/SC	N/A
DISC	N
SEIS	N/A
TYPE	DGE
ELEC	N/A
BLD	
INV & S	
DESIGN	X

UNLESS OTHERWISE SPECIFIED
DIMENSIONS ARE IN INCHES
NO BURRS OR SHARP EDGES
DIMENSIONS PER ANSI-Y-14.5M
TOLERANCES ARE
FRACTIONS DECIMALS ANGLES
± .X ±0.1 ±0.05
.XX ±0.01
.XXX ±0.001 125
ALL MACHINED SURFACES
CALC WT
DO NOT SCALE DRAWING

GENERAL ATOMICS
SAN DIEGO, CALIFORNIA

TITLE: HTGR SECONDARY ENCLOSURE

SIZE: C | FSCM NO: 32334 | DWG NO: 032231 | REV: A
SCALE: 1=1 | QAL 1B | SHEET 1 OF 1

DWG NO 032231 REV A SH 1

NAC DCRM 01

R-202646

DB/LB NAME	AUTOCAD	CAE NUMBER
CELL NAME	032236B.DWG	DATE 5, Jan 1996

REVISIONS										
REV	DATE	ZONE	DESCRIPTION	DR	CHK	ENG	APVD	APPD	QA	APVD
N/C			INITIAL RELEASE	ACL						
A	JAN 0 9 1996		INCORPORATE CN 006483	ACL						
B	JAN 2 9 1996		INCORPORATE CN 006484	ACL						

NOTES:
1. REMOVE ALL BURRS PRIOR TO WELDING.
2. ONE END CAP WELD TO BE HELIUM LEAK CHECKED PER QDI LTH-S-3801 OR EQUIVALENT.
3. END CAPS MUST BE MADE FROM PLATE TO ASSURE PROPER DIRECTION OF STRINGERS.
4. OTHER END CAP TO BE WELDED REMOTELY IN HOT CELL FACILITY. VISUAL INSPECTION REQUIRED.
5. TOP END CAP TO BE SERIALIZED.
6. MATERIALS TO BE PURCHASED TO QAL 1C.

3/8-16TPI, X0.37DEEP, FLAT BOTTOMED HOLE

-4 SAME AS -3 EXCEPT AS SHOWN

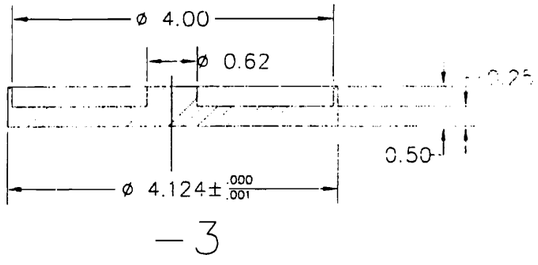

-3

TUBE END DETAIL
TYPICAL BOTH ENDS

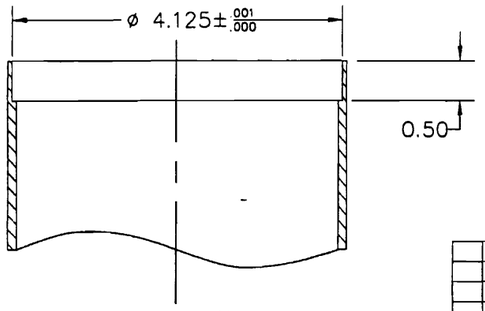

-2

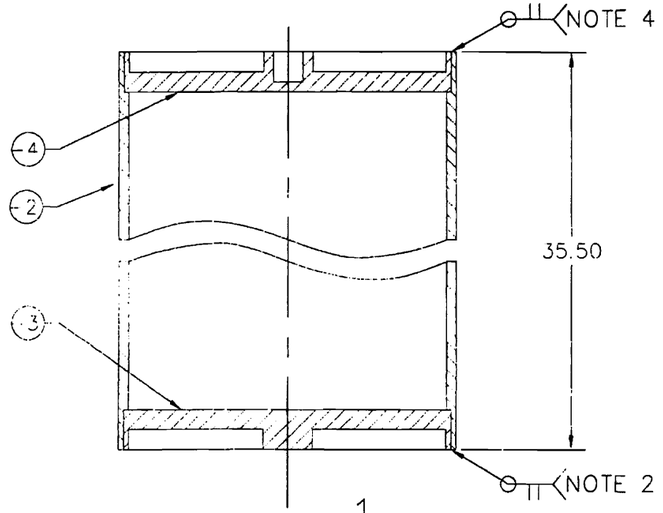

-1

QTY REQD	ITEM NO	PART NO	DESCRIPTION	MAT'L/SPEC	SHT NO
1	4	-4	END CAP 4.25 DiaX0.5	N06600/SB168	1
1	3	-3	END CAP 4.25 DiaX0.5	N06600/SB168	1
1	2	-2	TUBE 4.25 OD X 0.120 WALL	304/A-269	1
XX		-1	ASSEMBLY		1

PARTS LIST

PART DASH NO	NEXT ASSY	USED ON
	HCP-6-6	

APPLICATION

GA PROPRIETARY INFORMATION
THIS DOCUMENT IS THE PROPERTY OF GA TECHNOLOGIES INC. ANY TRANSMITTAL OF THIS DOCUMENT OUTSIDE GA SHALL BE IN CONFIDENCE. EXCEPT WITH THE WRITTEN CONSENT OF GA, THIS DOCUMENT MAY NOT BE COPIED IN WHOLE OR IN PART AND WILL BE RETURNED UPON REQUEST OR WHEN NO LONGER NEEDED BY RECIPIENT. AND (2) INFORMATION CONTAINED HEREON MAY NOT BE COMMUNICATED TO OTHERS AND MAY BE USED BY RECIPIENT ONLY FOR THE PURPOSE FOR WHICH IT WAS TRANSMITTED.

PROJECT	7340
SYSTEM	N/A

APPVL	EC/SC
2	N/A
DISC	SEIS
M	N/A
TYPE	ELEC
DGE	N/A

R & S ☐ DV & S ☐ DESIGN ☒

UNLESS OTHERWISE SPECIFIED:
DIMENSIONS ARE IN INCHES
NO BURRS OR SHARP EDGES
DIMENSIONS PER ANSI-Y-14.M
TOLERANCES ARE
FRACTIONS DECIMALS ANGLES
± x ± 0.1 ± 0.05
.xx ± 0.01
.xxx ± 0.001
ALL MACHINED SURFACES 125
CALC WT
DO NOT SCALE DRAWING

GENERAL ATOMICS
SAN DIEGO, CALIFORNIA

TITLE: RERTR PRIMARY ENCLOSURE

SIZE	SCM NO	DWG NO	REV
C	32334	032236	B

SCALE 1=1 QAL 1B SHEET 1 OF 1

DWG NO 032236 REV B SH 1

NAC DCRM 01

R-202647

DRAWING NAME	AUTOCAD	CAL NUMBER	
CELL NAME	03223/B.DWG	DATE	5 Jan 1996

NOTES:
1. REMOVE ALL BURRS PRIOR TO WELDING.
2. ONE END CAP WELD TO BE HELIUM LEAK CHECKED PER QDI LTH-S-3801 OR EQUIVALENT.
3. END CAPS MUST BE MADE FROM PLATE TO ASSURE PROPER DIRECTION OF STRINGERS.
4. OTHER END CAP TO BE WELDED REMOTELY IN HOT CELL FACILITY. VISUAL INSPECTION REQUIRED.
5. TOP END CAP TO BE SERIALIZED.
6. MATERIALS TO BE PURCHASED TO QAL 1C.

REVISIONS										
REV	DATE	ZONE	DESCRIPTION	DR	CHK	ENG	APVD	APPD	QA	APVD
N/C			INITIAL RELEASE	ACL						
A	JAN 03 1996		INCORPORATE CN006483	ACL		JSK				
B	JAN 04 1996		INCORPORATE CN006484	ACL		JSK				

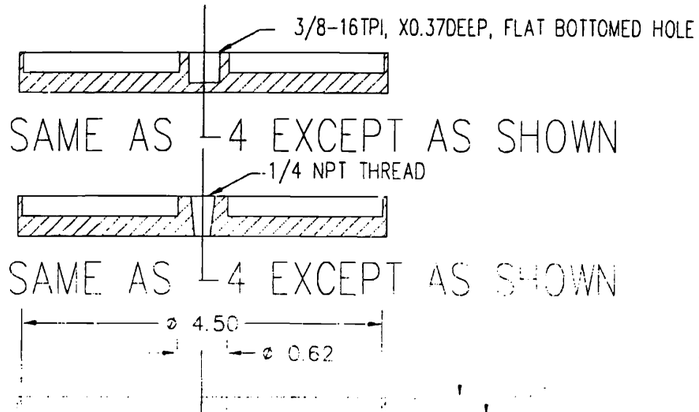

-6 SAME AS -4 EXCEPT AS SHOWN

-5 SAME AS -4 EXCEPT AS SHOWN

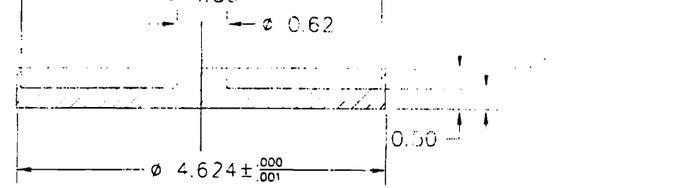

-4

TUBE END DETAIL
TYPICAL BOTH ENDS

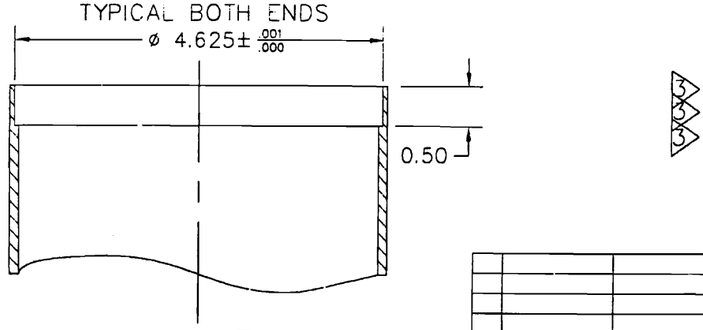

-3

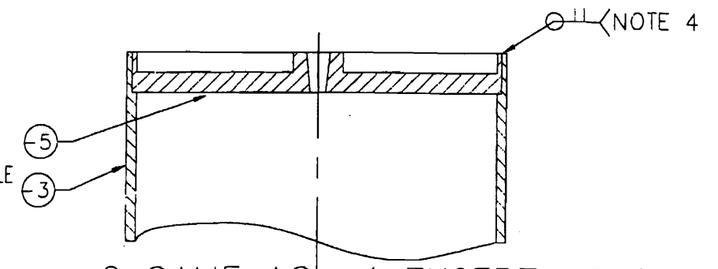

-2 SAME AS -1 EXCEPT AS SHOWN

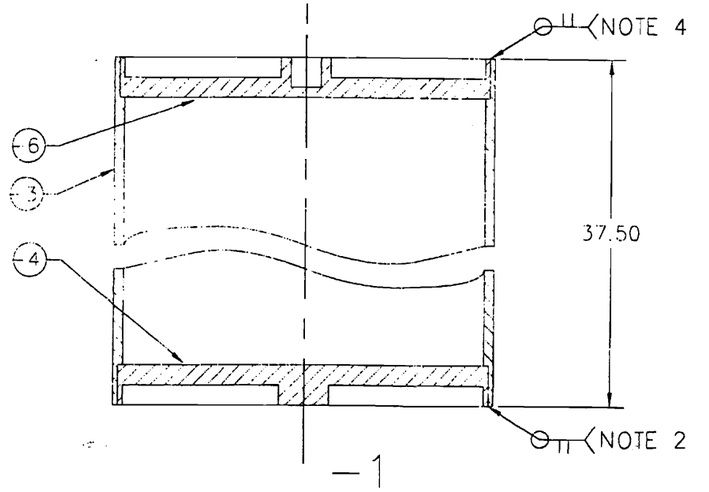

-1

ITEM NO	QTY REQD	PART NO	DESCRIPTION	MAT'L/SPEC	SHT NO
6	1	-6	END CAP 4.75 DiaX0.5	N06600/SB168	1
5	1	-5	END CAP 4.75 DiaX0.5	N06600/SB168	1
4	1	-4	END CAP 4.75 DiaX0.5	N06600/SB168	1
3	1	-3	TUBE 4.75 OD X 0.120 WALL	304/A-269	1
2	XX	-2	TEST ASSEMBLY		1
1	XX	-1	ASSEMBLY		1

PARTS LIST

PART DASH NO	NEXT ASSY	USED ON
	HCP-6-6	
	APPLICATION	

GA PROPRIETARY INFORMATION
THIS DOCUMENT IS THE PROPERTY OF GA TECHNOLOGIES INC. AND TRANSMITTAL OF THIS DOCUMENT OUTSIDE GA OR USE IN CONFIDENCE EXCEPT UNDER THE WRITTEN CONSENT OF GA TECHNOLOGIES INC. THIS DOCUMENT MAY NOT BE COPIED IN WHOLE OR IN PART AND WILL BE RETURNED UPON REQUEST OR WHEN NO LONGER NEEDED BY RECIPIENT AND (2) INFORMATION CONTAINED HEREIN MAY NOT BE COMMUNICATED TO OTHERS AND MAY BE USED BY RECIPIENT ONLY FOR THE PURPOSE FOR WHICH IT WAS TRANSMITTED.

PROJECT	7340
SYSTEM	N/A
APPVL	2
EC/SC	N/A
DISC	M
SEIS	N/A
TYPE	M
ELEC	N/A
DESIGN	

UNLESS OTHERWISE SPECIFIED DIMENSIONS ARE IN INCHES
NO BURRS OR SHARP EDGES
DIMENSIONS PER ANSI-Y-14.5M
TOLERANCES ARE
FRACTIONS DECIMALS ANGLES
± .x ± 0.1 ± 0.05
.xx ± 0.01
.xxx ± 0.001 125
ALL MACHINED SURFACES
CALC WT
DO NOT SCALE DRAWING

GENERAL ATOMICS
SAN DIEGO CALIFORNIA

TITLE: HTGR PRIMARY ENCLOSURE

SIZE	FSCM NO	DWG NO	REV
C	32334	032237	B

SCALE 1=1 | QAL 1B | SHEET 1 OF 1

DWG. NO 032237 REV B SH 1

NAC DCRM 01

R-217269

REV	CHANGE
0	INITIAL ISSUE
1	INC DCR 0A
2	INC DCR 1A

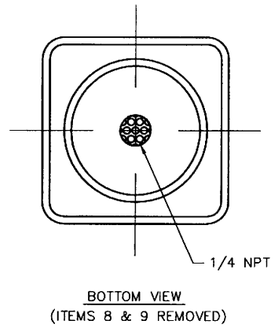

BOTTOM VIEW
(ITEMS 8 & 9 REMOVED)

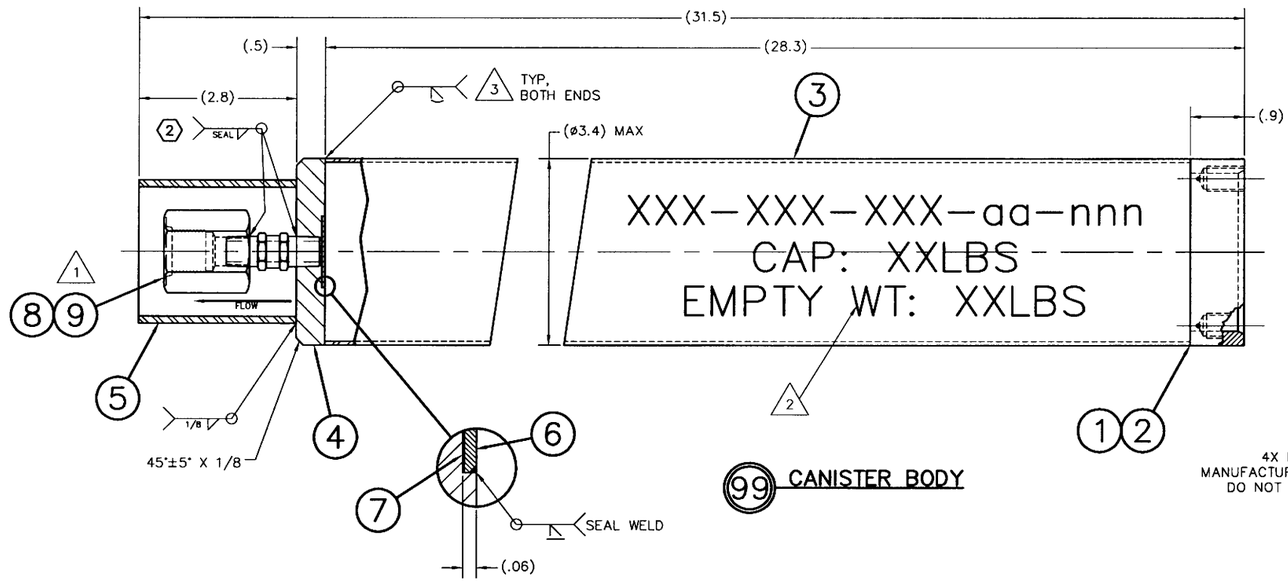

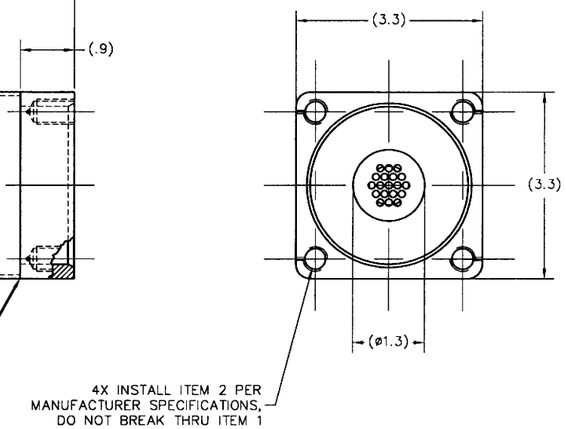

4X INSTALL ITEM 2 PER MANUFACTURER SPECIFICATIONS, DO NOT BREAK THRU ITEM 1

99 CANISTER BODY

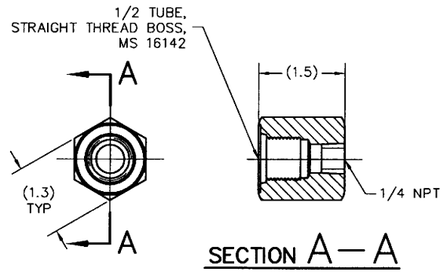

SECTION A-A

8 PLUG ADAPTER

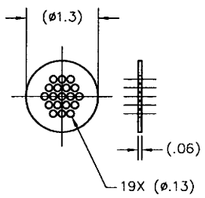

6 COVER PLATE

4. UNLESS OTHERWISE NOTED, ALL WELDING TO BE IN ACCORDANCE WITH SECTION IX OF THE ASME PRESSURE VESSEL CODE.

(2) (3) PENETRANT TEST FINAL PASS. EXAMINE PER ASME SECTION V, ARTICLE 6. ACCEPTANCE PER ASME SECTION III, ARTICLE NG-5350.

(2) ENGRAVE APPROX. AS SHOWN. LETTERS .5 HIGH X .03 MAX. DEEP, FILL WITH BLACK WEATHER RESISTANT PAINT. XXX-XXX-XXX REPRESENTS CUSTOMER IDENTIFICATION NUMBER. "nnn" SERIALIZES THE COMPONENT. "aa" REPRESENTS THE LENGTH ROUNDED TO THE NEAREST INCH. aa-nnn SHALL BE DETERMINED AS SPECIFIED BY THE FAB. SPEC.

(1) DISASSEMBLE ITEM 9 PRIOR TO WELDING AND MINIMIZE HEAT TO HOUSING.

NOTES:

		1	9	CHECK VALVE	ST. STL.	COML		
		1	8	PLUG ADAPTER	304 ST. STL.	ASME SA240/SA479		PLATE/BAR
		1	7	SCREEN	ST. STL.	COML		
		1	6	COVER PLATE	304 ST. STL.	ASTM A276/ASME SA479		PLATE/BAR
		1	5	BOTTOM TUBE	304 ST. STL.	ASTM A269/A249		TUBE
		1	4	BOTTOM PLATE	304 ST. STL.	ASME SA240/SA479		PLATE/BAR
		1	3	BODY TUBE	304 ST. STL.	ASME SA249		TUBE
		4	2	HELICAL INSERT	ST. STL.	COML		
		1	1	TOP PLATE	304 ST. STL.	ASME SA240/SA479		PLATE/BAR
97	98	99	ITEM	NAME	MATERIAL	SPEC	DRAWING No.	DESCRIPTION
ASSY	ASSY	ASSY						
QUANTITY								

NAC INTERNATIONAL

UNLESS OTHERWISE STATED	GROUP	NAME	DATE
DIMENSIONING AND TOLERANCING SHALL BE PER ASME Y14.5M-94	PREPARER	Kevin Matth	12/23/11
ALL THREAD DEPTH CALLOUTS ARE TO BE CONSIDERED AS A MIN. DEPTH OF PERFECT THREADS.	CHECKER	[illegible]	12-23-11
	PROJECT MANAGER	[illegible]	1/4/12
	ENGINEERING	[illegible]	1/24/12
ALL DIMENSIONS ARE IN INCHES	LICENSING	[illegible]	2/29/12
MACHINED SURFACES TO BE 125 OR BETTER	QUALITY	Roger Born	1/29/12
NEXT ASSEMBLY 315-40-130			
DRAWING TYPE. LICENSE			

CANISTER BODY ASSEMBLY, SEALED FAILED FUEL CAN, PULSTAR (2)

PROJECT	DRAWING	REV
315-40	129	2
SCALE N.T.S. (2)	SH 1 OF 1	2:33PM 12-15-2011

Rr 2 1 7 2 7 1

REV	CHANGE
0	INITIAL ISSUE
1	INC DCR 0A
2	INC DCR 1A

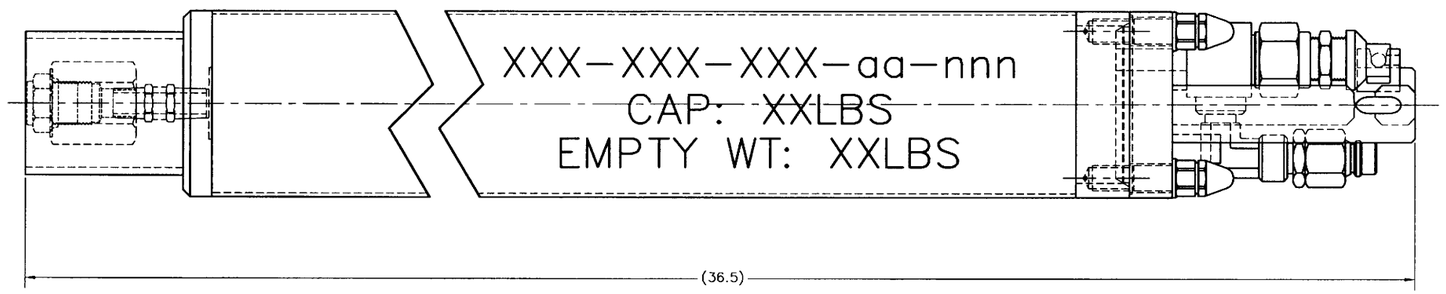

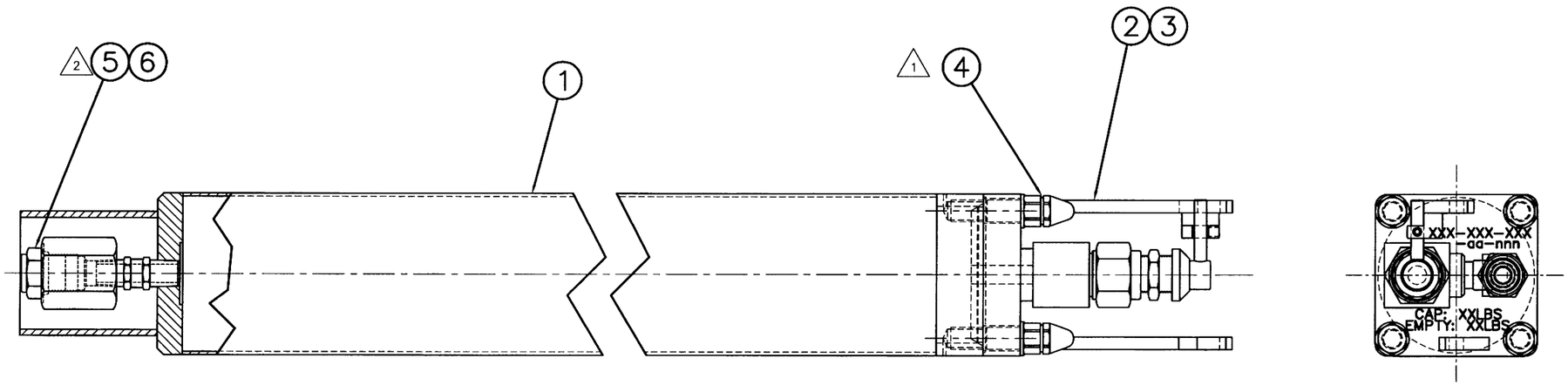

99 FAILED FUEL CAN

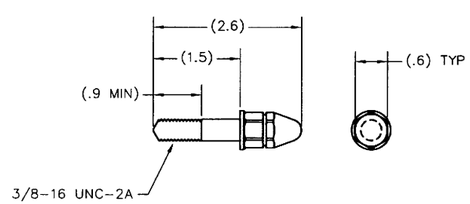

4 LID BOLT

		1	6	SEAL	ST. STL.	COML			
		1	5	PLUG	ST. STL.	COML			
		4	4	LID BOLT	NICKEL ALLOY	SB-637, Gr NO7718		BAR	
		1	3	SEAL	ST. STL.	COML			
		1	2	CANISTER LID			315-087-99		
		1	1	CANISTER BODY			315-129-99		
97	98	99	ITEM	NAME	MATERIAL	SPEC	DRAWING No.	DESCRIPTION	
ASSY	ASSY	ASSY							
QUANTITY									

2 COAT WITH BOSTIK NEVER-SEEZ #NGBT-16 AND TORQUE TO 50±2 FT-LBS.

1 COAT WITH BOSTIK NEVER-SEEZ #NGBT-16 AND TORQUE TO 150±10 IN-LBS.

NOTES:

NAC INTERNATIONAL

ASSEMBLY,
SEALED FAILED FUEL CAN,
2 PULSTAR

UNLESS OTHERWISE STATED	GROUP	NAME	DATE
DIMENSIONING AND TOLERANCING SHALL BE PER ASME Y14.5M-94	PREPARER	[signature]	12/23/11
ALL THREAD DEPTH CALLOUTS ARE TO BE CONSIDERED AS A MIN. DEPTH OF PERFECT THREADS.	CHECKER	[signature]	12-23-11
	PROJECT MANAGER	[signature]	12/28/11
	ENGINEERING	[signature]	12/28/11
ALL DIMENSIONS ARE IN INCHES			
MACHINED SURFACES TO BE ▽ OR BETTER	LICENSING	[signature]	01/30/12
NEXT ASSEMBLY: 315-40-133	QUALITY	[signature]	1/24/12
DRAWING TYPE: LICENSE			

PROJECT 315-40 | DRAWING 130 | REV 2
SCALE N.T.S. (2) | SH 1 OF 1 | 1 DSPM 12-23-2011

R-1 2 1 7 2 7 3

REV	CHANGE
0	INITIAL ISSUE
1	INC DCR(L) 0A
2	INC DCR(L) 1A

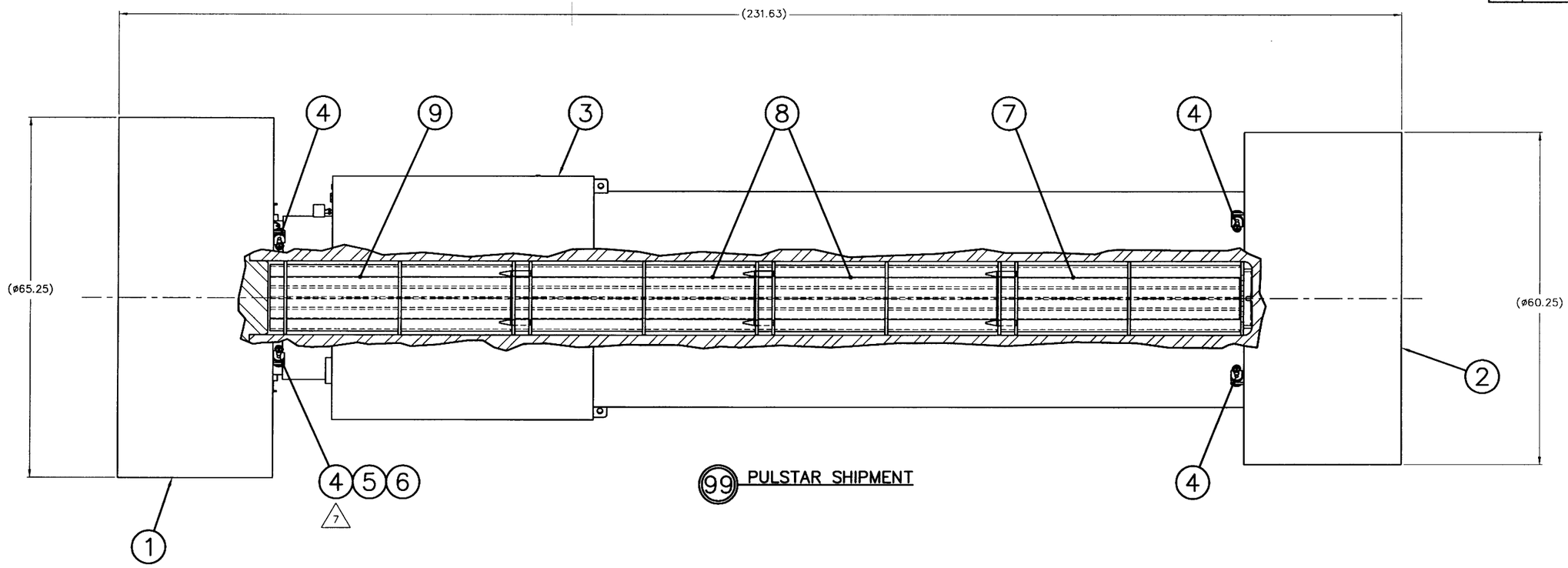

△7 AT LEAST 1 OUT OF 8 ITEM 4 (BALL-LOK PIN) TO BE MODIFIED PER DWG. 315-40-01.

6. UNLESS OTHERWISE NOTED, ALL WELDING TO BE IN ACCORDANCE WITH SECTION IX OF THE ASME PRESSURE VESSEL CODE.

(2) △5 PENETRANT TEST FINAL PASS. EXAMINE PER ASME SECTION V, ARTICLE 6. ACCEPTANCE PER ASME SECTION III, ARTICLE NG-5350.

△4 LENGTH AND PROFILE MAY BE FIELD MODIFIED TO ACCOMMODATE FIELD FIT-UP.

△3 STEEL STAMP/ENGRAVE APPROX. AS SHOWN. LETTERS .25 HIGH X .03 MAX DEEP, FILL WITH BLACK WEATHER RESISTANT PAINT.

△2 ITEM 12, FUEL ROD INSERT MAY BE SHIPPED IN ANY MODULE. AN ITEM 13, SPACER (DUNNAGE) MUST BE PLACED IN EACH MODULE FUEL CELL BEFORE THE ITEM 12, FUEL ROD INSERT IS PUT INTO THE CELL.

△1 ITEM 10, SCREENED FUEL CAN AND ITEM 11, FAILED FUEL CAN MAY ONLY BE SHIPPED IN ITEM 7, BASE MODULE OR ITEM 9, TOP MODULE. A SPACER (DUNNAGE) MAY BE PLACED IN EACH MODULE FUEL CELL BEFORE THE CAN IS PUT INTO THE CELL.

NOTES:

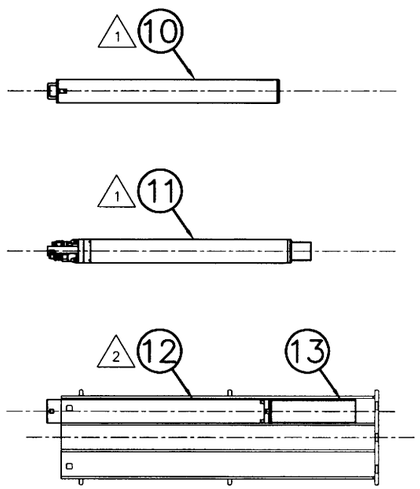

(ALTERNATE SHIPPING CONFIGURATIONS)

	1		15	SPACER TUBE	6061-T6 ALUM.	ASTM B210/B221/B241		TUBE
	1		14	SUPPORT PLATE	6061-T6 ALUM.	ASTM B209/B221		PLATE/BAR
		A/R	13	SPACER			315-40-133-98	
(2)		A/R	12	FUEL ROD INSERT			315-40-96-99	
		A/R	11	SEALED FAILED FUEL CAN			315-40-130-99	
(1)		A/R	10	SCREENED FUEL CAN			315-40-135-99	
		1	9	TOP MODULE			315-40-51-99	
		2	8	INTERMEDIATE MODULE			315-40-50-99	
		1	7	BASE MODULE			315-40-49-99	
		1	6	METAL CUP SEAL			315-40-01-11	
		A/R	5	WIRE			315-40-01-10	
△7		8	4	BALL-LOK PIN			315-40-01-8	
		1	3	CASK ASSEMBLY			315-40-02-99	
		1	2	IMPACT LIMITER			315-40-06-99	
		1	1	IMPACT LIMITER			315-40-05-99	
97 ASSY	98 ASSY	99 ASSY	ITEM	NAME	MATERIAL	SPEC	DRAWING No	DESCRIPTION
QUANTITY								

NAC INTERNATIONAL

TRANSPORT CASK ASSEMBLY, PULSTAR SHIPMENT, LWT CASK

UNLESS OTHERWISE STATED	GROUP	NAME	DATE
DIMENSIONING AND TOLERANCING SHALL BE PER ASME Y14.5M-94	PREPARER		12/23/11
ALL THREAD DEPTH CALLOUTS ARE TO BE CONSIDERED AS A MIN. DEPTH OF PERFECT THREADS.	CHECKER		12-23-11
	PROJECT MANAGER		12/28/11
	ENGINEERING		12/28/11
ALL DIMENSIONS ARE IN INCHES	LICENSING		12/28/11
MACHINED SURFACES TO BE ▽ OR BETTER	QUALITY		1/24/12
NEXT ASSEMBLY: N/A			
DRAWING TYPE: LICENSE			

PROJECT 315-40 | DRAWING 133 | REV 2
SCALE N.T.S. (2) | SH 1 OF 2 | 2:33PM 12-19-2011

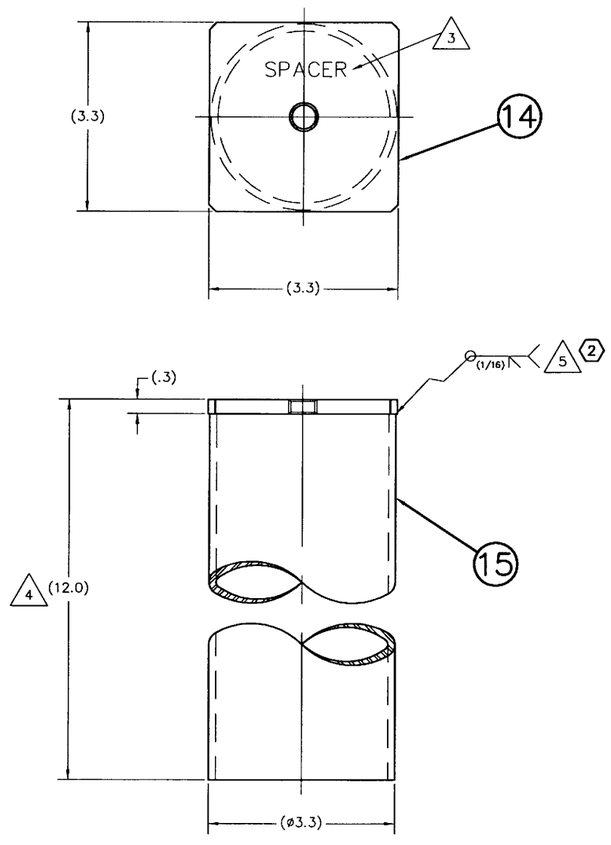

98 SPACER
WEIGHT: 2#

NAC INTERNATIONAL

TRANSPORT CASK ASSEMBLY,
PULSTAR SHIPMENT,
LWT CASK

PROJECT	DRAWING	REV
315-40	133	2
SCALE N.T.S. ⟨2⟩ EST. WT.	SH 2 OF 2	2:35PM 12-19-2011

R-1 2 1 7 2 7 5

REV	CHANGE
0	INITIAL ISSUE
1	INC DCR(L) 0A
2	INC DCR(L) 1A

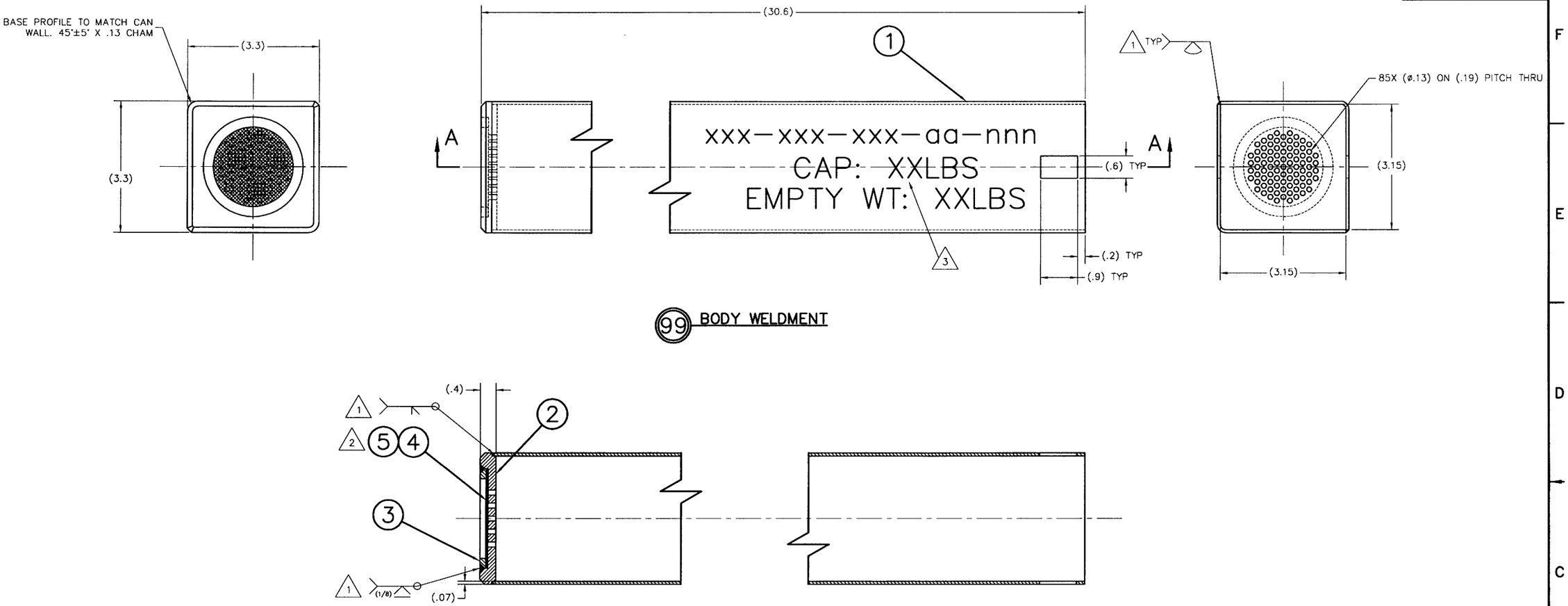

99 BODY WELDMENT

SECTION A–A

4. UNLESS OTHERWISE NOTED, ALL WELDING TO BE IN ACCORDANCE WITH SECTION IX OF THE ASME PRESSURE VESSEL CODE.

△3 STEEL STAMP/ENGRAVE APPROX. AS SHOWN. LETTERS .5 HIGH X .03 MAX. DEEP, FILL WITH BLACK WEATHER RESISTANT PAINT. "nnn" SERIALIZES THE COMPONENT AND SHOULD MATCH THE LID WITH WHICH IT IS FITTED. "aa" REPRESENTS THE CAN LENGTH ROUNDED TO THE NEAREST INCH. XXX-XXX-XXX REPRESENTS CUSTOMER IDENTIFICATION NUMBER.

△2 ITEM 4 TO BE SANDWICHED BETWEEN ITEMS 5 AND CLAMPED FIRMLY INTO BASE WITH ITEM 3 AND WELDED.

(2)△1 PENETRANT TEST FINAL PASS. EXAMINE PER ASME SECTION V, ARTICLE 6. ACCEPTANCE PER ASME SECTION III, ARTICLE NG-5350.

NOTES:

97 ASSY QUANTITY	98 ASSY QUANTITY	99 ASSY QUANTITY	ITEM	NAME	MATERIAL	SPEC	DRAWING No.	DESCRIPTION
		2	5	SUPPORT	ST. STL.	COML		
		1	4	FILTER	ST. STL.	COML		
		1	3	RETAINER	304 ST. STL.	ASME SA240/SA479		PLATE/BAR
		1	2	BOTTOM	304 ST. STL.	ASME SA240/SA479		PLATE/BAR
		1	1	BODY	304 ST. STL.	ASME SA240		SHEET

(2)△

NAC INTERNATIONAL

UNLESS OTHERWISE STATED	GROUP	NAME	DATE
DIMENSIONING AND TOLERANCING SHALL BE PER ASME Y14.5M-94	PREPARER		12/27/11
ALL THREAD DEPTH CALLOUTS ARE TO BE CONSIDERED AS A MIN. DEPTH OF PERFECT THREADS	CHECKER		12-28-11
	PROJECT MANAGER		12-30-11
ALL DIMENSIONS ARE IN INCHES	ENGINEERING		12-28-11
MACHINED SURFACES TO BE 125 OR BETTER	LICENSING		12/28/11
NEXT ASSEMBLY: 315-40-135	QUALITY		1/29/12
DRAWING TYPE: LICENSE			

BODY WELDMENT, SCREENED FUEL CAN, PULSTAR FUEL

PROJECT	DRAWING	REV
315-40	134	2
SCALE N.T.S. (2)	SH 1 OF 1	2:05PM 12-19-2011

R-202832

REV	CHANGE
0	INITIAL ISSUE
1	INC DCR 0A

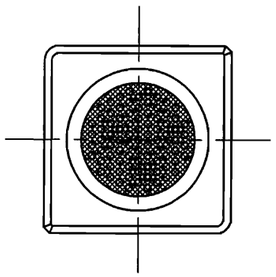

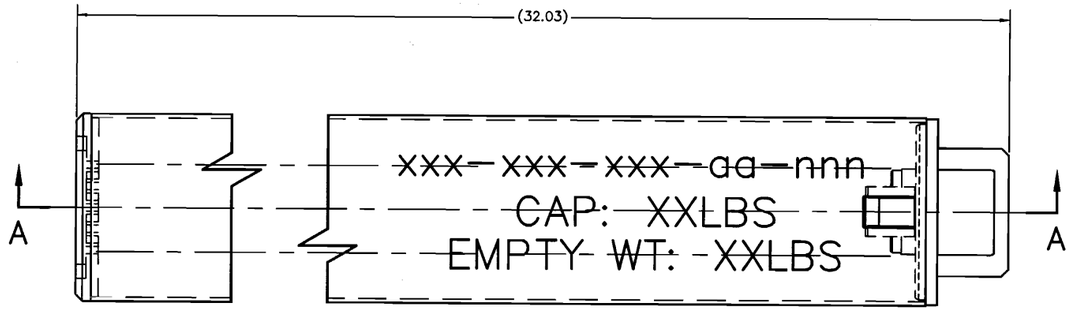

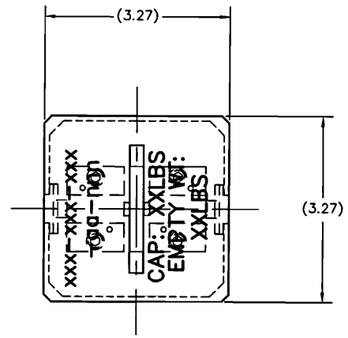

① 99 SCREENED FUEL CAN

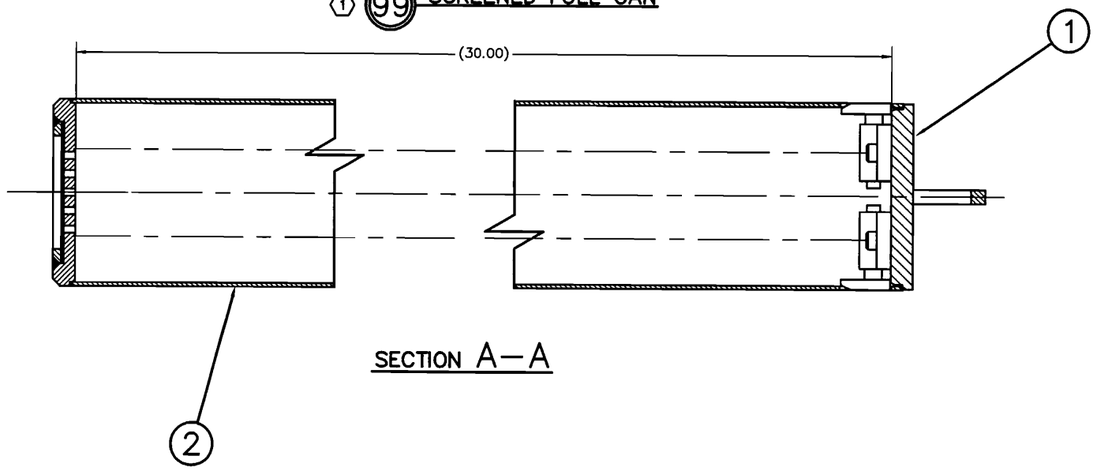

SECTION A–A

		1	2	SCREENED FUEL CAN			315-40-134-99	
		1	1	LID ASSEMBLY			315-40-074-99	
97	98	99	ITEM	NAME	MATERIAL	SPEC	DRAWING No.	DESCRIPTION
ASSY	ASSY	ASSY						
QUANTITY								

NAC INTERNATIONAL

UNLESS OTHERWISE STATED DIMENSIONING AND TOLERANCING SHALL BE PER ASME Y14.5M–94

ALL THREAD DEPTH CALLOUTS ARE TO BE CONSIDERED AS A MIN. DEPTH OF PERFECT THREADS.

ALL DIMENSIONS ARE IN INCHES

MACHINED SURFACES TO BE 125 OR BETTER

NEXT ASSEMBLY: 315-40-133

DRAWING TYPE: LICENSE

GROUP	NAME	DATE
PREPARER	R. Walker	2-3-05
CHECKER	Dan Gunn	2-3-05
PROJECT MANAGER	John McCarthy	02/04/05
ENGINEERING	Alan Tse	2/4/05
LICENSING	Anthony L Pietrangelo	2/9/05
QUALITY	Roy W Bass	2/14/05

ASSEMBLY,
SCREENED FUEL CAN,
PULSTAR FUEL

PROJECT 315-40 | DRAWING 135 | REV 1

SH 1 OF 1 | 2:11PM 2-3-2005

NAC DCRM 02

K-207550

REV	CHANGE
0	INITIAL ISSUE
1	INC DCR 0A

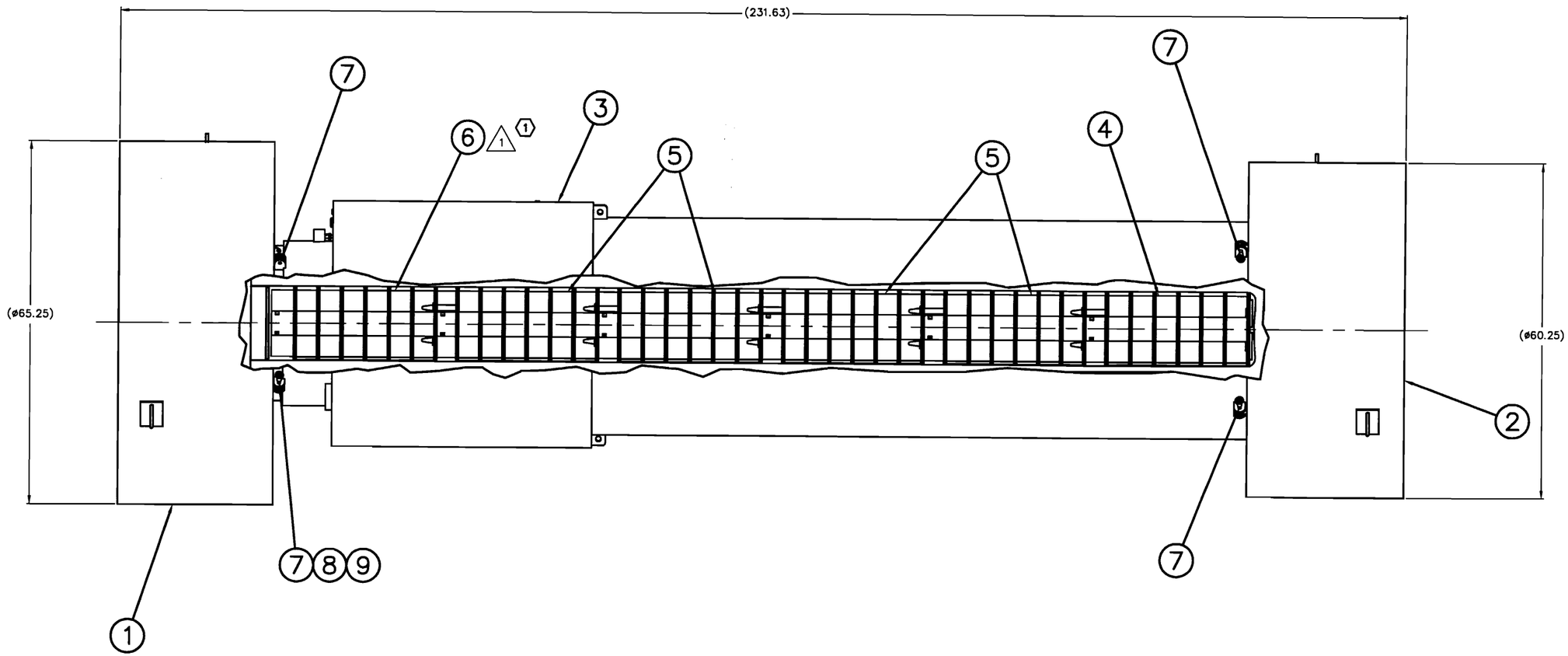

		1	9	TAMPER INDICATING DEVICE (TID)		COML		
		A/R	8	WIRE	ST. STL.	COML		
		8	7	BALL-LOK PIN			315-40-01-8	
		1	6	TOP MODULE			315-40-140-99	
		4	5	INTER. MODULE			315-40-141-99	
		1	4	BASE MODULE			315-40-142-99	
		1	3	CASK ASSEMBLY			315-40-02-99	
		1	2	IMPACT LIMITER			315-40-06-99	
		1	1	IMPACT LIMITER			315-40-05-99	
97	98	99	ITEM	NAME	MATERIAL	SPEC	DRAWING No.	DESCRIPTION
ASSY	ASSY	ASSY						
QUANTITY								

1 DAMAGED FUEL CANS (DFC'S) CONTAINING ANSTO MKII (PLATE), MKIII (SPIRAL) OR MKIV (DIDO) FUEL ELEMENTS, MAY BE LOADED IN THE 7 CELLS OF THE TOP BASKET MODULE.

NOTES:

UNLESS OTHERWISE STATED

DIMENSIONING AND TOLERANCING SHALL BE PER ASME Y14.5M-94, UNSPECIFIED DIMENSIONAL TOLERANCES ARE SHOWN BELOW.

ALL THREAD DEPTH CALLOUTS ARE TO BE CONSIDERED AS A MIN. DEPTH OF PERFECT THREADS. THE ACTUAL DEPTH OF THE THREADS IS NOT SUBJECT TO TOLERANCE CONTROLS.

XXX	UNDER 3	±.003
	3-12	±.005
	OVER 12	±.010
XX	UNDER 6	±.02
	6-18	±.03
	OVER 18	±.06
X	ALL	±.1
FRACTIONAL ±1/8		
ANGLES ±0.5°		

WEIGHTS ARE APPROXIMATE AND ARE TO BE USED FOR HANDLING PURPOSES ONLY

ALL DIMENSIONS ARE IN INCHES

BORDER SIZE: F (40 X 28)

ALL UNSPECIFIED TOOL RADII: .015 - .030

BREAK ALL SHARP CORNERS .015 - .030

MACHINED SURFACES TO BE ▽ OR BETTER

NEXT ASSEMBLY: N/A

DRAWING TYPE: LICENSE

	GROUP	NAME	DATE
PREPARER			7/29/08
CHECKED			8/6/08
PROJECT MANAGER			8/6/08
ENGINEERING			8/6/08
LICENSING			8-8-08
QUALITY			8-11-08

NAC INTERNATIONAL

LEGAL WEIGHT TRUCK TRANSPORT CASK ASSY ANSTO FUEL

PROJECT 315-40	DRAWING 139	REV 1	
SCALE 1/8	WEIGHT	SH 1 OF 1	8:28AM 7-29-2008

NAC DCRM 01

R-207551

REV	CHANGE
0	INITIAL ISSUE
1	INC DCR 0A

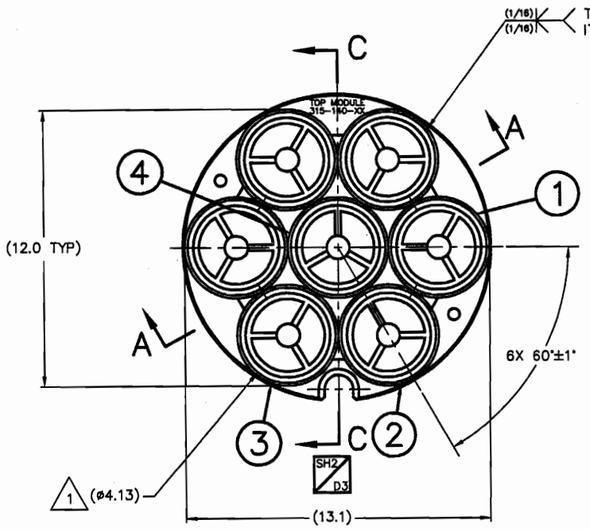

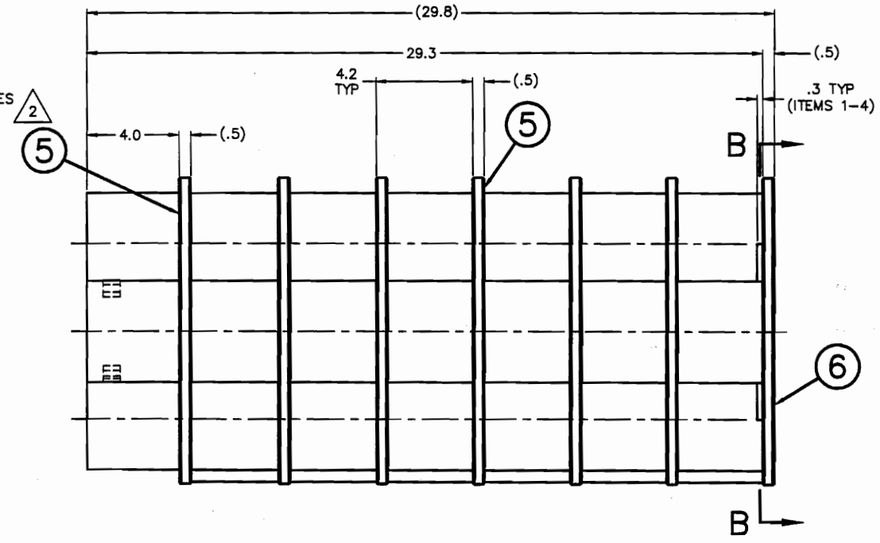

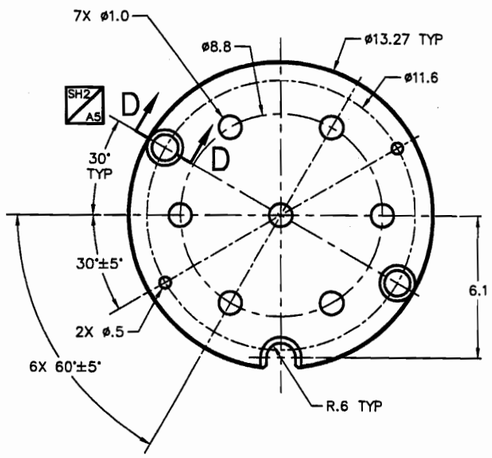

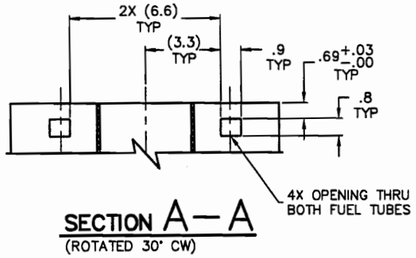

SECTION A–A
(ROTATED 30° CW)

99 TOP MODULE
WEIGHT: 142#

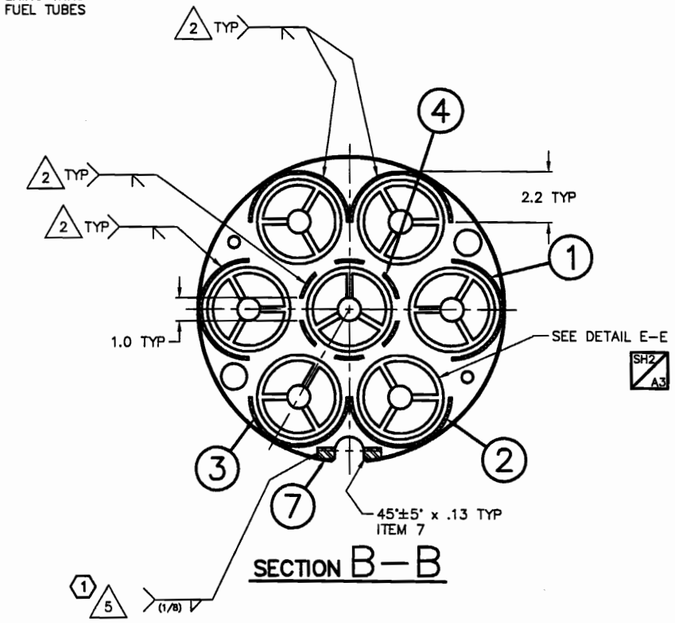

SECTION B–B

1 5 RADIAL INSIDE SURFACE, SEAL WELD OUTER EDGE, BOTH ENDS ITEM 7.

4. SPECIFICATION TO BE ASME SA249 OR ASTM A511.

3. ALL WELDING PROCEDURES TO BE IN ACCORDANCE WITH ASME SECTION IX.

2 VISUALLY INSPECT (VT) ALL WELDS PER ASME SECTION V, ARTICLE 1 & 9. ACCEPTANCE PER SECTION III, NG-5360.

1 ALL SEVEN ø4.13 REF OPENINGS TO ACCEPT A ø4.045 GO GAGE. THE LENGTH OF THE GAGE SHALL BE 30.0" +.5/-.0 LONG. NO INDIVIDUAL OPENING TO EXCEED ø4.150.

NOTES:

97 ASSY	98 ASSY	99 ASSY	ITEM	NAME	MATERIAL	SPEC	DRAWING No.	DESCRIPTION
QUANTITY								
		12	7	GUIDE BAR	304 ST. STL.	ASME SA479		1/2 X 3/4 BAR
		1	6	BASE PLATE	304 ST. STL.	ASME SA240		1/2 PLATE
		6	5	SUPPORT PLATE	304 ST. STL.	ASME SA240		1/2 PLATE
		1	4	CENTER FUEL TUBE	304 ST. STL.	SEE NOTE 4		4 3/8 OD X 1/8 WALL
		2	3	OUTER FUEL TUBE – C	304 ST. STL.	SEE NOTE 4		4 3/8 OD X 1/8 WALL
		2	2	OUTER FUEL TUBE – B	304 ST. STL.	SEE NOTE 4		4 3/8 OD X 1/8 WALL
		2	1	OUTER FUEL TUBE – A	304 ST. STL.	SEE NOTE 4		4 3/8 OD X 1/8 WALL

UNLESS OTHERWISE STATED
DIMENSIONING AND TOLERANCING SHALL BE PER ASME Y14.5M–94, UNSPECIFIED DIMENSIONAL TOLERANCES ARE SHOWN BELOW.
ALL THREAD DEPTH CALLOUTS ARE TO BE CONSIDERED AS A MIN. DEPTH OF PERFECT THREADS. THE ACTUAL DEPTH OF THE THREADS IS NOT SUBJECT TO TOLERANCE CONTROLS.

XXX	UNDER 3	±.005
	3–12	±.005
	OVER 12	±.010
XX	UNDER 6	±.02
	6–18	±.03
	OVER 18	±.06
X	ALL	±.1
FRACTIONAL ±1/8		
ANGLES ±0.5°		

WEIGHTS ARE APPROXIMATE AND ARE TO BE USED FOR HANDLING PURPOSES ONLY
ALL DIMENSIONS ARE IN INCHES
BORDER SIZE: F (40 X 28)
ALL UNSPECIFIED TOOL RADII: .015 – .030
BREAK ALL SHARP CORNERS .015 – .030
MACHINED SURFACES TO BE 125 OR BETTER
NEXT ASSEMBLY: 315-40-139
DRAWING TYPE: LICENSE

GROUP	NAME	DATE
PREPARER	[signature]	7/30/08
CHECKER	[signature]	8/6/08
PROJECT MANAGER	[signature]	8/6/08
ENGINEERING	[signature]	8/6/08
LICENSING	[signature]	8-8-08
QUALITY	[signature]	8-11-08

NAC INTERNATIONAL

WELDMENT,
7 CELL BASKET,
TOP MODULE,
ANSTO FUEL

PROJECT 315–40 | DRAWING 140 | REV 1
SCALE 1/2.5 | WEIGHT NOTED | SH 1 OF 2
11:37AM 7-30-2008

NAC DCRM 01

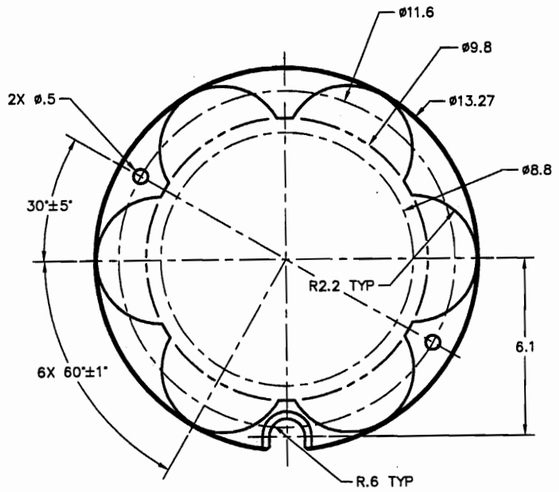

5 SUPPORT PLATE
(CHAMFER R.63 NOTCH, TOP PLATE ONLY)

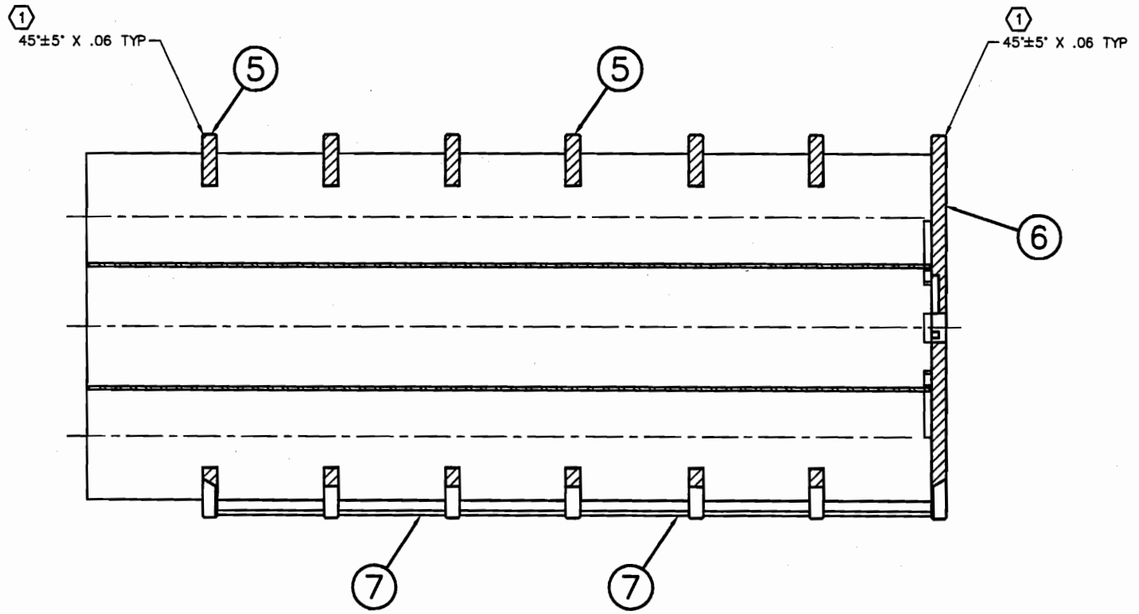

SH1 / D7 SECTION C—C

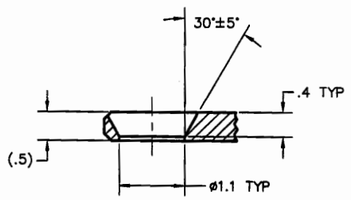

SH1 / E2 SECTION D—D
ROTATED 30° CCW
SCALE: 1/1

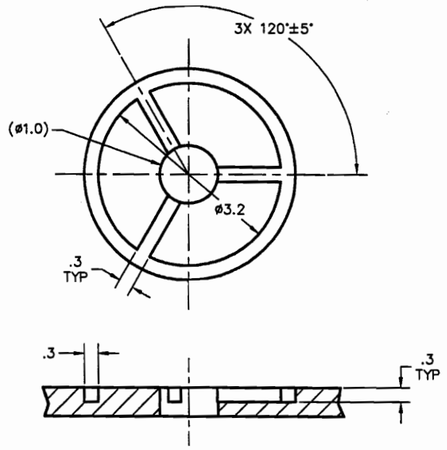

SH1 / B4 DETAIL E—E
SCALE: FULL
TYPICAL 7 PLACES, ORIENTATION OPTIONAL

NAC INTERNATIONAL

WELDMENT,
7 CELL BASKET,
TOP MODULE,
ANSTO FUEL

PROJECT 315—40		DRAWING 140	REV 1
SCALE 1/2	WEIGHT N/A	SH 2 OF 2	11:41AM 7-30-2008

R- 207552

REV	CHANGE
0	INITIAL ISSUE
1	INC DCR 0A

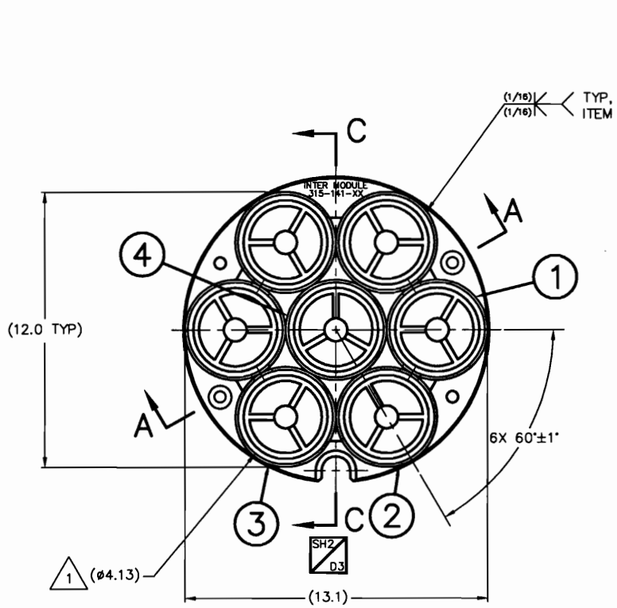

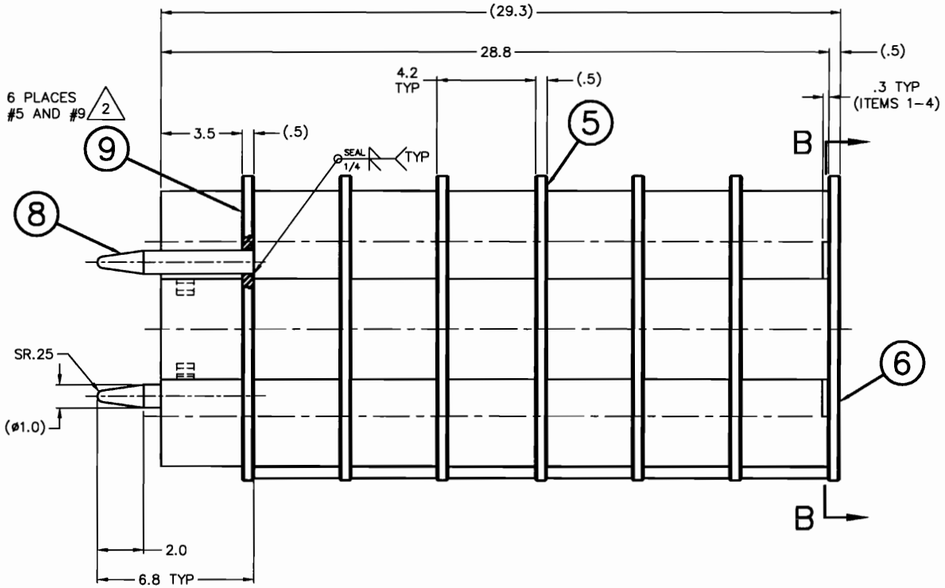

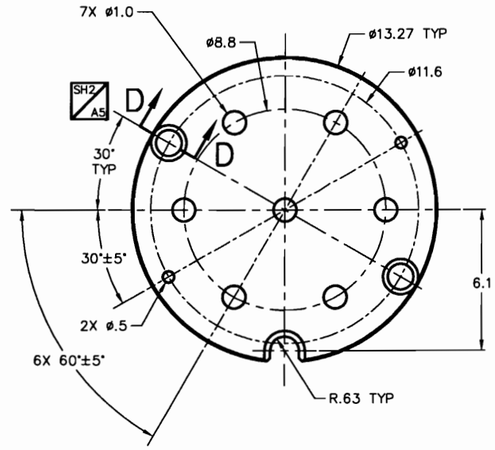

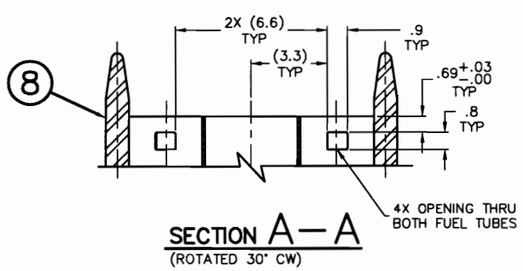

SECTION A–A
(ROTATED 30° CW)

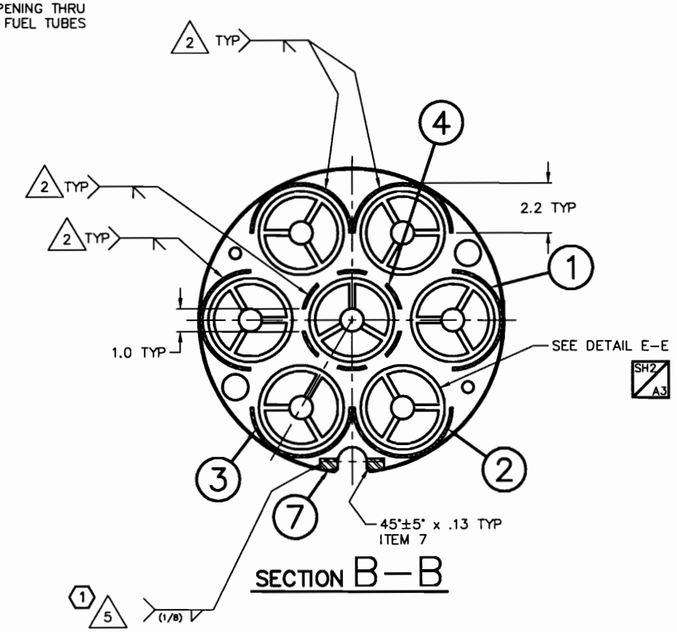

SECTION B–B

99 INTERMEDIATE MODULE
WEIGHT: 144#

1

5 RADIAL INSIDE SURFACE, SEAL WELD OUTER EDGE, BOTH ENDS ITEM 7.

4. SPECIFICATION TO BE ASME SA249 OR ASTM A511.

3. ALL WELDING PROCEDURES TO BE IN ACCORDANCE WITH ASME SECTION IX.

2 VISUALLY INSPECT (VT) ALL WELDS PER ASME SECTION V, ARTICLE 1 & 9. ACCEPTANCE PER SECTION III, NG-5360.

1 ALL SEVEN ø4.13 REF OPENINGS TO ACCEPT A ø4.045 GO GAGE. THE LENGTH OF THE GAGE SHALL BE 30.0" +.5/-.0 LONG. NO INDIVIDUAL OPENING TO EXCEED ø4.150.

NOTES:

97	98	99	ITEM	NAME	MATERIAL	SPEC	DRAWING No.	DESCRIPTION
		1	9	TOP PLATE	304 ST. STL.	ASME SA240		1/2 PLATE
		2	8	GUIDE PIN	304 ST. STL.	ASME SA479		1 DIA BAR
		12	7	GUIDE BAR	304 ST. STL.	ASME SA479		1/2 X 3/4 BAR
		1	6	BASE PLATE	304 ST. STL.	ASME SA240		1/2 PLATE
		5	5	SUPPORT PLATE	304 ST. STL.	ASME SA240		1/2 PLATE
		1	4	CENTER FUEL TUBE	304 ST. STL.	SEE NOTE 4		4 3/8 OD X 1/8 WALL
		2	3	OUTER FUEL TUBE – C	304 ST. STL.	SEE NOTE 4		4 3/8 OD X 1/8 WALL
		2	2	OUTER FUEL TUBE – B	304 ST. STL.	SEE NOTE 4		4 3/8 OD X 1/8 WALL
		2	1	OUTER FUEL TUBE – A	304 ST. STL.	SEE NOTE 4		4 3/8 OD X 1/8 WALL
ASSY	ASSY	ASSY		QUANTITY				

NAC INTERNATIONAL

UNLESS OTHERWISE STATED
DIMENSIONING AND TOLERANCING SHALL BE PER ASME Y14.5M-94, UNSPECIFIED DIMENSIONAL TOLERANCES ARE SHOWN BELOW.
ALL THREAD DEPTH CALLOUTS ARE TO BE CONSIDERED AS A MIN. DEPTH OF PERFECT THREADS. THE ACTUAL DEPTH OF THE THREADS IS NOT SUBJECT TO TOLERANCE CONTROLS.

XXX	UNDER 3	±.003
	3–12	±.005
	OVER 12	±.010
XX	UNDER 6	±.01
	6–18	±.03
	OVER 18	±.06
X	ALL	±.1
FRACTIONAL		±1/8
ANGLES		±0.5°

WEIGHTS ARE APPROXIMATE AND ARE TO BE USED FOR HANDLING PURPOSES ONLY.
ALL DIMENSIONS ARE IN INCHES
BORDER SIZE: F (40 X 28)
ALL UNSPECIFIED TOOL RADII: .015 – .030
BREAK ALL SHARP CORNERS .015 – .030
MACHINED SURFACES TO BE ▽ OR BETTER
NEXT ASSEMBLY: 315-40-139
DRAWING TYPE: LICENSE

GROUP	NAME	DATE
PREPARER		7/29/08
CHECKER		8/6/08
PROJECT MANAGER		8/6/08
ENGINEERING		8/6/08
LICENSING		8-8-08
QUALITY		8-11-08

WELDMENT,
7 CELL BASKET,
INTERMEDIATE MODULE,
ANSTO FUEL

PROJECT 315-40 | DRAWING 141 | REV 1
SCALE 1/2.5 | WEIGHT NOTED | SH 1 OF 2 | 10:34AM 7-29-2008

NAC DCRM 01

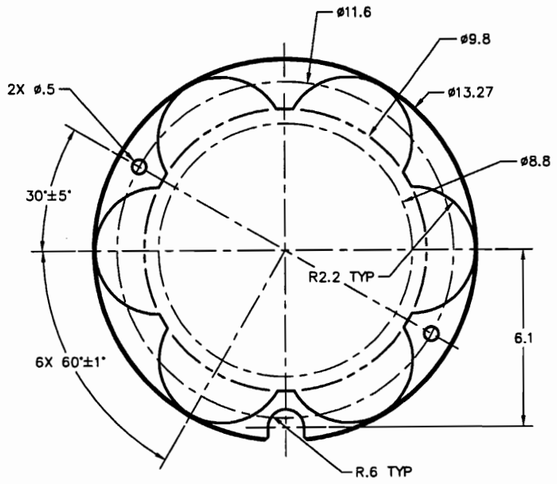

⑤ SUPPORT PLATE

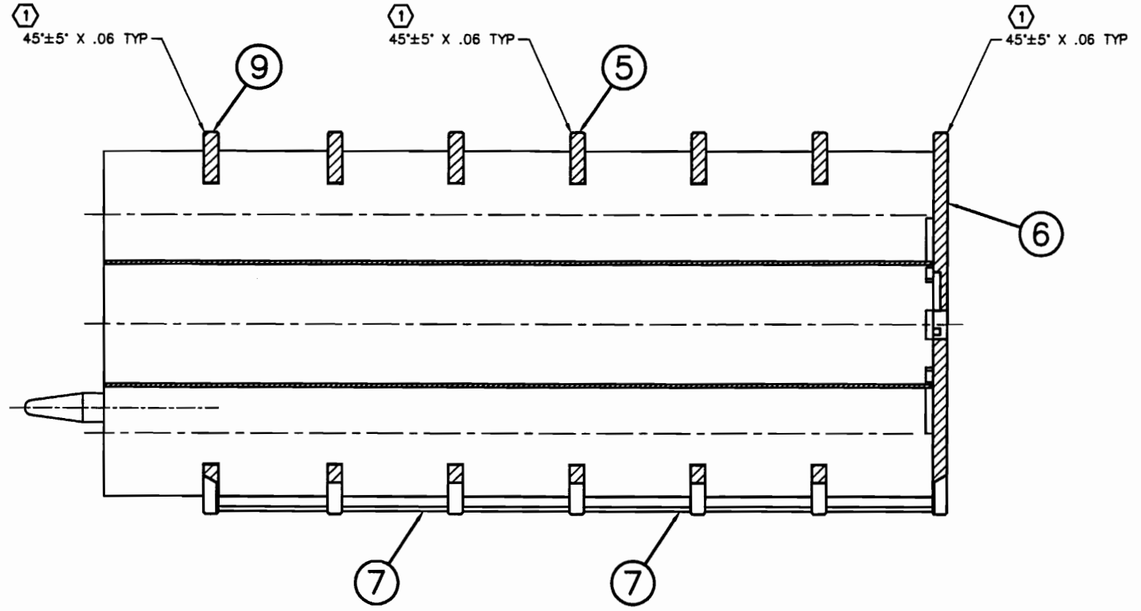

SH1 / D7 SECTION C–C

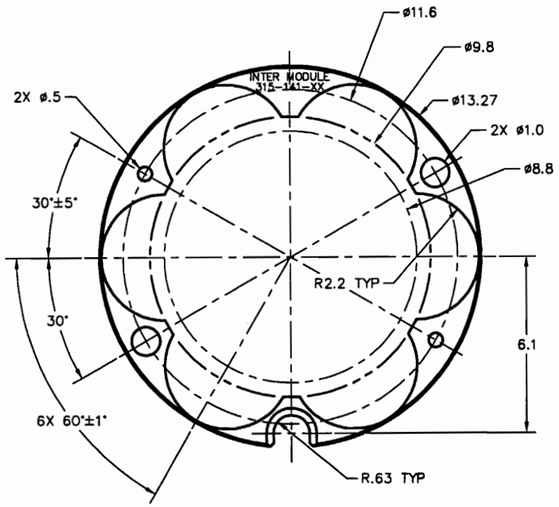

⑨ TOP PLATE

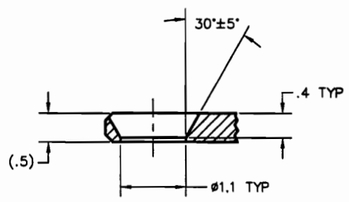

SH1 / E2 SECTION D–D
ROTATED 30° CCW
SCALE: 1/1

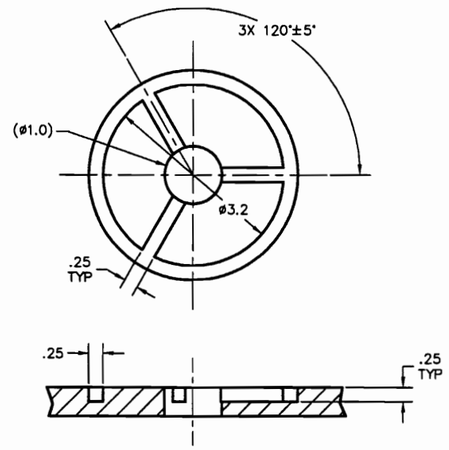

SH1 / B4 DETAIL E–E
SCALE: FULL
TYPICAL 7 PLACES, ORIENTATION OPTIONAL

NAC INTERNATIONAL

WELDMENT,
7 CELL BASKET,
INTERMEDIATE MODULE,
ANSTO FUEL

PROJECT 315-40		DRAWING 141	REV 1
SCALE 1/2	WEIGHT NOTED	SH 2 OF 2	10:34AM 7-29-2008

R-207553

REV	CHANGE
0	INITIAL ISSUE
1	INC DCR 0A

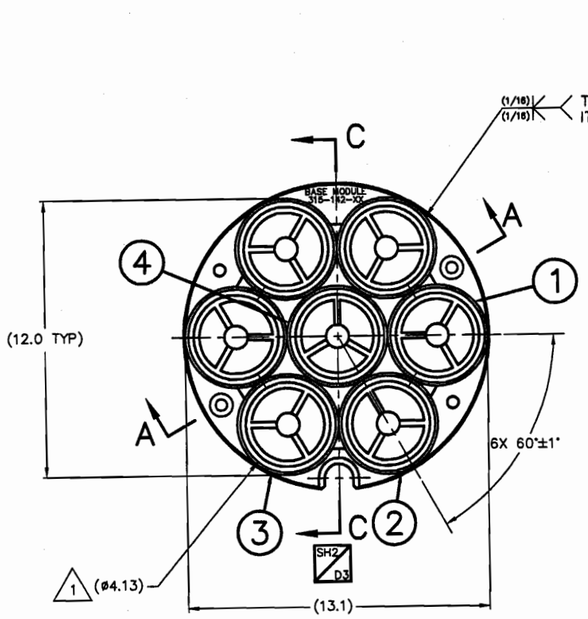

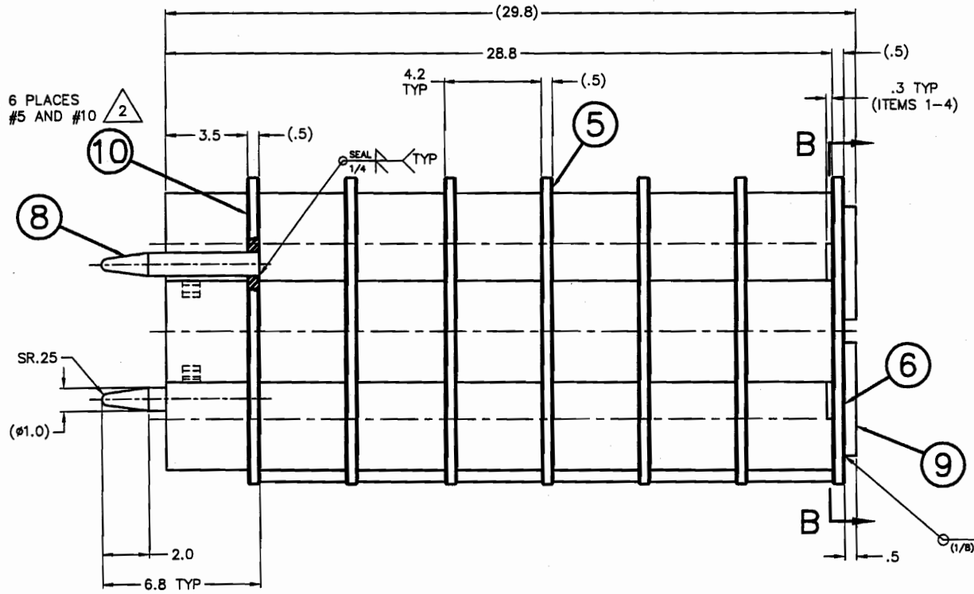

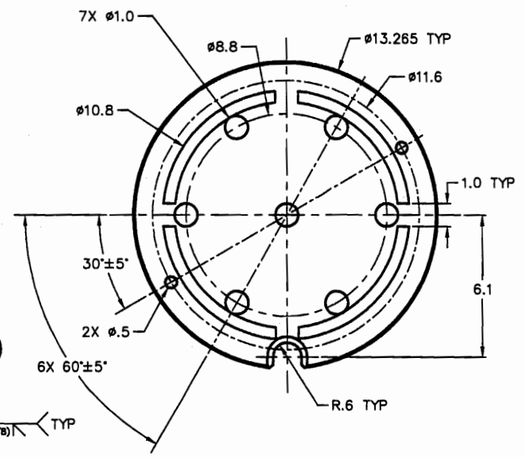

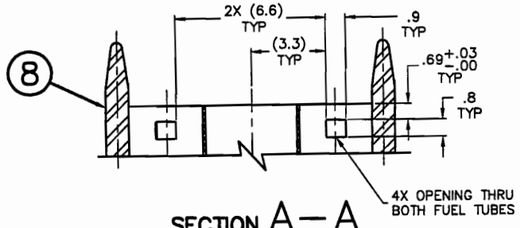

SECTION A–A
(ROTATED 30° CW)

99 BASE MODULE
WEIGHT: 144#

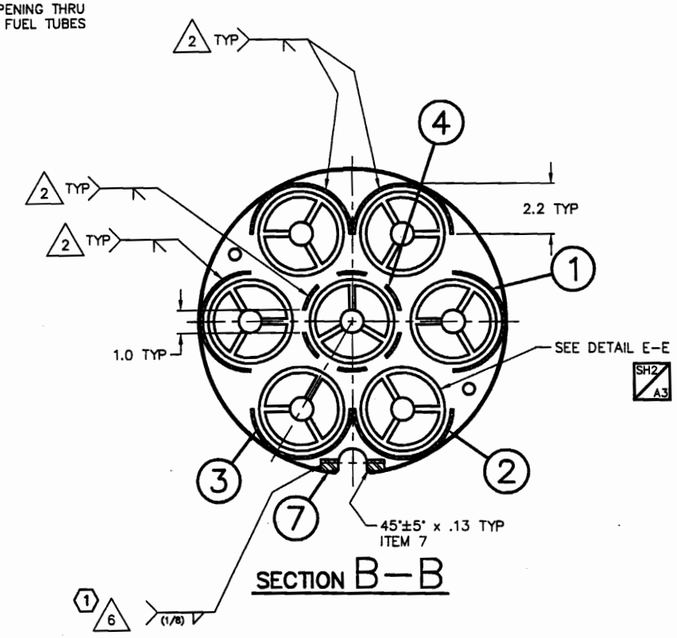

SECTION B–B

1 6 RADIAL INSIDE SURFACE, SEAL WELD OUTER EDGE, BOTH ENDS ITEM 7.

5 ITEM 9 (BASE) CAN BE MADE FROM PLATE/BAR ASME SA240/SA479.

4. SPECIFICATION TO BE ASME SA249 OR ASTM A511.

3. ALL WELDING PROCEDURES TO BE IN ACCORDANCE WITH ASME SECTION IX.

2 VISUALLY INSPECT (VT) ALL WELDS PER ASME SECTION V, ARTICLE 1 & 9. ACCEPTANCE PER SECTION III, NG-5360.

1 ALL SEVEN ø4.13 REF OPENINGS TO ACCEPT A ø4.045 GO GAGE. THE LENGTH OF THE GAGE SHALL BE 30.0" +.5/-.0 LONG. NO INDIVIDUAL OPENING TO EXCEED ø4.150.

NOTES:

		1	10	TOP PLATE	304 ST. STL.	ASME SA240		1/2 PLATE
		1	9	BASE	304 ST. STL.	ASME SA312		10 SCH 80S PIPE
		2	8	GUIDE PIN	304 ST. STL.	ASME SA479		1 DIA BAR
		12	7	GUIDE BAR	304 ST. STL.	ASME SA479		1/2 X 3/4 BAR
		1	6	BASE PLATE	304 ST. STL.	ASME SA240		1/2 PLATE
		5	5	SUPPORT PLATE	304 ST. STL.	ASME SA240		1/2 PLATE
		1	4	CENTER FUEL TUBE	SEE NOTE 4	SEE NOTE 3		4 3/8 OD X 1/8 WALL
		2	3	OUTER FUEL TUBE – C	SEE NOTE 4	SEE NOTE 3		4 3/8 OD X 1/8 WALL
		2	2	OUTER FUEL TUBE – B	SEE NOTE 4	SEE NOTE 3		4 3/8 OD X 1/8 WALL
		2	1	OUTER FUEL TUBE – A	SEE NOTE 4	SEE NOTE 3		4 3/8 OD X 1/8 WALL
97	98	99	ITEM	NAME	MATERIAL	SPEC	DRAWING No.	DESCRIPTION
ASSY	ASSY	ASSY						
QUANTITY								

NAC INTERNATIONAL

UNLESS OTHERWISE STATED
DIMENSIONING AND TOLERANCING SHALL BE PER ASME Y14.5M-94, UNSPECIFIED DIMENSIONAL TOLERANCES ARE SHOWN BELOW.
ALL THREAD DEPTH CALLOUTS ARE TO BE CONSIDERED AS A MIN. DEPTH OF PERFECT THREADS. THE ACTUAL DEPTH OF THE THREADS IS NOT SUBJECT TO TOLERANCE CONTROLS.

XXX	UNDER 3	±.003
	3–12	±.005
	OVER 12	±.010
XX	UNDER 6	±.02
	6–18	±.03
	OVER 18	±.06
X	ALL	±.1
FRACTIONAL ±1/8		
ANGLES ±0.5°		

WEIGHTS ARE APPROXIMATE AND ARE TO BE USED FOR HANDLING PURPOSES ONLY
ALL DIMENSIONS ARE IN INCHES
BORDER SIZE: F (40 X 28)
ALL UNSPECIFIED TOOL RADII: .015 – .030
BREAK ALL SHARP CORNERS .015 – .030
MACHINED SURFACES TO BE ▽ OR BETTER
NEXT ASSEMBLY: 315-40-139
DRAWING TYPE: LICENSE

GROUP	NAME	DATE
PREPARER		7/30/08
CHECKER		8/6/08
PROJECT MANAGER		8/6/08
ENGINEERING		8/6/08
LICENSING		8-8-08
QUALITY		8-11-08

WELDMENT,
7 CELL BASKET,
BASE MODULE,
ANSTO FUEL

PROJECT 315–40	DRAWING 142	REV 1	
SCALE 1/2.5	WEIGHT NOTED	SH 1 OF 2	1:38PM 7-30-2008

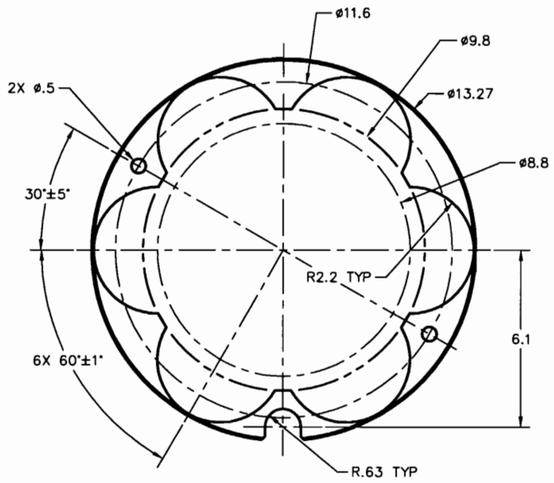

(5) SUPPORT PLATE

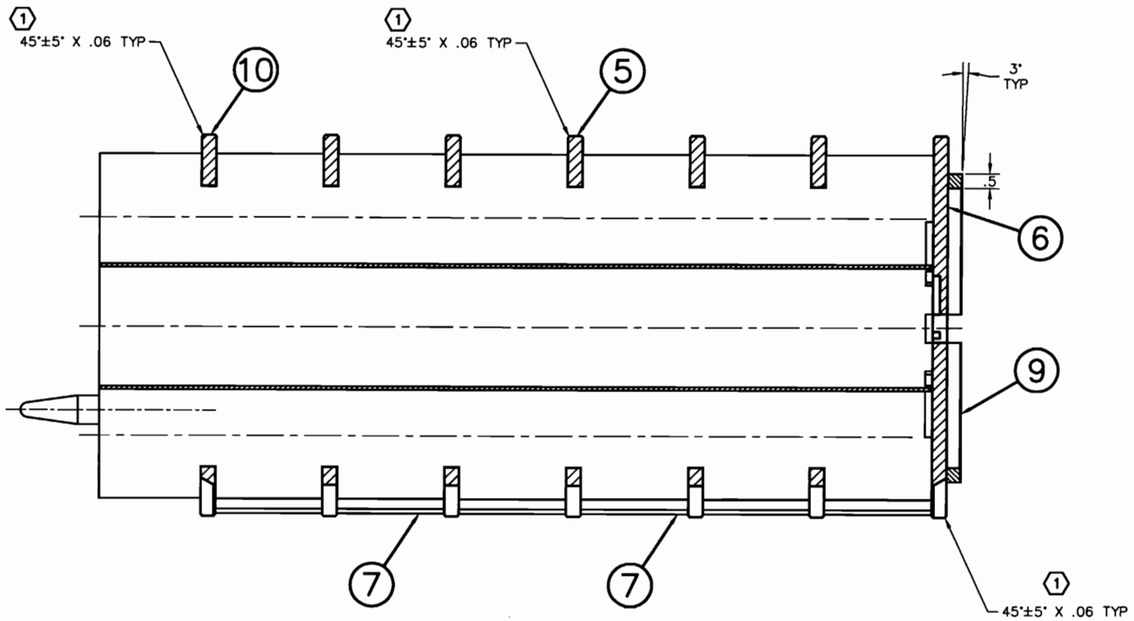

SH1 D7 SECTION C—C

(10) TOP PLATE

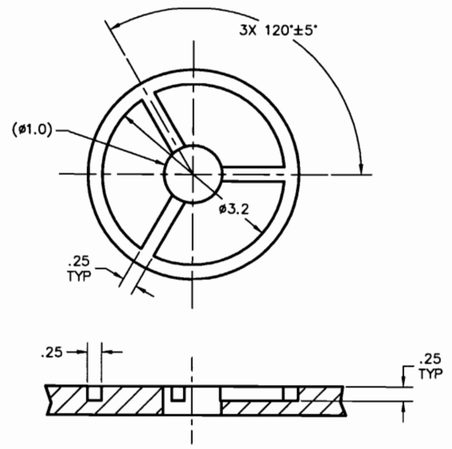

SH1 B4 DETAIL E—E
SCALE: FULL
TYPICAL 7 PLACES, ORIENTATION OPTIONAL

NAC INTERNATIONAL

WELDMENT,
7 CELL BASKET,
BASE MODULE,
ANSTO FUEL

PROJECT 315-40	DRAWING 142	REV 1
SCALE 1/2	WEIGHT NOTED	SH 2 OF 2

REV	CHANGE
0	INITIAL ISSUE

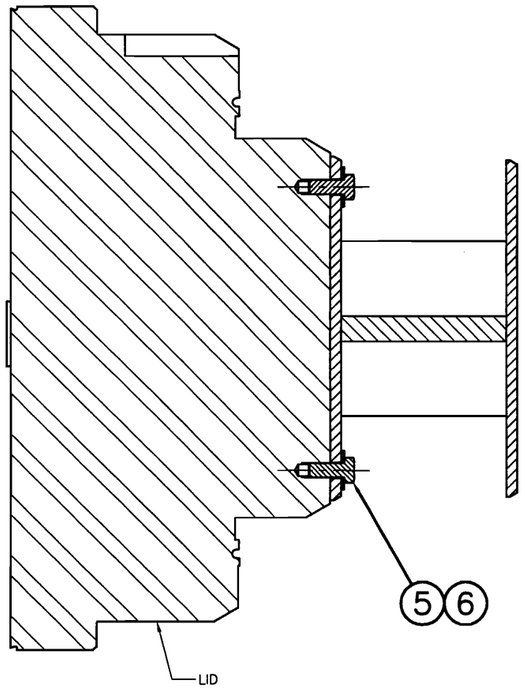

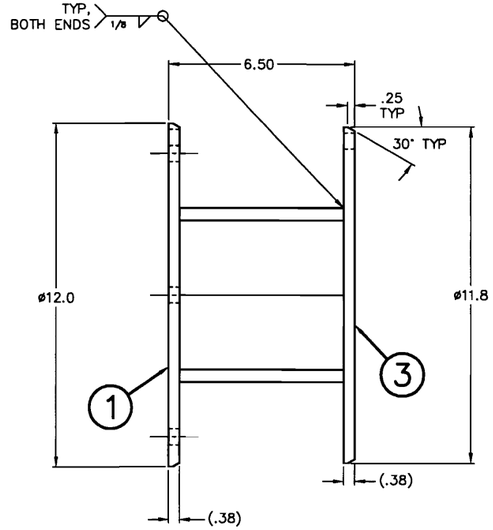

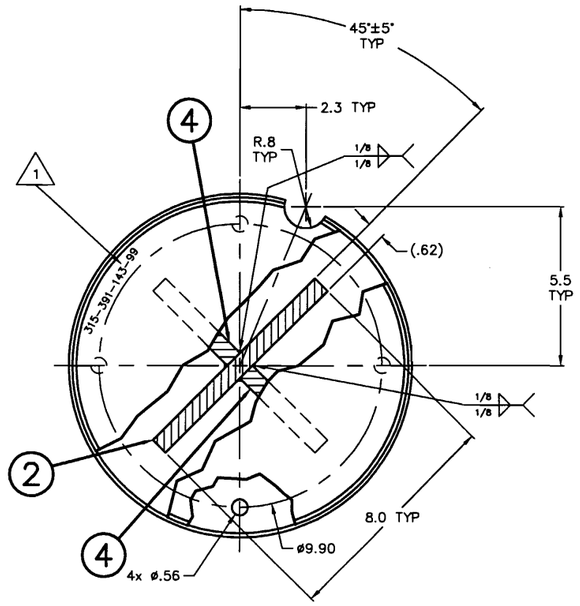

△3 (99) IRRADIATED HARDWARE LID SPACER
WEIGHT: 40#

△3 IRRADIATED HARDWARE LID SPACER TO BE INSTALLED IN NAC-LWT FOR THE TRANSPORT OF IRRADIATED HARDWARE IN NAC-LWT CASK ASSEMBLY PER DWG. NO. 315-40-01.

△2 TIGHTEN TO 200±20 IN-LBS

△1 STEEL STAMP OR ENGRAVE, APPROX. AS SHOWN AND FILL WITH WEATHER RESISTANT PAINT. THE TEXT IS .3 TALL AND THE DELTA IS .5 TALL.

NOTES:

△2

97	98	99	ITEM	NAME	MATERIAL	SPEC	DRAWING No.	DESCRIPTION
			6	LOCK WASHER	ST. STL.	COML		DIA 1/2
		4	5	HEX HEAD BOLT	304 ST. STL.	ASTM A193-B8		1/2-13 UNC-2B 1 1/4 LG
		2	4	SPACER	304 ST. STL.	ASTM A240		5/8 PLATE
		1	3	TOP PLATE	304 ST. STL.	ASTM A240		3/8 PLATE
		1	2	SPACER	304 ST. STL.	ASTM A240		5/8 PLATE
		1	1	BASE PLATE	304 ST. STL.	ASTM A240		3/8 PLATE
ASSY	ASSY	ASSY						
QUANTITY								

NAC INTERNATIONAL

UNLESS OTHERWISE STATED	GROUP	NAME	DATE
DIMENSIONING AND TOLERANCING SHALL BE PER ASME Y14.5M-94	PREPARER		10-20-06
ALL THREAD DEPTH CALLOUTS ARE TO BE CONSIDERED AS A MIN. DEPTH OF PERFECT THREADS.	CHECKER		10-23-06
	PROJECT MANAGER		10-23-06
ALL DIMENSIONS ARE IN INCHES	ENGINEERING		10-23-06
MACHINED SURFACES TO BE 125 OR BETTER	LICENSING		10-23-06
NEXT ASSEMBLY:	QUALITY		10-23-06
DRAWING TYPE: LICENSE			

IRRADIATED HARDWARE, LID SPACER, LWT CASK

PROJECT 315-40 | DRAWING 145 | REV 0 | SH 1 OF 1 | 8:51AM 10-20-2006

NAC DCRM 01

R-20,7554

REV	CHANGE
0	INITIAL ISSUE

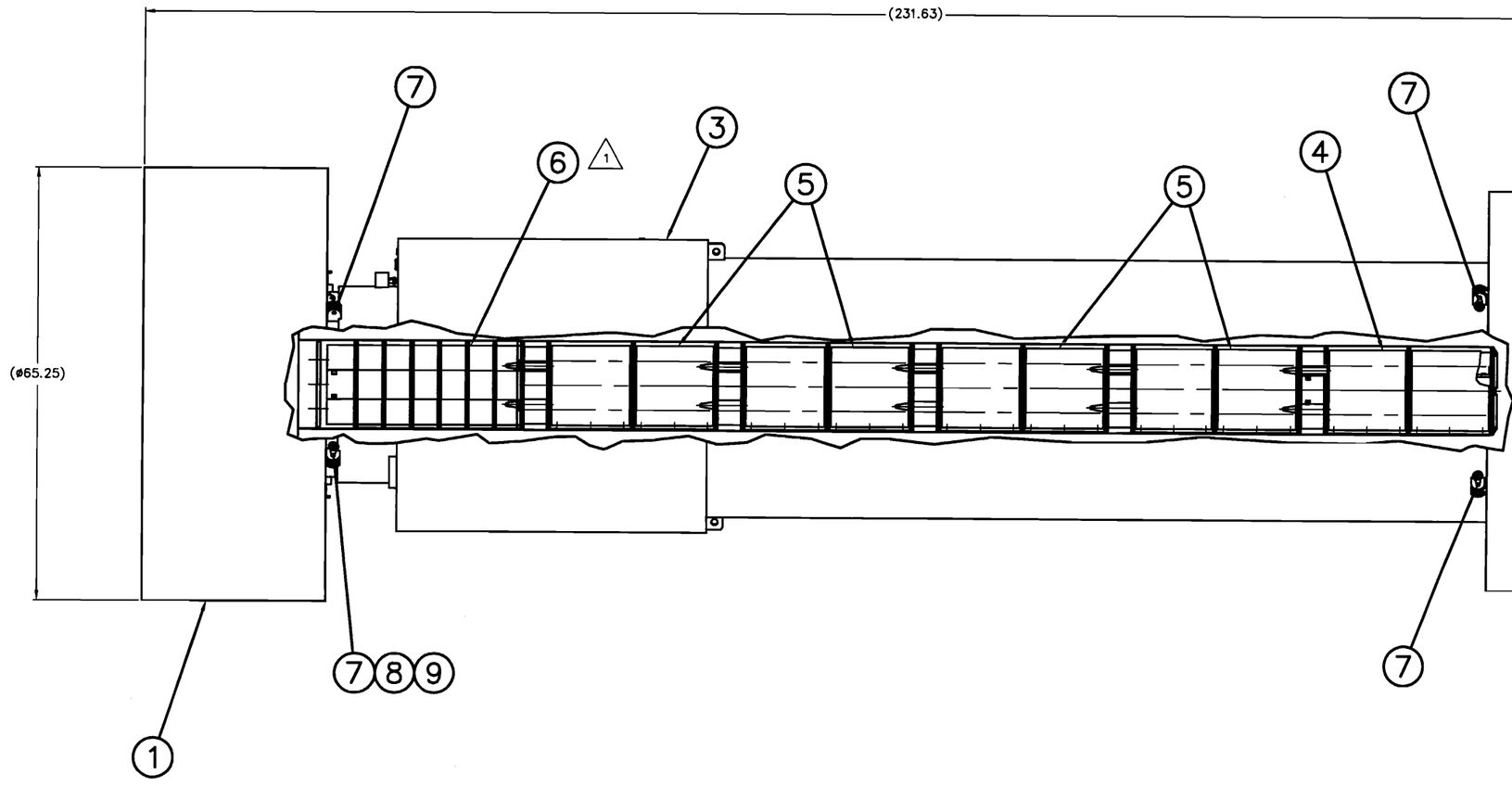

		1	9	TAMPER INDICATING DEVICE (TID)		COML		---
		A/R	8	WIRE	ST. STL.	COML		---
		8	7	BALL-LOK PIN			315-40-01-8	---
		1	6	TOP BASKET			315-40-140-99	---
		4	5	INTER. BASKET			315-40-109-99	---
		1	4	BASE BASKET			315-40-110-99	---
		1	3	CASK ASSEMBLY			315-40-02-99	---
		1	2	IMPACT LIMITER			315-40-06-99	---
		1	1	IMPACT LIMITER			315-40-05-99	---
97 ASSY	98 ASSY	99 ASSY	ITEM	NAME	MATERIAL	SPEC	DRAWING No.	DESCRIPTION
QUANTITY								

1 DAMAGED FUEL CANS (DFC'S) CONTAINING ANSTO MKII (PLATE), MKIII (SPIRAL) OR MKIV (DIDO) DISASSAMBLED OR INTACT FUEL ELEMENTS MAY BE LOADED INTO THE 7 FUEL CELLS OF THE TOP BASKET MODULE.

NOTES:

NAC DCRM 01

UNLESS OTHERWISE STATED	GROUP	NAME	DATE
DIMENSIONING AND TOLERANCING SHALL BE PER ASME Y14.5M-94	PREPARER	[signature]	8/5/08
ALL THREAD DEPTH CALLOUTS ARE TO BE CONSIDERED AS A MIN. DEPTH OF PERFECT THREADS.	CHECKER	[signature]	8/5/08
	PROJECT MANAGER	[signature]	8/5/08
ALL DIMENSIONS ARE IN INCHES	ENGINEERING	[signature]	8/5/08
MACHINED SURFACES TO BE ▽ OR BETTER	LICENSING	[signature]	8/5/08
NEXT ASSEMBLY: N/A	QUALITY	[signature]	8.5.08
DRAWING TYPE: LICENSE			

NAC INTERNATIONAL

LEGAL WEIGHT TRUCK TRANSPORT CASK ASSY ANSTO-DIDO COMBINATION BASKET

PROJECT	DRAWING	REV
315-40	148	0
1/8	SH 1 OF 1	11:23AM 8-5-2008

R-218406

REV	CHANGE
0	INITIAL ISSUE
1	INC DCR 0A
2	INC DCR 1A
3	INC DCR 2A

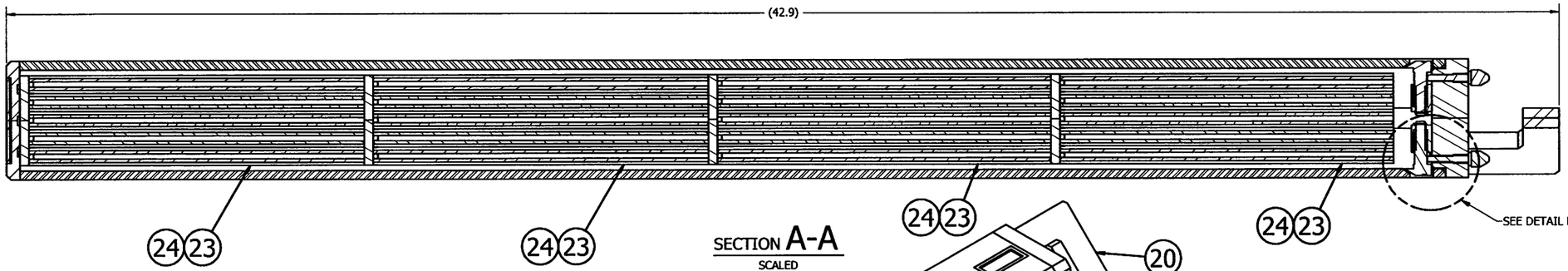

SECTION A-A
SCALED

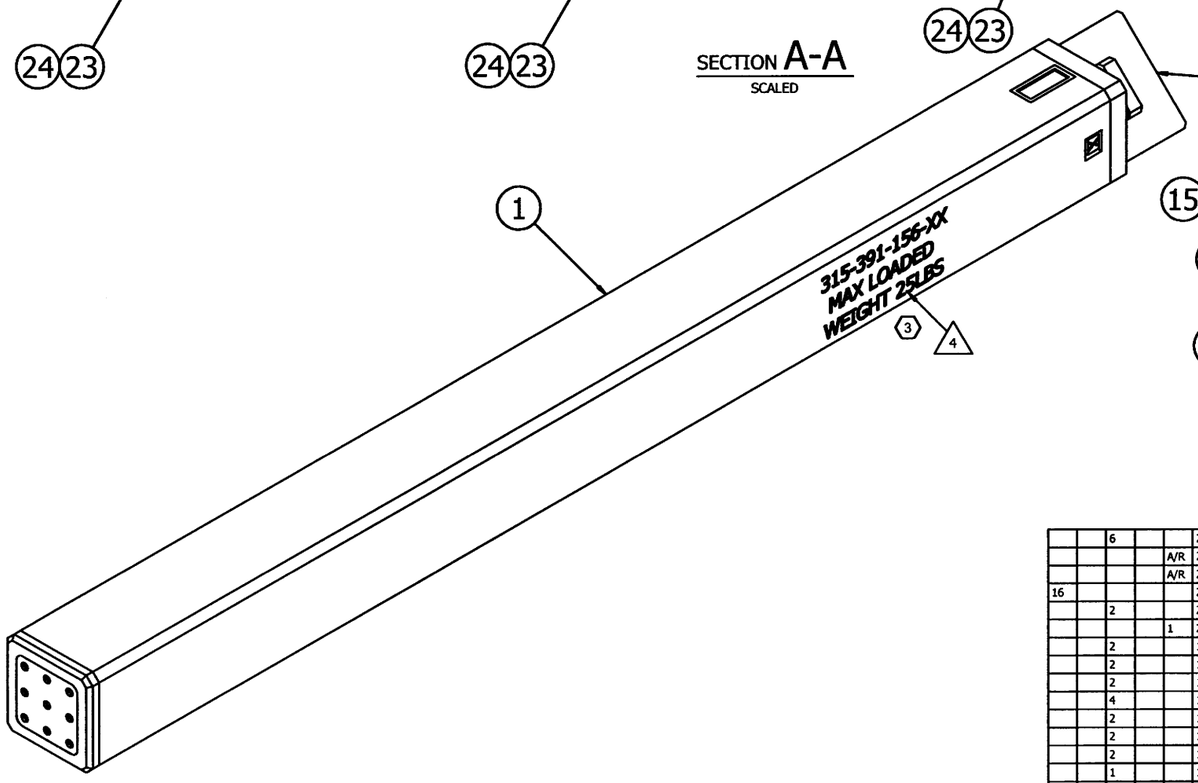

99 CANISTER ASSEMBLY

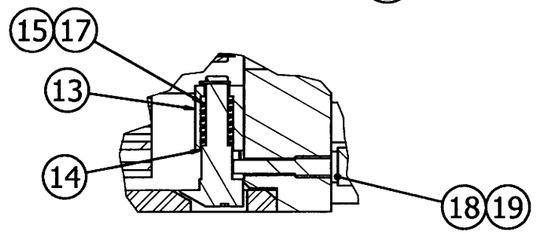

DETAIL B-B
SCALED

		6			25	LOCK WASHER	ST. STL.	COML		#8 LOCK WASHER
				A/R	24	4 X 4 INSERT ASSEMBLY			315-40-156-95	
				A/R	23	5 X 5 INSERT ASSEMBLY			315-40-156-96	
16					22	INSERT TUBE	6061-T6 AL	ASTM B210		5/8 O.D. X .049 WALL
		2			21	LID HANDLE S.H.C.S.	ST. STL.	COML		8-32 UNC -3A X 1 1/2
				1	20	LID ASSEMBLY			315-40-156-97	
		2			19	LOCK WASHER	ST. STL.	COML		1/4 LOCK WASHER
		2			18	LID LATCH BOLT	ST. STL.	COML		HEX BAR
		2			17	COMPRESSION SPRING	ST. STL.	COML		SPEC #C0360-038-0620-S
		4			16	SOCKET HEAD CAP SCREW	ST. STL.	COML		SHCS #8-32 UNC-3A X 1/2
		2			15	RETAINING RING	ST. STL.	COML		McMASTER-CARR 91590A113
		2			14	LID LATCH	6061-T6 AL	ASTM B209/B211		BAR/PLATE
		2			13	LID LATCH HOUSING	6061-T6 AL	ASTM B209/B211		BAR/PLATE
		1			12	LID HANDLE	6061-T6 AL	ASTM B209/B211		BAR/PLATE
		1			11	LID	6061-T6 AL	ASTM B209/B211		1 BAR/PLATE
	25				10	INSERT TUBE	6061-T6 AL	ASTM B210		1/2 O.D. X .049 WALL
1	1				9	INSERT BASE PLATE	6061-T6 AL	ASTM B209		1/4 PLATE
			2		8	SIDE WALL SCREEN	ALUMINUM	COML		McMASTER-CARR #9227T412 MESH
			2		7	SIDE WALL - B	6061-T6 AL	ASTM B209		1/4 PLATE
			2		6	SIDE WALL - A	6061-T6 AL	ASTM B209		1/4 PLATE
			1		5	RETAINER	6061-T6 AL	ASTM B209		11 GA PLATE
			2		4	BACKING PLATE	6061-T6 AL	ASTM B209		14 GA PLATE
			1		3	BOTTOM SCREEN	ALUMINUM	COML		McMASTER-CARR #9227T412 MESH
			1		2	BOTTOM PLATE	6061-T6 AL	ASTM B209		3/8 PLATE
				1	1	CANISTER WELDMENT			315-40-156-98	
95	96	97	98	99	ITEM	NAME	MATERIAL	SPEC	DRAWING No.	DESCRIPTION
ASSY	ASSY	ASSY	ASSY	ASSY						
		QUANTITY								

5 PT AND VT WELD FOLLOWING LOAD TEST. PT ACCEPTANCE PER ASME SECTION III ARTICLE NG-5350.

4 ENGRAVE AS SHOWN AND FILL WITH BLACK WEATHER RESISTANT PAINT. "XX" TO BE SERIAL NUMBER UNIQUE TO EACH CANISTER ASSEMBLY.

3 ENGRAVE AS SHOWN AND FILL WITH BLACK WEATHER RESISTANT PAINT.

2. TACK WELDS ARE FOR ASSEMBLY ONLY. WELD INSPECTIONS ARE NOT REQUIRED FOR TACK WELDS.

1 TACK WELD TOGETHER ON AT LEAST TWO QUADRANTS OF EACH TUBE. INCLUDE AT LEAST 1" OF WELD AT THE TOP, MIDPOINT AND BOTTOM ALONG THE LENGTH OF THE TUBE.

NOTES:

NAC INTERNATIONAL

UNLESS OTHERWISE STATED
DIMENSIONING AND TOLERANCING SHALL BE PER ASME Y14.5M-94.
ALL THREAD DEPTH CALLOUTS ARE TO BE CONSIDERED AS A MIN. DEPTH OF PERFECT TREADS
ALL DIMENSIONS ARE IN INCHES
MACHINED SURFACES SHALL BE 125 OR BETTER
NEXT ASSEMBLY: N/A
DRAWING TYPE: LICENSE

GROUP	NAME	DATE
PREPARER		5/21/12
CHECKER		5-21-12
PROJECT MANAGER		5/21/12
ENGINEERING		5-21-12
LICENSING		5/21/12
QUALITY		5/22/12

CANISTER ASSEMBLY SLOWPOKE FUEL

PROJECT 315-40 | DRAWING 156 | REV 3
SCALE N. T. S. | WEIGHT N/A | SH 1 OF 4 | 5/21/2012

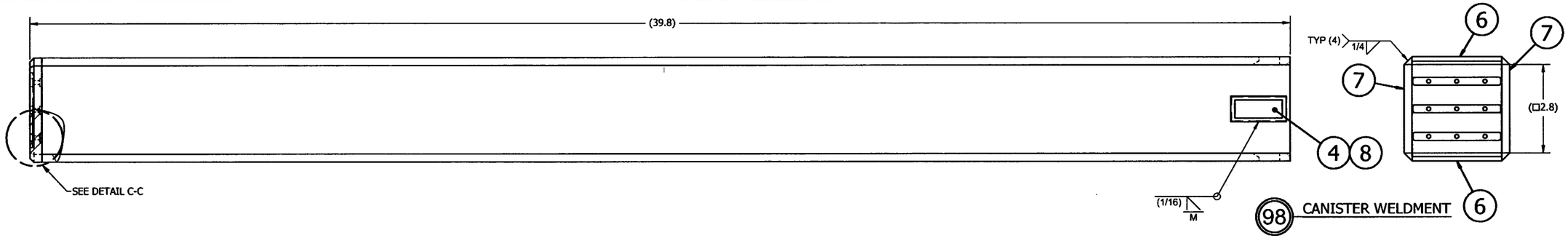

98 CANISTER WELDMENT

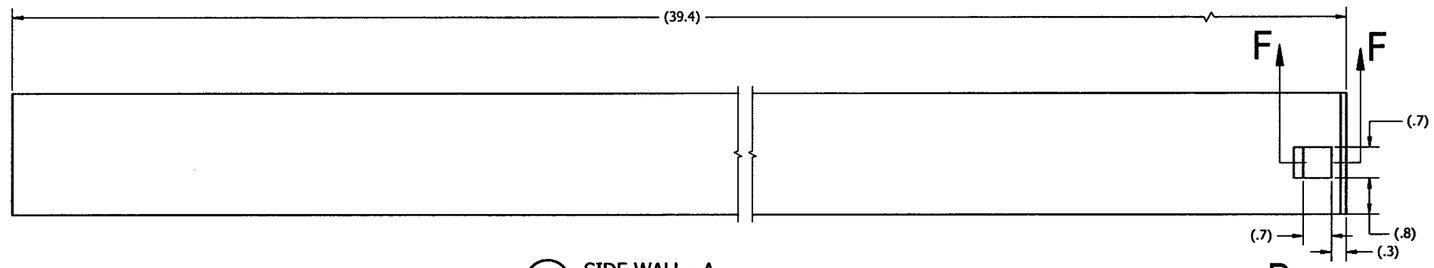

6 SIDE WALL - A

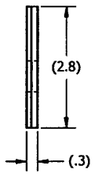

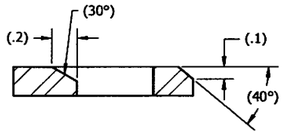

SECTION F-F
SCALED

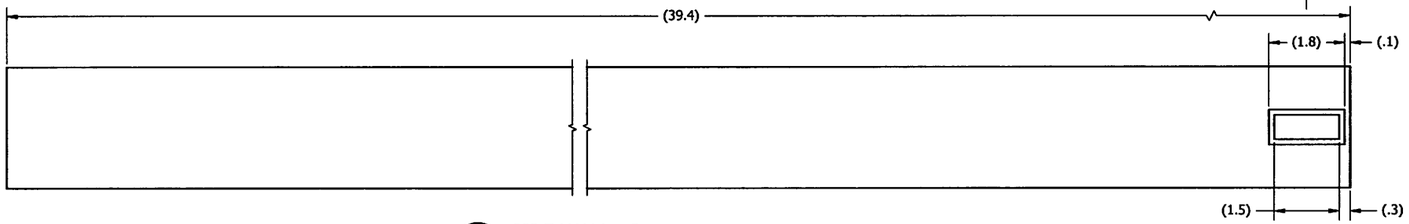

7 SIDE WALL - B

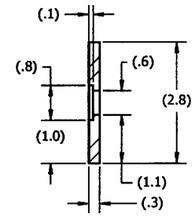

SECTION D-D
SCALED

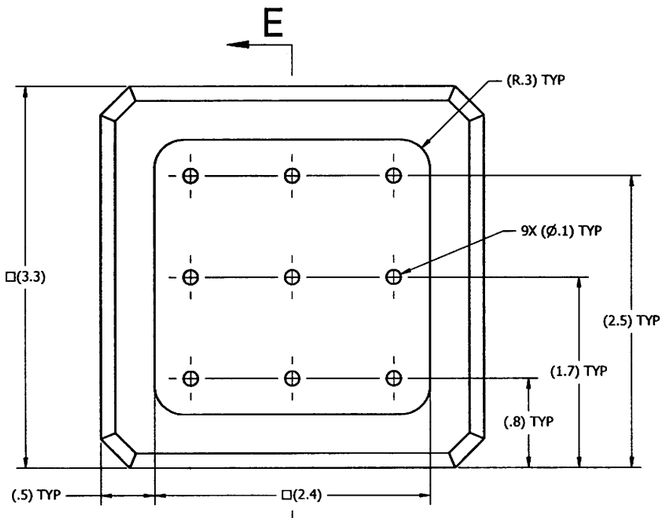

2 BOTTOM PLATE

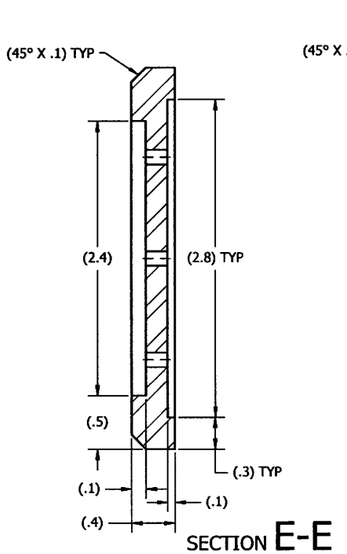

SECTION E-E
SCALED

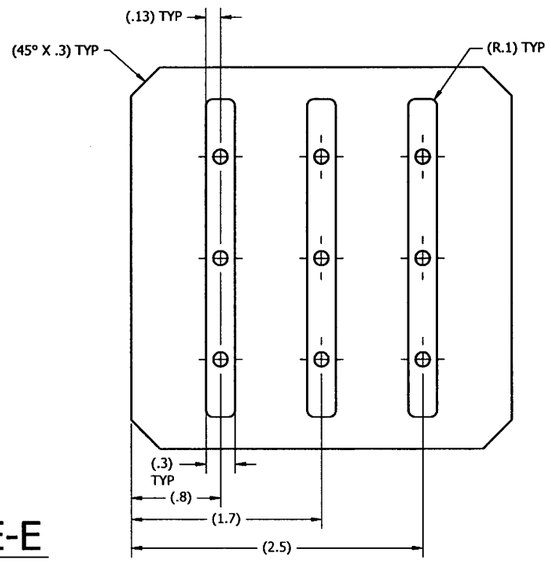

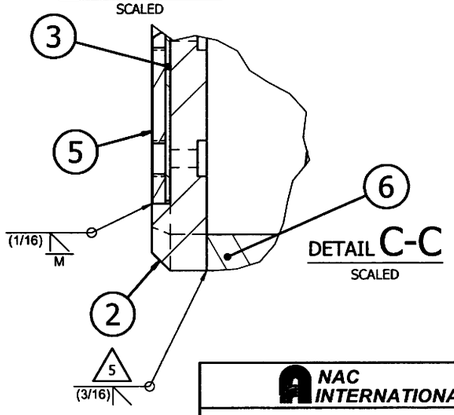

DETAIL C-C
SCALED

NAC INTERNATIONAL

CANISTER ASSEMBLY
SLOWPOKE FUEL

PROJECT	315-40	DRAWING	156	REV 3
SCALE N. T. S.	WEIGHT N/A	SH 2 OF 4	5/21/2012	

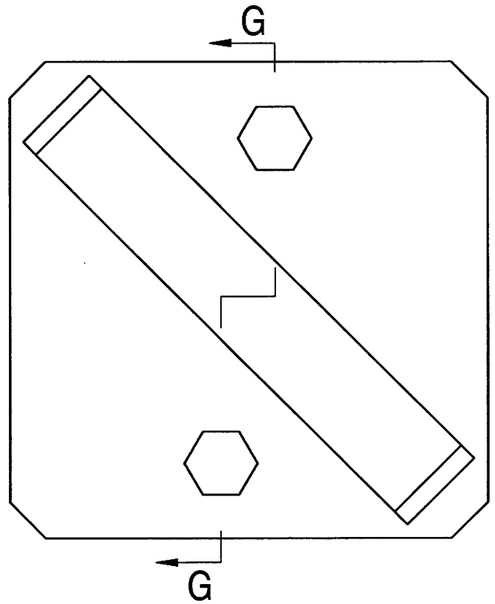

97 LID ASSEMBLY

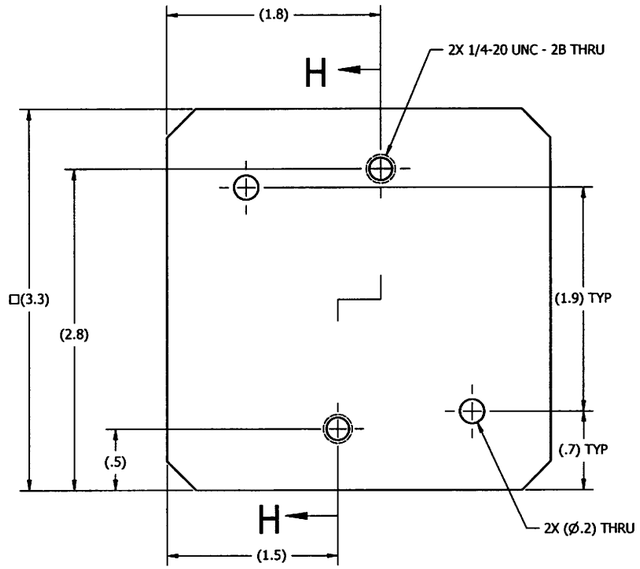

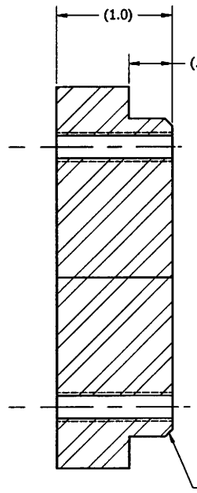

SECTION H-H
SCALED

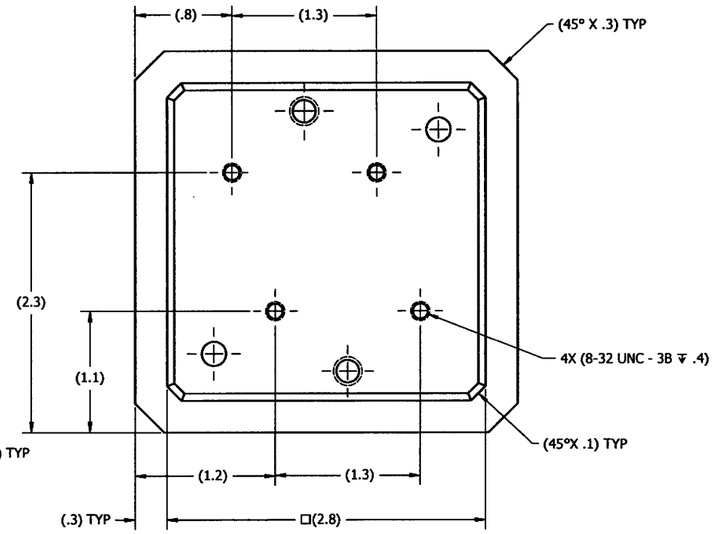

11 LID

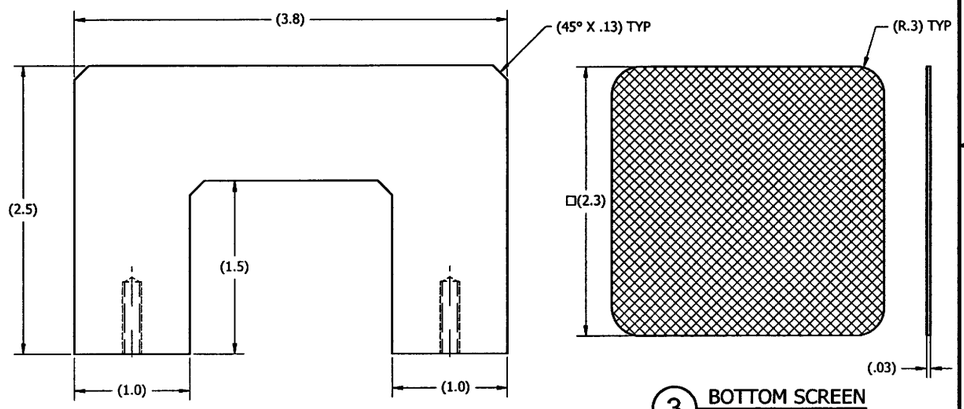

3 BOTTOM SCREEN

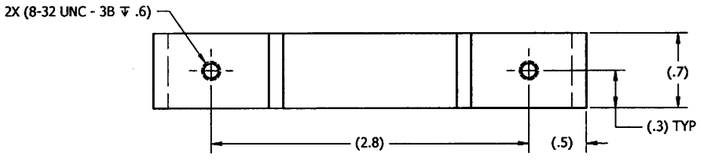

12 LID HANDLE

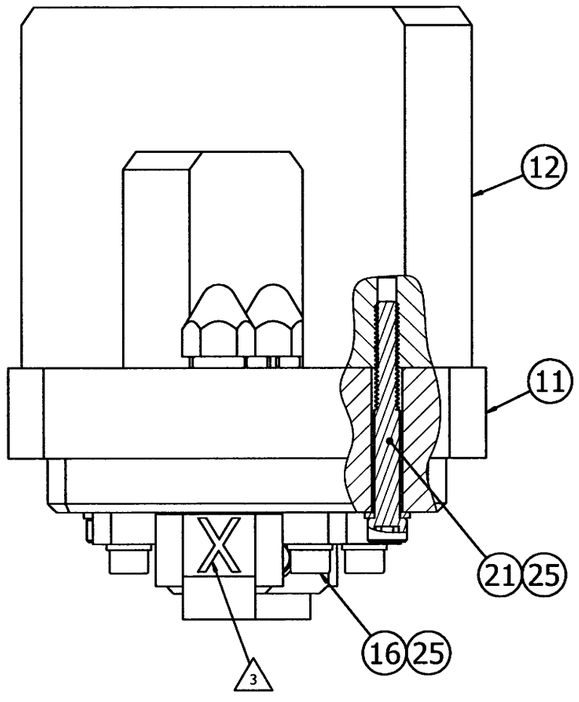

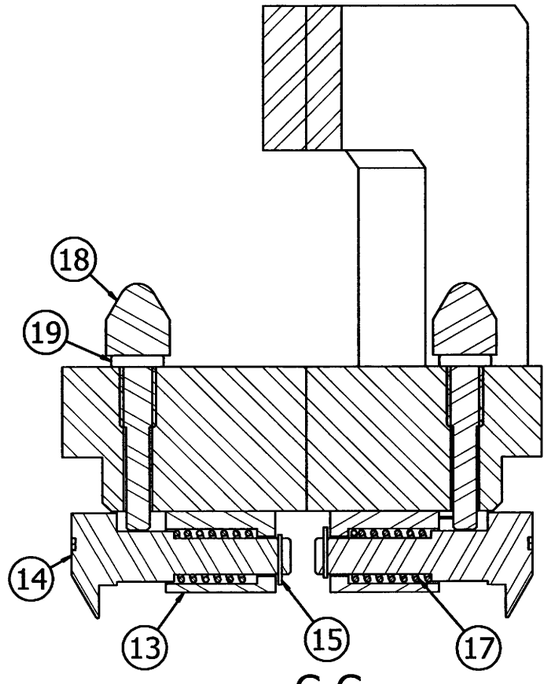

SECTION G-G
SCALED
ROTATED 90° CW

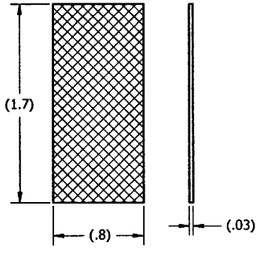

8 SIDE WALL SCREEN

NAC INTERNATIONAL

CANISTER ASSEMBLY
SLOWPOKE FUEL

PROJECT	315-40	DRAWING	156	REV 3
SCALE N. T. S.	WEIGHT N/A	SH 3 OF 4	5/21/2012	

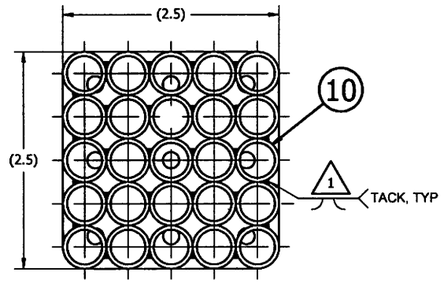

96 5 X 5 CANISTER INSERT ASSEMBLY

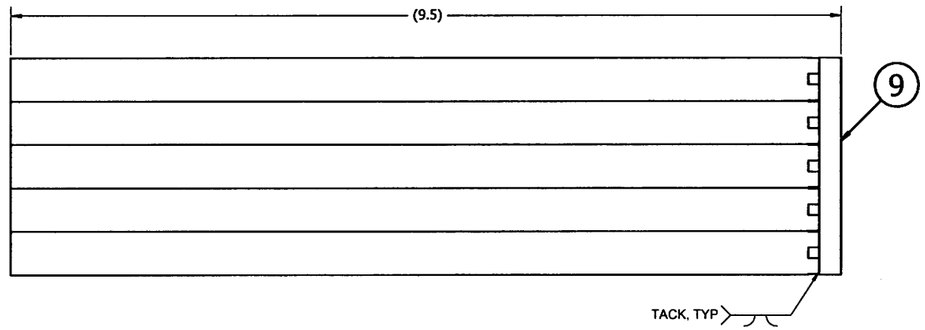

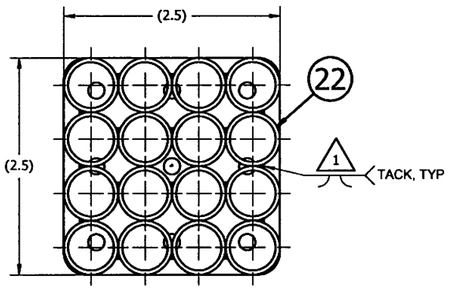

95 4 X 4 CANISTER INSERT

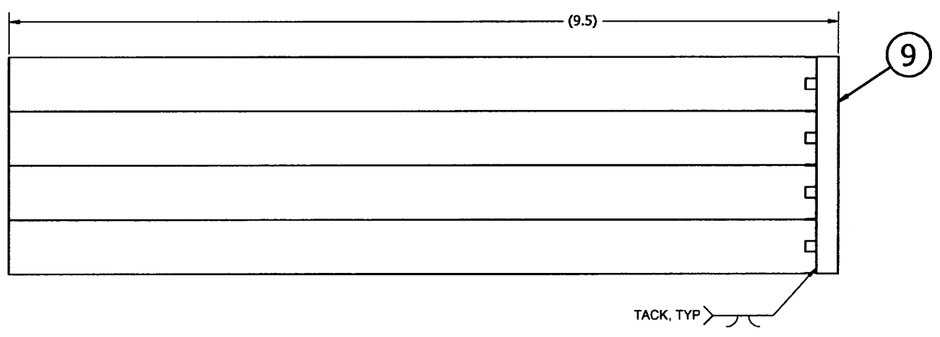

NAC INTERNATIONAL

CANISTER ASSEMBLY
SLOWPOKE FUEL

PROJECT	DRAWING	REV
315-40	156	3
SCALE N. T. S. / WEIGHT N/A	SH 4 OF 4	5/21/2012

R1-217042

REV	CHANGE
0	INITIAL ISSUE

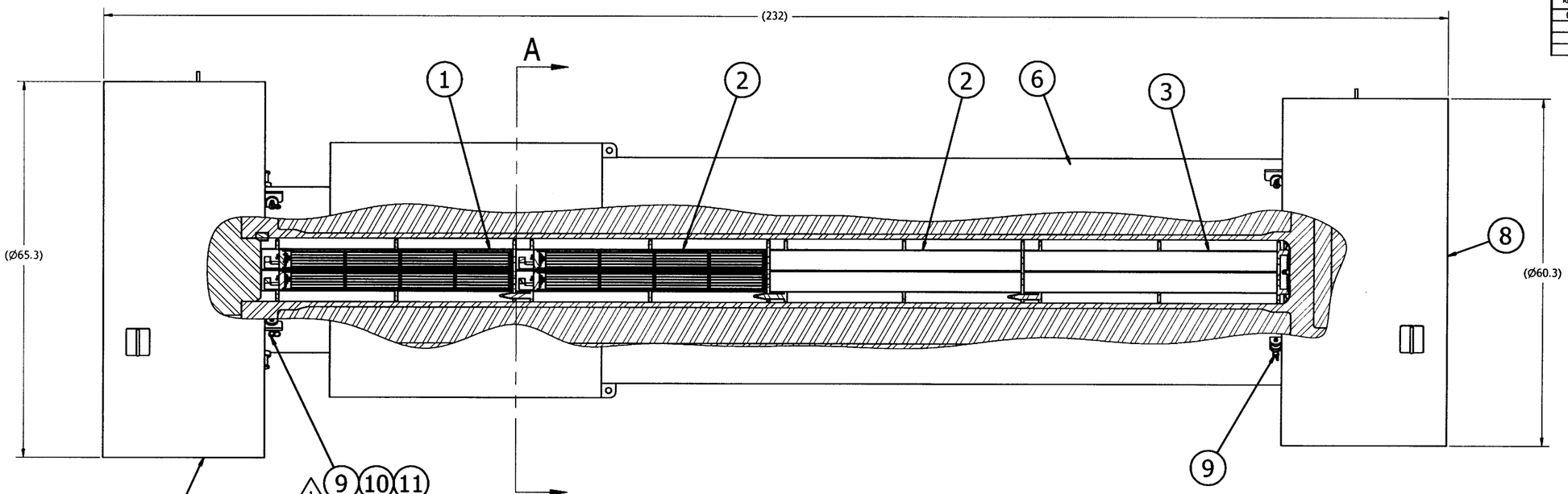

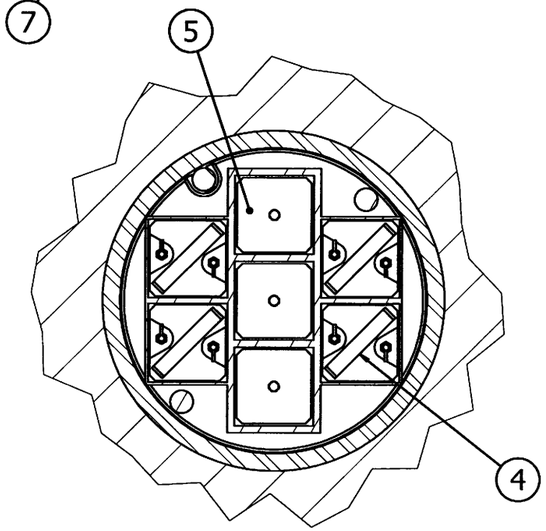

DETAIL B-B
SCALED

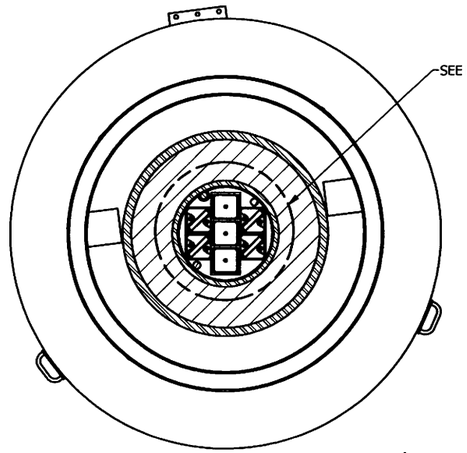

SECTION A-A
SCALED

		1	11	TAMPER INDICATING DEVICE (TID)			315-40-01-11	
		A/R	10	WIRE			315-40-01-10	
		8	9	BALL-LOK PIN			315-40-01-8	
		1	8	IMPACT LIMITER			315-40-06-99	
		1	7	IMPACT LIMITER			315-40-05-99	
		1	6	CASK BODY ASSEMBLY			315-40-02-99	
		6	5	CELL BLOCK SPACER			315-40-085-97	
		8	4	CANISTER ASSEMBLY			315-40-156-99	
		1	3	BASE BASKET			315-40-049-99	
		2	2	INTER. BASKET			315-40-050-99	
		1	1	TOP BASKET			315-40-051-99	
97	98	99	ITEM	NAME	MATERIAL	SPEC	DRAWING No.	DESCRIPTION
ASSY	ASSY	ASSY	QUANTITY					

1 AT LEAST 1 OUT OF 8 ITEM 9 (BALL-LOK PIN) TO BE MODIFIED PER DWG. 315-40-01.

NOTE:

NAC INTERNATIONAL

UNLESS OTHERWISE STATED	GROUP	NAME	DATE
DIMENSIONING AND TOLERANCING SHALL BE PER ASME Y14.5M-94	PREPARER	[signature]	12/23/11
ALL THREAD DEPTH CALLOUTS ARE TO BE CONSIDERED AS A MIN. DEPTH OF PERFECT THREADS	CHECKER	[signature]	12/23/11
	PROJECT MANAGER	[signature]	12/23/11
ALL DIMENSIONS ARE IN INCHES	ENGINEERING	[signature]	12-23-11
MACHINED SURFACES SHALL BE √ OR BETTER	LICENSING	[signature]	12/23/11
NEXT ASSEMBLY N/A	QUALITY	[signature]	12/29/11
DRAWING TYPE LICENSE			

LEGAL WEIGHT TRUCK TRANSPORT CASK ASSY SLOWPOKE FUEL

PROJECT	DRAWING	REV
315-40	158	0
SCALE N. T. S. / WEIGHT N/A	SH 1 OF 1	12/12/2011

E 220302

REV	CHANGE
0	INITIAL ISSUE
1	INC DCR 0A

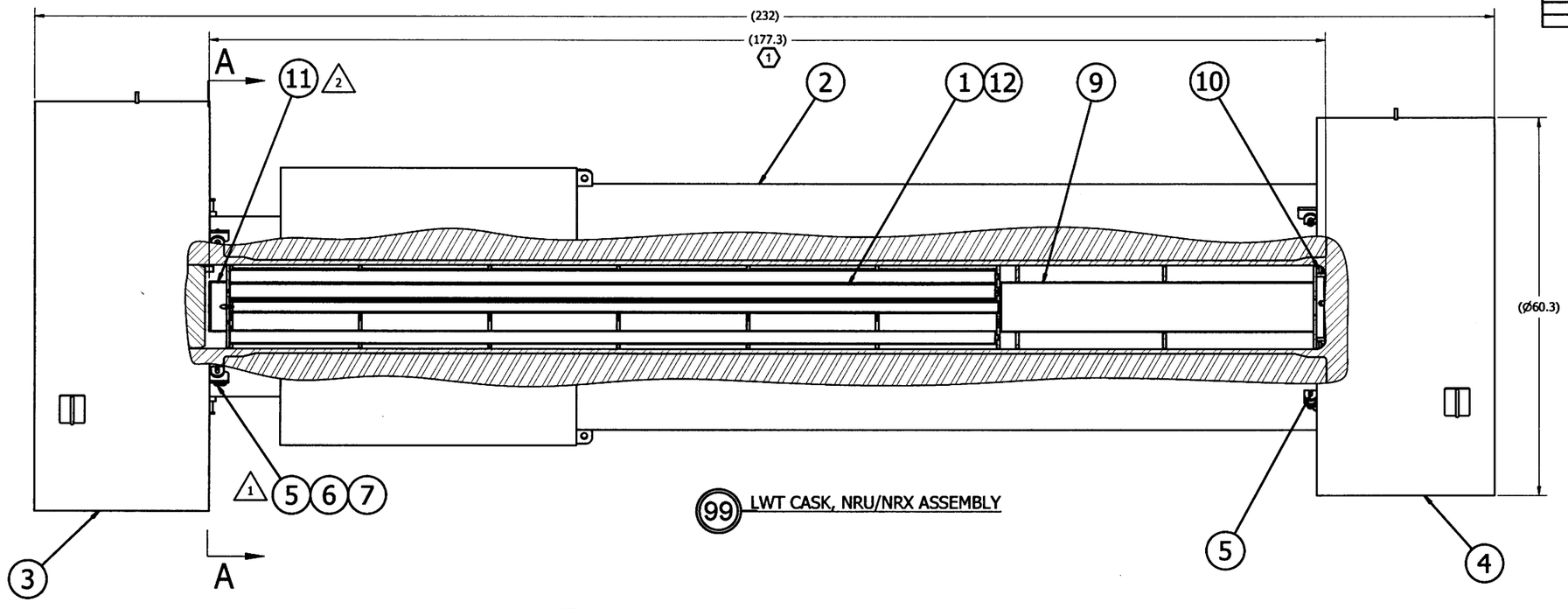

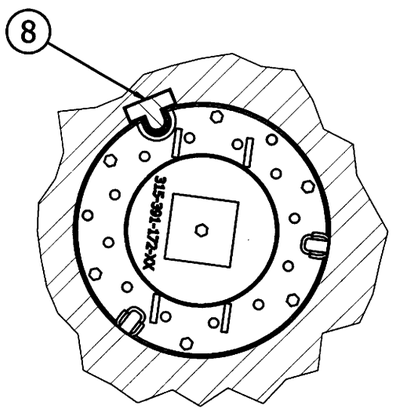

DETAIL B-B
SCALED

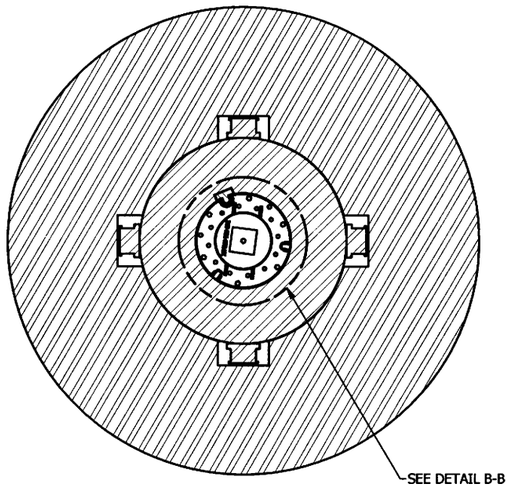

SECTION A-A
SCALED

		A/R	12	CADDY ASSEMBLY			315-40-175-99	
		1	11	LID ASSEMBLY			315-40-172-99	
		1	10	DRAIN ALIGNMENT RING			315-40-08-94	
		1	9	BASKET SPACER			315-40-174-99	
		1	8	DRAIN TUBE			315-40-08-95	
		1	7	TAMPER INDICATING DEVICE			315-40-01-11	
		A/R	6	WIRE			315-40-01-10	
1		8	5	BALL-LOK PIN			315-40-01-8	
		1	4	LOWER IMPACT LIMITER			315-40-06-99	
		1	3	UPPER IMPACT LIMITER			315-40-05-99	
		1	2	CASK BODY ASSEMBLY			315-40-02-99	
		1	1	BASKET WELDMENT			315-40-173-99	
97	98	99	ITEM	NAME	MATERIAL	SPEC	DRAWING No.	DESCRIPTION
ASSY	ASSY	ASSY						
QUANTITY								

2 TORQUE LID BOLTS TO (20±2 FT-LBS). APPLY NEVER-SEEZ TO BOLT THREADS AND BOTTOM OF BOLT HEAD.

1 AT LEAST 1 OUT OF 8 ITEM 5 (BALL-LOK PIN) TO BE MODIFIED PER DWG. 315-40-01.

NOTES:

NAC INTERNATIONAL

UNLESS OTHERWISE STATED	GROUP	NAME	DATE
DIMENSIONING AND TOLERANCING SHALL BE PER ASME Y14.5M-94.	PREPARER		10/10/12
ALL THREAD DEPTH CALLOUTS ARE TO BE CONSIDERED AS A MIN. DEPTH OF PERFECT THREADS	CHECKER		10/11/12
	PROJECT MANAGER		10/11/12
ALL DIMENSIONS ARE IN INCHES	ENGINEERING		10/11/12
MACHINED SURFACES SHALL BE 125 OR BETTER	LICENSING		10/16/12
NEXT ASSEMBLY: N/A	QUALITY		10.17.12
DRAWING TYPE: LICENSE			

LWT TRANSPORT CASK ASSY., AECL NRU/NRX COMPONENTS

PROJECT	DRAWING	REV
315-40	170	1
SCALE N. T. S.	WEIGHT N/A	SH 1 OF 1
		10/10/2012

R1-234934

REV	CHANGE
0	INITIAL ISSUE
1	INC DCR(L) 0A
2	INC DCR(L) 1A

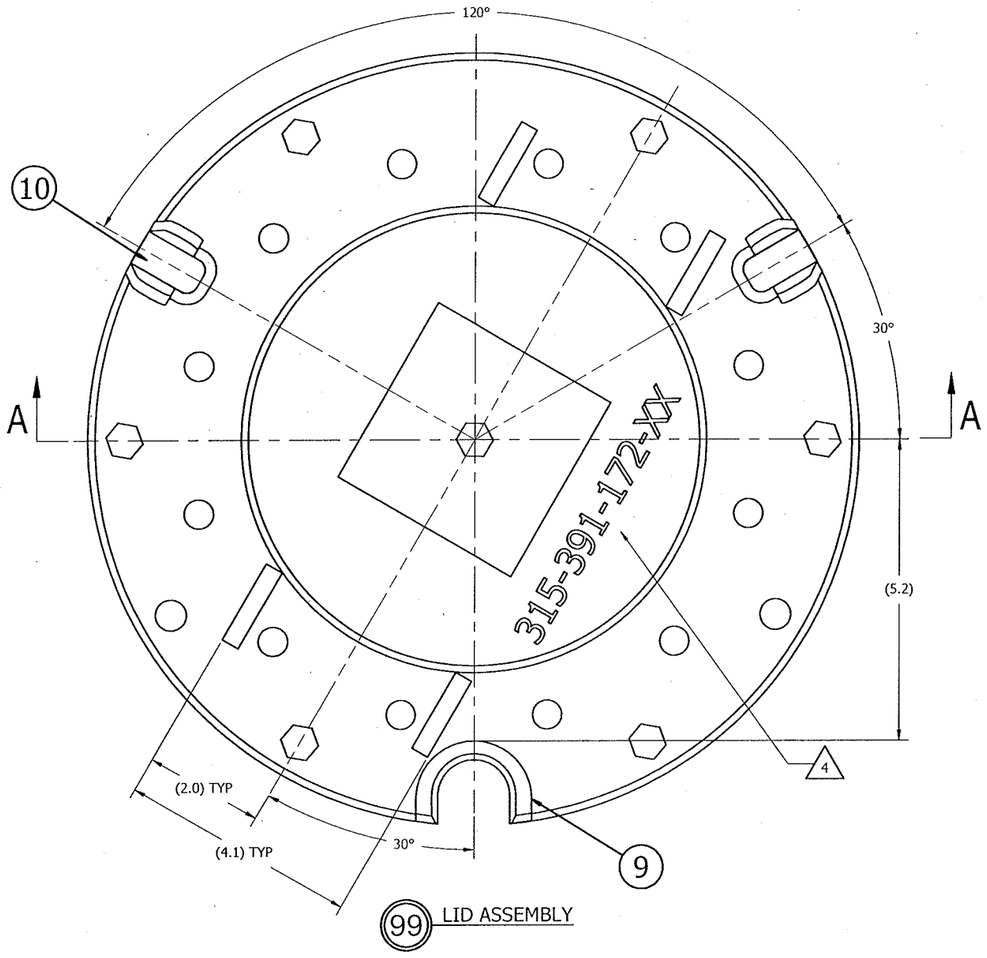

99 LID ASSEMBLY

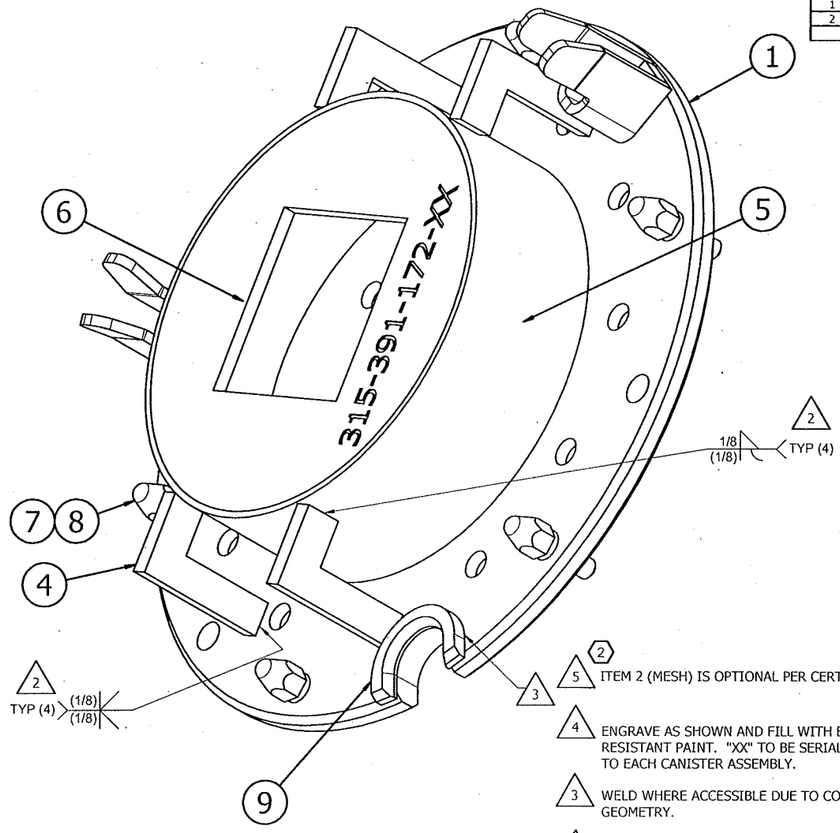

5 2 ITEM 2 (MESH) IS OPTIONAL PER CERTIFICATE REQUIREMENTS.

4 ENGRAVE AS SHOWN AND FILL WITH BLACK WEATHER RESISTANT PAINT. "XX" TO BE SERIAL NUMBER UNIQUE TO EACH CANISTER ASSEMBLY.

3 WELD WHERE ACCESSIBLE DUE TO COMPONENT GEOMETRY.

2 PT POST LOAD TEST PER ASME SECTION V, ARTICLES 1 AND 6 WITH ACCEPTANCE PER SECTION III, ARTICLE NG-5350 WHERE ACCESSIBLE DUE TO COMPONENT GEOMETRY.

1. VISUALLY INSPECT (VT) ALL WELDS PER ASME SECTION V, ARTICLES 1 & 9. ACCEPTANCE CRITERIA PER SECTION III, NG-5360.

NOTES:

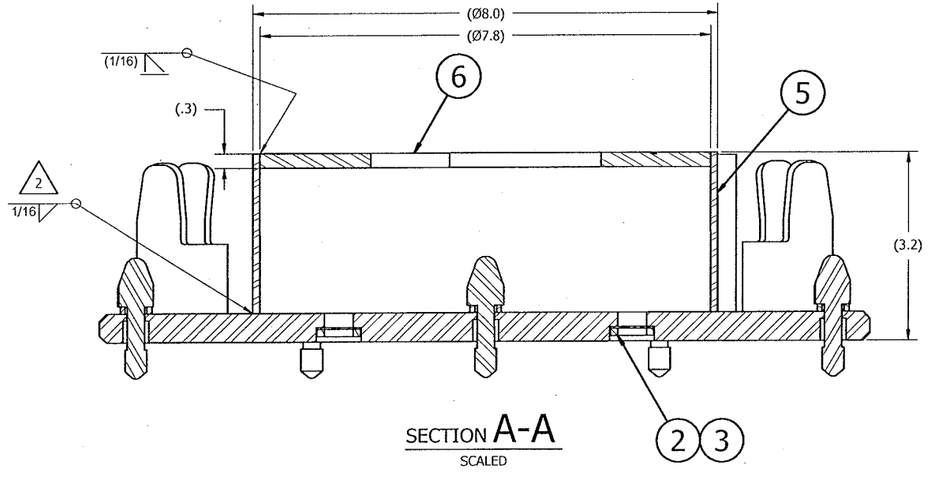

SECTION A-A
SCALED

	1		12	GRAPPLE GUIDE	304 ST. STL.	ASME SA240		PLATE
	1		11	GRAPPLE STOP	304 ST. STL.	ASME SA240		PLATE
		2	10	GRAPPLE GUIDE ASSEMBLY			315-40-172-98	
		1	9	SPACER	304 ST. STL.	ASME SA240		PLATE
		7	8	LOCK WASHER	ST. STL.	COML		3/8 LOCK WASHER
		7	7	LID BOLT	17-4 P.H. ST. STL.	ASME SA564		HEX BAR
		1	6	COLLAR COVER PLATE	304 ST. STL.	ASME SA240		PLATE
		1	5	LID COLLAR	304 ST. STL.	ASME SA249		TUBE
		4	4	LIFTING LUG	304 ST. STL.	ASME SA240		PLATE
		18	3	MESH RETAINER	304 ST. STL.	ASME SA249		TUBE
2 5		18	2	MESH	304 ST. STL.	COML		McMASTER-CARR #85385T853
		1	1	LID PLATE	304 ST. STL.	ASME SA240		PLATE
97	98	99	ITEM	NAME	MATERIAL	SPEC	DRAWING No.	DESCRIPTION
ASSY	ASSY	ASSY						
QUANTITY								

NAC INTERNATIONAL

UNLESS OTHERWISE STATED
DIMENSIONING AND TOLERANCING SHALL BE PER ASME Y14.5M-94.
ALL THREAD DEPTH CALLOUTS ARE TO BE CONSIDERED AS A MIN. DEPTH OF PERFECT TREADS
ALL DIMENSIONS ARE IN INCHES
MACHINED SURFACES SHALL BE 125 OR BETTER
NEXT ASSEMBLY: 315-40-170
DRAWING TYPE: LICENSE

GROUP	NAME	DATE
PREPARER		5-15-17
CHECKER		5/16/17
PROJECT MANAGER		5/16/17
ENGINEERING		5/16/17
LICENSING		5/16/17
QUALITY	Ray B. Barr	5.16.17

LID ASSEMBLY, NRU/NRX

PROJECT 315-40 | DRAWING 172 | REV 2
SCALE N. T. S. | WEIGHT N/A | SH 1 OF 2 | 5/15/2017

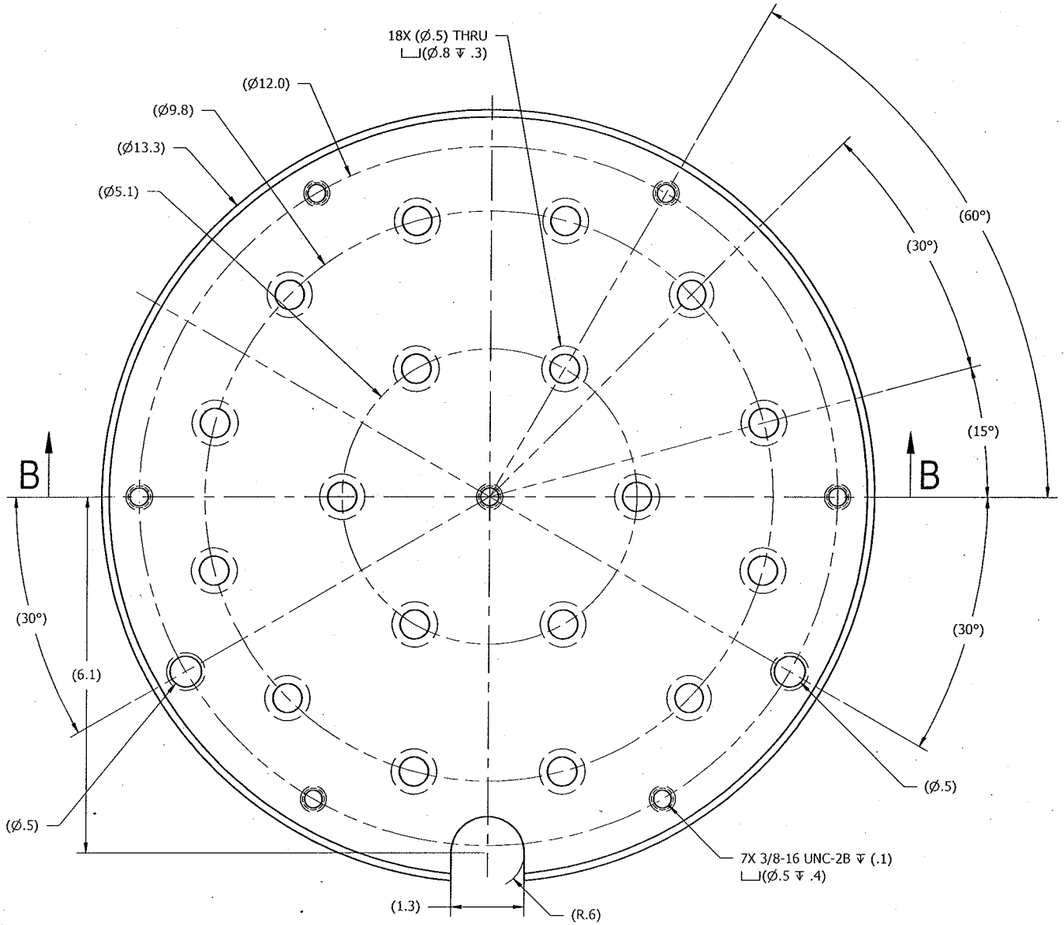

1 LID PLATE

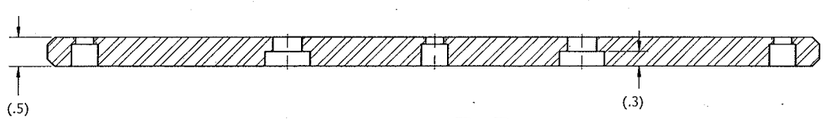

SECTION B-B
SCALED

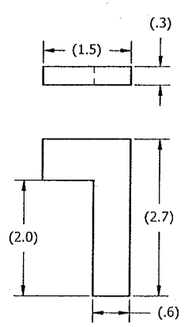

4 LIFTING LUG

NAC INTERNATIONAL

LID ASSEMBLY, NRU/NRX

PROJECT 315-40		DRAWING 172	REV 2
SCALE N. T. S.	WEIGHT N/A	SH 2 OF 2	5/15/2017

R-223631

REV	CHANGE
0	INITIAL ISSUE
1	INC DCR 0A & 0B
2	INC DCR 1A

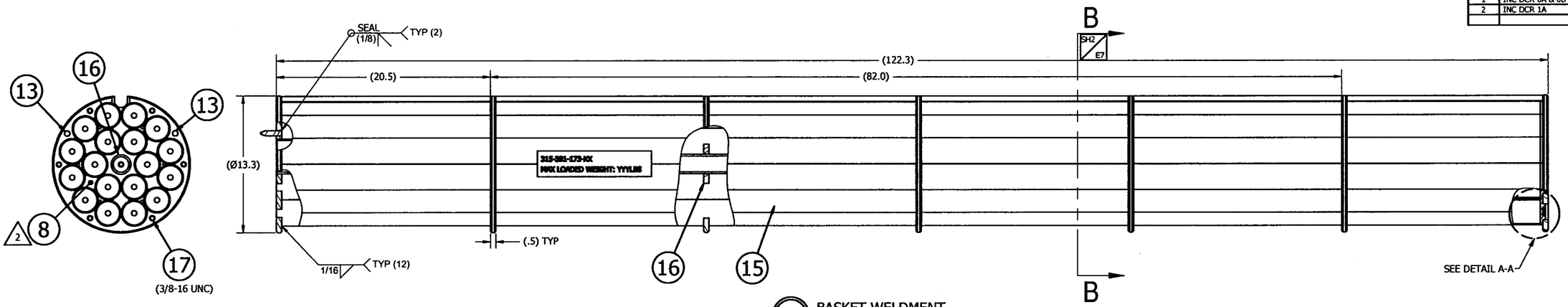

99 BASKET WELDMENT

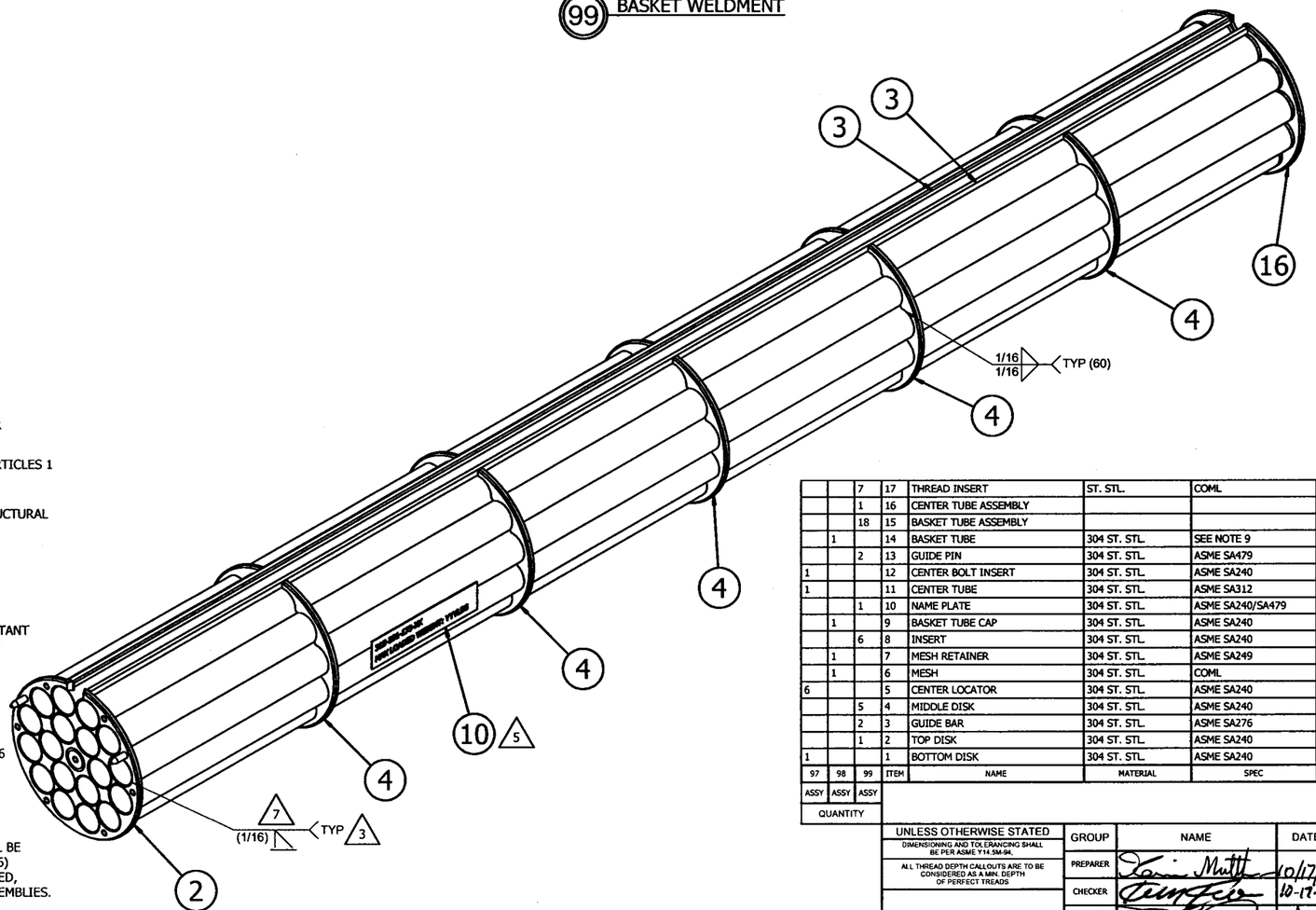

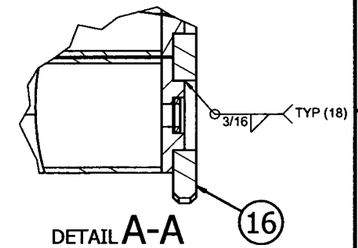

DETAIL A-A
SCALED

2 9. MATERIAL SHALL BE 304 ST. STL. WITH TENSILE STRENGTH, YIELD STRENGTH, AND ELONGATION EQUAL TO, OR GREATER THAN, THOSE OF ASME SA249 TYPE 304 ST. STL.

8. VISUALLY INSPECT (VT) ALL WELDS PER ASME SECTION V, ARTICLES 1 & 9. ACCEPTANCE CRITERIA PER SECTION III, NG-5360.

7 WELD BASKET TUBE ASSEMBLY (ITEM 15) TO ADJACENT STRUCTURAL COMPONENTS (ITEMS 2, 8, & 16).

6. ITEM 4 MIDDLE DISK MAY BE SEGMENTED TO FACILITATE INSTALLATION AT THE OPTION OF THE FABRICATOR. SEGMENTS MUST BE SEAL WELDED.

5 ENGRAVE AS SHOWN AND FILL WITH BLACK WEATHER RESISTANT PAINT. WHERE "XX" TO BE SERIAL NUMBER UNIQUE TO EACH CANISTER ASSEMBLY AND "YYY" IS MAX LOADED WEIGHT.

4. MINIMUM SEAL WELD ALL JOINTS BETWEEN STRUCTURAL DISKS (ITEMS 1, 2, AND 4) AND GUIDE BAR (ITEM 3) UNLESS OTHER WELD TYPES ARE DEFINED.

3 PT POST LOAD TEST PER ASME SECTION V, ARTICLES 1 AND 6 WITH ACCEPTANCE PER SECTION III, ARTICLE NG-5350.

2 MACHINE INSERT (ITEM 8) TO FIT IN AREA BETWEEN BASKET TUBE ASSEMBLIES (ITEM 15).

1 INNER RING OF 6 BASKET TUBE ASSEMBLIES (ITEM 15) SHALL BE WELDED AS INDICATED TO CENTER TUBE ASSEMBLY (ITEM 16) WHERE COMPONENT GEOMETRY ALLOWS. WHERE PROHIBITED, TUBES SHALL BE TACK WELDED TO THE ADJACENT TUBE ASSEMBLIES.

NOTES:

		7	17	THREAD INSERT	ST. STL.	COML		HELI-COIL 1185-6CN562
		1	16	CENTER TUBE ASSEMBLY			315-40-173-97	
		18	15	BASKET TUBE ASSEMBLY			315-40-173-98	
	1		14	BASKET TUBE	304 ST. STL.	SEE NOTE 9		TUBE
		2	13	GUIDE PIN	304 ST. STL.	ASME SA479		BAR
1			12	CENTER BOLT INSERT	304 ST. STL.	ASME SA240		PLATE
1			11	CENTER TUBE	304 ST. STL.	ASME SA312		1.5 SCH. 80 PIPE
		1	10	NAME PLATE	304 ST. STL.	ASME SA240/SA479		SHEET
	1		9	BASKET TUBE CAP	304 ST. STL.	ASME SA240		PLATE
		6	8	INSERT	304 ST. STL.	ASME SA240		PLATE
	1		7	MESH RETAINER	304 ST. STL.	ASME SA249		TUBE
	1		6	MESH	304 ST. STL.	COML		McMASTER-CARR #85385T853
6			5	CENTER LOCATOR	304 ST. STL.	ASME SA240		PLATE
		5	4	MIDDLE DISK	304 ST. STL.	ASME SA240		PLATE
		2	3	GUIDE BAR	304 ST. STL.	ASME SA276		SQ. BAR
		1	2	TOP DISK	304 ST. STL.	ASME SA240		PLATE
1			1	BOTTOM DISK	304 ST. STL.	ASME SA240		PLATE
97	98	99	ITEM	NAME	MATERIAL	SPEC	DRAWING No.	DESCRIPTION
ASSY	ASSY	ASSY						
QUANTITY								

NAC INTERNATIONAL

UNLESS OTHERWISE STATED	GROUP	NAME	DATE
DIMENSIONING AND TOLERANCING SHALL BE PER ASME Y14.5M-94.	PREPARER	Jamie Mutt	10/17/13
ALL THREAD DEPTH CALLOUTS ARE TO BE CONSIDERED AS A MIN. DEPTH OF PERFECT TREADS	CHECKER	Jeff Fee	10-17-13
	PROJECT MANAGER	[illegible]	10/17/13
	ENGINEERING	[illegible]	10/18/13
ALL DIMENSIONS ARE IN INCHES	LICENSING	Andy L Pal	10/17/13
MACHINED SURFACES SHALL BE 125 OR BETTER	QUALITY	B P Bennett	10/18/13
NEXT ASSEMBLY: 315-40-170			
DRAWING TYPE: LICENSE			

BASKET WELDMENT, NRU/NRX

PROJECT	315-40	DRAWING	173	REV 2
SCALE	N. T. S.	WEIGHT	N/A	SH 1 OF 2	10/17/2013

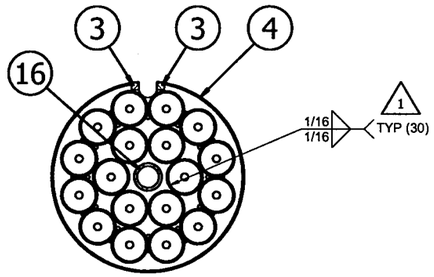

SECTION B-B
SCALED

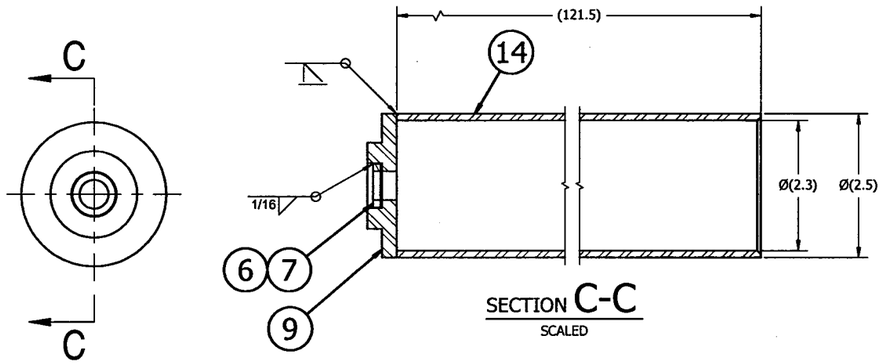

SECTION C-C
SCALED

98 BASKET TUBE ASSEMBLY

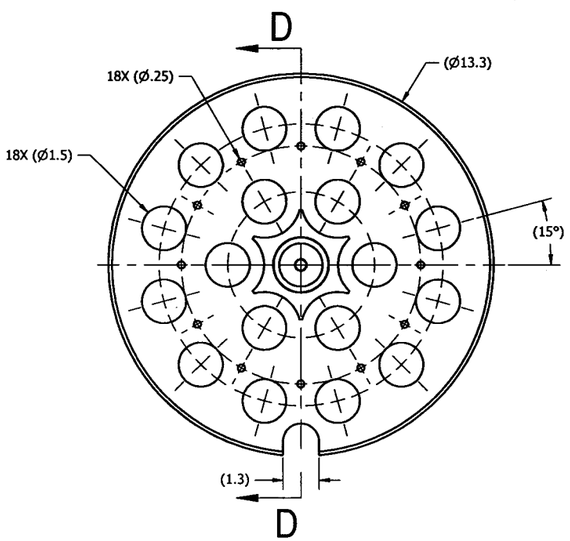

97 CENTER TUBE ASSEMBLY

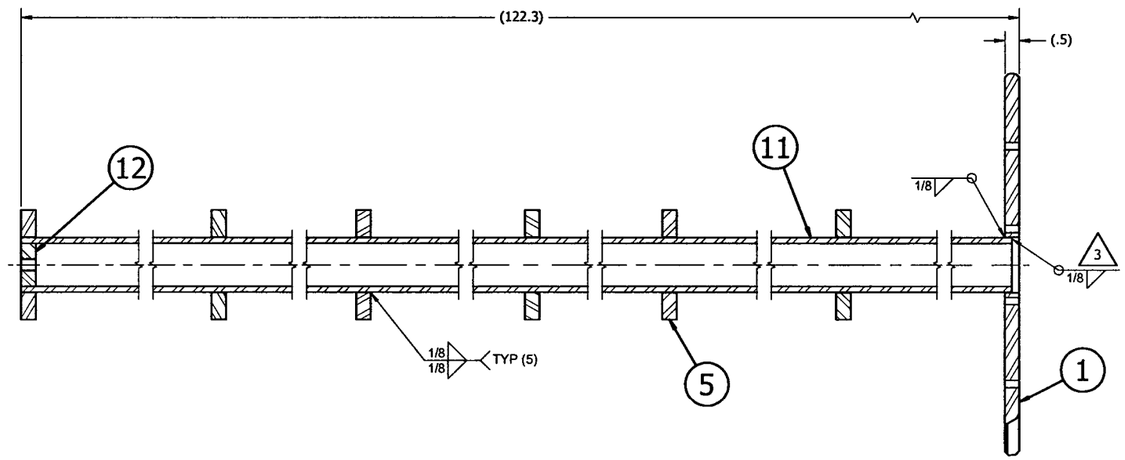

SECTION D-D
SCALED

NAC INTERNATIONAL

BASKET WELDMENT,
NRU/NRX

PROJECT	315-40	DRAWING	173	REV 2
SCALE N. T. S.	WEIGHT N/A	SH 2 OF 2	10/17/2013	

R-219903

REV	CHANGE
0	INITIAL ISSUE

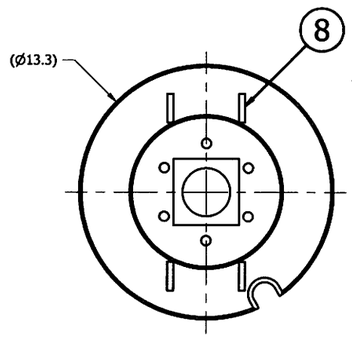

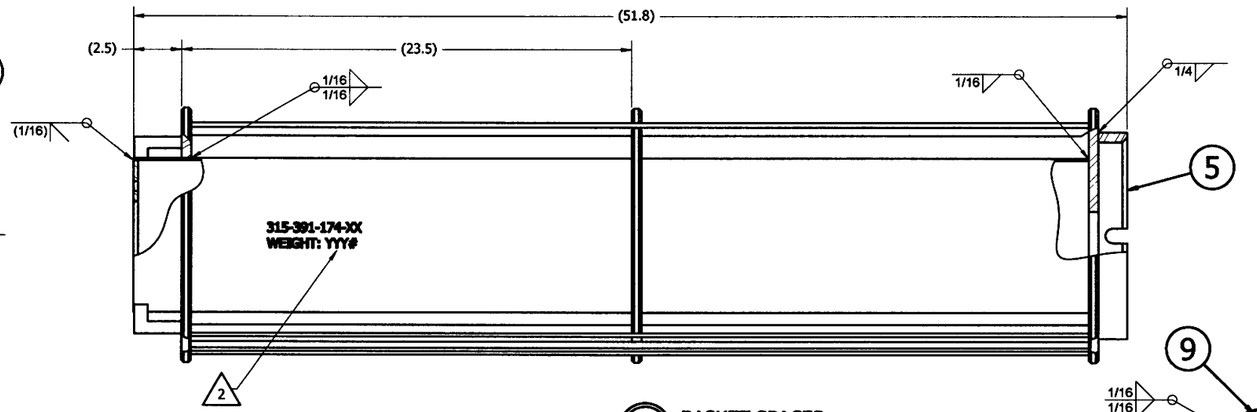

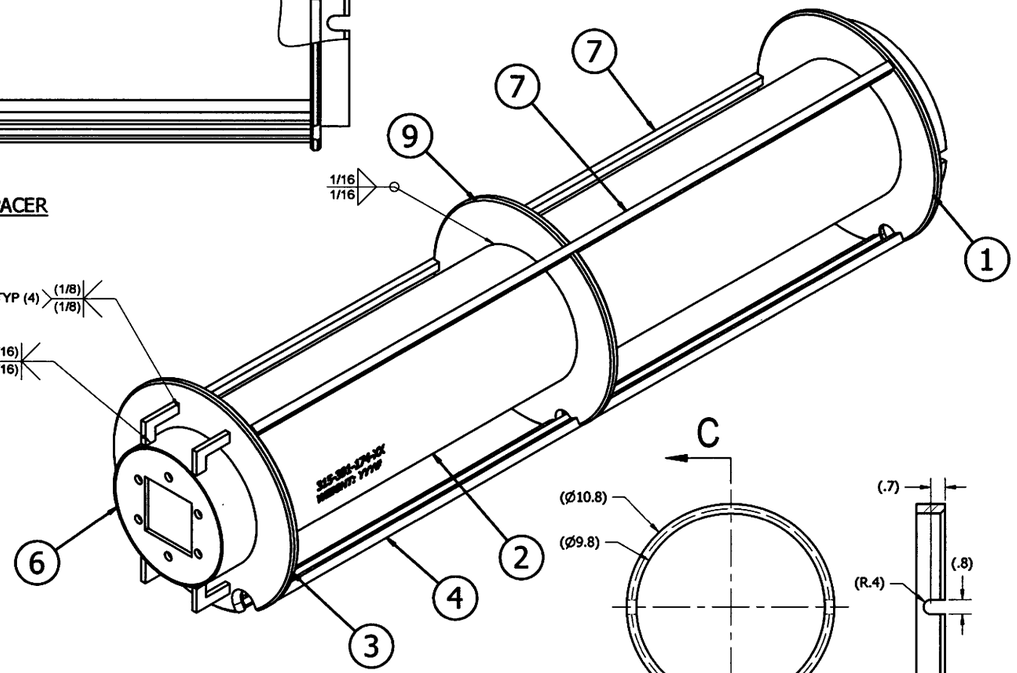

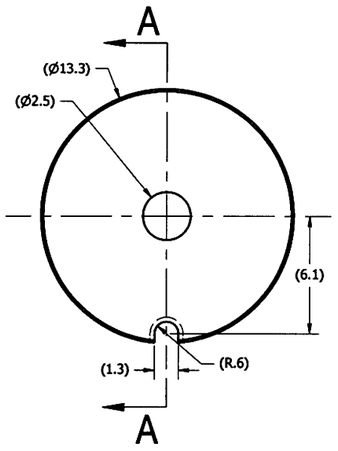

1 BASE DISK

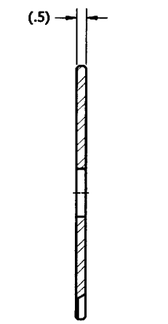

SECTION A-A
SCALED

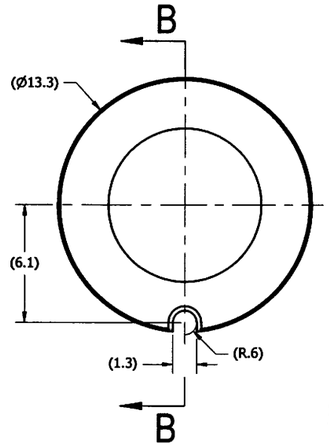

3 TOP DISK

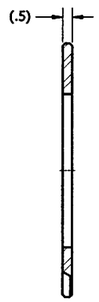

SECTION B-B
SCALED

5 BASE

SECTION C-C
SCALED

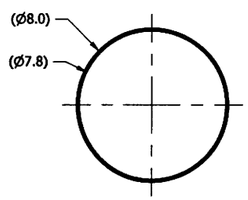

2 BASKET TUBE

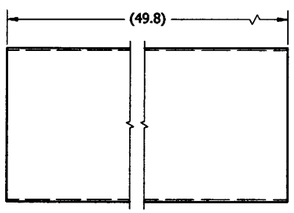

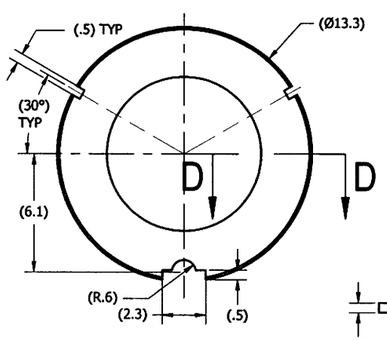

9 MIDDLE DISK

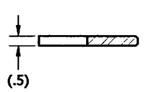

SECTION D-D
SCALED

2 ENGRAVE AS SHOWN AND FILL WITH BLACK WEATHER RESISTANT PAINT. WHERE "XX" TO BE SERIAL NUMBER UNIQUE TO EACH CANISTER ASSEMBLY AND "YYY" IS AS BUILT WEIGHT.

1. VISUALLY INSPECT (VT) ALL WELDS PER SECTION V, ARTICLES 1 & 9. ACCEPTANCE CRITERIA PER SECTION III, NG-5360.

NOTES:

		1	9	MIDDLE DISK	304 ST. STL.	ASME SA240		PLATE
		4	8	LIFTING LUG	304 ST. STL.	ASME SA240		PLATE
		2	7	GUIDE BAR	304 ST. STL.	ASME SA276		SQ. BAR
		1	6	COVER PLATE	304 ST. STL.	ASME SA240		PLATE
		1	5	BASE	304 ST. STL.	ASME SA312		PIPE
		2	4	GUIDE	304 ST. STL.	ASME SA276		SQ. BAR
		1	3	TOP DISK	304 ST. STL.	ASME SA240		PLATE
		1	2	SPACER TUBE	304 ST. STL.	ASME SA249		TUBE
		1	1	BASE DISK	304 ST. STL.	ASME SA240		PLATE
97	98	99	ITEM	NAME	MATERIAL	SPEC	DRAWING No.	DESCRIPTION
ASSY	ASSY	ASSY						
QUANTITY								

NAC INTERNATIONAL

UNLESS OTHERWISE STATED	GROUP	NAME	DATE
DIMENSIONING AND TOLERANCING SHALL BE PER ASME Y14.5M-94.	PREPARER		9/26/12
ALL THREAD DEPTH CALLOUTS ARE TO BE CONSIDERED AS A MIN. DEPTH OF PERFECT TREADS	CHECKER		9-26-12
	PROJECT MANAGER		9/26/12
	ENGINEERING		9/26/12
ALL DIMENSIONS ARE IN INCHES	LICENSING		9/27/12
MACHINED SURFACES SHALL BE 125 OR BETTER	QUALITY		9/27/12
NEXT ASSEMBLY 315-40-170			
DRAWING TYPE LICENSE			

BASKET SPACER, NRU/NRX

PROJECT	DRAWING	REV
315-40	174	0
SCALE N. T. S. / WEIGHT N/A	SH 1 OF 1	8/23/2012

R-243478

REV	CHANGE
0	INITIAL ISSUE
1	INC DCR 0A
2	INC DCR 1A

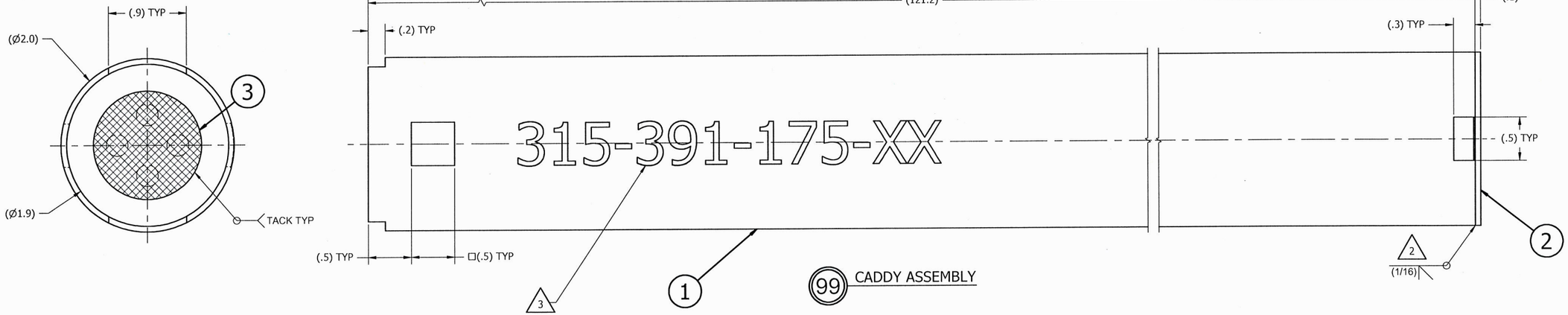

99 CADDY ASSEMBLY

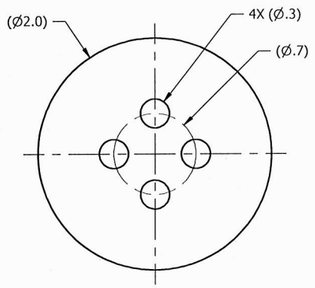

2 BOTTOM PLATE

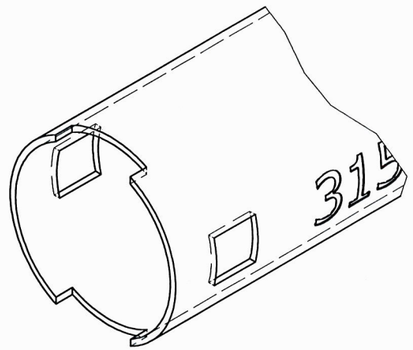

VIEW A
ISOMETRIC

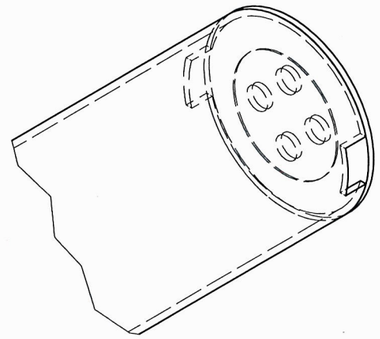

VIEW B
ISOMETRIC

		A/R	6	PLUG			315-40-175-98	
	1		5	PLUG CAP	ALUMINUM	COML		PLATE
	1		4	PLUG TUBE	ALUMINUM	COML		TUBE
		A/R	3	WIRE MESH	ALUMINUM	COML		16 x 16 x .018 WIRE DIA.
		1	2	BOTTOM PLATE	6061-T6 AL	ASTM B209		SHEET
		1	1	TUBE	6061-T6 AL	ASTM B210		TUBE
97 ASSY	98 ASSY	99 ASSY	ITEM	NAME	MATERIAL	SPEC	DRAWING No.	DESCRIPTION
QUANTITY								

2 △4 OUTER DIAMETER OF THE PLUG (ASSY 98) IS TO BE SIZED BASED ON THE INNER DIAMETER OF THE CADDY ASSEMBLY (ASSY 99).

△3 MARK AS SHOWN, LETTERS TO BE .5" HIGH. "XX" IS A CONSECUTIVE UNIT NUMBER BEGINNING WITH 01.

△2 WELD AROUND TUBE EXCEPT SLOT OPENINGS.

1. VISUALLY INSPECT (VT) ALL WELDS PER ASME SECTION V, ARTICLES 1 & 9. ACCEPTANCE CRITERIA PER SECTION III, NG-5360.

NOTES:

UNLESS OTHERWISE STATED
DIMENSIONING AND TOLERANCING SHALL BE PER ASME Y14.5M-94.
ALL THREAD DEPTH CALLOUTS ARE TO BE CONSIDERED AS A MIN. DEPTH OF PERFECT TREADS
ALL DIMENSIONS ARE IN INCHES
MACHINED SURFACES SHALL BE √ OR BETTER
NEXT ASSEMBLY 315-40-170
DRAWING TYPE LICENSE

GROUP	NAME	DATE
PREPARER		3-12-20
CHECKER		3-12-20
PROJECT MANAGER		3-12-20
ENGINEERING		3-12-20
LICENSING		3/13/20
QUALITY		3/13/20

NAC INTERNATIONAL

CADDY ASSEMBLY, NRU/NRX

PROJECT	DRAWING	REV
315-40	175	2
SCALE N. T. S. / WEIGHT N/A	SH 1 OF 2	3/12/2020

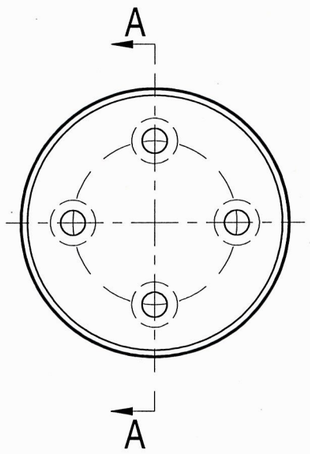

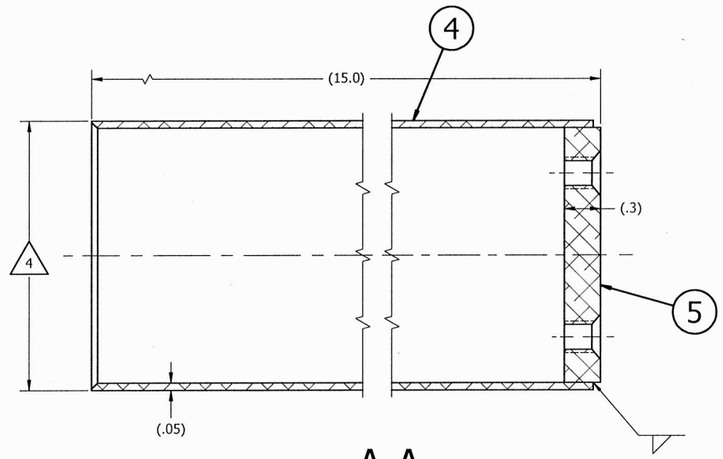

SECTION A-A
SCALED

2 98 PLUG
EST. WEIGHT: 0.5#

NAC INTERNATIONAL

CADDY ASSEMBLY, NRU/NRX

PROJECT 315-40		DRAWING 175	REV 2
SCALE N. T. S.	WEIGHT N/A	SH 2 OF 2	3/12/2020

2

R-220695

REV	CHANGE
0	INITIAL ISSUE

"NAC PROPRIETARY INFORMATION WITHHELD PER 10 CFR 2.390"

ASSY	ASSY	ASSY
QUANTITY		

UNLESS OTHERWISE STATED
DIMENSIONING AND TOLERANCING SHALL BE PER ASME Y14.5M-94.
ALL THREAD DEPTH CALLOUTS ARE TO BE CONSIDERED AS A MIN. DEPTH OF PERFECT TREADS
ALL DIMENSIONS ARE IN INCHES
MACHINED SURFACES SHALL BE 125 OR BETTER
NEXT ASSEMBLY: N/A
DRAWING TYPE: LICENSE

GROUP	NAME	DATE
PREPARER	Kathy Lucas	12-17-12
CHECKER		12-17-12
PROJECT MANAGER		12-17-12
ENGINEERING		12/17/12
LICENSING		12/17/12
QUALITY	Roy V. Bass	12/18/12

NAC INTERNATIONAL

LWT TRANSPORT CASK ASSEMBLY, HEUNL CONTENTS

PROJECT 315-40 | DRAWING 180 | REV 0NP
SCALE N. T. S. | WEIGHT N/A | SH 1 OF 1 | 12/7/2012

R-220697

REV	CHANGE
0	INITIAL ISSUE

"NAC PROPRIETARY INFORMATION WITHHELD PER 10 CFR 2.390"

ASSY	ASSY	ASSY
QUANTITY		

UNLESS OTHERWISE STATED
DIMENSIONING AND TOLERANCING SHALL BE PER ASME Y14.5M-94.
ALL THREAD DEPTH CALL OUTS ARE TO BE CONSIDERED AS A MIN. DEPTH OF PERFECT TREADS
ALL DIMENSIONS ARE IN INCHES
MACHINED SURFACES SHALL BE $\sqrt{}$ OR BETTER
NEXT ASSEMBLY: 315-40-180
DRAWING TYPE: LICENSE

GROUP	NAME	DATE
PREPARER	[signature]	12-17-12
CHECKER	[signature]	12-17-12
PROJECT MANAGER	[signature]	12-17-12
ENGINEERING	[signature]	12/17/12
LICENSING	[signature]	12/17/12
QUALITY	[signature]	12-18-12

NAC INTERNATIONAL

CONTAINER ASSEMBLY, HEUNL

PROJECT	DRAWING	REV
315-40	181	ONP

SCALE	WEIGHT	SH	OF	
N. T. S.	N/A	1	1	12/7/2012

R-220699

REV	CHANGE
0	INITIAL ISSUE

"NAC PROPRIETARY INFORMATION WITHHELD PER 10 CFR 2.390"

ASSY	ASSY	ASSY
QUANTITY		

UNLESS OTHERWISE STATED
DIMENSIONING AND TOLERANCING SHALL BE PER ASME Y14.5M-94.
ALL THREAD DEPTH CALLOUTS ARE TO BE CONSIDERED AS A MIN. DEPTH OF PERFECT TREADS
ALL DIMENSIONS ARE IN INCHES
MACHINED SURFACES SHALL BE 63 OR BETTER
NEXT ASSEMBLY: 315-40-180
DRAWING TYPE: LICENSE

GROUP	NAME	DATE
PREPARER	V. Slotyl Ciscoe	12-17-12
CHECKER		12-17-12
PROJECT MANAGER		12-17-12
ENGINEERING		12/17/12
LICENSING		12/17/12
QUALITY	Roy W. Barr	12/18/12

NAC INTERNATIONAL

CONTAINER SPACER, HEUNL

PROJECT	DRAWING	REV
315-40	182	0NP

SCALE N. T. S. | WEIGHT N/A | SH 1 OF 1 | 12/6/2012

R-220701

REV	CHANGE
0	INITIAL ISSUE

"NAC PROPRIETARY INFORMATION WITHHELD PER 10 CFR 2.390"

ASSY	ASSY	ASSY
QUANTITY		

UNLESS OTHERWISE STATED
DIMENSIONING AND TOLERANCING SHALL BE PER ASME Y14.5M-94.
ALL THREAD DEPTH CALLOUTS ARE TO BE CONSIDERED AS A MIN. DEPTH OF PERFECT TREADS

ALL DIMENSIONS ARE IN INCHES
MACHINED SURFACES SHALL BE $\sqrt{}$ OR BETTER
NEXT ASSEMBLY: 315-40-180
DRAWING TYPE: LICENSE

GROUP	NAME	DATE
PREPARER	V. Gilstrap-Cowan	12-17-12
CHECKER	R. Jones	12-17-12
PROJECT MANAGER	J. Shaw	12-17-12
ENGINEERING	J. Shaw	12/18/12
LICENSING	T. Hill	12/17/12
QUALITY	E. Bonner	12-18-12

NAC INTERNATIONAL

CONTAINER GUIDE, HEUNL

PROJECT	DRAWING	REV
315-40	183	ONP

SCALE	WEIGHT	SH	OF	
N. T. S.	N/A	1	1	12/7/2012

e-227530

REV	CHANGE
0	INITIAL ISSUE

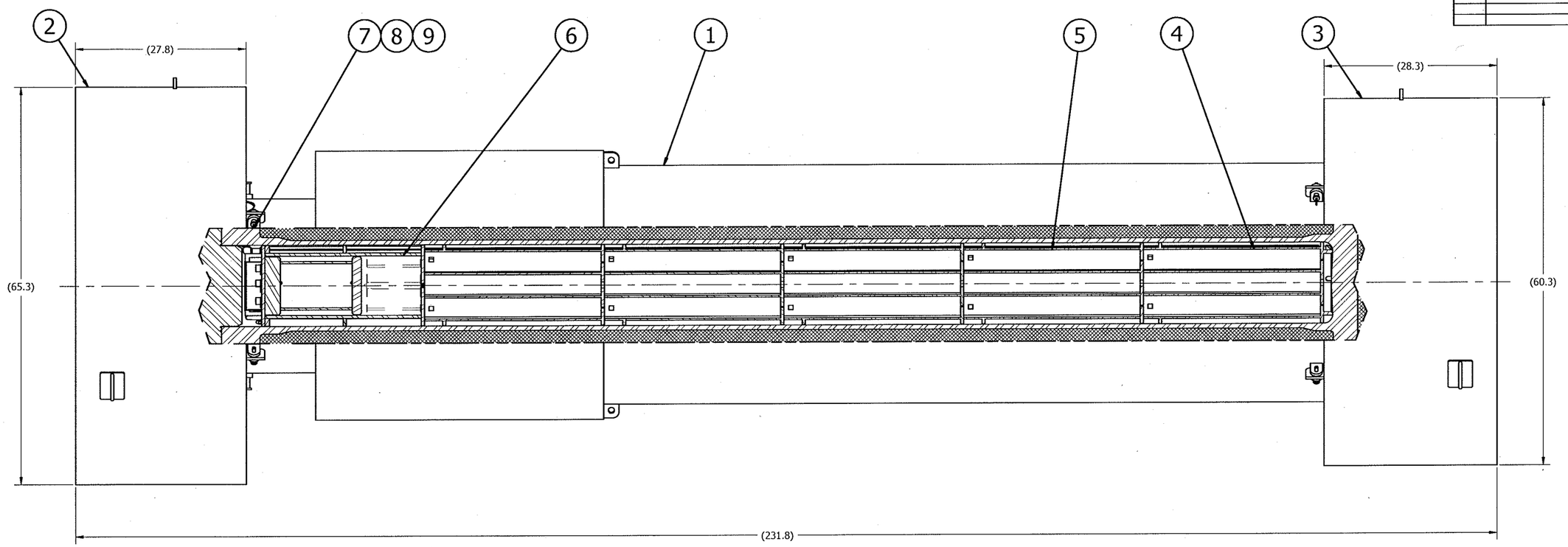

97	98	99	ITEM	NAME	MATERIAL	SPEC	DRAWING No.	DESCRIPTION
		1	9	TAMPER INDICATING DEVICE (TID)			315-40-01-11	
		A/R	8	WIRE			315-40-01-10	
		8	7	BALL-LOK PIN			315-40-01-08	
		1	6	BASKET ASSEMBLY			315-40-186	
		4	5	42 MTR BASKET, INTERMEDIATE			315-40-046	
		1	4	42 MTR BASKET, BASE			315-40-045	
		1	3	LOWER IMPACT LIMITER			315-40-06-99	
		1	2	UPPER IMPACT LIMITER			315-40-05-99	
		1	1	CASK BODY ASSEMBLY			315-40-02-99	
ASSY	ASSY	ASSY	QUANTITY					

NAC INTERNATIONAL

UNLESS OTHERWISE STATED
DIMENSIONING AND TOLERANCING SHALL BE PER ASME Y14.5M-94.
ALL THREAD DEPTH CALLOUTS ARE TO BE CONSIDERED AS A MIN. DEPTH OF PERFECT TREADS
ALL DIMENSIONS ARE IN INCHES
MACHINED SURFACES SHALL BE 125 OR BETTER
NEXT ASSEMBLY: N/A
DRAWING TYPE: LICENSE

GROUP	NAME	DATE
PREPARER	[signature]	1-28-15
CHECKER	[signature]	1-28-15
PROJECT MANAGER	[signature]	1-28-15
ENGINEERING	[signature]	1-28-15
LICENSING	[signature]	1/28/15
QUALITY	Roy W. Bass	2-2-15

LWT TRANSPORT CASK ASSEMBLY, SLOWPOKE CONTENTS

PROJECT	DRAWING	REV
315-40	185	0

SCALE N. T. S. | WEIGHT N/A | SH 1 OF 1 | 1/12/2015

R-228706

REV	CHANGE
0	INITIAL ISSUE
1	INC DCR 0A
2	INC DCR 1A

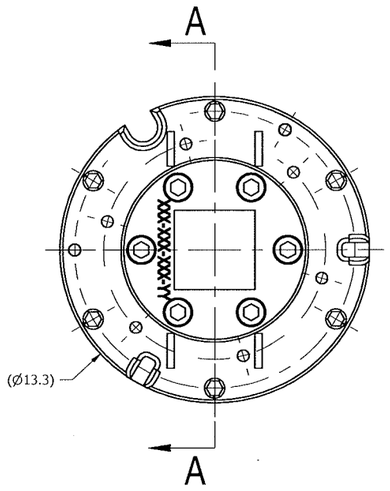

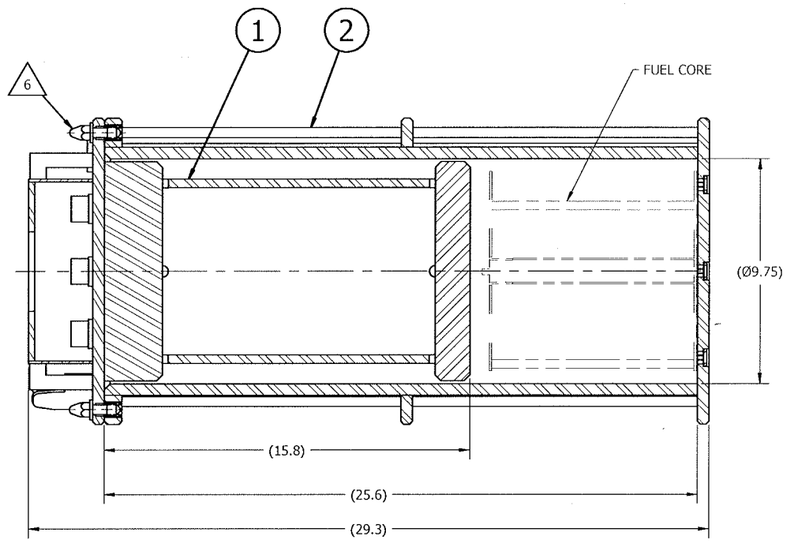

SECTION A-A

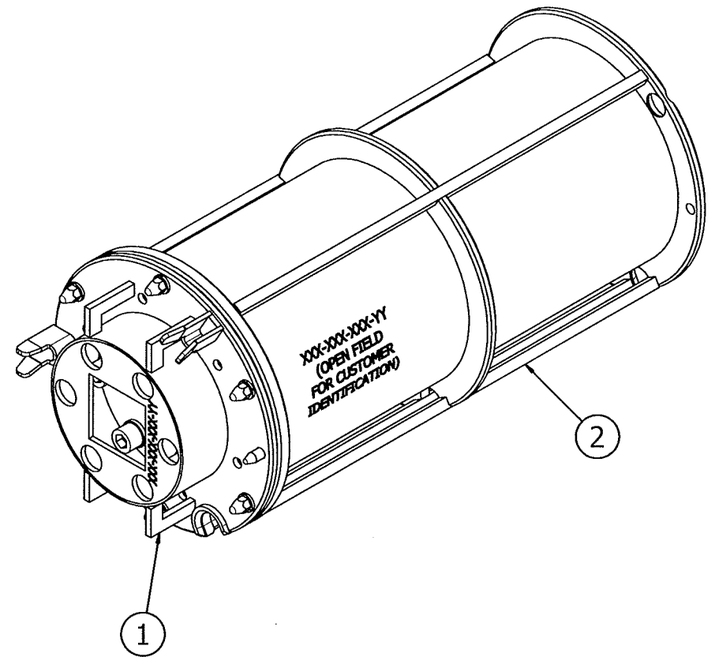

99 BASKET ASSEMBLY

7. BASKET ASSEMBLY SHALL BE SUBJECT TO A PROOF LOAD TEST OF 525 LBS +15 LBS/-0 LBS AND POST TEST NDE.

6 LUBRICATE LID BOLTS WITH NEVER-SEEZ OR EQUIVALENT AND TORQUE TO 60 ±10 IN-LBS.

5 SEAL WELD ALL OPEN SEAMS. GRIND AS NECESSARY.

4. PT INSPECTION PER ASME SECTION V ARTICLES 1 & 6 WITH ACCEPTANCE CRITERIA PER SECTION III, ARTICLE NG-5350.

3. VISUALLY INSPECT (VT) ALL WELDS PER ASME SECTION V, ARTICLES 1 & 9. ACCEPTANCE CRITERIA PER SECTION III, ARTICLE NG-5360.

2. ALL WELDING PROCEDURES AND QUALIFICATIONS TO BE IN ACCORDANCE WITH ASME SECTION IX.

1 STEEL STAMP/ENGRAVE APPROXIMATELY AS SHOWN. WHERE "XXX-XXX-XXX" IS A STRING THAT MAY VARY IN LENGTH AND CONTENT TO PROVIDE CLARIFICATION OF THE SPECIFIC BASKET AND "YY" REPRESENTS A UNIQUE NUMBER (STARTING FROM 01) FOR EACH BASKET ASSEMBLY MANUFACTURED. DIRECTLY BELOW THIS NUMBER IS AN OPEN AREA FOR EACH CUSTOMER TO ADD ANY REQUIRED INFORMATION THEY CHOOSE.

NOTES:

97 ASSY	98 ASSY	99 ASSY	ITEM	NAME	MATERIAL	SPEC	DRAWING No.	DESCRIPTION
	6		11	THREADED INSERT	ST. STL.	COML		
	7		10	MESH	ST. STL.	COML		
	7		9	MESH RETAINER	304 ST. STL.	ASTM A240/A276/A269		PLATE/BAR/TUBE
	2		8	GUIDE PIN	304 ST. STL.	ASTM A276		BAR
	4		7	GUIDE BAR	304 ST. STL.	ASTM A276		BAR
	1		6	INTERMEDIATE DISK	304 ST. STL.	ASME SA240/SA276		PLATE/BAR
	1		5	TOP DISK	304 ST. STL.	ASME SA240/SA276		PLATE/BAR
	1		4	SHELL	304 ST. STL.	ASME SA249/SA312		TUBE/PIPE
	1		3	BASE PLATE	304 ST. STL.	ASME SA240/SA276		PLATE/BAR
		1	2	BASKET WELDMENT			315-40-186-98	
		1	1	BASKET LID ASSEMBLY			315-40-187-99	

QUANTITY

NAC INTERNATIONAL

UNLESS OTHERWISE STATED
DIMENSIONING AND TOLERANCING SHALL BE PER ASME Y14.5M-94
ALL THREAD DEPTH CALLOUTS ARE TO BE CONSIDERED AS A MIN. DEPTH OF PERFECT TREADS

ALL DIMENSIONS ARE IN INCHES
MACHINED SURFACES SHALL BE √ OR BETTER
NEXT ASSEMBLY 315-40-185
DRAWING TYPE LICENSE

GROUP	NAME	DATE
PREPARER	V.Stylman	6-12-15
CHECKER	[illegible]	6-12-15
PROJECT MANAGER	[illegible]	6-12-15
ENGINEERING	[illegible]	6-12-15
LICENSING	[illegible]	6/15/15
QUALITY	Roger W. Brown	6-15-15

FUEL CORE BASKET ASSEMBLY, SLOWPOKE

PROJECT	DRAWING	REV
315-40	186	2

SCALE	WEIGHT	SH	OF	
N. T. S.	N/A	1	2	6/11/2015

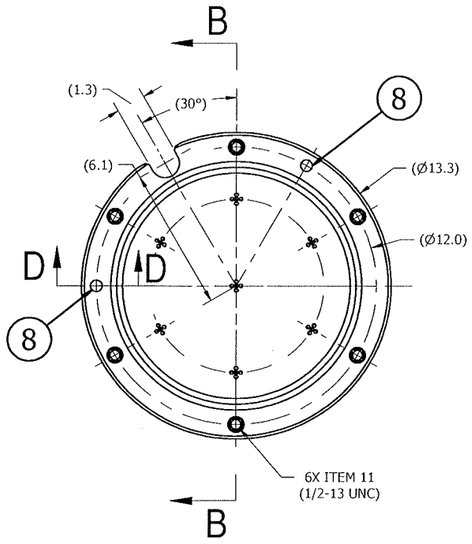

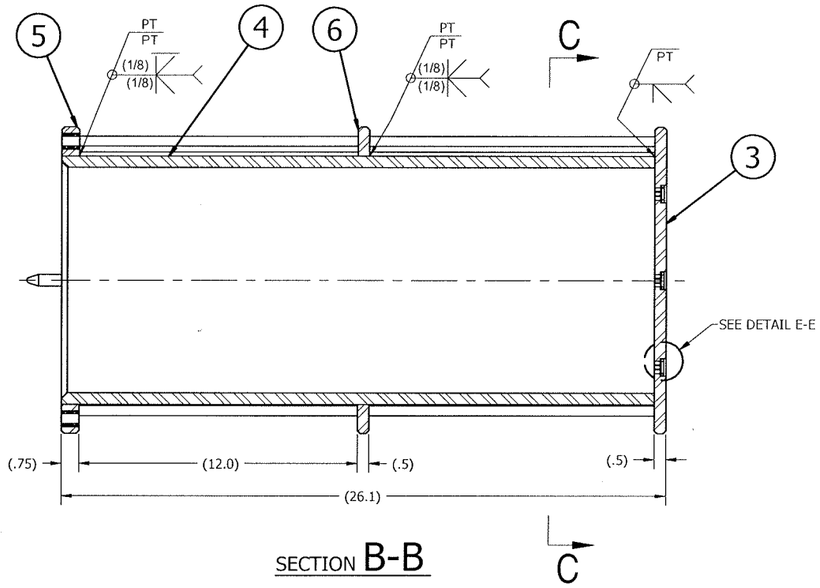

SECTION B-B

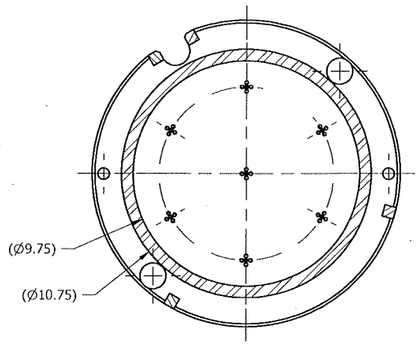

SECTION C-C

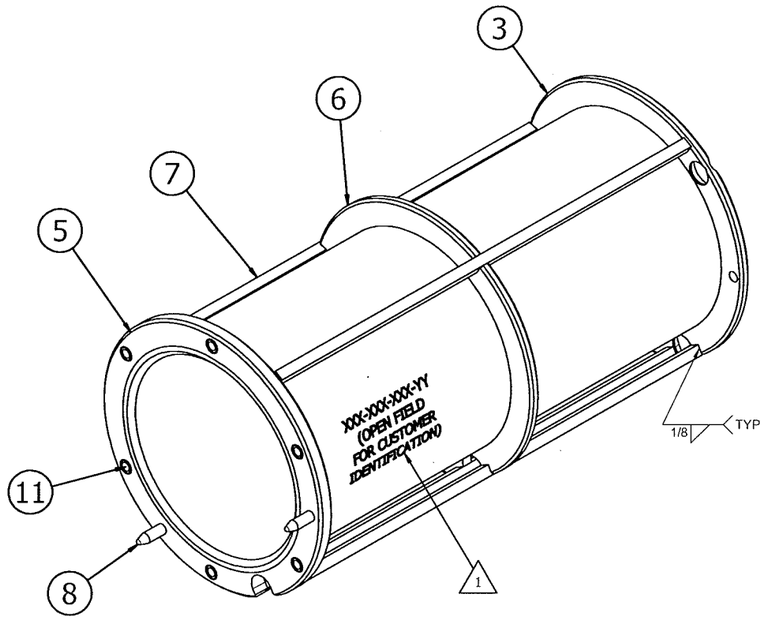

△5 (98) BASKET WELDMENT

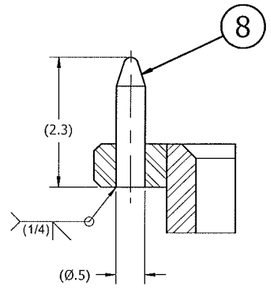

SECTION D-D
SCALED

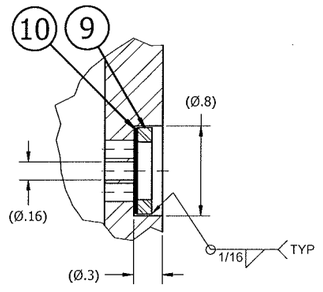

DETAIL E-E
SCALED

NAC INTERNATIONAL

FUEL CORE BASKET
ASSEMBLY,
SLOWPOKE

PROJECT	315-40	DRAWING	186	REV
SCALE N. T. S.	WEIGHT AS NOTED	SH 2 OF 2	6/11/2015	

R-228708

REV	CHANGE
0	INITIAL ISSUE
1	INC DCR 0A, 0B

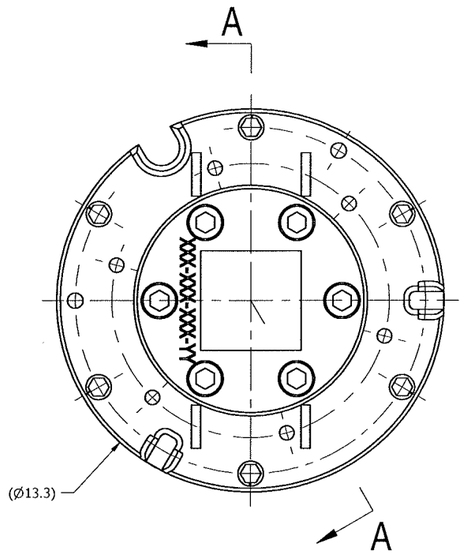

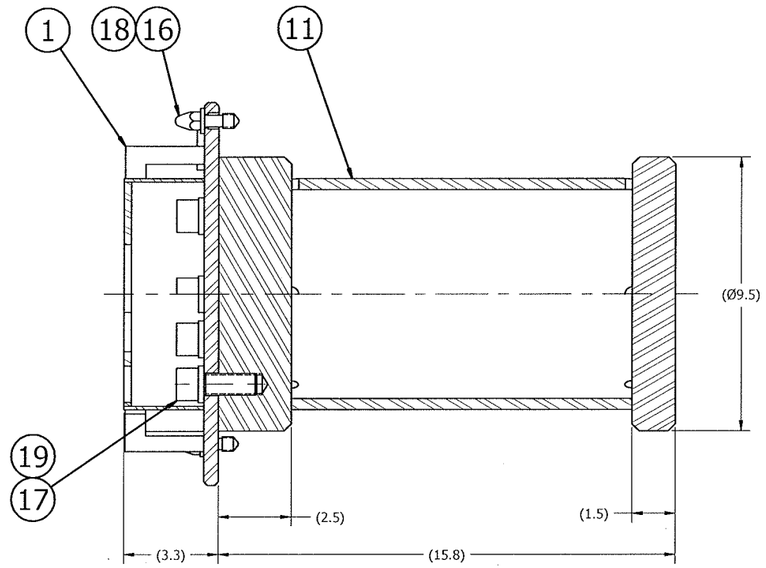

SECTION A-A

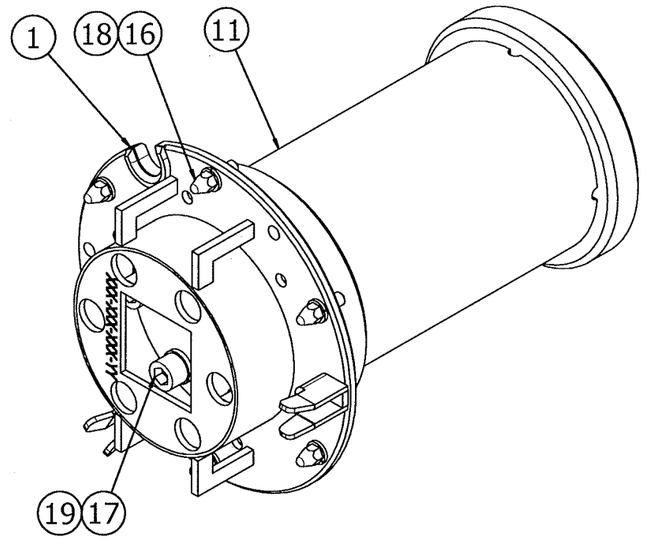

99 BASKET LID ASSEMBLY

1 8 ASME SA312 SIZE 8 SCHEDULE 40 PIPE (8.6 OD X .3 WALL) MAY BE USED IN LIEU OF ASME SA249 TUBE.

7 LUBRICATE WITH NEVER-SEEZ OR EQUIVALENT AND TORQUE TO 120 ±10 IN-LBS.

6 ITEMS 6 (GRAPPLE GUIDE) AND 7 (GRAPPLE STOP) ARE OPTIONAL, AT END USER'S DISCRETION.

5 SEAL WELD ALL OPEN SEAMS. GRIND AS NECESSARY.

4. PT INSPECTION PER ASME SECTION V ARTICLES 1 & 6 WITH ACCEPTANCE CRITERIA PER SECTION III, ARTICLE NG-5350.

3. VISUALLY INSPECT (VT) ALL WELDS PER ASME SECTION V, ARTICLES 1 & 9. ACCEPTANCE CRITERIA PER SECTION III, ARTICLE NG-5360.

2. ALL WELDING PROCEDURES AND QUALIFICATIONS TO BE IN ACCORDANCE WITH ASME SECTION IX.

1 STEEL STAMP/ENGRAVE APPROXIMATELY AS SHOWN. WHERE "XXX-XXX-XXX" IS A STRING THAT MAY VARY IN LENGTH AND CONTENT TO PROVIDE CLARIFICATION OF THE SPECIFIC BASKET LID AND "YY" REPRESENTS A UNIQUE NUMBER (STARTING FROM 01) FOR EACH BASKET ASSEMBLY MANUFACTURED.

NOTES:

			ITEM	NAME	MATERIAL	SPEC	DRAWING No.	DESCRIPTION
		6	19	LOCK WASHER	ST. STL.	COML		
		6	18	LOCK WASHER	ST. STL.	COML		
7		6	17	SOCKET HEAD SCREW	ST. STL.	ASME SA193, Gr. B8S		
		6	16	CONE HEAD BOLT	XM-19	ASME SA479		BAR
6			15	THREADED INSERT	ST. STL.	COML		
1 8			14	EXTENSION	304 ST. STL.	ASME SA249		TUBE
1			13	SHIELD PLATE	304 ST. STL.	ASME SA240/SA276		PLATE/BAR
1			12	MOUNTING PLATE	304 ST. STL.	ASME SA240/SA276		PLATE/BAR
		1	11	BASKET LID SPACER			315-40-187-97	
	6		10	MESH RETAINER	304 ST. STL.	ASTM A240/A276/A269		PLATE/BAR/TUBE
	6		9	MESH	ST. STL.	COML		
	1		8	KEYWAY SPACER	304 ST. STL.	ASTM A240/A276		PLATE/BAR
6	A/R		7	GRAPPLE STOP	304 ST. STL.	ASTM A240/A276		PLATE/BAR
	A/R		6	GRAPPLE GUIDE	304 ST. STL.	ASTM A240		3/16 PLATE
	4		5	LIFTING LUG	304 ST. STL.	ASME SA240/SA276		PLATE/BAR
	1		4	COLLAR COVER PLATE	304 ST. STL.	ASTM A240/A276		PLATE/BAR
1	1		3	LID COLLAR	304 ST. STL.	ASME SA249		TUBE
	1		2	BASE PLATE	304 ST. STL.	ASME SA240/SA276		PLATE/BAR
		1	1	BASKET LID WELDMENT			315-40-187-98	
97	98	99	ITEM	NAME	MATERIAL	SPEC	DRAWING No.	DESCRIPTION
ASSY	ASSY	ASSY						
QUANTITY								

NAC INTERNATIONAL

UNLESS OTHERWISE STATED	GROUP	NAME	DATE
DIMENSIONING AND TOLERANCING SHALL BE PER ASME Y14.5M-94.	PREPARER	V. Hartenman	6-12-15
ALL THREAD DEPTH CALLOUTS ARE TO BE CONSIDERED AS A MIN. DEPTH OF PERFECT TREADS	CHECKER		6-12-15
	PROJECT MANAGER		6-12-15
ALL DIMENSIONS ARE IN INCHES	ENGINEERING		6-12-15
MACHINED SURFACES SHALL BE ▽ OR BETTER	LICENSING		6/15/15
NEXT ASSEMBLY 315-40-186	QUALITY		6.15.15
DRAWING TYPE LICENSE			

BASKET LID ASSEMBLY, SLOWPOKE

PROJECT	DRAWING	REV
315-40	187	1
SCALE N. T. S.	WEIGHT N/A	SH 1 OF 2
		6/11/2015

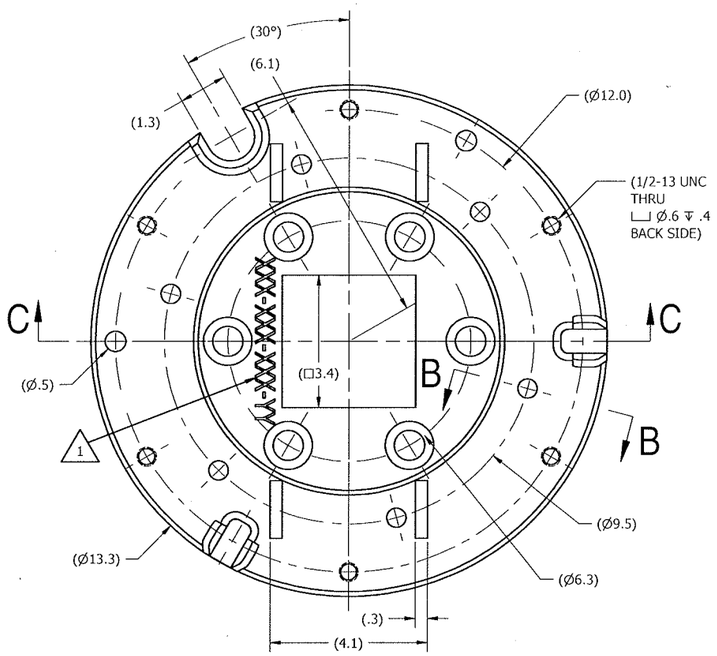

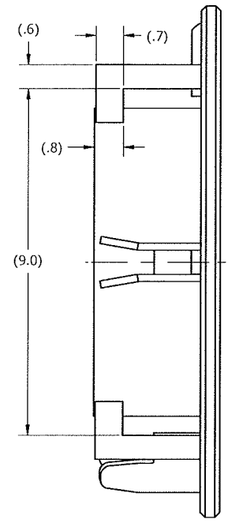

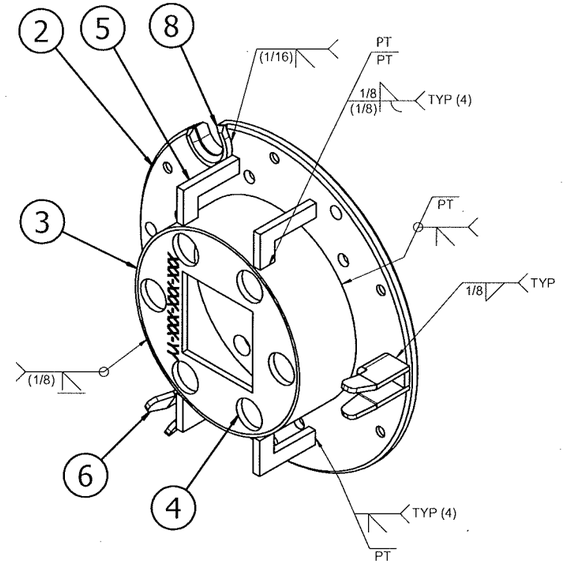

5 98 BASKET LID WELDMENT

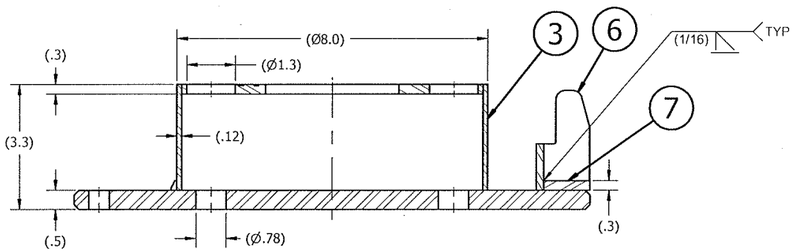

SECTION C-C

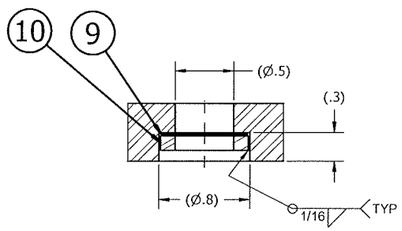

SECTION B-B
SCALED, TURNED

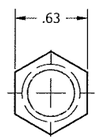

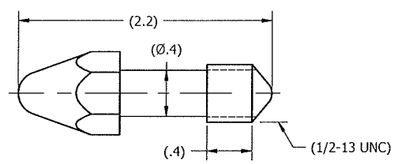

16 CONE HEAD BOLT

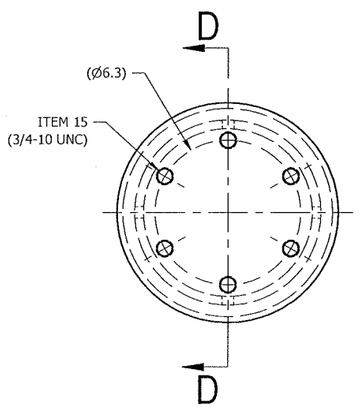

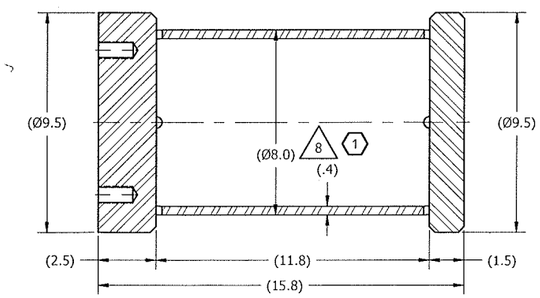

SECTION D-D

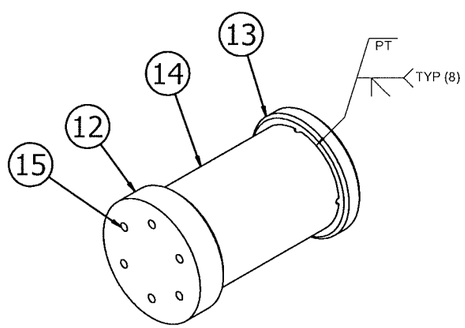

97 BASKET LID SPACER

NAC INTERNATIONAL

BASKET LID ASSEMBLY, SLOWPOKE

PROJECT	315-40	DRAWING	187	REV 1
SCALE N. T. S.	WEIGHT AS NOTED	SH 2 OF 2	6/11/2015	

R-258246

REV	CHANGE
ONP	INITIAL ISSUE

PROPRIETARY INFORMATION REMOVED

PROPRIETARY INFORMATION REMOVED

PROPRIETARY INFORMATION REMOVED

ITEM	QTY	NAME	MATERIAL	SPEC	DRAWING No.	DESCRIPTION
DRAWING TYPE		LICENSE				
NEXT ASSEMBLY		N/A				

UNLESS OTHERWISE STATED

ALL DIMENSIONS ARE IN INCHES.
DIMENSIONING AND TOLERANCING SHALL BE PER ASME Y14.5M-94.
ALL THREAD DEPTH CALLOUTS ARE TO BE CONSIDERED AS A MINIMUM DEPTH OF PERFECT THREADS.
MACHINED SURFACES TO BE $\sqrt{}$ OR BETTER

GROUP	NAME	DATE
PREPARER		
CHECKER		
PROJECT MANAGER		
ENGINEERING		
LICENSING		
QUALITY		

NAC INTERNATIONAL

LWT TRANSPORT CASK SHIPPING CONFIGURATION, LANL MOX

PROJECT	DRAWING	REV
315-40	188	ONP

SCALE N. T. S. WEIGHT: N/A SH 1 OF 1 10/3/2023

R-258247

REV	CHANGE
ONP	INITIAL ISSUE

PROPRIETARY INFORMATION REMOVED

PROPRIETARY INFORMATION REMOVED

PROPRIETARY INFORMATION REMOVED

ITEM	QTY	NAME	MATERIAL	SPEC	DRAWING No.	DESCRIPTION
DRAWING TYPE		LICENSE				
NEXT ASSEMBLY		315-40-188				
UNLESS OTHERWISE STATED						

ALL DIMENSIONS ARE IN INCHES.
DIMENSIONING AND TOLERANCING SHALL BE PER ASME Y14.5M-94.
ALL THREAD DEPTH CALLOUTS ARE TO BE CONSIDERED AS A MINIMUM DEPTH OF PERFECT THREADS.
MACHINED SURFACES TO BE √ OR BETTER.

GROUP	NAME	DATE
PREPARER		
CHECKER		
PROJECT MANAGER		
ENGINEERING		
LICENSING	Heath Baldner	
QUALITY		

NAC INTERNATIONAL

TRANSFER TUBE DETAILS, LANL MOX

PROJECT	DRAWING	REV
315-40	189	ONP

SCALE	WEIGHT	SH	OF	
N. T. S.	N/A	1	1	10/3/2023

R-253946

REV	CHANGE
0NP	INITIAL ISSUE

PROPRIETARY INFORMATION
REMOVED

NOTES:

ITEM	QTY	NAME	MATERIAL	SPEC	DRAWING No.	DESCRIPTION

DRAWING TYPE	LICENSE
NEXT ASSEMBLY	N/A

UNLESS OTHERWISE STATED

ALL DIMENSIONS ARE IN INCHES.
DIMENSIONING AND TOLERANCING SHALL BE PER ASME Y14.5M-94.
ALL THREAD DEPTH CALLOUTS ARE TO BE CONSIDERED AS A MINIMUM DEPTH OF PERFECT THREADS.
MACHINED SURFACES TO BE √OR BETTER

NAC INTERNATIONAL

GROUP	NAME	DATE
PREPARER	Thomas Hadaway (Sep 2, 2022 15:20 EDT)	
CHECKER	Kevin Klein (Sep 2, 2022 15:23 EDT)	
PROJECT MANAGER	Jimmy Tolliuzzi (Sep 12, 2022 12:34 EDT)	
ENGINEERING	Kevin Klein (Sep 2, 2022 15:23 EDT)	
LICENSING	Heath Baldner (Sep 12, 2022 15:15 EDT)	
QUALITY	David Gregory (Sep 14, 2022 07:45 EDT)	

LWT TRANSPORT CASK SHIPPING CONFIGURATION, WESF CAPSULES, ZENO

PROJECT	DRAWING	REV
315-40	190	0NP

SCALE	WEIGHT	SH	OF	
N. T. S.	N/A	1	1	9/1/2022

R-253948

REV	CHANGE
0NP	INITIAL ISSUE

PROPRIETARY INFORMATION
REMOVED

NOTES:

ITEM	QTY	NAME	MATERIAL	SPEC	DRAWING No.	DESCRIPTION
DRAWING TYPE		LICENSE				
NEXT ASSEMBLY		315-40-190				
UNLESS OTHERWISE STATED						

ALL DIMENSIONS ARE IN INCHES.
DIMENSIONING AND TOLERANCING SHALL BE PER ASME Y14.5M-94.
ALL THREAD DEPTH CALLOUTS ARE TO BE CONSIDERED AS A MINIMUM DEPTH OF PERFECT THREADS.
MACHINED SURFACES TO BE √ OR BETTER

NAC INTERNATIONAL

GROUP	NAME	DATE
PREPARER	Thomas Hadaway (Sep 2, 2022 15:22 EDT)	
CHECKER	Kevin Klein (Sep 2, 2022 15:24 EDT)	
PROJECT MANAGER	Jimmy Tolliuzis (Sep 12, 2022 12:32 EDT)	
ENGINEERING	Kevin Klein (Sep 2, 2022 15:24 EDT)	
LICENSING	Heath Baldner (Sep 13, 2022 15:15 EDT)	
QUALITY	David Gregory (Sep 14, 2022 07:44 EDT)	

WESF CAPSULES BASKET ASSEMBLY, ZENO

PROJECT	DRAWING	REV
315-40	191	0NP

SCALE	WEIGHT	SH	OF	
N. T. S.	N/A	1	1	9/1/2022

R-253950

REV	CHANGE
0NP	INITIAL ISSUE

PROPRIETARY INFORMATION
REMOVED

NOTES:

ITEM	QTY	NAME	MATERIAL	SPEC	DRAWING No.	DESCRIPTION

DRAWING TYPE	LICENSE
NEXT ASSEMBLY	315-40-190

UNLESS OTHERWISE STATED

ALL DIMENSIONS ARE IN INCHES.
DIMENSIONING AND TOLERANCING SHALL BE PER ASME Y14.5M-94.
ALL THREAD DEPTH CALLOUTS ARE TO BE CONSIDERED AS A MINIMUM DEPTH OF PERFECT THREADS.
MACHINED SURFACES TO BE ✓ OR BETTER

GROUP	NAME	DATE
PREPARER	Thomas Hadaway (Sep 2, 2022 19:24 EDT)	
CHECKER	Kevin Klein (Sep 2, 2022 15:26 EDT)	
PROJECT MANAGER	Jimmy Tolliuzis (Sep 12, 2022 12:30 EDT)	
ENGINEERING	Kevin Klein (Sep 2, 2022 15:26 EDT)	
LICENSING	Heath Baldner (Sep 12, 2022 15:02 EDT)	
QUALITY	David Simpson (Sep 14, 2022 07:35 EDT)	

NAC INTERNATIONAL

WESF CAPSULES CONTAINER ASSEMBLY, ZENO

PROJECT	DRAWING	REV
315-40	192	0NP

SCALE	WEIGHT	SH	OF	DATE
N. T. S.	N/A	1	1	9/1/2022

REV	CHANGE
0NP	INITIAL ISSUE

R-253952

PROPRIETARY INFORMATION
REMOVED

NOTES:

ITEM	QTY	NAME	MATERIAL	SPEC	DRAWING No.	DESCRIPTION
DRAWING TYPE		LICENSE				
NEXT ASSEMBLY		315-40-190				

UNLESS OTHERWISE STATED

ALL DIMENSIONS ARE IN INCHES.
DIMENSIONING AND TOLERANCING SHALL BE PER ASME Y14.5M-94.
ALL THREAD DEPTH CALLOUTS ARE TO BE CONSIDERED AS A MINIMUM DEPTH OF PERFECT THREADS.
MACHINED SURFACES TO BE ✓ OR BETTER

NAC INTERNATIONAL

GROUP	NAME	DATE
PREPARER	Thomas Hadaway (Sep 2, 2022 10:23 EDT)	
CHECKER	Kevin Klein (Sep 2, 2022 15:25 EDT)	
PROJECT MANAGER	Jimmy Tolliuzzi (Sep 12, 2022 12:31 EDT)	
ENGINEERING	Kevin Klein (Sep 2, 2022 15:25 EDT)	
LICENSING	Heath Baldner (Sep 12, 2022 15:08 EDT)	
QUALITY	David Gregory (Sep 14, 2022 07:38 EDT)	

LWT LID SPACER,
WESF CAPSULES,
ZENO

PROJECT	DRAWING	REV
315-40	193	0NP

SCALE	WEIGHT	SH	OF	
N. T. S.	N/A	1	1	9/1/2022

R-253954

REV	CHANGE
0NP	INITIAL ISSUE

PROPRIETARY INFORMATION
REMOVED

NOTES:

ITEM	QTY	NAME	MATERIAL	SPEC	DRAWING No.	DESCRIPTION
DRAWING TYPE		LICENSE				
NEXT ASSEMBLY		N/A				

UNLESS OTHERWISE STATED

ALL DIMENSIONS ARE IN INCHES.
DIMENSIONING AND TOLERANCING SHALL BE PER ASME Y14.5M-94.
ALL THREAD DEPTH CALLOUTS ARE TO BE CONSIDERED AS A MINIMUM DEPTH OF PERFECT THREADS.
MACHINED SURFACES TO BE ✓ OR BETTER

GROUP	NAME	DATE
PREPARER	Thomas Hadaway (Sep 2, 2022 19:15 EDT)	
CHECKER	Kevin Klein (Sep 2, 2022 15:21 EDT)	
PROJECT MANAGER	Jimmy Tolliuzzi (Sep 12, 2022 12:36 EDT)	
ENGINEERING	Kevin Klein (Sep 2, 2022 15:21 EDT)	
LICENSING	Heath Baldner (Sep 12, 2022 15:00 EDT)	
QUALITY	David Hansen (Sep 14, 2022 07:32 EDT)	

NAC INTERNATIONAL

LWT TRANSPORT CASK
SHIPPING CONFIGURATION,
BUP-500, ZENO

PROJECT	DRAWING	REV
315-40	195	0NP

SCALE	WEIGHT	SH	OF	
N. T. S.	N/A	1	1	9/1/2022

REV	CHANGE
0NP	INITIAL ISSUE

R-253956

PROPRIETARY INFORMATION
REMOVED

NOTES:

ITEM	QTY	NAME	MATERIAL	SPEC	DRAWING No.	DESCRIPTION
DRAWING TYPE		LICENSE				
NEXT ASSEMBLY		315-40-195				
UNLESS OTHERWISE STATED						

ALL DIMENSIONS ARE IN INCHES.
DIMENSIONING AND TOLERANCING SHALL BE PER ASME Y14.5M-94.
ALL THREAD DEPTH CALLOUTS ARE TO BE CONSIDERED AS A MINIMUM DEPTH OF PERFECT THREADS.
MACHINED SURFACES TO BE ✓ OR BETTER

GROUP	NAME	DATE
PREPARER	Thomas Hadaway (Sep 2, 2022 15:16 EDT)	
CHECKER	Kevin Klein (Sep 2, 2022 15:22 EDT)	
PROJECT MANAGER	Jimmy Tolliuzis (Sep 12, 2022 12:35 EDT)	
ENGINEERING	Kevin Klein (Sep 2, 2022 15:22 EDT)	
LICENSING	Heath Baldner (Sep 13, 2022 15:19 EDT)	
QUALITY	David Gregory (Sep 14, 2022 07:51 EDT)	

NAC INTERNATIONAL

BUP-500 BASKET ASSEMBLY, ZENO

PROJECT	DRAWING	REV
315-40	196	0NP

SCALE	WEIGHT:	SH	OF	
N. T. S.	N/A	1	1	9/1/2022

R-253958

REV	CHANGE
0NP	INITIAL ISSUE

PROPRIETARY INFORMATION
REMOVED

NOTES:

ITEM	QTY	NAME	MATERIAL	SPEC	DRAWING No.	DESCRIPTION
DRAWING TYPE		LICENSE				
NEXT ASSEMBLY		315-40-195				
UNLESS OTHERWISE STATED						

ALL DIMENSIONS ARE IN INCHES.
DIMENSIONING AND TOLERANCING SHALL BE PER ASME Y14.5M-94.
ALL THREAD DEPTH CALLOUTS ARE TO BE CONSIDERED AS A MINIMUM DEPTH OF PERFECT THREADS.
MACHINED SURFACES TO BE ✓ OR BETTER

NAC INTERNATIONAL

GROUP	NAME	DATE
PREPARER	Thomas Hadaway (Sep 2, 2022 15:19 EDT)	
CHECKER	Kevin Klein (Sep 2, 2022 15:23 EDT)	
PROJECT MANAGER	Jimmy Tolliuzis (Sep 12, 2022 12:34 EDT)	
ENGINEERING	Kevin Klein (Sep 2, 2022 15:23 EDT)	
LICENSING	Heath Baldner (Sep 13, 2022 15:20 EDT)	
QUALITY	David Gregory (Sep 14, 2022 07:54 EDT)	

BUP-500 CAVITY SPACER, ZENO

PROJECT	DRAWING	REV
315-40	197	0NP

SCALE	WEIGHT	SH	OF	
N. T. S.	N/A	1	1	9/1/2022

R-263429

REV	CHANGE
0NP	INITIAL ISSUE

PROPRIETARY INFORMATION
REMOVED

NOTES:

97	98	99	ITEM	NAME	MATERIAL	SPEC	DRAWING No.	DESCRIPTION

DRAWING TYPE	LICENSE
NEXT ASSEMBLY	N/A

UNLESS OTHERWISE STATED

ALL DIMENSIONS ARE IN INCHES.
DIMENSIONING AND TOLERANCING SHALL BE PER ASME Y14.5M-94.
ALL THREAD DEPTH CALLOUTS ARE TO BE CONSIDERED AS A MINIMUM DEPTH OF PERFECT THREADS.
MACHINED SURFACES TO BE ✓OR BETTER

GROUP	NAME	DATE
PREPARER	Isiah Sanz (May 14, 2025 13:10 EDT)	
CHECKER	Kevin Klein (May 14, 2025 13:12 EDT)	
PROJECT MANAGER	David Oliver (May 14, 2025 13:28 EDT)	
ENGINEERING	Kevin Klein (May 14, 2025 13:32 EDT)	
LICENSING	Heath Baldner (May 14, 2025 14:01 EDT)	
QUALITY	Dave Hagen (May 14, 2025 07:35 EDT)	

NAC INTERNATIONAL

LWT TRANSPORT CASK SHIPPING CONFIGURATION, UCS, ZENO

PROJECT	DRAWING	REV
315-40	198	0NP

SCALE	WEIGHT	SH	OF	
N. T. S.	N/A	1	1	5/14/2025

R-263430

REV	CHANGE
0NP	INITIAL ISSUE

PROPRIETARY INFORMATION
REMOVED

NOTES:

97	98	99	ITEM	NAME	MATERIAL	SPEC	DRAWING No.	DESCRIPTION

DRAWING TYPE	LICENSE
NEXT ASSEMBLY	315-40-198

UNLESS OTHERWISE STATED

ALL DIMENSIONS ARE IN INCHES.
DIMENSIONING AND TOLERANCING SHALL BE PER ASME Y14.5M-94.
ALL THREAD DEPTH CALLOUTS ARE TO BE CONSIDERED AS A MINIMUM DEPTH OF PERFECT THREADS.
MACHINED SURFACES TO BE ✓ OR BETTER

GROUP	NAME	DATE
PREPARER	Isiah Sanz (May 14, 2025 13:08 EDT)	
CHECKER	Kevin Klein (May 14, 2025 13:11 EDT)	
PROJECT MANAGER	David Oliver (May 14, 2025 13:37 EDT)	
ENGINEERING	Kevin Klein (May 14, 2025 13:11 EDT)	
LICENSING	Heath Baldner (May 14, 2025 14:03 EDT)	
QUALITY	David Oliver (May 14, 2025 13:37 EDT)	

NAC INTERNATIONAL

UCS BASKET ASSEMBLY, ZENO

PROJECT	DRAWING	REV
315-40	199	0NP

SCALE	WEIGHT	SH	OF	
N. T. S.	N/A	1	1	5/14/2025

R-263431

REV	CHANGE
0NP	INITIAL ISSUE

PROPRIETARY INFORMATION
REMOVED

NOTES:

97	98	99	ITEM	NAME	MATERIAL	SPEC	DRAWING No.	DESCRIPTION

DRAWING TYPE	LICENSE
NEXT ASSEMBLY	315-40-198

UNLESS OTHERWISE STATED

ALL DIMENSIONS ARE IN INCHES.
DIMENSIONING AND TOLERANCING SHALL BE PER ASME Y14.5M-94.
ALL THREAD DEPTH CALLOUTS ARE TO BE CONSIDERED AS A MINIMUM DEPTH OF PERFECT THREADS.
MACHINED SURFACES TO BE √OR BETTER

GROUP	NAME	DATE
PREPARER	Isiah Sanz (May 14, 2025 13:04 EDT)	
CHECKER	Kevin Klein (May 14, 2025 13:05 EDT)	
PROJECT MANAGER	David Oliver (May 14, 2025 13:37 EDT)	
ENGINEERING	Kevin Klein (May 14, 2025 13:05 EDT)	
LICENSING	Heath Baldner (May 14, 2025 14:40 EDT)	
QUALITY	David Oliver (May 14, 2025 13:37 EDT)	

NAC INTERNATIONAL

LWT LID SPACER,
UCS, ZENO

PROJECT	DRAWING	REV
315-40	200	0NP

SCALE	WEIGHT	SH	OF	
N. T. S.	N/A	1	1	5/14/2025

R-263432

REV	CHANGE
0NP	INITIAL ISSUE

PROPRIETARY INFORMATION
REMOVED

NOTES:

97	98	99	ITEM	NAME	MATERIAL	SPEC	DRAWING No.	DESCRIPTION

DRAWING TYPE	LICENSE
NEXT ASSEMBLY	315-40-198

UNLESS OTHERWISE STATED

ALL DIMENSIONS ARE IN INCHES.
DIMENSIONING AND TOLERANCING SHALL BE PER ASME Y14.5M-94.
ALL THREAD DEPTH CALLOUTS ARE TO BE CONSIDERED AS A MINIMUM DEPTH OF PERFECT THREADS.
MACHINED SURFACES TO BE ✓OR BETTER

GROUP	NAME	DATE
PREPARER	Isiah Sanz (May 14, 2025 12:59 EDT)	
CHECKER	Kevin Klein (May 14, 2025 13:05 EDT)	
PROJECT MANAGER	David Oliver (May 14, 2025 13:26 EDT)	
ENGINEERING	Kevin Klein (May 14, 2025 13:05 EDT)	
LICENSING	Heath Baldner (May 14, 2025 14:40 EDT)	
QUALITY	David Hayden (May 15, 2025 07:48 EDT)	

NAC INTERNATIONAL

UNIVERSAL CAPSULE SLEEVE (UCS) ASSEMBLY, ZENO

PROJECT	DRAWING	REV
315-40	201	0NP

SCALE	WEIGHT	SH	OF	
N. T. S.	N/A	1	1	5/14/2025

R-263433

REV	CHANGE
0NP	INITIAL ISSUE

PROPRIETARY INFORMATION
REMOVED

NOTES:

97	98	99	ITEM	NAME	MATERIAL	SPEC	DRAWING No.	DESCRIPTION

DRAWING TYPE	LICENSE
NEXT ASSEMBLY	315-40-198

UNLESS OTHERWISE STATED

ALL DIMENSIONS ARE IN INCHES.
DIMENSIONING AND TOLERANCING SHALL BE PER ASME Y14.5M-94.
ALL THREAD DEPTH CALLOUTS ARE TO BE CONSIDERED AS A MINIMUM DEPTH OF PERFECT THREADS.
MACHINED SURFACES TO BE ✓ OR BETTER

GROUP	NAME	DATE
PREPARER	Isaiah Sanz (May 14, 2025 13:58 EDT)	
CHECKER	Kevin Klein (May 14, 2025 14:00 EDT)	
PROJECT MANAGER	David Oliver (May 14, 2025 14:33 EDT)	
ENGINEERING	Kevin Klein (May 14, 2025 14:00 EDT)	
LICENSING	Heath Baldner (May 14, 2025 14:38 EDT)	
QUALITY	David Oliver (May 14, 2025 14:41 EDT)	

NAC INTERNATIONAL

UCS AND CAPSULES SPACER ASSEMBLIES, ZENO

PROJECT	DRAWING	REV
315-40	202	0NP

SCALE	WEIGHT	SH	OF	DATE
N. T. S.	N/A	1	1	5/14/2025

1.5 Unclassified DOE Reference Documents and Drawings

The unclassified DOE reference documents and drawings are contained in the following appendices.

- Appendix 1-A – TTQP-1-015, "Description of the Tritium-Producing Burnable Absorber Rod for the Commercial Light Water Reactor," Revision 14
- Appendix 1-B – TTQP-1-091, "Unclassified TPBAR Releases, Including Tritium," Revision 14
- Appendix 1-C – TTQP-1-111, "Unclassified Bounding Source Term, Radionuclide Concentrations, Decay Heat, and Dose Rates for the Production TPBAR," Revision 5
- Appendix 1-D – DOE Drawing H-3-307845, "Production TPBAR Reactor Interface Dimensions Watts Bar," Revision 10, Sheet 1 of 2
- Appendix 1-E – DOE Drawing H-3-308875, "Production TPBAR Reactor Interface Dimensions Sequoyah," Revision 5, Sheet 1 of 2
- Appendix 1-F – DOE Drawing H-3-310568, "Mark 8 Multi-Pencil TPBAR – Watts Bar Reactor Interface," Revision 0, Sheet 1 of 2
- Appendix 1-G – PNNL Letter, TTP-06-056, Subject: Exposure of Shipping Casks to Tritium, February 21, 2006

APPENDIX 1-A

TTQP-1-015, "Description of the Tritium-Producing Burnable Absorber Rod for the Commercial Light Water Reactor," Revision 14

COPY NO. 00005

R-204392

TRITIUM TECHNOLOGY PROGRAM

DESCRIPTION OF THE TRITIUM-PRODUCING BURNABLE ABSORBER ROD FOR THE COMMERCIAL LIGHT WATER REACTOR

TTQP-1-015

Revision 14

Effective Date: 3/10/06

TRITIUM TECHNOLOGY PROGRAM

DESCRIPTION OF THE TRITIUM-PRODUCING BURNABLE ABSORBER ROD FOR THE COMMERCIAL LIGHT WATER REACTOR

Revision 14

Major formatting revision; no revision marks

Prepared By:	D.D. Lanning, Author	2/27/06 Date
Concurrence:	R.O. Gates, Independent Reviewer	2/28/06 Date
Concurrence:	Authorized Derivative Classifier	3/2/06 Date
Approved By:	T. M. Brewer, Quality Engineer	3-3-06 Date
Approved By:	B.D. Reid, Design Task Manager	3/6/06 Date
Approved By:	C.K. Thornhill, TTP Project Manager	3/8/06 Date

1.0 ABSTRACT

Tritium-producing burnable absorber rods (TPBARs) used in the U.S. Department of Energy's Tritium Readiness Program are designed to produce tritium when placed in a Westinghouse or Framatome 17x17 fuel assembly and irradiated in a pressurized water reactor (PWR). This document provides an unclassified description of the design baseline for the TPBARs. This design baseline is currently valid only for Watts Bar reactor production cores.

2.0 DESIGN BASIS DOCUMENTS

The TPBAR design basis for the Watts Bar reactor production cores consists of this unclassified design basis description plus a collection of design basis documents. The design basis documents include the design drawings, the design specifications, and the component acceptance test requirements. These documents are listed in Appendices A, B, and C, respectively.

3.0 GENERAL FUNCTIONS AND REQUIREMENTS

TPBARs are similar in size and nuclear characteristics to standard, commercial PWR, stainless-steel-clad burnable absorber rods. The exterior of the TPBAR is a stainless-steel tube, approximately 152 inches from tip to tip at room temperature. The nominal outer diameter of the stainless-steel cladding is 0.381 inches. The internal components have been designed and selected to produce and retain tritium.

Figure 1 illustrates the concentric, cylindrical, internal components of a TPBAR. Within the stainless-steel cladding is a metal getter tube that encircles a stack of annular, ceramic pellets of lithium aluminate. The pellets are enriched with the ^{6}Li isotope. When irradiated in a PWR, the ^{6}Li pellets absorb neutrons, simulating the nuclear characteristics of a burnable absorber rod, and produce tritium, a hydrogen isotope. The tritium chemically reacts with the metal getter, which captures the tritium as a metal hydride.

To meet design limitations on rod internal pressure and burn-up of the lithium pellets, the amount of tritium production per TPBAR is limited to a maximum of 1.2 grams over the full design life of the rod (approximately 550 equivalent full-power days). The potential release rate of tritium into the reactor coolant is subject to a design limit that is consistent with the plant tritium release limits from the plant licensing basis. This is achieved by the combined effects of the metal getter tube surrounding the lithium aluminate pellets and an aluminide barrier coating on the inner surface of the cladding.

4.0 TPBAR COMPONENTS

The TPBAR cladding is double-vacuum-melted, Type 316 stainless steel. To prevent hydrogen from diffusing inward from the coolant to the TPBAR getter and to prevent

tritium from diffusing outward from the TPBAR to the reactor coolant, an aluminide coating is on the inner surface of the cladding. This coating barrier must remain effective during fabrication, handling, and in-reactor operations.

The annular ceramic pellets are composed of sintered, high-density, lithium aluminate ($LiAlO_2$).

The metal getter tube located between the cladding and the lithium aluminate pellets is composed of nickel-plated Zircaloy-4. The getter absorbs the molecular tritium (T_2) generated during irradiation. Nickel plating is used on both sides of the getter to prevent oxidation of the Zircaloy-4 surfaces, which would reduce the tritium absorption rate. Consequently, this plating must remain effective during fabrication, handling, and in-reactor operations.

One or more unplated Zircaloy-4 tube(s) line the inside of the annular pellets. This component is called the "liner." (In the Mark 8 design these include the liner and the cracking flange). Because the tritium produced in the pellets is mainly released as oxidized molecules (T_2O), a reactive metal liner is needed to reduce these species to molecular tritium by reacting with the oxygen. The liner also provides mechanical support to prevent axial movement of pellet material in case any pellets crack during TPBAR handling or operation.

5.0 PREVIOUS PRODUCTION TPBAR DESIGNS

In this section, two previous TPBAR designs are described: the production TPBAR design, in which the pellet column and getter tubes are segmented into sections called "pencils"; and the production full-length getter TPBAR design, in which the getter tube runs the full length of the TPBAR. These designs are augmented by added features in the Mark 8 TPBAR design, described in Section 6.0.

5.1 Production TPBAR Design (Irradiated in Watts Bar Cycles 6 and 7)

The getter tube is cut and rolled over (coined) to capture the liner and pellets within an assembly called a "pencil." There are a total of 11 pencil assemblies stacked within the cladding tube of each TPBAR (see Figure 2.) The majority of the pencils are of standard length (approximately 12 inches). Two of the pencils are of variable length.

To minimize the impact of power peaking in adjacent fuel rods resulting from the axial gaps between the stacked pencils, there is more than one type of TPBAR. The types are differentiated by where the variable-length pencils are loaded within the pencil stack. The loading sequence of the pencils is tracked, and each TPBAR is identified by type so that the location of each TPBAR type within a TPBAR assembly can be specified.

5.2 Production Full-Length Getter TPBAR Design Option

The axial arrangement of components is altered for the production full-length getter TPBAR design option. In this design, a single getter tube runs the full length of the TPBAR, and surrounds both the pellet column and the upper and lower spacer tubes (see Figure 3). The spacer tubes at the top and bottom of the pellet column are nickel-plated Zircaloy getters. The Zircaloy liner tubes and lithium aluminate pellet stacks in the full-length getter design are longer than in the standard design: typically approximately 16 inches compared to approximately 12 inches in the standard design.

The use of the production full-length getter design eliminates the need for variable-length pencils and different TBPAR types to minimize the impact of power peaking in adjacent fuel rods resulting from axial gaps between pencils. The pellet column in the production full-length getter TPBAR design is essentially continuous, and there is no power peaking penalty from axial gaps in the absorber column.

5.3 Common TPBAR Design Features

For hermetic closure of the TPBARs, end plugs similar to those used in commercial PWR burnable absorber rods are welded to each end of the cladding tube. As shown in Figures 2 and 3, a gas plenum space is located above the top of the absorber column and below the top end plug. A spring clip in this plenum space holds the internals in place during pre-irradiation handling and shipping. Depending on the design, either a top plenum getter tube or a spacer tube is placed in the plenum space to getter additional tritium.

The length of the column of enriched lithium aluminate must be variable to provide optimal flexibility in reactor core design. Consequently, the column of enriched lithium aluminate pellets is approximately centered axially about the core mid-plane elevation, but ranges in total length from about 126 to 132 inches. A thick-walled, nickel-plated, Zircaloy-4 spacer tube is placed between the bottom of the absorber column and the bottom end plug both to support the absorber column and to getter tritium.

6.0 THE MARK 8 DESIGN

The Mark 8 multi-pencil design corresponds with the production TPBAR designs described in Section 5.0 above, with the following changes and additions:

- Each pencil contains an added short flanged Zircaloy tube, called a "cracking flange", which interfaces with the inner liner at the top of the pencil, as shown in Figure 4. In the multi-pencil design, the pencil getter tube is coined to capture the pellet column

and the inner liner, as in the production TPBAR design; and the flange on the cracking flange similarly lies below and is captured by the coined-over getter on the top of the pencil.

- The pellet stack within each standard length pencil will consist of 13 pellets each approximately 1 inches long, instead of 6 pellets each approximately 2 inches long as in previous designs. However, the overall pellet stack length remains unchanged. The pellets within variable length pencils will similarly be slightly less than 1 inch in length.
- The upper and lower plenums in the multi-pencil design each contain "spacer assemblies" consisting of an outer NPZ getter tube (the "plenum getter") and an NPZ spacer tube within this outer getter tube (the "spacer getter").
- The upper spacer assembly contains two sections of NPZ spacer getter tube. The upper portion of the assembly contains an NPZ spacer getter tube only. The lower portion of the assembly contains in addition a Zircaloy "spacer liner tube" inside the lower section of the spacer getter tube (Figure 4). The spacer liner tube is flanged at its top end, and this flange separates the upper and lower sections of the spacer getter tube.
- The bottom spacer assembly in the multi-pencil design includes an outer NPZ getter tube and within that an NPZ lower spacer getter tube. A flanged spacer liner tube is inserted into the top of the lower spacer assembly. The outer NPZ getter tube is coined to capture both the lower spacer getter tube and the spacer liner (Figure 4).
- The top end plug design has been altered to include a hex- shaped shank on the upper body, and the neck-down region of the end plug has been removed. In addition, the diameter of the bored out region has been reduced and the length of the end plug insert has been reduced.
- The bored out region in the bottom end plug is removed, the length of the end plug insert has been reduced, and an NPZ getter disk resides on the insert of the bottom end plug (Figure 4).

7.0 TPBAR ASSEMBLIES

A TPBAR assembly is shown in Figure 5. It should be noted, however, that a typical design used in a 17x17 fuel assembly would be 20 TPBARs, rather than the eight illustrated in Figure 5 Compatibility with alternate fuel assembly designs can be accommodated by changes to the TPBAR lengths and end plugs.

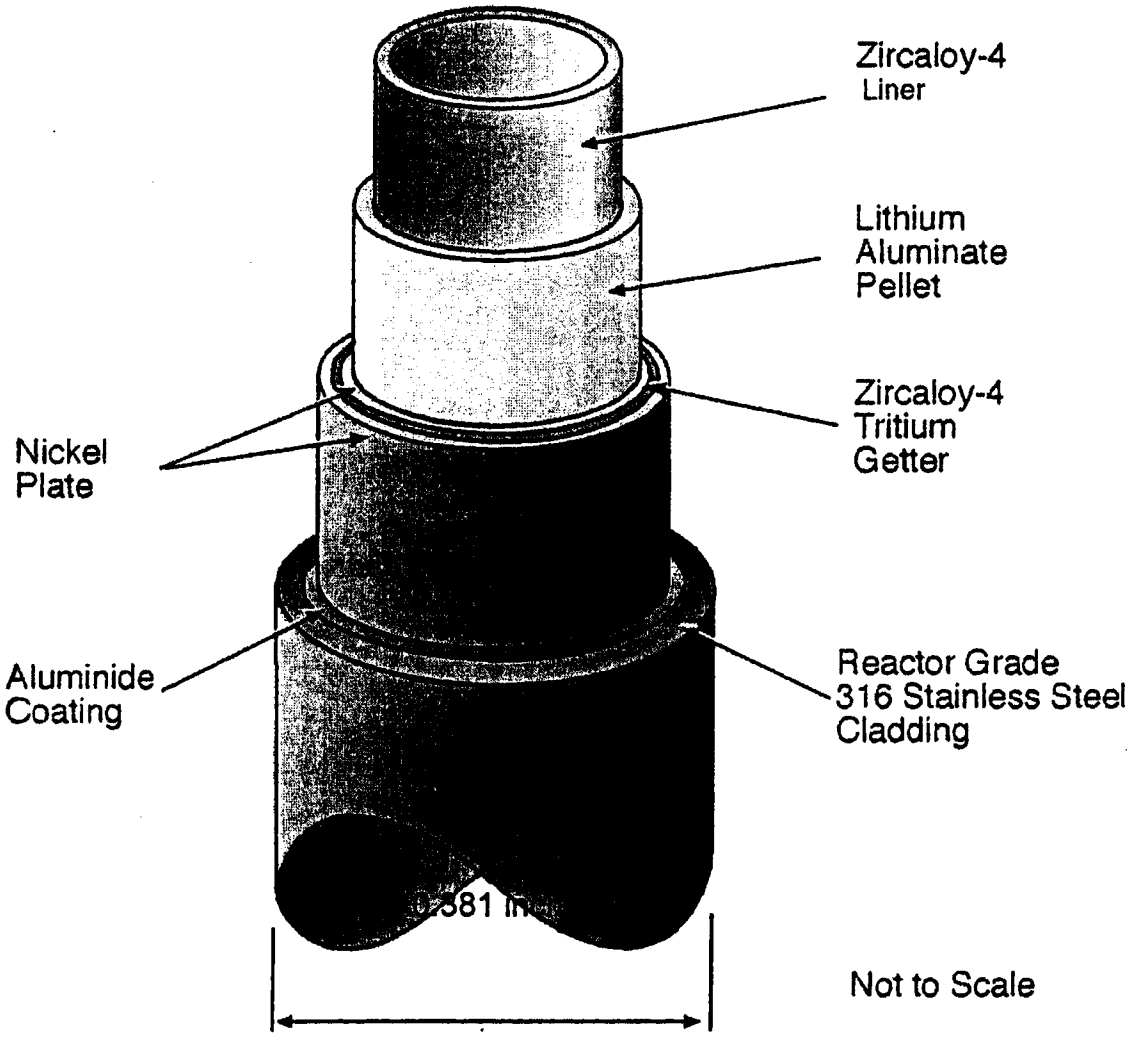

Figure 1. Isometric Section of a Tritium-Producing Burnable Absorber Rod

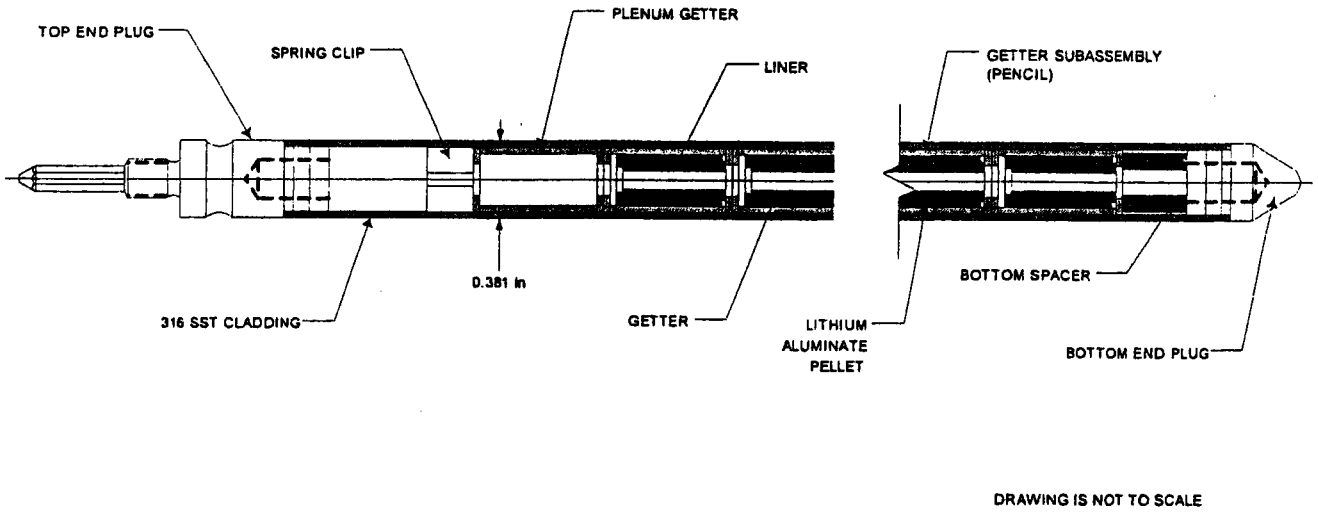

Figure 2. Axial Layout of TPBAR Internal Components –Production Standard Design

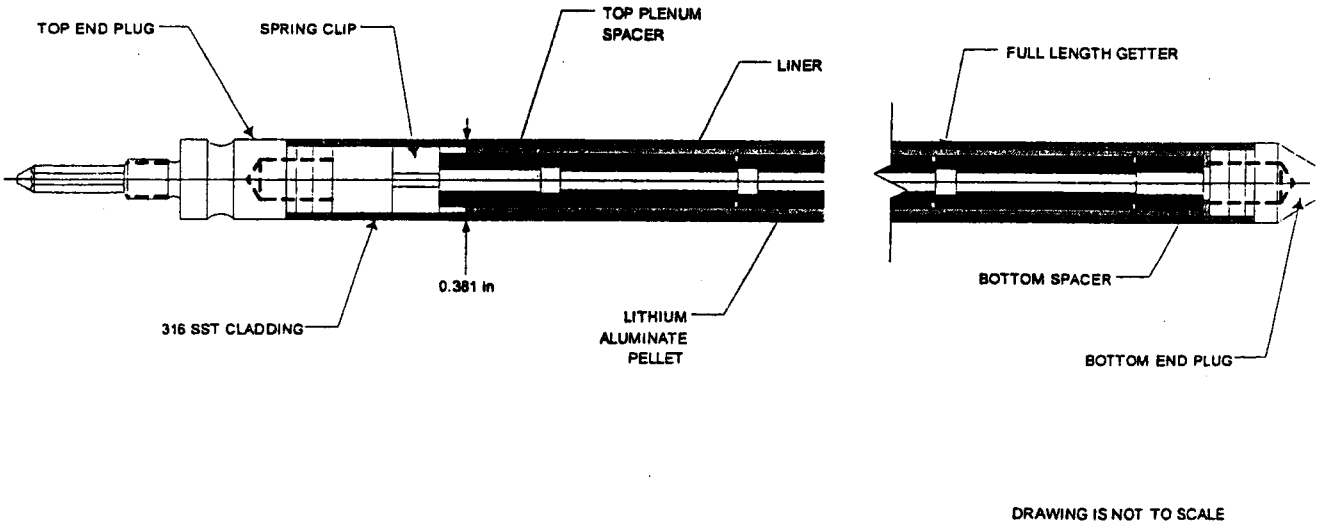

Figure 3. Axial Layout of TPBAR Internal Components –Production Full-Length Getter Design

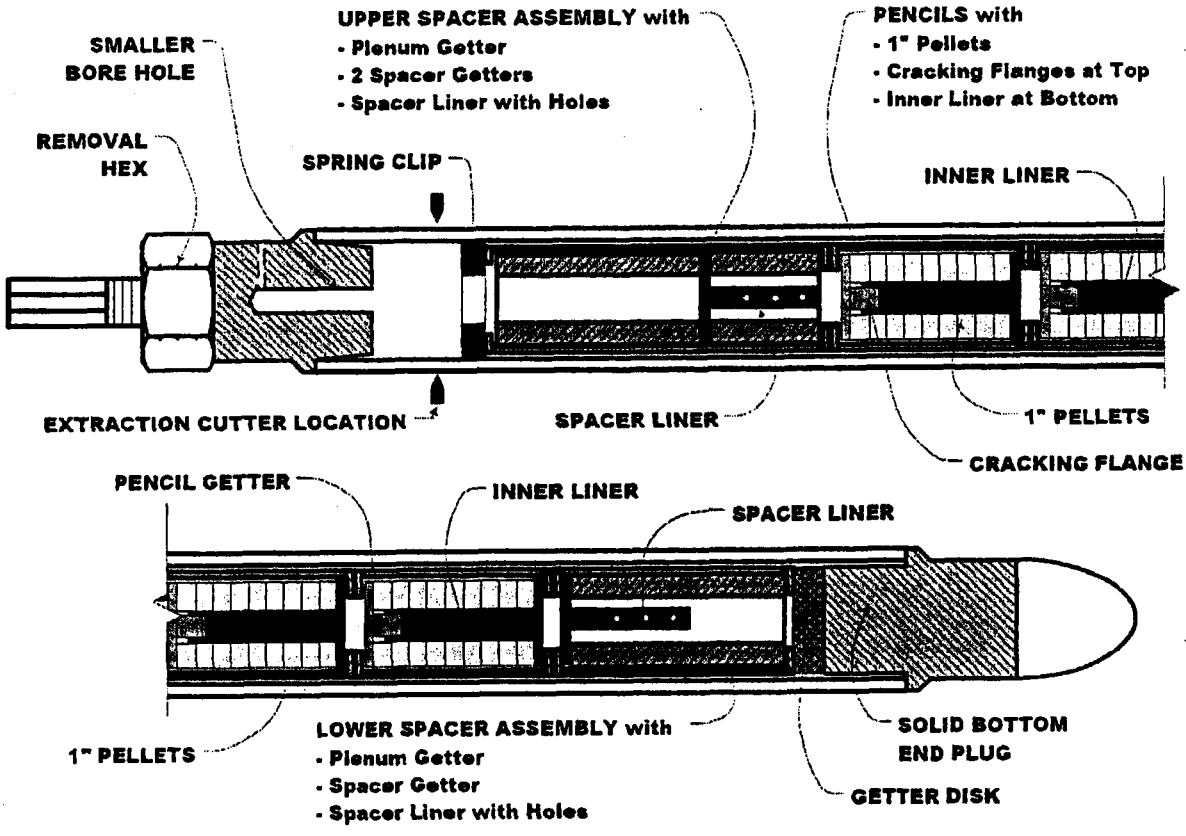

Figure 4 Axial Layout of Internal Components – Mark 8 Multi Pencil Design

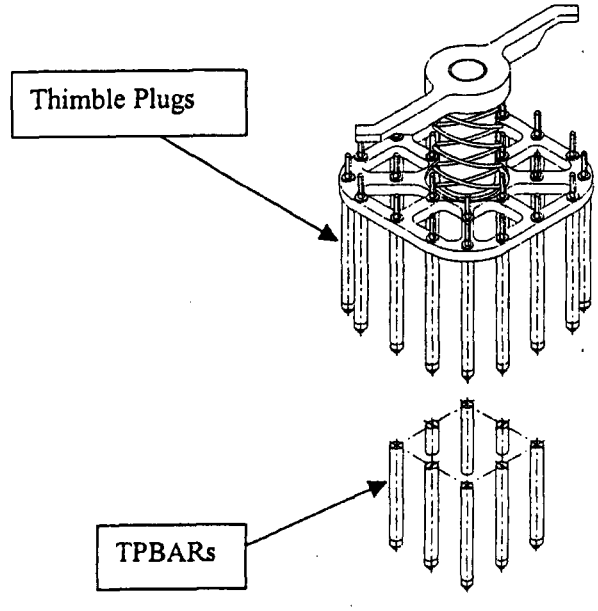

Figure 5 Typical TPBAR Assembly

APPENDIX A: LIST OF DESIGN DRAWINGS

Table A.1. List of Design Drawings for Standard Production TPBAR Design

Drawings are compiled in the latest revision of PNNL-TTQP-1-720, *Design Drawings for the Production TPBAR.*

Drawing	Title (Note: "U" designates an unclassified title.)	Classification
H-3-307843 Sheets 1 to 8	Production TPBAR Assembly Watts Bar (U)	Classified Sheet 2 is Unclassified
H-3-308874 Sheets 1 to 8	Production TPBAR Sequoyah (U)	Classified Sheet 2 is Unclassified
H-3-307844	Production Design Drawing List	Unclassified
H-3-307845 Sheets 1 and 2	Production TPBAR Interface Dimensions Watts Bar	Sheet 1 Unclassified Sheet 2 Classified
H-3-308875 Sheets 1 and 2	Production TPBAR Interface Dimensions Sequoyah	Sheet 1 Unclassified Sheet 2 Classified
H-3-307846	Production Cladding Tube	Unclassified
H-3-307847	Production Coated Cladding Tube (U)	Classified
H-3-307848 Sheets 1 and 2	Production Trimmed Coated Cladding Tube with End Prep (U)	Classified
H-3-307849	Production Standard Pencil Assembly (U)	Classified
H-3-307850	Production Variable Length Pencil Assembly (U)	Classified
H-3-307851 Sheets 1 and 2	Production Bottom Spacer (U)	Classified
H-3-307852	Production Top Plenum Spacer (U)	Classified
H-3-307853	Production Standard Pellet Stack	Unclassified
H-3-307854	Production Variable Length Pellet Stack	Unclassified
H-3-307855	Production Getter Tube Stock	Unclassified
H-3-307856 Sheets 1 and 2	Production Plated Getter Tube (U)	Classified
H-3-307857	Production Standard Inner Liner Tube	Unclassified
H-3-307858	Production Variable Length Inner Liner Tube	Unclassified
H-3-307859	Production Bottom Spacer Tube Stock	Unclassified
H-3-307860 Sheets 1 to 3	Production Top End Plug	Unclassified
H-3-307861 Sheets 1 and 2	Production Bottom End Plug	Unclassified
H-3-307862	Production Spring Clip	Unclassified
H-3-307325	Production Coated Cladding Bottom End Plug Assembly (U)	Classified
H-3-307326	Production Coated Cladding Bottom End Plug Assembly With End Prep (U)	Classified
H-3-309517	Activation Heat Treatment Profiles (U)	Classified
Full-Length Parts Needed FOR Multi-Pencil TPBAR Design (See PNNL-TTQP-1-769)		
H-3-307317	Spring Clip	Unclassified
H-3-310191 Sheets 1 to 3	Top End Plug	Unclassified
H-3-310192 Sheets 1 and 2	Bottom End Plug	Unclassified

Table A.2. List of Design Drawings for Production Full-Length Getter TPBAR Design

Drawings are compiled in the latest revision of PNNL-TTQP-1-769, *Production Full-Length Getter TPBAR Design Drawings (U)*

Drawing	Title (Note: "U" designates an unclassified title.)	Classification
H-3-307310 Sheets 1 to 6	Production Full-Length Getter TPBAR - Watts Bar (U)	Classified Sheet 2 is Unclassified
H-3-307311 Sheets 1 to 6	Production Full-Length Getter TPBAR - Sequoyah (U)	Classified Sheet 2 is Unclassified
H-3-307312 Sheets 1 to 4	Full-Length Getter TPBAR Interface Dimensions	Sheets 1 and 3 Unclassified Sheet 2 and 4 Classified
H-3-307313	Reserved for future use	
H-3-307314	Full-Length Getter Spacer Stock	Unclassified
H-3-307315	Full-Length Getter Plated Spacer (U)	Classified
H-3-307316	Full-Length Getter Finished Bottom Spacer (U)	Classified
H-3-307317	Spring Clip	Unclassified
H-3-307318	Reserved for future use	---
H-3-307319	Full-Length Getter Finished Top Plenum Spacer (U)	Classified
H-3-307320	Full-Length Getter Pellet Stack	Unclassified
H-3-307321	Full-Length Getter Inner Liner Tube	Unclassified
H-3-307322	Full-Length Getter Tube Stock	Unclassified
H-3-307323 Sheets 1 and 2	Full-Length Getter Plated Getter Tube (U)	Classified
H-3-307324	Production Full-Length Getter TPBAR Design Drawing List	Unclassified
H-3-307327	Activation Heat Treatment Profiles for Spacers (U)	Classified
H-3-310191 Sheets 1 to 3	Top End Plug	Unclassified
H-310192 Sheets 1 and 2	Bottom End Plug	Unclassified
Production Parts Needed for Full-Length Getter TPBAR Design (See PNNL-TTQP-1-720)		
H-3-307325	Production Coated Cladding Bottom End Plug Assembly (U)	Classified
H-3-307326	Production Coated Cladding Bottom End Plug Assembly With End Prep (U)	Classified
H-3-307846	Production Cladding Tube	Unclassified
H-3-307847	Production Coated Cladding Tube (U)	Classified
H-3-307848 Sheets 1 and 2	Production Trimmed Coated Cladding Tube with End Prep (U)	Classified
H-3-307853	Production Standard Pellet Stack	Unclassified
H-3-307854	Production Variable Length Pellet Stack	Unclassified
H-3-307857	Production Standard Inner Liner Tube	Unclassified
H-3-307858	Production Variable Length Inner Liner Tube	Unclassified
H-3-307860 Sheets 1 to 3	Production Top End Plug	Unclassified
H-3-307861 Sheets 1 and 2	Production Bottom End Plug	Unclassified

Table A.3. List of Design Drawings for Mark 8 Multi-Pencil TPBAR Design

Drawings are compiled in the latest revision of PNNL-TTQP-1-976, *Mark 8 TPBAR Design Drawings.*

Drawing	Title (Note: "U" designates an unclassified title.)	Classification
H-3-310566	Mark 8 TPBAR Drawing List	Unclassified
H-3-310567 Sheets 1 to 6	Mark 8 TPBAR Multi-Pencil Watts Bar (U)	Classified Sheet 2 is Unclassified
H-3-310568 Sheets 1 and 2	Mark 8 TPBAR Multi Pencil –Reactor Interface Mark 8 TPBAR Multi-Pencil –Extraction Interface	Sheet 1 Unclassified Sheet 2 Classified
H-3-310571 Sheets 1 to 3	Top End Plug	Unclassified
H-3-310572 Sheets 1 and 2	Trimmed Cladding Tube with End Prep (U)	Classified
H-3-310573	Coated Cladding Bottom End Plug Assembly (U)	Classified
H-3-310574	Coated Cladding Bottom End Plug Assembly with End Prep (U)	Classified
H-3-310575	Upper Spacer Assembly (U)	Classified
H-3-310576	Spacer Getters (U)	Classified
H-3-310580	Pencil Assemblies – Cracking Flange (U)	Classified
H-3-310583	Lower Spacer Assembly (U)	Classified
H-3-310584	Getter Disk (U)	Classified
H-3-310585	Getter Disk Stock	Unclassified
H-3-310586 Sheets 1 and 2	Bottom End Plug	Unclassified
H-3-310587	Cracking Flange	Unclassified
H-3-310591	Spacer Liner	Unclassified
H-3-310593	Mark 8 Variable Pellet Stack	Unclassified
H-3-310594	Mark 8 Standard Pellet Stack	Unclassified
H-3-310595 Sheets 1 to 5	Mark 8 EM TPBAR	Classified Sheet 2 Unclassified
H-3-310596	Mark 8 EM Pencil Assemblies (U)	Classified
H-3-310597	Mark 8 EM Beta Liner	Unclassified
H-3-310598	Mark 8 EM End Effect Pellet Stack	Unclassified

Table A.3. List of Design Drawings for Mark 8 Multi-Pencil TPBAR Design (continued)

Drawings listed below are reference drawings from PNNL-TTQP-1-720 and PNNL-1-769 (at the latest revision) for parts or items used in the Mark 8 design.

Drawing	Title (Note: "U" designates an unclassified title.)	Classification
H-3-307846	Production Cladding Tube	Unclassified
H-3-307847	Production Coated Cladding Tube (U)	Classified
H-3-307862	Production Spring Clip	Unclassified
H-3-307855	Production Getter Tube Stock	Unclassified
H-3-307856 Sheets 1 and 2	Production Plated Getter Tube (U)	Classified
H-3-307314	Full Length Getter Spacer Stock	Unclassified
H-3-307315	Full Length Getter Plated Spacer (U)	Classified
H-3-307853	Production Standard Pellet Stack	Unclassified
H-3-307854	Production Variable Length Pellet Stack	Unclassified
H-3-307857	Production Standard Inner Liner Tube	Unclassified
H-3-307858	Production Variable Length Inner Liner Tube	Unclassified
H-3-309517	Activation Heat Treatment Profiles (U)	Classified
H-3-307327	Activation Heat Treatment Profiles for Spacers (U)	Classified

APPENDIX B: LIST OF DESIGN SPECIFICATIONS (All at Latest Revision)

NOTE: "PNNL" prefix in the document number denotes a classified document, and "U" following the document title designates an unclassified title.

Document Number	Title
TTQP-1-072	*Production Specification for 316 Stainless Steel Seamless Cladding Tubes*
TTQP-1-073	*Manufacturing Specification for Production LWR Tritium Target Rod Getter Tube Stock*
TTQP-1-075	*Production Specification for LWR Tritium Target Rod Stainless Steel Bar Stock for Cladding*
TTQP-1-076	*Production Specification for Enriched Annular $LiAlO_2$ Pellets*
TTQP-1-077	*Production Specification for LWR Tritium Target Rod Bare Zircaloy Tube*
TTQP-1-079	*Production Specification for LWR Tritium Target Rod Top and Bottom End Plugs*
TTQP-1-080	*Production Specification for LWR Tritium Target Rod Top and Bottom End Plug Welding*
TTQP-1-083	*Production Specification for LWR Tritium Target Rod Stainless Steel Bar Stock for End Plugs*
TTQP-1-089	*Production Specification for LWR Tritium Target Rod Spring Clip*
TTQP-1-134	*Production Specification for Assembling TPBARs onto a Holddown Base Plate*
PNNL-TTQP-1-690	*Production Specification for LWR Tritium Target Rod Final Assembly (U)*
PNNL-TTP-1-1078	*Mark 8 Final Assembly Specification (U)*
PNNL-TTQP-1-692	*Specification for LWR Tritium Target Rod Inside Diameter Aluminide Barrier (U)*
PNNL-TTQP-1-826	*Final Product Specification for Production LWR Activated, Plated Getter Tubes (U)*
PNNL-TTQP-1-920	*Specification for Production LWR Full-Length Getter Tubes (U)*
PNNL-TTQP-1-941	*Production Specification for LWR Tritium Target Rod Final Assembly Using Full-Length Getters (U)*
PNNL-TTP-1-1073	*Specification for LWR TPBAR Getter Disks (U)*

APPENDIX C: COMPONENT ACCEPTANCE TEST REQUIREMENTS (ALL AT LATEST REVISION)

Note: "PNNL" prefix in the document number denotes a classified document, and "U" following the document title designates an unclassified title.

Document Number	Title
TTQP-1-081	*TPBAR Component Characteristics and Related Importance Factors*
TTQP-1-085	*Design Requirements for TTQP Weld Joint Burst Testing Matrix/Test Plan*
TTQP-1-129	*Qualification Requirements for Coated Cladding Bending*
PNNL-TTQP-1-829	*Standard Getter Rate Test Requirements (U)*
PNNL-TTQP-1-830	*Requirements for a Standard Cladding D_2 Permeation Test (U)*
PNNL-TTQP-1-867	*Test Plan for Target Rod Spring Clip (U)*

APPENDIX 1-B

TTQP-1-091, "Unclassified TPBAR Releases, Including Tritium," Revision 14

U.S. DEPARTMENT OF ENERGY

PNNL-22085

Prepared for the U.S. Department of Energy
under Contract DE-AC05-76RL01830

Unclassified TPBAR Releases, Including Tritium

TTQP-1-091, Revision 14

RL Gruel
CK Thornhill

July 2012

Pacific Northwest
NATIONAL LABORATORY

Proudly Operated by Battelle *Since 1965*

DISCLAIMER

This report was prepared as an account of work sponsored by an agency of the United States Government. Neither the United States Government nor any agency thereof, nor Battelle Memorial Institute, nor any of their employees, makes any **warranty, express or implied, or assumes any legal liability or responsibility for the accuracy, completeness, or usefulness of any information, apparatus, product, or process disclosed, or represents that its use would not infringe privately owned rights.** Reference herein to any specific commercial product, process, or service by trade name, trademark, manufacturer, or otherwise does not necessarily constitute or imply its endorsement, recommendation, or favoring by the United States Government or any agency thereof, or Battelle Memorial Institute. The views and opinions of authors expressed herein do not necessarily state or reflect those of the United States Government or any agency thereof.

PACIFIC NORTHWEST NATIONAL LABORATORY
operated by
BATTELLE
for the
UNITED STATES DEPARTMENT OF ENERGY
under Contract DE-AC05-76RL01830

Printed in the United States of America

Available to DOE and DOE contractors from the
Office of Scientific and Technical Information,
P.O. Box 62, Oak Ridge, TN 37831-0062;
ph: (865) 576-8401
fax: (865) 576-5728
email: reports@adonis.osti.gov

Available to the public from the National Technical Information Service,
U.S. Department of Commerce, 5285 Port Royal Rd., Springfield, VA 22161
ph: (800) 553-6847
fax: (703) 605-6900
email: orders@ntis.fedworld.gov
online ordering: http://www.ntis.gov/ordering.htm



This document was printed on recycled paper.
(9/2003)

TRITIUM TECHNOLOGY PROGRAM

UNCLASSIFIED TPBAR RELEASES, INCLUDING TRITIUM

TTQP-1-091

Revision 14

Effective Date: 07/24/12

TRITIUM TECHNOLOGY PROGRAM

UNCLASSIFIED TPBAR RELEASES, INCLUDING TRITIUM

Revision 14

Prepared By:	RL Gruel, Technical Advisor	7/12/12 Date
Reviewed By:	KA Burns, Engineer	7/12/12 Date
Reviewed By:	NL Mara, Design Database Administrator	7/12/12 Date
Reviewed By:	TM Brewer, Quality Engineer	7-13-12 Date
Reviewed By:	Authorized Derivative Classifier	7/12/12 Date
Reviewed By:	EF Love, Design Task Manager	7/13/12 Date
Approved By:	CK Thornhill, TTP Project Manager	7/16/12 Date

1.0 INTRODUCTION

This document provides a listing of unclassified tritium release values that should be assumed for unclassified analysis. Much of the information is brought forth from the related documents listed in Section 5.0 to provide a single-source listing of unclassified release values. This information has been updated based on current design analysis and available experimental data.

2.0 SUMMARY OF UNCLASSIFIED RELEASES, INCLUDING TRITIUM

All tritium-producing burnable absorber rod (TPBAR) analyses presented here assume that a maximum of 1.2 grams of tritium per TPBAR will be generated during an 18-month operating cycle (Lopez and Love, 2006). Tables 1, 2, and 3 provide a summary of the information provided in this section.

Table 1. Summary of Unclassified Tritium Release Assumptions for Non-Transportation Scenarios

In-Reactor Permeation (at ~600 F)	In-Reactor Release from Defective TPBARs	Spent Fuel Pool Accident Releases (<200ºF)	Tritium Releases from TPBARs in Storage Canisters (<200ºF)
Less than 0.53 mCi per TPBAR per hour	Released as it is generated	The Tennessee Valley Authority take-action limit of 60 microcuries per ml of spent fuel pool water will not be exceeded following the simultaneous breach of up to 24 TPBARs. The best estimate total tritium release in this event is less than 25% of the total TPBAR tritium inventory. The release rate will be < 3% (of initial inventory) per hour. The instantaneous release of tritium from breached TPBARs (as gas within the released gas from the TPBARs) will not exceed 0.001 Ci/TPBAR. The concentration of lithium and aluminum in the spent fuel pool following a 24-TPBAR breach will not exceed 400 ppb and 50 ppb, respectively.	Tritium partial pressure within storage canisters containing LTA TPBARs and sections will not exceed 25 torr. Tritium release from extracted TPBARs will not exceed 1% of the declared tritium residual.

Table 2. Summary of Unclassified Tritium Release Assumptions for Cask Transportation Scenarios

Intact TPBARs			Event-Failed TPBARs				TPBARs Pre-Failed In-Reactor	
Ambient to 200 ºF	>200ºF to 650ºF	>650ºF to 1050ºF	Ambient to 200°F	>200°F to 650ºF	>650°F to 1050°F	>1050°F	Ambient to 200°F	>200°F
<0.05 mCi per hour for 300 or less TPBARs	<0.60 mCi per hour	<0.5 Ci per TPBAR per hour	<0.1 Ci per TPBAR per hour	<55 Ci total per TPBAR	<100% of inventory	100% of inventory	<0.1 Ci per TPBAR per hour	up to 100% of inventory

Table 3. Unclassified Helium Release Assumption for Cask Transportation Scenarios

TPBAR Condition	TPBAR Condition	Helium Release to Cask
Intact	Intact	No release
Event-Failed	Event-Failed	0.42 moles per TPBAR (following shutdown and 90-day cooling period), plus the decay-generated moles of He-3 at time t (years) following the cooldown, calculated as: He-3(moles) = (0.4-0.0055)*{1 – exp[-(ln2)*t/12.32]}

2.1 Intact TPBAR In-reactor Tritium Permeation

The in-reactor tritium permeation rate deduced from RCS tritium activity for the group of 240 Mark 9.2 (FLG) design TPBARs in Watts Bar Cycle 10, averaged over 513 EFPDs, was 3.8 ± 0.8 Ci/TPBAR/year (95% confidence interval) (Shaver and Niehus, 2011). The 95% upper bound of 3.8 + 0.8 = 4.6 Ci/TPBAR/year is recommended as the basis for assessing the tritium release from intact TPBARs. This translates to < 0.53 mCi/TPBAR/hour.

2.2 In-reactor Tritium Release from a Failed TPBAR

This scenario involves a TPBAR that may have a fabrication defect or may be damaged prior to insertion into the reactor for irradiation. In this case, 100 percent of the tritium generated in the TPBAR is assumed to be released to the reactor coolant as it is generated (Lanning, 1996).

2.3 TPBAR Releases from Spent Fuel Pool Accidents

2.3.1 Spent Fuel Pool Tritium Concentration Limit

It has been determined that following the simultaneous breach of 24 TPBARs, the Tennessee Valley Authority take-action limit for tritium concentration in the spent fuel pool water will not be exceeded. The concentration limit is 60 microcuries per milliliter. The best estimate of total tritium release in this event is less than 25% of the TPBAR inventory. The release will not be instantaneous, but will occur at a steady rate over a time period substantially greater than 8 hours. The rate will thus be less than 3% (of initial inventory) per hour (Lanning, 2001).

2.3.2 Instantaneous Tritium Release per TPBAR

The instantaneous release of tritium from breached TPBARs in the spent fuel pool (as gas within the released gas from the TPBARs) will not exceed 0.001 Ci/TPBAR (Schmitt, 2012).

2.3.3 Lithium and Aluminum Release

In the event of a 24-TPBAR breach in the spent fuel, the following concentration limits for lithium and aluminum will not be exceeded (Migliore, 2001):

- 400 ppb lithium
- 50 ppb aluminum.

2.4 Tritium Releases from TPBARs within Storage Canisters (<200°F)

The upper-bounding tritium partial pressure within storage canisters containing lead test assembly (LTA) TPBARs or sections is not expected to exceed 20 torr under nominal storage conditions (~86ºF) (Thornhill, 2002). The bounding pressure for maximum temperatures (<200ºF) is estimated by increasing this figure by the ratio of absolute temperatures, to 25 torr.

Tritium release from extracted TPBARs in storage will not exceed 1% of the declared post-extraction residual tritium (Clemmer et al. 1984; and Johnson et al. 1976).

In both cases, the form of the released tritium will be tritiated water vapor or condensate (HTO).

2.5 TPBAR Transportation Cask Event Releases

All of the release rates reported below are for releases from the TPBARs into the transportation cask, not from the transportation cask into the environment; the evaluation of tritium permeation (release) from the shipping cask to the environment is beyond the scope of this review.

2.5.1 Intact TPBARs

2.5.1.1 For TPBAR temperatures ranging from ambient to less than 200ºF, and for casks containing 300 or less TPBARs, the tritium release would be less than 0.05 mCi per hour. The tritium would be released from the TPBARs in the form of molecular tritium gas (i.e., T_2 or HT) (Schmitt, 2012).

2.5.1.2 For TPBAR temperatures ranging from 200ºF to 650ºF, the average tritium release would be less than 0.60 mCi per TPBAR per hour based on the upper-bound in-reactor release rate of 4.6 Ci/TPBAR/year. The tritium would be released from the TPBARs in the form of tritium gas (Schmitt, 2012).

2.5.1.3 For TPBAR temperatures ranging from 650ºF up to 1050ºF (565ºC), the tritium release should be considered to be less than 0.5 Ci per TPBAR per hour. Again, the tritium would be released from the TPBARs in the form of tritium gas (Schmitt, 2012).

2.5.1.4 At temperatures above 1050°F, the TPBARs are assumed to have burst, releasing 100% of the tritium inventory (Schmitt, 2012).

2.5.1.5 Helium release from intact TPBARs is negligible.

2.5.2 Event-failed TPBARs

This section applies to rods breached either 1) in the dry condition (after cask loading) or 2) in water (e.g., spent fuel pool drop) prior to cask loading, but which were dried after cask loading (Schmitt, 2012).

2.5.2.1 For TPBAR temperatures ranging from ambient to 200ºF, the tritium release from a TPBAR whose cladding fails mechanically (e.g., due to impact forces) should be considered to be less than 0.1 Ci per TPBAR per hour (Schmitt, 2012).

2.5.2.2 For TPBAR temperatures ranging from 200°F to 650°F, the total tritium release from a TPBAR whose cladding fails mechanically (e.g., due to impact forces) should be considered to be less than 55 Ci per TPBAR (Schmitt, 2012).

2.5.2.3 For TPBAR temperatures ranging from 650°F to 1050ºF, the tritium release should be considered to be up to 100% of the TPBAR tritium inventory (Schmitt, 2012).

2.5.2.4 For TPBAR temperatures in excess of 1050ºF, it should be assumed that 100 percent of the tritium inventory of the TPBAR would be instantaneously released (Schmitt, 2012).

2.5.2.5 The helium inventory per TPBAR following shutdown and a 90-day cooling period is calculated to be 0.42 moles (total of He-4 from fill gas plus tritium production, plus residual He-3 and decay-generated He-3) [Pagh and Starner, 2007].

The additional He-3 moles per TPBAR generated by tritium decay at any time "t" (years) following the 90-day cooldown can be calculated as:

He-3(moles) = (0.4-0.0055)*{1 – exp[-(ln2)*t/12.32]}.

It is recommended that 100% of all He-3 and He-4 be assumed to be released from event-failed TPBARs. This assumption may be significantly conservative for decay-generated He-3, since it is largely retained within the solid internal components of the TPBAR. However, a specific postirradiation temperature history for the TPBAR components would be required to calculate specific release fractions.

2.5.3 Pre-failed TPBARs

This section applies to rods that have pre-existing cladding breaches (in-reactor) prior to cask loading (Schmitt, 2012).

2.5.3.1 Casks used for transportation of TPBARs are assumed to contain up to 300 rods, two of which can be pre-failed (NAC-LWT SAR, 2008). For pre-failed TPBARs at temperatures ranging from ambient to less than 200°F, the tritium release for event-failed TPBARs – 0.1Ci per TPBAR per hour – applies (Schmitt, 2012).

2.5.3.2 Without further definition of the timing and nature of the failure and the subsequent operational and cask environmental conditions, it is conservative to assume that 100% of the pre-failed TPBAR inventory is released to the cask during transport when temperatures exceed 200°F (Schmitt, 2012).

3.0 FLAMMABLE GAS SOURCES

Because transportation accident temperatures are limited to 402°F, flammable gas generation for temperatures greater than ~400°F are not considered here.

Releases from event-failed rods (i.e., 55 Ci/TPBAR) will result in the release of 0.30 moles of T_2O and HTO from the 298 event-failed rods. The pre-failed TPBARs are assumed to be waterlogged, and for the purposes of estimating tritium release, the potential flammable hydrogen (H_2) gas formation from these rods is calculated assuming 100% release of the potential 7.75 moles of water per TPBAR. This results in a total of up to 15.8 moles of water (H2O, T2O, and HTO) that can be released to the cask.

The conversion of this water to hydrogen gas is based upon temperature dependent oxidation rates from reaction with hot steel surfaces. This results in the generation and release of 0.18 moles of flammable gas per year at temperatures up to 200°F and release of 0.72 moles of flammable gas per year at temperatures up to 400°F.

These bounding estimates for moisture release and flammable gas formation are summarized in Table 4 (Schmitt, 2012).

Table 4. Summary of Unclassified Bounding Flammable Gas Formation and Moisture Release for Cask Transportation Scenarios

Flammable Gas Formation [1]			
Intact TPBARs		**Event-Failed and Pre-Failed TPBARs**	
Ambient to 200°F	>200°F to 400°F	Ambient to 200°F	>200°F to 400°F
Negligible	Negligible	<0.18 moles per year	<0.72 moles per year
Moisture Release from TPBARs [2]			
Intact TPBARs		**Event-failed TPBARs**	**Pre-failed TPBARs**
Negligible		0.30 moles (for 298 TPBARs)	15.5 moles (for 2 TPBARs)

[1] Moles refer to moles H_2 equivalent
[2] Moles refer to moles H_2O equivalent

4.0 SHIPMENT OF TPBAR SEGMENTS AND FINES

Shipment of sectioned TPBARs plus cutting fines is planned. Such shipments will be bounded in content by up to 55 equivalent TPBAR lengths (NAC-LWT SAR, 2008), with tritium content of the TPBARs less than the design limit of 1.2 grams tritium per TPBAR. The segments are expected to retain their internal components largely intact; however, impact loads during shipment could result in an undetermined extent of pellet cracking and further fragmentation of pellet pieces. Conservatively, it is assumed that 100% of the tritium in the pellets is released during shipment. This bounding assumption regarding tritium release from pellets is judged to include any in-shipment release of the residual tritium in the cutting fines.

The same declarations made in Section 3.0 above for event-failed rods apply to the shipment of TPBAR segments regarding the expected form of the released tritium and the conversion to flammable species. That is, the expected forms of the released tritium are T_2O and HTO and the conversion to flammable species (T_2 and HT) will result in the release of 0.055 moles of flammable gas from the 55 equivalent TPBAR lengths (0.30 moles*55/298), given cask temperatures less than 400ºF.

Table 5 indicates the bounding quantities of released tritium and flammable gas generation for shipment of TPBAR segments as described above.

Table 5. Summary of Unclassified Bounding Tritium Release and Flammable Gas Formation for Cask Shipment of TPBAR Segments and Cutting Fines (up to 55 Equivalent TPBARs)

Tritium Releases		**Flammable Gas Generation** (moles refer to moles H_2 equivalent)	
Ambient to 200°F	>200°F to 400°F	Ambient to 200°F	>200°F to 400°F
100% of pellet inventory	100% of pellet inventory	Negligible	< 0.055 moles

5.0 RELATED DOCUMENTS

Letter. July 1, 2002. CK Thornhill (PNNL) to D Duncan (ANL-W), *Tritium Pressure from Previously Breached TPBARs During Storage (U)*. PNNL-TTQP-1-937, Pacific Northwest National Laboratory, Richland, Washington.

Clemmer RG, PA Finn, RF Malecha, B Misra, MC Billone, DL Bowers, AK Fischer, LR Greenwood, RF Mattas, and SW Tam. 1984. *The TRIO Experiment.* ANL-84-55, Argonne National Laboratory, Argonne, Illinois.

Johnson AB, TJ Kabele, and WE Gurwell. 1976. *The Coproduct Program*. BNWL-2097, Pacific Northwest National Laboratory, Richland, Washington.

Lanning DD. 1996. *Tritium Release from Ruptured and Waterlogged Rods (U)*. PNNL-TTQP-1-522, Revision 0, Pacific Northwest National Laboratory, Richland, Washington.

Lopez A and EF Love. 2006. *Functional Design Requirements for the Production Design Tritium-Producing Burnable Absorber Rod (U).* PNNL-TTQP-1-689, Revision 10, Pacific Northwest National Laboratory, Richland, Washington.

Migliore RJ. 2001. *Aluminum and Lithium Concentrations in the Spent Fuel Pool Following a Multiple TPBAR Breach (U).* PNNL-TTQP-1-767, Revision 0, Pacific Northwest National Laboratory, Richland, Washington.

NAC-LWT SAR. 2008. *Legal Weight Truck Cask System Safety Analysis Report*. NAC International, Rev. 39.

Pagh RT and JR Starner. 2007. *Release of Gas-Phase Components and Fines During Transportation Breach of Production TPBAR.* TTQP-1-2061, Revision 2, Pacific Northwest National Laboratory, Richland, Washington.

Schmitt BE. 2012. *TPBAR Tritium Releases (U).* PNNL-TTQP-1-735, Revision 10, Pacific Northwest National Laboratory, Richland, Washington.

Shaver MW and MT Niehus. 2011. *WBN-1 Cycle 10 TPBAR Tritium Release, Deduced from Analysis of Cycle 10 RCS Data.* TTP-1-3046-00, Revision 0, Pacific Northwest National Laboratory, Richland, Washington.

APPENDIX 1-C

TTQP-1-111, "Unclassified Bounding Source Term, Radionuclide Concentrations, Decay Heat, and Dose Rates for the Production TPBAR," Revision 5

VERIFIED DISTRIBUTION
COPY NO. 00009

R- 204306

TRITIUM TECHNOLOGY PROGRAM

UNCLASSIFIED BOUNDING SOURCE TERM, RADIONUCLIDE CONCENTRATIONS, DECAY HEAT, AND DOSE RATES FOR THE PRODUCTION TPBAR

TTQP-1-111

Revision 5

Effective Date: 12/14/05

TRITIUM TECHNOLOGY PROGRAM

UNCLASSIFIED BOUNDING SOURCE TERM, RADIONUCLIDE CONCENTRATIONS, DECAY HEAT, AND DOSE RATES FOR THE PRODUCTION TPBAR

Revision 5

Prepared By:	Richard J Pagh **R.T. Pagh, Senior Development Engineer**	12/13/05 **Date**
Reviewed By:	George H. Mennetheu **Technical Reviewer**	12/13/05 **Date**
	for T Brewer **Quality Engineer**	12/13/05 **Date**
	BD Reid **Authorized Derivative Classifier**	12/13/05 **Date**
Approved By:	BD Reid **B.D. Reid, Design Task Manager**	12/13/05 **Date**
	CK Thornhill **C.K. Thornhill, TTP Project Manager**	12/14/05 **Date**

TTP Design Analysis Report	EDP: D01398-EDP03 Rev. 12 TTQP-1-112, Rev. 12
Title: Unclassified Bounding Source Term, Radionuclide Concentrations, Decay Heat, and Dose Rates for the Production TPBAR (U)	Number: TTQP-1-111 Revision: 5

Purpose and Description of Design Analysis: The constituents of a TPBAR become radioactive during irradiation in a reactor. This analysis will determine the unclassified bounding source term, radionuclide concentrations, decay heat, and dose rates of an irradiated production TPBAR and the hold-down assembly.

Changes to Previous Proven Designs or the Analysis of Previous Proven Designs: Inclusion of Appendix D containing trace radionuclide concentrations in TPBAR.

Unverified Assumptions and/or Unverified Inputs (including source identification if available): None

Method of Analysis: Radionuclide concentrations, decay heat, and source terms are estimated using ORIGEN2. Dose rates are estimated using MCNP.

Computer Codes used including Version and Computer Processor(s) or Model(s) Used: ORIGEN2 Version 2.1b, MCNP 4C, and Excel 97 on a Dell OptiPlex Gx1, Pentium II processor. ORIGEN2 Version 2.2 on a Dell Precision 650, Pentium IV processor.

Summary of Results: The primary calculated values are given in the body of this report. Complete results for TPBAR radionuclide concentrations, decay heat, and source terms are presented in Tables 3 through 5, respectively, for various decay times. Similar results for the hold-down assembly are presented in Tables 6-8, results for the thimble plug are given in Tables 9-11. Complete results for the dose rates for a TPBAR and hold-down assembly are presented in Tables 12 and 13, respectively. Axial power profile is shown in Figure 2. Material constituents are given in Appendix A. ORIGEN2 input is given in Appendix B. MCNP input is given in Appendix C. Trace radionuclide concentrations for the TPBAR are provided in Appendix D.

	Signature	Date
Responsible Engineer(s)	RT Pagh Richard T Pagh	12/13/05
Design Verifier(s)	George H. Meredith	12/13/05
TTP ADC	G O'Reid	12/13/05
Quality Engineer	/S Dukelow for T Brewer	12/13/05
Design Task Manager	G O'Reid	12/13/05
Design Database Administrator (N/A for Revision 0)	Kent Marcy	12/13/05

1.0 INTRODUCTION

During the tritium-producing burnable absorber rod (TPBAR) irradiation, the components of the TPBAR will become radioactive as a result of neutron capture. The irradiated TPBAR will emit a spectrum of photons from the radioactive decay of these activation products. This radioactive decay also generates decay heat in the TPBAR.

Unclassified bounding estimates of radionuclide concentrations, photon source term, and decay heat have been made for an irradiated production TPBAR and are presented in this calculation. These results bound irradiation of the production TPBAR in any anticipated host reactor. This information is needed to address waste classification, waste disposal, and transportation. Additionally, the source term is needed for dose-rate calculations. Dose rate calculations are performed for several representative configurations and are included in this calculation.

These calculations are performed for both the TPBAR (absorber, getter, liner, cladding, plenum, spring clip, and end plugs) and the hold-down assembly. This calculation bounds all TPBAR designs including the full-length getter design.

2.0 METHODOLOGY

2.1 ORIGEN2 Methodology

The radionuclide concentrations, source term, and decay heat of an irradiated TPBAR and hold-down assembly were estimated using the ORIGEN2 code (RSIC 1996). The ORIGEN family of codes has been used extensively in the past to estimate radionuclide inventories when measurements were not available. Input to ORIGEN2 consists primarily of the total masses of the constituent elements (including trace elements), the power density of the fuel, and the irradiation time.

Reactor data is given in Table 1. A uranium-235 enrichment of 3% was assumed. A lower enrichment is more conservative than a higher enrichment because the neutron flux will be higher to maintain the desired power level. The specific power used for the ORIGEN2 input was calculated by dividing the assembly burnup by the irradiation time. The specific power represents a radial peaking factor of 1.5 for the reactor.

Masses for the elements present in a TPBAR and hold-down assembly are derived in Appendix A. Impurities, which are important for both source term and waste classification analysis, are included for the various components. The cobalt in the stainless steel is the primary contributor to the dose rate for both the TPBAR and hold-down assembly. Both SS-304 and SS-316 contain 500 ppm cobalt. It needs to be noted that the bounding mass derived in Appendix A is valid only for

radiological source calculations. For mechanical analysis or radiological shielding analysis, the bounding TPBAR mass of 2.3 lbs. listed in Lopez (2002) for the Sequoyah Units and Lopez (2003) for Watts Bar should be referenced.

Table 1. Reactor Data

Reactor Data from Lopez 2002, 2003	
Parameter	**Value**
Mass of U, kg/assembly	462
Number of assemblies	193
Reactor Power, MW	3,459
Irradiation Time, d	510
Maximum Assembly Burnup, MWd/MTU	29,700
Assumptions	
U-235 enrichment, wt%	3.000
U-234 content is small and can be treated as if it is U-238.	
Reactor is at full power throughout the cycle.	
Calculated Numbers	
Mass U-235, g/MTU	30000
Mass U-238, g/MTU	970000
Specific Power for Assembly, MW/MTU	58.24
Radial Assembly Peaking Factor	1.50

ORIGEN2 was executed for the following 3 cases:

- complete TPBAR
- hold-down assembly (without thimble plugs)
- single thimble plug (SS-304)

The hold-down assembly and the thimble plugs are located above the active core. Therefore, the results must be modified by conservative "scaling factors" to account for the fact that these components are located outside the active region of the core.

The various components, their masses determined for radiological source analysis, and appropriate scaling factors are summarized in Table 2. Note that the average scaling factor for a thimble plug is 0.2 for radionuclide concentrations and decay heat. Since the thimble plug will activate more at the end closer to the core, where the scaling factor is estimated to be 0.5 (Guenther et al. 1988), the scaling factor for the thimble plug photon source term is assumed to be 0.5 to be conservative.

The scaling factor for the hold-down assembly was applied to the output from the ORIGEN2 calculation. The calculation for the thimble plug was made as one gram of material. The output from each calculation was multiplied by the mass of the thimble plug (150 grams) and the appropriate scaling factors.

Table 2. Summary of ORIGEN2 Cases

Component	Material	Mass (g)	Scaling Factor
Complete TPBAR	SS-316, Lithium Aluminate, Nickel, Aluminum, Zircaloy	1245	1.0 (no scaling factor) Note: Mass is valid only for radiological source calculations. Bounding mechanical and shielding mass of 2.3 lbs. is listed in Lopez (2002) and Lopez (2003).
Hold-Down Assembly (no thimble plugs)	SS-304 and Inconel	2815	0.1 (Migliore et al. 1994)
Single Thimble Plug	SS-304	150	0.2 for radionuclide concentrations and decay heat (Luksic 1989, averaged over whole thimble plug) 0.5 for source terms (Guenther et al. 1988)

ORIGEN2 input for each of these cases is given in Appendix B.

ORIGEN2 output does not report a complete list of radionuclides generated by irradiation as this list would be quite long. Rather the code provides a threshold value below which concentrations are not reported. For the above cases the threshold is set at a value such that any radionuclide whose value is nine orders of magnitude below the total for the item is not reported. In most cases this is sufficient to identify important radionuclides of concern. However, parent-daughter products (such as Sr-90 and Y-90) may not both be displayed if one of the radionuclides does not meet the threshold. Appendix D provides a listing of radionuclide concentrations for the TPBAR where the threshold has been lowered to report any concentration greater than 1 picocurie.

2.2 MCNP Methodology

Dose rates were estimated for the unshielded TPBAR and hold-down assembly using the MCNP code (RSICC 2000). MCNP is a general-purpose particle transport code commonly used for shielding applications. MCNP allows the user to model the problem geometry in as much detail as the user demands. Input includes the problem geometry, materials, and source term.

TPBAR Geometry. The TPBAR was modeled in a simplified manner as a piece of bare cladding using smeared geometry (but not smeared compositions) as described in Love (2003). Smeared geometry was used because the source term was calculated for the entire TPBAR, not for individual TPBAR components. To add conservatism the source (Table 5) is uniformly distributed throughout the smeared cladding region (i.e., no source in the inner region of the TPBAR). This assumption was made because the largest contributor to the dose rate is from cobalt activation in the cladding. Even more conservatism could be added by using unsmeared cladding dimensions because this would concentrate the source closer to the surface, but this level of conservatism is unwarranted because there will be a contribution to the dose rate from the TPBAR internals, which is approximately modeled by using smeared cladding dimensions. The entire length of the TPBAR was modeled. No shielding material was used in the model and the TPBAR is detached from the hold-down assembly.

Hold-Down Assembly Geometry. The geometry of the hold-down assembly was modeled in a simplified manner. All dimensions used in the model are approximate and sufficient to describe the hold-down assembly for the purpose of dose rate analyses. Dimensions are assumed and were chosen based upon the approximate cross sectional area of a fuel assembly and from personal communication with Westinghouse.

The TPBARs will be removed from the hold-down assembly prior to extraction, leaving only the thimble plugs. It was assumed that a hold-down assembly would contain at least 4 TPBARs, leaving 20 thimble plugs on the hold-down assembly. Figure 1 shows the assumed loading pattern. Each thimble plug was modeled as a cylinder with a radius of 0.5 cm and a length of 16 cm. The hold-down assembly itself was modeled as a cylindrical plate 0.7 cm thick with a radius of 12 cm. (Note: The entire mass and source term of the hold-down assembly is modeled as a single plate.) The steel composition was modeled as pure iron with an assumed density of 8 g/cc (approximate density of steel from Livingston 2001). No shielding material was used in the model.

The source term for the hold-down assembly (Table 8) is distributed uniformly throughout the plate. The source term for a thimble plug (Table 11) is distributed uniformly throughout each thimble plug. Note that the average scaling factor for a thimble plug is 0.2 for radionuclide concentrations (see Table 2). Because the thimble plug will activate more at the end closer to the core, where the scaling factor is estimated to be 0.5, to be conservative the source strength for a thimble plus is assumed to be 0.5 in the MCNP calculations.

Flux-to-dose rate conversion factors are used by MCNP to estimate dose rates. The conversion factors used are the ANSI/ANS-6.1.1-1977 standard

(Battat 1977). A 1991 standard is also available, but the 1977 standard is still in wide use and gives more conservative results than the 1991 standard.

The dose rates for both the TPBAR and hold-down assembly are computed for decay times of 7 days, 90 days, 180 days, 1 year, and 5 years. For the TPBAR, dose rates are calculated at the surface and at a distance of lm along the entire length. Dose rates at lm (radial) are also given for the centermost lm (axial) and represent an average over this axial region. For the hold-down assembly, dose rates are calculated at the top of the assembly, bottom of the thimble plugs, and around the sides of the assembly (at a radial distance of 12 cm from the centerline). All dose rates are averaged over surface areas.

Select MCNP input files are included in Appendix C.

3.0 ORIGEN2 RESULTS FOR RADIONUCLIDE CONCENTRATIONS, DECAY HEAT, AND PHOTON SOURCE TERMS; MCNP RESULTS FOR DOSE RATES

Complete results for TPBAR radionuclide concentrations, decay heat, and source terms are presented in Tables 3 through 5, respectively, for various decay times. The tritium results for the complete TPBAR have been forced to match the functional requirement of 1.2 g tritium maximum per TPBAR (e.g., the ORIGEN2 results for tritium are not reported in Tables 3 and 4). Similar results for the hold-down assembly are presented in Tables 6 through 8 and results for the thimble plug are given in Tables 9 through 11.

Complete results for the dose rates for a TPBAR and hold-down assembly are presented in Tables 12 and 13, respectively.

The source term was axially distributed uniformly throughout the TPBAR, i.e., core axial peaking was ignored in both the source term and dose rate analyses. Sufficient conservatism exists in the calculation that treating the axial peaking explicitly was unwarranted. The components were also modeled as existing in a vacuum and having no air attenuation, back-scattering, or other buildup factors included in the dose rates.

The relative axial profile of power per unit length for the TPBAR (without the bottom end plug) is shown in Figure 2. The peak-to-average ratio for this profile is 1.15. The bottom end plug is not shown as it represents 6.8% of the total power of the TPBAR. The remainder of the power is distributed as shown in Figure 2. This axial power distribution accounts for axial distribution of neutron fluence as deduced from the end of life axial distribution of tritium production, and also accounts for the higher mass/unit length in the bottom spacer region, which is the cause of the rise at the bottom end. This profile is provided for reference but was not used in these calculations.

The calculations in this document are conservative based upon the input assumptions and the calculational approach. The major assumptions are:

- Cobalt-60 is the major contributor to the dose rates. 500 ppm of cobalt was assumed for the calculations, which is the highest allowed by the stainless steel specification. The actual cobalt concentration could be a factor of 2 lower, which would cause the actual dose rates to be a factor of 2 lower than those calculated.

- Experimental data shows that ORIGEN2 tends to calculate cobalt-60 approximately 50% higher than expected (Migliore et. al. 1994).

- The flux-to-dose-rate conversion factors used in MCNP are a conservative set. The dose rates would decrease if a less conservative set of factors were used.

- The hold-down assembly was modeled as a plate. The actual hold-down assembly extends above the bottom plate, which would spread the source over a larger volume. The dose rate at the top of the hold-down assembly should decrease if a more detailed model were employed.

Table 3. Radionuclide Concentrations in a TPBAR (Ci/TPBAR)

Nuclide	7 Days	30 Days	90 Days	180 Days	1 Year	5 Years	10 Years
H-3[1]	1.16E+04	1.15E+04	1.14E+04	1.13E+04	1.10E+04	8.76E+03	6.61E+03
C 14	1.42E-03	1.42E-03	1.42E-03	1.42E-03	1.42E-03	1.42E-03	1.42E-03
NA 24	1.98E-02	1.65E-13	0.00E+00	0.00E+00	0.00E+00	0.00E+00	0.00E+00
P 32	1.03E+00	3.38E-01	1.84E-02	2.35E-04	3.02E-08	5.78E-10	5.75E-10
S 35	1.37E-02	1.15E-02	7.15E-03	3.52E-03	8.18E-04	8.22E-09	4.65E-15
AR 37	3.79E-01	2.40E-01	7.32E-02	1.23E-02	3.15E-04	8.74E-17	1.76E-32
AR 39	9.49E-03	9.49E-03	9.48E-03	9.48E-03	9.46E-03	9.37E-03	9.25E-03
K 42	2.18E-04	8.34E-12	8.31E-12	8.27E-12	8.18E-12	7.52E-12	6.77E-12
CA 41	7.51E-05	7.51E-05	7.51E-05	7.51E-05	7.51E-05	7.51E-05	7.51E-05
CA 45	3.13E-01	2.84E-01	2.20E-01	1.50E-01	6.82E-02	1.37E-04	5.78E-08
CA 47	1.57E-04	4.66E-06	4.86E-10	5.17E-16	2.62E-28	0.00E+00	0.00E+00
SC 46	8.20E-03	6.78E-03	4.13E-03	1.96E-03	4.24E-04	2.39E-09	6.57E-16
SC 47	5.68E-04	1.76E-05	1.86E-09	1.98E-15	1.00E-27	0.00E+00	0.00E+00
CR 51	9.67E+02	5.44E+02	1.21E+02	1.28E+01	1.24E-01	1.66E-17	2.38E-37
MN 54	4.19E+01	3.98E+01	3.48E+01	2.85E+01	1.89E+01	7.41E-01	1.29E-02
FE 55	2.15E+02	2.12E+02	2.03E+02	1.90E+02	1.66E+02	5.71E+01	1.51E+01
FE 59	1.98E+01	1.39E+01	5.52E+00	1.38E+00	7.96E-02	1.34E-11	8.14E-24
CO 58	2.69E+02	2.15E+02	1.19E+02	4.95E+01	8.06E+00	4.92E-06	8.41E-14
CO 60	3.60E+01	3.57E+01	3.49E+01	3.38E+01	3.16E+01	1.87E+01	9.68E+00
NI 59	1.68E-01	1.68E-01	1.68E-01	1.68E-01	1.68E-01	1.68E-01	1.68E-01

1 The ORIGEN2 values for H-3 are not reported. The values given for H-3 are based on a maximum of 1.2 g of tritium per TPBAR at discharge, as specified in the Functional Requirements document (Lopez 2003). There is 9664 Ci per gram of tritium, and the half-life of tritium is 12.33 years. The value of 1.2 g at discharge is decayed appropriately for the various decay times.

Nuclide	7 Days	30 Days	90 Days	180 Days	1 Year	5 Years	10 Years
NI 63	2.29E+01	2.29E+01	2.28E+01	2.28E+01	2.27E+01	2.20E+01	2.12E+01
NI 66	1.52E-04	1.38E-07	1.59E-15	1.97E-27	0.00E+00	0.00E+00	0.00E+00
CU 64	1.27E-03	1.04E-16	0.00E+00	0.00E+00	0.00E+00	0.00E+00	0.00E+00
CU 66	1.52E-04	1.38E-07	1.59E-15	1.97E-27	0.00E+00	0.00E+00	0.00E+00
ZN 65	4.13E-03	3.87E-03	3.26E-03	2.52E-03	1.49E-03	2.34E-05	1.31E-07
AS 76	8.74E-01	4.25E-07	1.44E-23	0.00E+00	0.00E+00	0.00E+00	0.00E+00
SE 75	8.88E-01	7.77E-01	5.49E-01	3.26E-01	1.12E-01	2.38E-05	6.13E-10
BR 82	1.14E-03	2.25E-08	1.18E-20	0.00E+00	0.00E+00	0.00E+00	0.00E+00
SR 89	7.51E-02	5.48E-02	2.40E-02	6.99E-03	5.49E-04	1.07E-12	1.39E-23
Y 89M	5.48E-04	4.18E-06	1.24E-11	6.39E-20	0.00E+00	0.00E+00	0.00E+00
Y 90	5.14E-01	1.30E-03	1.38E-06	1.37E-06	1.36E-06	1.23E-06	1.09E-06
Y 91	1.92E-01	1.46E-01	7.19E-02	2.47E-02	2.76E-03	8.38E-11	3.36E-20
ZR 89	5.49E-04	4.18E-06	1.25E-11	6.40E-20	5.60E-37	0.00E+00	0.00E+00
ZR 93	1.13E-04	1.13E-04	1.13E-04	1.13E-04	1.13E-04	1.13E-04	1.13E-04
ZR 95	6.57E+01	5.12E+01	2.67E+01	1.01E+01	1.36E+00	1.81E-07	4.63E-16
ZR 97	1.12E-01	1.65E-11	0.00E+00	0.00E+00	0.00E+00	0.00E+00	0.00E+00
NB 92	3.04E-01	6.34E-02	1.06E-03	2.28E-06	7.41E-12	0.00E+00	0.00E+00
NB 93M	3.68E-06	4.02E-06	4.87E-06	6.15E-06	8.73E-06	2.69E-05	4.49E-05
NB 94	4.76E-04	4.76E-04	4.76E-04	4.76E-04	4.76E-04	4.76E-04	4.76E-04
NB 95	6.93E+01	6.50E+01	4.45E+01	1.99E+01	2.94E+00	4.02E-07	1.03E-15
NB 95M	4.80E-01	3.80E-01	1.98E-01	7.48E-02	1.01E-02	1.34E-09	3.44E-18
NB 96	1.20E-03	9.19E-11	2.51E-29	0.00E+00	0.00E+00	0.00E+00	0.00E+00
NB 97	1.13E-01	1.78E-11	0.00E+00	0.00E+00	0.00E+00	0.00E+00	0.00E+00
NB 97M	1.06E-01	1.57E-11	0.00E+00	0.00E+00	0.00E+00	0.00E+00	0.00E+00
MO 93	1.04E-03	1.04E-03	1.04E-03	1.04E-03	1.04E-03	1.04E-03	1.04E-03
MO 99	1.68E+01	5.11E-02	1.38E-08	1.94E-18	0.00E+00	0.00E+00	0.00E+00
TC 99	4.35E-05	4.36E-05	4.36E-05	4.36E-05	4.36E-05	4.36E-05	4.36E-05
RU103	3.21E-03	2.14E-03	7.41E-04	1.52E-04	5.76E-06	3.67E-17	3.71E-31
CD115	2.91E-04	2.27E-07	1.78E-15	1.23E-27	0.00E+00	0.00E+00	0.00E+00
CD115M	1.84E-04	1.28E-04	5.05E-05	1.25E-05	7.00E-07	9.62E-17	4.52E-29
IN113M	1.31E+00	1.14E+00	7.94E-01	4.62E-01	1.51E-01	2.28E-05	3.83E-10
IN114	1.26E-01	9.13E-02	3.94E-02	1.12E-02	8.36E-04	1.10E-12	8.64E-24
IN114M	1.32E-01	9.54E-02	4.12E-02	1.17E-02	8.73E-04	1.15E-12	9.03E-24
SN113	1.31E+00	1.14E+00	7.93E-01	4.61E-01	1.51E-01	2.28E-05	3.82E-10
SN117M	8.21E+00	2.63E+00	1.35E-01	1.57E-03	1.64E-07	0.00E+00	0.00E+00
SN119M	8.42E+00	7.89E+00	6.66E+00	5.16E+00	3.06E+00	4.90E-02	2.80E-04
SN121	7.39E-02	4.66E-08	3.12E-24	0.00E+00	0.00E+00	0.00E+00	0.00E+00
SN121M	5.54E-04	5.53E-04	5.52E-04	5.50E-04	5.46E-04	5.17E-04	4.82E-04
SN123	4.78E-01	4.22E-01	3.06E-01	1.89E-01	6.99E-02	2.75E-05	1.52E-09
SN125	2.20E+00	4.21E-01	5.63E-03	8.71E-06	1.43E-11	0.00E+00	0.00E+00
SB122	1.10E-01	2.99E-04	6.12E-11	5.66E-21	0.00E+00	0.00E+00	0.00E+00
SB124	1.86E-02	1.43E-02	7.16E-03	2.54E-03	3.01E-04	1.49E-11	1.10E-20
SB125	1.67E+00	1.66E+00	1.60E+00	1.50E+00	1.32E+00	4.87E-01	1.39E-01

Nuclide	7 Days	30 Days	90 Days	180 Days	1 Year	5 Years	10 Years
SB126	5.64E-02	1.56E-02	5.45E-04	3.55E-06	1.13E-10	0.00E+00	0.00E+00
TE123M	3.02E-03	2.65E-03	1.87E-03	1.11E-03	3.80E-04	8.02E-08	2.05E-12
TE 125M	3.26E-01	3.40E-01	3.58E-01	3.56E-01	3.22E-01	1.19E-01	3.40E-02
CS131	5.10E-02	2.34E-02	1.17E-03	7.33E-06	1.50E-10	0.00E+00	0.00E+00
BA131	3.68E-02	9.53E-03	2.81E-04	1.43E-06	2.69E-11	0.00E+00	0.00E+00
BA133	7.43E-04	7.40E-04	7.32E-04	7.20E-04	697E-04	5.38E-04	3.90E-04
BA133M	3.65E-05	1.95E-09	1.39E-20	2.26E-37	0.00E+00	0.00E+00	0.00E+00
BA135M	2.77E-04	4.49E-10	3.51E-25	0.00E+00	0.00E+00	0.00E+00	0.00E+00
LA140	3.92E-04	1.86E-07	6.07E-09	4.62E-11	2.02E-15	0.00E+00	0.00E+00
LU177	2.13E-03	1.99E-04	1.57E-06	7.79E-07	3.40E-07	4.95E-10	1.40E-13
HF175	3.25E-02	2.59E-02	1.43E-02	5.86E-03	9.37E-04	4.88E-10	6.84E-18
HF181	8.82E-01	6.06E-01	2.27E-01	5.22E-02	2.52E-03	1.07E-13	1.15E-26
TA182	1.07E+01	9.33E+00	6.50E+00	3.78E+00	1.24E+00	1.85E-04	3.84E-09
TA183	2.54E+01	1.12E+00	3.21E-04	1.56E-09	1.82E-20	0.00E+00	0.00E+00
W181	5.88E-03	5.16E-03	3.66E-03	2.19E-03	7.58E-04	1.78E-07	5.17E-12
W185	2.09E-01	1.69E-01	9.69E-02	4.22E-02	7.64E-03	1.06E-08	5.09E-16
W187	2.68E-02	2.99E-09	2.18E-27	0.00E+00	0.00E+00	0.00E+00	0.00E+00
W188	1.65E-02	1.31E-02	7.22E-03	2.94E-03	4.62E-04	2.12E-10	2.54E-18
RE186	3.18E-02	4.66E-04	7.70E-09	5.16E-16	8.85E-31	0.00E+00	0.00E+00
RE188	1.79E-02	1.33E-02	7.29E-03	2.97E-03	4.67E-04	2.15E-10	2.57E-18
OS191	4.87E-05	1.73E-05	1.16E-06	2.03E-08	4.86E-12	0.00E+00	0.00E+00
TOTAL	1.34E+04	1.28E+04	1.21E+04	1.17E+04	1.12E+04	8.86E+03	6.66E+03

Table 4. Decay Heat in a TPBAR (Watts/TPBAR)

Nuclide	7 Days	30 Days	90 Days	180 Days	1 Year	5 Years	10 Years
H-3[2]	3.90E-01	3.89E-01	3.85E-01	3.80E-01	3.69E-01	2.95E-01	2.23E-01
P 32	1.04E-02	3.42E-03	1.87E-04	2.38E-06	3.06E-10	5.86E-12	5.83E-12
CR 51	2.07E-01	1.17E-01	2.60E-02	2.74E-03	2.66E-05	3.57E-21	5.10E-41
MN 54	2.09E-01	1.98E-01	1.73E-01	1.42E-01	9.42E-02	3.69E-03	6.42E-05
FE 55	7.28E-03	7.15E-03	6.85E-03	6.41E-03	5.60E-03	1.93E-03	5.08E-04
FE 59	1.54E-01	1.08E-01	4.28E-02	1.07E-02	6.16E-04	1.04E-13	6.30E-26
CO 58	1.61E+00	1.29E+00	7.14E-01	2.96E-01	4.82E-02	2.94E-08	5.03E-16
CO 60	5.55E-01	5.50E-01	5.39E-01	5.21E-01	4.88E-01	2.88E-01	1.49E-01
NI 63	2.30E-03	2.30E-03	2.30E-03	2.30E-03	2.29E-03	2.22E-03	2.14E-03
AS 76	7.74E-03	3.76E-09	1.28E-25	0.00E+00	0.00E+00	0.00E+00	0.00E+00
ZR 95	3.33E-01	2.60E-01	1.36E-01	5.11E-02	6.87E-03	9.18E-10	2.35E-18
NB 95	3.32E-01	3.12E-01	2.13E-01	9.53E-02	1.41E-02	1.93E-09	4.93E-18

2 The ORIGEN2 values for H-3 are not reported. The values given for H-3 are based on a maximum of 1.2 g of tritium per TPBAR at discharge, as specified in the Functional Requirements document (Lopez 2003). There is 0.325 W per gram of tritium, and the half-life of tritium is 12.33 years. The value of 1.2 g at discharge is decayed appropriately for the various decay times.

MO 99	5.40E-02	1.64E-04	4.44E-11	6.24E-21	0.00E+00	0.00E+00	0.00E+00
SN117M	1.52E-02	4.88E-03	2.50E-04	2.91E-06	3.03E-10	0.00E+00	0.00E+00
SN119M	4.35E-03	4.08E-03	3.44E-03	2.67E-03	1.58E-03	2.53E-05	1.45E-07
SN125	1.46E-02	2.79E-03	3.73E-05	5.77E-08	9.47E-14	0.00E+00	0.00E+00
SB125	5.23E-03	5.20E-03	5.00E-03	4.70E-03	4.14E-03	1.52E-03	4.35E-04
TA182	9.55E-02	8.31E-02	5.79E-02	3.36E-02	1.10E-02	1.65E-06	3.42E-11
TA183	1.61E-01	7.08E-03	2.03E-06	9.91E-12	1.15E-22	0.00E+00	0.00E+00
Total	4.19E+00	3.35E+00	2.31E+00	1.55E+00	1.05E+00	5.92E-01	3.75E-01

Table 5. Source Term in a TPBAR (Photons/s/TPBAR)

Energy (MeV)	7 Days	30 Days	90 Days	180 Days	1 Year	5 Years	10 Years
1.00E-02	7.73E+12	5.07E+12	2.33E+12	1.14E+12	6.01E+11	3.17E+11	2.28E+11
2.50E-02	6.71E+11	4.15E+11	2.59E+11	1.76E+11	1.03E+11	1.95E+10	7.02E+09
3.75E-02	1.80E+11	1.08E+11	6.65E+10	3.72E+10	1.85E+10	6.83E+09	2.84E+09
5.75E-02	5.80E+11	4.44E+11	2.90E+11	1.60E+11	5.27E+10	4.20E+09	2.15E+09
8.50E-02	1.52E+11	9.81E+10	5.86E+10	2.93E+10	9.11E+09	1.66E+09	8.49E+08
1.25E-01	2.24E+11	1.41E+11	8.80E+10	4.66E+10	1.45E+10	7.08E+08	3.45E+08
2.25E-01	4.52E+11	2.38E+11	1.20E+11	6.46E+10	2.15E+10	1.30E+09	4.20E+08
3.75E-01	3.06E+12	1.73E+12	4.10E+11	6.55E+10	1.94E+10	6.57E+09	1.90E+09
5.75E-01	2.75E+12	2.17E+12	1.21E+12	5.16E+11	1.02E+11	8.36E+09	2.39E+09
8.50E-01	1.56E+13	1.29E+13	7.83E+12	3.77E+12	1.11E+12	2.70E+10	5.28E+08
1.25E+00	3.05E+12	2.96E+12	2.81E+12	2.63E+12	2.38E+12	1.38E+12	7.16E+11
1.75E+00	5.01E+10	3.96E+10	2.20E+10	9.10E+09	1.48E+09	9.09E+02	5.52E+00
2.25E+00	2.12E+09	3.75E+08	3.27E+07	1.84E+07	1.30E+07	7.33E+06	3.80E+06
2.75E+00	7.48E+08	6.48E+04	5.30E+04	4.48E+04	3.88E+04	2.27E+04	1.18E+04
3.50E+00	5.05E+05	1.88E+00	6.13E-02	4.70E-04	3.16E-06	2.87E-06	2.58E-06
5.00E+00	5.21E+03	5.25E-08	6.64E-09	4.23E-09	1.67E-09	1.11E-12	1.93E-15
7.00E+00	6.37E-10	5.81E-10	4.31E-10	2.75E-10	1.09E-10	7.23E-14	1.25E-16
9.50E+00	4.03E-11	3.68E-11	2.72E-11	1.74E-11	6.87E-12	4.57E-15	7.93E-18
TOTAL	3.45E+13	2.63E+13	1.55E+13	8.65E+12	4.44E+12	1.78E+12	9.63E+11

Table 6. Radionuclide Concentrations in a Hold-Down Assembly, no thimble plugs (Ci/HDA) (scaling factor of 0.1 applied)

Isotope	7 Days	30 Days	90 Days	180 Days	1 Year	5 Years	10 Years
H 3	8.61E-07	8.58E-07	8.50E-07	8.39E-07	8.15E-07	6.51E-07	4.92E-07
C 14	3.10E-08	3.10E-08	3.10E-08	3.10E-08	3.10E-08	3.10E-08	3.10E-08
NA 24	1.11E-05	9.27E-17	0.00E+00	0.00E+00	0.00E+00	0.00E+00	0.00E+00
P 32	6.41E-01	2.10E-01	1.15E-02	1.46E-04	1.87E-08	2.15E-10	2.14E-10
P 33	2.92E-05	1.54E-05	2.92E-06	2.41E-07	1.42E-09	3.63E-27	0.00E+00
S 35	1.88E-02	1.57E-02	9.77E-03	4.81E-03	1.12E-03	1.12E-08	6.36E-15
CA 45	4.18E-04	3.79E-04	2.94E-04	2.00E-04	9.11E-05	1.83E-07	7.73E-11
CA 47	1.94E-06	5.77E-08	6.01E-12	6.40E-18	3.25E-30	0.00E+00	0.00E+00
SC 46	5.68E-02	4.69E-02	2.86E-02	1.36E-02	2.93E-03	1.65E-08	4.55E-15
SC 47	2.39E-02	2.05E-04	8.57E-10	3.13E-17	1.24E-29	0.00E+00	0.00E+00
SC 48	6.64E-04	1.07E-07	1.36E-17	1.95E-32	0.00E+00	0.00E+00	0.00E+00
CR 51	5.23E+02	2.94E+02	6.56E+01	6.90E+00	6.71E-02	8.99E-18	1.30E-37

Isotope	7 Days	30 Days	90 Days	180 Days	1 Year	5 Years	10 Years
MN 54	1.96E+01	1.87E+01	1.63E+01	1.34E+01	8.87E+00	3.47E-01	6.04E-03
FE 55	9.65E+01	9.49E+01	9.08E+01	8.50E+01	7.43E+01	2.56E+01	6.74E+00
FE 59	9.09E+00	6.38E+00	2.53E+00	6.33E-01	3.65E-02	6.15E-12	3.73E-24
CO 58	4.10E+01	3.27E+01	1.82E+01	7.53E+00	1.23E+00	7.49E-07	1.28E-14
CO 60	5.41E+01	5.37E+01	5.25E+01	5.09E+01	4.76E+01	2.81E+01	1.46E+01
NI 59	2.56E-02	2.56E-02	2.56E-02	2.56E-02	2.56E-02	2.56E-02	2.56E-02
NI 63	3.48E+00	3.48E+00	3.48E+00	3.47E+00	3.46E+00	3.35E+00	3.23E+00
NI 66	2.31E-05	2.10E-08	2.42E-16	3.00E-28	0.00E+00	0.00E+00	0.00E+00
CU 64	9.68E-04	7.98E-17	0.00E+00	0.00E+00	0.00E+00	0.00E+00	0.00E+00
CU 66	2.32E-05	2.10E-08	2.43E-16	3.01E-28	0.00E+00	0.00E+00	0.00E+00
CU 67	1.03E-06	2.11E-09	2.08E-16	6.40E-27	0.00E+00	0.00E+00	0.00E+00
ZN65	3.18E-03	2.98E-03	2.51E-03	1.95E-03	1.15E-03	1.81E-05	1.01E-07
Y 89M	3.13E-05	2.38E-07	7.10E-13	3.65E-21	0.00E+00	0.00E+00	0.00E+00
Y 90	1.44E-04	3.64E-07	4.92E-11	4.88E-11	4.82E-11	4.38E-11	3.89E-11
ZR 89	3.13E-05	2.39E-07	7.11E-13	3.65E-21	3.36E-38	0.00E+00	0.00E+00
ZR 95	4.18E-04	3.26E-04	1.70E-04	6.41E-05	8.62E-06	1.15E-12	2.95E-21
NB 92	3.04E-02	6.32E-03	1.06E-04	2.27E-07	7.38E-13	0.00E+00	0.00E+00
NB 94	7.76E-04	7.76E-04	7.76E-04	7.76E-04	7.76E-04	7.76E-04	7.76E-04
NB 95	1.38E+00	8.78E-01	2.69E-01	4.57E-02	1.20E-03	2.56E-12	6.54E-21
NB 95M	3.05E-06	2.42E-06	1.26E-06	4.76E-07	6.40E-08	8.55E-15	2.19E-23
NB 96	3.16E-05	2.42E-12	6.60E-31	0.00E+00	0.00E+00	0.00E+00	0.00E+00
MO 93	5.92E-05	5.92E-05	5.92E-05	5.92E-05	5.91E-05	5.91E-05	5.90E-05
MO 99	9.60E-01	2.91E-03	7.87E-10	1.11E-19	0.00E+00	0.00E+00	0.00E+00
TC 99	2.48E-06	2.49E-06	2.49E-06	2.49E-06	2.49E-06	2.49E-06	2.49E-06
RU103	1.83E-04	1.22E-04	4.23E-05	8.64E-06	3.29E-07	2.09E-18	2.12E-32
TOTAL	7.50E+02	5.05E+02	2.50E+02	1.68E+02	1.36E+02	5.74E+01	2.46E+01

Table 7. Decay Heat in a Hold-Down Assembly, no thimble plugs (Watts/HDA) (scaling factor of 0.1 applied)

Isotope	7 Days	30 Days	90 Days	180 Days	1 Year	5 Years	10 Years
P 32	6.50E-03	2.13E-03	1.16E-04	1.48E-06	1.89E-10	2.18E-12	2.17E-12
CR 51	1.12E-01	6.31E-02	1.41E-02	1.48E-03	1.44E-05	1.93E-21	2.78E-41
MN 54	9.77E-02	9.28E-02	8.13E-02	6.66E-02	4.41E-02	1.73E-03	3.01E-05
FE 55	3.26E-03	3.21E-03	3.07E-03	2.87E-03	2.51E-03	8.64E-04	2.28E-04
FE 59	7.04E-02	4.94E-02	1.96E-02	4.90E-03	2.83E-04	4.76E-14	2.89E-26
CO 58	2.45E-01	1.96E-01	1.09E-01	4.50E-02	7.34E-03	4.48E-09	7.65E-17
CO 60	8.35E-01	8.28E-01	8.10E-01	7.84E-01	7.34E-01	4.34E-01	2.25E-01
NI 63	3.51E-04	3.51E-04	3.50E-04	3.50E-04	3.48E-04	3.38E-04	3.25E-04
NB 95	6.63E-03	4.21E-03	1.29E-03	2.19E-04	5.76E-06	1.23E-14	3.14E-23
MO 99	3.08E-03	9.35E-06	2.53E-12	3.56E-22	0.00E+00	0.00E+00	0.00E+00
TOTAL	1.38E+00	1.24E+00	1.04E+00	9.06E-01	7.88E-01	4.36E-01	2.25E-01

Table 8. Source Term for Hold-Down Assembly, no thimble plugs (Photons/s/HDA) (scaling factor of 0.1 applied)

Energy (MeV)	7 Days	30 Days	90 Days	180 Days	1 Year	5 Years	10 Years
1.00E-02	2.76E+12	1.71E+12	6.17E+11	2.62E+11	1.50E+11	5.76E+10	2.93E+10
2.50E-02	4.42E+10	3.60E+10	2.69E+10	2.08E+10	1.67E+10	9.57E+09	4.98E+09
3.75E-02	2.73E+10	2.18E+10	1.60E+10	1.21E+10	9.57E+09	5.45E+09	2.83E+09
5.75E-02	3.48E+10	2.77E+10	1.97E+10	1.44E+10	1.09E+10	6.14E+09	3.18E+09
8.50E-02	1.80E+10	1.39E+10	9.34E+09	6.30E+09	4.39E+09	2.41E+09	1.25E+09
1.25E-01	1.21E+10	7.62E+09	4.79E+09	2.91E+09	1.77E+09	9.27E+08	4.80E+08
2.25E-01	1.31E+10	7.87E+09	4.41E+09	2.12E+09	7.69E+08	3.05E+08	1.58E+08
3.75E-01	1.62E+12	9.13E+11	2.04E+11	2.21E+10	4.49E+08	8.55E+07	4.43E+07
5.75E-01	4.05E+11	3.23E+11	1.80E+11	7.44E+10	1.21E+10	4.93E+06	2.54E+06
8.50E-01	2.21E+12	1.86E+12	1.25E+12	7.54E+11	3.66E+11	1.27E+10	3.13E+08
1.25E+00	4.01E+12	3.97E+12	3.89E+12	3.76E+12	3.52E+12	2.08E+12	1.08E+12
1.75E+00	7.50E+09	5.99E+09	3.33E+09	1.38E+09	2.25E+08	1.37E+02	2.00E-04
2.25E+00	2.12E+07	2.11E+07	2.06E+07	1.99E+07	1.87E+07	1.10E+07	5.71E+06
2.75E+00	4.76E+05	6.51E+04	6.37E+04	6.17E+04	5.77E+04	3.41E+04	1.77E+04
3.50E+00	2.81E+02	4.06E-09	1.53E-09	1.29E-09	9.14E-10	6.44E-11	7.67E-12
5.00E+00	2.92E+00	2.44E-11	0.00E+00	0.00E+00	0.00E+00	0.00E+00	0.00E+00
7.00E+00	0.00E+00	0.00E+00	0.00E+00	0.00E+00	0.00E+00	0.00E+00	0.00E+00
9.50E+00	0.00E+00	0.00E+00	0.00E+00	0.00E+00	0.00E+00	0.00E+00	0.00E+00
TOTAL	1.12E+13	8.91E+12	6.22E+12	4.94E+12	4.09E+12	2.18E+12	1.12E+12

Table 9. Radionuclide Concentrations for Single Thimble Plug (Ci/thimble plug) (scaling factor of 0.2 and mass of 150g applied)

Isotope	7 Days	30 Days	90 Days	180 Days	1 Year	5 Years	10 Years
H 3	9.18E-08	9.15E-08	9.07E-08	8.94E-08	8.69E-08	6.94E-08	5.24E-08
C 14	3.31E-09	3.31E-09	3.31E-09	3.31E-09	3.31E-09	3.31E-09	3.31E-09
P 32	7.69E-02	2.52E-02	1.38E-03	1.75E-05	2.23E-09	2.53E-11	2.51E-11
P 33	3.41E-06	1.80E-06	3.41E-07	2.81E-08	1.65E-10	4.23E-28	0.00E+00
S 35	2.19E-03	1.83E-03	1.14E-03	5.60E-04	1.30E-04	1.31E-09	7.41E-16
SC 47	3.40E-07	2.93E-09	1.34E-14	1.73E-21	8.28E-34	0.00E+00	0.00E+00
SC 48	1.11E-07	1.78E-11	2.26E-21	3.01E-36	0.00E+00	0.00E+00	0.00E+00
CR 51	5.69E+01	3.20E+01	7.13E+00	7.50E-01	7.29E-03	9.77E-19	0.00E+00
MN 54	2.35E+00	2.24E+00	1.96E+00	1.60E+00	1.06E+00	4.16E-02	7.25E-04
FE 55	1.15E+01	1.13E+01	1.08E+01	1.01E+01	8.82E+00	3.04E+00	8.01E-01
FE 59	1.09E+00	7.61E-01	3.02E-01	7.55E-02	4.36E-03	7.34E-13	4.46E-25
CO 58	2.65E+00	2.12E+00	1.18E+00	4.87E-01	7.94E-02	4.85E-08	8.28E-16
CO 60	1.69E+00	1.68E+00	1.64E+00	1.59E+00	1.49E+00	8.79E-01	4.55E-01
NI 59	1.65E-03	1.65E-03	1.65E-03	1.65E-03	1.65E-03	1.65E-03	1.65E-03
NI 63	2.25E-01	2.25E-01	2.25E-01	2.24E-01	2.24E-01	2.17E-01	2.09E-01
NI 66	1.49E-06	1.35E-09	1.56E-17	1.94E-29	0.00E+00	0.00E+00	0.00E+00

Isotope	7 Days	30 Days	90 Days	180 Days	1 Year	5 Years	10 Years
CU 64	1.45E-07	1.20E-20	0.00E+00	0.00E+00	0.00E+00	0.00E+00	0.00E+00
CU 66	1.50E-06	1.36E-09	1.57E-17	1.94E-29	0.00E+00	0.00E+00	0.00E+00
ZN 65	1.01E-07	9.44E-08	7.96E-08	6.16E-08	3.64E-08	5.72E-10	3.19E-12
Y 89M	3.83E-06	2.92E-08	8.69E-14	4.47E-22	0.00E+00	0.00E+00	0.00E+00
Y 90	9.39E-07	2.38E-09	1.21E-12	1.21E-12	1.19E-12	1.08E-12	9.61E-13
ZR 89	3.84E-06	2.92E-08	8.70E-14	4.47E-22	0.00E+00	0.00E+00	0.00E+00
ZR 95	5.12E-05	3.99E-05	2.08E-05	7.85E-06	1.06E-06	1.41E-13	3.61E-22
NB 92	2.16E-03	4.49E-04	7.49E-06	1.62E-08	5.25E-14	0.00E+00	0.00E+00
NB 94	5.04E-06	5.04E-06	5.04E-06	5.04E-06	5.04E-06	5.04E-06	5.04E-06
NB 95	9.08E-03	5.78E-03	1.79E-03	3.13E-04	1.00E-05	3.13E-13	8.01E-22
NB 95M	3.74E-07	2.96E-07	1.55E-07	5.83E-08	7.83E-09	1.05E-15	2.68E-24
NB 96	1.02E-06	7.79E-14	2.12E-32	0.00E+00	0.00E+00	0.00E+00	0.00E+00
MO 93	7.25E-06	7.25E-06	7.25E-06	7.25E-06	7.24E-06	7.24E-06	7.23E-06
MO 99	1.18E-01	3.57E-04	9.65E-11	1.36E-20	0.00E+00	0.00E+00	0.00E+00
TC 99	3.04E-07	3.05E-07	3.05E-07	3.05E-07	3.05E-07	3.05E-07	3.05E-07
RU103	2.24E-05	1.49E-05	5.18E-06	1.06E-06	4.03E-08	2.57E-19	2.60E-33
TOTAL	7.65E+01	5.03E+01	2.32E+01	1.48E+01	1.17E+01	4.18E+00	1.47E+00

Table 10. Decay Heat in a Single Thimble Plug (Watts/thimble plug)
(scaling factor of 0.2 and mass of 150g applied)

Isotope	7 Days	30 Days	90 Days	180 Days	1 Year	5 Years	10 Years
P 32	7.79E-04	2.56E-04	1.39E-05	1.78E-07	2.26E-11	2.56E-13	2.55E-13
CR 51	1.22E-02	6.86E-03	1.53E-03	1.61E-04	1.56E-06	2.10E-22	0.00E+00
MN 54	1.17E-02	1.11E-02	9.75E-03	7.99E-03	5.30E-03	2.07E-04	3.61E-06
FE 55	3.87E-04	3.81E-04	3.65E-04	3.41E-04	2.98E-04	1.03E-04	2.71E-05
FE 59	8.40E-03	5.90E-03	2.34E-03	5.85E-04	3.37E-05	5.68E-15	3.45E-27
CO 58	1.59E-02	1.27E-02	7.04E-03	2.91E-03	4.75E-04	2.90E-10	4.95E-18
CO 60	2.61E-02	2.59E-02	2.53E-02	2.45E-02	2.29E-02	1.36E-02	7.02E-03
NI 63	2.27E-05	2.27E-05	2.27E-05	2.26E-05	2.25E-05	2.19E-05	2.11E-05
MO 99	3.77E-04	1.15E-06	3.10E-13	4.36E-23	0.00E+00	0.00E+00	0.00E+00
TOTAL	7.59E-02	6.31E-02	4.64E-02	3.65E-02	2.91E-02	1.39E-02	7.07E-03

Table 11. Source Term for a Single Thimble Plug (Photons/s/thimble plug)
(scaling factor of 0.5 and mass of 150g applied)

Energy (Mev)	7 Days	30 Days	90 Days	180 Days	1 Year	5 Years	10 Years
1.00E-02	6.95E+11	4.18E+11	1.34E+11	4.68E+10	2.27E+10	4.95E+09	2.35E+09
2.50E-02	6.68E+09	4.76E+09	3.01E+09	1.96E+09	1.36E+09	7.52E+08	3.92E+08
3.75E-02	4.25E+09	2.93E+09	1.83E+09	1.16E+09	7.80E+08	4.27E+08	2.22E+08
5.75E-02	5.49E+09	3.85E+09	2.34E+09	1.42E+09	8.96E+08	4.80E+08	2.49E+08
8.50E-02	2.97E+09	2.03E+09	1.18E+09	6.66E+08	3.69E+08	1.89E+08	9.77E+07
1.25E-01	2.36E+09	1.17E+09	6.53E+08	3.36E+08	1.55E+08	7.24E+07	3.75E+07

Energy (Mev)	7 Days	30 Days	90 Days	180 Days	1 Year	5 Years	10 Years
2.25E-01	2.53E+09	1.30E+09	6.81E+08	3.00E+08	8.15E+07	2.38E+07	1.23E+07
3.75E-01	4.40E+11	2.48E+11	5.54E+10	5.91E+09	8.33E+07	6.68E+06	3.46E+06
5.75E-01	6.56E+10	5.23E+10	2.90E+10	1.20E+10	1.96E+09	3.85E+05	1.99E+05
8.50E-01	4.50E+11	3.91E+11	2.82E+11	1.89E+11	1.04E+11	3.79E+09	6.98E+07
1.25E+00	3.13E+11	3.11E+11	3.04E+11	2.94E+11	2.75E+11	1.63E+11	8.42E+10
1.75E+00	1.21E+09	9.69E+08	5.38E+08	2.23E+08	3.63E+07	2.22E+01	1.32E-05
2.25E+00	1.66E+06	1.65E+06	1.61E+06	1.56E+06	1.46E+06	8.62E+05	4.46E+05
2.75E+00	5.13E+03	5.09E+03	4.98E+03	4.82E+03	4.51E+03	2.67E+03	1.38E+03
3.50E+00	1.32E-05	5.11E-10	4.56E-10	3.86E-10	2.75E-10	1.75E-11	5.16E-13
5.00E+00	1.38E-07	1.15E-18	0.00E+00	0.00E+00	0.00E+00	0.00E+00	0.00E+00
7.00E+00	0.00E+00	0.00E+00	0.00E+00	0.00E+00	0.00E+00	0.00E+00	0.00E+00
9.50E+00	0.00E+00	0.00E+00	0.00E+00	0.00E+00	0.00E+00	0.00E+00	0.00E+00
TOTAL	1.99E+12	1.44E+12	8.14E+11	5.54E+11	4.07E+11	1.73E+11	8.77E+10

Table 12. Dose Rates for the TPBAR (rem/hr)[3]

	7 days	90 days	180 days	1 year	5 years
Surface, Entire Length	77, 000	42,000	25,000	14,000	6200
1m from TPBAR, Entire Length	160	86	52	29	13
1m from TPBAR, lm In Center (average)	180	97	59	33	14

Table 13. Surface Dose Rates for the Hold-Down Assembly (rem/hr) (including 20 thimble plugs)[3]

	7 days	90 days	180 days	1 year	5 years
Top of Assembly	51,000	38,000	32,000	27,000	15,000
Bottom of Assembly	34,000	22,000	18,000	14,000	6800
Side of Assembly	28,000	19,000	16,000	13,000	6400

4.0 REFERENCES

ASTM A 213-95. *Standard Specification for Seamless Ferritic and Austenitic Alloy-Steel Boiler, Superheater, and Heat-Exchanger Tubes.* American National Standards Institute.

Battat ME. 1977. *American National Standard Neutron and Gamma-Ray Flux-to-Dose Rate Factors.* ANSI/ANS-6.1.1-1977 (N666). American Nuclear Society, LaGrange Park, Illinois.

3 The dose rates are rounded to two significant figures. The MCNP statistical uncertainty in the results is less than 1%.

Gates RO. 2001. *Production Specification for Enriched, Annular $LiAlO_2$ Pellets.* TTQP-1-076, Rev. 4. Pacific Northwest National Laboratory, Richland, Washington.

Guenther, RJ, DE Blanik, TK Campbell, UP Jenquin, JE Mendel, LE Thomas, and CK Thornhill. 1988. *Characterization of Spent Fuel Approved Testing Material – ATM-103.* PNL-5109-103. Pacific Northwest Laboratory, Richland, Washington.

Livingston JV. 2001. *Materials Properties Handbook for the Tritium Target Qualification Project.* TTQP-7-008, Rev. 3. Pacific Northwest National Laboratory, Richland, Washington.

Lopez Jr. A. 2002. *Production TPBAR Design Inputs for Sequoyah Units 1 and 2 (U).* TTQP-1-118, Rev. 7. Pacific Northwest National Laboratory, Richland, Washington.

Lopez Jr. A. 2003. *Production TPBAR Design Inputs for Watts Bar (U).* PNNL-TTQP-1-702, Rev. 9. Pacific Northwest National Laboratory, Richland, Washington.

Love EF. 2003. *Homogenization of the Production and Full-Length Getter TPBARs (U).* PNNL-TTQP-1-718, Rev. 4. Pacific Northwest National Laboratory, Richland, Washington. (CRD)

Luksic AT. 1989. *Spent Fuel Assembly Hardware: Characterization and 10 CFR 61 Classification with Calculation for Spent Fuel Assembly Hardware.* PNL-6906. Pacific Northwest Laboratory, Richland, Washington.

Migliore RJ, BD Reid, SK Fadeff, KA Pauley, and UP Jenquin. 1994. *Non-Fuel Assembly Components: 10 CFR 61.55 Classification for Waste Disposal.* PNL-10103. Pacific Northwest Laboratory. Richland, Washington.

Migliore RJ. 1998a. *Waste Classification for the Mark 2 TPBAR.* TTQP-1-2011, Rev. 0. Pacific Northwest Laboratory. Richland, Washington.

Migliore RJ. 1998b. *Source Term and Dose Rates for the LTA Hold-Down Assembly.* TTQP-1-084, Rev. 1. Pacific Northwest National Laboratory, Richland, Washington.

Migliore RJ. 1998c. *TPBAR Source Term, Radionuclide Concentrations, and Decay Heat.* TTQP-1-050, Rev. 2. Pacific Northwest National Laboratory, Richland, Washington.

Migliore RJ. 2000. *Bending Limits for Watts Bar Production TPBAR (U).* PNNL-TTQP-1-707, Rev. 3. Pacific Northwest National Laboratory, Richland, Washington. (CRD).

Migliore RJ, and UP Jenquin. 1998. *Bounding TPBAR Source Term, Radionuclide Concentrations, and Decay Heat.* TTQP-1-2012, Rev. 1. Pacific Northwest National Laboratory, Richland, Washington.

Pagh RT. 2003. *Bounding Source Term, Radionuclide Concentrations, Decay Heat, and Dose Rates for Production TPBAR (U).* PNNL-TTQP-1-726, Rev. 3. Pacific Northwest National Laboratory, Richland, Washington. (CRD).

RSIC Computer Code Collection. 1996. *ORIGEN2.1: Isotope Generation and Depletion Code - Matrix Exponential Method.* CCC-371, Oak Ridge National Laboratory, Oak Ridge, Tennessee.

RSICC Computer Code Collection. 2000. *MCNP4C – Monte Carlo N-Particle Transport Code System.* CCC-700. Oak Ridge National Laboratory, Oak Ridge, Tennessee.

RSICC Computer Code Collection. 2002. *ORIGEN2.2: Isotope Generation and Depletion Code - Matrix Exponential Method.* CCC-371, Oak Ridge National Laboratory, Oak Ridge, Tennessee.

Special Metals. 2003. http://www.magellanmetals.com/inconel_X750.htm

Walker FW, JR Parrington, and F Feiner. 1989. *Chart of the Nuclides 14th Edition.* General Electric Co., San Jose, California.

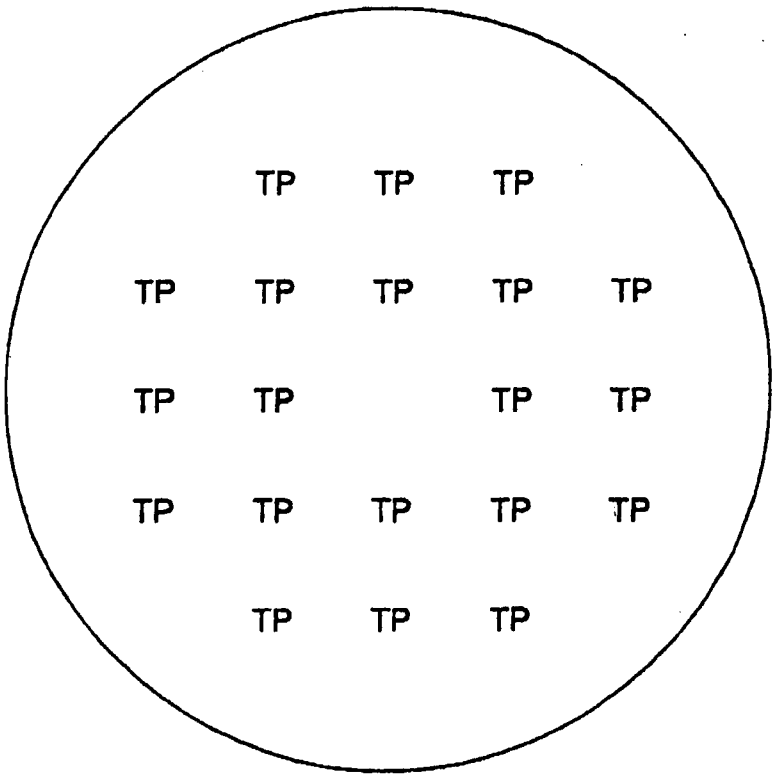

Figure 1. Assumed Hold-Down Assembly Thimble Plug (TP) Loading Pattern

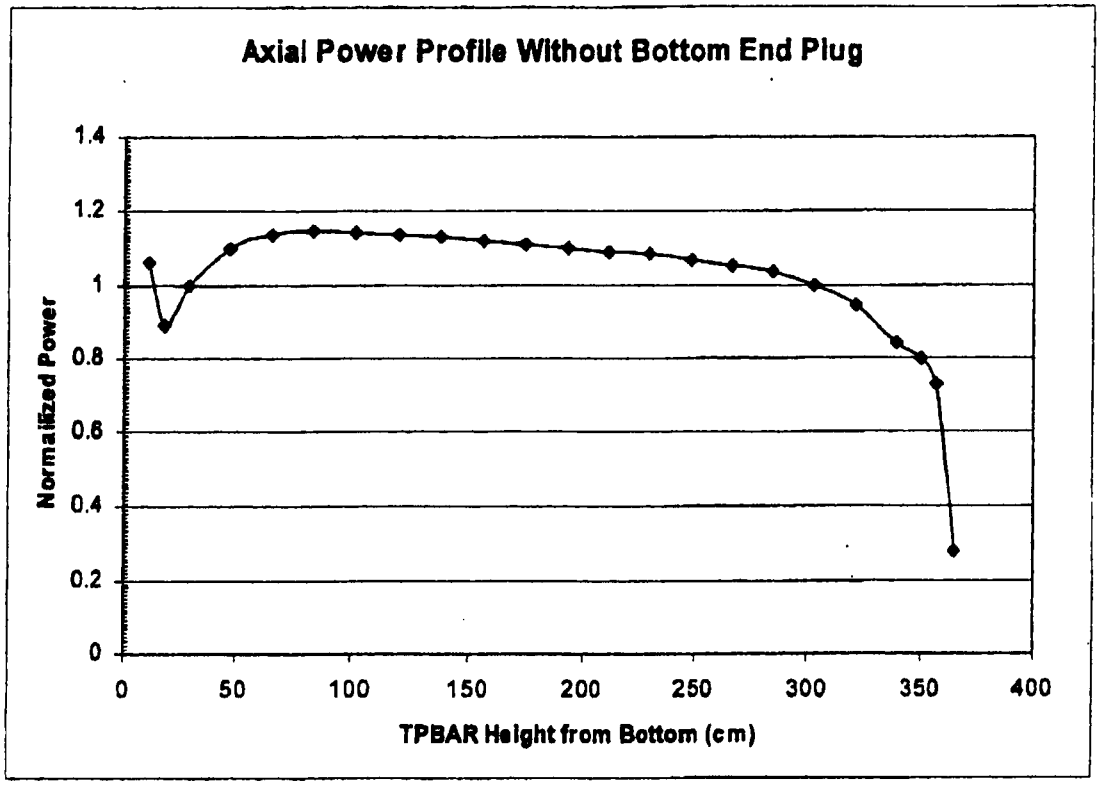

Figure 2. Axial Power Profile without Bottom End Plug

APPENDIX A

TPBAR Constituents

Masses for the elements present in a TPBAR were obtained from various sources as referenced on pages 20-22. All material in the TPBAR was accounted for including the aluminide barrier and the nickel plating on the getters. The bounding masses derived here are for radiological source assessment and not mechanical analysis or radiological shielding (self-shielding) analysis. Bounding mechanical and shielding masses are 2.3 lbs. from Lopez (2002) for the Sequoyah Units and Lopez (2003) for Watts Bar.

Compositions of the Zircaloy and SS-316 were taken from Livingston (2001).

Composition of the pellet was taken from Gates (2001).

Composition of the Inconel was taken from Special Metals (2003).

Composition of the SS-304 was taken primarily from ASTM A 213. Because this ASTM standard does not contain values for cobalt, niobium, and molybdenum, the weight percent of cobalt was assumed, while the weight percent of the molybdenum and niobium were taken from Migliore (1998b).

Table A-1. Data for Developing the TPBAR Constituents

Parameter	Value	Reference
Mass of hold-down assembly (SS304)	5.29 lb	PNNL-TTQP-1-702 R9
Mass of inconel in HDA	0.5 lb	PNNL-TTQP-1-702 R9
Mass of thimble plug (SS304)	0.3 lb	PNNL-TTQP-1-702 R9
Atomic Weight of Ni	58.69 g/mole	Chart of the Nuclides
Atomic Weight of Li-6	6.015 g/mole	Chart of the Nuclides
Atomic Weight of Li-7	7.016 g/mole	Chart of the Nuclides
Atomic Weight Al	26.9815 g/mole	Chart of the Nuclides
Atomic Weight of O	15.9994 g/mole	Chart of the Nuclides
Avogrado's No.	6.022E+23 a/mole	Chart of the Nuclides
Li Nominal Enrichment	33.7% atom%	PNNL-TTQP-1-702 R9
Assumptions		
Assumed Mass of Stainless Steel (total)	565 g	PNNL-TTQP-1-726 R3
Assumed Mass Zircaloy-4	215 g	PNNL-TTQP-1-726 R3
Assumed Mass LiA1O2	210 g	PNNL-TTQP-1-726 R3
Assumed Mass of Nickel Plating	255 g	PNNL-TTQP-1-726 R3
Cobalt Concentration	500 ppm	For SS-304
Add the pellet impurities to the given pellet mass. The resulting mass will be larger than the value given above, bringing the total to 217g.		
Fe+Cr+Ni impurity in the pellet is split equally.		
U in the Zircaloy-4 and F, Cl, I, & Br in the pellet have a negligible contribution and will not be included in the ORIGEN2 model.		
Calculated Values		
Mass of hold-down assembly (SS304)	2815 g	Bounding Value
Mass of inconel in HDA	365 g	Bounding Value
Mass of thimble plug (SS304)	150 g	Bounding Value
Atomic Weight of Enriched Li	6.679 g/mole	
Molecular Weight of LiA1O2	65.66 g/mole	
Mass of Li-6	6.48 g	
Mass of Li-7	14.88 g	
Mass of Al	86.30 g	
Mass of O	102.34 g	

Table A-2. Material Impurities, wt%

Element	Zircaloy-4	316-SS	Pellet	304-SS	Inconel X
	TTQP-7-008 R3	TTQP-7-008 R3	TTQP-1-076 R4	ASTM A 213	Special Metals
Fe	0.24	Remainder		Remainder	9.0
Cr	0.13	18.0		20	17.0
Ni	0.0070	14.0		11	Remainder
Zr	Remainder				
Fe+Cr+Ni			0.6		
F+Cl+I+Br			0.06		
Al	0.0075	0.05			1.0
As		0.03	0.05		
B	0.00005	0.002			
Ba			0.08		
C	0.027	0.06	0.15	0.08	0.08
Ca			0.4		
Cd	0.00005				
Co	0.0020	0.050		0.05[4]	1.0
Cu	0.0050	0.04			0.5
H	0.0025				
Hf	0.010				
K			0.5		
Mg	0.0020		0.2		
Mn	0.0050	2.00		2	1.0
Mo	0.0050	3.00		0.3965	
N	0.0080	0.01			
Na			0.5		
Nb		0.05		0.01[5]	1.2
P		0.04		0.04	
Pb			0.04		
S		0.01		0.03	0.01
Se			0.035		
Si	0.0120	0.75	1.0	0.75	0.5
Sn	1.70				
Ta		0.02			
Ti	0.0050				2.75
V		0.05			
W	0.010				
Zr					
U	0.00035				
Total	2.18	38.16	3.62	34.36	34.04
Calculated Numbers, wt%					
Fe		61.84		65.64	
Zr	97.82				
Ni					65.96

4 Assumed.
5 From Migliore 1998b

Table A-3. Nuclide Mass Values, g

							pounds	g
					SS in holddown		5.401	2450
ORIGEN2 Mass Input					Inconel in holddown		0.805	365
Mass(g) =		215.0	565.0	210.0		1.0	1.0	
Nuclide	ORIGEN2 ID	Zircaloy-4	316-SS	Pellet	TPBAR (with Ni)	304-SS	Inconel X	HDA
Li-6	30060			6.48E+00	6.48E+00			
Li-7	30070			1.49E+01	1.49E+01			
Fe	260000	5.16E-01	3.49E+02	4.20E-01	3.50E+02	6.56E-01	9.00E-02	1.64E+03
Cr	240000	2.80E-01	1.02E+02	4.20E-01	1.02E+02	2.00E-01	1.70E-01	5.52E+02
Ni[6]	280000	1.51E-02	7.91E+01	4.20E-01	3.35E+02	1.10E-01	6.60E-01	5.10E+02
O	80000			1.02E+02	1.02E+02			
Al	130000	1.61E-02	2.83E-01	8.63E+01	8.66E+01		1.00E-02	3.65E+00
As	330000		1.70E-01	1.05E-01	2.75E-01			
B	50000	1.08E-04	1.13E-02		1.14E-02			
Ba	560000			1.68E-01	1.68E-01			
C	60000	5.81E-02	3.39E-01	3.15E-01	7.12E-01	8.00E-04	8.00E-04	2.25E+00
Ca	200000			8.40E-01	8.40E-01			
Cd	480000	1.08E-04			1.08E-04			
Co	270000	4.30E-03	2.83E-01		2.87E-01	5.00E-04	1.00E-02	4.88E+00
Cu	290000	1.08E-02	2.26E-01		2.37E-01		5.00E-03	1.83E+00
H	10000	5.38E-03			5.38E-03			
Hf	720000	2.15E-02			2.15E-02			
K	190000			1.05E+00	1.05E+00			
Mg	120000	4.30E-03		4.20E-01	4.24E-01			
Mn	250000	1.08E-02	1.13E+01		1.13E+01	2.00E-02	1.00E-02	5.27E+01
Mo	420000	1.08E-02	1.70E+01		1.70E+01	3.96E-03		9.70E+00
N	70000	1.72E-02	5.65E-02		7.37E-02			
Na	110000			1.05E+00	1.05E+00			
Nb	410000		2.83E-01		2.83E-01	1.00E-04	1.20E-02	4.63E+00
P	150000		2.26E-01		2.26E-01	4.00E-04		9.80E-01
Pb	820000			8.40E-02	8.40E-02			
S	160000		5.65E-02		5.65E-02	3.00E-04	1.00E-04	7.72E-01
Se	340000			7.35E-02	7.35E-02			
Si	140000	2.58E-02	4.24E+00	2.10E+00	6.36E+00	7.50E-03	5.00E-03	2.02E+01
Sn	500000	3.66E+00			3.66E+00			
Ta	730000		1.13E-01		1.13E-01			
Ti	220000	1.08E-02			1.08E-02		2.75E-02	1.00E+01
V	230000		2.83E-01		2.83E-01			
W	740000	2.15E-02			2.15E-02			
Zr	400000	2.10E+02			2.10E+02			
U	920000	7.53E-04			7.53E-04			
Total		2.15E+02	5.65E+02	2.17E+02	1.25E+03	1.00E+00	1.00E+00	2.82E+03

6 The total value for nickel in column 6 includes the assumed 255g of nickel plating.

APPENDIX B

ORIGEN2 Input and Output

The ORIGEN2 input files are listed on the following pages. They are:

- TPBAR.INP- One TPBAR
- HDA.INP- One hold-down assembly (no thimble plugs)
- SS304.INP-One gram of SS304 (thimble plug)

The PWRU library was used for the calculations because its enrichment (3.1%) most closely matches the assumed assembly enrichment (3.0%).

ORIGEN2 was executed on a Dell OptiPlex Gx1 Pentium-II with Windows 98, which has been approved for Commercial Nuclear Related calculations.

TPBAR.INP

```
-1
-1
-1
TIT     Prod.  Reactor Target Rod Waste Eval.:  TPBAR
RDA     PD = 58.24 MW/MTU   E = 3.0
BAS     1 TPBAR
LIB     0 1 2 3 204 205 206 9 3 0 1 1
PHO     101 102 103 10
LIP     0 0 0
INP     1 1 -1 -1 1 1
BUP
IRP      50.   58.24     1  2  4  2
IRP     100.   58.24     2  3  4  0
IRP     150.   58.24     3  4  4  0
IRP     200.   58.24     4  5  4  0
IRP     250.   58.24     5  6  4  0
IRP     300.   58.24     6  7  4  0
IRP     350.   58.24     7  8  4  0
IRP     400.   58.24     8  9  4  0
IRP     450.   58.24     9 10  4  0
IRP     500.   58.24    10 11  4  0
IRP     510.   58.24    11  1  4  0
BUP
DEC       7.             1  2  4  2
DEC      30.             2  3  4  0
DEC      90.             3  4  4  0
DEC     180.             4  5  4  0
DEC       1.             5  6  5  0
DEC       5.             6  7  5  0
DEC      10.             7  8  5  0
HED     1   Discharge
HED     2    7 Days
HED     3   30 Days
HED     4   90 Days
HED     5  180 Days
HED     6    1 Year
HED     7    5 Years
HED     8   10 Years
OPTL    8 8 8 8 7 8 7 8 7 8 8 8 8 8 8 8 8 8 8 8 8 8 8 8 8
OPTA    8 8 8 8 7 8 8 8 8 8 8 8 8 8 8 8 8 8 8 8 8 8 8 8 8
OPTF    8 8 8 8 8 8 8 8 8 8 8 8 8 8 8 8 8 8 8 8 8 8 8 8 8
CUT     7 1.0E-9 -1
OUT     8  1  0  -1
STP     4
1        30060 6.48E+00    30070 1.49E+01        0       0.0
2       922350  30000.0   922380 970000.0        0       0.0
4       260000 3.50E+02   240000 1.02E+02   280000 3.35E+02    80000 1.02E+02
4       130000 8.66E+01   330000 2.75E-01    50000 1.14E-02   560000 1.68E-01
4        60000 7.12E-01   200000 8.40E-01   480000 1.08E-04   270000 2.87E-01
4       290000 2.37E-01    10000 5.38E-03   720000 2.15E-02   190000 1.05E+00
4       120000 4.24E-01   250000 1.13E+01   420000 1.70E+01    70000 7.37E-02
4       110000 1.05E+00   410000 2.83E-01   150000 2.26E-01   820000 8.40E-02
4       160000 5.65E-02   340000 7.35E-02   140000 6.36E+00   500000 3.66E+00
```

```
4        730000 1.13E-01   220000 1.08E-02   230000 2.83E-01   740000 2.15E-02
4        400000 2.10E+02        0      0.0
0
END
```

HDA.INP

```
-1
-1
-1
TIT     Prod.  Reactor Target Rod Waste Eval.:  HDA
RDA     PD = 58.24 MW/MTU   E = 3.0
BAS     1 hold-down assembly, no thimble plugs
LIB     0 1 2 3 204 205 206 9 3 0 1 1
PHO     101 102 103 10
LIP     0 0 0
INP     1 1 -1 -1 1 1
BUP
IRP      50.  58.24    1  2  4  2
IRP     100.  58.24    2  3  4  0
IRP     150.  58.24    3  4  4  0
IRP     200.  58.24    4  5  4  0
IRP     250.  58.24    5  6  4  0
IRP     300.  58.24    6  7  4  0
IRP     350.  58.24    7  8  4  0
IRP     400.  58.24    8  9  4  0
IRP     450.  58.24    9 10  4  0
IRP     500.  58.24   10 11  4  0
IRP     510.  58.24   11  1  4  0
BUP
DEC       7.            1  2  4  2
DEC      30.            2  3  4  0
DEC      90.            3  4  4  0
DEC     180.            4  5  4  0
DEC       1.            5  6  5  0
DEC       5.            6  7  5  0
DEC      10.            7  8  5  0
HED     1   Discharge
HED     2    7 Days
HED     3   30 Days
HED     4   90 Days
HED     5  180 Days
HED     6    1 Year
HED     7    5 Years
HED     8   10 Years
OPTL    8 8 8 8 7 8 7 8 7 8 8 8 8 8 8 8 8 8 8 8 8 8 8 8
OPTA    8 8 8 8 7 8 8 8 8 8 8 8 8 8 8 8 8 8 8 8 8 8 8 8
OPTF    8 8 8 8 8 8 8 8 8 8 8 8 8 8 8 8 8 8 8 8 8 8 8 8
CUT     7 1.0E-9 -1
OUT     8  1  0  -1
STP     4
1        30060 0.00E+00    30070 0.00E+00        0      0.0
2       922350  30000.0   922380 970000.0        0      0.0
4       260000 1.64E+03   240000 5.52E+02   280000 5.10E+02    80000 0.00E+00
```

```
4        130000 3.65E+00   330000 0.00E+00    50000 0.00E+00   560000 0.00E+00
4         60000 2.25E+00   200000 0.00E+00   480000 0.00E+00   270000 4.88E+00
4        290000 1.83E+00    10000 0.00E+00   720000 0.00E+00   190000 0.00E+00
4        120000 0.00E+00   250000 5.27E+01   420000 9.70E+00    70000 0.00E+00
4        110000 0.00E+00   410000 4.63E+00   150000 9.80E-01   820000 0.00E+00
4        160000 7.72E-01   340000 0.00E+00   140000 2.02E+01   500000 0.00E+00
4        730000 0.00E+00   220000 1.00E+01   230000 0.00E+00   740000 0.00E+00
4        400000 0.00E+00        0      0.0
0
END
```

SS304.INP

```
-1
-1
-1
TIT     Prod.  Reactor Target Rod Waste Eval.:  ss304
RDA     PD = 58.24 MW/MTU   E = 3.0
BAS     1g of ss304
LIB     0 1 2 3 204 205 206 9 3 0 1 1
PHO     101 102 103 10
LIP     0 0 0
INP     1 1 -1 -1 1 1
BUP
IRP      50.  58.24    1  2  4  2
IRP     100.  58.24    2  3  4  0
IRP     150.  58.24    3  4  4  0
IRP     200.  58.24    4  5  4  0
IRP     250.  58.24    5  6  4  0
IRP     300.  58.24    6  7  4  0
IRP     350.  58.24    7  8  4  0
IRP     400.  58.24    8  9  4  0
IRP     450.  58.24    9 10  4  0
IRP     500.  58.24   10 11  4  0
IRP     510   58.24   11  1  4  0
BUP
DEC       7.            1  2  4  2
DEC      30.            2  3  4  0
DEC      90.            3  4  4  0
DEC     180.            4  5  4  0
DEC       1.            5  6  5  0
DEC       5.            6  7  5  0
DEC      10.            7  8  5  0
HED     1   Discharge
HED     2    7 Days
HED     3   30 Days
HED     4   90 Days
HED     5  180 Days
HED     6    1 Year
HED     7    5 Years
HED     8   10 Years
OPTL    8 8 8 8 7 8 7 8 7 8 8 8 8 8 8 8 8 8 8 8 8 8 8 8
OPTA    8 8 8 8 7 8 8 8 8 8 8 8 8 8 8 8 8 8 8 8 8 8 8 8
```

```
OPTF    8 8 8 8 8 8 8 8 8 8 8 8 8 8 8 8 8 8 8 8 8 8 8 8
CUT     7 1.0E-9 -1
OUT     8  1  0  -1
STP     4
1        30060 0.00E+00    30070 0.00E+00        0       0.0
2       922350  30000.0   922380 970000.0        0       0.0
4       260000 6.56E-01   240000 2.00E-01   280000 1.10E-01    80000 0.00E+00
4       130000 0.00E+00   330000 0.00E+00    50000 0.00E+00   560000 0.00E+00
4        60000 8.00E-04   200000 0.00E+00   480000 0.00E+00   270000 5.00E-04
4       290000 0.00E+00    10000 0.00E+00   720000 0.00E+00   190000 0.00E+00
4       120000 0.00E+00   250000 2.00E-02   420000 3.96E-03    70000 0.00E+00
4       110000 0.00E+00   410000 1.00E-04   150000 4.00E-04   820000 0.00E+00
4       160000 3.00E-04   340000 0.00E+00   140000 7.50E-03   500000 0.00E+00
4       730000 0.00E+00   220000 0.00E+00   230000 0.00E+00   740000 0.00E+00
4       400000 0.00E+00      0.0          0
0
END
```

APPENDIX C

MCNP Input

The MCNP input files are:

TPBAR7.I	TPBAR dose rates, 7 day decay time
TPBAR90.I	TPBAR dose rates, 90 day decay time
TPBAR180.I	TPBAR dose rates, 180 day decay time
TPBAR1.I	TPBAR dose rates, 1 year decay time
TPBAR5.I	TPBAR dose rates, 5 year decay time
HDA7.I	HDA dose rates, 7 day decay time
HDA90.I	HDA dose rates, 90 day decay time
HDA180.I	HDA dose rates, 180 day decay time
HDA1.I	HDA dose rates, 1 year decay time
HAD5.I	HDA dose rates, 5 year decay time

Because many of these input files are similar, only the files TPBAR7.I and HDA7.I are presented.

TPBAR7.I

```
Dose rate, TPBAR, 7 day decay time
999    0        -14:13:12         imp:p=0
10     0         14 -13 -11       imp:p=1
11     1 -8.0    14 -13  11 -10   imp:p=1
12     0         14 -13  10 -12   imp:p=1

10     cz   0.4839    $ cladding OR
11     cz   0.3848    $ cladding IR
12     cz   100.4839  $ 1m tally surface
13     pz   193       $ top of TPBAR
14     pz  -193       $ bottom of TPBAR
20     pz   50        $ tally cutting surface
21     pz  -50        $ tally cutting surface

print    -85
c
c      tallies
c
fc12     Contact dose rate, entire length
f12:p    10
fs12     13 -14
sd12     1174 2r
c
fc22     Contact dose rate, middle 1m
f22:p    10
fs22     20 -21
sd22     304 2r
c
fc32     1m from side, entire length
f32:p    12
fs32     13 -14
sd32     2.437e5 2r
c
fc42     1m from side, middle 1m
f42:p    12
fs42     20 -21
sd42     63136  2r
c
mode    p
prdmp    j j 1 2
nps     1000000
sdef      cel=11 erg=d1 pos=0 0 0 rad=d2
          ext=d3 axs=0 0 1 wgt=3.45e13
si2       0.3848 0.4839
si3       193
c
m1      26000 1
c
c      Photon source
c
c         E, MeV    photons/s
#            si1    sp1
             1        d
```

```
                0.01     7.73E+12
               0.025     6.71E+11
              0.0375     1.80E+11
              0.0575     5.80E+11
               0.085     1.52E+11
               0.125     2.24E+11
               0.225     4.52E+11
               0.375     3.06E+12
               0.575     2.75E+12
                0.85     1.56E+13
                1.25     3.05E+12
                1.75     5.01E+10
                2.25     2.12E+09
                2.75     7.48E+08
                 3.5     5.05E+05
                 5.0     5.21E+03
                 7.0     6.37E-10
                 9.5     4.03E-11
c       TOTAL    3.45E+13
c
c       Flux to Dose conversion from MCNP Manual
c       ANSI/ANS-6.1.1-1977
c
c       E, MeV      (rem/hr)/(photons/cm2/s)
#         de0          df0
        0.01         3.96e-6
        0.03         5.82e-7
        0.05         2.90e-7
        0.07         2.58e-7
        0.1          2.83e-7
        0.15         3.79e-7
        0.2          5.01e-7
        0.25         6.31e-7
        0.3          7.59e-7
        0.35         8.78e-7
        0.4          9.85e-7
        0.45         1.08e-6
        0.5          1.17e-6
        0.55         1.27e-6
        0.6          1.36e-6
        0.65         1.44e-6
        0.7          1.52e-6
        0.8          1.68e-6
        1.0          1.98e-6
        1.4          2.51e-6
        1.8          2.99e-6
        2.2          3.42e-6
        2.6          3.82e-6
        2.8          4.01e-6
        3.25         4.41e-6
        3.75         4.83e-6
        4.25         5.23e-6
        4.75         5.60e-6
        5.0          5.80e-6
        5.25         6.01e-6
```

```
          5.75        6.37e-6
          6.25        6.74e-6
          6.75        7.11e-6
          7.5         7.66e-6
          9.0         8.77e-6
          11.0        1.03e-5
          13.0        1.18e-5
          15.0        1.33e-5
```

HDA7.I

```
Dose rate, entire hold-down assembly, 7 day decay time
999    0          -40:42:35     imp:p=0
10     1 -8.0     41 -42 -35    imp:p=1   $ plate
20     1 -8.0    -41  40 -10    imp:p=1   $ thimble plug
22     1 -8.0    -41  40 -11    imp:p=1   $ thimble plug
24     1 -8.0    -41  40 -12    imp:p=1   $ thimble plug
26     0          40 -41 -13    imp:p=1   $ void
27     0          40 -41 -14    imp:p=1   $ void
28     1 -8.0    -41  40 -15    imp:p=1   $ thimble plug
30     1 -8.0    -41  40 -16    imp:p=1   $ thimble plug
32     1 -8.0    -41  40 -17    imp:p=1   $ thimble plug
34     1 -8.0    -41  40 -18    imp:p=1   $ thimble plug
36     1 -8.0    -41  40 -19    imp:p=1   $ thimble plug
38     1 -8.0    -41  40 -20    imp:p=1   $ thimble plug
40     1 -8.0    -41  40 -21    imp:p=1   $ thimble plug
43     0          40 -41 -22    imp:p=1   $ center void
44     1 -8.0    -41  40 -23    imp:p=1   $ thimble plug
46     1 -8.0    -41  40 -24    imp:p=1   $ thimble plug
48     1 -8.0    -41  40 -25    imp:p=1   $ thimble plug
50     1 -8.0    -41  40 -26    imp:p=1   $ thimble plug
52     1 -8.0    -41  40 -27    imp:p=1   $ thimble plug
54     1 -8.0    -41  40 -28    imp:p=1   $ thimble plug
56     1 -8.0    -41  40 -29    imp:p=1   $ thimble plug
58     0          40 -41 -30    imp:p=1   $ void
59     0          40 -41 -31    imp:p=1   $ void
60     1 -8.0    -41  40 -32    imp:p=1   $ thimble plug
62     1 -8.0    -41  40 -33    imp:p=1   $ thimble plug
64     1 -8.0    -41  40 -34    imp:p=1   $ thimble plug
66     0          10 11 12 13 14 15 16 17  $ void between plugs
                  18 19 20 21 22 23 24 25
                  26 27 28 29 30 31 32 33
                  34
                 -35 40 -41 imp:p=1

c      20 thimble plugs, 4 TPBAR voids, 1 instrument tube void
10     c/z -3.78  7.56 0.5
11     c/z  0     7.56 0.5
12     c/z  3.78  7.56 0.5
13     c/z -6.3   6.3  0.5  $ TPBAR void
14     c/z  6.3   6.3  0.5  $ TPBAR void
15     c/z -7.56  3.78 0.5
16     c/z -3.78  3.78 0.5
17     c/z  0     3.78 0.5
18     c/z  3.78  3.78 0.5
```

```
19     c/z  7.56 -3.78 0.5
20     c/z -7.56  0    0.5
21     c/z -3.78  0    0.5
22     cz              0.5  $ instrument tube void
23     c/z  3.78  0    0.5
24     c/z  7.56  0    0.5
25     c/z -7.56 -3.78 0.5
26     c/z -3.78 -3.78 0.5
27     c/z  0    -3.78 0.5
28     c/z  3.78 -3.78 0.5
29     c/z  7.56 -3.78 0.5
30     c/z -6.3  -6.3  0.5  TPBAR void
31     c/z  6.3  -6.3  0.5  TPBAR void
32     c/z -3.78 -7.56 0.5
33     c/z  0    -7.56 0.5
34     c/z  3.78 -7.56 0.5
c      hold-down plate
35     cz    12
c
40     pz   -16   $ bottom of thimble plug
41     pz    0    $ bottom of plate
42     pz    0.7  $ top of plate

c
m1      26000  1
c
print    -85
c
c      tallies
c
fc12     Top of Plate
f12:p    42
fs12     -35
sd12     452.4 1r
c
fc22     Bottom of Assembly
f22:p    40
fs22     -35
sd22     452.4 1r
c
fc32     Side of Assembly
f32:p    35
fs32     42 -40
sd32     1259 2r
c
mode    p
prdmp    j j 1 2
nps     1000000
sdef      cel=d10 erg=fcel=d20 pos=fcel=d30 rad=fcel=d40
          ext=fcel=d50 axs=0 0 1  wgt=5.1e13
si10     1 10                          $ plate
           20 22 24 28 30 32 34 36     $ thimble plugs
           38 40 44 46 48 50 52 54
           56 60 62 64
sp10      1.13e13 1.99e12 19r
```

```
ds20      s 21 22 19r
ds30      1   0  0  0.35
             -3.78  7.56 -8       0  7.56 -8
              3.78  7.56 -8   -7.56  3.78 -8
             -3.78  3.78 -8       0  3.78 -8
              3.78  3.78 -8    7.56  3.78 -8
             -7.56     0 -8   -3.78     0 -8
              3.78     0 -8    7.56     0 -8
             -7.56 -3.78 -8   -3.78 -3.78 -8
                 0 -3.78 -8    3.78 -3.78 -8
              7.56 -3.78 -8   -3.78 -7.56 -8
                 0 -7.56 -8    3.78 -7.56 -8
ds40     s 41 42 19r
si41       12
si42       0.5
ds50     s 51 52 19r
si51       0.35
si52       8
c
c       Photon source
c         Plate                        Thimble Plugs
c         E, MeV     photons/s         E, MeV     photons/s
#            si21      sp21                si22       sp22
                1         d                   1          d
             0.01   2.76E+12              0.01   6.95E+11
            0.025   4.42E+10             0.025   6.68E+09
           0.0375   2.73E+10            0.0375   4.25E+09
           0.0575   3.48E+10            0.0575   5.49E+09
            0.085   1.80E+10             0.085   2.97E+09
            0.125   1.21E+10             0.125   2.36E+09
            0.225   1.31E+10             0.225   2.53E+09
            0.375   1.62E+12             0.375   4.40E+11
            0.575   4.05E+11             0.575   6.56E+10
             0.85   2.21E+12              0.85   4.50E+11
             1.25   4.01E+12              1.25   3.13E+11
             1.75   7.50E+09              1.75   1.21E+09
             2.25   2.12E+07              2.25   1.66E+06
             2.75   4.76E+05              2.75   5.13E+03
              3.5   2.81E+02               3.5   1.32E-05
                5   2.92E+00                 5   1.38E-07
                7   0.00E+00                 7   0.00E+00
              9.5   0.00E+00               9.5   0.00E+00
c       TOTAL       1.12E+13                    1.99E+12
c       Grand       5.10E+13
c        Flux to Dose conversion from MCNP Manual
c        ANSI/ANS-6.1.1-1977
c
c        E, MeV      (rem/hr)/(photons/cm2/s)
#          de0         df0
          0.01        3.96e-6
          0.03        5.82e-7
          0.05        2.90e-7
          0.07        2.58e-7
          0.1         2.83e-7
          0.15        3.79e-7
```

0.2	5.01e-7
0.25	6.31e-7
0.3	7.59e-7
0.35	8.78e-7
0.4	9.85e-7
0.45	1.08e-6
0.5	1.17e-6
0.55	1.27e-6
0.6	1.36e-6
0.65	1.44e-6
0.7	1.52e-6
0.8	1.68e-6
1.0	1.98e-6
1.4	2.51e-6
1.8	2.99e-6
2.2	3.42e-6
2.6	3.82e-6
2.8	4.01e-6
3.25	4.41e-6
3.75	4.83e-6
4.25	5.23e-6
4.75	5.60e-6
5.0	5.80e-6
5.25	6.01e-6
5.75	6.37e-6
6.25	6.74e-6
6.75	7.11e-6
7.5	7.66e-6
9.0	8.77e-6
11.0	1.03e-5
13.0	1.18e-5
15.0	1.33e-5

APPENDIX D

Trace Isotope Concentrations

ORIGEN2 output does not report a complete list of radionuclides generated by irradiation as this list would be quite long. Rather, the code provides a threshold value below which concentrations are not reported. For the standard cases, the threshold is set at a value such that any radionuclide whose value is nine orders of magnitude below the total for the TPBAR, Hold-Down Assembly, or Single Thimble Plug is not reported. In most cases this is sufficient to identify important radionuclides of concern. However, parent-daughter products (such as Sr-90 and Y-90) may not both be displayed if one of the radionuclides does not meet the threshold requirements.

Additionally, the calculated ORIGEN2 cases (described in Appendix B) use the power irradiation option to generate the irradiation profile of the components. Power irradiation assumes uranium isotopes to be contained in fuel pins, not trace uranium contained in the metal components of a TPBAR, Hold-Down Assembly, or Single Thimble Plug. Therefore, fission products generated in the ORIGEN2 output for these cases are for fuel pins. Based upon the threshold output value for these standard cases it would not be expected to see the fission products from uranium impurities in the TPBAR, Hold-Down Assembly, or Single Thimble Plug, so the absence from the standard calculations is of no concern.

There are applications, however, where it is necessary to know the concentrations of trace radionuclides generated either from irradiation or from fission of uranium in metal components. A trace radionuclide is defined for the purposes of this calculation as a concentration greater than one picocurie. Table D1 provides a list of these trace radionuclides for the TPBAR excluding tritium.

Table D1. Trace Radionuclide Concentrations in a TPBAR (Ci/TPBAR)

Nuclide	7 Days	30 Days	90 Days	180 Days	1 Year	5 Years	10 Years
BE 10	3.76E-09	3.76E-09	3.76E-09	3.76E-09	3.76E-09	3.76E-09	3.76E-09
C 14	1.42E-03	1.42E-03	1.42E-03	1.42E-03	1.42E-03	1.42E-03	1.42E-03
NA 24	1.71E-02	1.43E-13	0.00E+00	0.00E+00	0.00E+00	0.00E+00	0.00E+00
MG 28	1.53E-10	1.73E-18	0.00E+00	0.00E+00	0.00E+00	0.00E+00	0.00E+00
AL 28	1.53E-10	1.73E-18	0.00E+00	0.00E+00	0.00E+00	0.00E+00	0.00E+00
SI 32	5.76E-10	5.76E-10	5.76E-10	5.76E-10	5.76E-10	5.73E-10	5.70E-10
P 32	9.13E-01	2.99E-01	1.63E-02	2.08E-04	2.68E-08	5.73E-10	5.70E-10
P 33	1.90E-05	1.01E-05	1.90E-06	1.57E-07	9.23E-10	2.36E-27	0.00E+00
S 35	2.77E-01	2.31E-01	1.44E-01	7.08E-02	1.65E-02	1.65E-07	9.36E-14
CL 36	7.09E-05	7.09E-05	7.09E-05	7.09E-05	7.09E-05	7.09E-05	7.09E-05
AR 37	3.40E-01	2.15E-01	6.57E-02	1.11E-02	2.83E-04	7.84E-17	1.57E-32
AR 39	9.48E-03	9.48E-03	9.47E-03	9.47E-03	9.46E-03	9.36E-03	9.24E-03
AR 42	7.78E-12	7.77E-12	7.74E-12	7.70E-12	7.62E-12	7.01E-12	6.31E-12
K 40	3.03E-08	3.03E-08	3.03E-08	3.03E-08	3.03E-08	3.03E-08	3.03E-08
K 42	1.89E-04	7.77E-12	7.74E-12	7.70E-12	7.62E-12	7.01E-12	6.31E-12
K 43	1.37E-06	6.08E-14	4.01E-33	0.00E+00	0.00E+00	0.00E+00	0.00E+00

Nuclide	7 Days	30 Days	90 Days	180 Days	1 Year	5 Years	10 Years
CA 41	7.50E-05	7.50E-05	7.50E-05	7.50E-05	7.50E-05	7.50E-05	7.50E-05
CA 45	2.99E-01	2.71E-01	2.10E-01	1.43E-01	6.52E-02	1.30E-04	5.52E-08
CA 47	1.36E-04	4.05E-06	4.23E-10	4.50E-16	2.28E-28	0.00E+00	0.00E+00
SC 46	7.79E-03	6.44E-03	3.92E-03	1.86E-03	4.02E-04	2.27E-09	6.24E-16
SC 47	4.93E-04	1.53E-05	1.62E-09	1.72E-15	8.74E-28	0.00E+00	0.00E+00
SC 48	1.13E-05	1.83E-09	2.32E-19	3.33E-34	0.00E+00	0.00E+00	0.00E+00
CR 51	8.61E+02	4.84E+02	1.08E+02	1.14E+01	1.10E-01	1.48E-17	2.11E-37
MN 54	4.09E+01	3.88E+01	3.40E+01	2.78E+01	1.85E+01	7.22E-01	1.26E-02
FE 55	2.13E+02	2.10E+02	2.01E+02	1.88E+02	1.64E+02	5.65E+01	1.49E+01
FE 59	1.79E+01	1.26E+01	5.00E+00	1.25E+00	7.20E-02	1.21E-11	7.36E-24
CO 58	2.57E+02	2.05E+02	1.14E+02	4.73E+01	7.70E+00	4.70E-06	8.03E-14
CO 60	3.58E+01	3.55E+01	3.48E+01	3.37E+01	3.15E+01	1.86E+01	9.64E+00
NI 59	1.68E-01	1.68E-01	1.68E-01	1.68E-01	1.68E-01	1.68E-01	1.68E-01
NI 63	2.28E+01	2.28E+01	2.28E+01	2.27E+01	2.27E+01	2.20E+01	2.12E+01
NI 66	1.14E-04	1.03E-07	1.19E-15	1.48E-27	0.00E+00	0.00E+00	0.00E+00
CU 64	1.10E-03	9.03E-17	0.00E+00	0.00E+00	0.00E+00	0.00E+00	0.00E+00
CU 66	1.14E-04	1.03E-07	1.19E-15	1.48E-27	0.00E+00	0.00E+00	0.00E+00
CU 67	1.12E-06	2.30E-09	2.26E-16	6.98E-27	0.00E+00	0.00E+00	0.00E+00
ZN 65	4.00E-03	3.75E-03	3.16E-03	2.45E-03	1.45E-03	2.27E-05	1.27E-07
ZN 69	1.09E-12	9.19E-25	0.00E+00	0.00E+00	0.00E+00	0.00E+00	0.00E+00
ZN 69M	1.02E-12	8.56E-25	0.00E+00	0.00E+00	0.00E+00	0.00E+00	0.00E+00
ZN 72	5.87E-09	1.57E-12	7.46E-22	7.75E-36	0.00E+00	0.00E+00	0.00E+00
GA 72	8.45E-09	2.25E-12	1.07E-21	1.12E-35	0.00E+00	0.00E+00	0.00E+00
GA 73	5.74E-18	0.00E+00	0.00E+00	0.00E+00	0.00E+00	0.00E+00	0.00E+00
GE 73M	5.74E-18	0.00E+00	0.00E+00	0.00E+00	0.00E+00	0.00E+00	0.00E+00
GE 77	2.47E-11	4.88E-26	0.00E+00	0.00E+00	0.00E+00	0.00E+00	0.00E+00
AS 76	7.57E-01	3.68E-07	1.25E-23	0.00E+00	0.00E+00	0.00E+00	0.00E+00
AS 77	1.11E-07	5.82E-12	3.93E-23	0.00E+00	0.00E+00	0.00E+00	0.00E+00
SE 75	8.38E-01	7.33E-01	5.18E-01	3.08E-01	1.05E-01	2.25E-05	5.78E-10
SE 77M	2.76E-10	1.44E-14	9.75E-26	0.00E+00	0.00E+00	0.00E+00	0.00E+00
SE 79	8.52E-06	8.52E-06	8.52E-06	8.52E-06	8.52E-06	8.52E-06	8.52E-06
BR 80	6.00E-12	0.00E+00	0.00E+00	0.00E+00	0.00E+00	0.00E+00	0.00E+00
BR 80M	5.61E-12	0.00E+00	0.00E+00	0.00E+00	0.00E+00	0.00E+00	0.00E+00
BR 82	1.75E-01	3.43E-06	1.81E-18	7.47E-37	0.00E+00	0.00E+00	0.00E+00
KR 79	4.01E-07	6.94E-12	2.63E-24	0.00E+00	0.00E+00	0.00E+00	0.00E+00
KR 81	1.60E-06	1.60E-06	1.60E-06	1.60E-06	1.60E-06	1.60E-06	1.60E-06
KR 85	9.11E-06	9.07E-06	8.97E-06	8.83E-06	8.55E-06	6.60E-06	4.78E-06
KR 85M	7.87E-16	0.00E+00	0.00E+00	0.00E+00	0.00E+00	0.00E+00	0.00E+00
RB 86	7.35E-07	3.13E-07	3.37E-08	1.19E-09	1.22E-12	0.00E+00	0.00E+00
RB 87	6.12E-15	6.12E-15	6.12E-15	6.12E-15	6.12E-15	6.12E-15	6.12E-15
SR 89	6.86E-02	5.01E-02	2.20E-02	6.39E-03	5.02E-04	9.81E-13	1.27E-23
SR 90	2.22E-05	2.22E-05	2.21E-05	2.20E-05	2.17E-05	1.97E-05	1.75E-05
SR 91	7.17E-08	2.31E-25	0.00E+00	0.00E+00	0.00E+00	0.00E+00	0.00E+00
Y 89M	4.76E-04	3.62E-06	1.08E-11	5.55E-20	0.00E+00	0.00E+00	0.00E+00
Y 90	4.45E-01	1.15E-03	2.21E-05	2.20E-05	2.17E-05	1.98E-05	1.75E-05

Nuclide	7 Days	30 Days	90 Days	180 Days	1 Year	5 Years	10 Years
Y 91	1.76E-01	1.34E-01	6.59E-02	2.27E-02	2.53E-03	7.68E-11	3.08E-20
Y 91M	2.05E-09	6.61E-27	0.00E+00	0.00E+00	0.00E+00	0.00E+00	0.00E+00
Y 92	1.72E-17	0.00E+00	0.00E+00	0.00E+00	0.00E+00	0.00E+00	0.00E+00
Y 93	1.02E-08	3.61E-25	0.00E+00	0.00E+00	0.00E+00	0.00E+00	0.00E+00
ZR 89	4.77E-04	3.63E-06	1.08E-11	5.56E-20	5.04E-37	0.00E+00	0.00E+00
ZR 93	1.13E-04	1.13E-04	1.13E-04	1.13E-04	1.13E-04	1.13E-04	1.13E-04
ZR 95	6.03E+01	4.70E+01	2.45E+01	9.25E+00	1.24E+00	1.66E-07	4.25E-16
ZR 97	9.67E-02	1.42E-11	0.00E+00	0.00E+00	0.00E+00	0.00E+00	0.00E+00
NB 92	2.67E-01	5.56E-02	9.27E-04	2.00E-06	6.49E-12	0.00E+00	0.00E+00
NB 93M	3.83E-06	4.16E-06	5.02E-06	6.29E-06	8.85E-06	2.69E-05	4.49E-05
NB 94	4.75E-04	4.75E-04	4.75E-04	4.75E-04	4.75E-04	4.75E-04	4.75E-04
NB 95	6.51E+01	6.07E+01	4.11E+01	1.83E+01	2.70E+00	3.69E-07	9.43E-16
NB 95M	4.41E-01	3.49E-01	1.82E-01	6.86E-02	9.23E-03	1.23E-09	3.15E-18
NB 96	9.87E-04	7.55E-11	2.06E-29	0.00E+00	0.00E+00	0.00E+00	0.00E+00
NB 97	9.75E-02	1.53E-11	0.00E+00	0.00E+00	0.00E+00	0.00E+00	0.00E+00
NB 97M	9.19E-02	1.35E-11	0.00E+00	0.00E+00	0.00E+00	0.00E+00	0.00E+00
MO 93M	5.03E-09	0.00E+00	0.00E+00	0.00E+00	0.00E+00	0.00E+00	0.00E+00
MO 93	1.04E-03	1.04E-03	1.04E-03	1.04E-03	1.04E-03	1.03E-03	1.03E-03
MO 99	1.46E+01	4.43E-02	1.20E-08	1.68E-18	0.00E+00	0.00E+00	0.00E+00
TC 98	1.58E-11	1.58E-11	1.58E-11	1.58E-11	1.58E-11	1.58E-11	1.58E-11
TC 99	4.34E-05	4.35E-05	4.35E-05	4.35E-05	4.35E-05	4.35E-05	4.35E-05
TC 99M	2.36E-04	7.16E-07	1.94E-13	2.73E-23	0.00E+00	0.00E+00	0.00E+00
RU103	4.22E-03	2.81E-03	9.75E-04	1.99E-04	7.58E-06	4.83E-17	4.88E-31
RU105	4.83E-15	0.00E+00	0.00E+00	0.00E+00	0.00E+00	0.00E+00	0.00E+00
RU106	4.61E-04	4.41E-04	3.94E-04	3.33E-04	2.35E-04	1.50E-05	4.81E-07
RH102	5.31E-10	5.23E-10	5.03E-10	4.74E-10	4.20E-10	1.61E-10	4.89E-11
RH103M	1.16E-03	7.76E-04	2.69E-04	5.50E-05	2.09E-06	1.33E-17	1.35E-31
RH105	4.29E-05	8.58E-10	4.73E-22	0.00E+00	0.00E+00	0.00E+00	0.00E+00
RH105M	1.36E-15	0.00E+00	0.00E+00	0.00E+00	0.00E+00	0.00E+00	0.00E+00
RH106	4.61E-04	4.41E-04	3.94E-04	3.33E-04	2.35E-04	1.50E-05	4.81E-07
PD107	7.55E-11	7.55E-11	7.55E-11	7.55E-11	7.55E-11	7.55E-11	7.55E-11
PD109	6.72E-08	3.04E-20	0.00E+00	0.00E+00	0.00E+00	0.00E+00	0.00E+00
PD111	5.74E-16	0.00E+00	0.00E+00	0.00E+00	0.00E+00	0.00E+00	0.00E+00
PD111M	7.87E-16	0.00E+00	0.00E+00	0.00E+00	0.00E+00	0.00E+00	0.00E+00
PD112	1.28E-07	6.92E-16	2.19E-37	0.00E+00	0.00E+00	0.00E+00	0.00E+00
AG106	5.17E-11	7.92E-12	5.94E-14	3.86E-17	1.06E-23	0.00E+00	0.00E+00
AG108	3.03E-11	3.03E-11	3.02E-11	3.02E-11	3.01E-11	2.95E-11	2.87E-11
AG108M	3.40E-10	3.40E-10	3.40E-10	3.39E-10	3.38E-10	3.31E-10	3.22E-10
AG109M	5.98E-06	5.72E-06	5.23E-06	4.57E-06	3.47E-06	3.91E-07	2.55E-08
AG110	4.41E-08	4.14E-08	3.50E-08	2.73E-08	1.63E-08	2.84E-10	1.79E-12
AG110M	3.32E-06	3.11E-06	2.63E-06	2.05E-06	1.23E-06	2.13E-08	1.35E-10
AG111	4.30E-05	5.06E-06	1.90E-08	4.40E-12	1.44E-19	0.00E+00	0.00E+00
AG111M	8.24E-16	0.00E+00	0.00E+00	0.00E+00	0.00E+00	0.00E+00	0.00E+00
AG112	1.52E-07	8.20E-16	0.00E+00	0.00E+00	0.00E+00	0.00E+00	0.00E+00
AG113	8.48E-15	0.00E+00	0.00E+00	0.00E+00	0.00E+00	0.00E+00	0.00E+00

Nuclide	7 Days	30 Days	90 Days	180 Days	1 Year	5 Years	10 Years
CD109	5.92E-06	5.72E-06	5.23E-06	4.57E-06	3.47E-06	3.91E-07	2.55E-08
CD113M	3.55E-08	3.54E-08	3.51E-08	3.47E-08	3.39E-08	2.80E-08	2.21E-08
CD115	2.55E-04	1.99E-07	1.56E-15	1.08E-27	0.00E+00	0.00E+00	0.00E+00
CD115M	1.68E-04	1.18E-04	4.62E-05	1.14E-05	6.41E-07	8.81E-17	4.14E-29
IN113M	1.23E+00	1.07E+00	7.48E-01	4.35E-01	1.43E-01	2.15E-05	3.61E-10
IN114	1.17E-01	8.46E-02	3.65E-02	1.04E-02	7.75E-04	1.02E-12	8.01E-24
IN114M	1.22E-01	8.84E-02	3.82E-02	1.08E-02	8.09E-04	1.06E-12	8.37E-24
IN115	1.03E-20	1.04E-20	1.06E-20	1.07E-20	1.07E-20	1.07E-20	1.07E-20
IN115M	2.51E-06	2.04E-09	3.35E-11	8.27E-12	4.65E-13	6.38E-23	2.96E-35
SN113	1.23E+00	1.07E+00	7.48E-01	4.35E-01	1.43E-01	2.15E-05	3.60E-10
SN117M	7.22E+00	2.31E+00	1.19E-01	1.38E-03	1.44E-07	0.00E+00	0.00E+00
SN119M	8.16E+00	7.65E+00	6.45E+00	5.00E+00	2.96E+00	4.75E-02	2.71E-04
SN121	6.40E-02	4.03E-08	2.70E-24	0.00E+00	0.00E+00	0.00E+00	0.00E+00
SN121M	5.52E-04	5.52E-04	5.51E-04	5.49E-04	5.45E-04	5.15E-04	4.81E-04
SN123	4.53E-01	4.00E-01	2.90E-01	1.79E-01	6.62E-02	2.61E-05	1.44E-09
SN125	1.93E+00	3.69E-01	4.93E-03	7.65E-06	1.26E-11	0.00E+00	0.00E+00
SN126	4.33E-10	4.33E-10	4.33E-10	4.33E-10	4.33E-10	4.33E-10	4.33E-10
SB122	9.51E-02	2.59E-04	5.31E-11	4.91E-21	0.00E+00	0.00E+00	0.00E+00
SB124	1.75E-02	1.35E-02	6.74E-03	2.39E-03	2.83E-04	1.40E-11	1.03E-20
SB125	1.66E+00	1.65E+00	1.59E+00	1.49E+00	1.31E+00	4.82E-01	1.38E-01
SB126	4.95E-02	1.37E-02	4.78E-04	3.12E-06	1.59E-10	6.06E-11	6.06E-11
SB126M	4.33E-10	4.33E-10	4.33E-10	4.33E-10	4.33E-10	4.33E-10	4.33E-10
SB127	3.14E-05	5.00E-07	1.02E-11	9.31E-19	3.04E-33	0.00E+00	0.00E+00
SB128	3.80E-11	1.38E-29	0.00E+00	0.00E+00	0.00E+00	0.00E+00	0.00E+00
SB129	5.98E-16	0.00E+00	0.00E+00	0.00E+00	0.00E+00	0.00E+00	0.00E+00
TE123M	2.88E-03	2.52E-03	1.78E-03	1.06E-03	3.61E-04	7.64E-08	1.95E-12
TE125M	3.30E-01	3.42E-01	3.57E-01	3.53E-01	3.19E-01	1.18E-01	3.37E-02
TE127	6.64E-05	3.20E-05	2.15E-05	1.21E-05	3.74E-06	3.45E-10	3.12E-15
TE127M	3.71E-05	3.22E-05	2.20E-05	1.24E-05	3.82E-06	3.52E-10	3.19E-15
TE129	5.02E-05	3.13E-05	9.07E-06	1.42E-06	3.10E-08	2.52E-21	0.00E+00
TE129M	7.72E-05	4.80E-05	1.39E-05	2.18E-06	4.76E-08	3.88E-21	1.69E-37
TE131	5.95E-07	1.72E-12	6.11E-27	0.00E+00	0.00E+00	0.00E+00	0.00E+00
TE131M	2.64E-06	7.64E-12	2.71E-26	0.00E+00	0.00E+00	0.00E+00	0.00E+00
TE132	2.63E-04	1.97E-06	5.64E-12	2.73E-20	2.25E-37	0.00E+00	0.00E+00
I129	6.19E-11	6.21E-11	6.23E-11	6.23E-11	6.23E-11	6.23E-11	6.23E-11
I130	9.21E-09	3.32E-22	0.00E+00	0.00E+00	0.00E+00	0.00E+00	0.00E+00
I131	4.73E-04	6.52E-05	3.70E-07	1.58E-10	1.83E-17	0.00E+00	0.00E+00
I132	2.71E-04	2.03E-06	5.81E-12	2.81E-20	0.00E+00	0.00E+00	0.00E+00
I133	6.06E-06	6.22E-14	8.98E-35	0.00E+00	0.00E+00	0.00E+00	0.00E+00
I135	3.37E-11	0.00E+00	0.00E+00	0.00E+00	0.00E+00	0.00E+00	0.00E+00
XE127	7.86E-05	5.08E-05	1.62E-05	2.92E-06	8.59E-08	7.17E-20	5.72E-35
XE129M	5.31E-03	7.23E-04	4.00E-06	1.64E-09	1.76E-16	0.00E+00	0.00E+00
XE131M	1.21E-05	4.52E-06	1.74E-07	9.62E-10	1.99E-14	0.00E+00	0.00E+00
XE133	7.57E-04	3.66E-05	1.32E-08	9.01E-14	2.10E-24	0.00E+00	0.00E+00
XE133M	8.53E-06	5.96E-09	3.37E-17	1.43E-29	0.00E+00	0.00E+00	0.00E+00

Nuclide	7 Days	30 Days	90 Days	180 Days	1 Year	5 Years	10 Years
XE135	1.16E-08	6.10E-27	0.00E+00	0.00E+00	0.00E+00	0.00E+00	0.00E+00
XE135M	5.40E-12	0.00E+00	0.00E+00	0.00E+00	0.00E+00	0.00E+00	0.00E+00
CS131	4.51E-02	2.06E-02	1.02E-03	6.44E-06	1.32E-10	0.00E+00	0.00E+00
CS132	1.03E-07	8.78E-09	1.43E-11	9.32E-16	2.27E-24	0.00E+00	0.00E+00
CS134	6.66E-05	6.52E-05	6.17E-05	5.68E-05	4.79E-05	1.25E-05	2.32E-06
CS135	9.73E-11	9.73E-11	9.73E-11	9.73E-11	9.73E-11	9.73E-11	9.73E-11
CS136	2.01E-05	5.96E-06	2.49E-07	2.13E-09	1.18E-13	0.00E+00	0.00E+00
CS137	4.19E-05	4.19E-05	4.17E-05	4.15E-05	4.10E-05	3.74E-05	3.33E-05
BA131	3.23E-02	8.36E-03	2.47E-04	1.25E-06	2.37E-11	0.00E+00	0.00E+00
BA133	7.40E-04	7.37E-04	7.29E-04	7.18E-04	6.94E-04	5.36E-04	3.89E-04
BA133M	3.16E-05	1.69E-09	1.20E-20	2.26E-37	0.00E+00	0.00E+00	0.00E+00
BA135M	2.40E-04	3.88E-10	3.04E-25	0.00E+00	0.00E+00	0.00E+00	0.00E+00
BA136M	3.31E-06	9.82E-07	4.11E-08	3.51E-10	1.95E-14	0.00E+00	0.00E+00
BA137M	3.97E-05	3.96E-05	3.95E-05	3.92E-05	3.88E-05	3.53E-05	3.15E-05
BA140	9.03E-04	2.60E-04	1.01E-05	7.65E-08	3.34E-12	0.00E+00	0.00E+00
LA138	2.71E-20	2.71E-20	2.71E-20	2.71E-20	2.71E-20	2.71E-20	2.71E-20
LA140	1.37E-03	2.99E-04	1.16E-05	8.81E-08	3.84E-12	0.00E+00	0.00E+00
LA141	1.84E-16	0.00E+00	0.00E+00	0.00E+00	0.00E+00	0.00E+00	0.00E+00
CE141	1.08E-03	6.63E-04	1.84E-04	2.71E-05	5.21E-07	1.55E-20	1.91E-37
CE142	9.97E-15	9.97E-15	9.97E-15	9.97E-15	9.97E-15	9.97E-15	9.97E-15
CE143	3.24E-05	2.99E-10	2.18E-23	0.00E+00	0.00E+00	0.00E+00	0.00E+00
CE144	6.43E-04	6.08E-04	5.25E-04	4.22E-04	2.68E-04	7.61E-06	8.86E-08
PR142	9.80E-08	2.02E-16	0.00E+00	0.00E+00	0.00E+00	0.00E+00	0.00E+00
PR143	8.34E-04	2.59E-04	1.21E-05	1.21E-07	9.40E-12	0.00E+00	0.00E+00
PR144	6.43E-04	6.08E-04	5.25E-04	4.22E-04	2.68E-04	7.61E-06	8.86E-08
PR144M	7.72E-06	7.29E-06	6.30E-06	5.06E-06	3.22E-06	9.14E-08	1.06E-09
ND144	2.84E-19	2.97E-19	3.28E-19	3.66E-19	4.23E-19	5.20E-19	5.22E-19
PR145	2.70E-12	0.00E+00	0.00E+00	0.00E+00	0.00E+00	0.00E+00	0.00E+00
PM146	1.19E-09	1.18E-09	1.16E-09	1.12E-09	1.05E-09	6.35E-10	3.38E-10
SM146	2.82E-17	2.85E-17	2.92E-17	3.02E-17	3.22E-17	4.43E-17	5.30E-17
ND147	3.27E-04	7.73E-05	1.80E-06	6.39E-09	5.80E-14	0.00E+00	0.00E+00
PM147	6.65E-05	6.83E-05	6.62E-05	6.21E-05	5.43E-05	1.89E-05	5.04E-06
SM147	2.95E-16	3.23E-16	3.95E-16	4.97E-16	6.88E-16	1.56E-15	1.90E-15
PM148	7.20E-05	4.16E-06	1.85E-07	4.03E-08	1.80E-09	4.03E-20	1.96E-33
PM148M	1.31E-05	8.88E-06	3.24E-06	7.16E-07	3.20E-08	7.15E-19	3.48E-32
SM148	1.45E-20	1.46E-20	1.47E-20	1.48E-20	1.48E-20	1.48E-20	1.48E-20
PM149	5.60E-05	4.15E-08	2.83E-16	1.60E-28	0.00E+00	0.00E+00	0.00E+00
EU150	3.42E-15	3.41E-15	3.40E-15	3.39E-15	3.35E-15	3.10E-15	2.82E-15
PM151	3.06E-06	4.29E-12	2.31E-27	0.00E+00	0.00E+00	0.00E+00	0.00E+00
SM151	1.94E-07	1.94E-07	1.94E-07	1.94E-07	1.93E-07	1.87E-07	1.80E-07
EU152	1.88E-09	1.88E-09	1.86E-09	1.84E-09	1.79E-09	1.46E-09	1.13E-09
EU152M	2.02E-13	2.99E-31	0.00E+00	0.00E+00	0.00E+00	0.00E+00	0.00E+00
SM153	3.02E-05	8.35E-09	4.35E-18	5.17E-32	0.00E+00	0.00E+00	0.00E+00
GD153	1.46E-08	1.37E-08	1.16E-08	8.92E-09	5.25E-09	7.99E-11	4.28E-13
EU154	4.56E-06	4.53E-06	4.48E-06	4.39E-06	4.21E-06	3.05E-06	2.04E-06

Nuclide	7 Days	30 Days	90 Days	180 Days	1 Year	5 Years	10 Years
EU155	3.08E-06	3.05E-06	2.98E-06	2.88E-06	2.68E-06	1.53E-06	7.62E-07
SM156	1.14E-10	2.40E-28	0.00E+00	0.00E+00	0.00E+00	0.00E+00	0.00E+00
EU156	1.02E-04	3.58E-05	2.32E-06	3.81E-08	8.09E-12	0.00E+00	0.00E+00
EU157	1.38E-08	1.61E-19	0.00E+00	0.00E+00	0.00E+00	0.00E+00	0.00E+00
GD159	1.40E-08	1.63E-17	0.00E+00	0.00E+00	0.00E+00	0.00E+00	0.00E+00
TB160	7.71E-07	6.19E-07	3.48E-07	1.47E-07	2.49E-08	2.06E-14	5.12E-22
TB161	8.00E-07	7.99E-08	1.96E-10	2.39E-14	2.09E-22	0.00E+00	0.00E+00
DY166	8.97E-09	8.20E-11	3.94E-16	4.14E-24	0.00E+00	0.00E+00	0.00E+00
HO166	1.47E-08	1.22E-10	5.86E-16	6.17E-24	0.00E+00	0.00E+00	0.00E+00
HO166M	1.53E-12	1.53E-12	1.53E-12	1.53E-12	1.53E-12	1.52E-12	1.52E-12
ER169	1.58E-10	2.90E-11	3.48E-13	4.57E-16	5.34E-22	0.00E+00	0.00E+00
TM170	3.20E-11	2.82E-11	2.04E-11	1.26E-11	4.63E-12	1.76E-15	9.34E-20
TM171	5.22E-13	5.10E-13	4.81E-13	4.40E-13	3.66E-13	8.64E-14	1.42E-14
TM172	6.04E-10	1.47E-12	2.25E-19	1.34E-29	0.00E+00	0.00E+00	0.00E+00
YB175	4.08E-12	9.08E-14	4.44E-18	1.52E-24	8.74E-38	0.00E+00	0.00E+00
LU177	1.88E-03	1.76E-04	1.47E-06	7.45E-07	3.25E-07	4.73E-10	1.34E-13
LU177M	7.02E-06	6.33E-06	4.84E-06	3.24E-06	1.41E-06	2.06E-09	5.84E-13
HF175	2.98E-02	2.37E-02	1.31E-02	5.37E-03	8.58E-04	4.47E-10	6.26E-18
HF180M	3.08E-11	0.00E+00	0.00E+00	0.00E+00	0.00E+00	0.00E+00	0.00E+00
HF181	7.98E-01	5.48E-01	2.06E-01	4.72E-02	2.28E-03	9.65E-14	1.04E-26
HF182	7.65E-10	7.65E-10	7.65E-10	7.65E-10	7.65E-10	7.65E-10	7.65E-10
TA182	1.05E+01	9.16E+00	6.38E+00	3.71E+00	1.21E+00	1.82E-04	3.78E-09
TA183	2.17E+01	9.53E-01	2.74E-04	1.34E-09	1.55E-20	0.00E+00	0.00E+00
W181	5.56E-03	4.87E-03	3.46E-03	2.07E-03	7.16E-04	1.68E-07	4.88E-12
W185	1.94E-01	1.57E-01	9.00E-02	3.92E-02	7.09E-03	9.88E-09	4.72E-16
W187	2.33E-02	2.59E-09	1.89E-27	0.00E+00	0.00E+00	0.00E+00	0.00E+00
W188	1.40E-02	1.11E-02	6.12E-03	2.49E-03	3.91E-04	1.80E-10	2.16E-18
RE186	2.86E-02	4.19E-04	6.92E-09	4.64E-16	7.95E-31	0.00E+00	0.00E+00
RE187	6.01E-11	6.01E-11	6.01E-11	6.01E-11	6.01E-11	6.01E-11	6.01E-11
RE188	1.52E-02	1.13E-02	6.18E-03	2.52E-03	3.96E-04	1.82E-10	2.18E-18
RE189	5.96E-08	8.65E-15	1.25E-32	0.00E+00	0.00E+00	0.00E+00	0.00E+00
OS191	4.34E-05	1.54E-05	1.04E-06	1.81E-08	4.34E-12	0.00E+00	0.00E+00
OS191M	6.15E-09	1.02E-21	0.00E+00	0.00E+00	0.00E+00	0.00E+00	0.00E+00
OS193	1.23E-11	5.34E-17	5.55E-31	0.00E+00	0.00E+00	0.00E+00	0.00E+00
IR192	9.83E-06	7.92E-06	4.52E-06	1.95E-06	3.43E-07	8.05E-12	7.55E-12
IR192M	7.76E-12	7.76E-12	7.76E-12	7.75E-12	7.74E-12	7.65E-12	7.54E-12
IR194	1.52E-09	1.34E-13	1.31E-13	1.28E-13	1.20E-13	7.57E-14	4.25E-14
PT193	3.08E-11	3.09E-11	3.09E-11	3.09E-11	3.09E-11	3.07E-11	3.05E-11
PT193M	5.54E-09	1.36E-10	8.57E-15	4.29E-21	4.61E-34	0.00E+00	0.00E+00
PT195M	6.53E-12	4.07E-14	7.21E-20	1.70E-28	0.00E+00	0.00E+00	0.00E+00
TL207	1.08E-17	1.32E-17	1.78E-17	2.70E-17	4.38E-17	1.86E-16	3.83E-16
TL208	4.94E-14	5.77E-14	8.54E-14	1.31E-13	2.47E-13	1.40E-12	2.25E-12
TL209	6.95E-19	4.78E-19	1.62E-19	1.71E-19	1.62E-19	1.87E-19	2.35E-19
PB205	1.47E-10	1.47E-10	1.47E-10	1.47E-10	1.47E-10	1.47E-10	1.47E-10
PB209	3.22E-17	2.21E-17	7.50E-18	7.91E-18	7.48E-18	8.64E-18	1.09E-17

Nuclide	7 Days	30 Days	90 Days	180 Days	1 Year	5 Years	10 Years
PB210	2.15E-19	2.32E-19	2.47E-19	2.55E-19	2.74E-19	1.03E-18	4.77E-18
PB211	1.08E-17	1.32E-17	1.79E-17	2.70E-17	4.39E-17	1.86E-16	3.84E-16
PB212	1.38E-13	1.61E-13	2.38E-13	3.65E-13	6.86E-13	3.90E-12	6.27E-12
PB214	6.58E-19	6.58E-19	9.11E-19	1.18E-18	1.87E-18	1.33E-17	4.30E-17
BI210	2.90E-09	1.21E-10	3.00E-14	3.73E-19	2.74E-19	1.03E-18	4.77E-18
BI211	1.08E-17	1.32E-17	1.79E-17	2.70E-17	4.39E-17	1.86E-16	3.84E-16
BI212	1.38E-13	1.61E-13	2.38E-13	3.65E-13	6.86E-13	3.90E-12	6.27E-12
BI213	3.22E-17	2.21E-17	7.50E-18	7.91E-18	7.48E-18	8.64E-18	1.09E-17
BI214	6.58E-19	6.58E-19	9.11E-19	1.18E-18	1.87E-18	1.33E-17	4.30E-17
PO210	4.83E-09	4.40E-09	3.26E-09	2.08E-09	8.22E-10	5.47E-13	6.68E-17
PO211	3.02E-20	3.69E-20	5.00E-20	7.57E-20	1.23E-19	5.21E-19	1.08E-18
PO212	8.81E-14	1.03E-13	1.52E-13	2.34E-13	4.40E-13	2.50E-12	4.02E-12
PO213	3.15E-17	2.16E-17	7.34E-18	7.74E-18	7.32E-18	8.45E-18	1.07E-17
PO214	1.26E-17	6.05E-18	1.62E-18	1.20E-18	1.87E-18	1.33E-17	4.30E-17
PO215	1.08E-17	1.32E-17	1.79E-17	2.70E-17	4.39E-17	1.86E-16	3.84E-16
PO216	1.38E-13	1.61E-13	2.38E-13	3.65E-13	6.86E-13	3.90E-12	6.27E-12
PO218	6.58E-19	6.58E-19	9.11E-19	1.18E-18	1.87E-18	1.33E-17	4.30E-17
AT217	3.22E-17	2.21E-17	7.50E-18	7.91E-18	7.48E-18	8.64E-18	1.09E-17
RN218	1.20E-17	5.39E-18	7.10E-19	1.75E-20	0.00E+00	0.00E+00	0.00E+00
RN219	1.08E-17	1.32E-17	1.79E-17	2.70E-17	4.39E-17	1.86E-16	3.84E-16
RN220	1.38E-13	1.61E-13	2.38E-13	3.65E-13	6.86E-13	3.90E-12	6.27E-12
RN222	6.58E-19	6.58E-19	9.11E-19	1.18E-18	1.87E-18	1.33E-17	4.30E-17
FR221	3.22E-17	2.21E-17	7.50E-18	7.91E-18	7.48E-18	8.64E-18	1.09E-17
FR223	2.09E-19	2.36E-19	3.08E-19	4.16E-19	6.42E-19	2.57E-18	5.29E-18
RA222	1.20E-17	5.39E-18	7.10E-19	1.75E-20	0.00E+00	0.00E+00	0.00E+00
RA223	1.08E-17	1.32E-17	1.79E-17	2.70E-17	4.39E-17	1.86E-16	3.84E-16
RA224	1.38E-13	1.61E-13	2.38E-13	3.65E-13	6.86E-13	3.90E-12	6.27E-12
RA225	2.88E-17	1.48E-17	7.21E-18	7.21E-18	7.48E-18	8.64E-18	1.09E-17
RA226	6.95E-19	7.52E-19	9.11E-19	1.18E-18	1.87E-18	1.33E-17	4.30E-17
RA228	0.00E+00	0.00E+00	0.00E+00	0.00E+00	0.00E+00	0.00E+00	6.27E-21
AC225	3.22E-17	2.21E-17	7.50E-18	7.91E-18	7.48E-18	8.64E-18	1.09E-17
AC227	1.51E-17	1.71E-17	2.23E-17	3.01E-17	4.65E-17	1.86E-16	3.84E-16
AC228	1.98E-24	0.00E+00	0.00E+00	0.00E+00	0.00E+00	0.00E+00	6.27E-21
TH226	1.20E-17	5.39E-18	7.10E-19	1.75E-20	0.00E+00	0.00E+00	0.00E+00
TH227	1.23E-17	1.46E-17	1.97E-17	2.74E-17	4.32E-17	1.83E-16	3.79E-16
TH228	1.42E-13	1.66E-13	2.37E-13	3.63E-13	6.84E-13	3.89E-12	6.27E-12
TH229	7.28E-18	7.29E-18	7.32E-18	7.37E-18	7.48E-18	8.64E-18	1.09E-17
TH230	2.02E-15	2.12E-15	2.37E-15	2.74E-15	3.50E-15	9.71E-15	1.79E-14
TH231	4.18E-12	3.30E-12	3.30E-12	3.30E-12	3.30E-12	3.30E-12	3.30E-12
TH232	1.81E-21	1.94E-21	2.28E-21	2.79E-21	3.84E-21	1.21E-20	2.25E-20
TH234	2.46E-10	2.46E-10	2.46E-10	2.46E-10	2.46E-10	2.46E-10	2.46E-10
PA231	1.00E-15	1.01E-15	1.02E-15	1.03E-15	1.07E-15	1.35E-15	1.70E-15
PA232	1.25E-12	6.49E-18	1.06E-31	0.00E+00	0.00E+00	0.00E+00	0.00E+00
PA233	7.53E-11	7.89E-11	8.28E-11	8.38E-11	8.39E-11	8.45E-11	8.62E-11
PA234M	2.46E-10	2.46E-10	2.46E-10	2.46E-10	2.46E-10	2.46E-10	2.46E-10

Nuclide	7 Days	30 Days	90 Days	180 Days	1 Year	5 Years	10 Years
PA234	3.20E-13	3.20E-13	3.20E-13	3.20E-13	3.20E-13	3.20E-13	3.20E-13
U230	1.16E-17	5.24E-18	3.50E-19	0.00E+00	0.00E+00	0.00E+00	0.00E+00
U231	1.20E-15	2.55E-17	1.28E-21	4.53E-28	0.00E+00	0.00E+00	0.00E+00
U232	1.15E-12	1.26E-12	1.52E-12	1.90E-12	2.61E-12	5.86E-12	7.00E-12
U233	1.98E-15	2.00E-15	2.06E-15	2.15E-15	2.33E-15	3.81E-15	5.67E-15
U234	1.67E-10	1.67E-10	1.67E-10	1.68E-10	1.69E-10	1.77E-10	1.86E-10
U235	3.30E-12	3.30E-12	3.30E-12	3.30E-12	3.30E-12	3.30E-12	3.30E-12
U236	4.20E-11	4.20E-11	4.20E-11	4.20E-11	4.20E-11	4.20E-11	4.21E-11
U237	1.52E-04	1.43E-05	3.26E-08	2.39E-09	2.33E-09	1.92E-09	1.51E-09
U238	2.46E-10	2.46E-10	2.46E-10	2.46E-10	2.46E-10	2.46E-10	2.46E-10
U240	2.35E-11	3.66E-16	3.66E-16	3.66E-16	3.66E-16	3.66E-16	3.66E-16
NP235	1.77E-12	1.70E-12	1.53E-12	1.31E-12	9.46E-13	7.34E-14	3.00E-15
NP236M	1.83E-11	7.52E-19	0.00E+00	0.00E+00	0.00E+00	0.00E+00	0.00E+00
NP236	1.45E-15	1.45E-15	1.45E-15	1.45E-15	1.45E-15	1.45E-15	1.45E-15
NP237	8.25E-11	8.37E-11	8.39E-11	8.39E-11	8.39E-11	8.45E-11	8.62E-11
NP238	1.32E-05	7.10E-09	1.68E-11	1.67E-11	1.67E-11	1.64E-11	1.60E-11
NP239	2.96E-03	3.41E-06	1.24E-08	1.24E-08	1.24E-08	1.24E-08	1.24E-08
NP240M	2.37E-11	3.66E-16	3.66E-16	3.66E-16	3.66E-16	3.66E-16	3.66E-16
PU236	1.76E-10	1.73E-10	1.67E-10	1.57E-10	1.39E-10	5.25E-11	1.56E-11
PU237	2.01E-10	1.42E-10	5.69E-11	1.45E-11	8.68E-13	1.97E-22	1.73E-34
PU238	6.11E-07	6.23E-07	6.46E-07	6.71E-07	6.99E-07	7.03E-07	6.76E-07
PU239	2.33E-07	2.34E-07	2.34E-07	2.34E-07	2.34E-07	2.34E-07	2.34E-07
PU240	3.24E-07	3.24E-07	3.24E-07	3.24E-07	3.24E-07	3.24E-07	3.24E-07
PU241	9.95E-05	9.92E-05	9.84E-05	9.73E-05	9.49E-05	7.83E-05	6.16E-05
PU242	1.34E-09	1.34E-09	1.34E-09	1.34E-09	1.34E-09	1.34E-09	1.34E-09
PU243	2.42E-14	4.01E-17	4.01E-17	4.01E-17	4.01E-17	4.01E-17	4.01E-17
PU244	3.67E-16	3.67E-16	3.67E-16	3.67E-16	3.67E-16	3.67E-16	3.67E-16
PU245	1.44E-14	3.04E-30	0.00E+00	0.00E+00	0.00E+00	0.00E+00	0.00E+00
PU246	2.40E-13	5.52E-14	1.20E-15	3.21E-18	2.41E-23	8.12E-25	8.12E-25
AM239	4.75E-17	5.16E-31	0.00E+00	0.00E+00	0.00E+00	0.00E+00	0.00E+00
AM240	1.82E-11	9.73E-15	2.86E-23	4.58E-36	0.00E+00	0.00E+00	0.00E+00
AM241	5.71E-08	6.71E-08	9.31E-08	1.32E-07	2.10E-07	7.61E-07	1.31E-06
AM242M	3.35E-09	3.35E-09	3.35E-09	3.35E-09	3.34E-09	3.28E-09	3.21E-09
AM242	4.56E-08	3.34E-09	3.33E-09	3.33E-09	3.32E-09	3.26E-09	3.19E-09
AM243	1.24E-08	1.24E-08	1.24E-08	1.24E-08	1.24E-08	1.24E-08	1.24E-08
AM244	5.33E-11	1.88E-27	0.00E+00	0.00E+00	0.00E+00	0.00E+00	0.00E+00
AM245	1.79E-14	3.77E-18	3.31E-18	2.73E-18	1.83E-18	7.71E-20	1.48E-21
AM246	2.40E-13	5.53E-14	1.20E-15	3.81E-18	2.41E-23	8.12E-25	8.12E-25
CM241	9.17E-12	5.89E-12	1.85E-12	3.28E-13	9.26E-15	5.62E-27	0.00E+00
CM242	2.33E-05	2.11E-05	1.64E-05	1.12E-05	5.09E-06	1.30E-08	2.64E-09
CM243	8.85E-09	8.83E-09	8.80E-09	8.75E-09	8.64E-09	7.84E-09	6.94E-09
CM244	1.26E-06	1.26E-06	1.25E-06	1.24E-06	1.21E-06	1.04E-06	8.60E-07
CM245	8.80E-11	8.80E-11	8.80E-11	8.80E-11	8.80E-11	8.80E-11	8.80E-11
CM246	1.65E-11	1.65E-11	1.65E-11	1.65E-11	1.65E-11	1.65E-11	1.65E-11
CM247	4.01E-17	4.01E-17	4.01E-17	4.01E-17	4.01E-17	4.01E-17	4.01E-17

Nuclide	7 Days	30 Days	90 Days	180 Days	1 Year	5 Years	10 Years
CM248	8.05E-17	8.05E-17	8.05E-17	8.05E-17	8.05E-17	8.05E-17	8.05E-17
CM249	8.38E-19	3.42E-19	3.47E-20	1.69E-21	1.26E-24	0.00E+00	0.00E+00
BK249	2.74E-13	2.60E-13	2.29E-13	1.88E-13	1.26E-13	5.32E-15	1.02E-16
BK250	1.83E-18	1.73E-18	1.49E-18	1.17E-18	7.29E-19	4.14E-20	1.47E-20
CF249	6.32E-17	9.65E-17	1.76E-16	2.77E-16	4.32E-16	7.28E-16	7.34E-16
CF250	3.75E-15	3.74E-15	3.70E-15	3.66E-15	3.56E-15	2.88E-15	2.21E-15
CF251	1.99E-17	1.99E-17	1.99E-17	1.99E-17	1.99E-17	1.98E-17	1.97E-17
CF252	3.45E-15	3.39E-15	3.25E-15	3.05E-15	2.67E-15	9.32E-16	2.51E-16
CF253	2.70E-16	1.10E-16	1.12E-17	5.45E-19	4.04E-22	0.00E+00	0.00E+00
CF254	4.35E-18	3.21E-18	1.76E-18	5.59E-19	2.14E-19	1.15E-26	9.40E-36
ES253	2.06E-16	1.85E-16	5.00E-17	3.95E-18	4.73E-19	0.00E+00	0.00E+00
ES254M	5.27E-18	3.12E-22	2.91E-33	0.00E+00	0.00E+00	0.00E+00	0.00E+00
ES254	1.83E-18	1.73E-18	1.47E-18	1.13E-18	7.29E-19	4.14E-20	1.47E-20
TOTAL	1.65E+03	1.15E+03	6.03E+02	3.72E+02	2.55E+02	9.87E+01	4.61E+01

In order to provide the results in Table D1 it was necessary to convert the ORIGEN2 case from a power irradiation to a flux irradiation for the TPBAR. The output file from the input file shown in Appendix B provides an equivalent flux irradiation to the specified power irradiation in the input file. Using this information, it is possible to include the trace uranium in the metal components to generate a complete listing of radionuclides. Table D1 contains a summation of the activation products, the actinides and daughters, and the fission products. A listing of the input file is provided below.

Small_Origen.inp

```
-1
-1
-1
TIT     Prod.  Reactor Target Rod Waste Eval.:  TPBAR
RDA     FLUX=5.16435E14
BAS     1 TPBAR
LIB     0 1 2 3 204 205 206 9 3 0 1 1
PHO     101 102 103 10
LIP     0 0 0
INP     1 1 -1 -1 1 1
BUP
IRF      50.  5.16435E14  1  2  4  2
IRF     100.  5.16435E14  2  3  4  0
IRF     150.  5.16435E14  3  4  4  0
IRF     200.  5.16435E14  4  5  4  0
IRF     250.  5.16435E14  5  6  4  0
IRF     300.  5.16435E14  6  7  4  0
IRF     350.  5.16435E14  7  8  4  0
IRF     400.  5.16435E14  8  9  4  0
IRF     450.  5.16435E14  9 10  4  0
IRF     500.  5.16435E14 10 11  4  0
IRF     510.  5.16435E14 11  1  4  0
BUP
DEC      7.              1  2  4  2
```

```
DEC      30.              2  3  4  0
DEC      90.              3  4  4  0
DEC     180.              4  5  4  0
DEC       1.              5  6  5  0
DEC       5.              6  7  5  0
DEC      10.              7  8  5  0
HED     1   Discharge
HED     2     7 Days
HED     3    30 Days
HED     4    90 Days
HED     5   180 Days
HED     6     1 Year
HED     7     5 Years
HED     8    10 Years
OPTL    8 8 8 8 7 8 7 8 7 8 8 8 8 8 8 8 8 8 8 8 8 8 8 8
OPTA    8 8 8 8 7 8 7 8 8 8 8 8 8 8 8 8 8 8 8 8 8 8 8 8
OPTF    8 8 8 8 7 8 7 8 8 8 8 8 8 8 8 8 8 8 8 8 8 8 8 8
CUT     7 3.0E-17 -1
OUT     8  1  0  -1
STP     4
1        30060 6.48E+00    30070 1.49E+01        0       0.0
2       922340 4.14E-08   922350 5.42E-06   922380 7.48E-04        0       0.0
4       260000 3.50E+02   240000 1.02E+02   280000 3.35E+02    80000 1.02E+02
4       130000 8.66E+01   330000 2.75E-01    50000 1.14E-02   560000 1.68E-01
4        60000 7.12E-01   200000 8.40E-01   480000 1.08E-04   270000 2.87E-01
4       290000 2.37E-01    10000 5.38E-03   720000 2.15E-02   190000 1.05E+00
4       120000 4.24E-01   250000 1.13E+01   420000 1.70E+01    70000 7.37E-02
4       110000 1.05E+00   410000 2.83E-01   150000 2.26E-01   820000 8.40E-02
4       160000 5.65E-02   340000 7.35E-02   140000 6.36E+00   500000 3.66E+00
4       730000 1.13E-01   220000 1.08E-02   230000 2.83E-01   740000 2.15E-02
4       400000 2.10E+02    90000 3.15E-02   170000 3.15E-02   530000 3.15E-02
4       350000 3.15E-02        0       0.0
0
END
```

APPENDIX 1-D

DOE Drawing H-3-307845, "Production TPBAR Reactor Interface Dimensions Watts Bar," Revision 10, Sheet 1 of 2

UNCLASSIFIED

UNCLASSIFIED

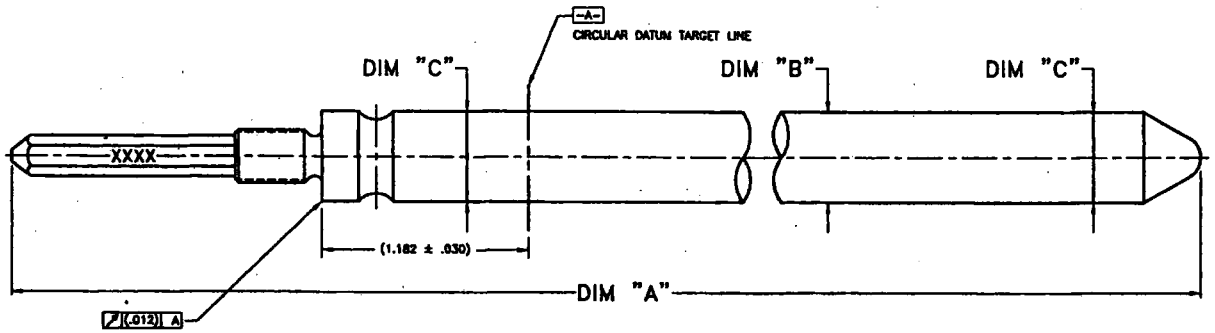

GENERAL NOTES
(UNLESS OTHERWISE SPECIFIED)

1. ALL DIMENSIONS ARE IN INCHES
2. DIMENSIONING AND TOLERANCING ARE IN ACCORDANCE WITH ASME Y14.5M-1994.
3. "BOL" (BEGINNING OF LIFE) DIMENSIONS DO NOT INCLUDE IRRADIATION INDUCED EFFECTS. "EOL" (END OF LIFE) DIMENSIONS INCLUDE IRRADIATION INDUCED EFFECTS.
4. TOP END PLUG DIMENSIONS ARE SHOWN ON H-3-307860 OR H-3-310191. BOTTOM END PLUG DIMENSIONS ARE SHOWN ON H-3-307861 OR H-3-310192.

WATTS BAR

CONDITION (SEE NOTE 3)	OVERALL LENGTH DIM "A" (MAXIMUMS)	OUTSIDE DIA DIM "B" (MAXIMUMS)	WELD DIA DIM "C" (MAXIMUMS)
COLD "BOL" T = 68° F Pi = 14.7 PSI Po = 14.7 PSI	153.035	0.3825	0.3855
COLD "EOL" T = 68° F Pi = 1500 PSI* Po = 14.7 PSI	153.247	0.3837	0.3859
HOT "BOL" T = 583° F Pi = 14.7 PSI Po = 2500 PSI	153.898	0.3845	0.3877
HOT "EOL" T = 583° F Pi = 3200 PSI Po = 14.7 PSI	154.147	0.3861	0.3881

* PRESSURE SELECTED TO BOUND TPBAR OPERATION, NOT RELATED TO TRITIUM PRODUCTION.

SIGNATURES ARE ON FILE

| REVISIONS | | |

APPENDIX 1-E

DOE Drawing H-3-308875, "Production TPBAR Reactor Interface Dimensions Sequoyah," Revision 5, Sheet 1 of 2

UNCLASSIFIED

UNCLASSIFIED

VERIFIED DISTRIBUTION
COPY NO. 00002

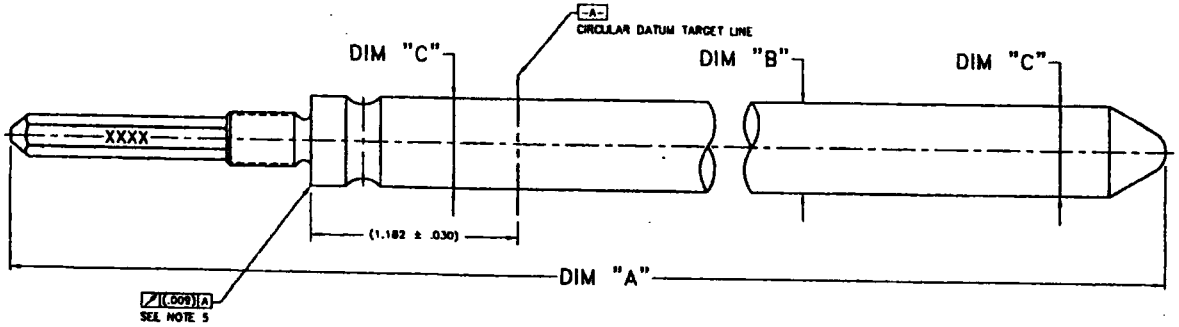

GENERAL NOTES
(UNLESS OTHERWISE SPECIFIED)

1. ALL DIMENSIONS ARE IN INCHES
2. DIMENSIONING AND TOLERANCING ARE IN ACCORDANCE WITH ASME Y14.5M-1994.
3. "BOL" (BEGINNING OF LIFE) DIMENSIONS DO NOT INCLUDE IRRADIATION INDUCED EFFECTS. "EOL" (END OF LIFE) DIMENSIONS INCLUDE IRRADIATION INDUCED EFFECTS.
4. TOP END PLUG DIMENSIONS SHOWN ON H-3-307860 OR H-3-310191. BOTTOM END PLUG DIMENSIONS SHOWN ON H-3-307861 OR H-3-310192.
5. TIR MAY BE INCREASED IF APPROVED BY THE DESIGN AUTHORITY AND THE FUEL DESIGNER.

SEQUOYAH

CONDITION (SEE NOTE 3)	OVERALL LENGTH DIM "A" (MAXIMUMS)	OUTSIDE DIA DIM "B" (MAXIMUMS)	WELD DIA DIM "C" (MAXIMUMS)
COLD "BOL" T = 68° F Pi = 14.7 PSI Po = 14.7 PSI	153.035	0.3825	0.3855
COLD "EOL" T = 68° F Pi = 1500 PSI* Po = 14.7 PSI	153.247	0.3837	0.3859
HOT "BOL" T = 663° F Pi = 14.7 PSI Po = 2500 PSI	153.898	0.3845	0.3877
HOT "EOL" T = 663° F Pi = 3200 PSI Po = 14.7 PSI	154.147	0.3861	0.3881

* PRESSURE SELECTED TO BOUND TPBAR OPERATION, NOT RELATED TO TRITIUM PRODUCTION.

H-3-307860	PRODUCTION TOP END PLUG
H-3-307861	PRODUCTION BOTTOM END PLUG
H-3-310191	TOP END PLUG
H-3-310192	BOTTOM END PLUG
DRAWING NO	DRAWING TITLE
REFERENCE DRAWINGS	
NEXT USED ON :	

SIGNATURES ARE ON FILE

REV NO	DESCRIPTION	DRN	DES	ENG	QA	DATE
5	REQUEST #04-T-523 REVISED PER TTP CHANGE	DMH				2/6/04
4	REQUEST #02-T-429 REVISED PER TTQP CHANGE	DMH				5/17/02
3	REQUEST #02-T-484 REVISED PER TTQP CHANGE	DJY				9/1/02
2	REQUEST #02-T-400 REVISED PER TTQP CHANGE	DJY				9/4/02
1	REQUEST #01-T-397 REVISED PER TTQP CHANGE	DMH				9/24/01

REVISIONS

RELEASED	HAGERTY/SACKS
CHECKED	DJ YEAGER
APPROVED	DJ YEAGER
	R D GATES
	ROBERT GATES
	NEIL F MARA
	JF MUCHA
APPROVED FOR RELEASE	DD REQ 8/25/00
DES TP	

PNL RELEASE 8/25/00 DATE JAG

PACIFIC NORTHWEST NATIONAL LABORATORY P.O. BOX 999 Richland, WA 99352

Author: E. T. Lund, Jr.
Senior Development Engineer
Pacific Northwest National Laboratory
Date: 8/25/00
Quality Assurance:

COMMERCIAL NUCLEAR RELATED | WP # D01388-EDP03R'0

U. S. DEPARTMENT OF ENERGY
RICHLAND OPERATIONS OFFICE
PACIFIC NORTHWEST NATIONAL LABORATORY
OPERATED BY BATTELLE MEMORIAL INSTITUTE

PRODUCTION TPBAR REACTOR INTERFACE DIMENSIONS SEQUOYAH

TRITIUM TECHNOLOGY PROGRAM

SIZE	CAGE NO	BLUE PRINT NO	DRAWING NO	REV
D	9003	330	H-3-308875	5
SCALE	4" = 1"	SHEET	1 OF 2	

UNCLASSIFIED

UNCLASSIFIED

APPENDIX 1-F

DOE Drawing H-3-310568, "Mark 8 Multi-Pencil TPBAR – Watts Bar Reactor Interface," Revision 0, Sheet 1 of 2

UNCLASSIFIED

PNNL-TTP-1-976

UNCLASSIFIED

VERIFIED DISTRIBUTION
COPY NO. 00002

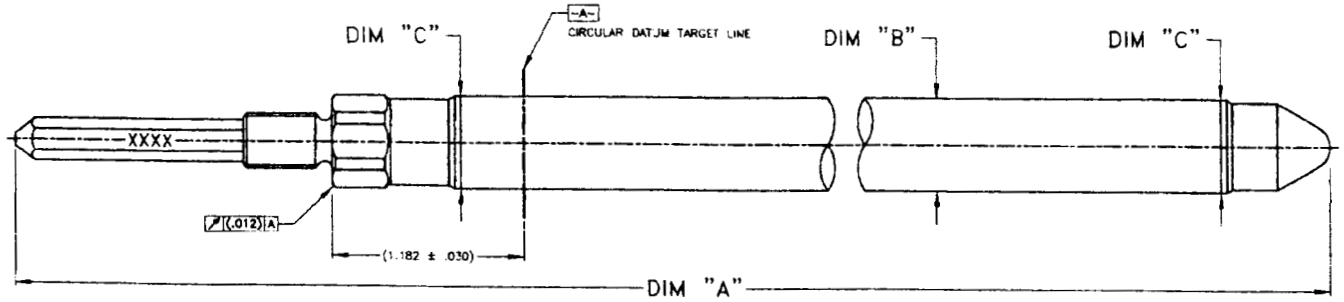

WATTS BAR

CONDITION (SEE NOTE 3)	OVERALL LENGTH DIM "A" (MAXIMUMS)	OUTSIDE DIA DIM "B" (MAXIMUMS)	WELD DIA DIM "C" (MAXIMUMS)
COLD "BOL" T = 68° F, Pi = 14.7 PSI, Po = 14.7 PSI	153.035	0.3825	0.3855
COLD "EOL" T = 68° F, Pi = 1500 PSI *, Po = 14.7 PSI	153.221	0.3837	0.3859
HOT "BOL" T = 663° F, Pi = 14.7 PSI, Po = 2500 PSI	153.809	0.3843	0.3875
HOT "EOL" T = 663° F, Pi = 3200 PSI *, Po = 14.7 PSI	154.003	0.3859	0.3879

* PRESSURE SELECTED TO BOUND TPBAR OPERATION. NOT RELATED TO TRITIUM PRODUCTION

GENERAL NOTES
(UNLESS OTHERWISE SPECIFIED)

1. ALL DIMENSIONS ARE IN INCHES.
2. DIMENSIONING AND TOLERANCING ARE IN ACCORDANCE WITH ASME Y14.5M-1994
3. "BOL" (BEGINNING OF LIFE) DIMENSIONS DO NOT INCLUDE IRRADIATION INDUCED EFFECTS. "EOL" (END OF LIFE) DIMENSIONS INCLUDE IRRADIATION INDUCED EFFECTS
4. TOP END PLUG DIMENSIONS ARE SHOWN ON H-3-310571. BOTTOM END PLUG DIMENSIONS ARE SHOWN ON H-3-310586.

RELEASE
02-02-06
DATE

PACIFIC NORTHWEST NATIONAL LABORATORY
ATTN: DMCC
P.O. BOX 999
Richland, WA 99352

Author: E. F. Love, Jr.
Senior Development Engineer
Pacific Northwest National Laboratory
Date 2/1/06
Checked From:

COMMERCIAL NUCLEAR RELATED | EDP # DD139B-EDP03R12

DRAWN	DM HAGERTY	DATE 10/8/05
CHECKED		
ENGR	R O GATES	
PROJ		
DESIGN		
QA		
APPD FOR IMPLEMENTATION BY		

U. S. DEPARTMENT OF ENERGY
PACIFIC NORTHWEST SITE OFFICE
Pacific Northwest Division Battelle Richland, Washington 99352

MARK 8 MULTI PENCIL
TPBAR – WATTS BAR
REACTOR INTERFACE

TRITIUM TECHNOLOGY PROGRAM

SIZE	INDEX NO	BLDG NO	DWG NO	REV NO
D	5003	338	H-3-310568	0

SCALE 4" = 1" SHEET 1 OF 2

DRAWING NO	DRAWING TITLE
REFERENCE DRAWINGS	
NEXT USED ON	

REV	AR	MF	QA BY / DATE	CHKD BY / DATE	CHK BY / DATE	REV BY / DATE	DESCRIPTION
							REVISIONS

UNCLASSIFIED

2/2

APPENDIX 1-G

PNNL Letter, TTP-06-056, Subject: Exposure of Shipping Casks to Tritium, February 21, 2006

Pacific Northwest National Laboratory
Operated by Battelle for the U.S. Department of Energy

February 21, 2006 TTP-06-056

Ms. Nanette D. Founds
Tritium Readiness Subprogram
Office of Stockpile Technology (NA-123)
Department of Energy/NNSA
PO Box 5400
Albuquerque, NM 87185-5400

Dear Ms. Founds:

EXPOSURE OF SHIPPING CASKS TO TRITIUM

Pacific Northwest National Laboratory was assigned a Tritium Readiness Subprogram Action Item to "Draft position on NRC tritium cask exposure issue" (AI 43). Attached is a white paper summarizing the conclusions we presented during the teleconference with NAC International, Inc.; U.S. Nuclear Regulatory Commission; and National Nuclear Security Administration to complete this action.

If you have any questions regarding the information in this paper, please contact me or Bruce Reid at (509) 372-4135.

Sincerely,
Cheryl K. Thornhill
Cheryl K. Thornhill, Manager
Tritium Technology Program

/bjk
Enclosure

ecc: J. R. Chapman, SAIC
C. J. Rogers, SAIC
M. Holloway, SAIC
cc: J. Adam, NAC
B. G. McLeod, DOE-PNSO
NA-123 RMS/SS (05-10)

902 Battelle Boulevard • P.O. Box 999 • Richland, WA 99352

Telephone 509-375-2532 □ Email cheryl.thornhill@pnl.gov □ Fax 509-375-2610

Nuclear Regulatory Commission Concerns Regarding Shipping Tritium Producing Burnable Absorber Rods in the NAC-LWT Cask

Background

In conversations with NAC licensing personnel in preparation for their submittal of a license amendment request for the NAC-LWT cask to handle future shipments of tritium producing burnable absorber rods (TPBARs), staff from the U.S. Nuclear Regulatory Commission (NRC) expressed some concerns regarding the potential for residual tritium contamination in the crystalline structure of the stainless steel to be an issue for subsequent cask users. While the NRC had no firm calculations, some "back-of-the-envelope" calculations by an NRC materials expert indicated that residual tritium could be an issue of concern for the subsequent cask users who were not expecting tritium contamination.

A conference call was held on January 26, 2006 with representatives of NRC, NNSA, Westinghouse Savannah River Company (WSRC), NAC and Pacific Northwest National Laboratory (PNNL) participating. At the conclusion of the call, NRC was satisfied with the responses received and requested that NAC provide, in Chapter 7 of the NAC-LWT Safety Analysis Report, a discussion of the procedures to be followed when unloading TPBARs and before sending the empty cask back to NAC.

During the conference call, PNNL staff discussed the experience with shipping TPBARs to date and the potential for tritium to permeate from the irradiated TPBARs into the Stainless Steel cask wall.

Transportation Experience

The NRC has licensed the NAC-LWT cask to ship up to 300 TPBARs including 2 pre-failed TPBARs. To date, there have been 9 shipments of TPBARs to various locations as noted below:

- 4 shipments of 8 TPBARs each from Watts Bar Nuclear Plant (WBN) to Idaho National Laboratory (INL) (1999)
- 1 shipment of 3 sectioned TPBARs (12 sections) from INL to PNNL (2000)
- 1 shipment of 6 TPBARs from WBN to INL (2005)
- 1 shipment of 3 TPBARs from INL to PNNL (2005)
- 1 shipment of 215 TPBARs from WBN to the Savannah River Site Tritium Extraction Facility (TEF) (2005)
- 1 shipment of 19 TPBARs from WBN to TEF (2005)

The last two shipments will remain stored at TEF in the NAC-LWT shipping casks until the TEF is ready to process the tritium.

Nuclear Regulatory Commission Concerns Regarding Shipping Tritium Producing Burnable Absorber Rods in the NAC-LWT Cask

Discussion

Prior to opening the casks bearing TPBARs, both INL and PNNL have sampled the gas in the cask cavity to assure that there would not be a tritium release to the environment or to facility personnel. In all cases, the gas samples have tested at negligible levels for tritium (~1E-6 μCi/cc). Also, prior to sending the empty cask back to NAC for use by others, "swipes" of the internal surfaces have been taken to assure that contamination was not present. Samples taken on the consolidation container and the basket within the cask cavity showed tritium levels ranging from ~25 to ~1050 disintegrations per minute per 100 cm^2, well below any levels of concern for contamination. A similar procedure will be followed at TEF when they open and return the NAC-LWT casks. The TPBARs are contained in the stainless steel consolidation container and the basket holds the consolidation container. Both are between the TPBARs and the cask inner wall, thus if contamination is present, it would be noticed first on the consolidation container and basket before it would affect the cask wall.

When the TPBARs at INL were punctured, the gas pressure inside the rod was measured and the gas analyzed. The tritium partial pressure in the gas was below 5 $X10^{-3}$ Pa of T_2 which is ~5 X 10^{-8} atmospheres, i.e., equivalent to a very good vacuum with respect to tritium. Hence, there is little driving force for permeation of the tritium out of the unbreached TPBARs during storage and shipment. With no driving force, there is no mechanism for the tritium to permeate from the TPBARs into the cask inner wall. As noted above, there have been no shipments to date at the licensed limit (300) for TPBARs; however the number of TPBARs in the cask will not change the tritium partial pressure inside the individual TPBAR. The number of TPBARs in the shipment does affect the temperature in the cask cavity (at 30 days after discharge from the reactor, each TPBAR produces ~3.3 watts of decay heat). The temperature that will exist when shipping 300 TPBARs is well below the temperature required to drive the tritium out of the TPBARs to any significant degree within the time frame of expected residence in the cask.

With regard to the two (2) pre-failed TPBARs in a shipment, which is part of the licensing basis for the cask, it is assumed that the failure occurs near the end of the plant operating cycle when the TPBAR has generated the maximum amount of tritium. The isotopic exchange that takes place between the tritium in the TPBAR and the hydrogen in the reactor coolant system (and the spent fuel pool after the TPBARs are discharged from the reactor) is expected to remove essentially all of the tritium from the TPBAR, thus the tritium available to "leak" from the TPBAR to the cask wall is still expected to be negligible. The failed TPBARs will have no internal pressure and any residual tritium would first contact the consolidation container and basket before the cask inner wall is exposed. Another scenario would be damage to two TPBARs during handling in the spent fuel pool while removing the TPBAR base plate from the fuel assembly. In this case, TVA procedures will have the breached TPBAR placed in another tube which can be sealed to prevent further tritium contamination of the spent fuel pool. During the time

it will take to remove the TPBAR from the baseplate, get the secondary tube, and place the TPBAR in the tube, a significant amount of the tritium will have been released to the spent fuel pool through isotopic exchange. Because of the precautions to be taken and the low driving force to move tritium from the TPBAR, contamination of the cask cavity is not expected to be a significant issue. In this scenario, the TPBAR will be enclosed in a secondary tube contained in the consolidation container, so an additional barrier will exist between the TPBAR and the cask wall.

If the tritium partial pressure in the cask did rise to some higher level (we have not performed calculations to determine what pressure would be required) then tritium surface contamination would be expected. Experiments performed by Hirayabashi and Saeki (JNM 120 (1984) 309-315) examined stainless steel coupons after exposing the coupons to relatively high pressure tritium gas (13,300 Pa compared to the $<5X10^{-3}$ Pa found inside of TPBARs at INL). They did find subsurface tritium in the steel after exposure at this pressure. However, it is significant to note that they also found surface concentrations of tritium in the sample almost 2 orders of magnitude greater than the levels in the bulk (i.e. beneath the surface). Hence, extrapolation of these results to the NAC-LWT cask situation would indicate that highly contaminated surface smears would identify that subsurface tritium concentrations of lower levels (~2 orders of magnitude lower) existed. At some level of surface contamination, it is evident from the literature that the surface contamination would indicate there had been enough tritium permeate into the cask wall that subsequent leaching of tritium from the bulk could present a concern for subsequent users. No work has been done to determine what this level of surface contamination is. However, at the low tritium partial pressure in the TPBARs, the risk of achieving a high level of surface contamination is small and, as noted above, there are other stainless steel surfaces between the TPBARs and the cask wall. If an abnormally high level of surface contamination is found, this issue will need to be addressed.

Conclusion

Based on past experience and the above discussion, it is concluded that the potential for tritium contamination of the NAC-LWT cask inner wall is minimal. The steps that will be taken to monitor the cask gas prior to opening the cask and the taking of smears on the internal surfaces will provide assurance that residual tritium contamination is not an issue of concern for subsequent users.

Table of Contents

2 STRUCTURAL EVALUATION 2-1

2.1 Structural Design 2.1.1-1
2.1.1 Discussion 2.1.1-1
2.1.2 Basic Design Criteria 2.1.2-1
2.1.2.1 Containment Structures 2.1.2-1
2.1.2.2 Noncontainment Structures 2.1.2-1
2.1.3 Miscellaneous Structural Failure Modes 2.1.3-1
2.1.3.1 Brittle Fracture 2.1.3-1
2.1.3.2 Fatigue – Normal Operating Cycles 2.1.3-1
2.1.3.3 Extreme Total Stress Intensity Range 2.1.3-5
2.1.3.4 Buckling 2.1.3-5

2.2 Weights and Centers of Gravity 2.2.1-1
2.2.1 Major Component Statistics 2.2.1-1

2.3 Properties of Materials 2.3-1
2.3.1 Mechanical Properties of Materials 2.3.1-1
2.3.1.1 Cask Body Materials 2.3.1-1
2.3.1.2 Port Cover Materials 2.3.1-1
2.3.1.3 Fuel Basket Materials 2.3.1-1
2.3.1.4 Bolting Material 2.3.1-2
2.3.1.5 Shielding Material (Gamma Radiation) 2.3.1-2

2.4 General Standards for All Packages 2.4-1
2.4.1 Minimum Package Size 2.4.1-1
2.4.2 Tamperproof Feature 2.4.2-1
2.4.3 Positive Closure 2.4.3-1
2.4.4 Chemical and Galvanic Reactions 2.4.4-1
2.4.5 Cask Design 2.4.5-1
2.4.6 Continuous Venting 2.4.6-1

2.5 Lifting and Tiedown Standards 2.5.1-1
2.5.1 Lifting Devices 2.5.1-1
2.5.1.1 Lifting Trunnion 2.5.1-1
2.5.1.2 Lid Lifting Bolts 2.5.1-7
2.5.1.3 Can Assembly (315-40-98) 2.5.1-8
2.5.2 Tiedown Devices 2.5.2-1
2.5.2.1 Discussion and Loads 2.5.2-1
2.5.2.2 Rear Support 2.5.2-5
2.5.2.3 Front Support 2.5.2-11

2.6 Normal Conditions of Transport 2.6.1-1
2.6.1 Hot Case 2.6.1-1
2.6.1.1 Discussion 2.6.1-1
2.6.1.2 Analysis Description 2.6.1-1
2.6.1.3 Detailed Analysis 2.6.1-2
2.6.1.4 Conclusion 2.6.1-3

Table of Contents (Continued)

2.6.2 Cold Case 2.6.2-1
2.6.2.1 Discussion 2.6.2-1
2.6.2.2 Analysis Description 2.6.2-1
2.6.2.3 Detailed Analysis 2.6.2-2
2.6.2.4 Conclusion 2.6.2-3
2.6.3 Reduced External Pressure 2.6.3-1
2.6.4 Increased External Pressure 2.6.4-1
2.6.5 Vibration 2.6.5-1
2.6.6 Water Spray 2.6.6-1
2.6.7 Free Drop (1 Foot) 2.6.7-1
2.6.7.1 End Drop (1 Foot) 2.6.7-1
2.6.7.2 Side Drop (1 Foot) 2.6.7-2
2.6.7.3 Corner Drop (1 Foot) 2.6.7-3
2.6.7.4 Impact Limiters 2.6.7-4
2.6.7.5 Closure Lid 2.6.7-25
2.6.7.6 Bolts – Closure Lid (Normal Conditions of Transport) 2.6.7-27
2.6.7.7 Neutron Shield Tank 2.6.7-28
2.6.7.8 Expansion Tank 2.6.7-44
2.6.7.9 Upper Ring/Outer Shell Intersection Analysis 2.6.7-47
2.6.7.10 PWR/BWR Rod Transport Canister Assembly Analysis 2.6.7-51
2.6.8 Corner Drop 2.6.8-1
2.6.9 Compression 2.6.9-1
2.6.10 Penetration 2.6.10-1
2.6.10.1 Impact Limiter – Penetration 2.6.10-1
2.6.10.2 Expansion Tank – Penetration 2.6.10-1
2.6.10.3 Neutron Shield Tank – Penetration 2.6.10-5
2.6.10.4 Port Cover – Penetration 2.6.10-6
2.6.10.5 Alternate Port Cover – Penetration 2.6.10-8
2.6.11 Fabrication Conditions 2.6.11-1
2.6.11.1 Lead Pour 2.6.11-1
2.6.11.2 Cooldown 2.6.11-3
2.6.11.3 Lead Creep 2.6.11-12
2.6.12 Fuel Basket / Container Analysis 2.6.12-1
2.6.12.1 Discussion 2.6.12-1
2.6.12.2 PWR Basket Construction 2.6.12-1
2.6.12.3 PWR Basket Analysis 2.6.12-2
2.6.12.4 BWR Basket Construction 2.6.12-4
2.6.12.5 Metallic Fuel Basket Construction 2.6.12-6
2.6.12.6 MTR Fuel Basket Construction 2.6.12-8
2.6.12.7 TRIGA Fuel Basket One-Foot Drop Evaluation 2.6.12-26
2.6.12.8 DIDO Fuel Basket Construction 2.6.12-53
2.6.12.9 General Atomics IFM Basket Construction 2.6.12-62
2.6.12.10 TPBAR Basket Analysis 2.6.12-71
2.6.12.11 ANSTO Basket Analysis 2.6.12-85

Table of Contents (Continued)

2.6.12.12 TPBAR Basket with the PWR/BWR Rod Transport Canister 2.6.12-92
2.6.12.13 SLOWPOKE Fuel Canister Assembly 2.6.12-95
2.6.12.14 NRU/NRX Fuel Basket 2.6.12-107
2.6.12.15 HEUNL Container 2.6.12-125
2.6.12.16 SLOWPOKE Fuel Core Basket 2.6.12-138
2.6.12.17 SrF_2 Baskets 2.6.12-141
2.6.12.18 LANL MOX Fuel Transfer Tubes and Divider Plates 2.6.12-151
2.6.12.19 Conclusion 2.6.12-153

2.7 Hypothetical Accident Conditions 2.7-1
2.7.1 Free Drop (30 Feet) 2.7.1-1
2.7.1.1 End Drop 2.7.1-2
2.7.1.2 Side Drop 2.7.1-5
2.7.1.3 Oblique Drops 2.7.1-10
2.7.1.4 Shielding for Lead Slump Accident 2.7.1-18
2.7.1.5 Bolts - Closure Lid (Hypothetical Accident - Free Drop) 2.7.1-19
2.7.1.6 Crush 2.7.1-20
2.7.1.7 Rod Shipment Can Assembly Analysis 2.7.1-21
2.7.2 Puncture 2.7.2-1
2.7.2.1 Puncture - Cask Side Midpoint 2.7.2-1
2.7.2.2 Puncture - Center of Cask Closure Lid 2.7.2-3
2.7.2.3 Puncture - Center of Cask Bottom 2.7.2-6
2.7.2.4 Puncture - Port Cover 2.7.2-9
2.7.2.5 Puncture Accident - Shielding Consequences 2.7.2-17
2.7.2.6 Puncture - Conclusion 2.7.2-17
2.7.3 Fire 2.7.3-1
2.7.3.1 Discussion 2.7.3-1
2.7.3.2 Thermal Stress Evaluation 2.7.3-1
2.7.3.3 Bolts - Closure Lid (Hypothetical Accident - Fire) 2.7.3-3
2.7.3.4 Inner Shell Evaluation 2.7.3-4
2.7.3.5 Conclusion 2.7.3-5
2.7.4 Immersion - Fissile Material 2.7.4-1
2.7.5 Immersion – Irradiated Nuclear Fuel Packages 2.7.5-1
2.7.5.1 Method of Analysis 2.7.5-1
2.7.5.2 Closure Lid Stresses 2.7.5-1
2.7.5.3 Outer Bottom Head Forging Stresses 2.7.5-2
2.7.5.4 Cask Cylindrical Shell Stresses 2.7.5-3
2.7.5.5 Containment Seal Evaluation 2.7.5-5
2.7.6 Damage Summary 2.7.6-1
2.7.7 Fuel Basket / Container Accident Analysis 2.7.7-1
2.7.7.1 Discussion 2.7.7-1
2.7.7.2 PWR Basket Construction 2.7.7-1
2.7.7.3 PWR Basket Analysis 2.7.7-1
2.7.7.4 BWR Basket Construction 2.7.7-3

Table of Contents (Continued)

2.7.7.5 Metallic Fuel Basket Analysis 2.7.7-6
2.7.7.6 MTR Fuel Basket Construction 2.7.7-8
2.7.7.7 Conclusion 2.7.7-18
2.7.7.8 PWR Spacer 2.7.7-18
2.7.7.9 TRIGA Fuel Basket Thirty-Foot Drop Evaluation 2.7.7-24
2.7.7.10 DIDO Fuel Basket Construction 2.7.7-47
2.7.7.11 General Atomics IFM Basket Construction 2.7.7-51
2.7.7.12 TPBAR Basket Analysis 2.7.7-54
2.7.7.13 ANSTO Basket Analysis 2.7.7-66
2.7.7.14 TPBAR Basket with the PWR/BWR Rod Transport Canister 2.7.7-70
2.7.7.15 SLOWPOKE Fuel Canister Assembly 2.7.7-72
2.7.7.16 NRU/NRX Fuel Basket 2.7.7-89
2.7.7.17 HEUNL Container 2.7.7-98
2.7.7.18 SLOWPOKE Fuel Core Basket for the Accident Conditions of Transport 2.7.7-103
2.7.7.19 SrF_2 Baskets 2.7.7-105
2.7.7.20 LANL MOX Fuel Transfer Tubes 2.7.7-113

2.8 Special Form 2.8-1

2.9 Spent Fuel Contents 2.9-1
2.9.1 PWR and BWR Fuel Rods 2.9-1
2.9.2 TRIGA Fuel Elements 2.9-1
2.9.2.1 End Drop 2.9-2
2.9.2.2 Side Drop 2.9-3
2.9.3 PULSTAR Intact Fuel Elements 2.9-5
2.9.4 ANSTO Fuels 2.9-6
2.9.4.1 MARK III Spiral Fuel Assemblies 2.9-6
2.9.4.2 MOATA Plate Bundles 2.9-10
2.9.4.3 DIDO Fuel Assemblies 2.9-14
2.9.5 SLOWPOKE Fuel Core Assembly 2.9-21
2.9.5.1 Normal Conditions of Transport 2.9-21
2.9.5.2 Accident Conditions of Transport 2.9-22
2.9.5.3 SLOWPOKE Structural Calculation 2.9-24
2.9.6 SrF_2 Capsules 2.9-25

2.10 Appendices 2.10.1-1
2.10.1 Computer Program Descriptions 2.10.1-1
2.10.1.1 ANSYS 2.10.1-1
2.10.1.2 RBCUBED - A Program to Calculate Impact Limiter Dynamics 2.10.1-2
2.10.2 Finite Element Model Description 2.10.2-1
2.10.2.1 Boundary and Loading Conditions Used in the 30-Foot Drop Finite Element Analysis 2.10.2-2
2.10.3 Finite Element Evaluations 2.10.3-1
2.10.3.1 Isothermal Plot - Hot Case 2.10.3-1

Table of Contents (Continued)

2.10.3.2 Isothermal Plot - Cold Case 2.10.3-1
2.10.3.3 Determination of Component Critical Stresses 2.10.3-1
2.10.4 Oblique Drop Slapdown 2.10.4-1
2.10.4.1 Discussion 2.10.4-1
2.10.4.2 Analysis 2.10.4-1
2.10.4.3 Energy Calculation 2.10.4-3
2.10.4.4 Rotational Velocity Change 2.10.4-4
2.10.5 Lead Slump - End Drop 2.10.5-1
2.10.6 Inner Shell Buckling Design Criteria and Evaluation 2.10.6-1
2.10.6.1 Code Case N-284 ..... 2.10.6-1
2.10.6.2 Theoretical Elastic Buckling Stresses 2.10.6-1
2.10.6.3 Capacity Reduction Factors 2.10.6-2
2.10.6.4 Plasticity Reduction Factors 2.10.6-3
2.10.6.5 Upper Bound Magnitudes for Compressive Stresses and In-Plane Shear Stresses 2.10.6-3
2.10.6.6 Interaction Equations 2.10.6-4
2.10.6.7 Detailed Buckling Evaluation - Sample Calculation 2.10.6-4
2.10.6.8 Conclusion 2.10.6-7
2.10.7 Detailed Finite Element Stress Summary 2.10.7-1
2.10.7.1 Finite Element Stress Tables – Normal Operation Hot Condition 2.10.7-1
2.10.7.2 Finite Element Stress Tables - Normal Operation Cold Condition 2.10.7-1
2.10.7.3 Finite Element Stress Tables – 1-Foot End Drop 2.10.7-1
2.10.7.4 Finite Element Stress Tables – 1-Foot Side Drop 2.10.7-1
2.10.7.5 Finite Element Stress Tables – 1-Foot Corner Drop 2.10.7-1
2.10.7.6 Finite Element Stress Tables – 30-Foot End Drop 2.10.7-1
2.10.7.7 Finite Element Stress Tables – 30-Foot Side Drop 2.10.7-1
2.10.7.8 Finite Element Stress Tables – 30-Foot Oblique Drop 2.10.7-2
2.10.8 Quarter-Scale Model Drop Test Program for the NAC-LWT Cask 2.10.8-1
2.10.8.1 Introduction 2.10.8-1
2.10.8.2 Purpose 2.10.8-1
2.10.8.3 Summary 2.10.8-1
2.10.8.4 Description of Quarter-Scale LWT Cask Model 2.10.8-4
2.10.8.5 Description of Test Procedures and Instrumentation 2.10.8-5
2.10.8.6 Detailed Test Results 2.10.8-7
2.10.8.7 Metrology Results 2.10.8-14
2.10.8.8 Discussion of Test Results 2.10.8-15
2.10.8.9 Post-Test Revisions 2.10.8-17
2.10.9 Bolts – Closure Lid (Stress Evaluations) 2.10.9-1
2.10.9.1 Analysis Approach 2.10.9-1
2.10.9.2 Closure Bolt Analyses – Analytics and Assumptions 2.10.9-2
2.10.10 Finite Element Stress Results for the 30-Foot Drop Accident Conditions 2.10.10-1

Table of Contents (Continued)

2.10.10.1 Discussion 2.10.10-1
2.10.10.2 Procedures 2.10.10-1
2.10.10.3 Analysis and Results 2.10.10-3
2.10.10.4 Conclusion 2.10.10-6
2.10.11 Hand Calculation for the 30-Foot Drop Accident Conditions 2.10.11-1
2.10.11.1 Top End Drop 2.10.11-1
2.10.11.2 Side Drop 2.10.11-2
2.10.12 Impact Limiter Force-Deflection Curves and Data 2.10.12-1
2.10.12.1 Potential Energy and Cask Drop Motion 2.10.12-1
2.10.12.2 Potential to Kinetic Energy Conversion 2.10.12-3
2.10.12.3 Deceleration Forces and Energy Absorption Calculation 2.10.12-4
2.10.12.4 RBCUBED Calculated Force-Deflection Graphs 2.10.12-7
2.10.12.5 Quarter-Scale Model Quasi-Static Force-Deflection Tests 2.10.12-7
2.10.13 Structural Evaluation of Failed Fuel Cans and Liners (Baskets) 2.10.13-1
2.10.13.1 Discussion 2.10.13-1
2.10.13.2 Method of Analysis 2.10.13-1
2.10.13.3 Input Geometry & Data 2.10.13-2
2.10.13.4 Mechanical Properties of Materials 2.10.13-3
2.10.13.5 Thermal Evaluation 2.10.13-3
2.10.13.6 Structural Evaluation 2.10.13-3
2.10.13.7 Results and Conclusion 2.10.13-11
2.10.13.8 Failed Fuel Shipment Component Drawings 2.10.13-12
2.10.14 Structural Evaluation of the NAC-LWT Cask Body with TPBAR Contents 2.10.14-1
2.10.14.1 Normal Conditions of Transport for Cask Body with TPBAR Contents 2.10.14-1
2.10.14.2 Hypothetical Accident Conditions for Cask Body with TPBAR Contents 2.10.14-3
2.10.14.3 Inner Shell Buckling 2.10.14-4
2.10.14.4 NAC-LWT Cask Closure Lid and Bolts 2.10.14-5
2.10.14.5 Conclusion 2.10.14-6
2.10.15 NAC-LWT Alternate B Port Cover 2.10.15-1
2.10.15.1 Alternate B Port Cover Bolt Analysis 2.10.15-1
2.10.16 Structural Evaluation of the NAC-LWT Cask Body with TPBARs in the PWR/BWR Rod Transport Canister 2.10.16-1
2.10.16.1 Normal Conditions of Transport for Cask Body and TPBARS in the PWR/BWR Rod Transport Canister 2.10.16-1
2.10.16.2 Hypothetical Accident Conditions for Cask Body with TPBARs and the PWR/BWR Rod Transport Canister 2.10.16-2
2.10.16.3 Inner Shell Buckling 2.10.16-3
2.10.16.4 NAC-LWT Cask Closure Lid and Bolts 2.10.16-4
2.10.16.5 Conclusion 2.10.16-5

List of Figures

Figure 2.1.3-1 Design Fatigue Curve for High Strength Steel Bolting 2.1.3-7
Figure 2.3.1-1 Static Stress-Strain Curve for Chemical Copper Lead 2.3.1-3
Figure 2.3.1-2 Dynamic Deformation Stress-Strain Curve for Chemical Copper Lead 2.3.1-4
Figure 2.5.1-1 Trunnion Cross-Section and Forging Shear Area 2.5.1-10
Figure 2.5.2-1 Front Support and Tiedown Geometry 2.5.2-13
Figure 2.5.2-2 Pressure Distribution of Horizontal Bearing Between Cask and Support Saddle 2.5.2-14
Figure 2.5.2-3 Free Body Diagram of Cask Subjected to Lateral Load 2.5.2-15
Figure 2.5.2-4 Rotation Trunnion Pocket 2.5.2-16
Figure 2.6.1-1 NAC-LWT Cask Critical Sections (Hot Case) 2.6.1-4
Figure 2.6.2-1 NAC-LWT Cask Critical Sections (Cold Case) 2.6.2-4
Figure 2.6.7-1 1-Foot Bottom End Drop with 130°F Ambient Temperature and Maximum Decay Heat Load 2.6.7-63
Figure 2.6.7-2 1-Foot Bottom End Drop with -40°F Ambient Temperature and Maximum Decay Heat Load 2.6.7-64
Figure 2.6.7-3 1-Foot Bottom End Drop with -40°F Ambient Temperature and No Decay Heat Load 2.6.7-65
Figure 2.6.7-4 1-Foot Top End Drop with 130°F Ambient Temperature and Maximum Decay Heat Load 2.6.7-66
Figure 2.6.7-5 1-Foot Top End Drop with -40°F Ambient Temperature and Maximum Decay Heat Load 2.6.7-67
Figure 2.6.7-6 NAC-LWT Cask Critical Sections (1-Foot Side Drop with 100°F Ambient Temperature) 2.6.7-68
Figure 2.6.7-7 1-Foot Top Corner Drop with 130°F Ambient Temperature and Maximum Decay Heat Load - Drop Orientation = 15.74 Degrees 2.6.7-69
Figure 2.6.7-8 1-Foot Bottom Corner Drop with 130°F Ambient Temperature and Maximum Decay Heat Load - Drop Orientation = 15.74 Degrees 2.6.7-70
Figure 2.6.7-9 1-Foot Top Corner Drop with -40°F Ambient Temperature and No Decay Heat Load - Drop Orientation = 15.74 Degrees 2.6.7-71
Figure 2.6.7-10 NAC-LWT Cask with Impact Limiters 2.6.7-72
Figure 2.6.7-11 Cross-Section of Top Impact Limiter 2.6.7-73
Figure 2.6.7-12 Load Versus Deflection Curve (Typical Aluminum Honeycomb) 2.6.7-74
Figure 2.6.7-13 Quarter-Scale Model Limiter End Drop Cross-Section 2.6.7-75
Figure 2.6.7-14 End Drop Impact Limiter Cross-Section 2.6.7-76
Figure 2.6.7-15 Impact Limiter Lug Detail 2.6.7-77
Figure 2.6.7-16 Cask Lug Detail 2.6.7-78
Figure 2.6.7-17 RBCUBED Output Summary – Center of Gravity Over Top Corner 2.6.7-79
Figure 2.6.7-18 Free Body Diagram - Top Impact Limiter - Center of Gravity Over Corner 2.6.7-80
Figure 2.6.7-19 Free Body Diagram - Top Impact Limiter - Cask Wedging Forces 2.6.7-81
Figure 2.6.7-20 Cask Lid Configuration 2.6.7-82
Figure 2.6.7-21 Closure Lid Free Body Diagram 2.6.7-83

List of Figures (Continued)

Figure 2.6.7-22 NAC-LWT Cask Cross-Section 2.6.7-84
Figure 2.6.7-23 Component Parts of Shield Tank Structure 2.6.7-85
Figure 2.6.7-24 Shield Tank Cross-Section 2.6.7-86
Figure 2.6.7-25 Shield Tank Quarter-Section Geometry 2.6.7-87
Figure 2.6.7-26 Partial Bottom/Top End Plate Plan and Cross-Section 2.6.7-88
Figure 2.6.7-27 Shield Tank End Plate 2.6.7-89
Figure 2.6.7-28 Gusset Profile 2.6.7-90
Figure 2.6.7-29 End Plate Welds 2.6.7-91
Figure 2.6.7-30 Component Parts of the Expansion Tank Structure 2.6.7-92
Figure 2.6.7-31 Expansion Tank Top and Bottom End Plate 2.6.7-93
Figure 2.6.7-32 Expansion Tank Stiffener Load Geometry 2.6.7-94
Figure 2.6.7-33 Cask Upper Ring at Trunnion - ANSYS Model 2.6.7-95
Figure 2.6.7-34 Cask Upper Ring at Trunnion - Model Loads and Boundary Conditions 2.6.7-96
Figure 2.6.7-35 NAC-LWT Cask Upper Ring at Trunnion - Critical Sections 2.6.7-97
Figure 2.6.10-1 Impact of Penetration Cylinder on Neutron Shield Tank and Expansion Tank – Points of Impact 2.6.10-12
Figure 2.6.10-2 Impact of Penetration Cylinder on Neutron Shield Tank and Expansion Tank – Details for Analysis 2.6.10-13
Figure 2.6.10-3 Impact of Penetration Cylinder on Port Cover 2.6.10-14
Figure 2.6.10-4 One-Sixth Model of the Alternate Port Cover – 60° Symmetry 2.6.10-15
Figure 2.6.12-1 Cask Side Drop Fuel Tube Loading – MTR Fuel Basket 2.6.12-24
Figure 2.6.12-2 Baseplate Supports for Cask End Drop Loads - MTR Fuel Basket 2.6.12-25
Figure 2.6.12-3 DIDO Fuel Basket Module Structural Model – Top View 2.6.12-57
Figure 2.6.12-4 DIDO Fuel Basket Module Structural Model – Bottom View 2.6.12-58
Figure 2.6.12-5 DIDO Fuel Basket Module Maximum Stress Locations for the Side Drop Orientation 2.6.12-59
Figure 2.6.12-6 DIDO Fuel Basket Module Maximum Stress Locations for the End Drop Orientation 2.6.12-60
Figure 2.6.12-7 Cross-Section of TPBAR Basket 2.6.12-83
Figure 2.6.12-8 TPBAR Spacer Schematic Triangular Top Plate and Tube 2.6.12-84
Figure 2.6.12-9 SLOWPOKE Fuel Canister Assembly Housing 2.6.12-102
Figure 2.6.12-10 SLOWPOKE Fuel Canister Assembly Latch and the Free Body Diagram 2.6.12-106
Figure 2.6.12-11 HEUNL Container – Outside View 2.6.12-126
Figure 2.6.12-12 HEUNL Container – Inside View 2.6.12-126
Figure 2.6.12-13 HEUNL Container – Gap Elements Shown 2.6.12-127
Figure 2.6.12-14 HEUNL Container Support Ring – Axisymmetric Model 2.6.12-128
Figure 2.6.12-15 Closure Assembly Model 2.6.12-128
Figure 2.6.12-16 Bolt Modeling 2.6.12-129
Figure 2.6.12-17 Fill/Drain Port Model 2.6.12-129
Figure 2.6.12-18 HEUNL Container – Section Locations 2.6.12-130
Figure 2.6.12-19 HEUNL Container – Section Locations 2.6.12-130

List of Figures (Continued)

Figure 2.6.12-20 Stress Linearization Paths in Closure Lid 2.6.12-134
Figure 2.6.12-21 Stress Linearization Paths in Fill/Drain Ports 2.6.12-137
Figure 2.7.1-1 30-Foot Bottom End Drop with 130°F Ambient Temperature and Maximum Decay Heat Load 2.7.1-30
Figure 2.7.1-2 30-Foot Bottom End Drop with -40°F Ambient Temperature and Maximum Decay Heat Load 2.7.1-31
Figure 2.7.1-3 30-Foot Bottom End Drop with -40°F Ambient Temperature and No Decay Heat Load 2.7.1-32
Figure 2.7.1-4 30-Foot Top End Drop with 130°F Ambient Temperature and Maximum Decay Heat Load 2.7.1-33
Figure 2.7.1-5 30-Foot Top End Drop with -40°F Ambient Temperature and Maximum Decay Heat Load 2.7.1-34
Figure 2.7.1-6 Circumferential Load Distribution for Cask Side Drop Impact 2.7.1-35
Figure 2.7.1-7 Six Term Fourier Series Representation of Circumferential Load Distribution for Cask Side Drop Impact 2.7.1-36
Figure 2.7.1-8 NAC-LWT Cask Critical Sections (30-Foot Side Drop with 100°F Ambient Temperature) 2.7.1-37
Figure 2.7.1-9 Circumferential Load Distribution for Cask Oblique Drop Impact 2.7.1-38
Figure 2.7.1-10 30-Foot Top Corner Drop with 130°F Ambient Temperature - Drop Orientation = 15.74 Degrees 2.7.1-39
Figure 2.7.1-11 30-Foot Top Oblique Drop with 130°F Ambient Temperature - Drop Orientation = 30 Degrees 2.7.1-40
Figure 2.7.1-12 30-Foot Top Oblique Drop with 130°F Ambient Temperature - Drop Orientation = 45 Degrees 2.7.1-41
Figure 2.7.1-13 30-Foot Oblique Drop with 130°F Ambient Temperature - Drop Orientation = 60 Degrees 2.7.1-42
Figure 2.7.1-14 30-Foot Top Corner Drop with -40°F Ambient Temperature - Drop Orientation = 15.74 Degrees 2.7.1-43
Figure 2.7.1-15 30-Foot Top Oblique Drop with -40°F Ambient Temperature - Drop Orientation = 30 Degrees 2.7.1-44
Figure 2.7.1-16 30-Foot Top Oblique Drop with -40°F Ambient Temperature - Drop Orientation = 45 Degrees 2.7.1-45
Figure 2.7.1-17 30-Foot Top Oblique Drop with -40°F Ambient Temperature - Drop Orientation = 60 Degrees 2.7.1-46
Figure 2.7.1-18 30-Foot Bottom Oblique Drop with 130°F Ambient Temperature – Drop Orientation = 15.74 Degrees 2.7.1-47
Figure 2.7.1-19 30-Foot Bottom Oblique Drop with 130°F Ambient Temperature - Drop Orientation = 30 Degrees 2.7.1-48
Figure 2.7.1-20 30-Foot Bottom Oblique Drop with 130°F Ambient Temperature - Drop Orientation = 45 Degrees 2.7.1-49
Figure 2.7.1-21 30-Foot Bottom Oblique Drop with 130°F Ambient Temperature - Drop Orientation = 60 Degrees 2.7.1-50

List of Figures (Continued)

Figure 2.7.1-22 Sectional Stress Plot - 30-Foot Bottom Oblique Drop with 130°F Ambient Temperature - Drop Orientation = 60 Degrees 2.7.1-51
Figure 2.7.1-23 Sectional Stress Plot (P_m) – 30-Foot Bottom Oblique Drop with 130°F Ambient Temperature - Drop Orientation = 60 Degrees 2.7.1-52
Figure 2.7.1-24 Sectional Stress Plot ($P_m + P_b$) - 30-Foot Bottom Oblique Drop with 130°F Ambient Temperature - Drop Orientation = 60 Degrees 2.7.1-53
Figure 2.7.1-25 Bottom Closure Plate - Section Cut Identification 2.7.1-54
Figure 2.7.1-26 Sectional Stress Plot - 30-Foot Bottom Oblique Drop with 130°F Ambient Temperature - Drop Orientation = 45 Degrees 2.7.1-55
Figure 2.7.1-27 Sectional Stress Plot - 30-Foot Bottom Oblique Drop with 130°F Ambient Temperature - Drop Orientation = 30 Degrees 2.7.1-56
Figure 2.7.2-1 NAC-LWT Cask Midpoint Section 2.7.2-18
Figure 2.7.2-2 Cask Lid Configuration 2.7.2-19
Figure 2.7.2-3 NAC-LWT Cask Bottom Design Configuration 2.7.2-20
Figure 2.7.2-4 Port Cover Geometry 2.7.2-21
Figure 2.7.2-5 Puncture of Cask at Valve Cover Region 2.7.2-22
Figure 2.7.2-6 Alternate Port Cover Thermal Analysis Geometry 2.7.2-23
Figure 2.7.7-1 PWR Spacer Geometry 2.7.7-23
Figure 2.7.7-2 Mass and Gap Element ANSYS Model of the Cask and Canister Weldment 2.7.7-80
Figure 2.7.7-3 Force on the Canister Weldment for the 30-Foot End Drop 2.7.7-80
Figure 2.7.7-4 Mass and Gap Element ANSYS Model of the Cask, Canister Weldment, Insert and Fuel 2.7.7-81
Figure 2.7.7-5 Force on the Canister Lid Handle for the 30-Foot End Drop 2.7.7-81
Figure 2.7.7-6 Quarter Symmetry Model of the Lid 2.7.7-85
Figure 2.7.7-7 SLOWPOKE Fuel Canister Assembly Housing 2.7.7-88
Figure 2.7.7-8 Internal Pressure Case – 30° Sector Model 2.7.7-99
Figure 2.9.4-1 DIDO Fuel Assembly Model and Boundary Conditions 2.9-19
Figure 2.9.4-2 DIDO Stress Intensities for 30-Foot Side Drop 2.9-20
Figure 2.10.2-1 ANSYS Finite Element Model – NAC-LWT Cask 2.10.2-5
Figure 2.10.2-2 Cask Bottom of Model 2.10.2-6
Figure 2.10.2-3 Inner, Lead and Outer Shells – Lower Region of Model 2.10.2-7
Figure 2.10.2-4 Inner, Lead and Outer Shells – Lower Middle Region of Model 2.10.2-8
Figure 2.10.2-5 Inner, Lead and Outer Shell – Upper Middle Region of Model 2.10.2-9
Figure 2.10.2-6 Inner, Lead and Outer Shells – Upper Region of Model 2.10.2-10
Figure 2.10.2-7 Upper Ring Forging on Model 2.10.2-11
Figure 2.10.2-8 Closure Lid on Model 2.10.2-12
Figure 2.10.2-9 ANSYS Finite Element Model – Component Identification 2.10.2-13
Figure 2.10.3-1 NAC-LWT Cask Isotherms (Hot Case) 2.10.3-3
Figure 2.10.3-2 NAC-LWT Cask Isotherms (Cold Case) 2.10.3-4
Figure 2.10.3-3 Stress Contour Plot – Hot Case 2.10.3-5
Figure 2.10.4-1 Cask Slapdown Geometry 2.10.4-6
Figure 2.10.4-2 Force Deflection Curve of Drop Tested Limiter – 0-Degree Impact 2.10.4-7

List of Figures (Continued)

Figure 2.10.4-3 Force Deflection Curve of Drop Tested Limiter – 14-Degree Impact... 2.10.4-8
Figure 2.10.4-4 Force Deflection Curve of Drop Tested Limiter – 90 Degree Impact... 2.10.4-9
Figure 2.10.4-5 Oblique Drop 2.10.4-10
Figure 2.10.7-1 Representative Section Cut Diagram 2.10.7-3
Figure 2.10.8-1 Drawing of Quarter-Scale Model..... 2.10.8-19
Figure 2.10.8-2 Drawing of Model Body 2.10.8-20
Figure 2.10.8-3 Drawing of Model Lid 2.10.8-23
Figure 2.10.8-4 Drawing of Model Upper Impact Limiter..... 2.10.8-24
Figure 2.10.8-5 Drawing of Model Lower Impact Limiter 2.10.8-25
Figure 2.10.8-6 Drawing of Model Simulated Cask Contents 2.10.8-26
Figure 2.10.8-7 Quarter-Scale Model..... 2.10.8-27
Figure 2.10.8-8 Model Rigged for 30-Foot End Drop..... 2.10.8-28
Figure 2.10.8-9 Model Positioned for 30-Foot End Drop 2.10.8-29
Figure 2.10.8-10 Model Position Following 30-Foot End Drop 2.10.8-30
Figure 2.10.8-11 Top End Impact Limiter Following 30-Foot End Drop..... 2.10.8-31
Figure 2.10.8-12 Exterior of Top Impact Limiter Following 30-Foot End Drop..... 2.10.8-32
Figure 2.10.8-13 Model Rigged for 30-Foot Corner Drop..... 2.10.8-33
Figure 2.10.8-14 Model Positioned for 30-Foot Corner Drop..... 2.10.8-34
Figure 2.10.8-15 Model Following 30-Foot Corner Drop..... 2.10.8-35
Figure 2.10.8-16 Top Impact Limiter Following 30-Foot Corner Drop..... 2.10.8-36
Figure 2.10.8-17 Model Position Following 30-Foot Side Drop – View 1 ..... 2.10.8-37
Figure 2.10.8-18 Model Position Following 30-Foot Side Drop – View 2 ..... 2.10.8-38
Figure 2.10.8-19 Top Impact Limiter Following 30-Foot Side Drop..... 2.10.8-39
Figure 2.10.8-20 Bottom Impact Limiter Following 30-Foot Side Drop – View 1 ..... 2.10.8-40
Figure 2.10.8-21 Bottom Impact Limiter Following 30-Foot Side Drop – View 2 ..... 2.10.8-41
Figure 2.10.8-22 Model Rigged for 30-Foot Oblique Drop 2.10.8-42
Figure 2.10.8-23 Model Positioned for 30-Foot Oblique Drop..... 2.10.8-43
Figure 2.10.8-24 Model Position Following 30-Foot Oblique Drop..... 2.10.8-44
Figure 2.10.8-25 Bottom Impact Limiter Following 30-Foot Oblique Drop 2.10.8-45
Figure 2.10.8-26 Top Impact Limiter Following 30-Foot Oblique Drop..... 2.10.8-46
Figure 2.10.8-27 Model Rigged for Midpoint 40-Inch Pin Drop 2.10.8-47
Figure 2.10.8-28 Model Positioned for 40-Inch Pin Drop..... 2.10.8-48
Figure 2.10.8-29 Instant Before Midpoint 40-Inch Pin Drop..... 2.10.8-49
Figure 2.10.8-30 Model Position Following Midpoint 40-Inch Pin Drop..... 2.10.8-50
Figure 2.10.8-31 Impact Location – Midpoint 40-Inch Pin Drop 2.10.8-51
Figure 2.10.8-32 Angular Orientation of Instrumentation..... 2.10.8-52
Figure 2.10.8-33 Strain Gauge Time History for Channel 3 – End Drop 2.10.8-53
Figure 2.10.8-34 Strain Gauge Time History for Channel 4 – End Drop 2.10.8-54
Figure 2.10.8-35 Strain Gauge Time History for Channel 5 – End Drop 2.10.8-55
Figure 2.10.8-36 Strain Gauge Time History for Channel 3 – Side Drop..... 2.10.8-56
Figure 2.10.8-37 Strain Gauge Time History for Channel 4 – Side Drop..... 2.10.8-57
Figure 2.10.8-38 Strain Gauge Time History for Channel 5 – Side Drop..... 2.10.8-58
Figure 2.10.8-39 Location of Block Sets..... 2.10.8-59

List of Figures (Continued)

Figure 2.10.10-1 Stress Point Locations 2.10.10-7
Figure 2.10.11-1 Mathematical Model of NAC-LWT Cask (30-foot Top End Impact) . 2.10.11-8
Figure 2.10.12-1 Side Drop ($\theta = 90°$) 2.10.12-9
Figure 2.10.12-2 End Drop ($0° \le \theta < 15°$) 2.10.12-10
Figure 2.10.12-3 Oblique Drop ($15° \le \theta < 90°$) 2.10.12-11
Figure 2.10.12-4 Force Deflection Graph (0-Degree, Top End Drop) 2.10.12-12
Figure 2.10.12-5 Force-Deflection Graph (0-Degree, Bottom-End Drop) 2.10.12-13
Figure 2.10.12-6 Force-Deflection Graph (15.74-Degree, Top Corner Drop) 2.10.12-14
Figure 2.10.12-7 Force-Deflection Graph (14.5-Degree, Bottom Corner Drop) 2.10.12-15
Figure 2.10.12-8 Force-Deflection Graph (30-Degree, Top Oblique Drop) 2.10.12-16
Figure 2.10.12-9 Force-Deflection Graph (30-Degree, Bottom Oblique Drop) 2.10.12-17
Figure 2.10.12-10 Force-Deflection Graph (45-Degree, Top Oblique Drop) 2.10.12-18
Figure 2.10.12-11 Force-Deflection Graph (45-Degree, Bottom Oblique Drop) 2.10.12-19
Figure 2.10.12-12 Force-Deflection Graph (60-Degree, Top Oblique Drop) 2.10.12-20
Figure 2.10.12-13 Force-Deflection Graph (60-Degree, Bottom Oblique Drop) 2.10.12-21
Figure 2.10.12-14 Force-Deflection Graph (75-Degree, Top Oblique Drop) 2.10.12-22
Figure 2.10.12-15 Force-Deflection Graph (75-Degree, Bottom Oblique Drop) 2.10.12-23
Figure 2.10.12-16 Force-Deflection Graph (90-Degree, Top Side Drop) 2.10.12-24
Figure 2.10.12-17 Force-Deflection Graph (90-Degree, Bottom Side Drop) 2.10.12-25
Figure 2.10.12-18 Force-Deflection Curve (0-Degree Impact, Drop Tested Limiter) 2.10.12-26
Figure 2.10.12-19 Force-Deflection Curve (14-Degree Impact, Drop Tested Limiter) .. 2.10.12-27
Figure 2.10.12-20 Force-Deflection Curve (90-Degree Impact, Drop Tested Limiter) .. 2.10.12-28
Figure 2.10.12-21 End Drop Impact Limiter Cross Section 2.10.12-29
Figure 2.10.13-1 LWT Cask, Metal Fuel Basket Assembly Safety Analysis Report, NAC Drawing No. 315-40-12 ..... 2.10.13-13
Figure 2.10.13-2 Liner-Failed Fuel Can, 2.75 I.D., LWT Cask, Safety Analysis Report, NAC Drawing No. 315-040-43 ..... 2.10.13-14
Figure 2.10.13-3 Failed Fuel Rod Can – 4.00 I.D., Fuel Rod Containerization, NAC Drawing No. 340-108-D1 ..... 2.10.13-15
Figure 2.10.13-4 Failed Fuel Rod Can – 2.75 I.D., Fuel Rod Containerization, NAC Drawing No. 340-108-D2 ..... 2.10.13-16
Figure 2.10.13-5 Failed Fuel Filter, NAC Drawing No. 491-042 ..... 2.10.13-17
Figure 2.10.14-1 ANSYS Finite Element Model of the Cask Body 2.10.14-7
Figure 2.10.14-2 Detailed View of the Cask Body Finite Element Model Top 2.10.14-8
Figure 2.10.14-3 Detailed View of the Cask Body Finite Element Model Bottom 2.10.14-9
Figure 2.10.14-4 Location of Sections of the NAC-LWT Cask Body Model 2.10.14-10
Figure 2.10.15-1 Alternate B Port Cover Finite Element Model 2.10.15-10

List of Tables

Table 2.1.2-1 Allowable Stress Limits for Containment Structures 2.1.2-2
Table 2.1.2-2 Allowable Stress Limits for Noncontainment Structures 2.1.2-3
Table 2.1.3-1 Extreme Total Stress Intensities..... 2.1.3-8
Table 2.2.1-1 Weights of the NAC-LWT Cask Major Components..... 2.2.1-2
Table 2.2.1-2 Weights and Center of Gravity Locations for the NAC-LWT Cask Shipping Configurations 2.2.1-4
Table 2.3.1-1 Mechanical Properties of Type 304 Stainless Steel..... 2.3.1-5
Table 2.3.1-2 Mechanical Properties of Type XM-19 Stainless Steel 2.3.1-6
Table 2.3.1-3 Mechanical Properties of SA-705, Grade 630, Precipitation-Hardened Stainless Steel..... 2.3.1-7
Table 2.3.1-4 Mechanical Properties (6061-T6 and T651 per ASTM B-209)..... 2.3.1-8
Table 2.3.1-5 Mechanical Properties of SA-193, Grade B6 High Alloy, Steel Bolting Material 2.3.1-9
Table 2.3.1-6 Mechanical Properties of SA-453, Grade 660 High Alloy, Steel Bolting Material 2.3.1-10
Table 2.3.1-7 Static Mechanical Properties of Chemical Copper Lead 2.3.1-11
Table 2.3.1-8 Dynamic Mechanical Properties of Chemical Copper Lead..... 2.3.1-12
Table 2.3.1-9 Mechanical Properties of SB-637, Grade N07718, Nickel Alloy Steel Bolting Material 2.3.1-13
Table 2.5.1-1 Maximum Capacity of the Lifting Components 2.5.1-11
Table 2.5.2-1 Reactions Caused By Tiedown Devices 2.5.2-17
Table 2.6.1-1 Critical Stress Summary (Hot Case) - P_m 2.6.1-5
Table 2.6.1-2 Critical Stress Summary (Hot Case) - $P_m + P_b$ 2.6.1-6
Table 2.6.1-3 Critical Stress Summary (Hot Case) – Total Range 2.6.1-7
Table 2.6.2-1 Critical Stress Summary (Cold Case) - P_m..... 2.6.2-5
Table 2.6.2-2 Critical Stress Summary (Cold Case) - $P_m + P_b$ 2.6.2-6
Table 2.6.2-3 Critical Stress Summary (Cold Case) – Total Range..... 2.6.2-7
Table 2.6.7-1 Critical Stress Summary (1-Foot Bottom End Drop) – Loading Condition 1 – P_m 2.6.7-98
Table 2.6.7-2 Critical Stress Summary (1-Foot Bottom End Drop) – Loading Condition 1 - $P_m + P_b$ 2.6.7-99
Table 2.6.7-3 Critical Stress Summary (1-Foot Bottom End Drop) – Loading Condition 1 - Total Range..... 2.6.7-100
Table 2.6.7-4 Critical Stress Summary (1-Foot Bottom End Drop) – Loading Condition 2 – P_m 2.6.7-101
Table 2.6.7-5 Critical Stress Summary (1-Foot Bottom End Drop) – Loading Condition 2 - $P_m + P_b$ 2.6.7-102
Table 2.6.7-6 Critical Stress Summary (1-Foot Bottom End Drop) – Loading Condition 2 - Total Range..... 2.6.7-103
Table 2.6.7-7 Critical Stress Summary (1-Foot Bottom End Drop) – Loading Condition 3 – P_m 2.6.7-104
Table 2.6.7-8 Critical Stress Summary (1-Foot Bottom End Drop) – Loading Condition 3 - $P_m + P_b$ 2.6.7-105

List of Tables (Continued)

Table 2.6.7-9 Critical Stress Summary (1-Foot Bottom End Drop) – Loading Condition 3 - Total Range 2.6.7-106
Table 2.6.7-10 Critical Stress Summary (1-Foot Top End Drop) – Loading Condition 1 – P_m 2.6.7-107
Table 2.6.7-11 Critical Stress Summary (1-Foot Top End Drop) – Loading Condition 1 - $P_m + P_b$ 2.6.7-108
Table 2.6.7-12 Critical Stress Summary (1-Foot Top End Drop) – Loading Condition 1 - Total Range 2.6.7-109
Table 2.6.7-13 Critical Stress Summary (1-Foot Top End Drop) – Loading Condition 2 – P_m 2.6.7-110
Table 2.6.7-14 Critical Stress Summary (1-Foot Top End Drop) – Loading Condition 2 - $P_m + P_b$ 2.6.7-111
Table 2.6.7-15 Critical Stress Summary (1-Foot Top End Drop) – Loading Condition 2 - Total Range 2.6.7-112
Table 2.6.7-16 Critical Stress Summary (1-Foot Side Drop) – Loading Condition 1 – P_m 2.6.7-113
Table 2.6.7-17 Critical Stress Summary (1-Foot Side Drop) – Loading Condition 1 - $P_m + P_b$ 2.6.7-114
Table 2.6.7-18 Critical Stress Summary (1-Foot Side Drop) – Loading Condition 1 - S_n 2.6.7-115
Table 2.6.7-19 Critical Stress Summary (1-Foot Side Drop) – Loading Condition 1 - Total Range 2.6.7-116
Table 2.6.7-20 Critical Stress Summary (1-Foot Top Corner Drop) – Loading Condition 1 – P_m – Drop Orientation = 15.74 Degrees 2.6.7-117
Table 2.6.7-21 Critical Stress Summary (1-Foot Top Corner Drop) – Loading Condition 1 - $P_m + P_b$ – Drop Orientation = 15.74 Degrees 2.6.7-118
Table 2.6.7-22 Critical Stress Summary (1-Foot Top Corner Drop) – Loading Condition 1 - S_n – Drop Orientation = 15.74 Degrees 2.6.7-119
Table 2.6.7-23 Critical Stress Summary (1-Foot Top Corner Drop) – Loading Condition 1 - Total Range – Drop Orientation = 15.74 Degrees 2.6.7-120
Table 2.6.7-24 Critical Stress Summary (1-Foot Bottom Corner Drop) – Loading Condition 1 – P_m – Drop Orientation = 15.74 Degrees 2.6.7-121
Table 2.6.7-25 Critical Stress Summary (1-Foot Bottom Corner Drop) – Loading Condition 1 - $P_m + P_b$ – Drop Orientation = 15.74 Degrees 2.6.7-122
Table 2.6.7-26 Critical Stress Summary (1-Foot Bottom Corner Drop) – Loading Condition 1 - S_n – Drop Orientation = 15.74 Degrees 2.6.7-123
Table 2.6.7-27 Critical Stress Summary (1-Foot Bottom Corner Drop) – Loading Condition 1 - Total Range – Drop Orientation = 15.74 Degrees 2.6.7-124
Table 2.6.7-28 Critical Stress Summary (1-Foot Top Corner Drop) – Loading Condition 3 – P_m – Drop Orientation = 15.74 Degrees 2.6.7-125
Table 2.6.7-29 Critical Stress Summary (1-Foot Top Corner Drop) – Loading Condition 3 - $P_m + P_b$ – Drop Orientation = 15.74 Degrees 2.6.7-126

List of Tables (Continued)

Table 2.6.7-30	Critical Stress Summary (1-Foot Top Corner Drop) – Loading Condition 3 - S_n – Drop Orientation = 15.74 Degrees	2.6.7-127
Table 2.6.7-31	Critical Stress Summary (1-Foot Top Corner Drop) – Loading Condition 3 - Total Range – Drop Orientation = 15.74 Degrees	2.6.7-128
Table 2.6.7-32	Summary of Results - Impact Limiter Analysis for 1-Foot Free Drop	2.6.7-129
Table 2.6.7-33	Summary of Results - Impact Limiter Analysis for 30-Foot Free Drop Subsequent to a 1-Foot Fall	2.6.7-131
Table 2.6.7-34	Summary of Cask Drop Equivalent G Load Factors	2.6.7-133
Table 2.6.7-35	NAC-LWT Cask Hot Bolt Analysis – Normal Conditions	2.6.7-134
Table 2.6.7-36	NAC-LWT Cask Cold Bolt Analysis – Normal Conditions	2.6.7-135
Table 2.6.7-37	Summary of Neutron Shield Tank Analysis	2.6.7-136
Table 2.6.7-38	Normal Transport Shield Tank Temperatures	2.6.7-137
Table 2.6.7-39	Normal Transport Shield Tank Pressures	2.6.7-138
Table 2.6.7-40	Summary of Expansion Tank Analysis	2.6.7-138
Table 2.6.7-41	Upper Ring – Cross-Section Principal Stresses	2.6.7-139
Table 2.6.12-1	Maximum Primary Membrane Stress for the 1-Foot Drop (DIDO Basket)	2.6.12-61
Table 2.6.12-2	Maximum Primary Membrane Plus Bending Stress for the 1-Foot Drop (DIDO Basket)	2.6.12-61
Table 2.6.12-3	Summary of SLOWPOKE Fuel Canister Assembly Component Dimensions and other Inputs	2.6.12-95
Table 2.6.12-4	Stress Summary for Top End Drop Case	2.6.12-139
Table 2.6.12-5	Stress Summary for Side Drop Case	2.6.12-140
Table 2.7.1-1	Critical Stress Summary (30-Foot Bottom End Drop) – Loading Condition 1 – P_m	2.7.1-57
Table 2.7.1-2	Critical Stress Summary (30-Foot Bottom End Drop) – Loading Condition 1 - $P_m + P_b$	2.7.1-58
Table 2.7.1-3	Critical Stress Summary (30-Foot Bottom End Drop) – Loading Condition 1 - Total Range	2.7.1-59
Table 2.7.1-4	Critical Stress Summary (30-Foot Bottom End Drop) – Loading Condition 2 – P_m	2.7.1-60
Table 2.7.1-5	Critical Stress Summary (30-Foot Bottom End Drop) – Loading Condition 2 - $P_m + P_b$	2.7.1-61
Table 2.7.1-6	Critical Stress Summary (30-Foot Bottom End Drop) – Loading Condition 2 - Total Range	2.7.1-62
Table 2.7.1-7	Critical Stress Summary (30-Foot Bottom End Drop) – Loading Condition 3 – P_m	2.7.1-63
Table 2.7.1-8	Critical Stress Summary (30-Foot Bottom End Drop) – Loading Condition 3 - $P_m + P_b$	2.7.1-64
Table 2.7.1-9	Critical Stress Summary (30-Foot Bottom End Drop) – Loading Condition 3 - Total Range	2.7.1-65

List of Tables (Continued)

Table 2.7.1-10 Critical Stress Summary (30-Foot Top End Drop) – Loading Condition 1 – P_m 2.7.1-66
Table 2.7.1-11 Critical Stress Summary (30-Foot Top End Drop) – Loading Condition 1 - $P_m + P_b$ 2.7.1-67
Table 2.7.1-12 Critical Stress Summary (30-Foot Top End Drop) – Loading Condition 1 - Total Range 2.7.1-68
Table 2.7.1-13 Critical Stress Summary (30-Foot Top End Drop) – Loading Condition 2 – P_m 2.7.1-69
Table 2.7.1-14 Critical Stress Summary (30-Foot Top End Drop) – Loading Condition 2 - $P_m + P_b$ 2.7.1-70
Table 2.7.1-15 Critical Stress Summary (30-Foot Top End Drop) – Loading Condition 2 - Total Range 2.7.1-71
Table 2.7.1-16 Side Drop Load Analysis Description 2.7.1-72
Table 2.7.1-17 Critical Stress Summary (30-Foot Side Drop) – Loading Condition 1 - P_m 2.7.1-73
Table 2.7.1-18 Critical Stress Summary (30-Foot Side Drop) – Loading Condition 1 - $P_m + P_b$ 2.7.1-74
Table 2.7.1-19 Critical Stress Summary (30-Foot Side Drop) – Loading Condition 1 - Total Range 2.7.1-75
Table 2.7.1-20 G Loads – Oblique Drop 2.7.1-76
Table 2.7.1-21 Impact and Contents Pressures – Oblique Drop 2.7.1-77
Table 2.7.1-22 Fourier Series Modal Coefficients – Oblique Drop 2.7.1-78
Table 2.7.1-23 Oblique Drop Load Analysis Description 2.7.1-79
Table 2.7.1-24 Critical Stress Summary (30-Foot Top Corner Drop) – Loading Condition 1 - P_m – Drop Orientation = 15.74 Degrees 2.7.1-80
Table 2.7.1-25 Critical Stress Summary (30-Foot Top Corner Drop) – Loading Condition 1 - $P_m + P_b$ – Drop Orientation = 15.74 Degrees 2.7.1-81
Table 2.7.1-26 Critical Stress Summary (30-Foot Top Corner Drop) – Loading Condition 1 – Total Range – Drop Orientation = 15.74 Degrees 2.7.1-82
Table 2.7.1-27 Critical Stress Summary (30-Foot Top Oblique Drop) – Loading Condition 1 - P_m – Drop Orientation = 30 Degrees 2.7.1-83
Table 2.7.1-28 Critical Stress Summary (30-Foot Top Oblique Drop) – Loading Condition 1 - $P_m + P_b$ – Drop Orientation = 30 Degrees 2.7.1-84
Table 2.7.1-29 Critical Stress Summary (30-Foot Top Oblique Drop) – Loading Condition 1 – Total Range – Drop Orientation = 30 Degrees 2.7.1-85
Table 2.7.1-30 Critical Stress Summary (30-Foot Top Oblique Drop) – Loading Condition 1 - P_m – Drop Orientation = 45 Degrees 2.7.1-86
Table 2.7.1-31 Critical Stress Summary (30-Foot Top Oblique Drop) – Loading Condition 1 - $P_m + P_b$ – Drop Orientation = 45 Degrees 2.7.1-87
Table 2.7.1-32 Critical Stress Summary (30-Foot Top Oblique Drop) – Loading Condition 1 – Total Range – Drop Orientation = 45 Degrees 2.7.1-88
Table 2.7.1-33 Critical Stress Summary (30-Foot Top Oblique Drop) – Loading Condition 1 - P_m – Drop Orientation = 60 Degrees 2.7.1-89

List of Tables (Continued)

Table 2.7.1-34 Critical Stress Summary (30-Foot Top Oblique Drop) – Loading Condition 1 - $P_m + P_b$ – Drop Orientation = 60 Degrees 2.7.1-90
Table 2.7.1-35 Critical Stress Summary (30-Foot Top Oblique Drop) – Loading Condition 1 – Total Range – Drop Orientation = 60 Degrees 2.7.1-91
Table 2.7.1-36 Critical Stress Summary (30-Foot Top Corner Drop) – Loading Condition 3 - P_m – Drop Orientation = 15.74 Degrees 2.7.1-92
Table 2.7.1-37 Critical Stress Summary (30-Foot Top Corner Drop) – Loading Condition 3 - $P_m + P_b$ – Drop Orientation = 15.74 Degrees 2.7.1-93
Table 2.7.1-38 Critical Stress Summary (30-Foot Top Corner Drop) – Loading Condition 3 – Total Range – Drop Orientation = 15.74 Degrees 2.7.1-94
Table 2.7.1-39 Critical Stress Summary (30-Foot Top Oblique Drop) – Loading Condition 3 - P_m – Drop Orientation = 30 Degrees 2.7.1-95
Table 2.7.1-40 Critical Stress Summary (30-Foot Top Oblique Drop) – Loading Condition 3 - $P_m + P_b$ – Drop Orientation = 30 Degrees 2.7.1-96
Table 2.7.1-41 Critical Stress Summary (30-Foot Top Oblique Drop) – Loading Condition 3 – Total Range – Drop Orientation = 30 Degrees 2.7.1-97
Table 2.7.1-42 Critical Stress Summary (30-Foot Top Oblique Drop) – Loading Condition 3 - P_m – Drop Orientation = 45 Degrees 2.7.1-98
Table 2.7.1-43 Critical Stress Summary (30-Foot Top Oblique Drop) – Loading Condition 3 - $P_m + P_b$ – Drop Orientation = 45 Degrees 2.7.1-99
Table 2.7.1-44 Critical Stress Summary (30-Foot Top Oblique Drop) – Loading Condition 3 – Total Range – Drop Orientation = 45 Degrees 2.7.1-100
Table 2.7.1-45 Critical Stress Summary (30-Foot Top Oblique Drop) – Loading Condition 3 - P_m – Drop Orientation = 60 Degrees 2.7.1-101
Table 2.7.1-46 Critical Stress Summary (30-Foot Top Oblique Drop) – Loading Condition 3 - $P_m + P_b$ – Drop Orientation = 60 Degrees 2.7.1-102
Table 2.7.1-47 Critical Stress Summary (30-Foot Top Oblique Drop) – Loading Condition 3 – Total Range – Drop Orientation = 60 Degrees 2.7.1-103
Table 2.7.1-48 Critical Stress Summary (30-Foot Bottom Oblique Drop) – Loading Condition 1 - P_m – Drop Orientation = 15.74 Degrees 2.7.1-104
Table 2.7.1-49 Critical Stress Summary (30-Foot Bottom Oblique Drop) – Loading Condition 1 - $P_m + P_b$ – Drop Orientation = 15.74 Degrees 2.7.1-105
Table 2.7.1-50 Critical Stress Summary (30-Foot Bottom Oblique Drop) – Loading Condition 1 – Total Range – Drop Orientation = 15.74 Degrees 2.7.1-106
Table 2.7.1-51 Critical Stress Summary (30-Foot Bottom Oblique Drop) – Loading Condition 1 - P_m – Drop Orientation = 30 Degrees 2.7.1-107
Table 2.7.1-52 Critical Stress Summary (30-Foot Bottom Oblique Drop) – Loading Condition 1 - $P_m + P_b$ – Drop Orientation = 30 Degrees 2.7.1-108
Table 2.7.1-53 Critical Stress Summary (30-Foot Bottom Oblique Drop) – Loading Condition 1 – Total Range – Drop Orientation = 30 Degrees 2.7.1-109
Table 2.7.1-54 Critical Stress Summary (30-Foot Bottom Oblique Drop) – Loading Condition 1 - P_m – Drop Orientation = 45 Degrees 2.7.1-110

List of Tables (Continued)

Table 2.7.1-55 Critical Stress Summary (30-Foot Bottom Oblique Drop) – Loading Condition 1 - $P_m + P_b$ – Drop Orientation = 45 Degrees 2.7.1-111
Table 2.7.1-56 Critical Stress Summary (30-Foot Bottom Oblique Drop) – Loading Condition 1 – Total Range – Drop Orientation = 45 Degrees 2.7.1-112
Table 2.7.1-57 Critical Stress Summary (30-Foot Bottom Oblique Drop) – Loading Condition 1 - P_m – Drop Orientation = 60 Degrees 2.7.1-113
Table 2.7.1-58 Critical Stress Summary (30-Foot Bottom Oblique Drop) – Loading Condition 1 - $P_m + P_b$ – Drop Orientation = 60 Degrees 2.7.1-114
Table 2.7.1-59 Critical Stress Summary (30-Foot Bottom Oblique Drop) – Loading Condition 1 – Total Range – Drop Orientation = 60 Degrees 2.7.1-115
Table 2.7.1-60 NAC-LWT Cask Hot Bolt Analysis Hypothetical Accident Conditions 2.7.1-116
Table 2.7.1-61 NAC-LWT Cask Cold Bolt Analysis Hypothetical Accident Conditions 2.7.1-117
Table 2.7.6-1 Summary of Maximum Calculated Stresses – 30-Foot Drop 2.7.6-2
Table 2.7.6-2 Summary of Maximum Calculated Stresses – 40-Inch Free Drop 2.7.6-3
Table 2.7.6-3 Summary of Maximum Calculated Stresses - Fire 2.7.6-4
Table 2.7.7-1 Maximum Primary Membrane Stress for the 30-Foot Drop..... 2.7.7-50
Table 2.7.7-2 Maximum Primary Membrane Plus Bending Stress for the 30-Foot Drop 2.7.7-50
Table 2.7.7-3 Length and Initial Gap of SLOWPOKE Fuel Canister Assembly Components 2.7.7-75
Table 2.7.7-4 Summary of Gap and Relative Velocity between SLOWPOKE Fuel Canister Assembly Components 2.7.7-75
Table 2.7.7-5 Summary of Gap and Relative Velocity between SLOWPOKE Fuel Canister Assembly Components Over Time..... 2.7.7-76
Table 2.7.7-6 End Drop Force on the SLOWPOKE Fuel Canister Assembly Components 2.7.7-79
Table 2.7.7-7 Stress Summary for Top End Drop Case..... 2.7.7-103
Table 2.7.7-8 Stress Summary for Side Drop Case..... 2.7.7-104
Table 2.10.2-1 Node Definitions..... 2.10.2-14
Table 2.10.2-2 Applied Impact Pressure Loadings – 30-Foot Hypothetical Accident Conditions..... 2.10.2-48
Table 2.10.3-1 P_m Stress Summary – Upper Ring Critical Section 2.10.3-6
Table 2.10.3-2 $P_m + P_b$ Stress Summary – Upper Ring Critical Section..... 2.10.3-11
Table 2.10.4-1 Determination of Maximum Energy for Secondary Impact – Full-Scale Impact Limiter..... 2.10.4-11
Table 2.10.6-1 Inner Shell Geometry Parameters 2.10.6-8
Table 2.10.6-2 Material Properties of Type XM-19 Stainless Steel for Buckling Analysis Input (ASME, Section III, Appendix I) 2.10.6-9
Table 2.10.6-3 Theoretical Elastic Buckling Stress Values (Temperature Independent Form)..... 2.10.6-10
Table 2.10.6-4 Theoretical Elastic Buckling Stresses for Selected Temperatures..... 2.10.6-11

List of Tables (Continued)

Table 2.10.6-5 Capacity Reduction Factors for the Type XM-19 Stainless Steel Inner Shell 2.10.6-12
Table 2.10.6-6 Fabrication Tolerances for the NAC-LWT Cask Inner Shell 2.10.6-13
Table 2.10.6-7 Upper Bound Buckling Stresses 2.10.6-14
Table 2.10.6-8 Calculated Maximum Compressive Stresses in the Inner Shell 2.10.6-15
Table 2.10.6-9 Calculated Stresses with ASME Factors of Safety 2.10.6-17
Table 2.10.6-10 Results – Interaction Equations 2.10.6-18
Table 2.10.7-1 Section Cut Identification 2.10.7-4
Table 2.10.7-2 P_m Stress Summary (Hot Case) 2.10.7-5
Table 2.10.7-3 $P_m + P_b$ Stress Summary (Hot Case) 2.10.7-6
Table 2.10.7-4 P_m Stress Summary (Cold Case) 2.10.7-7
Table 2.10.7-5 $P_m + P_b$ Stress Summary (Cold Case) 2.10.7-8
Table 2.10.7-6 P_m Stress Summary (1-Foot Bottom End Drop) – Loading Condition 1 ..... 2.10.7-9
Table 2.10.7-7 $P_m + P_b$ Stress Summary (1-Foot Bottom End Drop) – Loading Condition 1 ..... 2.10.7-10
Table 2.10.7-8 P_m Stress Summary (1-Foot Bottom End Drop) – Loading Condition 2 ..... 2.10.7-11
Table 2.10.7-9 $P_m + P_b$ Stress Summary (1-Foot Bottom End Drop) – Loading Condition 2 ..... 2.10.7-12
Table 2.10.7-10 P_m Stress Summary (1-Foot Bottom End Drop) – Loading Condition 3 ..... 2.10.7-13
Table 2.10.7-11 $P_m + P_b$ Stress Summary (1-Foot Bottom End Drop) – Loading Condition 3 ..... 2.10.7-14
Table 2.10.7-12 P_m Stress Summary (1-Foot Top End Drop) – Loading Condition 1 .. 2.10.7-15
Table 2.10.7-13 $P_m + P_b$ Stress Summary (1-Foot Top End Drop) – Loading Condition 1 ..... 2.10.7-16
Table 2.10.7-14 P_m Stress Summary (1-Foot Top End Drop) – Loading Condition 2 .. 2.10.7-17
Table 2.10.7-15 $P_m + P_b$ Stress Summary (1-Foot Top End Drop) – Loading Condition 2 ..... 2.10.7-18
Table 2.10.7-16 P_m Stress Summary (1-Foot Side Drop) – Loading Condition 1 ..... 2.10.7-19
Table 2.10.7-17 $P_m + P_b$ Stress Summary (1-Foot Side Drop) – Loading Condition 1 . 2.10.7-20
Table 2.10.7-18 S_n Stress Summary (1-Foot Side Drop) – Loading Condition 1 ..... 2.10.7-21
Table 2.10.7-19 P_m Stress Summary (1-Foot Top Corner Drop) – Loading Condition 1 – Drop Orientation = 15.74 Degrees 2.10.7-22
Table 2.10.7-20 $P_m + P_b$ Stress Summary (1-Foot Top Corner Drop) – Loading Condition 1 – Drop Orientation = 15.74 Degrees 2.10.7-23
Table 2.10.7-21 S_n Stress Summary (1-Foot Top Corner Drop) – Loading Condition 1 – Drop Orientation = 15.74 Degrees 2.10.7-24
Table 2.10.7-22 P_m Stress Summary (1-Foot Bottom Corner Drop) – Loading Condition 1 – Drop Orientation = 15.74 Degrees 2.10.7-25
Table 2.10.7-23 $P_m + P_b$ Stress Summary (1-Foot Bottom Corner Drop) – Loading Condition 1 – Drop Orientation = 15.74 Degrees 2.10.7-26

List of Tables (Continued)

Table 2.10.7-24 S_n Stress Summary (1-Foot Bottom Corner Drop) – Loading Condition 1 – Drop Orientation = 15.74 Degrees 2.10.7-27
Table 2.10.7-25 P_m Stress Summary (1-Foot Top Corner Drop) – Loading Condition 3 – Drop Orientation = 15.74 Degrees 2.10.7-28
Table 2.10.7-26 $P_m + P_b$ Stress Summary (1-Foot Top Corner Drop) – Loading Condition 3 – Drop Orientation = 15.74 Degrees 2.10.7-29
Table 2.10.7-27 S_n Stress Summary (1-Foot Top Corner Drop) – Loading Condition 3 – Drop Orientation = 15.74 Degrees 2.10.7-30
Table 2.10.7-28 P_m Stress Summary (30-Foot Bottom End Drop) – Loading Condition 1 ..... 2.10.7-31
Table 2.10.7-29 $P_m + P_b$ Stress Summary (30-Foot Bottom End Drop) – Loading Condition 1 ..... 2.10.7-32
Table 2.10.7-30 P_m Stress Summary (30-Foot Bottom End Drop) – Loading Condition 2 ..... 2.10.7-33
Table 2.10.7-31 $P_m + P_b$ Stress Summary (30-Foot Bottom End Drop) – Loading Condition 2 ..... 2.10.7-34
Table 2.10.7-32 P_m Stress Summary (30-Foot Bottom End Drop) – Loading Condition 3 ..... 2.10.7-35
Table 2.10.7-33 $P_m + P_b$ Stress Summary (30-Foot Bottom End Drop) – Loading Condition 3 ..... 2.10.7-36
Table 2.10.7-34 P_m Stress Summary (30-Foot Top End Drop) – Loading Condition 1 ..... 2.10.7-37
Table 2.10.7-35 $P_m + P_b$ Stress Summary (30-Foot Top End Drop) – Loading Condition 1 ..... 2.10.7-38
Table 2.10.7-36 P_m Stress Summary (30-Foot Top End Drop) – Loading Condition 2 ..... 2.10.7-39
Table 2.10.7-37 $P_m + P_b$ Stress Summary (30-Foot Top End Drop) – Loading Condition 2 ..... 2.10.7-40
Table 2.10.7-38 P_m Stress Summary (30-Foot Side Drop) – Loading Condition 1 ..... 2.10.7-41
Table 2.10.7-39 $P_m + P_b$ Stress Summary (30-Foot Side Drop) – Loading Condition 1 ..... 2.10.7-42
Table 2.10.7-40 P_m Stress Summary (30-Foot Top Corner Drop) – Loading Condition 1 – Drop Orientation = 15.74 Degrees 2.10.7-43
Table 2.10.7-41 $P_m + P_b$ Stress Summary (30-Foot Top Corner Drop) – Loading Condition 1 – Drop Orientation = 15.74 Degrees 2.10.7-44
Table 2.10.7-42 P_m Stress Summary (30-Foot Top Oblique Drop) – Loading Condition 1 – Drop Orientation = 30 Degrees 2.10.7-45
Table 2.10.7-43 $P_m + P_b$ Stress Summary (30-Foot Top Oblique Drop) – Loading Condition 1 – Drop Orientation = 30 Degrees 2.10.7-46
Table 2.10.7-44 P_m Stress Summary (30-Foot Top Oblique Drop) – Loading Condition 1 – Drop Orientation = 45 Degrees 2.10.7-47
Table 2.10.7-45 $P_m + P_b$ Stress Summary (30-Foot Top Oblique Drop) – Loading Condition 1 – Drop Orientation = 45 Degrees 2.10.7-48

List of Tables (Continued)

Table 2.10.7-46 P_m Stress Summary (30-Foot Top Oblique Drop) – Loading Condition 1 – Drop Orientation = 60 Degrees 2.10.7-49
Table 2.10.7-47 $P_m + P_b$ Stress Summary (30-Foot Top Oblique Drop) – Loading Condition 1 – Drop Orientation = 60 Degrees 2.10.7-50
Table 2.10.7-48 P_m Stress Summary (30-Foot Top Corner Drop) – Loading Condition 3 – Drop Orientation = 15.74 Degrees 2.10.7-51
Table 2.10.7-49 $P_m + P_b$ Stress Summary (30-Foot Top Corner Drop) – Loading Condition 3 – Drop Orientation = 15.74 Degrees 2.10.7-52
Table 2.10.7-50 P_m Stress Summary (30-Foot Top Oblique Drop) – Loading Condition 3 – Drop Orientation = 30 Degrees 2.10.7-53
Table 2.10.7-51 $P_m + P_b$ Stress Summary (30-Foot Top Oblique Drop) – Loading Condition 3 – Drop Orientation = 30 Degrees 2.10.7-54
Table 2.10.7-52 P_m Stress Summary (30-Foot Top Oblique Drop) – Loading Condition 3 – Drop Orientation = 45 Degrees 2.10.7-55
Table 2.10.7-53 $P_m + P_b$ Stress Summary (30-Foot Top Oblique Drop) – Loading Condition 3 – Drop Orientation = 45 Degrees 2.10.7-56
Table 2.10.7-54 P_m Stress Summary (30-Foot Top Oblique Drop) – Loading Condition 3 – Drop Orientation = 60 Degrees 2.10.7-57
Table 2.10.7-55 $P_m + P_b$ Stress Summary (30-Foot Top Oblique Drop) – Loading Condition 3 – Drop Orientation = 60 Degrees 2.10.7-58
Table 2.10.7-56 P_m Stress Summary (30-Foot Bottom Corner Drop) – Loading Condition 1 – Drop Orientation = 15.74 Degrees 2.10.7-59
Table 2.10.7-57 $P_m + P_b$ Stress Summary (30-Foot Bottom Corner Drop) – Loading Condition 1 – Drop Orientation = 15.74 Degrees 2.10.7-60
Table 2.10.7-58 P_m Stress Summary (30-Foot Bottom Oblique Drop) – Loading Condition 1 – Drop Orientation = 30 Degrees 2.10.7-61
Table 2.10.7-59 $P_m + P_b$ Stress Summary (30-Foot Bottom Oblique Drop) – Loading Condition 1 – Drop Orientation = 30 Degrees 2.10.7-62
Table 2.10.7-60 P_m Stress Summary (30-Foot Bottom Oblique Drop) – Loading Condition 1 – Drop Orientation = 45 Degrees 2.10.7-63
Table 2.10.7-61 $P_m + P_b$ Stress Summary (30-Foot Bottom Oblique Drop) – Loading Condition 1 – Drop Orientation = 45 Degrees 2.10.7-64
Table 2.10.7-62 P_m Stress Summary (30-Foot Bottom Oblique Drop) – Loading Condition 1 – Drop Orientation = 60 Degrees 2.10.7-65
Table 2.10.7-63 $P_m + P_b$ Stress Summary (30-Foot Bottom Oblique Drop) – Loading Condition 1 – Drop Orientation = 60 Degrees 2.10.7-66
Table 2.10.8-1 Scaling Relations 2.10.8-60
Table 2.10.8-2 Metrology Results of Inner Diameter Measurements Before Drop 2.10.8-62
Table 2.10.8-3 Metrology Results of Outer Diameter Measurements Before Drop 2.10.8-63
Table 2.10.8-4 Metrology Results of External Length Measurements Before Drop 2.10.8-64
Table 2.10.8-5 Metrology Results of Inner Diameter Measurements After Drop 2.10.8-65
Table 2.10.8-6 Metrology Results of Outer Diameter Measurements After Drop 2.10.8-66
Table 2.10.8-7 Metrology Results of External Length Measurements After Drop 2.10.8-67

List of Tables (Continued)

Table 2.10.9-1 NAC-LWT Cask Hot Bolt Analysis Hypothetical Accident Conditions 2.10.9-9
Table 2.10.10-1 Stress Point Locations 2.10.10-8
Table 2.10.10-2 Constraint Forces for the 30-Foot Top End Drop Condition ($\phi = 0°$) 2.10.10-12
Table 2.10.10-3 Constraint Forces for the 30-Foot Top Corner Drop Condition ($\phi = 15.74°$) 2.10.10-13
Table 2.10.10-4 Constraint Forces for the 30-Foot Top Oblique Drop Condition ($\phi = 60°$) 2.10.10-13
Table 2.10.10-5 Constraint Forces for the 30-Foot Side Drop Condition ($\phi = 90°$) 2.10.10-13
Table 2.10.10-6 Stress Components – Thermal; 130°F; 1.12-Inch Outer Shell Thickness 2.10.10-14
Table 2.10.10-7 Stress Components – Internal Pressure; 50 psi; 1.12-Inch Outer Shell Thickness 2.10.10-18
Table 2.10.10-8 Stress Components – Bolt Preload; 1.12-Inch Outer Shell Thickness 2.10.10-22
Table 2.10.10-9 Stress Components – Impact and Inertial Loads; 30-Foot Top End Drop; $\phi = 0°$; 1.12-Inch Outer Shell Thickness 2.10.10-26
Table 2.10.10-10 Stress Components – Impact and Inertial Loads; 30-Foot Top Corner Drop; $\phi = 15.74°$; 1.12-Inch Outer Shell Thickness 2.10.10-30
Table 2.10.10-11 Impact and Inertial Loads; 30-Foot Top Oblique Drop; $\phi = 60°$; 1.12-Inch Outer Shell Thickness 2.10.10-34
Table 2.10.10-12 Stress Components – Impact and Inertial Loads; 30-Foot Side Drop; $\phi = 90°$; 1.20-Inch Outer Shell Thickness; Circumferential Location = 0° 2.10.10-38
Table 2.10.10-13 Stress Components – Thermal; 130°F; 1.20-Inch Outer Shell Thickness 2.10.10-42
Table 2.10.10-14 Stress Components – 50 psi Internal Pressure and Bolt Preload; 1.20-Inch Outer Shell Thickness 2.10.10-46
Table 2.10.10-15 Primary Stresses; 30-Foot Top End Drop; $\phi = 0°$; 1.12-Inch Outer Shell Thickness 2.10.10-50
Table 2.10.10-16 Primary Plus Secondary Stresses; 30-Foot Top End Drop; $\phi = 0°$; 1.12-Inch Outer Shell Thickness 2.10.10-54
Table 2.10.10-17 Primary Membrane (P_m) Stresses; 30-Foot Top End Drop; $\phi = 0°$; 1.12-Inch Outer Shell Thickness 2.10.10-58
Table 2.10.10-18 Primary Membrane Plus Primary Bending ($P_m + P_b$) Stresses; 30-Foot Top End Drop; $\phi = 0°$; 1.12-Inch Outer Shell Thickness 2.10.10-59
Table 2.10.10-19 Primary Membrane (P_m) and Primary Membrane Plus Primary Bending ($P_m + P_b$) Stress Qualification; 30-Foot Top End Drop; $\phi = 0°$; 1.12-Inch Outer Shell Thickness 2.10.10-60
Table 2.10.10-20 Primary Stresses; 30-Foot Top Corner Drop; $\phi = 15.74°$; 1.12-Inch Outer Shell Thickness 2.10.10-61

List of Tables (Continued)

Table 2.10.10-21 Primary Plus Secondary Stresses; 30-Foot Top Corner Drop; ϕ = 15.74°; 1.12-Inch Outer Shell Thickness 2.10.10-65
Table 2.10.10-22 Primary Membrane (Pm) Stresses; 30-Foot Top Corner Drop; ϕ = 15.74°; 1.12-Inch Outer Shell Thickness 2.10.10-69
Table 2.10.10-23 Primary Membrane Plus Primary Bending ($P_m + P_b$) Stresses; 30-Foot Top Corner Drop; ϕ = 15.74°; 1.12-Inch Outer Shell Thickness 2.10.10-70
Table 2.10.10-24 Primary Membrane (P_m) and Primary Membrane Plus Primary Bending ($P_m + P_b$) Stresses; 30-Foot Top Corner Drop; ϕ = 15.74°; 1.12-Inch Outer Shell Thickness 2.10.10-71
Table 2.10.10-25 Primary Stresses; 30-Foot Top Oblique Drop; ϕ = 60°; 1.12-Inch Outer Shell Thickness 2.10.10-72
Table 2.10.10-26 Primary Plus Secondary Stresses; 30-Foot Top Oblique Drop; ϕ = 60°; 1.12-Inch Outer Shell Thickness 2.10.10-76
Table 2.10.10-27 Primary Membrane (P_m) Stresses; 30-Foot Top Oblique Drop; ϕ = 60°; 1.12-Inch Outer Shell Thickness 2.10.10-80
Table 2.10.10-28 Primary Membrane Plus Primary Bending ($P_m + P_b$) Stresses; 30-Foot Top Oblique Drop; ϕ = 60°; 1.12-Inch Outer Shell Thickness.. 2.10.10-81
Table 2.10.10-29 Primary Membrane (P_m) and Primary Membrane Plus Primary Bending ($P_m + P_b$) Stresses; 30-Foot Top Oblique Drop; ϕ = 60°; 1.12-Inch Outer Shell Thickness 2.10.10-82
Table 2.10.10-30 Primary Stresses; 30-Foot Side Drop; ϕ = 90°; 1.20-Inch Outer Shell Thickness; Circumferential Location = 0° 2.10.10-83
Table 2.10.10-31 Primary Plus Secondary Stresses; 30-Foot Side Drop; ϕ = 90°; 1.20-Inch Outer Shell Thickness; Circumferential Location = 0° 2.10.10-87
Table 2.10.10-32 Primary Membrane (P_m) Stresses; 30-Foot Side Drop; ϕ = 90°; 1.20-Inch Outer Shell Thickness; Circumferential Location = 0° 2.10.10-91
Table 2.10.10-33 Primary Membrane Plus Primary Bending ($P_m + P_b$) Stresses; 30-Foot Side Drop; ϕ = 90°; 1.20-Inch Outer Shell Thickness; Circumferential Location = 0° 2.10.10-92
Table 2.10.10-34 Primary Membrane (P_m) Stresses; 30-Foot Side Drop; ϕ = 90°; 1.20-Inch Outer Shell Thickness; Circumferential Location = 90° ... 2.10.10-93
Table 2.10.10-35 Primary Membrane Plus Primary Bending ($P_m + P_b$) Stresses; 30-Foot Side Drop; ϕ = 90°; 1.20-Inch Outer Shell Thickness; Circumferential Location = 90° 2.10.10-94
Table 2.10.10-36 Primary Membrane (P_m) Stresses; 30-Foot Side Drop; ϕ = 90°; 1.20-Inch Outer Shell Thickness; Circumferential Location = 180° . 2.10.10-95
Table 2.10.10-37 Primary Membrane Plus Primary Bending ($P_m + P_b$) Stresses; 30-Foot Side Drop; ϕ = 90°; 1.20-Inch Outer Shell Thickness; Circumferential Location = 180° 2.10.10-96

List of Tables (Continued)

Table 2.10.10-38 Primary Membrane (P_m) and Primary Membrane Plus Primary Bending ($P_m + P_b$) Stress Qualification; 30-Foot Side Drop; ϕ = 90°; 1.20-Inch Outer Shell Thickness; Circumferential Location = 0° 2.10.10-97
Table 2.10.11-1 Geometric Dimensions of the Cask 2.10.11-9
Table 2.10.11-2 Comparison of the Hand-Calculated and Finite Element Results 2.10.11-10
Table 2.10.12-1 Determination of Maximum Energy Remaining for Secondary Impact – Full-Scale Impact Limiter 2.10.12-30
Table 2.10.12-2 Determination of Extreme Force During Cask Deceleration (First Limiter) – Quarter-Scale Impact Limiter 2.10.12-31
Table 2.10.14-1 Material Designations for Sections 2.10.14-11
Table 2.10.14-2 1-Foot Side Drop with Internal Pressure, P_m Stresses, ksi 2.10.14-12
Table 2.10.14-3 1-Foot Side Drop with Internal Pressure, $P_m + P_b$ Stresses, ksi 2.10.14-13
Table 2.10.14-4 1-Foot Side Drop with Internal Pressure, P + Q Stresses, ksi 2.10.14-14
Table 2.10.14-5 1-Foot Top-End Drop with Normal Internal Pressure, P_m Stresses, ksi 2.10.14-15
Table 2.10.14-6 1-Foot Top-End Drop with Internal Pressure, $P_m + P_b$ Stresses, ksi .. 2.10.14-16
Table 2.10.14-7 1-Foot Top-End Drop with Internal Pressure, P + Q Stresses, ksi 2.10.14-17
Table 2.10.14-8 1-Foot Top-Corner Drop with Internal Pressure, P_m Stresses, ksi 2.10.14-18
Table 2.10.14-9 1-Foot Top-Corner Drop with Internal Pressure, $P_m + P_b$ Stresses, ksi 2.10.14-19
Table 2.10.14-10 1-Foot Top-Corner Drop with Internal Pressure, P + Q Stresses, ksi 2.10.14-20
Table 2.10.14-11 1-Foot Bottom-End Drop with Internal Pressure, P_m Stresses, ksi 2.10.14-21
Table 2.10.14-12 1-Foot Bottom-End Drop with Internal Pressure, $P_m + P_b$ Stresses, ksi 2.10.14-22
Table 2.10.14-13 1-Foot Bottom-End Drop with Internal Pressure, P + Q Stresses, ksi 2.10.14-23
Table 2.10.14-14 1-Foot Bottom-Corner Drop with Internal Pressure, P_m Stresses, ksi 2.10.14-24
Table 2.10.14-15 1-Foot Bottom-Corner Drop with Internal Pressure, $P_m + P_b$ Stresses, ksi 2.10.14-25
Table 2.10.14-16 1-Foot Bottom-Corner Drop with Internal Pressure, P + Q Stresses, ksi 2.10.14-26
Table 2.10.14-17 30-Foot Side Drop with Internal Pressure, P_m Stresses, ksi 2.10.14-27
Table 2.10.14-18 30-Foot Side Drop with Internal Pressure, $P_m + P_b$ Stresses, ksi 2.10.14-28
Table 2.10.14-19 30-Foot Top-End Drop with Internal Pressure, P_m Stresses, ksi 2.10.14-29
Table 2.10.14-20 30-Foot Top-End Drop with Internal Pressure, $P_m + P_b$ Stresses, ksi 2.10.14-30
Table 2.10.14-21 30-Foot Top-Corner Drop with Internal Pressure, P_m Stresses, ksi ... 2.10.14-31
Table 2.10.14-22 30-Foot Top-Corner Drop with Internal Pressure, $P_m + P_b$ Stresses, ksi 2.10.14-32
Table 2.10.14-23 30-Foot Bottom-End Drop with Internal Pressure, P_m Stresses, ksi .. 2.10.14-33

List of Tables (Continued)

Table 2.10.14-24 30-Foot Bottom-End Drop with Internal Pressure, $P_m + P_b$ Stresses, ksi 2.10.14-34
Table 2.10.14-25 30-Foot Bottom-Corner Drop with Internal Pressure, P_m Stresses, ksi 2.10.14-35
Table 2.10.14-26 30-Foot Bottom-Corner Drop with Internal Pressure, $P_m + P_b$ Stresses, ksi 2.10.14-36
Table 2.10.14-27 Accident Internal Pressure with Inertia Load, P_m Stresses, ksi 2.10.14-37
Table 2.10.14-28 Accident Internal Pressure with Inertia Load , $P_m + P_b$ Stresses, ksi 2.10.14-38

2 STRUCTURAL EVALUATION

The structural analysis of the NAC-LWT spent-fuel transportation cask demonstrates that the package satisfies the requirements of Part 71 of Title 10, Chapter 1 of the Code of Federal Regulations, specifically, Subpart E, “Package Approval Standards” and Subpart F, “Package and Special Form Tests.” It is shown that containment is not breached under any of the normal operations or hypothetical accident conditions.

Analysis techniques that utilize the current state-of-the-art methods for the calculation of stresses in large structures subject to both steady state and transient loadings are used throughout these analyses. The evaluation of the structural characteristics of the containment boundary is based upon a conservative interpretation of the requirements of the American Society of Mechanical Engineers (ASME) Boiler and Pressure Vessel Code.

This section of the Safety Analysis Report demonstrates that the NAC-LWT cask design is capable of meeting the rigors of transport while carrying nuclear fuel; it documents the results of the analyses that are performed to provide assurance that the design also satisfies the statutory requirements for licensing.

2.1 Structural Design

2.1.1 Discussion

The NAC-LWT cask consists of six major components: (1) the cask body; (2) the closure lid and bolts; (3) the neutron shield/expansion tanks; (4) the trunnions; (5) the fuel basket; and (6) the energy absorbing impact limiters, which are located over the ends of the cask. The bottom plate, the inner shell, the upper ring and the closure lid, including seals and bolts, form the primary containment boundary.

The NAC-LWT cask body is constructed of Type 304 stainless steel with Type XM-19 stainless steel inner and outer shells and with lead shielding in the side wall and bottom end (Section 1.4, License Drawings). The cask bottom consists of a 3.5-inch thick, 20.75-inch diameter Type 304 stainless steel forging on the outside; a 3.0-inch thick, 20.75-inch diameter lead plate; and a 4.0-inch thick, 17.80-inch diameter Type 304 stainless steel forging on the inside; these components are enclosed by a 10.5-inch thick, 28.63-inch outside diameter, 17.80-inch inside diameter, Type 304 stainless steel forging. The cask bottom is welded directly to the Type XM-19 stainless steel inner shell (0.75-inch thick with 1.26-inch thick transition regions at each end; 13.375-inch inside diameter, 14.88-inch outside diameter) and the Type XM-19 stainless steel outer shell (1.20-inch thick with 1.87-inch thick transition regions at each end; 26.38-inch inside diameter, 28.78-inch outside diameter); the shells are 175.05 inches long. The annulus between the shells (26.38-inch outside diameter, 14.88-inch inside diameter) is filled with lead for gamma shielding. The Type 304 stainless steel top forging is welded directly to the inner and outer shells and has three stepped regions to accommodate the closure lid, the seals and the lid bolts. The total height of the top forging is 14.25 inches with an outside diameter of 28.63 inches and stepped inside diameters of 13.375 inches × 6.25 inches long, 20.6 inches × 4.9 inches long, and 22.63 inches × 3.1 inches long.

The stainless steel closure lid is 11.3 inches thick with stepped regions of length and diameters to match those of the top forging so that the closure lid is recessed in the top forging and flush with its top surface. The twelve 1-8 UNC closure lid bolts are SA-453, Grade 660 high alloy bolting material. The inner and outer seals on the closure lid are metallic and tetrafloroetheylene (TFE) O-rings, respectively.

There are three penetrations into the NAC-LWT cask cavity – the closure lid, a vent port and a drain port. There also is a penetration into the region between the two closure lid O-rings to test the containment seal. The vent and drain ports contain quick-disconnect valves and are located in the cask body upper ring region. There are two port cover designs—the alternate port cover and the Alternate B port cover.

The port cover designs are physically similar, but the O-ring designs and materials are different. The primary containment O-ring seal for the alternate port cover is provided by a Viton® O-ring located in a groove on the face (inner end) of the port barrel of the cover body. The secondary (test annulus) seal is a single Viton® O-ring located in a groove on the barrel of the port cover. The bolts for the alternate port cover are SA-193 (Type 410 stainless steel) socket-head cap screws.

The Alternate B port cover has the same basic geometry as the alternate port cover. With the exception of modifications made to the sealing surface and the material of construction, the Alternate B port cover is the same design as the alternate port cover. The Alternate B port cover has two face seals on the inner end of the port cover. The primary containment seal is provided by an inner metal face seal located in a groove on the inner end of the barrel of the port cover body. The metal face seal maintains the containment boundary meeting the leaktight definition of ANSI N14.5-1997. The secondary (test annulus) face seal is a Viton® O-ring located in a groove on the inner end towards the outer edge of the barrel of the port cover body. The Alternate B port cover is fabricated from Type XM-19 stainless steel to provide maximum thermal expansion compatibility with the Type 304 stainless steel cask body. The Alternate B port cover is fastened to the cask body using three high-strength SB-637 Grade N07718 bolts.

The neutron shield tank shell is 0.24-inch thick stainless steel, which is 164.0 inches long with an outside diameter of 39.28 inches and an inside diameter of 38.81 inches. The bottom plate of the neutron shield tank is 0.50-inch thick stainless steel. The expansion tank shell is 0.32-inch thick stainless steel, which is 46.0 inches long with an outside diameter of 44.24 inches and an inside diameter of 43.61 inches. The top end of the shield and expansion tanks is a single 0.50-inch thick stainless steel plate. A pressure relief valve is located in the neutron shield tank shell. The relief valve is selected to contain any shield/expansion tank pressure due to the 10 CFR 71 prescribed normal operations conditions, but will release at higher pressures (165 psig) before gross failure of either tank occurs.

Four stainless steel lifting trunnions, located at 90-degree intervals, are welded to the exterior of the upper ring. Two stainless steel socket pads are welded to the outer shell for support of the cask on a trailer or in a shipping container.

The fuel basket assembly locates and supports the fuel in the cask cavity.

The aluminum honeycomb impact limiters control the g loads acting on the cask during impact load conditions. The g loads acting upon the cask are controlled by the honeycomb material crush strength.

2.1.2 Basic Design Criteria

2.1.2.1 Containment Structures

Regulatory Guides 7.6 and 7.8 are used to establish the design criteria for analyses to evaluate the package containment boundaries for both the normal transport and the hypothetical accident conditions. Material data used in the evaluations correspond to the design stress values (S_m), yield strengths (S_y), and ultimate strengths (S_u) presented in Section 2.3. The containment cavity is described by the solid 4.0-inch thick bottom end forging, welded to a 13.375-inch inner diameter 0.75-inch thick stainless steel shell, which is welded at the upper end to the upper end ring. The 11.3-inch thick stainless steel lid and metal O-ring seal, when bolted in place to the upper ring, close the containment cavity at the top of the cask. The cavity shell has two penetrations located near the top of the cask body: 1) the vent port for venting and filling; and 2) the drain port for draining. These penetrations are closed by either alternate port covers or the Alternate B port covers with the respective O-ring seals. The containment boundary is further described in Section 4.1.

A summary of allowable stress criteria used for containment structures and bolting materials is presented in Table 2.1.2-1. This data is consistent with Regulatory Guide 7.6 and applicable parts of Subsection NB-3000 and Appendix F of the "ASME Boiler and Pressure Vessel Code."

2.1.2.2 Noncontainment Structures

Noncontainment structures include all structural members other than the primary containment boundary components, but excluding the impact limiters. Noncontainment structural members are shown to satisfy similar structural criteria as the containment structure, although Regulatory Guide 7.6 applies only to containment structures. Allowable stresses for the noncontainment structures and noncontainment bolting materials are presented in Table 2.1.2-2. In addition, noncontainment lifting and handling structures satisfy the requirements of NUREG-0612 for the lifting of heavy loads.

While performing their intended function during all free drop conditions, the impact limiters crush and absorb the energy of impact. Crushing of the impact limiter prevents any cask "peak load hard points" from occurring during the impact.

Table 2.1.2-1 Allowable Stress Limits for Containment Structures

	Allowable Stresses		Bolt Allowable Stresses*	
Stress Category	**Normal Conditions**	**Accident Conditions**	**Normal Conditions**	**Accident Conditions**
Primary Membrane	S_m	Lesser of: 2.4 S_m and: 0.7 S_u	S_y	S_y
Primary Membrane + Primary Bending	1.5 S_m	Lesser of: 3.6 S_m and: S_u	S_y	S_y
Range of Primary + Secondary	3.0 S_m	NA		
Bearing	S_y	S_y for containment boundary surfaces S_u elsewhere		
Pure Shear	0.5 S_y	0.5 S_u		
Peak	Per Section 2.6.5			
Buckling	Per Section 2.10.6			

* Not considering stress concentrations (Section 2.1.3-1).

Table 2.1.2-2 Allowable Stress Limits for Noncontainment Structures

	Allowable Stresses		Bolt Allowable Stresses*	
Stress Category	**Normal Conditions**	**Accident Conditions**	**Normal Conditions**	**Accident Conditions**
Primary Membrane	Greater of: S_m and: S_y	0.7 S_u	Greater of: 2.0 S_m and: S_y	Greater of: S_y and: 0.7 S_u
Primary Membrane + Primary Bending	Greater of: 1.5 S_m and: S_y	S_u	Greater of: 3.0 S_m and: S_y	S_u
Range of Primary + Secondary	Greater of: 3.0 S_m and: S_y	NA		
Bearing	S_y	S_u		
Pure Shear	Greater of: 0.6 S_m and: 0.6 S_y	0.5 S_u		
Peak	Per Section 2.6.5			
Buckling	Per Section 2.10.6			

* Not considering stress concentrations (Section 2.1.3.2).

2.1.3 Miscellaneous Structural Failure Modes

2.1.3.1 Brittle Fracture

The materials used to fabricate the NAC-LWT cask body meet all appropriate brittle fracture requirements. The cask structure consists of Type XM-19 stainless steel inner and outer shells with the remainder of the cask body being Type 304 stainless steel. The neutron shield/ expansion tank system is also fabricated of Type 304 stainless steel. The Type XM-19 and Type 304 austenitic stainless steels do not undergo a ductile to brittle transition in the temperature range of interest.

The closure lid bolts are SA-453, Grade 660 high alloy bolting material. The port covers are SA-705, Grade 630 stainless steel. The port cover bolts are SA-193, Grade B6 alloy steel bolting material. All of these materials meet the impact energy absorption requirements of ASTM A370 and A20-77 (Annual Book of ASTM Standards, 1986).

The impact limiters and the fuel basket are fabricated from aluminum. Since the aluminum does not undergo a ductile to brittle transition in the cask structure temperature range, brittle fracture is not a concern.

2.1.3.2 Fatigue - Normal Operating Cycles

2.1.3.2.1 Cask Structure

A normal operating cycle is defined as the sequence of loading an empty cask at ambient temperature with contents of maximum heat load, transporting the contents to a destination, unloading the contents and letting the cask return to ambient temperature. The expected number of operating cycles for the NAC-LWT cask is approximately 480 (24 cycles/year $\times$ 20 years). For the purpose of performing a fatigue stress evaluation, the LWT cask is assumed to be subjected to 2,000 cycles. From the "ASME Boiler and Pressure Vessel Code," Appendix I, Figure I-9.2.1, the fatigue allowable stress intensity amplitude (S_a) for austenitic stainless steels for 2,000 cycles is 98,000 psi (one-half of the alternating stress range). This value, when multiplied by the ratio of elastic moduli at 70°F to that at 300°F ($27.0 \times 10^6 / 28.3 \times 10^6$), and multiplied by two, gives a fatigue allowable alternating stress intensity range of 187,000 psi. However, the allowable primary plus secondary (S_n) stress intensity range, from "ASME Boiler and Pressure Vessel Code," Subsection NB-3222.2, is 60,000 psi (3.0 S_m) for Type 304 stainless steel. No stress concentration factor is greater than 3.0 for the Type 304 stainless steel cask body components. The fatigue allowable alternating stress intensity range, 187,000 psi, is greater than three times the maximum allowable S_n stress intensity range for Type 304 stainless steel.

Similarly, for Type XM-19 stainless steel, the allowable S_n stress intensity range is 100,000 psi (3.0 S_m). No stress concentration factor for the inner and outer shells is greater than 1.5; the fatigue allowable alternating stress intensity range, 187,000 psi, is greater than 1.5 times the maximum allowable S_n stress intensity range for Type XM-19 stainless steel. Therefore, the S_n allowable stress intensity governs.

2.1.3.2.2 Bolts – Closure Lid (Fatigue)

Lid closure bolts indirectly complete containment by holding the lid in place on the upper forging. The maximum cyclic stress in the lid bolts results from preloading the bolts to the 260 foot-pounds torque (3120 inch-pounds) specified for installation. The actual required bolt preload torque (T), is given by:

$$T = \left[\frac{d_m}{2d} \left(\frac{\tan\psi + \mu \sec\alpha}{1 - \mu \tan\psi \sec\alpha} \right) + 0.625\mu \right] (F)(d)$$

$$= 2862 \text{ in-lb } (238.5 \text{ ft-lb})$$

where:

F = preload force, lb

d = 1.0 in (bolt diameter)

ψ = 2.494° (helix angle)

α = 30° (one-half the thread angle)

μ = 0.060 (coefficient of friction)

d_m = 0.9134 in (mean diameter of threads)

The required bolt preload force is calculated for the top corner drop as follows:

1. Inertial Weight of Lid

$$F_l = \frac{W_t}{g}(a) = \frac{941}{32.2}(60 \text{ x } 32.2)$$

$$= 56{,}460 \text{ lbs}$$

where:

W_t = 941 lbs (Table 2.2.0-1)

a = 60 g (Table 2.6.7-34)

2. Inertial Weight of Cask Contents

$$F_2 = \frac{W_c}{g}(a) = \frac{4000}{32.2}(60 \text{ x } 32.2)$$

$$= 240{,}000 \text{ lbs}$$

where:

W_c = 4000 lbs (Table 2.2.0-1)

a = 60 g (Table 2.6.7-34)

3. Force Resulting From Internal Pressure

$F_{ip} = P_{ip}(A) = 30(171.36)$

$= 5141$ lbs

where:

$P_{ip} = 30$ psig

$$A = \frac{\pi}{4}(14.771^2)$$

$= 171.36 \text{ in}^2$

4. Force Resulting From Compression of TFE O-Ring

The TFE material used in the NAC-LWT cask lid O-ring (outer) (Shamban, Part No. S11214-460) has a nominal diameter of 0.275 inch and is compressed to a height of 0.242 inch, yielding a compression of 12 percent. The rated load on the O-ring using a shore hardness of 90 and 12 percent compression is 50 pounds per linear inch. The total compressive force on the O-ring is calculated as:

$F_{tr} = 50 (\pi \text{ x } 15.75)$

$= 2{,}474$ lbs

5. Force Resulting From Compression of Metallic O-Ring

The rated load on the 14.75-inch diameter metal O-ring, Inconel X-750 material, with an 0.188-inch outside diameter and 0.032-inch wall thickness is 1.4(1225) pounds per linear inch. The compressive force on the O-ring is calculated as:

$F_{mr} = (1.4 \text{ x } 1225)(\pi \text{ x } 14.75)$

$= 79{,}470$ lbs

The total required bolt preload force (12 bolts) is:

$$F_T = F_1 + F_2 + F_{ip} + F_{tr} + F_{mr}$$

$$= 383,545 \text{ lbs}$$

For each of the twelve 1 - 8 UNC bolts in the lid, the required maximum bolt preload force is:

$$F = 383,545 / 12$$

$$= 31,962 \text{ lbs}$$

Conservatively, an installed bolt preload of 34,843 pounds is specified.

From Table 6-2, page 230, of Shigley, the tensile stress area (A_t) of each lid bolt is 0.606 square inches. Bolt stress resulting from the specified preload is:

$$S = F/At = 34,843 \text{ lb}/0.606 \text{ in}^2$$

$$= 57,497 \text{ psi}$$

According to Juvinall, page 251, it is assumed that the stress concentration factor is approximately 3.8 for unified and American standard threads. The modulus of elasticity of the bolting material at 300°F is 26.7 x 10^6 psi. The extreme temperature, normal transport condition, which the bolting material may experience, is actually calculated to be 230°F, adding a level of conservatism to this analysis. Figure 2.1.3-1 ("ASME Boiler and Pressure Vessel Code," Figure I-9.4, page 199) is based on a modulus of elasticity of 30.0 x 10^6 psi; therefore, by ratioing the moduli, the equivalent stress range is given by:

$$S_{range} = (57,497 \text{ psi}) (3.8) [(30.0/26.7)]$$

$$= 245,492 \text{ psi}$$

The equivalent stress range defines the endpoints of the stress cycle; thus, the alternating component would be half the range or 122,746 psi. From Figure 2.1.3-1, using the 3.0 S_m curve, the allowable number of operating cycles is greater than 550. Conservatively assuming that the bolts are torqued twice each month, the bolts would be cycled 24 times in one year. Then, 550 cycles represent a minimum service life of 22.9 years. The lid bolts will be replaced after 20 years of operational service to ensure that the fatigue limit is satisfied.

2.1.3.2.3 Containment Vessel

Fatigue concerns associated with normal over-the-road vibration are addressed in Section 2.6.5.

2.1.3.3 Extreme Total Stress Intensity Range

Regulatory Guide 7.6, paragraph C.7 requires that the extreme total stress intensity range (including stress concentrations) between the initial state, the fabrication state, the normal operations condition, and the accident condition be less than twice the adjusted value (adjusted to account for the modulus of elasticity at the highest temperature) of S_a at 10 cycles given by the appropriate design fatigue curves. Table 2.1.3-1 (constructed from the finite element analysis results of the normal operations and accident conditions) shows a maximum total stress intensity range of 1311 ksi in component 7. This stress intensity range is based on an unrealistic finite element analysis calculated stress intensity value, which results from the applied boundary condition in the ANSYS program (refer to Section 2.7.1.3 for the explanation of this singularity condition). From the Type 304 stainless steel material property summary Table 2.3.1-1, the allowable stress for 10 cycles at 230°F is 686.0 ksi. The allowable stress range is then 1372 ksi (2 × 686.0 ksi). For Type 304 stainless steel, this allowable stress at 10 cycles (1372 ksi) is greater than the unrealistically high limiting stress range for low cycle fatigue (1311 ksi). Based on the significantly higher strength of Type XM-19 stainless steel, when compared to Type 304 stainless steel, no further evaluation of the extreme total stress intensity range is necessary. The low cycle fatigue limits for the containment material are not exceeded for the highly conservative value of stress intensity range considered in this analysis.

2.1.3.4 Buckling

Regulatory Guide 7.6, paragraph C.5, states that buckling of a shipping cask containment vessel must not occur under any circumstances. Precluding large deformations assures that the assumptions of elastic analyses and quasi-linear stress allowances remain valid as stated in paragraph C.6 of the above reference.

Two concentric stainless steel shells, both welded to a large ring at each end, define the primary cask structure. The annulus between the shells is filled with lead. The inner shell is considered to be the only load bearing member, taking no credit for the outer shell or the elastic support of the lead in the analyses. The analyses demonstrate that the inner shell will not buckle for normal transport or hypothetical accident conditions. For reference, the nominal dimensions of the cask shells follow.

Shell	Mean Diameter (D_m)(in)	Thickness (T)(in)	Length (L)(in)	D_m /T**	L/D_m***
Outer Shell	27.58	1.20	181.25*	23.0	6.6
Inner Shell	14.12	0.75	181.25	18.8	12.8

* Assumed shell length, no credit taken for the end forgings.

** Mean diameter divided by thickness.

*** Length divided by mean diameter.

The NAC-LWT cask inner shell is analyzed for structural stability (buckling) using Code Case N-284 (Metal Containment Shell Buckling Design Methods) of the "ASME Boiler and Pressure Vessel Code." The details of these analyses are presented in Section 2.10.6; however, the basic methodology used is as follows:

1. Calculate the theoretical elastic hoop, axial compression, and inplane shear loading using classical methodology.
2. Calculate shell geometry-dependent capacity reduction factors and shell ovality coefficients. These factors and coefficients account for differences between classical and predicted instability stresses for fabricated shells and for geometric variances from perfect cylinders.
3. Calculate plasticity reduction factors, which are used if the calculated buckling stress exceeds a material's proportional limit.
4. Identify the factors of safety (FS) to be used in the buckling evaluation. Article-1400, Code Case N-284, "ASME Boiler and Pressure Vessel Code," defines the factors of safety to be applied to compressive buckling stresses: (1) FS = 2.0 for Design Conditions and Level A and B Service Limits, which correspond to the normal transport conditions of Regulatory Guide 7.6; and (2) FS = 1.34 for Level D Service Limits, which correspond to the hypothetical accident conditions of Regulatory Guide 7.6. These factors of safety are used in the buckling evaluations of the NAC-LWT cask inner shell.
5. Using the appropriate interaction equations and the factors identified in 2, 3 and 4, calculate the worst case applied compressive stresses and in-plane shear stresses.
6. Compare worst case stresses to the classically determined buckling allowables and determine the margins of safety for the critical locations on the inner shell.

Figure 2.1.3-1 Design Fatigue Curve for High Strength Steel Bolting

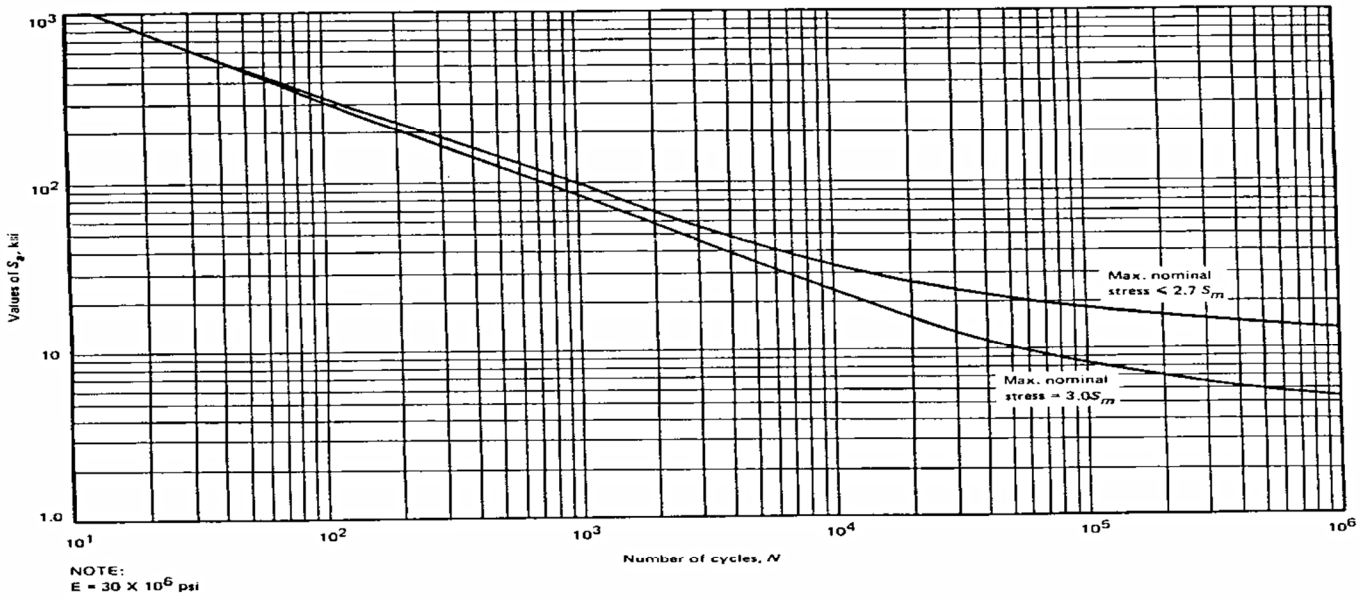

FIG. I-9.4 DESIGN FATIGUE CURVE FOR HIGH STRENGTH STEEL BOLTING
FOR TEMPERATURES NOT EXCEEDING 700°F
Table I-9.1 Contains Tabulated Values and a Formula for Accurate
Interpolation of These Curves

Table 2.1.3-1 Extreme Total Stress Intensities

Component	Algebraic Maximum and Minimum Stress Intensities (ksi)	Total Stress Intensity Range (ksi)
Closure Lid (1)	-1310.41[1], 0.0	1310.41[1]
Top Ring (3)	-62.23, 0.0	62.23
Inner Shell (4)	-39.98, 0.0	39.98
Outer Shell (6)	-77.65[1], 0.0	77.65[1]
Bottom (7)	-1311.20[1], 0.0	1311.20
Bottom Cover Plate (8)	-81.86[1], 0.0	81.86[1]

[1] Refer to Section 2.7.1.3 for discussion of these values, which are unrealistic due to finite element model boundary conditions.

2.2 Weights and Centers of Gravity

2.2.1 Major Component Statistics

The weights of the major components of the NAC-LWT cask and their respective centers of gravity are presented in Table 2.2.1-1. The axial location of the center of gravity is measured from the bottom surface of the cask body. The center of gravity is always on the longitudinal centerline of the cask because the cask is essentially axisymmetric about that axis. The center of gravity location of the fuel is representative of typical fuel configurations.

The weights and centers of gravity of the cask package in eight different shipping configurations are presented in

Table 2.2.1-2. In each case, the center of gravity is measured from the bottom surface of the cask body. The term “loaded” refers to the presence of fuel or other radioactive materials in the cask cavity; the term “empty” implies the absence of any fuel or other radioactive materials in the cask cavity. However, the fuel basket does remain in the cask cavity for the “empty” configuration. The weight of a lifting yoke is not included in the tabulated package weights.

All of the values tabulated in Table 2.2.1-1 and Table 2.2.1-2 are calculated to the nearest pound to obtain an accurate cask weight and center of gravity. The cask package weight and center of gravity used in the analyses of this report are the design values - 52,000 pounds and 98.93 inches. A design value of 4,000 pounds is conservatively used for the total weight of the cask contents (including the appropriate basket).

Table 2.2.1-1 Weights of the NAC-LWT Cask Major Components

Component	Weight (pounds)	Axial Center of Gravity Location (inches)
Cask Body	39,906	96.46
Closure Lid and Bolts	941	195.11
Impact Limiters		
Top	1,535	202.98
Bottom	1,320	-3.18
Shield Tank Fluid	3,506	96.26
PWR Fuel Basket and Spacer	874	100.98
PWR High Burnup Rod Payload	1,620	95.33
PWR Fuel Payload (Maximum)	3,126	96.63
BWR Fuel Basket	1,124	97.88
BWR Fuel Payload	1,500	97.88
Metallic Fuel Basket	128	96.40
Metallic Fuel Payload	2,080	96.40
MTR Four Unit Basket	982	96.20
MTR Four Unit Fuel Payload	840[1]	96.20
MTR Four Unit PULSTAR Fuel Payload	2,240[2]	96.20
MTR Five Unit Basket	1,015	96.20
MTR Five Unit Fuel Payload	1,050[1]	96.20
MTR Six Unit Basket	1,002	96.20
MTR Six Unit Fuel Payload	1,260[1]	96.20
GA IFM Basket and Spacer	818	98.06
GA IFM Fuel Payload	148	167.34
TPBAR Basket and Spacer	675	110.40
TPBAR Payload	978[3]	96.00
ANSTO Basket	911	100.95
ANSTO Payload	756	100.95
TPBAR Basket	575	97.43
TPBAR with Rod Transport Canister Payload	1,326[4]	102.26
SLOWPOKE Four Unit Basket	982	96.20
SLOWPOKE Fuel Payload	840[5]	96.20
NRU/NRX Basket & Spacer	845	113.03
NRU/NRX Basket + Spacer + Fuel	1205[6]	116.34

1 For conservatism, a design basis MTR fuel weight of 30 lbs/assy is used in the structural analysis. The maximum MTR element weight is 13.2 lbs for an intact element and 9.7 lbs for the cut elements in the 42-element configuration. The maximum weight for the SLOWPOKE canister is 25 pounds.

2 For conservatism, a bounding weight of 80 pounds is considered for each of the 28 fuel cells for PULSTAR fuel.

3 TPBAR payload represents the combined weight of the TPBAR and consolidation canister. A conservative 1,000 lb weight is applied in the structural analysis.

4 TPBAR with Rod Transport Canister payload represents the combined weight of the 25 TPBARs, the PWR /BWR Rod Transport Canister and the PWR insert.

5 A fuel weight of 30 lbs/assembly is used to compute the weight for this table as compared to the maximum weight for the SLOWPOKE canister of 25 pounds.

6 Each fuel tube in the NRU/NRX basket is limited to 20 pounds of fuel, aluminum caddy and dunnage. This includes fuel tubes loaded with EFN rod, Booster rod, and Moly target, caddies and caddy plugs.

Table 2.2.1-1 Weights of the NAC-LWT Cask Major Components (Continued)

Component	Weight (pounds)	Axial Center of Gravity Location (inches)
HEUNL Container & Spacer[7]	1,446	104
HEUNL Payload	704	98
SLOWPOKE Fuel Core Basket & Five MTR Baskets	1,160	108
SLOWPOKE Fuel Core Payload	15	164
WESF Basket, Lid Spacer & Container[8]	1,972	99
WESF Payload	396	99
BUP-500 Basket	1,694	97
BUP-500 Payload & Spacers[9]	408	98
LANL MOX Payload	1,490	95
UCS Payload & UCS[10]	1,056	92
UCS Basket & Lid Spacer	1,527	100

[7] Includes 4 HEUNL Containers, Container Guide and Container Spacer.
[8] Includes 1 Lid Spacer and 6 WESF Containers.
[9] Two BUP-500 canisters (150 lbs each) are loaded with three spacers (36 lbs each) to maintain axial position. The C.G. is presented in the loaded configuration.
[10] Includes 18 WESF Capsules (22 lbs each) loaded within three UCSs (220 lbs each). The C.G. is presented in the loaded configuration.

Table 2.2.1-2 Weights and Center of Gravity Locations for the NAC-LWT Cask Shipping Configurations

Component	Weight (pounds)	Axial Center of Gravity Location (inches)
Package -Loaded for Shipment (PWR) Maximum Payload	51,208	98.96
Package – Loaded for Shipment PWR High Burnup Rods	49,702	99.0
Package - Empty for Shipment (PWR)	48,082	99.12
Package - Loaded for Shipment (BWR)	49,832	99.00
Package - Empty for Shipment (BWR)	48,332	99.07
Package - Loaded for Shipment* (Metallic Fuel)	45,910	98.88
Package - Empty for Shipment* (Metallic Fuel)	43,830	99.09
Package - Loaded for Shipment (PULSTAR Fuel, MTR Four Unit Basket)	50,430	99.1
Package - Loaded for Shipment (MTR Fuel, Four Unit Basket)	49,030	99.1
Package - Empty for Shipment (MTR Fuel, Four Unit Basket)	48,190	98.9
Package - Loaded for Shipment (MTR Fuel, Five Unit Basket)	49,273	99.1
Package - Empty for Shipment (MTR Fuel, Five Unit Basket)	48,223	98.9
Package - Loaded for Shipment (MTR Fuel, Six Unit Basket)	49,470	99.1
Package - Empty for Shipment (MTR Fuel, Six Unit Basket)	48,210	98.9
Package - Loaded for Shipment (GA IFM Fuel and Basket)	48,147	99.3
Package - Empty for Shipment (GA IFM Basket)	48,026	99.3
Package – Loaded for Shipment (TPBARs and Basket)	48,861	99.2
Package – Empty for Shipment (TPBAR Basket)	47, 883	99.2
Package - Loaded for Shipment (ANSTO Fuel and Basket)	48,875	99.2
Package - Empty for Shipment (ANSTO Basket)	48,119	99.1

* Neutron Shield Tank is empty.

Table 2.2.1-2 Weights and Center of Gravity Locations for the NAC-LWT Cask Shipping Configurations (Continued)

Component	Weight (pounds)	Axial Center of Gravity Location (inches)
Package - Loaded for Shipment TPBARs in the PWR/BWR Rod Transport Canister	49,109	99.2
Package - Empty for Shipment (TPBAR Basket for PWR/BWR Rod Transport Canister)	47,783	99.1
Package - Loaded for Shipment (SLOWPOKE Fuel, Four Unit Basket) [1]	49,030	99.1
Package - Empty for Shipment (SLOWOKE Fuel, Four Unit Basket)	48,190	98.9
Package – Loaded for Shipment (NRU/NRX Basket with Fuel Assemblies and Caddy containing rods/targets)	41,111	97.0
Package – Empty for Shipment (NRU/NRX Basket)	40,751	96.8
Package – Empty for Shipment (HEUNL)	48,656	99.2
Package – Loaded for Shipment (HEUNL)	49,360	99.2
Package – Loaded for Shipment (SLOWPOKE Fuel Core, Basket, Five MTR Baskets)[2]	48,400	99.3
Package – Empty for Shipment (SLOWPOKE Fuel Core Basket, Five MTR Baskets)[2]	48,400	99.3
Package – Empty for Shipment (WESF)	49,180	99.1
Package – Loaded for Shipment (WESF)	49,576	99.1
Package – Empty for Shipment (BUP-500)	48,902	99.0
Package – Loaded for Shipment (BUP-500)	49,310	99.0
Package – Loaded for Shipment (LANL MOX Fuel Rods)	49,572	99.2
Package – Empty for Shipment (LANL MOX Fuel Rods)	49,377	99.2
Package – Empty for Shipment (UCS)	48,735	99.1
Package – Loaded for Shipment (UCS)	49,791	99.0
Package - Design for Shipment	52,000	98.93

[1] A fuel weight of 30 lbs/assembly is used to compute the weight for this table as compared to the maximum weight for the SLOWPOKE canister of 25 pounds.
[2] Weight rounded up to nearest 100 pounds.

2.3 Properties of Materials

The NAC-LWT cask body consists of six materials: (1) the inner and outer shells are Type XM-19 stainless steel; (2) the remainder of the cask body, the closure lid and the lifting trunnions are Type 304 stainless steel; (3) the annulus between the cask shells and the cavity in the bottom is filled with chemical copper lead for gamma radiation shielding; (4) the port covers are fabricated from SA-705, Grade 630 (Type 17-4PH) precipitation-hardened stainless steel; (5) the port cover bolts are made from SA-193, Grade B6 (Type 410) stainless steel; and (6) the closure lid bolts are fabricated from SA-453, Grade 660 high alloy steel bolting material.

The PWR and BWR fuel baskets are fabricated from Type 304 stainless steel and 6061-T6 aluminum alloy. The metallic fuel basket is fabricated from 6061-T6 aluminum alloy. The MTR, TRIGA, DIDO and GA IFM fuel baskets are fabricated from Type 304 stainless steel.

2.3.1 Mechanical Properties of Materials

The structural analyses of the NAC-LWT cask for normal operations and accident load conditions utilize the mechanical properties of the component materials. These properties are also used in calculating the allowable stresses for each component under each load condition.

The American Society of Mechanical Engineers is the source for the mechanical properties of Type 304 stainless steel, Type XM-19 stainless steel, SA-705, Grade 630 precipitation-hardened stainless steel, SA-193, Grade B6 (Type 410) stainless steel, and SA-453, Grade 660 high alloy steel bolting material ("ASME Boiler and Pressure Vessel Code," Appendix I). The effects of temperature on the material properties are included. The coefficient of thermal expansion presented in the tables represents the mean value for a temperature range from 70°F to the indicated temperature.

MIL-HDBK-5C is the source for the material properties of the aluminum alloys and for the equations used to evaluate the relationships of their material properties at elevated temperatures.

2.3.1.1 Cask Body Materials

The material of the inner and outer shells is Type XM-19 stainless steel. The remainder of the cask body and the closure lid are Type 304 stainless steel. These materials are selected because they are strong, ductile and highly resistant to corrosion and brittle fracture. The mechanical properties of Type 304 and Type XM-19 stainless steel are listed in Table 2.3.1-1 and Table 2.3.1-2, respectively.

2.3.1.2 Port Cover Materials

The alternate port covers are manufactured from SA-705, 17-4 PH Grade 630 precipitation-hardened stainless steel. The mechanical properties for this material are given in Table 2.3.1-3. The Alternate B port covers are manufactured from SA-479 XM-19 stainless steel. The mechanical properties for this material are given in Table 2.3.1-2.

2.3.1.3 Fuel Basket Materials

The materials used for the fuel basket are 6061-T6 aluminum and Type 304 stainless steel sheet, plate and bar. The mechanical properties of Type 304 stainless steel and 6061-T6 aluminum alloys are listed in Table 2.3.1-1 and Table 2.3.1-4, respectively.

2.3.1.4 Bolting Material

The port cover bolts for the alternate port cover are SA-193, Grade B6 (Type 410) stainless steel as described in Table 2.3.1-5. The bolts for Alternate B port covers are SB-637, Grade N07718, and nickel alloy steel as described in Table 2.3.1-9.

2.3.1.5 Shielding Material (Gamma Radiation)

Chemical copper lead fills the cylindrical region of the cask between the inner and outer cask shells and bottom plates. This lead core provides the required gamma radiation shielding. The presence of copper slightly increases the strength of lead at elevated temperatures. There is no concern that the lead will fail during normal transport conditions because it is completely enclosed inside the cask walls and bottom plates. Its shielding function requires no strength.

The finite element structural analysis program (ANSYS), used in the structural analysis of the cask, requires that the stress versus strain curve for this material be bilinear in the elastic to plastic transition region.

2.3.1.5.1 Static Mechanical Properties of Lead

The static mechanical properties of chemical copper lead are used in the NAC-LWT cask thermal stress analyses. The coefficient of thermal expansion for lead is of particular significance, because it is approximately twice that of stainless steel. The mechanical properties are obtained from testing reports (Tietz, Gallagher, Baumeister, NUREG/CR-0481). The properties are tabulated in Table 2.3.1-7 for the range of temperatures considered in the structural analysis. The bilinearized static stress-strain curve used in the finite element (ANSYS) analysis is shown in Figure 2.3.1-1; it is based on NUREG/CR-0481, Figure 24, and Table 2.3.1-7 of this report.

2.3.1.5.2 Dynamic Mechanical Properties of Lead

The dynamic mechanical properties of chemical copper lead are important for use in the NAC-LWT cask impact analyses. These properties are obtained from the "Cask Designer's Guide" (Shappert), which provides conservative values for dynamic yield strength. This property is used for calculating the shield deformation and for calculation of the maximum deceleration loading. These dynamic mechanical properties are listed in Table 2.3.1-8 for the range of temperatures considered in the structural analysis. The bilinearized dynamic deformation stress-strain curve used in the finite element (ANSYS) structural analysis is shown in Figure 2.3.1-2; it is based on NUREG/CR-0481, Figure 24, and Table 2.3.1-8 of this report.

Figure 2.3.1-1 Static Stress-Strain Curve for Chemical Copper Lead

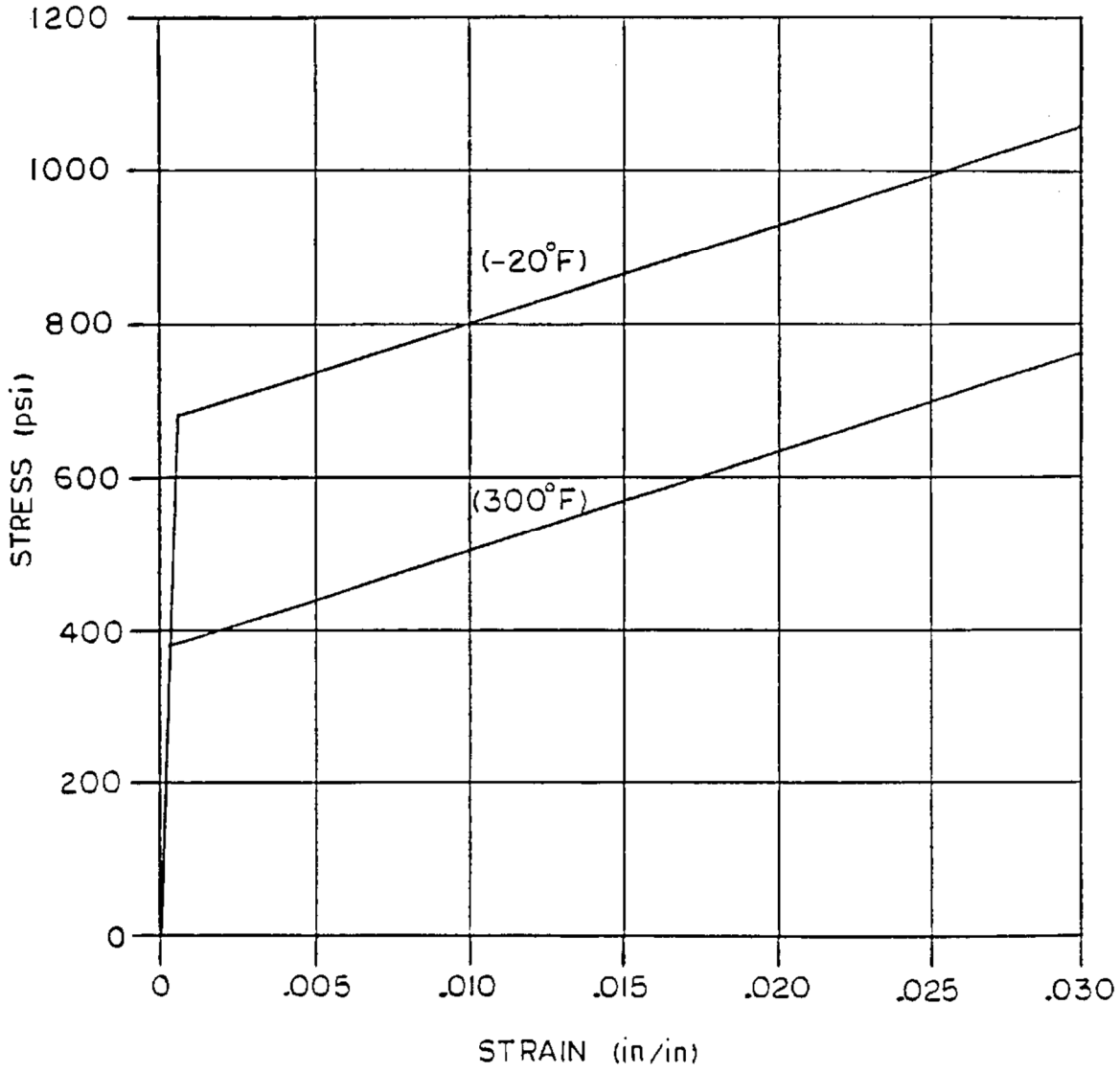

Figure 2.3.1-2 Dynamic Deformation Stress-Strain Curve for Chemical Copper Lead

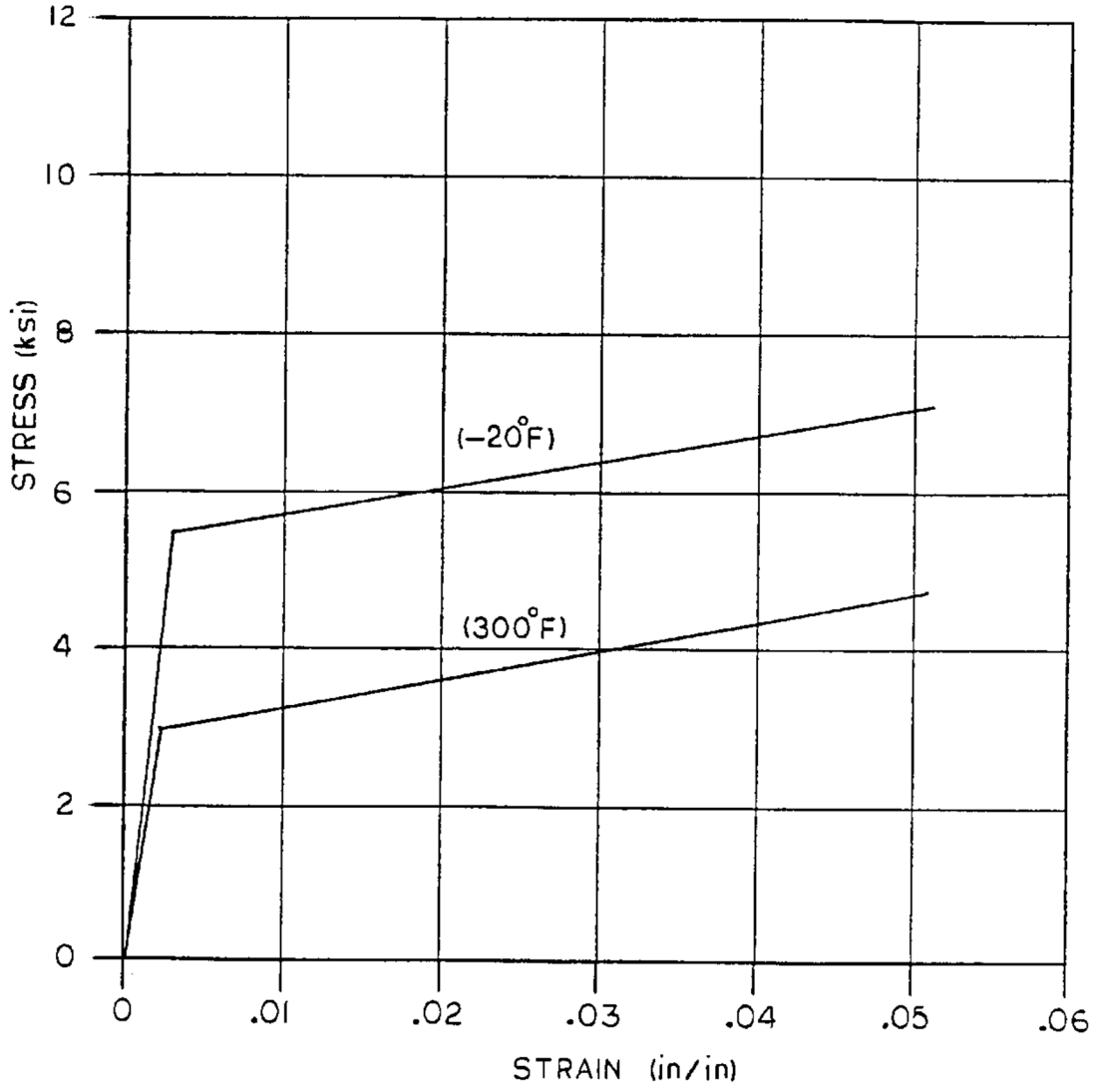

Table 2.3.1-1 Mechanical Properties of Type 304 Stainless Steel

Property (units)/Temperature (°F)	-40	-20	+70	+150	+200	+300	+600	+750
Ultimate Strength (ksi)	79.4	78.8	76.0	73.0	71.0	66.0	63.5	63.1
Yield Strength (ksi)	36.0	35.4	31.4	27.5	25.0	22.5	18.2	17.3
Design Stress Intensity	> 20.0	> 20.0	20.0	20.0	20.0	20.0	16.4	15.6
Modulus of Elasticity (ksi)	28.8E+3	28.7E+3	28.3E+3	27.9E+3	27.6E+3	27.0E+3	25.3E+3	24.4E+3
Alternating Stress @10 Cycles	720.5	718.0	708.0	698.0	690.5	675.5	632.9	610.4
Alternating Stress @10^6 Cycles	28.8	28.7	28.3	27.9	27.6	27.0	25.3	24.4
Strain at Yield (in/in)	0.00125	0.00123	0.00111	0.00099	0.00091	0.00083	0.00072	0.00071
Coefficient of Thermal Expansion (in/in/°F)	8.16E-6	8.23E-6	8.46E-6	8.67E-6	8.79E-6	9.00E-6	9.53E-6	9.76E-6
Poisson's Ratio	0.275							
Density	497 lbm/ft^3 (0.288 lbm/in^3)							

Reference:
ASME Boiler and Pressure Vessel Code, Section III, Division I, Appendix I.

Table 2.3.1-2 Mechanical Properties of Type XM-19 Stainless Steel

Property (units)/Temperature (°F)	-40	-20	+70	+150	+200	+300	+600	+750
Ultimate Strength (ksi)	104.5	103.7	100.0	99.8	99.5	94.3	87.8	85.7
Yield Strength (ksi)	63.0	62.0	55.0	51.0	47.0	43.4	37.3	35.8
Design Stress Intensity (ksi)	> 33.3	> 33.3	33.3	33.2	33.2	31.4	29.2	28.5
Modulus of Elasticity (ksi)	28.8E+3	28.7E+3	28.3E+3	27.9E+3	27.6E+3	27.0E+3	25.3E+3	24.4E+3
Alternating Stress @10 Cycles	720.5	718.0	708.0	698.0	690.5	675.5	632.9	610.4
Alternating Stress @10^6 Cycles	28.8	28.7	28.3	27.9	27.6	27.0	25.3	24.4
Coefficient of Thermal Expansion (in/in/°F)	8.16E-6	8.19E-6	8.27E-6	8.40E-6	8.48E-6	8.65E-6	9.03E-6	9.20E-6
Poisson's Ratio	0.275							
Density	497 lbm/ft^3 (0.288 lbm/in^3)							

Reference:
ASME Boiler and Pressure Vessel Code, Section III, Division I, Appendix I.

Table 2.3.1-3 Mechanical Properties of SA-705, Grade 630, Precipitation-Hardened Stainless Steel

Property (units)/Temperature (°F)	-40	-20	+70	+150	+200	+300	+600	+750
Ultimate Strength (ksi)	> 135.0	> 135.0	135.0	135.0	135.0	135.0	126.7	125.2
Yield Strength (ksi)	> 105.0	> 105.0	105.0	101.1	97.1	93.0	84.7	81.3
Design Stress Intensity	> 45.0	> 45.0	45.0	45.0	45.0	45.0	42.1	41.3
Modulus of Elasticity (ksi)	28.8E+3	28.7E+3	28.3E+3	27.9E+3	27.6E+3	27.0E+3	25.3E+3	24.4E+3
Alternating Stress @10 Cycles	720.5	718.0	708.0	698.0	690.5	675.5	632.9	610.4
Alternating Stress @10^6 Cycles	28.8	28.7	28.3	27.9	27.6	27.0	25.3	24.4
Strain at Yield (in/in)	0.00365	0.00366	0.00371	0.00362	0.00352	0.00344	0.00335	0.00333
Coefficient of Thermal Expansion (in/in/°F)	5.88E-6	5.88E-6	5.89E-6	5.89E-6	5.90E-6	5.90E-6	5.93E-6	5.95E-6
Poisson's Ratio	0.287							
Density	487 lbm/ft^3 (0.282 lbm/in^3)							

References:

1. ASME Boiler and Pressure Vessel Code, Section III, Division I, Appendix I.
2. MIL-HDBK-5C, Section 2.7.4.
3. Baumeister, pages 5 – 6.

Table 2.3.1-4 Mechanical Properties (6061-T6 and T651 per ASTM B-209)

Property (units)/Temperature (°F)	+70	+360[1]	+500[1]
Ultimate Strength (ksi)	42.0	30.2	17.2
Yield Strength (ksi)	35.0	26.6	15.8
Comp. Yield Strength (ksi)	35.0	26.6	15.8
Ultimate Shear Strength (ksi)	27.0	19.4	11.1
Yield Shear Strength (ksi)	20.0	15.2	9.0
Modulus of Elasticity (E), (ksi)	9,900	9,100	8,000
Coefficient of Thermal Expansion (in/in/°F)	12.6×10^{-6}	13.5×10^{-6}	13.9×10^{-6}

1. Strength at elevated temperatures calculated using the following relationships from MIL-HDBK-5A, pages 325, 326, and 328.

   @360°F: $(S_u)_{360} = 0.72(S_u)_{70}$; $(S_y)_{360} = 0.76(S_{70})$; $(E)_{360} = 0.92(E)_{70}$
   @500°F: $(S_u)_{500} = 0.41(S_u)_{70}$; $(S_y)_{500} = 0.45(S_{70})$; $(E)_{500} = 0.81(E)_{70}$

   Reference:
   MIL-HDBK-5C, pages 3–208 and 3-214.

Property (units)/Temperature (°F)	70	100	200	300	400
Design Stress Intensity[2] (ksi)	10.5	10.5	10.5	8.4	4.4

2. ASME Code, Section II-D, Table 1-B

Table 2.3.1-5 Mechanical Properties of SA-193, Grade B6 High Alloy, Steel Bolting Material

Property (units)/Temperature (°F)	-40	-20	+70	+150	+200	+300	+600	+750
Ultimate Strength (ksi)	> 110.0	> 110.0	110.0	108.2	106.6	104.3	96.8	90.0
Yield Strength (ksi)	> 85.0	> 85.0	85.0	83.5	82.3	80.5	74.8	69.5
Modulus of Elasticity (ksi)	30.3E+3	30.1E+3	29.2E+3	28.8E+3	28.5E+3	27.9E+3	26.1E+3	25.1E+3
Alternating Stress @10^6 Cycles	20.2	20.1	19.8	19.5	19.3	19.0	17.9	17.3
Poisson's Ratio	0.32							
Density	489 lbm/ft^3 (0.283 lbm/in^3)							

References:

1. ASME Boiler and Pressure Vessel Code, Section III, Division I, Appendix I.
2. MIL-HDBK-5C, Section 2.3.1.

Table 2.3.1-6 Mechanical Properties of SA-453, Grade 660 High Alloy, Steel Bolting Material

Property (units)/Temperature (°F)	-40	-20	+70	+150	+200	+300	+600	+750
Ultimate Strength (ksi)	> 130.0	> 130.0	130.0	130.0	130.0	130.0	122.0	120.6
Yield Strength (ksi)	> 85.0	> 85.0	85.0	83.9	82.8	81.9	81.0	80.1
Modulus of Elasticity (ksi)	28.3E+3	28.2E+3	27.8E+3	27.3E+3	27.1E+3	26.7E+3	25.2E+3	23.8E+3
Coefficient of Thermal Expansion (in/in/°F)	7.93E-6	8.00E-6	8.22E-6	8.31E-6	8.39E-6	8.54E-6	8.94E-6	9.11E-6
Poisson's Ratio	0.32							
Density	489 lbm/ft^3 (0.283 lbm/in^3)							

References:

1. ASME Boiler and Pressure Vessel Code, Section III, Division I, Appendix I.
2. MIL-HDBK-5C, Section 2.3.1.

Table 2.3.1-7 Static Mechanical Properties of Chemical Copper Lead

Property (units)/Temperature (°F)	-40	-20	+70	+150	+200	+300	+600
Ultimate Strength (psi)	700	680	640	550	490	380	20
Modulus of Elasticity (ksi)	2.45E+3	2.42E+3	2.28E+3	2.16E+3	2.06E+3	1.94E+3	1.5E+3
Strain at Yield (in/in)	0.000286	0.000281	0.000291	0.000255	0.000238	0.000196	0.000133
Coefficent of Thermal Expansion (in/in/°F)	15.6E-6	15.7E-6	16.1E-6	16.4E-6	16.6E-6	17.2E-6	20.2E-6
Poisson's Ratio	0.40						
Density	708 lbm/ft^3 (0.41 lbm/in^3)						

References:

1. Tietz.
2. Gallagher.
3. NUREG/CR-0481.
4. Baumeister, pages 6-10.

Table 2.3.1-8 Dynamic Mechanical Properties of Chemical Copper Lead

Property (units)/Temperature (°F)	-40	-20	+70	+150	+200	+300	+600
Deformation Yield Strength (psi)	5620	5510	5000	4440	3960	3100	150
Deceleration Loading Yield Strength (ksi)	11,200	11,000	10,320	8870	7800	6100	300
Modulus of Elasticity (ksi)	2.45E+3	2.42E+3	2.28E+3	2.16E+3	2.06E+3	1.94E+3	0.15E+3
Strain at Yield (Deformation) (in/in)	0.00229	0.00228	0.00219	0.00206	0.00192	0.00160	0.00100

References:

1. Shappert.
2. NUREG/CR-0481.

Table 2.3.1-9 Mechanical Properties of SB-637, Grade N07718, Nickel Alloy Steel Bolting Material

Property (units)/Temperature (°F)	-40	-20	+70	+200	+300	+400	+500	+750
Ultimate Strength (ksi)	> 185.0	> 185.0	185.0	177.6	173.5	170.6	168.7	165.0
Yield Strength (ksi)	> 150.0	> 150.0	150.0	144.0	140.7	138.3	136.8	133.8
Modulus of Elasticity (ksi)	29.6E+3	29.5E+3	29.0E+3	28.3E+3	27.8E+3	27.6E+3	27.1E+3	26.1E+3
Coefficient of Thermal Expansion (in/in/°F)			7.05E-6	7.22E-6	7.33E-6	7.45E-6	7.57E-6	7.82E-6
Poisson's Ratio	0.31							
Density	503 lbm/ft^3 (0.291 lbm/in^3)							

Reference:
1. ASME Boiler and Pressure Vessel Code, Section III, Division I.

2.4 General Standards for All Packages

This section demonstrates that general requirements found in 10 CFR 71.43 are addressed in the design and analysis of the NAC-LWT cask, a spent-fuel shipping package. A package is defined as the assembly of components necessary to ensure compliance with 10 CFR 71 for the transportation of radioactive contents. The package includes the radioactive contents.

2.4.1 Minimum Package Size

The minimum transverse dimension of the NAC-LWT package is 44.24 inches (112 cm), and the minimum longitudinal dimension is 199.8 inches (507 cm). Both dimensions are greater than 10 centimeters; therefore, the requirements of 10 CFR 71.43(a) are satisfied.

2.4.2 Tamperproof Feature

One railroad car type seal is looped through a hole near the end of one ball-lock pin, which attaches the impact limiter attachment lugs to the mating cask lugs.

To tamper with the closure lid or port cover bolts, it is necessary to remove the upper impact limiter; thus, a severed seal will indicate purposeful tampering. This satisfies the tamperproof requirement of 10 CFR 71.43(b). This vent port and the drain port are protected by port covers. Both port covers are covered by the upper impact limiter; therefore, they cannot be operated by unauthorized personnel. This satisfies the requirements of 10 CFR 71.43(e).

2.4.3 Positive Closure

Inadvertent opening of the cask closure lid or the port covers from the combined effects of shock, vibration, thermal expansion, internal loads and/or external loads, cannot occur because of the large preload applied to the lid bolts. Loosening of these bolts is resisted by friction from the large clamping forces produced by the applied bolt preload torque. A cask operations procedure is followed, ensuring that each bolt is torqued. It is necessary to deliberately loosen the bolts with a wrench to facilitate inadvertent opening. The cover bolts cannot be loosened/removed while the upper impact limiter is attached with tamper-indicating seals in place. Therefore, the NAC-LWT cask containment system cannot be opened unintentionally and is protected against unauthorized operation; the requirements of 10 CFR 71.43(c) and (e) are satisfied.

2.4.4 Chemical and Galvanic Reactions

The structural materials of this package, which are in direct contact with each other, will not produce significant chemical or galvanic reaction in an electrically conductive environment. An inert stainless steel material is used to separate anodic from cathodic materials. The lead shielding material is completely encapsulated by the stainless steel shells; thereby, being separated from the aluminum basket. The aluminum honeycomb used for impact limiters is sealed inside an aluminum shell. The material of the miscellaneous cask components is stainless steel, which is compatible with all adjacent materials. Therefore, the materials do not have chemical or galvanic reactions in accordance with 10 CFR 71.43(d).

2.4.5 Cask Design

The cask is designed to meet the applicable sections of 10 CFR 71. Criticality, shielding, thermal, radiological and structural requirements of 10 CFR 71 are analytically shown to be satisfied. Conclusions drawn from the structural analyses are supported by quarter scale model drop tests. The NAC-LWT cask is an exclusive use package designed for transport in a 130°F environment such that personnel barrier temperatures do not exceed 180°F; thus, meeting the requirements of 10 CFR 71.43(g).

2.4.6 Continuous Venting

The neutron shield/expansion tank is the only vented system of the NAC-LWT cask. The shield/expansion tank contains a solution of ethylene glycol and water. No venting of the shield/expansion tank occurs during normal operations conditions; thus, meeting the requirements of 10 CFR 71.43(h).

2.5 Lifting and Tiedown Standards

2.5.1 Lifting Devices

The NAC-LWT cask has three types of lifting devices: (1) four lifting trunnions; (2) four lid lifting bolts; and (3) two rotation trunnions. These lifting devices are designed to meet the requirements of NUREG-0612, "Control of Heavy Loads at Nuclear Power Plants."

Lifting of the cask is accomplished by utilizing the lifting trunnions near the top of the cask. Two lifting yokes are used to provide redundancy. Each lifting yoke is attached to two diametrically opposite lifting trunnions. An overhead crane lifts the cask by these yokes. No impact limiter is attached to the cask during lifting and handling. The bottom impact limiter could be attached for protection during handing, but the top impact limiter cannot be used while the lifting yoke is in place.

The lid lifting bolts are used to attach cables for lifting the lid during installation or removal.

The rotation trunnions are used to rotate the cask from the horizontal to the vertical position. The rotation trunnions also support the cask in the transportation cradle.

2.5.1.1 Lifting Trunnion

The NAC-LWT cask is equipped with four lifting trunnions located on the upper ring near the top of the cask and spaced at 90-degree intervals; thus, either a nonredundant, two-arm yoke or a redundant, four-arm yoke system may be used to lift and handle the cask.

2.5.1.1.1 Loads

The lifting trunnions were analyzed for the most severe load, a single, nonredundant load path lift. Using the requirements of 10 CFR 71.45(a), the applied load factor is 3.0 on the yield strength. The yield strength of the material at 200°F is used. Any dynamic load effects are negligible when considered in combination with the large applied load factor.

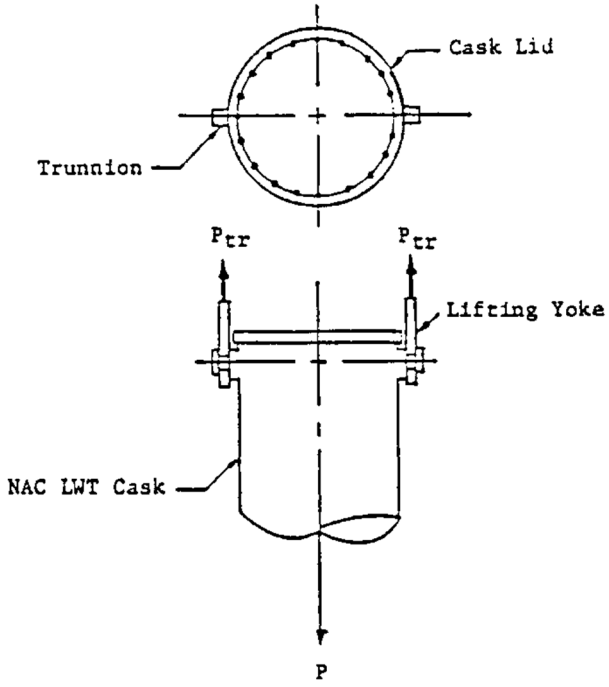

Lifting Trunnion Loads and Reactions

P = LF x W

Fully Loaded Cask Weight (W) = 52,000 lbs

Load Factor on Yield $(LF)_y = 3.0$

$P_y = 3.0\ (52{,}000) = 156{,}000$ lbs

$(P_{tr})_y = 0.5\ (P_y) = 78{,}000$ lbs

2.5.1.1.2 Material Properties at 200°F

Trunnion and Cask Upper Ring (Base Metal)

ASME SA-240, Type 304

$S_y = 25{,}000$ psi

The shear strength is half the tensile strength if the compressive and tensile strengths are equal (Timoshenko, 1976, p. 449), which is conservative for stainless steel.

$$F_{sy} = \frac{S_y}{2} = 12{,}500 \text{ psi}$$

Weld Metal

The weld metal properties exceed those of the base metal, which is a standard welding code practice; therefore, the base metal properties are used for the weld analysis.

2.5.1.1.3 Stress Analysis

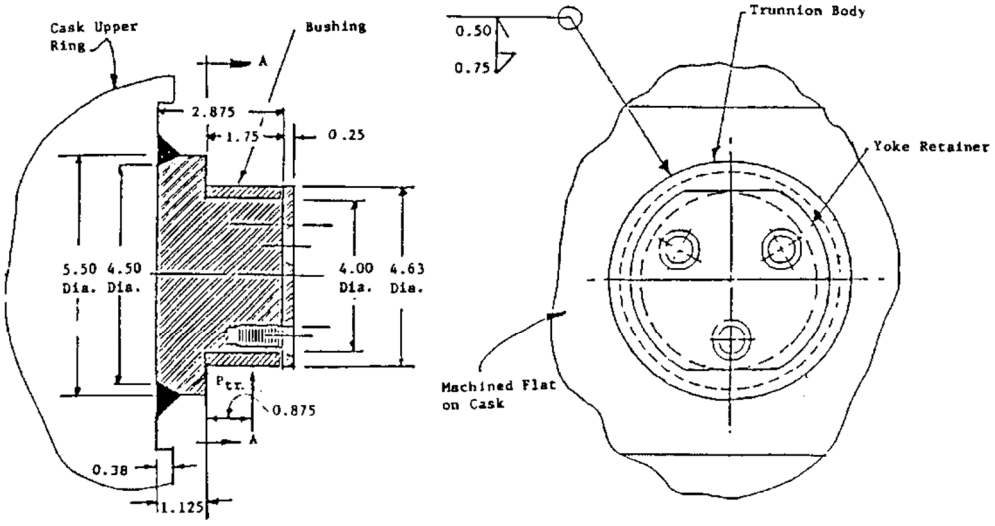

Typical Lifting Trunnion

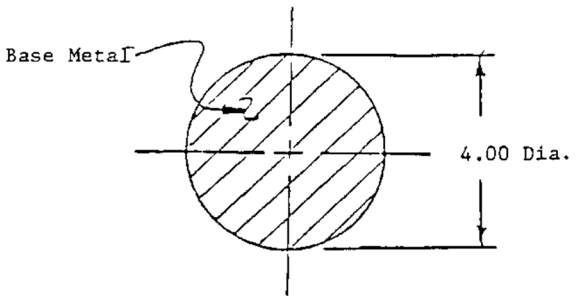

Section A-A

Shear Stress in Base Metal at Section A-A

$$(S_s)_y = \frac{(P_{tr})_y}{A_{aa}} = \frac{78{,}000}{\pi\,(2.00)^2} = 6{,}207 \text{ psi}$$

Margin of Safety at Section A-A

$$(M.S.)_y = \frac{F_{sy}}{(S_s)_y} - 1 = \frac{12{,}500}{6207} - 1 = \underline{+1.01}$$

Critical Weld Section

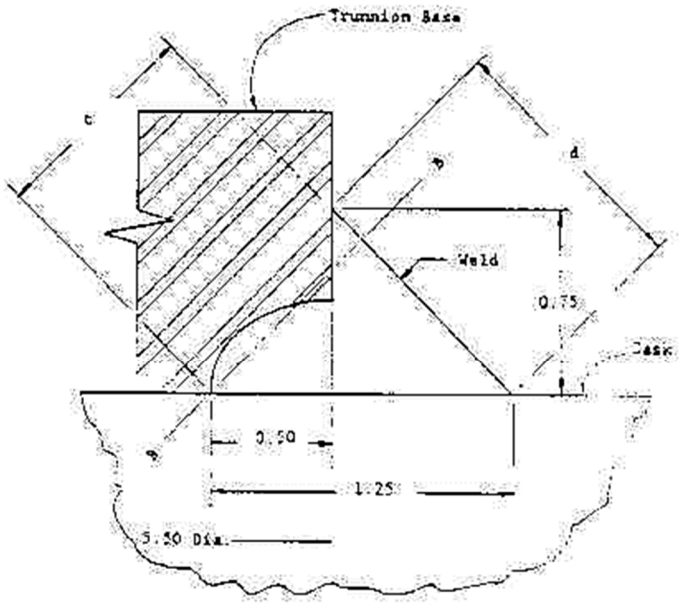

Effective Weld Throat

The most critical section of the weld shown in the above sketch is Section B-B. Its length is:

$$L_{bb} = 0.707\,(1.25) = 0.884 \text{ in}$$

The mean diameter of the center of gravity of Section B-B is:

$$d_{bb} = 5.50 - 2\,(0.50) + 2\,(\frac{1.25}{4}) = 5.125 \text{ inches}$$

Vertical Shear Force/Inch in Welds at Section B-B

$$(f_v)_y = \frac{(P_{tr})_y}{(d)_{bb}} = \frac{78{,}000}{\pi(5.125)} = 4{,}845 \text{ pounds/inch}$$

Horizontal Shear Force/Inch in Welds at Section B-B

$$(f_h)_y = \frac{(M_{bb})_y}{(Z_w)_{bb}} = \frac{78{,}000\ (1.125 + 1.75/2)}{\pi\ (5.125)^2/4} = 7{,}562 \text{ pounds/inch}$$

Combined Shear Force/Inch in Welds at Section B-B

$$(f_r)_y = \sqrt{[(f_v)_y]^2 + [(f_h)_y]^2} = \sqrt{(4845)^2 + (7562)^2}$$

$$= 8{,}981 \text{ pounds/inch}$$

Shear Stress in Weld at Section B-B

$$(f_w)_y = \frac{(f_r)_y}{L_{bb}} = \frac{8981}{0.884} = 10{,}159 \text{ psi}$$

Margin of Safety (MS) in Weld at Section B-B

$$(M.S.)_y = \frac{F_{sy}}{(f_w)_y} - 1 = \frac{12{,}500}{10{,}159} - 1 = \underline{+0.23}$$

2.5.1.1.4 Sequence of Lifting Component Failure

In addition to the load factor requirements in 10 CFR 71.45(a), lifting components must be designed such that, if the component fails under excessive load, the package will continue to meet other 10 CFR 71 requirements. To establish that the package continues to meet other 10 CFR 71 requirements, it is shown below that the trunnions will fail before the containment boundary fails. Trunnion failure enables other cask features (for example, impact limiters, cask body, etc.) to perform their function and bring the cask and contents to rest without breaching containment.

The maximum load carrying capacity of the trunnions, the trunnion welds, and the upper forging are calculated in this section.

Trunnions

The trunnions are manufactured from Type 304 stainless steel. To conservatively evaluate the maximum load carrying capacity of the trunnions, bending is neglected and the trunnion is considered in pure shear failure. The maximum load carrying capacity is calculated by multiplying the ultimate shear strength of Type 304 stainless steel by the cross-sectional area of the trunnion. The ultimate shear strength is calculated by multiplying the ultimate tensile strength (UTS) by 0.50 (Section 2.1.2.2).

$$P_u = (S_{su})(A_t)$$
$$= 446{,}235 \text{ lbs}$$

where:

P_u = maximum load capacity (lb)

S_{su} = (UTS) (0.50), Type 304 stainless steel @ 200°F (psi)

= 35,500 psi

D_t = 4.00 in.

A_t = shear area of trunnion (in^2) = $(\pi/4)\ (D_t)^2$

= 12.57 in^2

Trunnion Weld Interface

The width of the interface between the trunnion and the weld is $(0.50^2 + 0.75^2)^{0.5} = 0.901$ inch with an effective diameter of 5.0 inches. The ultimate shear capacity of the trunnion at the weld interface is:

$$P_u = (5.0)(\pi\pi(0.901)(35{,}500)$$
$$= 502{,}427 \text{ lbs}$$

Trunnion Weld

Figure 2.5.1-1 shows the lifting component (trunnion and trunnion weld) attached to the upper forging. The applied load, W, acts 2.125 inches from the weld and outer shell. The effects of bending are conservatively ignored because the line of action of the load is less than one diameter from the trunnion weld.

The effective weld area for the fillet/groove weld is the circular ring described by the minimum throat area as described in Section 2.5.1.1.3. The weld area is calculated as:

$$A_w = (L_w)(\pi)(D_m)$$
$$= 14.23 \text{ in}^2$$

where:

A_w = effective weld area (in^2)

L_w = minimum throat length = 0.884 in

D_m = mean diameter = 5.125 inches

The ultimate shear stress, S_{su}, for AWS E308 electrodes, which are used to weld Type 304 stainless steel, is (0.5)(80,000) = 40,000 psi. The maximum load that the trunnion weld can withstand is:

$$P_u = (A_w)(S_{su})$$
$$= 569{,}200 \text{ lbs}$$

Cask Upper Forging

The lifting components are attached to the upper forging of the NAC-LWT cask. Since the upper end casting is a solid piece of Type 304 stainless steel, this calculation considers the 1.25-inch wide ring of parent material beneath the trunnions (shown as a cross-hatched area in Figure 2.5.1-1). The maximum load that the outer shell can withstand is:

$$P_u = (A_p)(S_{su})$$
$$= 801{,}590 \text{ lbs}$$

where:

$$A_p = (\pi/4)(D_o^2 - D_i^2)$$
$$= (\pi/4)(7.00 - 4.50^2)$$
$$= 22.58 \text{ in}^2$$

$$S_{su} = 35{,}500 \text{ psi}$$

Conclusion

The maximum load carrying capacity of the trunnion, the trunnion/weld interface, the trunnion weld, and the upper forging are summarized in Table 2.5.1-1. The trunnion has a minimum load carrying capacity; its failure under excessive load will not impair the ability of the package to meet the other requirements of 10 CFR 71, Subpart E.

2.5.1.2 Lid Lifting Bolts

The top of the NAC-LWT cask lid is equipped with four 1 - 8 UNC threaded holes on a 9.0-inch square pattern to accommodate bolts to be used to lift the lid. These holes are threaded 1.5 inches deep.

A load factor of 3.0 for yield strength analysis is applied to the load for handling safety. The weight of the lid without attachment bolts is 919 pounds; thus, the tensile force on each bolt is (3.0)(919)/4 = 689 pounds. For conservatism, it is assumed that the bolt and the lid are of the same material, Type 304 stainless steel, which has a yield strength (S_y) equal to 27,500 psi at

150°F. Any dynamic load effects are negligible when considered in combination with the large applied load factors.

The tensile stress area (A_t) for a 1 - 8 UNC bolt, according to Table III.3 of "Screw-Thread Standards for Federal Services," is 0.606 square inches. Therefore, the stress in the bolt is 689/0.606 = 1044 psi and the margin of safety is (27,500/1044) - 1 = +LARGE.

The minimum length of thread engagement (L_e) required to fully develop the tensile strength of the bolt is calculated from "Screw-Thread Standards for Federal Services," Section II, Article 23, which gives the equation:

$$L_e = \frac{2A_t}{\pi n K_{n_{max}} + \left[0.5n + 0.57735\left(E_{s_{min}} - K_{n_{max}}\right)\right]}$$

where ("Screw-Thread Standards for Federal Services," Table III.10):

n = number of threads per inch = 8

$K_{n_{max}}$ = maximum minor diameter of threaded hole = 0.890 in

$E_{s_{min}}$ = minimum pitch diameter of bolt threads = 0.910 in

$$L_e = \frac{2(0.606)}{\pi(8)(0.890)\left[1/2(8) + 0.57735(0.910 - 0.890)\right]} = 0.7318 \text{ in}$$

This length is less than the 1.25-inch actual depth of threads, assuming the first and last threads are inactive; therefore, the internal threads of the tapped hole possess enough strength to cause the bolt to fail before the threads shear.

2.5.1.3 Can Assembly (315-40-98)

The LWT can assembly lifting is accomplish by lifting the assembly at the handle on the can lid. A factor of safety on yield strength of 3 is required for handling safety. The weight lifted by the handle (considering a 10% dynamic load factor) is:

W = (350 + 310 + 240 + 75) × 1.1 = 1,072 lbs

During lifting, the tensile stress at the minimum cross section of the handle is:

$$\sigma_t = \frac{W}{A} = \frac{1{,}072 \text{ lb}}{0.78 \text{ in.}^2} \cong 1{,}374 \text{ psi}$$

where:

A = (4.25 – 3.0) x 5/8 = 0.78 in^2

Because the factor of safety, $FS = \frac{17{,}300}{1{,}326} = 13.0 > 3$, the design condition lifting stresses have a factor of safety of 3 on the basis of yield strength is met.

The maximum shear occurs at the center of the handle and is computed as:

$$\tau = \frac{W}{A} = \frac{1{,}072 \text{ lbs}}{(3.23 - 1.5 - 0.23 - 0.88)(0.625) \text{ in.}} \cong 2{,}766 \text{ psi}$$

The factor of safety (FS) is conservatively calculated using a shear allowable of $0.6S_m$ at 750°F.

$$FS = \frac{0.6(17{,}300 \text{ psi})}{2{,}766 \text{psi}} = 3.38 > 3$$

Therefore, the design condition that lifting stresses have a factor of safety of 3 on the basis of yield strength is met.

Figure 2.5.1-1 Trunnion Cross-Section and Forging Shear Area

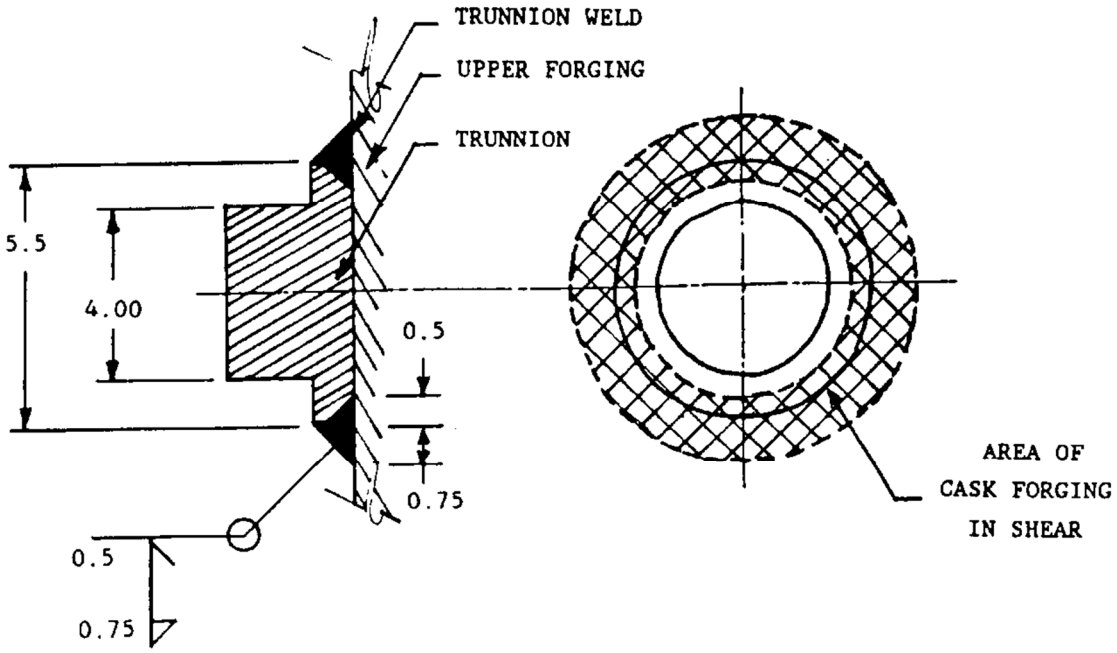

Table 2.5.1-1 Maximum Capacity of the Lifting Components

Lifting Trunnion	446,235 lbs
Trunnion/Weld Interface	502,427 lbs
Trunnion Weld	569,200 lbs
Cask - Upper Forging	801,590 lbs

2.5.2 Tiedown Devices

The NAC-LWT cask is tied down to the shipping skid using the following: (a) rotation trunnions near the bottom at point i (Figure 2.5.2-1); and (b) a 90-degree saddle support, hold-down straps and a shear ring near the top end at point j (Figure 2.5.2-1). Longitudinal force towards the bottom of the cask is resisted by the supports at the rotation trunnions; a shear ring welded to the outer shell resists the longitudinal force towards the top end of the cask. A 0.50-inch gap is provided between the shear ring and the saddle support to accommodate the thermal expansion of the cask.

In accordance with 10 CFR 71.45(b), the tiedown components of the cask are designed for static forces having a vertical component of two times the weight of the package, a longitudinal component of ten times the weight of the package, and a lateral component of five times the weight of the package. The design weight of the NAC-LWT cask with its contents and impact limiters is 52,000 pounds.

2.5.2.1 Discussion and Loads

The resultant force on the shear ring is assumed to act at the centroid of the contact area between the shear ring and the saddle support. Referring to Figure 2.5.2-1, the distance of the centroid from the center of the cask is determined:

$$\bar{y} = (A_o \bar{y}_o - A_i \bar{y}_i)/(A_o - A_i)$$

$$\bar{y} = \left[(2 \sin\theta\ (R_o^3 - R_i^3)\right] / \left[3\theta (R_o^2 - R_i^2)\right]$$

$$= 13.90 \text{ inches}$$

where:

$A = \theta R^2$

$\bar{y} = (2R \sin\theta / 3\theta$

$\theta = 45° = \pi/4$ radians

$R_o = 15.81$ inches

$R_i = 15.06$ inches

There are three loading cases for the tiedown components - vertical, longitudinal, and lateral loads. The reaction forces for each loading case are determined by the equations of equilibrium.

2.5.2.1.1 Vertical Load

Downward Direction Case

$F_y = -2W = -2(52,000) = -104,000$ lbs

Summing moments M_z about point j:

$\Sigma M_z = -104,000(82.22) + 2R_{iy}(165.63) = 0$

$R_{iy} = +25,813$ lbs

Summing vertical forces:

$2R_{iy} + R_{jy} - 104,000 = 0$

$R_{jy} = 52,374$ lbs

Note: $R_{ix} = R_{jx} = 0$ because of the gap provided at the shear ring.

Upward Direction Case

$F_y = +2W = +2(52,000) = +104,000$ lbs

similarly (Section 2.5.2.1.1),

$R_{iy} = - 25,813$ lbs

$R_{jy} = -52,374$ lbs

Note that the support saddle cannot carry any upward load. Hence, the negative R_{jy} is resisted by tiedown straps.

2.5.2.1.2 Longitudinal Load

Load Toward the Top End of the Cask

$F_x = +10W = +10(52,000) = +520,000$ lbs

Summing horizontal forces:

$520,000 + R_{jx} = 0$

$R_{jx} = - 520,000$ lbs

Summing moments about j:

$520,000(13.90) + 2R_{iy}(165.63) = 0$

R_{iy} - -21,820 lbs

Summing vertical forces:

R_{jy} - 2(21,820) = 0

R_{jy} - 43,640 lbs

Load Toward the Bottom of the Cask

F_x = -10W = -10(52,000) = -520,000 lbs

Summing horizontal forces:

-520,000 + $2R_{ix}$ = 0

R_{ix} = +260,000 lbs

Summing moments about j:

-520,000(13.90) + 2(260,000)(13.90 + 3) + $2R_{iy}$ (165.63) = 0

R_{iy} = -4,709 lbs

Summing vertical forces:

R_{jy} – 2(4709) = 0

R_{jy} = 9,418 lbs

2.5.2.1.3 Lateral Load

F_z = 5W = 5(52,000) = 260,000 lbs

To find the reactions resisting the above load, it is necessary to find the location of the bearing pressure between the support saddle and the cask surface. The contact surface is one-half of the saddle, as shown in Figure 2.5.2-2. Assume that the horizontal bearing pressure at any point is proportional to the sine function of the angular distance of the point from the lowest point in the saddle.

Referring to Figure 2.5.2-2, take a unit radius:

$dA = \sin\theta[\cos\theta - \cos(\theta + d\theta)]$

$= \sin\theta[\cos\theta - (\cos\theta\cos d\theta - \sin\theta\sin d\theta)]$

For small angle $d\theta$, $\cos d\theta \approx 1$, $\sin d\theta \approx d\theta$

hence,

$dA = \sin^2\theta d\theta$

$$A = \int_0^{\pi/4} \sin^2\theta d\theta$$

$$= \frac{1}{2}\theta - \frac{1}{4}\sin 2\theta$$

$$= (\pi - 2)/8 = 0.1427$$

The first moment of area about the horizontal line through the center is:

$$dM = ydA$$

$$= \cos\theta \sin^2\theta d\theta$$

$$M = \int_0^{\pi/4} \cos\theta os\theta^2 \theta d\theta$$

$$= (\sin^3\theta)/3$$

$$= 0.17785$$

$$\bar{y} = \frac{M}{A} = 0.8259$$

where:

R = 14.31 inches

$\bar{y}$ = 11.82 inches

Call the location of this centroid: point k.

The horizontal distance from the center of the cask to the support point i is 16.87 inches.

Summing moments about the vertical line through k (Figure 2.5.2-3):

$$260{,}000(82.22) + R'_{iZ}(165.63) = 0$$

$$R'_{iZ} = -129{,}066 \text{ lbs}$$

Summing forces along the Z-axis:

$$260{,}000 - 129{,}066 + R_{jz} = 0$$

$$R_{jz} = -130{,}934 \text{ lbs}$$

Summing forces along the Y-axis:

$$R_{iy} = -R'_{iy}$$

Summing moments about the longitudinal axis of the cask:

$$130{,}934(11.82) - 129{,}066(3) - R'_{ig}(16.87+16.87) = 0$$

$$R'_{iy} = 34{,}394 \text{ lbs}$$

$$R_{iy} = -34{,}394 \text{ lbs}$$

(Opposite Lateral Load)

$$F_z = -5W = -5(52{,}000) = -260{,}000 \text{ lbs}$$

The reactions for this case are opposite to the previous case.

2.5.2.1.4 Loads Summary

The results of all the loading cases are summarized in Table 2.5.2-1.

2.5.2.2 Rear Support

The NAC-LWT cask rear tiedown attachment is at the rotation trunnions. There are two rotation trunnions, which are slots located 16 inches above the bottom of the cask and spaced at approximately 180-degree positions in line with two of the lifting trunnions. Each slot is a machined part, which is welded all around to the cask outer shell. The neutron shield tank shell is cut out to provide access to the slots. The geometry details of the shield tank cut-outs and the rotation trunnion slots are shown in Figure 2.5.2-4.

2.5.2.2.1 Loads

The rotation trunnions are analyzed for the cask tiedown load condition defined in 10 CFR 71.45(b). The condition used for this analysis assumes that the cask is supported horizontally on a trailer and is subjected to a 10 g longitudinal shock load simultaneously with a 2 g vertical shock load and a 5 g lateral shock load. The direct lateral load is transferred to the cask through bearing on the large trunnion slot base. Any dynamic load effects are negligible when considered in combination with the large applied load factors. The critical loads on the rotation trunnions are derived in Section 2.5.2.1.

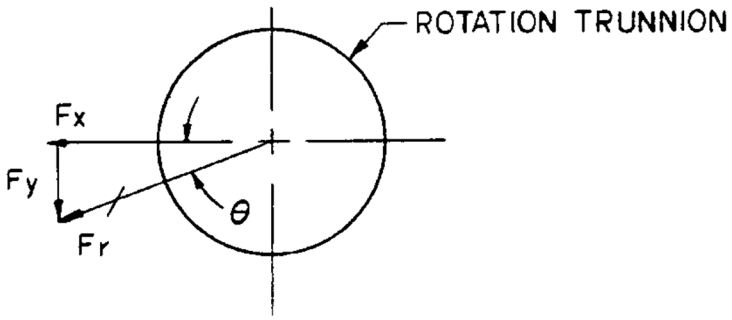

Resultant Load Determination

$$F_r = \sqrt{(F_x)^2 + (F_y)^2}$$

$$= 272{,}632 \text{ lbs}$$

where:

$F_x = 260{,}000$ lbs

$F_y = 82{,}027$ lbs (Table 2.5.2-1; Section 2.5.2.1)

then

$\theta = \arctan(82{,}027/260{,}000)$

$= 17.5$ degrees

2.5.2.2.2 Material Properties at 200°F

The yield strength of each material at 200°F is the allowable stress:

Type 304 stainless steel

$S_y = 25{,}000$ psi

Cask and Trunnion Slot (Base Metal)

The bearing stress ratio is taken from MIL-HDBK-5A where the bearing yield stress for the austenitic stainless steels at ambient temperature is specified as 50,000 psi and the yield strength as 30,000 psi. It is assumed that the ratio of bearing stress to yield stress remains constant up to 200°F:

$S_{bry} = 1.67(25{,}000) = 41{,}750$ psi

The shear strength is (0.6) (yield strength):

$S_{sy} = 0.6S_y = 15{,}000$ psi

Weld Metal

The weld metal properties exceed those of the base metal, based on standard welding code practice; therefore, the base metal properties will be used for the weld analysis:

$(S_{sy})_w = 15{,}000$ psi

2.5.2.2.3 Stress Analysis

Bearing Stress in Trunnion Slot (Figure 2.5.2-4)

$F_y = 272{,}632$ lbs

Length of engagement for 4.00-in diameter pin = 3.25 inches

$A_{br} = 4.00(3.25) = 13.00$ in^2

$$S_{br} = \frac{F_r}{A_{br}}$$

$= 20{,}972$ psi

$$MS = \frac{S_{bry}}{S_{br}} - 1 = \underline{+0.99}$$

Stress in Weld Connecting Trunnion to Cask (Figure 2.5.2-4)

Assume the entire load transferred to the cask outer shell through the weld at the base of the trunnion.

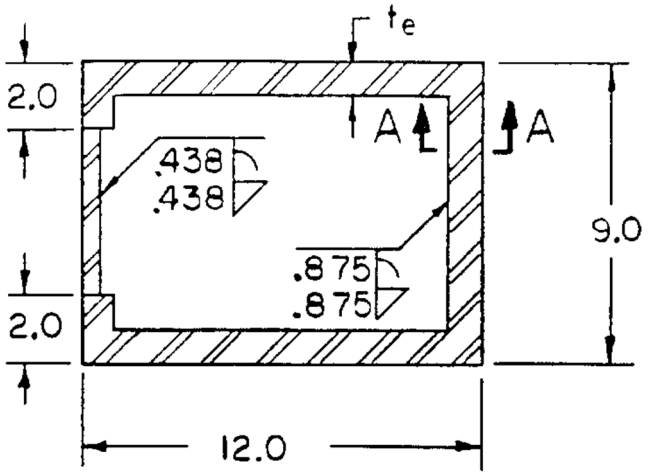

Section Through Weld at Base of Pocket

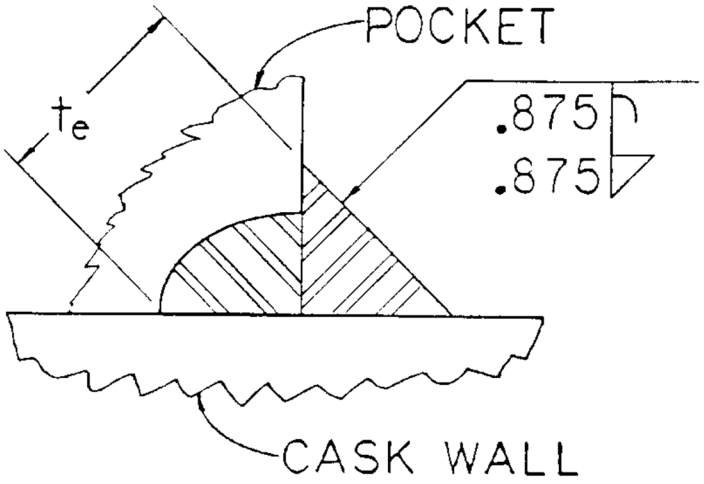

Section A-A

Effective thickness of weld (t_e) = ($\sqrt{2}$) (t_w)

for:

t_w = 0.875 in; t_e = 1.237 in

t_w = 0.438 in; t_e =0.619 in

Section Properties of Weld Group

Area (A_w) = 42.741 in^2

$\bar{y}$= 4.500 inches

$\bar{x}$= 6.412 inches

I_{xx} = 501.924 in^4

I_{yy} = 718.398 in^4

J_{xy} = I_{xx} + I_{yy} = 1220.322 in^4

Loads on Weld Group

F_x = 260,000 lbs

F_y = 82,027 lbs

e_x = 6.412 – 4.000 = 2.412 inches

e_z = 19.08 – 14.00 – 3.25/2 = 3.455 inches

$M_x = F_y (e_z) = 82,027 (3.455) = 283,403$ in-lbs

$M_y = F_x (e_z) = 260,000 (3.455) = 898,300$ in-lbs

$M_z = F_y (e_x) = 82,027 (2.412) = 197,849$ in-lbs

Maximum Stresses on Effective Thickness of Weld Group

$$S_x = \frac{F_x}{A_w} + \frac{M_z C_y}{J_{xy}} = \frac{260,000}{42.741} + \frac{(197,849)(4.50)}{1220.322}$$
$$= 6813 \text{ psi}$$

$$S_y = \frac{F_y}{A_w} + \frac{M_z C_x}{J_{xy}} = \frac{82,027}{42.741} + \frac{(197,849)(6.412)}{1220.322}$$
$$= 2959 \text{ psi}$$

$$S_z = \frac{M_x C_y}{I_{xx}} + \frac{M_y C_x}{I_{yy}} = \frac{(283,403)(4.5)}{(501.924)} + \frac{(898,300)(6.412)}{(718.398)}$$
$$= 10,559 \text{ psi}$$

$$S_{smax} = (S_x^2 + S_y^2 + S_z^2)^{0.5}$$
$$= 12,910 \text{ psi}$$

$$\text{M.S.} = \frac{(S_{sy})_w}{S_{smax}} - 1 = \underline{+0.16}$$

The positive margins of safety show that the rotation trunnion meets the requirements of 10 CFR 71.45(b).

2.5.2.2.4 Overload – Tiedowns

According to 10 CFR 71.45(b)(3), each tiedown device that is a structural part of a package must be designed so that failure of the device under excessive load would not impair the ability of the package to meet the other requirements of 10 CFR 71. For this reason, the shear capacity of the rotation trunnions, weld and outer shell are compared.

The weld attaching the rotation trunnion to the outer shell and the lower forging is shown in Section 2.5.2.2.3. The shear capacities of the rotation trunnions, weld and outer shell are calculated below (see sketch of Section A-A on page 2.5.2-8 for geometry details).

Rotation Trunnion

The width of the interface between the rotation trunnion base metal and the weld is:

$b_{rt} = \pi(0.875)/2$

$= 1.374$ in

The ultimate shear capacity of the rotation trunnion base metal per inch of length along the weld is:

$F_{rt} = 1.374(0.50\ S_{tu})$

$= 1.374(0.50 \times 71{,}000)$

$= 48{,}777$ lbs/in

Weld

The effective throat of the weld is:

$t_e = 1.414(0.875)$

$= 1.237$ in

The welding electrode used to weld Type 304 stainless steel is AWS E308 with a tensile strength of 80,000 psi. The ultimate shear capacity per inch of length of weld is:

$F_w = 1.237(0.50 \times 80{,}000)$

$= 49{,}480$ lbs/in

Outer Shell

The width of the interface between the weld and the outer shell base metal is:

$b_{os} = 2(0.875)$

$= 1.75$ in

The ultimate shear capacity of the outer shell base metal per inch of length along the weld is:

$F_{os} = 1.75(0.50 \times 71{,}000)$

$= 62{,}125$ lbs/in

The maximum shear capacities per inch of length along the weld interface are summarized as follows:

Rotation trunnion = 48,777 lbs/in

Weld = 49,480 lbs/in

Outer shell= 62,125 lbs/in

Thus, the rotation trunnions and the weld will fail in shear before the outer shell, assuring that failure caused by excessive overload on the rotation trunnions will not impair the ability of the package to meet the other requirements of 10 CFR 71.

2.5.2.3 Front Support

2.5.2.3.1 Discussion

The longitudinal force toward the top end of the cask is resisted by a shear ring welded to the cask outer shell. The shear ring is located at the juncture of the neutron shield shell top plate with the outer shell.

2.5.2.3.2 Shear Ring

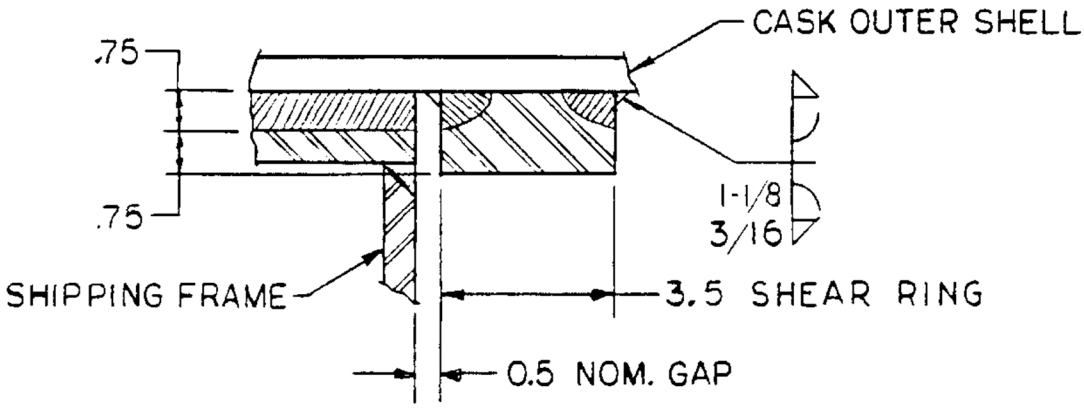

Shear Ring Geometry

The shear ring geometry bears on the shipping frame along a 90-degree arc (Figure 2.5.2-1). The load on the shear ring is:

R_{jx} = 520,000 lbs (Section 2.5.2)

Assuming that 0.75 inch of the ring thickness is in direct bearing against the side of the support frame, the bearing pressure is:

S_{brg} = 520,000/(0.5)(π)(15.06)(0.75)
= 29,309 psi

The allowable bearing on the surface of Type 304 stainless steel is:

$(S_{brg})_{ALL}$ = 41,750 psi at 200°F

The margin of safety for bearing is:

MS = (41,750/29,309) - 1= +0.42

The shear stress across the weld is:

$S_s = (29,309)(0.75)/(1.12)(2) = 9,813$ psi/in

In addition, the bar is subject to flexure:

$M = (29,309)(0.75)(0.75 + 0.375)$

$= 24,729$ in-lb/in

The moment of inertia of the welded area is:

$I = (1)(3.5)^3/12 - (1)(1.25)^3/12$

$= 3.410$ in^4

The flexural stress is:

$S_b = (24,729)(1.75)/3.410$

$= 12,690$ psi

The equivalent stress is:

$$S_{eq} = \left(S_b^{\,2} + 3S_s^{\,2}\right)^{0.5}$$

$= 21,211$ psi

The margin of safety at 200°F is:

$MS = (25,000/21,211) - 1 = +0.18$

where:

$S_y = 25,000$ psi at 200°F.

Figure 2.5.2-1 Front Support and Tiedown Geometry

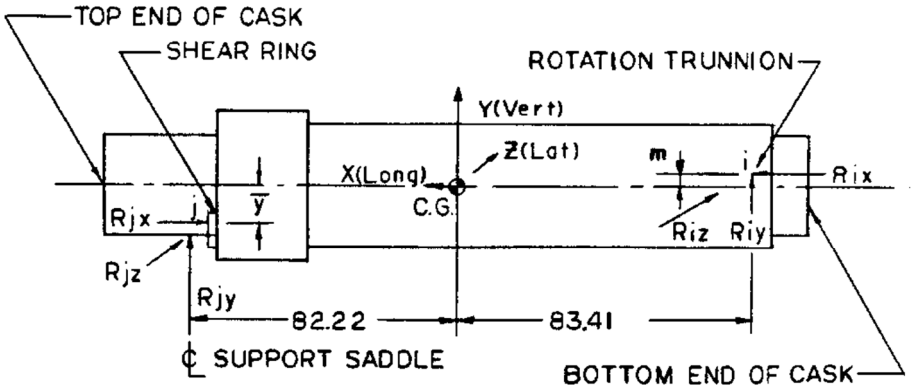

Free Body Diagram

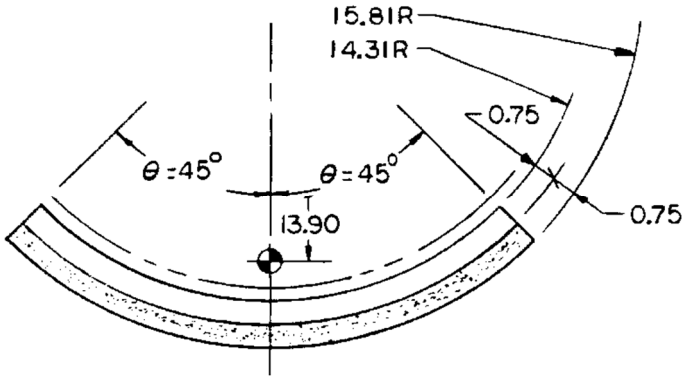

Shear Ring Geometry

Figure 2.5.2-2 Pressure Distribution of Horizontal Bearing Between Cask and Support Saddle

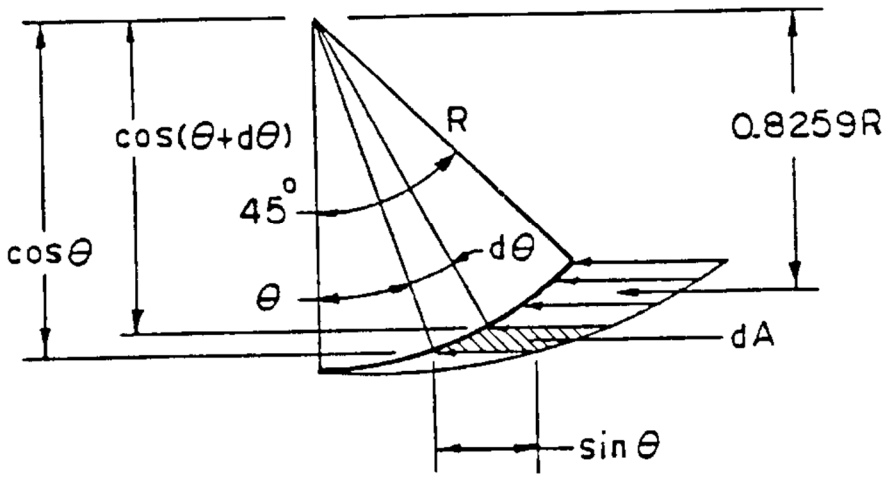

Figure 2.5.2-3 Free Body Diagram of Cask Subjected to Lateral Load

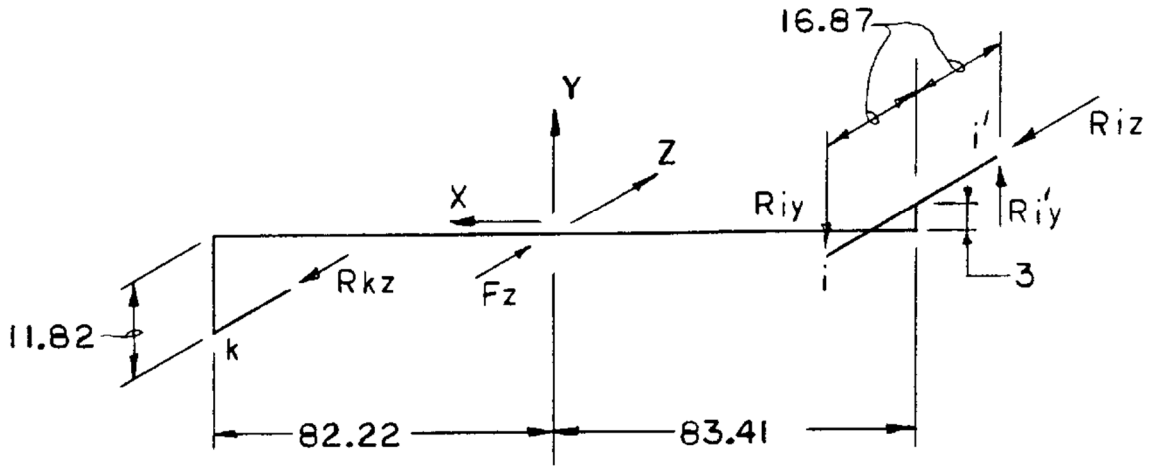

Figure 2.5.2-4 Rotation Trunnion Pocket

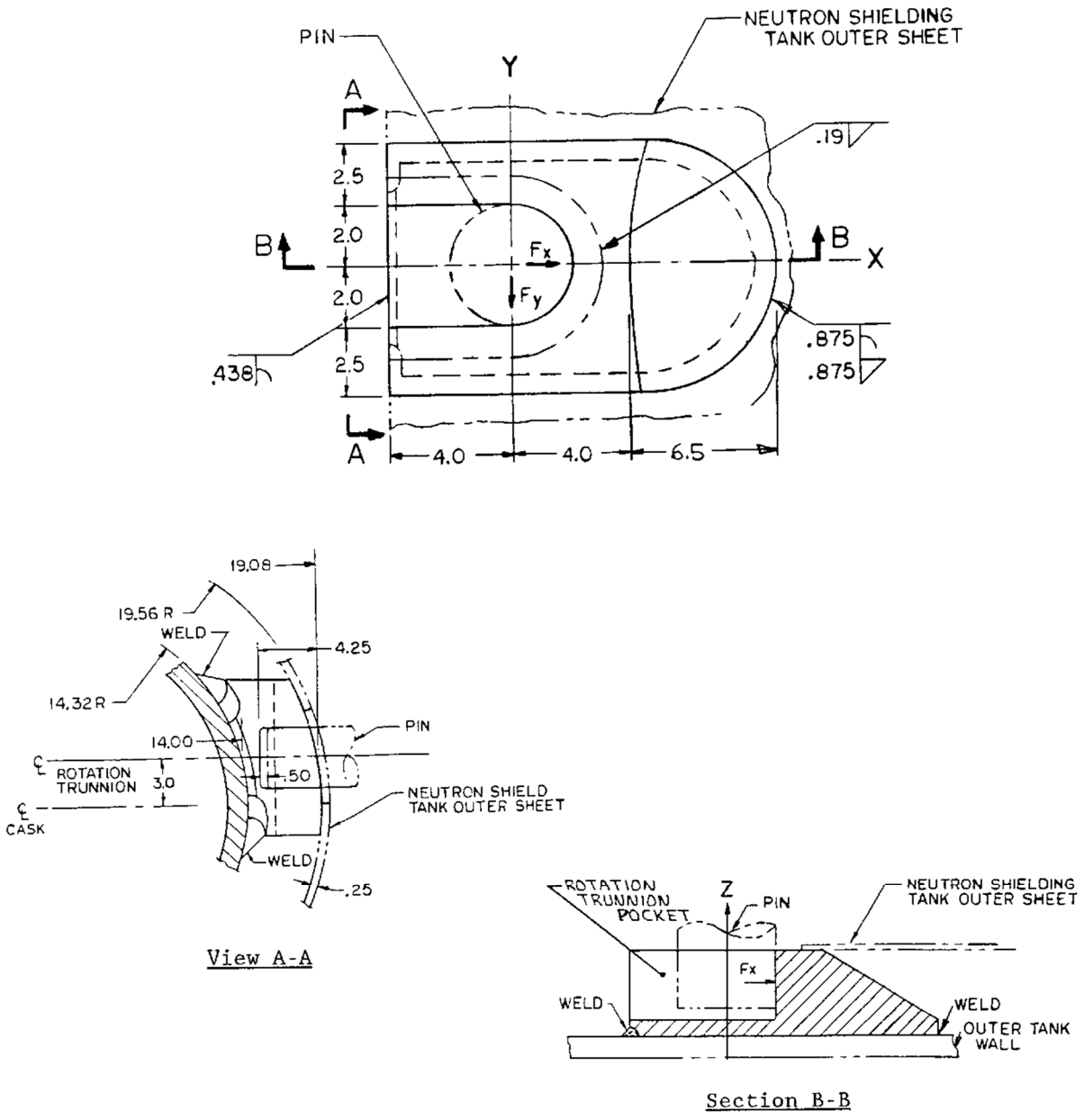

Table 2.5.2-1 Reactions Caused By Tiedown Devices

		Reactions (lb)					
Load Case	**Load (lb)**	**R_{jx}**	**R_{jy}**	**R_{jz}**	**R_{ix}**	**R_{iy}**	**R_{iz}**
A1	F_y = -104,000	0	52,374	0	0	25,813	0
A2	F_y = 104,000	0	-52,374	0	0	-25,813	0
B1	F_x = 520,000	-520,000	43,640	0	0	-21,820	0
B2	F_x = -520,000	0	9418	0	260,000	-4709	0
C1	F_z = 260,000	0	0	-130,934	0	-34,394	-129,066
C2	F_z = -260,000	0	0	130,934	0	34,394	-129,066
Maximum combined reactions		0	96,014	130,934	260,000	60,207	129,066
(A + B + C)		-520,000	-52,374	-130,934	0	-82,027	0

2.6 Normal Conditions of Transport

2.6.1 Hot Case

2.6.1.1 Discussion

The NAC-LWT cask body and lid are analyzed for structural adequacy in accordance with the requirements of 10 CFR 71.71(l) Heat (normal transport conditions). The cask is assumed to be loaded and ready for shipment in the horizontal position with an ambient temperature of 130°F.

The stress analysis of the cask is performed by the finite element method using the ANSYS computer program (See Sections 2.10.1 and 2.10.2 for model and computer program descriptions).

2.6.1.2 Analysis Description

2.6.1.2.1 Geometry

The finite element model is described in Section 2.10.2. The temperature-dependent material properties presented in Section 2.3 are used in the analysis.

2.6.1.2.2 Loadings

An internal pressure of 50 psig is applied on the cask cavity and lid interior surfaces in the outward normal direction. The pressure loading region includes the lid and upper body forging mating surfaces outward to the inner cask lid seal centerline.

The total cask lid bolt torque, as calculated in Section 2.1.3.2.2, is applied to the bolt, which is modeled as a beam element with a preload force of 39,788.74 pounds/radian (This is equivalent to an initial strain of 0.0021361 in/in-radian).

Cask temperatures as determined in Section 3.4.2 (based on 130°F ambient temperature) are imposed on the model. See Section 2.10.3.1 for the resulting isothermal temperature plot.

Mechanical loads resulting from the total weight of the cask structure and contents are imposed on the model. The total weight of the finite element model is 37,519 pounds, which is less than the design weight of 52,000 pounds (The design weight includes the total weight of the cask and its contents). Therefore, an acceleration of 1.387 g (535.94 in/sec^2) is uniformly applied to the finite element model in the positive global x-direction (The model is defined in the positive x-y plane).

Fabrication stresses are considered negligible as demonstrated in Section 2.6.11.

2.6.1.2.3 Displacement Boundary Conditions

The finite element model is restrained radially at all centerline nodes and longitudinally at the node located on the centerline at the cask model global origin; i.e., at the bottom of the cask model.

2.6.1.3 Detailed Analysis

Stresses throughout the finite element model of the cask body and closure lid are calculated for the combined pressure, bolt preload, thermal and mechanical load conditions as previously described. In accordance with the design criteria presented in Section 2.1.2, the calculated stresses are evaluated as primary membrane (P_m), primary membrane plus primary bending ($P_m + P_b$), S_n and total stress categories. The secondary stresses (thermal) are conservatively included in the primary stress categories and margin of safety calculations; therefore, the 3 S_m limit on the S_n stress intensity range is satisfied because it is enveloped by the 1.0 S_m limit on primary stress intensity.

To satisfy this criteria, procedures have been implemented (as demonstrated in Section 2.10.3) to determine the following:

1. The critical P_m and $P_m + P_b$ section stresses for each cask component.
2. The critical total stress for each cask component.

The most critical sections for each cask component are shown in Figure 2.6.1-1. The maximum P_m and $P_m + P_b$ stresses for each component are reported in Table 2.6.1-1 and Table 2.6.1-2, respectively. Both tables consider the allowable stress for a component with a temperature of 300°F. Additionally, the stresses at representative sections throughout the cask are presented in the tables in Section 2.10.7. These tables document the maximum stress locations tabulated for each component. The critical total stress for each cask component is reported in Table 2.6.1-3. For the fatigue evaluation, refer to Section 2.1.3.2.

The minimum margin of safety is shown to be ± 0.30, which occurs in component 7 (the Type 304 stainless steel cask bottom) for the condition of $P_m + P_b$ stress. This section is located 5.50 inches axially from the bottom of the cask body at the region where the bottom lead shielding is located.

2.6.1.4 Conclusion

Using conservatively applied loadings and stress categorization, it is demonstrated that the minimum margin of safety for the NAC-LWT cask for the heat condition is +0.30. Therefore, the NAC-LWT cask satisfies the requirements of 10 CFR 71 for consideration of the heat load condition.

Figure 2.6.1-1 NAC-LWT Cask Critical Sections (Hot Case)

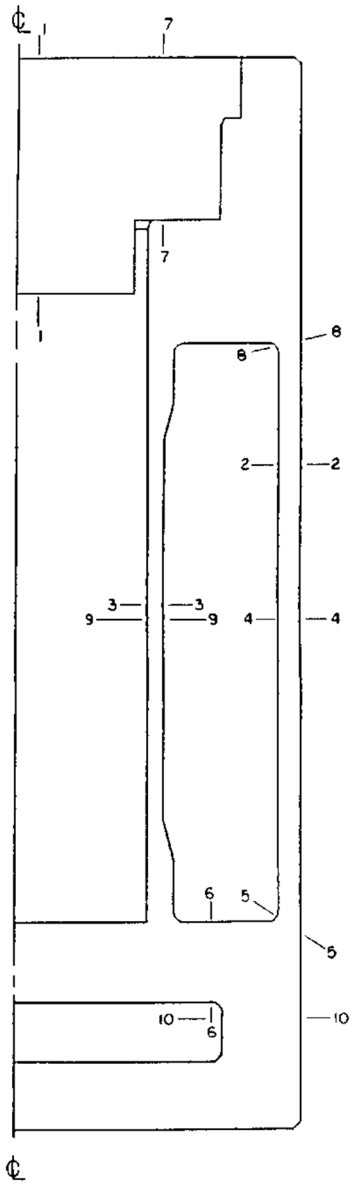

Table 2.6.1-1 Critical Stress Summary (Hot Case) – P_m

		P_m Stresses (ksi)				Principal Stresses					
Comp. No.[1]	Cut Node to Node	S_x	S_y	S_z	S_{xy}	S_1	S_2	S_3	S.I.	Allow. Stress 1.0 S_m	Margin of Safety
	1-1										
1	2302 to 2562	0.67	0.16	-0.44	0.51	0.99	-0.15	-0.44	1.43	20.0	Large
	2-2										
3	1595 to 1598	0.00	10.20	0.27	-0.06	10.20	0.27	0.00	10.20	20.0	+1.0
	3-3										
4	1121 to 1124	-0.03	3.38	0.45	0.00	3.38	0.45	-0.03	3.41	31.4	+8.2
	4-4										
6	1115 to 1118	-0.01	11.18	0.05	0.00	11.18	0.05	-0.01	11.19	31.4	+1.8
	5-5										
7	375 to 300	1.80	6.23	3.47	-4.98	9.46	3.47	-1.43	10.90	20.0	+0.8
	6-6										
8	192 to 342	-5.61	1.21	-0.75	3.56	2.73	-0.75	-7.13	9.85	20.0	+1.0

[1] Refer to Figure 2.10.2-9 for component identification.

Table 2.6.1-2 Critical Stress Summary (Hot Case) – $P_m + P_b$

		$P_m + P_b$ Stresses (ksi)				Principal Stresses					
Comp. No.[1]	Section Cut Node to Node	S_x	S_y	S_z	S_{xy}	S_1	S_2	S_3	S.I.	Allow. Stress 1.5 S_m	Margin of Safety
	7-7										
1	2371 to 2571	-3.06	-0.26	0.10	0.18	0.10	-0.25	-3.08	3.17	30.0	+8.5
	8-8										
3	1852 to 1856	-0.30	13.09	3.90	-0.56	13.11	3.90	-0.32	13.43	30.0	+1.2
	9-9										
4	1101 to 1104	0.00	3.68	0.68	0.00	3.68	0.68	0.00	3.68	47.1	Large
	2-2										
6	1595 to 1598	-0.01	11.59	0.48	-0.06	11.59	0.48	-0.01	11.60	47.1	+3.0
	10-10										
7	168 to 175	-13.48	9.78	1.46	-1.09	9.83	1.46	-13.53	23.36	30.0	+0.3
	6-6										
8	192 to 342	-16.04	1.21	-0.75	3.56	1.91	-0.75	-16.74	18.66	30.0	+0.6

[1] Refer to Figure 2.10.2-9 for component identification.

Table 2.6.1-3 Critical Stress Summary (Hot Case) – Total Range

		Total Stress Range (ksi)				Principal Stresses			Stress Differences		
Comp. No.[1]	Node	S_x	S_y	S_z	S_{xy}	S_1	S_2	S_3	S_1-S_2	S_2-S_3	S_3-S_1
1	2561	1.05	0.01	1.05	-18.80	19.34	1.05	-18.28	18.29	19.33	-37.62
3	1856	-0.30	12.04	3.33	0.18	12.04	3.33	-0.30	8.71	3.63	-12.34
4	1584	0.23	4.07	1.37	0.25	4.09	1.37	0.21	2.72	1.16	-3.88
6	1118	0.00	11.50	0.30	0.00	11.50	0.30	0.00	11.20	0.30	-11.50
7	1	4.81	0.03	4.81	23.99	26.53	4.81	-21.69	21.72	26.50	-48.22
8	192	1.59	-18.05	-7.95	2.20	1.83	-7.95	-18.29	9.78	10.34	-20.12

[1] Refer to Figure 2.10.2-9 for component identification.

2.6.2 Cold Case

2.6.2.1 Discussion

The NAC-LWT cask body and lid are analyzed for structural adequacy in accordance with the requirements of 10 CFR 71.71(c)(2) Cold (normal transport conditions). The cask is assumed to be loaded and ready for shipment in a horizontal position in an ambient steady-state environmental air temperature of -40°F.

The stress analysis of the cask is performed by the finite element method using the ANSYS computer program. See Sections 2.10.1 and 2.10.2 for model and computer program descriptions.

2.6.2.2 Analysis Description

2.6.2.2.1 Geometry

The finite element model is described in Section 2.10.2. The temperature-dependent material properties presented in Section 2.3 are used in this analysis.

2.6.2.2.2 Loadings

An internal pressure of 50 psig is applied on the cask cavity and lid interior surfaces in the outward normal direction. The pressure loading region includes the lid and upper body forging mating surfaces outward to the inner cask lid seal centerline.

The total cask lid bolt torque, as calculated in Section 2.1.3.2.2, is applied to the bolt that is modeled as a beam element with a preload force of 39,788.74 pounds/radian, which is equivalent to an initial strain of 0.0021361 in/in-radian. Cask temperatures as determined in Section 3.4.3 (based on -40°F ambient temperature) are imposed on the model. See Section 2.10.3.2 for the resulting isothermal temperature plot.

Mechanical loads due to the total weight of the cask structure and contents are imposed on the model. Since the total weight of the finite element model is 37,519 pounds, it is less than the design weight (52,000 pounds), which includes the total weight of the cask and its contents. Therefore, an acceleration of 1.387 g (535.94 in/sec^2) is uniformly applied to the finite element model in the positive global x-direction (The model is defined in the positive x-y plane).

Fabrication stresses are considered negligible as demonstrated in Section 2.6.11.

2.6.2.2.3 Displacement Boundary Conditions

The finite element model is restrained radially at all centerline nodes and longitudinally at the node located on the center line at the cask model global origin, i.e., at the bottom of the cask model.

2.6.2.3 Detailed Analysis

Stresses throughout the finite element model of the cask body and closure lid are calculated for the combined pressure, bolt preload, thermal and mechanical load conditions as previously described.

In accordance with the design criteria presented in Section 2.1.2, the calculated stresses are evaluated as P_m, $P_m + P_b$, S_n and total stress categories. The secondary stresses (thermal) are conservatively included in the primary stress categories and margin of safety calculations; therefore, the 3 S_m limit on S_n stress intensity range is satisfied because it is enveloped by the 1.0 S_m limit on primary stress intensity.

To satisfy this criteria, procedures have been implemented (as demonstrated in Section 2.10.3) to determine the following:

1. The critical P_m and $P_m + P_b$ section stresses for each cask component
2. The critical total stress for each cask component.

The most critical sections for each cask component are shown in Figure 2.6.2-1. The maximum P_m and $P_m + P_b$ stresses for each component are reported in Table 2.6.2-1 and Table 2.6.2-2, respectively. Both tables consider the allowable stress for a component with a temperature of 300°F. Additionally, the stresses at representative sections throughout the cask are presented in the tables in Section 2.10.7. These tables document the maximum stress locations tabulated for each component. The critical total stress for each cask component is reported in Table 2.6.2-3. For the fatigue evaluation, refer to Section 2.1.3.2.

The minimum margin of safety is shown to be +1.50, which occurs in component 7 (the Type 304 stainless steel cask bottom) for the condition of $P_m + P_b$ stress. This section is located 10.50 inches axially from the bottom of the cask body at the intersection of the outer shell with the bottom.

2.6.2.4 Conclusion

Using conservatively applied loadings and stress categorization, it is demonstrated that the minimum margin of safety for the NAC-LWT cask for the cold condition is +1.50. Therefore, the NAC-LWT cask satisfies the requirements of 10 CFR 71 for consideration of the cold load condition.

Figure 2.6.2-1 NAC-LWT Cask Critical Sections (Cold Case)

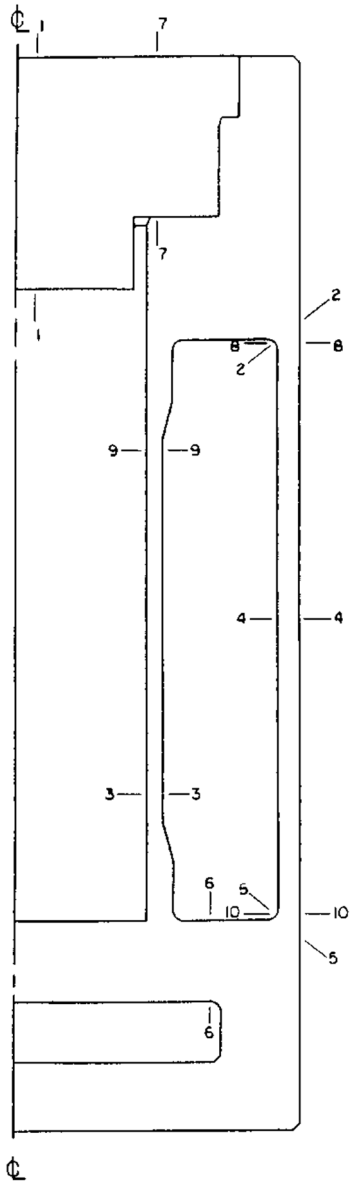

Table 2.6.2-1 Critical Stress Summary (Cold Case) – P_m

		P_m Stresses (ksi)				Principal Stresses					
Comp. No.[1]	Section Cut Node to Node	S_x	S_y	S_z	S_{xy}	S_1	S_2	S_3	S.I.	Allow. Stress 1.0 S_m	Margin of Safety
	1-1										
1	2302 to 2562	0.75	0.07	-0.53	0.51	1.02	-0.20	-0.53	1.55	20.0	Large
	2-2										
3	1835 to 1856	-0.28	6.08	2.12	1.66	6.49	2.12	-0.69	7.18	20.0	+1.8
	3-3										
4	701 to 704	-0.01	-2.59	0.13	-0.01	0.13	-0.01	-2.59	2.72	31.4	Large
	4-4										
6	1115 to 1118	-0.01	7.82	0.06	0.00	7.82	0.06	-0.01	7.83	31.4	+3.0
	5-5										
7	375 to 325	0.24	5.24	3.42	-3.08	6.71	3.42	-1.23	7.93	20.0	+1.5
	6-6										
8	192 to 342	-2.72	-0.74	-0.38	0.82	-0.38	-0.45	-3.01	2.64	20.0	+6.6

[1] Refer to Figure 2.10.2-9 for component identification.

Table 2.6.2-2 Critical Stress Summary (Cold Case) – $P_m + P_b$

		$P_m + P_b$ Stresses (ksi)				Principal Stresses					
Comp. No.[1]	Section Cut Node to Node	S_x	S_y	S_z	S_{xy}	S_1	S_2	S_3	S.I.	Allow. Stress 1.5 S_m	Margin of Safety
	7-7										
1	2371 to 2571	-3.81	-0.39	0.06	0.19	0.06	-0.38	-3.82	3.88	30.0	+6.7
	8-8										
3	1852 to 1856	-0.26	10.30	3.87	-0.19	10.30	3.87	-0.26	10.57	30.0	+1.8
	9-9										
4	1521 to 1524	0.00	-3.08	-0.25	-0.01	0.00	-0.25	-3.08	3.08	47.1	Large
	4-4										
6	1115 to 1118	0.00	8.30	0.48	0.00	8.30	0.48	0.00	8.30	47.1	+4.7
	10-10										
7	346 to 350	-0.23	11.86	5.77	-0.29	11.87	5.77	-0.24	12.10	30.0	+1.5
	6-6										
8	192 to 342	-6.67	-0.74	-0.38	0.82	-0.38	-0.63	-6.78	6.41	30.0	+3.7

[1] Refer to Figure 2.10.2-9 for component identification.

Table 2.6.2-3 Critical Stress Summary (Cold Case) – Total Range

		Total Stress Range (ksi)				Principal Stresses			Stress Differences		
Comp. No.[1]	Node	S_x	S_y	S_z	S_{xy}	S_1	S_2	S_3	S_1-S_2	S_2-S_3	S_3-S_1
1	2561	0.28	0.01	0.27	-18.80	18.95	0.27	-18.66	18.68	18.93	-37.61
3	1856	-0.26	10.18	3.50	-0.01	10.18	3.50	-0.26	6.68	3.76	-10.44
4	1261	0.00	-2.66	-0.39	0.00	0.00	-0.39	-2.66	0.39	2.27	-2.66
6	1278	-0.03	8.16	0.20	0.00	8.16	0.20	-0.03	7.96	0.23	-8.19
7	1	4.64	0.02	4.64	23.99	26.43	4.64	-21.77	21.79	26.41	-48.20
8	192	-0.97	-7.36	-2.70	1.45	-0.66	-2.70	-7.67	2.04	4.97	-7.01

[1] Refer to Figure 2.10.2-9 for component identification.

2.6.3 Reduced External Pressure

The drop in atmospheric pressure to 3.5 psia, as specified in 10 CFR 71.71(c)(3), effectively results in an additional internal pressure in the cask of 11.2 psig. This additional pressure has a negligible effect on the NAC-LWT cask because the cask is conservatively analyzed for a normal operations conditions internal pressure of 50.0 psig in Section 2.6.1.2.

2.6.4 Increased External Pressure

An increased external pressure of 20 psia (5.3 psig external pressure), as specified in 10 CFR 71.71(c)(4), has a negligible effect on the NAC-LWT cask because of the thick outer shell and end closures of the cask. Conservatively, applying a 20-psi external pressure to the expansion tank shell and to the neutron shield tank shell produces hoop stresses of only 1373 psi and 1627 psi, respectively. These stresses are negligible. Additionally, Section 2.6.7 addresses many different loading cases, which exceed these prescribed external pressure requirements.

2.6.5 Vibration

The effect of vibrations normally incident to transportation is considered to be negligible for the NAC-LWT cask. This conclusion is based on the fact that the calculated stresses for vibrations normally incident to transportation are much smaller than the calculated stresses for the normal transport 1-foot side drop event. The following analysis documents this fact.

The normal transport 1-foot side drop, discussed in Section 2.6.7.3, results in an impact deceleration equal to 24.3 g. This impact force produces a 17,420 psi stress intensity in the inner shell and a 23,590 psi stress intensity in the outer shell of the NAC-LWT cask.

As a conservative worst case, it is assumed that the normal transport vibration acceleration is equal to the equivalent acceleration which will produce the normal vertical loading imposed on the tiedown devices by 10 CFR 71.45(b)(1). This regulation specifies a load factor of 2.0 to be applied to the package weight; therefore, it is assumed that the tiedown devices and the cask must resist an imposed 2.0 g vibration acceleration.

The maximum stress intensity range for normal transport vibration is obtained by multiplying the stress from the 1-foot side drop impact by the ratio of acceleration values from vibration to those for the drop impact. Thus the stress intensities in the outer shell (the critical component) are S_{max} = (2/24.3)(23,590) = 1942 psi and S_{min} = -(2/24.3)(23,590) = -1942 psi, and the maximum stress intensity range is S_n = 3884 psi. The allowable alternating stress intensity for austenitic stainless steel is determined as the 10^{11} cycle value from the "ASME Boiler and Pressure Vessel Code," Table I-9.2.2 ratioed for the effect of the 300°F temperature. This value is S_e = 12,975 psi; therefore, the margin of safety for the critical component of the NAC-LWT cask for normal transport vibration is:

$$MS = (Se / Salt) - 1 = (12{,}295/1942) - 1 = +\underline{Large}$$

where:

$$Salt = 0.5\ Sn$$

The rotation trunnions serve as the rear tiedown for the NAC-LWT cask during normal transport. The rotation trunnion is the critical tiedown component for all three load axes; the front of the cask is supported in a cradle and restrained vertically by a band attached to the trailer. From Section 2.5.2.2, the critical component on the rotation trunnion is the attachment weld between the trunnion and the cask outer shell, which has an applied shear stress of 11,500 psi. This applied shear stress is produced by the 10.2 g resultant from the combined longitudinal and vertical shock (10.0 g longitudinal and 2 g vertical) tiedown load components.

The same method is used to determine the maximum stress intensity range as is used for the cask, except that the ratio of the normal transport vibration acceleration to the resultant acceleration for the combined longitudinal and vertical shock was used. The allowable alternating stress for the weld is the same as that for the cask. The alternating shear stresses are S_{max} = (2/10.2)(11,500) = 2255 psi and S_{min} = -(2/10.2)(11,500) = -2255 psi, and the maximum stress intensity range is S_n = 4510 psi. The margin of safety for the rotation trunnion as a rear tiedown device for normal transport vibration is:

$$MS = (S_e / S_{alt}) = 1\ (12{,}975/2255) - 1 = +\underline{\text{Large}}$$

where:

$$S_{alt} = 0.5\ S_n$$

The NAC-LWT cask satisfies the requirements for normal vibration incident to transportation as required by 10 CFR 71.71(c)(5).

2.6.6 Water Spray

Water causes negligible corrosion of the stainless steel materials used to fabricate the NAC-LWT cask; the cask contents are protected in the sealed cavity. A water spray as specified in 10 CFR 71.71(c)(6) has no adverse effect on this package.

2.6.7 Free Drop (1 Foot)

The free drop scenario outlined by Subpart F of 10 CFR 71 requires the NAC-LWT cask to be structurally adequate for a 1-foot drop (normal transport conditions) onto a flat, essentially unyielding, horizontal surface in the orientation that inflicts the maximum damage to the cask. The following subsections evaluate the cask body; the impact limiters; the closure lid and bolts; the neutron shield shell; the expansion tank shell; and the upper ring components; for the end, side, and corner drop orientations.

2.6.7.1 End Drop (1 Foot)

2.6.7.1.1 Discussion

The NAC-LWT cask is analyzed for the effects of a normal operations end drop impact condition. The event scenario is that the NAC-LWT cask, equipped with an impact limiter, drops 1 foot onto a flat, unyielding, horizontal surface. The cask strikes the surface in a vertical position on either its bottom or its top end.

The 1-foot end drop analysis can be carried out in an identical fashion as was used in the 30-foot accident end drop analysis, Section 2.7.1.1. The general comments, analysis descriptions and the analysis method described in Section 2.7.1.1 also apply to this section.

The only difference between the 30-foot end drop analysis (Section 2.7.1.1) and this 1-foot end drop analysis is the magnitude of the impact force, i.e., impact load, which is expressed in terms of a g factor. The magnitude of the impact force varies with the different drop heights. As calculated in Section 2.6.7-4, the g loads for the 1-foot end drop condition and for the 30-foot end drop condition are 15.8 g and 60 g, respectively. These g loads are conservatively based on a maximum crush strength of 3850 psi for the aluminum honeycomb impact limiters, although the design maximum crush strength is 3675 psi. Also, these analyses conservatively use a 1.12-inch thick outer shell, although the actual outer shell thickness is 1.20 inches. Using the analysis results obtained in Section 2.7.1.1 to represent the structural response of the NAC-LWT cask for the 1-foot end drop condition is conservative and acceptable. Therefore, Tables 2.7-1 through 2.7-15 were used to compose Table 2.6.7-1 through Table 2.6.7-16, for the 1-foot drop analyses. The most critical sections for each component during a particular loading condition are shown in Figure 2.6.7-1 through Figure 2.6.7-5. The critical P_m, $P_m + P_b$, and total stresses for each component are documented in Table 2.6.7-1 through Table 2.6.7-16. The allowable stresses are those defined in Section 2.1.2 for the normal operations conditions based on 300°F. Note that the maximum cask component temperatures are below 300°F for all of the conditions that are considered. Additionally, the stresses at representative sections throughout the cask are

presented in the tables in Section 2.10.7. These tables document the maximum stress locations tabulated for each component.

The secondary stresses (thermal) are conservatively included in the primary stress categories and margin of safety calculations; therefore, the 3 S_m limit on the S_n stress intensity range is satisfied. This is because it is enveloped by the 1.5 S_m limit on $P_m + P_b$ stress intensity.

2.6.7.1.2 Results and Conclusions

Since the margins of safety are positive for all of the cask components, the NAC-LWT cask maintains its containment capability and satisfies the 10 CFR 71 requirements for the 1-foot normal operations end drop condition.

2.6.7.2 Side Drop (1 Foot)

2.6.7.2.1 Discussion

This section presents the evaluation of the structural adequacy of the NAC-LWT cask for the 1-foot side drop impact condition. In this event, the NAC-LWT cask with impact limiters attached over each end experiences a free drop through a distance of 1 foot onto a flat, unyielding surface, and strikes the surface in a horizontal position.

The 1-foot side drop analysis is performed in the same manner as was done for the 30-foot side drop analysis in Section 2.7.1.2. The general comments, analysis descriptions, and the analysis methods described in Section 2.7.1.2 also apply to this section.

The difference between the 30-foot side drop analysis and the 1-foot side drop analysis is the magnitude of the impact force, which varies because of the different drop heights. As determined in Section 2.6.7.4, the g loads for the 1-foot side drop condition and for the 30-foot side drop accident condition are 24.3 g and 49.7 g, respectively.

Analysis of the NAC-LWT cask for the normal operations conditions side drop follows the same methodology as used for the accident side drop analysis. Because all calculations for the accident side drop analysis are performed on a basis of linear elastic behavior, the stress components for the 1-foot side drop condition are calculated by multiplying the 30-foot side drop stress components (resulting from the effects of inertial and impact loads) by the ratio of the 1-foot side drop g load to the 30-foot side drop g load. These stress components are then combined with those induced by the thermal effects, internal pressure, and bolt preload.

2.6.7.2.2 Results and Conclusions

Since the material properties of the cask structure are temperature-dependent, varying environmental temperatures will produce changes in the calculated stresses in the cask for the thermal load cases. Environmental temperatures will not change the calculated stresses in the

cask produced by other types of loads. This is verified by comparing the finite element results for the NAC-LWT cask subjected to a gravity load for different temperature conditions. Also, the stress levels produced by the following thermal loading conditions were evaluated: (1) 100°F ambient temperature with maximum decay heat load, (2) -40°F ambient temperature with maximum decay heat load, and (3) -40°F ambient temperature with no decay heat load. The combination effect of the thermal loads with other load types (e.g., inertial body load) has also been studied. It is determined that the side drop event with 100°F ambient temperature represents the worst case for the normal operations 1-foot side drop condition. Therefore, only the stress results produced by a 1-foot side drop with 100°F ambient temperature are reported.

Stress components and stress intensities are calculated throughout the finite element model for the combined loads due to internal pressure, bolt preload, thermal, inertia, and impact. Table 2.6.7-16 through Table 2.6.7-19 report the P_m stress intensities, the $P_m + P_b$ stress intensities, the S_n stress intensities, and the total stress intensities for each cask component, which are obtained from the finite element side drop analysis. Additionally, the stresses at representative sections throughout the cask are presented in the tables in Section 2.10.7. These tables document the maximum stress locations tabulated for each component.

As mentioned previously, the finite element cask model conservatively ignores the effect of the neutron shield shell on the overall bending of the cask structure.

The margins of safety reported in Table 2.6.7-16 through Table 2.6.7-18 are positive for all cask components. It has been demonstrated that all margins of safety are positive for the normal operations 1-foot side drop condition.

The NAC-LWT cask maintains its containment capability and satisfies the 10 CFR 71 requirements for the normal operations 1-foot side drop condition.

2.6.7.3 Corner Drop (1 Foot)

2.6.7.3.1 Discussion

The analysis of the NAC-LWT cask for a 1-foot corner drop condition uses the same methods as those used for the hypothetical accident oblique drop analyses. The general comments, analysis descriptions, and analysis methods discussed in Section 2.7.1.3 also apply to this section. The difference between the hypothetical accident analysis and the normal operations conditions analysis in this section is the drop height. Refer to Section 2.6.7.4 for the calculation of the g loads induced by a normal operations conditions 1-foot corner drop and by an accident condition 30-foot corner drop. These g loads are conservatively based on a maximum crush strength of 3850 psi for the aluminum honeycomb impact limiters, although the design maximum crush strength is 3675 psi. The stress components for the 1-foot corner drop are calculated by multiplying the accident condition stress components (resulting from the effects of inertial and

impact loads) by the ratio of the 1-foot corner drop g load to the 30-foot corner drop g load. These stress components, then, are combined with those resulting from internal pressure, bolt preload, and thermal effects. These analyses conservatively use a 1.12-inch thick outer shell, although the actual outer shell thickness is 1.20 inches.

2.6.7.3.2 Results and Conclusions

The most critical sections for each component during a particular loading condition are shown in Figure 2.6.7-7 through Figure 2.6.7-9. Table 2.6.7-20 through Table 2.6.7-23 report the maximum P_m stress intensities, the maximum $P_m + P_b$ stress intensities, the maximum S_n stress intensities, and the maximum total stress intensities for each component resulting from the 1-foot top corner drop condition with a 130°F ambient temperature and maximum decay heat load. Similarly, Table 2.6.7-24 through Table 2.6.7-27 report those stress intensities resulting from the 1-foot bottom corner drop condition with a 130°F ambient temperature and maximum decay heat load. Also, Table 2.6.7-28 through Table 2.6.7-31 report the stress intensities for each component resulting from the 1-foot top corner drop condition with a -40°F ambient temperature. Additionally, the stresses at representative sections throughout the cask are presented in the tables in Section 2.10.7. These tables document the maximum stress locations for each component.

It has been demonstrated that all margins of safety are positive for the normal operations 1-foot corner drop condition. The NAC-LWT cask maintains its containment capability and satisfies the 10 CFR 71 requirements for the normal operations 1-foot corner drop condition.

2.6.7.4 Impact Limiters

2.6.7.4.1 Introduction

Removable impact limiters are supplied with the NAC-LWT cask to ensure that the design impact loads on the cask are not exceeded for any of the defined impact conditions. These defined conditions are:

1. The cask falls 1 foot and lands on: (a) its side, impacting both limiters simultaneously; (b) flat on one limiter at either end; or (c) oblique on either corner (the center of gravity is directly above the corner of the impact limiter).
2. The cask, having experienced a normal operating conditions 1-foot drop, is dropped through a distance of 30 feet and lands on its end, its side, or at any oblique angle. The impact limiter analysis considers a 31-foot drop (1 foot + 30 feet). This provides conservative impact loads, which are used in the cask analyses.

2.6.7.4.2 Assumptions

The following assumptions form the basis for the impact limiter analysis:

1. The cask impacts on an unyielding surface.
2. The impact limiter remains in position on the cask during all impact events. (The qualification of the impact limiter attachment is presented in Section 2.6.7.4.7.)

2.6.7.4.3 Load Conditions

The impact limiters described and analyzed in the following paragraphs decelerate the cask by applying a force in the direction opposite the motion of the cask. The deceleration force is generated by crushing the aluminum honeycomb material of the limiter between the cask and the unyielding surface. The energy absorbed during crushing is the net force, the vector sum of the cask weight (downward) and the deceleration force (upward), multiplied by the distance crushed. The amount of energy an impact limiter can absorb is calculated for various cask impact orientations, from vertical (0°) to horizontal (90°).

The specific loading conditions for the impact limiters are defined by 10 CFR 71.71(c)(7), 10 CFR 71.73(c)(1) and Regulatory Guide 7.8, as follows:

1. A 1-foot fall of the cask on one limiter, impacted at any angle from vertical (flat end) to corner (cask center of gravity is directly above the point of impact).
2. A 1-foot fall of the cask horizontally, so that the side surfaces of both limiters impact the unyielding surface simultaneously.
3. Any of the 1-foot falls can be followed by a 30-foot fall at an end, a side, or an oblique orientation.

Based on these loading conditions, the NAC-LWT cask impact limiters are designed for a 31-foot fall. Either of the first two conditions plus the third condition is equivalent to a single drop at the combined heights, as explained in Section 2.6.7.4.5. The maximum impact force and the maximum crush depth for the 1-foot falls are obtained from the computer output for the 31-foot fall analyses at the value of the energy dissipated in a 1-foot fall. This method is explained in Section 2.6.7.4.5.

2.6.7.4.4 Descriptions – Impact Limiters

Figure 2.6.7-10 shows the location on the cask and the primary dimensions of the impact limiters. A different impact limiter is used on the bottom of the cask to reduce weight. The top impact limiter diameter is larger because it is required to clear the cask lifting trunnions and to be of sufficient depth over the trunnions to prevent the limiter from behaving as a solid in the event of a side impact. The larger diameter provides greater distance from the point of impact to the cask body; however, the effective depth of the limiter is maintained at the trunnions and the same corner impact absorption capability is retained. Figure 2.6.7-11 shows a cross-section of the top impact limiter.

The bottom impact limiter does not have the cut-outs for the trunnions. It has a smaller outside diameter and larger bottom depth than the top impact limiter.

Each impact limiter consists of two different layers of aluminum honeycomb, which are enclosed in a thin outer aluminum shell. The layers of aluminum honeycomb are separated by a thin aluminum sheet. The honeycomb material absorbs the impact energy as it is crushed. A typical load versus deflection curve for aluminum honeycomb is presented in Figure 2.6.7-12. The force deflection curves and test data for the NAC-LWT cask impact limiters at the various drop angles are provided in Appendix 2.10.12. The nominal crush strength of the bottom layer of aluminum honeycomb is 250 psi axially, and is negligible radially. The nominal crush strength of the second layer is 3500 psi in both the axial and the radial directions. The tolerance on the crush strength is +5, -10 percent. The bottom, 250-psi crush strength, single-directional layer of honeycomb material absorbs the majority of the energy in a 1-foot flat impact on the end, and limits the impact force to a value acceptable for normal operations. The lower crush strength is necessary because the impact area is considerably greater in a flat bottom impact than in any other orientation. The second, 3500-psi crush strength, multi-directional layer of honeycomb material absorbs the majority of the energy in an impact on the corner of the impact limiter, and all of the energy in an impact on the side of the impact limiter. Both crushable aluminum honeycomb materials behave as a solid when compressed to 30 percent of their original depth.

The outside diameters of the impact limiters are 65.25 inches and 60.25 inches for the top and bottom impact limiters, respectively. The depth of the bottom aluminum honeycomb layer is 1.5 inches on each limiter. The second aluminum honeycomb layer is 14.0 inches deep for the top impact limiter and 14.5 inches for the bottom impact limiter. The top impact limiter has four recesses to provide clearance around the trunnions. This clearance is closed during the impact for a 30-foot side drop. Therefore, the trunnion provides a rigid foundation for the impact limiter in the region near the trunnion.

The impact limiter shells are positioned against the cask lid and bottom surfaces; the impact limiters overlap the cask cylinder by a length of 12 inches. The shells are mechanically attached to the cask as described in Section 2.6.7.4.7.

For each of the impact load conditions considered in this analysis, the impact limiters remain in position on the cask and absorb the energy of the impact; thus, they limit the impact load to the values calculated in this section.

2.6.7.4.5 Method of Analysis

The primary areas of analytical evaluation that are required in an impact limiter analysis are: (1) crush depth; (2) maximum crush force; and (3) attachment to the cask. The crush depth and

maximum crush force are dependent on the crush strength of the crushable material, the area engaged in crushing, the geometry of the impact limiter, and the energy to be dissipated.

Deceleration forces for constant crush strength aluminum honeycomb impact limiters are directly related to the area crushing. The area engaged in crushing can be best explained by examining the experimental results of a top end drop impact test. Figure 2.6.7-13 shows a quarter-scale model impact limiter just before crushing begins. The cask and the unyielding surface are rigid and undeformable compared to the honeycomb material. The 3.9 inches of honeycomb material are trapped in place between the cask and the impacted surface.

The 250-psi crush strength honeycomb is designed to absorb the potential energy of the cask in a 1-foot drop. The area of the 250-psi honeycomb covering the entire bottom of the impact limiter is 208.7 square inches. The higher crush strength honeycomb structurally supports or "backs" the lower crush strength honeycomb, even if just the cask backs the higher crush strength honeycomb. The force necessary to begin crushing the 250 psi crush strength material is 52,168 pounds. The quarter-scale model weighs approximately 800 pounds; therefore, the 52,168 pounds of force is equivalent to 65 g for the model (The normal operation g-load for the full-size cask is calculated to be 16.3 g).

The 3500-psi crush strength honeycomb absorbs the kinetic energy of the cask in a 30-foot drop. The area of the bottom of the scale model cask is 40.7 square inches. The force necessary to crush the 3500-psi crush strength honeycomb trapped between the model cask and the impacted surface is 142,500 pounds, or 178 g, based on the model weight of 800 pounds.

A force imbalance is immediately established between the lower and higher strength honeycombs at the onset of crushing. It requires 52,168 pounds to crush the lower strength honeycomb, which is 2.7 times smaller than the force required to crush the higher strength honeycomb. The lower strength honeycomb of constant crush strength will crush until lock-up occurs. When lock-up occurs, the crush strength of the lower strength honeycomb increases and exceeds that of the higher strength honeycomb. Crushing now begins beneath the cask because the force to crush the 16.3-inch diameter of the locked-up, lower strength honeycomb exceeds the 142,500 pounds necessary to crush the backed-up higher strength honeycomb.

The cask has kinetic energy gained while falling prior to the impact limiter contacting the unyielding surface. (Section 2.10.12 gives a more complete description of the kinetic energy gain.) Some kinetic energy was dissipated in crushing the lower strength honeycomb. The remaining energy will be absorbed by crushing the higher strength honeycomb between the cask and the impacted surface. The cask "backs" the higher crush strength honeycomb; therefore, the maximum force is easily compared with the average maximum force from the quasi-static test as adjusted to reflect the dynamic crush strength of the honeycomb (For an explanation of the term "dynamic" as applied to quasi-static tests, refer to Appendix 2.10.12).

Figure 2.6.7-14 is a photograph of a section of an end impact tested quarter-scale limiter. The average maximum force from the end drop quasi-static crush test is 158,400 pounds. If the backed and unbacked area were to crush, the required force would be 3500 psi x $\pi/4\ (16.3)^2$ = 730,400 pounds of force. This is a factor of 4.6 times more than the actual measured force and shows that the unbacked area did not contribute to the limiter force. The calculated maximum force using the backed-up area of the limiter is approximately 11 percent lower than the test results. The scale model limiter crush test, therefore, demonstrates that the unbacked area did not crush and generate a force. One reason for the difference is the shearing of the high crush strength honeycomb, which is clearly visible in Figure 2.6.7-14. Shearing acts in a plane, surrounding the shear area. In an end impact crush, the plane is a thin ring with a diameter equal to the diameter of the cask. Since the crush force is proportional to the backed area, which depends on the square of the cask diameter, for the full-scale impact limiters, shearing becomes a much less significant part of the maximum force.

Figure 2.6.7-14 shows the sequence of crushing and the backed area as described above. The lower crush strength honeycomb is crushed to stack height completely to the outer edge of the cask. Higher crush strength honeycomb beneath the cask is crushed, while material on the "other side" of the shear plane is uncrushed.

The combination of the accurate prediction of measured impact limiter crush forces and the visual evidence in the sectioned limiter after the test shows that only the backed-up area crushes for aluminum honeycomb with a 3500-psi, multi-directional, dynamic crush strength.

The cask orientation for a corner impact is defined by the angle from vertical of the cask's longitudinal axis when the cask center of gravity is vertically aligned with the impact point on the limiter. This angle is 15.74 degrees for the top limiter and 14.52 degrees for the bottom limiter.

A proprietary computer program, RBCUBED, is used to analyze an impact limiter for an impact event, to determine the dynamics of the event, to determine the forces generated during that event, and to determine the depth of crush (Section 2.10.1.2).

The computer program, RBCUBED, is run for many combinations of crushable material strength until satisfactory results are obtained. Two runs are made for each impact orientation. One run is made using the maximum value of the aluminum honeycomb crush strength, 105 percent of the nominal crush strength, to determine the maximum force on the cask. A second run, using the minimum value for the aluminum honeycomb crush strength, 90 percent of the nominal crush strength, is also made to find the maximum crush depth of the crushable material.

A single RBCUBED run is necessary to determine the reaction force for a 1-foot fall and a subsequent 30-foot fall. The 1-foot fall crushes the limiter a distance (δ_1), and absorbs

12 inches × 52,000 lbs = 0.624 × 10^6 inch-pounds of energy. Then, the impact limiter must absorb the additional energy of 360 inches × 52,000 lbs = 18.72 × 10^6 inch-pounds by crushing an additional distance (δ_2) from a 30-foot drop. The total displacement is $\delta_1 + \delta_2$ and the total energy is (18.72 + 0.624) × 10^6 = 19.344 × 10^6 inch-pounds. Dividing this energy by the cask weight gives 372 inches (31 feet), which demonstrates that a 1-foot fall followed by a 30-foot fall can be evaluated from data for a 31-foot fall. The maximum impact force and the maximum crush depth for the 1-foot fall can be obtained from the RBCUBED output for the 31-foot fall analysis at the value of the energy dissipated in a 1-foot fall.

2.6.7.4.6 Results

The data in Table 2.6.7-32 and Table 2.6.7-33 give the results of the impact limiter design analyses for a 1-foot fall and a subsequent 30-foot fall, respectively. The calculated g loads for the 30-foot fall side impact are based on the 3675-psi design maximum crush strength of the multidirectional aluminum honeycomb. The calculated g loads for all of the other 1-foot and 30-foot fall impacts are conservatively based on an aluminum honeycomb maximum crush strength of 3850 psi. A design cask weight of 52,000 lbs is used.

The calculated (RBCUBED) and measured (quasi-static, adjusted for dynamic crush strength) force-deflection curves for the NAC-LWT cask impact limiters for all drop orientations are presented in Appendix 2.10.12. To verify the results, the area under the curves is calculated by the trapezoidal method. This area represents the energy dissipated for each of the cases, i.e., E_{max} = 19.344 × 10^6 inch-pounds for the top limiter at maximum strength, and E_{min} = 19.206 × 10^6 inch-pounds for the bottom limiter at minimum strength. The potential energy to be dissipated consists of the cask weight (52,000 lbs) multiplied by the distance the cask falls (372 inches), i.e., E_p = 372 × 52,000 = 19.344 × 10^6 inch-pounds. The calculated and actual values compare within 0.71 percent, which indicates that the proper amount of potential energy is dissipated in the RBCUBED analysis. Another check is to multiply the total crush area (the maximum area backed by the cask) by the crush strength of the impact limiters to determine the reacting force. This hand-calculated value of the reaction force for maximum impact limiter crush strength compares within 0.38 percent of the RBCUBED calculated value for the bottom impact limiter and within 1.88 percent for the top impact limiter. The hand-calculated value of the reaction force for minimum impact limiter crush strength compares within 0.46 percent of the RBCUBED calculated value for the bottom impact limiter and within 1.83 percent for the top impact limiter. These results verify both the energy absorption and the reaction force calculations of RBCUBED for the impact limiters.

A study of a side drop shows that the cask will come to rest at an angle of 0.76 degrees with the horizontal because the radius of the top limiter is 2.5 inches larger than that of the bottom limiter.

The RBCUBED analysis, analyzing the side drop as horizontal, is not affected by this small angle because the horizontal component of the forces is negligible.

With both impact limiters at their minimum allowable crush strength (maximum crush depth case), clearance is maintained between the neutron shield/expansion tank and the unyielding surface for the 1-foot side impact.

An evaluation of the displacements obtained from the RBCUBED runs is as follows:

1. The RBCUBED run for the 31-foot side drop assumes the cask is a rigid element and does not include the trunnions; therefore, the displacement from the 31-foot drop must be analyzed, by referring to Figure 2.6.7-11, as follows:

   The free distance of crushable material between the impact limiter and the trunnion equals 14.995 inches. The aluminum honeycomb compresses to 70 percent of its free height before exhibiting behavior as a solid (10.497 inches). The RBCUBED run for the 31-foot side drop with the crushable material at minimum strength calculates a crush depth of 10.00 inches; thus, 0.497 inch of crushable material remains before solid height occurs. Therefore, an impact directly on a trunnion does not change the energy absorbing characteristics of the impact limiter for this condition.

   The impact from a 31-foot side drop on the bottom impact limiter with the crushable material at minimum strength exhibits solid behavior at a displacement of 10.73 inches, which leaves 0.43 inch displacement before solid height occurs (crush depth = 10.30 inches).

2. The impact from a 31-foot flat end drop onto the top impact limiter with the crushable material at minimum strength exhibits solid behavior at a displacement of 10.85 inches, which leaves 0.61 inch displacement before solid height occurs. Similarly, for the bottom impact limiter, solid behavior occurs at 11.20 inches, which leaves 0.90 inch displacement before solid height occurs.

3. For a 31-foot corner drop on the top impact limiter with the crushable material at minimum crush strength, the crush distance of 12.72 inches is much less than the solid height displacement of 16.86 inches. Similarly, for the bottom impact limiter, the 12.70-inch crush distance is much less than the 15.83-inch solid height displacement.

The cask analysis for these impact conditions is based on the maximum deceleration (g) derived from the RBCUBED results. The critical condition for maximum lateral deceleration from both a 1-foot and a 31-foot drop is the side drop with the crushable material at its maximum strength. The critical condition for maximum longitudinal deceleration from a 1-foot drop is the flat bottom drop with the crushable material at its maximum strength, and from a 31-foot drop is the corner drop. The longitudinal component of the deceleration from the 31-foot corner drop was used as the longitudinal criteria; that is, 60.4 cos 15.74 degrees equals 58.1 g. Nevertheless, a 60.0 g (deceleration) is conservatively used as the maximum longitudinal deceleration. The design g load factors (deceleration values) for the NAC-LWT cask analyses are summarized in Table 2.6.7-34. The design g load for the 31-foot side drop is based on the 3675-psi design

maximum crush strength of the aluminum honeycomb impact limiters. The design g loads for all of the other 1-foot and 31-foot drops are conservatively based on an aluminum honeycomb maximum crush strength of 3850 psi.

2.6.7.4.7 Impact Limiter Attachment Analysis

A three-part design criteria applies to the method of attachment of the impact limiters to the cask body. These three criteria are as follows:

1. The impact limiters must remain attached to the cask body during normal handling and transport. Satisfaction of this criterion ensures that the limiters will be in a proper position to perform their impact limiting function in the event of a free drop (normal or accident).
2. In a free drop (normal or accident), the limiter(s) making initial contact with the unyielding surface must remain in position on the end(s) of the cask for the full duration of the initial impact. Satisfaction of this criterion ensures that the limiter(s) will be able to properly perform their impact limiting function.
3. In a free drop (normal or accident) involving an initial impact on a single impact limiter, the limiter on the opposite end of the cask must remain attached to the cask during the initial impact. Satisfaction of this criterion ensures that the limiter will be in a proper position to perform its impact limiting function in a subsequent secondary impact following the initial impact.

Section 2.6.7.4.7 demonstrates that each of the above criterion are satisfied.

Impact Limiter Attachment During Normal Handling and Transport

Attachment of the impact limiters to the cask body during normal handling and transport is ensured by demonstrating that the attachment hardware (pins, lugs and associated welds) does not yield under normal handling and transport conditions. The worst case loading associated with normal handling and transport is taken to be a 10-g axial loading associated with rail transport [10 CFR 71.45 (b)]. This bounds the 2.0-g load corresponding to the peak shock loading expected as the result of truck transport (per ANSI N14.23 for air ride suspensions). For this normal condition evaluation, it will be assumed that only two of the four attachment points for each limiter are effective. The load, P, per attachment point therefore becomes:

$$P = 10.0(1535)/2$$
$$= 7{,}675 \text{ lbs}$$

where 1,535 lbs is the weight of the heaviest (top) impact limiter.

Analysis of Impact Limiter Lug

The geometry of the impact limiter lug is as shown in Figure 2.6.7-15. As shown, the lug has an outer width of 2.0 inches, a hole diameter of 0.53 inch and an edge distance of 1.7 inches. The

lug is made of 6061-T651 aluminum and is 0.5 inch thick. According to Table 2.3.1-4, the yield strength of the aluminum at 150°F is 32,700 psi. Potential failure modes of tension across the net section and 40-degree shearout are considered as follows:

Tension Across the Net Section

$P = 7{,}675$ lbs

$A = 0.5(2.0 - 0.53)$

$= 0.735$ in^2

$S_t = 7{,}675/0.735 = 10{,}442$ psi ($S_y = 32{,}700$ psi)

$MS = 32{,}700/10{,}442 - 1$

$= +2.13$

40-Degree Shearout

$P = 7{,}675$ lbs

$e = 1.7 - (0.53/2) \cos 40°$

$= 1.497$ inches

$A_s = 2(0.5)(e)$

$= 1.497$ in^2

$S_s = 7{,}675/1.497$

$= 5{,}127$ psi ($0.6\ S_y = 19{,}620$ psi)

$MS = 19{,}620/5{,}127 - 1$

$= +2.83$

The impact limiter attachment lug is subject to normal wear and tear during normal handling and transport. Localized deformation/wear to the lug hole from repeated contact with the ball-lok-pin results in what equates to an increase in the diameter of the nominal 0.53 inch hole over time. To establish a basis for the acceptability of this expected wear and a limit for inspection, maintenance, and repair activities, an increased hole diameter of 1.23 inch is evaluated. As with the nominal configuration evaluation, potential failure modes of tension across the net section and shearout are considered as follows:

Tension Across the Net Section

P = 7,675 lbs

A = 0.5(2.0 - 1.23)

= 0.385 in^2

St = 7,675/0.385 = 19,935 psi (Sy = 32,700 psi)

MS = 32,700/19,935 -1

= +0.64

Shearout

P = 7,675 lbs

e = 1.7 - (1.23/2)

= 1.085 inches, conservatively using minimum edge distance

A_s = 2(0.5)(e)

= 1.085 in^2

S_s = 7,675/1.085

= 7,074 psi (0.6 Sy = 19,620 psi)

MS = 19,620/7,074 - 1

= +1.77

An optional impact limiter lug configuration permits the gusset plate impact limiter attachment tab to be an assembly of the tab and gusset plate using a full-penetration weld. The structural strength of the weld using a mock-up test confirms that the minimum weld yield strength is equal to or greater than 10 ksi. The only stress applicable to the weld is the tension across the entire section of the weld. Using the bounding load of 7,675 pounds, the margin of safety for the weld region is:

MS = 10,000/7,675-1
= +0.30

Both the 6061-T651 continuous tab gusset configuration and the optional full-penetration weld assembly configuration, including wear of the nominal 0.53 inch diameter hole up to an effective diameter of 1.23 inch, are confirmed to maintain the attachment of the impact limiters to the cask body for truck or rail transport, considering only two of the four attachment points to be effective.

Analysis of Cask Lug

The geometry of the cask lug is a shown in Figure 2.6.7-16. As shown, the lug actually consists of two, 0.5-inch thick lugs, which are integral to a common base plate (the lugs and base plate are machined from one piece). Each of these two lugs is 2.0 inches wide, has a hole diameter of 0.53 inch and has a minimum edge distance of 0.72 inch in the direction of the applied force P. The base plate is 1.6 inches wide and 2.0 inches long. The material used is Type 304 stainless steel, which exhibits a yield strength at 150°F of 27,500 psi. Potential failure modes of 40-degree shearout and failure of the weld (3/8-inch bevel plus 3/8-inch fillet), which attaches the base plate to the cask body, are considered as follows:

40-Degree Shearout

$F = P/2 = 7{,}675/2$

$= 3{,}838$ lbs

$e = 0.72 - (0.53/2) \cos 40°$

$= 0.517$ in

$A_s = 2(0.5)(e)$

$= 0.517$ in^2

$S_s = 3{,}838/0.517$

$= 7{,}424$ psi ($0.6\ S_y = 16{,}500$ psi)

$MS = 16{,}500/7{,}424 - 1 = +1.22$

Weld Stresses

The analysis of the weld considers the 3/8-inch bevel weld and the 3/8-inch fillet weld around the perimeter of the base plate. Stresses in this weld resulting from the imposed bending moment and the imposed direct shear are converted to von Mises (equivalent) stress and compared against yield strength.

The bending stress in the weld due to the applied moment is as follows:

$$\sigma_b = \frac{Mc}{I} = \frac{13{,}048 \times 1.375}{2.736} = 6{,}557 \text{ psi}$$

where:

$M = 1.7(P) = 13{,}048$ in-lb

$P = 7{,}675$ lbs

$c = 1.375$ in Distance to extreme fiber from weld centroid

$I = \frac{BH^3}{12} - \frac{bh^3}{12} = \frac{2.13 \times 2.53^3}{12} - \frac{0.85 \times 1.25^3}{12} = 2.736$ in^4 Moment of Inertia, weld group

$B = 1.6 + 2 \times 0.707 \times 0.375 = 2.13$ in Width, base of lug plus eff. throat, two fillet welds

H = 2.0 + 2×0.707×0.375 = 2.53 in Height, base of lug plus eff. throat, two fillet welds

b = 1.6 - 2×0.375 = 0.85 in Width, base of lug minus two groove welds

h = 2.0 - 2×0.375 = 1.25 in Height, base of lug minus two groove welds

The stress in the weld due to the applied shear load is:

τ = P/A_s

= 1774 psi

where:

P = 7675 lbs

A_s = (BH) – (bh) = (2.13×2.53) – (0.85×1.25)

= 4.362 in^2

The von Mises (equivalent) stress due to combined bending and shear stresses is:

$\sigma_{eqv} = \sqrt{\sigma_b^2 + 3 \times \tau^2} = \sqrt{6{,}557^2 + 3 \times 1{,}774^2}$

= 7241 psi (S_y = 27,500 psi)

MS = 27,500/7,241 - 1

= +2.80

Analysis of Ball-Lock Pin

The 1/2-inch, AVIBANK 57459-1 ball-lock pins have a 36,800-pound capacity in double shear. With an applied load of 7,675 lbs, the margin of safety +3.79.

Response of Impact Limiter(s) During Initial Impact of Package with Ground

The second criterion applicable to the impact limiters requires that the limiter(s) making initial contact with the unyielding surface must remain in position on the end(s) of the cask for the full duration of the initial impact. To satisfy this criterion, attachment hardware (pins, lugs and/or associated welds) may fail during an impact event as long as the limiter(s) being crushed remains in position on the end of the cask and does not separate from the cask. The ability of the limiter to remain in position during an impact is demonstrated with reference to a series of dynamic, free drop tests (end, center of gravity over corner, side and oblique), during which some attachment hardware failure occurred, and to several static crush tests, during which the only attachment mechanism was a strip of duct tape. All of the tests were performed using quarter-scale models of the limiters. Analytic evaluations are also presented to further justify that the limiters will remain in position during the impact.

Dynamic Free Drop Test Results

As presented in Appendix 2.10.8, a series of 30-foot free drop tests were performed on a quarter-scale model of the NAC-LWT cask. Drop orientations included an end drop, a center of gravity over struck corner drop, a side drop and an oblique drop with a subsequent secondary impact. A study of the drop test photographs presented in Appendix 2.10.8 indicates that although attachment hardware failed in some of the dynamic free drop tests, the limiters did not physically separate from the cask body and did completely perform their intended impact limiting function. In fact, the limiters wedged themselves even more securely onto the cask body.

At all times during the testing, the limiters remained in position on the ends of the cask. Notably, rebound from the drop pad due to the whipping action of the restraint cables, did not result in the limiters separating from the cask even though some attachment hardware failure had occurred. This observation demonstrates a tendency for the limiters to become wedged onto the cask body as the result of an impact.

Based on the above test observations, the conclusion reached is that the limiters will remain in position on the cask body during the full duration of the free drop impact event.

Static Crush Test Results

A series of quasi-static crush tests have been performed on quarter-scale models of the bottom impact limiter for the NAC-LWT cask. The limiter orientations tested were end (axial), side and center of gravity over corner (15.7 degrees from axial). The purpose of the quasi-static crush tests was to document the force-deflection and energy absorption characteristics of the honeycomb material used in the impact limiter. Additionally, the tests demonstrated that the limiters need not be mechanically attached to the cask body in order to remain in position to absorb the energy of crushing. No attachment between the model limiter and the test fixture was used for the end (axial) test. A strip of duct tape was adequate to retain the model limiters in position on the side (90-degree) and center of gravity over corner (15.7-degree) fixtures. Once crushing of the limiter is initiated, its cup-shaped geometry causes it to maintain its position on the fixture, which is identical to a quarter-scale model cask body. Thus, attachment of the impact limiter to the cask body is not necessary for maintaining proper position and energy absorption capability.

Analytic Evaluations

Although the results from the above discussed test programs are considered to be the primary proof that the limiters will remain in position during the impact event and properly perform their impact limiting function, analytic studies can also be used to confirm the test observations. Analytic assessments presented in this evaluation indicate that failure of the attachment hardware

can be expected to occur for some drop orientations, but subsequent to such failure, the cask tends to wedge into the limiter and separation of the limiter from the cask does not occur. As shown, a significant resistance to the applied separation moment exists due to a combination of crushing of the limiter at the cask interface and due to frictional resistance that exists there. This total resistance is shown to be greater than the applied separation moment and is approximately 7.9 times greater than that provided by the attachment hardware alone.

Additionally, it is noted that the maximum applied separation moment occurs early in the impact when crush depths are small. As crush depths increase, the moment arm and the separation moment decrease to zero. The maximum separation moments occur early in the impact event when the package still possesses a significant downward velocity (87 percent of the initial impact velocity). Additionally, the duration of the impact is very short (approximately 0.04 to 0.06 seconds) and minimal rotation (approximately 1 degree) of the package occurs during the impact. Thus, the cask "drives" into the limiter and physically "traps" the limiter between the cask body and the ground.

The remainder of this section presents a detailed analytic study of the center of gravity over top corner impact event. This near vertical orientation, coupled with the fact that little energy will be converted into rotational energy of the entire package (that is, the center of gravity is over the impacted corner), makes this particular orientation a representative worst case regarding the development of significant separation moments. The available impact limiter analysis program results associated with the corner drop are summarized in Figure 2.6.7-17. The crush depths, crush forces and package velocities presented in the summary figure are directly available from the impact limiter analysis program, RBCUBED, and the separation moment is calculated based on the geometry (that is, the crush footprint) existing at the particular position of interest. Of note, the velocity of the package is still 466.2 inches/second (87 percent of the initial impact velocity) when the maximum separation moment of 7.67×10^6 inch-pounds has developed.

Capability of Attachment Hardware

Figure 2.6.7-18 presents a free body diagram for the top impact limiter during a top down center of gravity over corner impact. With point "A" being the pivot point of the impact limiter on the cask, taking moments about point "A" yields the following:

$$F_i x_i = 14.45\ F_2 + (14.45 + 16.1)\ F_1$$
$$= 14.45\ F_1 + 30.55\ F_1$$
$$= 45.0\ F_1 = \text{separation moment}$$

where:

F_1 = maximum force on a lug

$F_2 = 2(F_l/2) = F_1$

$F_3 = 0.0$ (approximately)

F_i = impact force at limiter to ground interface

x_i = moment arm for force F_i

According to the section titled "Response of Secondary Impact Limiter During Initial Impact of Package," the failure mode for the attachment hardware is tension on the net section of the impact limiter lug. Failure of the nominal impact limiter lug design configuration will occur at a load of 28,445 pounds, which corresponds to a stress equal to the ultimate strength of the aluminum lug. Substitution into the above separation moment equation indicates that a moment of 1.28×10^6 inch-pounds can be expected to fail the attachment hardware. As seen from Figure 2.6.7-17, this moment is exceeded prior to 2 inches of crush occurring for the limiter. Attachments may, therefore, fail in the center of gravity over top corner drop.

Resistance to Separation Following Attachment Hardware Failure

If attachments do fail, the cask tends to wedge itself into the limiter as shown in the free body diagram presented as Figure 2.6.7-19. From that figure:

f_{max} = force required to crush limiter honeycomb

= 28.9 S_c (projected area x crush strength) = 28.9(3850)

= 111,265 lb/in

where:

S_c = crush strength of honeycomb used in limiter

= 3850 psi (conservative upper bound crush strength, which was the case selected for Figure 2.6.7-17; the design upper bound crush strength is 3675 psi)

From moment equilibrium:

$F_i x_i = (6\ f_{max}) = 36\ f_{max}$

$= 4.006 \times 10^6$ in-lb

A significant frictional resistance to separation of the limiter also exists. Selecting a coefficient of friction of approximately 0.5 for aluminum on steel (Baumeister, pages 3-26), the frictional resistance to the separation moment is:

$M_f = F_f\ d$

$= 6.145 \times 10^6$ in-lb

where:

F_f = friction force

$0.5(6\ f_{max}) = 3\ f_{max} = 333{,}795$ lbs

and with the centroid of a 180-degree arc (that is, the arc over which f_{max} acts) being located at 63.7 percent of its radius:

$$d = 0.637(28.9)$$
$$= 18.41 \text{ inches}$$

The total resistance to separation, therefore, becomes:

$$M_t = 4.006 \times 10^6 + 6.145 \times 10^6$$
$$= 10.151 \times 10^6 \text{ in-lb}$$

This total resistance to separation exceeds the maximum applied separation moment of 7.67×10^6 inch-pounds (Figure 2.6.7-17). Separation of the limiter from the cask body will not occur. As discussed in the section titled "Dynamic Free Drop Test Results," this particular center of gravity over corner case was tested. Test results are consistent with the preceding analysis in that attachment hardware did fail, that the cask did tend to wedge itself into the impact limiter, and that physical separation did not occur (Appendix 2.10.8, Figures 2.10.8-15 and 2.10.8-16).

Response of Secondary Impact Limiter During Initial Impact of Package

The final criterion to be satisfied is for a free drop (normal or accident) involving an initial impact on a single impact limiter, that the limiter on the opposite end of the cask (secondary limiter) must remain attached to the cask during the initial impact. This ensures that the secondary limiter will be in position to absorb the secondary impact and, as discussed in the section titled "Response of Impact Limiter(s) During Initial Impact of Package with Ground," it remains in position for the full duration of the secondary impact and performs its impact limiting function. Attachment is ensured by demonstrating that the attachment hardware (pins, lugs and associated welds) does not fail during the initial impact while the far end of the transport cask is rotating about the end that is in contact with the ground. For this evaluation, the worst case loading on the secondary impact limiter to separate it from the cask is based on the response of the cask to an oblique drop slapdown (cask angle 15°-75°) which imparts a rotational moment about the cask base and a resulting angular velocity (ω) to the package. The angular velocity results in a radial angular acceleration (A_r) of the far end of the cask (a radius of r) that is computed by $r\omega^2$. The angular velocity is determined by using conservation of energy.

As discussed in Section 2.10.4, the total energy dissipated in a free drop is equal to the sum of the energy absorbed during impact of the first impact limiter (E1), the remaining energy after the first impact (ER), the rotational potential energy (EP), and the elastically stored energy (ES). Assuming all the energy not absorbed in the initial impact (i.e. ER+EP+ES) is converted into rotational kinetic energy, the angular velocity is calculated as follows:

$$\omega = \sqrt{\frac{2KE}{I}}$$

Where, KE is the maximum rotational kinetic energy for an oblique drop or 1.03×10^7 in-lbs (ER+EP+ES = E2 from Table 2.10.4-1 for a 75° drop angle). The moment of inertia of the cask (I) about the point of rotation is computed for a 199.8-in long, 39.23-in diameter, right circular cylinder about the edge in conjunction with the impact limiter (M_L) (see page 34 of "Formulas for Natural Frequency and Mode Shape," Robert D. Blevins, Ph.D, Krieger Publishing Co., Inc., 1984):

$$\begin{aligned} I &= (M)\times\left[\frac{1}{12}\left(3\times(R)^2+(L)^2\right)+(R)^2\right]+M_L\times L^2 \\ &= \left(118.2\ \text{lb}\cdot\text{sec}^2/\text{in}\right)\times\left[\frac{1}{12}\left(3\times\left(\frac{39.23\ \text{in}}{2}\right)^2+(199.8\ \text{in})^2\right)+\left(\frac{39.23\ \text{in}}{2}\right)^2\right]+3.97\times199.8^2 \\ &= 6.09\times10^5\ \text{lb}\cdot\text{sec}^2\cdot\text{in} \end{aligned}$$

where,

M = mass of the empty cask, less the weight of one impact limiter = $\frac{45{,}673\ \text{lbs}}{386.4\ \text{in}/\text{sec}^2} = 118.2\ \text{lb}\cdot\text{sec}^2/\text{in}$

M_L = mass of the impact limiter = $\frac{1{,}535\ \text{lbs}}{386.4\ \text{in}/\text{sec}^2} = 3.97\ \text{lb}\cdot\text{sec}^2/\text{in}$

The bounding angular velocity is therefore:

$$\varpi = \sqrt{\frac{2\times KE}{I}} = \sqrt{\frac{2\times(1.03\times10^7 in\cdot lbs)}{6.09\times10^5 lb\cdot sec^2\cdot in}} = 5.82\,{}^{rad}/_{s}$$

The radial acceleration (A_r) (g) using a radius of 200 inches from the bottom to the top end of the cask is:

$$A_r(g) = \frac{200in\times\left(5.82^{rad}/_{s}\right)^2}{386.4} = 17.5g$$

The calculations for the stress conservatively use a bounding acceleration of 18 g's. Considering only two of the four attachment points, the load, P, per attachment point therefore becomes:

$$P = 18 \times 1{,}535/2$$
$$= 13{,}815 \text{ lbs}$$

where 1,535 pounds is the weight of the heaviest (top) impact limiter.

Analysis of Impact Limiter Lug

The impact limiter lug is evaluated using the same approach as was used in the section titled "Analysis of Impact Limiter Lug," but the allowable limit is based on ultimate strength rather than yield strength. As shown in Table 2.3.1-4, the ultimate strength of 6061-T651 aluminum at 150°F is 38,700 psi. Potential failure modes of tension across the net section and 40-degree shearout are considered as follows:

Tension Across the Net Section

$P = 13{,}815$ lbs

$A = 0.5(2.0 - 0.53)$

$= 0.735$ in^2

$S_t = 13{,}815 / 0.735$

$= 18{,}796$ psi ($S_u = 38{,}700$ psi)

$MS = 38{,}700/18{,}796 - 1$

$= +1.06$

40-Degree Shearout

$P = 13{,}815$ lbs

$e = 1.7 - (0.53/2) \cos 40°$

$= 1.497$ inches

$A_s = 2(0.5)(e)$

$= 1.497$ in^2

$S_s = 13{,}815/1.497$

$= 9{,}228$ psi ($0.6\ S_u = 23{,}220$ psi)

$MS = 23{,}220/9{,}228 - 1$

$= +1.52$

To account for expected wear and tear to the impact limiter lug hole, an increased hole diameter of 1.23 inch is evaluated. As with the nominal configuration evaluation, potential failure modes of tension across the net section and shearout are considered as follows:

Tension Across the Net Section

$P = 13,815$ lbs

$A = 0.5(2.0 – 1.23)$

$= 0.385$ in^2

$S_t = 13,815/0.385$

$= 35,883$ psi ($S_u = 38,700$ psi)

$MS = 38,700/35,883 - 1$

$= +0.08$

Shearout

$P = 13,815$ lbs

$e = 1.7 - (1.23/2)$

$= 1.085$ inches, *conservatively using minimum edge distance*

$A_s = 2(0.5)(e)$

$= 1.085$ in^2

$S_s = 13,815/1.085$

$= 12,733$ psi ($0.6\ S_u = 23,220$ psi)

$MS = 23,220/12,733 - 1$

$= +0.82$

An optional impact limiter lug configuration permits the gusset plate impact limiter attachment tab to be an assembly of the tab and gusset plate using a full-penetration weld, as described in Section 8.2.1.1, Impact Limiter Attachment Lug Repairs. Structural strength of the weld using a mock-up test confirms that the minimum weld tensile strength is equal to or greater than 20 ksi. The only stress applicable to the weld is the tension across the entire section of the weld. Using the bounding load of 13,815 pounds, the tensile stress is 13,815 (2×1/2) or 13,815 psi and the margin of safety for the weld region is:

$MS = 20,000/13,815-1$

$= +0.45$

Both the 6061-T651 continuous tab gusset configuration and the optional full-penetration weld assembly configuration, including wear of the nominal 0.53 inch diameter hole up to an effective

diameter of 1.23 inch, are confirmed to maintain the attachment of the impact limiters during the bounding condition of the accident side drop condition.

Analysis of Cask Lug

The cask lug is evaluated using the same approach as was used in the section titled "Analysis of Impact Limiter Lug," but the allowable limit is based on ultimate strength rather than yield strength. The ultimate strength of Type 304 stainless steel at 150°F is 73,000 psi. Potential failure modes of 40-degree shearout and failure of the weld (3/8-inch bevel plus 3/8-inch fillet), which attaches the base plate to the cask body, are considered as follows:

40-Degree Shearout

$F = P/2 = 13,815/2$
$= 6,908$ lbs
$e = 0.72 - (0.53/2) \cos 40°$
$= 0.517$ in
$A_s = 2(0.5)(e)$
$= 0.517$ in^2
$S_s = 6,908/0.517$
$= 13,362$ psi ($0.6\ S_u = 43,800$ psi)
$MS = 43,800/13,362 - 1$
$= +2.28$

Weld Stresses

The analysis of the weld considers the 3/8-inch bevel weld and the 3/8-inch fillet weld around the perimeter of the base plate.

The bending stress in the weld due to the applied moment is as follows:

$$\sigma_b = \frac{Mc}{I} = \frac{23,486 \times 1.375}{2.736} = 11,803 \text{ psi}$$

where:

$M = 1.7(P) = 23,486$ in-lb
$P = 13,815$ lbs Load per attachment point
$c = 1.375$ in Distance to extreme fiber from weld centroid

I = $\frac{BH^3}{12} - \frac{bh^3}{12} = \frac{2.13 \times 2.53^3}{12} - \frac{0.85 \times 1.25^3}{12}$ = 2.736 in^4 Moment of Inertia, weld group

B = 1.6 + 2×0.707×0.375 = 2.13 in Width, base of lug plus eff. throat, two fillet welds

H = 2.0 + 2×0.707×0.375 = 2.53 in Height, base of lug plus eff. throat, two fillet welds

b = 1.6 - 2×0.375 = 0.85 in Width, base of lug minus two groove welds

h = 2.0 - 2×0.375 = 1.25 in Height, base of lug minus two groove welds

The stress in the weld due to the applied shear load is:

$\tau = P/A_s$

= 3,193 psi

where:

P = 13,815 lbs

A_s = (BH) – (bh) = (2.13×2.53) – (0.85×1.25)

= 4.326 in^2

The von Mises (equivalent) stress due to combined bending and shear stresses is:

$\sigma_{eqv} = \sqrt{\sigma_b^2 + 3 \times \tau^2} = \sqrt{11{,}803^2 + 3 \times 3{,}193^2}$

= 13,034 psi (0.6 S_u = 73,000 psi)

MS = 73,000/13,034 - 1

= +5.60

Analysis of Ball-Lock Pin

The 1/2-inch, AVIBANK 57459-1 ball-lock pins have a 36,800-pound capacity in double shear. With an applied load of 13,815 pounds, the margin of safety becomes:

MS = 36,800/13,815 - 1

= +1.66

2.6.7.5 Closure Lid

2.6.7.5.1 Discussion

The NAC-LWT cask closure lid is analyzed for structural adequacy in accordance with the requirements of 10 CFR 71.73(c)(1) free drop (hypothetical accident condition). The cask is assumed to be inverted, with the lid downward, when dropped through a distance of 30 feet onto a flat, unyielding, horizontal surface. The structural evaluation is performed by classical elastic analysis methods.

2.6.7.5.2 Analysis Description

Geometry

The closure lid geometry is shown in Figure 2.6.7-20. The lid is bolted in position on the upper end of the cask. The lid material is Type 304 stainless steel. The temperature-dependent material properties for Type 304 stainless steel, which are presented in Section 2.3, are used in this analysis.

Loadings

During impact, the cask cavity contents are considered to apply an internal inertia pressure on the interior surface of the lid in the outward normal direction. The impact limiter applies an external inertia pressure on the exterior lid surface in the inward normal direction; however, this pressure is conservatively ignored in this analysis. Each bolt is torqued to a preload force of 21,000 pounds. The lid is also loaded with an assumed 50-psig internal pressure for the 130°F ambient temperature hot case.

Displacement Boundary Conditions

The closure lid is restrained from vertical and rotational deformation at the 17.875-inch bolt circle diameter by the preloaded lid bolts.

Detailed Analysis

For the loading and boundary conditions described, the structural behavior of the closure lid may be assessed by superposition of maximum stresses from Section 2.6.1, which includes consideration of thermal effects, bolt preload, and internal pressure, with the maximum stresses produced by the inertia loading. The maximum $P_m + P_b$ component stresses from Section 2.6.1 (Table 2.6.1-2) are:

$$S_x = -3060 \text{ psi};\ S_y = -260 \text{ psi};\ S_z = 100 \text{ psi};\ S_{xy} = 180 \text{ psi}$$

The free body diagram of Figure 2.6.7-21 can be evaluated by applying formulas from Case 6 (Roark, page 217) for a uniformly loaded circular plate.

The total deceleration force of the contents, F_D = 4000 lbf × 60 g deceleration = 240,000 lbf, creates a pressure, W, on the lid interior surface:

$$W = \frac{240,000}{\pi(8.938)^2} = 956 \text{ psi}$$

The maximum radial, tangential, and vertical stresses on the lid are:

$$S_r = \frac{3Wa^2}{4t^2}$$

$$= 895 \text{ psi}$$

$$S_t = \frac{3Wa^2\gamma}{4t^2}$$

$$= 246 \text{ psi}$$

$$S_v = -W$$

$$= -956 \text{ psi}$$

where:

a = 8.938 inches

γ = 0.275

t = 8.0 inches

Conservatively combining these stresses with $P_m + P_b$ stresses from Section 2.6.1 (Table 2.6.1-2), the total $P_m + P_b$ component stresses on the lid are:

S_x = -3955 psi; S_y = - 1216 psi; S_z = 346 psi; S_{xy} = 180 psi

For small S_{xy}, the stress intensity becomes S.I. = $S_z - S_x$ = 4301 psi. Since the maximum cask lid temperature is less than 300°F for the 130°F ambient temperature hot case (Section 3.4.2), the closure lid allowable $P_m + P_b$ stress is 72,000 psi (3.6 S_m). Therefore, the minimum margin of safety is +Large; thus, containment is maintained.

2.6.7.5.3 Conclusion

It is demonstrated by use of a conservative loading that the minimum margin of safety is +4.23 and containment is maintained. Therefore, the NAC-LWT cask lid satisfies the requirements of 10 CFR 71 for consideration of the closure lid impact in the 30-foot free drop accident.

2.6.7.6 Bolts - Closure Lid (Normal Conditions of Transport)

The NAC-LWT cask closure lid is bolted to the cask body top forging with twelve 1 - 8 UNC bolts fabricated from SA-453, Grade 660 high alloy steel. The threaded portion of the bolt engages the cask body a minimum of 1.875 inches. In accordance with the free drop provisions of the normal conditions of transport, 10 CFR 71.71(c)(7), this bolted closure has been carefully evaluated for structural adequacy and found to satisfy all regulatory requirements and design criteria. Details of this analytic evaluation follow.

The simultaneous loads that may be imposed upon the cask closure bolts include: pressure loads, thermal differential expansion loads, pre-loads and inertial loads arising from impact responses. For a given set of initial conditions, the pressure loads, thermal loads and pre-loads all remain constant. Inertial impact loads, however, vary with impact orientation and bolt location. Lateral impact loads acting upon the lid are directly related to the mass of the lid and the lateral impact acceleration. Longitudinal impact loads acting on the lid are proportional to the longitudinal impact acceleration, as well as, the mass of the lid and the payload within the containment cavity.

In general, these lid impact loads impose unequal individual forces, or loadings, in the closure bolts. This NAC-LWT cask evaluation conservatively assumes a set of impact forces that induce maximum containment closure separation forces and bolt loadings. With this conservative assumption, the external impact force is presumed to be located at a point where it cannot restrain those forces that tend to separate the cask lid from the cask body. This assumption locates the external impact force at the lower corner of the lid-body interface. With this assumption the lower corner of the lid is assumed to be pinned (by the impact forces), and bolt tension forces are assumed to vary linearly from zero at this pinned lower corner to a maximum value at the opposite, or upper, corner of the lid.

A complete range of impact orientations is evaluated, from an end impact at 0 degrees to a flat side impact at 90 degrees, and at 5-degree increments in between. Loads are derived from the normal impact accelerations summarized within Table 2.6.7-34. Where necessary, impact accelerations have been interpolated at 5-degree increments from those values given in Table 2.6.7-34.

The details of this analytic evaluation are described and performed within Section 2.10.9 for both normal conditions of transport and hypothetical accident conditions. Normal conditions of transport results are summarized in Table 2.6.7-35 and Table 2.6.7-36, corresponding to a “hot” initial condition and a “cold” initial condition, respectively. The hot initial condition bolt temperature is taken at 227°F, as summarized in Table 3.4-2. The cold initial condition bolt temperature is assumed to be -20°F, per regulatory requirements. Physical properties for the SA-

453, Grade 660 bolts are conservatively taken at 300°F and at room temperature (70°F) for hot and cold conditions, respectively. As defined within Table 2.1.2-1, the allowable bolt stress is taken as S_y, leading to allowable direct tension stresses of 81.9 and 85.0 ksi, at 300°F and 70°F, respectively. Based on this thorough evaluation, the closure bolts incur a maximum stress intensity of 61,012 psi, which results in a minimum margin of safety of 34 percent. See Table 2.6.7-35 (at 5°):

$$MS = 81.9/61.042 - 1$$
$$= +0.34$$

Bolt engagement may be evaluated by computing shear stresses within the SA-336, Type 304, end forging material. At 300°F, the allowable shear stress is 0.5 S_y, or 11.25 ksi, according to Tables 2.1.2-1 and 2.3.1-1. The maximum tensile load is found as the product of the maximum bolt stress intensity, noted above, and the bolt stress area; that is, (61,042 psi)(0.6051) = 36,937 pounds. The shear area per inch of engagement for a 1 - 8 UNC internal thread is 2.325 in^2/in ("Table Speeds Calculation of Strength of Threads," pp. 41-49). The resultant shear stress and margin of safety within the top body forging is:

$$\tau = P/A = (36,937)/[(2.325)(1.875)]$$
$$= 8473 \text{ psi}$$
$$MS = 11.25/8.473 - 1$$
$$= +0.33$$

Using consistently conservative assumptions, the NAC-LWT cask lid bolted closure can be shown to satisfy the performance and structural integrity requirements of 10 CFR 71.71(c)(7) for normal conditions of transport.

2.6.7.7 Neutron Shield Tank

2.6.7.7.1 Introduction

The neutron shield tank is welded to, and concentric with, the NAC-LWT cask outer shell. The tank consists of eight cells. The neutron shield fluid flows freely through holes in the longitudinal stiffeners between these cells. During thermal expansion or contraction, fluid passes through the valve assembly into or out of the expansion tank, which is external to and concentric with, the shield tank. Table 2.6.7-37 summarizes the results of the structural analyses described below. The table shows positive margins of safety, demonstrating that each component of the neutron shield tank satisfies the requirements of the normal operations conditions 1-foot free drop as described in 10 CFR 71.71. Classical analysis techniques are used to demonstrate that each tank component withstands the hydrodynamic loads from a 1-foot side or end drop in combination with internal tank pressure. Similarly, classical analyses show that the

shield/expansion tank does not rupture, nor does the check valve sustain damage during the penetration test.

The shield tank wall has a mean diameter of 39.04 inches, is located approximately 23 inches below the top edge of the upper end casting, and extends 164 inches longitudinally. Constructed entirely of Type 304 stainless steel, the tank external shell and eight longitudinal stiffeners are 0.24-inch thick plate. Each end of the tank is a 0.50-inch thick end plate. Equally spaced between stiffeners are eight 0.24-inch thick gusset plates, which provide additional support to the end plates.

A 56 percent by volume ethylene glycol and water solution provides the neutron shielding. The shield tank fluid volume (excluding stiffeners) is 84,742 cubic inches or approximately 370 gallons (3,280 pounds) of fluid. At the upper end, concentric with the shield tank, is the expansion tank. The expansion tank is 46 inches long and is constructed from 0.32-inch thick stainless steel plate; there are eight cells divided by equally spaced plate stiffeners with holes in them, which enables the fluid to flow from chamber to chamber. The expansion tank empty volume is 13,245 cubic inches. It is filled with 11.5 gallons (103 pounds) of solution initially, leaving an expansion volume of 10,589 cubic inches. At the bottom of the expansion tank is a siphon tube, which goes around the shield tank and exits at its top. Volumetric expansion forces fluid through the siphon tube. During heating, the solution in the shield tank expands into the expansion tank avoiding uncontrolled pressurization of the shield/expansion tank. A pressure relief valve in the shield tank assures that the tank structure is protected against over pressurization. The pressure relief valve is set to begin relieving pressure at 165 psig. Initially, the expansion tank is filled with 11.5 gallons of fluid to assure that the shield tank remains filled at -40°F. A cross section of the upper end of the cask with pertinent dimensions is shown in Figure 2.6.7-22.

2.6.7.7.2 Structural Criteria

The neutron shield tank and expansion tank analyses use 10 CFR 71 and Regulatory Guide 7.8 to determine load/ambient conditions to bound other load conditions. In this way, the shield/expansion tank components are conservatively analyzed for the most severe structural loads at maximum temperatures; thus, the material properties and allowable stresses have minimum values.

The 10 CFR 71 requires that all transport packages weighing more than 30,000 pounds be evaluated to determine the consequences of a free fall through a distance of 1-foot onto a horizontal, unyielding surface for normal operation; cask orientation during the fall shall be such that maximum damage is inflicted upon the cask. End and side drop g loads are the most severe normal operating loads that the cask sustains; analyses of the shield and expansion tanks are

based on the end and side drop loads. All other cask drop orientations produce less severe g loads.

Table 2 in Regulatory Guide 7.8 defines three initial ambient states that guide the analyses. The two extreme cases used to envelope analyses are:

1. 100°F ambient temperature, with maximum insolation, decay heat, internal pressure, weight, and minimum external pressure
2. 20°F ambient temperature, with no insolation or decay heat, minimum internal pressure, weight, and external pressure.

These conditions are used to evaluate the shield tank fluid temperatures (Actually, Sections 3.4.2 and 3.4.3 results, which are based on the more limiting ambient temperatures of 130°F and -40°F are used). With the fluid temperatures established, it is then possible to calculate the shield/expansion tank pressures for the extreme cases and the resulting amount of fluid flowing between the shield tank and the expansion tank (for expansion tank sizing). Table 2.6.7-38 summarizes the calculated shield tank fluid temperatures used in analyzing the shield tank structure.

Since the functional and structural adequacy of the neutron shield and expansion tanks depend on linear elastic evaluations, the allowable stress criteria is selected as the material yield strength. All calculated stresses are less than this criteria. From Table 2.6.7-38, the highest average fluid temperature is 227°F; therefore, material properties for 250°F are used in the analyses. The evaluation of the shield/expansion tank and the resulting conclusions are conservative.

2.6.7.7.3 Neutron Shield and Expansion Tank Loads

Structural, hydrostatic/hydraulic pressure and expansion pressure are the three components of shield tank loads. Structural loads result from decelerating the cask structure. Hydrostatic and hydraulic loads (water hammer) result from the shield tank fluid decelerating against the shield tank structure. Expansion pressure loads are generated when the fluid expands during heating. An explanation of how each type of load is calculated follows.

Structural loads are loads imposed on the structure by the weight of the structure itself. The stainless steel materials from which the cask is fabricated all have mass and are acted upon by gravity and the normal operations conditions 1-foot drop deceleration. Shield tank structural components weigh approximately 2,116 pounds. Expansion tank components weigh approximately 610 pounds. These loads are included in the analysis of the tanks.

Hydrostatic pressure is the pressure at a given depth within a fluid caused by the mass of the fluid being accelerated by gravity. Hydraulic pressure is the hydrostatic pressure acted upon by accelerations other than gravity. To determine the hydrostatic pressure of fluid acting on the plate, the following formula is used:

$$p = \rho g h$$

where:

ρ = mass density of fluid (lbm/in^3)
g = acceleration due to gravity (in/sec/sec)
h = height of fluid above point considered (in)

When the cask is vertical, the maximum fluid height in the shield tank is 164 inches, which is equivalent to 6.3 psig under the acceleration of gravity (1 g). When the cask is in the horizontal position, there is a 39-inch maximum fluid height (diameter of shield tank) or 1.56 psig (1 g). The presence of the expansion tank around the shield tank is conservatively neglected, because the fluid pressure acting on the exterior of the shield tank reduces the forces acting on the shield tank components. During a 1-foot end drop (normal operations conditions), the cask undergoes a 15.8 g deceleration (Section 2.6.7.4). This results in a hydraulic pressure of 100 psig (6.3 psig × 15.8 g) at the bottom of the shield tank. Similarly, during the side drop, the pressure at the lowest point on the shield tank is 38 psig (1.56 psig × 24.3 g). The maximum hydrostatic and hydraulic pressures for the end and side drops and the location of the maximum pressure for the shield tank analyses are shown in the following sketches.

1-Foot End Drop (15.8 g)

Maximum Hydrostatic Pressure	Maximum Hydraulic Pressure
6.3 psig	100 psig

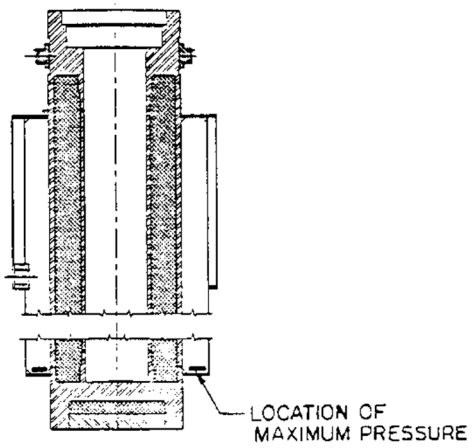

Vertical Orientation

1-Foot Side Drop (24.3 g)

Maximum Hydrostatic Pressure	Maximum Hydraulic Pressure
1.56 psig	38 psig

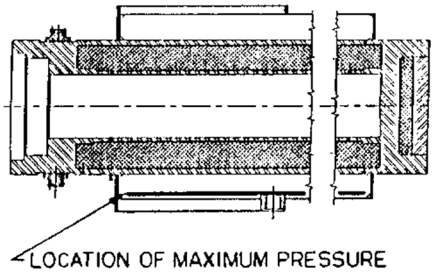

Horizontal Orientation

The g loads for various drop orientations and how they were calculated are explained in Section 2.6.7.4.

Once the shield/expansion tank is filled, it is a sealed compartment, which will not permanently deform under normal transport conditions. The neutron shield tank solution expands or contracts when heated or cooled. During heating the liquid expansion causes fluid to flow into the expansion tank, compressing the air in the expansion tank and causing the pressure to increase. Similarly, as the cask fluid temperatures reach 40°F, there is sufficient fluid in the expansion tank to always keep the neutron shield tank completely filled.

The neutron shield tank is completely filled in the upright configuration, when the fluid and ambient conditions are at 68°F. The 56 percent by volume ethylene glycol and water solution

has a density of 67.07 lbs/ft^3 at 68°F. After the neutron shield tank is filled, 11.5 gallons of solution are poured into the expansion tank. Both tanks are then sealed.

The normal transport condition of maximum decay heat load, 100°F ambient temperature and maximum insolation results in an average (natural and forced mixing of fluid is assumed) shield tank fluid temperature of 227°F. The volume of fluid that enters the expansion tank as the temperature increases from 68°F to 227°F is:

$$\Delta V = V_1\left(\frac{\rho_1}{\rho_2} - 1\right) = 5539 \text{ in}^3$$

where:

ρ_1 = 67.07 lb/ft^3 = density of 56 percent ethylene glycol and water solution at 68°F

ρ_2 = 63.07 lb/ft^3 = density of 56 percent ethylene glycol and water solution at 230°F

V_1 = 87,398 lb/in^3 = volume of fluid in the expansion and shield tank at 68°F

ΔV = volume of fluid entering the expansion tank

Then the increased uniform air pressure in the expansion tank at 230°F is:

$$P_2 = P_1\left(\frac{V_1 T_2}{T_1 V_2}\right) = 40.3 \text{ psia (25.6 psig)}$$

where:

P_1 = 14.7 psia

V_1 = 10,589 in^3 (expansion tank air volume at 68°F)

T_1 = 528°R = 68°F

T_2 = 690°R = 230°F

V_2 = 10,589 in^3 - 5539 in^3 - 5050 in^3 (expansion tank air volume at 230°F)

The same analysis procedure was used to calculate the pressures at other significant normal operating states; these pressures are presented in Table 2.6.7-39. Properties for the 56 percent by volume ethylene glycol and water solution are presented in Table 3.2-5. Two normal operating conditions are presented in Table 2.6.7-39, and are helpful in understanding how the cask operates, but are all bounded by the pressure relief valve release pressure (PRVR) shown in Table 2.6.7-39. The PRVR pressure is used to establish the structural loads for shield and expansion tank analyses.

Thus, the magnitude of the expansion pressure is determined as discussed previously by the volume of fluid added to the expansion tank during the initial filling. It is assumed that 11.5

gallons of fluid are added to the expansion tank, 0.5 gallons more than specified. This results in a maximum expansion pressure of 26 psig.

In addition to the expansion pressure acting radially outward, 10 CFR 71, Subpart F, requires that the cask be able to sustain a reduced external pressure. The cask is initially filled and pressurized at atmospheric pressure (14.7 psia). When the external pressure is reduced to 3.5 psia, there is a relative increase in internal pressure of 11.5 psig (rounded to 12 psig). The reduced external pressure load has been included in the analysis as an increase in internal pressure.

The calculated pressures for the end drop load condition are as follows:

Reduced external pressure	12 psig
Hydraulic pressure	100 psig
Expansion pressure	26 psig
TOTAL	138 psig

The calculated pressures for the side drop load condition are as follows:

Reduced external pressure	12 psig
Hydraulic pressure	38 psig
Expansion pressure	26 psig
TOTAL	76 psig

These pressures are conservatively assumed to add algebraically and represent the highest pressure expected at a point on the shield/expansion tank structure. All other pressures within the shield/expansion tank are less because the hydraulic pressure is a function of fluid depth.

2.6.7.7.4 Neutron Shield Tank Structural Analyses

To simplify analysis of the shield tank structure, the use of symmetry, superposition and analysis of worst case loads are employed to reduce the number of calculations to be performed. Major shield tank structural components are shown in Figure 2.6.7-23. Analyses performed and resulting conclusions for one location of the shield tank are directly applicable to the same relative location elsewhere on the shield tank structure. For reasons stated earlier, the normal operating conditions 1-foot end drop loads envelope all other normal operations conditions drop orientations, and is the only loading condition that is considered in the following analyses. Moreover, the bottom end drop g load is more severe than the top end drop, and is used in both

the top and bottom end drop analyses. The shield tank analysis is performed with the shield tank pressure equal to 180 psig, a pressure 42 psig higher than the calculated 138 psig for the end drop (which envelops the side drop condition).

The bottom end plate, shield tank shell, gussets, top end plate, and welds are the major components of interest in the shield tank evaluation for normal transport conditions.

To ensure a conservative analysis of the neutron shield and expansion tank structure, several simplifying assumptions are made for all analyses performed (other assumptions are stated with each analysis). The allowable stress is taken as the yield strength of Type 304 stainless steel at 250°F, which is 23,750 psi. This is conservative since the maximum calculated shield/expansion tank normal operating temperature is 227°F.

Finally, the edge restraint of the structural components analyzed is considered to be simply supported. The smallest welds are considered in the analyses; a larger weld assures a conservative analysis.

Weld Allowable Stresses

The shield and expansion tanks are constructed primarily from 0.24-inch thick Type 304 stainless steel plate. The plates are welded together using 0.188-inch fillet welds, using Type 308 weld material. From the Metals Handbook, 9th Edition, Volume 3, page 20, the ultimate tensile strength is 75.0 ksi. The allowable strength for shield tank fillet welds is:

$$S_{ALL} = (0.3)(75{,}000)$$
$$= 22{,}500 \text{ psi}$$

or:

$$f_{ALL} = (0.707)(22{,}500)\omega$$
$$= 15{,}900\omega \text{ lb/in}$$

where:

f_{ALL} = fillet allowable (lb/in)

ω = fillet weld size (in)

The only size fillet weld considered in the shield tank analysis is a 0.188-inch fillet. Therefore, the 0.188-inch fillet weld has an allowable strength of:

$$f_{ALL} = (15{,}900)(0.188 \text{ in})$$
$$= 2980 \text{ lb/in}$$

Structural Loads

Shield tank and end plate loads are considered in the neutron shield tank analysis. The weight of a unit depth of the 0.24-inch thick shield tank plate material is considered to be located at the mass centroid of the plate assembly. The mass centroid is 6.13 inches from the outer shell, as shown in the following analysis:

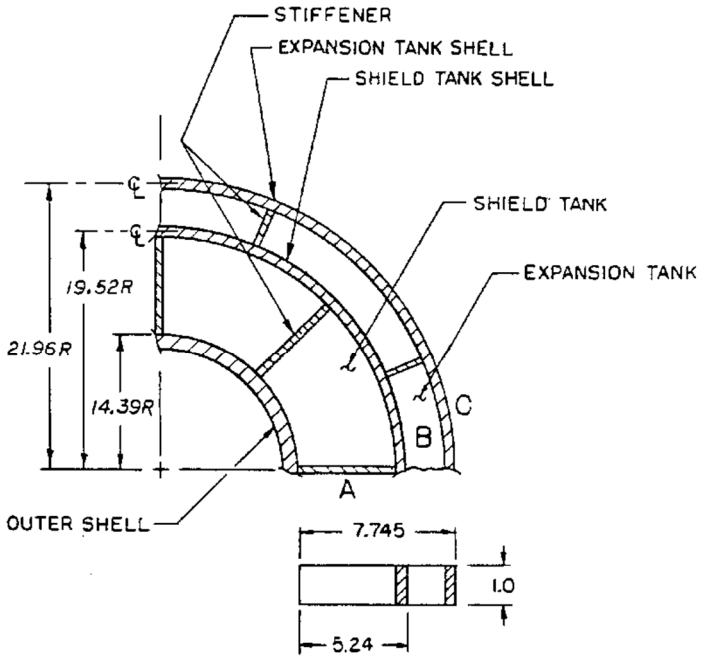

Quarter Section - NAC LWT Cask

Two "A" plates weigh 1.051 pounds with a mass centroid at 3.87 inches from the outer shell.
Two "B" plates weigh 2.005 pounds with a mass centroid at 5.12 inches from the outer shell.
Two "C" plates weigh 3.032 pounds with a mass centroid at 7.59 inches from the outer shell.
The total weight of the plates is 6.09 pounds.

The mass centroid is located at:

$$\bar{x} = \frac{(1.051\ \text{lb})(3.873\ \text{in}) + (2.005\ \text{lb})(5.12\ \text{in}) + (3.032\ \text{lb})(7.59\ \text{in})}{5.643\ \text{lb}}$$

$$= 6.134\ \text{in}$$

The weight of the neutron shield tank structural plates is considered to act at 6.09 inches from the outer shell. The weight of one stiffener and shield/expansion tank shell section is 3.54 pounds.

The shield tank end plates are 0.5-inch thick stainless steel plate. To determine the structural load, the weight of the plate was divided by its area. The resulting structural load is 3 pounds/square inch.

Shield Tank Shell

The shield tank shell is analyzed as a thin-walled tube, taking no credit for the eight radial stiffeners, which run the length of the tank. Using Case 1 (Roark, page 298), the meridional and hoop stresses are calculated:

$$S_1 = \frac{pR}{2t} = 7414 \text{ psi}$$

where:

p = 180 psig

R = 19.44 inches

t = 0.24 in

and

$$S_2 = \frac{pR}{t} = 14{,}827 \text{ psi}$$

Von Mises yield criterion is used to calculate an equivalent stress, S_e, which is compared to the yield strength of stainless steel.

$$S_e = \frac{1}{\sqrt{2}} \left[(S_1 - S_2)^2 + (S_2 - S_3)^2 + (S_3 - S_1)^2 \right]^{0.5}$$

$$= 12{,}841 \text{ psi}$$

where:

S_1 = 7414 psi

S_2 = 14,827 psi

S_3 = 0 psi

then

$$M.S. = \frac{S_{ALL}}{S_e} - 1 = \underline{+0.07}$$

where:

S_{ALL} = (0.577)(23,750 psi)
= 13,700 psi

Stiffener

A 1-inch longitudinal section of the neutron shield tank is analyzed. The total pressure load (180 psi) acts equally between stiffeners as shown in Figure 2.6.7-24. No credit is taken for support from the end plates or the expansion tank end plate. The load acting on the stiffener (L = 2772 pounds) is the area of the tank shell 15.4 square inches (15.4 inches × 1 inch) multiplied by the total end drop pressure, 180 psi. The cross sectional area, A_p , of a 1-inch section of the stiffener plate is 0.24 square inches (0.24 inch × 1.0 inch). The tensile stress acting on the stiffener is calculated:

$$S_T = \frac{L}{A_p} = 11,746 \text{ psi}$$

then

$$M.S. = \frac{S_{ALL}}{S_T} - 1 = \underline{+0.17}$$

where:

S_{ALL} = 13,700 psi (Section 2.6.7.7.4)

The stiffeners are the structural members locating the shield tank shell and providing support for the end plates (similar to the gussets) during end drops. This analysis demonstrates that the stiffeners have adequate strength to withstand the maximum pressure in the shield tank. The analysis in Section 2.6.7.7.4 shows that the shield tank shell has adequate strength to withstand the maximum pressure in the shield tank. All other drop orientations offer less severe structural loads on both the stiffeners and tank shell. Lightening holes in each stiffener do not affect the structural integrity of the shield tank and stiffeners. Lightening holes are located away from the ends of the stiffeners where the hydraulic component of the pressure load is less severe.

Stiffener Weld

A unit section (1 inch longitudinal) of stiffener weld is analyzed. Two loads act on the weld attaching the stiffener to the cask outer shell. The drop pressure load acting on the stiffener is L = 2772 pounds (see section titled “Stiffener”). In addition to the pressure load, the structural load (L_s) is calculated concentrating the mass of the tank (stiffeners and shell) unit section (see section titled Structural Loads). The structural pressure loads and welds being examined are shown in Figure 2.6.7-25. Treating the two 1-inch welds as lines and determining the weld loading using methodology found in Design of Welded Structures (Blodgett, Section 7.4):

Tensile Load

f_t = 2772/2

= 1,386 lb/in

where:

L = 2,772 lbs

Shear Load

f_s = 55.9/2

= 28.0 lb/in

where:

L_s = 3.54 lb x 15.8 g

= 55.9 lbs

15.8 g = end drop g load
(Section 2.6.7.4)

The end drop structural load produces a bending moment on the weld group (Figure 2.6.7-25). The bending moment (M) is 343 inch-pounds (6.13 inches × 55.9 pounds). The section properties of the weld group are calculated from Blodgett, Table 5, page 7.4-7,

$$S_\omega = \frac{d^2}{3}$$

$$= 0.33 \text{ in}^2$$

where:

d = 1 in

Bending Load

$$f_b = \frac{M}{S_\omega}$$

$$= 343/0.33$$

$$= 1038 \text{ lb/in}$$

The resultant load on the weld group is calculated:

$$f_r = \sqrt{f_1^2 + f_2^2}$$

$$= 2424 \text{ lb/in}$$

where:

$f_1 = f_s = 28.0$ lb/in

$f_2 = f_t + f_b$

$= 2,424$ lb/in

The allowable weld load is $f_{ALL} = 2,980$ lb/in; therefore, the margin of safety is:

$$M.S. = \frac{f_{ALL}}{f_r} - 1 = \underline{+0.23}$$

Gusset Weld

It is assumed that the end drop load on the end plate is shared equally between the stiffeners and gussets (Figure 2.6.7-26). The fillet weld attaching the gusset to the cask outer shell and end plate is 0.188 inch and is on both sides of the gusset. Bending and shear stresses on the weld group A are calculated in the following analyses. Since the gussets and stiffeners share the end drop load, the end plate area, which the gusset must support, is calculated:

$$A = [\pi(R_o^2 - R_i^2) - (16)(T_{PLT})(R_o - R_i)]/16$$

$$= 33.95 \text{ in}^2$$

where:

$R_o = 19.6$ inches

$R_i = 14.3$ inches

$T_{PLT} = 0.25$ in

The distributed load is composed of the end drop pressure load (180 psig) and a structural load (3 psig) equivalent to the end plate weight. The concentrated load (L) is calculated by multiplying the area (A) by the sum of the distributed loads (183 psig): L = 6,213 pounds. Therefore, the moment acting on weld group A is:

$$M = L\left(\frac{5.1}{2}\right)$$

$$= 15,843 \text{ in-lb}$$

The section properties of the weld group are calculated from Blodgett, Table 5, page 7.4-7:

$$S_\omega = \frac{d^2}{3}$$

$$= 12 \text{ in}^2$$

where:

d = 6 inches

Bending Load

$$f_b = \frac{M}{S_\omega}$$

$$= 1320 \text{ lb/in}$$

Shear Load

$$f_s = \frac{L}{W_{LEN}}$$

$$= 518 \text{ lb/in}$$

where:

L = 6,213 lbs

W_{LEN} = 2 × 6 inches

= 12 inches

The resultant load on the weld group is calculated by:

$$f_r = \sqrt{f_1^2 + f_2^2}$$

$$= 1418 \text{ lb/in}$$

where:

$f_1 = f_s = 518$ lb/in

$f_2 = f_b = 1320$ lb/in

The allowable weld load is $f_{ALL} = 2980$ lb/in; therefore, the margin of safety is:

$$M.S. = \frac{f_{ALL}}{f_r} - 1 = \underline{+1.10}$$

Bottom End Plate

It is assumed that the portions of the end plate between a gusset and the adjacent stiffener can be modeled by a rectangular plate of the appropriate dimensions. The width (b) of the plate is the difference between radii of the cask outer shell and the shield tank shell as shown in Figure 2.6.7-27. The length (a) of the plate is the average of the inner and outer arc lengths, 6.7 inches ((7.7 inches + 5.6 inches)/2). Using Case 36 (Roark, page 225), the maximum bending stress on the 0.5-inch thick end plate is:

$$S_b = \beta \frac{wb^2}{t^2}$$

$$= 8{,}525 \text{ psi}$$

where:

$\beta = 0.4146$

$w = 183$ psi (see section titled "Gusset Weld")

$b = 5.3$ inches

$t = 0.5$-in thick

The margin of safety is:

$$M.S. = \frac{S_{ALL}}{S_B} - 1 = \underline{+1.79}$$

where:

$S_{ALL} = S_{y_{250°F}}$

$= 23{,}750$ psi

Gusset Plate Cross-Section

The plate was modeled as a large weld, with the throat in tension during an end drop. The end drop load (L) acting on the gusset is the load acting on the end plate between the gusset and adjacent stiffener. The gusset root cross-section (R) is considered to be in tension (Figure 2.6.7-28). From the section titled "Gusset Weld," the load on the gusset root is L = 6213 pounds. The gusset root cross-sectional area is calculated:

$A_R = 0.707(h)(T_{PLT})$

$= 0.865 \text{ in}^2$

where:

$h = 5.1$ in (shortest leg)

$T_{PLT} = 0.24$ in (thickness)

Calculating the tensile load:

$$S_T = \frac{L}{A_R}$$

$$= 7180 \text{ psi}$$

The margin of safety is:

$$M.S. = \frac{S_{ALL}}{S_T} - 1 = \underline{+LARGE}$$

where:

S_{ALL} = 23,750 psi

End Plate Welds

Peripheral weld group B (Figure 2.6.7-29) is considered to be in shear during an end drop. The end plate load is 6213 pounds, from the section titled "Gusset Weld." The area of weld material is:

$$A_W = 0.707\left(\frac{3}{16}[2(19.6 - 14.3) + 7.7] + \frac{3}{8}(5.6)\right)$$

$$= 3.9 \text{ in}^2$$

The tensile stress on weld group B is:

$$S_T = \frac{L}{A_W}$$

$$= 1593 \text{ psi}$$

The margin of safety is:

$$M.S. = \frac{S_{ALL}}{S_T} - 1 = \underline{+LARGE}$$

where:

S_{ALL} = 23,750 psi

Top End Plate - Normal Operations Conditions

In the analyses of the section titled "Bottom End Plate" and Section 2.6.7.8.2, the 0.5-inch thick bottom end plates are shown to be structurally adequate. This analysis shows that the top end plate, which is in effect equivalent to both bottom end plates welded together at the shield tank shell, is structurally adequate. Two bounding conditions are considered. The first condition considers the shield tank top end plate loaded with a pressure of 180 psig and the expansion tank top end plate unloaded. Using Case 38 (Roark, page 113), considering a unit strip of top end plate, where the two end points are considered pinned, the maximum bending stress is 10,272 psi, and the margin of safety equals +0.33. The second condition considers both the shield and expansion tank end plates loaded at 180 psig. Again using Case 38, the bending stress equals 11,172 psi, resulting in a margin of safety of +0.23. The maximum normal operations conditions

pressure in the expansion tank is 162 psig; therefore, the top end plate is adequate for the normal operations conditions.

2.6.7.8 Expansion Tank

The expansion tank is located at the upper end of the cask and is concentric with the shield tank. As its name implies, the expansion tank provides a location for fluid to expand into during fluid heating; thus, protecting both the neutron shield tank and the expansion tank from over-pressurization during normal operations conditions. A description of the expansion tank, structural criteria, and structural loads is presented in Sections 2.6.7.7.1 through 2.6.7.7.3. Table 2.6.7-40 summarizes the results of the structural analyses described in the following sections. The table shows adequate margins of safety for each component of the expansion tank examined. Therefore, the normal operations conditions requirements of 10 CFR 71 are satisfied.

To simplify analysis of the expansion tank structure, the use of symmetry, superposition, and worst case loads are employed to reduce the number of calculations to be performed and yet provide a thorough analysis. Major expansion tank structural components are shown in Figure 2.6.7-30. Analysis of the expansion tank uses the same format and simplifying assumptions as were used in the neutron shield tank structural analysis.

2.6.7.8.1 Expansion Tank Shell

The expansion tank shell is analyzed as a thin-walled tube, taking no credit for the eight radial stiffeners, which run the length of the tank. Using Case 1 (Roark, page 298), the meridional and hoop stresses are calculated:

$$S_1 = \frac{pR}{2t}$$

$$= 6269 \text{ psi}$$

$$S_2 = \frac{pR}{t}$$

$$= 12,537 \text{ psi}$$

where:

p = 180 psig

R = 21.94 inches

t = 0.32 in

Von Mises yield criterion is used to calculate an equivalent stress (S_e), which is compared to the yield strength of Type 304 stainless steel.

$$S_e = \frac{1}{\sqrt{2}}\left[(S_1 - S_2)^2 + (S_2 - S_3)^2 + (S_3 - S_1)^2\right]^{0.5}$$

$$= 10,857 \text{ psi}$$

where:

$S_3 = 0$ psi

then

$$M.S. = \frac{S_{ALL}}{S_e} - 1 = \underline{+0.26}$$

where:

$S_{ALL} = 0.577$ (23,750 psi)

$= 13,700$ psi

2.6.7.8.2 Bottom End Plate

It is assumed that the sections of end plate between stiffeners can be represented by a rectangular plate of appropriate dimensions. The width (b) of the plate is the difference between radii of the neutron shield tank and expansion tank shells, as shown in Figure 2.6.7-31. The length (a) of the plate is the average of the inner and outer arch lengths, a = 16.4 inches ((17.3 + 15.4)/2). Using Case 36 (Roark, page 225), the maximum bending stress on the 0.5-inch thick end plate is:

$$S_{max} = \beta \frac{wb^2}{t^2}$$

$$= 3375 \text{ psi}$$

where:

$\beta = 0.75$

$w = 180$ psig

$b = 2.5$ inches

$t = 0.5$ in

then

$$M.S. = \frac{S_{ALL}}{S_{max}} - 1 = \underline{+LARGE}$$

where:

$S_{ALL} = 23,750$ psi (S_y at 250°F)

2.6.7.8.3 Stiffener

The drop load is assumed to be distributed over all stiffeners equally. It is further assumed that the stiffener examined is in tension resulting from the drop load, as shown in Figure 2.6.7-32. The analysis shown below is for a 1-inch section (longitudinal) without credit for end plate welds. The drop pressure load is L = 3,114 pounds (17.3 in^2 x 180 psi). Additionally, the stiffener must support itself and the expansion tank shell during a drop, which adds an additional 45 pounds of structural load, bringing the total load (L) on the stiffener to 3,159 pounds. The cross sectional area of the 1-inch section analyzed is 132 in^2.

$$S_T = \frac{L}{A}$$

$$= 10,029 \text{ psi}$$

The margin of safety is:

$$M.S. = \frac{S_{ALL}}{S_T} - 1 = \underline{+0.37}$$

where:

S_{ALL} = 0.577(23,750) psi
= 13,700 psi

2.6.7.8.4 Stiffener Weld

This analysis of a unit section (1-inch longitudinal) of expansion tank shell assumes that the drop load is equally distributed among all stiffeners. The load acting on the weld attaching the stiffener to the adjacent shield tank stiffener equals the load acting on the stiffener, L = 3,114 pounds (Section 2.6.7.8.3). The weld is a 0.188-inch fillet, both sides with a total throat area, A_w = 0.265 in^2. The tensile stress acting on the weld is:

$$S_T = \frac{L}{A_w}$$

$$= 11,750 \text{ psi}$$

The resulting margin of safety is:

$$M.S. = \frac{S_y}{S_T} - 1 = \underline{+0.17}$$

where:

S_y = 0.577(23,750) psi
= 13,700 psi

2.6.7.9 Upper Ring/Outer Shell Intersection Analysis

Membrane and bending stresses are induced in the upper ring/outer shell intersection region of the cask body. These stresses are calculated using a detailed finite element model (Figure 2.6.7-33) and the ANSYS PC-Linear computer program.

The upper ring/outer shell intersection region is conservatively analyzed utilizing an axisymmetric model, axisymmetric loading and minimum ring cross section properties. The actual loading occurs only at the two lifting trunnions, and the minimum ring cross section occurs only at four 90-degree locations around the ring circumference. The model is restrained in the longitudinal direction by roller boundary conditions on the inner and outer shells (Figure 2.6.7-34) located 10 inches below the upper ring/outer shell intersection (attenuation length = 2.5 $(Rt)^{0.5}$ = 9.81 inches). A fine mesh grid is used in the model in regions where peak stresses caused by concentration effects are expected. The following assumptions are made in this analysis:

1. The stiffness and support of the lead shell are not included.
2. The support/restraint of the upper ring provided by the closure lid and bolts is not included.
3. A uniform average temperature of 300°F is used in the analysis.
4. ANSYS STIF42 isoparametric quadrilateral elements adequately represent the cask geometry.

The sections analyzed as critical are shown in Figure 2.6.7-35. Section c-c is critical for P_m stress, and section a-a is critical for $P_m + P_b$ stress.

Applied Loads

The normal operations lifting trunnion loads used in this analysis are:

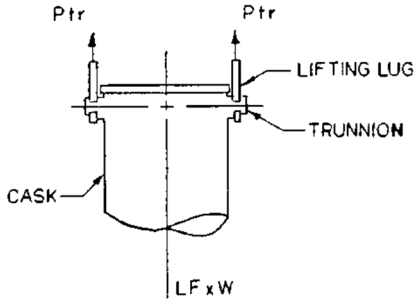

Lifting Load On Trunnions

Load Factor (LF) = 1.15

Cask Weight (W) = 52,000 lbs

P_{tr} = (LF)(W/2) = (1.15)(52,000/2) = 29,900 lbs

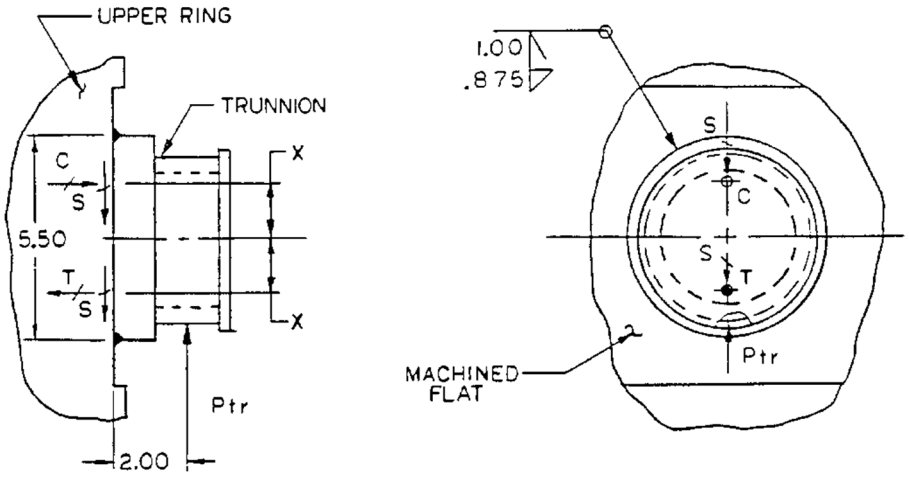

Lifting Trunnion Load Geometry

The concentrated loads were used to represent the distributed loads in the trunnion weld.

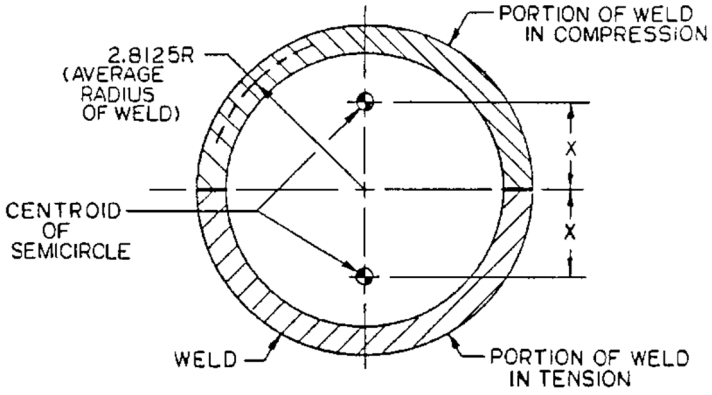

Trunnion Weld Group Centroid

To determine the trunnion weld group centroid:

$x = 0.6366\ R_{avg}$

$= 0.6366\ (2.8125)$

$= 1.790$ inches

$T = C = y\ (P_{tr}/2x)$

= 2.00 (29,900) / 2 (2.8125)

= 16,704 lbs

S = P_{tr} /2

= 29,900/2

= 14,950 lbs

Assume these loads are uniform over the trunnion weld diameter:

$T_u = C_u$ = 16,704/2(2.8125)

= 2969.6 lb/in

S_u = 14,950/2(2.8125)

= 2657.8 lb/in

The ANSYS program requires that the loads for an axisymmetric model be input as load/radian:

Radians enclosed in 1 inch of circumference = 1/radius = 11/13.94 = 0.0717

$T_r = C_r$ = (2969.6)/0.0717

= 41,396.22 lb/rad

S = 2657.8/0.0717

= 37,049.73 lb/rad

Calculated Stress Summary - Normal Operations Conditions

As anticipated, the maximum stresses occur at the upper ring/outer shell intersection, in the region of the machined flat and the internal radius of the outer shell. This analysis conservatively considers an outer shell thickness of 1.12 inches (actual shell thickness is 1.20 inches).

Stress peaking is present at the intersection of the outside surface of the outer shell with the upper ring because of stress concentration effects. The three sections through this region were investigated to determine the maximum stress intensity.

Section	Node	ANSYS Output Stress Summary			
		Radial S_x (ksi)	Axial S_y (ksi)	Hoop S_z (ksi)	Shear S_{xy} (ksi)
	66	1.6	7.3	2.9	-0.6
a-a	65	-0.1	4.9	1.9	-0.4
	64	-2.6	-0.4	-0.2	0.8
	66	1.6	7.3	2.9	-0.6
b-b	61	-0.7	5.1	1.6	0.5
	56	1.1	1.8	0.6	0.6
	66	1.6	7.3	2.9	-0.6
c-c	61	-0.7	5.1	1.6	0.5
	56	-0.2	4.5	0.6	0.6

The P_m and the $P_m + P_b$ stress components are determined by linearization of the ANSYS output stress components across sections a-a, b-b, and c-c. The principal stresses are calculated using the classical stress transformation law (Table 2.6.7-41).

The total normal operations lifting condition component stresses, principal stresses, and stress intensities at the critical section are calculated by combining the principal stresses from lifting, section b-b, with the internal pressure hot case (Table 2.6.1-1 and Table 2.6.2-2).

The P_m principal stress summary is:

Load Condition	Principal Stresses (ksi)		
	S_1	S_2	S_3
Lifting	5.5	-0.3	2.0
Internal Pressure	2.9	0.4	-0.4
Total	8.4	0.1	1.6

P_m stress differences are: S_{12} = 8.3 ksi, S_{23} = -1.5 ksi, and S_{31} = -6.8 ksi.
P_m stress intensity is S_i = 8.3 ksi.
Allowable stress intensity is S_a = 1.0 S_m = 20.0 ksi (Table 2.3.1-1).

$$M.S. = \frac{S_a}{S_i} - 1 = \underline{+1.41}$$

The $P_m + P_b$ principal stress summary is:

	Principal Stresses (ksi)		
Load Condition	S_1	S_2	S_3
Lifting	9.1	-2.7	4.0
Internal Pressure	4.2	1.5	0.2
Total	13.3	-1.2	4.2

The $P_m + P_b$ stress differences are: S_{12} = 14.5 ksi, S_{23} = -5.4 ksi, and S_{31} = -9.1 ksi.
The $P_m + P_b$ stress intensity is S_i = 14.5 ksi.
Allowable stress intensity is $S_a = 1.5\ S_m$ = 30.0 ksi.

$$M.S. = \frac{S_a}{S_i} - 1 = \underline{+1.07}.$$

The maximum peak stress, S_y = 7.3 ksi, is less than 1.5 S_m; therefore, a fatigue evaluation is not required.

2.6.7.10 PWR/BWR Rod Transport Canister Assembly Analysis

2.6.7.10.1 Discussion

The NAC-LWT PWR/BWR Rod Transport Canister is analyzed for structural adequacy in accordance with the requirements of 10 CFR 71 for a 1-foot drop (normal transport condition). The structural evaluation is performed by classical elastic analysis methods. The components evaluated include the can weldment, internal spacer, 4 × 4 and 5 × 5 inserts (rod holder), PWR insert, BWR fuel assembly lattice spacer and can weldment spacer. In the 5×5 insert configuration, four of the tubes comprising the insert may be replaced with a single larger tube to accommodate an oversize nonfuel-bearing component (e.g., a single BWR water rod or a CE guide tube). Evaluations are performed for the inserts being comprised of 16 or 25 tubes to accommodate the fuel rods and these evaluations are considered to bound the insert configuration containing a single BWR water rod. The presence of the BWR water rod reduces the inertial loading due to contents, as well as employs a larger cross-section for the BWR water rod as compared to four smaller tubes containing fuel rods.

2.6.7.10.2 Analysis Description

Geometry

The geometry of the can assembly is shown in Drawing 315-40-098. Note that the tube component of the can assembly is fabricated from a 6-in.×6-in.×0.5-in.-thick tube that is

machined to the final dimensions of 5.5-in.×5.5-in.×0.25-in.-thick. The can assembly is positioned within the basket during transport of the cask. If the cask is equipped with a PWR basket, the PWR insert is required to provide correct positioning within the basket. The can assembly is constructed of Type 304 stainless steel with the exception of the PWR insert, which is constructed of 6061 Aluminum.

Loadings

The magnitude of the impact force varies according to the drop height and drop orientation. As calculated in Section 2.6.7.4, the g-loads for the 1-foot end and side drops are 15.8 and 24.3g, respectively.

Detailed Analysis

The maximum temperatures of the components are shown below. For the can weldment and components outside the can weldment, the temperatures are significantly below 700°F, which are within the 800°F design limits. For the tubes supporting the fuel pins, the maximum temperatures are determined to be 925°F. The tubes, which are only used with the insert for the high burnup pins, are shown to be acceptable using ASME Code, Section III, Division I, Subsection NH, which specifies allowable stresses above 800°F. The remaining components are shown to be acceptable using the stress allowable in ASME Code, Section III, Subsection NB.

Thermal Stresses

To evaluate effects of the calculated temperatures within the can assembly, the nominal dimensions of the can are used to calculate the resulting thermal expansions. The coefficient of thermal expansion for ASME SA 240 Type 304 stainless steel is 9.0×10^{-6} in./in.-°F. All components of the can assembly are constructed of Type 304 stainless steel, except for the PWR insert. The PWR insert is made of 6061 Aluminum with a coefficient of thermal expansion of 13.5E-6 in/in-°F. The following temperatures are used in the thermal expansion calculation and material property definitions.

Component Name	Maximum Operating Temperature (°F)	Temperature Used for Calculation (°F)
Aluminum PWR Insert	394	400
Can Weldment	538	575
5 × 5 Insert	885	925

Since the 5 × 5 insert is larger than the 4 × 4 insert, it is bounding for the thermal expansion calculations. The nominal gap between the insert and internal spacer is 3.56 – 3.44 = 0.12 inch. The growth of the insert is 3.44 × 9.0 E-6 in/in-°F × (925-70)°F = 0.027 inch. Since the growth of the insert is less than the nominal gap, no interference will occur.

The nominal gap between the internal spacer and can shell is 5.0 – 4.94 = 0.06 inch. The growth of the internal spacer is 4.94 × 9.0 E-6 in/in-°F × (575-70)°F = 0.023 inch. Since the growth of the internal spacer is less than the nominal gap, no interference will occur.

The nominal gap between the can shell and PWR insert is 5.75 – 5.5 = 0.25 inch. The growth of the can shell is 5.5 × 9.0 E-6 in/in-°F × (575-70)°F = 0.025 inch. Since the growth of the can shell is less than the nominal gap, no interference will occur.

Because the differential thermal expansion causes no interference or binding, no further thermal stress evaluation is required.

Can Weldment

The can weldment is contained within the basket assembly and not subjected to bending stresses in the side-drop case.

For the end drop, the can weldment is loaded by its own weight. The can contents bear against the bottom or top of the can assembly, depending on drop orientation.

LWT Can Body Compressive Stress

Under normal operating conditions the tube is evaluated for a 15.8 g acceleration for the end drop. The compressive load (P) on the tube is the combined weight of the lid and tube times the appropriate g factor.

The compressive stress (S_c) in the tube body is:

$$S_c = \frac{P}{A} = \frac{4{,}898 \text{ lb}}{4.98 \text{ in}^2} \cong 984 \text{ psi}$$

where:

$A = \pi (0.75^2 - 0.5^2) + 4 \times 4.0 \times 0.25 = 4.98 \text{ in}^2$

$P = 310 \times 15.8 = 4{,}898$ lbs (conservatively, the weight of the tube, lid, and bottom plate is used)

The margin of safety (MS) is then:

$$MS = \frac{S_m}{S_c} - 1 = \frac{17{,}300 \text{ psi}}{984 \text{ psi}} - 1 = +16.6.$$

LWT Can Body Bearing Stress

For the bottom end drop, the can base feet are subjected to a bearing stress. The compressive load (P) on the base is the combined weight of the can assembly, fuel and insert, and the internal spacer times the appropriate g factor.

P = [310 (can weldment) + 350 (fuel) + 75 (tube insert) + 240 (internal spacer)] × 15.8 = 15,405 lbs

The compressive stress (S_c) in the feet is:

$$S_c = \frac{P}{A} = \frac{15{,}405}{2.8} \cong 5{,}502 \text{ psi}$$

where:

$A = 4 \times 0.5 \times (2.0 - 0.6) = 2.8 \text{ in}^2$

The margin of safety (MS) for bearing is then:

$$MS = \frac{S_m}{S_c} - 1 = \frac{17{,}300 \text{ psi}}{5{,}502 \text{ psi}} - 1 = +2.14$$

Can Internal Pressure

Can weldment internal pressure is considered insignificant in the end-drop and side-drop cases because it will tend to reduce the compressive loads on the can tube sides.

The effect of internal pressure is evaluated for the bending stress that the pressure imposes on the can weldment sides. Conservatively, a one-inch-wide section of the tube wall, equal in length to the outside dimension of the tube (L = 5.5 in.) is analyzed as a cantilevered beam with a uniform load.

The maximum moment (M) is determined by the following relation:

$$M = \frac{wL^2}{12} = \frac{(85 - 14.7)(5.5^2)}{12} \cong 177.2 \text{ in.-lb}$$

where w is the maximum differential pressure across the can wall due to the maximum normal temperature (assumes that the cask internal pressure is atmospheric). The 85 psia envelopes the pressure reported in Section 3.4.4.2.

The combined stress (σ) in the 0.25-inch thick tube wall is:

$$\sigma = \frac{Mc}{I} + \frac{wL}{t}$$

$$= \frac{(177.2)(0.125)}{0.0013} + \frac{(85 - 14.7)(5.5)}{0.25} \cong 18{,}600 \text{ psi}$$

The margin of safety (MS) is:

$$MS = \frac{1.5 S_m}{\sigma} - 1 = \frac{25.35 \text{ ksi}}{18.6 \text{ ksi}} - 1 = +0.36 \text{ for the normal condition}$$

Can Lid Bolt Analysis

The tensile force (F_p) on each lid bolt due to internal pressure is:

$$F_p = \frac{PA}{n} = \frac{(85 - 14.7)(3.75^2)}{8} \cong 123.6 \text{ lbs}$$

where

P = the pressure differential across the can wall at maximum normal temperature (assumes cask internal pressure is atmospheric)

A = 3.75 in × 3.75 in, the area of the can lid exposed to pressure

n = 8, number of bolts

The total tensile force on each lid bolt is F_p + the initial preload force, F_i = 635 lbs

The lid bolt tensile stress (σ) is:

$$\sigma = \frac{F_p + F_i}{A_t} = \frac{758.6}{0.049} = 15{,}480 \text{ psi}$$

where

A_t = 0.049 in.^{2}, the bolt tensile stress area $\frac{\pi}{4}(0.25^2)$

The margin of safety (MS) for the normal condition is:

$$MS = \frac{S_y}{\sigma} - 1 = \frac{18.8 \text{ ksi}}{15.48 \text{ ksi}} - 1 = +0.21$$

Can Tube Buckling

The tube is evaluated, using the Euler formula, to determine the critical buckling load (P_{cr}):

$$P_{cr} = \frac{K\pi^2 EI}{L^2} = \frac{3.26\pi^2(24.4\times10^6)(24.2)}{(165.5)^2} = 0.698 \times 10^6 \text{ lbs}$$

where:

E = 24.4×10^6 psi at 750°F

I = $\frac{5.5^4 - 5.0^4}{12} = 24.2 \text{ in}^4$

L = tube body length (165.5 inches)

Because the maximum compressive load (310 × 15.8 = 4,898 lbs) is much less than the critical buckling load (698×10^3 lbs), the tube has adequate resistance to buckling.

Internal Spacer

The internal spacer body is contained within the can assembly and not subjected to bending in the side drop condition.

The compressive stress in the internal spacer rails during the side drop is determined as follows:

$$\sigma_b = \frac{Wg}{A} = \frac{665 \times 24.3}{123.7} \cong 130.6 \text{ psi}$$

where:

W = total load = 350 (fuel) + 240 (internal spacer) + 75 (4x4 insert) = 665 lbs

g = 24.3 (normal condition side drop)

A = 123.7 in^2 cross-sectional area of spacer rails, $4 \times 0.188 \times (165.25 - 2 \times 0.38)$

The resulting margin of safety is large.

Internal Spacer Compressive Stress

For the end drop, the internal spacer shell is loaded by its own weight. The insert rail stiffness is conservatively neglected in the strength.

Under normal operating conditions, the spacer is evaluated for a 15.8 g acceleration. The compressive load (P) on the shell is due to the weight of the internal spacer. The entire weight of the internal spacer times the appropriate g factor will be used to calculate the compressive load.

$P = 240 \times 15.8 = 3{,}792$ lbs

The compressive stress (S_c) in the internal spacer body is:

$$S_c = \frac{P}{A} = \frac{3{,}792}{1.69} \cong 2{,}244 \text{ psi}$$

where:

A = $(3.936^2 - 3.56^2) - 12 \times 0.5 \times 0.188 = 1.69$ in^2

The margin of safety (MS) is then:

$$MS = \frac{S_m}{S_c} - 1 = \frac{17{,}300}{2{,}244} - 1 = +6.71$$

Internal Spacer Buckling

The shell is evaluated, using the Euler formula for an axially distributed load, to determine the critical buckling load (P_{cr}):

$$P_{cr} = \frac{K\pi^2 EI}{L^2} = \frac{3.26\pi^2 (24.4 \times 10^6)(6.615)}{(165.25)^2} = 0.19 \times 10^6 \text{ lbs}$$

where:

E = 24.4×10^6 psi at 750°F

I = $\frac{3.936^4 - 3.56^4}{12} = 6.615$ in^4

L = spacer body length (165.25 inches)

Because the maximum compressive load (240×15.8 = 3,792 lbs) is much less than the critical buckling load (190×10^3 lbs), the internal spacer has adequate resistance to buckling.

4×4 and 5×5 Inserts

The 4×4 and 5×5 inserts are contained within the internal spacer. The 4×4 inserts are supported by straps on 10-inch spacing. These straps provide a clearance of 0.31 inches and will allow bending of the tubes to occur. The 5×5 insert tubes are evaluated for a diametrically opposed load due to the weight of the adjacent tubes during the side drop.

The 4×4 insert lower tube will be evaluated as a fixed-fixed beam over a 10-inch span. The weight of the 3 tubes above (as well as lower tube self-weight) will be considered in the analysis. The stiffness of the tubes above the lower tube will conservatively be neglected. The combined weight (P) of the fuel pins and insert tubes are considered as a uniformly distributed load over the 10-inch span. In addition, the weights are scaled by the appropriate deceleration factor depending on the drop orientation and condition being evaluated.

The maximum bending stress (f_b) is determined as follows:

$$f_b = \frac{Wlg}{12Z} = \frac{5.8(10.0)24.3}{12x0.0092} \cong 12{,}766 \text{ psi}$$

where:

W = load on 10-inch section = (14 + 9.5) x 4 x 10/163.0 = 5.8 lbs

l = 10 inches (span of tube)

g = 24.3 (normal condition side drop)

Z = $\pi/32\ (0.6875^4\text{-}0.6315^4) / 0.6875 = 0.0092$ in^3 (section modulus of the tube)

The margin of safety (MS) is:

$$MS = \frac{1.5S_m}{\sigma_{max}} - 1 = \frac{1.5(12{,}050)}{12{,}766} - 1 = +0.42$$

The bending moment due to the diametrically opposed line load on the 5×5 insert is calculated by the following:

$$M_b = \frac{WRg}{\pi} = \frac{70/163.0\,x\,0.344\,x\,24.3}{\pi} \cong 1.143\,lb-in$$

where:

W = total load = 14 × 4 + 70/5 = 70 lbs

g = 24.3 (normal condition side drop)

R = 0.6875/2 = 0.344 in (radius of insert tube)

The resulting bending stress is:

$$f_b = \frac{6M_b}{t^2} = \frac{6 \times 1.143}{0.028^2} \cong 8{,}745 \text{ psi}$$

The margin of safety (MS) is:

$$MS = \frac{1.5\ S_m}{\sigma_{max}} - 1 = \frac{1.5(12{,}050)}{8{,}745} - 1 = +1.07$$

4×4 and 5×5 Insert Tube Compressive Stress

Under normal operating conditions, the tube is evaluated for a 15.8 g acceleration. The compressive load (P) on the shell is due to the weight of the tube. The entire weight of the tube is calculated as:

$P = \pi/4\ (0.6875^2 - 0.6315^2) \times 163.0 \times 0.288 = 2.72$ lbs

The compressive stress (S_c) in the tube body is:

$$S_c = \frac{P}{A} = \frac{2.72 \times 15.8}{0.058} \cong 741 \text{ psi}$$

where:

$A = \pi/4\ (0.6875^2 - 0.6315^2) = 0.058$ in^2

The margin of safety (MS) is then:

$$MS = \frac{S_m}{S_c} - 1 = \frac{14{,}100}{741} - 1 = +18.0$$

PWR Insert

The PWR insert contains the can assembly for insertion into the PWR basket. The PWR insert comprises a square box section with smooth sides. Therefore, no bending stresses will be introduced in the side drop condition.

PWR Insert Bearing Stress

The bearing load (P) on the PWR insert is due to the weight of the loaded can assembly. The entire weight of the assembly times the appropriate g factor will conservatively be used to calculate the bearing load.

W = bearing load = [350 (fuel) + 310 (can) + 240 (internal spacer) + 75 (4x4 insert)] x 24.3 = 23,693 lbs

The compressive stress (S_c) in the tube body is:

$$S_c = \frac{P}{A} = \frac{23{,}693}{921.3} \cong 26 \text{ psi}$$

where:

$A = 5.5 \times 167.5 = 921.3 \text{ in}^2$

The margin of safety (MS) is then:

$$MS = \frac{S_y}{S_c} - 1 = \frac{23{,}500}{26} - 1 = +\text{Large}$$

PWR Insert Body Compressive Stress

Under normal operating conditions, the tube is evaluated for a 15.8 g acceleration. The compressive load (P) on the body is due to the weight of the PWR insert. The entire weight of the PWR insert, times the appropriate g factor, will conservatively be used to calculate the compressive load.

$P = 650 \text{ lb} \times 15.8 = 10{,}270 \text{ lbs}$

The compressive stress (S_c) in the tube body is:

$$S_c = \frac{P}{A} = \frac{10{,}270}{39.2} \cong 262 \text{ psi}$$

where:

$A = (8.5^2 - 5.75^2) = 39.2 \text{ in}^2$

The margin of safety (MS) is then:

$$MS = \frac{S_y}{S_c} - 1 = \frac{23{,}500}{262} - 1 = +\text{Large}$$

PWR Insert Tube Buckling

The tube is evaluated, using the Euler formula, to determine the critical buckling load (P_{cr}):

$$P_{cr} = \frac{K\pi^2 EI}{L^2} = \frac{3.26\pi^2\left(8.8\text{x}10^6\right)(343.9)}{(167.0)^2} = 3.86\times10^6 \text{ lbs}$$

where:

$E = 8.8\times10^6$ psi at 400°F

$I = \frac{8.5^4 - 5.75^4}{12} = 343.9 \text{ in}^4$

L = tube body length (167.0 inches)

Because the maximum compressive load (650 x 15.8 = 10,270 lbs) is much less than the critical buckling load (3.86×10^6 lbs), the PWR insert has adequate resistance to buckling.

PWR Insert Assembly Bolts

The PWR insert is comprised of four short and four long aluminum plates joined with ½-13 UNC × 1.5-in. long socket head cap screws to form a hollow box. Each plate is secured to each adjacent plate using three screws.

The screws joining the plates are loaded in shear when the two lift tabs are used to lift the PWR insert and its payload. The controlling load path is through the lift tab attached to the shorter side plate and the three screws connecting the shorter side plate to the adjacent long plate. The distance from the line of load application (centerline of the lift tab) to the centerline of the 3-screw pattern is approximately 3.6 inches. Any internal moment created by this eccentricity is reacted by the strong-direction section modulus of the side plates and is effectively countered by the stiffness inherent in the overall symmetry of the box section. The screw shear stress (τ) in each of the 3 screws is:

$$\tau = \frac{P/2}{A} = \frac{900}{3(0.130)} = 2{,}308 \text{ psi}$$

where:

P = [310 (can weldment)+350 (fuel rods)+240 (internal spacer)+70 (5×5 insert)+650 (PWR insert)]×1.1 = 1,782 lbs, use 1,800 lbs for analysis. (Total lift weight with 10% dynamic load factor.)

A = screw cross-sectional area = $(0.4069^2 \times \pi)/4 = 0.130$ in^2 (Thread minor diameter)

The safety factor (FS) is calculated using a shear allowable of $0.6S_m$ at 750°F.

$$FS = \frac{0.6(15{,}600)}{2{,}308} = 4.06 > 3$$

where

S_m = 15,600 psi for commercial austenitic stainless steel.

Therefore the design condition that lifting stresses have a load factor of 3 on the basis of yield strength is met.

Can Weldment Spacer

The can weldment spacer prevents the PWR basket, PWR insert, fuel, and can weldment from shifting during transport. The spacer (Drawing 315-40-125, Item 10) is placed on the top of the can weldment. The spacer is bolted to the bottom side of the lid and the cruciform stiffener functions as the spacer between the lid and can weldment. The maximum load applied to the spacer occurs during the top end drop. To bound both normal and accident conditions, stresses are compared using accident load conditions and are compared to allowable stresses for normal operating conditions. The stress in the spacer is:

$$\sigma = \frac{P \times g}{A} = \frac{1{,}945 \times 60}{8.4} = 13{,}893 \text{ psi}$$

where:

P= Conservative weight of the PWR basket, PWR insert, fuel, and can weldment
= 1,945 lbs

g= Top end drop acceleration (60g)

A= Cross-sectional area of cruciform
$= 2 \times 7 \times 0.63 - 0.63^2 = 8.4 \text{ in}^2$

The margin of safety (MS) is:

$$MS = \frac{1.0 \times S_m}{\sigma} - 1 = \frac{17{,}500 \text{ psi}}{13{,}893 \text{ psi}} - 1 = +0.26$$

where:

S_m = The stress intensity of 304 stainless steel at 500°F

Because the height-to-diameter ratio (4.5/6.0 = 0.75) is less than one, the spacer has adequate resistance to buckling.

Using a bounding weight of 50.0 lbs for the spacer, the maximum shear stress on the 1/8-inch fillet weld corresponds to the hypothetical accident bottom end drop condition of 60g. The shear stress in the weld is computed as:

$$\tau = \frac{60 \times 50}{28.0 \times 0.707 \times 0.125} = 1{,}212 \text{psi}$$

where:

the perimeter of cruciform is 28.0 in [(7-0.625) × 4 + 0.625 × 4]

The margin of safety, based on the normal conditions of transport allowable stress, is:

$$MS = \frac{0.6S_m}{\tau} - 1 = \frac{0.6 \times 17{,}500}{1{,}212} - 1 = +7.66$$

The can weldment spacer is, therefore, determined to be structurally adequate for normal and accident conditions for the NAC-LWT cask.

Fuel Assembly Lattice Spacer

The BWR fuel assembly lattice fits into the PWR insert in place of the can assembly. The fuel assembly lattice holds up to 25 intact BWR fuel rods. To accommodate the fuel assembly lattice, the bottom plate of the PWR insert is removed. This allows the fuel assembly lattice to rest on

the bottom of the cask. To prevent the PWR basket from shifting during transport, a spacer (Drawing 315-40-125, Item 12) is placed at the top of the fuel assembly lattice. The spacer is bolted to the bottom side of the lid and eight 1-inch diameter posts function as the spacer between the lid and PWR basket. The maximum load applied to the spacer occurs during the top end drop. To bound both normal and accident conditions, accident stresses are compared to the normal allowable stress. The stress in the spacer is:

$$\sigma = \frac{P \times g}{A \times Np} = \frac{400 \times 60}{0.785 \times 8} = 3{,}822 \text{ psi}$$

where:

P= Conservative weight of the PWR basket

g= Top end drop acceleration (Table 2.6.7-34)

A= Cross-sectional area of a post

Np = Number of posts

The margin of safety is:

$$MS = \frac{1.0 \times S_m}{\sigma} - 1 = \frac{17{,}500 \text{ psi}}{3{,}822 \text{ psi}} - 1 = +3.58$$

where:

S_m = The stress intensity of 304 stainless steel at 500°F

Buckling of the post is evaluated using the Euler formula. The critical buckling load (P_{cr}) is:

$$P_{cr} = \frac{K\pi^2 EI}{L^2} = \frac{0.25\pi^2 (25.8 \times 10^6)(0.0491)}{(13.4)^2} = 17{,}407 \text{ lbs}$$

where:

E = Modulus of elasticity = 25.8×10^6 psi at 500°F

I = Moment of inertia = $\frac{\pi \times d^4}{64} = 0.0491 \text{ in}^4$

d = Post diameter = 1 in

L = Post length = 13.38 inches

K = Euler buckling coefficient for fixed-free column = 0.25 (Marks, 9th Ed., p. 5-42)

Because the maximum compressive load ($400/8 \times 60 = 3{,}000$ lbs) is less than the critical buckling load (17,407 lbs), the spacer has adequate resistance to buckling.

Figure 2.6.7-1 1-Foot Bottom End Drop with 130°F Ambient Temperature and Maximum Decay Heat Load

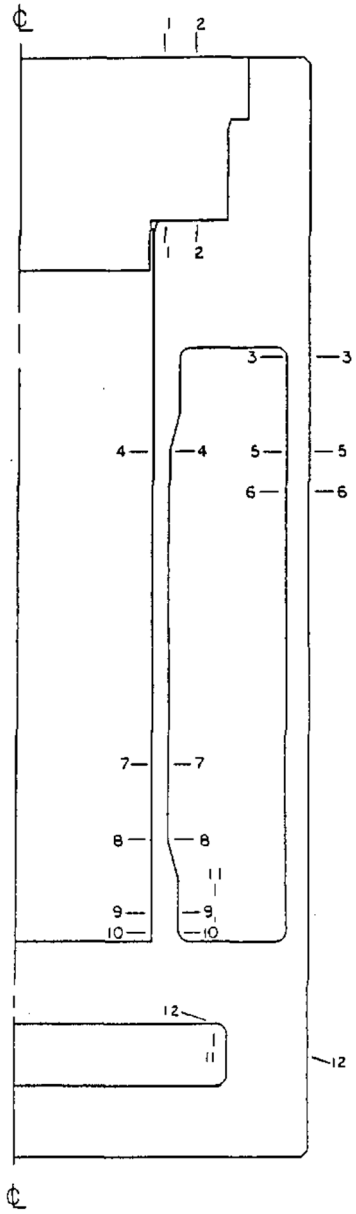

Figure 2.6.7-2 1-Foot Bottom End Drop with -40°F Ambient Temperature and Maximum Decay Heat Load

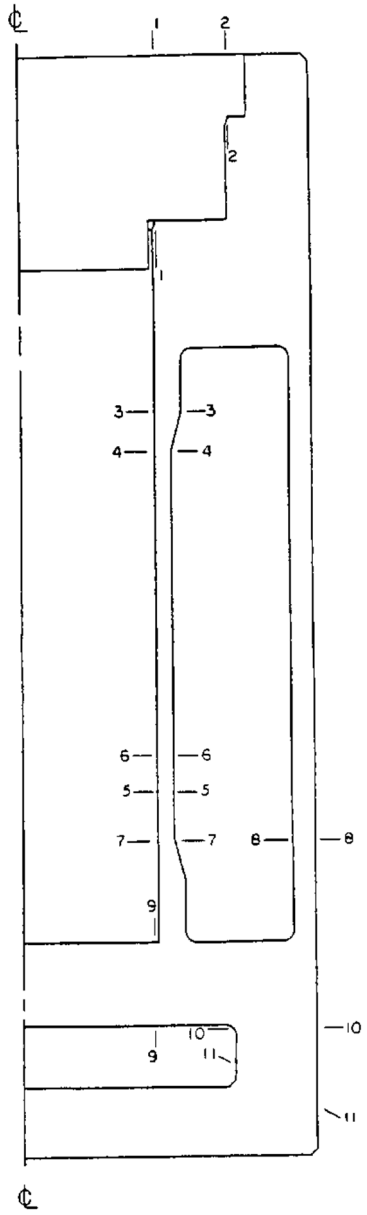

Figure 2.6.7-3 1-Foot Bottom End Drop with -40°F Ambient Temperature and No Decay Heat Load

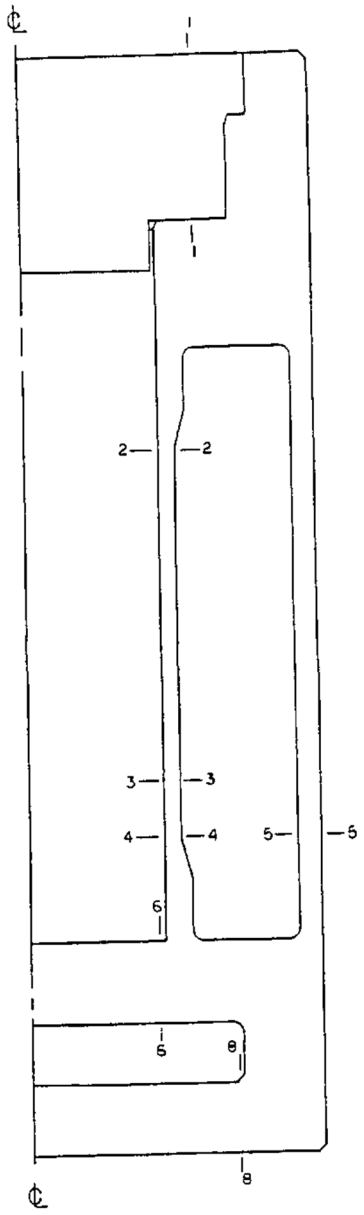

Figure 2.6.7-4 1-Foot Top End Drop with 130°F Ambient Temperature and Maximum Decay Heat Load

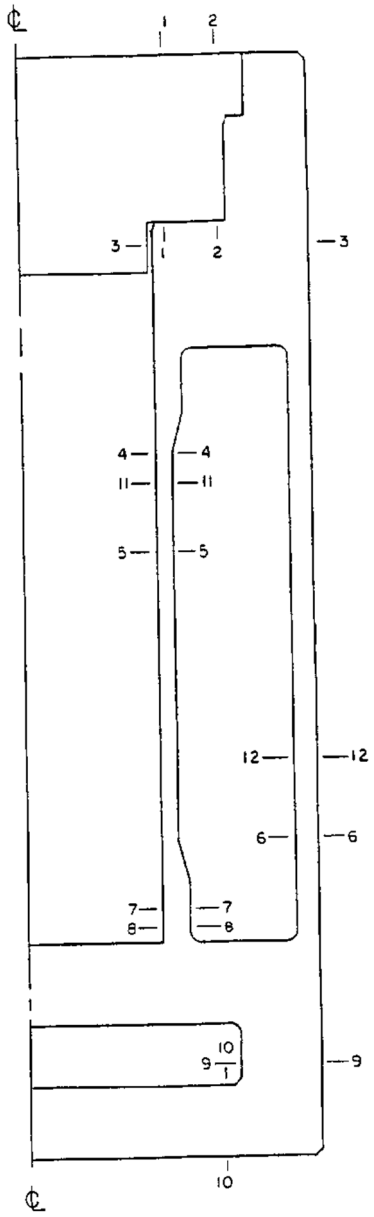

Figure 2.6.7-5 1-Foot Top End Drop with -40°F Ambient Temperature and Maximum Decay Heat Load

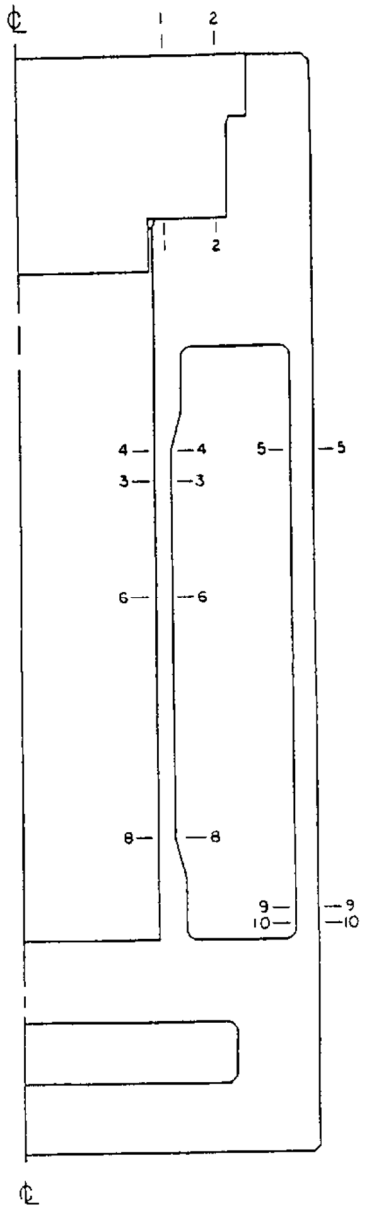

Figure 2.6.7-6 NAC-LWT Cask Critical Sections (1-Foot Side Drop with 100°F Ambient Temperature)

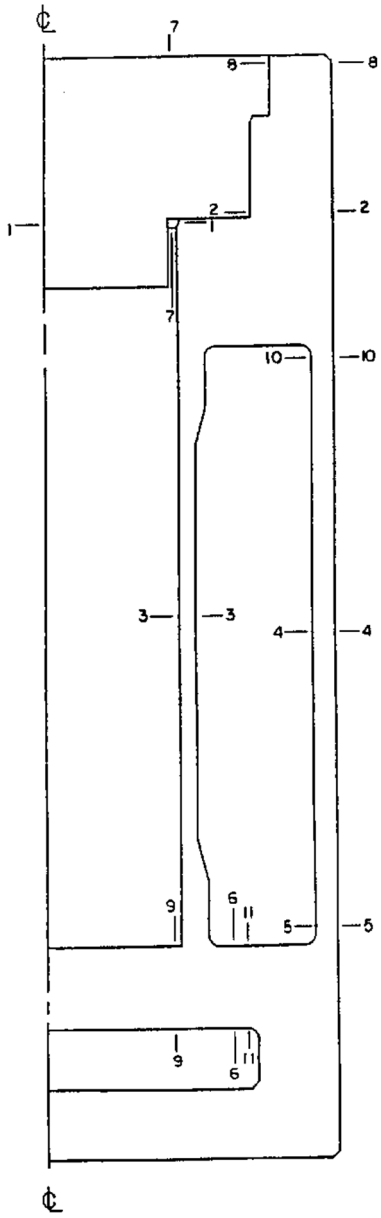

Figure 2.6.7-7 1-Foot Top Corner Drop with 130°F Ambient Temperature and Maximum Decay Heat Load - Drop Orientation = 15.74 Degrees

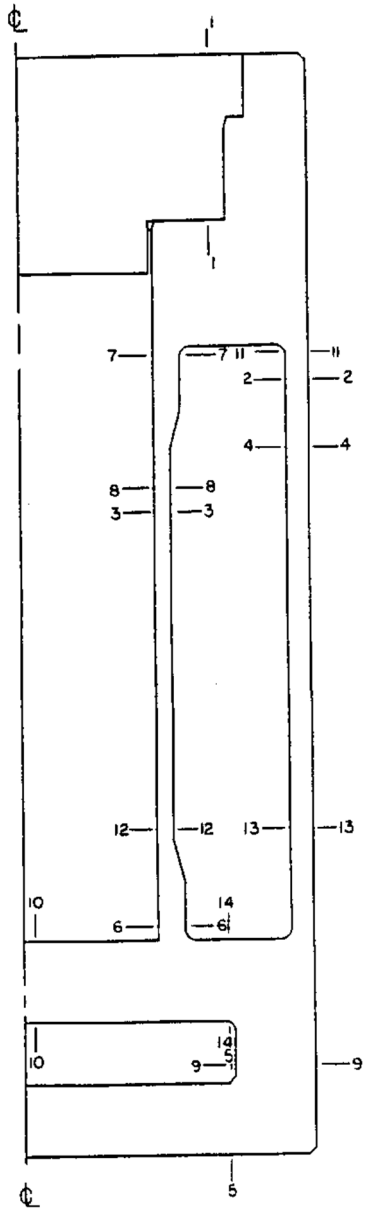

Figure 2.6.7-8 1-Foot Bottom Corner Drop with 130°F Ambient Temperature and Maximum Decay Heat Load - Drop Orientation = 15.74 Degrees

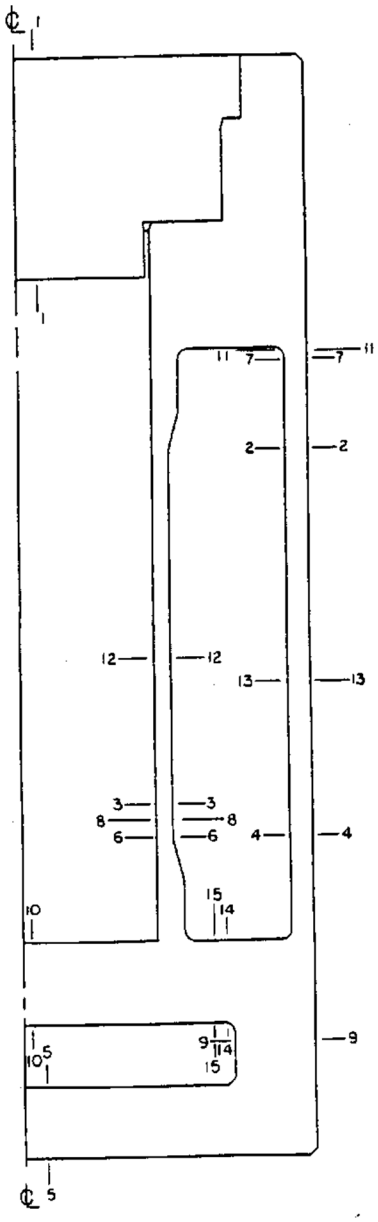

Figure 2.6.7-9 1-Foot Top Corner Drop with -40°F Ambient Temperature and No Decay Heat Load – Drop Orientation = 15.74 Degrees

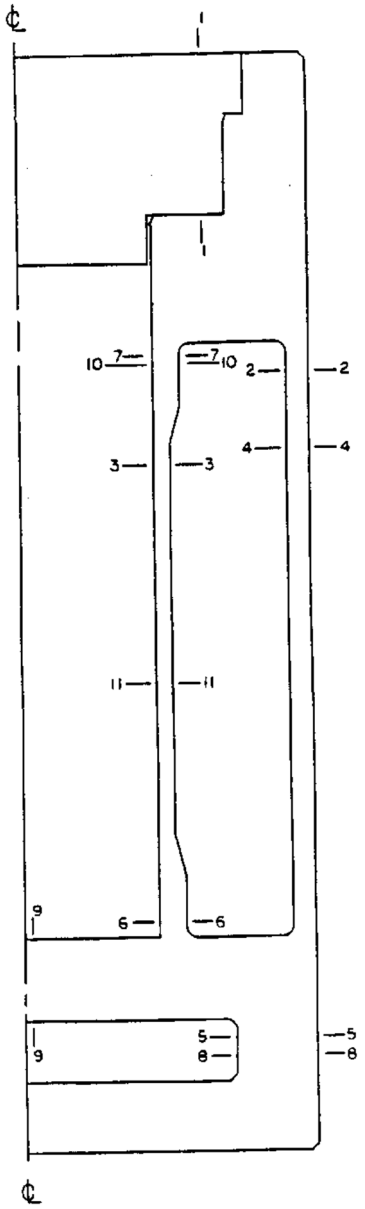

Figure 2.6.7-10 NAC-LWT Cask with Impact Limiters

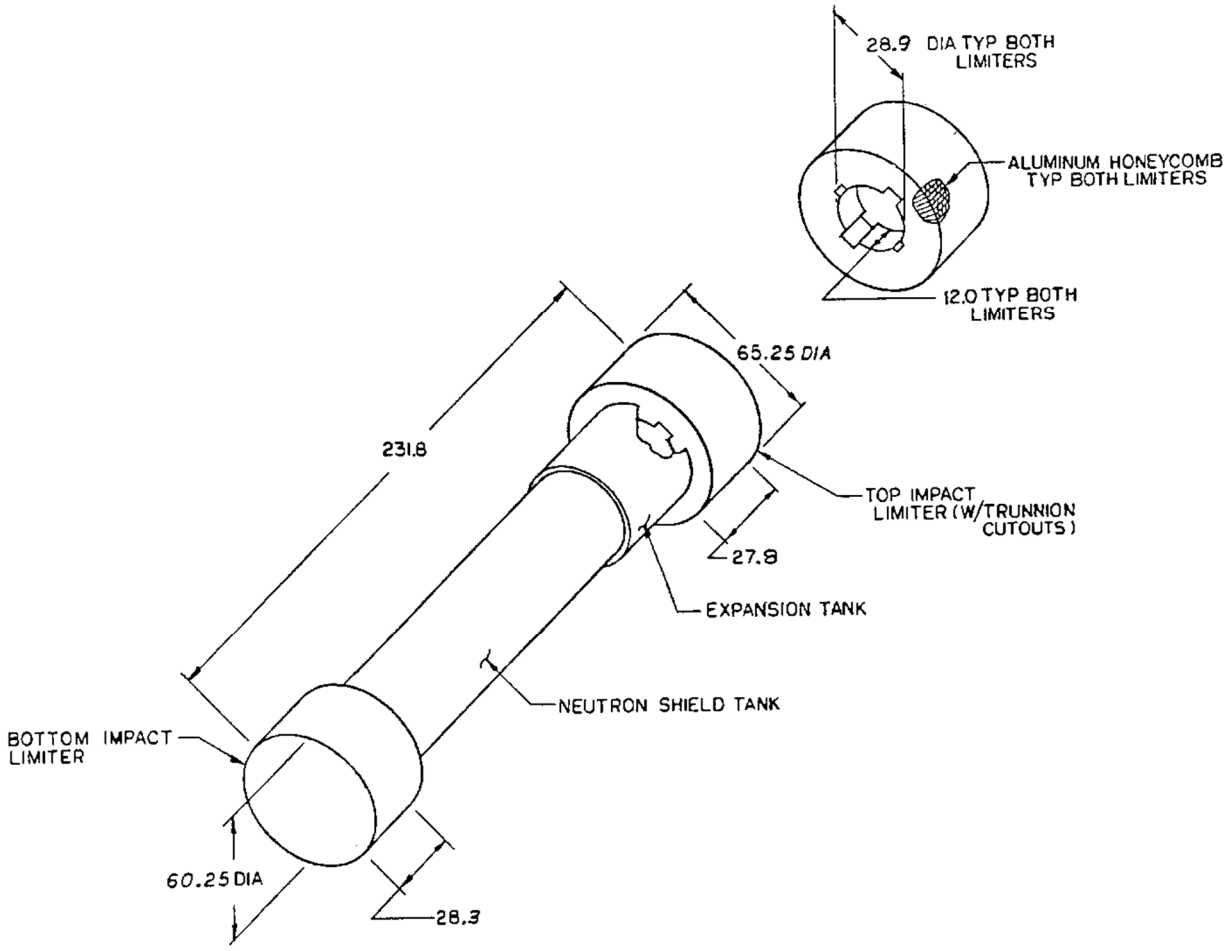

Figure 2.6.7-11 Cross-Section of Top Impact Limiter

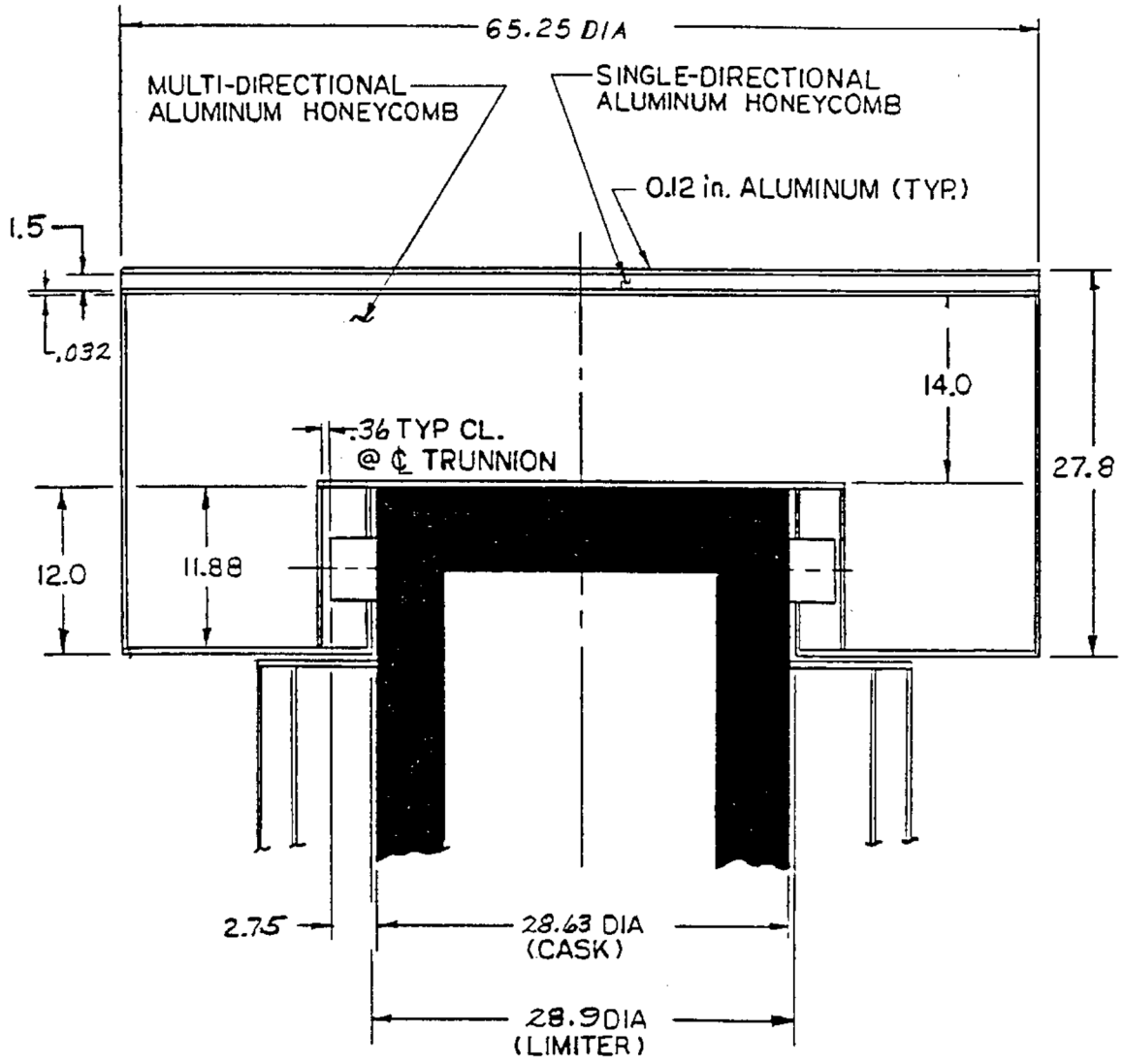

Figure 2.6.7-12 Load Versus Deflection Curve (Typical Aluminum Honeycomb)

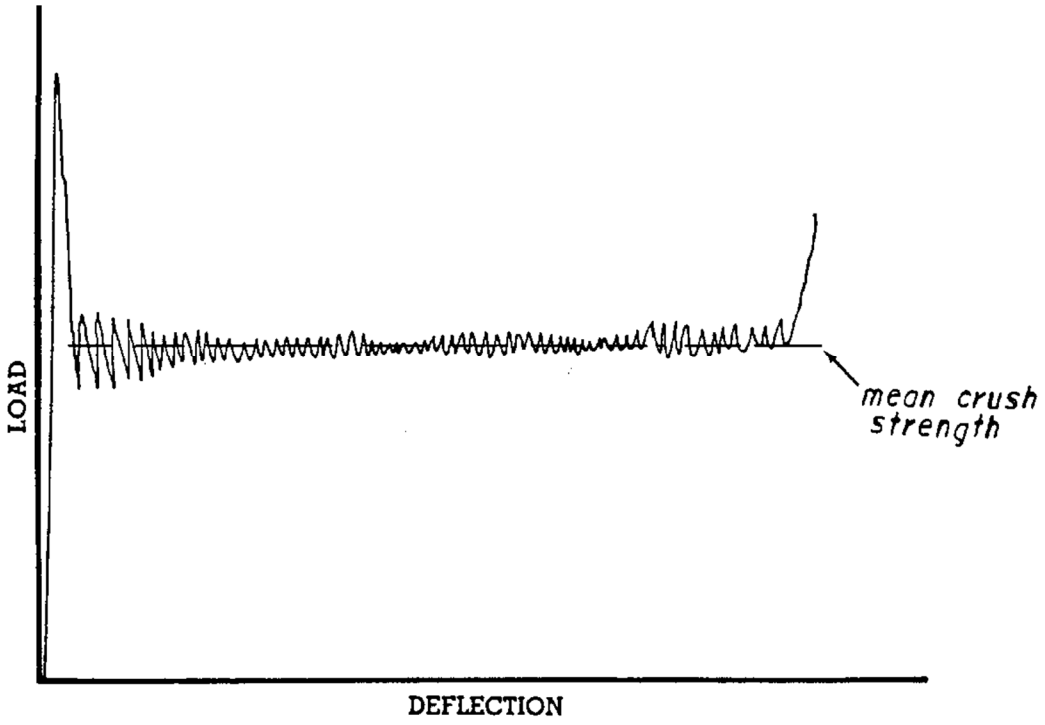

Figure 2.6.7-13 Quarter-Scale Model Limiter End Drop Cross-Section

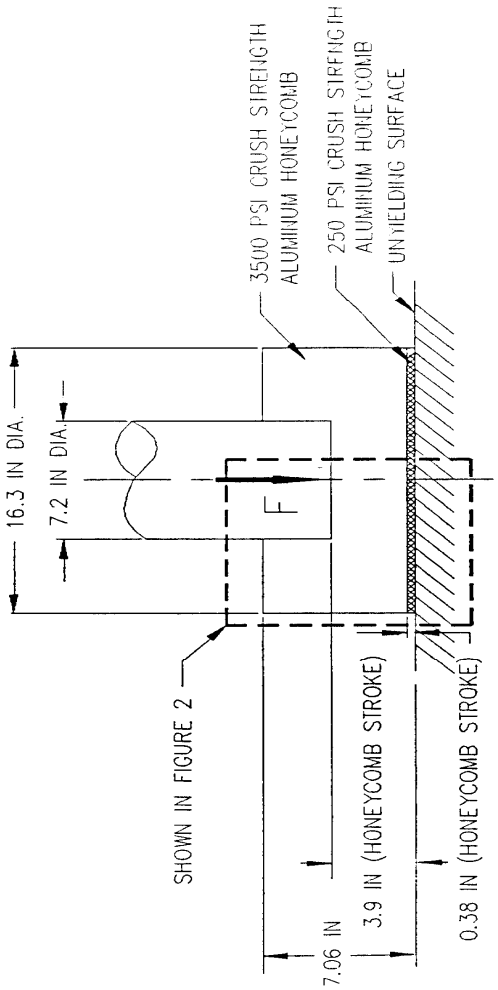

Figure 2.6.7-14 End Drop Impact Limiter Cross-Section

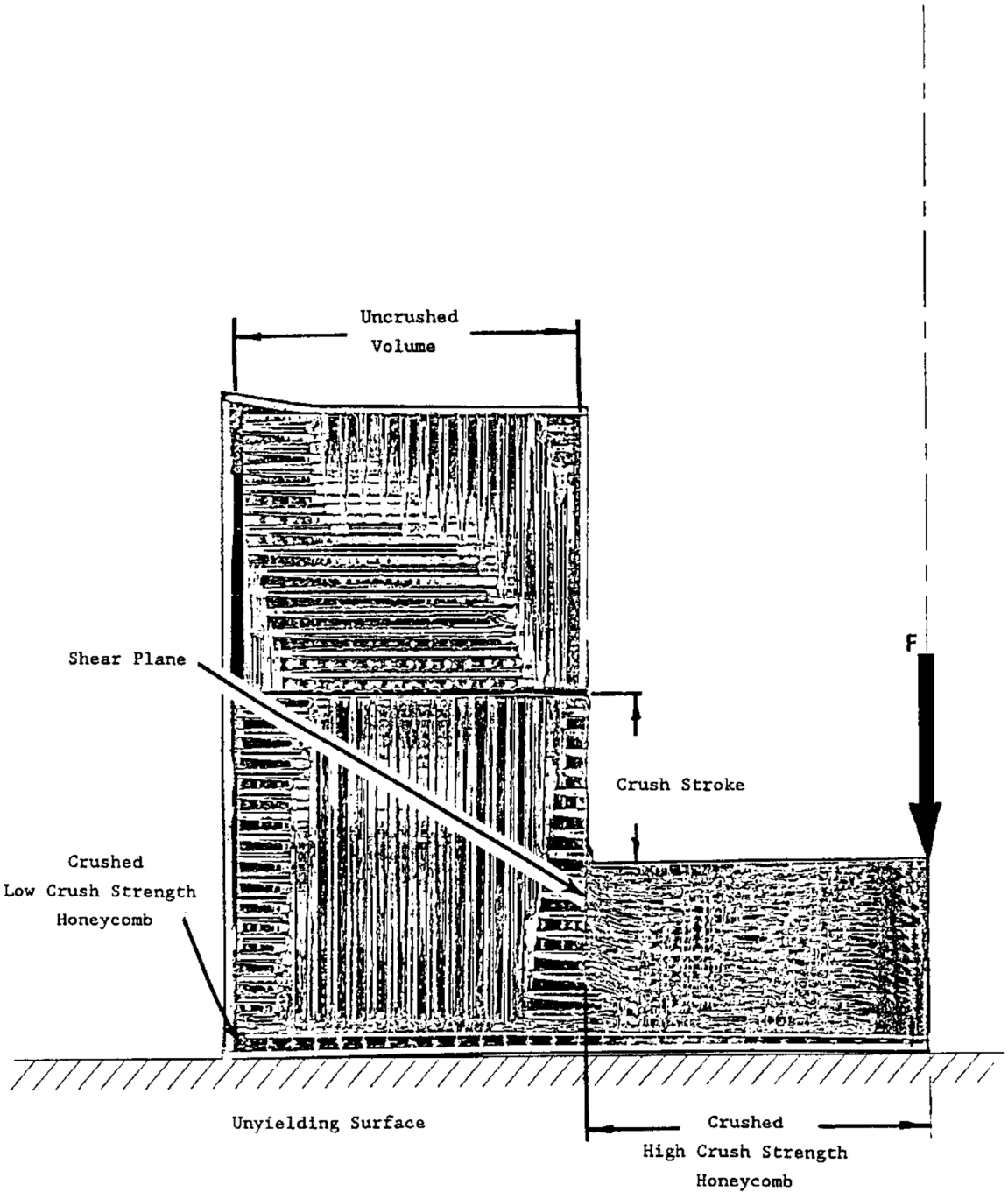

Figure 2.6.7-15 Impact Limiter Lug Detail

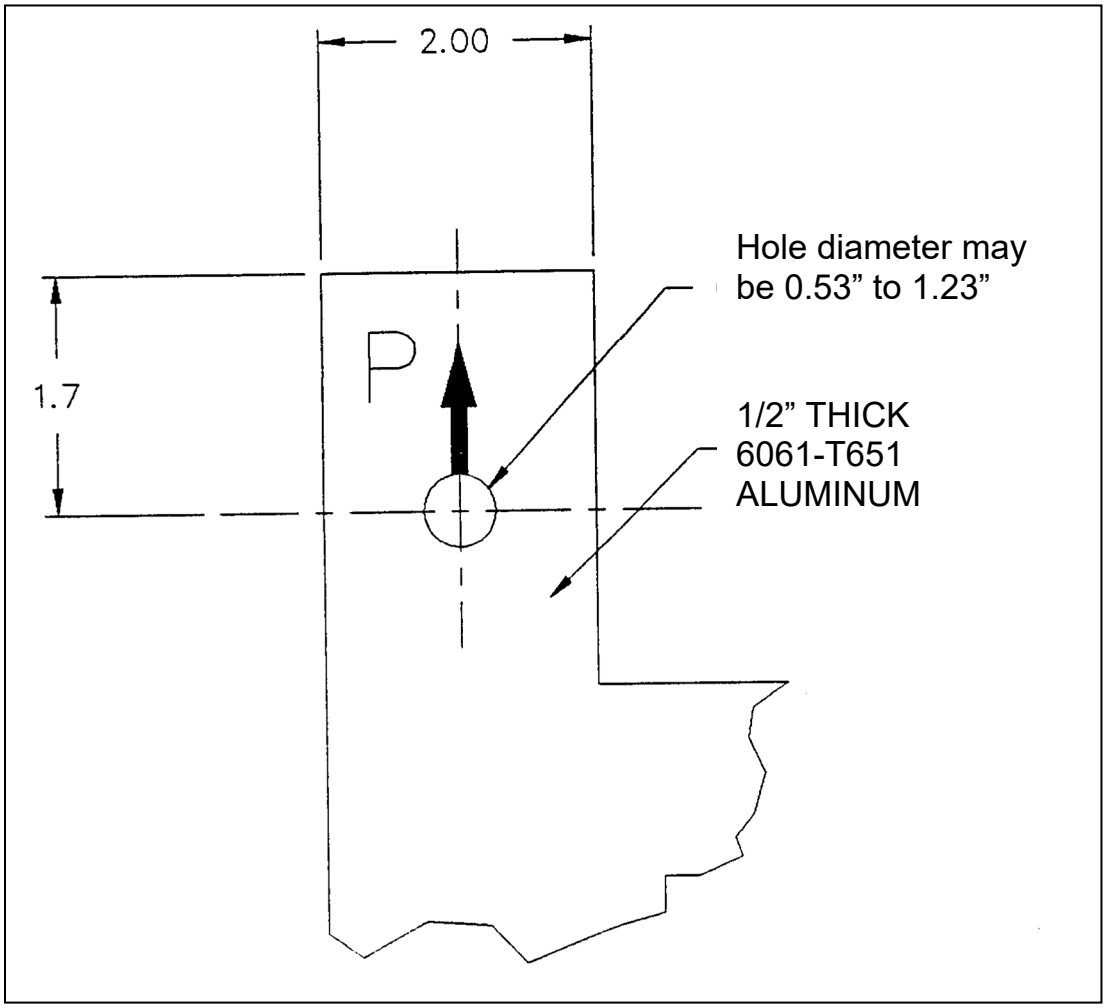

Figure 2.6.7-16 Cask Lug Detail

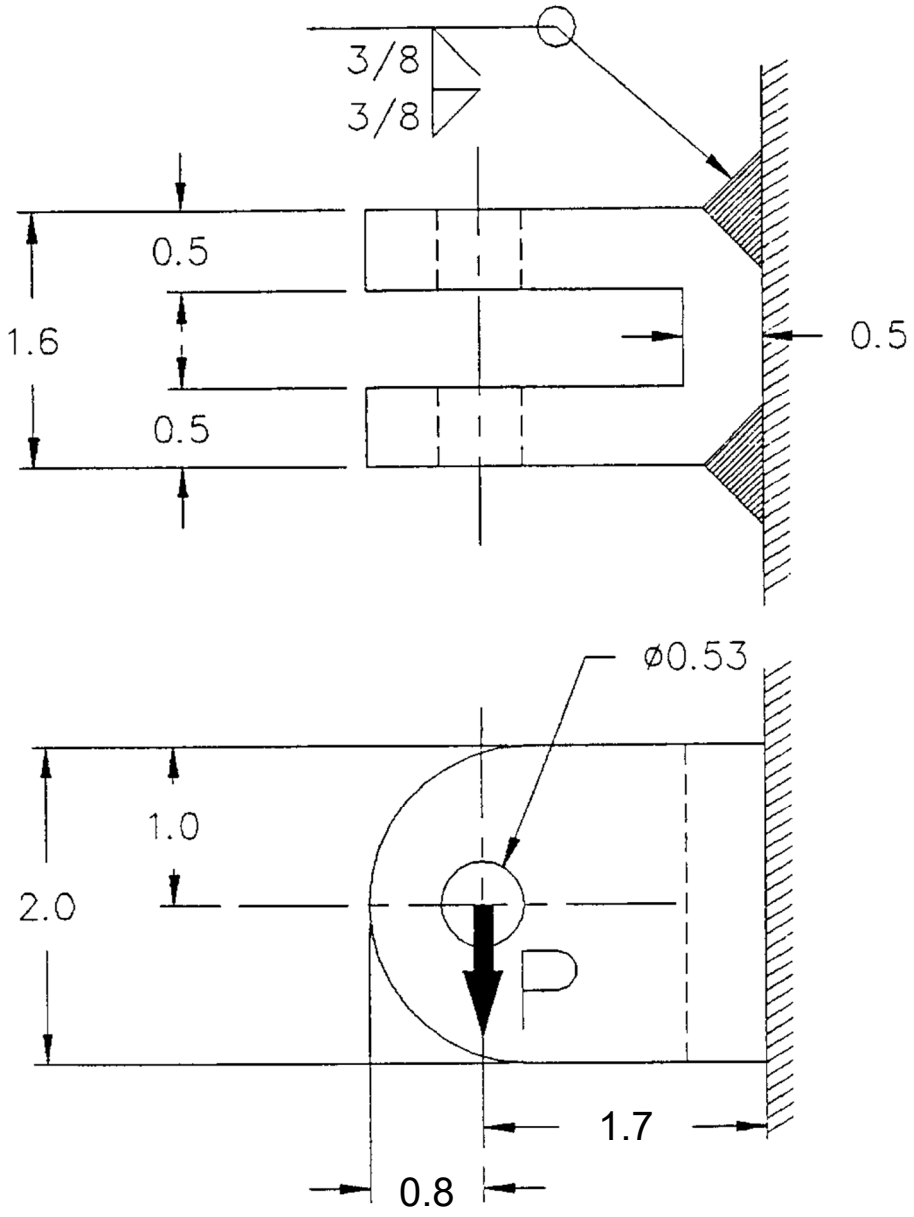

Figure 2.6.7-17 RBCUBED Output Summary – Center of Gravity Over Top Corner

Position	Crush Depth (in)	Crush Force, F_i (lb)	Package Velocity (in/sec)	Approximate Separation Moment (in-lb)
①	2	2.30×10^5	543.4	2.25×10^6
②	4	9.74×10^5	514.8	6.63×10^6
③	6	1.83×10^6	466.2	7.67×10^6
④	8	2.63×10^6	381.2	5.75×10^6

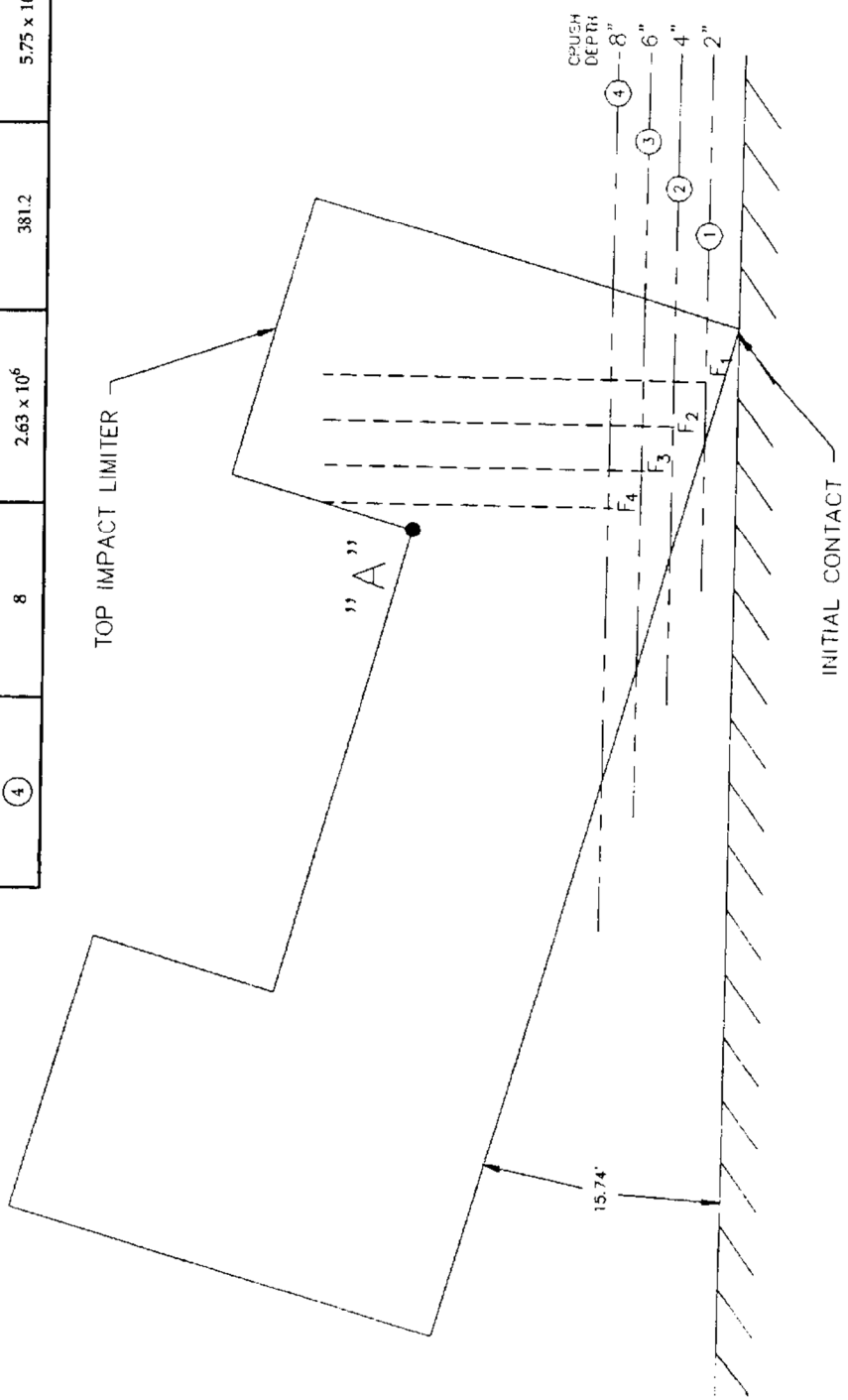

Figure 2.6.7-18 Free Body Diagram – Top Impact Limiter – Center of Gravity Over Corner

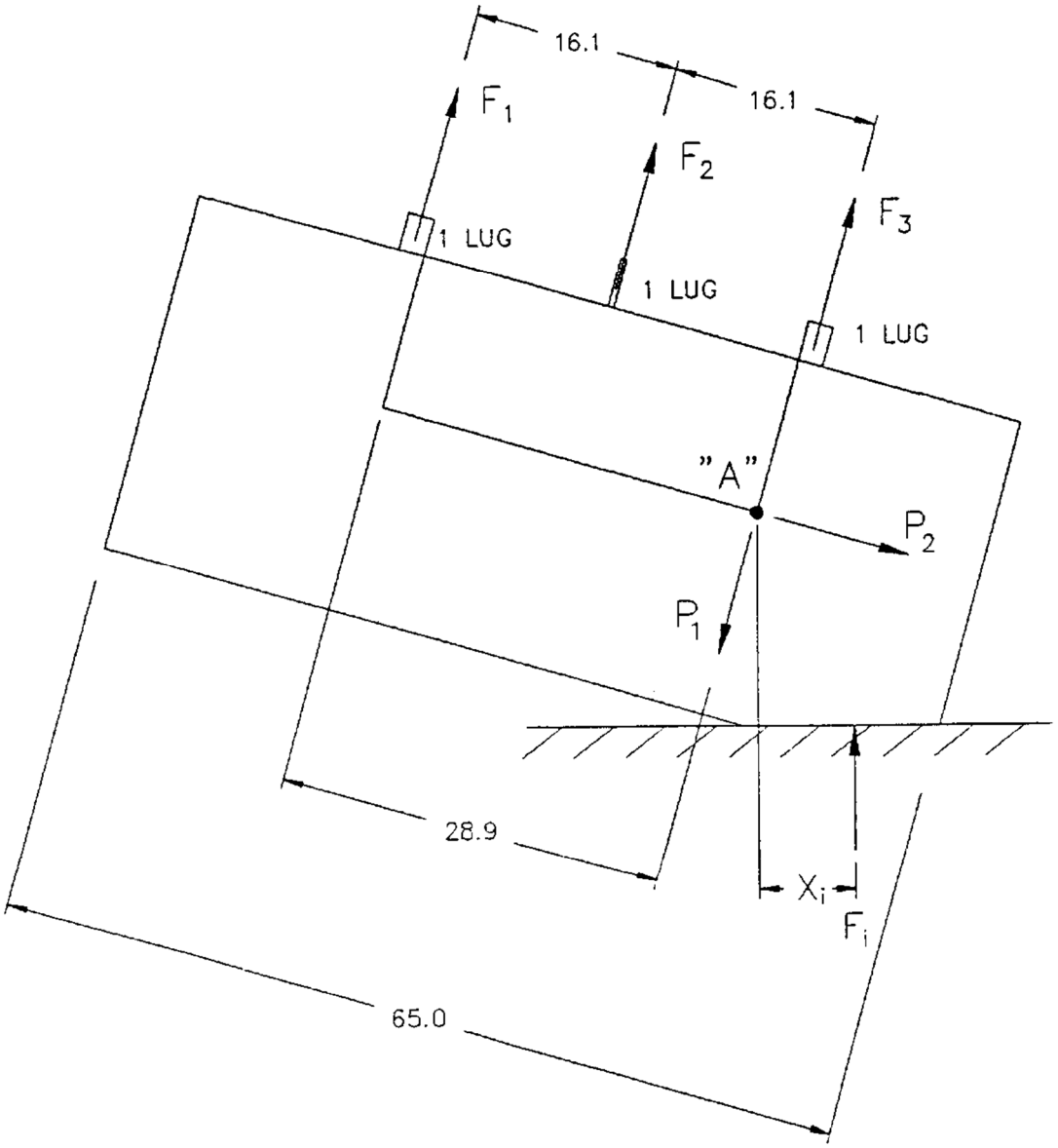

Figure 2.6.7-19 Free Body Diagram – Top Impact Limiter – Cask Wedging Forces

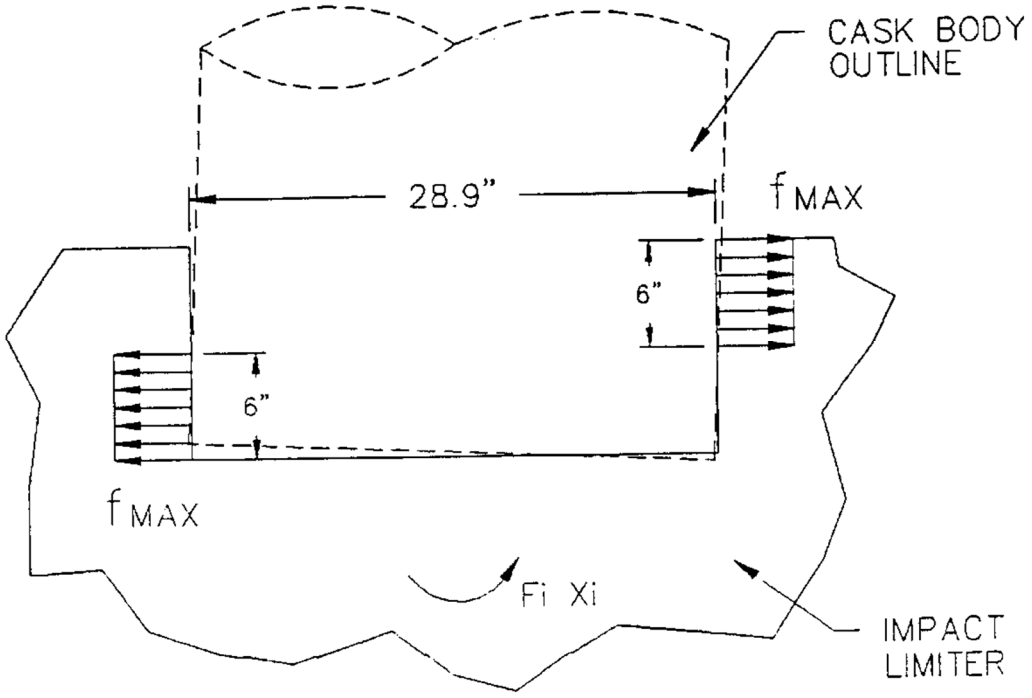

Figure 2.6.7-20 Cask Lid Configuration

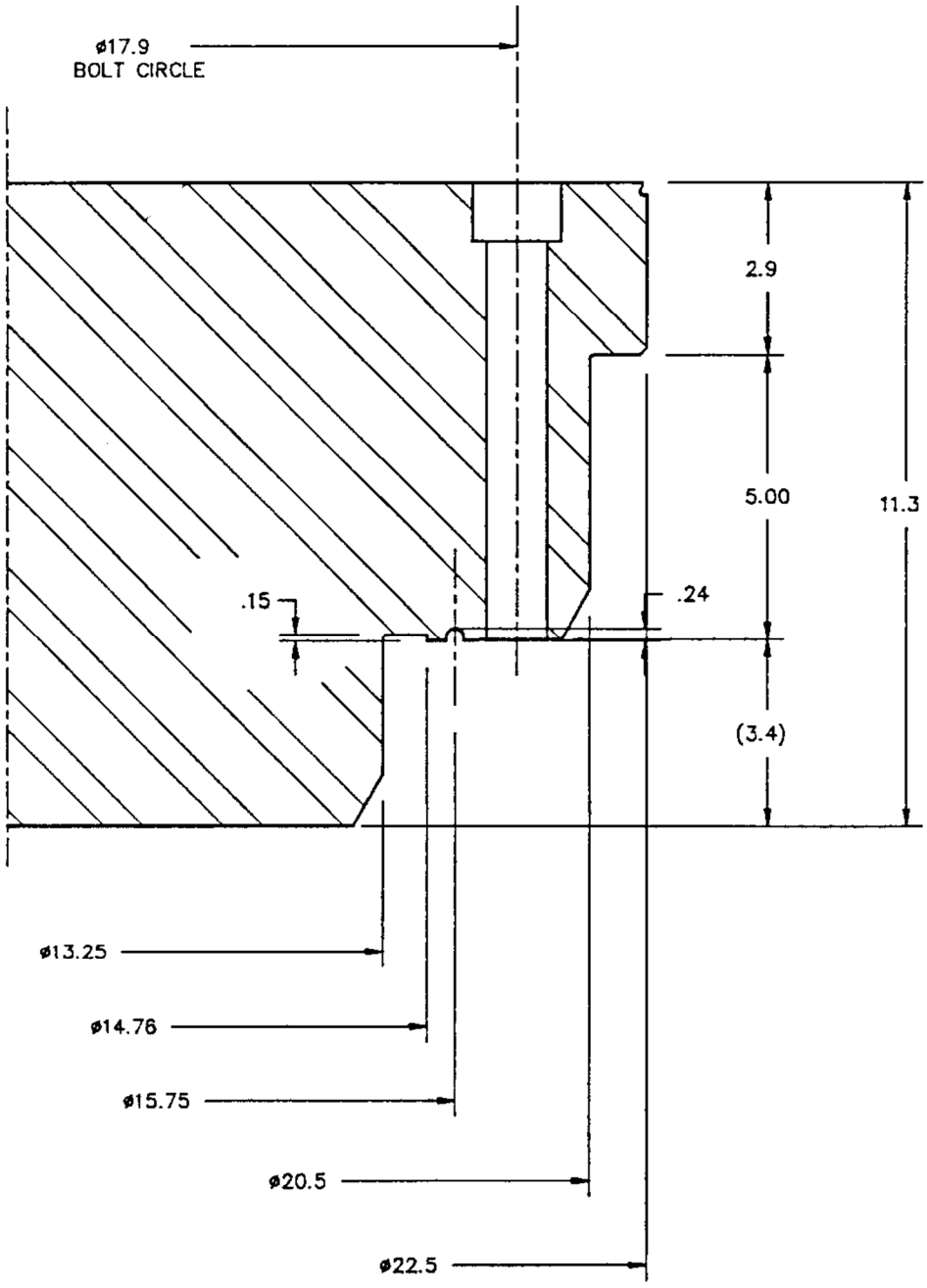

Figure 2.6.7-21 Closure Lid Free Body Diagram

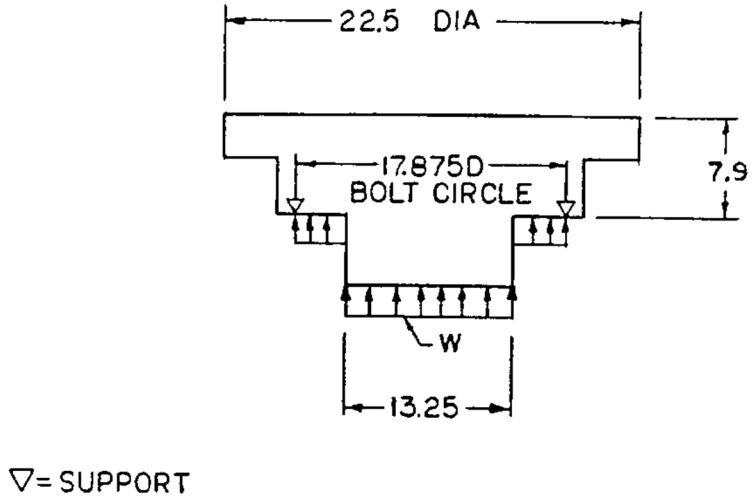

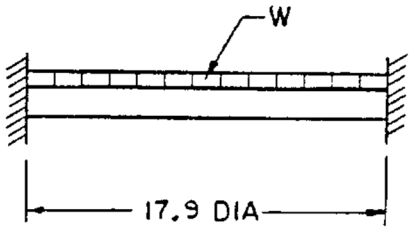

Figure 2.6.7-22 NAC-LWT Cask Cross-Section

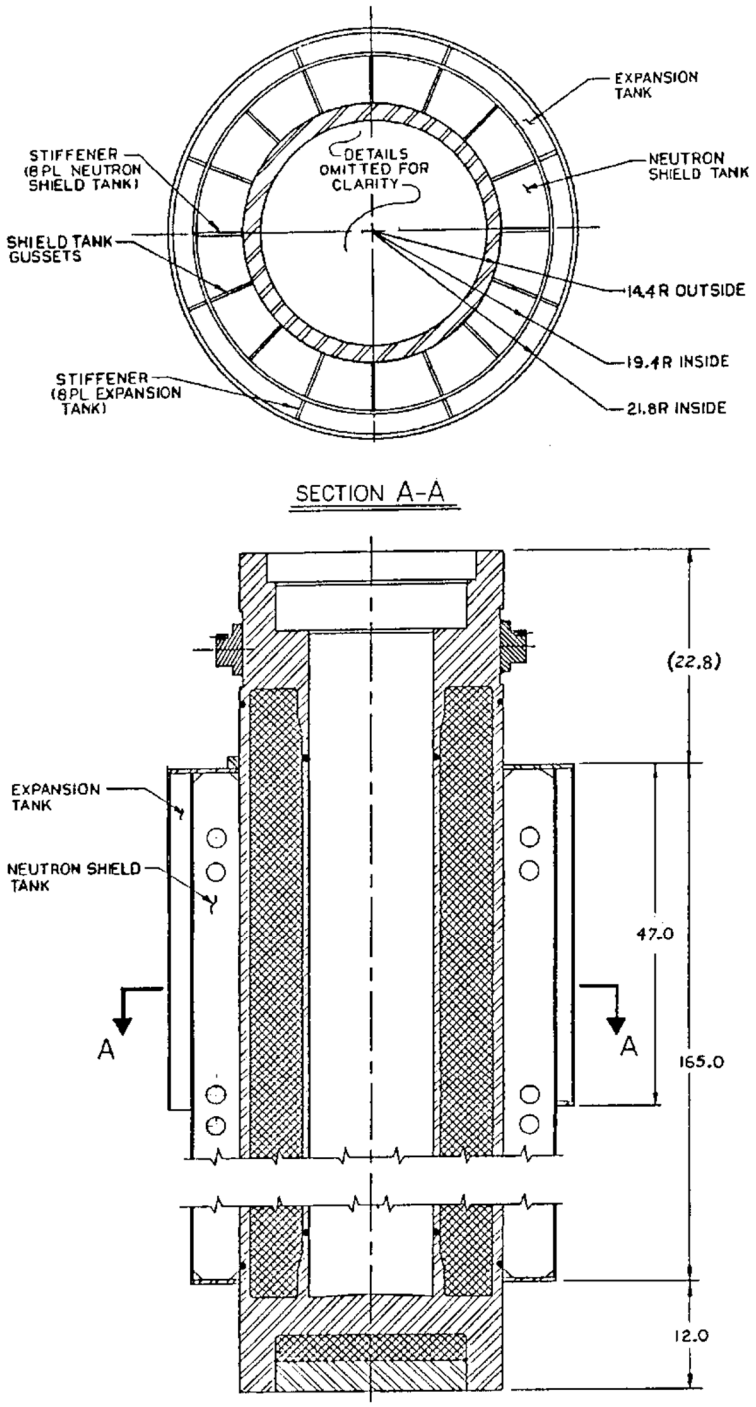

Figure 2.6.7-23 Component Parts of Shield Tank Structure

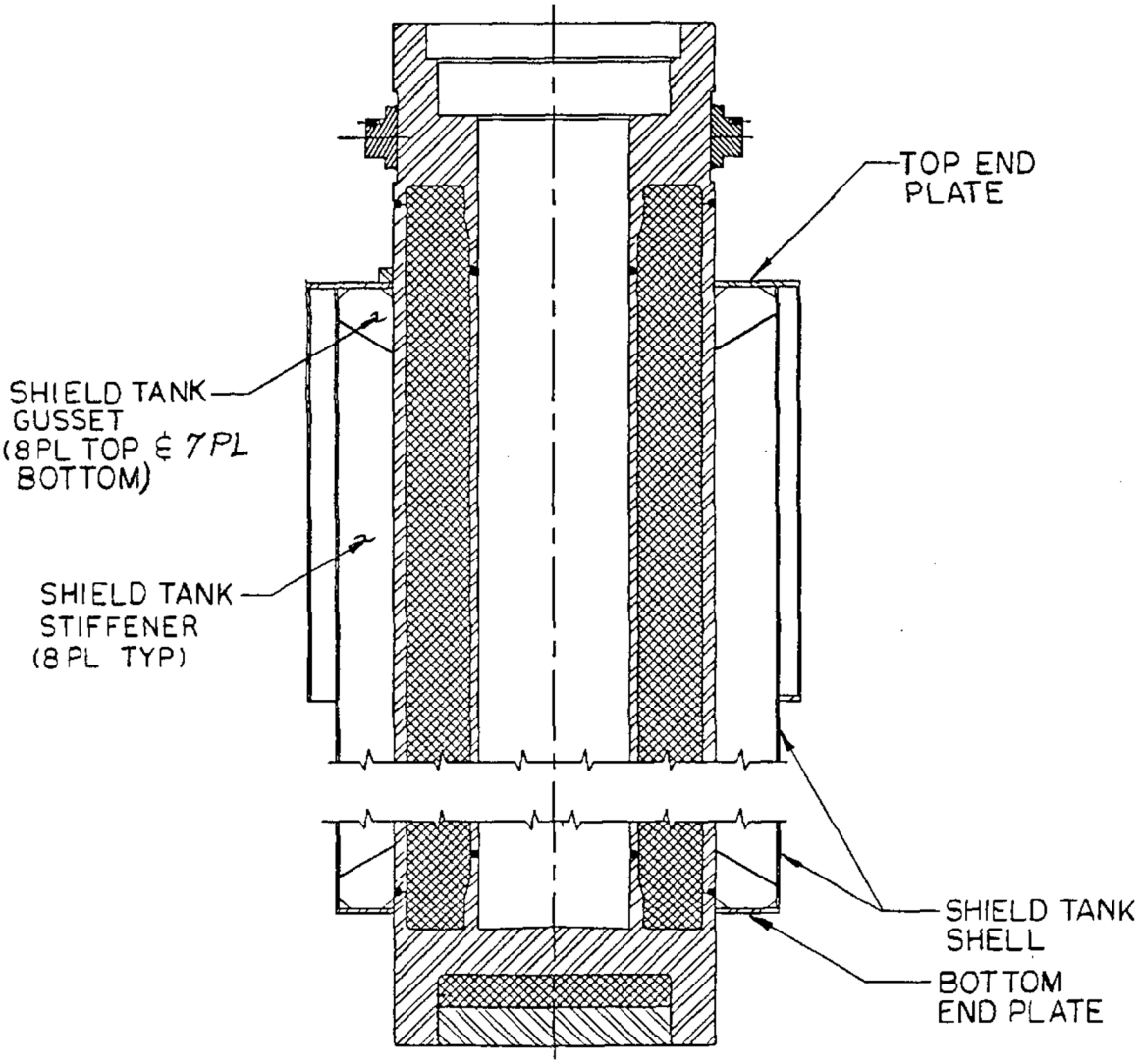

Figure 2.6.7-24 Shield Tank Cross-Section

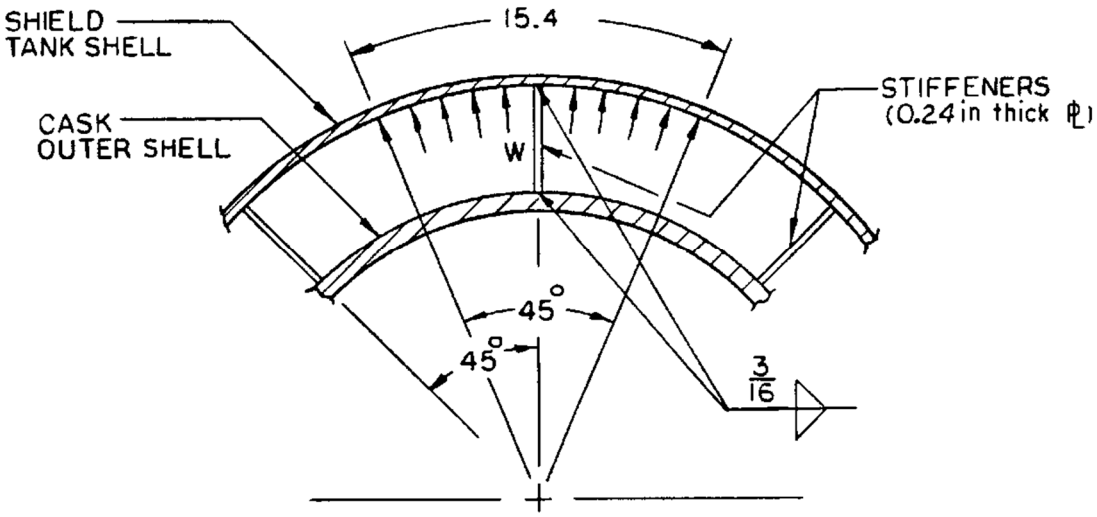

Figure 2.6.7-25 Shield Tank Quarter-Section Geometry

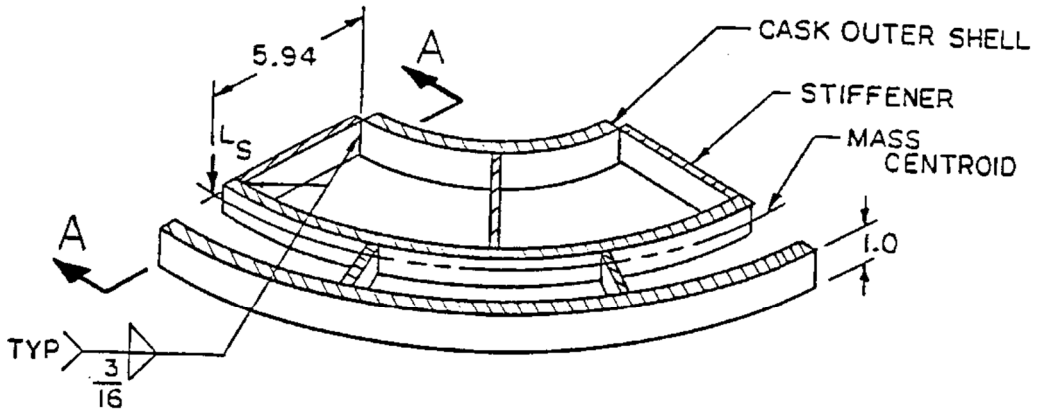

One Quarter of Tank Unit Section

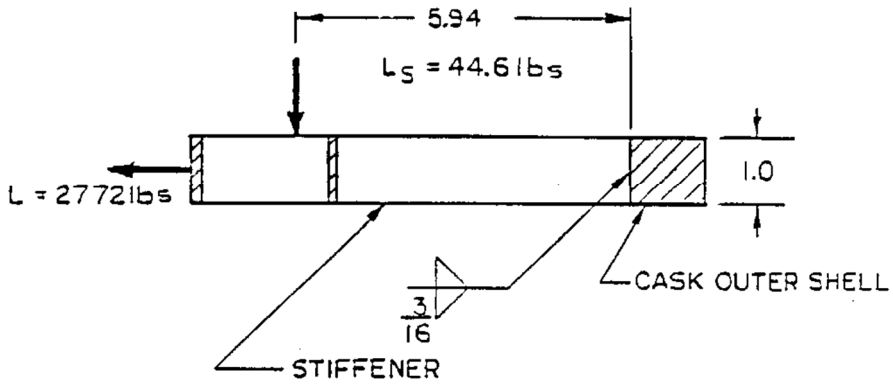

Section A-A

Figure 2.6.7-26 Partial Bottom/Top End Plate Plan and Cross-Section

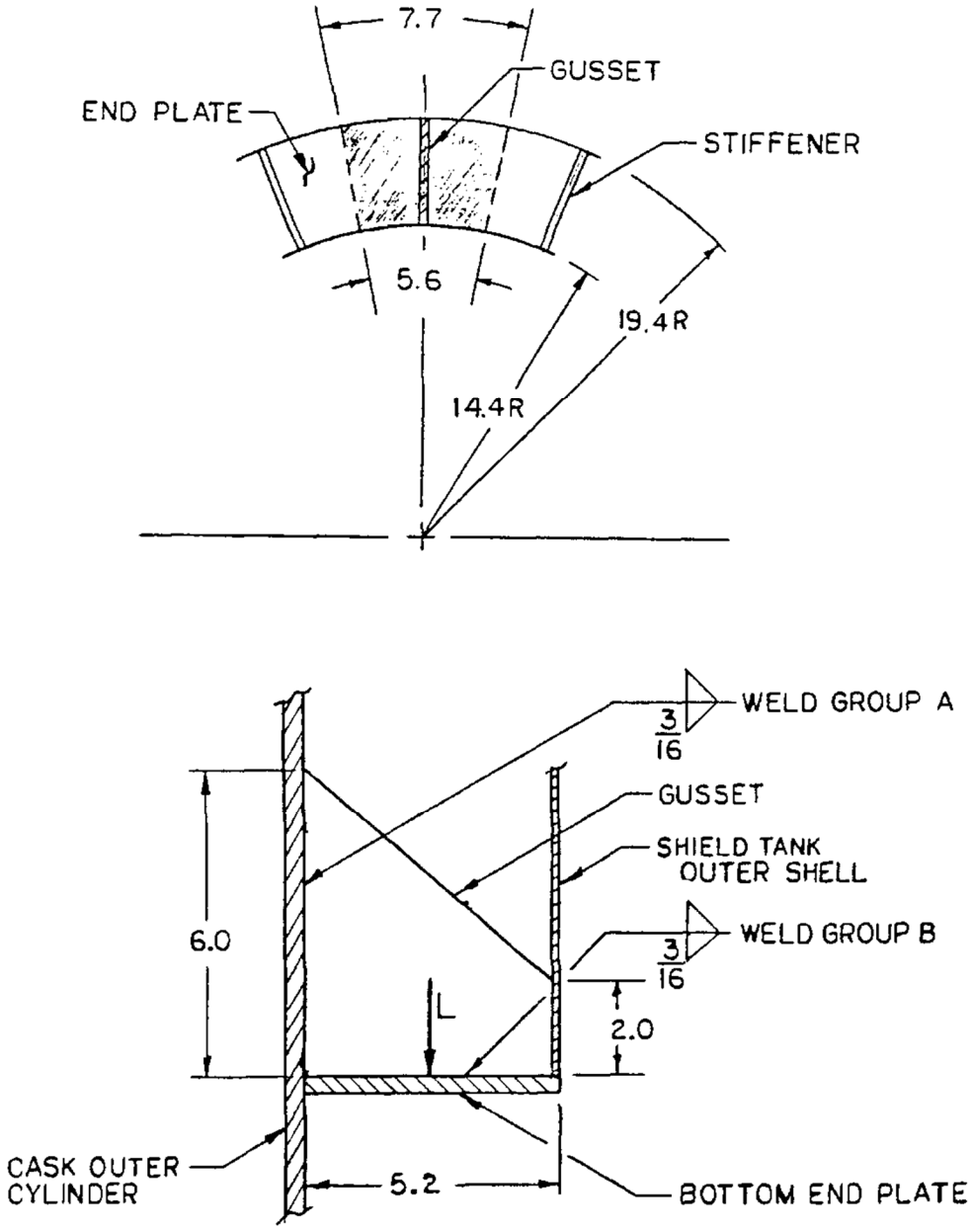

Figure 2.6.7-27 Shield Tank End Plate

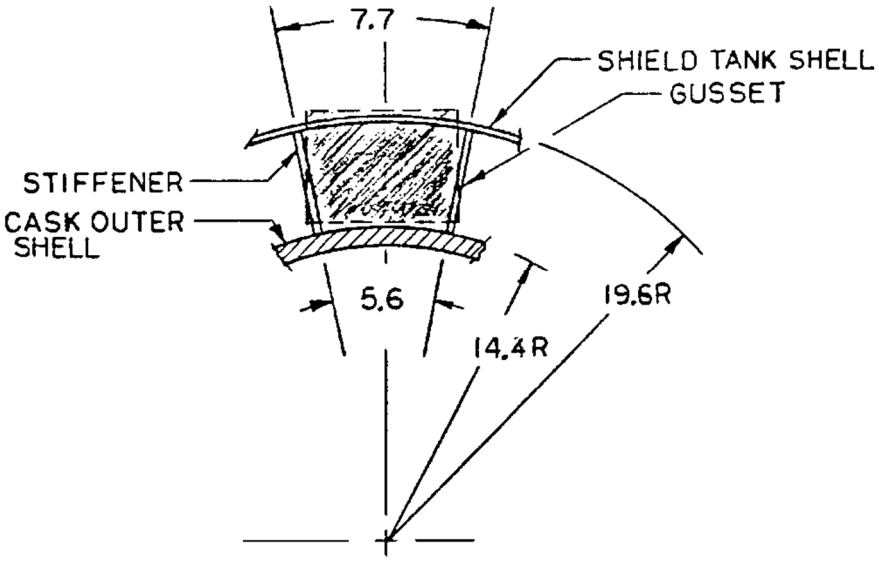

Figure 2.6.7-28 Gusset Profile

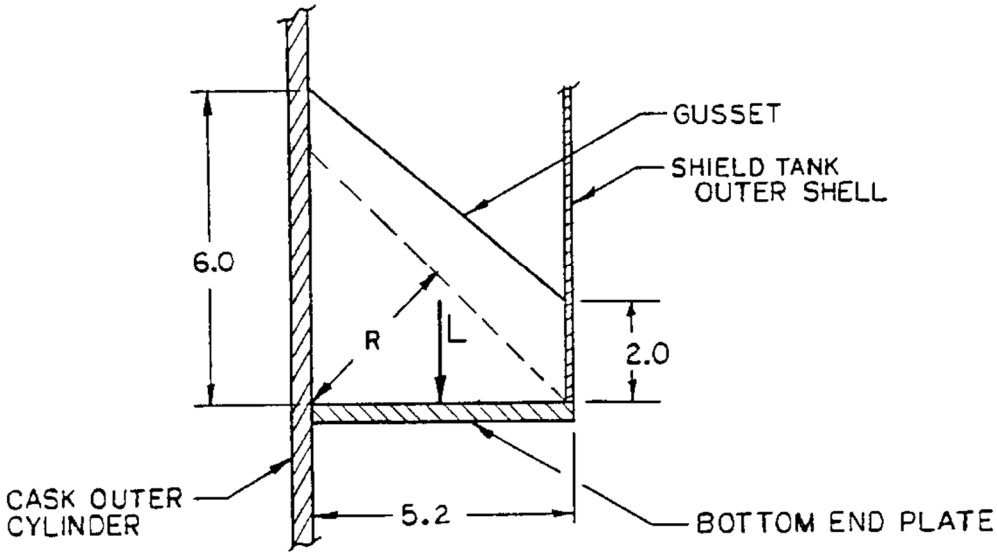

Figure 2.6.7-29 End Plate Welds

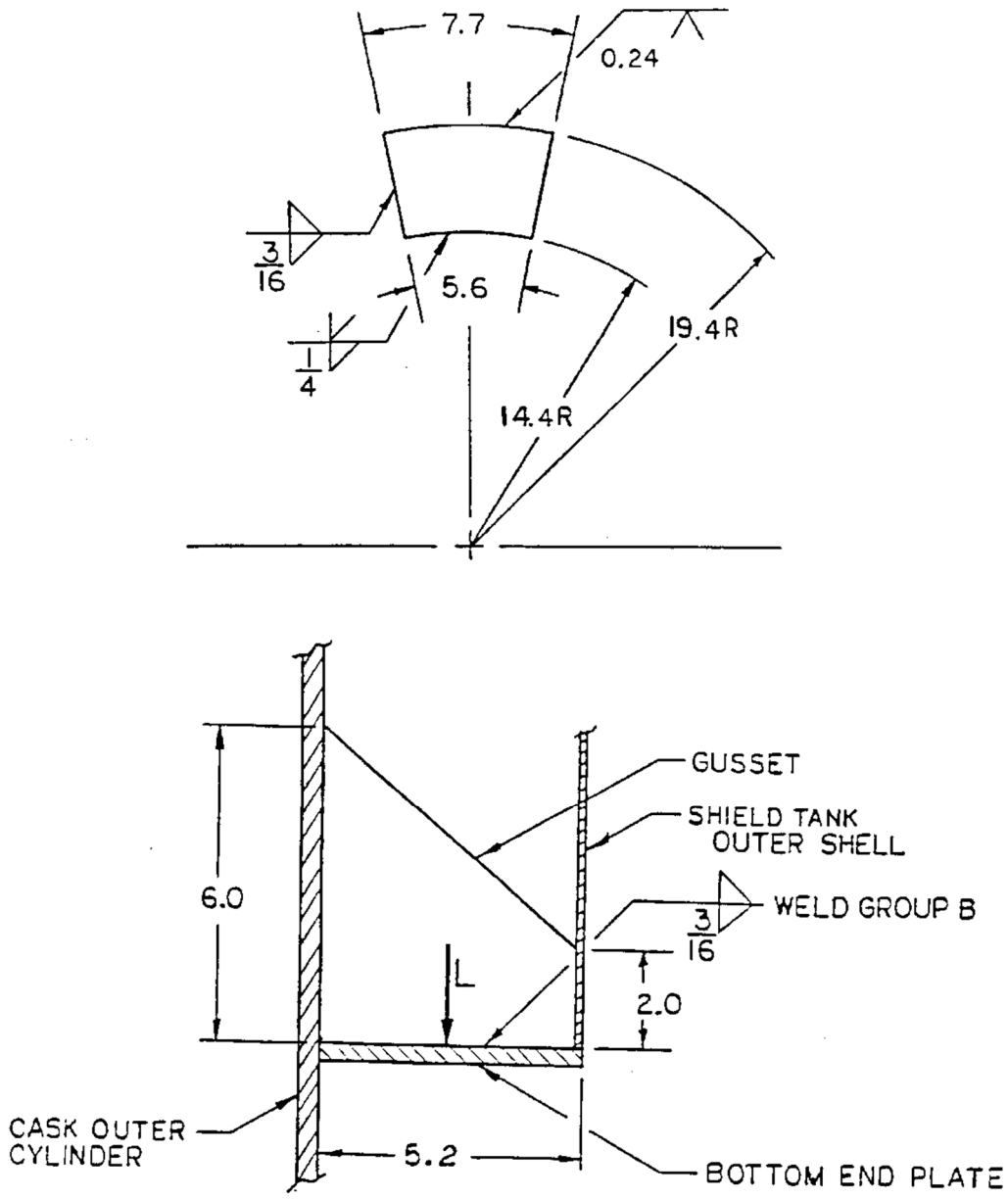

Figure 2.6.7-30 Component Parts of the Expansion Tank Structure

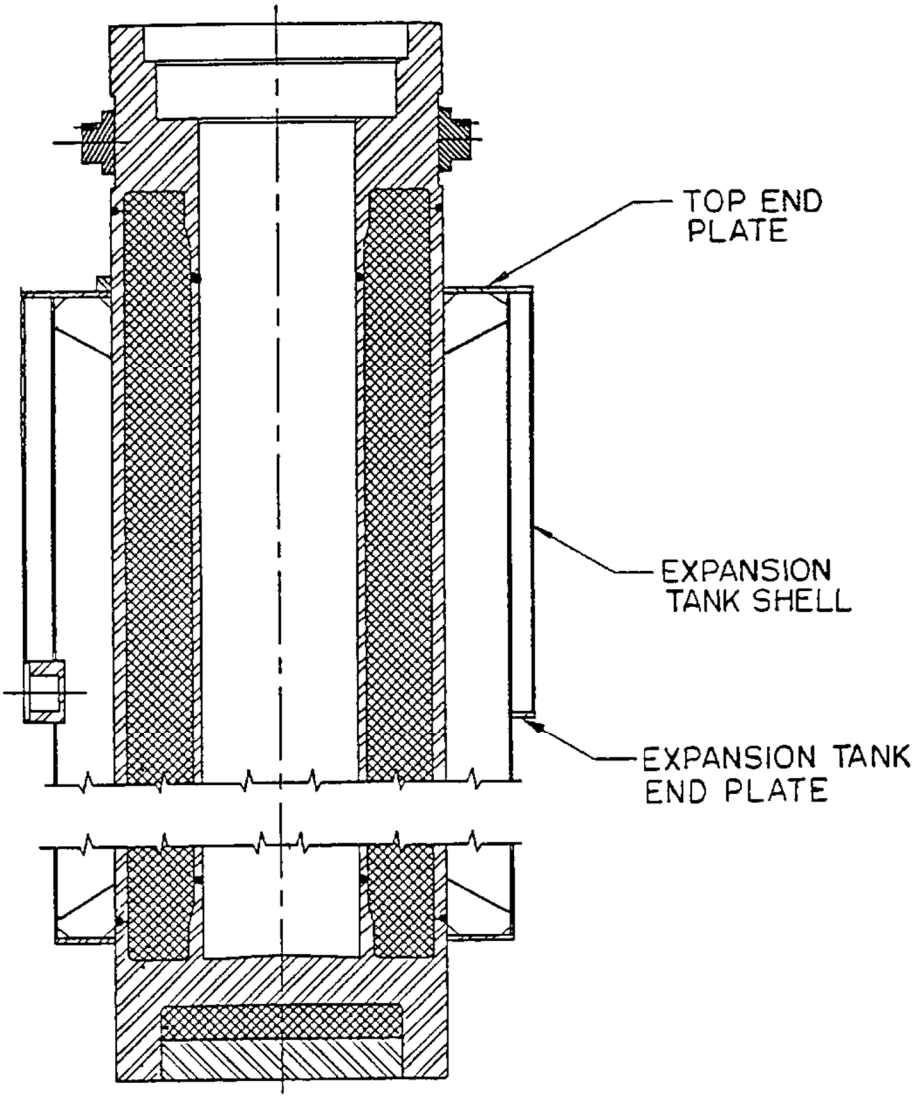

Figure 2.6.7-31 Expansion Tank Top and Bottom End Plate

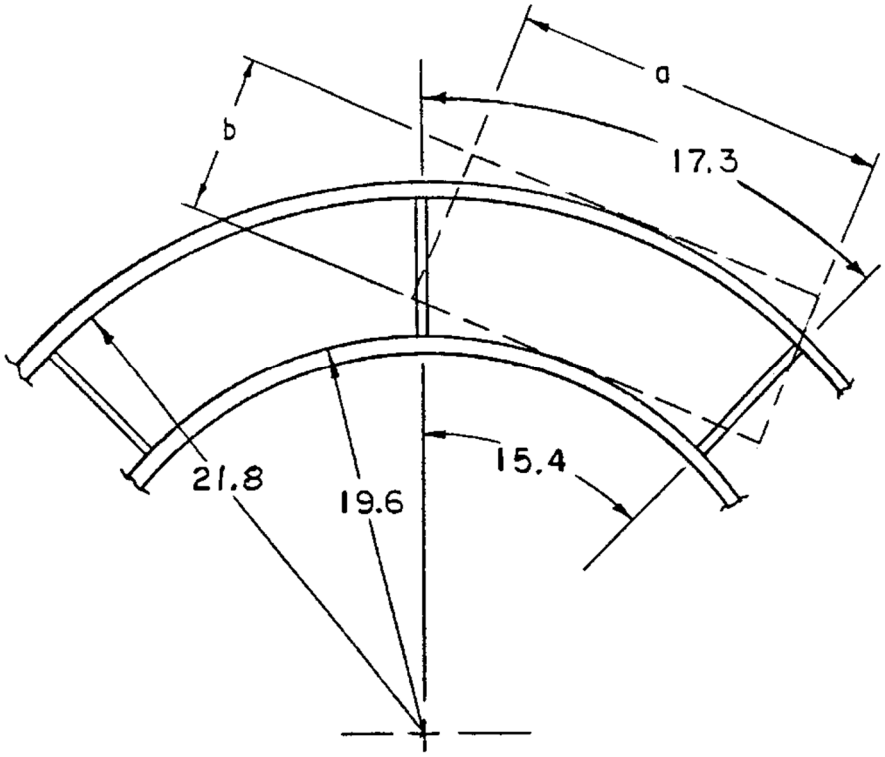

Figure 2.6.7-32 Expansion Tank Stiffener Load Geometry

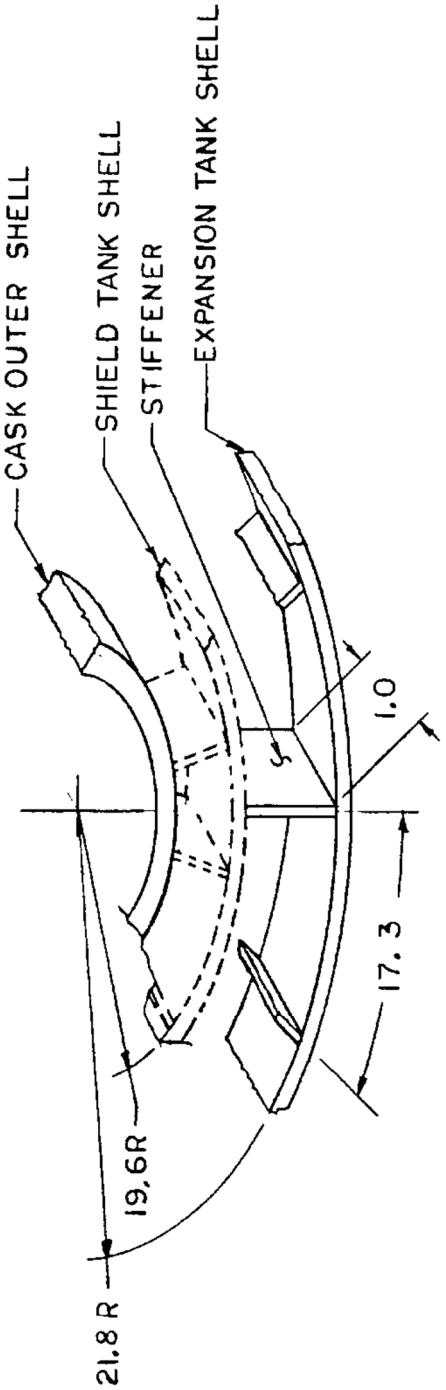

Figure 2.6.7-33 Cask Upper Ring at Trunnion – ANSYS Model

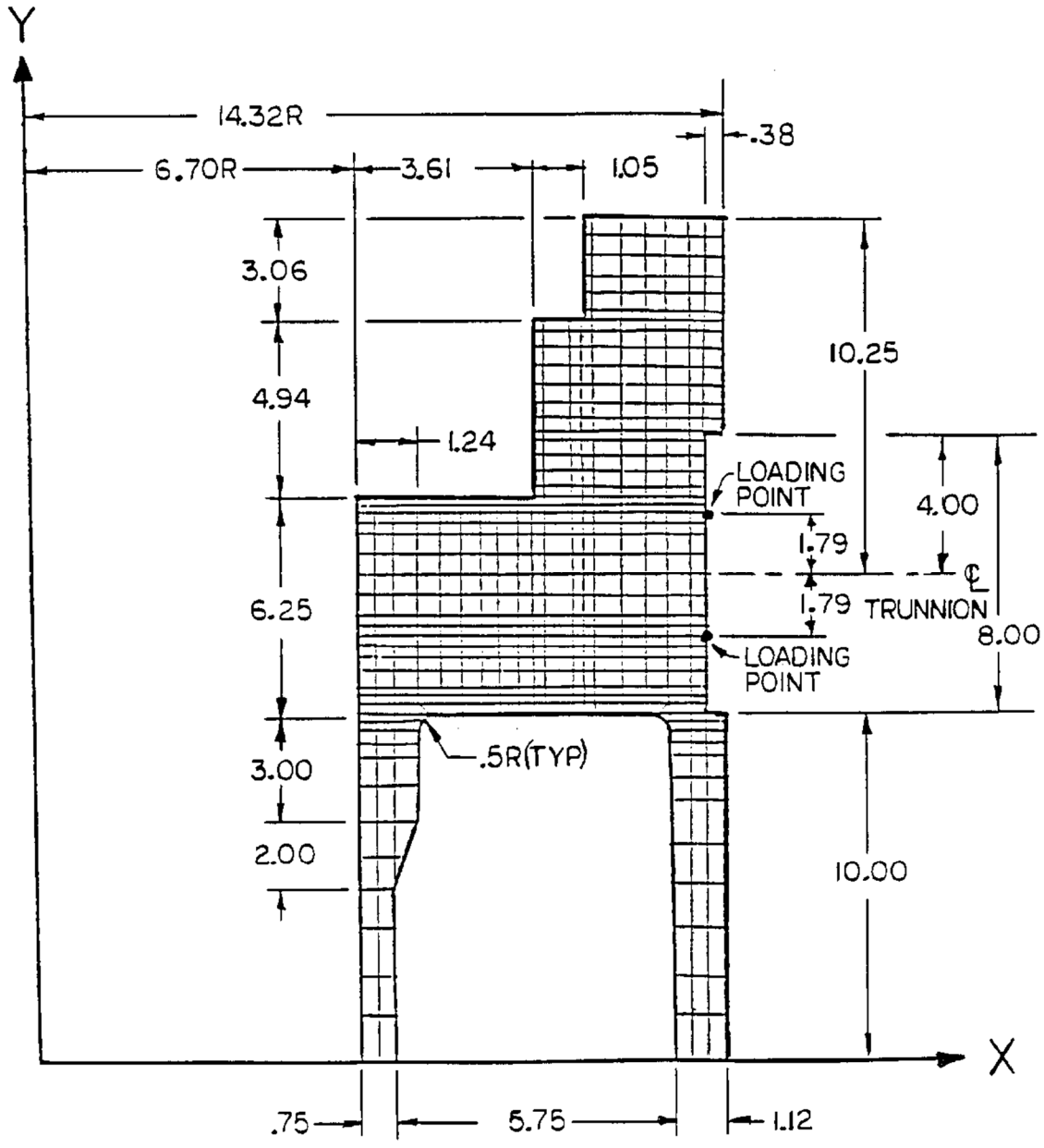

Figure 2.6.7-34 Cask Upper Ring at Trunnion – Model Loads and Boundary Conditions

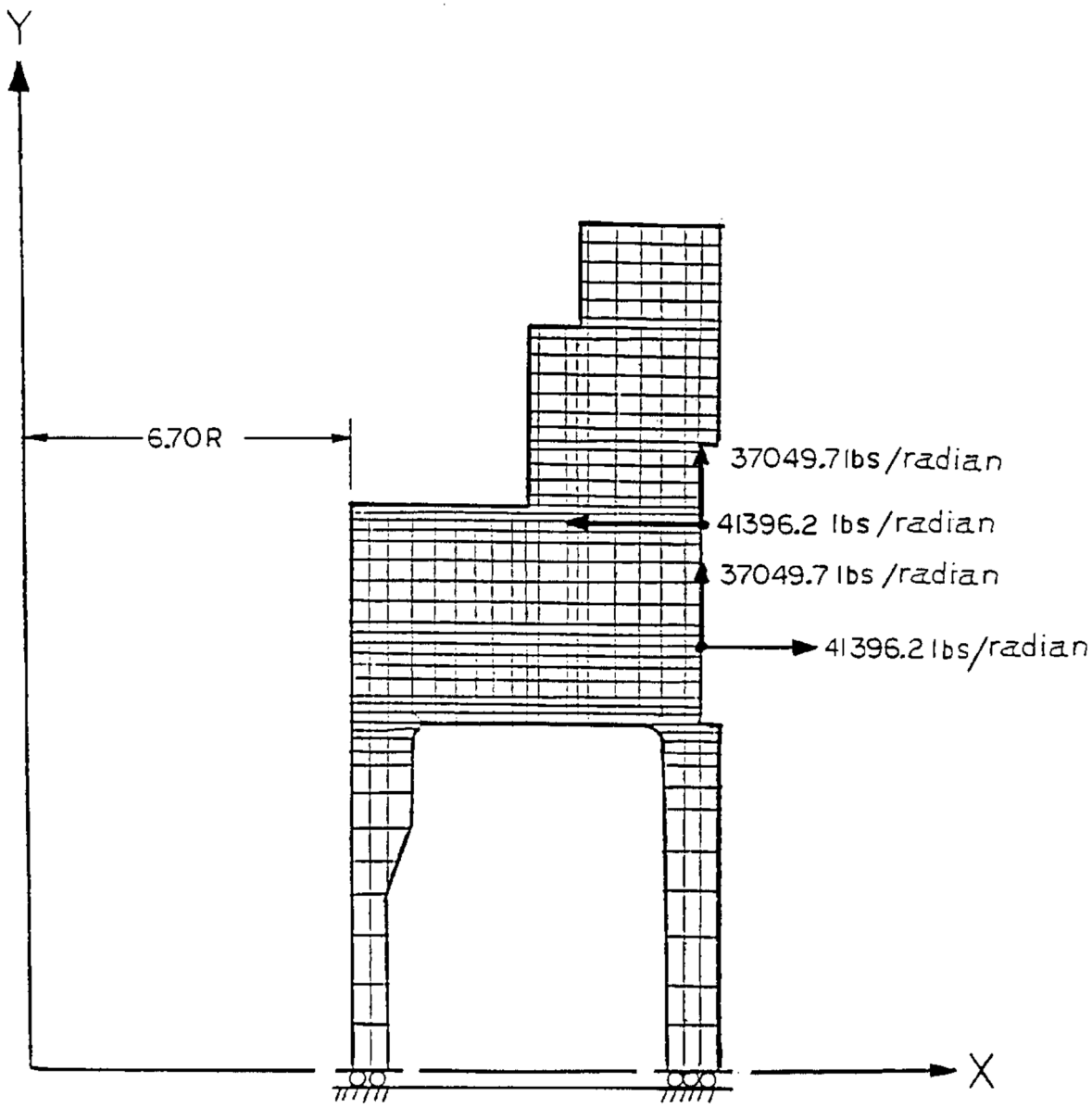

Figure 2.6.7-35 NAC-LWT Cask Upper Ring at Trunnion – Critical Sections

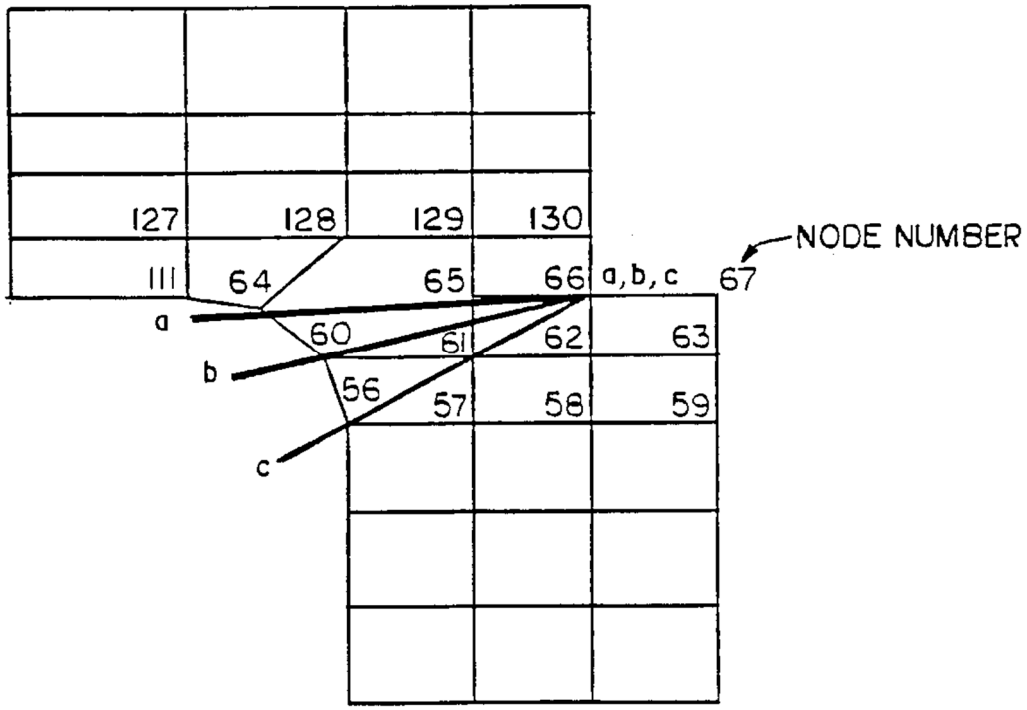

Table 2.6.7-1 Critical Stress Summary (1-Foot Bottom End Drop) – Loading Condition 1 – P_m

Loading Condition 1: 130°F Ambient Temperature and Maximum Decay Heat Load

		P_m Stresses[1] (ksi)				Principal Stresses					
Comp. No.[2]	Section Cut Node to Node	S_x	S_y	S_z	S_{xy}	S_1	S_2	S_3	S.I.	Allow. Stress 1.0 S_m	Margin of Safety
	2-2										
1	2375 to 2575	-0.17	-0.23	0.62	0.40	0.62	0.2	-0.6	1.22	20.0	Large
	4-4										
3	1581 to 1584	-0.1	-4.54	-0.16	-0.14	-0.1	-0.16	-4.55	4.45	20.0	+3.49
	7-7										
4	701 to 704	-0.03	-8.44	0.51	-0.02	0.51	-0.03	-8.44	8.94	31.4	+2.51
	6-6										
6	1515 to 1518	0.00	1.98	-0.16	-0.04	1.98	0.00	-0.16	2.14	31.4	Large
	11-11										
7	192 to 342	-6.50	1.18	1.28	1.69	1.54	1.28	-6.85	8.39	20.0	+1.38
	10-10										
8	361 to 365	0.77	-5.40	3.89	-0.99	3.89	0.92	-5.55	9.44	20.0	+1.19

[1] Conservatively based on a 1.12-inch thick outer shell and on a 3850-psi crush strength aluminum honeycomb impact limiter (Section 2.6.7.1.1).

[2] Refer to Figure 2.10.2-9 for component identification.

Table 2.6.7-2 Critical Stress Summary (1-Foot Bottom End Drop) – Loading Condition 1 - $P_m + P_b$

Loading Condition 1: 130°F Ambient Temperature and Maximum Decay Heat Load

		$P_m + P_b$ Stresses[1] (ksi)				Principal Stresses					
Comp. No.[2]	Section Cut Node to Node	S_x	S_y	S_z	S_{xy}	S_1	S_2	S_3	S.I.	Allow. Stress 1.5 S_m	Margin of Safety
	1-1										
1	2371 to 2571	-3.91	-0.35	0.11	0.00	0.11	-0.35	-3.91	4.01	30.0	+6.48
	3-3										
3	1835 to 1838	-0.1	4.66	2.25	0.29	4.68	2.25	-0.1	4.76	30.0	+5.30
	8-8										
4	621 to 624	0.15	-10.37	-1.16	0.28	0.16	-1.16	-10.38	10.54	47.1	+3.47
	5-5										
6	1595 to 1598	-0.01	3.03	0.57	0.00	3.03	0.57	-0.01	3.04	47.1	Large
	12-12										
7	150 to 193	9.25	-5.21	2.76	0.63	9.27	2.76	-5.24	14.51	30.0	+1.06
	9-9										
8	381 to 385	-0.21	-13.14	2.03	-1.07	2.03	-0.12	-13.23	15.26	30.0	+0.97

[1] Conservatively based on a 1.12-inch thick outer shell and on a 3850-psi crush strength aluminum honeycomb impact limiter (Section 2.6.7.1.1).

[2] Refer to Figure 2.10.2-9 for component identification.

Table 2.6.7-3 Critical Stress Summary (1-Foot Bottom End Drop) – Loading Condition 1 - Total Range

Loading Condition 1: 130°F Ambient Temperature and Maximum Decay Heat Load

		Total Stress Range[1] (ksi)				Principal Stresses			Stress Differences		
Comp. No.[2]	Node	S_x	S_y	S_z	S_{xy}	S_1	S_2	S_3	S_1-S_2	S_2-S_3	S_3-S_1
1	2376	0.80	-4.48	-0.22	-0.31	0.82	-0.22	-4.50	1.04	4.28	-5.32
3	1805	-0.19	-5.27	-2.19	-0.78	-0.07	-2.19	-5.39	2.12	3.20	-5.32
4	604	-0.69	-12.07	-1.65	0.61	-0.66	-1.65	-12.10	0.99	10.45	-11.44
6	1595	-0.02	2.93	0.48	0.00	2.93	0.48	-0.02	2.45	0.50	-2.95
7	192	12.54	-7.35	3.46	-3.90	13.28	3.46	-8.09	9.82	11.55	-21.37
8	361	-0.03	-16.44	0.82	-1.40	0.82	0.09	-16.57	0.73	16.65	-17.38

1 Conservatively based on a 1.12-inch thick outer shell and on a 3850-psi crush strength aluminum honeycomb impact limiter (Section 2.6.7.1.1).
2 Refer to Figure 2.10.2-9 for component identification.

Table 2.6.7-4 Critical Stress Summary (1-Foot Bottom End Drop) – Loading Condition 2 – P_m

Loading Condition 2: -40°F Ambient Temperature and Maximum Decay Heat Load

		P_m Stresses[1] (ksi)				Principal Stresses					
Comp. No.[2]	Section Cut Node to Node	S_x	S_y	S_z	S_{xy}	S_1	S_2	S_3	S.I.	Allow. Stress 1.0 S_m	Margin of Safety
	2-2										
1	2478 to 2578	0.03	-0.11	1.28	0.02	1.28	0.03	-0.11	1.39	20.0	Large
	4-4										
3	1581 to 1584	-0.15	-7.90	-0.93	-0.26	-0.14	-0.93	-7.91	7.77	20.0	+1.57
	6-6										
4	701 to 704	-0.02	-12.08	0.20	-0.03	0.20	-0.02	-12.08	12.28	31.4	+1.56
	8-8										
6	615 to 618	0.00	-2.85	0.80	0.00	0.80	0.00	-2.85	3.65	31.4	+7.60
	11-11										
7	100 to 143	-3.18	-4.19	2.15	2.18	2.15	-1.45	-5.93	8.07	20.0	+1.50
	7-7										
8	601 to 604	-0.23	-11.12	-1.21	0.46	-0.21	-1.21	-11.13	10.93	20.0	+0.83

[1] Conservatively based on a 1.12-inch thick outer shell and on a 3850-psi crush strength aluminum honeycomb impact limiter (Section 2.6.7.1.1).
[2] Refer to Figure 2.10.2-9 for component identification.

Table 2.6.7-5 Critical Stress Summary (1-Foot Bottom End Drop) – Loading Condition 2 - $P_m + P_b$

Loading Condition 2: -40°F Ambient Temperature and Maximum Decay Heat Load

		$P_m + P_b$ Stresses[1] (ksi)				Principal Stresses					
Comp. No.[2]	Section Cut Node to Node	S_x	S_y	S_z	S_{xy}	S_1	S_2	S_3	S.I.	Allow. Stress 1.5 S_m	Margin of Safety
	1-1										
1	2371 to 2571	-4.10	-0.43	0.14	0.00	0.14	-0.43	-4.10	4.24	30.0	+6.08
	3-3										
3	1701 to 1705	0.04	-8.08	-1.59	-0.34	0.05	-1.59	-8.10	8.15	30.0	+2.68
	5-5										
4	621 to 624	0.18	-13.91	-1.67	0.32	0.19	-1.67	-13.91	14.10	47.1	+2.34
	8-8										
6	615 to 618	0.03	-4.12	0.63	0.00	0.63	0.03	-4.12	4.75	47.1	+8.92
	10-10										
7	193 to 200	3.76	-9.04	1.83	-0.76	3.81	1.83	-9.09	12.89	30.0	+1.32
	9-9										
8	185 to 335	-12.66	-0.38	-0.11	1.93	-0.09	-0.11	-12.96	12.87	30.0	+1.33

1 Conservatively based on a 1.12-inch thick outer shell and on a 3850-psi crush strength aluminum honeycomb impact limiter (Section 2.6.7.1.1).
2 Refer to Figure 2.10.2-9 for component identification.

Table 2.6.7-6 Critical Stress Summary (1-Foot Bottom End Drop) – Loading Condition 2 - Total Range

Loading Condition 2: -40°F Ambient Temperature and Maximum Decay Heat Load

		Total Stress Range[1] (ksi)				Principal Stresses			Stress Differences		
Comp. No.[2]	Node	S_x	S_y	S_z	S_{xy}	S_1	S_2	S_3	S_1-S_2	S_2-S_3	S_3-S_1
1	2376	0.67	-4.03	0.05	-0.35	0.70	0.05	-4.06	0.65	4.11	-4.75
3	1805	-0.32	-9.36	-3.82	-1.34	-0.12	-3.82	-9.56	3.70	5.74	-9.44
4	604	-0.90	-15.99	-2.51	0.80	-0.86	-2.51	-16.03	1.65	13.52	-15.17
6	618	0.03	-4.20	0.57	0.00	0.57	0.03	-4.20	0.54	4.23	-4.77
7	143	-5.58	-14.56	-1.04	0.55	-1.04	-5.55	-14.59	4.51	9.05	-13.55
8	361	0.01	-14.97	-0.81	-1.62	0.18	-0.81	-15.14	0.99	14.33	-15.33

[1] Conservatively based on a 1.12-inch thick outer shell and on a 3850-psi crush strength aluminum honeycomb impact limiter (Section 2.6.7.1.1).

[2] Refer to Figure 2.10.2-9 for component identification.

Table 2.6.7-7 Critical Stress Summary (1-Foot Bottom End Drop) – Loading Condition 3 – P_m

Loading Condition 3: -40°F Ambient Temperature and No Decay Heat Load

		P_m Stresses[1] (ksi)				Principal Stresses					
Comp. No.[2]	Section Cut Node to Node	S_x	S_y	S_z	S_{xy}	S_1	S_2	S_3	S.I.	Allow. Stress 1.0 S_m	Margin of Safety
	1-1										
1	2375 to 2575	-0.21	0.00	-0.03	0.18	0.1	-0.03	-0.31	0.41	20.0	Large
	2-2										
3	1581 to 1584	-0.22	-3.78	-5.48	-0.28	-0.19	-3.80	-5.48	5.29	20.0	+2.78
	3-3										
4	621 to 624	0.04	-7.76	-1.05	0.24	0.04	-1.05	-7.77	7.81	31.4	+3.02
	5-5										
6	615 to 618	0.00	-6.85	-0.13	0.00	0.00	-0.13	-6.85	6.85	31.4	+3.58
	8-8										
7	18 to 118	-10.02	-0.60	-2.86	2.62	0.08	-2.86	-10.70	10.78	20.0	+0.86
	4-4										
8	601 to 604	-0.16	-7.07	-0.78	0.34	-0.14	-0.78	-7.09	6.95	20.0	+1.88

[1] Conservatively based on a 1.12-inch thick outer shell and on a 3850-psi crush strength aluminum honeycomb impact limiter (Section 2.6.7.1.1).

[2] Refer to Figure 2.10.2-9 for component identification.

Table 2.6.7-8 Critical Stress Summary (1-Foot Bottom End Drop) – Loading Condition 3 - $P_m + P_b$

Loading Condition 3: -40°F Ambient Temperature and No Decay Heat Load

		$P_m + P_b$ Stresses[1] (ksi)				Principal Stresses					
Comp. No.[2]	Section Cut Node to Node	S_x	S_y	S_z	S_{xy}	S_1	S_2	S_3	S.I.	Allow. Stress 1.5 S_m	Margin of Safety
	1-1										
1	2375 to 2575	-1.99	0.00	-0.03	0.18	0.01	-0.03	-2.01	2.02	30.0	Large
	2-2										
3	1581 to 1584	0.01	-3.30	-5.65	-0.28	0.03	-3.33	-5.65	5.68	30.0	+4.28
	3-3										
4	621 to 624	0.12	-8.99	-1.30	0.24	0.13	-1.30	-9.00	9.13	47.1	+4.16
	5-5										
6	615 to 618	0.00	-7.06	-0.19	0.00	0.00	-0.19	-7.06	7.06	47.1	+5.67
	8-8										
7	18 to 118	-20.14	-0.6	-2.86	2.62	-0.25	-2.86	-20.49	20.23	30.0	+0.48
	6-6										
8	185 to 335	-8.83	1.55	1.16	2.22	2.0	1.16	-9.29	11.29	30.0	+1.66

[1] Conservatively based on a 1.12-inch thick outer shell and on a 3850-psi crush strength aluminum honeycomb impact limiter (Section 2.6.7.1.1).

[2] Refer to Figure 2.10.2-9 for component identification.

Table 2.6.7-9 Critical Stress Summary (1-Foot Bottom End Drop) – Loading Condition 3 - Total Range

Loading Condition 3: -40°F Ambient Temperature and No Decay Heat Load

		Total Stress Range[1] (ksi)				Principal Stresses			Stress Differences		
Comp. No.[2]	Node	S_x	S_y	S_z	S_{xy}	S_1	S_2	S_3	S_1-S_2	S_2-S_3	S_3-S_1
1	2376	0.96	-3.75	-0.64	-0.11	0.96	-0.64	-3.75	1.60	3.11	-4.71
3	2176	3.74	-17.36	-1.84	-2.41	4.01	-1.84	-17.90	5.85	16.06	-21.91
4	604	-0.58	-10.47	-1.81	0.56	-0.55	-1.81	-10.50	1.26	8.69	-9.95
6	615	0.01	-7.05	-0.19	0.00	0.01	-0.19	-7.05	0.20	6.86	-7.06
7	143	0.08	-23.96	-3.03	-2.73	0.39	-3.03	-24.27	3.42	21.24	-24.66
8	361	-0.02	-10.55	0.26	-1.38	0.26	-0.16	-10.73	0.10	10.89	-10.99

[1] Conservatively based on a 1.12-inch thick outer shell and on a 3850-psi crush strength aluminum honeycomb impact limiter (Section 2.6.7.1.1).

[2] Refer to Figure 2.10.2-9 for component identification.

Table 2.6.7-10 Critical Stress Summary (1-Foot Top End Drop) – Loading Condition 1 – P_m

Loading Condition 1: 130°F Ambient Temperature and Maximum Decay Heat Load

		P_m Stresses[1] (ksi)				Principal Stresses					
Comp. No.[2]	Section Cut Node to Node	S_x	S_y	S_z	S_{xy}	S_1	S_2	S_3	S.I.	Allow. Stress 1.0 S_m	Margin of Safety
	2-2										
1	2377 to 2577	-7.46	-0.06	0.09	0.15	0.09	-0.05	-7.46	7.55	20.0	+1.65
	4-4										
3	1581 to 1584	-0.20	-7.58	-0.57	-0.33	-0.18	-0.57	-7.60	7.42	20.0	+1.70
	5-5										
4	1481 to 1484	-0.03	-8.19	0.52	0.02	0.52	-0.03	-8.19	8.71	31.4	+2.60
	12-12										
6	695 to 698	0.00	2.39	-0.10	0.04	2.40	0.00	-0.10	2.50	31.4	Large
	10-10										
7	17 to 117	-1.04	1.54	2.36	-2.84	3.37	2.36	-2.87	6.23	20.0	+2.21
	7-7										
8	401 to 405	-0.03	-2.63	1.89	-0.39	1.89	0.03	-2.69	4.58	20.0	+3.37

[1] Conservatively based on a 1.12-inch thick outer shell and on a 3850-psi crush strength aluminum honeycomb impact limiter (Section 2.6.7.1.1).

[2] Refer to Figure 2.10.2-9 for component identification.

Table 2.6.7-11 Critical Stress Summary (1-Foot Top End Drop) – Loading Condition 1 - $P_m + P_b$

Loading Condition 1: 130°F Ambient Temperature and Maximum Decay Heat Load

		$P_m + P_b$ Stresses[1] (ksi)				Principal Stresses					
Comp. No.[2]	Section Cut Node to Node	S_x	S_y	S_z	S_{xy}	S_1	S_2	S_3	S.I.	Allow. Stress 1.5 S_m	Margin of Safety
	1-1										
1	2371 to 2571	-12.69	-0.13	-0.22	-1.01	-0.05	-0.22	-12.77	12.72	30.0	+1.36
	3-3										
3	1941 to 1956	0.84	-10.28	-3.31	0.03	0.84	-3.31	-10.28	11.12	30.0	+1.70
	11-11										
4	1561 to 1564	0.12	-9.50	-0.89	-0.22	0.13	-0.89	-9.51	9.64	47.1	+3.89
	6-6										
6	615 to 618	-0.02	3.50	0.78	0.00	3.50	0.78	-0.02	3.52	47.1	Large
	9-9										
7	143 to 150	-7.68	6.60	1.37	1.33	6.72	1.37	-7.80	14.52	30.0	+1.07
	8-8										
8	381 to 385	-0.15	-6.77	0.67	-0.49	0.67	-0.12	-6.81	7.47	30.0	+3.02

[1] Conservatively based on a 1.12-inch thick outer shell and on a 3850-psi crush strength aluminum honeycomb impact limiter (Section 2.6.7.1.1).

[2] Refer to Figure 2.10.2-9 for component identification.

Table 2.6.7-12 Critical Stress Summary (1-Foot Top End Drop) – Loading Condition 1 - Total Range

Loading Condition 1: 130°F Ambient Temperature and Maximum Decay Heat Load

		Total Stress Range[1] (ksi)				Principal Stresses			Stress Differences		
Comp. No.[2]	Node	S_x	S_y	S_z	S_{xy}	S_1	S_2	S_3	S_1-S_2	S_2-S_3	S_3-S_1
1	2371	2.76	-10.30	0.04	3.56	3.67	0.04	-11.21	3.63	11.25	-14.88
3	1962	-1.54	-12.69	-5.46	-1.00	-1.45	-5.46	-12.78	4.01	7.32	-11.33
4	1584	-0.62	-10.96	-1.54	-0.54	-0.59	-1.54	-10.98	0.95	9.44	-10.39
6	615	-0.01	3.43	0.72	-0.01	3.43	0.72	-0.01	2.71	0.73	-3.44
7	143	-7.68	6.79	1.34	2.96	7.37	1.34	-8.26	6.03	9.60	-15.63
8	361	-0.07	-8.76	-0.09	-0.78	0.00	-0.09	-8.83	0.09	8.74	-8.83

1 Conservatively based on a 1.12-inch thick outer shell and on a 3850-psi crush strength aluminum honeycomb impact limiter (Section 2.6.7.1.1).

2 Refer to Figure 2.10.2-9 for component identification.

Table 2.6.7-13 Critical Stress Summary (1-Foot Top End Drop) – Loading Condition 2 – P_m

Loading Condition 2: -40°F Ambient Temperature and Maximum Decay Heat Load

		P_m Stresses[1] (ksi)				Principal Stresses					
Comp. No.[2]	Section Cut Node to Node	S_x	S_y	S_z	S_{xy}	S_1	S_2	S_3	S.I.	Allow. Stress 1.0 S_m	Margin of Safety
	2-2										
1	2377 to 2577	-7.42	-0.08	0.30	0.18	0.30	-0.08	-7.42	7.72	20.0	+1.59
	4-4										
3	1581 to 1584	-0.24	-10.89	-1.33	-0.44	-0.22	-1.33	-10.91	10.69	20.0	+0.87
	6-6										
4	1481 to 1484	-0.02	-11.77	0.24	0.04	0.24	-0.02	-11.77	12.01	31.4	+1.61
	5-5										
6	1595 to 1598	0.01	-2.37	1.0	0.02	1.0	0.01	-2.37	3.37	31.4	+8.32
	10-10										
7	375 to 378	-1.35	1.92	2.97	-0.61	2.97	2.03	-1.45	4.42	20.0	+3.52
	8-8										
8	601 to 604	-0.13	-7.55	-0.80	0.27	-0.12	-0.80	-7.56	7.44	20.0	+1.69

1 Conservatively based on a 1.12-inch thick outer shell and on a 3850-psi crush strength aluminum honeycomb impact limiter (Section 2.6.7.1.1).

2 Refer to Figure 2.10.2-9 for component identification.

Table 2.6.7-14 Critical Stress Summary (1-Foot Top End Drop) – Loading Condition 2 - $P_m + P_b$

Loading Condition 2: -40°F Ambient Temperature and Maximum Decay Heat Load

		$P_m + P_b$ Stresses[1] (ksi)				Principal Stresses					
Comp. No.[2]	Section Cut Node to Node	S_x	S_y	S_z	S_{xy}	S_1	S_2	S_3	S.I.	Allow. Stress 1.5 S_m	Margin of Safety
	1-1										
1	2371 to 2571	-12.88	-0.21	-0.19	-1.02	-0.13	-0.19	-12.96	12.84	30.0	+1.34
	4-4										
3	1581 to 1584	-0.52	-12.05	-1.44	-0.45	-0.51	-1.44	-12.07	11.56	30.0	+1.60
	3-3										
4	1561 to 1564	0.17	-13.22	-1.52	-0.30	0.17	-1.52	-13.23	13.40	47.1	+2.51
	5-5										
6	1595 to 1598	0.04	-3.78	0.86	0.02	0.86	0.04	-3.78	4.64	47.1	+9.15
	9-9										
7	395 to 398	-0.18	7.35	4.97	-0.78	7.42	4.97	-0.26	7.69	30.0	+2.90
	8-8										
8	601 to 604	-0.18	-7.94	-0.67	0.27	-0.18	-0.67	-7.95	7.78	30.0	+2.86

1 Conservatively based on a 1.12-inch thick outer shell and on a 3850-psi crush strength aluminum honeycomb impact limiter (Section 2.6.7.1.1).

2 Refer to Figure 2.10.2-9 for component identification.

Table 2.6.7-15 Critical Stress Summary (1-Foot Top End Drop) – Loading Condition 2 - Total Range

Loading Condition 2: -40°F Ambient Temperature and Maximum Decay Heat Load

		Total Stress Range[1] (ksi)				Principal Stresses			Stress Differences		
Comp. No.[2]	Node	S_x	S_y	S_z	S_{xy}	S_1	S_2	S_3	S_1-S_2	S_2-S_3	S_3-S_1
1	2371	2.56	-10.43	0.01	3.61	3.50	0.01	-11.37	3.49	11.38	-14.87
3	1962	-1.54	-12.88	-5.92	-1.05	-1.44	-5.92	-12.98	4.48	7.06	-11.54
4	1584	-0.85	-15.19	-2.48	-0.76	-0.81	-2.48	-15.23	1.67	12.75	-14.42
6	1598	0.02	-3.94	0.76	0.02	0.76	0.02	-3.94	0.74	3.96	-4.70
7	378	-0.19	7.42	4.95	-0.07	7.42	4.95	-0.19	2.47	5.14	-7.61
8	361	-0.02	-7.21	-1.70	-1.00	0.16	-1.70	-7.38	1.86	5.68	-7.54

[1] Conservatively based on a 1.12-inch thick outer shell and on a 3850-psi crush strength aluminum honeycomb impact limiter (Section 2.6.7.1.1).

[2] Refer to Figure 2.10.2-9 for component identification.

Table 2.6.7-16 Critical Stress Summary (1-Foot Side Drop) – Loading Condition 1 – P_m

Loading Condition 1: 100°F Ambient Temperature and Maximum Decay Heat Load

		P_m Stresses (ksi)				Principal Stresses					
Comp. No.[1]	Section Cut Node to Node	S_x	S_y	S_z	S_{xy}	S_1	S_2	S_3	S.I.	Allow. Stress 1.0 S_m	Margin of Safety
	1-1										
1	2361 to 2370	-3.39	-0.30	0.06	-0.26	0.06	-0.28	-3.42	3.48	20.0	+4.74
	2-2										
3	1969 to 1976	-10.14	1.89	-4.53	-1.65	2.11	-4.53	-10.37	12.47	20.0	+0.60
	3-3										
4	1141 to 1144	-0.11	15.43	0.25	0.00	15.43	0.25	-0.11	15.54	31.4	+1.02
	4-4										
6	1115 to 1118	-0.05	31.36	1.31	0.00	31.36	1.31	-0.05	31.4	31.4	+0.00
	5-5										
7	395 to 398	-2.17	4.06	-5.51	0.78	4.15	-2.27	-5.51	9.66	20.0	+1.07
	6-6										
8	192 to 342	-5.47	-0.35	-3.06	0.18	-0.35	-3.06	-5.48	5.13	20.0	+2.89

[1] Refer to Figure 2.10.2-9 for component identification.

Table 2.6.7-17 Critical Stress Summary (1-Foot Side Drop) – Loading Condition 1 - $P_m + P_b$

Loading Condition 1: 100°F Ambient Temperature and Maximum Decay Heat Load

		$P_m + P_b$ Stresses (ksi)				Principal Stresses					
Comp. No.[1]	Section Cut Node to Node	S_x	S_y	S_z	S_{xy}	S_1	S_2	S_3	S.I.	Allow. Stress 1.5 S_m	Margin of Safety
	7-7										
1	2301 to 2561	-0.78	0.06	0.82	3.96	3.62	0.82	-4.34	7.96	30.0	+2.77
	8-8										
3	2150 to 2156	-4.40	-0.08	-20.16	0.01	-0.08	-4.40	-20.16	20.08	30.0	+0.49
	3-3										
4	1141 to 1144	-0.07	16.41	0.86	0.00	16.41	0.86	-0.07	16.48	47.1	+1.86
	4-4										
6	1115 to 1118	0.01	33.37	1.50	0.00	33.37	1.50	0.01	33.36	47.1	+0.41
	5-5										
7	395 to 398	-1.11	16.09	-0.89	0.78	16.12	-0.89	-1.14	17.26	30.0	+0.74
	9-9										
8	177 to 327	-8.25	-1.80	0.27	-1.47	0.27	-1.48	-8.58	8.85	30.0	+2.39

[1] Refer to Figure 2.10.2-9 for component identification.

Table 2.6.7-18 Critical Stress Summary (1-Foot Side Drop) – Loading Condition 1 - S_n

Loading Condition 1: 100°F Ambient Temperature and Maximum Decay Heat Load

		S_n Stresses (ksi)				Principal Stresses					
Comp. No.[1]	Section Cut Node to Node	S_x	S_y	S_z	S_{xy}	S_1	S_2	S_3	S.I.	Allow. Stress 3.0 S_m	Margin of Safety
	1-1										
1	2361 to 2370	-9.54	-1.04	-1.24	-0.19	-1.04	-1.24	-9.55	8.51	60.0	+6.05
	10-10										
3	1815 to 1818	-0.09	22.64	2.62	-1.58	22.75	2.62	-0.20	22.95	60.0	+1.61
	3-3										
4	1141 to 1144	-0.07	17.55	0.98	0.00	17.55	0.98	-0.07	17.62	94.2	+4.34
	4-4										
6	1115 to 1118	0.01	38.01	1.65	0.00	38.01	1.65	0.01	38.00	94.2	+1.48
	11-11										
7	395 to 398	-1.10	19.46	0.52	0.51	19.47	0.52	-1.12	20.59	60.0	+1.91
	6-6										
8	177 to 327	-12.34	-1.86	-3.80	-1.48	-1.66	-3.80	-12.55	10.89	60.0	+4.51

[1] Refer to Figure 2.10.2-9 for component identification.

Table 2.6.7-19 Critical Stress Summary (1-Foot Side Drop) – Loading Condition 1 - Total Range

Loading Condition 1: 100°F Ambient Temperature and Maximum Decay Heat Load

		Total Stress Range (ksi)				Principal Stresses			Stress Differences		
Comp. No.[1]	Node	S_x	S_y	S_z	S_{xy}	S_1	S_2	S_3	S_1-S_2	S_2-S_3	S_3-S_1
1	2561	0.06	0.02	1.33	15.24	15.28	1.33	-15.19	13.95	16.52	-30.47
3	1815	1.72	24.87	3.61	7.38	27.05	3.61	-0.46	23.44	4.07	-27.51
4	1144	-0.07	17.55	0.96	0.00	17.55	0.96	-0.07	16.59	1.03	-17.62
6	1118	0.01	37.98	1.61	0.00	37.98	1.61	0.01	36.37	1.60	-37.97
7	395	-1.10	22.68	1.30	1.50	22.78	1.30	-1.20	21.48	2.50	-23.98
8	192	-22.96	-1.15	-9.18	-0.81	-1.10	-9.18	-23.00	8.08	13.82	-21.90

[1] Refer to Figure 2.10.2-9 for component identification.

Table 2.6.7-20 Critical Stress Summary (1-Foot Top Corner Drop) – Loading Condition 1 – P_m – Drop Orientation = 15.74 Degrees

Loading Condition 1: 130°F Ambient Temperature and Maximum Decay Heat Load

		P_m Stresses[1] (ksi)				Principal Stresses					
Comp. No.[2]	Section Cut Node to Node	S_x	S_y	S_z	S_{xy}	S_1	S_2	S_3	S.I.	Allow. Stress 1.0 S_m	Margin of Safety
	1-1										
1	2377 to 2577	-5.07	-0.37	-0.71	-0.29	-0.35	-0.71	-5.09	4.74	20.0	+3.22
	2-2										
3	1775 to 1778	-0.05	-4.39	0.55	0.01	0.55	-0.05	-4.39	4.95	20.0	+3.04
	3-3										
4	1501 to 1504	-0.03	-3.11	0.36	0.01	0.36	-0.03	-3.11	3.47	31.4	+8.05
	4-4										
6	1595 to 1598	-0.01	-3.94	0.52	0.03	0.52	-0.01	-3.94	4.46	31.4	+6.04
	5-5										
7	18 to 118	-1.72	2.83	0.47	-2.50	3.94	0.47	-2.83	6.76	20.0	+1.96
	6-6										
8	381 to 385	-1.83	-2.67	0.82	-0.32	0.82	-1.73	-2.77	3.60	20.0	+4.56

[1] Conservatively based on a 1.12-inch thick outer shell and on a 3850-psi crush strength aluminum honeycomb impact limiter (Section 2.6.7.3.1).

[2] Refer to Figure 2.10.2-9 for component identification.

Table 2.6.7-21 Critical Stress Summary (1-Foot Top Corner Drop) – Loading Condition 1 - $P_m + P_b$ – Drop Orientation = 15.74 Degrees

Loading Condition 1: 130°F Ambient Temperature and Maximum Decay Heat Load

		$P_m + P_b$ Stresses[1] (ksi)				Principal Stresses					
Comp. No.[2]	Section Cut Node to Node	S_x	S_y	S_z	S_{xy}	S_1	S_2	S_3	S.I.	Allow. Stress 1.5 S_m	Margin of Safety
	1-1										
1	2377 to 2577	-6.69	-0.37	-0.71	-0.29	-0.35	-0.71	-6.70	6.34	30.0	+3.73
	7-7										
3	1821 to 1825	-0.02	-4.40	1.73	0.32	1.73	0.00	-4.43	6.16	30.0	+3.87
	8-8										
4	1561 to 1564	0.06	-4.51	-0.67	-0.13	0.06	-0.67	-4.52	4.58	47.1	+9.28
	4-4										
6	1595 to 1598	0.01	-4.03	0.45	0.03	0.45	0.01	-4.03	4.47	47.1	+9.54
	9-9										
7	143 to 150	-7.82	11.71	1.04	1.55	11.83	1.04	-7.94	19.77	30.0	+0.52
	10-10										
8	176 to 326	-2.87	7.16	0.74	-0.96	0.74	-2.66	-7.37	8.10	30.0	+2.70

[1] Conservatively based on a 1.12-inch thick outer shell and on a 3850-psi crush strength aluminum honeycomb impact limiter (Section 2.6.7.3.1).

[2] Refer to Figure 2.10.2-9 for component identification.

Table 2.6.7-22 Critical Stress Summary (1-Foot Top Corner Drop) – Loading Condition 1 - S_n – Drop Orientation = 15.74 Degrees

Loading Condition 1: 130°F Ambient Temperature and Maximum Decay Heat Load

		S_n Stresses[1] (ksi)				Principal Stresses					
Comp. No.[2]	Section Cut Node to Node	S_x	S_y	S_z	S_{xy}	S_1	S_2	S_3	S.I.	Allow. Stress 3.0 S_m	Margin of Safety
	1-1										
1	2377 to 2577	-6.82	-0.40	0.32	-0.13	0.32	-0.40	-6.82	7.14	60.0	+7.40
	11-11										
3	1852 to 1856	-0.19	7.89	4.10	-0.42	7.91	4.10	-0.21	8.12	60.0	+6.39
	12-12										
4	601 to 604	0.09	-3.42	-0.54	-0.21	0.11	-0.54	-3.44	3.54	94.2	Large
	13-13										
6	615 to 618	-0.02	15.94	1.30	0.00	15.94	1.30	-0.02	15.95	94.2	+4.90
	14-14										
7	193 to 343	-7.81	12.82	1.50	1.46	12.93	1.50	-7.92	20.84	60.0	+1.88
	6-6										
8	381 to 385	-4.22	-7.18	-0.60	-0.96	-0.60	-3.93	-7.47	6.86	60.0	+7.74

1 Conservatively based on a 1.12-inch thick outer shell and on a 3850-psi crush strength aluminum honeycomb impact limiter (Section 2.6.7.3.1).
2 Refer to Figure 2.10.2-9 for component identification.

Table 2.6.7-23 Critical Stress Summary (1-Foot Top Corner Drop) – Loading Condition 1 - Total Range – Drop Orientation = 15.74 Degrees

Loading Condition 1: 130°F Ambient Temperature and Maximum Decay Heat Load

		Total Stress Range[1] (ksi)				Principal Stresses			Stress Differences		
Comp. No.[2]	Node	S_x	S_y	S_z	S_{xy}	S_1	S_2	S_3	S_1-S_2	S_2-S_3	S_3-S_1
1	2561	1.48	-1.26	0.20	43.95	44.08	0.20	-43.86	43.88	44.06	-87.94
3	1856	-0.19	7.24	3.70	0.08	7.24	3.70	-0.19	3.54	3.89	-7.43
4	1584	-0.13	-2.05	0.02	-0.11	0.02	0.12	-2.06	0.14	1.93	-2.08
6	1595	-0.05	7.09	0.97	0.01	7.09	0.97	-0.05	6.12	1.02	-7.14
7	192	-7.81	14.07	1.73	3.37	14.58	1.73	-8.32	12.85	10.05	-22.90
8	385	-7.64	-8.88	-3.12	-1.02	-3.12	-7.07	-9.46	3.95	2.39	-6.34

1 Conservatively based on a 1.12-inch thick outer shell and on a 3850-psi crush strength aluminum honeycomb impact limiter (Section 2.6.7.3.1).
2 Refer to Figure 2.10.2-9 for component identification.

Table 2.6.7-24 Critical Stress Summary (1-Foot Bottom Corner Drop) – Loading Condition 1 – P_m – Drop Orientation = 15.74 Degrees

Loading Condition 1: 130°F Ambient Temperature and Maximum Decay Heat Load

		P_m Stresses[1] (ksi)				Principal Stresses					
Comp. No.[2]	Section Cut Node to Node	S_x	S_y	S_z	S_{xy}	S_1	S_2	S_3	S.I.	Allow. Stress 1.0 S_m	Margin of Safety
	1-1										
1	2301 to 2561	-1.28	-0.32	0.62	0.30	0.62	-0.24	-1.37	1.99	20.0	Large
	2-2										
3	1595 to 1598	-3.44	-3.78	-1.65	-0.68	-1.65	-2.91	-4.31	2.66	20.0	+6.51
	3-3										
4	661 to 664	-0.04	-2.98	0.28	0.02	0.28	-0.04	-2.98	3.26	31.4	+8.63
	4-4										
6	615 to 618	-0.01	-4.93	0.28	-0.03	0.28	-0.01	-4.93	5.21	31.4	+5.03
	5-5										
7	2 to 102	-5.98	-3.63	-0.03	2.73	-0.03	-1.83	-7.78	7.76	20.0	+1.58
	6-6										
8	601 to 604	-0.10	-2.94	0.09	0.13	0.09	-0.09	-2.95	3.04	20.0	+5.58

[1] Conservatively based on a 1.12-inch thick outer shell and on a 3850-psi crush strength aluminum honeycomb impact limiter (Section 2.6.7.3.1).

[2] Refer to Figure 2.10.2-9 for component identification.

Table 2.6.7-25 Critical Stress Summary (1-Foot Bottom Corner Drop) – Loading Condition 1 - $P_m + P_b$ – Drop Orientation = 15.74 Degrees

Loading Condition 1: 130°F Ambient Temperature and Maximum Decay Heat Load

		$P_m + P_b$ Stresses[1] (ksi)				Principal Stresses					
Comp. No.[2]	Section Cut Node to Node	S_x	S_y	S_z	S_{xy}	S_1	S_2	S_3	S.I.	Allow. Stress 1.5 S_m	Margin of Safety
	1-1										
1	2301 to 2561	-4.05	-0.32	0.38	1.31	0.38	0.09	-4.46	4.84	30.0	+5.20
	7-7										
3	1815 to 1818	-1.55	4.49	-4.47	0.28	4.51	-1.56	-4.47	8.98	30.0	+2.34
	8-8										
4	621 to 624	0.04	-4.09	-0.52	0.09	0.04	-0.52	-4.10	4.14	47.1	Large
	4-4										
6	615 to 618	-0.02	-5.20	0.30	-0.03	0.30	-0.02	-5.20	5.49	47.1	+7.58
	9-9										
7	168 to 175	9.21	-3.47	-0.15	-0.29	9.22	-0.15	-3.48	12.70	30.0	+1.36
	10-10										
8	176 to 326	-6.65	0.00	-0.82	0.00	0.00	-0.82	-6.65	6.65	30.0	+3.51

1 Conservatively based on a 1.12-inch thick outer shell and on a 3850-psi crush strength aluminum honeycomb impact limiter (Section 2.6.7.3.1).
2 Refer to Figure 2.10.2-9 for component identification.

Table 2.6.7-26 Critical Stress Summary (1-Foot Bottom Corner Drop) – Loading Condition 1 - S_n – Drop Orientation = 15.74 Degrees

Loading Condition 1: 130°F Ambient Temperature and Maximum Decay Heat Load

		S_n Stresses[1] (ksi)				Principal Stresses					
Comp. No.[2]	Section Cut Node to Node	S_x	S_y	S_z	S_{xy}	S_1	S_2	S_3	S.I.	Allow. Stress 3.0 S_m	Margin of Safety
	1-1										
1	2301 to 2561	-6.94	-0.68	-0.30	-0.06	-0.30	-0.68	-6.94	6.64	60.0	+8.04
	11-11										
3	1852 to 1856	-0.13	11.99	3.05	-0.24	12.00	3.05	-0.13	12.13	60.0	+3.95
	12-12										
4	1301 to 1304	0.00	4.74	0.69	0.00	4.74	0.69	0.00	4.74	94.2	Large
	13-13										
6	1275 to 1278	-0.01	12.83	0.30	0.00	12.83	0.30	-0.01	12.84	94.2	+6.34
	14-14										
7	193 to 343	17.94	-0.43	1.20	2.27	18.22	1.20	-0.71	18.93	60.0	+2.17
	15-15										
8	192 to 342	-16.86	-0.12	-1.41	3.03	0.41	-1.41	-17.40	17.81	60.0	+2.37

1 Conservatively based on a 1.12-inch thick outer shell and on a 3850-psi crush strength aluminum honeycomb impact limiter (Section 2.6.7.3.1).
2 Refer to Figure 2.10.2-9 for component identification.

Table 2.6.7-27 Critical Stress Summary (1-Foot Bottom Corner Drop) – Loading Condition 1 - Total Range – Drop Orientation = 15.74 Degrees

Loading Condition 1: 130°F Ambient Temperature and Maximum Decay Heat Load

		Total Stress Range[1] (ksi)				Principal Stresses			Stress Differences		
Comp. No.[2]	Node	S_x	S_y	S_z	S_{xy}	S_1	S_2	S_3	S_1-S_2	S_2-S_3	S_3-S_1
1	2561	0.80	-4.34	0.23	4.73	3.61	0.23	-7.15	3.38	7.38	-10.76
3	1815	0.38	3.10	-0.93	1.68	3.90	-0.42	-0.93	4.32	0.51	-4.83
4	604	-0.19	-2.77	0.11	0.15	0.11	-0.18	-2.78	0.29	2.60	-2.89
6	615	-0.03	5.78	0.94	-0.03	5.78	0.94	-0.03	4.84	0.97	-5.81
7	1	3.73	-1.26	1.97	-43.45	44.76	1.97	-42.29	42.79	44.26	-87.04
8	192	0.11	-18.73	-9.11	2.58	0.46	-9.11	-19.08	9.57	9.97	-19.53

[1] Conservatively based on a 1.12-inch thick outer shell and on a 3850-psi crush strength aluminum honeycomb impact limiter (Section 2.6.7.3.1).

[2] Refer to Figure 2.10.2-9 for component identification.

Table 2.6.7-28 Critical Stress Summary (1-Foot Top Corner Drop) – Loading Condition 3 – P_m – Drop Orientation = 15.74 Degrees

Loading Condition 3: -40°F Ambient Temperature and No Decay Heat Load

		P_m Stresses[1] (ksi)				Principal Stresses					
Comp. No.[2]	Section Cut Node to Node	S_x	S_y	S_z	S_{xy}	S_1	S_2	S_3	S.I.	Allow. Stress 1.0 S_m	Margin of Safety
	1-1										
1	2377 to 2577	-4.89	-0.34	-0.78	-0.34	-0.32	-0.78	-4.91	4.59	20.0	+3.36
	2-2										
3	1775 to 1778	-0.06	-4.13	0.62	0.01	0.62	-0.06	-4.13	4.75	20.0	+3.21
	3-3										
4	1561 to 1564	0.02	-2.72	-0.33	-0.11	0.03	-0.33	-2.73	2.75	31.4	Large
	4-4										
6	1595 to 1598	-0.01	-3.71	0.53	0.03	0.53	-0.01	-3.71	4.23	31.4	+6.42
	5-5										
7	168 to 175	-2.03	3.20	1.06	-0.33	3.22	1.06	-2.05	5.27	20.0	+2.79
	6-6										
8	381 to 385	-1.93	-7.44	-1.79	0.32	-1.79	-1.91	-7.46	5.67	20.0	+2.53

1 Conservatively based on a 1.12-inch thick outer shell and on a 3850-psi crush strength aluminum honeycomb impact limiter (Section 2.6.7.3.1).
2 Refer to Figure 2.10.2-9 for component identification.

Table 2.6.7-29 Critical Stress Summary (1-Foot Top Corner Drop) – Loading Condition 3 - $P_m + P_b$ – Drop Orientation = 15.74 Degrees

Loading Condition 3: -40°F Ambient Temperature and No Decay Heat Load

		$P_m + P_b$ Stresses[1] (ksi)				Principal Stresses					
Comp. No.[2]	Section Cut Node to Node	S_x	S_y	S_z	S_{xy}	S_1	S_2	S_3	S.I.	Allow. Stress 1.5 S_m	Margin of Safety
	1-1										
1	2377 to 2577	-6.71	-0.34	-0.78	-0.34	-0.33	-0.78	-6.72	6.40	30.0	+3.69
	7-7										
3	1821 to 1825	0.03	-4.61	1.68	0.43	1.68	0.07	-4.65	6.33	30.0	+3.74
	3-3										
4	1561 to 1564	0.06	-3.75	-0.84	-0.11	0.06	-0.84	-3.75	3.81	94.2	Large
	4-4										
6	1595 to 1598	0.01	-3.81	0.45	0.03	0.45	0.01	-3.81	4.26	94.2	Large
	8-8										
7	143 to 150	-0.54	12.44	4.53	-0.50	12.46	4.53	-0.56	13.02	30.0	+1.30
	9-9										
8	176 to 326	-2.90	-8.30	-0.56	-0.22	-0.56	-2.89	-8.31	7.74	30.0	+2.87

1 Conservatively based on a 1.12-inch thick outer shell and on a 3850-psi crush strength aluminum honeycomb impact limiter (Section 2.6.7.3.1).
2 Refer to Figure 2.10.2-9 for component identification.

Table 2.6.7-30 Critical Stress Summary (1-Foot Top Corner Drop) – Loading Condition 3 - S_n – Drop Orientation = 15.74 Degrees

Loading Condition 3: -40°F Ambient Temperature and No Decay Heat Load

		S_n Stresses[1] (ksi)				Principal Stresses					
Comp. No.[2]	Section Cut Node to Node	S_x	S_y	S_z	S_{xy}	S_1	S_2	S_3	S.I.	Allow. Stress 3.0 S_m	Margin of Safety
	1-1										
1	2377 to 2577	-6.95	-0.47	-1.07	-0.53	-0.43	-1.07	-6.99	6.56	60.0	+8.15
	10-10										
3	1801 to 1805	0.47	14.21	7.54	1.89	14.46	7.54	0.22	14.25	60.0	+3.21
	11-11										
4	661 to 664	0.14	-7.03	-1.15	-0.29	0.15	-1.15	-7.04	7.20	94.2	Large
	4-4										
6	1595 to 1598	0.02	-7.43	0.70	0.05	0.70	0.02	-7.43	8.13	94.2	Large
	8-8										
7	143 to 150	-0.54	13.55	4.99	-0.59	13.58	4.99	-0.56	14.14	60.0	+3.24
	6-6										
8	381 to 385	-4.25	-8.32	-1.90	-0.23	-1.90	-4.23	-8.33	6.42	60.0	+8.34

1 Conservatively based on a 1.12-inch thick outer shell and on a 3850-psi crush strength aluminum honeycomb impact limiter (Section 2.6.7.3.1).
2 Refer to Figure 2.10.2-9 for component identification.

Table 2.6.7-31 Critical Stress Summary (1-Foot Top Corner Drop) – Loading Condition 3 - Total Range – Drop Orientation = 15.74 Degrees

Loading Condition 3: -40°F Ambient Temperature and Maximum Decay Heat Load

		Total Stress Range[1] (ksi)				Principal Stresses			Stress Differences		
Comp. No.[2]	Node	S_x	S_y	S_z	S_{xy}	S_1	S_2	S_3	S_1-S_2	S_2-S_3	S_3-S_1
1	2561	0.05	-1.17	-1.15	40.01	39.49	-1.15	-40.61	40.64	39.46	-80.10
3	1805	0.47	16.81	8.08	2.75	17.26	8.08	0.02	9.18	8.06	-17.24
4	1584	-0.04	4.04	-3.61	-0.44	4.09	-0.09	-3.61	4.17	3.52	-7.70
6	1598	-0.02	-7.58	0.65	0.03	0.65	-0.02	-7.58	0.67	7.56	-8.23
7	2	-0.55	14.68	5.23	0.43	14.69	5.23	-0.56	9.46	5.79	-15.25
8	385	-7.60	-7.37	-4.68	-1.24	-4.68	-6.24	-8.73	1.56	2.48	-4.05

1 Conservatively based on a 1.12-inch thick outer shell and on a 3850-psi crush strength aluminum honeycomb impact limiter (Section 2.6.7.3.1).

2 Refer to Figure 2.10.2-9 for component identification.

Table 2.6.7-32 Summary of Results – Impact Limiter Analysis for 1-Foot Free Drop

Analysis Description	Displacement (in)	Force (lb)	Equivalent[1] G Load Factor
Flat End Impact			
Bottom Limiter with Max Crush Strength	0.76	8.22×10^5	15.8
Bottom Limiter with Min Crush Strength	0.94	6.60×10^5	12.7
Top Limiter with Max Crush Strength	0.82	8.22×10^5	15.8
Top Limiter with Min Crush Strength	0.96	6.71×10^5	12.9
Corner Impact			
Bottom Limiter with Max Crush Strength	3.16	6.29×10^5	12.1
Bottom Limiter with Min Crush Strength	3.40	6.29×10^5	12.1
Top Limiter with Max Crush Strength	3.18	6.40×10^5	12.3
Top Limiter with Min Crush Strength	3.42	5.98×10^5	11.5

[1] Equivalent g load factor = Force/52,000.

Table 2.6.7-32 Summary of Results – Impact Limiter Analysis for 1-Foot Free Drop (Continued)

Analysis Description	Displacement (in)	Force (lb)	Equivalent[1] G Load Factor
Flat Side Impact			
Bottom Limiter with Max Crush Strength	0.83	1.21×10^6	23.3
Bottom Limiter with Min Crush Strength	0.95	1.03×10^6	19.8
Top Limiter with Max Crush Strength	0.83	1.26×10^6	24.3
Top Limiter with Min Crush Strength	0.94	1.07×10^6	20.6

[1] Equivalent g load factor = Force/52,000.

Table 2.6.7-33 Summary of Results – Impact Limiter Analysis for 30-Foot Free Drop Subsequent to a 1-Foot Fall

Analysis Description	Displacement (in)	Force (lb)	Equivalent[1] G Load Factor
Flat End Impact			
Bottom Limiter with Max Crush Strength	8.50	2.50×10^6	48.1
Bottom Limiter with Min Crush Strength	10.30	2.03×10^6	39.0
Top Limiter with Max Crush Strength	8.47	2.51×10^6	48.3
Top Limiter with Min Crush Strength	10.24	2.04×10^6	39.2
Corner Impact			
Bottom Limiter with Max Crush Strength	11.30	3.08×10^6	59.2
Bottom Limiter with Min Crush Strength	12.70	2.58×10^6	49.6
Top Limiter with Max Crush Strength	11.38	3.14×10^6	60.4
Top Limiter with Min Crush Strength	12.72	2.98×10^6	57.3

[1] Equivalent g load factor = Force/52,000.

Table 2.6.7-33 Summary of Results – Impact Limiter Analysis for 30-Foot Free Drop Subsequent to a 1-Foot Fall (Continued)

Analysis Description	Displacement (in)	Force (lb)	Equivalent[1] G Load Factor
Flat Side Impact			
Bottom Limiter with Max Crush Strength	8.60	2.65×10^6	48.7
Bottom Limiter with Min Crush Strength	10.30	2.17×10^6	41.8
Top Limiter with Max Crush Strength	8.42	2.71×10^6	49.7
Top Limiter with Min Crush Strength	10.00	2.22×10^6	42.7

[1] Equivalent g load factor = Force/52,000.

Table 2.6.7-34 Summary of Cask Drop Equivalent G Load Factors

	Equivalent G Load Factor[1]			
Direction	**1-Foot Drop**	**31-Foot Drop**		
		Total	**Axial[2] Comp.**	**Lateral[3] Comp.**
Lateral (Side)	24.3	49.7	—	49.7
Longitudinal	15.8	60.0	60.0	—
Corner (15.74°)	12.3	60.4	58.2	16.4
Oblique (30°)	—	54.4	47.1	27.2
Oblique (45°)	—	43.8	31.0	31.0
Oblique (60°)	—	44.4	22.2	38.5

[1] Equivalent g load factor = Force/52,000.
[2] Axial Component = total x cosθ where θ = 15.74°, 30°, 45°, or 60°
[3] Lateral Component = total x sinθ where θ = 15.74°, 30°, 45°, or 60°

Table 2.6.7-35 NAC-LWT Cask Hot Bolt Analysis – Normal Conditions

Nominal Diameter (in):	1.00		
Number of Bolts:	12		
Service Stress, Sy (ksi):	81.9	} at a 300	
Bolt Expansion (in/in):	9E-06	} degree-F	
Bolt Modulus (ksi):	26700	} Service	
Lid Expansion (in/in):	9E-06	} Temperature	
Lid Modulus (ksi):	27000	}	
Stress Area (in2):	0.6051		
Grip Length (in):	7.99		
Maximum Pressure (psi):	50		
Seal Diameter (in):	15.750		
Preload Torque (ft-lbs):	260	at RT	
Nominal Room Temp, RT:	70	deg-F	
Bolt Circle Diameter (in):	17.88		
Lid Diameter (in):	22.50		

(a) Longitudinal Weight (lbs):	4941
(b) Lateral Weight (lbs):	941
Service DT (degrees):	157
[default value =]	230
CALCULATED LOADS & STIFFNESS	
(c) Bolt Thermal Load (lbs):	1423
(d) Bolt Preload (lbs):	34770
(e) Bolt Pressure Load (lbs):	812
(f) Bolt Stiffness (lbs/in):	1.9E+06
(g) Lid Stiffness (lbs/in):	2.1E+07

Angle wrt Vert. (Deg)	Impact Accel. (g)	<**** LOADS (lbs.) ****> Impact Tension	Impact Shear	Bolt Tension Applied	Bolt Tension Net	<**** STRESSES (psi) ****> Direct Tension	Principal Shear	Principal Sig-1	Principal Sig-2	Stress Intens.	Margin of Safety
	(h)		(k)	(l)	(m)	(n)	(o)		(p)	(q)	(r)
0 End	60.00	24705[i]	0	25517	38292	63282	0	0	63282	63282	0.29
5 (+)	60.13	33641[j]	411	34453	39027	64497	679	-7	64504	64511	0.27
10 (+)	60.25	33327	820	34138	39001	64454	1356	-29	64483	64511	0.27
15.7 Corner	60.40	32657	1282	33469	38946	64363	2118	-70	64433	64503	0.27
20 (+)	58.60	30924	1572	31736	38804	64128	2597	-105	64233	64338	0.27
25 (+)	56.50	28758	1872	29570	38626	63833	3094	-150	63983	64133	0.28
30 (calc)	54.40	26459	2133	27271	38436	63521	3525	-195	63716	63911	0.28
35 (+)	50.87	23402	2288	24213	38185	63105	3781	-226	63331	63557	0.29
40 (+)	47.33	20364	2386	21176	37935	62692	3943	-247	62939	63186	0.30
45 (calc)	43.80	17394	2429	18206	37691	62289	4014	-258	62546	62804	0.30
50 (+)	44.00	15884	2643	16696	37567	62083	4368	-306	62389	62695	0.31
55 (+)	44.20	14238	2839	15050	37431	61860	4692	-354	62213	62567	0.31
60 (calc)	44.40	12468	3015	13280	37286	61619	4983	-400	62019	62420	0.31
65 (+)	45.68	10843	3247	11655	37152	61398	5366	-465	61863	62329	0.31
70 (+)	46.97	9022	3461	9834	37002	61150	5719	-530	61681	62211	0.32
75 (+)	48.25	7014	3655	7825	36837	60877	6040	-593	61471	62064	0.32
80 (+)	49.53	4831	3825	5643	36657	60581	6322	-653	61233	61886	0.32
85 (+)	50.82	2487	3970	3299	36465	60262	6560	-706	60968	61674	0.33
90 Side	52.10	0	4086	812	36260	59924	6752	-751	60675	61427	0.33

Minimum Margin of Safety: 0.27

Table 2.6.7-36 NAC-LWT Cask Cold Bolt Analysis – Normal Conditions

Nominal Diameter (in):	1.00	
Number of Bolts:	12	
Service Stress, Sy (ksi):	85	at a 70
Bolt Expansion (in/in):	8E-06	degree-F
Bolt Modulus (ksi):	27800	Service
Lid Expansion (in/in):	8E-06	Temperature
Lid Modulus (ksi):	28300	
Stress Area (in2):	0.6051	
Grip Length (in):	7.99	
Maximum Pressure (psi):	50	
Seal Diameter (in):	15.750	
Preload Torque (ft-lbs):	260	at RT
Nominal Room Temp, RT:	70	deg-F
Bolt Circle Diameter (in):	17.88	
Lid Diameter (in):	22.50	

Longitudinal Weight (lbs):	4941
Lateral Weight (lbs):	941
Service DT (degrees):	-90
[default value =]	0
CALCULATED LOADS & STIFFNESS	
Bolt Thermal Load (lbs):	-594
Bolt Preload (lbs):	34770
Bolt Pressure Load (lbs):	812
Bolt Stiffness (lbs/in):	2.0E+06
Lid Stiffness (lbs/in):	2.2E+07

Angle wrt Vert. (Deg)	Impact Accel. (g)	<**** LOADS (lbs.) **** Impact Tension	Impact Shear	Bolt Tension Applied	Bolt Tension Net	<**** STRESSES (psi) **** Direct Tension	Direct Shear	Principal Sig-1	Principal Sig-2	Stress Intens.	Margin of Safety
0 End	60.00	24705	0	25517	36262	59928	0	0	59928	59928	0.42
5 (+)	60.13	33641	411	34453	36993	61135	679	-8	61143	61150	0.39
10 (+)	60.25	33327	820	34138	36967	61093	1356	-30	61123	61153	0.39
15.7 Corner	60.40	32657	1282	33469	36912	61002	2118	-73	61076	61149	0.39
20 (+)	58.60	30924	1572	31736	36771	60768	2597	-111	60879	60990	0.39
25 (+)	56.50	28758	1872	29570	36594	60475	3094	-158	60633	60791	0.40
30 (calc)	54.40	26459	2133	27271	36406	60165	3525	-206	60371	60577	0.40
35 (+)	50.87	23402	2288	24213	36156	59752	3781	-238	59990	60228	0.41
40 (+)	47.33	20364	2386	21176	35908	59341	3943	-261	59602	59863	0.42
45 (calc)	43.80	17394	2429	18206	35665	58940	4014	-272	59212	59484	0.43
50 (+)	44.00	15884	2643	16696	35541	58736	4368	-323	59059	59382	0.43
55 (+)	44.20	14238	2839	15050	35407	58514	4692	-374	58888	59262	0.43
60 (calc)	44.40	12468	3015	13280	35262	58275	4983	-423	58698	59121	0.44
65 (+)	45.68	10843	3247	11655	35129	58055	5366	-492	58547	59039	0.44
70 (+)	46.97	9022	3461	9834	34980	57809	5719	-560	58369	58930	0.44
75 (+)	48.25	7014	3655	7825	34816	57538	6040	-627	58165	58792	0.45
80 (+)	49.53	4831	3825	5643	34638	57243	6322	-690	57933	58622	0.45
85 (+)	50.82	2487	3970	3299	34446	56926	6560	-746	57672	58419	0.46
90 Side	52.10	0	4086	812	34243	56590	6752	-794	57384	58179	0.46

Minimum Margin of Safety: 0.39

Table 2.6.7-37 Summary of Neutron Shield Tank Analysis

Load Condition: 1-Foot End Drop and 1-Foot Side Drop

Description	Stress Magnitude (psi)	Margin of Safety[1]
Tank Shell	12,841	+0.07
Stiffener	11,746	+0.17
Stiffener Weld	2,424 lb/in	+0.23
Gusset Weld	1,418 lb/in	+1.10
Bottom End Plate	8,525	+1.79
Gusset Plate Cross Section	7,180	+LARGE
End Plate Welds	1,593	+LARGE
Top End Plate	11,172	+0.23

This table summarizes the stresses and margins for a design condition of 180 psig (Section 2.6.7.7.4), which envelops both the end drop and side drop conditions.

[1] Based on an allowable stress equal to the yield strength of Type 304 stainless steel at 250°F.

Table 2.6.7-38 Normal Transport Shield Tank Temperatures

Transport Condition	Average Fluid Temperature
100°F/Full Heat Load	227°F
68°F/No Heat Load	68°F
-20°F/Full Heat Load	99°F
-20°F/No Heat Load	-20°F

Table 2.6.7-39 Normal Transport Shield Tank Pressures

Transport Condition	Calculated Tank Pressure
PRVR	165 psig
100°F/Full Heat Load	25.6 psig
68°F/No Heat Load	0 psig

Table 2.6.7-40 Summary of Expansion Tank Analysis

Load Condition: 1-Foot End Drop and 1-Foot Side Drop

Description	Stress Magnitude (psi)	Margin of Safety[1]
Bottom/Top End Plate	3,375	+LARGE
Tank Shell	10,857	+0.26
Tank Stiffener	9,997	+0.37
Shell Weld	11,750	+0.17

This table summarizes the stresses and margins for a design condition of 180 psig (Sections 2.6.7.8 and 2.6.7.7.4), which envelops both the end drop and side drop conditions.

[1] Based on an allowable stress equal to the yield strength of Type 304 stainless steel at 250°F.

Table 2.6.7-41 Upper Ring – Cross-Section Principal Stresses

	P_m Stresses							$P_m + P_b$ Stresses						
Section	Component (ksi)				Principal (ksi)			Component (ksi)				Principal (ksi)		
	S_x	S_y	S_z	S_{xy}	S_1	S_2	S_3	S_x	S_y	S_z	S_{xy}	S_1	S_2	S_3
a-a	-0.8	4.7	1.9	-0.1	4.7	-0.8	1.9	-2.6	9.0	4.0	-1.0	9.1	-2.7	4.0
b-b	0.1	4.9	1.9	-0.2	4.9	0.1	1.9	1.2	8.0	2.9	-1.0	8.1	1.1	2.9
c-c	-0.1	5.5	2.0	0.5	5.5	-0.3	2.0	-0.2	6.5	2.6	1.0	6.6	-0.3	2.6

2.6.8 Corner Drop

According to 10 CFR 71.71(c)(8), this test is not applicable to the NAC-LWT cask because the cask is composed of materials other than fiberboard or wood.

2.6.9 Compression

According to 10 CFR 71.71(c)(9), this test is not applicable to the NAC-LWT cask because the package weight is greater than 5,000 kilograms (11,023 pounds).

2.6.10 Penetration

This condition is defined in 10 CFR 71.71(c)(10) as a 40-inch drop of a 13-pound, 1.25-inch diameter penetration cylinder with a hemispherical end, onto any exposed surface of the cask. The acceptance criteria is that there will be no adverse effects on either the ability of the cask to maintain containment of the contents or to survive a hypothetical accident. The following package components could potentially be damaged by this penetration impact: (1) the impact limiter, (2) the expansion tank, (3) the neutron shield tank, and (4) the port cover. An evaluation of a penetration impact on each of these components follows.

2.6.10.1 Impact Limiter – Penetration

The outer shell of the impact limiter resists puncture of the aluminum honeycomb by the penetration cylinder; however, this resistance is conservatively not considered in the analysis. The 13.0-pound penetration cylinder drops 40.0 inches producing 13.0 x 40.0 = 520 inch-pounds of energy, which is absorbed by the limiter. The minimum crush strength of the limiter is 3150 psi (Section 2.6.7.4.6), and the area of the penetration cylinder is 1.227 square inches. Therefore, using the minimum honeycomb crush strength and the average impact area in the conservation of energy equation, the penetration cylinder will compress the aluminum honeycomb to a depth of 520/[(3150)(1.227)/2] = 0.270 inch. This shallow depression does not adversely affect the performance of the impact limiter.

2.6.10.2 Expansion Tank – Penetration

The expansion tank shell is vulnerable to the penetration cylinder. This analysis documents the expansion tank shell structural adequacy to resist the penetration event.

The expansion tank shell is supported radially every 45 degrees by radial stiffeners. Assume the penetration cylinder impacts the shell at the center of the unsupported region as shown in Figure 2.6.10-1.

Chapter 12-5 of Strength of Materials (Singer) analyzes the problem of a falling object on an elastic member, and derives the following equation for the dynamic impact stress (S_{dyn}) in terms of the static displacement (δ_{st}) and the static stress (S_{st}), where the static values are for the weight (W) resting on the elastic member:

$$S_{dyn} = S_{st}\left[1 + \left(1 + \frac{2h}{\delta_{st}}\right)^{0.5}\right]$$

where:

h = height of drop = 40.0 inches

The static displacement is evaluated by assuming an arched plate with built-in edges (a stiffer plate provides a more conservative analysis), which is centrally loaded by the static weight (W) of the penetration cylinder. The dimensions of the arched plate representing the expansion tank are identified in Figure 2.6.12-2:

t = 0.315 in

r = 22.00 inches

a = 2πr x 45°/360° = 2π(22.0)(0.125) = 17.28 inches

b = 46.00 inches

Because the aspect ratio is small (2.66:1) the effect of the short edge fixity is considered. The effective width of the plate tangential to the radius is calculated by using Article 36 on page 133 of Formulas for Stress and Strain (Roark). Assume the circular area of the load is half the maximum; therefore, the radius c = $[(0.625)^2 /2]^{0.5}$ = 0.442 inch, or 0.026(a). The table in the reference does not give a/b values of aspect ratios beyond 2:1; therefore, a/b = 2.0 is assumed.

Interpolation of the table in the reference for c = 0.026(a) yields e/b = 0.59; then, w_e = (0.59)(2)(17.28) = 20.39 inches. The effective width of the plate in the longitudinal direction is the (a) dimension. The amount of load transferred to each edge is calculated by assuming two fixed plates, free on two opposite edges and built-in on the other two, and solving for compatible deflections at the edge common to both plates. The equation for the percent of load taken by each plate is derived as follows:

The terms δ_a and δ_b, P_a and P_b, and k_a and k_b are deflections, loads, and spring constants for plates fixed on the (a) and (b) edges, respectively.

$$\delta_a = \delta_b;\ P_a/k_a = P_b/k_b;\ P_a = P_b(k_a/k_b)$$

$$P_a + P_b = W;\ P_b[(k_a/k_b) + 1] = W$$

$$P_b/W = k_b/(k_a + k_b);\ P_a/W = 1 - P_b/W$$

The spring constant (k_b) for edges fixed at (b) is evaluated as follows:

$k_b = P / \delta_b$

where:

P = any load

δ_b = the deflection due to P

"Charts Simplify Calculations for Moments and Deflections of Circular Arches" (Blake) gives the following equation for the static displacement (δ_b) of the arch with built-in edges:

$$\delta_b = (Pr^3/EI)K_b$$

where:

$E = 27 \times 10^6$ psi (300°F)

$r = 22.00$ in

$I = w_e t^3/12 = (20.39)(0.32)^3/12$
$= 0.0531$ in^3

$K_b = 0.00025$ (Blake, Figure 3, $\beta = 45°$)

thus

$$\delta_b = \frac{P(0.00025)(22.00)^3}{(27.0 \times 10^6)(0.0531)}$$

$$= P(1.857 \times 10^{-6}) \text{ in}$$

$$k_b = P/\delta_b = 5.385 \times 10^5 \text{ lb/in}$$

The spring constant (k_a) for edges fixed at (a) is evaluated as follows:

$k_a = P / \delta_a$

where:

P = any load

δ_a = the deflection due to P

The plate with the edges fixed at (a) is treated as a flat plate with a curvature, which increases the moment of inertia. The equation for the deflection at the center of the plate for a central load (P) is:

$\delta_a = P_b^3 / 192\ EI$

$= P(1.379 \times 10^{-5})$

where:

$I = r^3 t\ [a + \sin\alpha \cos\alpha - (2\sin^2\alpha)/\alpha]$ ("Research and Advanced Development Applied Mechanics," page 8)

$= 1.362 \text{ in}^4$

$\alpha = \pi/8$ radians

then

$k_a = P/\delta_a = 7.252 \times 10^4$ lb/in

and

$P_b/W = (5.385 \times 10^5)/[(7.252 \times 10^4) + (5.385 \times 10^5)]$

$= 0.881$, or P_b is 88.1 percent of W

$P_a/W = 1 - 0.881 = 0.119$, or P_a is 11.9 percent of W

The static deflection is calculated using the load, P_a, and the spring constant for the curved plate as a longitudinal beam:

$\delta_{st} = 0.881 \text{ W}/k_a = 0.881(13.00)/(5.385 \times 10^5)$

$= 2.128 \times 10^{-5}$ in

The static stress is calculated using the formulas from "Charts Simplify Calculations for Moments and Deflections of Circular Arches" (Blake) for an arched plate with a central load (P_a) as follows:

The static bending moment (M_{st}) at the load for the arched plate with built-in edges resulting from the central load P_b is:

$M_{st} = H_b r(\sin\theta - \sin\alpha) - Rr(\cos\alpha - \cos\theta) + M_o$

where:

$M_o = - P r K_m = -0.881 \text{ W r } K_m$

$H_b = P K_{hb} = 0.881 \text{ W } K_{hb}$

$\theta = 90.0°$

$\alpha = 67.5°$

$R = 0.5 (0.881W) = 0.441W$

$K_m = 0.0225$

$K_{hb} = 2.375$ (Blake, Figure 3, $\beta = 45°$)

then

$H_b = (0.881)(13.0)(2.375) = 27.20$ lbs

$R = 0.441(13.0) = 5.73$ lbs

$M_o/r = -0.881(13.0)(0.0225) = -0.258$ in-lb

M_{st} = 22.00[27.20(sin 90.0° - sin 67.5°) - 5.73 (cos 67.5° - cos 90.0°) + (-0.258)]
= -8.37 in-lb

The static stress, determined from the elastic plate formula, is:

$$S_{st} = \frac{6M_{st}}{w_e t^2} + \frac{H_b}{w_e t}$$

$$= 29.06 \text{ psi}$$

Substitution of S_{st} and δ_{st} into the equation for the dynamic impact stress produces:

$$S_{dyn} = 29.06 \left[1 + \left(1 + \frac{(40.0)}{2.128 \times 10^{-5}}\right)^{0.5}\right]$$

$$= 56,374 \text{ psi}$$

This stress exceeds the 22,500 psi yield strength of Type 304 stainless steel at 300°F, but not the 66,000 psi ultimate strength; therefore, it is concluded that an impact by the penetration cylinder would produce a permanent deformation, but it would not rupture the expansion tank shell.

The expansion tank meets the requirements for penetration resistance per 10 CFR 71.71(c)(10).

2.6.10.3 Neutron Shield Tank – Penetration

The neutron shield tank shell is vulnerable to the penetration cylinder. This analysis documents the neutron shield tank shell structural adequacy to resist the penetration event.

The neutron shield tank shell is supported radially every 45 degrees by rigid stiffeners. Assume the penetration cylinder impacts the shell at the center of the unsupported region as shown in Figure 2.6.10-1.

The static displacements and stresses resulting from the impact of a 13-pound penetration cylinder are evaluated by the use of the ANSYS finite element method. The neutron shield tank shell is modeled as a complete circle, represented by 80 two-dimensional elastic beam (STIF3) elements, each spanning a 4.5-degree arc. Each stiffener is represented by four STIF3 elements. One edge of each stiffener is rigidly attached to the outer shell of the cask.

The dimensions of the arched plate representing the shield tank are identified in Figure 2.6.10-2:

t = 0.24 in
r = 19.345 inches

$a = 2\pi r \times 45°/360°$

$= 2\pi(19.345)(0.125)$

$= 15.12$ inches

$= 164.00$ inches

Because the aspect ratio is large (10.7:1), the effect of the short edge fixity is ignored. The effective width of the plate tangential to the radius is calculated by using Article 36 on page 133 of Formulas for Stress and Strain (Roark). As derived in Section 2.6.10.2, the radius of the load is 0.442 inch, or 0.0292(a). The maximum tabular value in the reference for b/a = 2 is conservatively assumed. Interpolation for c = 0.0292(a) gives e/b = 0.598; then, w_e = (0.598)(2)(15.12) = 18.084 inches.

The properties of the beam elements are as follows:

$E = 27 \times 10^6$ psi at 200°F

$A = 18.084 \times 0.24$

$= 4.268$ in^2

$I = 18.084 \times (0.24)^3/12$

$= 0.0198$ in^4

From the results of the ANSYS finite element analysis, the static deflection and stress at the point of load application are 0.0003451 inch and 116.18 psi, respectively. Substitution of S_{st} and δ_{st} into the equation for the dynamic impact stress (Section 2.6.10.2) produces:

$$S_{dyn} = 116.18 \left[1 + \left(1 + \frac{2(40)}{0.0003451}\right)^{0.5}\right]$$

$$= 56{,}054 \text{ psi}$$

The margin of safety for the noncontainment structure during an accident event is:

$$M.S. = \frac{S_{tu}}{S_{dyn}} - 1 = \frac{66{,}000}{56{,}054} - 1 = +0.18$$

Impact by the penetration cylinder may produce a permanent deformation, but it will not rupture the neutron shield tank; therefore, the neutron shield tank meets the requirements for penetration resistance as specified in 10 CFR 71.71(c)(10).

During normal operations, particularly during fuel loading, it is possible that a hand tool could drop onto the NAC-LWT cask. The following analysis is performed to demonstrate that such an occurrence (presumed to be a 13-pound, 1.25-inch diameter projectile dropped through a distance of 40 inches) will not cause loss of the cask containment capability as a result of damage to the port cover. The port cover is shown in Figure 2.6.10-3.

The static displacement and stress is evaluated by assuming the port cover is loaded at the center by the static weight (W) of the penetration cylinder. The port cover is stiffened by the attached cylinder wall and is clamped by the bolts. This geometry requires that the displacement be evaluated in two steps - (1) from the bolt circle to the outside diameter of the cylinder, and (2) from the inside diameter of the cylinder to the center of the plate.

The first step in the calculation is made by using equation (92) from Theory of Plates and Shells (Timoshenko, 1940) and treating the whole plate as being clamped at the bolt circle and finding the displacement at the outside diameter of the cylinder, $a_1 = 1.875$, $r_1 = 1.436$, as follows:

$$\delta_{st} = -\frac{Wr^2}{8\pi D}\ln\frac{r}{a} + \frac{W(a^2 - r^2)}{16\pi D}$$

$$D = \frac{Et^3}{12(1 - \nu^2)}$$

where:

ν = Poisson's ratio = 0.30

$$\delta_{st_1} = -\frac{0.75W(1 - \nu^2)}{\pi Et^3}\left[(a_1^2 - r_1^2) + 2\ln\frac{r_1}{a_1}\right]$$

$$= -9.3505 \times 10^{-8} \text{ in}$$

The second step in the calculation is to treat the portion of the plate from the inside diameter of the cylinder to the center of the plate as clamped, $a_2 = 0.8125$ and $r_2 = 0$, using the same equation, which reduces as follows:

$$\delta_{st_2} = -\frac{0.75Wa_2^2(1 - \nu^2)}{\pi Et^3}$$

$$= -6.7022 \times 10^{-8} \text{ in}$$

The total static displacement of the plate is:

$$\delta_{st} = \delta_{st_1} + \delta_{st_2} = -1.6043 \times 10^{-7} \text{ in}$$

The static stress at the point of impact is calculated using equation (97) from Theory of Plates and Shells (Timoshenko, 1940) using the portion of the plate inside the cylinder as a plate with clamped edges as follows:

$$S_{st} = \frac{W(1 - \nu)}{t^2}\left[0.485 \ln\left(\frac{a_2}{t}\right) + 0.52\right]$$

$$= 3.6974 \text{ psi}$$

Substitution of S_{st} and δ_{st} into the equation for dynamic impact stress referenced in Section 2.6.10.2 produces:

$$S_{dyn} = 3.6974\left[1 + \left(1 + \frac{2(40.0)}{1.6043 \times 10^{-7}}\right)^{0.5}\right]$$

$$= 82{,}570 \text{ psi}$$

The margin of safety against yield strength of the SA-705, Grade 630, Type H1150 stainless steel port cover at 300°F is:

MS = 93,000/82,570 - 1 = +0.23

The port cover meets the requirements for penetration resistance according to 10 CFR 71.71(c)(10).

2.6.10.5 Alternate Port Cover – Penetration

This analysis documents the adequacy of the alternate port cover design to resist a postulated normal conditions of transport penetration event. Analyses presented evaluate the consequences of the penetration event on the port cover, attachment bolt stresses and inertial loads acting on the port cover to reduce the compressive load on the primary O-ring. A bounding analysis evaluating the consequences of differential thermal expansion on the attachment bolt stresses and the compressive load applied to the port cover primary O-ring is presented in Section 2.7.2.4.3.

The alternate port cover design is shown in Figure 2.6.10-3. The alternate port cover design includes the primary O-ring between the inner face of the port cover barrel and the sealing surface located in the cask top forging. The secondary (test) O-ring is located in a groove on the barrel of the port cover body. Both O-rings are manufactured from Viton®. The alternate port cover body is fabricated from Type 630, 17-4 PH precipitation-hardened stainless steel. The alternate port cover bolts are SA-193 GR B6 (Type 410 stainless steel) socket-head cap screws.

Normal operating condition requirements postulate a penetration event intended to represent a hand tool that inadvertently drops and strikes the port cover installed on the cask. A steel bar of

1-1/4 inch diameter with a hemispherical head and weighing 13 pounds simulates a tool for analysis purposes. The steel bar is assumed to be dropped from a height of 40 inches. This analysis shows that there is no loss of containment capability, even if the tool strikes the alternate port cover in its most vulnerable location.

The bolt preload applies the required compressive force on the face O-ring to maintain a seal between the port cover and the top forging. The O-ring compressive force required to maintain a seal is 120 pounds per linear inch of O-ring, according to the manufacturer. Using the average radius of the O-ring cavity to determine the length of the O-ring, the force to maintain a seal is 861 pounds. The force applied by the bolt preload torque is calculated as:

$$F = T / 0.2 (d)$$

where:

F = tensile load generated due to bolt torque, pounds

T = installation torque, 100 inch-pounds

d = minimum cross-sectional diameter, 0.281 inch

The calculated force applied by torquing one port cover bolt is 1,780 pounds, approximately twice the compressive load necessary to maintain a seal. There are three bolts for each port cover.

The tensile force applied by the port cover bolts to maintain the load on the O-ring is evaluated. ANSYS is used to model the reaction of the port cover structure to the compressive applied loads. The port cover bolt load acts against the load needed to load the O-ring through the port cover body. Two load cases for normal conditions of transport penetration loading and two load cases for hypothetical accident conditions pin puncture (presented in Section 2.7.2.4.3) are evaluated.

Finite element analysis is used to determine the dynamic impact load resulting from the penetrating loading event. Then the port cover bolt torque preload and pressure loads are evaluated and are combined with the dynamic impact load to determine the total compression load on the inner face O-ring.

A three-dimensional model of the port cover is used to determine the static deflection when a 13-pound load is applied at the center of the port cover exterior. The port cover is a hollow barrel, with a flat thick plate at the outer end of the barrel. The plate and barrel slide into a stepped cylindrical bore in the upper end forging. The only exposed port cover surface is the outer face of the 1-inch thick port cover bolting flange. Deflection of the port cover due to the static load is calculated and used to determine the equivalent dynamic load, resulting from the 40-inch free-fall of the steel bar.

A one-sixth (1/6) section, three-dimensional finite element model of the alternate port cover, shown in Figure 2.6.10-4, was constructed using ANSYS Version 5.5. The model is a 60° wedge section of the port cover body. The body is constructed using SOLID45 3-D structural solid elements, CONTAC52 node-to-node contact elements, and BEAM4 three-dimensional two node beam elements. The node-to-node contact elements are used at the inner end surface, where the O-ring is located, to evaluate the sealing force. An initial strain is specified in the BEAM4 elements to simulate the initial bolt torque preload force. Since the port cover bolt is positioned on a model symmetry plane, the calculated bolt preload force applied to the port cover is half (1/2) of the total preload force. A force of 120 lbs. per linear inch of O-ring is required to maintain a seal. Using the average radius of O-ring cavity, the total required sealing force is calculated to be 861 pounds. Since the model is 1/6 of the actual port cover, this corresponds to a force of 861/6 = 143.5 lbs. required in the model to maintain sealing.

Symmetry boundary conditions are applied to the model at 0° and 60° surfaces. Model nodal coordinate systems have been rotated in the cylindrical coordinate system to facilitate the application of the symmetry boundary conditions. To prevent axial motion of the port cover, the port cover bolt is restrained axially at the bottom. The node-to-node contact elements on the inner end surface, the "ground" node of the contact elements, is fixed in all degrees-of-freedom.

Two simplifying assumptions were made in the ANSYS analysis consistent with accepted engineering practice. First, it is assumed for small deflections that materials behave elastically, and second, nominal dimensions are the basis for the ANSYS model geometry.

The equivalent dynamic loading, from Ugural and Fenster, is calculated using the following relation:

$$P_{dyn} = W\,(1+ (1 + 2h / \delta_{st})^{1/2})$$

where:

P_{dyn} = dynamic load resulting from weight (W) free falling a height (h), lbs

W = weight, 13 lbs

h = drop height, 40 inches

δ_{st} = static deflection resulting from weight (W) on plate, inches

The dynamic penetration load was calculated to be 11,334 pounds, resulting from the 13-pound steel pin dropping a distance of 40 inches on to the port cover. The sealing surface bearing stress is calculated to be 4,027 psi, which results in a margin of safety of +4.9 compared with yield strength of the upper forging. The dynamic load on the port cover is applied as a bearing load, which will pass through the alternate port cover body, to the top forging. Also, the dynamic load

increases the compressive force on the inner end O-ring, trapped in an O-ring groove at the bottom of the port cover body. Thus, the primary seal is not affected.

Bolt preload alone and preload combined with the normal operating pressure are the two load cases evaluated for normal conditions of transport. The normal condition cavity pressure calculated in Section 3.4.4 is 28.3 psia. The allowable bolt stress of 2 S_m or 50,600 psi is conservatively evaluated at 400°F. The normal condition analysis results are:

Load Case	Preload	Preload + Normal Pressure
Evaluation Temperature (ºF)	400	400
Calculated Seal Force (lbs)	891	883
Percent O-ring compression (20-30% compression to maintain seal)	25.2[1]	25.2[1]
Bolt Tensile Force (lbs)	1781	1782
Bolt Stress (based on Tensile Stress Area) (psi)	28,720	28,728
Bolt Margin of Safety	0.76	0.76

[1] Maximum compression possible due to metal to metal contact with O-ring fully compressed in O-ring groove.

Figure 2.6.10-1 Impact of Penetration Cylinder on Neutron Shield Tank and Expansion Tank – Points of Impact

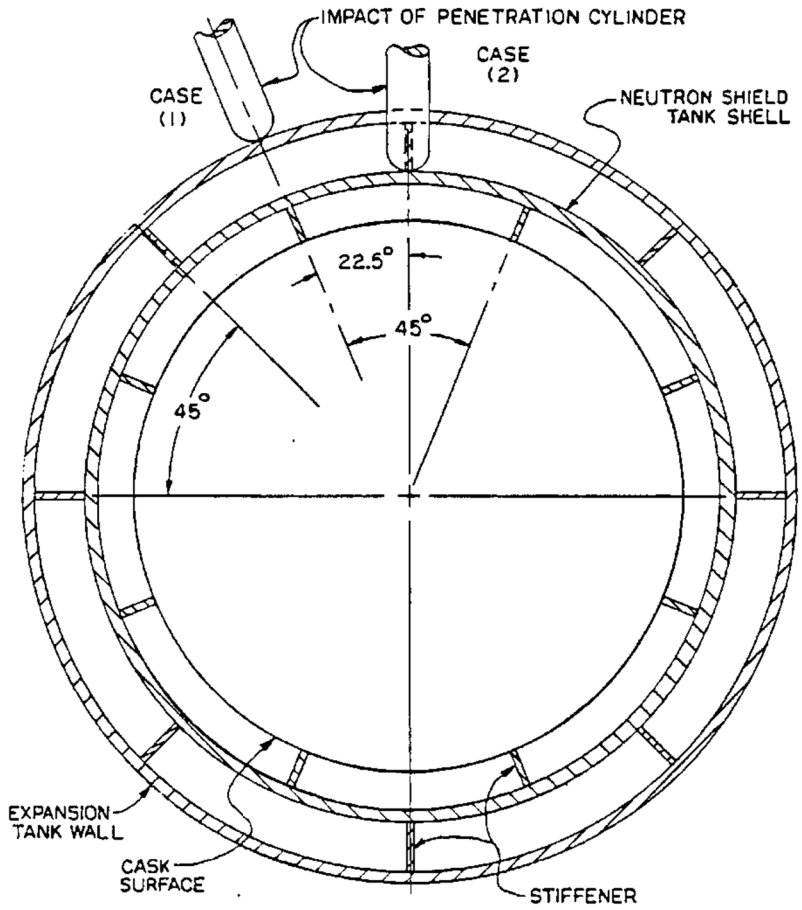

Figure 2.6.10-2 Impact of Penetration Cylinder on Neutron Shield Tank and Expansion Tank – Details for Analysis

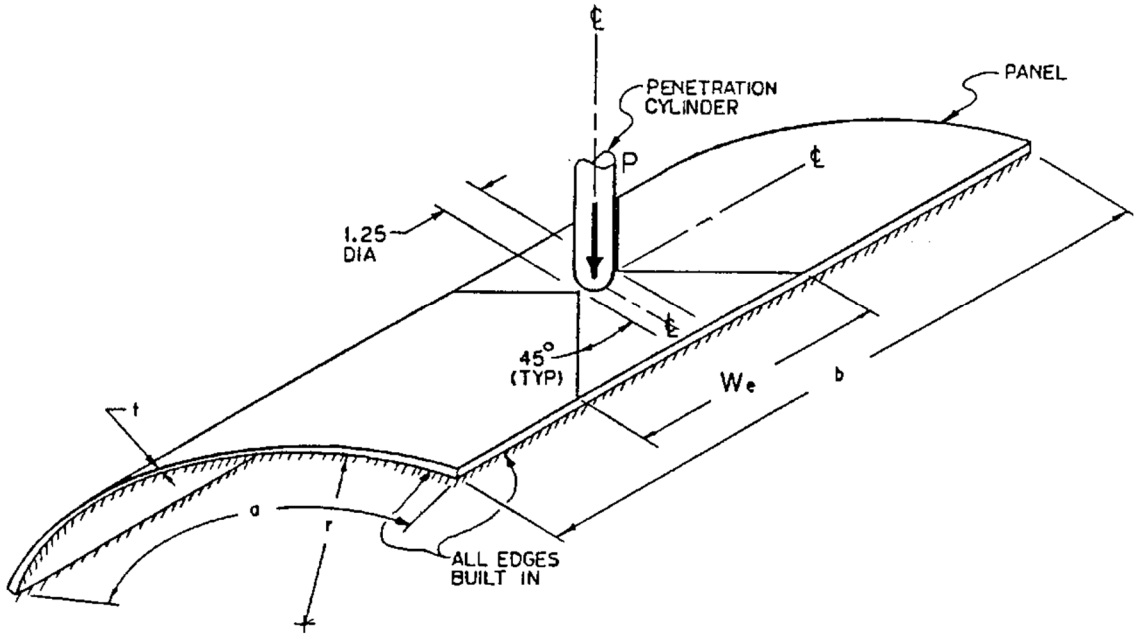

Figure 2.6.10-3 Impact of Penetration Cylinder on Port Cover

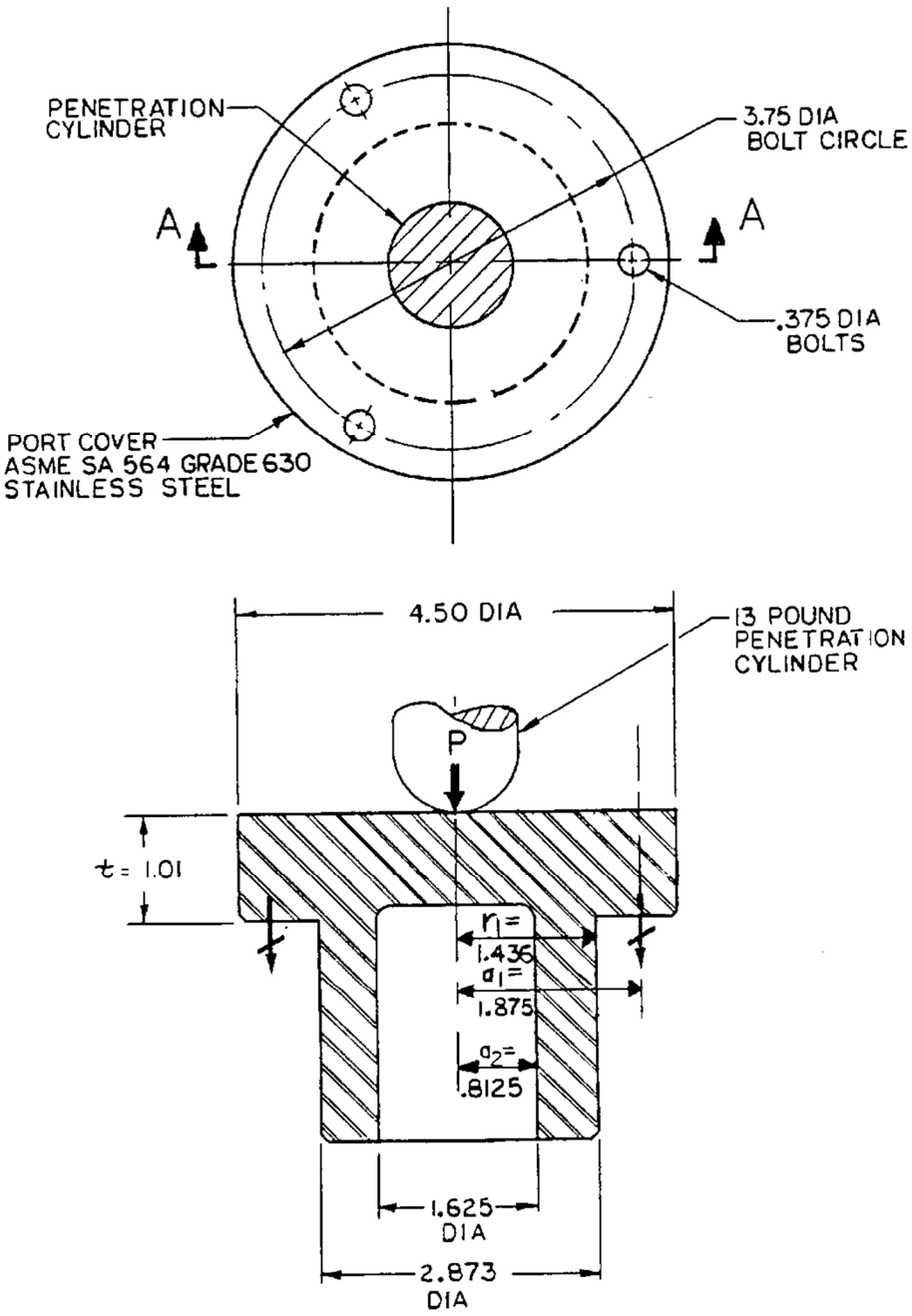

Figure 2.6.10-4 One-Sixth Model of the Alternate Port Cover – 60° Symmetry

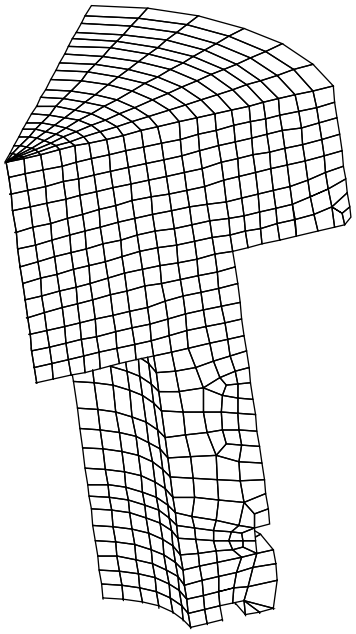

2.6.11 Fabrication Conditions

The process of manufacturing the NAC-LWT cask can introduce thermal stresses in the inner and outer shells as a result of pouring molten lead between them. These thermal stresses are evaluated to provide assurance that the manufacturing process does not adversely affect the normal operation of the cask or its ability to survive an accident. Residual stresses in the containment vessel and the outer shell induced by shrinkage of the lead shielding after the lead pouring operation are relieved early in the life of the cask because of the low yield strength of lead. Any residual stresses in the containment vessel shell due to inelastic strain associated with the secondary local bending stresses, which result from the lead pour thermal gradient, are considered in the total stress range for normal and accident load conditions according to Regulatory Position 7 of Regulatory Guide 7.6.

For the lead pouring process (Appendix 8.3), the temperature of the cask shells is controlled between 550°F (288°C) and 650°F (343°C), and the lead temperature before pouring is between 698°F (370°C) and 790°F (421°C). Heating of the cask is performed using heaters inside the inner shell and heating rings around the outer shell. Heat up is time controlled; consistent with maintaining shell temperatures uniformly. The shell temperatures are measured by thermocouples attached to the shell surfaces. A portable thermometer is also used to measure temperature at any location. Heating is carried out after all the preparations have been completed including melting of the lead in order to minimize the time that the cask is heated.

The lead is poured after the cask reaches the specified temperatures. Prior to lead pouring, the cask flange area is heated with hand-held burners to approximately 572°F (300°C). Pouring is carried out continuously using a filling tube with its open end maintained under the lead surface. The pouring time is kept as short as possible. During pouring, the interior heaters and exterior heating rings are continuously energized.

The cooling process consists of sequentially turning the heating rings and interior heaters off, starting from the lowest point, and of spraying the cask with water from the outside. Molten lead is maintained until the upper surface starts to solidify. This process allows the molten lead to fill the space created by the lead shrinkage as it cools.

2.6.11.1 Lead Pour

2.6.11.1.1 Cask Shell Geometry

At 70°F, the Type XM-19 stainless steel shell geometry is as follows:

Inner Shell

Inside Diameter	d_i	13.375 inches
Outside Diameter	d_o	14.875 inches
Shell Thickness	t_i	0.75 in

Outer Shell

Inside Diameter	D_i	26.375 inches
Outside Diameter	D_o	28.620 inches
Shell Thickness	T_o	1.12 inches

2.6.11.1.2 Stresses Due to Lead Pour

The melting point of lead is 620°F. Assuming that the lead and the inner and outer shells are uniformly at this temperature, the hydrostatic pressure produced by the column of lead is:

$$p = \rho h$$
$$= 72 \text{ psi}$$

where:

$\rho = 0.41$ lb/in^3 (lead density)

$h = 175$ inches (height of lead column)

At 620°F, the shell geometric dimensions are:

$$d'_o = d_o (1 + \alpha \Delta T)$$
$$D'_i = D_i (1 + \alpha \Delta T)$$
$$t' = t (1 + \alpha \Delta T)$$

where:

$$\alpha = 9.05 \times 10^{-6} \text{ in/in/°F at 620°F}$$

$$\Delta T = 620 - 70 = 550°F$$

$$d'_o = 14.875 \left[1 + 9.05 \times 10^{-6}(550)\right] = 14.9490 \text{ in}$$

$$D'_i = 26.375 \left[1 + 9.05 \times 10^{-6}(550)\right] = 26.5063 \text{ in}$$

$$t'_i = 0.75 \left[1 + 9.05 \times 10^{-6}(550)\right] = 0.7537 \text{ in}$$

$$t'_o = 1.12 \left[1 + 9.05 \times 10^{-6}(550)\right] = 1.1256 \text{ in}$$

The inner shell is subjected to an external hydrostatic pressure and the outer shell to an internal hydrostatic pressure, of 72 psi. This causes the inner shell to decrease in diameter and the outer shell to increase in diameter.

The inner shell decreases in size radially (Roark and Young, Case lb, page 448):

$$\Delta r_o = \frac{q(r_o')^2}{Et_i'} = \frac{-72(14.9490/2)^2}{25.2 \times 10^6(0.7537)} = -0.0002 \text{ in}$$

where:

E = 25.2 x 10^6 psi at 620°F.

The outer shell increases in size radially:

$$\Delta R_i = \frac{q(R_i')^2}{Et_o'} = \frac{72(26.5063/2)^2}{25.2 \times 10^6(1.1256)} = 0.0004 \text{ in}$$

The shell geometries at 620°F and 72 psi hydrostatic pressure are:

$d''_o = 14.9490 - 2(0.0002) = 14.9486$

$D''_i = 26.5063 + 2(0.0004) = 26.5055$

The hoop stresses in the inner and outer shells at 620°F are:

$$S_{hi} = \frac{Pd_o''}{2t_i'}$$

$$= \frac{-72(14.9486)}{2(0.7537)} = -714 \text{ psi (inner shell)}$$

$$S_{ho} = \frac{PD_i''}{2t_o'}$$

$$= \frac{72(26.5055)}{2(1.1256)} = 847 \text{ psi (outer shell)}$$

2.6.11.2 Cooldown

2.6.11.2.1 Hoop Stresses

Lead decreases in volume during solidification. As the lower lead region solidifies, the molten lead above fills the shrinkage void between the solidifying lead and the inner and outer shells, thus, maintaining the 72 psi pressure on the shells.

The stress-free inner and outer radii of the solidified lead can be calculated (Roark and Young, Case 1a and 1c, page 504) as:

$$\Delta a = \frac{q}{E}\left[\frac{2ab^2}{a^2 - b^2}\right] - \frac{qa}{E}\left[\frac{a^2 + b^2}{a^2 - b^2} - \nu\right]$$

$$= 0.0004 \text{ in}$$

$$\Delta b = \frac{qb}{E}\left[\frac{a^2 + b^2}{a^2 - b^2} + \nu\right] - \frac{q}{E}\left[\frac{2a^2b}{a^2 - b^2}\right]$$

$$= 0.0002 \text{ in}$$

where:

q = -72 psi pressure
E = 1.47 x 10^6 psi
ν = 0.4 Poisson's ratio
a = 26.5055/2 = 13.2527 inches
b = 14.9486/2 = 7.4743 inches

then

$$R_{o\ell} = 13.2527 + 0.0004 = 13.2531 \text{ in}$$

$$R_{i\ell} = 7.4743 + 0.0002 = 7.4745 \text{ in}$$

When cooled to 70°F, the inside radius of the lead is such that:

$$R'_{i\ell}\ (1 + \alpha\Delta T) = R_{i\ell}$$

where:

$R'_{i\ell}$ = inside radius of the stress-free lead at 70°

α = 20.4 x 10^{-6} in/in/°F

ΔT = 550°F (620-70)

then

$$R'_{i\ell} = 7.3936 \text{ in}$$

likewise

$$R'_{o\ell} = R_{o\ell}/(1 + \alpha\Delta T) = 13.1105 \text{ in}$$

The outside radius of the stress-free inner shell is 14.875/2 = 7.4375 inches, which is larger than the stress-free inner radius of the lead shell. Therefore, there exists an interface pressure between the lead and the inner shell after cooling to 70°F. The interface pressure, when acting on the lead cylinder and inner shell, is such that the inner radius of the lead cylinder is the same as the outer radius of the inner shell (Roark and Young, Case 1a, page 504).

$$R''_{i\ell} = b + \Delta b$$

$$= b + \frac{qb}{E}\left(\frac{a^2 + b^2}{a^2 - b^2} + \nu\right)$$

where:

$R''_{i\ell}$ = inside radius of lead cylinder at 70°F

$\nu = 0.4$

$E = 2.28 \times 10^6$ psi

$a = 13.1105$ inches

$b = 7.3936$ inches

then

$$R''_{i\ell} = 7.3936 + \left(\frac{7.3936q}{2.28 \times 10^6}\right)\left(\frac{13.1105^2 + 7.3936^2}{13.1105^2 - 7.3936^2} + 0.4\right)$$

The outside radius of the inner shell at 70°F under the interface pressure q (Roark and Young, Case 1c, page 504) is:

$$r_o = a_s - \Delta a_s$$

$$= a_s - \frac{qa_s}{E}\left(\frac{a_s^2 + b_s^2}{a_s^2 - b_s^2} - \nu\right)$$

where:

r_o = outside radius of inner shell at 70°F

$a_s = 14.875/2 = 7.4375$ inches

$b_s = 13.375/2 = 6.6875$ inches

$E = 28.3 \times 10^6$ psi

$\nu = 0.275$

then

$$r_o = 7.4375 - \left(\frac{7.4375q}{28.3 \times 10^6}\right)\left(\frac{7.4375^2 + 6.6875^2}{7.4375^2 - 6.6875^2} - 0.275\right)$$

Equating $R''_{i\ell}$ and r_o and solving for q:

q = 4401 psi interface +pressure

The lead shell geometry is:

$$R''_{i\ell} = 7.3936 + \left(\frac{7.3936(4401)}{2.28 \times 10^6}\right)\left(\frac{13.1105^2 + 7.3936^2}{13.1105^2 - 7.3936^2} + 0.4\right)$$

$$= 7.4269 \text{ in}$$

$$R''_{o\ell} = R'_{o\ell} + \frac{q}{E}\left(\frac{2R'_{o\ell}\, R'^{2}_{i\ell}}{R'^{2}_{o\ell} - R'^{2}_{i\ell}}\right)$$

$$= 13.1105 + \left(\frac{4401}{2.28 \times 10^6}\right)\left(\frac{2 \times 13.1105 \times 7.3936^2}{13.1105^2 - 7.3936^2}\right)$$

$$= 13.1341 \text{ in}$$

The corresponding maximum lead shell hoop stress is:

$$S_{hPb} = (4401)\left(\frac{13.1341^2 + 7.4269^2}{13.1341^2 - 7.4269^2}\right)$$

$$= 8538 \text{ psi}$$

Obviously, the lead cannot sustain the above stress. The interference between the lead shell and the inner shell is 0.0439 inches (7.4375 - 7.3936). To fully accommodate this interference, the lead must undergo a strain of 0.0439/7.3936 = 0.0059 or 0.59 percent. From Figure 21 of NUREG/CR-0481, the lead stress for the above strain is 850 psi. The corresponding interface pressure for this stress in the lead shell is:

$$q = (S)\left[\frac{R''^{2}_{o\ell} - R''^{2}_{i\ell}}{R''^{2}_{o\ell} + R''^{2}_{i\ell}}\right]$$

$$= (850)\left[\frac{13.1341^2 - 7.4269^2}{13.1341^2 + 7.4269^2}\right]$$

$$= 438 \text{ psi interface pressure}$$

The change in geometry of the inner shell for this interface pressure is:

$$\Delta a = \left[\frac{-438}{28.3 \times 10^6}\right]\left[\frac{2(7.4375)(6.6875^2)}{7.4375^2 - 6.6875^2}\right]$$

$$= 0.0010 \text{ in}$$

This can conservatively be neglected in the analysis. The inner shell hoop stress is:

$$S_{his} = (-438)\left[\frac{7.4375^2 + 6.6875^2}{7.4375^2 - 6.6875^2}\right]$$

$$= -4136 \text{ psi}$$

2.6.11.2.2 Axial Stresses

Axial stresses also develop in the lead shell and inner shell during fabrication as a result of the unequal shrinkage of the lead and steel shells. Assume bonding of the lead shell to the inner shell during the cooldown process after completion of lead pouring. The strain in the lead, when cooled to 70°F, is:

$$\epsilon = (\alpha_\ell - \alpha_s)\Delta T$$

$$= 0.0062 \text{ in/in or } 0.62 \text{ percent}$$

where:

$\alpha_\ell = 20.4 \times 10^{-6}$ in/in/°F

$\alpha_s = 9.05 \times 10^{-6}$ in/in/°F

$\Delta T = 620 - 70 = 550$°F

Extrapolating from Figure 2.3.1-1, for this strain, an axial stress of approximately 850 psi exists in the lead shell. The total force in the lead caused by assuming non-deformability of the inner shell is:

$$P_{sPb} = p_{\ell} A_{\ell}$$

$$= 850\pi(13.1875^2 - 7.4375^2)$$

$$= 316,687 \text{ lb tensile force}$$

The corresponding compression stress in the inner shell to maintain equilibrium is:

$$p_{SST} = \frac{P_s}{A_s}$$

$$= \frac{-316,687}{\pi[(7.4375)^2 - (6.6875)^2]}$$

$$= -9515 \text{ psi}$$

This is a highly conservative estimate of the compressive stress that can develop in the inner shell for the following reasons:

1. It assumes axial non-deformability of the inner shell and no load development in the outer shell. Any pre-strain in the inner shell reduces the total strain, thus reducing the lead stress and axial force.
2. Creep in the lead is neglected. This also reduces the stress and force in the lead (Section 2.6.11.3).
3. It assumes the strain is uniform through the thickness of the lead shell. A particle away from the inner shell develops less strain, consequently lower stress, than a particle adjacent to the inner shell; this also reduces the total force in the lead shell.

2.6.11.2.3 Effects of Temperature Differential During Cooldown

The preceding analyses assume that the inner and outer shells and the lead are always at the same temperature at any time during the cooldown process. This assumption may not be true under actual conditions. However, because of the high thermal conductivity of the stainless steel and the lead and the time-controlled cooldown process, the temperature differential between any two of the above shells is kept to a minimum. For the effect of temperature differential on the stresses in the shells, a temperature differential of 300°F is conservatively assumed. A temperature differential of this magnitude is very unlikely during the actual lead pour.

When the inner shell is cooler than the lead, the interference between them, as well as the corresponding interface pressure and hoop stresses are less than for the case of equal temperatures. Hence, the preceding analysis is conservative.

When the inner shell is hotter than the lead shell, an analysis is required. Assume the temperature of the inner shell to be 370°F and that of the lead to be 70°F. The inner radius of the stress-free lead shell at 70°F is 7.3936 inches (R'_{it}); the outer radius of the inner shell at 370°F is:

$$R = 7.4375\,[1 + 8.74(10^{-6})(300)]$$
$$= 7.4570 \text{ inches}$$

The interference between the inner shell and the lead is 0.0634 inches. To fully accommodate this interference, the lead has to undergo a strain of 0.0634/7.3936 = 0.0086 inch/inch or 0.86 percent. From Figure 21 of NUREG/CR-0481, the hoop stress in the lead is approximately 900 psi for a 0.0086 inch/inch strain. The interface pressure is:

$$q = (900)\left[\frac{13.1105^2 - 7.3936^2}{13.1105^2 + 7.3936^2}\right]$$

$$= 466 \text{ psi}$$

The hoop stress in the inner shell becomes:

$$S_{his} = (-466)\left[\frac{7.4375^2 + 6.6875^2}{7.4375^2 - 6.6875^2}\right]$$

$$= -4400 \text{ psi}$$

Note that the thermal expansion or contraction of a shell subjected to a constant pressure does not affect the hoop stress; i.e.,

$$S_h = q\left[\frac{(ka)^2 + (kb)^2}{(ka)^2 - (kb)^2}\right] = q\left[\frac{a^2 + b^2}{a^2 - b^2}\right]$$

where:

$$k = 1 + \alpha\Delta T$$

This -4400 psi hoop stress (the inner shell is 300°F hotter than the lead shell) reduces to the previously calculated hoop stress of -4136 psi as both the inner shell and lead reach an ambient temperature of 70°F. This, of course, does not take into account the beneficial effect of the creep properties of the lead.

The axial stress in the inner shell also increases when the inner shell is 300°F hotter than the lead shell. The axial stress of -9515 psi calculated when both the inner shell and lead shell are at 70°F is recalculated for the inner shell temperature of 370°F, $\alpha = 8.74 \times 10^{-6}$:

$$\epsilon_\ell = (20.38 - 9.05)(10^{-6})(620 - 70) + (8.74 \times 10^{-6})(370 - 70)$$

$$= 0.0085 \text{ in/in or } 0.85 \text{ percent}$$

Referring to Figure 21 of NUREG/CR-0481, the axial stress in the lead is approximately 900 psi. The corresponding axial stress in the inner shell is -10,300 psi. As before, cooling of the inner shell reduces this stress. The previous assumptions apply in arriving at this inner shell compressive stress.

Temperature differentials between the inner and outer shells are of no consequence, since the axial restraint between them is placed after cooldown when the cask is at a uniform ambient temperature. Welding of the outer shell and the cask bottom to the bottom ring after cooldown is, therefore, a necessary fabrication step.

The question of buckling of the inner shell due to the combined effect of external pressure and fabrication inaccuracies must also be addressed. According to the "ASME Boiler and Pressure Vessel Code," Article NE-4221.1, the difference between the maximum and minimum inside diameters at any cross section shall not exceed 1 percent of the nominal diameter at the cross section under consideration. This amounts to (0.01)(13.375) or 0.13375 inch. The relation between the initial radial deviation, ω_i, and the maximum and minimum diameter (Timoshenko, 1976, Figure 7-10) is:

$$D_{max} = D_{nom} + 2\omega_1$$

$$D_{min} = D_{nom} - 2\omega_1$$

thus

$$D_{max} - D_{min} = 4\omega_1$$

or

$$\Delta D = 4\omega_1$$

Hence, the maximum initial radial deviation allowed is:

$$\omega_{max} = \Delta D/4 = 0.13375/4 = 0.0334 \text{ in}$$

From Timoshenko, 1976, equation (7-16), page 293:

$$S_{cr} = \left[\frac{E_t}{1 - \nu^2}\right]\left[\frac{h}{2R}\right]^2$$

$$= 81,435 \text{ psi}$$

where:

$E_t = 26.7 \times 10^6$ psi at 370°F

$\nu = 0.275$

h = shell thickness = 0.75 in

R = shell radius = 7.0625 inches

This critical buckling stress is well beyond the yield point of the shell material and, thus, cannot exist. Per Timoshenko, 1976, page 294, $S_{cr} = S_{Yp}$ = 42,000 psi at 370°F can be used. Then from Timoshenko, 1976, equation (7-12), page 294:

$$q_{cr} = \left[\frac{E}{4(1 - \nu^2)}\right]\left[\frac{h}{R}\right]^3$$

$$= S_{cr}\left[\frac{h}{R}\right]$$

$$= 4460.16 \text{ psi}$$

When the cylinder has fabrication inaccuracies, the external pressure, q_{YP}, required to produce yielding in the extreme fibers can be solved in the following equation (Timoshenko, 1976, equation (e), page 296):

$$q_{YP}^2 - \left[\frac{S_{YP}}{m} + (1 + 6mn)\, q_{cr}\right] q_{YP} + \frac{S_{YP}}{m} q_{cr} = 0$$

where:

S_{YP} = 42,000 psi at 370°F

$m = R/h = 7.0625/0.75 = 9.4167$

$n = \omega_1/R = \omega_1/7.0625$

then

$q^2_{YP} - [4460.16 + (1 + 8\omega_1)\, 4460.16]\, q_{YP} + 19,893,211 = 0$

The value of ω_I can vary from 0.0 inches (perfect cylinder) up to 0.0334 inch maximum allowed according to the "ASME Boiler and Pressure Vessel Code." Solving q_{YP} for varying values of ω_I, gives the following:

Initial Radial Deviation ω_I (in)	Yield Pressure q_{YP} (psi)
0.001	4079
0.01	3365
0.02	2998
0.0334	2675

Thus, the margin of safety against yielding for the inner shell with maximum allowed radial deviation subjected to 466 psi lead pressure (inner shell temperature is 300°F higher than lead temperature) is:

$$M.S. = \frac{2675}{466} - 1 = +4.74$$

Since the margin of safety for this conservative load case exceeds zero, the inner shell does not buckle when subjected to the lead pressure produced during the cooling of the cask.

2.6.11.3 Lead Creep

As shown in Sections 2.6.11.2.1 and 2.6.11.2.2, cooling of the lead shell and inner shell introduces a hoop stress of -4136 psi and an axial stress of -9515 psi in the inner shell. However, the high rate of creep of lead at room or elevated temperatures causes the stresses to be relieved early in the life of the cask. From Figure 21 of NUREG/CR-0481, it can be seen that maintaining a constant strain of 0.59 percent at 325°F for only five hours reduces the lead pressure to approximately 200 psi. For this stress in the lead, the corresponding hoop and axial stresses in the inner shell are:

$$\sigma_h = \frac{200}{850} (-4136) = -973 \text{ psi}$$

$$\sigma_a = \frac{200}{850} (-9515) = -2239 \text{ psi}$$

During fabrication following the lead pour, the lead creep relieves the stresses in the lead shell and the stresses in the inner shell to a point that they become negligible.

2.6.12 Fuel Basket / Container Analysis

2.6.12.1 Discussion

To assure that the cask contents are retained in a subcritical and safe configuration, a fuel basket supports the contents both laterally and longitudinally. During normal transport, the cask may sustain a 1-foot free fall to either the side, corner or end drop orientations. Fuel basket designs examined under normal operations conditions are: the PWR basket (Section 2.6.12.2); the BWR basket (Section 2.6.12.4); the metallic fuel basket (Section 2.6.12.5); the MTR basket (Section 2.6.12.6); the TRIGA fuel basket (Section 2.6.12.7); the DIDO fuel basket (Section 2.6.12.8); the GA IFM basket (Section 2.6.12.9); the TPBAR basket and spacer (Section 2.6.12.10); ANSTO fuel basket (Section 2.6.12.11); NRU/NRX fuel basket (Section 2.6.12.14); and the HEUNL containers (Section 2.6.12.15); the SLOWPOKE fuel core basket (Section 2.6.12.16); SrF_2 baskets (2.6.12.17); and the LANL MOX fuel transfer tubes and divider plates (Section 2.6.12.18). The transport configuration can also accommodate a combination of an ANSTO top basket module and five DIDO basket modules. Within the top ANSTO module of the ANSTO-DIDO combination basket assembly, a total of up to seven aluminum damaged fuel cans (DFCs) can be placed. The total additional weight of the seven DFCs is less than 35 pounds. The increased weight is bounded by the analysis weight of 1,770 lbs, per Section 2.6.12.11.2, which exceeds the calculated weight of the ANSTO baskets in Table 2.2.1-1 of 1,667 lbs (911 + 756 = 1,667) by 103 pounds. Table 2.2.1-1 confirms that the maximum weight of the four HEUNL containers is bounded by the design basis payload of 4,000 pounds. The analyses demonstrate that each of the basket designs is supported by the inner shell in bearing during a side drop, and that none of the basket designs will buckle during an end drop. The effects of a corner drop are bounded by the side and end drops.

2.6.12.2 PWR Basket Construction

The cylindrical basket body is fabricated from 6061-T6 aluminum alloy extrusions. An open, square, central core extends the length of the basket and provides lateral support for the cask contents. A 13.25-inch outside diameter, 0.125-inch thick aluminum tube that is 4.38 inches long, is bolted to the top of the basket body. This top tube protects the cask inner shell from damage during fuel loading operations and provides lifting points, which are used when the basket is removed from the cask. An aluminum spacer plate assembly is bolted to the bottom of the basket body. The spacer plate assembly supports the fuel basket and contents longitudinally, providing their movement within the cask. Additional spacer fixtures are either bolted to the cask lid or to the base of the fuel basket, if the cask contents do not fill the basket. The maximum spacer loads occur for the 30-foot drop hypothetical accident load conditions. The spacer analysis is presented in Section 2.7.7.8. A groove on the outside of the basket body is

provided for the cask drain tube. The drain tube is connected to a fitting on the cask body, and is used to drain or fill the cask during cask loading or unloading operations.

For the shipment of up to 25 PWR or BWR rods, or up to 16 PWR MOX rods (or mixed MOX and UO_2 rods), a canister with insert will be utilized to position the fuel rod contents within the PWR basket. Similarly, LANL MOX Fuel Rods may be loaded in up to 16 transfer tubes in the canister within the PWR basket. The canister for the fuel rods will be fabricated from Type 304 stainless steel (minimum thickness 0.12 inch) and will be designed to allow positive handling of the canister during loading and unloading operations. The size, shape, closure design and capacity of the canister will vary depending on the requirements of the shipping and/or receiving facilities. A spacer fabricated from stainless steel will be utilized, as required, to position the PWR/BWR rod canister longitudinally within the NAC-LWT cask cavity. A PWR insert fabricated from

6061-T651 aluminum is used to laterally position the rod canister within the PWR basket. The total weight of the fuel rods, canister and basket insert will be less than the maximum PWR fuel assembly payload weight of 1,650 pounds. Therefore, the up to 25 fuel rods content condition is bounded by the current PWR basket analyses.

2.6.12.3 PWR Basket Analysis

The minimum ambient temperature during normal transport, -40°F, combined with the maximum decay heat load produces an average inner wall temperature of 151°F. The 6061-T6 aluminum alloy expands approximately 1.5 times more per degree Fahrenheit than stainless steel. Assuming that both the cask and basket respond linearly, the maximum as-designed gap between the basket and the cavity, when the basket is centered in the cavity, is 0.094 in. Since aluminum expands faster than stainless steel, any increase in temperature will serve to decrease the basket-cavity gap. Since the gap is small, it is assumed that there is no relative motion between the basket and cask, and that the basket is in contact bearing on the inner shell during a side drop. The basket bearing loads are transmitted to the inner shell and cask structure.

2.6.12.3.1 Bearing Stress Calculation

The bearing stress is calculated using Case 6 (Roark, page 320), which models the cylindrical basket in a circular groove. The maximum compressive stress is calculated using:

$$S_{c_{max}} = 0.798 \left[\frac{\frac{P(D_1 - D_2)}{D_1 D_2}}{\frac{1 - \nu_1^2}{E_1} + \frac{1 - \nu_2^2}{E_2}} \right]^{0.5}$$

$$= 1570 \text{ psi}$$

where the material properties at 250°F are:

Stainless Steel

D_1 = 13.405 inches

E_1 = 27.3 x 10^6 psi

ν_1 = 0.275

Aluminum (6061-T6)

D_2 = 13.25 inches

E_2 = 9.4 x 10^6 psi

ν_2 = 0.334

contents + basket weight = 4,000 lbs

P_{1g} = 4,000 lb/178 in = 22.5 lb/in

$P_{24.3g}$ = (22.5 lb/in)(24.3 g) = 547 lb/in

(The 24.3 g side drop load is obtained from Table Table 2.6.7-34.)

The allowable compressive stress is selected to be the yield strength $(S_y)_{250°F}$ of Type 304 stainless steel, 23,800 psi. The margin of safety is calculated as:

$$M.S. = \frac{S_y}{S_{c_{max}}} - 1 = \underline{+Large}$$

2.6.12.3.2 Compressive Stress Calculation

The PWR basket and inner cavity length are designed to ensure that there is very limited longitudinal movement of the basket relative to the cask when the cask is carrying fuel. Additional spacers are attached to the cask or added in the PWR basket, if the fuel contents do not fill the basket cavity. The fuel contents are not attached to the PWR basket, and do not impart any longitudinal structural load on the basket body. However, the PWR basket must support itself during an end drop accident. To determine if the PWR basket is self-supporting, it is analyzed as a column, acted upon by a structural (weight) compressive load.

The PWR basket weighs 840 pounds, which, during a normal operations 1-foot fall, is decelerated at 15.8 g. The g loads are completely described for all cask drop orientations in Section 2.6.7.4. The total compressive load acting over the basket body cross section, 59.2 square inches, is P_{max} = 840 x 15.8 = 13,272 pounds. The compressive stress (S_c), conservatively considered to act on the basket body, is 13,272/59.2 = 224 psi.

An Euler column analysis is used to determine the critical buckling stress of the PWR basket body. Assuming that the impacting end is fixed and the other is free, the critical buckling stress (Shigley, page 116) is calculated as:

$$P_{cr} = \frac{n\pi^2 EI}{L^2}$$

$$= 670,700 \text{ psi}$$

where:

n = 0.25, end fixity coefficient

$E_{Al_{250°F}}$ = 9.4 x 10^6 psi

$I_{basket\ body}$ = 870 in^4 (Roark, Case 10, page 75)

L = 178 inches, inner cavity length

$$M.S. = \frac{P_{cr}}{P_{max}} - 1 = \underline{+Large}$$

2.6.12.4 BWR Basket Construction

The BWR basket is fabricated from 6061-T6 aluminum alloy extrusions. Two open, square cores, located in the center of the basket body, extend the length of the basket, providing lateral support for the cask contents. A 13.25-inch outside diameter, 0.25-inch thick stainless steel tube that is 5.4 inches long is welded to a 0.62-inch thick plate and the top cover assembly is bolted to the basket body. The top cover protects the cask inner shell from damage during fuel loading operations and provides lifting points, which are used when the basket is removed from the cask. A stainless steel spacer plate assembly is bolted to the bottom of the basket body. The spacer plate assembly supports the fuel basket and contents longitudinally, preventing their movement within the cask. Additional spacer fixtures are either bolted to the cask lid or the base of the fuel basket if the cask contents do not fill the basket. A groove on the outside of the basket body is provided for the cask drain tube.

2.6.12.4.1 BWR Basket Analysis

The BWR basket body is fabricated from the same material as the PWR basket body. Moreover, the outer diameter and its tolerance are exactly the same for both basket designs. Therefore, the

BWR basket is also considered to be in contact bearing for similar reasons to those stated in Section 2.6.12.3, and all basket bearing loads are transmitted to the cask inner shell.

2.6.12.4.2 Bearing Stress Calculation

The BWR basket and its contents weigh 2,624 pounds. The normal operations conditions 1-foot side drop g load is 24.3, resulting in a total bearing load of 63,760 pounds (2,624 lb x 24.3 g). The bearing load per unit length ($P_{24.3g}$) is 358 pounds/inch (63,760 lb/178 in). Using Case 6 (Roark, page 320) and the same material properties as described in Section 2.6.12.3.1, the $S_{c_{max}}$ = 1383 psi. The allowable compressive stress is selected to be the yield strength $(S_y)_{250°F}$ of Type 304 stainless steel, 23,800 psi. The margin of safety is calculated as:

$$M.S. = \frac{S_y}{S_{c_{max}}} - 1 = \underline{+LARGE}$$

2.6.12.4.3 Compressive Stress Calculation

For the same reasons that are stated in Section 2.6.12.3.2, the BWR basket needs only to be self-supporting. The BWR basket weighs 1124 pounds, which during a normal operations 1-foot fall, is decelerated at 15.8 g. The total compressive load acting over the basket body cross-section (72.5 in^2), is P_c = 1124 lb × 15.8 g = 17,759 pounds. The compressive stress (S_c) conservatively considered to act on the basket body is 17,759 lb/72.5 in^2 = 245 psi, which is negligible.

An Euler column analysis is used to determine the critical buckling stress of the BWR basket body. Assuming that the impacting end is fixed and the other end is free, the critical buckling stress (Shigley, page 116) is calculated as:

$$P_{cr} = \frac{n\pi^2 EI}{L^2}$$

$$= 1.0 \times 10^6 \text{ psi}$$

where:

n = 0.25, end fixity coefficient
$E_{Al_{250°F}}$ = 9.4 x 10^6 psi
$I_{basket\ body}$ = 1,298 in^4 (Roark, Case 10, page 75)
L = 178 in, inner cavity length

$$M.S. = \frac{P_{cr}}{P_c} - 1 = \underline{+LARGE}$$

2.6.12.5 Metallic Fuel Basket Construction

The metallic fuel basket is fabricated from three 5.625-inch outer diameter 6061-T6 aluminum tubes, laterally restrained by five 13.0-inch diameter 0.25-inch thick, 6061-T6 aluminum bulkheads welded along the length of the tubes. Each tube provides lateral support for the cask contents. The uppermost bulkhead has three attachment points, which are lifting points used when the basket is removed from the cask. Welded to the bottom bulkhead is a 9.0-inch outer diameter, 0.25-inch thick, 6061-T6 aluminum spacer tube, 29.5 inches long, which supports the fuel basket and contents longitudinally, preventing their movement within the cask. A groove on the outside of the basket body is provided for the cask drain tube.

2.6.12.5.1 Metallic Fuel Basket Analysis

The metallic fuel basket body is fabricated from similar material to the PWR basket body. Moreover, the outer diameter of the bulkheads and its tolerance are exactly the same for both basket designs. Therefore, the metallic fuel basket bulkheads are also considered in contact bearing for the same reasons stated in Section 2.6.12.3, and all basket bearing loads are transmitted to the inner shell and cask structure.

2.6.12.5.2 Bearing Stress Calculation

The metallic fuel basket and its contents weigh 2,208 pounds. The normal operations conditions 1-foot side drop g load is 24.3, resulting in a total bearing load of 53,654 pounds (2,208 lb × 24.3 g). It is assumed that the entire bearing load is distributed over the five 0.25-inch thick bulkheads. The bearing load per unit length ($P_{24.3g}$) is 42,924 pounds/inch (53,654 lb/1.25 in). From Case 6 (Roark, page 320) the maximum compressive stress is calculated using:

$$S_{c_{max}} = 0.798 \left[\frac{\frac{P(D_1 - D_2)}{D_1 D_2}}{\frac{1 - \nu_1^2}{E_1} + \frac{1 - \nu_2^2}{E_2}} \right]^{0.5}$$

$$= 36{,}530 \text{ psi}$$

where the material properties at 250°F are:

Stainless Steel

$D_1 = 13.405$ inches
$E_1 = 27.3 \times 10^6$ psi
$\nu_1 = 0.275$

Aluminum (6061-T6)

D_2 = 13.0 inches
$E_2 = 9.4 \times 10^6$ psi
ν_2 = 0.334

The allowable compressive stress is selected to be $(1.5)(S_y)_{250°F}$ of 6061-T6 aluminum, 44,685 psi. The margin of safety is calculated as:

$$M.S. = \frac{S_y}{S_{c_{max}}} - 1 = \underline{+0.22}$$

2.6.12.5.3 Compressive Stress Calculation

For the same reasons that are stated in Section 2.6.12.3.2, the metallic fuel basket needs only to be self-supporting. The metallic fuel basket weighs 128 pounds, which during a normal operating conditions 1-foot fall, is decelerated at 15.8 g. The total compressive load acting over the three fuel tubes is P_F = 2,022 pounds (128 lb × 15.8 g). The total cross sectional area of the three aluminum fuel tubes is 6.48 square inches, resulting in a normal operating conditions compressive stress ($S_{c_{fuel}}$) of 312 psi (2,022 lb/6.48 in^2). The spacer tube must support the basket and its contents during a bottom end drop. The total weight that the spacer tube supports is 2,208 pounds, resulting in a normal operating conditions 1-foot bottom end drop compressive load of P_c = 34,886 pounds. The cross sectional area of the 9.0-inch outer diameter aluminum spacer tube is 6.87 square inches, resulting in a compressive stress ($S_{c_{spacer}}$) of 5078 psi. Assuming that the impacting end is fixed and the other end is free, the critical buckling stresses for each tube column (Shigley, page 116) is calculated:

Fuel Tubes (3)

$$P_{cr} = \frac{n\pi^2 EI}{L^2}$$

$$= 33,550 \text{ psi}$$

Spacer Tube

$$P_{cr} = \frac{n\pi^2 EI}{L^2}$$

$$= 1,754,000 \text{ psi}$$

where:

n = 0.25, end fixity coefficient
$E_{Al250°F}$ = 9 x 4 10^6 psi
$I_{basket\ body}$ = 46 in^4
L = 145.25 in, fuel tube length
MS = $\underline{P_{cr}}$ / P_F - 1 = $\underline{+Large}$

n = 0.25, end fixity coefficient
$E_{Al250°F}$ = 9.4 x 10^6 psi
$I_{spacer\ tube}$ = 66 in^4
L = 29.5 in, spacer tube length
MS = $\underline{P_{cr}}$ / P_c - 1 = $\underline{+Large}$

2.6.12.6 MTR Fuel Basket Construction

The MTR modular basket assembly has five configurations. One configuration is for 28 uncut (intact) MTR fuel assemblies (28 MTR – 4 unit basket); the second is for 35 partially cut MTR elements that have had portions of the upper and lower end fittings removed (35 MTR – 5 unit basket). The third configuration is for 42 MTR fuel assemblies (42 MTR – 6 unit basket) with the upper and lower end fittings removed; and the fourth configuration is for up to 700 PULSTAR fuel elements loaded in the 28 MTR basket. The PULSTAR fuel may be intact fuel assemblies, intact fuel elements (rods) loaded in a fuel rod insert or in fuel cans, or damaged fuel elements, fuel debris, and nonfuel components of fuel assemblies loaded in fuel cans. The fifth configuration is for up to 800 SLOWPOKE intact and/or damaged fuel rods contained in canisters. Each MTR basket configuration consists of one base module, one top module, and two, three or four intermediate modules for the 28, 35 and 42 element configurations, respectively. Each MTR basket module is designed to hold up to seven MTR or PULSTAR fuel assemblies. The modules are not interchangeable between basket configurations. Up to four (4) SLOWPOKE canisters may be loaded in each of the top and the upper intermediate MTR-28 basket modules with the center fuel cells blocked. The lower intermediate and bottom basket modules are installed as axial spacers. The structural analysis is not affected by the specific fuel element design or enrichment as long as the fuel characteristics are in compliance with the fuel characteristics listed in Table 1.2-4 or Table 1.2-14.

Axial fuel and plate spacers may be used to axially position the MTR fuel assemblies in the basket modules. Cell block spacers are used to prevent the loading of fuel assemblies in basket module positions 1, 2 and 3 when LEU MTR fuel elements having >470 g ^{235}U per element (>22 g ^{235}U per plate) are loaded. The presence and/or use of spacers, fuel plate canisters or fuel cans does not affect the structural integrity of the MTR fuel baskets as the total weight of fuel element, spacer and fuel plate canister or fuel can is limited to the evaluated load of 80 pounds/cell. The axial fuel and cell block spacers perform no safety function and are considered dunnage. Plate spacers are used, if required, to ensure that the criticality evaluation required minimum nonfuel hardware is provided.

Each module, fabricated from Type 304 stainless steel, is a weldment made up of two 1/2-inch thick, 13.265-inch diameter, circular plates at each end of the longitudinal divider plates creating seven MTR fuel assembly cavities. The outside wall of the four symmetric outermost fuel compartments is fabricated from 11-gage Type 304 stainless steel sheet. The 1/2-inch thick plate at the top end of the MTR fuel basket module is welded to the exterior surfaces of the fuel tube weldment with a 1/8-inch continuous weld on the under side of the top plate and with a continuous fillet seal weld on the top side. The 1/2-inch thick baseplate is continuously welded to the 1/4-inch thick divider plates and the 5/16-inch thick web plates. The 11-gage sheet metal and the 5/16-inch intermediate webs are discontinued at 1/4 inch from the surface of the baseplate to provide for compartment drainage. The 5/16-inch plate material may be machined to a minimum thickness of 0.28 inch. In addition to the drainage path at the base of each assembly cavity, a 1-inch diameter hole is located at the center of each of the compartments in the module. Each MTR basket base

module sits on a 1.5-inch long, 10-inch schedule 80S pipe welded to the 1/2-inch thick baseplate. The 10-inch schedule 80S pipe carries the total weight of the MTR basket assembly and bears directly on the bottom forging of the cask.

The MTR fuel basket base module and intermediate modules have guide pins fixed to the surface of the top support plate. The guide pins fit into holes in the base plate of the top and intermediate modules and provide controlled alignment of the basket assembly. A groove slot on the outside of each basket unit support plate is provided for the clearance of cask drain tube and for circumferential alignment of the MTR basket assembly.

The MTR Plate Canister (canister) is an all-aluminum rectangular canister that is suitable for transport in the NAC-LWT MTR 42 element basket. The canister may be transported in the 28 or 35 element basket if appropriate dunnage is used. The canister is fabricated from ASTM B209 or ASTM B221 6061 aluminum. The canister body comprises two thick walls and two thin walls that are welded together into a rectangular tube to contain up to 23 MTR fuel plates. Each end of the canister body is closed by identical aluminum lids milled from a solid piece to incorporate a lifting bail. The lids are fastened securely to the thick wall plates using aluminum socket head cap screws that are captive in the lid to facilitate closing the canister.

2.6.12.6.1 MTR Fuel Basket Analysis

The MTR basket assembly and the inner shell are both fabricated from Type 304 stainless steel material. The nominal radial gap between the MTR basket assembly and the cask inner shell is 0.055 inch. The nominal radial gap between the basket and the inner shell is 0.0531 inch at the design basis fuel normal operation steady-state temperature. As defined for other NAC-LWT fuel specific basket designs, since the gap between the basket and cask inner shell wall is small, it is assumed that there is no relative motion between the basket and the cask, and that the basket is in contact bearing on the inner shell during a side drop. The basket bearing loads are transmitted to the inner shell and cask structure.

The analysis of the MTR plate canister is presented in Section 2.6.12.6.6.

2.6.12.6.2 MTR Fuel Basket Normal Conditions 1-foot Side Drop

This section evaluates the MTR fuel basket for the normal conditions of transport 1-foot side drop.

Bearing Stress Calculation—Inner Shell (Cask 1-foot Side Drop)

The bearing stress is calculated using Roark's, Table 33, Case 2 (Roark's, 6th Edition), which models the cylindrical basket in a circular groove. The 28 MTR fuel assembly base module is the heaviest module when loaded with 25 PULSTAR fuel elements. The maximum compressive stress, for two elastic bodies with similar elastic modulus, is:

$$\sigma_c = 0.798\sqrt{\frac{g\,P(D_1 - D_2)}{\frac{D_1 D_2}{\frac{2(1-\nu^2)}{E}}}} = 16{,}679 \text{ psi}$$

where:

g = 1-foot side drop acceleration = 24.3

E = Elastic modulus = 28.3×10^6 psi (conservatively use E @ 70°F)

ν = Poisson's ratio for steel material = 0.275

D_1 = Cask cavity diameter = 13.405 inches

D_2 = Basket diameter = 13.265 inches

t = Thickness of stiffener at mid section of base module (less chamfers)

= $0.5 - 2 \times 0.13 = 0.24$ in

W = Maximum weight of MTR basket with contents (PULSTAR fuel elements)

= 3,222 lbs

W_r = Load supported by 28-assembly basket base module middle ring

= W/9 = 358 lbs

P = W_r/t = 358 lb/0.24 in = 1,491 lb/in

The allowable compressive stress, S_y, of Type 304 stainless steel at a conservative maximum operating temperature envelope of 600°F is 18,200 psi. The margin of safety is calculated as:

$$MS = \frac{S_y}{\sigma_c} - 1 = +0.09$$

Fuel Tube Stresses (Cask 1-foot Side Drop)

The maximum stress in the fuel tubes occurs in the 0.12-inch thick, 11-gage sheet metal tubes which support the entire length of the MTR fuel elements or PULSTAR fuel elements. There are two cases to consider. In the first case, the weight of the fuel assembly is transmitted to the tube through the two aluminum plates at the sides of the fuel assembly. As shown in Figure 2.6.12-1, this load path creates a uniform line load along the length of the tube located about 0.315 inch from the corners. The tube is analyzed as a simple beam, 1-inch wide, 0.12-inch thick, and 3.44-inches long with a concentrated load at 0.315 inch from the ends. The maximum bending moment, M_I, is:

$$M_I = \frac{(8Pa + WL^2) \times g}{8} = 14.0 \text{ in-lb/in}$$

where:

W = Unit tube body weight = $0.288 \times t = 0.0346$ lb/in^2

L = Length = 3.44 inches

P = Bounding fuel load = $P_f / (2 \times L_f) = 1.67$ lb/in

P_f = Fuel weight = 80.0 lbs

L_f = Shortest length over which fuel load is applied = 24 inches

a = Distance from applied load, P to support = 0.315 in

g = 1-foot side drop acceleration = 24.3

In the second case, the weight of the fuel assembly is transmitted to the tube as a uniform load. The load path is shown in Figure 2.6.12-1. The maximum bending moment for this case, M_{II}, is:

$$M_{II} = \frac{(2PL^2 + WL^3) \times g}{8L} = 36.1 \text{ in-lb/in}$$

The maximum bending stress, σ, is:

$$\sigma = \frac{6M_{II}}{t^2} = 15{,}042 \text{ psi}$$

where:

t = Fuel tube thickness = 0.12 in

The stress allowable, $1.5S_m$, is 24,600 psi for Type 304 stainless steel at a conservative temperature of 600°F. The margin of safety is:

$$MS = \frac{24{,}600}{15{,}042} - 1 = +0.64$$

The 11-gage sheet metal tube is continuously welded to the adjacent divider plates with a 1/8-inch fillet weld. This weld resists shear developed in the simple beam analyzed above.

$$V = \frac{(2P + WL) \times g}{L} = 24.4 \text{ lb/in}$$

The shear stress, τ, is:

$$\tau = \frac{V}{t} = 203 \text{ psi}$$

The "throat" thickness of the weld is 0.088 in. The ratio of the plate thickness (0.12 in) to the weld "throat" thickness (0.088 in) is 1.36. The maximum stress of 203 psi calculated above is adjusted by a factor of 1.36 to obtain the maximum stress in the weld for the 1-foot side drop (24.3g). Maximum stress in the weld, S_w, is:

$$S_w = 1.36 \times \tau = 276 \text{ psi}$$

The ASME Code, Subsection NG-3352 recommends that the allowable stress be determined for a fillet weld with PT or MT surface examination by implementing a quality factor, n, of 0.4. The stress allowable, S_y, of the base metal, Type 304 stainless steel, is 18,200 psi at a conservative operating temperature envelope of 600°F. The margin of safety for the fillet weld is:

$$MS = \frac{S_y \times n}{S_w} - 1 = \underline{+\text{Large}}$$

2.6.12.6.3 MTR Fuel Basket Normal Conditions 1-foot End Drop

This section evaluates the MTR fuel basket for the normal conditions of transport 1-foot end drop.

Bearing Stress Calculation—Bottom Forging (Cask 1-foot End Drop)

When in the vertical position a 0.5-inch thick, 10-inch nominal diameter schedule 80S pipe supports the MTR basket assembly. The 1.5-inch long pipe is welded to the baseplate of the base module. The compressive stress is:

$$\sigma_c = \frac{g \times W}{A} = 3{,}162 \text{ psi}$$

where:

W = Maximum weight of MTR basket with contents (PULSTAR fuel elements) = 3,222 lbs

A = Cross-sectional area of base pipe support = 16.1 in^2

g = 1-foot end drop acceleration = 15.8

The allowable stress, S_y, of Type 304 stainless steel at a conservative maximum operating temperature of 600°F is 18,200 psi. The margin of safety is:

$$MS = \frac{S_y}{\sigma_c} - 1 = +4.76$$

Compressive Stress Calculation—Fuel Tubes (Cask 1-foot End Drop)

The MTR basket assembly and the inner cavity length are designed to ensure that there is minimal longitudinal movement of the basket relative to the cask. The base module of the MTR basket assembly supports itself and the weight of the other basket modules, including fuel content during a 1-foot end drop. The normal operation load compressive stress developed in the basket tube wall is:

$$\sigma_c = \frac{g \times W}{A} = 6{,}208 \text{ psi}$$

where:

W = Maximum weight of MTR basket with contents (PULSTAR fuel elements)
= 3,222 lbs

g = 1-foot end drop acceleration = 15.8

A = Total compartment cross-sectional area at baseplate (Figure 2.6.12-2)
= 8.20 in^2

The allowable compressive stress, S_m, is 16,400 psi conservatively evaluated for Type 304 stainless steel at a conservative maximum operating temperature of 600°F. The margin of safety is:

$$MS = \frac{S_m}{\sigma_c} - 1 = +1.64$$

The Euler elastic buckling load formulation is used to determine the critical buckling load of the MTR basket base module. The base module is treated as simply supported, which results in an effective length that is twice the actual length, thus reducing the critical buckling load by a factor of 4.0. The basket base module buckling load is:

$$P_{cr} = \frac{\pi^2 E I_i}{(L_e)^2} = 1.55 \times 10^6 \text{ lb}$$

The margin of safety is:

$$MS = \frac{P_{cr}}{P_c} - 1 = \underline{+\text{Large}}$$

where:

P_c = Compressive load = 15.8g × 3,222 lbs = 50,908 lbs

I_i = Basket inertia moment = 47.92 in^4

E = Elastic modulus (@ 600°F) = 25.3×10^6 psi

L_e = Effective length of 28 assembly basket = 2 × 44.0 inches = 88 inches

Baseplate Stresses (Cask 1-foot End Drop)

The support plate at the top end of the basket modules is continuously welded to the outside periphery of the fuel compartment tubes. The baseplate of a typical basket module is continuously welded to the two 11.57-inch wide, 5/16-inch (min. 0.28-inch considering machining tolerance) thick web plates, and to the two 3.44-inch wide, 1/4-inch thick divider

plates as shown in Figure 2.6.12-2. The ½-inch thick baseplate supports seven MTR or seven DIDO fuel assemblies or 25 PULSTAR fuel elements and is conservatively assumed to be supported by the main longitudinal webs mentioned above during a cask end drop. Two separate load cases are examined. The maximum stress for each case is then combined to obtain the total stress on the baseplate. Figure 2.6.12-2 details the baseplate support.

The first case, Case I, examines a 3.44-inch square plate with two adjacent sides fixed and the other two sides free. The applied pressure over the entire plate is uniform (Roark's, 6th edition, Table 26, Case 11a). The bending stress is:

$$\sigma_I = \frac{-g\beta_I P b^2}{at^2} = -8{,}947 \text{ psi}$$

where:

P = Fuel weight = 80.0 lbs

g = 1-foot end drop acceleration = 15.8

a = Area of plate = $(3.44 \text{ in})^2 = 11.83 \text{ in}^2$

t = Plate thickness = 0.5 inch

b = Plate width = 3.44 inches

β_I = Boundary condition stress factor = 1.769

The second case, Case II, examines a rectangular plate, 11.57 inches by 3.44 inches, fixed along the long edges, free along the short edges and uniformly loaded (Roark's, 6th edition, Table 26, Case 6a). The bending stress is:

$$\sigma_{II} = \frac{-g\beta_{II} P b^2}{at^2} = -747 \text{ psi}$$

where:

a = Area of plate = $11.57 \times 3.44 \text{ in} = 39.8 \text{ in}^2$

β_{II} = Boundary condition stress factor = 0.497

The total bending stress is conservatively obtained by adding the individual stresses:

$$\sigma = \sigma_I + \sigma_{II} = -9{,}694 \text{ psi}$$

The allowable stress, 1.5 S_m, is 24,600 psi for Type 304 stainless steel at the conservative maximum temperature envelope of 600°F. The margin of safety is:

$$MS = \frac{24{,}600}{9{,}694} - 1 = +1.54$$

2.6.12.6.4 Fuel Tube Stresses (Cask 1-foot Oblique Drop)

Table 2.6.7-34 summarizes the cask drop g-load factors for six drop orientations: the cask end drop (0 degrees), the cask corner drop (15.74 degrees), the cask oblique drops (30, 45 and, 60 degrees) and the cask side drop (90 degrees). To conservatively envelope the maximum stresses expected for all the 1-foot oblique drops, the calculated stresses of 6,208 psi in Section 2.6.12.6.3 for the end drop and 15,042 psi in Section 2.6.12.6.2 for the side drop are added as absolute values. The maximum stress in the MTR basket that envelops the maximum stresses expected for any 1-foot oblique drop is 21,250 psi. The margin of safety, against stress allowable, 1.5 S_m, of 24,600 psi, at 600°F, is:

$$MS = \frac{24,600}{21,250} - 1 = +0.16$$

2.6.12.6.5 Fuel Cans in a MTR Basket (Damaged PULSTAR Elements)

PULSTAR Damaged Fuel Can

The PULSTAR can is a modification of the existing damaged fuel can for TRIGA fuel, which has two different design lengths. The PULSTAR fuel can has the same cross-section (can width and wall thickness) as the TRIGA fuel can and is approximately four inches longer than the shorter TRIGA fuel can design. Identical materials of fabrication are used for both TRIGA and PULSTAR fuel cans. As shown in Section 2.6.12.7.6, the TRIGA fuel can is evaluated for a maximum weight of 59.6 lb, which includes a can weight of 20 lbs and a payload of 39.6 lbs. The weights of the PULSTAR fuel can and its maximum payload are approximately 15 lbs and 35 lbs, respectively, for a maximum total weight of 50 lbs. Therefore, the stress evaluation for inertia loads for the PULSTAR can is bounded by the evaluation for the TRIGA can.

The maximum internal pressure for the PULSTAR can is 3.4 atm (gage). The calculation for the TRIGA can in the section titled “Sealed Failed Fuel Can Bolt Evaluation” used a value of 3 atm (gage). In the evaluation of the bolt stresses and loads, the calculation in this section conservatively used a linear load of 700 lb/inch, which bounds the increased internal pressure of 3.4 atm (gage) for the PULSTAR can.

For the e valuation of the failed fuel can tube, the minimum margin of safety is +0.77 (actual stress is 9,241 psi) in the section titled “Sealed Failed Fuel Can Plate Stress Due to Side Drop” for the 1-foot side drop. Considering the damaged fuel can as a thin wall cylinder with a bounding internal pressure of 60 psig, the stresses in circumferential, radial, and longitudinal directions are:

$$\sigma_\theta = \frac{P \times r}{t} = 1,500 \text{ psi}$$

$$\sigma_r = -P = -60 \text{psi}$$

$$\sigma_Z = \frac{P \times r}{2 \times t} = 750 \text{ psi}$$

where:

P = 60 psig

r = 3.25/2 in., the radius of the can

t = 0.065 in., the thickness of the can

Combining the stresses caused by can contents (1-ft side drop) and the internal pressure, the bounding stress intensity is:

$$S_{int} = (1{,}500 + 9{,}241) - (-60) = 10{,}801 \text{ psi}$$

The minimum margin of safety for the one-foot side drop and internal pressure is:

$$\text{M.S.} = \frac{1.5\ S_m}{S_{int}} - 1 = +1.28$$

It is concluded that the PULSTAR fuel can is structurally adequate for normal conditions of transport. No additional analysis is required.

PULSTAR Screened Fuel Can

The PULSTAR screened can is a modification of the existing screened fuel can for TRIGA fuel, which has two different design lengths. The PULSTAR screened fuel can has the same cross-section (can width and wall thickness) as the TRIGA screened fuel can and is approximately four inches longer than the shorter TRIGA screened fuel can design. Identical materials of fabrication are used for both TRIGA and PULSTAR fuel cans. As shown in Section 2.6.12.7.5, the TRIGA fuel can is evaluated for a maximum weight of 71 lbs, which includes a maximum can weight of 17 lbs and a payload of 54 lbs. The weights of the PULSTAR screened fuel can and its maximum payload are 12 lbs and 54 lbs, respectively, for a maximum total weight of 66 lbs. Therefore, the evaluation presented in Section 2.6.12.7.5 for the TRIGA screened fuel can bounds the evaluation for the PULSTAR screened fuel can and it may be concluded that the PULSTAR screened fuel can is structurally adequate for normal conditions of transport. No additional analysis is required.

PULSTAR Fuel Rod Insert and Spacer

Intact PULSTAR fuel elements can be placed into the TRIGA fuel rod insert (Dwg. 315-40-096). This insert is identical to the TRIGA fuel rod insert evaluated in Section 2.6.12.7.9. The weight of the individual PULSTAR fuel element is 1.31 lbs, which is bounded by the weight of an

individual TRIGA rod of 1.44 lbs reported in Section 2.6.12.7.9. Therefore no additional evaluation for PULSTAR fuel elements contained in the TRIGA fuel rod insert is required.

For an end drop, the maximum stress is computed using the accelerations for the accident condition, but is compared to the stress allowables for the normal condition. The stress in the aluminum spacer is:

$$\sigma = \frac{Pg}{A} = 0.5 \text{ ksi}$$

where:

P = 65 lbs Bounding load

g = End drop g-load for the 30-foot end drop= 60.0g

A = $\pi r^2 = 8.3$ in^2

r = Radius of cylinder = 3.25/2 = 1.625 inches

t = Wall thickness = 0.125 in

The margin of safety is

$$MS = \frac{0.7S_u}{\sigma} - 1 = \frac{0.7 \times 30.2}{0.5} - 1 = \underline{+Large}$$

Using NUREG / CR-6322, a buckling evaluation of the spacer is performed for the accident condition which corresponds to an acceleration of 60g. The critical buckling stress for the spacer is:

$$\sigma_c = \frac{\pi^2 E}{\left(\frac{KL}{r}\right)^2} = 99.7 \text{ ksi}$$

where:

K = Effective length factor for fixed-free end conditions = 2.0

L = spacer length = 16.5 inches, which bounds 12-inch length

r = Radius of gyration = $\sqrt{I/A}$ =1.1 in

A = Cross-sectional area of spacer = πDt = 1.28 in^2

I = Moment of inertia = $\frac{\pi D^3 t}{8}$ = 1.69 in^4

D = Spacer diameter = 3.25 inches

t = Spacer thickness = 0.125 in

E = Modulus of elasticity of aluminum = 9.1×10^6 psi

The margin of safety against buckling is:

$$MS = \frac{\sigma_c}{\sigma} - 1 = \frac{99.7}{0.5} - 1 = \underline{+Large}$$

2.6.12.6.6 MTR Plate Canister Analysis

The MTR Plate Canister (canister) is a handling fixture designed to assist loading MTR fuel plates into the removable modules of the NAC-LWT MTR fuel basket. The fuel basket modules are used to load and unload fuel from the NAC-LWT cask and are the analyzed support structure for the fuel and canister. Therefore, the canister is not a required operational feature for loading or unloading fuel from the cask and serves only as a spacer (dunnage) once inserted into a basket module.

In this section, the canister is evaluated and found to be structurally adequate for all normal conditions of handling and transport. Stresses developed during the normal (one-foot drop) conditions meet all appropriate allowable criteria with positive margins. Classical hand calculations are used to determine the stresses in the canister. Calculated stresses are compared to allowable stresses for non-containment structures shown in Table 2.1.2-2, "Allowable Stress Limits for Noncontainment Structures."

Design deceleration (g) factors used in the canister analysis are shown in Table 2.6.7-34, "Summary of Cask Drop Equivalent G Load Factors." A temperature of 295°F bounds the highest calculated canister temperature and is used for both normal and accident conditions analyses. Stresses for corner and oblique drops are considered to be enveloped by the stresses produced by the end and side drops based on the cask drop acceleration component loads summarized in Table 2.6.7-34.

Maximum Canister Temperature

The maximum heat load allowed in an MTR basket cell is 120 W (409.8 Btu/hr), which is assumed to be transmitted only through one plate of the canister, resulting in a conservative estimate of the ΔT through the thickness of the canister shell. The maximum basket temperature is listed in Table 3.4-6 as 292°F.

The change in temperature through the thickness of the shell is calculated using the following formula:

$$\Delta T = Q\,t / kA = 409.8 \text{ Btu/hr} \times 0.24 \text{ inch} / (6.23 \text{ Btu/hr-in-F} \times 76.26 \text{ in}^2) = 0.21°F$$

where:

$k = 6.77 - 0.0025 \times (292 - 77) = 6.23$ Btu/hr-in-F at 292°F

$A = 25.85(3.2 - 0.125 \times 2) = 76.26$ in^2 is the cross-sectional area of the plate

The peak canister shell temperature is then 292°F + 0.21°F = 292.21°F. A temperature of 295°F is conservatively used for the temperature of the canister.

MTR Plate Canister Weight

The canister component weights are determined by conservatively calculating the volume of each component and multiplying by the density of 6061 aluminum, 0.098 lb/in^3 ("ASME Boiler and Pressure Vessel Code, Section II, Part D – Properties," 1995 with 1995 Addendum).

Can Weldment

$$W_{canister} = W_1 + W_2 + W_3 + W_4 = 6.8 \text{ lbs (use 10 lbs for analysis)}$$

where:

Item/Description	Calculation of Weight
1 Plate-A (2)	$W_1 = 25.85 \times 3.20 \times 0.24 \times 0.098 \times 2 = 3.9$ lbs
2 Plate-B (2)	$W_2 = 25.85 \times 2.95 \times 0.125 \times 0.098 \times 2 = 1.9$ lbs
3 Lid (2)	$W_3 = 3.30 \times 3.20 \times 0.25 \times 0.098 \times 2 = 0.5$ lb
4 Bail (2)	$W_4 = [(0.46(4) + 2.94(2)) \times 0.125) + 1.04 \times 0.25] \times 0.098 \times 2 = 0.5$ lb

This weight calculation conservatively neglects holes in the lids.

NAC-LWT MTR Plate Canister Stress Analysis

The canister is evaluated for stresses developed during the normal (one-foot drop) conditions. The empty canister weight is assumed to be 10 pounds and the loaded canister weight is assumed to be 30 lbs throughout the calculations.

Side Drop

The canister is contained within the NAC-LWT MTR 42-element basket assembly in the side-drop case. Because of the support provided by the basket, only the uppermost canister plate is subjected to bending. Bending of the plate is analyzed by considering a 1-inch section as a fixed-fixed beam equal in length to the width of the plate and uniformly loaded by the plate weight times the appropriate acceleration (g).

Normal Operating Condition (1-foot drop)

With the 0.125-in. thick plate uppermost:

The maximum moment (M_{max}) is:

$$M_{max} = \frac{wL^2}{12} = \frac{(0.30)(3.3^2)}{12} = 0.272 \text{ in-lb}$$

$$S_b = \frac{Mc}{I} = \frac{(0.272)(0.0625)}{1.63 \times 10^{-4}} = 104 \text{ psi for the normal operating condition}$$

where:

$w = 0.125 \times 1.0 \times 1.0 \times 0.098 \times 24.3g = 0.30$ lb/in

$$I = \frac{bh^3}{12} = \frac{(1.0)(0.125^3)}{12} = 1.63\times10^{-4} \text{ in}^4$$

With the 0.24-in. thick plate uppermost:

The maximum moment (M_{max}) is:

$$M_{max} = \frac{wL^2}{12} = \frac{(0.57)(3.3^2)}{12} = 0.517 \text{ in-lb}$$

$$S_b = \frac{Mc}{I} = \frac{(0.517)(0.125)}{1.15\times10^{-3}} = 56 \text{ psi for the normal operating condition}$$

where:

$w = 0.24 \times 1.0 \times 1.0 \times 0.098 \times 24.3g = 0.57$ lb/in

$$I = \frac{bh^3}{12} = \frac{(1.0)(0.24^3)}{12} = 1.15\times10^{-3} \text{ in}^4$$

The minimum margin of safety (MS) for bending is:

$$MS = \frac{1.5S_m}{S_b} - 1 = \frac{(1.5)(11{,}500)}{104} - 1 = \underline{+\text{Large}}$$

Side Plate Buckling

The 0.125-inch-thick side plates are evaluated as axially loaded compression members. Buckling of the 0.24-inch thick plates is based on this analysis. Considering a 1-inch section of the plate, the slenderness ratio (C_c) is:

$$C_c = \sqrt{\frac{2\pi^2 E}{S_y}} = \sqrt{\frac{2\pi^2 9.6\times10^6}{27{,}900}} = 82.4$$

The radius of gyration (r) is:

$$r = \sqrt{\frac{I}{A}} = 0.036 \text{ in}^4$$

where:

$$I = \frac{bh^3}{12} = \frac{1.0(0.125)^3}{12} = 1.628\times10^{-4} \text{ in}^4$$

$A = 0.125\times1.0 = 0.125$ in^2

For K = 1,

$$\frac{KL}{r} = \frac{1(3.3)}{0.036} = 91.67$$

For KL/r = 91.67 > C_c = 82.4, the allowable stress (S_a) is:

$$S_a = \frac{12\pi^2 E}{23\left(\frac{KL}{r}\right)^2} = \frac{12\pi^2\left(9.6\times10^6\right)}{23\left(91.67^2\right)} = 5{,}882 \text{ psi}$$

The allowable load (P_a) is:

$P_a = S_a \times A = 5{,}882 \text{ psi} \times 0.125 \text{ in}^2 = 735 \text{ lbs}$

The load (P) imposed upon the 0.125-inch-thick side plate by the 0.24-inch-thick side plate in the normal condition, one-foot side drop is:

$P = 0.24 \times 1.0 \times 3.3 \times 0.098 \times 24.3g \cong 2 \text{ lbs}$

This 2-pound load is conservative because the load from the thicker plate is actually shared between the two thinner plates.

The margin of safety (MS) is:

$$MS = \frac{P_a}{P} - 1 = \frac{735}{2} - 1 = +\underline{\text{Large}}$$

End Drop

For the end drop, the can weldment is loaded by its own weight. The canister contents bear against the bottom or top of the canister, depending on drop orientation.

Under normal operating conditions the canister body weldment is evaluated for a 15.8g end drop acceleration. The compressive load (P) on the tube is the combined weight of the lid and body plates times the appropriate g factor.

The compressive stress (S_c) in the canister body weldment is:

$$S_c = \frac{P}{A} = \frac{158 \text{ lb}}{2.24 \text{ in.}^2} \cong 70.5 \text{ psi}$$

where:

$$A = \left(3.2\times0.24 + 2.82\times0.125\right)(2) = 2.24 \text{ in}^2$$

P = 10 lb × 15.8g = 158 lb (Conservatively, the entire weight of the canister is used)

The margin of safety (MS) is then:

$$MS = \frac{S_m}{S_c} - 1 = \frac{11{,}500 \text{ psi}}{70.5 \text{ psi}} - 1 = \underline{+\text{Large}}$$

Lifting Bail Compressive Stress

Under normal operating conditions, the lifting bail is evaluated for a 1-foot end drop (15.8g acceleration). The compressive load (P) on the lifting bail is the combined weight of the canister and its contents (30 lbs) times the appropriate g factor.

The compressive stress (S_c) in the canister body weldment is:

$$S_c = \frac{P}{A} = \frac{474 \text{ lb}}{0.965 \text{ in}^2} = 491 \text{ psi}$$

where:

$$A = (0.46 \times 4 + 2.94 \times 2)(0.125) = 0.965 \text{ in}^2$$

$$P = 30 \text{ lb} \times 15.8g = 474 \text{ lbs}$$

The margin of safety (MS) is then:

$$MS = \frac{S_m}{S_c} - 1 = \frac{11{,}500 \text{ psi}}{491 \text{ psi}} - 1 = \underline{+\text{Large}}$$

Canister Body Buckling

The canister body is evaluated for buckling during the end drop by using the Euler formula to determine the critical buckling load (P_{cr}):

$$P_{cr} = \frac{K\pi^2 EI}{L^2} = \frac{0.722\pi^2 (9.6 \times 10^6)(2.98)}{(25.85)^2} =$$

305,073 lbs, assuming lower end fixed, upper end free

where:

$E = 9.6 \times 10^6$ psi

$K = 0.722$ (Reference Roark's Table 34, Case 3a)

$$I = \left(\frac{3.3 \text{ x } 3.2^3 - 2.82 \text{ x } 2.95^3}{12} \right) = 2.98^4, \text{ minimum moment of inertia}$$

L = tube body length (25.85 in.)

Because the maximum compressive load (10 lbs × 60g = 600 lbs under the accident condition) is much less than the critical buckling load (305,073 lbs), the canister body has adequate resistance to buckling.

As noted in the first paragraph of this section, the plate canister is only a handling fixture (not a structural component) and only serves as a spacer once inserted into the basket. Thus, retempering of the aluminum plates after welding is not required. The criticality evaluation presented in Section 6.4.3.10 includes the hypothetical separation of the canister fixture.

Figure 2.6.12-1 Cask Side Drop Fuel Tube Loading – MTR Fuel Basket

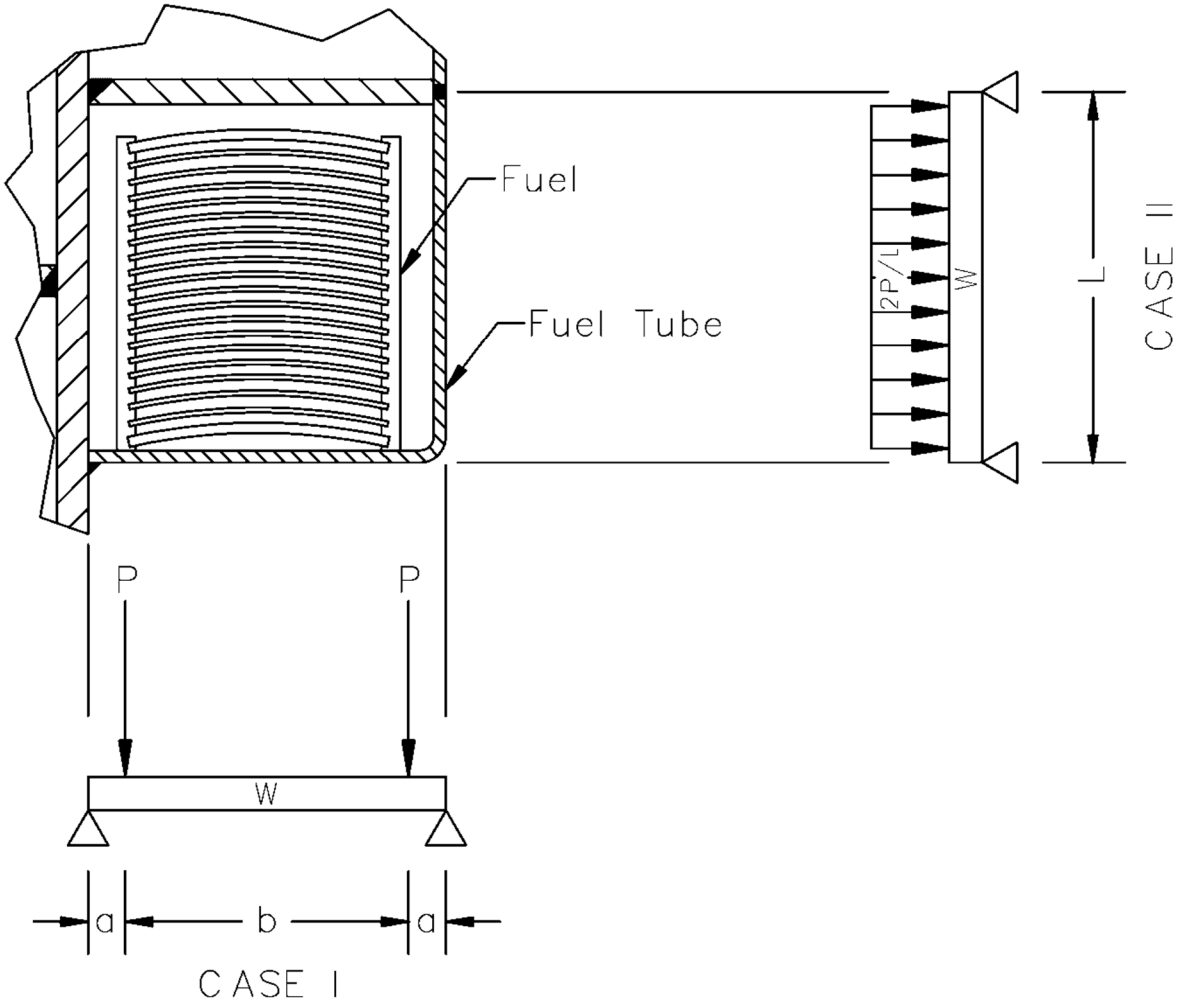

Figure 2.6.12-2 Baseplate Supports for Cask End Drop Loads – MTR Fuel Basket

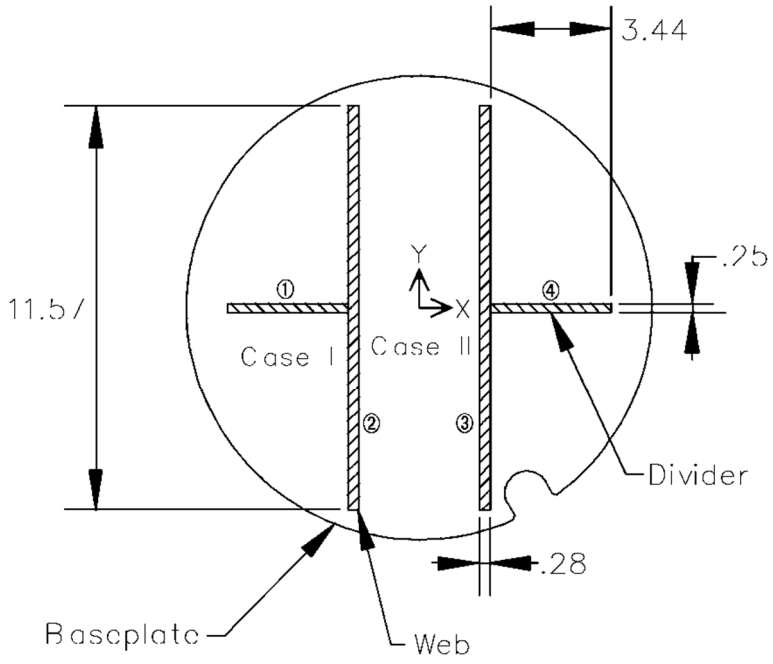

Notes:
Area of shaded portion = 8.20 in^2

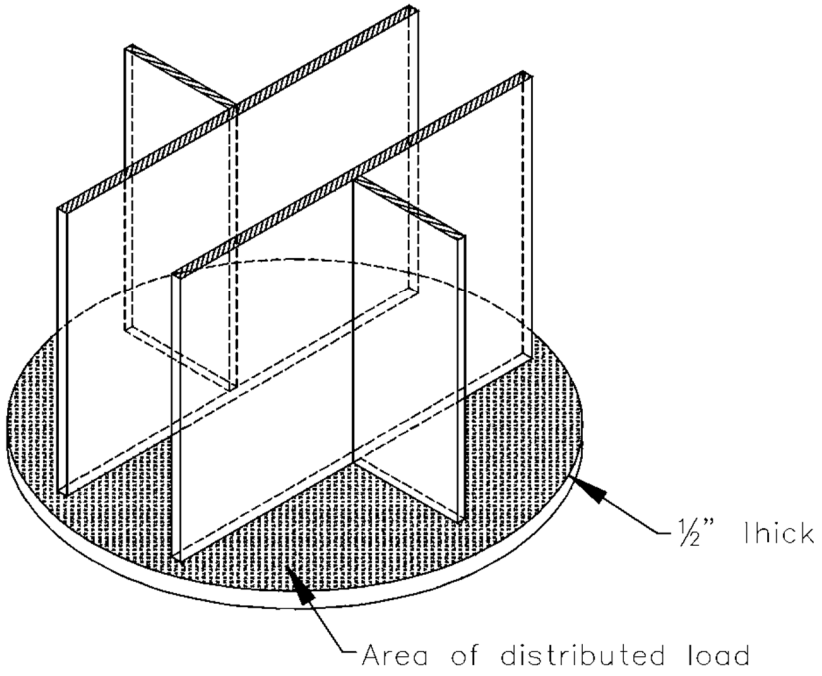

2.6.12.7 TRIGA Fuel Basket One-Foot Drop Evaluation

This section evaluates the stresses in TRIGA fuel baskets as a result of the normal condition one-foot drop. The basket assembly consists of 5 basket modules - a base module, a top module and 3 intermediate modules. During transport all 5 modules must be installed in the cask. The 3 intermediate modules are interchangeable, but the base and top modules are not. The top module is sized to accept TRIGA Fuel Follower elements, which are longer than the typical element. Two basket configurations are available, "nonpoisoned" and "poisoned," where the poisoned basket configuration utilizes borated steel plates for additional criticality control. Each module has up to 7 cells and each open cell holds up to 4 TRIGA fuel elements or up to 16 TRIGA fuel cluster rods. The center cell of each module of the nonpoisoned basket configuration is blocked by a solid 11-gage stainless steel plate that precludes fuel loading in the center cell. The structural evaluation is based on the poisoned TRIGA basket configuration, so that the structural evaluation bounds transportation of the nonpoisoned configuration with the center cell blocked. Intact fuel elements are loaded directly into the module cells, while intact fuel cluster rods are loaded into fuel rod inserts that are placed into the basket cells prior to fuel loading. For the poisoned basket design, an alternative is provided that utilizes one base module and four intermediate modules, along with a spacer to fill the space differential resulting from the use of an additional intermediate module, rather than a top module.

The top and bottom modules are designed to hold up to 4 intact TRIGA fuel elements in screened cans, or failed or damaged TRIGA fuel elements or fuel cluster rods in screened or sealed cans in each of the open cells. Up to four intact fuel elements may be confined within a screened failed fuel can. The screened can is a square tube of 14-gage Type 304 stainless steel, closed on its bottom end with a screen to allow water draining. It is closed with a lid.

Up to two failed TRIGA fuel elements or up to 6 failed TRIGA fuel cluster rods may be transported in a sealed failed fuel can. The sealed can has a circular cross-section and is fabricated from Type 304 stainless steel tubing with a 0.065-inch thick wall. The bottom end includes a check valve and drain plug to facilitate draining. The top end is closed with a metal seal and a lid that is bolted in place.

Each basket module is a Type 304 stainless steel weldment made up of two 1/2-inch thick, 13.27-inch diameter, circular plates at each end of longitudinal divider plates. The divider plates create seven compartments or cells. The outside wall of the four symmetric outermost fuel cells is fabricated from 11- gage Type 304 stainless steel sheet. The 1/2-inch plate at the top end of the module is welded to the exterior surfaces of the divider plates using a continuous 1/8-inch weld on the under side of the top plate and a continuous fillet weld on the top side. The 1/2-inch thick baseplate is continuously welded to the 1/2-inch thick divider plates and the 5/16-inch thick

web plates. The top module has an additional 1-inch thick support plate midway between the top and bottom circular plates that has a continuous fillet weld on the bottom side and a continuous seal weld on the top side. The 11-gage sheet metal, and the 5/16-inch thick (0.28-inches, min) intermediate webs, end 1/2-inch above the top surface of the baseplate to provide for module drainage. In addition, a 1-inch diameter hole is located in the module base plate, at the center of each of the cells. The bottom module sits on a 1.5-inch section of 10-inch diameter, schedule 80S, pipe welded to the baseplate. The pipe carries the total weight of the TRIGA basket assembly, and bears directly on the cask bottom forging. As previously noted, the center cell of each nonpoisoned basket module is blocked with an 11 gage plate welded to the cell walls. This plate prevents loading fuel elements in the center cell. The center cell is open at the bottom to ensure water draining.

Four of the seven cells in each poisoned basket module have a plate of borated stainless steel neutron absorber material on one side to ensure criticality control in transport. The borated plate extends over the active length of the TRIGA fuel assemblies, and covers the width and length of the cell face within the limits of the attachment welds. The configuration of the borated plate is shown in the license drawings in Section 1.4.

The bottom and intermediate modules have guide pins fixed to the surface of the top support plate. The pins fit into holes in the baseplate provided for that purpose to achieve alignment. A cutout in the baseplate and top plate is provided for clearance of the cask drain tube, and for circumferential alignment of the TRIGA basket assembly.

The weights of the TRIGA basket assembly and modules are shown below. The weight includes the heaviest fuel element that could be installed in the module, and failed fuel containers in the top and bottom modules. The calculated weight of each top and bottom module is increased by 70 lbs to account for the poison plates and to conservatively bound the structural analysis. Similarly, the calculated weight of the intermediate module is increased by 140 lbs.

Component	Weight of Fuel (lb) 140 Elements	Weight of Module(s)[1] (lb)	Total Weight (lb)	Length of Module(s) (in)
Bottom Module	247[2]	356	603	34.70
3 Intermediate Modules	741[2]	957	1,698	31.50
Top Module	370[3]	460	830	48.30
Weight of Empty Basket		1,773		
Loaded Weight of Basket			3,131	

Notes:

1. Includes the weight of failed fuel cans plus additional weight added for conservative design evaluation.
2. TRIGA fuel element design-basis weight is 8.82 pounds.
3. TRIGA fuel element design-basis weight is 13.2 pounds for top module.

The weight of TRIGA fuel cluster rods in a basket cell, including the weight of the fuel rod insert, is bounded by that of the TRIGA fuel elements. As reported in Section 1.2.3.1, the design basis weight of a TRIGA fuel element is 8.8 lbs, while the design basis weight of a TRIGA fuel cluster rod is 1.4 lbs and the weight of the insert is 11.2 lbs. Thus, four fuel elements in a cell weigh 35.2 lbs, while 16 fuel cluster rods and an insert in a cell weigh 33.6 lbs. Additionally, the active fuel cluster rod length is slightly longer than the length of the fuel elements, producing a smaller bearing load along the length of the fuel cluster rod and insert.

Therefore, the analyses of TRIGA basket modules and payload presented in the following sections are bounding for both nonpoisoned and poisoned basket configurations, and for all TRIGA fuel types.

2.6.12.7.1 NAC-LWT Inner Shell Bearing Stress Analysis

The nominal radial gap between the TRIGA fuel basket and the cask inner shell is 0.0531 inch at the calculated, steady state, normal conditions fuel temperature. As defined for other NAC-LWT fuel specific basket designs, it is assumed that there is no relative motion between the basket and the cask, and that the basket is in bearing contact with the cask cavity inner shell in the side drop. Bearing loads of the intact fuel, and the screened and sealed failed fuel cans, are thus transmitted directly to the inner shell and cask structure.

Bearing stress is calculated using Case 2C (Young) which models the cylindrical basket in a circular groove. The maximum compressive stress, for two elastic bodies with a similar elastic modulus, is:

$$S_c = 0.798\left\{\frac{\frac{gp(D_1 - D_2)}{D_1 D_2}}{\frac{2(1-\nu^2)}{E}}\right\}^{1/2} = 15{,}305 \quad \text{psi}$$

where:

g = 24.3, Dynamic load factor for the one-foot side drop

p = 1,256 lb/in., 1 g bearing load

D_1 = 13.405 inches, Cask cavity diameter

D_2 = 13.265 inches, Basket outside diameter.

ν = 0.275, Poisson's ratio for SS 304

E = 28.3 x 10^6 psi, Elastic modulus (conservatively use E at 70°F)

The bounding bearing load, p, is determined using the weight of the bottom module bearing on the inner shell of the cask at the top and bottom circular plates. The bearing surface considers the chamfer at the edge of the circular plates.

The allowable stress S_y = 18,200 psi at 600°F. Therefore:

$$MS = \frac{18,200}{15,305} - 1 = +0.19$$

2.6.12.7.2 NAC-LWT Bottom Forging Bearing Stress

The TRIGA basket assembly, when in the vertical position, is supported by a 0.5-inch thick, 10-inch nominal diameter schedule 80S pipe. The 1.5-inch long pipe is welded to the baseplate of the base unit. The compressive stress is:

$$S_c = \frac{g \times W}{A} = 3,073 \quad \text{psi}$$

where:

g = 15.8 Dynamic load factor for the one-foot end drop

W = 3,131 lbs, Total weight of the basket

A = 16.1 in^2, Area of 10-inch diameter Schedule 80S pipe

The allowable stress, S_y = 18,200 psi at 600 °F.

Therefore:

$$MS = \frac{18,200}{3,073} - 1 = +\underline{\text{Large}}$$

2.6.12.7.3 TRIGA Basket Compressive Stress Analysis

The TRIGA fuel basket is designed to ensure that the longitudinal movement of the basket relative to the cask inner cavity is limited. The fuel, and screened or sealed can contents are not attached to the basket, and do not impart any longitudinal structural load on the basket body. However, the basket must support itself during an end drop accident. The basket is analyzed as a column, acted upon by a structural (weight) compressive load.

The compressive stress developed in the basket compartment wall is:

$$S_c = \frac{g \times W}{A} = 6,033 \quad \text{psi}$$

where:

g = 15.8 Dynamic load factor for the one-foot end drop

W = 3,131 lbs, Total weight of the basket

A = 8.20 in^2, Total compartment cross-section area at base plate.

The allowable stress, S_m = 16,400 psi at 600°F.

Therefore:

$$MS = \frac{16,400}{6,033} - 1 = +\underline{1.72}$$

The Euler elastic buckling load formulation is used to determine the critical buckling load (P_{cr}) of the 10-inch diameter Schedule 80S pipe and the base module. The pipe and base module are conservatively treated as simply supported, which results in an effective length that is twice the actual length, reducing the critical buckling load by a factor of 4.0. For the 10-inch pipe, the critical buckling load is:

$$P_{cr} = \frac{\pi^2 EI}{L_e^{\,2}} = 5.88 \times 10^9 \text{ lbs}$$

where:

E = 25.3 x 10^6 psi at 600°F

I = 212 in^4, inertia moment

L_e = 2 x 1.5 = 3.0 in., effective length (2L)

The calculated compressive load is:

P_c = W x g = 3,131 x 15.8 = 49,470 lbs

where:

g = 15.8 Dynamic load factor for the one-foot end drop

W = 3,131 lbs, Total weight of the basket

Therefore:

$$M.S. = \frac{P_{cr}}{P_c} - 1 = \frac{5.88 \times 10^9}{49,470} - 1 = +\underline{\text{Large}}$$

The critical buckling load for the base module is calculated using the same equation as above, by applying the moment of inertia of the fuel support structure. The fuel web and divider support structure is shown in the figure in the section titled “Baseplate Stress Due to End Drop.”

The moment of inertia for the support structure is:

Item	$(I_o)_{yy}$	A	h	Ah^2	$(I_o)_{xx}$
2-11.57" x 0.28" web plate	0.0	6.48	1.86	22.42	72.28
2-3.44" x 0.25" divider plate	1.7	1.72	3.72	23.80	0.0
Total	1.7			46.22	72.28

$(I_o)_{yy} = I_o + \Sigma Ah^2 = 1.7 + 46.22 = 47.92 \text{ in}^4$

$(I_o)_{xx} = \Sigma I_o = 72.28 \text{ in}^4$

Choosing the smaller moment of inertia, $(I_o)_{yy}$, as I:

$I = 47.92 \text{ in}^4$

$$P_{cr} = \frac{\pi^2 EI}{L_e^{\,2}} = \frac{\pi^2 \times 25.3 \times 10^6 \times 47.92}{(2 \times 33.2)^2} = 2.11 \times 10^6 \text{ lbs}$$

where:

$L_e = 2 \times 33.2$ inches

$P_c = W \times g = 3{,}131 \times 15.8 = 49{,}470$ lbs

where:

g = 15.8, Dynamic load factor for 1 foot end drop

W = 3,131 lbs, Total weight of the basket

$$\text{M.S.} = \frac{P_{cr}}{P_c} - 1 = \frac{2.11 \times 10^6}{49{,}470} - 1 = +\underline{\text{Large}}$$

2.6.12.7.4 TRIGA Basket Lateral Stress Analysis

The base plate at the end of a typical TRIGA basket module supports the weight of up to 28 TRIGA fuel elements, or the loaded screened or sealed failed fuel cans, when the cask is in the vertical orientation (0 degree drop). With the cask in the horizontal orientation (90 degree drop), the fuel cell divider plates support the entire length of the TRIGA fuel. The base plate and the divider plates share in the support of the TRIGA fuel at drop orientations between 0 and 90 degrees.

Baseplate Stress Due to End Drop

The support plate at the top end of the modules is continuously welded to the outside periphery of the plates, including the support plates that form the fuel cells. The baseplate of the basket module is continuously welded to the two 11.57-inches wide, 5/16-inch thick (0.28-inch min)

web plates, and to the two 3.44-inches wide, 1/4-inch thick divider plates as shown in the following sketch.

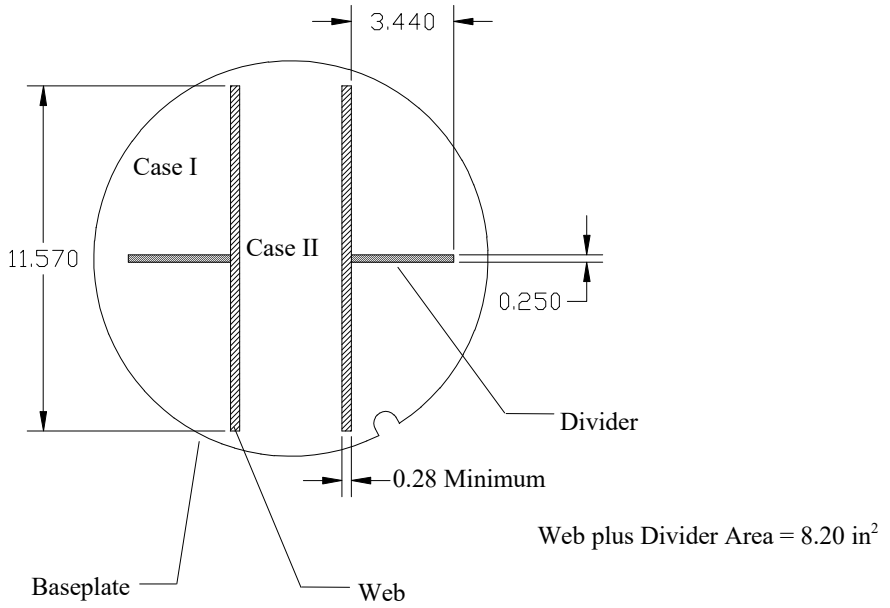

The baseplate supports 28 TRIGA fuel elements and is conservatively assumed to be supported by the main longitudinal support plates during a cask end drop. Two separate load cases are evaluated. The maximum stress for each case is combined to obtain the total stress on the baseplate.

The first case (Case I), evaluates a 3.44-inches square plate with adjacent sides fixed and the other sides free. The applied pressure over the entire plate is uniform (Young, page 471, case 11). The second case, Case II, examines a rectangular plate, 11.57 inches by 3.44 inches, fixed along the long edges, free along the short edges and uniform pressure (Young, page 462, case 6).

For Case I, the 3.44-inches square plate is analyzed as a cantilevered plate supported at two adjacent sides with the other two sides free. Load is assumed uniform over the area of the plate. The bounding fuel weight is applied. The maximum stress is expressed as (Young, page 471, case 11):

$$S_I = \frac{-g \times B_I \times P \times b^2}{A \times t^2} = -8{,}944 \text{ psi}$$

where:

g = 15.8, Dynamic load factor for the one-foot end drop

B_I = 1.769, Boundary condition stress factor

P = 80 lbs, Bounding module fuel weight

b = 3.44 inches, Width of plate

A = $(3.44)^2$ sq. in., Plate area

t = 0.5 in, Plate thickness

Case II, evaluates a plate 3.44-inches by 3.44-inches (width x length), fixed on two opposite sides, with the other two sides free. The maximum stress is expressed as (Young, page 462, case 6):

$$S_{II} = \frac{-g \times B_{II} \times P \times b^2}{A \times t^2} = -2{,}528 \text{ psi}$$

where:

g = 15.8, Dynamic load factor for the one-foot end drop

B_{II} = 0.5, Boundary condition stress factor

P = 80 lbs, Bounding module fuel weight

b = 3.44 inches, Width of plate

A = $(3.44)^2$ sq. in., Plate area

t = 0.5 in., Plate thickness

The total bending stress from Case I and Case II is:

$S_{total} = S_I + S_{II} = -11{,}472 \text{ psi} < 1.5\ S_m = 24{,}600 \text{ psi}$

Therefore:

$$MS = \frac{24{,}600}{11{,}472} - 1 = +\underline{1.14}$$

Support Plate Stress Due to Side Drop With Intact Fuel or the Screened Failed Fuel Can

The maximum stress in the support plates that form the fuel cells occurs in the 0.12-inch thick 11 gage sheet metal tubes which support the entire length of the TRIGA fuel elements, or the length of the loaded screened failed fuel can. The weight of the TRIGA fuel element is transmitted through the can walls to the support plates that form the fuel cell. This load path creates a uniform pressure load over the entire area as shown in the following sketch.

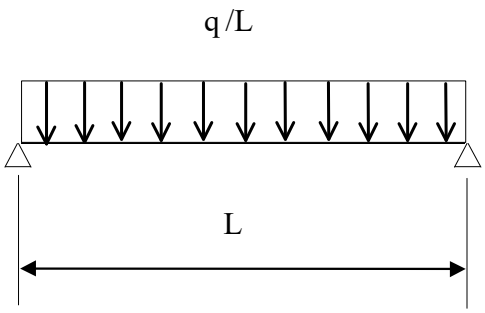

As stated in Section 2.6.12.7, the loading of TRIGA fuel cluster rods is bounded by the TRIGA fuel elements. The fuel weight per unit length for the bounding TRIGA fuel elements is:

Fuel Type	Max. Weight, W (lb)	Max. Length, L (in)	W/L (lb/in)
Aluminum Clad	6.4	28.53”	0.22
Stainless Steel Clad	8.82	29.88”	0.30
Fuel Follower Control Element	13.2	45”	0.29

The intact fuel bounding load, q_i, along the length of the tube is:

$$q_i = \frac{W_i}{L_s} = 1.850 \text{ lb / in}$$

The uniform pressure load for the shorter (L_s) failed fuel in the screened can is:

$$q_f = \frac{W_f}{L_s} = 1.950 \text{ lb/in}$$

The uniform pressure load of the longer (L_L) failed fuel in the screened can is:

$$q_f = \frac{W_f}{L_L} = 1.778 \text{ lb/in}$$

where:

L_s = 29.88 inches, length of short fuel element

L_L = 45 inches, length of long fuel element

Weight of long failed fuel can = 17 lbs

Weight of short failed fuel can = 13 lbs

Added weight for fuel can calculation = 10 lbs

The weight calculation below includes 4 fuel elements, added weight, plus fuel can.

W_f = 58.28 lbs for fuel can with fuel elements having a length of 29.88 inches (L_s)

W_f = 80 lbs for fuel can with fuel elements having a length of 45 inches (L_L)

W_i = 55.28 lbs for fuel can with intact fuel

The bounding load for TRIGA fuel is 1.950 lb/in.

The maximum bending moment is:

$$M_{max} = \frac{(q_f + w) \times gL}{8} = 21.6 \text{ in} - \text{lb}$$

where:

q_f = 1.950 lb/in

g = 24.3, dynamic load factor for one foot side drop

t = 0.12-inches (11 gage)

L = 3.44 = width of side support plate (11 gage)

w = 0.288 x 3.44 x t = 0.1185 lb/in, steel beam weight

$$S = \frac{6 \times M_{max}}{t^2} = 9{,}065 \text{ psi}$$

Therefore,

$$MS = \frac{24{,}600}{9{,}065} - 1 = +\underline{1.71}$$

The 11 gage sheet metal is continuously welded to the adjacent divider plates with a 1/8-inch fillet weld. This weld resists the shear developed in the simple beam analysis above.

$$V = \frac{(W_f + wL_s) \times g}{2 \text{ x } L_s} = 25.14 \text{ lbs}$$

where:

W_f = 58.28 lbs

L_s = 29.88 inches

$$S_v = \frac{V}{t \times 1} = 210 \text{ psi}$$

The throat thickness of 1/8-inch fillet weld is 0.707 x 0.125 = 0.088-inches. The square of the ratio of the plate thickness (0.12-inch) to the weld throat thickness (0.088-inches) is 1.86. ASME Code Subsection NG-3352 recommends that the calculated stress in a fillet weld be increased by a factor of 1/0.35 = 2.86. The maximum weld stress is:

$S_w = S_v (1.86) (2.86) = 1,117$ psi

The allowable stress is $0.6S_m = 9,840$ psi at 600°F.

Therefore:

$$MS = \frac{9,840}{1,117} - 1 = +\underline{Large}$$

Support Plate Stress Due To Side Drop For the Sealed Failed Fuel Can

The total bounding weight of the long sealed can is 59.6 lbs, which includes 20 lbs for the can and a bounding weight of 39.6 lbs for the follower control elements.

The maximum stress in the support plates occurs in the 0.12-inch thick (11 gage) sheet metal tubes which supports the entire length of the sealed can. Since the sealed can is cylindrical, its weight is transmitted as a line load over the length to the supporting plate. For a unit cross-section of the supporting plate, the line load is treated as a concentrated load over the supporting plate as shown in the following loading diagram.

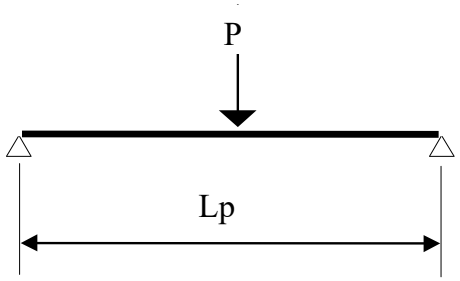

The load of the sealed can and its contents is represented by a uniformly distributed line load along the basket length that is in contact with the sealed can. For a unit length, the concentrated load due to the longer can is:

$$P = \frac{W_f \times g}{L} = 37.71 \ \text{lb/in}$$

where:

W_f = 59.6 lbs, weight of the long sealed can (20 lbs) and the follower control elements (39.6 lbs)

g = 24.3, dynamic load factor for one-foot side drop

L = 38.41 inches, length of the longer body sealed can tube

For the shorter can:

$$P = \frac{W_f \times g}{L} = 45.24 \text{ lb / in.}$$

where:

W_f = 43.4 lbs, weight of the shorter sealed can (17 lbs) and bounding fuel element (26.4 lbs)

g = 24.3, dynamic load factor for one-foot side drop

L = 23.31 inches, length of the shorter body sealed can tube

The concentrated load from the shorter can, P = 45.24 lb/in., enveloping both the longer can and short can, is used to calculate the maximum bending moment. The unit length of the basket support plate with the 45.24 lbs concentrated force in the middle is treated as a simply supported beam. The maximum bending moment is:

$$M_{max} = \frac{P \times L_p}{4} = 38.91 \text{ in-lb}$$

where:

P = 45.24 lbs, concentrated load

L_p = 3.44 inches, width of the 11 gage support plate

The maximum bending stress is:

$$S = \frac{6 \times M_{max}}{t^2} = 16{,}321 \text{ psi}$$

where:

M_{max} = 38.91 in-lb, maximum bending moment

t= 0.12 in., thickness of the 11-gage support plate

The margin of safety is:

$$M.S. = \frac{1.5S_m}{S} - 1 = \frac{24{,}600}{16{,}321} - 1 = +\underline{0.51}$$

The 11 gage sheet metal is continuously welded to the adjacent divider plates with a 1/8-inch fillet weld. This weld resists shear developed in the simple beam analyzed above.

$$S_v = \frac{P}{t \times 1} = 378 \text{ psi}$$

where:

P = 45.24 lbs, load of unit length

t = 0.12 in, thickness of the 11 gage support plate

The throat thickness of 1/8-inch fillet weld is 0.707 × 0.125 = 0.088 in. The square of the ratio of the plate thickness (0.12 in) to the weld throat thickness (0.088 in) is 1.86. ASME Code Subsection NG-3352 recommends that the calculated stress in a fillet weld be increased by a factor of 1/0.35 = 2.86.

Maximum weld stress is the calculated stress in the material times the above factors.

$S_w = S_v$ (1.86) (2.86) = 378 × 1.86 × 2.86 = 2,011 psi

The allowable stress is:

$0.6S_m$= 9,840 psi @ 600°F,

The margin of safety is:

$$MS = \frac{9,840}{2,011} - 1 = +\underline{3.9}$$

Maximum Basket Stress Due To Oblique Drop

As shown in the previous sections, the sealed can imposes the largest stress in the basket support plate due to its cylindrical cross-section. Therefore, the maximum stress in the basket is bounded by the stress induced by the sealed failed fuel can.

The maximum stress in the basket during oblique drop is found by combining the absolute value of the maximum stresses found in the basket during side drop and end drop determined in the previous sections. Although the stresses in the two different drop configurations do not occur in the same location, the stress combination method conservatively envelopes the maximum possible stress states during the oblique drop.

The maximum calculated stresses for the 1-foot end drop and the 1-foot side drop are:

Maximum stress = 6,033 psi for end drop
Maximum stress = 16,321 psi for side drop

Adding the two stress values to obtain the total oblique drop stress = 6,033 + 16,321 = 22,354 psi.

Allowable stress = 1.5 S_m = 1.5 x 16,400 = 24,600 psi @ 600°F,

$$MS = \frac{24,600}{22,354} - 1 = +\underline{0.10}$$

2.6.12.7.5 Screened Failed Fuel Can

This section evaluates the stresses in the screened failed fuel can as a result of the normal condition one-foot drop. The screened failed fuel can is described in Section 2.6.12.7. The screened failed fuel can is analyzed for side and end drops during transportation.

Screened Failed Fuel Can Compressive Stress Analysis

The fuel contents are not attached to the screened can and do not impart any longitudinal structural load on the can. The screened can must support itself during an end drop accident. The can is analyzed as a column acted upon by a structural (weight) compressive load consisting of the weight of the can and its contents. The screened can for fuel follower control rods is used since it is heavier, carries a heavier load and has the same properties as the screened can for the fuel rods.

The compressive stress developed in the screened can wall is:

$S_c = Wg/A = 1{,}145$ psi

where:

W = 71 lbs, weight of screened can and contents

g = 15.8, dynamic load factor for one foot end drop (normal condition)

A = 0.98 in^2, cross-section area of screened can

The allowable stress,

S_m=16,400 psi at 600°F.

Therefore:

MS = (16,400/1,145) - 1 = +Large

Buckling of the screened failed fuel can is evaluated using hypothetical accident loading conditions in Section 2.7.7.9.4. The loading conditions presented in that section bound normal condition loads.

Screened Failed Fuel Can Plate Stress Due to Side Drop

The plate making up the sides of the screened failed fuel can is analyzed for bending as a result of loads applied during a side drop. To bound the analysis, the weight of the longer failed fuel can is used and this load is distributed over the length of the shorter fuel can to determine the load acting on a one-inch wide strip (along the axial length of the can) of the fuel can cross section. This total load on a one-inch strip is conservatively applied to the area between fuel elements (1.5 inches), resting inside of the can. This is the longest span of plate subject to

bending from a side drop and the 1.5-inch long plate section (which is one-inch wide) is considered to be simply supported.

The bending moment in the plate due to a uniform load is:

$M = gPL/8 = 10.3$ in-lb

where:

g = 24.3, dynamic load factor for one foot side drop

P = 2.26 lbs., Total load on one inch wide strip

L = 1.5inches, spacing between fuel elements

The section modulus, s, of the cross-section resisting the bending moment is:

$s = t^2/6 = 0.00093$ in.^{3}

where:

t = 0.0747 in, thickness of plate making up the screened failed fuel can

The bending stress is:

$S_b = M/s = 11{,}075$ psi

The allowable stress is: $1.5S_m = 24{,}600$ psi

Therefore:

MS = (24,600/11,075) - 1 = +1.22

2.6.12.7.6 Sealed Failed Fuel Can

This section evaluates the stresses in the sealed failed fuel can as a result of the normal condition one-foot side and end drops. The sealed can is described in Section 2.6.12.7.

Sealed Failed Fuel Can Compressive Stress Analyses Due to End Drop

This section analyzes the compressive stress and buckling load in the fuel tube, bottom tube and lifting lugs. The bounding weight of the sealed can used in this analysis is 59.6 lbs, which includes 20 lbs for the can and conservatively 39.6 lbs for the follower control elements. Actual operational capacity is controlled to the weight of two fuel elements.

Fuel Tube

The fuel elements are not attached to the round tube that forms the wall of the can. However, it is conservatively assumed that the shell of the sealed can carries the entire weight of the can and contents. The compressive stress is:

$$\sigma_C = \frac{W \times g}{A} = 1{,}448 \text{ psi}$$

where:

W = 59.6 lbs, conservative weight of the can and contents

g = 15.8, dynamic load factor for one foot end drop

A = $\pi(1.625^2 - 1.56^2)$ = 0.6504 in.^{2} cross section area of the can

The margin of safety is:

$$MS = \frac{S_m}{\sigma_C} - 1 = \frac{16{,}400}{1{,}448} - 1 = +\underline{\text{Large}}$$

Bottom Tube

The compressive stress for the bottom tube is:

$$\sigma_C = \frac{W \times g}{A} = 1{,}010 \text{ psi}$$

where:

W = 59.6 lbs, conservative weight of the can and contents

g = 15.8, dynamic load factor for one foot end drop

A = $\pi(1.25^2 - 1.125^2)$ = 0.9327 in.^{2} cross section area of bottom tube

The margin of safety is:

$$MS = \frac{S_m}{\sigma_C} - 1 = \frac{16{,}400}{1{,}010} - 1 = +\underline{\text{Large}}$$

Lifting Lug

The sealed can lifting lugs may be subject to compressive or buckling loads in drop accident events. The load is considered evenly distributed to both lugs.

The compressive stress for two lift lugs is:

$$\sigma_C = \frac{W \times g}{A} = 3{,}657 \text{ psi}$$

where:

W = 59.6 lbs, conservative weight of the can and contents

g = 15.8, dynamic load factor for one foot end drop

A = 2 x 0.515 x 0.25 = 0.2575 in.^{2} smallest cross section area of the two lift lugs

The margin of safety is:

$$MS = \frac{S_m}{\sigma_C} - 1 = \frac{16,400}{3,657} - 1 = +\underline{3.48}$$

Considering the lifting lug as a cantilever beam with a fixed end, the load is carried by an equivalent moment, M:

$$M = (P/2) \times d \times g = 114.2 \text{ in-lbs}$$

where:

g = 15.8, g load factor for the one foot end drop

P = 59.6 lbs, conservative weight of can and contents

d = 0.2425 in, the length of moment arm, measured from the center of the section to the point of load application (.5 - .515/2)

The total stress acting on the neck section is:

$$\sigma = \frac{(M \times c)}{I} + \sigma_C = 13,975 \text{ psi}$$

where:

σ_c = compressive stress, 3,657 psi

W = 114.2 in-lbs, equivalent moment

c = 0.515/2 inches, distance from center of neck section to the edge

I = $0.25 \times (0.515)^3/12 = 2.85 \times 10^{-3}$ in^4, moment of inertia of the cross section

The margin of safety is:

$$MS = \frac{1.5S_m}{\sigma_c} - 1 = \frac{24,600}{13,975} - 1 = +\underline{0.76}$$

Buckling of the Sealed Failed Fuel Can

Buckling of the sealed failed fuel can, the bottom tube and the lifting lug is evaluated in Section 2.7.7.9.5. The loading conditions presented in that section bound the normal condition loads.

Sealed Failed Fuel Can Plate Stress Due to Side Drop

In the one-foot side drop, the sealed can supports the load applied by its contents.

The load applied to the can is considered as a linearly distributed load over the bottom 120° arc. The radial pressure w_x varies linearly from 0 at the beginning, to w at the bottom point of the can, as shown in the following sketch.

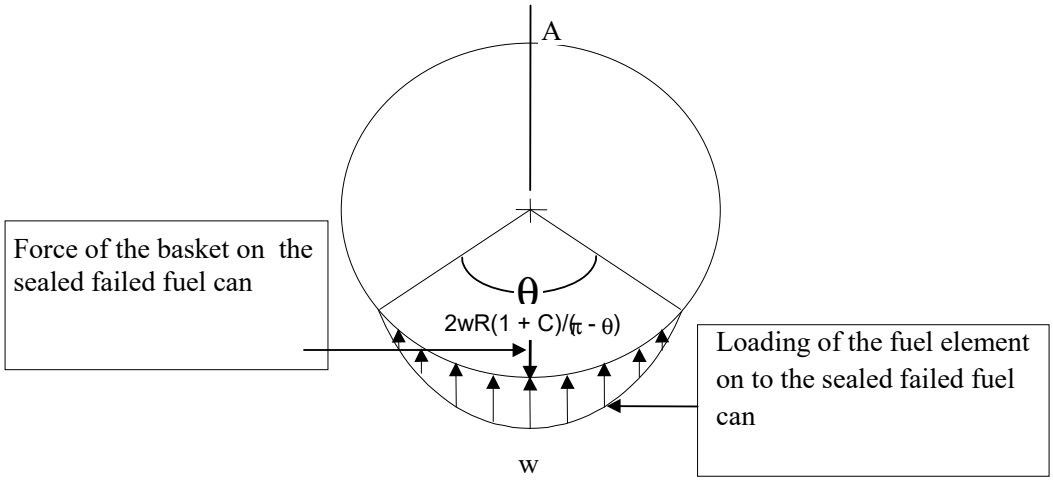

The load is uniformly distributed along the length of the can. For a unit length it is calculated as:

For the longer can:

$$p = \frac{W_f \times g}{L} = 25.05 \text{ lb / in.}$$

where:

W_f = 39.6 lbs, conservative fuel weight of three fuel follower control elements

g = 24.3, dynamic load factor for a one-foot side drop

L = 38.41 inches, length of the longer tube body

For the shorter can:

$$p = \frac{W_f \times g}{L} = 27.52 \text{ lb / in.}$$

where:

W_f = 24.4 lbs, conservative fuel weight of three fuel elements

g = 24.3, dynamic load factor for a one-foot side drop

L = 23.31 inches, length of the shorter tube body

To bound both the longer can and short can, p = 27.52 lb/in. is used to calculate the maximum distributed load.

Since (Young, 6th Edition, Table 17, Case 13):

$$p = 2wR(1+C) / (\pi - \theta)$$

$$w = \frac{p \times (\pi - \theta)}{2R \times (1 + C)} = 17.73 \text{ lb / in}$$

where:

p = 27.52 lbs, load on this unit length of the can tube

θ = 120° = 2π/3, angle

C = cos (θ) = -0.5

R = 3.25/2, radius of the can

The bending moment occurring at location A and C are respectively (Young, 6th Edition, Table 17, Case 13):

$$M_A = \frac{-wR^2}{\pi(\pi - \theta)} \left\{ 2 + 2C - s(\pi - \theta) + k_2 \left[1 + C - \frac{(\pi - \theta)^2}{2} \right] \right\} = -1.273 \text{ in-lb}$$

$$M_C = \frac{-wR^2}{\pi(\pi - \theta)} \left\{ \pi(\pi - \theta) - 2 - 2C - s\theta + k_2 \left[1 + C - \frac{(\pi - \theta)^2}{2} \right] \right\} = -6.507 \text{ in-lb}$$

where:

w = 17.73 lb/in, maximum distributed load

R = 3.25/2 - 0.625/2, curvature

θ = 120° = 2π/3, angle

C = cos (θ) = -0.5

s = sin(θ) = 0.866

$k_2 = 1 - \alpha = 1$ and $\alpha = \frac{I}{AR^2} = \frac{2.289e-5}{0.6504 \times 1.593^2} = 1.388 \times 10^{-5}$

$I = \frac{1 \times 0.065^3}{12} = 2.289 \times 10^{-5}$ in^4, moment of inertia of ring cross section

$A = \pi(1.625^2 - 1.56^2) = 0.6504$ in^2

The bending stress at location C, for unit length, is:

$$\sigma_c = \frac{M_C}{t^2 / 6} = 9{,}241 \text{ psi}$$

where:

M_C = 6.507 lb-in., bending moment at location C

t= 0.065 in., thickness of the can

Margin of safety is:

$$MS = \frac{S_m}{\sigma_C} - 1 = \frac{16{,}400}{9{,}241} - 1 = +\underline{0.77}$$

Sealed Failed Fuel Can Bolt Evaluation

The sealed failed fuel can bolts are evaluated using the worst case loading conditions. For analysis purposes, the maximum differential thermal expansion (from accident conditions), lifting loads, and bolt preload are combined to calculate the maximum bolt stresses.

Bolt Thread Stress

The shear stress caused by lifting is:

$$\tau_L = \frac{1.1 \times W}{A_S} = 170 \text{ psi}$$

where:

1.1 = dynamic load factor for lifting

W = total weight of the canister and contents, 59.6 lbs

A_s = shear area of the external thread, 0.3859 $in.^2$

The load caused by pre-load on each bolt is:

$F_T = (\pi \text{ x } D \text{ x } P)/4 = 1{,}721$ lbs

where:

P = 700 lb/in., conservative linear load required to crush the seal

D = 3.131 inches, diameter of the seal

The linear load, P, considers both the load to seat the metal seal as well as the internal pressure of the gas in the failed fuel canister. The contribution of the pressure to the linear load is:

$$\frac{P_{gas} D}{4} = \frac{(3\,\text{atm})(14.7\,\text{psi/atm})(3.131\,\text{in.})}{4} = 34.5 \text{ lb/in.}$$

Three (3) atm is conservatively used for the internal gas pressure during the fire. The linear load to seat the metal seal is 514 lbs. Combining the linear loads due to the pressure and seal gives a total value of 548.5 lb/inch. For analysis purposes, a conservative value of 700 lb/in. is used.

The shear stress caused by pre-loads in the bolts is:

$$\tau_t = \frac{F_t}{A_s} = 4{,}460 \text{ psi}$$

where:

F_t = 1,721 lbs, bolt pre-load

A_s = shear area for 3/8 -16 UNC 2A thread = 0.3859 sq. inch

Total shear caused by lifting and pre-load is obtained by conservatively adding the shear stresses:

$$\tau = \tau_L + \tau_t = 4{,}630 \text{ psi}$$

The margin of safety is:

$$MS = \frac{0.6S_m}{\tau} - 1 = \frac{0.6 \times 45{,}200}{4{,}630} - 1 = +\underline{4.86}$$

The average tensile stress due to pre-load in the bolts is:

$$S_t = \frac{F_t}{A_t} = 23{,}039 \text{ psi}$$

where:

F_t = 1,721 lbs, bolt pre-load

A_t = tensile stress area for 3/8-14 UNC 2A thread = 0.0747 in^2

The tensile stress due to the differential expansion of the bolt and the top plate is:

$$S_{dt} = \Delta T(\alpha_L - \alpha_{637})E_{637} = 26{,}912 \text{ psi}$$

where:

ΔT = (600 - 70)°F = 530°F (The actual maximum temperature of the can during the fire accident is 551°F.)

α_L = 9.53 x 10^{-6} (in/in/°F), coefficient of thermal expansion of top plate (S.S.304) at 600°F

α_{637} = 7.67 x 10^{-6} (in/in/°F), coefficient of thermal expansion of bolt (SB - 637) at 600°F

E_{637} = 27.3 x 10^6 psi at 600°F, bolt material elastic modulus at 600°F

The total stress due to pre-load and differential expansion of the bolt and the top plate is:

$S = S_{dt} + S_t = 49{,}951$ psi

The margin of safety is:

$$M.S = \frac{2S_m}{S} - 1 = \frac{2 \times 45{,}200}{49{,}951} - 1 = +\underline{0.81}$$

The relation between the torque value and tensile force is:

$$T = \left[\left(\frac{d_m}{2d}\right)\left(\frac{\tan\lambda + \mu \sec\alpha}{1 - \mu \tan\lambda \sec\alpha}\right) + 0.625\mu\right](F_T)(d) \qquad \text{(Machinery's)}$$

$$T = (0.2096) \times F_T \times d = 135 \text{ in-lb}$$

where:

T = applied torque in inch-pounds

F_T = pre-load force in pounds

d = 3/8 in, bolt diameter

$\tan\lambda = L/(\pi d_m)$

L = 1/16 in

d_m = 0.3911 in, mean diameter of threads

α = 30°, one-half the thread angle

μ = 0.15, coefficient of friction

The torque required to engage the bolt is 135 in-lb. However, the maximum torque is 160 in-lb. The torsional stress due to this torque value is:

$$\tau_t = \frac{T \times r}{J} = \frac{160 \times 0.1875}{1.94 \times 10^{-3}} \text{ psi} = 15{,}464 \text{ psi}$$

where:

T = 160 in-lb, the torque on a bolt

r = (3/8)/2 = 0.1875 in, radius of bolt

$J = (\pi r^4)/2 = (\pi \times 0.1875^4)/2 = 1.94 \times 10^{-3}$ in^4, polar moment of inertia

The margin of safety is:

$$MS = \frac{0.8S_m}{\tau_t} - 1 = \frac{0.8 \times 45{,}200}{15{,}464} - 1 = +\underline{1.34}$$

Top Plate Thread Stress

The effect of Heli-Coil is conservatively ignored. The shear stress consists of two parts; one is caused by the lifting load; the other is caused by the combination of pre-load P (700 lbs/in.) and differential thermal expansion. The shear stress due to the lifting load is:

$$t_L = \frac{1.1 \times W}{A_n} = 118 \text{ psi}$$

where:

1.1 = the dynamic load factor for lifting

W = 59.6 lbs, total weight of the canister and contents

A_n = 0.5548 in^2, shear area of the inner thread

The shear stress due to pre-load and differential thermal expansion in the top plate is:

$$S = \frac{F_t}{A_n} = 6{,}725 \text{ psi}$$

where:

F_t = 1,721+26,912 x 0.0747 = 3,731 lbs, bolt pre-load

A_n = 0.5548 in^2, shear area for 3/8 -16 UNC 2A thread

Total shear caused by lifting, pre-load and differential expansion is obtained by conservatively adding the separate shear stresses:

$$\tau = \tau_L + S = 6{,}843 \text{ psi}$$

The margin of safety is:

$$MS = \frac{0.6S_m}{\tau} - 1 = \frac{0.6 \times 16{,}400}{6843} - 1 = +\underline{0.44}$$

Top Plate Bearing Stress

Top plate bearing stress is developed from the combination of pre-load and the differential thermal expansion of the bolt and the top plate. The pre-load is 1,721 lbs on one bolt and thermal load is 2,010 lbs (0.0747 in^2 × 26,912 psi). The total bearing is 3,731 lbs. Then, the bearing stress on the top plate is:

$$S_b = \frac{P_b}{A_b} = \frac{3731}{0.2311} = 16{,}145 \text{ psi}$$

where:

P_b = 3,731 lbs, total bearing force

$A_b = \pi(0.68^2-0.41^2)/4 = 0.2311$ in^2, bearing area

The margin of safety for top plate is:

$$MS = \frac{1.0S_y}{S_b} - 1 = \frac{18{,}200}{16{,}145} - 1 = +\underline{0.13}$$

2.6.12.7.7 Borated Stainless Steel Plate Weld Stress

The borated stainless steel plate utilized in the poisoned TRIGA baskets is assumed to be welded on two sides to the divider plates using a 1/16-inch fillet weld. This assumption is conservative since the borated plate is welded completely around its periphery. For the end drop condition, the only load applied on the weld is the self weight of the plate, which results in a shear stress. For side drop, the load applied on the weld is the self weight of plate, which also results in shear stress. The plate also carries the weight of the fuel, which results in compressive stress.

The welded area for one stainless steel plate is:

Parameter	Base Module	Intermediate Module	Top Module
Weight of Plate (lb)*	14.44	13.64	21.61
Length of Plate (in)	30.45	28.75	45.55
Cross Section Area (in^2)	99.27	93.73	148.49
Weld Area (in^2)	3.81	3.59	5.69

Using the smallest area, 3.59 in^2 and largest weight, 21.61 lbs, the end drop shear stress is:

$$S_{se} = \frac{g \times W}{A} = \frac{15.8 \times 21.61}{3.59} = 95.11 \text{ psi}$$

where:

g = 15.8 one-foot end drop load factor

W = 21.61 lbs bounding poison plate weight

A = 3.59 in^2 bounding weld area

The allowable shear stress for normal condition is 0.6 S_m = 9840 psi. The margin of safety is:

$$\text{Margin of Safety} = \frac{0.6S_m}{S_{se}} - 1 = \frac{9840}{95.11} - 1 = +\underline{\text{Large}}$$

Using the smallest area, 3.59 in^2 and largest weight, 21.61 lbs, the side drop shear stress is:

$$S_{ss} = \frac{g \times W}{A} = \frac{24.3 \times 21.61}{3.59} = 146.27 \text{ psi}$$

where:

g = 24.3 one-foot side drop load factor

W =21.61 lbs bounding poison plate weight

A = 3.59 in^2 bounding weld area

The allowable shear stress for normal condition is 0.6 S_m = 9840 psi. The margin of safety is:

$$\text{Margin of Safety} = \frac{0.6S_m}{S_{ss}} - 1 = \frac{9840}{146.27} - 1 = +\underline{\text{Large}}$$

The compressive stress is evaluated using a bounding fuel cell weight of 80 lbs. The minimum cross section area is 93.73 in^2.

$$S_c = \frac{g \times W}{A} = \frac{24.3 \times 80}{93.73} = 20.74 \text{ psi}$$

where:

g = 24.3 one-foot side drop load factor

W = 80 lbs bounding fuel cell weight

A = 93.73 in^2 bounding cross section area

The allowable stress is 1.0S_m = 16,400 psi. The margin of safety is:

$$\text{Margin of Safety} = \frac{1.0S_m}{S_c} - 1 = \frac{16{,}400}{20.74} - 1 = +\underline{\text{Large}}$$

This evaluation shows that the weld has large margins of safety for the stresses that could occur in normal conditions.

2.6.12.7.8 TRIGA Fuel Spacer Evaluation

A spacer fabricated from Type 304 stainless steel is used in poisoned TRIGA basket Configuration 2 (base module and 4 intermediate modules). The spacer consists of 8-inch diameter pipe with a 1-inch thick plate welded to the bottom, and a 0.5-inch thick plate welded to the top. The top plate is attached to the underside of the NAC-LWT cask lid using four 1/2-inch diameter SA-193, Grade B6, bolts. It has a calculated weight of 85 lbs.

The spacer and bolts are analyzed for the effects of a normal condition 1-foot side and end drop. The material temperatures and properties are the same as those imposed on the fuel baskets. The compression load is calculated as 50,813 lbs, which results in a calculated stress of 6,049 psi (Margin of Safety = +1.71). The stress on the bolts in combined shear and tension is 11,881 psi.

All margins of safety are positive with a minimum Margin of Safety of +0.21 for the bolts in shear and tension as a result of the side drop condition.

2.6.12.7.9 TRIGA Fuel Cluster Rods Basket One Foot Drop Evaluation

The fuel cluster rod is restrained from motion by the aluminum tube, which has a 0.75-inch outer diameter and a 0.62-inch inner diameter. An array of four by four is inserted into an aluminum shell of 0.125-inch thickness, which is loaded into the stainless steel basket.

The bearing stress between the aluminum tubes is required to be less than the yield stress of the 6061-T6 aluminum. The yield stress is evaluated at the maximum aluminum temperature of 300°F, corresponding to a yield stress of 27.5 ksi. The maximum bearing load would occur between the aluminum tube and the 0.125 aluminum shell (Point 2 in the following sketch), but the maximum bearing stress would occur between two adjacent cylinders (Point 1 in the following sketch).

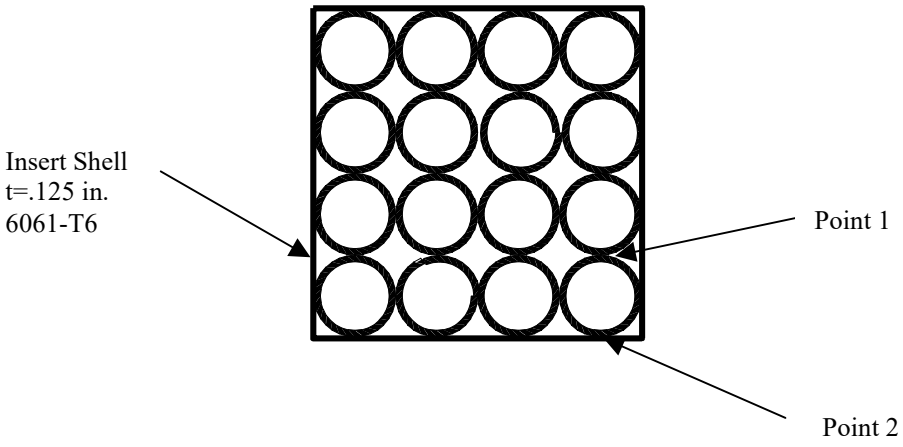

Using Roark, 6th edition, Table 33, Case 2a, which is the bearing stress between two adjacent cylinders, the bearing stress (S_{brg}) is:

$$S_{brg} = .789 \times \sqrt{\frac{P}{K_D C_E}}$$

$$P = \text{the line load} = (3 \text{ tubes}) \left(\frac{1.44}{27.5} + \frac{\pi}{4}(0.75^2 - 0.62^2)(0.098) \right)$$

$$P = 0.198 \text{ lbs/in (for dead weight only)}$$

where:

TRIGA fuel cluster rod weight = 1.44 lbs

rod length = 27.5 inches

aluminum density = 0.098 lb/in^3

aluminum tube OD = 0.75 in

aluminum tube ID = 0.62 in

$$C_E = \frac{1-\upsilon_1^2}{E_1} + \frac{1-\upsilon_2^2}{E_2} = 1.937e-7$$

where for 6061-T6 Aluminum at 300°F:

E = 9.2 x 10^6 psi

V = 0.33 and the subscripts 1 and 2 refer to each of the cylinders

where:

$$K_D = \frac{D_1 D_2}{D_1 + D_2} = .375$$

where D is the outer diameter of the tube, .75 in (the subscripts 1 and 2 refer to the individual tubes). The bearing stress corresponding to 24.3 g is:

$$S_{brg} = .798 \times \sqrt{\frac{24.3 \times 0.198}{0.375 \times 1.937e\text{-}7}} = 6495 \text{ psi}$$

$$MS = \frac{27400}{6495} - 1 = +\underline{3.21}$$

The bending stress in the aluminum insert tube is evaluated as a curved beam using the diametrical point forces, as contained in Roark's, 6th Edition, Table 17, Case 1.

Conservatively using 400°F to evaluate the aluminum properties, and the weight of four tubes (which results in a line load of 1.33 × 0.198 = 0.263 lbs/in), the maximum bending stress in the aluminum tube is:

$$S_b = \frac{6M}{bt^2}$$

Where b = 1.0 in, which is the axial length for the purpose of the calculation.

$$M = 0.3183 \cdot P \cdot R \cdot k_2$$

$$k_2 = 1 - \alpha$$

$$\alpha = \frac{I}{AR^2}$$

$$t_{ring} = \frac{.75 - .62}{2} = 0.065\text{in} \qquad I = \frac{0.065^3 \times 1}{12} = 2.29\text{e-}5\ \text{in}^4 \qquad A = .065 \times 1 = 0.065\ \text{in}^2$$

$$R = \frac{0.62}{2} + \frac{0.065}{2} = 0.343\text{in} \qquad \alpha = \frac{2.29\text{e-}5}{0.065 \times 0.343^2} = 0.003 \qquad k_2 = 1 - 0.003 = 0.997$$

$$M = 0.3183 \times (4 \times 0.263) \times 0.343 \times 0.997 = 0.115\ \text{in-lb/in}$$

$$S_b = \frac{6 \times 0.115 \times 24.3}{1 \times 0.065^2} = 3969\ \text{psi}$$

$$MS = \frac{1.5S_m}{S_b} - 1 = \frac{8250}{3969} - 1 = +\underline{1.07}$$

Where 24.3 g corresponds to the side drop accelerations.

This verifies that the aluminum insert tube is acceptable for the normal operational conditions.

2.6.12.8 DIDO Fuel Basket Construction

The DIDO modular basket assembly consists of a top module, four intermediate modules, and a base module. The top module is 29.8 inches long and the intermediate modules are each 29.3 inches long and all have an outer diameter of 13.27 inches. The base module has a length of 29.8 inches and an outer diameter of 13.27 inches. Each module is capable of holding seven DIDO fuel assemblies. Each module is a weldment made up of a 13.27 inch diameter 1/2-inch thick base plate and two 13.27 inch diameter 1/2-inch thick support plates scalloped on the inner diameter to fit around six peripheral fuel tubes. The weldment structure, fuel tubes and base and support plates are fabricated from Type 304 stainless steel. Each fuel tube has an inner diameter of 4.01 inches and a wall thickness of 0.12 inches. The bottom of each fuel tube is welded to the 1/2-inch thick base plate. At the bottom of each fuel tube, where it is welded to the base plate, there is a 0.3-inch slot to permit water to drain from the tube. The base plate supports the fuel in the end drop orientation. The base module sits on a 0.5-inch long, 10-inch diameter schedule 80S pipe that is welded to the base plate. The total weight of the DIDO basket assembly bears directly on the bottom forging of the cask through the schedule 80S pipe. The two scalloped 1/2-inch thick support plates and the base plate of each basket module provide lateral support and maintain the fuel configuration in the side drop orientation.

Heat rejection from the DIDO fuel and basket structure is augmented by six aluminum shunts and two heat transfer shells. Each shunt is mechanically attached to the center stainless steel fuel

tube. The heat transfer shell wraps around the 6 outer fuel tubes and is mechanically attached to the drain tube guide bars. The heat shunts are machined to match the outer diameter of the center fuel tube and are held in place by two shunt posts and shunt retainers. The shunt post at the bottom of each basket module is assembled with a tight fit between the shunt post, shunt retainer and base plate to provide a good conductive heat transfer path. The shunt post at the top of the basket is assembled with a slotted hole in the shunt to permit unrestricted differential thermal expansion between the fuel tube and thermal shunt. The aluminum sheet heat transfer shell is held in place against the outside fuel tubes by bolting the edge of the aluminum sheet to the drain tube guide bars. The heat shunts and heat transfer shell are not structural components and are not included in the structural analysis as load carrying components. The mass of the heat shunts and heat transfer shell have been included as loads in the structural analysis.

2.6.12.8.1 DIDO Fuel Basket Cask Interface Analysis

Structural analysis of the DIDO modular fuel basket and the MTR modular fuel basket are similar. DIDO fuel baskets and MTR fuel baskets are made from the same type of stainless steel. The contact points between the basket structure and the cask inner shell and between the basket structure and the cask bottom forging are similar. DIDO fuel baskets have an additional lateral support ring, reducing the side drop bearing stresses. A loaded DIDO fuel basket base module weighs approximately 250 lbs, assuming each DIDO assembly weighs 15 lbs. Loaded top and intermediate modules weigh approximately 247.4 lbs each. A full cask load of six DIDO basket modules represents a total contents weight of 1,487 lbs. The weight of a loaded 28-element MTR basket module is 289 lbs, which bounds the loaded weight of the loaded base DIDO basket module. Therefore, the bearing stress between the basket and the cask inner shell created by the DIDO basket module is bounded by the 28-element MTR fuel basket interface analysis.

The cask contents weight for the loaded 42-element MTR basket is 2,262 lbs, which bounds the cask contents weight of 1,487 lbs for the loaded DIDO basket. Therefore, the bearing stresses between the basket and cask bottom forging and between the basket and the cask lid created by the DIDO fuel baskets, are bounded by the 42-element MTR fuel basket interface analysis.

2.6.12.8.2 DIDO Fuel Basket Structural Analysis

Structural analyses of the DIDO fuel basket for the 1-foot end drop and the 1-foot side drop are performed using a finite element model of one basket module, as shown in Figure 2.6.12-1 and Figure 2.6.12-2, and the ANSYS general purpose computer program. Eight node brick elements (SOLID45) are used to construct the model. Each solid element has the material properties of stainless steel. In each basket module, the elements representing the seven 4.01-inch inner diameter tubes are joined to the base plate and to the two support plates at locations where the

welds are specified to connect the tubes to the plates. By design, the center tube is not connected to any of the six outer tubes. In this evaluation, the center tube is not considered to have any interaction with the outer six tubes, which is conservative, particularly in the side drop orientation where the tube is cantilevered from the base plate.

DIDO Fuel Basket 1-Foot Side Drop Orientation Analysis

The 1-foot side drop analysis of the DIDO fuel basket considers the weight of the center tube and fuel to be transferred to the circular base plate. A bounding fuel assembly weight of 15 pounds is used in the side drop analysis. To model the interaction of the two support plates and the base plate with the 13.375-inch cask inner shell diameter, CONTAC52 elements are used. The CONTACT52 element consists of two nodes, which corresponds to a 3D-line element, limiting transmitted loads to compression. One node of the CONTACT52 element is located on a circular plate, while the second node represents the inner shell, and is constrained in all three degrees of freedom. This boundary condition is considered to be conservative, since it models the inner shell as a rigid surface and minimizes the angle of contact between a circular plate and the cask inner shell, resulting in a more concentrated load at the point of contact. The aluminum heat shunts and aluminum heat transfer shell are not considered to be structural components. The shunts and shells are represented as lumped masses using the MASS21 element. These lumped masses are distributed along the outside of the center tube to represent the distributed weight of the heat shunt. The heat transfer shell is represented with lumped masses distributed along the outer six fuel tubes at the points of contact with the heat transfer shell.

The 1-foot side drop normal condition event is analyzed using an acceleration of 24.3g applied in each of three orientations: 0°, -60°, and -90° with respect to the model's X-axis. Maximum primary membrane stresses for each of the side drop orientations are shown in Table 2.6.12-1. The minimum margin of safety is calculated to be +2.5 for the 0° and 60° orientations. The maximum primary membrane plus bending stresses for each of the side drop orientations are shown in Table 2.6.12-2. The minimum margin of safety is calculated to be + 0.003 for the 60° orientation. Figure 2.6.12-3 presents the location of the maximum primary membrane and the primary membrane plus bending stresses for the side drop load.

DIDO Fuel Basket 1-Foot End Drop Analysis

For the end drop analysis, the finite element model load orientation and boundary conditions are specified to represent axial loading and consideration of the base basket module supporting five stacked modules above it. Equivalent pressure was applied to the area inside of the fuel tube at the top surface of the base plate to represent the fuel in each of the fuel tube locations in each basket module. The weight of the five loaded fuel basket modules, which rest on the base fuel basket module, multiplied by the equivalent acceleration, is applied as an equivalent pressure to

the top edges of the fuel tubes in the base module. A bounding DIDO fuel assembly weight of 15 pounds is used in the end drop analysis. The bounding assembly weight accounts for the fuel assembly and the tube spacer and variations in the weight of either. The total weight resting on the top of the base module is approximately 1,237 pounds. This load was applied as a pressure load on the ends of the fuel tubes.

Total end area of tubes = $7 \times \pi/4 \times (4.25^2 - 4.01^2) = 10.9$ in^2
Equivalent pressure = 1237 lbs/10.9 in^2 = 113.5 psi

The end drop finite element model reflects the base basket design shown on the drawings provided in Section 1.0. The height of the base skirt below the bottom support is 0.5 inch. Four full height drain slots are cut into the base skirt.

For the 1-foot end drop condition, the equivalent pressure load is increased to represent the maximum acceleration of 15.8 g. The maximum primary membrane stress for the end drop orientation is 11.4 ksi (shown in Table 2.6.12-1) resulting in a minimum margin of safety of +0.75. The maximum primary membrane plus bending stress is 13.2 ksi (shown in Table 2.6.12-2) resulting in a minimum margin of safety of + 1.27. Figure 2.6.12-6 presents the location of the maximum primary membrane and the primary membrane plus bending stresses for the end drop load.

Based on these results, it is concluded that the DIDO fuel basket is structurally adequate for normal transport conditions.

2.6.12.8.3 Fuel Assembly Spacer Structural Evaluation

During a top end drop, the spacer would be loaded by the weight of the fuel and the tube spacer. A bounding analysis of the DIDO fuel spacer post and top disk, based on hypothetical accident condition g-loads, is performed. The DIDO fuel assembly weight of 15 lbs is considered to include the weight of the tube spacer. The post is analyzed by determining the membrane stress due to the weight of the fuel assembly and tube spacer acting concentrically on the post. The top disk of the spacer is analyzed as a circular plate with a uniform load acting over the entire surface of the disk. The results, showing the spacer design is adequate to sustain the hypothetical accident top end drop analysis, are:

Component	Primary Membrane Stress (psi)	Allowable Stress (psi) @ Temp.	Margin of Safety	Primary Membrane + Bending (psi)	Allowable Stress (psi) @ Temp.	Margin of Safety
Pin	1,140	46,200	Large	5,082	66,000	12.0
Disk	N/A	46,200	N/A	10,980	66,000	5.0

Figure 2.6.12-3 DIDO Fuel Basket Module Structural Model – Top View

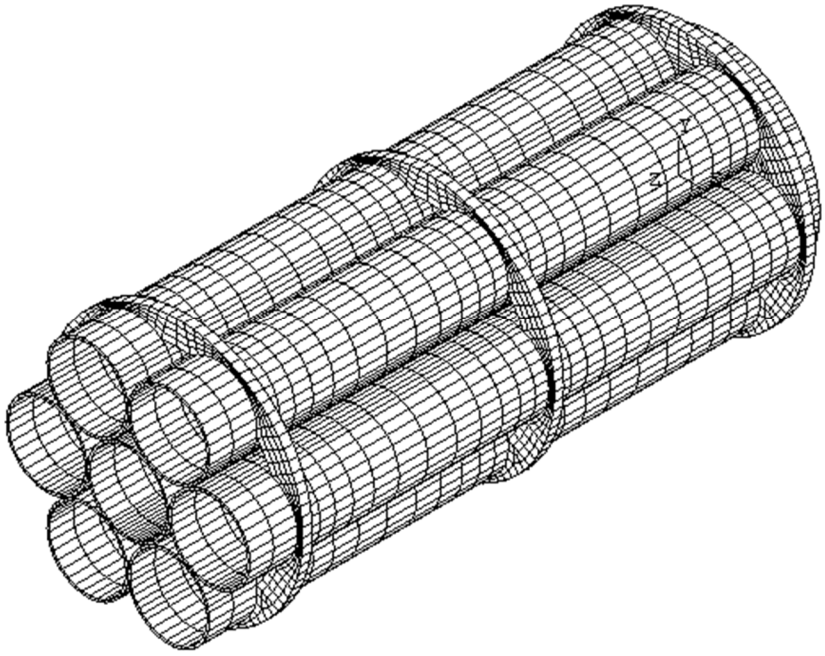

Figure 2.6.12-4 DIDO Fuel Basket Module Structural Model – Bottom View

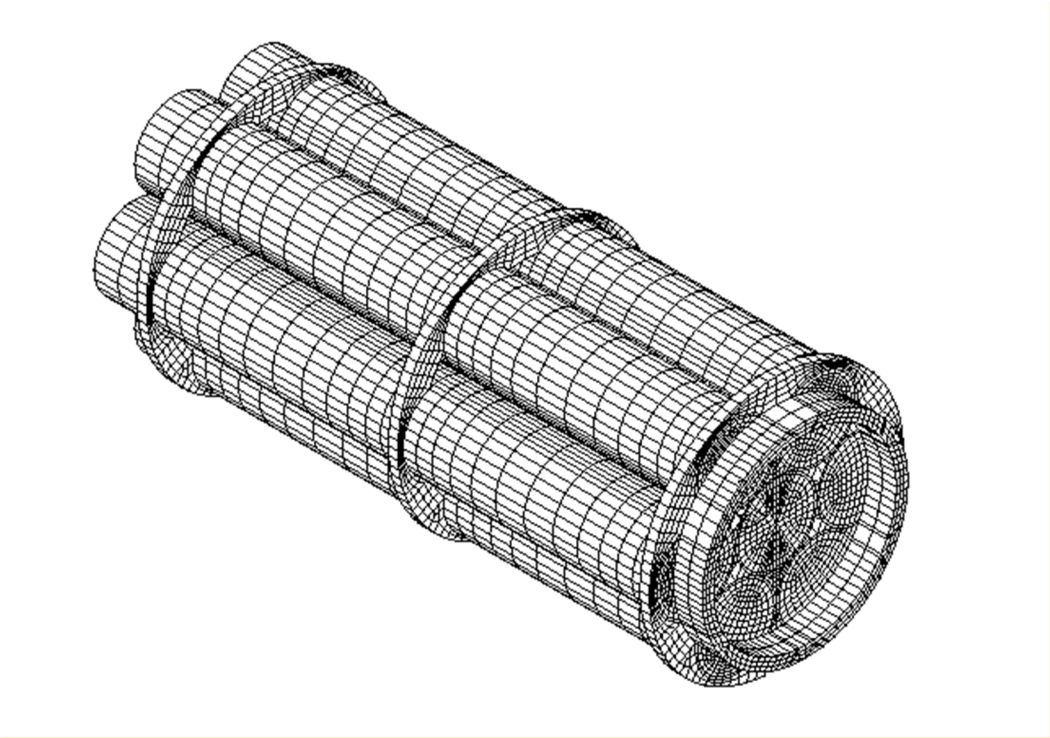

Figure 2.6.12-5 DIDO Fuel Basket Module Maximum Stress Locations for the Side Drop Orientation

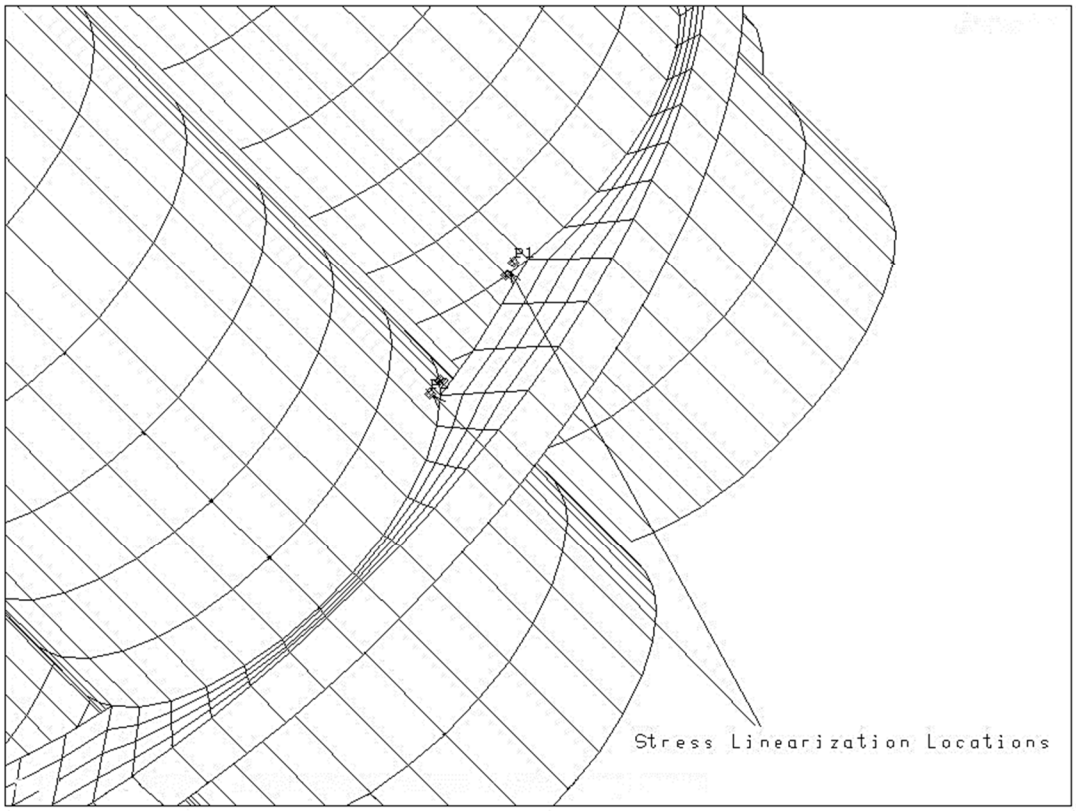

Figure 2.6.12-6 DIDO Fuel Basket Module Maximum Stress Locations for the End Drop Orientation

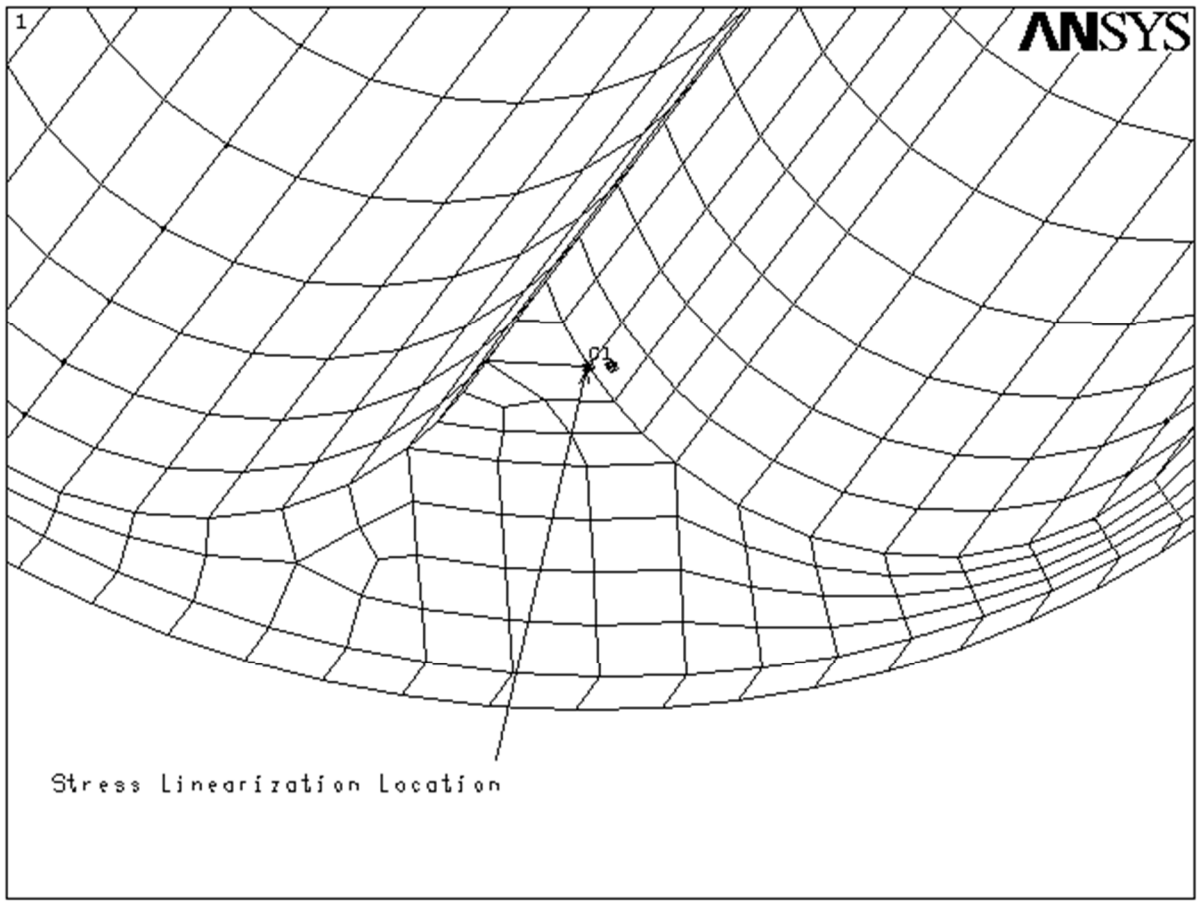

Table 2.6.12-1 Maximum Primary Membrane Stress for the 1-Foot Drop (DIDO Basket)

Location	Load Case 1-ft drop	Membrane (ksi)	Allowable (ksi) [1]	Margin of Safety [2]
Fuel Tube Wall	Side @ 0 Deg[3]	5.7	20.0	2.5
Fuel Tube Wall	Side @ 60 Deg[3]	5.7	20.0	2.5
Fuel Tube Wall	Side @ 90 Deg[3]	5.2	20.0	2.8
Fuel Tube Wall	End drop	11.4[4]	20.0	0.75

Table 2.6.12-2 Maximum Primary Membrane Plus Bending Stress for the 1-Foot Drop (DIDO Basket)

Location	Load Case 1-ft drop	Membrane + Bending (ksi)	Allowable (ksi) [5]	Margin of Safety [2]
Fuel Tube Wall	Side @ 0 Deg[3]	29.6[6]	30.0	0.01
Fuel Tube Wall	Side @ 60 Deg[3]	29.9[6]	30.0	0.003
Fuel Tube Wall	Side @ 90 Deg[3]	24.4[6]	30.0	0.23
Fuel Tube Wall	End drop	13.2[4]	30.0	1.27

1 $P_m \leq S_m$.
2 Margin of safety = (Allowable-Stress/Actual Stress) – 1.
3 Angle orientation shown on Figure 2.6.12-1.
4 The linearized stresses for the end drop case are scaled by the ratio of 360/178.65, which is the full arc-to-arc length of the tube welded to the base plate.
5 $P_m + P_b \leq 1.5S_m$.
6 These stresses are maximum local tube wall stresses and may be considered secondary stresses. They are conservatively considered primary membrane plus bending stresses and are located as shown in Figure 2.6.12-3.

2.6.12.9 General Atomics IFM Basket Construction

The General Atomics Irradiated Fuel Material (IFM) basket consists of a top module assembly designed to carry two IFM Fuel Handling Units (FHUs). Each IFM FHU is associated with RERTR or HTGR fuel materials. A spacer assembly is used to permit the top module assembly to be positioned next to the transport cask lid.

The top module is 43.7 inches long and is made up of two fuel tubes and three support plates. All components are made from ASME SA240 Type 304 stainless steel. The fuel tubes have a 6.0-inch outer diameter and a 0.25-inch wall thickness. Two of the support plates are 0.50-inch thick and the third, center plate, is 1.0-inch thick. The support plates are welded to the fuel tubes with 1/8-inch bevel welds.

Two types of IFM FHU are carried by the top module. One FHU carries irradiated HTGR fuel material and is 5.25 inches in diameter (0.12-inch thick wall) and 39.0 inches long. The other FHU contains irradiated RERTR fuel material, is 4.75 inches in diameter (0.12-inch thick wall), and is 37.25 inches long.

Each end of the FHU is comprised of a 0.25-inch thick plate welded to the container shell. The weld connecting the end plate to the container shell is labeled as a full-penetration butt weld. The dimensions of the end plate and the container shell provide a minimal gap (2 mils when considering maximum tolerances) to permit the end plate to be inserted into the container end. The close tolerances ensure that the two components are effectively in contact along the 0.5-inch common interface length of the end plate and the container. Once the end plate is inserted, a fusion weld procedure is employed to weld the lip of the end plate to the wall of the container. The depth of the weld along the interface between the end plate and the container is equal to approximately 70% of the thickness of the end plate lip or the container lip.

Due to the location of the weld for the end plate, the weld does not transfer any load for the drop conditions. Additionally, since the heat loads are insignificant (13w) and the backfill for the FHU and the cask cavity are limited to atmospheric pressure, the pressure differential across the welded plates is insignificant. Each of these FHUs also has an additional smaller container, which holds the fuel. In these evaluations, the inner container is neglected.

The spacer assembly is 133.0 inches in length, excluding guide pins. The assembly is comprised of one spacer tube and five support plates. The spacer tube consists of a Type 304 stainless steel 8-inch Schedule 80S pipe. The tube has an outside diameter of 8.63 inches and a wall thickness of 0.50 inch. The spacer plates are 1.0-inch thick and are welded to the tube with 1/8-inch bevel welds. Two guide pins are located at the top of the spacer assembly to facilitate alignment with the top module.

2.6.12.9.1 General Atomics IFM Basket Interface Analysis

The structural evaluation of the top module assembly is performed using classical hand calculations. The weight of the top module is bounded by 200 lbs, and the maximum weight of one FHU and its fuel contents is 76 lbs. Therefore, the total weight of a loaded top module system is 200 + 2(76) or 352 lbs. The weight of the spacer assembly is 760 lbs. The total loaded system weight is 1,112 lbs, and this weight is bounded by the design basis contents weight for the LWT system. Therefore, no analysis of the LWT cask body is required.

2.6.12.9.2 General Atomics Top Module Structural Analysis

Structural analyses for the top module for the 1-foot end drop and 1-foot side drop are performed using classical hand calculations.

General Atomics 1-Foot Side Drop Analysis

Top Module:

During a 1-foot side drop, the distributed load on one fuel tube is:

$$W = \frac{\left(76 + 0.291 \times \frac{\pi\left(6.0^2 - 5.5^2\right)}{4} \times 43.7\right)}{43.7} = 3.1\,\text{lb/in}$$

where:

weight of fuel = 76 lbs

length of tube = 43.7 inches

outer diameter = 6.0 inches

inner diameter = 5.5 inches

The maximum bending moment in tube is:

$$M = \frac{3.1 \times 20.35^2}{8} = 160\,\text{in - lbs}$$

The maximum bending stress in the fuel tube for 1g loading is:

$$I = \frac{\pi\left(6.0^4 - 5.5^4\right)}{64} = 18.7\,\text{in}^4$$

$$S_b = \frac{160 \times 3}{18.7} = 26\,\text{psi}$$

The margin of safety for tube bending for a 1-foot side drop (25g) is:

$$MS = \frac{1.5S_m}{S_b} - 1 = \frac{1.5 \times 19350}{25 \times 26} - 1 = +\underline{\text{Large}}$$

During a 1-foot side drop, the support plates bear up against the inner shell of the LWT cask. The center plate will carry the maximum weight. The bearing load on the center plate is:

$$W = \frac{10 \times \frac{[(2 \times 76) + 200]}{40.7} \times 20.35}{8} = 220 \text{ lbs}$$ (Page 2-299, #12, Manual of Steel Construction)

The bearing stress is maximum for the center disk.

The bearing stress is (Item 2c, Table 33, Young):

LWT cask cavity diameter, D1 = 13.375 inches

Support plate diameter, D2 = 13.265 inches

$$K_D = \frac{D_1 D_2}{D_1 - D_2} = 1{,}613$$

$$C_E = \frac{1 - 0.31^2}{26.75e6} + \frac{1 - 0.31^2}{8.29e6} = 1.42e-7$$

$$S_c = 0.798\sqrt{\frac{p}{K_D C_E}} = 0.798\sqrt{\frac{220}{1613 \times 1.42e\text{-}7}} = 782 \text{ psi}, \text{ 1g loading}$$

where:

p = 220/(1.0) = 220 lbs/in

E = 26.75e6 psi @ 350°F

Effective 'E' of LWT shells with lead:

$$E = \frac{0.75 \times 26.75e6 + 1.25 \times 26.75e6 + 5.75 \times 1.87e6}{7.75} = 8.29e6 \text{ psi}$$

The margin of safety for bearing for a 1-foot side drop (25g) is:

$$MS = \frac{S_y}{25 \times S_c} = \frac{21600}{25 \times 782} - 1 = +0.10$$

During a side drop, the top and bottom support plate welds are in shear. The load on the weld due to 1g is:

$$W = \frac{3 \times \frac{[(2 \times 76) + 200]}{40.7} \times 20.35}{8} = 66 \text{ lbs}$$ (Page 2-299, #12, Manual of Steel Construction)

The weld length is:

$$L = 2(\pi d_{tube} - r_{tube}\theta)$$
$$= 2(\pi \times 6.0 - 3.0 \times 1.57) = 28.3 \text{ inches}$$
$$\theta = \text{non welded arc length} = 90 \text{ deg} = 1.57 \text{ radians}$$

The support disk/ tube weld is a 1/8-inch bevel weld. The stress in the weld for 1g is:

$$S = \frac{66}{(28.3 \times 0.125 \times 0.7071)} = 26.4 \text{ psi}, \text{ 1g loading}$$

For visual inspection, the weld factor is 0.25 per ASME Section III, Subsection NG-3352. The margin of safety for shear is:

$$MS = \frac{0.25 \times 0.6 S_m}{25S} - 1 = \frac{0.25 \times 0.6 \times 19350}{25 \times 26.4} - 1 = +3.4$$

Spacer Assembly:

During a 1-foot side drop, the distributed load on the tube is:

$$W = \frac{760}{129.5} = 5.9 \text{ lb/in, use } 6.0 \text{ lb/in}$$

The maximum bending moment in tube, conservatively assuming a simply supported beam, is:

$$M = \frac{6 \times 32.0^2}{8} = 768 \text{ in - lbs}$$

The bending stress in tube for a 1g loading is:

$$I = \frac{\pi(8.63^4 - 7.63^4)}{64} = 106 \text{ in}^4$$
$$S_b = \frac{768 \times (8.63/2)}{106} = 31 \text{ psi}$$

The margin of safety for bending in the 1-foot side drop (25g) is:

$$MS = \frac{1.5 S_m}{S_b} - 1 = \frac{1.5 \times 19350}{25 \times 31} - 1 = + \text{Large}$$

During a 1-foot side drop, the support plates bear up against the inner shell of the LWT cask. The maximum load on a support plate during a side drop is:

$$W = 1.143 \times \frac{760}{128.0} \times 32.0 = 217 \text{ lbs}$$ (Page 2-309, #39, Manual of Steel Construction)

The bearing stress is (Item 2c, Table 33, Young):

LWT cask cavity diameter $D_1 = 13.375$ inches

Support plate diameter $D_2 = 13.265$ inches

$$K_D = \frac{D_1 D_2}{D_1 - D_2} = 1{,}613$$

$$C_E = \frac{1 - 0.31^2}{26.75e6} + \frac{1 - 0.31^2}{8.29e6} = 1.42e-7$$

$$S_c = 0.798\sqrt{\frac{p}{K_D C_E}} = 0.798\sqrt{\frac{217}{1613 \times 1.42e\text{-}7}} = 777 \text{ psi}$$

where:

p = 217 / 1.0 = 217 lb/in

E = 26.75e6 psi @ 350°F

Effective 'E' of LWT shells with lead:

$$E = \frac{0.75 \times 26.75e6 + 1.25 \times 26.75e6 + 5.75 \times 1.87e6}{7.75} = 8.29e6 \text{ psi}$$

The margin of safety for bearing is:

$$MS = \frac{S_y}{25 \times S_c} = \frac{21600}{25 \times 777} - 1 = +0.11$$

During a side drop, the top and support plate weld is in shear. The load on the weld is:

$$W = 0.393 \times \frac{760}{128.0} 32.0 = 75 \text{ lbs}$$ (Page 2-309, #39, Manual of Steel Construction)

The weld length is:

$$L = \pi \times 8.63 = 27.1 \text{ inches}$$

The weld between the support disk and tube is a 1/8-inch bevel weld. The stress in the weld for 1g is:

$$S = \frac{75}{(27.1 \times 0.125 \times 0.7071)} = 31 \text{ psi}, \text{ 1g loading}$$

For visual inspection, the weld factor is 0.25 per ASME Section III, Subsection NG-3352. The margin of safety for shear is:

$$MS = \frac{0.25 \times 0.6S_m}{25S} - 1 = \frac{0.25 \times 0.6 \times 19350}{25 \times 31} - 1 = 2.7$$

Fuel Handling Units (FHU)

The FHUs are analyzed in accordance with ASME Section III, Subsection NG. The bounding weight of a loaded fuel container is 76 lbs.

The side drop is analyzed assuming a circular ring under an external compressive load using Roarks Table 17, Item 1 (Young). The stress in the container shell is:

$$\alpha = \frac{I}{AR^2} = \frac{\pi(2.125^3) \times (0.12)}{\pi\left(2.125^2 - 2.0^2\right) \times 2.125^2} = 0.49$$

$$k_2 = 1 - \alpha = 1 - 0.49 = 0.51$$

$$M = (0.5 - 0.3183k_2)WR = [0.5 - 0.3183(0.51)]\frac{76}{35.5}2.125 = 1.5 \text{ in - lb}$$

$$S = \frac{6(1.5)}{0.12^2} = 0.63 \text{ ksi}$$

The margin of safety is:

$$MS = \frac{1.5S_m}{25S} - 1 = \frac{1.5 \times 19.35}{25 \times 0.63} - 1 = +0.84$$

General Atomics 1-Foot End Drop Analysis

Top Module:

During an end drop, the stress in the fuel tubes is calculated as follows.

The cross-sectional area of a tube is:

$$A = \frac{\pi\left(6.0^2 - 5.5^2\right)}{4} = 4.52 \text{ in}^2$$

Using a top module weight of 200 lbs, fuel weight not included, the stress in the two fuel tubes is:

$$S = \frac{200}{2 \times 4.52} = 22 \text{ psi}$$

The margin of safety is:

$$MS = \frac{S_m}{20S} - 1 = \frac{19350}{20 \times 22} - 1 = +\underline{\text{Large}}$$

Since the axial compression stress in the tubes is minimal, no buckling evaluation is required.

The top end drop is the bounding end drop because the top end has significantly less bearing area than the bottom end, and the weight of the spacer is included.

The bearing area for the top end is assumed to be the two fuel tubes, conservatively neglecting the lifting components. The cross-sectional area is:

$$A = 2\left[\frac{\pi\left(6.0^2 - 5.5^2\right)}{4} - 3.22 \times 0.25\right] = 7.42 \text{ in}^2$$

where:

outer diameter = 6.0 inches

inner diameter = 5.5 inches

cut out arc length = 3.22 inches

$$S = r\theta = 2.875 \times 1.12 = 3.22 \text{ inches}$$

$$\theta = 2 \times \tan^{-1}\left(\frac{1.72}{2.75}\right) = 64.05^\circ = 1.12 \text{ radians}$$

The bearing stress, fuel weight not included, in the module for a 1g loading is:

$$S_{brg} = \frac{200 + 760}{7.42} = 129 \text{ psi}$$

The margin of safety is:

$$S_{brg} = 20 \times 129 = 2.58 \text{ ksi}$$

$$MS = \frac{S_y}{S_{brg}} - 1 = \frac{21.6}{2.58} - 1 = +7.37$$

During an end drop, the self-weight of the center support plate has to be carried by the welds. The weight of the center support plate is:

$$W = 0.291\left\{1.0\left[\frac{\pi \times 13.265^2}{4} - 2\left(\frac{\pi \times 6.0^2}{4}\right)\right]\right\} = 24 \text{ lbs (use 30 lbs)}$$

where:

0.291 lbs/in^3 is the density of 304 stainless steel

1.0 inch is the disk thickness

13.265 inches is the disk diameter

6.0 inches is the cutout diameter

The weld length is:

$$L = 2(\pi d_{tube} - r_{tube}\theta)$$
$$= 2(\pi \times 6.0 - 3.0 \times 1.57) = 28.3 \text{ in.}$$
$$\theta = \text{nonwelded arc length} = 90 \text{ deg} = 1.57 \text{ radians}$$

The welds are 1/8-inch bevel welds on both sides of the disk. The stress in the weld for 1g is:

$$S = \frac{30}{2(28.3 \times 0.125 \times 0.7071)} = 6.0 \text{ psi}$$

For visual inspection, the weld factor is 0.25 per ASME Section III, Subsection NG-3352. The margin of safety for normal conditions is:

$$MS = \frac{0.25 \times 0.6 S_m}{20S} - 1 = \frac{0.25 \times 0.6 \times 19350}{20 \times 6} - 1 = +\underline{\text{Large}}$$

Spacer Assembly:

During an end drop, the stress in the tube is calculated as follows.

The cross-sectional area of a tube is:

$$A = \frac{\pi(8.63^2 - 7.63^2)}{4} = 12.77 \text{ in}^2$$

The stress in the tube is:

$$S = \frac{760 + 200 + 2 \times 76}{12.77} = 87 \text{ psi}$$

The margin of safety is:

$$MS = \frac{S_m}{20S} - 1 = \frac{19350}{20 \times 87} - 1 = +\underline{\text{Large}}$$

Since the axial stress in the tube is minimal, no buckling evaluation is required.

For a top and bottom end drop, the bearing stresses for 1g are:

$$A_{top} = 2(9.9 \times 0.3125) = 6.19 \text{ in}^2$$

$$S_{brg} = \frac{760}{6.19} = 123 \text{ psi}$$

$$A_{bot} = \frac{\pi(8.63^2 - 7.63^2)}{4} - (4 \times 1.0 \times 0.5) = 10.77 \text{ in}^2$$

$$S_{brg} = \frac{760 + 200 + 2 \times 76}{10.77} = 103 \text{ psi}$$

The margin of safety is:

$$S_{brg} = 20 \times 123 = 2.46 \text{ ksi}$$

$$MS = \frac{S_y}{S_{brg}} - 1 = \frac{21.6}{2.46} - 1 = +7.78$$

During an end drop, the weight of a support plate has to be carried by the welds to the tube.

The weight of the support plate is:

$$W = 0.291\left(\frac{\pi\left(13.265^2 - 8.63^2\right)}{4} \times 1.0\right) \approx 25 \text{ lbs}$$

The weld length is:

$$L = \pi \times 8.63 = 27.1 \text{ inches}$$

$$S = \frac{25}{2(27.1 \times 0.125 \times 0.7071)} = 5.2 \text{ psi}$$

Since the weld stress is less than the weld stress in the support disks in the top module, no additional analysis is required.

Fuel Handling Unit:

The maximum bearing stress occurs in the top end drop orientation. The bearing area for the handle supports is:

$$A = 2 \times 0.5^2 = 0.5 \text{ in}^2$$

The bearing stress is:

$$S_{brg} = \frac{76}{0.5} = 152 \text{ psi}$$

$$S_{brg} = 20 \times 152 = 3.0 \text{ ksi}$$

The margin of safety is

$$MS = \frac{S_y}{S_{brg}} - 1 = \frac{21.6}{3.0} - 1 = +6.2$$

The top lid and bottom plates sit on a lip in the container shell. The cross-sectional area of the lip is:

$$A = \frac{\pi\left(4.124^2 - 4.0^2\right)}{4} = 0.79 \text{ in}^2$$

Since the area is greater than the handle support area above, no additional analysis is required.

The cross-sectional area of the tube is:

$$A = \frac{\pi\left(4.25^2 - 4.0^2\right)}{4} = 1.62 \text{ in}^2$$

For a 20g end drop, normal conditions, the stress in the tube is:

$$S = \frac{20 \times 76}{1.62} = 0.94 \text{ ksi}$$

$$MS = \frac{S_m}{S} - 1 = \frac{19.35}{0.94} - 1 = +\underline{\text{Large}}$$

Since the axial compression stresses in the tube are minimal, no buckling evaluation is required.

2.6.12.10 TPBAR Basket Analysis

The TPBAR basket is a modified NAC-LWT PWR basket with increased free volume that is fabricated from 6061-T651 aluminum alloy. Figure 2.6.12-7 shows the cross-section of the TPBAR basket. A 13.25-inch outside diameter, 8.25-inch long stainless steel alternate upper fitting is bolted to the top of the basket body. This fitting provides lifting points for removing the basket from the cask. Additionally, this alternate upper fitting prevents the basket from applying load to the TPBAR contents during the top-end drop. A stainless steel lower fitting is bolted to the bottom of the basket body. The lower fitting assembly supports the fuel basket and contents longitudinally. An additional spacer assembly is bolted to the cask lid to prevent the TPBAR contents from shifting axially and rotationally within the basket. A groove on the periphery of the basket body provides for the cask drain tube. The drain tube is connected to a fitting on the cask body for draining or filling the cask during wet cask loading or unloading operations.

The TPBAR basket accommodates two TPBAR content configurations. The first TPBAR content configuration is the shipment of up to 300 production TPBARs (of which three can be prefailed) contained in an open consolidation canister with optional top insert. The consolidation canister body is fabricated from Type 304 stainless steel and the bail is fabricated from Type 7-4 precipitation hardened stainless steel. The consolidation canister is used to load and unload the TPBARs into and from the NAC-LWT cask configured with a TPBAR basket assembly.

The second TPBAR content configuration is the shipment of up to 55 segmented TPBARs, following post-irradiation examinations (PIE), contained in a welded sealed waste container. The waste container is welded to an extension weldment to provide the identical length as the consolidation canister to assure fit-up in the TPBAR basket assembly. The waste container and extension are fabricated from Type 316L stainless steel.

Following placement of the consolidation canister or the waste container with extension in the TPBAR basket, and installation and bolting of the lid, the TPBAR basket and contents are evaluated without consideration of the strength of the consolidation canister or waste container. The TPBAR basket provides a boundary for support on all sides of the consolidation canister and TPBARs for the full length of the canister. The cylindrical TPBAR waste container (external diameter 8.6 inches) is sized to fit within the square cross-section (8.8 inches) of the TPBAR basket. The TPBAR upper end-fitting spacer guides do not permit the consolidation canister to be loaded by the TPBAR basket in any drop orientation. The TPBAR spacer assembly attached to the bottom of the cask lid restricts the movement of the TPBARs in the axial direction and prevents rotation of the TPBAR waste container. Therefore, no additional evaluations are required for the TPBAR consolidation canister or TPBAR waste container and extension weldment.

2.6.12.10.1 TPBAR Basket Body

Structural analyses of the TPBAR basket for 1-foot side and end drops are performed using classical hand calculations. The analyzed weight of the loaded TPBAR consolidation canister is 1,000 lbs, which bounds the loaded weight of the TPBAR waste container and extension of 700 lbs. Therefore, the analyses provided for the consolidation canister are bounding.

TPBAR Basket Body 1-Foot Side Drop Analysis

The TPBAR basket body is constructed of four machined segments held together with aluminum bands at five locations along the axial length of the basket; as well as the top and bottom fittings, which are bolted to the aluminum basket. During a side drop, the TPBAR basket is subjected to bending and bearing stresses. The maximum bending stress occurs at Location 'A' as shown in the following sketch and is due to the content weight. The maximum bending stress is calculated using a cantilevered beam. This is conservative, since it neglects any support of the load due to the edges of the basket being supported by the cask inner shell. The maximum bending stress is:

$$S_b = \frac{6M}{t^2} = \frac{6 \times 152}{0.5^2} = 3.6 \text{ ksi}$$

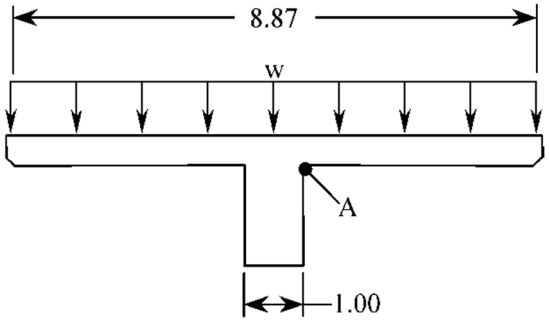

where:

$$w = \frac{W_c \times g}{L \times b} = \frac{1000 \times 25}{144 \times 8.87} = 19.6 \text{ psi}$$

(distributed load of the TPBAR consolidation canister)

W_c = 1,000 lbs, bounding TPBAR canister weight (with TPBARs)

L = 144 inches, length of consolidation canister

b = 8.87 inches, TPBAR basket opening width

g = 25g, bounding side drop acceleration

$$M = w \times \left(\frac{b}{2} - \frac{1}{2}\right) \times \frac{1}{2}\left(\frac{b}{2} - \frac{1}{2}\right)$$

$$= 19.6 \times \left(\frac{8.87}{2} - \frac{1}{2}\right) \times \frac{1}{2}\left(\frac{8.87}{2} - \frac{1}{2}\right) = 152 \text{ in-lb/in, the maximum bending moment}$$

t = 0.5 in, thickness of the flange

The margin of safety is:

$$MS = \frac{1.5S_m}{S_b} - 1 = \frac{1.5 \times 8.4}{3.6} - 1 = +2.5$$

where:

S_m = 8.4 ksi, stress intensity of 6061-T651 aluminum @300°F

The bearing stress in the basket is:

$$S_{brg} = \frac{P}{A} = \frac{47{,}500}{1.00 \times 161.5} = 294 \text{ psi} \approx 0.3 \text{ ksi}$$

where:

P = $g \times (W_c + W_b) = 25 \times (1{,}000 \text{ lbs} + 900 \text{ lbs}) = 47{,}500$ lbs, total side drop load

W_b = 900 lbs, the bounding weight of the TPBAR basket

A = is the minimum bearing area of the basket

The margin of safety is:

$$MS = \frac{S_y}{S_{brg}} = \frac{26.9}{0.3} - 1 = +\underline{\text{Large}}$$

where:

S_y = 26.9 ksi, yield strength of 6061-T651 aluminum @300°F

TPBAR Basket 1-Foot End-Drop Analysis

During an end drop, the maximum compressive stress on the minimum cross-section of the basket body is:

$$S_{comp} = \frac{g \times W_b}{A} = \frac{20 \times 900}{32.26} = 558 \text{ psi} \approx 0.6 \text{ ksi}$$

where:

A = $9.87^2 - 8.87^2 + 4(1.00 \times (13.25 - 9.87)) = 32.26\,in^2$, the minimum cross-sectional area of the basket (see Figure 2.6.12-7)

g = 20g, bounding end drop acceleration

W_b = 900 lbs, bounding weight of the TPBAR basket

The margin of safety is:

$$MS = \frac{S_y}{S_{comp}} - 1 = \frac{26.9}{0.6} - 1 = +\underline{Large}$$

where:

S_y = 26.9 ksi, yield strength of 6061-T651 aluminum @300°F

2.6.12.10.2 TPBAR Basket Upper Fitting

The upper fitting prevents the basket from loading the consolidation canister and TPBARs during a top-end drop. Four (4) spacer guides of the upper fitting are provided for this purpose. The spacer guides have a length of 7.63 inches, a width of 2.0 inches, and a thickness of 1.00 inch with a 45° × 0.25-inch chamfer. A bounding weight of 900 lbs is used for the TPBAR basket analysis. The temperature of the lid and upper region of the NAC-LWT cask body during TPBAR shipment is conservatively assumed to be 300°F. From Chapter 3, Table 3.4-16, the maximum temperature of the TPBARs under NCT is 300°F. Therefore, a temperature of 300°F bounds the maximum temperature of the upper LWT region for a maximum TPBAR heat load of 1.063 Kw and using 300°F for the analysis of the TPBAR upper fitting is conservative.

TPBAR Basket Upper Fitting 1-Foot Side Drop

During a side drop, the welds that hold the spacer guides to the top fitting are in shear and bending. The shear load on the welds is:

P = $(b \times t \times L) \times \rho \times g = (2.0 \times 1.0 \times 7.63) \times 0.288 \times 25 = 110$ lbs

where:

b = 2.0 inches, spacer guide width

t = 1.0 in, spacer guide thickness

L = 7.63 inches, spacer guide length

ρ = 0.288 lb/in^3, density of Type 304 stainless steel

g = 25g, side drop acceleration

The welds for the spacer are ⅛-inch fillet welds on three sides. The shear stress in the welds is:

$$\tau = \frac{P}{A} = \frac{110}{0.354} = 311\,\text{psi} = 0.3\ \text{ksi}$$

where:

A = $0.125 \times 0.707 \times (2.0 + 2 \times 1.0) = 0.354$ in^2, weld area

The bending moment is:

$$M = \frac{wL^2}{2} = \frac{(b \times t \times \rho \times g) \times L^2}{2} = \frac{(2 \times 1 \times 0.288 \times 25) \times 7.63^2}{2} = 419\ \text{in-lb}$$

The stress in the weld due to bending is:

$$S = \frac{M}{t \times S_w} = \frac{419}{(0.125 \times 0.707) \times 0.56} = 8.5\ \text{ksi}$$

where:

$$S_w = \frac{d^2(2b + d^2)}{3(b + d)} = \frac{1^2(2 \times 2 + 1^2)}{3(2 + 1)} = 0.56\ \text{in}^2, \text{ section modulus of weld (Blodgett)}$$

The maximum shear stress, τ_{max}, in the weld which, is equivalent to the stress intensity divided by two is:

$$\tau_{max} = \frac{\sqrt{S^2 + 4\tau^2}}{2} = \frac{\sqrt{8.5^2 + 4 \times 0.3^2}}{2} = 4.26\ \text{ksi}$$

The margin of safety is:

$$MS = \frac{0.6S_y}{\tau_{max}} - 1 = \frac{0.6 \times 22.5}{4.26} - 1 = +2.17$$

where:

S_y = 22.5 ksi, yield strength of Type 304 stainless steel @300°F

<u>TPBAR Basket Upper Fitting 1-Foot Top-End Drop</u>

For a top-end drop the weight of the TPBAR basket will load the four spacer guides. The membrane stress in the spacer guide is:

$$S = \frac{W_b \times g}{A} = \frac{900 \times 20}{(2.0 \times 1.0) \times 4} = 2.3\ \text{ksi}$$

where:

W_b = 900 lbs, bounding TPBAR basket weight

A = $(2.0 \times 1.0) \times 4 = 8$ in^2, cross sectional area of the spacer guide

g = 20g, bounding end drop acceleration

The margin of safety is:

$$MS = \frac{S_y}{S} - 1 = \frac{22.5}{2.3} - 1 = +8.8$$

where:

S_y = 22.5 ksi, yield strength of Type 304 stainless steel @300°F

The bearing stress is:

$$S = \frac{W_b \times g}{A} = \frac{900 \times 20}{6} = 3.0 \text{ ksi}$$

where:

A = $(2.0 \times 0.75) \times 4 = 6$ in^2, bearing area of the spacer guide

The margin of safety is:

$$MS = \frac{S_y}{S} - 1 = \frac{22.5}{3.0} - 1 = +6.5$$

The critical buckling load for the spacer is determined by using Euler's buckling equation. The critical buckling load is:

$$W_{cr} = K_c \frac{EI}{L^2} = 2.47 \frac{27 \times 10^6 (0.1667)}{7.63^2} \approx 190.9 \text{ kip}$$

where:

E = 27×10^6 psi, modulus of elasticity of Type 304 stainless steel @ 300°F

K_c = 2.47, buckling constant (Blake, Table 10.3)

I = $\frac{bt^3}{12}$ = 0.1667 in^4, minimum moment of inertia for cross section

b = 2.0 inches, spacer guide width

t = 1.0 in, spacer guide thickness

L = 7.63 inches, length of spacer guide

The margin of safety against buckling of the four spacer guides is:

$$MS = \frac{190{,}900}{20 \times 900/4} - 1 = + \underline{\text{Large}}$$

2.6.12.10.3 TPBAR Basket Lower Fitting

The TPBAR basket lower fitting is identical to the lower fitting of the PWR basket. The weight of the loaded TPBAR basket is less than the weight of the loaded PWR basket. Therefore, no further analysis is required.

2.6.12.10.4 TPBAR Spacer

The TPBAR Spacer is designed to limit the movement of the TPBAR contents during transport and to prevent the consolidation canister from loading the TPBARs during a top-end drop. The spacer is constructed of a circular base plate, two triangular spacer bases, two tubes, and two triangular top plates. The circular base plate forms the attachment of the spacer to the lower surface of the NAC-LWT cask closure lid. The circular base plate is attached with Type 304 stainless steel bolts. The two triangular spacer bases are bolted to the circular base plate. The tubes, constructed of 3-inch schedule 80 pipes, are welded to the spacer base and the triangular top plates that provide the interface with the TPBAR contents. The triangular top plates are arranged to form a square with a gap that fits over the consolidation canister or waste container bail and above the consolidation canister contents or the welded top of the waste container. Figure 2.6.12-8 shows the top view of the triangular top plate and tube. The calculated weight of the spacer assembly is 115 lbs. The analyzed loaded weight of the consolidation canister is 1,000 lbs, which bounds the loaded weight of the waste container (700 lbs). During the top-end drop condition, the weight of the consolidation canister is supported by the bail and directly transmitted into the NAC-LWT cask lid. Therefore, only the weight of the TPBARs is supported by the spacer for top-end drop conditions. The temperature of the lid and upper region of the NAC-LWT cask body during TPBAR transport is conservatively assumed to be 300°F. From Chapter 3, Table 3.4-16, the maximum temperature of the TPBARs under NCT is 300°F. Therefore, a temperature of 300°F bounds the maximum temperature of the LWT cask body for a maximum TPBAR heat load of 1.063 Kw and using 300°F for the analysis of the TPBAR spacer is conservative. The heat load of the TPBAR waste container is 0.195 kW and, therefore, the evaluated temperatures for the consolidation canister are bounding.

TPBAR Spacer 1-Foot Side Drop

Bolts

During 1-foot side-drop conditions, the weight of the spacer applies a shearing and tensile load to the bolts. The tensile load is due to the moment generated by the cantilever action of the spacer.

The shear stress is:

$$\tau = \frac{P}{A_t} = \frac{719}{0.1419} = 5.1\,\text{ksi}$$

where:

$P = \frac{W \times g}{4} = \frac{115 \times 25}{4} = 719$ lbs

W = 115 lb, spacer assembly weight abbreviations

g = 25g, side-drop acceleration

$A_t = 0.7854\left(D - \frac{0.9743}{n}\right)^2 = 0.7854\left(0.5 - \frac{0.9743}{13}\right)^2 = 0.1419\,\text{in}^2$, tensile area of screw thread with ultimate strength up to 100 ksi

For ½-13UNC bolts (Machinery's Handbook)

n = 13, number of threads per inch

D = 0.50 in, bolt diameter

Kn_{max} = 0.434 in, maximum minor diameter of internal thread

Es_{min} = 0.4435 in, minimum major diameter of external thread

En_{max} =0.4565 in, maximum pitch diameter of internal thread

Ds_{min} =0.4876 in, minimum major diameter of external thread

L_e = 1.0 in, Thread engagement

$P = \frac{M}{d} = \frac{16{,}891}{2 \times 4.95} = 1{,}706\,\text{lbs}$, the tensile load

d = 9.9 in, maximum distance between bolts

$M = \frac{wL^2}{2} \times g = \frac{\left(\frac{115}{11.75}\right)\left(11.75^2\right)}{2} \times 25 = 16{,}891\,\text{in - lb}$, the prying moment generated by the cantilever action of the spacer

The bolt tensile stress due to the moment, M, is:

$S = \frac{P}{A_t} = \frac{1706}{0.1419} = 12.0\,\text{ksi}$

The membrane stress intensity on the fastener is:

$SI = \sqrt{S^2 + 4\tau^2} = \sqrt{12.0^2 + 4 \times 5.1^2} = 15.7\,\text{ksi}$

The margin of safety is:

$MS = \frac{S_y}{SI} - 1 = \frac{22.5}{15.7} - 1 = +0.43$

where:

S_y = 22.5 ksi, yield strength of Type 304 stainless steel @300°F

The shear stress on the external threads is:

$$\tau = \frac{P}{A_S} = \frac{1706}{0.7789} = 2.2\,\text{ksi}$$

where:

$$A_s = 3.1416 n L_e Kn_{max}\left[\frac{1}{2n} + 0.57735\left(Es_{min} - Kn_{max}\right)\right]$$

$$= 3.1416(13)(1.00)(0.434)\left[\frac{1}{2(13)} + 0.57735\left(0.4435 - 0.434\right)\right]$$

= 0.7789 in^2, shear area of the bolt threads

The margin of safety is:

$$MS = \frac{0.6S_y}{\tau} - 1 = \frac{0.6 \times 22.5}{2.2} - 1 = +6.14$$

Spacer Welds

Using a bounding weight (W) of 25 pounds for the tube and triangular plates, the shear load on the welds is:

$$P = W \times g = 25 \times 25 = 625\,\text{lbs}$$

where:

g = 25 g, side-drop acceleration

The welds for the spacer are ¼-inch fillet weld. The shear stress in the weld is:

$$\tau = \frac{P}{t_w 0.707 \pi d} = \frac{625}{0.25 \times 0.707 \times (\pi \times 3.5)} = 322\,\text{psi}$$

where:

t_w = 0.25 in, weld size

d = 3.5 inches, outside diameter of 3-inch schedule-80 pipe

The stress in the weld due to bending is:

$$S = \frac{M}{t \times S_w} = \frac{5{,}263}{(0.25 \times 0.707)9.62} = 3.1\,\text{ksi}$$

where:

M = $wL = 25 \times 25 \times 8.42 = 5{,}263$ in - lb, the bending moment

S_w = $\frac{\pi d^2}{4} = \frac{\pi \times 3.5^2}{4} = 9.62$ in^2, section modulus of the weld (Blodgett)

The maximum shear stress (τ_{max}) in the weld, which is equivalent to the stress intensity divided by two, is:

$$\tau_{max} = \frac{\sqrt{S^2 + 4\tau^2}}{2} = \frac{\sqrt{3.1^2 + 4 \times 0.3^2}}{2} = 1.6 \text{ ksi}$$

The margin of safety is:

$$MS = \frac{0.6S_y}{\tau_{max}} - 1 = \frac{0.6 \times 22.5}{1.6} - 1 = +7.4$$

where:

S_y = 22.5 ksi, yield strength of Type 304 stainless steel @300°F

TPBAR Spacer 1-Foot Top-End Drop

When loaded in the consolidation canister, the TPBARs (held in the shape of a square) load the spacer tubes via the triangular top plates during top-end drop conditions. The compressive load applied to the tubes during the top-end drop is the weight of the TPBARs, 795 lbs (300 TPBARs at a bounding weight of 2.65 lbs per TPBAR), times the bounding acceleration of 20g (actual 15.8 g). For this analysis, W=1,000 lbs, is conservatively used.

Tube

The compressive stress in the tubes is:

$$S = \frac{W \times g}{A} = \frac{1000 \times 20}{2 \times \left(\frac{\pi}{4} \left(3.5^2 - 2.9^2 \right) \right)} = 3.3 \text{ ksi}$$

where:

A = the cross sectional area of a 3-inch schedule-80 pipe with an outer diameter of 3.5 inches and a thickness of 0.3 inch

The margin of safety is:

$$MS = \frac{S_y}{S} - 1 = \frac{22.5}{3.3} - 1 = +5.8$$

where:

S_y = 22.5 ksi, yield strength of Type 304 stainless steel @300°F

Triangular Top Plate

Referring to the dimensions provided in Figure 2.6.12-8, the pressure applied to a triangular plate is

$$P_{TP} = \frac{1}{2} \times \frac{1000}{0.5 \times 7.43 \times 7.43} \times 20 = 362 \text{ psi}$$

The bending moment in the top plate is (see Line A in Figure 2.6.12-6)

$$M = 362 \times \left(0.5 \times 4.18^2\right) \times \left(\frac{1}{3} \times 4.18\right) = 4406 \text{ in-lb}$$

The bending stress in the plate is:

$$S = \frac{6M}{bt^2} = \frac{6 \times 4{,}406}{4.18 \times 0.75^2} = 11.2 \text{ ksi}$$

The margin of safety is:

$$MS = \frac{1.5S_m}{S} - 1 = \frac{1.5 \times 20.0}{11.2} - 1 = +1.68$$

where:

S_m = 20.0 ksi, stress intensity of Type 304 stainless steel @300°F

TPBAR Spacer 1-Foot Bottom-End Drop

During the one-foot bottom-end drop, the inertial load of the spacer is applied to the bolts that affix the spacer to the NAC-LWT cask lid and the welds used to fabricate the spacer assembly. The maximum bottom-end drop acceleration is 20g.

Bolts

Four bolts (½-13UNC, Type 304 stainless steel) hold the spacer assembly to the bottom of the NAC-LWT cask lid and six bolts hold the spacer base to the circular base plate. For this evaluation, only the four spacer assembly bolts are considered since the individual bolt load is higher and the thread engagement length is shorter. The Internal lid thread evaluation is not required since high strength Helicoil inserts are utilized. Using the spacer assembly weight of 115 lbs and an acceleration of 20g, the critical bolt load is:

$$P = \frac{115 \times 20}{4} = 575 \text{ lbs}$$

The tensile stress is:

$$S = \frac{P}{A_t} = \frac{575}{0.1419} = 4.1\,\text{ksi}$$

The margin of safety is:

$$MS = \frac{S_y}{S} - 1 = \frac{22.5}{4.1} - 1 = +4.49$$

where:

S_y = 22.5 ksi, yield strength of Type 304 stainless steel @300°F

The shear stress in the bolt thread is:

$$\tau = \frac{P}{A_S} = \frac{575}{0.7789} = 0.74\,\text{ksi}$$

The margin of safety is:

$$MS = \frac{0.6S_y}{\tau} - 1 = \frac{0.6(22.5)}{0.74} - 1 = +\underline{\text{Large}}$$

Spacer Welds

During a 1-foot bottom-end drop (20g), the spacer weld is loaded by the inertial load of the spacer tube and the triangular top plate (25 lbs bounding). The weld is a ¼-inch fillet weld. The weld stress is:

$$S_w = \frac{W \times g}{t(0.707)(\pi d)} = \frac{25 \times 20}{0.25 \times 0.707 \times (\pi \times 3.5)} = 257\ \text{psi} = 0.3\ \text{ksi}$$

where:

d = 3.5 in, outside diameter of 3-inch schedule 80 pipe
t = 0.25 in, weld size

The margin of safety is:

$$MS = \frac{0.6S_y}{S_w} - 1 = \frac{0.6(22.5)}{0.3} - 1 = +\underline{\text{Large}}$$

where:

S_y = 22.5 ksi, yield strength of Type 304 stainless steel @300°F

Figure 2.6.12-7 Cross-Section of TPBAR Basket

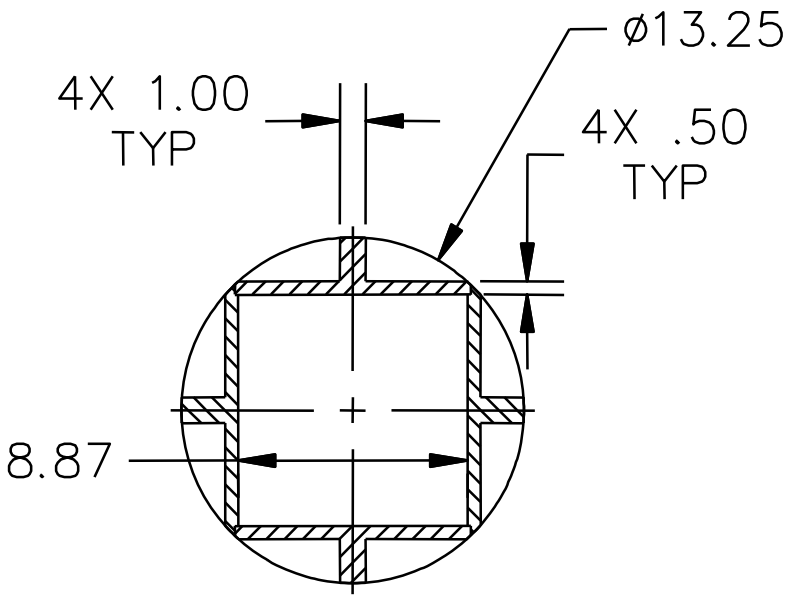

(Unit = inches)

Figure 2.6.12-8 TPBAR Spacer Schematic Triangular Top Plate and Tube

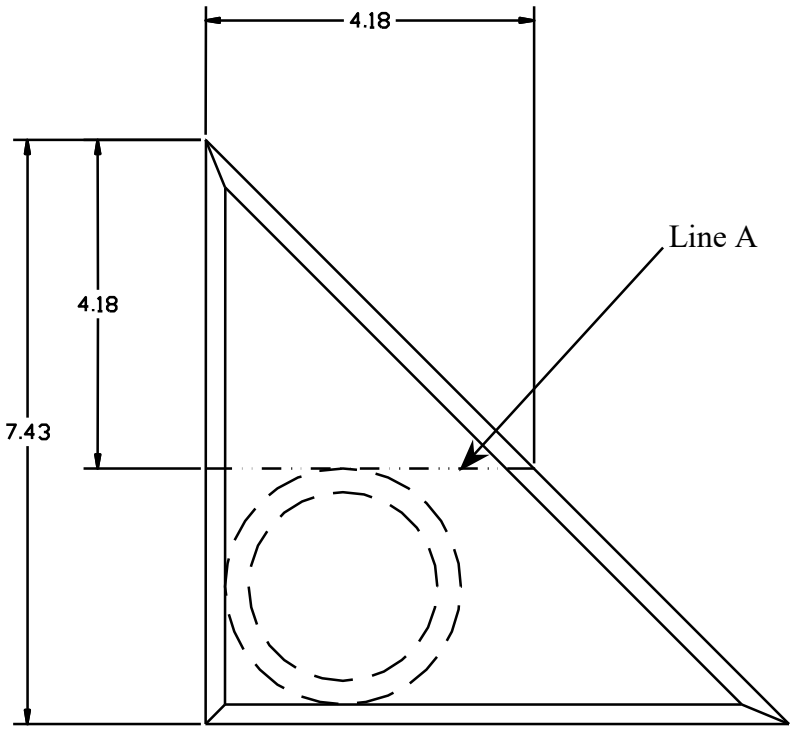

(Unit = inches)

2.6.12.11 ANSTO Basket Analysis

The ANSTO modular basket assembly consists of a top module, four intermediate modules, and a base module. The top and base modules are each 29.8 inches long; each of the four intermediate modules is 29.3 inches long (not including guide pins); and all six modules have an outer diameter of 13.27 inches. Each module is capable of holding up to seven spiral fuel assemblies or MOATA plate bundles. Each module is a weldment made up of a 13.27-inch-diameter, 1/2-inch-thick base plate and six 13.27-inch-diameter, 1/2-inch-thick support plates scalloped on the inner diameter to fit around six peripheral fuel tubes. The weldment structure, fuel tubes, and base and support plates are fabricated from Type 304 stainless steel. Each of the seven fuel tubes in each module has an outer diameter of 4.375 inches and a wall thickness of 0.125 inch. The bottom of each fuel tube is welded to the 1/2-inch-thick base plate. At the bottom of each fuel tube, where it is welded to the base plate, there is a 0.3-inch slot to permit water to drain from the tube. The base plate supports the fuel assembly/bundle in the end drop orientation. The base module sits on a 0.5-inch-high, 10-inch-diameter ring that is welded in segments to the base plate. The total weight of the ANSTO basket assembly bears directly on the bottom forging of the cask through the ring. The six scalloped 1/2-inch-thick support plates and the base plate of each basket module provide lateral support and maintain the fuel configuration in the side drop orientation.

2.6.12.11.1 ANSTO Basket Body 1-Foot Side Drop Analysis

Structural analyses of the ANSTO basket for 1-foot side and end drops are performed using classical hand calculations.

The inertia load of the LWT cask for a 1-foot side drop is 25g. A conservative loading condition of a diametrically loaded ring (Table 17, Case 1, Roark) is considered, which neglects any load distribution. Also, it is conservative to assume that there are three loaded fuel tubes acting on the top of a fuel tube since, in reality, there are only two of them. The stresses in the circumferential direction and in the longitudinal direction are added without regard to their signs. Since the circumferential direction and the longitudinal direction also correspond to the direction of the principal stresses, the addition of the two magnitudes reflects the possibility of the principal stresses being of opposite signs.

The maximum applied load to a fuel tube for the circumferential bending stress is:

$$P_s = (3W_{FT} + 3W) \times 25 = 2{,}415 \text{ lbs}$$

where:

W_{FT} = 14.2 lbs, maximum fuel tube weight

W = 18.0 lbs, maximum average fuel assembly weight

The bending moment in the fuel tube is:

$$M = \frac{wRk_2}{\pi} = \frac{84 \times 2.13 \times 1.00}{\pi} = 57 \text{ in-lb/in}$$ (Table 17, Case 1, Roark)

where:

$$w = \frac{P_s}{L_t} = 84 \text{ lb/in}$$

L_t = 28.81 inches, shortest fuel tube length

R = 2.13 inches, mean radius of fuel tube

$k_2 = 1-\alpha = 1.00$

$$\alpha = \frac{I}{A \times R^2} = \frac{bt^3/12}{b \times t \times R^2} = 2.87 \times 10^{-4}$$

b = 1.0 in, unit length

t= 0.125 in, tube wall thickness

The circumferential bending stress in the fuel tube is:

$$\sigma c = \frac{6M}{bt^2} = \frac{6 \times 57}{1 \times 0.125^2} = 21.9 \text{ ksi}$$

The stress in the fuel tube in the longitudinal direction is calculated assuming the fuel tube acts like a beam. The maximum bending moment occurs at the top of the basket where the fuel tube acts like a cantilever beam. (The maximum moment for a cantilevered beam with a uniform loading of w (lb/in) and length (l) is $wl^2/2$, as compared to the maximum moment $wl^2/8$ for a simply supported beam.) The bending moment in the tube is:

$$M = \frac{wl^2}{2} = \frac{84 \times 4.0^2}{2} = 672 \text{ in-lb}$$

where:

l = 4.0 inches, the length of the tube extending beyond the support plates

The bending stress is:

$$\sigma_l = F\frac{Mc}{I} = \frac{672 \times 2.19}{3.77} \approx 1.1 \text{ ksi}$$

where:

c = 2.19 inches, distance to extreme outer fiber of tube from centroid of tube

I = 3.77 in^4, tube moment of inertia

F = 2.725, factor to account for the effect of the small diameter-to-length ratio on bending for a cantilevered tube. This is obtained for a uniformly loaded beam in Article 7.10 in Roark.

The maximum stress in the tube is:

$$\sigma_b = 21.9 + 1.1 = 23.0 \text{ ksi}$$

The margin of safety is:

$$MS = \frac{1.5S_m}{\sigma_b} - 1 = +0.26$$

where:

S_m = 19.4 ksi, design stress intensity, Type 304 stainless steel, 350°F

The bearing stress on the support plate is calculated using Table 33, Case 2c from Roark.

The maximum weight of a loaded module is the weight of the base module, W_{BM} = 280 lbs. The weight of the loaded basket is supported by the six support plates and the base plate (i.e., total of seven). The bearing stress on a support plate is:

$$\sigma_{brg} = 0.591\sqrt{\frac{pE}{K_D}} = 3.6 \text{ ksi}$$

where:

$$p = \frac{W}{7t_d}g = \frac{280}{7 \times 0.5} \times 25 = 2{,}000 \text{ lb/in, bearing load for 25g side drop}$$

t_d = 0.5 in, support disk thickness

g = 25g, side drop inertia load

$$K_D = \frac{D_1 D_2}{D_1 - D_2} = 1{,}366.81$$

D_1 = 13.395 inches, LWT cask inner diameter

D_2 = 13.265 inches, support disk diameter

E = 25.7×10^6 psi, modulus of elasticity, Type 304 stainless steel, 350°F

The margin of safety is:

$$MS = \frac{S_y}{\sigma_{brg}} - 1 = +5.06$$

where:

S_y = 21.8 ksi, yield strength, Type 304 stainless steel, 350°F

2.6.12.11.2 ANSTO 1-Foot End Drop Evaluation

The inertia load for the LWT for a 1-foot end drop is 20g. The applied load to the ANSTO basket is:

$$P = W_{total} \times 20 = 35{,}400 \text{ lbs}$$

where:

W_{total} = 1,770 lbs, total weight of loaded basket, which bounds the calculated weight of 1,667 lbs

The minimum cross-sectional area is at the base of the fuel tubes where the cutouts for water drainage are located. The cross-sectional area is:

$$A = \frac{\left[\frac{\pi}{4}\left(D_o^2 - D_i^2\right) \times 6\right]}{2} + \left[\frac{\pi}{4}\left(D_o^2 - D_i^2\right) - 6 \times l_c \times t_t\right] = 5.93 \text{ in}^2$$

where:

D_o = 4.375 inches, tube outer diameter

D_i = 4.125 inches, tube inner diameter

l_c = 1.00 in, cutout length in center tube

t_t = 0.125 in, tube wall thickness

The membrane stress in the basket is:

$$\sigma = \frac{P}{A} = \frac{35{,}400}{5.93} = 5.97 \text{ ksi}$$

The margin of safety is:

$$MS = \frac{S_m}{\sigma} - 1 = +2.2$$

where:

S_m = 19.4 ksi, design stress intensity, Type 304 stainless steel, 350°F

The support plates are welded to the fuel tube with 1/16-inch bevel welds on both sides of the plate. The area of the weld is:

$$A_W = \frac{6(\pi D_o)}{2} \times 2t_w = 5.15 \text{ in}^2$$

where:

D_o = 4.375 inches, outer diameter of tube

t_w = 1/16 in, weld thickness

The bounding weight of the support plates is 20.1 lbs; and the bounding g-load factor is 60. A weld quality factor of 0.25 for a surface visual examination is divided into the calculated stress. This factor corresponds to the largest stress reduction factor in Table NG-3352-1 of the ASME Code. Therefore, the stress in the weld is:

$$\sigma_w = \frac{20.1 \times 60}{A_w (0.25)} = 936 \text{ psi}$$

The margin of safety using normal conditions allowable is:

$$MS = \frac{0.6S_m}{\sigma_w} - 1 = +\underline{\text{Large}}$$

where:

S_m = 19.4 ksi, design stress intensity, Type 304 stainless steel, 350°F

2.6.12.11.3 ANSTO Thermal Stress Evaluation

Thermal stress caused by a temperature gradient in the basket is calculated in this section. The thermal stress is minimal since the basket is free to expand. The thermal stress occurs as the hotter tubes expand radially against the basket support plates, which are at a lower temperature.

The maximum thermal stress of the fuel tube is back-calculated from the displacement computed using equations for circular rings from Table 17, Case 1, Roark.

The diametrical displacements caused by the thermal expansions for the center tube (Δ_1) and the tube adjacent to it (Δ_2) are calculated as:

$$\Delta_1 = \alpha \times \Delta T \times R_t = 4.58 \times 10^{-3} \text{ in}$$

where:

$\alpha = 9.1 \times 10^{-6}$ /°F, coefficient of thermal expansion, Type 304 stainless steel, 350°F

ΔT= 230°F (300-70), T_{max} of the basket is conservatively considered to be 300°F

70°F is room temperature

R_t = 2.19 inches (4.375/2), radius of the fuel tube outer surface

$$\Delta_2 = \alpha \times \Delta T \times D_t = 9.17 \times 10^{-3} \text{ in}$$

where,

$\alpha = 9.1 \times 10^{-6}$ /°F, coefficient of thermal expansion, Type 304 stainless steel, 350°F

ΔT= 230°F (300-70), T_{max} of the basket is conservatively considered to be 300°F

70°F is room temperature

D_t = 4.375, diameter of the fuel tube

The displacement caused by the thermal expansions for the outer surface of the support plate (Δ_s) is calculated as:

$$\Delta_S = \alpha \times \Delta T \times R_S = 8.58 \times 10^{-3} \text{ in}$$

where,

$\alpha = 9.1 \times 10^{-6}$ /°F, coefficient of thermal expansion, Type 304 stainless steel, 350°F

ΔT= 144°F (214-70), T_{max} of the inner shell

70°F is room temperature

R_S = 6.55 inches (13.1/2), radius of the support plate

Note: 214ºF is conservatively used to result in a minimum Δ_S in order to maximize the thermal stress.

The deformation that results in thermal stress is -5.17×10^{-3} inch ($\Delta_S - \Delta_1 - \Delta_2$). Therefore, the fuel tube will experience a reduction in diameter due to the differential thermal expansion of the fuel tubes and support plates. It is conservative to assume that all deformation occurs at the center tube. Using Case 1 in Table 17 of Roark, the change in the diameter of the circular ring, D_V, and the moment, M_A, are given by:

$$D_V = 0.1488\times\frac{WR^3}{EI} \quad \text{and} \quad M_A = \frac{WR\times k_2}{\pi}$$

therefore:

$$M_A = \frac{D_V\times EI}{0.1488\times R^2}\times\frac{k_2}{\pi}$$

where:

W is the load due to differential thermal expansion

$D_V = 5.17\times10^{-3}$ inch, change in the diameter due to thermal stress

R = 2.13 inches, mean radius of fuel tube

$E = 25.7 \times 10^6$ psi, modulus of elasticity, Type 304 stainless steel, 350°F

$I = bt^3/12$, inertial of the cross-section

b = 1.0 in, unit length

t = 0.125 in, tube wall thickness

$k_2 = 1-\alpha = 1.00$

$$\alpha = \frac{I}{A\times R^2} = \frac{bt^3/12}{b\times t\times R^2} = 2.87\times10^{-4}$$

The thermal stress is:

$$\sigma = \frac{6M_A}{bt^2} = \frac{D_V\,E\,t\,k_2}{0.2976\,\pi\,R^2} = \frac{5.17\times10^{-3}\times25.7\times10^6\times0.125\times1.0}{0.2976\times\pi\times2.13^2} = 3{,}916 \text{ psi}$$

The maximum P+Q stress in the basket is conservatively calculated by combining the bending stress and thermal stress in the basket. The P+Q stress is:

$$\sigma_{pq} = \sigma_b + \sigma_{th} = 23.0 + 3.9 = 26.9 \text{ ksi}$$

The margin of safety is:

$$MS = \frac{3S_m}{\sigma_{pq}} - 1 = +1.16$$

where:

S_m = 19.4 ksi, design stress intensity, Type 304 stainless steel, 350°F

2.6.12.12 TPBAR Basket with the PWR/BWR Rod Transport Canister

This section provides the structural analysis for the shipment of up to 25 individual TPBARs in the PWR/BWR Rod Transport Canister, the PWR insert and the TPBAR basket. Section 2.6.12.10 provides the structural evaluation of the TPBAR basket, with 300 TPBARs, considering a slightly lower contents weight (1800 lbs) than the TPBARs in the PWR/BWR Rod Transport Canister configuration (1901 lbs). The effects of the increased weight loading for the TPBAR basket are addressed in this section. The structural evaluation of the PWR/BWR Rod Transport Canister and the PWR insert is performed in Section 2.6.7.10.

TPBAR Basket Body 1-Foot Side Drop Analysis – Normal Condition

The TPBAR basket body is constructed of four machined segments that are held together with aluminum bands at five locations along the axial length of the basket, as well as the top and bottom fittings, which are bolted to the aluminum basket. During a side drop, the TPBAR basket is subjected to bending and bearing stresses. The maximum bending stress occurs at Location 'A' in the following figure and is due to the content weight. The maximum bending stress is calculated using a cantilevered beam. This is conservative since it neglects any support of the load due to the edges of the basket being supported by the cask inner shell. The maximum bending stress is:

$$S_b = \frac{6M}{t^2} = \frac{6 \times 226}{0.5^2} = 5.42 \text{ ksi}$$

where:

$$w = \frac{W_c \times g}{L \times b} = \frac{1{,}650 \times 25}{159.5 \times 8.87} = 29.2 \text{ psi},$$

the distributed load transfer by the PWR insert on the TPBAR basket

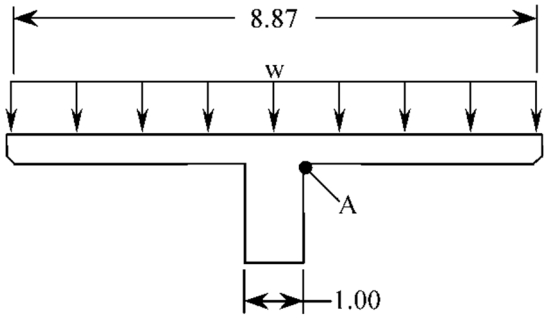

W_c = 1,650 lb, bounding TPBAR contents weight (with TPBARs, PWR/BWR Rod Transport Canister and the PWR insert)

L = 159.5 in, loadable length of the TPBAR basket

b = 8.87 in, TPBAR basket opening width

g = 25g, bounding side drop acceleration

$$M = w \times \left(\frac{b}{2} - \frac{1}{2}\right) \times \frac{1}{2}\left(\frac{b}{2} - \frac{1}{2}\right)$$

$$= 29.2 \times \left(\frac{8.87}{2} - \frac{1}{2}\right) \times \frac{1}{2}\left(\frac{8.87}{2} - \frac{1}{2}\right) = 226 \text{ in-lb/in, the maximum bending moment}$$

t = 0.5 in, thickness of the flange

The margin of safety is

$$MS = \frac{1.5S_m}{S_b} - 1 = \frac{1.5 \times 8.4}{5.42} - 1 = +1.32$$

where:

S_m = 8.4 ksi, stress intensity of 6061-T6 aluminum @ 300°F

The bearing stress in the basket is

$$S_{brg} = \frac{P}{A} = \frac{63{,}750}{1.00 \times 161.5} = 395 \text{ psi} = 0.4 \text{ ksi}$$

where:

P = $g \times (W_c + W_b) = 25 \times (1{,}650 \text{ lb} + 900 \text{ lb}) = 63{,}750$ lb, total side drop load

W_b = 900 lb, the bounding weight of the TPBAR basket

A = is the minimum bearing area of the basket

The margin of safety is

$$MS = \frac{S_y}{S_{brg}} = \frac{26.9}{0.4} - 1 = +\text{large}$$

where:

S_y = 26.6 ksi, yield strength of 6061-T6 aluminum @ 300°F

TPBAR Basket – End Drop

In an end drop scenario, the basket is only loaded by its own weight. The TPBAR basket weight is bounded by what was considered for the end drop analysis of the TPBAR basket in Section 2.6.12.10. Additionally, the assumed component temperatures remain conservative. Therefore, the results of section 2.6.12.10 are bounding and no further analysis is required.

TPBAR Basket Upper Fitting

The TPBAR basket upper fitting is identical to what was analyzed for the TPBAR basket in Section 2.6.12.10. The TPBAR basket weight and component temperatures considered in Section 2.6.12.10 are conservative. Therefore, the results of the Section 2.6.12.10 are bounding and no further analysis is required.

TPBAR Basket Lower Fitting

The TPBAR basket lower fitting is identical to the lower fitting of the PWR basket. The weight of the loaded TPBAR basket is less than the weight of the loaded PWR basket. Therefore, no further analysis is required.

PWR Insert

The PWR insert contains the PWR/BWR Rod Transport Canister assembly for insertion into the TPBAR basket. The PWR insert is not a structural component and, therefore, an analysis of its performance under normal conditions is not required.

PWR/BWR Rod Transport Canister Assembly Analysis

The PWR/BWR Rod Transport Canister is identical to the configuration analyzed in Section 2.6.7.10. The fuel weight considered in the Section 2.6.7.10 analysis for the PWR/BWR fuel (350 lbs) bounds the fuel weight of 25 TPBARs in the PWR/BWR Rod Transport Canister (66 lbs). Therefore, no further analysis is required for the canister.

Internal Spacer

The internal spacer for the PWR/BWR Rod Transport Canister is identical to what was analyzed in Section 2.6.7.10. The fuel weight considered in the Section 2.7.1.7 analysis for the PWR/BWR fuel (350 lbs) bounds the fuel weight of 25 TPBARs in the PWR/BWR Rod Transport Canister (66 lbs). Therefore, no further analysis is required for the internal spacer.

4×4 and 5×5 Inserts

The 4×4 and 5×5 inserts for the PWR/BWR Rod Transport Canister are identical to what was analyzed in Section 2.6.7.10. The fuel weight considered in the Section 2.7.1.7 analysis for the PWR/BWR fuel (350 lbs) bounds the fuel weight of 25 TPBARs in the PWR/BWR Rod

Transport Canister (66 lbs). Therefore, no further analysis is required for the 4×4 and 5×5 inserts.

2.6.12.13 SLOWPOKE Fuel Canister Assembly

Evaluation of the SLOWPOKE fuel canister assembly components for normal conditions of transport includes longitudinal (end) and lateral (side) 1-foot drop evaluations. The 'g' loads of 20 g's and 25 g's (Table 2.6.7-34) are conservatively assumed for a 1-foot end drop and a 1-foot side drop, respectively. Evaluation of all the assembly components for the normal condition of transport is given below. Table 2.6.12-3 gives the summary of weights and other dimensions of the SLOWPOKE fuel canister assembly components.

Table 2.6.12-3 Summary of SLOWPOKE Fuel Canister Assembly Component Dimensions and other Inputs

Component	Canister Weldment	Canister Insert	Fuel
Weight, W, lbs (6)	12.3+1.6=13.9(1)	7.6(4)	3.5(5)
Length, L, in	39.81	9.25×4=37(2)	8.66×4=34.64(2)
Outer Dimension/Diameter, D, in	3.3	0.50	0.206
Inner Dimension/Diameter, d, in	2.8	0.402	0.166
Number of Component, n	1	25	25
Area of Each Tube, A, in^2	2.8(3)	6.943×10^{-2}	1.169×10^{-2}
Stiffness K= (EA/L), lbs/in	670,987	447,517	80,464
Material	6061-T6 Aluminum	6061-T6 Aluminum	6061-T6 Aluminum
Elastic Modulus, $\times10^6$ psi (7)	9.54	9.54	9.54

Note:
1) The weight of the canister weldment is conservatively assumed as12.3 lbs instead of the estimated drawing weight of 11 lbs.
2) Total length of four sets arranged in the canister assembly.
3) Maximum canister weldment cross sectional area.
4) Weight of four 5×5 inserts.
5) Weight of 100 fuel rods and each fuel rod weighs 15.659 grams is 3.445 which is conservatively rounded up to 3.5.
6) The total weight of the SLOWPOKE fuel canister assembly is 25.0 lbs (13.9+7.6+3.5).
7) Elastic modulus is taken at 200°F.

Canister Weldment

The canister weldment is a square tube made of four quarter inch aluminum plates welded along their lengths. The canister weldment is evaluated for longitudinal (end) and lateral (side) drops for normal conditions of transport. For stress analysis, the area of the canister weldment is calculated near the lid where the cross sectional area is smallest. The detailed analysis of the canister weldment is given below.

Evaluation of the canister weldment for the 1-foot end drop:

The compressive stress on the canister weldment is calculated as:

$$\sigma_c = \frac{WG_{E1}}{2(A1 + A2)} = \frac{12.3 \times 20}{2(0.5225 + 0.4975)} = 120.5\ psi$$

where:

W = 12.3 lbs, Weight of the canister weldment
G_{E1} = 20 g, 1-foot end drop 'g' load
A1 = (2.8-0.71) ×0.25=0.5225 in^2, Cross sectional area of Side wall-A
A2 = (2.8-0.81) ×0.25=0.4975 in^2, Cross sectional area of Side wall-B

Margin of safety is:

$$MS = \frac{Membrane\ Allowable}{Compressive\ Stress} - 1 = \frac{10500}{120.5} - 1 = +Large$$

Buckling analysis of canister weldment:

Column slenderness ratio separating elastic and inelastic buckling:

$$C_C = \sqrt{\frac{2\pi^2 E}{F_y}} = \sqrt{\frac{2\pi^2 \times 9.54 \times 10^6}{3.12 \times 10^4}} = 77.65$$

Slenderness ratio Kl/r:

$$kl/r = \frac{1.0 \times l}{\sqrt{I/A}} = \frac{1.0 \times 39.44}{\sqrt{3.66/2.04}} = 29.42$$

where:

E = 9.54×10^6 psi, Elastic modulus of aluminum at 200°F
F_y = 3.12×10^4 psi, Yield strength of aluminum at 200°F
l = 39.44 in, Length of canister weldment wall
I = $2 \times \left(\frac{2.8 \times 0.25^3}{12} + 2.8 \times 0.25 \times \left(2.8/2\right)^2 \right) + 2 \times \left(\frac{0.25 \times 2.8^3}{12} \right) = 3.66\ in^4$, Moment of inertia

A = $2\times(0.523+0.498)=2.04\ in^2$, Cross sectional area of weldment

If Kl/r < C_C, then

Allowable compressive stress on the tube:

$$F_a=\frac{\left[1-\frac{(kl/r)^2}{2C_C^2}\right]F_y}{\frac{5}{3}+\frac{3(kl/r)}{8C_C}-\frac{(kl/r)^3}{8C_C^3}}=\frac{\left[1-\frac{(29.42)^2}{2\times77.65^2}\right]3.12\times10^4}{\frac{5}{3}+\frac{3(29.42)}{8\times77.65}-\frac{(29.42)^3}{8\times77.65^3}}=16{,}089$$

Margin of safety is:

$$MS=\frac{Allowable\,Comp\,Stress}{Maximum\,Comp\,Stress}-1=\frac{16089}{120.5}-1=+Large$$

For the 1-foot side drop, the weldment wall is assumed to be fixed at all the corners.

The bending stress on the canister weldment wall is calculated as (Roark's, 7th Edition, Table 11.4):

$$\sigma_b=\frac{-\beta_1 qb^2}{t^2}=\frac{-(0.5\times0.696\times2.8^2)}{0.25^2}=-43.65\ psi$$

where:

β_1 = 0.5, Parameter for a/b = ∞

q = $\frac{W}{4}\times G_{S1}\times\frac{1}{A}=\frac{12.3}{4}\times25\times\frac{1}{39.44\times2.8}=0.696\ psi$, Uniformly distributed load

W = 12.3 lbs, Weight of the canister weldment

G_{S1} = 25 g, 1-foot side drop 'g' load

A = 39.44×2.8 = 110.43in^2, Area of the weldment wall

Margin of safety:

$$MS=\frac{Bending\,Allowable}{Compressive\,Stress}-1=\frac{15750}{43.65}-1=+\text{Large}$$

Canister Lid

The canister lid is a one-inch aluminum plate which covers the top end of the canister weldment. The lid assembly includes the lid plate, handle, housing, latch, and handle cap screw. For the normal conditions of transport analysis, the lid is assumed to be simply supported at the outer edges and the total weight (inertial load) is assumed to act at the central rectangular area. The total weight of the SLOWPOKE fuel canister assembly with fuel is 25.0 pounds.

For the 1-foot end drop:

The bending stress on the canister lid is calculated by assuming the inertial load acts at the center of the lid and is simply supported at all edges (Roark's, 7th Edition, Table 11.4).

$$\sigma_{b-Lid} = \frac{\beta W}{t^2} = \frac{1.28 \times W_t \times G_{E1}}{t^2} = \frac{1.28 \times 25.0 \times 20}{1.0^2} = 640\ psi$$

where:

β = 1.28, Parameter for $a_1/b = a/b_1 = 0.2$
W_t = 25.0 lbs, Weight of the canister weldment assembly with fuel
G_{E1} = 20 g, 1-foot end drop 'g' load
t = 1.0 in^2, Thickness of the lid

Margin of safety is:

$$MS = \frac{Bending\ \ Allowable}{Bending\ \ Stress} - 1 = \frac{15750}{640} - 1 = +L\arg e$$

During the 1-foot end drop, the lid handle can shear or puncture the canister lid. The shear stress on the lid due to the handle is:

$$\tau_{l-h} = \frac{W_t G_{E1}}{A_1} = \frac{W_t G_{E1}}{2(w_1 + t_1) \times 2} = \frac{25.0 \times 20}{2(1.0 + 0.65) \times 2} = 75.76\ psi$$

where:

w_1 = 1.0 in, Width of the handle
t_1 = 0.65 in, Thickness of the handle

Margin of safety is:

$$MS = \frac{Shear\ Allowable}{Shear\ \ Stress} - 1 = \frac{15615}{75.76} - 1 = +L\arg e$$

During the 1-foot end drop, the canister weldment can shear the lid. The shear stress on the lid due to canister weldment is:

$$\tau_{l-w} = \frac{W_t G_{E1}}{A_2} = \frac{W_t G_{E1}}{4 w_2 t_2} = \frac{25.0 \times 20}{(4 \times 2.75 \times (1 - 0.38))} = 73.31\ psi$$

where:

w_2 = 2.75 in, Width of the lid at the canister weldment seating
t_2 = 1-0.38=0.62 in, Thickness of the lid at the canister weldment seating

Margin of safety is:

$$MS = \frac{Shear\ \ Allowable}{Shear\ \ Stress} - 1 = \frac{15615}{73.31} - 1 = +L\arg e$$

Lid Handle

The aluminum lid handle is 0.65" thick and 2.5" tall and is fastened to the lid plate using two socket head cap screws. For the end drop, the entire end drop load is transferred through the lid handle.

For 1-foot end drop:

The membrane or compressive stress on the lid handle is calculated as:

$$\sigma_{mh} = \frac{W_t G_{E1}}{A_3} = \frac{W_t G_{E1}}{2 \times w_3 t_3} = \frac{25.0 \times 20}{2 \times 1.0 \times 0.65} = 384.6\ psi$$

where:

W_t = 25.0 lbs, Weight of the canister weldment assembly with fuel
G_{E1} = 20 g, 1-foot end drop 'g' load
w_3 = 1.0 in, Width of the lid handle
t_3 = 0.65 in, Thickness of the lid handle

Margin of safety is:

$$MS = \frac{Membrane\ Allowable}{Membrane\ Stress} - 1 = \frac{10500}{384.6} - 1 = +Large$$

The bearing stress on the lid handle during end drop is calculated as:

$$\sigma_{bH} = \frac{W_t G_{E1}}{A_4} = \frac{W_t G_{E1}}{L_h \times t_3} = \frac{25.0 \times 20}{3.75 \times 0.65} = 205.1\ psi$$

where:

L_h = 3.75 in, Length of the lid handle
t_3 = 0.65 in, Thickness of the lid handle

Margin of safety is:

$$MS = \frac{Bearing\ Allowable}{Bearing\ Stress} - 1 = \frac{31230}{205.1} - 1 = +Large$$

Housing

The housing supports the latch and the spring mechanism; these three components maintain the position of the lid. Figure 2.6.12-9 shows the housing with dimensions and critical locations for evaluation. On the housing, compressive or membrane stresses are evaluated at Location MN, bearing stresses are evaluated at Location RS, bending stresses are evaluated at Location A and shear stresses are evaluated at Location A.

For the end drop, the canister insert along with fuel contacts the housing at Location RS (Figure 2.6.12-9). The weight of the insert and the fuel transferred to the housing is 11.1 pounds.

The membrane stress on the housing Location MN (Figure 2.6.12-9) is calculated as:

$$\sigma_{mHo} = \frac{W_t G_{E1}}{A_5} = \frac{W_t G_{E1}}{2(w_5 - d)t_5} = \frac{(7.6 + 3.5) \times 20}{2(0.75 - 0.38)0.75} = 400\ psi$$

where:

W_t = 7.6+3.5 = 11.1 lbs, Weight of the canister insert and fuel
G_{E1} = 20 g, 1-foot end drop 'g' load
W_5-d = (0.75-0.38) = 0.37 in, Width of the housing at Location MN
t_5 = 0.75 in, Thickness of the housing at Location MN

Margin of safety is:

$$MS = \frac{Membrane\ Allowable}{Membrane\ Stress} - 1 = \frac{10500}{400} - 1 = +Large$$

The bearing stress on the housing Location RS (Figure 2.6.12-9) is calculated as:

$$\sigma_{bHo} = \frac{W_t \times G_{E1}}{A_6} = \frac{W_t \times G_{E1}}{2 \times w_5 \times t_5} = \frac{(7.6 + 3.5) \times 20}{2 \times 0.75 \times 0.75} = 197.3 psi$$

where:

W_5 = 0.75 in, Width of the housing at Location RS
t_5 = 0.75 in, Thickness of the housing at Location RS

Margin of safety is:

$$MS = \frac{Bearing\ Allowable}{Bearing\ Stress} - 1 = \frac{31230}{197.3} - 1 = +Large$$

The shearing stress on the housing Location A (Figure 2.6.12-9) is:

$$\tau_A = \frac{W_t G_{E1}(R)}{A_7} = \frac{W_t G_{E1}(R)}{2h_1 \times 2t} = \frac{(7.6 + 3.5) \times 20 \times \left(0.38 / 0.75\right)}{2 \times 0.25 \times 2 \times 0.75} = 150\ psi$$

where:

R = Ratio of load on the curved section

$$= \frac{\text{Thickness of curved section (Length AA)}}{\text{Thickness of housing (Length RS)}} = \frac{0.38}{0.75} = 0.51$$

(Note: R = 0.51, Half of the load on the housing is conservatively applied on the curved section of the housing)

h_1 = 0.25 in, Height of the housing at Location A
t = 0.75 in, Thickness of the housing at Location A

Margin of safety is:

$$MS = \frac{Shear\ Allowable}{Shear\ \ Stress} - 1 = \frac{15615}{150} - 1 = +Large$$

The bending stress on the housing Location A is (assumed as beam fixed at two ends):

$$\sigma_A = M\frac{Y}{I} = \frac{W_a L^2}{12}\frac{Y}{I} = \frac{W_t G_{E1} R}{L}\frac{L^2}{12}\frac{Y}{I}$$
$$= \frac{(7.6+3.5)\times 20\left(0.38/0.75\right)}{0.38}\frac{0.38^2}{12}\frac{0.25/2}{9.77\times 10^{-4}} = 455.7\ psi$$

where:

I = $(bh_1^3/12) = (0.75\times 0.25^3/12) = 9.77\times 10^{-4}$ in^4, Moment of inertia at Location A

Y = 0.25/2 in, Height of the housing from mid point at Location A

L = 0.38 in, Length of the housing (Length AA)

The stress intensity on the housing Location A is:

$$\sigma_S = \sqrt{\sigma_A^2 + 4\tau_A^2} = \sqrt{455.7^2 + 4\times 150^2} = 546\ psi$$

Margin of safety is:

$$MS = \frac{Bending\ \ Allowable}{Stress\ Intensity} - 1 = \frac{15750}{546} - 1 = +Large$$

Location B:

The shearing stress on housing Location B is:

$$\tau_B = \frac{W_t G_{E1}(R)}{A_B} = \frac{W_t G_{E1}(R)}{2(h_2 \times t)} = \frac{(7.6+3.5)\times 20\times\left(0.38/0.75\right)}{2(0.06\times 0.75)} = 1{,}250\ psi$$

where:

h_2 = 0.06 in, Height of the housing at Location B (Figure 2.6.12-9)

t = 0.75 in, Thickness of the housing at Location B (Figure 2.6.12-9)

Margin of safety is:

$$MS = \frac{Shearing\ \ Allowable}{Shearing\ Stress} - 1 = \frac{15615}{1250} - 1 = +Large$$

Figure 2.6.12-9 SLOWPOKE Fuel Canister Assembly Housing

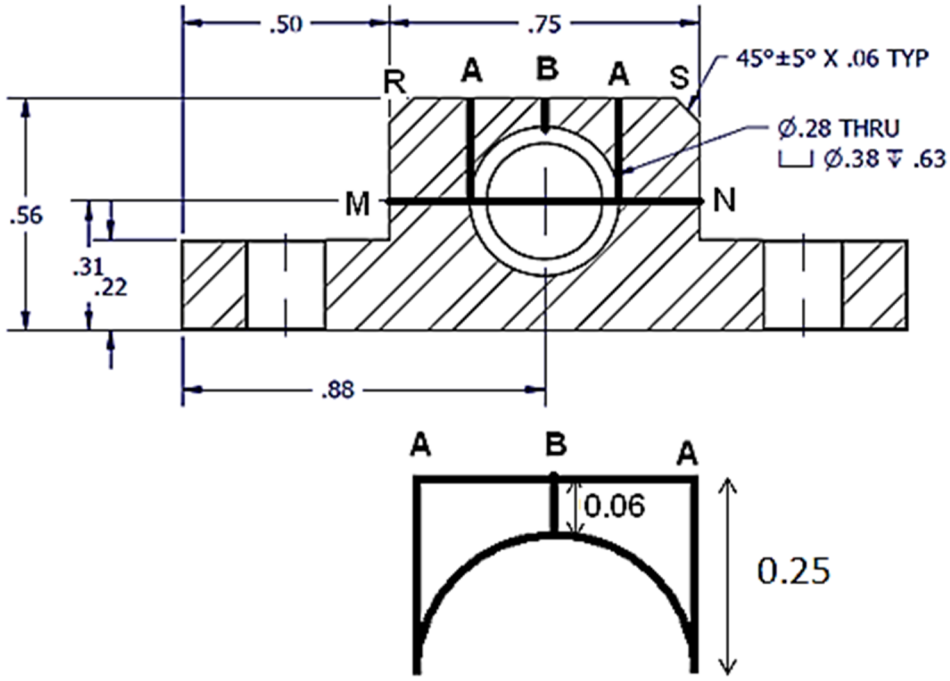

Canister Insert

The fuel tubes are placed inside the aluminum canister insert (four inserts per canister) during transportation. The canister insert tubes are arranged in a 4×4 or 5×5 matrix on a base plate. The canister insert is evaluated for normal conditions of transport only. Conservatively for analysis purposes, the fuel weight is added to the canister insert weight. Both the 4×4 and 5×5 matrix insert tubes have the same thickness (0.1”), but the 5×5matrix insert tube is smaller than the 4×4 matrix insert tube. Therefore, only 5×5 matrix insert is evaluated because the 5×5 matrix insert has a lower moment of inertia and area, and weighs more than the 4×4 matrix insert.

For the 1-foot end drop:

The compressive or membrane stress on the canister insert is calculated as:

$$\sigma_{ci} = \frac{W_{if} G_{E1}}{25 \times A} = \frac{W_{if} \times G_{E1}}{25 \times \pi (D^4 - d^4)/4} = \frac{(7.6 + 3.5) \times 20}{25 \times \pi (0.5^2 - 0.402^2)/4} = 128\ psi$$

where:

W_{if} = 7.6+3.5 = 11.1 lbs, Weight of the canister insert and fuel
G_{E1} = 20 g, 1-foot end drop ‘g’ load
D = 0.5 in, Outer diameter of the 5×5 insert tube
d = 0.402 in, Inner diameter of the 5×5 insert tube

Margin of safety is:

$$MS = \frac{Membrane.\ Allowable}{Compressive\ Stress} - 1 = \frac{10500}{128} - 1 = +L\arg e$$

Buckling Analysis of canister weldment:

Column slenderness ratio separating elastic and inelastic buckling:

$$C_C = \sqrt{\frac{2\pi^2 E}{F_y}} = \sqrt{\frac{2\pi^2 \times 9.54 \times 10^6}{3.12 \times 10^4}} = 77.65$$

Slenderness ratio Kl/r:

$$kl/r = \frac{1.0 \times l}{\sqrt{I/A}} = \frac{1.0 \times 9.25}{\sqrt{\frac{\pi(0.5^4 - 0.402^4)/64}{\pi(0.5^2 - 0.402^2)/4}}} = 57.67$$

where:

E = 9.54×10^6 psi, Elastic modulus of aluminum at 200°F
F_y = 3.12×10^4 psi, Yield strength of aluminum at 200°F

l = 9.25 in, Length of canister insert tube

I = $\pi(0.5^4 - 0.402^4)/64 = 1.79\times10^{-3}$ in^{-3}, Moment of inertia of insert tube

A = $\pi(0.5^2 - 0.402^2)/4 = 0.069$ in^2, Cross sectional area of the insert tube

If Kl/r < C_C, then

Allowable compressive stress on the tube:

$$F_a = \frac{\left[1 - \frac{(kl/r)^2}{2C_C^2}\right]F_y}{\frac{5}{3} + \frac{3(kl/r)}{8C_C} - \frac{(kl/r)^3}{8C_C^3}} = \frac{\left[1 - \frac{(57.67)^2}{2\times77.65^2}\right]3.12\times10^4}{\frac{5}{3} + \frac{3(57.67)}{8\times77.65} - \frac{(57.67)^3}{8\times77.65^3}} = 11{,}942$$

Margin of safety is:

$$MS = \frac{Allowable\,Comp\,Stress}{Maximum\,Comp\,Stress} - 1 = \frac{11{,}942}{128} - 1 = +L\arg e$$

For the 1-foot side drop, the insert is assumed to be simply supported at the ends and the weight is acting along the length of the insert.

The bending stress on the insert is calculated as (Roark's, 7th Edition, Table 8.1):

$$\sigma_{bi} = M\frac{y}{I} = \frac{W_a l^2}{8}\frac{D/2}{I} = \frac{W_{if}G_{S1}}{25\times l}\frac{l^2}{8}\frac{D/2}{I} = \frac{(7.6+3.5)\times25}{25\times9.25}\frac{9.25^2}{8}\frac{0.5/2}{1.79\times10^{-3}} = 1{,}793\ psi$$

where:

G_{S1} = 25 g, 1-foot side drop 'g' load

Margin of safety is:

$$MS = \frac{Bending\ Allowable}{Bending\ Stress} - 1 = \frac{15750}{1793} - 1 = 7.78$$

Lid Latch and Plunger

For the 1-foot top end drop, the load path through the lid, does not contain the lid latches or the plungers.

For the 1-foot side drop analysis of latch and plunger, the accident condition loads (60 g's) are used with normal condition allowables. This bounds both the normal and accident conditions of transport.

During the side drop, the latch experience 60 g's and the maximum shear stress occur at Location SA.

The shear stress on the latch at Location SA (Figure 2.6.12-10) is:

$$\tau_{SA} = \frac{W_P G_{S1}}{A_{SA}} = \frac{0.05 \times 60}{0.5 \times (0.76 - 2 \times 0.3) \times \tan(30)} = 65\ psi$$

where:

W_P = Weight of the latch = Volume ×Density of Aluminum
~ 0.5×0.5× (1.13+0.31) ×0.1 = 0.036 ~ 0.05 lbs
G_{S1} = 60 g, 30-foot side drop 'g' load
A_{SA} = 0.5× (0.76-2×0.3) × tan (30) = 0.046 in^2, Area of the latch at Location SA

Margin of safety is:

$$MS = \frac{Shear\ Allowable}{Shear\ Stress} - 1 = \frac{15615}{65} - 1 = +\text{Large}$$

Shear stress on the steel plunger is:

$$\tau_{PL} = \frac{W_P G_{S1}}{A_P} = \frac{W_P G_{S1}}{\pi/4 \times d^2} = \frac{0.05 \times 60}{\pi/4 \times 0.16^2} = 149\ psi$$

where:

d = 0.16 in, Diameter of the plunger nose

Margin of safety is:

$$MS = \frac{Shear\ Allowable}{Shear\ Stress} - 1 = \frac{6250}{149} - 1 = +L\arg e$$

Figure 2.6.12-10 SLOWPOKE Fuel Canister Assembly Latch and the Free Body Diagram

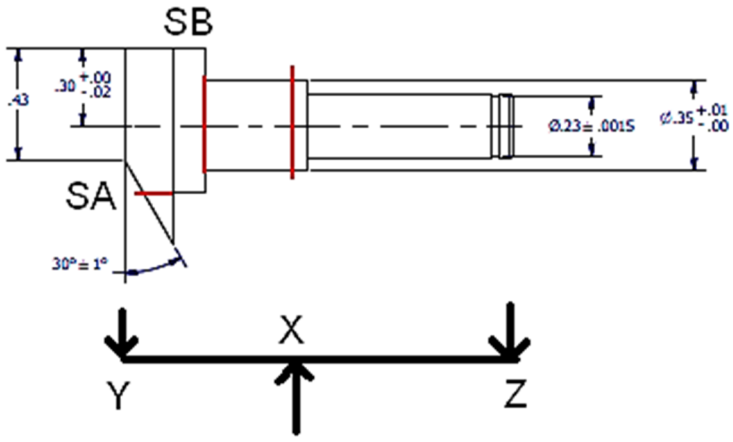

2.6.12.14 NRU/NRX Fuel Basket

The NRU/NRX fuel basket assembly consists of a top basket weldment, lid assembly and a basket spacer assembly. The basket weldment is 122.25 inches long and consists of 18 fuel tubes with a 2.5-inch outside diameter with a 0.12-inch wall thickness. Each fuel tube is capable of holding a single NRU/NRX fuel assembly or equivalent fuel rod quantity. NRU/NRX fuel assemblies/rods may be placed inside of an aluminum caddy. NRX fuel assemblies/rods shall be placed into a caddy. Note, the use of the caddy plug is not required for NRU or NRX shipments. The aluminum caddy may also be loaded with EFN rods, Booster rods, or Moly targets. The total weight inside each fuel tube is limited to 20 pounds, which includes the weight of the aluminum caddy, caddy plug, NRU/NRX fuel assembly/rods and dunnage. The 6 center tubes are supported by a center tube assembly which consists of 1.5-inch Schedule 80 pipe with 6 equally spaced scalloped center locators. The lower end of the center tube assembly is welded to the bottom support disk and the top end is bolted to the lid assembly. The 12 outer tubes are supported by 7 scalloped, circular support disks. There is a top support disk, 5 center support disks and a bottom support disk. These support disks have an outer diameter of 13.27 inches and are ½ inch thick. The 12 outer tubes are welded to these support disks on the outside of the tubes.

The spacer assembly is 51.8 inches long and consists of a center tube with an outside diameter of 8.0 inches and a wall thickness of 0.12 inches. This center tube is welded to 3 circular support disks. The spacer assembly rests on a base tube that consists of a 10-inch Schedule 80 pipe. The base tube is welded to the base disk. The total weight of the NRU/NRX basket assembly plus the spacer assembly bears directly on the bottom forging of the cask through the base tube.

The basket assembly, basket spacer assembly and lid assembly are fabricated from SA 240, Type 304 stainless steel. The lid assembly attachment bolts are made from SA564, Type 630 (17-4PH).

2.6.12.14.1 NRU/NRX End Drop Analysis for Normal Conditions of Transport

This section includes the evaluation of the NRU/NRX basket and spacer assembly components for lateral (side) and longitudinal (end) 1-foot drops. The acceleration load of 25 g's is conservatively assumed for end and side drops for normal conditions of transport.

Basket/Lid Assembly

Basket assembly consists of 18 cylindrical tube assemblies with a center tube assembly and 7 outer support disks. The center tube assembly is not attached to the 6 tubes in the middle of the basket but the outer 12 tubes are welded to the outer support disks. All 18 tube assemblies are welded to the bottom support disk. The basket lid assembly is attached to the top support disk and the center tube assembly with 7 lid bolts with a 3/8-16 UNC thread. One bolt attaches the lid to the center tube assembly and 6 bolts attach the lid to the top support disk. The bottom support

disk is attached to the center tube assembly by two 1/4 inch fillet welds around the entire circumference and the outer tubes by a 1/16 inch fillet weld spanning 60 degrees.

2.6.12.14.1.1 Top End Drop

The acceleration for a 1 foot top end drop is 25 g.

Fuel Tube Assembly

The compressive stress on the fuel tube assembly is calculated as:

$\sigma_c = Wg/18(A_{tube}) = 1.86$ ksi for 25 g

where; W = Weight of (basket assembly + 18 fuel assemblies + spacer assembly)
= 695 lbs + 30 + 18(20lbs) + 115 lbs = 1,200 lbs

Note: This is conservative since the weight of the top disk (5 lbs) is not carried by the fuel tubes in a top end drop.

and

$A_{tube} = \pi/4(OD^2-ID^2) = 0.897$ in^2

OD = 2.5 in
ID = 2.26 in

Margin of safety:

$MS = (1.0S_m/\sigma_c)-1 = 9.0$

where $S_m = 18.6$ ksi for SA240, Type 304 at 400 °F

Fuel tube buckling analysis

The column length to radius ratio is;

$L/r_m = 20.5/1.19 = 17.2$

where;

L= distance between disks = 20.5 in
r_m = mean radius of fuel tube = ¼(OD+ID) = 1.19 in

This means that the tube will not buckle as a classical Euler column, instead the buckling mode would be localized buckling (bellows or diamond pattern). For this mode of buckling, the critical compressive stress is given by Blake;

$$S_{cr} = E\frac{0.605 - m^2 x10^{-7}}{m(1+0.004\phi)} = 264.1 \text{ ksi}$$

where;

E = $26.5x10^6$ psi for SA240, Type 304 at 400 °F
S_y = 20.7 ksi for SA240, Type 304 at 400 °F
ø = E/S_y = 1280
m= r_m/t = 9.92
r_m = 1/2(OD/2+ID/2) = 1.19 in
t = 1/2(OD-ID) = 0.12 in

Margin of safety:

MS = $(S_{cr}/ \sigma_c)-1$ = large

Note: All margins of safety greater than 10 are reported as large.

Support Disk to Tube Welds

The welds for the middle 5 support disks only carry the disk self-weight in a top end drop. The middle support disks are attached to the outer 12 tubes with a 1/16-inch fillet weld on each side of the support disk. Due to lack of access, these welds only extend 60 degrees in the circumferential direction around each tube.

The primary stress in these attachment welds is shear.

$\tau = Wg/A_{eff}$ = 0.09 ksi for 25 g

where;

W = middle disk weight = 5 lbs
$A_{eff} = 12[2(60/360)(\pi D_{tube})(t_{eff})] = 1.39 \text{ in}^2$
D_{tube} = 2.5 inch
t_{eff} = 0.7071(1/16) = 0.0442 in

Margin of safety:

$$MS = (0.6S_m/\tau)-1 = \text{large}$$

where S_m = 18.6 ksi for SA240, Type 304 at 400 °F

Center Tube to Bottom Disk Weld

The fuel tube assembly consists of a cylindrical tube attached to a tube cap on the bottom of the fuel tube. This cap is then welded to the bottom disk to form part of the center tube assembly. This attachment weld is a full circumference double sided 1/8-inch fillet weld. This weld does not support the full weight of the center tube assembly since the center tube assembly is also bolted to the basket lid assembly at the top of the basket. For the weld calculation, it is conservatively assumed that this weld will carry the full weight of the center tube assembly.

The primary stress in these attachment welds is shear.

$$\tau = Wg/A_{eff} = 1.32 \text{ ksi for 25 g}$$

where;

W = center tube assembly weight = 56 lbs
$A_{eff} = 2(\pi D_{center\ tube})(t_{eff}) = 1.06$ in^2
$D_{tube} = 1.9$ inch
$t_{eff} = 0.7071(1/8) = 0.0884$ in

Margin of safety:

$$MS = (0.35 \times 0.6S_m/\tau)-1 = 1.96$$

where S_m = 18.6 ksi for SA240, Type 304 at 400 °F

0.35 = weld quality factor for visual inspection, ASME Section III Subsection NG, Table 3352-1.

Basket Tube End Cap to Bottom Disk Weld

The basket tube end cap is welded to the base disk with a 1/4-inch fillet weld around the circumference. However, the end cap fits inside of a hole in the base disk so this weld would not

be loaded significantly by the top end drop. The reaction load for the top end drop would be carried primarily by bearing between the end cap and the base disk.

Bearing stress between the fuel tube end cap and the base disk

$\sigma_b = Wg/18A_{end\ cap} = 0.479$ ksi for 25 g

where;

W = Weight of (basket+lid+18 fuel assemblies-base disk)
= 695 lbs + 30 lbs + 18(20 lbs) – 20 lbs = 1,065 lbs

$A_{end\ cap} = \pi/4[(OD_{end\ cap})^2 - (ID_{bottom\ disk\ opening})^2] = 3.09\ in^2$

$OD_{end\ cap} = 2.5$ in
$ID_{bottom\ disk\ opening} = 1.52$ in

Margin of safety:

$MS = (1.0S_y/\sigma_b)-1 = large$

where $S_y = 20.7$ ksi for SA240, Type 304 at 400 °F

Basket Lid Assembly

The basket lid assembly is a 1/2-inch stainless steel plate which covers the top end of the basket assembly. The lid assembly includes the lid plate, lid collar, collar cover plate, and lifting lugs. For the analysis, the lid is assumed to be simply supported at the location of the lid collar tube and the total weight (impact load) is assumed to act on the bottom face of the lid. The total weight of the NRU/NRX basket assembly, spacer assembly plus 18 fuel assemblies, or caddies containing rods/targets, is 1,170 lbs.

Since the basket lid plate is not a solid disk, due to the presence of several holes in the lid plate, the bending stress on the canister lid is calculated with a finite element analysis model (FEA). A quarter symmetry model of the lid plate was constructed. The following depicts the FEA Model.

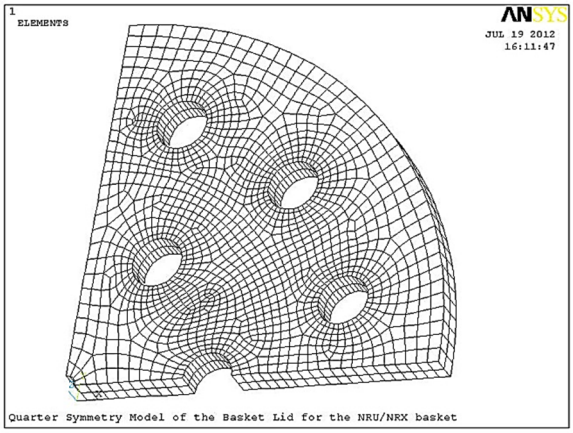

The linearized membrane stress and membrane plus bending stress for a 1 g load are 281 psi and 676 psi, respectively. Since this is a linear model, these stresses can be scaled. Therefore, for a 25 g load;

P_m = 7.03 ksi

$P_m + P_b$ = 16.9 ksi

Margin of safety:

$.0S_m/P_m) -1 = 1.65$

$MS_{m+b} = (1.5S_m/P_m + P_b) -1 = 0.65$

where S_m = 18.6 ksi for SA240, Type 304 at 400 °F

Lid Collar Tube

The lid collar tube is attached to the top of the basket lid. The lid collar tube is also subjected to compressive stress in the top end drop:

$\sigma_c = Wg/A_{collar\ tube}$ = 10.1 ksi for 25 g

where;

W = Weight of (basket assembly + basket lid assembly + 18 fuel assemblies + spacer assembly)
= 695 lbs + 30 lbs + 18(20 lbs) + 115 lbs = 1,200 lbs

$A_{collar\ tube} = \pi/4(OD^2-ID^2) = 2.97\ in^2$

for

OD = 8.0 in
ID = 7.76 in

Margin of safety:

$MS = (1.0S_m/ \sigma_c) -1 = 0.84$

where S_m = 18.6 ksi for SA240, Type 304 at 400 °F

Bearing Stress between the Basket Lid Assembly and the LWT Cask Lid

$\sigma_b = Wg/A_{collar+cover\ plate} = 0.781$ ksi for 25 g

where;

W = 1,200 lbs

$A_{collar+cover\ plate} = \pi/4(OD^2) - A^2 = 38.43\ in^2$

OD = 8.0 in
A = Width of opening in collar cover plate = 3.44 in

Margin of safety:

$MS = (1.0S_y/ \sigma_b) -1 =$ large

where S_y = 20.7 ksi for SA240, Type 304 at 400 °F

Bottom Support Disk

This disk will only support the weight of the spacer assembly (115 lbs) for the top end drop whereas it will support the total weight of the basket assembly, the basket lid assembly and the 18 fuel assemblies (1,085 lbs) in the bottom end drop case. Therefore, the bottom end drop will be controlling for the bottom support disk.

Spacer Assembly

For the top end drop, the spacer assembly is only subjected to its own weight. However, in the bottom end drop the spacer assembly will have to carry the weight of the basket assembly and the fuel assemblies. Therefore, the bottom end drop will be controlling for the spacer assembly.

Fuel Caddy

The fuel assembly/rods may be contained in an aluminum caddy. The caddy consists of a cylinder with an end cap on the bottom. The cylinder has a 2.0-inch outer diameter and a 0.065-inch wall thickness and is constructed from 6061-T6 aluminum.

The only loading that the caddy will experience is its own weight of 5 lbs during the top end drop.

The compressive stress on the fuel caddy is calculated as:

$\sigma_c = Wg/A_{net} = 0.374$ ksi for 25 g

where; W = Weight of fuel caddy = 5 lbs

$A_{net} = \pi/4(OD^2-ID^2)[360-2\theta)/360] = 0.334$ in^2

OD = 2.0 in
ID = 2.0-2(0.065) = 1.87 in

and

$\Theta = 2\ Sin^{-1}\ (L/2r) = 53.5°$

where; L= 0.9 in (lateral width of cut-out in caddy wall) and r = OD/2

Margin of safety:

$$MS = (1.0S_m/ \sigma_c)-1 = \text{large}$$

where S_m = 5.6 ksi for 6061-T6 aluminum at 400 °F

2.6.12.14.1.2 Bottom End Drop

The acceleration for a 1-foot top end drop is 25 g.

Fuel Tube Assembly

The compressive stress on the fuel tube assembly is less than the top end drop since only the weight of the basket assembly and the basket lid assembly is supported in this case.

W = Weight of basket assembly + Weight of basket lid assembly = 695 lbs + 30 lbs = 725 lbs

Since this is less than the weight of 1,200 lbs supported by the tubes in the top end drop, the top end drop is controlling.

Support Disk to Basket Tube End Cap Welds

The load on these welds is the same for the bottom end drop as the top end drop; therefore, the shear stress would be the same.

Center Tube to Bottom Disk Weld

The fuel tube assembly consists of a cylindrical tube attached to a tube cap on the bottom of the fuel tube. This attachment weld is a full circumference 3/16-inch fillet weld. This weld would not support the full weight of the center tube assembly since the reaction load would be through the basket lid assembly. For the weld calculation, it is conservatively assumed that this weld will carry the full weight of the basket plus the lid and fuel assemblies.

The primary stress in these attachment welds is shear.

$$\tau = Wg/18A_{eff} = 2.35 \text{ ksi for 25 g}$$

where;

W = basket + lid + fuel assemblies – bottom disk
= 695 lbs + 30 lbs +18(20 lbs) – 15 lbs = 1,070 lbs

$A_{eff} = (\pi D_{bottom\ disk\ opening})(t_{eff}) = 0.633\ in^2$

$D_{bottom\ disk\ opening} = 1.52$ inch

$t_{eff} = 0.7071(3/16) = 0.1326$ in

Margin of safety:

$$MS = (0.35 \times 0.6S_m/\tau) - 1 = 3.75$$

where $S_m = 18.6$ ksi for SA240, Type 304 at 400 °F

0.35 = weld quality factor for visual inspection, ASME Section III Subsection NG, Table 3352-1.

Basket Lid Assembly

The basket lid assembly will not experience any significant loading in the bottom end drop.

Bottom Support Disk

The bottom support disk is a 1/2-inch stainless steel plate which covers the bottom end of the basket assembly. The bottom support disk is part of the center tube assembly which includes the center tube center locators and the center bolt insert. For the analysis, the bottom disk is assumed to be simply supported at the location of the lid collar tube from the spacer assembly below the basket assembly and the total weight (impact load) is assumed to act on the top face of the bottom support disk.

Since the bottom support disk plate is not a solid disk due to the presence of several holes in the lid plate, the bending stress on the canister lid is calculated with a finite element analysis model (FEA). A quarter symmetry model of the lid plate was constructed.

The FEA model of the basket lid plate is shown as follows:

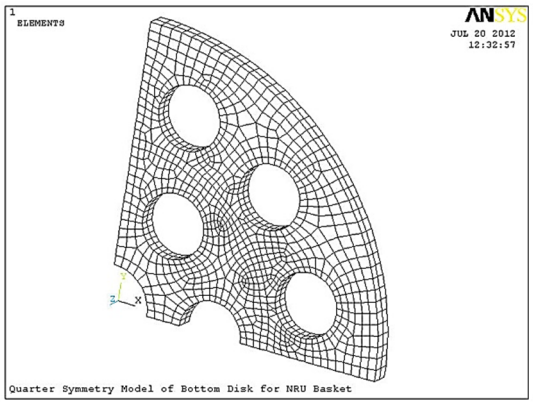

The linearized membrane stress and membrane plus bending stress for a 1 g load are 351 psi and 960 psi, respectively. Since this is a linear model, these stresses can be scaled. Therefore, for a 25 g load:

P_m = 8.78 ksi

$P_m + P_b$ = 24.03 ksi

Margin of safety:

$MS_m = (1.0S_m/P_m) - 1 = 1.11$

$MS_{m+b} = (1.5S_m/P_m + P_b) - 1 = 0.16$

where S_m = 18.6 ksi for SA240, Type 304 at 400 °F

Spacer Assembly

The spacer assembly will be subjected to its own weight plus the weight of the basket, lid and fuel assemblies.

Spacer Tube

The spacer tube will experience a compressive stress due to the bottom end drop. The compressive stress is given by;

$\sigma_c = Wg/A_{spacer\ tube}$ = 9.93 ksi for 25 g

where;

W = Weight of (basket assembly + basket lid assembly + 18 fuel assemblies + spacer assembly- base disk)

= 395 lbs + 30 lbs + 18(20 lbs) + 115 lbs – 20 lbs = 1,180 lbs

$A_{spacer\ tube} = \pi/4(OD^2-ID^2) = 2.97\ in^2$

for

OD = 8.0 in
ID = 7.76 in

Margin of safety:

$MS = (1.0S_m/\ \sigma_c) = 2.0$

where S_m = 18.6 ksi for SA240, Type 304 at 400 °F

Spacer tube buckling analysis

The column length to radius ratio is:

$L/r_m = 23.5/3.94 = 5.96$

where;

L= distance between disks = 23.5 in
r_m = mean radius of spacer tube = ¼(OD+ID) = 3.94

This means that the tube will not buckle as a classical Euler column, instead the buckling mode would be localized buckling (bellows or diamond pattern). For this mode of buckling, the critical compressive stress is given in Blake:

$$S_{cr} = E\frac{0.605 - m^2 x10^{-7}}{m(1+0.004\phi)} = 79.8\ ksi$$

where;

$E = 26.5 \times 10^6$ psi for SA240, Type 304 at 400 °F
$S_y = 20.7$ ksi for SA240, Type 304 at 200 °F
$ø = E/S_y = 1280$
$m = r_m/t = 32.83$
$r_m = 1/2(OD/2+ID/2) = 3.94$ in
$t = 1/2(OD-ID) = 0.12$ in

Margin of safety:

$MS = (S_{cr}/ \sigma_c) -1 = 7.04$

Base disk

Since there is only a small offset between the spacer tube OD and the ID [1/2(9.56-8.0) = 0.78] of the base ring below the base disk, there will not be any significant bending of the base disk in the spacer assembly.

Spacer base

The spacer base is a cylindrical tube beneath the base disk of the spacer assembly. This tube will be subjected to a compressive stress due to the total weight of the basket, lid, fuel and spacer assemblies.

$\sigma_c = Wg/A_{spacer\ base} = 2.05$ ksi for 25 g

where;

W = Weight of (basket assembly + basket lid assembly + 18 fuel assemblies + spacer assembly)
= 695 lbs + 30 lbs + 18(20 lbs) = 115 lbs = 1,200 lbs

$A_{spacer\ base} = \pi/4(OD^2-ID^2)-2(\text{slot width})(\text{tube thickness}) = 14.6$ in^2

OD = 10.75 in
ID = 9.75 in
Slot width = 0.75 in
Tube thickness = ½(OD-ID) = 0.5 in

Margin of safety:

$$MS = (1.0S_m/\sigma_c) - 1 = 8.07$$

where S_m = 18.6 ksi for SA240, Type 304 at 400 °F

Fuel caddy

The fuel caddy will only experience the self-weight of the aluminum cylinder for the bottom end drop. This weight is less than the total weight of the cylinder plus the bottom plate. Therefore, the top end drop is controlling for this component.

2.6.12.14.1.3 Side Drop

The acceleration for the 1 foot side drop is 25 g. For the side drop, the reaction loads will be carried by the support disks. The fuel tubes will be subjected to bending between the support disks.

Fuel Tube Assembly

The fuel tube assemblies are supported by five middle support disks plus a top disk and a bottom disk. The fuel tubes are unsupported between the support disks. To calculate the bending stress, the fuel tube section between the support disks will be assumed to be a simply supported beam. This is a conservative approach since the presence of the support disk and the continuity of the tube will add stiffness at the point where the fuel tube passes through the support disk.

$M_{max} = wl^2/8 = 23.74$ in-lbs

where;

$w = (W_{tube} + W_{fuel})/L = 0.452$ lbs/in
$W_{tube} = 32$ lbs
$W_{fuel} = 20$ lbs
L = length of fuel = 9’7” = 115 in
l = disk spacing = 20.5 in

Then the bending stress is given by;

$\sigma_b = Mc/I = 1.17$ ksi for 25 g

where;

$c = OD_{tube}/2 = 1.25$ in
$I = \pi/64(OD^4-ID^4) = 0.636$ in^4
$OD_{tube} = 2.5$ in
$ID_{tube} = 2.26$ in

Margin of safety:

$MS = (1.5S_m/ \sigma_c) -1 =$ large

where; $S_m = 18.6$ ksi for SA240, Type 304 at 400 °F

Support Disk Bearing Stress

From Roark, Table 33, Case 2c

$\sigma_c^{Max} = 0.591(pE/K_D)^{1/2} = 6.52$ ksi for 25 g

where;

$K_D = D_1D_2/(D_1-D_2) = 1690$

D_1 = ID of LWT Cask = 13.375 in
D_2 = OD of Support Disk = 13.27 in
$p = gW/L$
W = (basket lid assembly + weight of fuel assemblies) = 725 lbs + 18(20 lbs) = 1,085 lbs
L = total thickness of support disks = 7(1/2) = 3.5 in

Margin of safety:

$MS = (1.0S_y/ \sigma_c) -1 = 2.17$

where; $S_y = 20.7$ ksi for SA240, Type 304 at 400 °F

Center Tube Assembly

The fuel tube assemblies are supported by five center locators plus a top support disk and a bottom support disk. The center tube is unsupported between the center locators. To calculate the bending stress, the fuel tube section between the support disks will be assumed to be a simply supported beam. This is a conservative approach since the presence of the support disk and the continuity of the tube will add stiffness at the point where the fuel tube passes through the support disk.

$M_{max} = g(wl^2/8) = 407.5$ in-lbs for 25 g

where;

$w = \rho A = 0.3103$ lbs/in
$\rho = 0.29$ lbs/in^3
$A = \pi/4(OD^2-ID^2) = 1.07$
$OD_{tube} = 1.90$ in
$ID_{tube} = 1.50$ in
l = length of between center locators = 20.5 in

Then the bending stress in the center tube assembly is given by;

$\sigma_b = Mc/I = 0.99$ ksi for 25 g

where;

$c = OD_{tube}/2 = 0.95$ in
$I = \pi/64(OD^4-ID^4) = 0.391$ in^4

Margin of safety:

$MS = (1.5S_m/\sigma_c) - 1 =$ large

where; $S_m = 18.6$ ksi for SA240, Type 304 at 400 °F

2.6.12.14.1.4 Thermal Stress

The thermal stress in the basket assembly is determined from a finite element model and the temperature distribution from a corresponding thermal model. A complete description of the thermal model is given in Chapter 3. The structural model for thermal stress evaluation was derived from the thermal model by deleting the elements associated with modeling of the gas conduction and radiation effects. Then, the remaining thermal conduction elements were converted to the corresponding structural elements. The temperature distribution was applied to the structural model by reading the temperature from the thermal results. The structural FEA model is shown below.

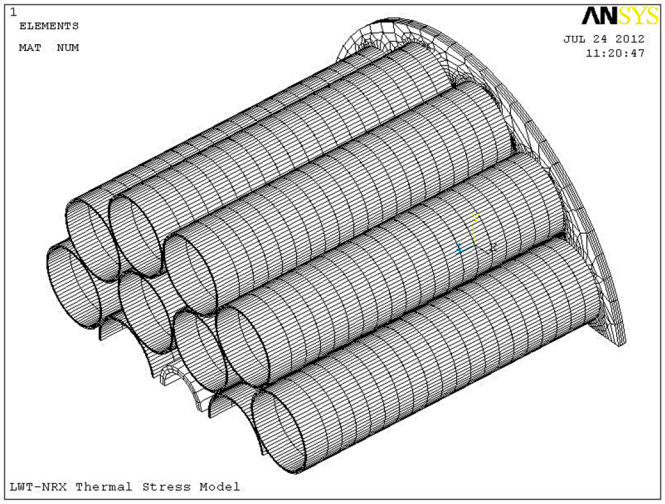

Structural Model Used to Evaluate Thermal Stresses

Standard symmetry boundary conditions were applied to the two cut planes (XY plane and XZ plane) and all of the nodes at the cut end of the fuel tubes were coupled in the UZ degree of freedom. To prevent rigid body motion, all nodes on the YZ plane were constrained in the UX direction. A plot of the calculated thermal stresses is shown as follows.

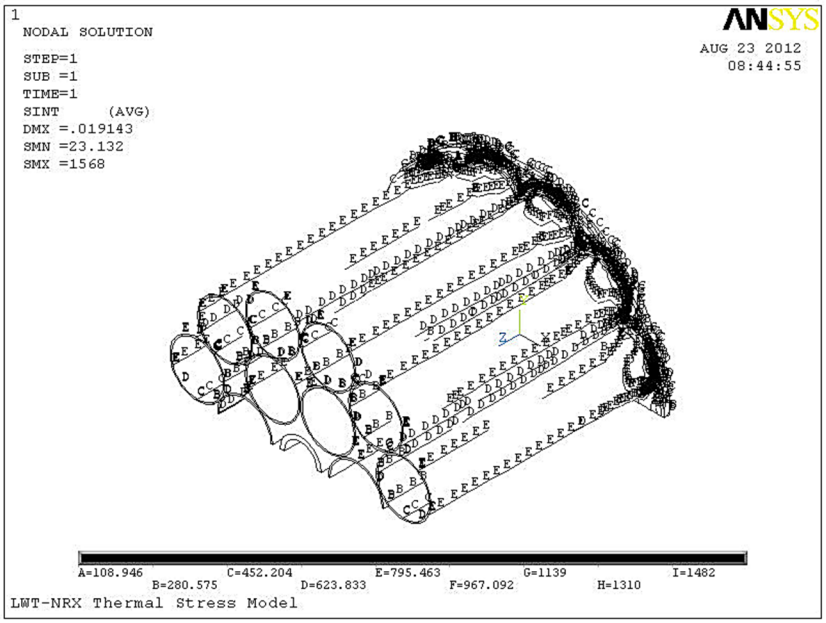

Thermal Stresses

The maximum peak thermal stress in the model is 1.6 ksi as shown in the stress plot. These stresses are conservatively combined with the maximum calculated stress from the drop cases for normal conditions of transport and compared to the primary plus secondary allowable of $3.0S_m$.

$$P_{m+b} + Q_{max} = 24.95 \text{ ksi} + 1.5 \text{ ksi} = 26.45 \text{ ksi}$$

Margin of Safety

$$MS = [3.0S_m / (P_{m+b} + Q_{max})] - 1 = 1.11$$

where; S_m = 18.6 ksi for SA240, Type 304 at 400 °F

2.6.12.15 HEUNL Container



There will be a total of 4 HEUNL containers in the LWT cask. A support spacer will be located at the bottom of the LWT cask between the bottom container and the bottom forging of the LWT cask. The HEUNL containers and the support ring are structurally evaluated with a combination of standard handbook formulas and finite element models.

The weight of each container is 350 lbs and the weight of the HEUNL fluid was calculated to be 176 lbs which gives a total of 526 lbs. A partially filled container would weigh less but it is conservative to use the weight of a fully filled container.

2.6.12.15.1 Finite Element Models

HEUNL Container FEA Model

The finite element model (FEA) was constructed of ANSYS SOLID45 3D elements and CONTAC52 gap elements. Both the HEUNL container and contained fluid were modeled. There

are CONTAC52 elements between the outside surface of the fluid region and the inner surface of the container to model the compression only loading by the liquid. For the side drop case, CONTAC52 elements were added to the outer surface of the guide rails to determine the load distribution between the HEUNL container and the inner surface of the LWT cask. The HEUNL container FEA model is shown in the Figure 2.6.12-11 through Figure 2.6.12-13.

Figure 2.6.12-11 HEUNL Container – Outside View



Figure 2.6.12-12 HEUNL Container – Inside View



Figure 2.6.12-13 HEUNL Container – Gap Elements Shown



Support Ring Model

The support ring is a flat annular, machined ring. The support ring is constructed from SA-240, Type 304. An axisymmetric FEA model of the support ring was constructed for the bottom drop structural evaluation. Gap elements were placed at the bottom edge of the ring to account for possible lift-off of one edge. The support ring is not loaded significantly by the side drop or the top end drop. The FEA Model is shown in Figure 2.6.12-14. Vertical constraints were applied to the lower end of the gap elements and a pressure load was applied to the model top surface for the inertial load of the containers.

Figure 2.6.12-14 HEUNL Container Support Ring – Axisymmetric Model

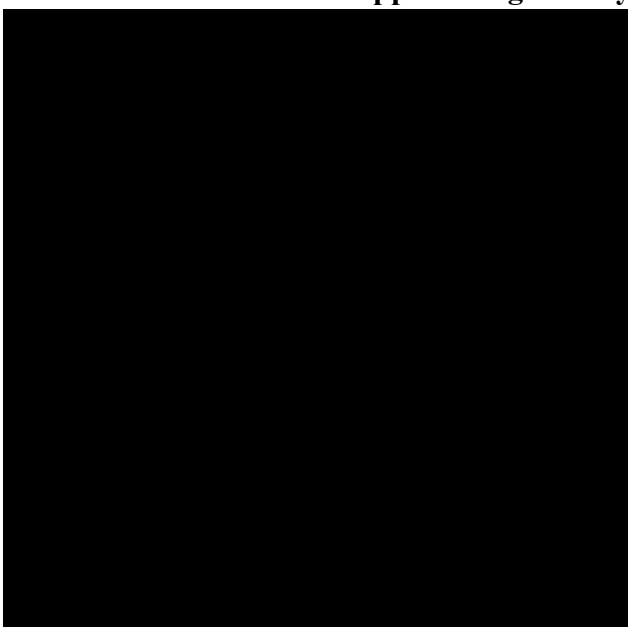

Closure Assembly Model

The closure lid is a circular flat plate which is attached to the container head with six ½ inch-13 UNC cap screws. There are two O-rings under the closure lid for sealing purposes. A quarter symmetry model is used for the closure assembly. The closure lid, the O-rings, a portion of the container head and the liquid region are modeled with ANSYS SOLID45, 3D solid elements. The bolts are modeled with ANSYS BEAM4, 3D beam elements. The beam elements representing the bolts are connected to the 3D solid elements with a spider array of rigid, massless beam elements. The FEA model is shown in Figure 2.6.12-15 and 2.6.12-16.

Figure 2.6.12-15 Closure Assembly Model



Figure 2.6.12-16 Bolt Modeling

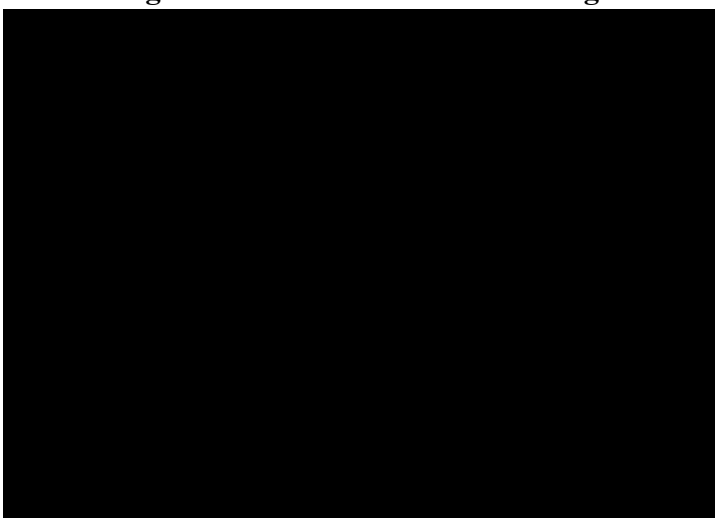

Fill/Drain Port FEA Model

The fill/drain port model is shown in Figure 2.6.12.17. The geometry was imported into the ANSYS software from AutoCAD and meshed with SOLID186, 3D solid elements. Due to the complexity of the geometry, tetrahedral elements are used. This is an acceptable approach since the elements have mid-side nodes. Note that the fluid region is included in the model for evaluation of freezing of the HEUNL fluid due to cold conditions. In the model, the fluid region extends up to the bottom edge of the counter-bore which neglects the presence of the quick disconnect. This is a conservative approach since it produces more expansion in this region.

Also note that a mesh sensitivity study was conducted to arrive at the mesh density shown below.

Figure 2.6.12-17 Fill/Drain Port Model



2.6.12.15.2 HEUNL Container 1-Foot Drop Cases and Pressure Cases

The HEUNL container is evaluated for both end drops (top and bottom drops) and a side drop. An equivalent acceleration of 25 g is used to evaluate the 1-foot drops.

For each drop case the FEA model is utilized. The linearized stresses are checked at 14 section locations. These sections used are shown in Figure 2.6.12-18 and Figure 2.6.12-19.

Figure 2.6.12-18 HEUNL Container – Section Locations



Figure 2.6.12-19 HEUNL Container – Section Locations



Sections P6, P7 and P13 are not shown in the figures but are located at the center of the container shell half way between the bottom end cap and the top end cap.

The allowable stress S_m for SA-240, Type 304 at 200 °F is 20 ksi.

Design Pressure Case

As identified in Section 8.1.4.4 the canister is to be hydrostatically tested to 140 +10/-0 psig. This condition is treated as a normal condition, which bounds the maximum pressure expected during normal operational conditions identified in Section 4.5.6. A pressure case of 150 psig was evaluated. For this case a 30° sector of the 180° model was used and the liquid region of material was eliminated.

The maximum membrane stress intensity from the 14 section cuts was 3.24 ksi and the maximum membrane plus bending stress intensity was 4.83 ksi. For the Normal Conditions of Transport, the margin of safety is 4.67 for the membrane stress and 5.21 for the membrane plus bending stress.

1 Foot Side Drop

For the side drop each container rests against the inner shell of the LWT cask. The gap elements on the outside surface of the guide bars have two nodes. The outermost nodes are constrained in the radial, tangential and axial direction. This boundary condition represents the inner surface of the LWT cask as rigid, which is a conservative approach since this produces higher loads on the container guide rails.

For the side drop case an acceleration of 25 g is applied in the lateral (X) direction.

The maximum membrane stress intensity from the 14 section cuts was 2.58 ksi and the maximum membrane plus bending stress intensity was 4.77 ksi. For the Normal Conditions of Transport, the margin of safety is 6.75 for the membrane stress and 5.29 for the membrane plus bending stress. For additional details refer to item 1 in Section 2.6.12.15.5.

The bearing stress between the guide rail and the inner surface of the LWT cask was also computed. Assuming that the entire weight of the filled container is supported by one guide rail, the bearing stress is 0.322 ksi. This gives a margin of safety greater than 10. For additional details refer to item 1 in Section 2.6.12.15.5.

1 Foot Bottom End Drop

For the bottom end drop case an acceleration of 25 g is applied in the vertical (Z) direction. The lowest container rests on the spacer ring, which rests on the bottom forging of the LWT cask. The vertical acceleration accounts for the weight of the lowest container; however, the remaining 3 containers are stacked on the top of the lowest container. To account for the weight of the other

three containers an equivalent pressure load is applied to the top of the FEA model for the bottom container.

The maximum membrane stress intensity from the 14 section cuts was 4.44 ksi and the maximum membrane plus bending stress intensity was 6.52 ksi. Comparing this to the allowable stress gives a margin of safety of 3.50 for the membrane stress and 3.60 for the membrane plus bending stress. For additional details refer to item 1 in Section 2.6.12.15.5.

The bearing stress between the lowest container and the top surface of the support spacer was computed. The bearing stress is 5.82 ksi. This gives a margin of safety against the yield strength of 3.30. The bearing stress between the bottom of the support ring and the bottom of the LWT cask was also checked. This bearing stress is 2.0 ksi, which gives a margin of safety of greater than 10. For additional details refer to item 1 in Section 2.6.12.15.5.

The container wall was also evaluated for potential buckling with a standard closed form solution. The calculated critical buckling stress calculated was 131 ksi. Compared to the calculated compressive stress in the container wall of 5.96 ksi, the margin of safety is greater than 10. For additional details refer to item 1 in Section 2.6.12.15.5.

The revised support ring FEA model was utilized to evaluate this case. The maximum membrane stress intensity calculated was 6.70 ksi and the maximum membrane plus bending stress intensity was 17.54 ksi. Comparing this to the allowable stress gives a margin of safety of 1.99 for the membrane stress and 0.71 for the membrane plus bending stress. For additional details refer to item 1 in Section 2.6.12.15.5.

1 Foot Top End Drop

For the top end drop case an acceleration of 25 g is applied in the vertical (-Z) direction. The topmost container rests on the closure lid of the LWT cask. The vertical acceleration accounts for the weight of the lowest container; however, the remaining 3 containers are stacked on the top of the lowest container. To account for the weight of the other three containers, an equivalent pressure load is applied to the bottom of the FEA model of the top container.

The maximum membrane stress intensity from the 14 section cuts is 5.01 ksi and the maximum membrane plus bending stress intensity is 5.96 ksi. Comparing this to the allowable stress gives a margin of safety of 2.99 for the membrane stress and 4.03 for the membrane plus bending stress. For additional details refer to item 1 in Section 2.6.12.15.5.

The bearing stress between the topmost container and the bottom surface of the LWT cask closure lid was also checked. The bearing stress is 1.76 ksi, which gives a margin of safety greater than 10. For additional details refer to item 1 in Section 2.6.12.15.5.

The container wall was evaluated for potential buckling with a standard closed form solution. The calculated critical buckling stress calculated was 131 ksi. The calculated compressive stress in the container wall is 5.96 ksi; therefore, the margin of safety is greater than 10. For additional details refer to item 1 in Section 2.6.12.15.5.

Pressure Case Combined with Drop Cases

The maximum stress intensities for the pressure case are added absolutely to the maximum stress intensities for the drop cases to get the combined stress intensity. The maximum combined membrane stress intensity is 7.13 ksi and the maximum combined membrane plus bending stress intensity is 9.74 ksi. Comparing this to the allowable stress gives a margin of safety of 1.81 for the membrane stress and 2.08 for the membrane plus bending stress. For additional details refer to item 1 in Section 2.6.12.15.5.



Thermal Stresses

Since the heat load for each HEUNL container is less than 5 Watts, there will not be any significant thermally induced stresses for the Normal Condition of Transport.

Extreme Cold Ambient Conditions (-40 °F)



2.6.12.15.3 Closure Assembly Model

The closure assembly model is evaluated for the conditions of bolt preload, normal pressure loading and cold conditions. The bolt preload requirement was determined by the maximum load required to resist the blow-off load for maximum pressure or the maximum load required to compress the O-rings to the point of metal-to-metal contact between the closure lid and the top of the container. The compression load required to compress the seals was larger than that required to resist the blow-off load. The bolt preload requirement was determined to be 18,000 lbs or 3,000 lbs per bolt.

The bolt preload for the FEA model was achieved by specifying as an initial strain for the beam elements representing the bolts.

Normal Condition Pressure Case

The stresses are linearized through the closure lid at two locations; 1) the center of the lid and 2) at the location of the maximum stress which is from the bottom of the counter-bore to the bottom of the lid. These paths are shown in Figure 2.6.12-20.

Figure 2.6.12-20 Stress Linearization Paths in Closure Lid



The normal condition pressure of 100 psi was applied to the lower surface of the closure lid from the center out to the inner diameter of the inner O-ring. The maximum stress occurs at the counter-bore for the cap screws in the lid. The linearized stresses at the two locations were checked. The maximum membrane stress was 12.2 ksi and the maximum membrane plus bending stress was 18.46 ksi. Comparing these stresses to the allowable stress gives a margin of safety of 0.64 for membrane stress and 0.63 for membrane plus bending.

The contact pressure on the inner seal is checked to ensure that full contact between the closure lid and the inner seal is maintained. This validates the assumption that the pressure load only extends to the inner radius of the inner seal.

The maximum axial bolt load calculated for the 100 psi case was 3,162 lbs. Using the thread tensile area, the bolt tensile stress calculated was 22.98 ksi. The maximum bolt moment calculated was 133.6 in-lbs. This produces a bending stress of 18.52 ksi. The combined axial plus bending stress is 41.5 ksi.

Bolt Stresses

Using an allowable stress of $(S_m)_{BM}$ = 36.85 ksi for SA 705, Type 630 (17-4 PH) at 150°F gives a margin of safety of 2.21 for the axial stress and 1.66 for axial plus bending stress.

Thread shear stress

The shear stress for the internal threads in the container is limiting since the bolt is SA 705, Type 630 and the container is SA 240, Type 304. The internal thread shear stress for a bolt load of 3,162 lbs is 3.48 ksi. Using the allowable for shear stress gives a margin of safety of 2.45.

For additional details refer to item 1 in Section 2.6.12.15.5.

Cold Conditions



Since the pressure in the container for cold conditions is 38.2 psig (52.9 psia), it is assumed that this pressure exists underneath the closure lid also. The 100 psig normal condition pressure load is applied from the center of the lid out to the inner radius of the inner seal.

The maximum stress occurs at the counter-bore for the cap screws in the lid. The linearized stresses at the two locations were checked. The maximum membrane plus bending stress was 28.86 ksi. Since this is a displacement controlled load, the allowable stress for membrane plus bending is $3S_m$. For SA 240, Type 304 at -40 °F, S_m is 20 ksi. Therefore the margin of safety is 1.08 based on the linearized membrane plus bending stress.

The contact pressure on the inner seal is checked to ensure that full contact between the closure lid and the inner seal is maintained. This validates the assumption that the pressure load only extends to the inner radius of the inner seal.

The maximum axial bolt load calculated for the cold condition case was 5,921 lbs. Using the thread tensile area, the bolt tensile stress calculated was 43.03 ksi. The maximum bolt moment calculated was 470.9 in-lbs. This produces a bending stress of 65.27 ksi. The combined axial plus bending stress is 108.3 ksi.

Bolt Stresses

Using an allowable stress of $(S_m)_{BM}$ = 38.3 ksi for SA 705, Type 630 (17-4 PH) for less than 100°F gives a margin of safety of 0.78 for the axial stress and 0.06 for axial plus bending stress.

Thread shear stress

The shear stress for the internal threads in the container is limiting since the bolt is SA 705, Type 630 and the container is SA 240, Type 304. The internal thread shear stress for the bolt load of 5,921 lbs is 6.52 ksi. Using the allowable for shear stress gives a margin of safety of 0.84.

For additional details refer to item 1 in Section 2.6.12.15.5.

2.6.12.15.4 Fill/Drain Port Model



To evaluate the stresses due to cold conditions, two paths are defined along the inner radius of the port passage. These paths are shown in Figure 2.6.12-21.

Figure 2.6.12-21 Stress Linearization Paths in Fill/Drain Ports

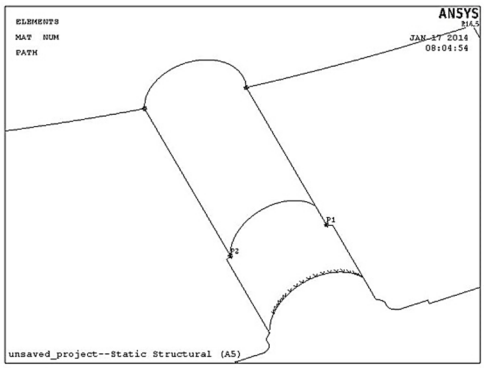

The maximum linearized stresses at these two locations are 16.78 ksi for membrane stress and 20.16 ksi for membrane plus bending stress. Since this is a displacement controlled load, the allowable stress for membrane plus bending is $3S_m$. For SA 240, Type 304 at -40 °F, S_m is 20 ksi. Therefore the margin of safety for the membrane plus bending stress is 1.98.

For additional details refer to item 1 in Section 2.6.12.15.5.

2.6.12.15.5 HEUNL Structural Calculations

1. 65008500-2010 “Canister Structural Evaluations for HEUNL in the NAC-LWT”

2.6.12.16 SLOWPOKE Fuel Core Basket

The SLOWPOKE fuel core basket assembly consists of the basket weldment, lid assembly weldment and an internal spacer assembly weldment. The basket weldment is 26.05 inches in length and consists of a circular cylinder which has an outer diameter of 10.75 inches with a 0.5-inch wall thickness. A base plate is welded to the bottom end of the cylinder and an annular ring with a 13.27-inch outer diameter and 0.75-inch thickness is welded to the top of the cylinder. A second annular ring with a 13.27-inch outer diameter and 0.5-inch thickness is welded near the midpoint of the cylinder. The lid assembly weldment is bolted to the top annular ring with six cone head bolts. The internal spacer assembly weldment fits inside of the basket and is bolted to the lid assembly with six socket head screws. The spacer assembly is 15.75 inches long and consists of a cylinder with two end plates attached. The outer diameter of the spacer cylinder is 8.0 inches and has a wall thickness of 0.38 inches. A shield plate, which has an outer diameter of 9.5 inches and is 1.5 inches thick, is welded to the lower end of the spacer cylinder and a base plate, with an outer diameter of 9.5 inches and 2.5 inches thick, is welded to the top end of the spacer cylinder.

The axial stack up of the basket, lid assembly and spacer leaves an axial gap of 9.8 inches between the end of the spacer assembly and the top of the basket base plate for the SLOWPOKE fuel core assembly. This space is sufficient to contain the SLOWPOKE fuel core assembly.

Due to the relatively small length of the SLOWPOKE basket as compared to the internal length of the LWT cask, five empty MTR basket assemblies are used as spacers between the lower end of the SLOWPOKE basket and the bottom forging of the cask. There are four intermediate MTR basket assemblies and one MTR base basket assembly between the SLOWPOKE basket and the bottom of the LWT cask.

The basket assembly, lid assembly and spacer assembly are fabricated from either SA-240/SA-269, Type 304 stainless steel or SA-269, Type 304 stainless steel. The cone head bolts are fabricated of SA-240, Type XM-19 stainless steel and the socket head screws are fabricated from SA-193, Grade B8S stainless steel.

2.6.12.16.1 SLOWPOKE Drop Analysis for the Normal Conditions of Transport

This section includes the evaluation of the SLOWPOKE basket, lid and spacer assemblies for longitudinal (end) and lateral (side) drop cases. The accelerations for the 1-foot drop cases are: an acceleration of 20 g for the end drop cases and 25 g for the side drop case.

The structural evaluation of the SLOWPOKE basket utilizes classic hand calculations.

Top End Drop

The acceleration used for the 1-foot top end drop is 20 g. The components which resist the load in a top end drop are; the lid assembly which is subjected to the weight of the loaded SLOWPOKE basket plus the 5 MTR spacers. For conservatism a bounding weight of 350 pounds is used for the loaded SLOWPOKE basket weight. The MTR basket assemblies have a bounding weight of 200 pounds each. The actual weights of these components are less.

A summary of the calculated stresses and margins of safety for the top end drop case are given in Table 2.6.12-4. Details of the calculations are given in Item 1 of Section 2.6.12.16-2.

Table 2.6.12-4 Stress Summary for Top End Drop Case

Assembly	Component	Stress Category	Calculated Stress (ksi)	Margin of Safety
Basket	Base Plate	Bearing	1.08	19.0
	Shell	Compression	1.49	11.9
Lid	Collar	Compression	9.09	1.12
	Collar cover plate	Bearing	0.87	23.8
Spacer	Shell	Compression	0.22	86.7
	Spacer/lid(1)	Bearing	0.034	633
	Spacer/lid(1)	Shear	0.16	70.9

Note:
(1) The spacer assembly bears against the base plate of the lid assembly for the top end drop case.

Bottom End Drop

The top end drop is the limiting case for the SLOWPOKE basket assembly since the basket components are only subjected to the weight of the loaded basket and will not be subjected to the weight of the empty MTR basket assemblies used as spacers below the SLOWPOKE basket. There is an increase in the bottom end drop bolts loads for the bolts attaching the basket lid spacer to the lid. However the bolt loads for the basket lid spacer are bounded by the side drop case.

Side Drop

The acceleration used for the 1 foot side drop is 25 g. The components which resist the load in a side drop are; the basket base plate and annular rings. In addition the spacer assembly is cantilevered from the lid assembly in the side drop case which produces bending and shear stresses in the spacer shell. This load case also results in bounding bolt loads for both the socket head screws and the cone head bolts.

A summary of the calculated stresses and margins of safety for the side drop case are given in Table 2.6.12-5. Details of the calculations are given in in Item 1 of Section 2.6.12.16-2.

Table 2.6.12-5 Stress Summary for Side Drop Case

Assembly	Component	Stress Category	Calculated Stress (ksi)	Margin of Safety
Basket	Shell	Bending	1.42	19.4
		Shear	0.212	20.8
	Base plate/rings	Bearing	5.25	3.14
Spacer	Shell	Bending	0.9	31.2
		Shear	0.2	56.6
Lid	Socket head screws	Tensile	6.11	2.42
		Thread shear	0.93	5.74
Lid	Cone head bolts	Tensile(2)	14.21	1.17
		Thread shear(1)	8.48	2.05

Notes:
(1) Bounding thread shear stress for external/internal shear
(2) For the reduced section of the cone head bolt

2.6.12.16.2 SLOWPOKE Structural Calculation

1. NAC Calculation 50026-2001, "Structural Evaluation of the SLOWPOKE Fuel Core Basket."

2.6.12.17 SrF_2 Baskets

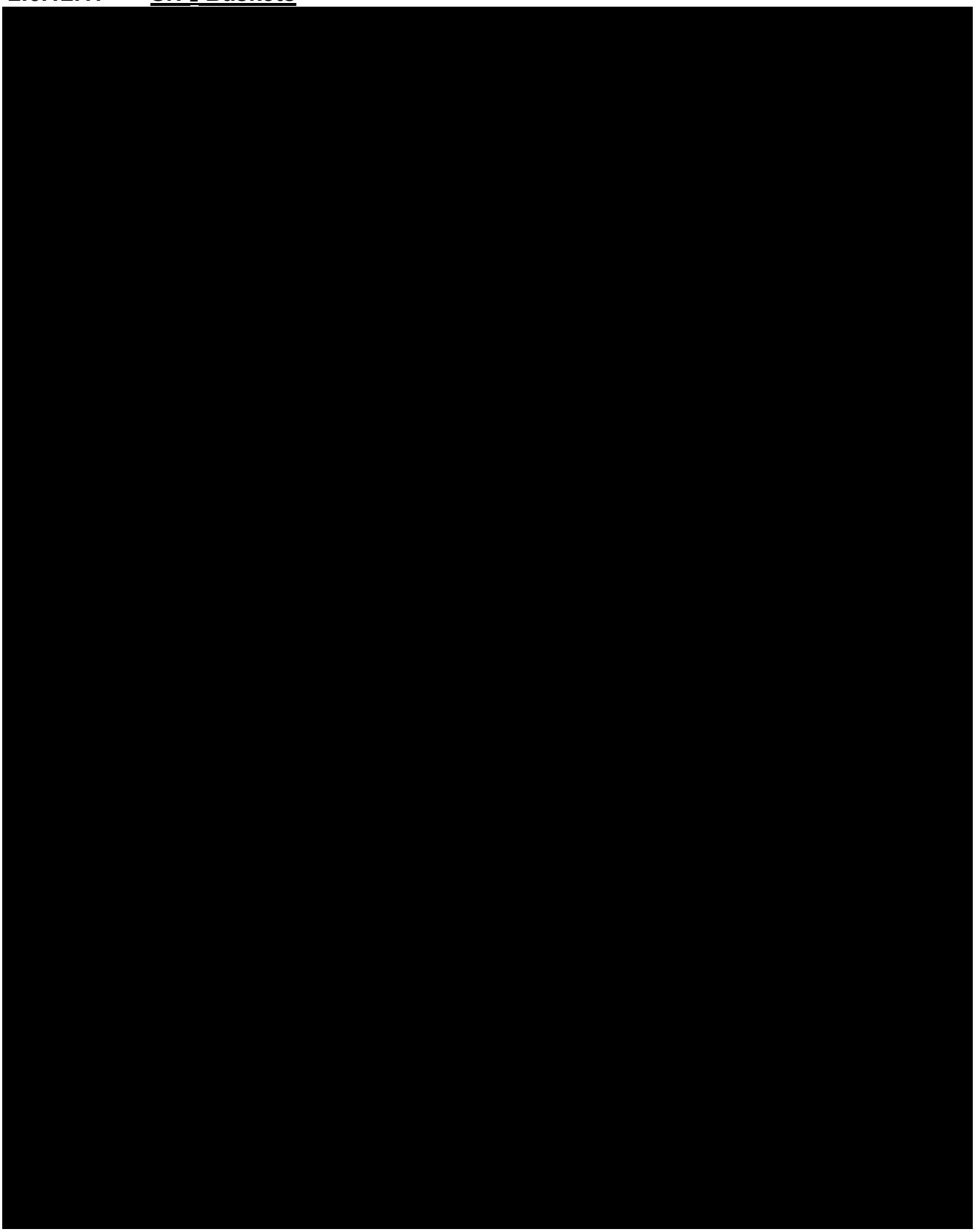

LWT Lid Spacer

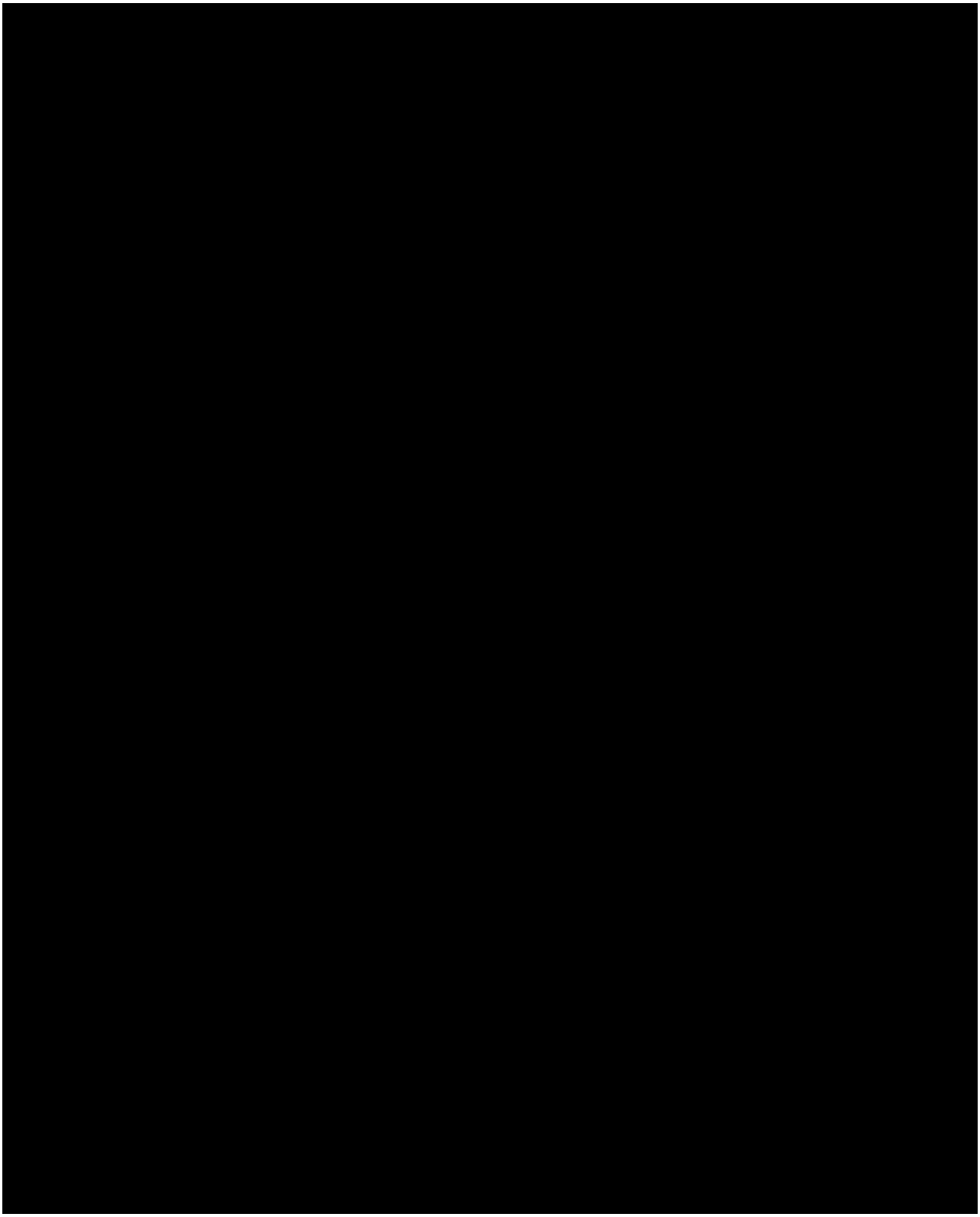

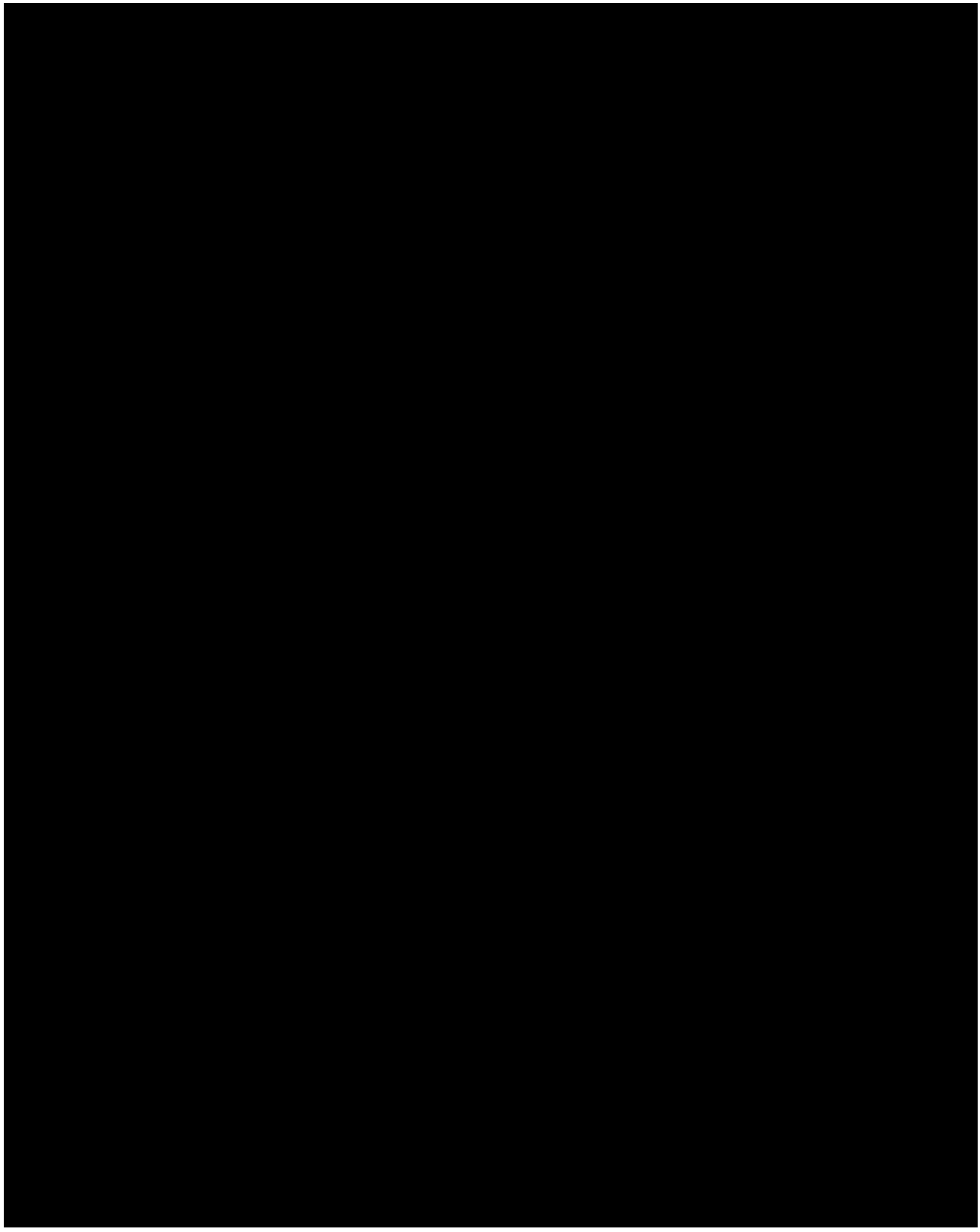

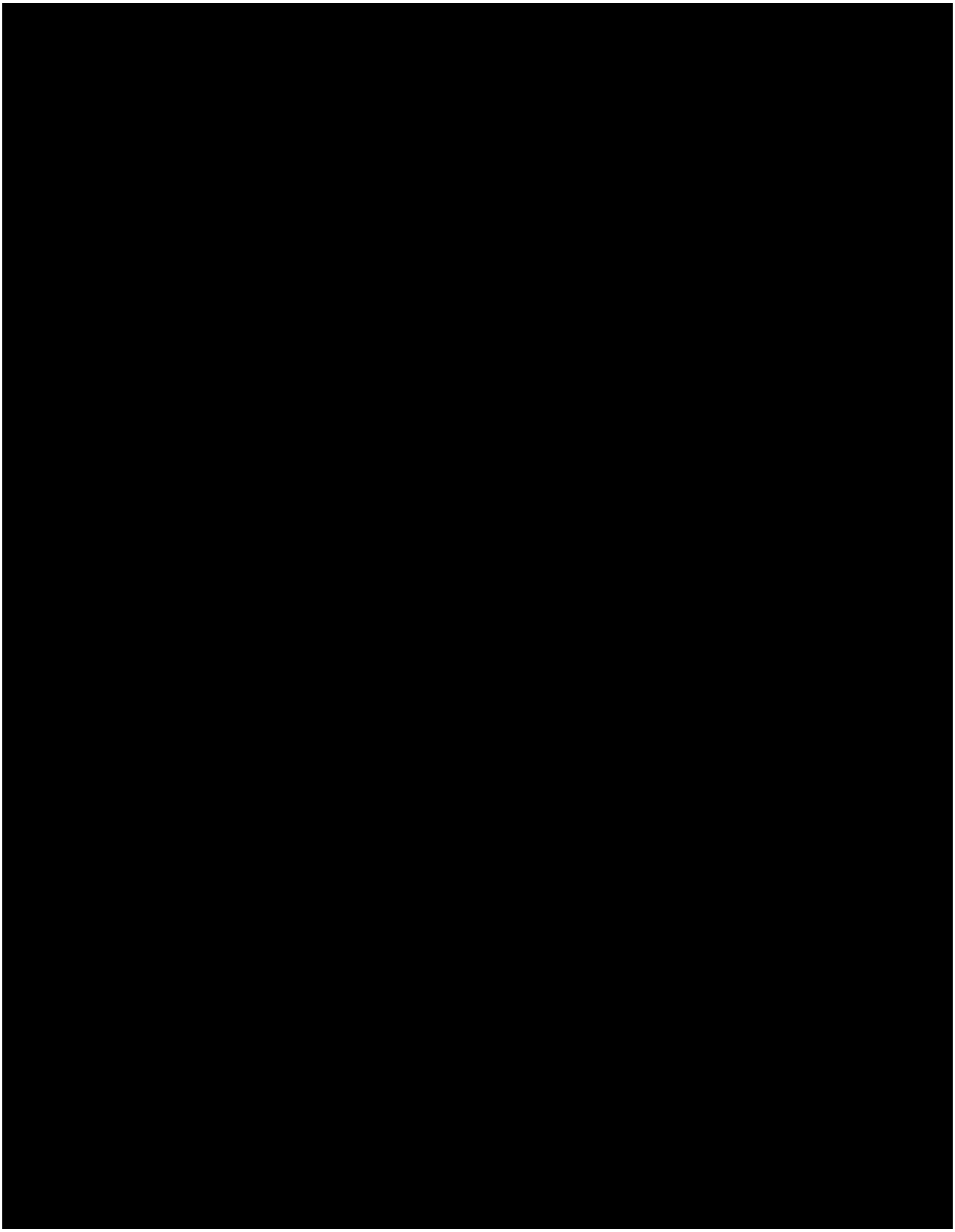

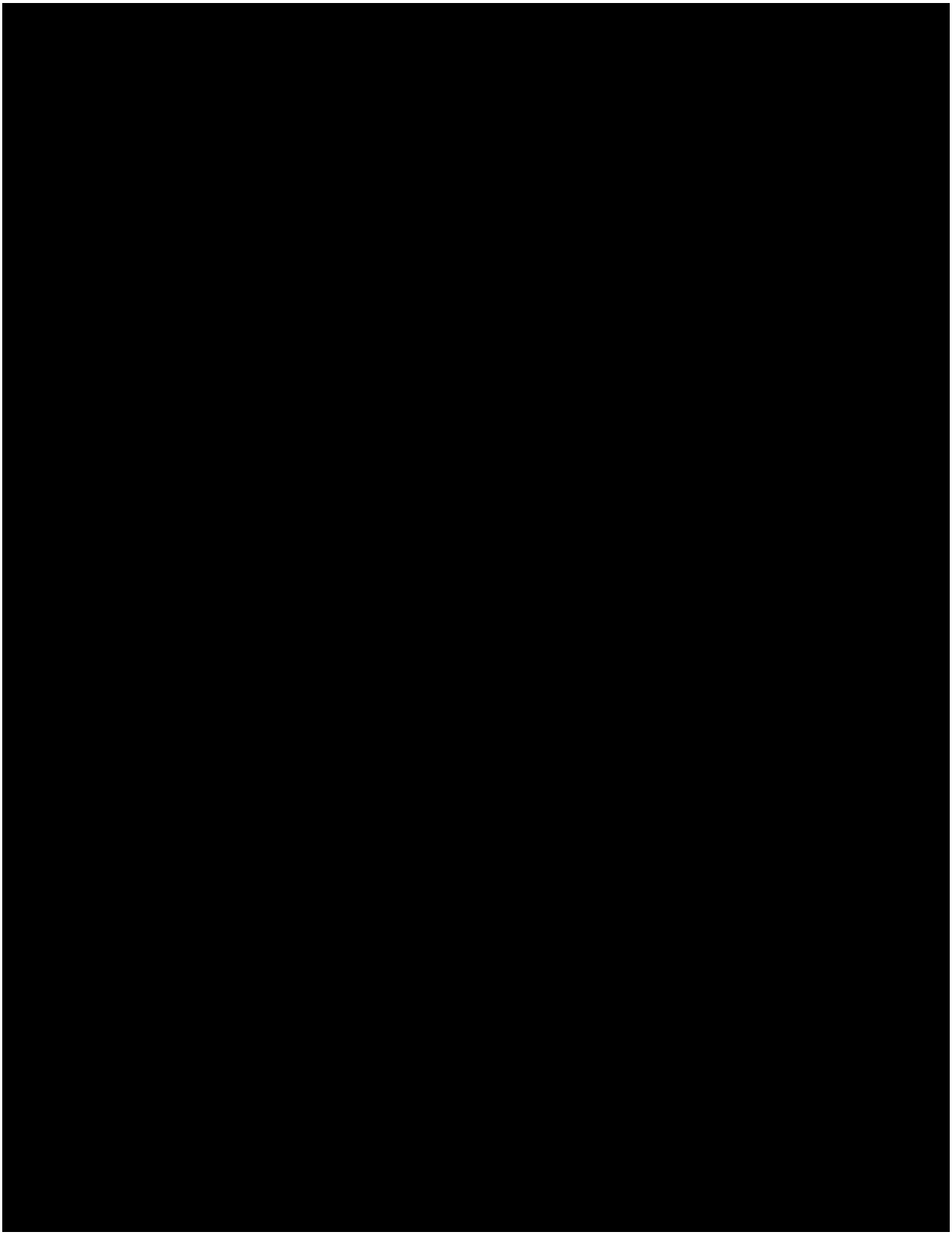



2.6.12.17.3 UCS Basket Analysis

The WESF capsules must be loaded into UCSs prior to being loaded into the UCS basket assembly in the NAC-LWT cavity. Three (3) UCSs are installed in the UCS basket assembly. Alternatively, up to two (2) UCS spacer assemblies may be used in lieu of UCSs. The UCS lid spacer must be installed unless the third/last loaded UCS is replaced by a UCS spacer assembly or capsule spacers are placed in the uppermost layer of the UCS basket assembly (i.e., layer adjacent the lid). Note that evaluation of the UCS basket assembly, which consists of the PWR fuel basket and a basket insert, is not required as the PWR basket is evaluated for a bounding loaded basket weight of 4,000 lb in Section 2.6.12.3 (the loaded basket weight for the UCS basket is 2,523 lb), and the basket insert is subjected to insignificant bearing load only and is bounded by the PWR basket evaluation. This section presents the evaluations of the UCS Assembly and the UCS LWT Lid Spacer for normal conditions of transport.

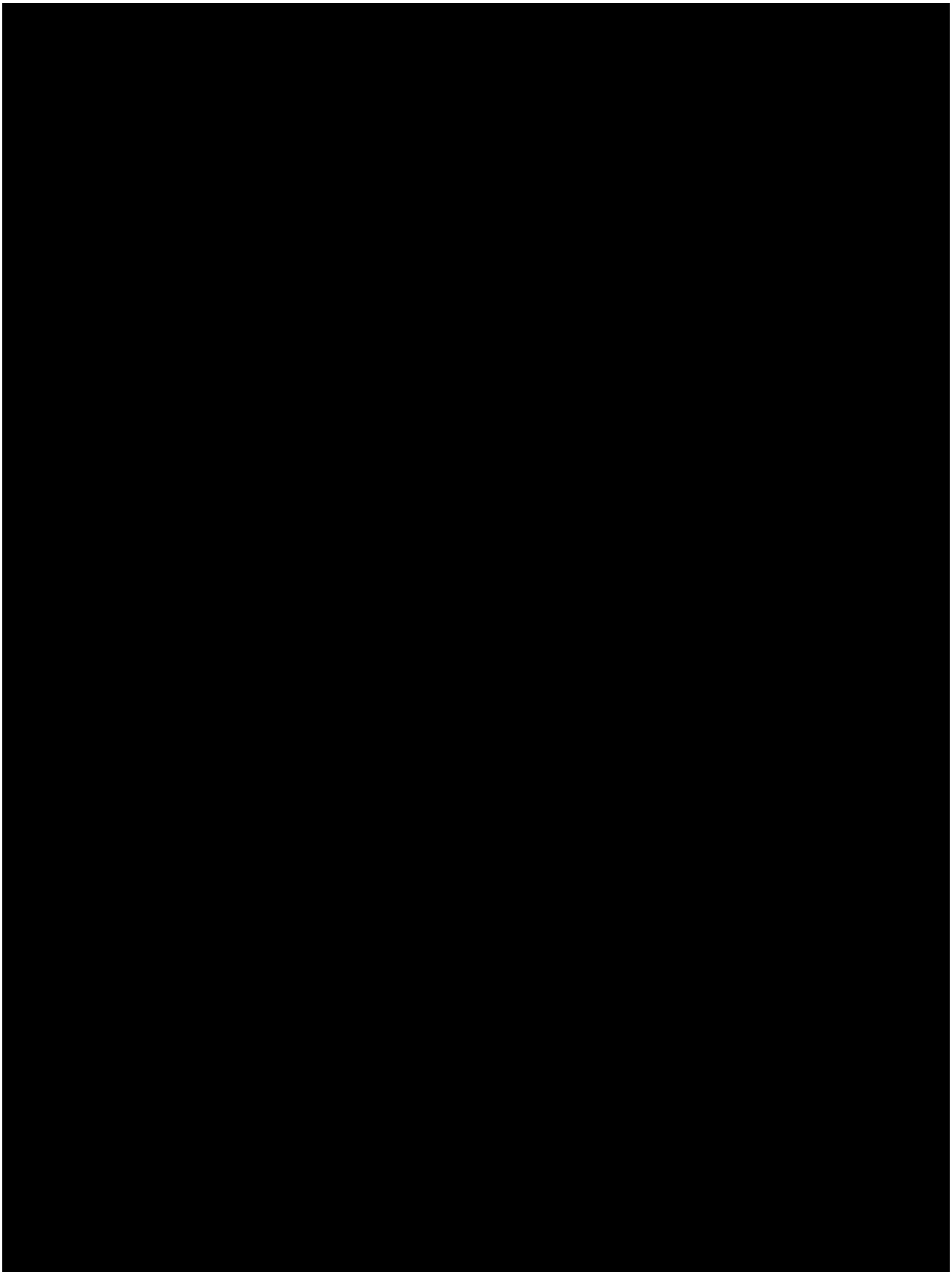

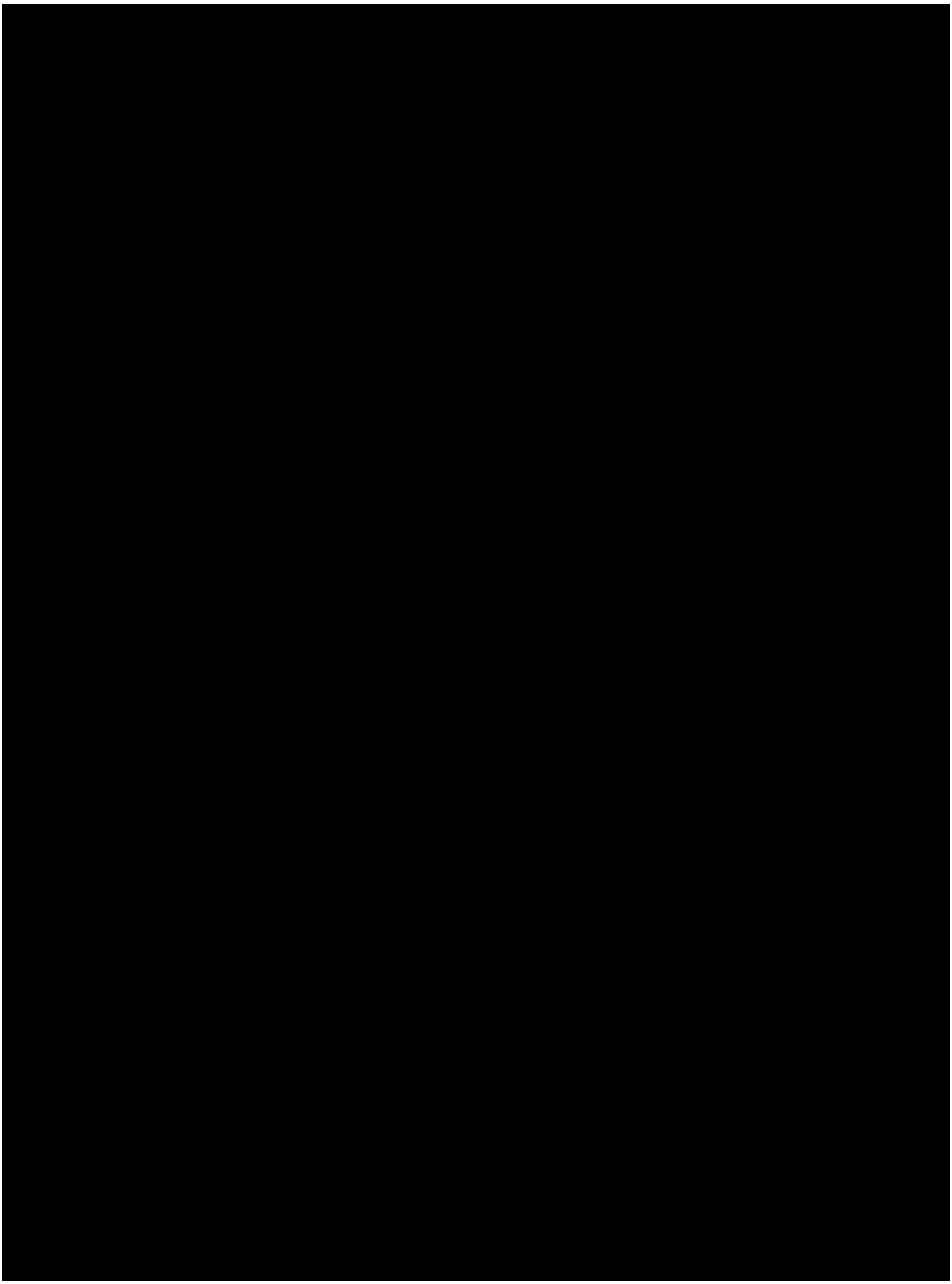

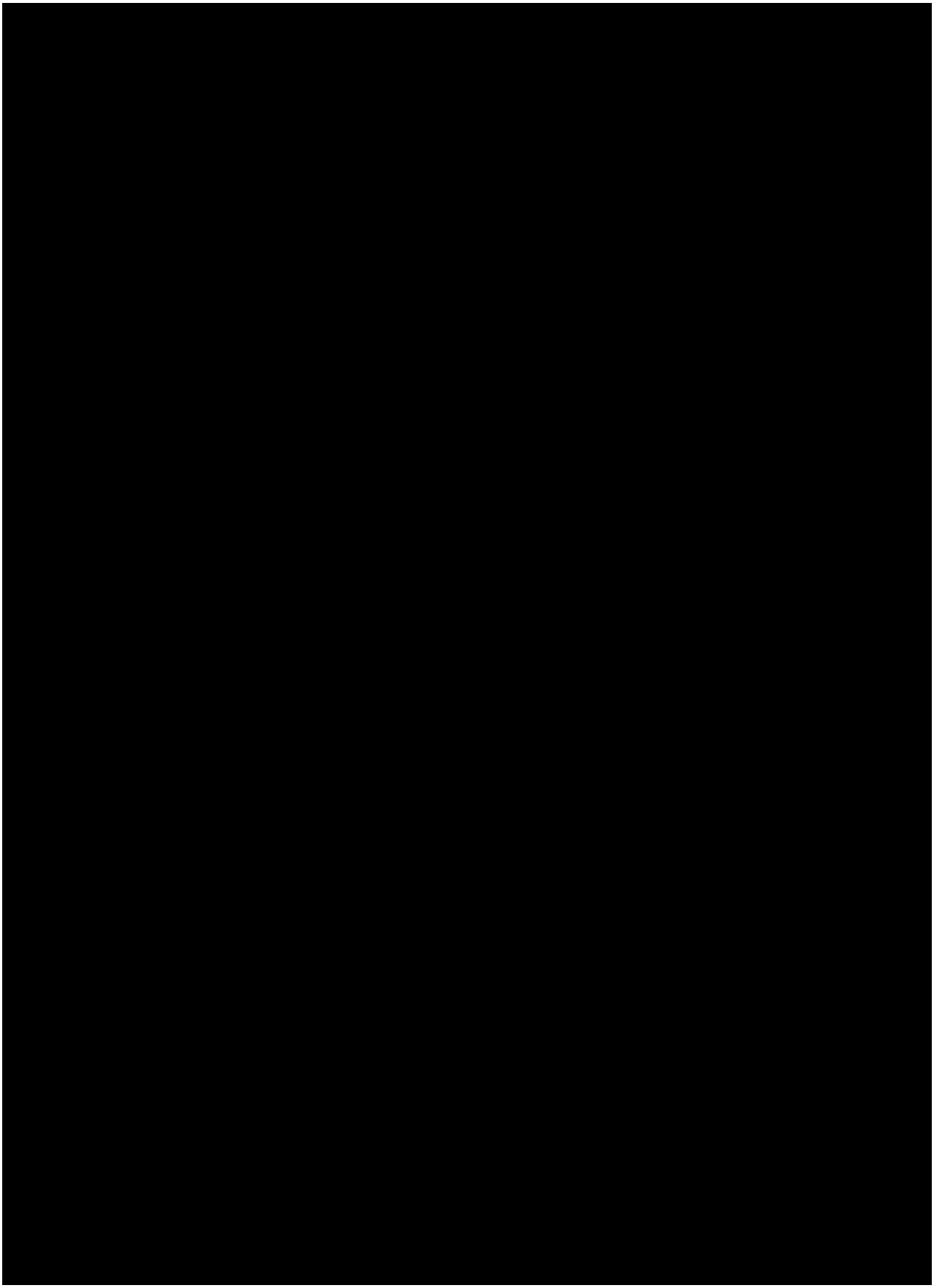

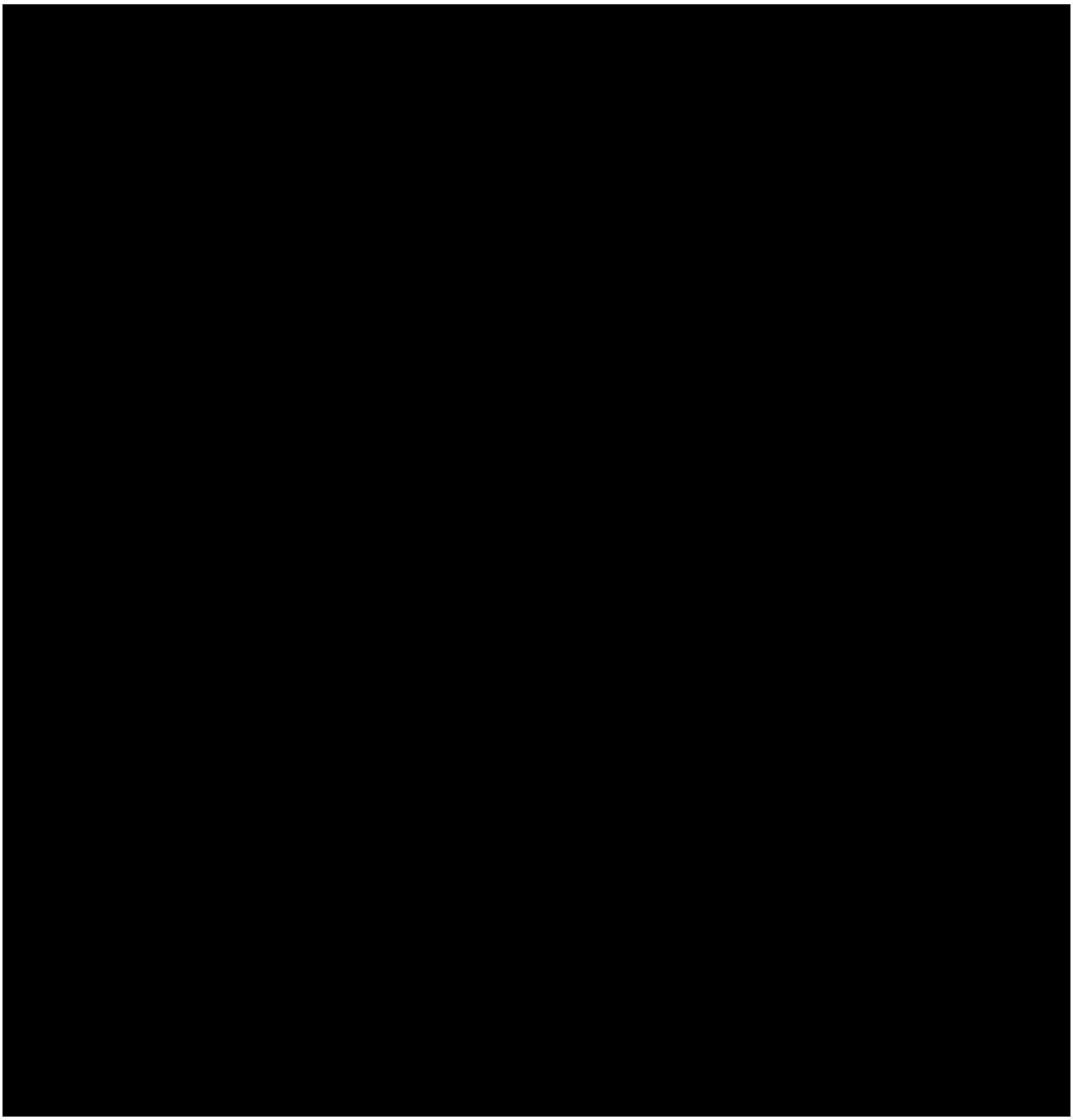

2.6.12.18 LANL MOX Fuel Transfer Tubes and Divider Plates

The LWT Transport Cask LANL MOX shipping configuration (drawing 315-40-188) consists of the LWT cask body assembly, the PWR basket assembly, PWR insert and the rod transport canister assembly, containing 16 transfer tubes (drawing 315-40-189) loaded with the LANL MOX Fuel Rods. As needed, stainless steel dunnage may also be inserted into the rod transport cannister assembly to provide additional configuration control. Note that LANL MOX shipping configuration utilizes the same rod transport can assembly and supporting cask internal structures used to ship high burnup rods within a 4×4 or 5×5 insert. In the LANL MOX configuration, the insert (4×4 or 5×5) is replaced by 16 transfer tubes and the content weight for the rod transport canister including permitted dunnage is 130 pounds less than that for the high burnup configuration. The rod transport canister assembly is evaluated in Section 2.6.7.10 and Section 2.7.1.7 for normal and accident conditions, respectively, for the transport of high burnup rod configuration. The content weight and material property temperatures used in the evaluation of the rod transport canister bound those of the LANL MOX configuration. Therefore, the rod transport canister assembly evaluations (as documented in Sections 2.6.7.10 and 2.7.1.7) are bounding and applicable to the same rod transport canister assembly with LANL MOX content. No further evaluation is required for the rod transport canister assembly or other cask internal structures.

The following sections present the evaluation of the transfer tubes for the end drop and side drop of normal conditions of transport. Note that the maximum heat load for LANL MOX fuel is 25 Watts per cask. Material properties and allowable stresses used in the evaluation are determined at a conservative temperature of 300°F since the maximum temperature for the LANL MOX configuration is less than 300°F during normal conditions of transport.

Additionally, the transfer tube assembly may be fabricated from Type 304 or 316 stainless steel. Since, the mechanical properties of Type 316 stainless steel are greater than or equal to those of Type 304 stainless steel, the properties of Type 304 are considered in the transfer tube analyses for NCT and HAC."

2.6.12.18.1 Transfer Tubes and Divider Plate – End Drop

In the end drop condition, the transfer tubes are subjected to inertia load due to self-weight (W_t) with a normal condition end drop acceleration (g_{end}) of 15.8g per Table 2.6.7-32. The transfer tubes are evaluated for membrane stresses (σ_m) as shown in the following table. Design Stress Intensity (S_m) is used as the allowable stress limit for primary membrane stresses per Table 2.1.2-2. The transfer tubes are made of Type 304 stainless steel. S_m is 20.0 ksi for Type 304 stainless steel at 300°F. As shown in the following table, the margins of safety are Large.

[redacted]

Transfer tube spacer may be used between the LANL MOX Fuel Rods inside the transfer tube. The membrane stress for the tube spacer is calculated to be 0.74 ksi using a bounding weight of 12.2 lb. for the transfer tube content (with the end drop acceleration of 15.8g), a cross-sectional area of 0.26 in^2. The margin of safety is also Large based on a design stress intensity of 14.9 ksi (S_m for Type 430 stainless steel at 300°F).

The shear stress in the optional fillet weld between the transfer tube wall and the end cap is evaluated. In the end drop, the weld is subjected to the inertia load of the transfer tube wall (43.9 lb.) only. The shear stress in the weld is calculated to be 1.13 ksi based on the effective area of the fillet weld (0.039 in^2). The margin of safety is +2.7 based on the allowable stress of $0.6S_m$ for shear stress and a weld quality factor of 0.35 (ASME B&PV Code, Section III, Subsection NG, Table NG-3352-2). S_m is 20 ksi for the base metal (Type 304 stainless steel at 300°F).

2.6.12.18.2 Transfer Tubes and Divider Plates – Side Drop

The transfer tubes have an identical geometry and equivalent or slightly stronger material compared to the 5×5 insert tubes used for the high burnup shipping configuration, which were evaluated for the side drop conditions of transport in Section 2.6.7.10. The temperature used for the evaluation of the insert tubes in Section 2.6.7.10 is significantly higher than the maximum temperature of the LANL MOX transfer tubes. The loaded tube weight used in evaluation in Section 2.6.7.10 is higher than the bounding weight of one loaded LANL MOX transfer tube weldment. The margin of safety for bending stress due to side drop is +1.07 for the 5×5 insert tubes. Therefore, the tube side drop evaluations for the high burnup configuration are applicable and bounding for the LANL MOX transfer tubes and no additional side drop evaluations are required for the LANL MOX transfer tubes.

2.6.12.19 Conclusion



2.7 Hypothetical Accident Conditions

The 10 CFR 71.73 requires the NAC-LWT cask to be structurally adequate for the free drop, puncture, fire and water immersion hypothetical accident scenario. In the free drop analyses, the cask impact orientation evaluated is that which inflicts the maximum damage to the cask. The 10 CFR 71.73 also requires the cask accident assessment to be at the most unfavorable ambient temperature in the range from –20°F to 100°F. The NAC-LWT cask is evaluated for structural integrity for the hypothetical accident conditions in this section.

2.7.1 Free Drop (30 Feet)

The NAC-LWT cask is required by 10 CFR 71.73(c)(1) to demonstrate structural adequacy for a free drop through a distance of 30 feet onto a flat, unyielding, horizontal surface. The cask strikes the surface in an orientation that inflicts maximum damage. In determining which orientation produces the maximum damage, the NAC-LWT cask is evaluated for impact orientations in which the cask strikes the impact surface on its top end, top end oblique, side, bottom end, and bottom end oblique. The impact limiters and the impact limiter attachments are evaluated in Section 2.6.7.4 for all loading conditions.

Impacts with the maximum and minimum weights of contents are considered. The environmental temperature for the drop is between -20°F and 100°F. Internal heat generation from the contents and insolation are also considered. Regarding internal pressure, the maximum or minimum normal operations pressure is applied to produce the critical stress condition in conjunction with the other loads previously discussed. Closure lid bolt preload and fabrication stresses are also considered. The analyses for the end and oblique drop accidents are conservatively based on a cask outer shell thickness of 1.12 inches. The side drop analyses are based on the cask outer shell thickness of 1.20 inches.

The following method and assumptions are adopted in all of the drop analyses:

1. The finite element method is utilized to do the impact analyses. The analyses are performed by the ANSYS computer program.
2. The analyses assume linearly elastic behavior of the cask.
3. The impact loads calculated in Section 2.6.7.4 are statically applied to the impact surface of the cask. The dynamic wave propagation produced by the impact is assumed to spread throughout the cask body simultaneously.
4. The finite element model of the NAC-LWT cask includes only the major structural components of the cask body; thus, the weight of the modeled cask body, 37,519 lbs, does not include the weight of the neutron shield material, the neutron shield shell nor the contents. However, the applied loads on the cask model are based on a cask design weight of 52,000 lbs.
5. To account for the lead slump during the drops and the differential thermal expansion between the cask stainless steel shells and lead shell, gap elements are used in the finite element model.
6. Although the 10 CFR 71.73 only requires the cask accident drop assessment to be at the most unfavorable ambient temperature in the range from –20°F to 100°F, the NAC-LWT cask is conservatively evaluated in all cases except the side drop for the ambient temperature in the range from -40°F to 130°F. The side drop evaluation uses an ambient temperature range of –40°F to 100°F.

Four accident conditions were identified for a detailed finite element stress presentation:

1. A 30-foot top end drop (drop orientation = $\phi = 0°$, where ϕ is defined as the impact orientation; that is, the angle between the impact direction and the cask centerline), 130°F ambient temperature, maximum decay heat load.
2. A 30-foot top corner drop (drop orientation $\phi = 15.74°$), 130°F ambient temperature, maximum decay heat load.
3. A 30-foot top oblique drop (drop orientation = $\phi = 60°$), 130°F ambient temperature, maximum decay heat load.
4. A 30-foot side drop (drop orientation = $\phi = 90°$), 100°F ambient temperature, maximum decay heat load.

The top end ($\phi = 0°$), top corner ($\phi = 15.74°$), top oblique ($\phi = 60°$) and side ($\phi = 90°$) drops envelope all of the drop orientations.

The types of loading involved in the four accident conditions include: (1) thermal, (2) internal pressure, (3) closure lid bolt preload, and (4) impact and inertial loads resulting from the impact event. These loadings and the boundary conditions, used in the finite element analyses, are discussed in Sections 2.7.1.1.2 through 2.7.1.3.2. Appendix 2.10.10 gives a thorough look at the procedures, analysis and stress results for the 30-foot drop accident conditions. The stress results, calculated for each individual loading at the 123 nodal points on the cask, are tabulated in Tables 2.10.10-6 through 2.10.10-15. Both the stress components and the principal stresses are included.

Note that the fabrication stresses are considered negligible as explained in Section 2.6.11. The puncture analysis is performed using classical hand calculations, as shown in Section 2.7.2.

2.7.1.1 End Drop

2.7.1.1.1 Discussion

The NAC-LWT cask is evaluated for the hypothetical accident end drop conditions to demonstrate its structural adequacy in accordance with the requirements of 10 CFR 71.73. The event scenario is that the NAC-LWT cask, equipped with impact limiters, falls through a distance of 30 feet onto a flat, unyielding, horizontal surface. The cask strikes the surface in a vertical position and, consequently, an end impact on the bottom or the top of the cask occurs. The types of loading involved in an end drop accident include (1) closure lid bolt preload, (2) internal pressure, (3) thermal, (4) inertial body load, and (5) impact load due to the end drop. There are six credible end impact conditions to be considered, according to Regulatory Guide 7.8:

1. Bottom end drop with 130°F ambient temperature and maximum decay heat load
2. Bottom end drop with -40°F ambient temperature and maximum decay heat load
3. Bottom end drop with -40°F ambient temperature and no decay heat load
4. Top end drop with 130°F ambient temperature and maximum decay heat load
5. Top end drop with -40°F ambient temperature and maximum decay heat load
6. Top end drop with -40°F ambient temperature and no decay heat load

The finite element analysis method is utilized to perform the end drop stress evaluation for the NAC-LWT cask.

2.7.1.1.2 Analysis Description

The detailed geometry and finite element model of the NAC-LWT cask are thoroughly described in Section 2.10.2. The cask is modeled as an axisymmetric structure assembly of ANSYS STIF42 isoparametric elements.

The dynamic wave propagation produced by the impact is assumed to spread throughout the cask body simultaneously. In addition, the equivalent static method is adopted to do the impact evaluations. The analyses assume linearly elastic behavior of the cask and that the fabrication stresses are negligible.

Based on the previous assumptions and discussions, the applied loads on the finite element model are as follows:

1. Closure lid bolt preload

   The required total preload of 250,000 lbs, as calculated in Section 2.6.7.6, is converted to an initial strain of 0.0021361 inch/inch/radians and is applied to the bolt, which is modeled as a vertical beam element.

2. Internal pressure

   The cask internal pressure is temperature dependent and is evaluated in Section 3.4.4. Pressures of 50 psig and 12 psig are applied on the interior surfaces of the cask cavity for the hot ambient and cold ambient cases, respectively.

3. Thermal

   There are three thermal conditions.

   A. The heat transfer analysis performed in Section 3.4.2 determined the cask temperatures for the hot environment (130°F temperature) with maximum insolation and maximum decay heat load. See Section 2.10.3.1 for the resulting isothermal temperature plot.

B. Similarly, the heat transfer analysis performed in Section 3.4.3 calculated the cask temperatures for the cold environment (-40°F ambient) with maximum decay heat load and no insolation. See Section 2.10.3.2 for the resulting isothermal temperature plot.

C. The third thermal condition evaluates the cask subjected to an ambient temperature of -40°F with no decay heat load and no insolation.

4. Inertial body load

   Applying D'Alembert's principle, the inertial effects created by an impact can be represented by equivalent static forces. In the analyses, a 76.8 g inertial load is vertically applied on the mass of the cask modeled. The 76.8 g value is derived from the multiplication of 60 g (shown in Table 2.6.7-34) and the factor of $\frac{48{,}000}{37{,}519}$, where 48,000 lbs is the cask body design weight and 37,519 lbs is the finite element model weight (The 60-g value is conservatively based on a 3,850-psi maximum crush strength of aluminum honeycomb, although the design maximum crush strength is only 3,675 psi).

   The inertial load resulting from the 4,000-pound contents weight is simulated as an equivalent static pressure load (1,708 psi) uniformly applied on the interior surface of the cask impact end.

5. Impact load

   The impact load is assumed to be uniformly applied over the impact surface of the cask. A uniform pressure of 4,852 psi is applied on the model. This pressure is obtained by dividing the total impact load ($60 \times 52{,}000$ lb $= 3.12 \times 10^6$ lb) by the impact area, 643 in^2 which is the bottom (or top end) surface area of the cask (Refer to note in 4).

Boundary conditions that are imposed on the model of the cask to restrain rigid body motion include: (1) the nodes located on the vertical centerline are restrained from moving radially, and (2) vertical restraints are imposed on the edge nodes located on the free surface; that is, the nonimpact end.

2.7.1.1.3 Results and Conclusions

The stresses throughout the finite element model are calculated for the combined load conditions. Based on the design criteria presented in Section 2.1.2 and Regulatory Guide 7.6, the calculated stresses are categorized into P_m , $P_m + P_b$, and total stress categories. The secondary stresses (thermal) are conservatively included in the primary stress categories and the margin of safety calculations.

As demonstrated in Section 2.10.3.3, procedures have been implemented to determine the critical Pm, Pm + Pb, and total stresses for each cask component. The calculated stresses are conservatively based on an outer shell thickness of 1.12 inches, although the design outer shell thickness is 1.20 inches. The most critical sections for each component during a particular loading condition are shown in Figure 2.7.1-1 through Figure 2.7.1-5. The critical Pm, Pm + Pb, and total stresses for each component are documented in Table 2.7.1-1 through Table 2.7.1-15. Additionally, the stresses at representative sections throughout the cask are presented in the tables in Section 2.10.7. These tables document the maximum stress locations tabulated for each component. Appendix 2.10.10 presents tabulated detailed stresses for the individual load conditions for the stress points at each section selected for analysis. Tabulations are also presented for the various combinations of the individual load cases.

The allowable stresses for the cask components are determined based on 300°F. Note that the maximum cask temperature is below 300°F for all of the conditions considered and the allowable stresses are, therefore, conservative.

Comparing the analyses results from loading condition 2, as documented in Table 2.7.1-4 through Table 2.7.1-6 and in Table 2.7.1-10 through Table 2.7.1-12, it is evident that the most critical Pm, Pm + Pb, and total stresses are comparable for the bottom and the top end drops. Furthermore, the margins of safety are very large. It is, therefore, expected that the top end drop under loading condition 3 will produce results similar to those for the bottom end drop under loading condition 3. Thus, analyzing the top end drop under loading condition 3 is considered to be unnecessary and is not performed.

The analyses demonstrate that all margins of safety are positive for all of the end drop accident conditions.

The documentation of the NAC-LWT cask adequacy in satisfying the buckling criteria for the stresses of the end drop conditions is presented in Section 2.10.6. The NAC-LWT cask maintains its containment capability and satisfies the 10 CFR 71 requirements for the end drop accident condition.

2.7.1.2 Side Drop

2.7.1.2.1 Discussion

This section presents the evaluation of the structural adequacy of the NAC-LWT cask for the hypothetical accident, 30-foot drop, side impact condition. The event scenario is that the NAC-LWT cask, with an impact limiter attached over each end, experiences a free drop through a distance of 30 feet onto a flat, unyielding surface and strikes the surface in the horizontal position. The types of loading involved in a side drop accident are similar to those discussed in

Section 2.7.1.1 for the end drop accident condition. However, for the side drop accident condition, both the inertial load and the side impact load are nonaxisymmetric and require special consideration for them to be applied on an axisymmetric model using the ANSYS harmonic elements.

There are three credible side impact conditions to be evaluated and discussed: (1) side drop with 100°F ambient temperature and maximum decay heat load, (2) side drop with -40°F ambient temperature and maximum decay heat load, and (3) side drop with -40°F ambient temperature and no decay heat load. Finite element analyses were performed for these side impact evaluations.

2.7.1.2.2 Analysis Description

The NAC-LWT cask is modeled as an axisymmetric structure utilizing the ANSYS STIF25 elements. The finite element mesh is illustrated in Section 2.10.2.

The analyses utilize linearly elastic structural behavior of the cask and the fabrication stresses are negligible.

There are five loads applied on the finite element model - closure lid bolt preload, internal pressure, thermal, inertial body load and impact load. The first three loads are the same as those described in Section 2.7.1.1. The inertial body load and the side impact load are nonaxisymmetric and require further discussion.

The 63.56-g inertial load is transversely applied on the mass of the cask model. The 63.56 g is determined from the side impact acceleration 49.7 g (determined in Section 2.6.7.4) multiplied by the weight factor of 48,000 / 37,519, where 48,000 lbs is the cask body design weight and 37,519 lbs is the cask finite element model weight.

The inertial load produced by the contents is applied as an equivalent static pressure (177.1 psi) on the interior surface of the cask; to be specific, the pressure is uniformly distributed along the cavity length with a circumferential variation. The method used to calculate the pressure of the contents is identical to that for the determination of the impact load pressure.

The impact load applied on the finite element model is nonaxisymmetric and localized. Consequently, it requires special consideration. The cask body (excluding the neutron shield shell) is conservatively assumed to resist the entire impact load due to the side drop accident. This impact load is calculated as $49.7 \times 52{,}000 = 2.58 \times 10^6$ pounds, where the factor 49.7 g was previously explained. The impact load is applied to the finite element model as a distributed pressure over the impact surface of the cask. The distribution of impact pressure is assumed to be uniform, in the longitudinal direction, but sinusoidally varied in the circumferential direction. A cosine-shaped pressure distribution is selected, which is peaked at the center and spread over a

90-degree arc in the circumferential direction as shown in Figure 2.7.1-6. The region of the applied pressure (a 90° arc) is defined based on the "crush" geometry of an impact limiter designed to limit the impact force for a 30-foot drop. The assumption of a "peaked" pressure distribution is a conservative, classical, stress analysis procedure. Variations in the shape and/or magnitude of the applied pressure distribution are expected to produce a localized stress variation in the pressure-applied region. Since the cask body is massive in this region, the variation in stress level is negligible.

Based on the previous discussion, a cosine-shaped pressure distribution, p(θ), in the circumferential direction (Figure 2.7.1-6) is selected as:

$$p(\theta) = \begin{cases} \bar{p} \cos 2\theta, & \text{for } -45° \le \theta \le 45° \\ 0 \quad , & \text{for } 315° > \theta > 45° \end{cases} \qquad (1)$$

where $\bar{p}$ represents the peaked value at the 0-degree orientation and is determined from the following equation,

$$P = \left[\int_0^{2\pi} p(\theta) \cos\theta \; r \; d\theta\right] \ell$$

$$= 0.5 \; (2.58 \times 10^6) = 1.29 \times 10^6 \text{ lb} \qquad (2)$$

where:

r = outside radius of outer shell = 14.3075 in

ℓ = interface lengths between the cask and the impact limiters, 11.88 inches are actually engaged with both the bottom and the top impact limiters. In the calculation, 11.25 inches is conservatively used for the bottom engagement and 11.00 inches is conservatively used for the top.

P = side drop impact force at each end of the cask

Thus, the impact pressures, $\bar{p}$, applied on the finite element model are 8,498 psi near the bottom end and 8,691 psi near the top end. These pressures are uniformly distributed element pressures along the longitudinal direction.

In order to use an axisymmetric finite element model to analyze a nonaxisymmetric loading, it is necessary to use the ANSYS harmonic element and harmonic function capability. This is

achieved by defining the pressure distribution, as shown in equation (1), in terms of a Fourier series of harmonic functions, as:

$$p(\theta) = A_0 + A_1\cos\theta + A_2\cos 2\theta + A_3\cos 3\theta + A_4\cos 4\theta + A_5\cos 5\theta \quad (3)$$

Note that, since the impact load is centered at the 0-degree orientation, all loading terms are of the form cos iθ. Each term of the series represents an individual axisymmetric load mode and is defined by the load coefficient (A_i), the number of harmonic waves in the mode shape, and the symmetry condition (cos iθ). The analytical results for the defined nonaxisymmetric loading are the summation of the results of each of the individual axisymmetric load term analyses. The load coefficients, A_i, are determined by the ANSYS PREP6 routine, and equation (3) becomes

$$p(\theta) = \tilde{p}\,[0.1590 + 0.2999\cos\theta + 0.2498\cos 2\theta + 0.1799\cos 3\theta + 0.1059\cos 4\theta + 0.0427\cos 5\theta] \quad (4)$$

Equations (1) and (4) are illustrated in Figure 2.7.1-7. The figures indicate that the Fourier series function contains six terms. The combination of these six terms adequately represents the desired impact pressure distribution. Consequently, six loading mode analyses are required to evaluate the effect on the cask body resulting solely from the impact load during the side impact event.

In summary, the finite element analysis of the side drop condition considers the combined loads resulting from internal pressure, bolt preload, thermal, inertia and impact. Nine loading mode analyses are developed such that their combination evaluates the effects previously mentioned. Table 2.7.1-16 summarizes the load analyses and their descriptions.

To combine the stress results produced by the nine loading mode analyses; the following steps are performed:

1. Utilize the Fourier series coefficients, as reported in equation (4), to multiply the results obtained from load mode analyses 4 through 9. This provides the stresses that result from the impact load.
2. Combine the results obtained from Step 1 and load mode analyses 1 and 3. This provides the stresses caused by the combined effects of internal pressure, bolt preload, inertial, and impact. The resulting stresses are used to calculate the P_m stress intensities and the $P_m + P_b$ stress intensities.
3. Combine the results from Step 1 and load mode analyses 2 and 3. This provides the results to be used to calculate the total stress intensities.

The boundary conditions imposed upon the model of the cask to restrain rigid body motions are defined as follows:

1. The top node located on the vertical centerline is restrained from moving radially.
2. The bottom node located on the vertical centerline is fixed completely.
3. A displacement constrained condition is imposed on the interface surface at the bolt location between the lid and the upper ring. This constrained condition is only imposed for the analysis of the impact load case and the inertial body load case.

2.7.1.2.3 Results and Conclusions

To balance the demands of analytical accuracy and computational efficiency, it is conservatively assumed that the sliding coefficient is zero between the lead/steel interface in the finite element analysis. This significantly minimizes the total number of iterations required for the analysis to converge; yet, it provides conservative analysis results because the horizontal shear resistance at the lead/steel interface is ignored, making the cask structure more flexible under bending. The stresses calculated by the finite element analysis are compared with the hand-calculated stress results. The finite element method indicates that the maximum bending stress, 1,373 psi, occurs at the midpoint of the cask outer shell due to a 1 g inertial load. The hand calculation considers the cask structure as a hollow, circular cross section beam, simply supported at each end, which gives 1,353 psi at the midpoint of the cask outer shell for a 1 g inertial load. The finite element and hand-calculated results agree extremely well. The hand-calculated results are presented in Table 2.10.11-2.

Since the material properties of the cask structure are temperature-dependent, varying environmental temperatures will produce changes in the calculated stresses in the cask for the thermal load cases; but they will not change the calculated stresses in the cask produced by the other types of loads. This is verified by comparing the finite element results for the NAC-LWT cask subjected to a gravity load for different temperature conditions. Also, the stress levels produced by the following different thermal conditions were evaluated: (1) 100°F ambient temperature with maximum decay heat load, (2) -40°F ambient temperature with maximum decay heat load, and (3) -40°F ambient temperature with no decay heat load. The combination effect of the thermal loads with other load types (e.g., inertial body load) has also been studied. It is determined that the side drop event with 100°F ambient temperature represents the worst case for the 30-foot side drop accident condition. Therefore, only the stress results produced by a 30-foot side drop with 100°F ambient temperature are reported.

Stress components and stress intensities are calculated throughout the finite element model for the combined loads due to internal pressure, bolt preload, thermal, inertial, and impact.

The critical sections for each cask component are shown in Figure 2.7.1-8. Table 2.7.1-17 through Table 2.7.1-19 report the P_m stress intensities, the $P_m + P_b$ stress intensities, and the total stress intensities for each cask component, which are obtained from the finite element side drop

analysis. The total P_m and $P_m + P_b$ stresses at representative sections throughout the cask are presented in the tables in Appendix 2.10.7. These tables document the maximum stress locations tabulated for each component. Appendix 2.10.10 presents tabulated detailed stresses for the individual load conditions for the stress points at each section selected for analysis. Tabulations are also presented for the various combinations of the individual load cases.

As mentioned previously, the finite element cask model conservatively ignores the effect of the neutron shield shell on the overall bending of the cask structure.

The margins of safety in Table 2.7.1-17 and Table 2.7.1-18 are positive for all cask components.

The documentation of the NAC-LWT cask adequacy in meeting the buckling criteria for the stresses of the side drop is presented in Section 2.10.6.

It has been demonstrated that all margins of safety are positive for the 30-foot side drop conditions. The NAC-LWT cask maintains its containment capability and satisfies the 10 CFR 71 requirements for the 30-foot side drop accident condition.

2.7.1.3 Oblique Drops

2.7.1.3.1 Discussion

This section presents the structural evaluation of the NAC-LWT cask for the hypothetical accident 30-foot oblique drops. In this event, the NAC-LWT cask, equipped with an impact limiter over each end, falls through a distance of 30 feet onto a flat, unyielding surface. According to NRC Regulatory Guide 7.8, "The center of gravity is usually considered to be directly above the impact area; however, evaluations of other oblique drop orientations are requested 'when appropriate'." An impact at an orientation angle of 15.74 degrees is defined as a corner impact, i.e., the center of gravity of the cask is vertically above the impacting edge of the cask. The NAC-LWT cask is evaluated for four oblique drop orientations (15.74, 30, 45, and 60 degrees) under varying ambient conditions. The types of loading involved in an oblique drop accident are similar to those described in Sections 2.7.1.1 and 2.7.1.2; the inertial loading and the impact loading are nonaxisymmetric and must be applied to the axisymmetric finite element model using the ANSYS harmonic elements. This method is similar to that used for the side drop analyses.

Four credible oblique impact orientations (15.74, 30, 45, and 60 degrees) are considered. For each oblique impact orientation, four combinations of ambient temperature, decay heat load, and cask end loading are evaluated:

1. Top end oblique drop, 130°F ambient temperature, maximum decay heat load.
2. Top end oblique drop, -40°F ambient temperature, maximum decay heat load.

3. Top end oblique drop, -40°F ambient temperature, no decay heat load.
4. Bottom end oblique drop, 130°F ambient temperature, maximum decay heat load.

The finite element analysis method is used for the oblique impact evaluations.

The hypothetical accident oblique drop initial impacts are followed by a secondary impact or "slapdown" of the cask on the end opposite the initially impacted end. The secondary impact is addressed in Section 2.10.4; the energy dissipation requirements for slapdown are shown to be well within the energy absorption capabilities of the NAC-LWT cask impact limiters. Thus, slapdown is not a limiting case for the cask and is not considered any further.

2.7.1.3.2 Analysis Description

Similar to the side impact analysis, the ANSYS STIF25 element is utilized to model the NAC-LWT cask. The finite element model is illustrated in Section 2.10.2.

The oblique drop analyses assume that the cask exhibits linear elastic behavior and that the fabrication stresses are negligible. There are five loads applied on the finite element model – closure lid bolt preload, internal pressure, thermal, inertial body load and impact load. The first three loads are the same as those described in Section 2.7.1.1. The inertial body load and the oblique impact load are nonaxisymmetric and require further discussion.

The inertial body load is the same as that discussed in Section 2.7.1.2, with an additional consideration in the oblique impact analysis. Both lateral and longitudinal inertial loads are applied on the cask. Unique g loads are applied on the mass of the cask model. Table 2.7.1-20 summarizes the applied g loads and their components (lateral and axial) for the different drop orientations. Refer to Section 2.6.7.4 for the detailed calculations of the g loads for the different oblique drop orientations. The g loads are conservatively based on a 3,850-psi maximum crush strength of aluminum honeycomb, although the design maximum crush strength is only 3,675 psi.

The cavity contents force components are applied to the inside of the cask body finite element model. The lateral component of the inertial load produced by the contents is applied to the cask model similarly to the side impact analysis, i.e., uniformly along the cavity length with a cosine-shaped distribution over a 2θ arc (the same sector of the cask on which the lateral impact load is applied) in the circumferential direction. The axial component of the inertial load due to the contents is applied on the end of the cavity of the cask model with the same cosine-shaped distribution over a 2θ arc as that described previously, and with a uniform distribution in the radial direction from the inside diameter of the cask cavity to its axial centerline. Table 2.7.1-21 summarizes the applied contents pressures used in the analyses.

The impact load condition is applied to the cask model similarly to the inertial body load. The lateral component of the impact load is applied to the side of the cask model at the impacting end, uniformly over the 11.25-inch long impact limiter region with a cosine-shaped distribution in the circumferential direction along a 2θ arc. The axial component of the impact load is applied to the impacting end of the cask model with a cosine-shaped distribution in the circumferential direction along an arc of 2θ (the same sector of the cask on which the lateral impact load component is applied) and with a uniform distribution in the radial direction from the outside diameter of the end of the cask to its axial centerline. Table 2.7.1-21 summarizes the pressures produced by the impact loads, which are calculated using the same method as presented in Section 2.7.1.2.

These load distributions of the impact force components and the cavity contents force components on the cask model are selected as being realistic, yet conservative, representations of the actual loadings on the cask for an oblique impact. Variations from actual load distributions are expected to be negligible. In addition, at locations on the cask away from the loading region, the stress results are not affected by the shape of the load distributions.

As shown in the side drop analysis (Section 2.7.1.2), six loading mode analyses are adequate to evaluate the effect on the cask body of the impact load during the oblique impact event. The modal coefficients for the oblique impact are determined by the ANSYS PREP6 routine and reported in Table 2.7.1-22.

In summary, the finite element analyses of the oblique drop conditions consider the combined loads due to internal pressure, bolt preload, thermal, inertia, and impact. Sixteen loading analyses are developed such that the various combinations of the defined load conditions are all considered. The sixteen loading combinations are summarized in Table 2.7.1-23.

To combine the analysis results produced by the sixteen loading mode analyses, the following steps are performed:

1. Utilize the Fourier series coefficients, as reported in Table 2.7.1-22, to multiply the results obtained from load analyses 5 through 16. This provides the stress results due to the oblique impact load.
2. Combine the results obtained from step 1 and load mode analyses 1, 3, and 4. This provides the stresses due to the effects of internal pressure, bolt preload, inertia, and impact. The resulting stresses are used to calculate the P_m stress intensities and the $P_m + P_b$ stress intensities.
3. Combine the results from step 1 and load mode analyses 2, 3, and 4. This gives the results which are used to calculate the total stress intensities.

The boundary conditions that are imposed upon the model of the cask to restrain rigid body motions are defined as follows:

1. On the vertical centerline of the cask, the node on the end opposite the impact is completely fixed.
2. On the vertical centerline of the cask, the node on the end near the impact is restrained from moving radially.
3. On the outside radius of the model, the node on the end opposite the impact is fixed in the radial direction to prevent rigid body rotation, but it is free to move axially.
4. A displacement constrained condition is imposed on the interface surface at the bolt location between the lid and the upper ring. This constrained condition is only imposed for the analyses of the impact load case and the inertial body load case.

2.7.1.3.3 Results and Conclusions

Similar to the discussion presented in Section 2.7.1.2.3, the friction coefficient at the interface between the lead and the stainless steel shells is conservatively assumed to be zero. The stress results produced by the following three oblique impact conditions are reported:

1. Top end oblique drop, 130°F ambient temperature, maximum decay heat load.
2. Top end oblique drop, -40°F ambient temperature, no decay heat load.
3. Bottom end oblique drop, 130°F ambient temperature, maximum decay heat load.

These three oblique drop conditions represent the bounding cases for all of the 30-foot oblique drop accident conditions. Four oblique orientations of the cask (15.74, 30, 45, and 60 degrees) are analyzed for each of the ambient temperature/heat load bounding conditions.

The stresses throughout the cask body are calculated for the combined load conditions. Based on the design criteria presented in Section 2.1.2 and Regulatory Guide 7.6, the calculated stresses are categorized into P_m, $P_m + P_b$, and total stress categories.

As demonstrated in Section 2.10.3.3, procedures have been implemented to determine the critical P_m, $P_m + P_b$, and total stresses for each cask component. The most critical sections for each component during a particular loading condition are shown in Figure 2.7.1-10 through Figure 2.7.1-21. The critical P_m, $P_m + P_b$, and total stresses for each component are documented in Table 2.7.1-24 through Table 2.7.1-59, with the following additional considerations: (1) the boundary effect on the finite element analysis results; and (2) the boundary effect on stress results. The calculated stresses are conservatively based on an outer shell thickness of 1.12 inches, although the design outer shell thickness is 1.20 inches. Additionally, the stresses at representative sections throughout the cask are presented in the tables in Section 2.10.7. These tables document the maximum stress locations tabulated for each component. Appendix 2.10.10 presents tabulated detailed stresses for the individual load conditions for the stress points at each section selected for analysis. Tabulations are also presented for the various combinations of the individual load cases.

Boundary Effect on Finite Element Analyses Results

As discussed previously, the oblique drop condition induces an eccentric (angular) momentum, which causes a rigid body rotation of the cask and a slapdown onto the unyielding surface. To eliminate this rigid body rotation in the oblique drop evaluation, certain displacement restraints are imposed on the finite element model. These restraints cause localized peak stresses in the immediate vicinity of boundary conditions. This boundary effect attenuates very rapidly at locations slightly away from the boundary region. Component 7 (bottom closure plate) exhibits this boundary effect; refer to P_m and $P_m + P_b$ stress intensities reported in Table 2.7.1-51, Table 2.7.1-52, Table 2.7.1-54, Table 2.7.1-55, Table 2.7.1-57 and Table 2.7.1-58. The case reported in Table 2.7.1-58 is selected to illustrate the attenuation of the boundary effect, because the stresses produced by the 60 degree oblique drop condition are most critical. Figure 2.7.1-22 shows the plot of the sectional stresses versus radial location with respect to the axial centerline of the cask. It is obvious that the structural behavior of the bottom cover plate is disturbed in the region from node 1 to node 3, because the calculated $P_m + P_b$ stress intensity is less than the P_m stress intensity. Consequently, these stresses are considered to be unrealistic and are disregarded.

This decision is justified by observing the stress plots shown in Figure 2.7.1-23 and Figure 2.7.1-24. In Figure 2.7.1-23, three curves are shown for the cask bottom (refer to Figure 2.7.1-25 for the location) for the 30-foot bottom oblique drop condition:

1. Curve 1 represents the P_m stress intensities versus the radial location, which are produced by the total loading, i.e., the combined result from load analyses 1 and 3 through 16. (See Table 2.7.1-23 for load analyses identification.)
2. Curve 2 is similar to curve 1, but is produced by a partial loading, i.e., the combined result from load analyses 3, 4, 5, 6, 11, and 12 only.
3. Curve 3 is identical to curve 2, except that the boundary restraint is moved to node 3; it was at node 1 for curves 1 and 2.

The close agreement between curves 1 and 2 indicates that the partial loading case is adequate to simulate the structural behavior of the cask produced by the total loading case. Comparing the stress values represented by curves 2 and 3, the curves clearly indicate that the stresses are greatly reduced in the vicinity of the boundary by changing the location of the displacement restraint from node 1 to node 3. This documents the statement that the stresses in the vicinity of the boundary restraint are unrealistic and are disregarded. Similarly, the plot of $P_m + P_b$ stress intensity (Figure 2.7.1-24) indicates the stress reduction, which results from shifting the location of the boundary restraint. Consequently, the stress results (excluding the boundary effect region; i.e., from section cut d through the rest of component 7; Figure 2.7.1-25) obtained from the finite element analyses are evaluated and reported. This criterion is applicable to all of the other drop orientation cases.

Figure 2.7.1-26 and Figure 2.7.1-27 show the same boundary effect on the stress results for the 30-degree and 45-degree impact orientations (in the vicinity of the boundary in the bottom closure plate of the cask) as is indicated in Figure 2.7.1-25. Thus, the criterion developed for the 60 degree orientation is applicable.

The following tables report the stress results excluding the boundary effect: Table 2.7.1-51, Table 2.7.1-52, Table 2.7.1-54, Table 2.7.1-55, Table 2.7.1-57 and Table 2.7.1-58.

Boundary Effect on Stress Results

The stresses reported in Table 2.7.1-49 indicate that the maximum $P_m + P_b$ stress intensity of component 1 is 69.74 ksi. Again, this is as a result of the boundary effect at this section cut (node 2561). This value of 69.74 ksi is unrealistically high. The next highest $P_m + P_b$ stress intensity for component 1 is 6.79 ksi, located at the section next to the section containing the boundary restraint. (Note that the stress value is one order of magnitude lower).

The method described in Section 2.7.1.3.2 to determine the stresses in the vicinity of the free end of the NAC-LWT cask for the oblique drops is conservative. Inertia loads on the cask, which are responsible for dynamic equilibrium during an oblique drop impact, consist of translational deceleration, the angular deceleration and the centrifugal deceleration. The crushing force generated by the limiter and the translational decelerations are determined from RBCUBED (Section 2.10.1.2) for the particular drop of interest. Results from RBCUBED are used to determine the input into ANSYS for the deceleration of the cask body and the pressure load for the contents. The remaining inertia forces representing the angular deceleration and the centrifugal deceleration are established by the imposed displacement boundary conditions at node 1 (at the center line of the model at the bottom end) and node 2561 (at the center line at the top end). While the actual physical loading is distributed over the body, the analysis procedures cause the boundary restraint to behave as a point load. This produces a concentration of the load in the free end of the cask and results in unrealistically large stresses in this region.

The stresses in the end region can also be determined by using the analysis results from the end drop and the side drop. In each case the effect of the geometrical discontinuities are present since the physical boundaries coincide. The manner in which the forces are developed in an oblique drop can be expressed as a combination of the end drop and side drop. The end drop represents the loads generated by the axial translational deceleration. The load path of the axial load in the end drop is the same as for the oblique drop. In the side drop, the loads generated by the cask body and contents must be reacted by the impact limiter crush forces. In the oblique drop, however, the lateral angular deceleration balances the translational deceleration. This represents some conservatism since the limiter load is concentrated in the end region (for the side drop), while the angular deceleration is not (for the oblique drop).

The actual superposition of the side drop results and end drop results is accomplished by applying a separate factor to the component stresses for each load case prior to the algebraic combination.

The factor for the end drop results is the ratio of the axial translational decelerations which is the only nonhomogeneous boundary condition applied to the model. This factor is expressed as:

$$K1 = \frac{Aao}{Aae} \quad (1)$$

where:

Aao = axial deceleration component for the oblique drop

Aae = axial deceleration for the end drop

The factor for the side drop results is the ratio of the lateral translational decelerations, which again is the only nonhomogeneous boundary condition applied to the model. This factor is:

$$K2 = \frac{Alo}{Als} \quad (2)$$

where:

Alo = lateral deceleration component for the oblique drop

Als = lateral deceleration for the side drop

Since superposition requires the stress components to be added, the stress intensity (maximum principal stress difference) must be recomputed once the component stresses have been determined for the combined case. Thus for each "superimposed" stress component,

$$Sij = K1(S'ij) + K2(S"ij) \quad (3)$$

where:

S'ij the stress component for the end drop (i = x, y, z, xy)

S"ij the stress component for the side drop (i = x, y, z, xy)

The stresses are to be evaluated for the end region and for portions of the cask shell itself. The factors for the different angles are specified below.

Angle of Drop(degrees)	K1	K2
15.74 (corner)	0.970	0.330
30	0.785	0.547
45	0.517	0.624
60	0.370	0.775

These factors are applied to the $P_m + P_b$ stresses, the S_n stresses, and stress ranges on a stress component level. This implies that the factors are applied to thermal stresses in the stress summaries. Since Kl + K2 is greater than unity for any angle, this method will provide some conservatism. All principal stresses and stress intensities are based on the revised stress components. For the critical stress summaries, the maximum stress components listed for the side drop (for the affected cask components only) are combined with the maximum stress components listed for the end drop. This ensures that the maximum stress for the oblique drops is truly the maximum for the component listed in the critical stress summary.

A measure of how far the combined stress methodology should extend axially along the cask shell is given by a fraction of the shell wave length. The formula used is:

$$L' = 2.4\ (rt)^{0.5} \qquad (4)$$

where:

r = mean radius

t = thickness

The value of r for the NAC-LWT cask is taken to be 14.5 inches. The outer shell comprises approximately 80 percent of the effective cross-sectional bending rigidity (See Section 2.10.11 for this computation). For computational purposes the thickness for the outer shell, which is 1.2 inches, is used. The estimated distance along the shell is determined to be 10 inches. This corresponds to a position between section cut "J" and section cut "L" of the cask shell in Figure 2.10.7-1 for the top end drop. For the bottom drop, this places the boundary of the re-evaluated stresses near section cut "T" for the top. It should be noted that the section cuts identifiers start with A at the center line of the bottom end and progresses to Z at the center line at the top end. The node numbers begin with "1" at the center line of the cask at the bottom and monotonically increase to 2561 at the center line at the top center line. This nodal numbering pattern allows the region of affected stresses to be identified by a node number. The location of the stresses to be revised by the superposition method for the top end drops and the bottom end drops are identified on the following page.

Impact End	Section Cuts[1]	Node Numbers[2]
Top	A through J	1 through 698
Bottom	S through Z	1481 through 2561

[1] The section cuts are identified in Figure 2.10.7-1 and their coordinates are listed in Table 2.10.7-1.

[2] The node numbers versus nodal coordinates are specified in Table 2.10.2-1.

Conclusion

The documentation of the NAC-LWT cask adequacy in meeting the buckling criteria for the stresses of the oblique drop is presented in Section 2.10.6.

It has been demonstrated that all margins of safety are positive for the 30-foot oblique drop conditions. The NAC-LWT cask maintains its containment capability and satisfies 10 CFR 71 requirements for the 30-foot oblique drop accident condition.

2.7.1.4 Shielding for Lead Slump Accident

Following the 30-foot free drop, the lead region may experience slumping resulting in a reduction in the shielding capabilities of the cask. The shielding evaluation of the lead slump accident was performed in a series of steps. Initially, QAD-CG was used to model the cask without any lead to see if this simple model would give a reasonable dose rate. It was determined that a more detailed analysis was required. This included calculating the lead gap that was formed because of contraction following the lead pour. The HEATING5 computer program (Turner) is used to calculate the temperatures throughout the cask assuming no gap. The resulting maximum temperature of the lead was 245°F. The gap was calculated based on this temperature. This gap value is then used to find the amount that the lead slumps at either the top or the bottom, depending on the cask drop orientation. The calculation is performed as follows:

$$V_1 = \pi[(r_o - s)^2 - r_i^2]h_1$$

$$V_2 = \pi[r_o^2 - r_i^2]h_2$$

Setting $V_1 = V_2$ and solving for h_2:

$$h_2 = \frac{[(r_o - s)^2 - r_i^2]h_1}{r_o^2 - r_i^2}$$

$$= \frac{[(13.19 - .0417)^2 - (7.45)^2](175.0)}{(13.19)^2 - (7.45)^2}$$

$$= 173.37 \text{ in}$$

therefore:

$$\Delta h = h_1 - h_2 = 175.0 - 173.37 = 1.63 \text{ inches}$$

where:

V_1 = volume of the lead after contraction (in^3)

V_2 = volume of the lead following the pour (in^3)

r_o = outside radius of lead region (in)

r_i = inside radius of lead region (in)

h = height of lead region (in)

s = gap (in) (Section 3.2)

The lead slump calculated using this method (1.63 inches) is much larger than the lead slump determined in the finite element analysis (Section 2.10.5), which makes the resulting dose rates conservative. At this point, another model is created using QAD-CC to determine the final dose rates 1 meter from the surface of the cask through this "window" in the lead shielding (Details of the models are found in Figures 5.3.3-3 through 5.3.3-5). This process is followed for both the top and bottom end-fittings of a PWR assembly and the bottom end-fitting of a BWR assembly. The BWR bottom end-fitting is analyzed since it is larger and has a higher Co 60 source than the PWR bottom end-fitting. The analysis is not performed for the BWR top end-fitting because it is smaller and, therefore, has a lower source strength than the PWR top end-fitting.

The resulting dose rates are less than the 49 CFR 73 limits, and can be found in Table 5.1.1-6. The analysis shows that the loss of lead shielding resulting from a lead slump accident will not result in a substantial loss in shielding effectiveness and that the dose rates from this accident are small when compared to the loss of neutron shield accident evaluated in Section 2.7.2.5.

2.7.1.5 Bolts – Closure Lid (Hypothetical Accident – Free Drop)

Section 2.6.7.6 provides a general description of the analysis approaches employed to demonstrate structural integrity of the NAC-LWT cask closure system for both normal conditions of transport and hypothetical accident conditions.

A complete range of impact orientations is evaluated, from an end impact at 0 degrees to a flat side impact at 90 degrees, and at 5-degree increments in between. Loads are derived from the hypothetical accident impact accelerations summarized within Table 2.6.7-34 and Table 2.7.1-20. Where necessary, impact accelerations have been interpolated at 5-degree increments from those values given in Table 2.6.7-34.

The details of this analytic evaluation are described and performed within Section 2.10.9 for both normal conditions of transport and hypothetical accident conditions. Hypothetical accident condition results are summarized in Table 2.7.1-60 and Table 2.7.1-61, corresponding to a "hot"

initial condition and a "cold" initial condition, respectively. The hot initial condition bolt temperature is taken at 227°F, as summarized in Table 3.4-2. The cold initial condition bolt temperature is assumed to be -20°F, per regulatory requirements. Physical properties for the SA-453, Grade 660 bolts are conservatively taken at 300°F and room temperature (70°F) for hot and cold conditions, respectively. As defined within Table 2.1.2-1, allowable bolt stress is taken as S_y, leading to an allowable direct tension stress of 81.9 ksi and 85.0 ksi, at 300°F and 70°F respectively. Based on this thorough evaluation, the closure bolts incur a maximum stress intensity of 64,511 psi, which result in a minimum margin of safety of 27 percent. See Table 2.7.1-60 (at 5°):

$$MS = 81.9/64.511 - 1$$

$$= + \underline{0.27}$$

Bolt engagement may be evaluated by computing shear stresses within the SA-336, Type 304, and forging material. At 300°F, the allowable shear stress is 0.5 S_U, or 33 ksi, according to Tables 2.1.2-1 and 2.3.1-1. The maximum tensile load is found as the product of the maximum bolt stress intensity, noted above, and the bolt stress area, or (64,511 psi) (0.6051) = 39,036 lbs. The shear area per inch of engagement for a 1 - 8 UNC internal thread is 2.325 in^2/in ("Table Speeds Calculation of Strength of Threads"). The resultant shear stress and margin of safety within the top body forging is:

$$\tau = P/A = (39,036) / [(2.325)(1.875)]$$

$$= 8,954 \text{ psi}$$

$$MS = 33.0/8.954 - 1$$

$$= + \underline{2.69}$$

Using consistently conservative assumptions, the NAC-LWT cask lid bolted closure is shown to satisfy the performance and structural integrity requirements of 10 CFR 71.73(c)(1) for hypothetical accident conditions.

2.7.1.6 Crush

The dynamic crush test required by 10 CFR 71.73 (c) (2) does not apply to the NAC-LWT cask. The mass of the NAC-LWT exceeds 500 kg and the overall package density is greater than 1,000 kg/m^3.

2.7.1.7 Rod Shipment Can Assembly Analysis

2.7.1.7.1 Discussion

The NAC-LWT rod shipment can assembly is analyzed for structural adequacy in accordance with the requirements of 10 CFR 73 for a 30-foot drop (hypothetical accident condition). The structural evaluation is performed by classical elastic analysis methods. The components evaluated include the can weldment, internal spacer, 4×4 and 5×5 inserts, and the PWR insert. The analysis follows the same methodology as that used for the normal conditions analysis contained in Section 2.6.7.10.

2.7.1.7.2 Analysis Description

Geometry

The geometry of the can assembly is shown in Drawing 315-40-098. Note that the tube component of the can assembly is fabricated from a 6-in. × 6-in. × 0.5-in.-thick tube that is machined to the final dimensions of 5.5-in. × 5.5-in. × 0.25-in.-thick. The can assembly is positioned within the basket during transport of the cask. If the cask is equipped with a PWR basket, the PWR insert is required to provide correct positioning within the basket. The can assembly is constructed of Type 304 stainless steel with the exception of the PWR insert, which is constructed of 6061 Aluminum.

Loadings

The magnitude of the impact force varies according to the drop height and drop orientation. As calculated in Section 2.6.7.4, the g-loads for the 30-foot end and side drops are 60 and 49.7 g, respectively.

Detailed Analysis

Can Weldment

The can body is contained within the basket assembly and is not subjected to bending stresses in the side-drop case.

For the end drop, the can weldment is loaded by its own weight. The can contents bear against the bottom or top of the can assembly, depending on drop orientation.

LWT Can Weldment Compressive Stress

Under hypothetical accident conditions, the tube is evaluated for a 60 g acceleration for the end drop. The compressive load (P) on the tube is the combined weight of the lid and tube body times the 60 g factor.

The compressive load (P) is:

$$P = 310 \times 60 = 18{,}600 \text{ lbs}$$

The compressive stress (S_c) in the tube body is:

$$S_c = \frac{P}{A} = \frac{18{,}600}{4.98} \cong 3{,}735 \text{ psi}$$

The margin of safety (MS) is then:

$$MS = \frac{0.7S_u}{S_c} - 1 = \frac{0.7(63{,}100)}{3{,}735} - 1 = +10.8$$

LWT Can Weldment Bolt Stresses

During the top end drop, the can assembly impacts on the lid handle. The insert and fuel rods strike the lid and the internal spacer strikes the flange. The resulting lid and flange deformations could result in prying forces on the lid bolts. To compute the force in the lid bolts due to a 30-foot top end drop, a 3-D finite element model of the lid, lid handle, flange, and can tube is constructed. The lid, lid handle, flange, and can tube are modeled using solid elements (SOLID45). The bolts are included in the model using beam elements (BEAM4) originating at the top of the lid and terminating at the top of the flange. The interface between the lid and flange uses contact element (COMBIN40) to model the interaction at this joint. The model represents 1/4 of the can assembly cross section. A uniform pressure load is applied to the inner lid surface to represent the weight of the fuel rods (350 lbs) and insert (75 lbs) multiplied by the 60g-accident acceleration loading. Nodal forces applied to the edge of the flange represent the weight of the internal spacer (240 lbs) multiplied by the 60g-accident acceleration. A plot of the model along with the applied loads follows.

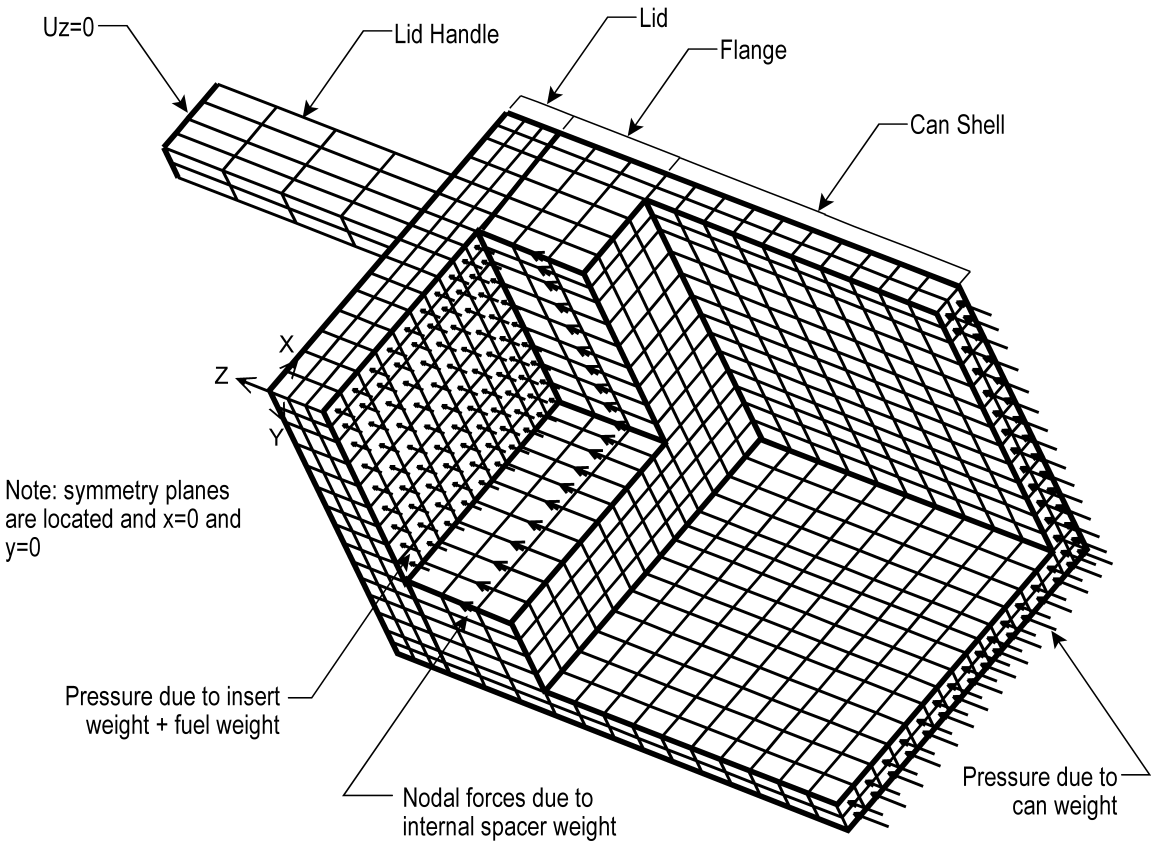

Since the entire can is not modeled, the weight of the can (310 lbs) multiplied by the 60g-accident acceleration is applied using a uniform pressure applied to the "cut surface" on the can shell. Because internal pressure opposes the impact force, thus reducing the bolt tensile load, its effect is not included in the analysis. Symmetry boundary conditions are applied at x = 0 and y = 0 positions on the model. The axial load is reacted at the top of the handle by restraining the Uz degree of freedom at this surface.

An initial strain is applied to the bolt beam elements to simulate the bolt preload. The bolt tension due to the bolt preload is calculated from the following relation. Each lid bolt is initially installed with a torque of 35 ± 5 in.-lb. The tensile force (P_B) in the bolt due to the maximum installation torque (T = 40 in.-lbs) is:

$$P_B = \frac{T}{\left(\frac{l}{2\pi} + \frac{d_2\mu_1}{2\cos\alpha} + \frac{(d + b\mu_2)}{4}\right)} = 635 \text{ lbs} \quad \text{(Machinery's Handbook, equation 22)}$$

where:

l = 0.0556 in, thread lead = 1/n

d_2 = 0.2732 in, pitch diameter

d = 0.3125 in, nominal bolt diameter

b = 0.5 in, nominal diameter of bolt head contact surface

α = 30°, 1/2 thread angle

$\mu_1 = \mu_2 = 0.15$, friction coefficient

From the finite element analysis, the maximum bolt tensile load (F), including preload and impact load, is 904 lbs. The maximum bolt stress is:

$$S = F / A = 904/((\pi/4)\ (0.25)^2) = 18.42 \text{ ksi}$$

Where F is the resulting bolt tensile force and A is the bolt cross-sectional area. The allowable bolt stress for pressure containing structures is S_y.

At 575°F, the yield stress for 316 stainless steel SA-479 is 19.1 ksi and the ultimate stress is 71.8 ksi. Therefore, the allowable stress is19.1 ksi. The resulting margin of safety is:

$$MS = \frac{S_y}{S} - 1 = \frac{19.1}{18.42} - 1 = +0.03$$

Therefore, the lid bolts maintain structural integrity during the end drop.

During the end impact, puncture of the can ends is possible by the fuel rods, an insert tube, or the lid handle. Since the lid is half the thickness of the can bottom plate, only puncture of the lid will be considered. Conservatively considering that the fuel rod weight and insert weight impacts the lid, the resulting shear stress is calculated as:

$$S = \frac{F}{A} = \frac{(350 + 75)x60}{\pi(0.6875)(0.5)} = 23.6 \text{ ksi}$$

where F is the weight of the fuel (350 lbs) and insert (75 lbs) and A is the shear area of the insert tube. The allowable for a pure shear loading during accident drop conditions is 0.5 S_u or 0.5 (63.7 ksi) = 31.85 ksi at 575°F for the 304 SS lid. The resulting margin of safety is:

$$MS = \frac{0.5S_u}{S} - 1 = \frac{31.85}{23.6} - 1 = +0.35$$

Considering puncture due to the lid handle,

$$S = \frac{F}{A} = \frac{(350 + 75 + 310)\ x\ 60}{2(1.25\,x\,2 + 2\,x\,0.625)(0.5)} = 11.76 \text{ ksi}$$

where F is the weight of the fuel (350 lbs), insert (75 lbs), and can (310 lbs) and A is the shear area of handle at the lid intersection. The resulting margin of safety is:

$$MS = \frac{0.5S_u}{S} - 1 = \frac{31.85}{11.76} - 1 = +1.71$$

Can Internal Pressure

Can weldment internal pressure is considered insignificant in the end-drop and side-drop cases because it will tend to reduce the compressive loads on the can tube sides.

The effect of internal pressure is evaluated for the bending stress that the pressure imposes on the can weldment sides. Conservatively, a one-inch-wide section of the tube wall, equal in length to the outside dimension of the tube (L = 5.5 in) is analyzed as a simply supported beam with a uniform load.

The maximum moment (M) is determined by the following relation:

$$M = \frac{wL^2}{8} = \frac{(140 - 14.7)(5.5^2)}{8} \cong 474 \text{ in.-lb}$$

where w is the maximum differential pressure across the can wall due to the fire accident temperature (assumes that the cask internal pressure is atmospheric).

The bending stress (σ) in the tube wall is:

$$\sigma = \frac{Mc}{I} = \frac{(474 \text{ in.} - \text{lb})(0.125 \text{ in})}{0.0013 \text{ in.}^4} \cong 45.58 \text{ ksi}$$

The margin of safety (MS) is:

$$MS = \frac{3.6S_m}{\sigma} - 1 = \frac{56.16 \text{ ksi}}{45.58 \text{ ksi}} - 1 = +0.23$$

Can Lid Bolt Analysis

The tensile force (F_p) on each lid bolt due to internal pressure is:

$$F_p = \frac{PA}{n} = \frac{(140 - 14.7)(3.75^2)}{8} \cong 220.3 \text{ lbs}$$

where:

P = the pressure differential across the can wall (100% rod failure with fire temperature and assuming atmospheric pressure in the cask)

A = 3.75 inches × 3.75 inches, the area of the can lid exposed to pressure

n = 8, number of bolts

The total tensile force on each lid bolt is F_p + the initial preload force, F_i = 635 lbs

The lid bolt tensile stress (σ) is:

$$\sigma = \frac{F_p + F_i}{A_t} = \frac{855.3}{0.049} = 17.46 \text{ ksi}$$

where:

At = 0.049 in^2, the bolt tensile stress area $\frac{\pi}{4}\left(0.25^2\right)$

The margin of safety (MS) for the hypothetical accident condition is:

$$MS = \frac{S_y}{\sigma} - 1 = \frac{19.1}{17.46} - 1 = +0.09$$

Can Tube Buckling

The critical buckling load was calculated (see Section 2.6.7.10) as 698 × 10^3 pounds. Since the actual compressive load of 310 × 60 = 18,600 lbs is much less than the critical buckling load, the tube has adequate resistance to buckling.

Internal Spacer

The internal spacer is contained within the can assembly and is not subjected to bending in the side drop condition.

The compressive stress in the internal spacer rails during the side drop is determined as follows:

$$\sigma_b = \frac{Wg}{A} = \frac{665 \text{ x } 49.7}{123.7} \cong 267.2 \text{ psi}$$

where:

W = total load = 350 (fuel) + 240 (internal spacer) + 75 (4x4 insert) = 665 lbs

g = 49.7 (hypothetical accident condition side drop)

A = 123.7 in^2 cross-sectional area of spacer rails, 4 × 0.188 × (165.25 – 2 x 0.38)

The resulting margin of safety is Large.

Internal Spacer Compressive Stress

For the end drop, the internal spacer shell is loaded by its own weight. The insert rail stiffness is conservatively neglected in the strength.

Under hypothetical accident conditions, the spacer is evaluated for a 60 g acceleration. The compressive load (P) on the shell is due to the weight of the internal spacer. The entire weight of the internal spacer times the 60 g factor is used to calculate the compressive load.

The compressive load (P) is:

$$P = 240 \times 60 = 14{,}400 \text{ lbs}$$

The compressive stress (S_c) in the spacer body is:

$$S_c = \frac{P}{A} = \frac{14{,}400}{1.69} \cong 8{,}521 \text{ psi}$$

The margin of safety (MS) is then:

$$MS = \frac{0.7S_u}{S_c} - 1 = \frac{0.7(63{,}100)}{8{,}521} - 1 = +4.18$$

Internal Spacer Buckling

The critical buckling load was calculated (see Section 2.6.7.10) as 190×10^3 pounds. Since the actual compressive load ($240 \times 60 = 14{,}400$ lbs) is much less than the critical buckling load, the tube has adequate resistance to buckling.

4×4 and 5×5 Inserts

The 4×4 and 5×5 inserts are contained within the internal spacer. The 4×4 inserts are supported by straps on 10-inch spacing. These straps provide a clearance of 0.31 inches and will allow bending of the tubes to occur. The 5×5 insert tubes are evaluated for a diametrically opposed load due to the weight of the adjacent tubes during the side drop.

The 4×4 insert lower tube will be evaluated as a fixed-fixed beam over a 10-inch span. The weight of the 3 tubes above (as well as lower tube self-weight) will be considered in the analysis. The stiffness of the tubes above the lower tube will conservatively be neglected. The combined weight (P) of the fuel pins and insert tubes are considered as a uniformly distributed load over the 10-inch span. In addition, the weights are scaled by the 60 g deceleration factor.

The maximum bending stress (f_b) is determined as follows:

$$f_b = \frac{Wlg}{12\ Z} = \frac{5.8(10.0)49.7}{12x0.0092} \cong 26{,}111 \text{ psi}$$

where:

W = load on 10-inch section = $(14 + 9.5) \times 4 \times 10/163.0 = 5.8$ lbs

l = 10 inch (span of tube)

g = 49.7 (accident condition side drop)

Z = $\pi/32\ (0.6875^4 - 0.6315^4) / 0.6875 = 0.0092\ in^3$ (section modulus of the tube)

The margin of safety (MS) is:

$$MS = \frac{1.0\ S_u}{\sigma_{max}} - 1 = \frac{1.0(48{,}160)}{26{,}111} - 1 = +0.84$$

The bending moment due to the diametrically opposed line load on the 5x5 insert is calculated by the following:

$$M_b = \frac{WRg}{\pi} = \frac{70/163.0 \text{ x } 0.344 \text{ x } 49.7}{\pi} \cong 2.34 \text{ lb} - \text{in}$$

where:

W = total load = 14 x 4 (fuel) + 70/5 (tube) = 70 lbs

g = 49.7 (hypothetical accident condition side drop)

R = 0.6875/2 = 0.344 in (radius of insert tube)

The resulting bending stress is:

$$f_b = \frac{6M_b}{t^2} = \frac{6 \text{ x } 2.34}{0.028^2} \cong 17{,}908 \text{ psi}$$

The margin of safety (MS) is:

$$MS = \frac{1.0\ S_u}{\sigma_{max}} - 1 = \frac{1.0(48{,}160)}{17{,}908} - 1 = +1.69$$

4×4 and 5×5 Insert Tube Compressive Stress

Under hypothetical accident conditions, the tube is evaluated for a 60 g acceleration. The compressive load (P) on the shell is due to the weight of the tube. The entire weight of the tube is calculated as:

The compressive load (P) is:

P = 2.72 x 60 = 163.2 lbs

The compressive stress (S_c) in the tube body is:

$$S_c = \frac{P}{A} = \frac{163.2}{0.058} \cong 2{,}814 \text{ psi}$$

where:

$A = \pi/4\ (0.6875^2 - 0.6315^2) = 0.058\ in^2$

The margin of safety (MS) is then:

$$MS = \frac{0.7S_u}{S_c} - 1 = \frac{0.7(48{,}160)}{2{,}814} - 1 = +11.0$$

PWR Insert

The PWR insert contains the can assembly for insertion into the PWR basket. The PWR insert comprises a square box section with smooth sides. Therefore, no bending stresses will be introduced in the side drop condition.

PWR Insert Body Compressive Stress

Under accident conditions, the tube is evaluated for a 60 g acceleration. The compressive load (P) on the body is due to the weight of the PWR insert. The entire weight of the PWR insert times the 60 g factor will conservatively be used to calculate the compressive load.

The compressive load (P) is:

$P = 650 \times 60 = 39{,}000$ lbs

The compressive stress (S_c) in the tube body is:

$$S_c = \frac{P}{A} = \frac{39{,}000}{39.2} \cong 995\,psi$$

where:

$A = (8.5^2 - 5.75^2) = 39.2\ in^2$

The margin of safety (MS) is then:

$$MS = \frac{0.7S_u}{S_c} - 1 = \frac{0.7(25{,}800)}{995} - 1 = +17.2$$

PWR Insert Tube Buckling

The critical buckling load was calculated (see Section 2.6.7.10) as 3.86×10^6 pounds. Since the maximum compressive load (650 x 60 = 39,000 lbs) is much less than the critical buckling load (3.86×10^6 lb), the PWR insert has adequate resistance to buckling.

Figure 2.7.1-1 30-Foot Bottom End Drop with 130°F Ambient Temperature and Maximum Decay Heat Load

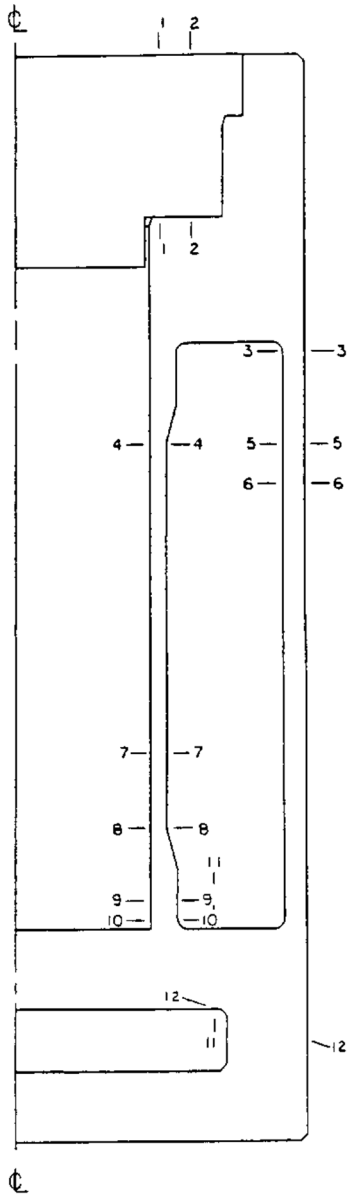

Figure 2.7.1-2 30-Foot Bottom End Drop with -40°F Ambient Temperature and Maximum Decay Heat Load

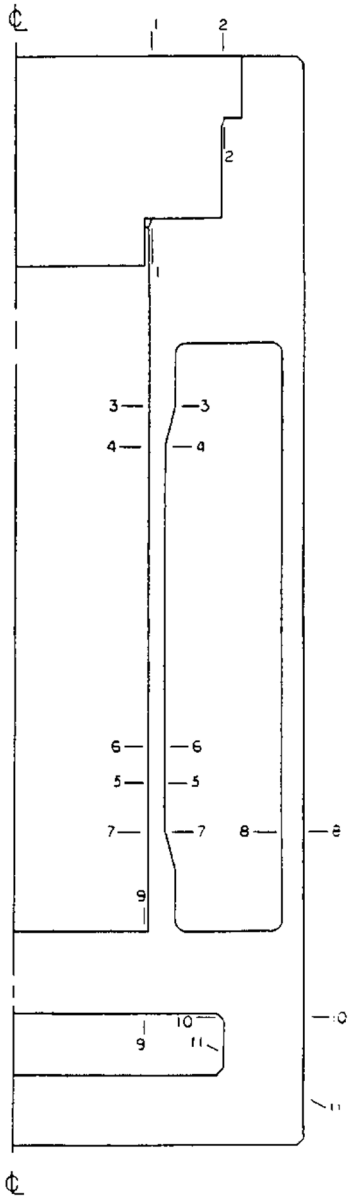

Figure 2.7.1-3 30-Foot Bottom End Drop with -40°F Ambient Temperature and No Decay Heat Load

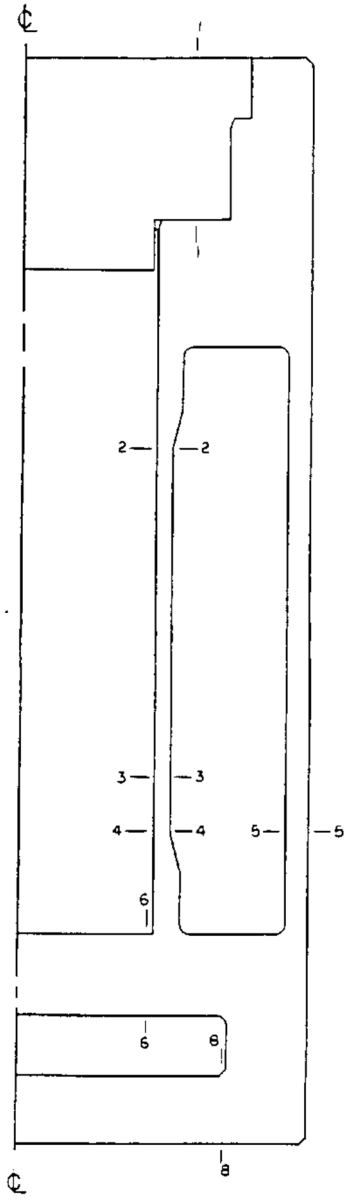

Figure 2.7.1-4 30-Foot Top End Drop with 130°F Ambient Temperature and Maximum Decay Heat Load

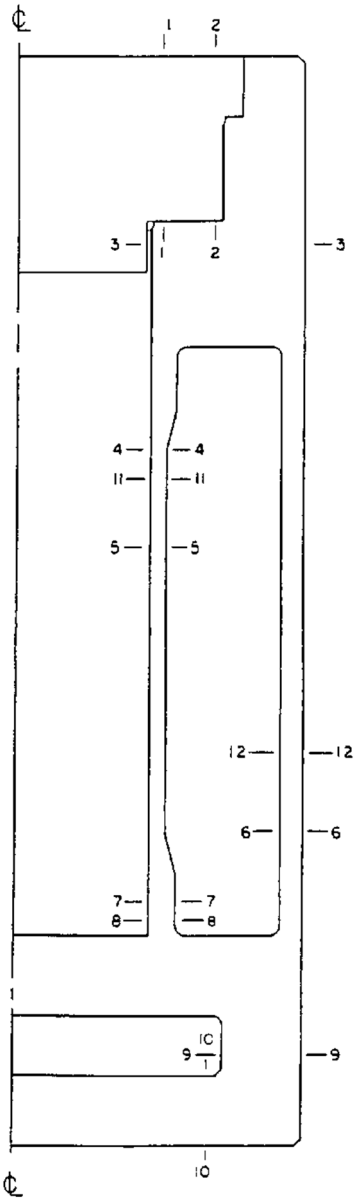

Figure 2.7.1-5 30-Foot Top End Drop with -40°F Ambient Temperature and Maximum Decay Heat Load

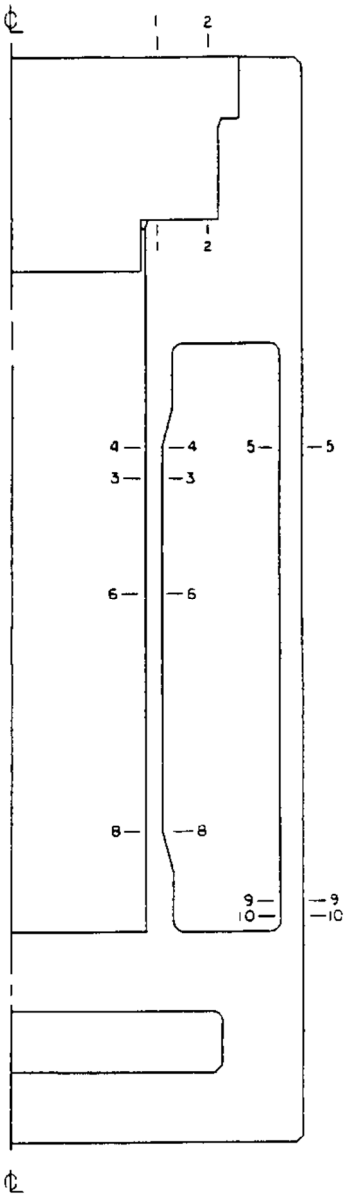

Figure 2.7.1-6 Circumferential Load Distribution for Cask Side Drop Impact

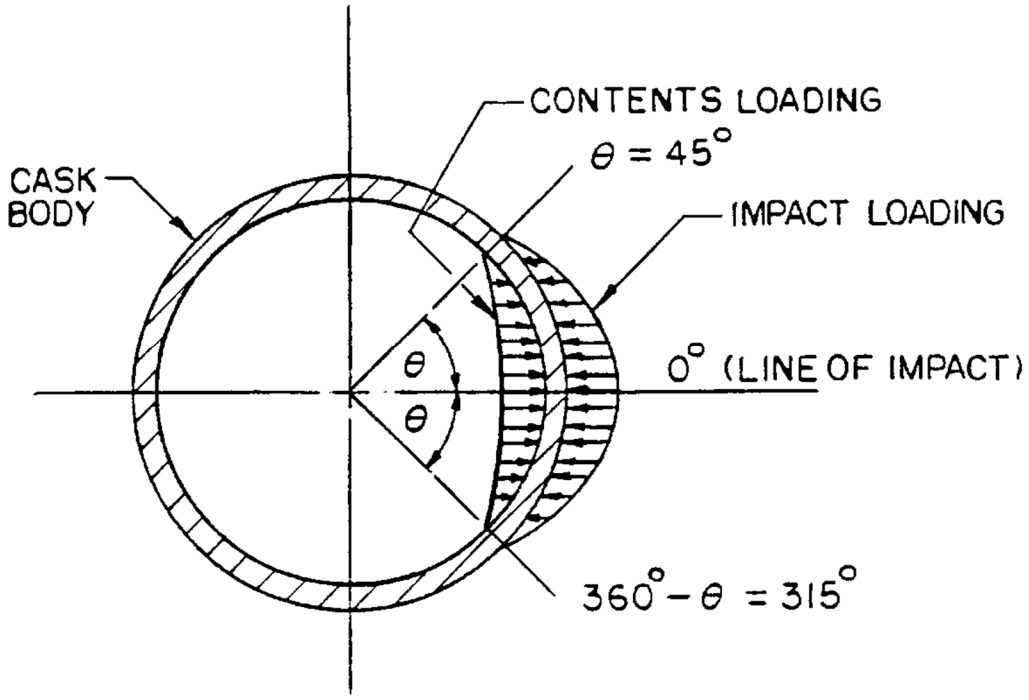

Figure 2.7.1-7 Six Term Fourier Series Representation of Circumferential Load Distribution for Cask Side Drop Impact

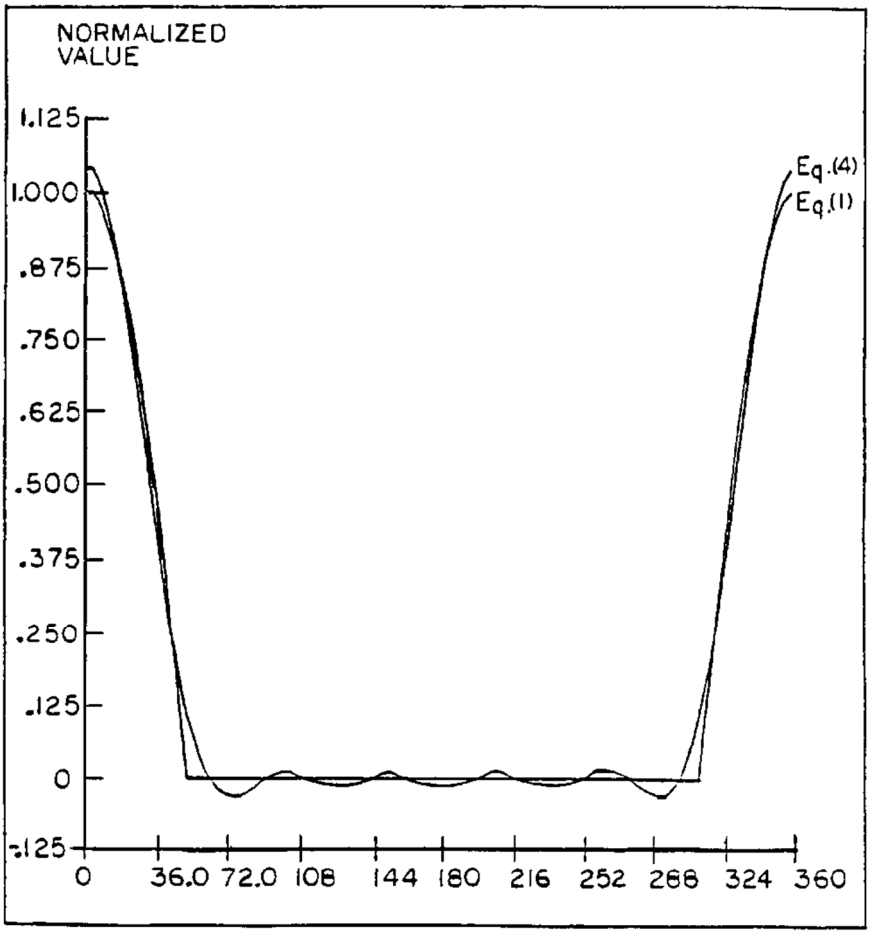

Figure 2.7.1-8 NAC-LWT Cask Critical Sections (30-Foot Side Drop with 100°F Ambient Temperature)

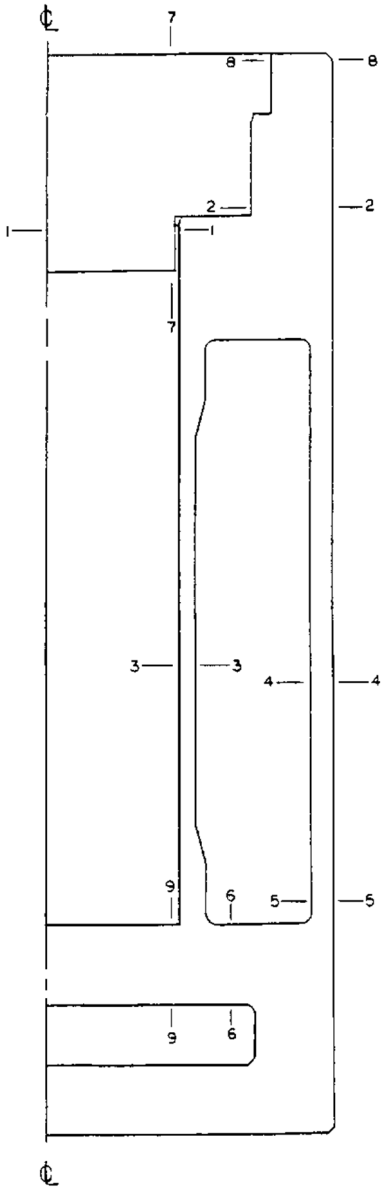

Figure 2.7.1-9 Circumferential Load Distribution for Cask Oblique Drop Impact

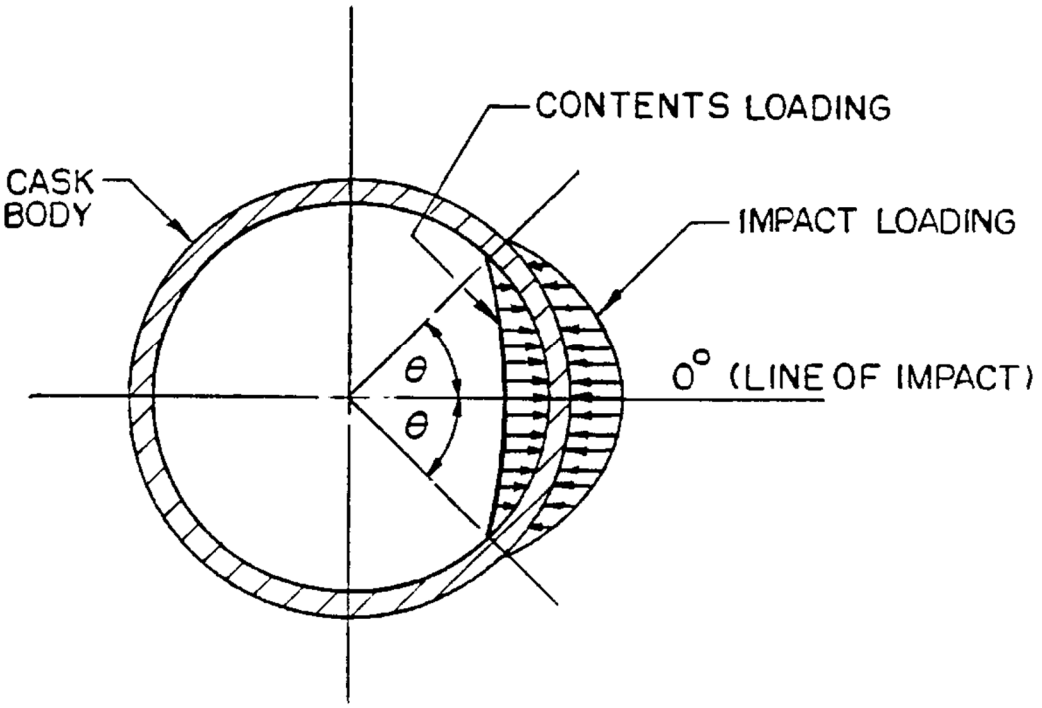

Figure 2.7.1-10 30-Foot Top Corner Drop with 130°F Ambient Temperature – Drop Orientation = 15.74 Degrees

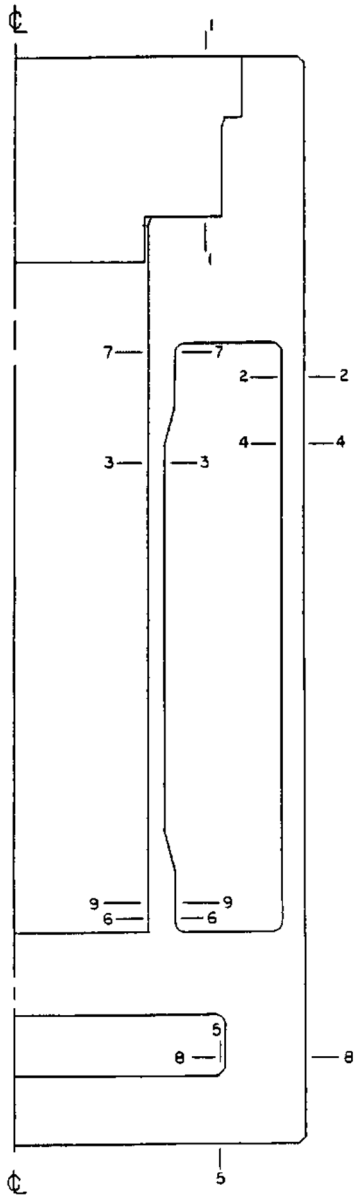

Figure 2.7.1-11 30-Foot Top Oblique Drop with 130°F Ambient Temperature – Drop Orientation = 30 Degrees

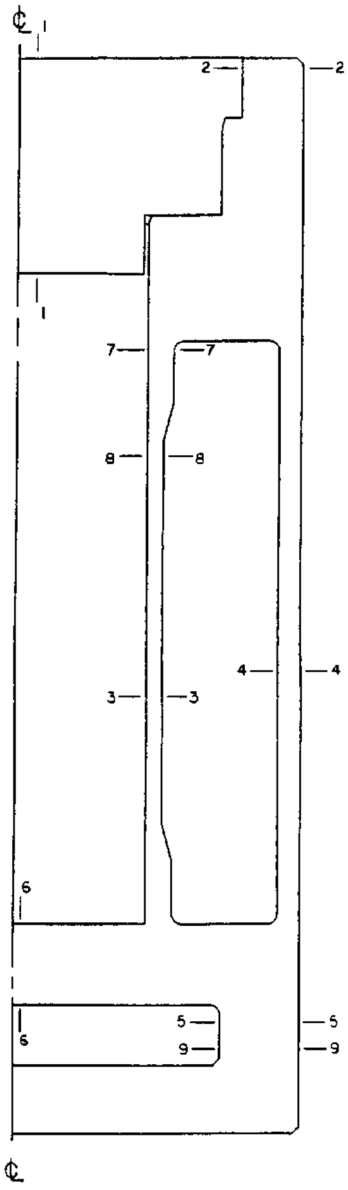

Figure 2.7.1-12 30-Foot Top Oblique Drop with 130°F Ambient Temperature – Drop Orientation = 45 Degrees

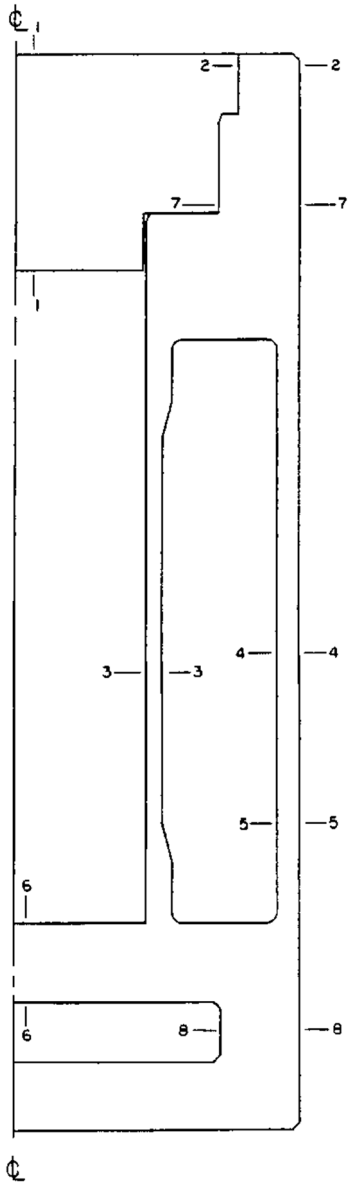

Figure 2.7.1-13 30-Foot Oblique Drop with 130°F Ambient Temperature – Drop Orientation = 60 Degrees

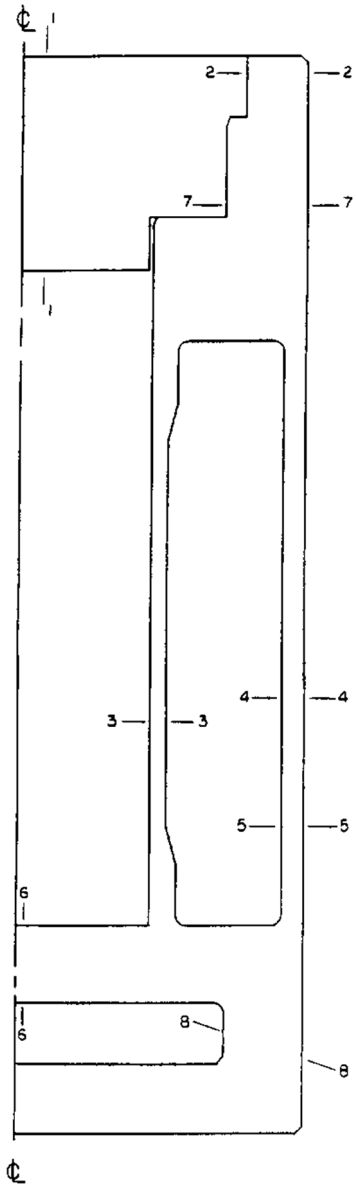

Figure 2.7.1-14 30-Foot Top Corner Drop with -40°F Ambient Temperature – Drop Orientation = 15.74 Degrees

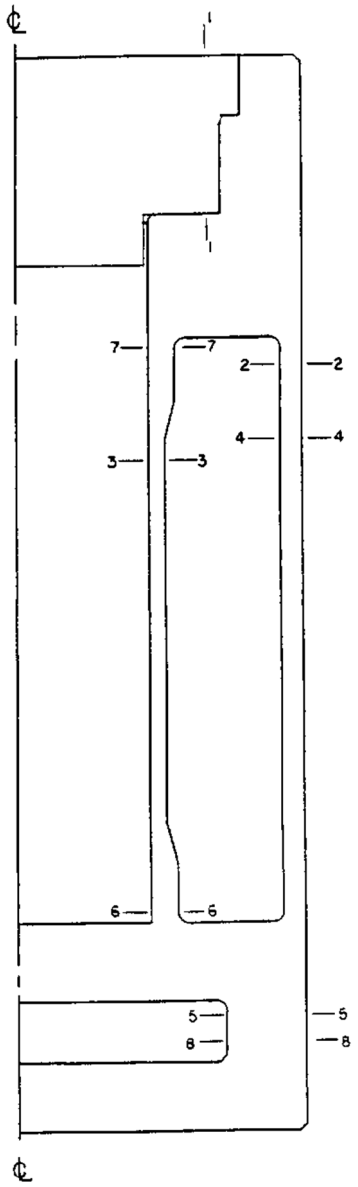

Figure 2.7.1-15 30-Foot Top Oblique Drop with -40°F Ambient Temperature – Drop Orientation = 30 Degrees

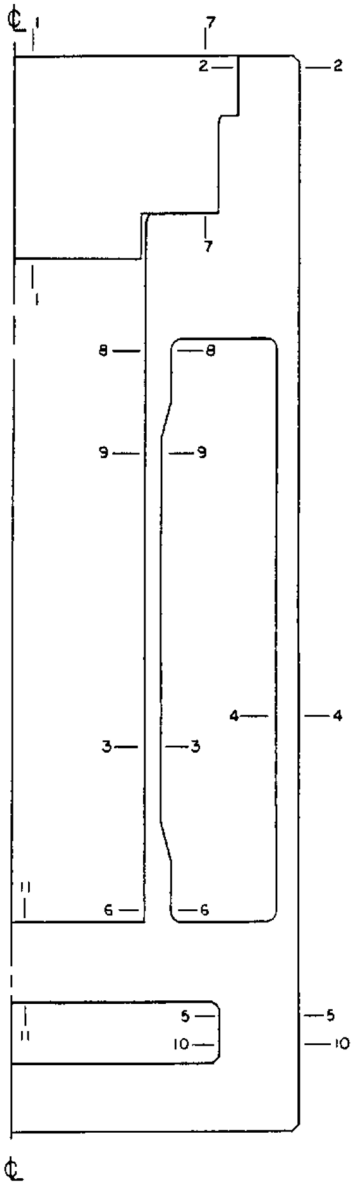

Figure 2.7.1-16 30-Foot Top Oblique Drop with -40°F Ambient Temperature – Drop Orientation = 45 Degrees

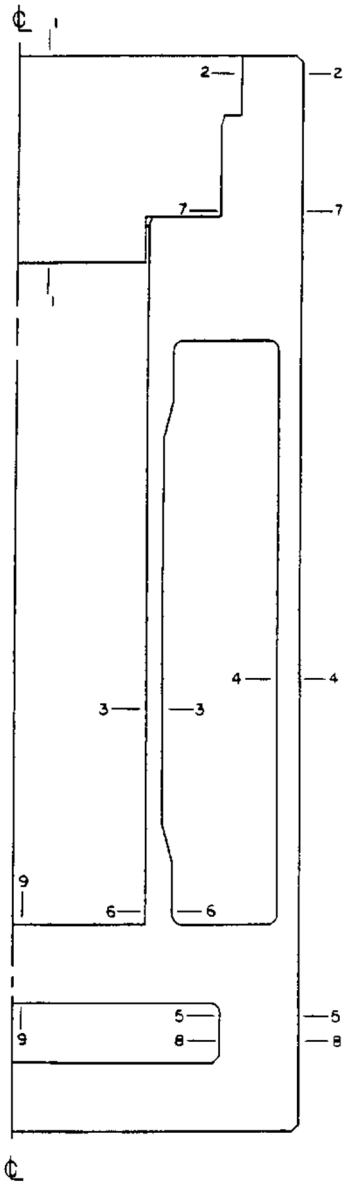

Figure 2.7.1-17 30-Foot Top Oblique Drop with -40°F Ambient Temperature – Drop Orientation = 60 Degrees

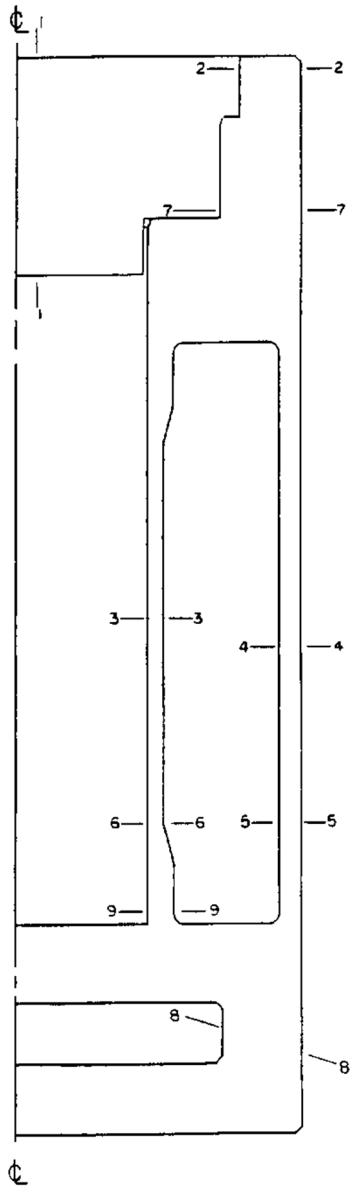

Figure 2.7.1-18 30-Foot Bottom Oblique Drop with 130°F Ambient Temperature – Drop Orientation = 15.74 Degrees

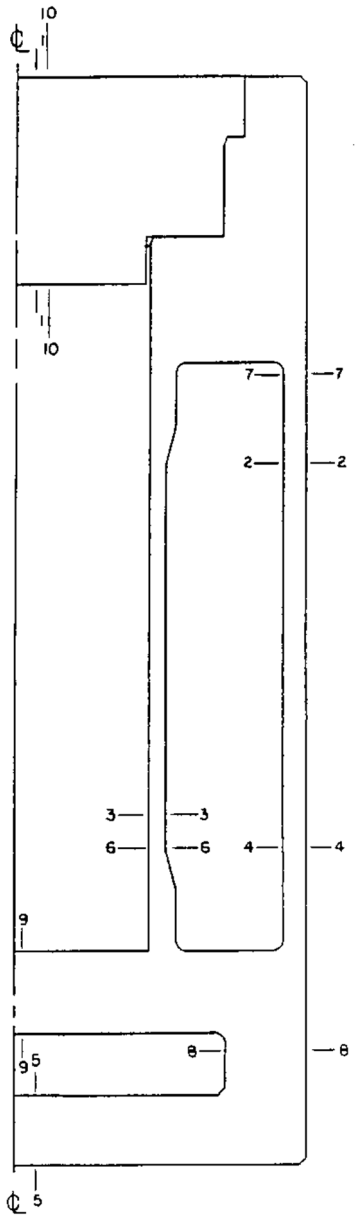

Figure 2.7.1-19 30-Foot Bottom Oblique Drop with 130°F Ambient Temperature – Drop Orientation = 30 Degrees

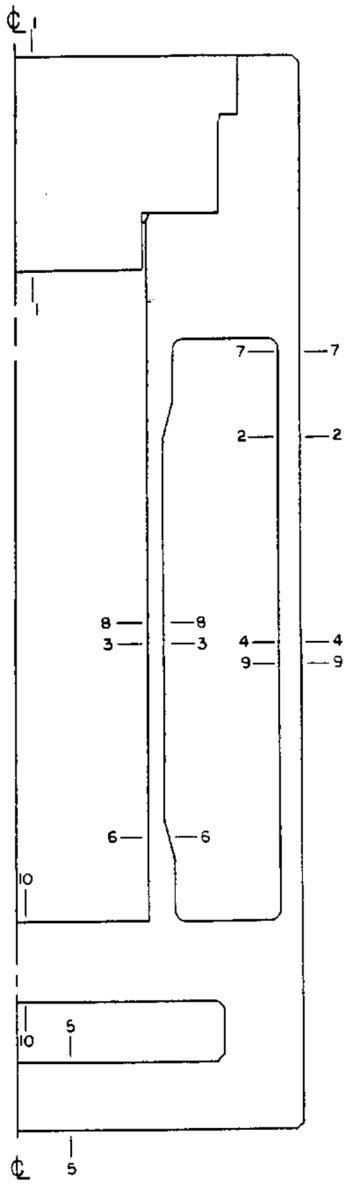

Figure 2.7.1-20 30-Foot Bottom Oblique Drop with 130°F Ambient Temperature – Drop Orientation = 45 Degrees

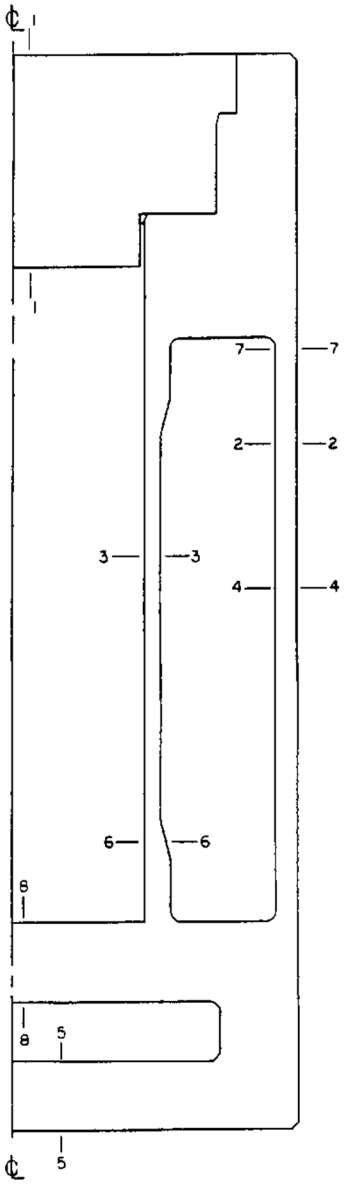

Figure 2.7.1-21 30-Foot Bottom Oblique Drop with 130°F Ambient Temperature – Drop Orientation = 60 Degrees

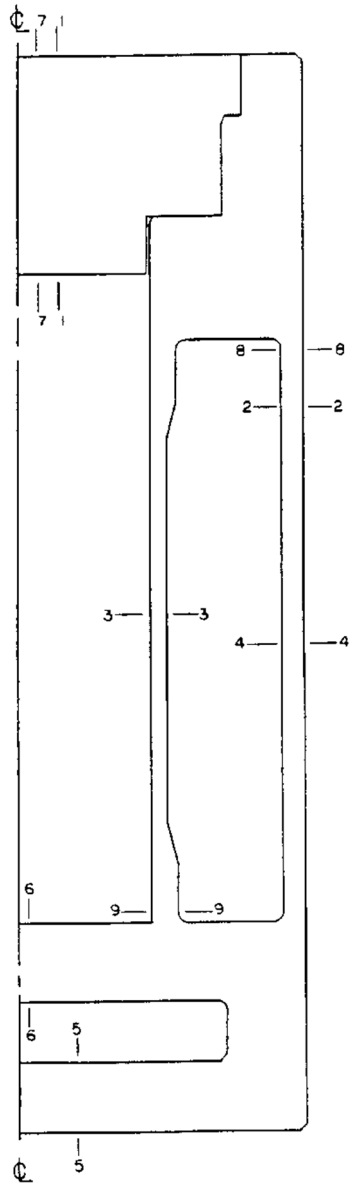

Figure 2.7.1-22 Sectional Stress Plot – 30-Foot Bottom Oblique Drop with 130°F Ambient Temperature – Drop Orientation = 60 Degrees

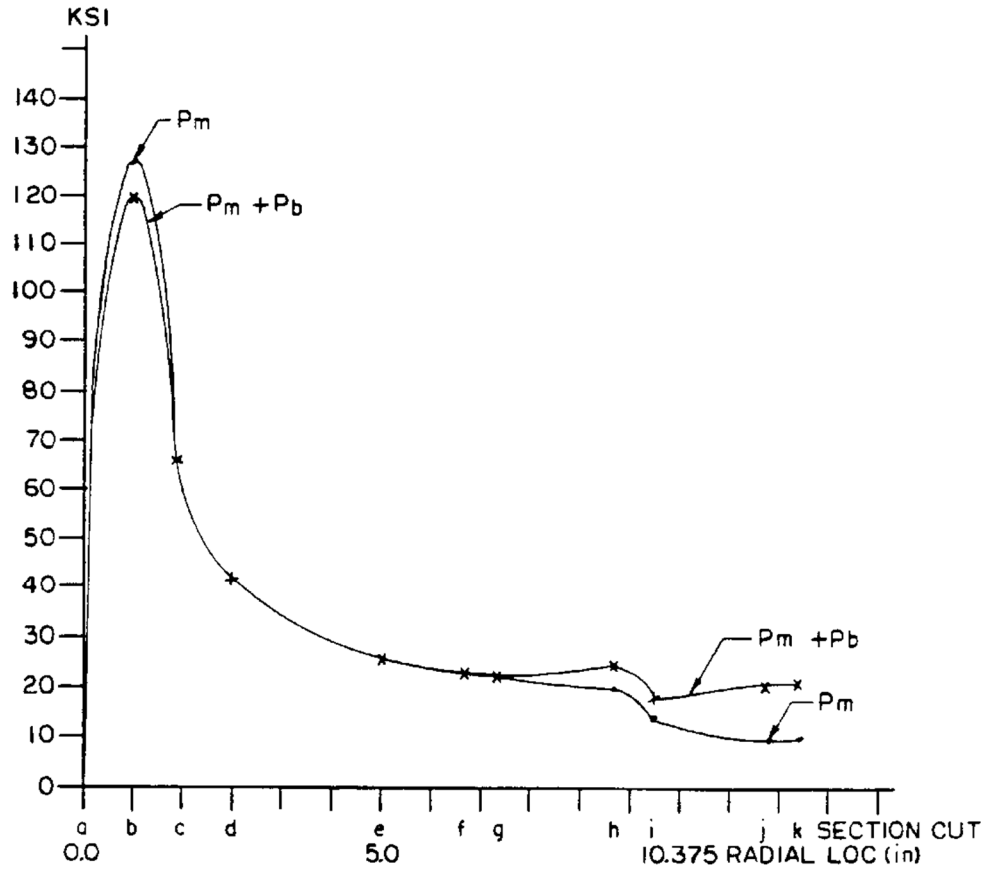

Note: Refer to Figure 2.7.1-25 for identification of the section cut.

Figure 2.7.1-23 Sectional Stress Plot (P_m) – 30-Foot Bottom Oblique Drop with 130°F Ambient Temperature – Drop Orientation = 60 Degrees

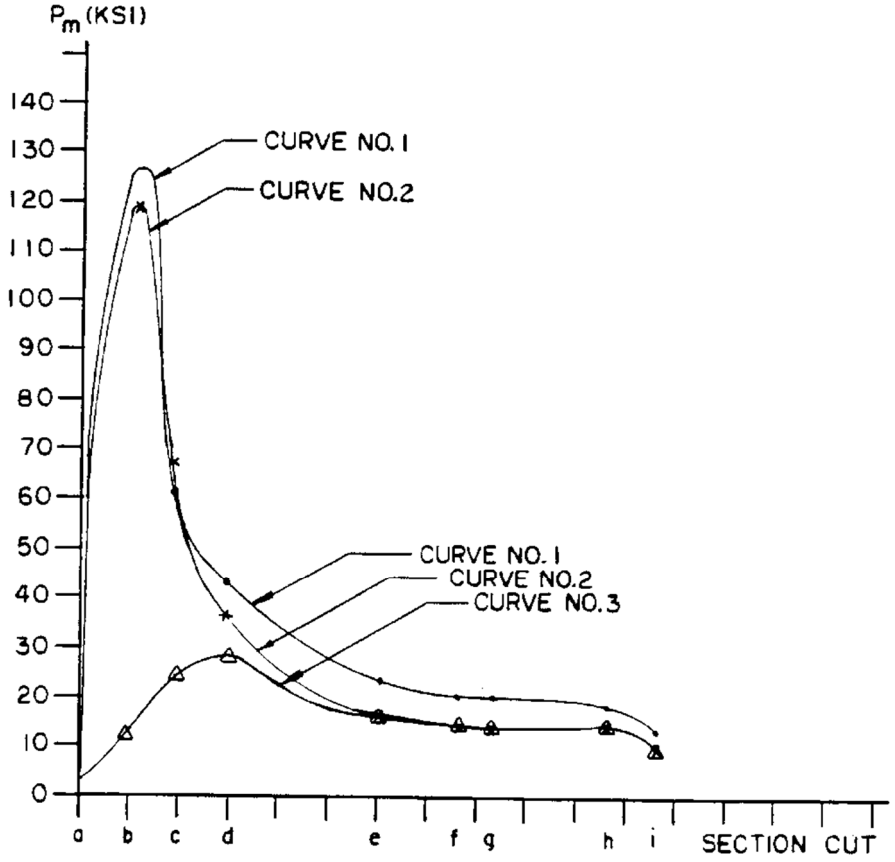

Note: Refer to Figure 2.7.1-25 for identification of the section cut.

Figure 2.7.1-24 Sectional Stress Plot ($P_m + P_b$) – 30-Foot Bottom Oblique Drop with 130°F Ambient Temperature – Drop Orientation = 60 Degrees

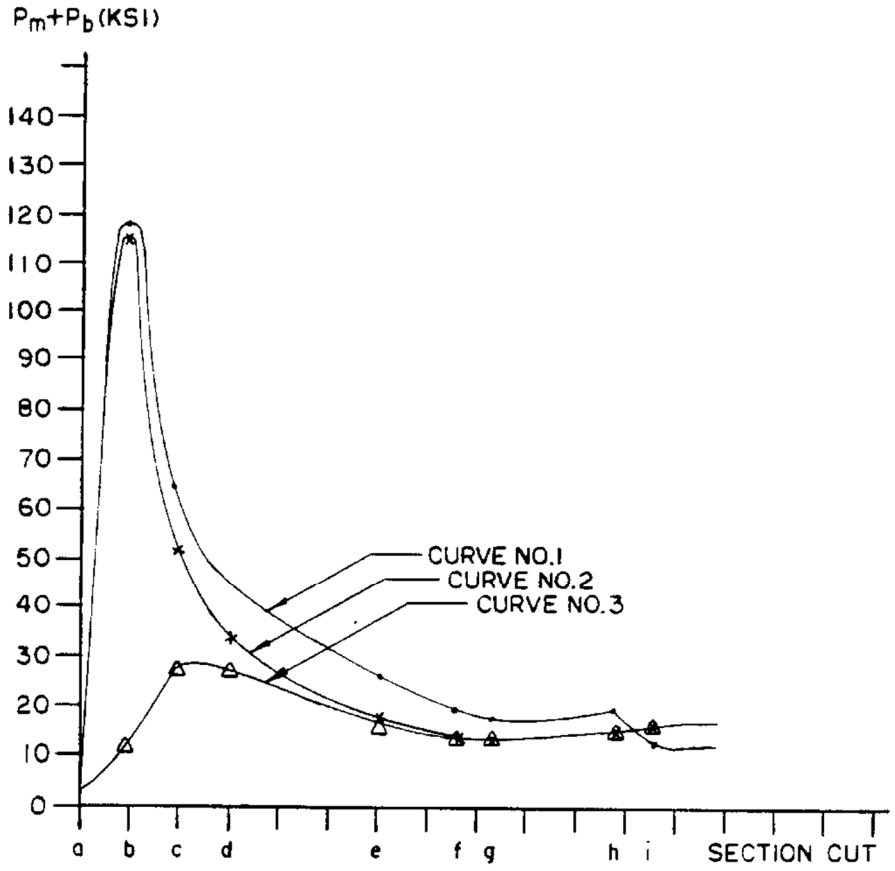

Note: Refer to Figure 2.7.1-25 for identification of the section cut.

Figure 2.7.1-25 Bottom Closure Plate – Section Cut Identification

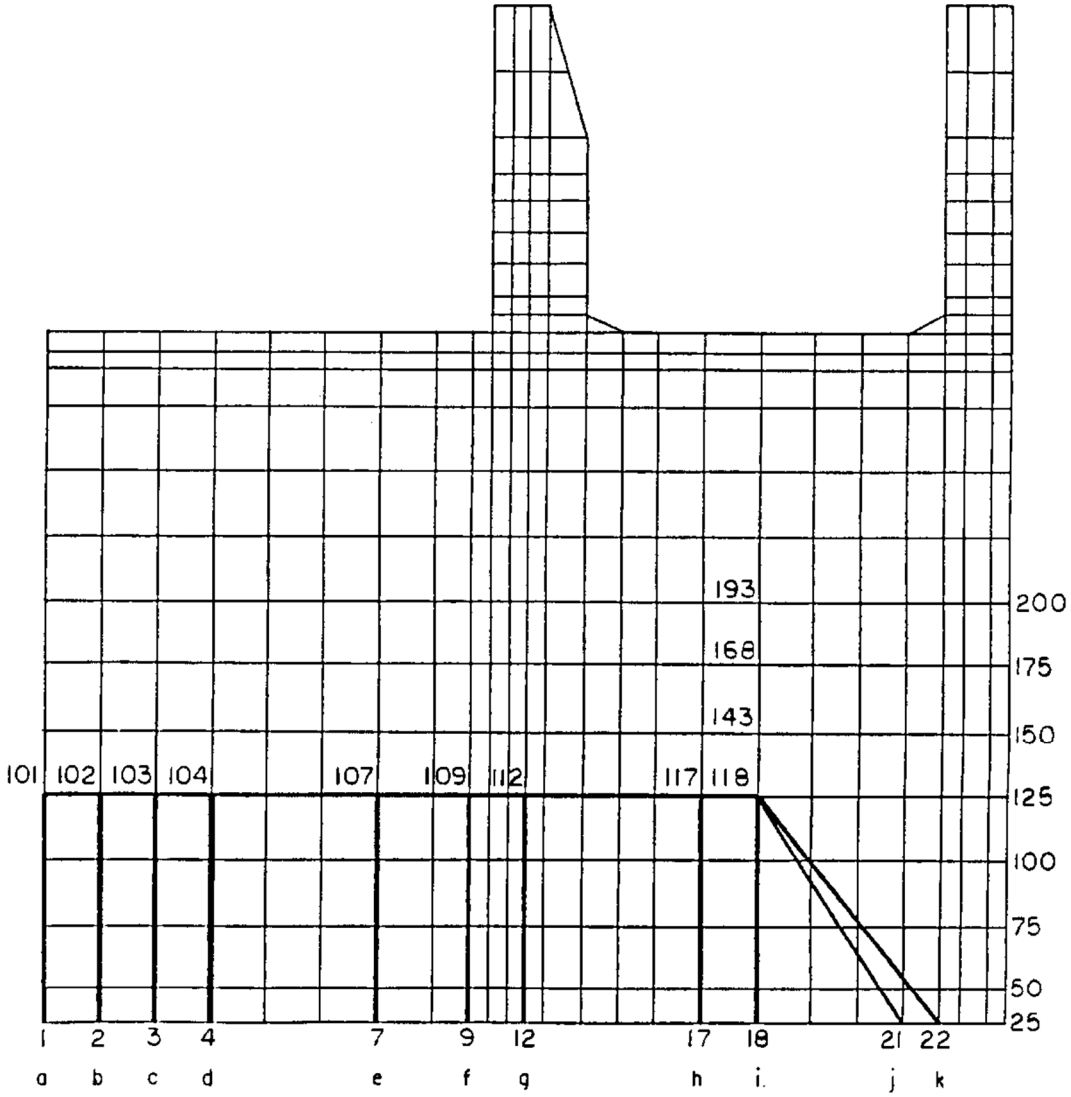

Figure 2.7.1-26 Sectional Stress Plot – 30-Foot Bottom Oblique Drop with 130°F Ambient Temperature – Drop Orientation = 45 Degrees

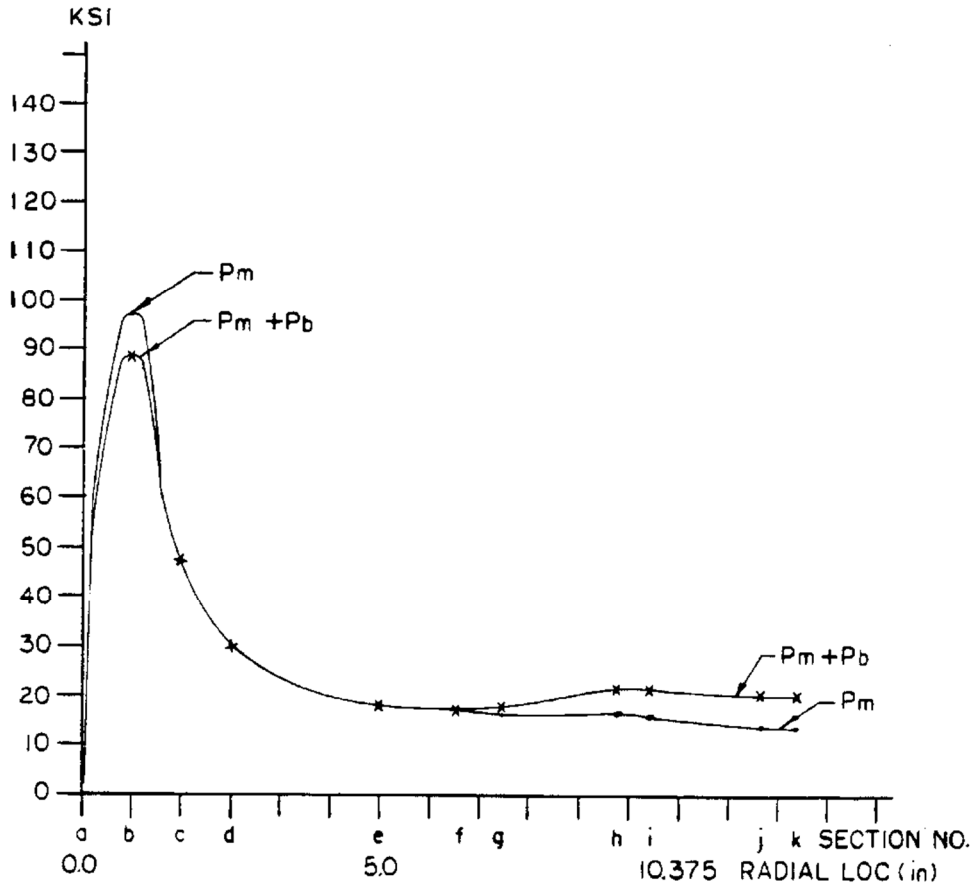

Note: Refer to Figure 2.7.1-25 for identification of the section cut.

Figure 2.7.1-27 Sectional Stress Plot – 30-Foot Bottom Oblique Drop with 130°F Ambient Temperature – Drop Orientation = 30 Degrees

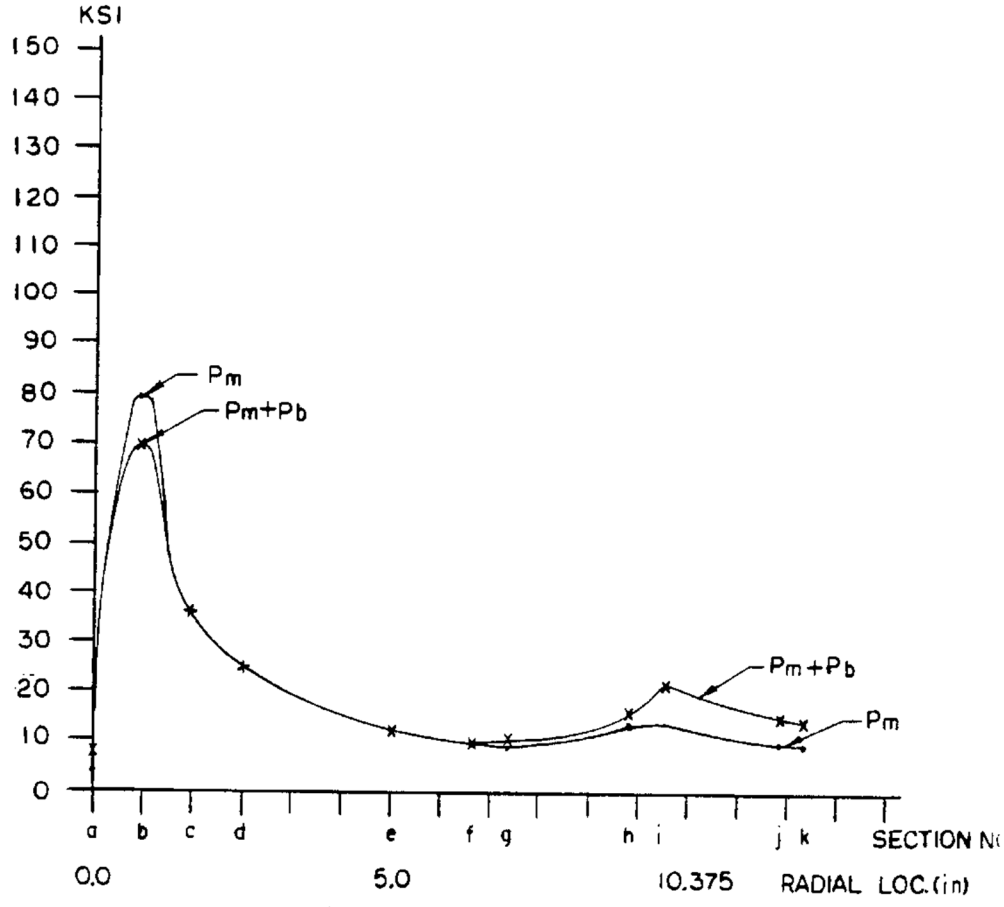

Note: Refer to Figure 2.7.1-25 for identification of the section cut.

Table 2.7.1-1 Critical Stress Summary (30-Foot Bottom End Drop) – Loading Condition 1 – P_m

Loading Condition 1: 130°F Ambient Temperature and Maximum Decay Heat Load

		P_m Stresses** (ksi)				Principal Stresses					
Comp. No.*	Section Cut Node to Node	S_x	S_y	S_z	S_{xy}	S_1	S_2	S_3	S.I.	Allow. Stress 0.7 S_u	Margin of Safety
	2-2										
1	2375 to 2575	-0.17	-0.23	0.62	0.40	0.62	0.2	-0.6	1.22	46.2	Large
	4-4										
3	1581 to 1584	-0.1	-4.54	-0.16	-0.14	-0.1	-0.16	-4.55	4.45	46.2	+9.38
	7-7										
4	701 to 704	-0.03	-8.44	0.51	-0.02	0.51	-0.03	-8.44	8.94	66.0	+6.38
	6-6										
6	1515 to 1518	0.00	1.98	-0.16	-0.04	1.98	0.00	-0.16	2.14	66.0	Large
	11-11										
7	192 to 342	-6.50	1.18	1.28	1.69	1.54	1.28	-6.85	8.39	46.2	+4.51
	10-10										
8	361 to 365	0.77	-5.40	3.89	-0.99	3.89	0.92	-5.55	9.44	46.2	+3.89

* Refer to Figure 2.10.2-9 for component identification.

** Conservatively based on a 1.12-inch thick outer shell and on a 3,850-psi crush strength aluminum honeycomb impact limiter (Section 2.7.1.1).

Table 2.7.1-2 Critical Stress Summary (30-Foot Bottom End Drop) – Loading Condition 1 – $P_m + P_b$

Loading Condition 1: 130°F Ambient Temperature and Maximum Decay Heat Load

		$P_m + P_b$ Stresses** (ksi)				Principal Stresses					
Comp. No.*	Section Cut Node to Node	S_x	S_y	S_z	S_{xy}	S_1	S_2	S_3	S.I.	Allow. Stress 1.0 S_u	Margin of Safety
	1-1										
1	2371 to 2571	-3.91	-0.35	0.11	0.00	0.11	-0.35	-3.91	4.01	66	Large
	3-3										
3	1835 to 1838	-0.1	4.66	2.25	0.29	4.68	2.25	-0.1	4.76	66	Large
	8-8										
4	621 to 624	0.15	-10.37	-1.16	0.28	0.16	-1.16	-10.38	10.54	94.3	+8.94
	5-5										
6	1595 to 1598	-0.01	3.03	0.57	0.00	3.03	0.57	-0.01	3.04	94.3	Large
	12-12										
7	150 to 193	9.25	-5.21	2.76	0.63	9.27	2.76	-5.24	14.51	66	+3.54
	9-9										
8	381 to 385	-0.21	-13.14	2.03	-1.07	2.03	-0.12	-13.23	15.26	66	+3.33

* Refer to Figure 2.10.2-9 for component identification.

** Conservatively based on a 1.12-inch thick outer shell and on a 3,850-psi crush strength aluminum honeycomb impact limiter (Section 2.7.1.1).

Table 2.7.1-3 Critical Stress Summary (30-Foot Bottom End Drop) – Loading Condition 1 – Total Range

Loading Condition 1: 130°F Ambient Temperature and Maximum Decay Heat Load

		Total Stress Range** (ksi)				Principal Stresses			Stress Differences		
Comp. No.*	Node	S_x	S_y	S_z	S_{xy}	S_1	S_2	S_3	S_1-S_2	S_2-S_3	S_3-S_1
1	2376	0.80	-4.48	-0.22	-0.31	0.82	-0.22	-4.50	1.04	4.28	-5.32
3	1805	-0.19	-5.27	-2.19	-0.78	-0.07	-2.19	-5.39	2.12	3.20	-5.32
4	604	-0.69	-12.07	-1.65	0.61	-0.66	-1.65	-12.10	0.99	10.45	-11.44
6	1595	-0.02	2.93	0.48	0.00	2.93	0.48	-0.02	2.45	0.50	-2.95
7	192	12.54	-7.35	3.46	-3.90	13.28	3.46	-8.09	9.82	11.55	-21.37
8	361	-0.03	-16.44	0.82	-1.4	0.82	0.09	-16.56	0.73	16.65	-17.38

* Refer to Figure 2.10.2-9 for component identification.

** Conservatively based on a 1.12-inch thick outer shell and on a 3,850-psi crush strength aluminum honeycomb impact limiter (Section 2.7.1.1).

Table 2.7.1-4 Critical Stress Summary (30-Foot Bottom End Drop) – Loading Condition 2 – P_m

Loading Condition 2: -40°F Ambient Temperature and Maximum Decay Heat Load

		P_m Stresses** (ksi)				Principal Stresses					
Comp. No.*	Section Cut Node to Node	S_x	S_y	S_z	S_{xy}	S_1	S_2	S_3	S.I.	Allow. Stress 0.7 S_u	Margin of Safety
	2-2										
1	2478 to 2578	0.03	-0.11	1.28	0.02	1.28	0.03	-0.11	1.39	46.2	Large
	4-4										
3	1581 to 1584	-0.15	-7.90	-0.93	-0.26	-0.14	-0.93	-7.91	7.77	46.2	Large
	6-6										
4	701 to 704	-0.02	-12.08	0.20	-0.03	0.20	-0.02	-12.08	12.28	66.0	+4.37
	8-8										
6	615 to 618	0.00	-2.85	0.80	0.00	0.80	0.00	-2.85	3.65	66.0	Large
	11-11										
7	100 to 143	-3.18	-4.19	2.15	2.18	2.15	-1.45	-5.93	8.07	46.2	Large
	7-7										
8	601 to 604	-0.23	-11.12	-1.21	0.46	-0.21	-1.21	-11.13	10.93	46.2	Large

* Refer to Figure 2.10.2-9 for component identification.

** Conservatively based on a 1.12-inch thick outer shell and on a 3,850-psi crush strength aluminum honeycomb impact limiter (Section 2.7.1.1).

Table 2.7.1-5 Critical Stress Summary (30-Foot Bottom End Drop) – Loading Condition 2 – $P_m + P_b$

Loading Condition 2: -40°F Ambient Temperature and Maximum Decay Heat Load

		$P_m + P_b$ Stresses** (ksi)				Principal Stresses					
Comp. No.*	Section Cut Node to Node	S_x	S_y	S_z	S_{xy}	S_1	S_2	S_3	S.I.	Allow. Stress 1.0 S_u	Margin of Safety
	1-1										
1	2371 to 2571	-4.10	-0.43	0.14	0.00	0.14	-0.43	-4.10	4.24	66	Large
	3-3										
3	1701 to 1705	0.04	-8.08	-1.59	-0.34	0.05	-1.59	-8.10	8.15	66	+7.10
	5-5										
4	621 to 624	0.18	-13.91	-1.67	0.32	0.19	-1.67	-13.91	14.10	94.3	+5.68
	8-8										
6	615 to 618	0.03	-4.12	0.63	0.00	0.63	0.03	-4.12	4.75	94.3	Large
	10-10										
7	193 to 200	3.76	-9.04	1.83	-0.76	3.81	1.83	-9.09	12.89	66	+4.12
	9-9										
8	185 to 335	-12.66	-0.38	-0.11	1.93	-0.09	-0.11	-12.96	12.87	66	+4.13

* Refer to Figure 2.10.2-9 for component identification.

** Conservatively based on a 1.12-inch thick outer shell and on a 3,850-psi crush strength aluminum honeycomb impact limiter (Section 2.7.1.1).

Table 2.7.1-6 Critical Stress Summary (30-Foot Bottom End Drop) – Loading Condition 2 – Total Range

Loading Condition 2: -40°F Ambient Temperature and Maximum Decay Heat Load

		Total Stress Range** (ksi)				Principal Stresses			Stress Differences		
Comp. No.*	Node	S_x	S_y	S_z	S_{xy}	S_1	S_2	S_3	S_1-S_2	S_2-S_3	S_3-S_1
1	2376	0.67	-4.03	0.05	-0.35	0.7	0.05	-4.06	0.65	4.11	-4.75
3	1805	-0.32	-9.36	-3.82	-1.34	-0.12	-3.82	-9.56	3.70	5.74	-9.44
4	604	-0.90	-15.99	-2.51	0.80	-0.86	-2.51	-16.03	1.65	13.52	-15.17
6	618	0.03	-4.2	0.57	0.00	0.57	0.03	-4.20	0.54	4.23	-4.77
7	143	-5.58	-14.56	-1.04	0.55	-1.04	-5.55	-14.59	4.51	9.05	-13.55
8	361	0.01	-14.97	-0.81	-1.62	0.18	-0.81	-15.14	0.99	14.33	-15.33

* Refer to Figure 2.10.2-9 for component identification.

** Conservatively based on a 1.12-inch thick outer shell and on a 3,850-psi crush strength aluminum honeycomb impact limiter (Section 2.7.1.1).

Table 2.7.1-7 Critical Stress Summary (30-Foot Bottom End Drop) – Loading Condition 3 – P_m

Loading Condition 3: -40°F Ambient Temperature and No Decay Heat Load

		P_m Stresses** (ksi)				Principal Stresses					
Comp. No.*	Section Cut Node to Node	S_x	S_y	S_z	S_{xy}	S_1	S_2	S_3	S.I.	Allow. Stress 0.7 S_u	Margin of Safety
	1-1										
1	2375 to 2575	-0.21	0.00	-0.03	0.18	0.1	-0.03	-0.31	0.41	46.2	Large
	2-2										
3	1581 to 1584	-0.22	-3.78	-5.48	-0.28	-0.19	-3.80	-5.48	5.29	46.2	+7.73
	3-3										
4	621 to 624	0.04	-7.76	-1.05	0.24	0.04	-1.05	-7.77	7.81	66.0	+7.45
	5-5										
6	615 to 618	0.00	-6.85	-0.13	0.00	0.00	-0.13	-6.85	6.85	66.0	Large
	8-8										
7	18 to 118	-10.02	-0.60	-2.86	2.62	0.08	-2.86	-10.70	10.78	46.2	+3.29
	4-4										
8	601 to 604	-0.16	-7.07	-0.78	0.34	-0.14	-0.78	-7.09	6.95	46.2	+5.65

* Refer to Figure 2.10.2-9 for component identification.

** Conservatively based on a 1.12-inch thick outer shell and on a 3,850-psi crush strength aluminum honeycomb impact limiter (Section 2.7.1.1).

Table 2.7.1-8 Critical Stress Summary (30-Foot Bottom End Drop) – Loading Condition 3 – $P_m + P_b$

Loading Condition 3: -40°F Ambient Temperature and No Decay Heat Load

		$P_m + P_b$ Stresses** (ksi)				Principal Stresses					
Comp. No.*	Section Cut Node to Node	S_x	S_y	S_z	S_{xy}	S_1	S_2	S_3	S.I.	Allow. Stress 1.0 S_u	Margin of Safety
	1-1										
1	2375 to 2575	-1.99	0.00	-0.03	0.18	0.01	-0.03	-2.01	2.02	66	Large
	2-2										
3	1581 to 1584	0.01	-3.30	-5.65	-0.28	0.03	-3.33	-5.65	5.68	66	Large
	3-3										
4	621 to 624	0.12	-8.99	-1.30	0.24	0.13	-1.30	-9.00	9.13	94.3	+9.32
	5-5										
6	615 to 618	0.00	-7.06	-0.19	0.00	0.00	-0.19	-7.06	7.06	94.3	Large
	8-8										
7	18 to 118	-20.14	-0.6	-2.86	2.62	-0.25	-2.86	-20.49	20.23	66	+2.26
	6-6										
8	185 to 335	-8.83	1.55	1.16	2.22	2.0	1.16	-9.29	11.29	66	+4.85

* Refer to Figure 2.10.2-9 for component identification.

** Conservatively based on a 1.12-inch thick outer shell and on a 3,850-psi crush strength aluminum honeycomb impact limiter (Section 2.7.1.1).

Table 2.7.1-9 Critical Stress Summary (30-Foot Bottom End Drop) – Loading Condition 3 – Total Range

Loading Condition 3: -40°F Ambient Temperature and No Decay Heat Load

		Total Stress Range** (ksi)				Principal Stresses			Stress Differences		
Comp. No.*	Node	S_x	S_y	S_z	S_{xy}	S_1	S_2	S_3	S_1-S_2	S_2-S_3	S_3-S_1
1	2376	0.96	-3.75	-0.64	-0.11	0.96	-0.64	-3.75	1.60	3.11	-4.71
3	2176	3.74	-17.36	-1.84	-2.41	4.01	-1.84	-17.63	5.85	15.79	-21.64
4	604	-0.58	-10.47	-1.81	0.56	-0.55	-1.81	-10.50	1.26	8.69	-9.95
6	615	0.00	-7.05	-0.19	0.00	0.00	-0.19	-7.05	0.19	6.86	-7.05
7	143	0.08	-23.96	-3.03	-2.73	0.39	-3.03	-24.27	3.42	21.24	-24.65
8	361	-0.02	-10.55	0.26	-1.38	0.26	0.16	-10.73	0.10	10.89	-10.99

* Refer to Figure 2.10.2-9 for component identification.

** Conservatively based on a 1.12-inch thick outer shell and on a 3,850-psi crush strength aluminum honeycomb impact limiter (Section 2.7.1.1).

Table 2.7.1-10 Critical Stress Summary (30-Foot Top End Drop) – Loading Condition 1 – P_m

Loading Condition 1: 130°F Ambient Temperature and Maximum Decay Heat Load

		P_m Stresses** (ksi)				Principal Stresses					
Comp. No.*	Section Cut Node to Node	S_x	S_y	S_z	S_{xy}	S_1	S_2	S_3	S.I.	Allow. Stress 0.7 S_u	Margin of Safety
	2-2										
1	2377 to 2577	-7.46	-0.06	0.09	0.15	0.09	-0.05	-7.46	7.55	46.2	+5.12
	4-4										
3	1581 to 1584	-0.20	-7.58	-0.57	-0.33	-0.18	-0.57	-7.60	7.42	46.2	+5.29
	5-5										
4	1481 to 1484	-0.03	-8.19	0.52	0.02	0.52	-0.03	-8.19	8.71	46.2	+6.57
	12-12										
6	695 to 698	0.00	2.39	-0.10	0.04	2.40	0.00	-0.10	2.50	46.2	Large
	10-10										
7	17 to 117	-1.04	1.54	2.36	-2.84	3.37	2.36	-2.87	6.23	46.2	+6.42
	7-7										
8	401 to 405	-0.03	-2.63	1.89	-0.39	1.89	0.03	-2.69	4.58	46.2	+9.09

* Refer to Figure 2.10.2-9 for component identification.

** Conservatively based on a 1.12-inch thick outer shell and on a 3,850-psi crush strength aluminum honeycomb impact limiter (Section 2.7.1.1).

Table 2.7.1-11 Critical Stress Summary (30-Foot Top End Drop) – Loading Condition 1 – $P_m + P_b$

Loading Condition 1: 130°F Ambient Temperature and Maximum Decay Heat Load

		$P_m + P_b$ Stresses** (ksi)				Principal Stresses					
Comp. No.*	Section Cut Node to Node	S_x	S_y	S_z	S_{xy}	S_1	S_2	S_3	S.I.	Allow. Stress 1.0 S_u	Margin of Safety
	1-1										
1	2371 to 2571	-12.69	-0.13	-0.22	-1.01	-0.05	-0.22	-12.77	12.72	66.0	+4.19
	3-3										
3	1941 to 1956	0.84	-10.28	-3.31	0.03	0.84	-3.31	-10.28	11.12	66.0	+4.94
	11-11										
4	1561 to 1564	0.12	-9.50	-0.89	-0.22	0.13	-0.89	-9.51	9.64	94.3	+8.78
	6-6										
6	615 to 618	-0.02	3.50	0.78	0.00	3.50	0.78	-0.02	3.52	94.3	Large
	9-9										
7	143 to 150	-7.68	6.60	1.37	1.33	6.72	1.37	-7.80	14.52	66.0	+3.55
	8-8										
8	381 to 385	-0.15	-6.77	0.67	-0.49	0.67	-0.12	-6.81	7.47	66.0	+7.84

* Refer to Figure 2.10.2-9 for component identification.

** Conservatively based on a 1.12-inch thick outer shell and on a 3,850-psi crush strength aluminum honeycomb impact limiter (Section 2.7.1.1).

Table 2.7.1-12 Critical Stress Summary (30-Foot Top End Drop) – Loading Condition 1 – Total Range

Loading Condition 1: 130°F Ambient Temperature and Maximum Decay Heat Load

		Total Stress Range** (ksi)				Principal Stresses			Stress Differences		
Comp. No.*	Node	S_x	S_y	S_z	S_{xy}	S_1	S_2	S_3	S_1-S_2	S_2-S_3	S_3-S_1
1	2371	2.76	-10.30	0.04	3.56	3.67	0.04	-11.21	3.63	11.25	-14.88
3	1962	-1.54	-12.69	-5.46	-1.00	-1.45	-5.46	-13.05	4.01	7.59	-11.60
4	1584	-0.62	-10.96	-1.54	-0.54	-0.59	-1.54	-10.99	0.95	9.45	-10.40
6	615	-0.01	3.43	0.72	-0.01	3.43	0.72	-0.01	2.71	0.73	-3.44
7	143	-7.68	6.79	1.34	2.96	7.37	1.34	-8.26	6.03	9.60	-15.63
8	361	-0.07	-8.76	-0.09	-0.78	0.00	-0.09	-8.83	0.09	8.74	-8.83

* Refer to Figure 2.10.2-9 for component identification.

** Conservatively based on a 1.12-inch thick outer shell and on a 3,850-psi crush strength aluminum honeycomb impact limiter (Section 2.7.1.1).

Table 2.7.1-13 Critical Stress Summary (30-Foot Top End Drop) – Loading Condition 2 – P_m

Loading Condition 2: -40°F Ambient Temperature and Maximum Decay Heat Load

		P_m Stresses** (ksi)				Principal Stresses					
Comp. No.*	Section Cut Node to Node	S_x	S_y	S_z	S_{xy}	S_1	S_2	S_3	S.I.	Allow. Stress 0.7 S_u	Margin of Safety
	2-2										
1	2377 to 2577	-7.42	-0.08	0.30	0.18	0.30	-0.08	-7.42	7.72	46.2	+4.98
	4-4										
3	1581 to 1584	-0.24	-10.89	-1.33	-0.44	-0.22	-1.33	-10.91	10.69	46.2	+3.32
	6-6										
4	1481 to 1484	-0.02	-11.17	0.24	0.04	0.24	-0.02	-11.77	12.01	66.0	+4.59
	5-5										
6	1595 to 1598	0.01	-2.37	1.0	0.02	1.0	0.01	-2.37	3.37	66.0	Large
	10-10										
7	375 to 378	-1.35	1.92	2.97	-0.61	2.97	2.03	-1.45	4.42	46.2	+9.45
	8-8										
8	601 to 604	-0.13	-7.55	-0.80	0.27	-0.12	-0.80	-7.56	7.44	46.2	+5.21

* Refer to Figure 2.10.2-9 for component identification.

** Conservatively based on a 1.12-inch thick outer shell and on a 3,850-psi crush strength aluminum honeycomb impact limiter (Section 2.7.1.1).

Table 2.7.1-14 Critical Stress Summary (30-Foot Top End Drop) – Loading Condition 2 – $P_m + P_b$

Loading Condition 2: -40°F Ambient Temperature and Maximum Decay Heat Load

		$P_m + P_b$ Stresses** (ksi)				Principal Stresses					
Comp. No.*	Section Cut Node to Node	S_x	S_y	S_z	S_{xy}	S_1	S_2	S_3	S.I.	Allow. Stress 1.0 S_u	Margin of Safety
	1-1										
1	2371 to 2571	-12.88	-0.21	-0.19	-1.02	-0.13	-0.19	-12.96	12.84	66.0	+4.14
	4-4										
3	1581 to 1584	-0.52	-12.05	-1.44	-0.45	-0.51	-1.44	-12.07	11.56	66.0	+4.71
	3-3										
4	1561 to 1564	0.17	-13.22	-1.52	-0.30	0.17	-1.52	-13.23	13.40	94.3	+6.03
	5-5										
6	1595 to 1598	0.04	-3.78	0.86	0.02	0.86	0.04	-3.78	4.64	94.3	Large
	9-9										
7	395 to 398	-0.18	7.35	4.97	-0.78	7.42	4.97	-0.26	7.69	66.0	+7.58
	8-8										
8	601 to 604	-0.18	-7.94	-0.67	0.27	-0.18	-0.67	-7.95	7.78	66.0	+7.48

* Refer to Figure 2.10.2-9 for component identification.

** Conservatively based on a 1.12-inch thick outer shell and on a 3,850-psi crush strength aluminum honeycomb impact limiter (Section 2.7.1.1).

Table 2.7.1-15 Critical Stress Summary (30-Foot Top End Drop) – Loading Condition 2 – Total Range

Loading Condition 2: -40°F Ambient Temperature and Maximum Decay Heat Load

		Total Stress Range** (ksi)				Principal Stresses			Stress Differences		
Comp. No.*	Node	S_x	S_y	S_z	S_{xy}	S_1	S_2	S_3	S_1-S_2	S_2-S_3	S_3-S_1
1	2371	2.56	-10.43	0.01	3.61	3.50	0.01	-11.37	3.49	11.38	-14.87
3	1962	-1.54	-12.88	-5.92	-1.05	-1.44	-5.92	-12.98	4.48	7.06	-11.54
4	1584	-0.85	-15.19	-2.48	-0.76	-0.81	-2.48	-15.23	1.67	12.75	-14.42
6	1598	0.02	-3.94	0.76	0.02	0.76	0.02	-3.94	0.74	3.96	-4.70
7	378	-0.19	7.42	4.95	-0.07	7.42	4.95	-0.19	2.47	5.14	-7.61
8	361	-0.02	-7.21	-1.7	-1.0	0.16	-1.70	-7.38	1.86	5.68	-7.54

* Refer to Figure 2.10.2-9 for component identification.

** Conservatively based on a 1.12-inch thick outer shell and on a 3,850-psi crush strength aluminum honeycomb impact limiter (Section 2.7.1.1).

Table 2.7.1-16 Side Drop Load Analysis Description

Load Analysis No.	Description	ANSYS Mode No.**
1	Bolt Preload + Internal Pressure	0
2	Thermal + Bolt Preload + Internal Pressure	0
3	Inertial Body Load (excluding content load)	1
4	Impact Load + Content Load*	0
5	Impact Load + Content Load*	1
6	Impact Load + Content Load*	2
7	Impact Load + Content Load*	3
8	Impact Load + Content Load*	4
9	Impact Load + Content Load*	5

* The same circumferential distribution arc is applied to both the impact load and content load.

** ANSYS Mode No. “0” indicates loading type is axisymmetric, while other positive numbers indicate loading types are nonaxisymmetric.

Table 2.7.1-17 Critical Stress Summary (30-Foot Side Drop) – Loading Condition 1 – P_m

Loading Condition 1: 100°F Ambient Temperature and Maximum Decay Heat Load

		P_m Stresses (ksi)				Principal Stresses					
Comp. No.*	Section Cut Node to Node	S_x	S_y	S_z	S_{xy}	S_1	S_2	S_3	S.I.	Allow. Stress 0.7 S_u	Margin of Safety
	1-1										
1	2361 to 2370	-6.94	-0.61	0.13	-0.53	0.13	-0.57	-6.99	7.12	46.2	+5.49
	2-2										
3	1969 to 1976	-20.74	3.86	-9.26	-3.37	4.32	-9.26	-21.20	25.51	46.2	+0.81
	3-3										
4	1141 to 1144	-0.22	31.55	0.52	0.00	31.55	0.52	-0.22	31.77	66.0	+1.08
	4-4										
6	1115 to 1118	-0.10	65.09	2.67	0.00	65.09	2.67	-0.10	65.19	66.0	+0.01
	5-5										
7	395 to 398	-4.44	8.30	-11.27	1.59	8.49	-4.64	-11.27	19.76	46.2	+1.34
	6-6										
8	192 to 342	-11.19	-0.72	-6.26	0.36	-0.71	-6.26	-11.20	10.50	46.2	+3.40

* Refer to Figure 2.10.2-9 for component identification.

Table 2.7.1-18 Critical Stress Summary (30-Foot Side Drop) – Loading Condition 1 – $P_m + P_b$

Loading Condition 1: 100°F Ambient Temperature and Maximum Decay Heat Load

		$P_m + P_b$ Stresses (ksi)				Principal Stresses					
Comp. No.*	Section Cut Node to Node	S_x	S_y	S_z	S_{xy}	S_1	S_2	S_3	S.I.	Allow. Stress 1.0 S_u	Margin of Safety
	7-7										
1	2301 to 2561	-1.60	0.12	1.68	8.10	7.40	1.68	-8.88	16.29	66.0	+3.05
	8-8										
3	2150 to 2156	-8.99	-0.17	-41.23	0.03	-0.17	-8.99	-41.23	41.06	66.0	+0.61
	3-3										
4	1141 to 1144	-0.15	33.56	1.75	0.00	33.56	1.75	-0.15	33.71	94.3	+1.80
	4-4										
6	1115 to 1118	0.02	68.25	3.06	0.00	68.25	3.06	0.02	68.23	94.3	+0.38
	5-5										
7	395 to 398	-2.27	32.90	-1.83	1.59	32.97	-1.83	-2.34	35.31	66.0	+0.87
	9-9										
8	177 to 327	-16.88	-3.68	0.56	-3.01	0.56	-3.03	-17.54	18.10	66.0	+2.65

* Refer to Figure 2.10.2-9 for component identification.

Table 2.7.1-19 Critical Stress Summary (30-Foot Side Drop) – Loading Condition 1 – Total Range

Loading Condition 1: 100°F Ambient Temperature and Maximum Decay Heat Load

		Total Stress Range** (ksi)				Principal Stresses			Stress Differences		
Comp. No.*	Node	S_x	S_y	S_z	S_{xy}	S_1	S_2	S_3	S_1-S_2	S_2-S_3	S_3-S_1
1	2561	0.13	0.04	2.72	31.16	31.25	2.72	-31.07	28.53	33.79	-62.32
3	1815	3.52	50.86	7.38	15.09	55.33	7.38	-0.94	47.95	8.32	-56.27
4	1144	-0.15	35.89	1.96	0.00	35.89	1.96	-0.15	33.93	2.11	-56.27
6	1118	0.02	77.67	3.29	0.00	77.67	3.29	0.02	74.38	3.27	-77.65
7	395	-2.26	46.39	2.66	3.07	46.59	2.66	-2.46	43.93	5.12	-49.05
8	177	-46.95	-2.35	-18.78	-1.66	-2.25	-18.78	-47.05	16.53	28.27	-44.80

* Refer to Figure 2.10.2-9 for component identification.

Table 2.7.1-20 G Loads – Oblique Drop

Drop Orientation	G Load*	Adjusted G Load**	Lateral Component	Axial Component
15.74°	60.4	77.27	20.96	74.37
30.0°	54.4	69.59	34.80	60.27
45.0°	43.8	56.03	39.62	39.62
60.0°	44.4	56.80	49.19	28.40

* Refer to Section 2.6.7.4 for g load calculations. The g loads are conservatively based on a maximum crush strength of 3850 psi for the aluminum honeycomb impact limiters, although the design maximum crush strength is 3675 psi.

** Adjusted g load = (g load)(cask body weight/model weight)
= (g load)(48,000/37,519)

Table 2.7.1-21 Impact and Contents Pressures – Oblique Drop

Impact Location	Drop Orientation	θ Angle*	Impact Pressure* (psi)		Content Pressure* (psi)	
			Lateral	Axial	Lateral	Axial
Top	15.74°	90.00°	3370	14768	35	5298.8
Top	30.0°	83.34°	5834	12925	60.6	4637.5
Top	45.0°	65.32°	7812	10840	81.2	3889.4
Top	60.0°	52.88°	11470	9599	119.3	3444.1
Bottom	15.74°	90.00°	3292	14768	34.9	5199.8
Bottom	30.0°	87.59°	5549	12294	58.8	4328.7
Bottom	45.0°	68.35°	7389	10359	78.3	3647.4
Bottom	60.0°	55.22°	10820	9191	114.7	3236.2

* The angle 2θ determines the pressure distribution arc in the circumferential direction (Figure 2.7.1-9). The same arc is chosen for both impact pressure and content pressure to be applied.

Table 2.7.1-22 Fourier Series Modal Coefficients – Oblique Drop

		Fourier Series Coefficents for Each Loading Mode					
Impact Location	Drop Orientation	Mode 0	Mode 1	Mode 2	Mode 3	Mode 4	Mode 5
Top	15.74°	0.318334	0.500064	0.212287	0.000064	-0.042393	0.000064
Top	30.0°	0.294779	0.479776	0.236186	0.030107	-0.041325	-0.015759
Top	45.0°	0.230640	0.407149	0.271864	0.119183	0.009851	-0.031607
Top	60.0°	0.186891	0.344502	0.266534	0.165172	0.070325	0.004581
Bottom	15.74°	0.318334	0.500064	0.212287	0.000064	-0.042393	0.000064
Bottom	30.0°	0.309638	0.493021	0.221703	0.010632	-0.043160	-0.005739
Bottom	45.0°	0.241699	0.421390	0.269221	0.104574	-0.003428	-0.034201
Bottom	60.0°	0.195189	0.357110	0.239495	0.158298	0.058632	-0.005100

Table 2.7.1-23 Oblique Drop Load Analysis Description

Load Analysis No.	Description	ANSYS Mode No.*
1	Bolt Preload + Internal Pressure	0
2	Thermal + Bolt Preload + Internal Pressure	0
3	Inertial Body Load (Lateral Direction)	1
4	Inertial Body Load (Axial Direction)	0
5	Impact Load + Content Load (Lateral)	0
6	Impact Load + Content Load (Lateral)	1
7	Impact Load + Content Load (Lateral)	2
8	Impact Load + Content Load (Lateral)	3
9	Impact Load + Content Load (Lateral)	4
10	Impact Load + Content Load (Lateral)	5
11	Impact Load + Content Load (Axial)	0
12	Impact Load + Content Load (Axial)	1
13	Impact Load + Content Load (Axial)	2
14	Impact Load + Content Load (Axial)	3
15	Impact Load + Content Load (Axial)	4
16	Impact Load + Content Load (Axial)	5

* ANSYS Mode No. “0” indicates loading type is axisymmetric, while other positive numbers indicate loading types are nonaxisymmetric.

Table 2.7.1-24 Critical Stress Summary (30-Foot Top Corner Drop) – Loading Condition 1 – P_m – Drop Orientation = 15.74 Degrees

Loading Condition 1: 130°F Ambient Temperature and Maximum Decay Heat Load

		P_m Stresses (ksi)**				Principal Stresses					
Comp. No.*	Section Cut Node to Node	S_x	S_y	S_z	S_{xy}	S_1	S_2	S_3	S.I.	Allow. Stress 0.7 S_u	Margin of Safety
	1-1										
1	2377 to 2577	-24.38	-1.69	-3.35	-0.98	-1.65	-3.35	-24.42	22.78	46.2	+1.03
	2-2										
3	1775 to 1778	-0.26	-21.63	2.63	0.06	2.63	-0.26	-21.63	24.26	46.2	+0.90
	3-3										
4	1561 to 1564	0.12	-17.16	-2.01	-0.63	0.14	-2.01	-17.18	17.32	66.0	+2.81
	4-4										
6	1595 to 1598	-0.03	-19.40	2.58	0.13	2.58	-0.03	-19.40	21.98	66.0	+2.00
	5-5										
7	18 to 118	-2.47	4.23	-1.43	-2.23	4.91	-1.43	-3.15	8.05	46.2	+4.74
	6-6										
8	361 to 365	-3.72	-2.79	-0.23	-0.26	-0.23	-2.72	-3.79	3.56	46.2	Large

* Refer to Figure 2.10.2-9 for component identification.

** Conservatively based on a 1.12-inch thick outer shell and on a 3,850-psi maximum crush strength aluminum honeycomb impact limiter (Section 2.7.1.3).

Table 2.7.1-25 Critical Stress Summary (30-Foot Top Corner Drop) – Loading Condition 1 – $P_m + P_b$ – Drop Orientation = 15.74 Degrees

Loading Condition 1: 130°F Ambient Temperature and Maximum Decay Heat Load

		$P_m + P_b$ Stresses (ksi)**				Principal Stresses					
Comp. No.*	Section Cut Node to Node	S_x	S_y	S_z	S_{xy}	S_1	S_2	S_3	S.I.	Allow. Stress 1.0 S_u	Margin of Safety
	1-1										
1	2377 to 2577	-27.51	-1.69	-3.35	-0.98	-1.65	-3.35	-27.55	25.90	66.0	+1.55
	2-2										
3	1775 to 1778	0.08	-20.95	7.55	1.47	7.55	0.18	-21.05	28.60	66.0	+1.31
	3-3										
4	1561 to 1564	0.33	-22.71	-4.58	-0.63	0.35	-4.58	-22.72	23.07	94.3	+3.09
	4-4										
6	1595 to 1598	0.04	-19.76	2.23	0.13	2.23	0.04	-19.77	22.00	94.3	+3.29
	8-8										
7	143 to 150	-8.20	17.26	0.73	1.81	17.39	0.73	-8.33	25.72	66.0	+1.57
	9-9										
8	381 to 385	-5.72	-7.78	0.83	-1.47	0.83	-4.95	-8.54	9.38	66.0	+6.04

* Refer to Figure 2.10.2-9 for component identification.

** Conservatively based on a 1.12-inch thick outer shell and on a 3,850-psi maximum crush strength aluminum honeycomb impact limiter (Section 2.7.1.3).

Table 2.7.1-26 Critical Stress Summary (30-Foot Top Corner Drop) – Loading Condition 1 – Total Range – Drop Orientation = 15.74 Degrees

Loading Condition 1: 130°F Ambient Temperature and Maximum Decay Heat Load

		Total Stress Range** (ksi)				Principal Stresses			Stress Differences		
Comp. No.*	Node	S_x	S_y	S_z	S_{xy}	S_1	S_2	S_3	S_1-S_2	S_2-S_3	S_3-S_1
1	2561***	2.74	-6.25	-3.49	215.9	214.19	-3.49	-217.70	217.68	214.21	-431.89
3	1815	-1.46	-18.25	2.52	0.59	2.52	-1.44	-18.27	3.96	16.83	-20.79
4	1584	-1.38	-23.60	-4.79	-1.37	-1.30	-4.79	-23.68	3.49	18.89	-22.39
6	1595	-0.06	-7.75	3.43	2.38	3.43	0.62	-8.43	2.81	9.04	-11.86
7	2	-8.20	21.90	2.18	3.88	22.39	2.18	-8.69	20.21	10.87	-31.08
8	361	-15.56	-9.27	-6.28	-1.30	-6.28	-9.01	-15.82	2.73	6.81	-9.54

* Refer to Figure 2.10.2-9 for component identification.

** Conservatively based on a 1.12-inch thick outer shell and on a 3,850-psi maximum crush strength aluminum honeycomb impact limiter (Section 2.7.1.3).

*** Stresses at node 2561 are unrealistic, resulting from the boundary effect. See Section 2.7.1.3.3 for the discussion of the boundary effect on the stress results.

Table 2.7.1-27 Critical Stress Summary (30-Foot Top Oblique Drop) – Loading Condition 1 – P_m – Drop Orientation = 30 Degrees

Loading Condition 1: 130°F Ambient Temperature and Maximum Decay Heat Load

		P_m Stresses (ksi)**				Principal Stresses					
Comp. No.*	Section Cut Node to Node	S_x	S_y	S_z	S_{xy}	S_1	S_2	S_3	S.I.	Allow. Stress 0.7 S_u	Margin of Safety
	1-1										
1	2302 to 2562	-18.88	-13.60	2.04	-10.79	2.04	-5.13	-27.35	29.39	46.2	+0.57
	2-2										
3	2150 to 2156	-3.01	-12.69	-26.09	0.09	-3.01	-12.69	-26.09	23.07	46.2	+1.00
	3-3										
4	941 to 944	-0.07	14.41	0.82	0.00	14.41	0.82	-0.07	14.48	66.0	+3.56
	4-4										
6	1035 to 1038	-0.05	30.01	1.60	0.00	30.01	1.60	-0.05	30.06	66.0	+1.20
	5-5										
7	168 to 175	-3.25	5.75	-4.31	-1.36	5.95	-3.45	-4.31	10.26	46.2	+3.50
	6-6										
8	176 to 326	-6.14	-2.46	-1.94	-0.11	-1.94	-2.46	-6.15	4.21	46.2	+9.98

* Refer to Figure 2.10.2-9 for component identification.

** Conservatively based on a 1.12-inch thick outer shell and on a 3,850-psi maximum crush strength aluminum honeycomb impact limiter (Section 2.7.1.3).

Table 2.7.1-28 Critical Stress Summary (30-Foot Top Oblique Drop) – Loading Condition 1 – $P_m + P_b$ – Drop Orientation = 30 Degrees

Loading Condition 1: 130°F Ambient Temperature and Maximum Decay Heat Load

		$P_m + P_b$ Stresses (ksi)**				Principal Stresses					
Comp. No.*	Section Cut Node to Node	S_x	S_y	S_z	S_{xy}	S_1	S_2	S_3	S.I.	Allow. Stress 1.0 S_u	Margin of Safety
	1-1										
1	2302 to 2562	2.72	-13.60	2.04	-10.79	8.09	2.04	-18.97	27.06	66.0	+1.44
	7-7										
3	1821 to 1825	0.06	-20.55	7.79	1.54	7.79	0.17	-20.66	28.46	66.0	+1.32
	8-8										
4	1561 to 1564	0.29	-18.93	-3.81	-0.57	0.30	-3.81	-18.95	19.25	94.3	+3.90
	4-4										
6	1035 to 1038	0.01	31.34	1.65	0.00	31.34	1.65	0.01	31.33	94.3	+2.00
	9-9										
7	143 to 150	-7.27	23.18	0.07	1.91	23.80	0.07	-7.39	30.69	66.0	+1.15
	6-6										
8	176 to 326	-9.35	-7.33	0.83	-2.03	0.83	-6.07	-10.61	11.44	66.0	+4.77

* Refer to Figure 2.10.2-9 for component identification.

** Conservatively based on a 1.12-inch thick outer shell and on a 3,850-psi maximum crush strength aluminum honeycomb impact limiter (Section 2.7.1.3).

Table 2.7.1-29 Critical Stress Summary (30-Foot Top Oblique Drop) – Loading Condition 1 – Total Range – Drop Orientation = 30 Degrees

Loading Condition 1: 130°F Ambient Temperature and Maximum Decay Heat Load

		Total Stress Range** (ksi)				Principal Stresses			Stress Differences		
Comp. No.*	Node	S_x	S_y	S_z	S_{xy}	S_1	S_2	S_3	S_1-S_2	S_2-S_3	S_3-S_1
1	2561***	2.57	-5.32	-2.66	423.0	421.64	-2.66	-424.39	424.30	421.73	-846.04
3	1856	0.38	-7.44	3.51	-0.14	3.51	0.38	-7.44	3.13	7.83	-10.95
4	1584	-1.14	-19.57	-3.72	-1.19	-1.06	-3.72	-19.65	2.66	15.93	-18.58
6	1038	0.01	41.20	1.89	0.00	41.20	1.89	0.01	39.31	1.88	-41.19
7	25	-7.27	30.71	2.51	4.00	31.12	2.51	-7.68	28.62	10.19	-38.81
8	177	-25.74	-8.16	-10.34	-1.52	-8.03	-10.34	-25.87	2.31	15.52	-17.84

* Refer to Figure 2.10.2-9 for component identification.

** Conservatively based on a 1.12-inch thick outer shell and on a 3,850-psi maximum crush strength aluminum honeycomb impact limiter (Section 2.7.1.3).

*** Stresses at node 2561 are unrealistic, resulting from the boundary effect. See Section 2.7.1.3.3 for the discussion of the boundary effect on the stress results.

Table 2.7.1-30 Critical Stress Summary (30-Foot Top Oblique Drop) – Loading Condition 1 – P_m – Drop Orientation = 45 Degrees

Loading Condition 1: 130°F Ambient Temperature and Maximum Decay Heat Load

		P_m Stresses (ksi)**				Principal Stresses					
Comp. No.*	Section Cut Node to Node	S_x	S_y	S_z	S_{xy}	S_1	S_2	S_3	S.I.	Allow. Stress 0.7 S_u	Margin of Safety
	1-1										
1	2302 to 2562	-20.53	-16.65	3.19	-13.28	3.19	-5.17	-32.01	35.21	46.2	+0.31
	2-2										
3	2150 to 2156	-3.91	-10.88	-30.14	0.10	-3.91	-10.88	-30.14	26.23	46.2	+0.76
	3-3										
4	961 to 964	-0.09	17.88	0.84	0.01	17.88	0.84	-0.09	17.97	66.0	+2.67
	4-4										
6	1055 to 1058	-0.06	37.32	1.84	0.00	37.32	1.84	-0.06	37.38	66.0	+0.77
	5-5										
7	615 to 618	-3.31	5.98	-5.81	-0.48	6.00	-3.33	-5.81	11.81	46.2	+2.91
	6-6										
8	176 to 326	-7.00	-1.81	-2.93	0.02	-1.81	-2.93	-7.00	5.19	46.2	+7.90

* Refer to Figure 2.10.2-9 for component identification.

** Conservatively based on a 1.12-inch thick outer shell and on a 3,850-psi maximum crush strength aluminum honeycomb impact limiter (Section 2.7.1.3).

Table 2.7.1-31 Critical Stress Summary (30-Foot Top Oblique Drop) – Loading Condition 1 – $P_m + P_b$ – Drop Orientation = 45 Degrees

Loading Condition 1: 130°F Ambient Temperature and Maximum Decay Heat Load

		$P_m + P_b$ Stresses (ksi)**				Principal Stresses					
Comp. No.*	Section Cut Node to Node	S_x	S_y	S_z	S_{xy}	S_1	S_2	S_3	S.I.	Allow. Stress 1.0 S_u	Margin of Safety
	1-1										
1	2302 to 2562	7.92	-16.65	3.19	-13.28	13.73	3.19	-22.45	36.18	66.0	+0.82
	7-7										
3	1969 to 1996	-44.85	-17.81	-11.30	0.12	-11.30	-17.81	-44.85	33.55	66.0	+0.97
	3-3										
4	961 to 964	-0.03	19.01	1.30	0.01	19.01	1.30	-0.03	19.05	94.3	+3.95
	4-4										
6	1055 to 1058	0.01	39.00	1.96	0.00	39.00	1.96	0.01	38.99	94.3	+1.41
	8-8										
7	143 to 150	-5.39	23.94	-0.43	1.68	24.04	-0.43	-5.48	29.52	66.0	+1.24
	6-6										
8	176 to 326	-10.61	-5.80	0.70	-2.13	0.70	-4.99	-11.42	12.11	66.0	+4.45

* Refer to Figure 2.10.2-9 for component identification.

** Conservatively based on a 1.12-inch thick outer shell and on a 3,850-psi maximum crush strength aluminum honeycomb impact limiter (Section 2.7.1.3).

Table 2.7.1-32 Critical Stress Summary (30-Foot Top Oblique Drop) – Loading Condition 1 – Total Range – Drop Orientation = 45 Degrees

Loading Condition 1: 130°F Ambient Temperature and Maximum Decay Heat Load

		Total Stress Range** (ksi)				Principal Stresses			Stress Differences		
Comp. No.*	Node	S_x	S_y	S_z	S_{xy}	S_1	S_2	S_3	S_1-S_2	S_2-S_3	S_3-S_1
1	2561***	2.31	-3.96	-1.76	508.3	507.48	-1.76	-509.13	509.24	507.37	-1016.62
3	1969	-47.18	-32.83	-18.27	5.25	-18.27	-30.95	-49.06	12.68	18.11	-30.79
4	964	-0.02	21.80	1.65	0.02	21.80	1.65	-0.02	20.15	1.67	-21.82
6	1058	0.01	48.86	2.21	0.00	48.86	2.21	0.01	46.65	2.20	-48.85
7	25	-5.38	32.46	2.35	3.45	32.77	2.35	-5.69	30.42	8.04	-38.46
8	177	-29.33	-6.00	-11.77	-1.44	-5.91	-11.77	-29.42	5.86	17.66	-23.51

* Refer to Figure 2.10.2-9 for component identification.

** Conservatively based on a 1.12-inch thick outer shell and on a 3,850-psi maximum crush strength aluminum honeycomb impact limiter (Section 2.7.1.3).

*** Stresses at node 2561 are unrealistic, resulting from the boundary effect. See Section 2.7.1.3.3 for the discussion of the boundary effect on the stress results.

Table 2.7.1-33 Critical Stress Summary (30-Foot Top Oblique Drop) – Loading Condition 1 – P_m – Drop Orientation = 60 Degrees

Loading Condition 1: 130°F Ambient Temperature and Maximum Decay Heat Load

		P_m Stresses (ksi)**				Principal Stresses					
Comp. No.*	Section Cut Node to Node	S_x	S_y	S_z	S_{xy}	S_1	S_2	S_3	S.I.	Allow. Stress 0.7 S_u	Margin of Safety
	1-1										
1	2302 to 2562	-24.77	-21.65	4.65	-17.41	4.65	-5.72	-40.69	45.35	46.2	+0.02
	2-2										
3	2150 to 2156	-5.64	-9.89	-36.97	0.13	-5.63	-9.90	-36.97	31.34	46.2	+0.47
	3-3										
4	981 to 984	-0.15	23.48	0.65	0.03	23.48	0.65	-0.15	23.63	66.0	+1.79
	4-4										
6	1075 to 1078	-0.08	49.11	2.30	0.00	49.11	2.30	-0.08	49.19	66.0	+0.34
	5-5										
7	615 to 618	-3.83	7.00	-7.86	0.18	7.01	-3.83	-7.86	14.87	46.2	+2.11
	6-6										
8	176 to 326	-8.68	-1.53	-4.15	0.13	-1.53	-4.15	-8.69	7.16	46.2	+5.45

* Refer to Figure 2.10.2-9 for component identification.

** Conservatively based on a 1.12-inch thick outer shell and on a 3,850-psi maximum crush strength aluminum honeycomb impact limiter (Section 2.7.1.3).

Table 2.7.1-34 Critical Stress Summary (30-Foot Top Oblique Drop) – Loading Condition 1 – $P_m + P_b$ – Drop Orientation = 60 Degrees

Loading Condition 1: 130°F Ambient Temperature and Maximum Decay Heat Load

		$P_m + P_b$ Stresses (ksi)**				Principal Stresses					
Comp. No.*	Section Cut Node to Node	S_x	S_y	S_z	S_{xy}	S_1	S_2	S_3	S.I.	Allow. Stress 1.0 S_u	Margin of Safety
	1-1										
1	2302 to 2562	14.65	-21.65	4.65	-17.41	21.66	4.65	-28.65	50.31	66.0	+0.31
	7-7										
3	1969 to 2016	-62.10	-19.16	-9.36	2.21	-9.36	-19.05	-62.22	52.86	66.0	+0.25
	3-3										
4	981 to 984	-0.09	24.96	1.44	0.03	24.96	1.44	-0.09	25.06	94.3	+2.76
	4-4										
6	1075 to 1078	0.01	51.35	2.56	0.00	51.35	2.56	0.01	51.33	94.3	+0.84
	8-8										
7	125 to 168	-4.60	27.94	-0.91	1.72	28.03	-0.91	-4.69	32.72	66.0	+1.02
	6-6										
8	176 to 326	-13.14	-5.36	0.68	-2.51	0.68	-4.62	-13.88	14.56	66.0	+3.53

* Refer to Figure 2.10.2-9 for component identification.

** Conservatively based on a 1.12-inch thick outer shell and on a 3,850-psi maximum crush strength aluminum honeycomb impact limiter (Section 2.7.1.3).

Table 2.7.1-35 Critical Stress Summary (30-Foot Top Oblique Drop) – Loading Condition 1 – Total Range – Drop Orientation = 60 Degrees

Loading Condition 1: 130°F Ambient Temperature and Maximum Decay Heat Load

		Total Stress Range** (ksi)				Principal Stresses			Stress Differences		
Comp. No.*	Node	S_x	S_y	S_z	S_{xy}	S_1	S_2	S_3	S_1-S_2	S_2-S_3	S_3-S_1
1	2561***	1.60	-3.05	-0.43	655.2	654.48	-0.43	-655.93	654.91	655.50	-1310.41
3	1969	-67.53	-43.53	-23.94	-1.29	-23.94	-43.46	-67.60	19.52	24.14	-43.66
4	984	-0.08	27.75	1.78	0.03	27.75	1.78	-0.08	25.97	1.86	-27.83
6	1078	0.02	61.20	2.81	0.00	61.20	2.81	0.02	58.39	2.79	-61.18
7	25	-4.59	38.46	2.56	3.47	38.74	2.56	-4.87	36.19	7.43	-43.61
8	177	-36.41	-5.06	-14.59	-1.58	-4.98	-14.59	-36.49	9.60	21.90	-31.51

* Refer to Figure 2.10.2-9 for component identification.

** Conservatively based on a 1.12-inch thick outer shell and on a 3,850-psi maximum crush strength aluminum honeycomb impact limiter (Section 2.7.1.3).

*** Stresses at node 2561 are unrealistic, resulting from the boundary effect. See Section 2.7.1.3.3 for the discussion of the boundary effect on the stress results.

Table 2.7.1-36 Critical Stress Summary (30-Foot Top Corner Drop) – Loading Condition 3 – P_m – Drop Orientation = 15.74 Degrees

Loading Condition 3: -40°F Ambient Temperature and No Decay Heat Load

		P_m Stresses (ksi)**				Principal Stresses					
Comp. No.*	Section Cut Node to Node	S_x	S_y	S_z	S_{xy}	S_1	S_2	S_3	S.I.	Allow. Stress 0.7 S_u	Margin of Safety
	1-1										
1	2377 to 2577	-23.41	-1.57	-3.70	-1.18	-1.50	-3.70	-23.48	21.97	46.2	+1.1
	2-2										
3	1775 to 1778	-0.30	-20.30	3.03	0.08	3.03	-0.30	-20.30	23.33	46.2	+1.0
	3-3										
4	1561 to 1564	0.14	-13.57	-2.03	-0.54	0.16	-2.03	-13.59	13.75	66.0	+3.80
	4-4										
6	1595 to 1598	-0.03	-18.20	2.61	0.15	2.61	-0.03	-18.20	20.82	66.0	+2.17
	5-5										
7	168 to 175	-2.77	4.60	-0.84	-0.07	4.60	-0.84	-2.78	7.38	46.2	+5.26
	6-6										
8	381 to 385	-3.82	-7.56	-2.84	0.38	-2.84	-3.78	-7.60	4.76	46.2	+8.71

* Refer to Figure 2.10.2-9 for component identification.

** Conservatively based on a 1.12-inch thick outer shell and on a 3,850-psi maximum crush strength aluminum honeycomb impact limiter (Section 2.7.1.3).

Table 2.7.1-37 Critical Stress Summary (30-Foot Top Corner Drop) – Loading Condition 3 – $P_m + P_b$ – Drop Orientation = 15.74 Degrees

Loading Condition 3: -40°F Ambient Temperature and No Decay Heat Load

		$P_m + P_b$ Stresses (ksi)**				Principal Stresses					
Comp. No.*	Section Cut Node to Node	S_x	S_y	S_z	S_{xy}	S_1	S_2	S_3	S.I.	Allow. Stress 1.0 S_u	Margin of Safety
	1-1										
1	2377 to 2577	-27.21	-1.57	-3.70	-1.18	-1.51	-3.70	-27.27	25.75	66.0	+1.56
	7-7										
3	1821 to 1825	0.20	-21.52	7.75	1.92	7.75	0.37	-21.69	29.45	66.0	+1.24
	3-3										
4	1561 to 1564	0.29	-18.60	-4.46	-0.54	0.30	-4.46	-18.61	18.92	94.3	+3.98
	4-4										
6	1595 to 1598	0.04	-18.68	2.26	0.15	2.26	0.04	-18.68	20.94	94.3	+3.50
	8-8										
7	143 to 150	-0.92	17.99	4.22	-0.23	17.99	4.22	-0.93	18.92	66.0	+2.49
	6-6										
8	381 to 385	-5.74	-8.92	-0.47	-0.73	-0.47	-5.58	-9.08	8.61	66.0	+6.66

* Refer to Figure 2.10.2-9 for component identification.

** Conservatively based on a 1.12-inch thick outer shell and on a 3,850-psi maximum crush strength aluminum honeycomb impact limiter (Section 2.7.1.3).

Table 2.7.1-38 Critical Stress Summary (30-Foot Top Corner Drop) – Loading Condition 3 – Total Range – Drop Orientation = 15.74 Degrees

Loading Condition 3: -40°F Ambient Temperature and No Decay Heat Load

		Total Stress Range** (ksi)				Principal Stresses			Stress Differences		
Comp. No.*	Node	S_x	S_y	S_z	S_{xy}	S_1	S_2	S_3	S_1-S_2	S_2-S_3	S_3-S_1
1	2561***	0.53	-5.77	-5.37	196.6	194.01	-5.37	-199.25	199.38	193.88	-393.25
3	1815	-1.78	-34.09	-0.31	1.13	-0.31	-1.74	-34.13	1.43	32.39	-33.82
4	1584	-1.07	-13.54	-7.81	-1.49	-0.89	-7.81	-13.72	6.92	5.91	-12.82
6	1598	-0.07	-22.77	2.35	0.07	2.35	-0.07	-22.77	4.42	22.70	-25.12
7	2	-0.93	22.51	5.68	0.95	22.54	5.68	-0.97	16.86	6.65	-23.51
8	385	-15.51	-7.77	-7.85	-1.52	-7.48	-7.85	-15.80	0.36	7.95	-8.32

* Refer to Figure 2.10.2-9 for component identification.

** Conservatively based on a 1.12-inch thick outer shell and on a 3,850-psi maximum crush strength aluminum honeycomb impact limiter (Section 2.7.1.3).

*** Stresses at node 2561 are unrealistic, resulting from the boundary effect. See Section 2.7.1.3.3 for the discussion of the boundary effect on the stress results.

Table 2.7.1-39 Critical Stress Summary (30-Foot Top Oblique Drop) – Loading Condition 3 – P_m – Drop Orientation = 30 Degrees

Loading Condition 3: -40°F Ambient Temperature and No Decay Heat Load

		P_m Stresses (ksi)**				Principal Stresses					
Comp. No.*	Section Cut Node to Node	S_x	S_y	S_z	S_{xy}	S_1	S_2	S_3	S.I.	Allow. Stress 0.7 S_u	Margin of Safety
	1-1										
1	2302 to 2562	-16.20	-12.40	1.94	-9.53	1.94	-4.59	-24.02	25.96	46.2	+0.78
	2-2										
3	2150 to 2156	-2.78	-11.71	-24.46	0.10	-2.78	-11.71	-24.46	21.68	46.2	+1.13
	3-3										
4	941 to 944	-0.01	11.94	0.15	0.00	11.94	0.15	-0.01	11.95	66.0	+4.52
	4-4										
6	1035 to 1038	-0.04	27.17	1.33	0.00	27.17	1.33	-0.04	27.21	66.0	+1.49
	5-5										
7	168 to 175	-3.49	6.05	-3.83	0.39	6.06	-3.50	-3.83	9.90	46.2	+3.67
	6-6										
8	381 to 385	-6.22	-6.32	-4.05	0.41	-4.05	-5.86	-6.68	2.63	46.2	+16.56

* Refer to Figure 2.10.2-9 for component identification.

** Conservatively based on a 1.12-inch thick outer shell and on a 3,850-psi maximum crush strength aluminum honeycomb impact limiter (Section 2.7.1.3).

Table 2.7.1-40 Critical Stress Summary (30-Foot Top Oblique Drop) – Loading Condition 3 – $P_m + P_b$ – Drop Orientation = 30 Degrees

Loading Condition 3: -40°F Ambient Temperature and No Decay Heat Load

		$P_m + P_b$ Stresses (ksi)**				Principal Stresses					
Comp. No.*	Section Cut Node to Node	S_x	S_y	S_z	S_{xy}	S_1	S_2	S_3	S.I.	Allow. Stress 1.0 S_u	Margin of Safety
	1-1										
1	2377 to 2577	-27.70	-2.51	-3.18	-2.00	-2.35	-3.18	-27.86	25.51	66.0	+1.59
	8-8										
3	1821 to 1825	0.23	-21.21	8.11	2.18	8.11	0.45	-21.43	29.54	66.0	+1.23
	9-9										
4	1561 to 1564	0.23	-13.23	-3.71	-0.43	0.24	-3.71	-13.25	13.49	94.3	+5.99
	4-4										
6	1035 to 1038	0.01	28.33	1.36	0.00	28.33	1.36	0.01	28.32	94.3	+2.33
	10-10										
7	143 to 150	-1.38	23.77	2.90	0.26	23.77	2.90	-1.39	25.15	66.0	+1.62
	11-11										
8	176 to 326	-9.37	-8.25	-0.22	-1.43	-0.22	-7.27	-10.35	10.13	66.0	+5.51

* Refer to Figure 2.10.2-9 for component identification.

** Conservatively based on a 1.12-inch thick outer shell and on a 3,850-psi maximum crush strength aluminum honeycomb impact limiter (Section 2.7.1.3).

Table 2.7.1-41 Critical Stress Summary (30-Foot Top Oblique Drop) – Loading Condition 3 – Total Range – Drop Orientation = 30 Degrees

Loading Condition 3: -40°F Ambient Temperature and No Decay Heat Load

		Total Stress Range** (ksi)				Principal Stresses			Stress Differences		
Comp. No.*	Node	S_x	S_y	S_z	S_{xy}	S_1	S_2	S_3	S_1-S_2	S_2-S_3	S_3-S_1
1	2561***	0.55	-4.91	-4.43	388.2	286.03	-4.43	-390.39	390.36	386.06	-776.42
3	1821	0.41	-23.19	9.86	0.65	9.86	0.43	-23.21	9.43	23.64	-33.07
4	1584	-0.72	-7.54	-6.57	-1.20	-0.52	-6.57	-7.74	6.05	1.17	-7.23
6	1038	0.01	24.74	1.37	0.00	24.74	1.37	0.01	23.37	1.36	-24.73
7	25	-1.39	31.20	5.34	1.62	31.28	5.34	-1.47	25.94	6.81	-32.75
8	385	-25.70	-6.95	-11.61	-1.69	-6.79	-11.61	-25.85	4.81	14.24	-19.06

* Refer to Figure 2.10.2-9 for component identification.

** Conservatively based on a 1.12-inch thick outer shell and on a 3,850-psi maximum crush strength aluminum honeycomb impact limiter (Section 2.7.1.3).

*** Stresses at node 2561 are unrealistic, resulting from the boundary effect. See Section 2.7.1.3.3 for the discussion of the boundary effect on the stress results.

Table 2.7.1-42 Critical Stress Summary (30-Foot Top Oblique Drop) – Loading Condition 3 – P_m – Drop Orientation = 45 Degrees

Loading Condition 3: -40°F Ambient Temperature and No Decay Heat Load

		P_m Stresses (ksi)**				Principal Stresses					
Comp. No.*	Section Cut Node to Node	S_x	S_y	S_z	S_{xy}	S_1	S_2	S_3	S.I.	Allow. Stress 0.7 S_u	Margin of Safety
	1-1										
1	2302 to 2562	-18.06	-15.24	2.98	-11.92	2.98	-4.65	-28.65	31.63	46.2	+0.46
	2-2										
3	2150 to 2156	-3.61	-10.04	-28.16	0.10	-3.61	-10.04	-28.16	24.55	46.2	+0.88
	3-3										
4	981 to 984	-0.01	14.90	0.16	0.00	14.90	0.16	-0.01	14.91	66.0	+3.43
	4-4										
6	1055 to 1058	-0.05	33.61	1.52	0.00	33.61	1.52	-0.05	33.66	66.0	+0.96
	5-5										
7	168 to 175	-3.47	6.17	-5.50	0.68	6.22	-3.52	-5.50	11.72	46.2	+2.94
	6-6										
8	381 to 385	-7.05	-4.35	-4.32	0.36	-4.30	-4.32	-7.10	2.79	46.2	+15.54

* Refer to Figure 2.10.2-9 for component identification.

** Conservatively based on a 1.12-inch thick outer shell and on a 3,850-psi maximum crush strength aluminum honeycomb impact limiter (Section 2.7.1.3).

Table 2.7.1-43 Critical Stress Summary (30-Foot Top Oblique Drop) – Loading Condition 3 – $P_m + P_b$ – Drop Orientation = 45 Degrees

Loading Condition 3: -40°F Ambient Temperature and No Decay Heat Load

		$P_m + P_b$ Stresses (ksi)**				Principal Stresses					
Comp. No.*	Section Cut Node to Node	S_x	S_y	S_z	S_{xy}	S_1	S_2	S_3	S.I.	Allow. Stress 1.0 S_u	Margin of Safety
	1-1										
1	2302 to 2562	7.23	-15.24	2.98	-11.92	12.38	2.98	-20.38	32.76	66.0	+1.01
	7-7										
3	1969 to 1996	-41.18	-16.23	-10.45	0.25	-10.45	-16.23	-41.19	30.74	66.0	+1.15
	3-3										
4	981 to 984	0.00	15.70	0.16	0.00	15.70	0.16	0.00	15.70	94.3	+5.01
	4-4										
6	1055 to 1058	0.01	35.09	1.62	0.00	35.09	1.62	0.01	35.08	94.3	+1.69
	8-8										
7	143 to 150	-1.51	24.33	1.43	0.59	24.34	1.43	-1.52	25.87	66.0	+1.55
	9-9										
8	176 to 326	-10.63	-6.40	0.00	-1.74	0.00	-5.78	-11.25	11.25	66.0	+4.87

* Refer to Figure 2.10.2-9 for component identification.

** Conservatively based on a 1.12-inch thick outer shell and on a 3,850-psi maximum crush strength aluminum honeycomb impact limiter (Section 2.7.1.3).

Table 2.7.1-44 Critical Stress Summary (30-Foot Top Oblique Drop) – Loading Condition 3 – Total Range – Drop Orientation = 45 Degrees

Loading Condition 3: -40°F Ambient Temperature and No Decay Heat Load

		Total Stress Range** (ksi)				Principal Stresses			Stress Differences		
Comp. No.*	Node	S_x	S_y	S_z	S_{xy}	S_1	S_2	S_3	S_1-S_2	S_2-S_3	S_3-S_1
1	2561***	0.57	-3.66	-3.33	467.6	466.1	-3.33	-469.2	469.4	465.82	-935.21
3	1969	-43.14	-27.23	-17.08	2.69	-17.08	-26.79	-43.58	9.71	16.80	-26.50
4	984	-0.93	6.36	-8.61	0.00	6.36	-0.93	-8.61	7.29	7.68	-14.97
6	1058	0.01	31.49	1.62	0.00	31.49	1.62	0.01	29.87	1.61	-31.48
7	25	-1.51	32.78	4.22	1.88	32.89	4.22	-1.61	28.67	5.83	-34.50
8	385	-29.31	-5.19	-12.60	-1.55	-5.09	-12.60	-29.41	7.50	16.81	-24.31

* Refer to Figure 2.10.2-9 for component identification.

** Conservatively based on a 1.12-inch thick outer shell and on a 3,850-psi maximum crush strength aluminum honeycomb impact limiter (Section 2.7.1.3).

*** Stresses at node 2561 are unrealistic, resulting from the boundary effect. See Section 2.7.1.3.3 for the discussion of the boundary effect on the stress results.

Table 2.7.1-45 Critical Stress Summary (30-Foot Top Oblique Drop) – Loading Condition 3 – P_m – Drop Orientation = 60 Degrees

Loading Condition 3: -40°F Ambient Temperature and No Decay Heat Load

		P_m Stresses (ksi)**				Principal Stresses					
Comp. No.*	Section Cut Node to Node	S_x	S_y	S_z	S_{xy}	S_1	S_2	S_3	S.I.	Allow. Stress 0.7 S_u	Margin of Safety
	1-1										
1	2302 to 2562	-22.17	-19.88	4.31	-15.80	4.31	-5.18	-36.87	41.18	46.2	+0.12
	2-2										
3	2150 to 2156	-5.21	-9.13	-34.47	0.13	-5.20	-9.13	-34.47	29.27	46.2	+0.58
	3-3										
4	1021 to 1024	-0.01	19.85	0.18	0.00	19.85	0.18	-0.01	19.86	66.0	+2.32
	4-4										
6	1075 to 1078	-0.06	44.14	1.89	0.00	44.14	1.89	-0.06	44.20	66.0	+0.49
	5-5										
7	615 to 618	-3.94	7.14	-7.64	1.01	7.23	-4.03	-7.64	14.87	46.2	+2.11
	6-6										
8	601 to 604	-8.72	-3.35	-5.15	0.38	-3.32	-5.15	-8.75	-5.42	46.2	+7.52

* Refer to Figure 2.10.2-9 for component identification.

** Conservatively based on a 1.12-inch thick outer shell and on a 3,850-psi maximum crush strength aluminum honeycomb impact limiter (Section 2.7.1.3).

Table 2.7.1-46 Critical Stress Summary (30-Foot Top Oblique Drop) – Loading Condition 3 – $P_m + P_b$ – Drop Orientation = 60 Degrees

Loading Condition 3: -40°F Ambient Temperature and No Decay Heat Load

		$P_m + P_b$ Stresses (ksi)**				Principal Stresses					
Comp. No.*	Section Cut Node to Node	S_x	S_y	S_z	S_{xy}	S_1	S_2	S_3	S.I.	Allow. Stress 1.0 S_u	Margin of Safety
	1-1										
1	2302 to 2562	13.46	-19.88	4.31	-15.80	19.76	4.31	-26.18	45.94	66.0	+0.44
	7-7										
3	1969 to 2016	-56.85	-17.63	-8.69	2.13	-8.69	-17.51	-56.97	48.28	66.0	+0.37
	3-3										
4	1021 to 1024	0.00	20.91	0.18	0.00	20.91	0.18	0.00	20.92	94.3	+3.51
	4-4										
6	1075 to 1078	0.01	46.11	2.12	0.00	46.11	2.12	0.01	46.10	94.3	+1.05
	8-8										
7	125 to 168	-1.83	28.22	0.42	0.94	28.25	0.42	-1.86	30.10	66.0	+1.19
	9-9										
8	381 to 385	-13.15	-5.79	0.19	-2.23	0.19	-5.17	-13.77	13.96	66.0	+3.73

* Refer to Figure 2.10.2-9 for component identification.

** Conservatively based on a 1.12-inch thick outer shell and on a 3,850-psi maximum crush strength aluminum honeycomb impact limiter (Section 2.7.1.3).

Table 2.7.1-47 Critical Stress Summary (30-Foot Top Oblique Drop) – Loading Condition 3 – Total Range – Drop Orientation = 60 Degrees

Loading Condition 3: -40°F Ambient Temperature and No Decay Heat Load

		Total Stress Range** (ksi)				Principal Stresses			Stress Differences		
Comp. No.*	Node	S_x	S_y	S_z	S_{xy}	S_1	S_2	S_3	S_1-S_2	S_2-S_3	S_3-S_1
1	2561***	0.06	-2.82	-1.96	603.5	602.12	-1.96	-604.88	604.08	602.92	-1207.00
3	1969	-62.00	-37.03	-22.36	1.03	-22.36	-36.99	-62.04	14.63	25.05	-39.68
4	1024	-0.93	11.58	-8.59	0.00	11.58	-0.93	-8.59	12.51	7.66	-20.17
6	1078	0.01	42.52	2.12	0.00	42.52	2.12	0.01	40.40	2.11	-42.51
7	25	-1.82	38.70	3.89	2.35	38.83	3.89	-1.96	34.94	5.85	-40.79
8	177	-36.39	-4.49	-15.18	-1.66	-4.40	-15.18	-36.48	10.78	21.30	-32.08

* Refer to Figure 2.10.2-9 for component identification.

** Conservatively based on a 1.12-inch thick outer shell and on a 3,850-psi maximum crush strength aluminum honeycomb impact limiter (Section 2.7.1.3).

*** Stresses at node 2561 are unrealistic, resulting from the boundary effect. See Section 2.7.1.3.3 for the discussion of the boundary effect on the stress results.

Table 2.7.1-48 Critical Stress Summary (30-Foot Bottom Oblique Drop) – Loading Condition 1 – P_m – Drop Orientation = 15.74 Degrees

Loading Condition 1: 130°F Ambient Temperature and Maximum Decay Heat Load

		P_m Stresses (ksi)**				Principal Stresses					
Comp. No.*	Section Cut Node to Node	S_x	S_y	S_z	S_{xy}	S_1	S_2	S_3	S.I.	Allow. Stress 0.7 S_u	Margin of Safety
	1-1										
1	2301 to 2561	-2.46	-0.42	-0.64	0.21	0.64	-0.40	-2.48	3.12	46.2	+13.80
	2-2										
3	1595 to 1598	-6.94	-3.13	-3.21	-1.25	-2.76	-3.21	-7.31	4.56	46.2	+9.14
	3-3										
4	621 to 624	0.07	-16.15	-1.45	0.48	0.09	-1.45	-16.17	16.26	66.0	+3.05
	4-4										
6	615 to 618	-0.05	-24.26	1.38	-0.17	1.38	-0.05	-24.26	25.64	66.0	+1.57
	5-5										
7	2 to 102	-29.38	-17.87	-0.14	13.44	-0.14	-9.01	-38.25	38.11	46.2	+0.21
	6-6										
8	601 to 604	-0.37	-14.99	-0.87	0.68	-0.34	-0.87	-15.02	14.68	46.2	+2.15

* Refer to Figure 2.10.2-9 for component identification.

** Conservatively based on a 1.12-inch thick outer shell and on a 3,850-psi maximum crush strength aluminum honeycomb impact limiter (Section 2.7.1.3).

Table 2.7.1-49 Critical Stress Summary (30-Foot Bottom Oblique Drop) – Loading Condition 1 – $P_m + P_b$ – Drop Orientation = 15.74 Degrees

Loading Condition 1: 130°F Ambient Temperature and Maximum Decay Heat Load

		$P_m + P_b$ Stresses (ksi)**				Principal Stresses					
Comp. No.*	Section Cut Node to Node	S_x	S_y	S_z	S_{xy}	S_1	S_2	S_3	S.I.	Allow. Stress 1.0 S_u	Margin of Safety
	1-1										
1	2301 to 2561	-4.32	-0.30	0.66	2.67	1.03	0.66	-5.65	6.69	66.0	+8.87
	7-7										
3	1815 to 1818	-3.06	4.46	-11.42	0.29	4.48	-3.07	-11.42	15.90	66.0	+3.15
	3-3										
4	621 to 624	0.27	-20.83	-3.90	0.48	0.28	-3.90	-20.84	21.12	94.3	+3.46
	4-4										
6	615 to 618	-0.11	-25.58	1.47	-0.17	1.47	-0.11	-25.58	27.05	94.3	+2.48
	8-8										
7	168 to 175	45.23	-16.97	-0.74	-1.45	45.26	-0.74	-17.01	62.27	66.0	+0.06
	9-9										
8	176 to 326	-32.63	0.00	-4.06	0.00	0.00	-4.06	-32.63	32.63	66.0	+1.02

* Refer to Figure 2.10.2-9 for component identification.

** Conservatively based on a 1.12-inch thick outer shell and on a 3,850-psi maximum crush strength aluminum honeycomb impact limiter (Section 2.7.1.3).

Table 2.7.1-50 Critical Stress Summary (30-Foot Bottom Oblique Drop) – Loading Condition 1 – Total Range – Drop Orientation = 15.74 Degrees

Loading Condition 1: 130°F Ambient Temperature and Maximum Decay Heat Load

		Total Stress Range** (ksi)				Principal Stresses			Stress Differences		
Comp. No.*	Node	S_x	S_y	S_z	S_{xy}	S_1	S_2	S_3	S_1-S_2	S_2-S_3	S_3-S_1
1	2561	0.82	-4.33	0.68	9.98	8.55	0.68	-12.07	7.87	12.75	-20.62
3	1815	0.98	11.67	0.31	4.22	13.14	0.31	-0.49	12.83	0.80	-13.63
4	604	-1.35	-22.40	-4.09	1.23	-1.28	-4.09	-22.47	2.81	18.38	-21.19
6	615	-0.03	-14.25	2.26	-0.28	2.26	-0.02	-14.26	2.28	14.23	-16.52
7	1***	-0.49	-6.30	-9.12	-213.50	210.12	-9.12	-216.91	219.24	207.79	-427.04
8	361	0.02	-28.18	2.01	-2.18	2.01	0.19	-28.35	1.82	28.54	-30.36

* Refer to Figure 2.10.2-9 for component identification.

** Conservatively based on a 1.12-inch thick outer shell and on a 3,850-psi maximum crush strength aluminum honeycomb impact limiter (Section 2.7.1.3).

*** Stresses at node 1 are unrealistic, resulting from the boundary effect. See Section 2.7.1.3.3 for the discussion of the boundary effect on the stress results.

Table 2.7.1-51 Critical Stress Summary (30-Foot Bottom Oblique Drop) – Loading Condition 1 – P_m – Drop Orientation = 30 Degrees

Loading Condition 1: 130°F Ambient Temperature and Maximum Decay Heat Load

		P_m Stresses (ksi)**				Principal Stresses					
Comp. No.*	Section Cut Node to Node	S_x	S_y	S_z	S_{xy}	S_1	S_2	S_3	S.I.	Allow. Stress 0.7 S_u	Margin of Safety
	1-1										
1	2301 to 2561	-3.93	-0.51	0.56	0.02	0.56	-0.51	-3.93	4.49	46.2	+9.30
	2-2										
3	1595 to 1598	-11.42	-1.45	-5.19	-1.95	-1.08	-5.19	-11.79	10.71	46.2	+3.31
	3-3										
4	1261 to 1264	-0.06	16.36	0.81	0.00	16.36	0.81	-0.06	16.42	66.0	+3.02
	4-4										
6	1195 to 1198	-0.05	29.57	1.48	0.00	29.57	1.48	-0.05	29.62	66.0	+1.22
7	2 to 102	-48.76	-30.81	5.29	31.95	5.29	-6.60	-72.97	78.26***	46.2	***
	6-6										
8	501 to 505	-0.06	-11.36	0.85	0.81	0.85	0.00	-11.42	12.27	46.2	+2.77

* Refer to Figure 2.10.2-9 for component identification.

** Conservatively based on a 1.12-inch thick outer shell and on a 3,850-psi maximum crush strength aluminum honeycomb impact limiter (Section 2.7.1.3).

*** This stress is unrealistic and is disregarded. See Section 2.7.1.3.3 for the discussion of the boundary effect on the stress results. The critical section and its stresses for component 7 are:

Section Cut Node to Node	S_x	S_y	S_z	S_{xy}	S_1	S_2	S_3	S.I.	0.7 S_u	MS
5-5 4 to 104	-11.36	-24.02	-2.05	4.49	-2.05	-9.93	-25.45	23.40	46.2	+0.97

Table 2.7.1-52 Critical Stress Summary (30-Foot Bottom Oblique Drop) – Loading Condition 1 – $P_m + P_b$ – Drop Orientation = 30 Degrees

Loading Condition 1: 130°F Ambient Temperature and Maximum Decay Heat Load

		$P_m + P_b$ Stresses (ksi)**				Principal Stresses					
Comp. No.*	Section Cut Node to Node	S_x	S_y	S_z	S_{xy}	S_1	S_2	S_3	S.I.	Allow. Stress 1.0 S_u	Margin of Safety
	1-1										
1	2301 to 2561	-3.94	-0.21	1.01	4.43	2.73	1.01	-6.89	9.62	66.0	+5.86
	7-7										
3	1815 to 1818	-5.00	3.57	-20.79	0.24	3.57	-5.00	-20.79	24.36	66.0	+1.71
	8-8										
4	1241 to 1244	-0.02	17.27	1.03	0.00	17.27	1.03	-0.02	17.29	94.3	+4.45
	9-9										
6	1175 to 1178	0.00	30.88	1.52	0.00	30.88	1.52	0.00	30.88	94.3	+2.04
7	2 to 102	-1.21	-30.81	5.29	31.95	19.20	5.29	-51.22	70.43***	66.0	***
	10-10										
8	176 to 326	-26.38	0.00	-3.46	0.00	0.00	-3.46	-26.38	26.38	66.0	+1.50

* Refer to Figure 2.10.2-9 for component identification.

** Conservatively based on a 1.12-inch thick outer shell and on a 3,850-psi maximum crush strength aluminum honeycomb impact limiter (Section 2.7.1.3).

*** This stress is unrealistic and is disregarded. See Section 2.7.1.3.3 for the discussion of the boundary effect on the stress results. The critical section and its stresses for component 7 are:

Section Cut Node to Node	S_x	S_y	S_z	S_{xy}	S_1	S_2	S_3	S.I.	1.0 S_u	MS
5-5 4 to 104	-13.71	-24.02	-2.05	4.49	-2.05	-12.03	-25.70	23.65	66.0	+1.79

Table 2.7.1-53 Critical Stress Summary (30-Foot Bottom Oblique Drop) – Loading Condition 1 – Total Range – Drop Orientation = 30 Degrees

Loading Condition 1: 130°F Ambient Temperature and Maximum Decay Heat Load

		Total Stress Range** (ksi)				Principal Stresses			Stress Differences		
Comp. No.*	Node	S_x	S_y	S_z	S_{xy}	S_1	S_2	S_3	S_1-S_2	S_2-S_3	S_3-S_1
1	2561	0.70	-3.49	1.32	16.80	15.53	1.32	-18.33	14.22	19.64	-33.86
3	1815	1.78	23.68	2.32	7.64	26.09	2.32	-0.63	23.77	2.94	-26.71
4	604	-1.10	-18.18	-3.00	1.02	-1.04	-3.00	-18.24	1.96	15.24	-17.20
6	1178	0.01	40.71	1.75	0.00	40.71	1.75	0.01	38.96	1.74	-40.70
7	1***	-1.03	-5.20	-6.73	-423.50	420.39	-6.73	-426.62	427.12	419.89	-847.01
8	177	-39.92	-4.9	-27.40	-3.15	-4.62	-27.40	-40.20	22.78	12.80	-35.58

* Refer to Figure 2.10.2-9 for component identification.

** Conservatively based on a 1.12-inch thick outer shell and on a 3,850-psi maximum crush strength aluminum honeycomb impact limiter (Section 2.7.1.3).

*** Stresses at node 1 are unrealistic, resulting from the boundary effect. See Section 2.7.1.3.3 for the discussion of the boundary effect on the stress results.

Table 2.7.1-54 Critical Stress Summary (30-Foot Bottom Oblique Drop) – Loading Condition 1 – P_m – Drop Orientation = 45 Degrees

Loading Condition 1: 130°F Ambient Temperature and Maximum Decay Heat Load

		P_m Stresses (ksi)**				Principal Stresses					
Comp. No.*	Section Cut Node to Node	S_x	S_y	S_z	S_{xy}	S_1	S_2	S_3	S.I.	Allow. Stress 0.7 S_u	Margin of Safety
	1-1										
1	2301 to 2561	-4.42	-0.50	0.40	-0.12	0.40	-0.50	-4.42	4.82	46.2	+8.58
	2-2										
3	1595 to 1598	-12.99	0.06	-5.86	-2.18	0.41	-5.86	-13.35	13.76	46.2	+2.36
	3-3										
4	1241 to 1244	-0.09	19.42	0.87	0.00	19.42	0.87	-0.09	19.51	66.0	+2.38
	4-4										
6	1175 to 1178	-0.06	36.99	1.79	0.00	36.99	1.79	-0.06	37.04	66.0	+0.78
7	2 to 102	-55.62	-36.07	9.42	40.01	9.42	-4.65	-87.03	96.45***	46.2	***
	6-6										
8	501 to 505	-0.06	-8.84	1.04	0.67	1.04	-0.01	-8.89	9.93	46.2	+3.65

* Refer to Figure 2.10.2-9 for component identification.

** Conservatively based on a 1.12-inch thick outer shell and on a 3,850-psi maximum crush strength aluminum honeycomb impact limiter (Section 2.7.1.3).

*** This stress is unrealistic and is disregarded. See Section 2.7.1.3.3 for the discussion of the boundary effect on the stress results. The critical section and its stresses for component 7 are:

Section Cut Node to Node	S_x	S_y	S_z	S_{xy}	S_1	S_2	S_3	S.I.	0.7 S_u	MS
5-5 4 to 104	-10.17	-27.98	0.97	6.07	0.97	-8.3	-29.85	30.82	46.2	+0.50

Table 2.7.1-55 Critical Stress Summary (30-Foot Bottom Oblique Drop) – Loading Condition 1 – $P_m + P_b$ – Drop Orientation = 45 Degrees

Loading Condition 1: 130°F Ambient Temperature and Maximum Decay Heat Load

		$P_m + P_b$ Stresses (ksi)**				Principal Stresses					
Comp. No.*	Section Cut Node to Node	S_x	S_y	S_z	S_{xy}	S_1	S_2	S_3	S.I.	Allow. Stress 1.0 S_u	Margin of Safety
	1-1										
1	2301 to 2561	-3.02	-0.11	1.11	5.05	3.70	1.11	-6.82	10.52	66.0	+5.27
	7-7										
3	1815 to 1818	-5.66	2.30	-24.56	0.17	2.31	-5.67	-24.56	26.87	66.0	+1.46
	3-3										
4	1241 to 1244	-0.03	20.58	1.32	0.00	20.58	1.32	-0.03	20.62	94.3	+3.57
	4-4										
6	1175 to 1178	0.00	38.64	1.74	0.00	38.64	1.74	0.00	38.64	94.3	+1.44
7	2 to 102	3.28	-36.07	9.42	40.01	28.20	9.42	-60.98	89.18***	66.0	***
	8-8										
8	176 to 326	-17.26	0.00	-1.15	0.00	0.00	-1.15	-17.26	17.26	66.0	+2.82

* Refer to Figure 2.10.2-9 for component identification.

** Conservatively based on a 1.12-inch thick outer shell and on a 3,850-psi maximum crush strength aluminum honeycomb impact limiter (Section 2.7.1.3).

*** This stress is unrealistic and is disregarded. See Section 2.7.1.3.3 for the discussion of the boundary effect on the stress results. The critical section and its stresses for component 7 are:

Section Cut Node to Node	S_x	S_y	S_z	S_{xy}	S_1	S_2	S_3	S.I.	1.0 S_u	MS
5-5 4 to 104	-12.31	-27.98	0.97	6.07	0.97	-10.23	-30.06	31.03	66.0	+1.13

Table 2.7.1-56 Critical Stress Summary (30-Foot Bottom Oblique Drop) – Loading Condition 1 – Total Range – Drop Orientation = 45 Degrees

Loading Condition 1: 130°F Ambient Temperature and Maximum Decay Heat Load

		Total Stress Range** (ksi)				Principal Stresses			Stress Differences		
Comp. No.*	Node	S_x	S_y	S_z	S_{xy}	S_1	S_2	S_3	S_1-S_2	S_2-S_3	S_3-S_1
1	2561	0.49	-2.29	1.58	19.28	18.44	1.58	-20.23	16.85	21.82	-38.67
3	1815	2.10	29.01	3.47	9.01	31.75	3.47	-0.64	28.28	4.11	-32.39
4	1244	-0.03	23.31	1.61	0.00	23.31	1.61	-0.03	21.70	1.64	-23.34
6	1178	0.01	48.47	1.97	0.00	48.47	1.97	0.01	46.50	1.96	-48.46
7	1***	0.06	-3.93	-3.64	-509.70	507.77	-3.64	-511.64	511.41	508.00	-1019.41
8	177	-40.74	-4.08	-23.25	-2.37	-3.88	-23.25	-40.94	19.37	17.69	-37.06

* Refer to Figure 2.10.2-9 for component identification.

** Conservatively based on a 1.12-inch thick outer shell and on a 3,850-psi maximum crush strength aluminum honeycomb impact limiter (Section 2.7.1.3).

*** Stresses at node 1 are unrealistic, resulting from the boundary effect. See Section 2.7.1.3.3 for the discussion of the boundary effect on the stress results.

Table 2.7.1-57 Critical Stress Summary (30-Foot Bottom Oblique Drop) – Loading Condition 1 – P_m – Drop Orientation = 60 Degrees

Loading Condition 1: 130°F Ambient Temperature and Maximum Decay Heat Load

		P_m Stresses (ksi)**				Principal Stresses					
Comp. No.*	Section Cut Node to Node	S_x	S_y	S_z	S_{xy}	S_1	S_2	S_3	S.I.	Allow. Stress 0.7 S_u	Margin of Safety
	1-1										
1	2302 to 2562	-5.44	-0.56	0.33	-0.26	0.33	-0.54	-5.46	5.79	46.2	+6.99
	2-2										
3	1595 to 1598	-16.11	1.31	-7.24	-2.66	1.71	-7.24	-16.51	18.22	46.2	+1.54
	3-3										
4	1221 to 1224	-0.12	24.94	0.91	-0.02	24.94	0.91	-0.12	25.06	66.0	+1.63
	4-4										
6	1155 to 1158	-0.07	48.97	2.27	0.00	48.97	2.27	-0.07	49.04	66.0	+0.34
7	2 to 102	-69.10	-45.77	14.35	52.94	14.35	-3.22	-111.6	126.00***	46.2	***
	6-6										
8	177 to 327	-3.61	-11.52	1.18	0.46	1.18	-3.58	-11.55	12.73	46.2	+2.63

* Refer to Figure 2.10.2-9 for component identification.

** Conservatively based on a 1.12-inch thick outer shell and on a 3,850-psi maximum crush strength aluminum honeycomb impact limiter (Section 2.7.1.3).

*** This stress is unrealistic and is disregarded. See Section 2.7.1.3.3 for the discussion of the boundary effect on the stress results. The critical section and its stresses for component 7 are:

Section Cut Node to Node	S_x	S_y	S_z	S_{xy}	S_1	S_2	S_3	S.I.	0.7 S_u	MS
5-5										
4 to 104	-10.12	-35.55	3.96	8.66	3.96	-7.45	-38.22	42.18	46.2	+0.10

Table 2.7.1-58 Critical Stress Summary (30-Foot Bottom Oblique Drop) – Loading Condition 1 – $P_m + P_b$ – Drop Orientation = 60 Degrees

Loading Condition 1: 130°F Ambient Temperature and Maximum Decay Heat Load

		$P_m + P_b$ Stresses (ksi)**				Principal Stresses					
Comp. No.*	Section Cut Node to Node	S_x	S_y	S_z	S_{xy}	S_1	S_2	S_3	S.I.	Allow. Stress 1.0 S_u	Margin of Safety
	7-7										
1	2301 to 2561	-2.69	-0.04	1.34	6.28	5.05	1.34	-7.78	12.83	66.0	+4.14
	8-8										
3	1815 to 1818	-7.00	1.59	-31.12	0.13	1.59	-7.01	-31.12	32.72	66.0	+1.02
	3-3										
4	1221 to 1224	-0.06	26.49	1.66	-0.02	26.49	1.66	-0.06	26.55	94.3	+2.55
	4-4										
6	1155 to 1158	0.01	51.14	2.18	0.00	51.14	2.18	0.01	51.13	94.3	+0.84
7	2 to 102	8.63	-45.77	14.35	52.94	40.94	14.35	-78.09	119.00***	66.0	***
	9-9										
8	381 to 385	-0.82	-14.41	-3.80	0.98	-0.75	-3.80	-14.48	13.74	66.0	+3.80

* Refer to Figure 2.10.2-9 for component identification.

** Conservatively based on a 1.12-inch thick outer shell and on a 3,850-psi maximum crush strength aluminum honeycomb impact limiter (Section 2.7.1.3).

*** This stress is unrealistic and is disregarded. See Section 2.7.1.3.3 for the discussion of the boundary effect on the stress results. The critical section and its stresses for component 7 are:

Section Cut Node to Node	S_x	S_y	S_z	S_{xy}	S_1	S_2	S_3	S.I.	1.0 S_u	MS
5-5										
4 to 104	-12.00	-35.55	3.96	8.66	3.96	-9.16	-38.40	42.4	66.0	+0.56

Table 2.7.1-59 Critical Stress Summary (30-Foot Bottom Oblique Drop) – Loading Condition 1 – Total Range – Drop Orientation = 60 Degrees

Loading Condition 1: 130°F Ambient Temperature and Maximum Decay Heat Load

		Total Stress Range** (ksi)				Principal Stresses			Stress Differences		
Comp. No.*	Node	S_x	S_y	S_z	S_{xy}	S_1	S_2	S_3	S_1-S_2	S_2-S_3	S_3-S_1
1	2561	0.40	-1.63	2.03	24.03	23.44	2.03	-24.67	21.41	26.70	-48.11
3	1815	2.66	37.47	4.91	11.41	40.87	4.91	-0.75	35.96	5.66	-41.62
4	1224	-0.05	29.24	1.96	-0.02	29.24	1.96	-0.05	27.28	2.01	-29.29
6	1158	0.01	60.98	2.42	0.00	60.98	2.42	0.01	58.56	2.41	-60.97
7	1***	-0.88	-3.07	-0.83	-655.60	653.63	-0.83	-657.58	654.46	656.75	-1311.20
8	177	-46.34	-4.01	-22.03	-2.06	-3.91	-22.03	-46.46	18.39	24.16	-42.55

* Refer to Figure 2.10.2-9 for component identification.

** Conservatively based on a 1.12-inch thick outer shell and on a 3,850-psi maximum crush strength aluminum honeycomb impact limiter (Section 2.7.1.3).

*** Stresses at node 1 are unrealistic, resulting from the boundary effect. See Section 2.7.1.3.3 for the discussion of the boundary effect on the stress results.

Table 2.7.1-60 NAC-LWT Cask Hot Bolt Analysis Hypothetical Accident Conditions

Nominal Diameter (in):	1.00	
Number of Bolts:	12	
Service Stress, Sy (ksi):	81.9	at a 300
Bolt Expansion (in/in):	9E-06	degree-F
Bolt Modulus (ksi):	26700	Service
Lid Expansion (in/in):	9E-06	Temperature
Lid Modulus (ksi):	27000	
Stress Area (in2):	0.6051	
Grip Length (in):	7.99	
Maximum Pressure (psi):	50	
Seal Diameter (in):	15.750	
Preload Torque (ft-lbs):	260	at RT
Nominal Room Temp, RT:	70	deg-F
Bolt Circle Diameter (in):	17.88	
Lid Diameter (in):	22.50	

Longitudinal Weight (lbs):	4941
Lateral Weight (lbs):	941
Service DT (degrees):	157
[default value =]	230

CALCULATED LOADS & STIFFNESS

Bolt Thermal Load (lbs):	1423
Bolt Preload (lbs):	34770
Bolt Pressure Load (lbs):	812
Bolt Stiffness (lbs/in):	1.9E+06
Lid Stiffness (lbs/in):	2.1E+07

Angle wrt Vert. (Deg)	Impact Accel. (g)	<**** LOADS (lbs.) Impact Tension	Impact Shear	Bolt Tension Applied	Bolt Tension Net **** >	<**** STRESSES (psi) Direct Tension	Direct Shear	Principal Sig-1	Principal Sig-2	Stress Intens. **** >	Margin of Safety
0 End	15.80	6506	0	7317	36795	60808	0	0	60808	60808	0.35
5 (+)	14.69	8216	100	9028	36936	61041	166	0	61041	61042	0.34
10 (+)	13.57	7506	185	8318	36877	60944	305	-2	60946	60947	0.34
15.7 Corner	12.30	6650	261	7462	36807	60828	431	-3	60831	60834	0.35
20 (+)	12.99	6858	349	7670	36824	60856	576	-5	60862	60867	0.35
25 (+)	13.80	7025	457	7837	36838	60879	756	-9	60888	60898	0.34
30 (+)	14.61	7106	573	7918	36845	60890	947	-15	60905	60919	0.34
35 (+)	15.42	7093	693	7905	36843	60888	1146	-22	60910	60931	0.34
40 (+)	16.22	6980	818	7792	36834	60873	1352	-30	60903	60933	0.34
45 (+)	17.03	6764	944	7576	36816	60844	1561	-40	60884	60924	0.34
50 (+)	17.84	6440	1072	7252	36790	60800	1771	-52	60851	60903	0.34
55 (+)	18.65	6007	1198	6819	36754	60741	1980	-64	60805	60870	0.35
60 (+)	19.45	5463	1321	6275	36709	60667	2183	-78	60745	60824	0.35
65 (+)	20.26	4809	1440	5621	36656	60578	2380	-93	60671	60765	0.35
70 (+)	21.07	4047	1553	4859	36593	60474	2566	-109	60583	60692	0.35
75 (+)	21.88	3180	1657	3992	36522	60356	2739	-124	60480	60604	0.35
80 (+)	22.68	2212	1752	3024	36442	60225	2895	-139	60364	60503	0.35
85 (+)	23.49	1150	1835	1962	36355	60080	3033	-153	60233	60386	0.36
90 Side	24.30	0	1906	812	36260	59924	3149	-165	60089	60254	0.36

Minimum Margin of Safety: 0.34

Table 2.7.1-61 NAC-LWT Cask Cold Bolt Analysis Hypothetical Accident Conditions

Nominal Diameter (in):	1.00	
Number of Bolts:	12	
Service Stress, Sy (ksi):	85	at a 70 degree-F Service Temperature
Bolt Expansion (in/in):	8E-06	
Bolt Modulus (ksi):	27800	
Lid Expansion (in/in):	8E-06	
Lid Modulus (ksi):	28300	
Stress Area (in2):	0.6051	
Grip Length (in):	7.99	
Maximum Pressure (psi):	50	
Seal Diameter (in):	15.750	
Preload Torque (ft-lbs):	260	at RT
Nominal Room Temp, RT:	70	deg-F
Bolt Circle Diameter (in):	17.88	
Lid Diameter (in):	22.50	

Longitudinal Weight (lbs):	4941
Lateral Weight (lbs):	941
Service DT (degrees):	-90
[default value =]	0

CALCULATED LOADS & STIFFNESS

Bolt Thermal Load (lbs):	-594
Bolt Preload (lbs):	34770
Bolt Pressure Load (lbs):	812
Bolt Stiffness (lbs/in):	2.0E+06
Lid Stiffness (lbs/in):	2.2E+07

Angle wrt Vert. (Deg)	Impact Accel. (g)	<**** LOADS (lbs.) **** Impact Tension	Impact Shear	Bolt Tension Applied	Bolt Tension Net	<**** STRESSES (psi) **** Direct Tension	Direct Shear	Principal Sig-1	Principal Sig-2	Stress Intens.	Margin of Safety
0 End	15.80	6506	0	7317	34775	57469	0	0	57469	57469	0.48
5 (+)	14.69	8216	100	9028	34914	57700	166	0	57701	57701	0.47
10 (+)	13.57	7506	185	8318	34856	57604	305	-2	57606	57607	0.48
15.7 Corner	12.30	6650	261	7462	34786	57489	431	-3	57492	57495	0.48
20 (+)	12.99	6858	349	7670	34803	57517	576	-6	57522	57528	0.48
25 (+)	13.80	7025	457	7837	34817	57539	756	-10	57549	57559	0.48
30 (+)	14.61	7106	573	7918	34824	57550	947	-16	57566	57581	0.48
35 (+)	15.42	7093	693	7905	34823	57548	1146	-23	57571	57594	0.48
40 (+)	16.22	6980	818	7792	34813	57533	1352	-32	57565	57597	0.48
45 (+)	17.03	6764	944	7576	34796	57504	1561	-42	57546	57589	0.48
50 (+)	17.84	6440	1072	7252	34769	57460	1771	-55	57515	57569	0.48
55 (+)	18.65	6007	1198	6819	34734	57402	1980	-68	57470	57538	0.48
60 (+)	19.45	5463	1321	6275	34689	57328	2183	-83	57411	57494	0.48
65 (+)	20.26	4809	1440	5621	34636	57240	2380	-99	57339	57437	0.48
70 (+)	21.07	4047	1553	4859	34574	57137	2566	-115	57252	57367	0.48
75 (+)	21.88	3180	1657	3992	34503	57020	2739	-131	57151	57282	0.48
80 (+)	22.68	2212	1752	3024	34424	56889	2895	-147	57036	57183	0.49
85 (+)	23.49	1150	1835	1962	34337	56745	3033	-162	56907	57069	0.49
90 Side	24.30	0	1906	812	34243	56590	3149	-175	56765	56939	0.49

Minimum Margin of Safety: 0.47

2.7.2 Puncture

The puncture accident outlined in 10 CFR 71 Subpart F requires that the NAC-LWT cask suffer no loss of containment as a result of a 40-inch free fall onto an upright 6-inch diameter mild steel bar (puncture pin), which is supported on an unyielding surface. The impact orientation of the cask is required to be such that maximum damage is inflicted upon the cask.

Locations of cask impact with the puncture pin, which will cause maximum cask damage, are direct impact on the (1) cask side - midpoint, (2) center of the cask lid, (3) center of the cask bottom, and (4) cask port covers. Since an impact at any other location is less severe, the NAC-LWT cask is analyzed for the required puncture accident at these four locations.

2.7.2.1 Puncture – Cask Side Midpoint

2.7.2.1.1 Discussion

The NAC-LWT cask is analyzed for structural adequacy in accordance with the requirements of 10 CFR 71.73(c)(2), puncture (hypothetical accident condition). The cask is assumed to be in a horizontal position and dropped through a distance of 40 inches onto a 6-inch diameter, mild steel bar oriented vertically on an unyielding surface. The static structural evaluation of the cask is performed by classical analysis and the use of relations derived from destructive testing.

2.7.2.1.2 Analysis Description

Figure 2.7.2-1 illustrates the local cask midpoint section that has been evaluated for this analysis. It is composed of the initial 1.12-inch design thickness, Type XM-19 stainless steel outer shell, a 5.75-inch thick chemical copper lead middle shell, and a 0.75-inch thick, Type XM-19, stainless steel inner shell. The final design outer shell thickness is 1.20 inches. The additional thickness will only serve to enhance the ability of the NAC-LWT cask to resist the puncture event at the cask side midpoint.

During impact, the puncture pin is considered to apply a force (due to its assumed 47,000 psi dynamic flow stress) of 1.329×10^6 lbs to the cask outer shell midpoint in the inward normal direction. The neutron shield tank is conservatively not considered.

2.7.2.1.3 Detailed Analysis

For an impact occurring on the cask side, the required local cask outer shell thickness (t_r) for puncture integrity is calculated according to the Nelms equation (Shappert) as:

$$t_r = \left[\frac{W}{S_u} \right]^{0.71} = 0.655 \text{ in}$$

where:

W = cask design weight = 52,000 lbs

S_u = cask outer shell ultimate tensile strength at 300°F

= 94,300 psi

From the free body diagram in the sketch that follows, it can be determined that:

$$\text{Deceleration} = \frac{\text{Applied Load}}{\text{Cask Design Weight}} = \frac{1.329 \times 10^6}{52{,}000} = 25.57 \text{ g}$$

letting $W_B = W_L$

W_B = (weight of bottom assembly and limiter) × 25.57 g

= 94,865 lbs

W_L = (weight of cask lid and upper limiter) × 25.57 g

= 94,865 lbs

P = distributed linear load (lb/in)

$$= \frac{(52{,}000)(25.57) - (2)(94{,}865)}{199.75}$$

= 5706.7 lb/in

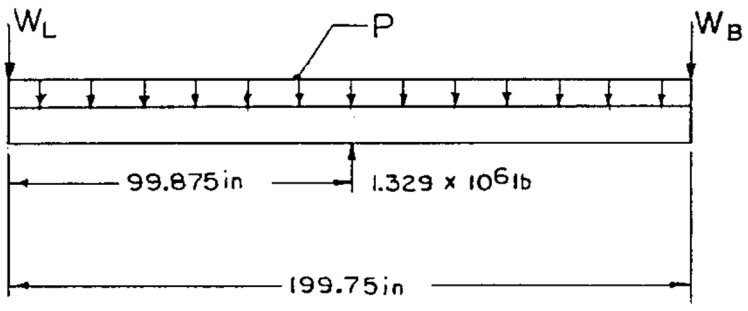

Cask Side Midpoint Puncture - Free Body Diagram

Then the maximum moment and shear are:

$$M_{max} = 99.875\ W_L + 0.50\ P\ (99.875)^2 = 3.80 \times 10^7\ \text{in-lb}$$

$$V_{max} = (1.329 \times 10^6)(0.50) = 6.645 \times 10^5\ \text{lb}$$

Since this loading is bounded by the 30-foot side drop loading (i.e., a cask deceleration force of 2.71×10^6 lbs, which produces $M_{max} = 6.36 \times 10^7$ in-lb and $V_{max} = 1.355 \times 10^6$ lbs; Section 2.7.1.2), the overall cask stresses are bounded by the 30-foot side drop, disregarding the local stresses in the area of the puncture pin. Since the outer shell thickness is 1.12 inches, the margin of safety, based on thickness, is +0.71.

2.7.2.1.4 Conclusion

For the pin puncture event at the cask midpoint, local deformation may occur in the region of the impact; however, the cask is demonstrated to have sufficient thickness to resist puncture. Therefore, the NAC-LWT cask satisfies the requirements of 10 CFR 71 for consideration of puncture at the cask midpoint.

2.7.2.2 Puncture – Center of Cask Closure Lid

2.7.2.2.1 Discussion

The NAC-LWT cask closure lid is analyzed for structural adequacy in accordance with the requirements of 10 CFR 71.73(c)(2), puncture (hypothetical accident condition). The cask is assumed to be inverted, with the lid downward, when dropped through a distance of 40 inches onto a 6-inch diameter, mild steel bar oriented vertically on an unyielding surface. The structural evaluation of the cask lid is performed by classical elastic analysis and the use of relations derived from destructive testing.

2.7.2.2.2 Analysis Description

The cask lid geometry is shown in Figure 2.7.2-2. It is fabricated of Type 304 stainless steel. The temperature-dependent material properties presented in Section 2.3 are used in this analysis.

During the impact, the puncture pin is considered to apply a pressure of 47,000 psi (assumed dynamic flow stress of mild steel) on the cask lid at the centerline of the exterior surface in the inward normal direction. The presence of an impact limiter is conservatively ignored.

The cask lid is vertically restrained at its mating surface with the cask body, which is located 8 inches below the top of the lid. For this analysis, the rotational restraint provided by the lid bolts is conservatively ignored.

2.7.2.2.3 Detailed Analysis

For the loading and displacement boundary conditions previously described, the bending behavior of the cask lid can be assessed by applying formulas from Case 2 (Roark, page 216) for a simply supported circular plate, concentrically loaded with a uniform load (q) over radius (r). The maximum radial and tangential stresses at the center of the plate are:

$$S_r = S_t = \frac{3qr^2}{2mt^2}\left[m + (m+1)\log\left(\frac{a}{r}\right) - (m-1)\frac{r^2}{4a^2}\right]$$

$$= 13{,}953 \text{ psi}$$

where:

r = 3 inches

a = 6.6875 inches

ν = Poisson's Ratio = 0.275

m = 1/ν = 3.636

q = 47,000 psi

t = 8.0 inches

then

$$M.S. = \frac{1.12}{0.844} - 1 = \underline{+0.327}$$

where:

S_y = 22,500 psi at 300°F

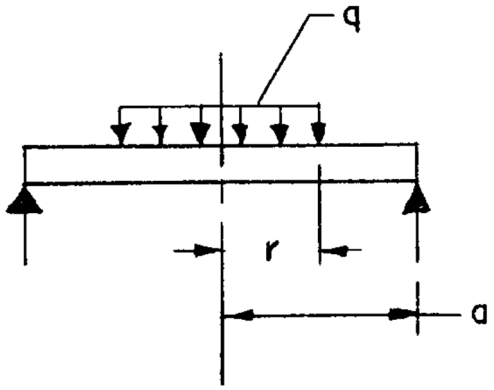

Lid Plate Loading Diagram

Neglecting all end restraint (from the bolts), the slope θ at the edge is:

$$\theta = \frac{3qr^2a\,(m-1)}{Emt^3}$$

$$= 0.00045 \text{ radians } (0.0258°)$$

where:

$E = 27 \times 10^6$ psi

The distance from the assumed support to the outer seal is 1.4 inches. The maximum vertical displacement (D) at the outer seal is assessed from the slope (θ) and the closure lid geometry.

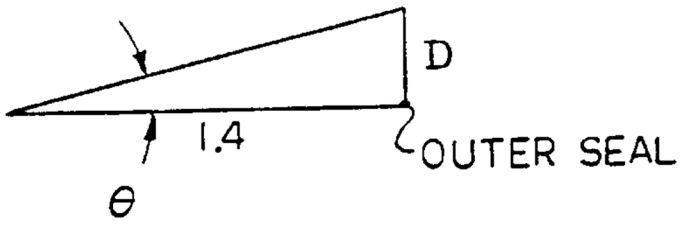

Displacement Geometry

$D = 1.4 \tan \theta = 0.0006$ in

Since this value represents a negligible loss of seal pressure (five times less than machine tolerance), the seals are unaffected by the puncture impact at the lid centerline.

It is obvious by inspection that the puncture pin does not penetrate the cask lid. The puncture pin load applied to the cask is:

$F_{pp} = \pi r^2 S_{DFS}$

$= 1.329 \times 10^6$ lbs

where:

r = 3.0 inches (pin radius)

S_{DFS} = 47,000 psi (assumed dynamic flow stress)

Then for static equilibrium, the cask deceleration force is a maximum of 1.329×10^6 lbs. Since this loading is bounded by the 30-foot top end drop loading (a cask deceleration force of 3.12×10^6 lbs; Section 2.7.1.1), the cask stresses are bounded by the 30-foot top end drop stress calculations.

2.7.2.2.4 Conclusion

For a pin puncture impact on the cask closure lid, local deformation may occur in the region of the impact. However, using conservative loading and displacement boundary conditions, it is determined that (1) the minimum margin of safety is +0.61, (2) containment is maintained by the seals, (3) the cask lid puncture resistance exceeds puncture requirements, and (4) overall cask stresses are enveloped by the 30-foot top end drop analysis. Therefore, the NAC-LWT cask satisfies the requirements of 10 CFR 71 for consideration of puncture on the cask closure lid.

2.7.2.3 Puncture – Center of Cask Bottom

2.7.2.3.1 Discussion

The NAC-LWT cask bottom is analyzed for structural adequacy in accordance with the requirements of 10 CFR 71.73(c)(2), puncture (hypothetical accident condition). The cask is assumed to be vertical and upright when dropped through a distance of 40 inches onto a 6-inch diameter, mild steel bar oriented vertically on an unyielding surface. The structural evaluation of the cask bottom is performed by classical elastic analysis and the use of relations derived from destructive testing.

2.7.2.3.2 Analysis Description

The cask bottom geometry shown in Figure 2.7.2-3 depicts a 10.50-inch thick cylindrical composite of chemical copper lead and Type 304 stainless steel. The temperature-dependent material properties in Section 2.3 are used in this analysis.

During the impact, the puncture pin is considered to apply a pressure of 47,000 psi (assumed dynamic flow stress of mild steel) on the cask bottom exterior surface in the inward normal direction. The presence of an impact limiter is conservatively ignored.

Vertical and rotational restraint is provided at the 21.00-inch diameter for the composite section by the stainless steel ring with an inside diameter of 21.00 inches and an outside diameter of 28.62 inches.

2.7.2.3.3 Detailed Analysis

For the loading and displacement boundary conditions described, the bending behavior of the bottom 3.50-inch thick plate can be assessed by applying formulas from Case 7 (Roark, page 218) for a fixed edge circular plate, with a concentric uniform load (q) over a circular area of radius (r). Conservatively neglecting the strength of the lead backing, the maximum radial, tangential, and shear stresses at the fixed edge of the bottom 3.50-inch thick plate are:

$$S_r = \frac{3qr^2}{2t^2}\left[1 - \frac{r^2}{2a^2}\right] = 49{,}682 \text{ psi (extreme fiber bending)}$$

$$S_t = \frac{S_r}{m} = 13{,}664 \text{ psi}$$

$$S_s = \frac{qr^2}{2at} = 5{,}755 \text{ psi}$$

where:

q= 47,000 psi (assumed dynamic flow stress of puncture pin)

t= 3.50 inches

r= 3 inches

a= 10.50 inches radius

m = 1/ν = 1/Poisson's ratio = 3.636

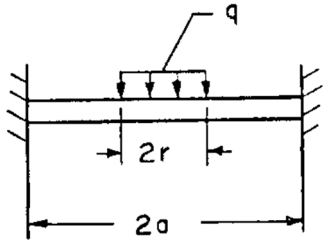

Bottom Plate Loading Diagram

Since the maximum temperature of the cask bottom is less than 300°F for the 130°F ambient temperature hot case (Section 3.4.2), the minimum ultimate strength (S_u) and design stress intensity (S_m) are 66,000 and 20,000 psi, respectively. For accident conditions, the section stress intensity resulting from $P_m + P_b$ stresses must not exceed 66,000 psi (lesser value of 3.6 S_m or S_u); the section stress intensity resulting from P_m stress must not exceed 46,200 psi (lesser value

of 2.4 S_m or 0.7 S_u). Averaging the radial bending stress, the fixed edge cross-section primary bending stress is:

$$S'_r = \frac{S_r}{2} = 24{,}841 \text{ psi}$$

Conservatively, the maximum shear stress is:

$$S_{smax} = \left[\frac{(S'_r + S_t)^2}{2} + S_s^2\right]^{0.5} = 27{,}815 \text{ psi}$$

Then the maximum stress intensity and margin of safety associated with $P_m + P_b$ stresses are:

S.I. = $2S_{smax}$ = 55,630 psi

$$M.S. = \frac{S_u}{S.I.} - 1 = +0.186$$

Clearly, the addition of S_s and S_t for the P_m stress intensity is less critical than the above stress combination.

The required local bottom plate thickness (t_r) for puncture integrity is calculated according to Shappert as:

$$t_r = \left[\frac{W}{S_u}\right]^{0.71} = 0.844 \text{ in}$$

where:

W = cask design weight = 52,000 lbs

S_u = 66,000 psi (bottom plate ultimate tensile strength at 300°F)

$$M.S. = \frac{1.12}{0.844} - 1 = \underline{+0.327}$$

The puncture pin load applied to the cask is:

$$F_{pp} = \pi r^2 S_{DFS}$$
$$= 1.329 \times 10^6 \text{ lbs}$$

where:

r = 3.0 inches (pin radius)

S_{DFS} = 47,000 psi (assumed dynamic flow stress)

Then for static equilibrium, the cask deceleration force is a maximum of 1.329 x 10^6 lbs. Since this loading is bounded by the 30-foot bottom end drop loading (i.e., a cask deceleration force of 3.12 × 10^6 lbs; Section 2.7.1.1), the cask stresses are bounded by the 30-foot bottom end drop stress calculations.

2.7.2.3.4 Conclusion

For a pin puncture impact on the cask bottom, local deformation may occur in the region of the impact. However, using conservative loading, it is determined that (1) the minimum margin of safety is +0.186, (2) the bottom plate puncture resistance exceeds puncture requirements, and (3) overall cask stresses are enveloped by the 30-foot bottom end drop analysis. Therefore, the NAC-LWT cask satisfies the requirements of 10 CFR 71 for consideration of puncture on the cask bottom.

2.7.2.4 Puncture – Port Cover

The port cover of the NAC-LWT cask is analyzed for structural adequacy in accordance with the requirements of 10 CFR 71.73(c)(3), puncture (hypothetical accident condition). The cask is assumed to be in a horizontal position and dropped through a distance of 40 inches onto a 6-inch diameter, mild steel bar oriented vertically on an unyielding surface. The structural evaluation of the port cover is performed by classical elastic analysis methods.

2.7.2.4.1 Analysis Description

The port cover geometry shown in Figure 2.7.2-4 is typical for the two port cover locations on the cask. Each cover centerline is located 11 inches axially below the top of the cask. In this region, the cask body is a Type 304 stainless steel ring in excess of 6 inches thick. The port cover material is SA-705, Grade 630, precipitation-hardened stainless steel. The temperature-dependent material properties presented in Section 2.3 are used in this analysis.

During the impact, the puncture pin is considered to apply a pressure of 47,000 psi (assumed dynamic flow stress of mild steel) on the port cover and the surrounding exterior surface of the cask in the inward normal direction. The existence of the top impact limiter is conservatively ignored.

The port cover rotation at its mating surface with the cask body is restrained by the bolted flange configuration of the cover. The port cover is also restrained from rotation in its flange region due to the puncture pin pressure acting on its exterior surface.

2.7.2.4.2 Detailed Analysis

Local Impact Region – Port Cover

For the loading and displacement boundary conditions described, the bending behavior of the port cover is assessed by applying formulas from Case 6 (Roark, page 217) for a uniformly loaded circular plate with fixed edges. The maximum radial stresses and the inward deflection of the port cover are, respectively:

$$S_r = \frac{3qa^2}{4t^2} = 74,569 \text{ psi}$$

$$y = \frac{3qa^4(1 - \nu^2)}{16Et^3} = 0.0013 \text{ in}$$

where:

q = 47,000 psi

a = 1.469 inches

t = 1.01 inches

E = 27.6 x 10^6 psi (at 200°F)

ν = Poisson's ratio = 0.287

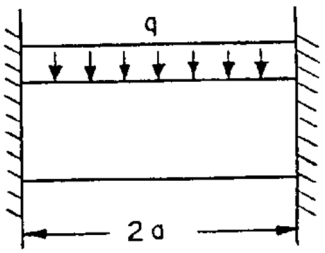

Port Cover Plate Loading Diagram

Since the maximum port cover temperature is less than 300°F for the 130°F ambient temperature hot case (Section 3.4.2), the yield strength of the port cover (conservatively based on 300°F) is 93,100 psi. Therefore, the minimum margin of safety is +0.25. Since the clearance between the port cover and the valve exceeds 0.0013 inch, the port cover does not contact the valve during impact.

Local Impact Region – Upper Ring

Locally, the potential puncture pin force due to its dynamic flow stress is:

$$F_{pp} = (3)^2 \pi(47{,}000) = 1.329 \times 10^6 \text{ lbs}$$

This force acting on the 7-inch thick stainless steel cask body produces a maximum shear stress:

$$S_s = F_{pp} / [6\pi(7)] = 10{,}071 \text{ psi.}$$

On the annular ring surrounding the port cover (i.e., from 4.53-inch to 6.00-inch diameter), the bearing stress on the cask is:

$$S_{br} = F_{pp} / \pi [(6.00)^2 - (4.53)^2] = 109{,}317 \text{ psi.}$$

If deformation of the cask and/or pin permits the pin to impact the top of the port cover, the bearing area increases to:

$$A_b = 0.25\pi [(6.00)^2 - (4.53)^2 + (4.50)^2 - (2.875)^2] - 0.75\pi (.45)^2$$

$$= 21.09 \text{ in}^2$$

Then, the bearing stress is:

$$S_{br} = F_{pp} / A_b = 63{,}016 \text{ psi}$$

The stress at the cask seal area is less because the load (F_{pp}) distributes over a larger area. The allowable dynamic yield bearing stress of Type 304 stainless steel is 65,130 psi, i.e., 1.67 (MIL-HDBK-5A) x 39,000 psi dynamic yield strength. The allowable dynamic ultimate bearing stress of Type 304 stainless steel is 132,000 psi, i.e., 2.0 (MIL-HDBK-5A) x 66,000 psi ultimate tensile strength. Thus, the minimum yield margin of safety is +0.03 and the ultimate margin of safety is +1.09 for the bearing stress state at the cask and port cover mating surface.

Cask Body Stresses

The NAC-LWT cask is analyzed for structural adequacy during a puncture pin impact on a port cover. The cask is assumed to be in a horizontal position and dropped through a distance of 40 inches, impacting the pin on a port cover, which is located near the upper end of the cask. The static structural evaluation of the cask is performed by classical elastic analysis methods. During an impact, the puncture pin is considered to apply a total force of 1.329×10^6 lbs (Figure 2.7.2-5) to the cask at the port cover in the inward normal direction assuming a pin dynamic flow stress of 47,000 psi. Vertical restraint is provided by the bottom impact limiter and the puncture pin located 11 inches from the top of the cask.

stress of 47,000 psi. Vertical restraint is provided by the bottom impact limiter and the puncture pin located 11 inches from the top of the cask.

For the loading and displacement boundary conditions described, the free body diagram (Figure 2.7.2-5) is evaluated. For static equilibrium, the cask deceleration force (F_g) and reaction (R_r) are determined by solving the following simultaneous equations:

$$1.329 \times 10^6 - F_g + R_r = 0$$

$$F_g (89.15) - 182.75 R_r = 0$$

then

$$F_g = 2.595 \times 10^6 \text{ lbs, and}$$

$$R_r = 1.266 \times 10^6 \text{ lbs}$$

Since this loading is bounded by the 30-foot side drop loading (a cask deceleration force of 3.12×10^6 lbs; Section 2.7.1.2), the cask stresses for the puncture pin impact are bounded by the 30-foot side drop accident.

2.7.2.4.3 Alternate Port Cover – Puncture

Analyses presented evaluate the consequences of the puncture event on the port cover, attachment bolts stresses and the inertial load acting on the port cover to reduce the compressive load on the primary O-ring. Also, a bounding analysis evaluating the effect of thermal expansion on the port cover bolt stress and compressive load on the primary O-ring due to extreme temperatures acting on the cask is presented in the section titled "Alternate Port Cover Differential Thermal Expansion."

The alternate port cover design is shown in Figure 2.6.10.3. The alternate port cover design includes the primary O-ring between the inner face of the port cover barrel and the sealing surface located in the cask top forging. The secondary (test) O-ring is located in a groove on the barrel of the port cover body. Both O-rings are manufactured from Viton®. The alternate port cover body is fabricated from Type 630, 17-4 PH precipitation-hardened stainless steel. The alternate port cover bolts are SA-193 GR B6 (Type 410 stainless steel) socket-head cap screws.

The analysis presented in the section titled "Local Impact Region – Port Cover" evaluates the load created by a mild steel pin impinging directly on a portion of the port cover. While the analysis is conservative, it does demonstrate the adequacy of the alternate port cover; it does not represent how the cask is expected to be configured at the time of the puncture event. A more representative analysis includes the cask impact limiters, which would be installed at the time of the puncture event.

The puncture accident is the third in the succession of hypothetical accidents that the cask must sustain. The impact limiters remain attached subsequent to the 30-foot free drop, as shown in Section 2.6.7.4. It is concluded in Section 2.7.1.6 that the hypothetical crush accident does not apply to the NAC-LWT cask. Therefore, the impact limiters will be attached to the cask prior to the cask dropping onto the mild steel pin. Both port covers are located near the top of the cask, underneath the impact limiter. When the top impact limiter strikes the mild steel pin, it will support the top end of the cask, while the bottom of the cask continues to translate then begin to rotate about the mild steel pin as a pivot point, until the bottom impact limiter contacts the unyielding surface. The bottom impact limiter will then absorb the cask's remaining kinetic energy. There is a load on the top of the cask that is assumed to be equivalent to the cask's weight. Furthermore, it is assumed to act directly on the alternate port cover, when in actuality, it will load the impact limiter immediately above the alternate port cover. The impact limiter will act to spread the load of the pin on the cask, reducing the actual load on the alternate port cover.

The bearing load (S_b) on the alternate port cover seal surface is:

$$S_b = W_c/A_s = 18{,}500 \text{ psi}$$

where:

W_c = Design basis weight of the loaded NAC-LWT cask = 52,000 lbs

A_s = Total concentric ring bearing area at inner face of port cover = 2.81 in^2

Inner ring: $A_i = \pi/4((D_{outer})^2 - (D_{inner})^2)$

$= \pi/4((2.065 \text{ in})^2 - (1.63 \text{ in})^2) = 1.26 \text{ in}^2$

Outer ring: $A_o = \pi/4((D_{outer})^2 - (D_{inner})^2)$

$= \pi/4((2.77)^2 - (2.387 \text{ in})^2) = 1.55 \text{ in}^2$

$A_s = 2.81 \text{ in}^2$

The maximum port cover temperature is less than 300ºF for the 130ºF ambient temperature hot case, shown in Section 3.4.2; the yield strength of Type 304 stainless steel, the material of the top forging, is 22,500 psi at 300ºF. The port covers are installed in the upper forging. Under these conditions, the minimum margin of safety is +0.17. Therefore, the load on the bearing surface is within the elastic range. The bolt preload will maintain the necessary load on the Viton® O-ring, thereby maintaining the containment seal.

It is also postulated that when the package is in a horizontal orientation and the port cover is oriented toward the impact surface, a g-load is applied to the port cover that would reduce the load on the inner end O-ring during deceleration from a 30-ft free drop. To evaluate this

condition, a three-dimensional finite element model of the port cover is used. The resulting load on the bolts is then calculated, including bolt preload, and the resulting sealing force evaluated.

Two loading cases are evaluated. One load case includes the bolt preload force, normal pressure, and the 60 g inertia load with the material temperatures assumed to be 250ºF. The second load case evaluates the bolt preload and the accident pressure with the materials at 845°F. This second load case postulates the cask post-fire accident conditions containing a design basis fuel assembly with 100% of the fuel rods ruptured, as described in Section 3.5.4. The maximum cavity pressure acts on the inner face of the port cover to reduce the compressive load on the O-ring.

The results are summarized as:

Load Case	Preload + Normal Pressure + 60 g	Preload + Accident Pressure
Evaluation Temperature (ºF)	250	845
Calculated Seal Force (lbs)	808	676
Percent O-ring compression (20-30% compression to maintain seal)	25.2[1]	25.2[1]
Bolt Tensile Force (lbs)	1794	1541
Bolt Stress (based on Tensile Stress Area) (psi)	28,931	24,850
Bolt Margin of Safety	1.72	1.66

[1] Maximum compression possible due to metal-to-metal contact with O-ring fully compressed in O-ring groove.

This table presents a summary of the port cover bolt stresses resulting from the cask operating in two environmental extremes. In the extreme cold case, the "preload + normal pressure + 60 g inertial" bolt stress was added to the thermal stress as a worst case condition. In the fire case, only the containment pressure load is assumed to act on the port cover and load the bolts.

Alternate Port Cover Differential Thermal Expansion

The alternate port cover primary containment sealing surfaces are located at the inner end of the port cover, where it interfaces with the top forging of the cask. The coefficients of thermal expansion of Type 304 stainless steel and Type 630, 17-4 PH precipitation hardened stainless steel are sufficiently different to warrant examination of the consequences of extreme temperature differences on the compressive load on the primary O-ring and on the port cover bolt stresses. The port cover bolt material SA193 B6 has a coefficient of thermal expansion that

is essentially equal to that of Type 304 stainless steel. Also, for the purposes of the analyses presented, the cask is assumed to be loaded at 70°F.

Extreme Cold

The coefficient of thermal expansion for the Type 304 stainless steel top forging is greater than that of the 17-4 PH precipitation hardened stainless steel port cover. When the cask temperature is reduced to -40°F, after loading at a 70°F ambient temperature, the cask top forging will contract at a greater rate than does the port cover. Since the top forging contracts more than the port cover, the compressive load between the port cover and the top forging will increase. However, since the top forging and port cover bolts contract more than the port cover, the port cover will be pushing against the port cover bolts, increasing the bolt tensile stress. Figure 2.7.2-6 presents a sketch of the port cover dimensions used in this analysis. The change in length of the port cover is:

$$\Delta L_{pc} = \Delta T \, \alpha \, L = 110°F \text{ x } (5.88E\text{-}6 \text{ in/in-°F}) \text{ x } 2.62 \text{ inches} = 1.695E\text{-}3 \text{ inches}$$

where:

ΔT = the change in temperature from 70°F to –40°F,

α = the thermal expansion coefficient,

L = the length of the section.

The top forging decreases in length:

$$\Delta L_{cask} = 110 \times (8.13E\text{-}6 \text{ in/in-°F}) \text{ x } 2.62 = 2.343E\text{-}3 \text{ inches}$$

The change in length of the port cover bolt is then:

$$\Delta L = 2.343E\text{-}3 - 1.695E\text{-}3 = 6.48E\text{-}4 \text{ inches}$$

The uniform strain in the bolt shank is then:

$$e_b = \Delta L / L = 6.48E\text{-}4 \text{ inches}/1.19 \text{ inches} = 5.445E\text{-}4 \text{ in/in}$$

where:

L is the length of the shank of the bolt.

The resulting bolt tensile stress is:

$$\sigma = e_b \, E = 5.445E\text{-}4 \times 30.3E6 \text{ psi} = 16{,}500 \text{ psi}$$

where:

E = the bolt Modulus of Elasticity.

The increase in tensile stress, due to differential thermal expansion between the port cover and the bolt and top forging is presented in a summary table at the end of this section. A margin of safety of +0.87 is maintained for the port cover bolts.

Extreme Heat

When the cask is heated from the 70°F ambient temperature at cask loading, the top forging and the port cover bolts will expand more than the port cover, resulting in the primary O-ring having to seal a small gap between the inner end of the port cover and the top forging. The bounding condition for minimum surface contact is during the accident fire condition. Figure 3.5-13 shows the peak temperature of the port cover bolt threads is 807°F, which occurs at 30 minutes into the fire accident event. The corresponding temperature of the primary containment O-ring at 30 minutes is 472°F. The average temperature (807°F + 472°F) of 640°F is considered representative of the temperature change expected for the port cover.

$$\Delta L_{pc} = \Delta T\ \alpha\ L = 570°F \times (5.93E\text{-}6\ in/in\text{-}°F) \times 2.62\ inches = 8.9E\text{-}3\ inches$$

where ΔT is the change in temperature from 70°F to 640°F, α is the thermal expansion coefficient, and L is the length of the section. For the top forging, the change in length is:

$$\Delta L_{cask} = 570°F \times (9.56E\text{-}6\ in/in\text{-}°F) \times 2.62 = 1.43E\text{-}2\ inches$$

The gap resulting between the bottom of the port cover and the bottom of the port cover housing is then:

$$Gap = 1.43E\text{-}2 – 8.9E\text{-}3 = 5.40E\text{-}3\ inches.$$

The inner end of the port cover and the sealing surface in the top forging are not in contact during the maximum temperature condition reached in the fire accident. However, the O-ring, located in a groove at the inner end of the port cover fills the 0.0054-inch gap because the O-ring remains under compressive load. The seal groove has a nominal depth of 0.104 inches. The calculated gap between the metallic sealing surfaces during the fire transient is 0.0054 inch. The O-ring fills this gap and is compressed between the O-ring groove and the top forging. The total depth available for the O-ring to occupy is 0.104 + 0.0054 = 0.1094 inch. The O-ring nominal diameter is 0.139 inch. The percent O-ring compression that remains is:

$$\%\ Compression = [(0.139 – 0.1094)/\ 0.139] \times 100 = 21.3\%$$

Conservatively, thermal expansion of the O-ring during heating is ignored. According to the O-ring manufacturer's design data, O-ring compression between 20% and 30% is satisfactory to ensure that a seal is maintained. In addition, according to the O-ring manufacturers design data, the O-ring can withstand pressure in excess of 1,000 psi. The maximum hypothetical accident

pressure in the cask is calculated to be 168 psig. Therefore, the primary containment O-ring is adequate to retain the maximum hypothetical accident condition pressure.

The changes in port cover bolt stresses due to extreme changes in temperature are presented as follows.

Load Case	Extreme Cold	Fire Accident
Evaluation Temperature (ºF)	-40	847
Thermal Stress on Bolt (psi)	16,500	0
Bolt Stress (based on Tensile Stress Area) (psi)	45,431	5,855
Bolt Margin of Safety	0.87	10.3[1]

[1] Extrapolated bolt yield strength of 66.1 ksi at 845ºF.

2.7.2.4.4 Conclusion

For the pin puncture event, local deformation may occur in the region of impact. However, it is demonstrated by use of conservative loading that (1) a positive margin of safety for the alternate port cover for local stresses is provided; (2) containment is maintained by the O-rings; and (3) cask bending stresses are enveloped by the 30-foot side drop analysis. Therefore, the NAC-LWT cask satisfies the requirements of 10 CFR 71 for a puncture impact on the cask at the port cover location.

2.7.2.5 Puncture Accident – Shielding Consequences

In order to comply with 10 CFR 71, calculations were performed for the hypothetical accident described in Section 2.7. In this case, a puncture occurs, which causes a reduction in the cask shielding resulting from a total loss of the liquid neutron shield. The resulting dose rates do not exceed the limits of 49 CFR 173. Details of the shielding analysis are presented in Section 5.4.

2.7.2.6 Puncture – Conclusion

The analyses of Section 2.7.2 demonstrate the structural and shielding adequacy of the NAC-LWT cask for a puncture pin impact on the (1) cask side midpoint, (2) center of cask closure lid, (3) center of cask bottom, and (4) cask port cover. Therefore, the NAC-LWT cask satisfies the structural requirements of 10 CFR 71.73(c)(2) and the shielding requirements of 49 CFR 173 for the puncture event.

Figure 2.7.2-1 NAC-LWT Cask Midpoint Section

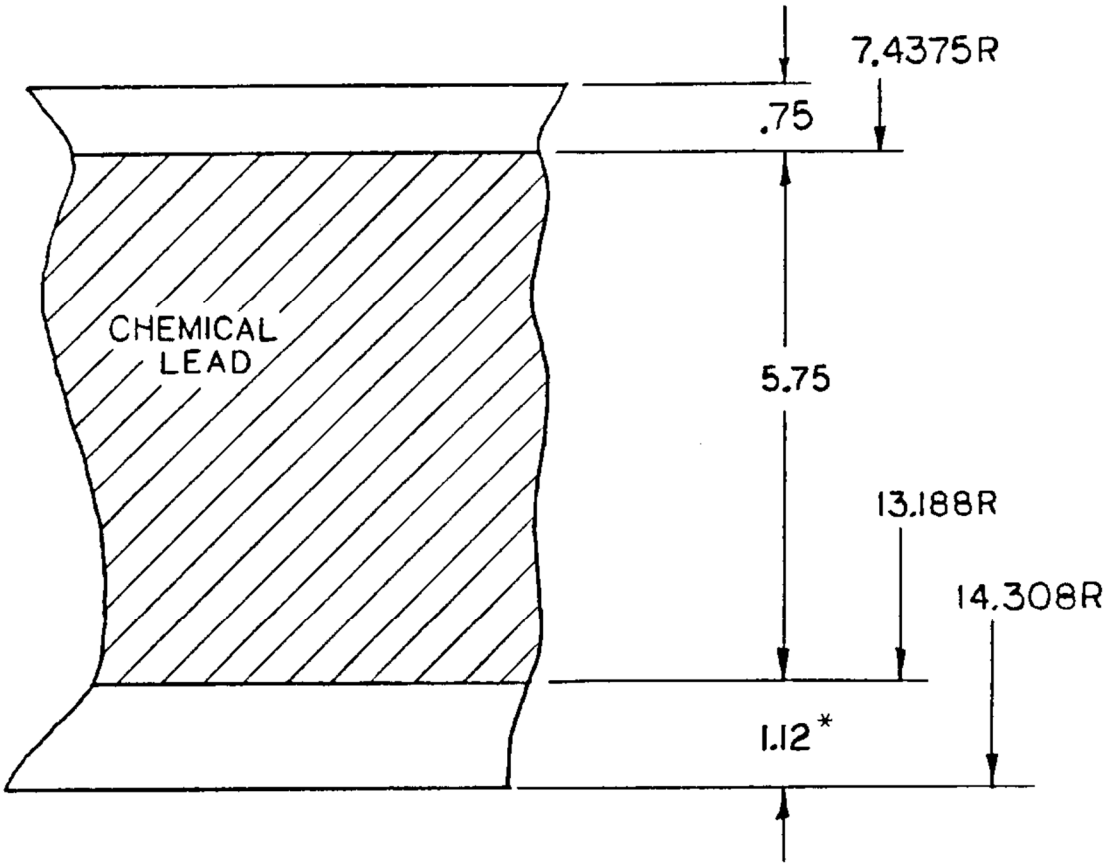

* The outer shell thickness conservatively used in the analysis was 1.12 inches. This yields conservative results since the actual outer shell thickness is 1.20 inches.

Figure 2.7.2-2 Cask Lid Configuration

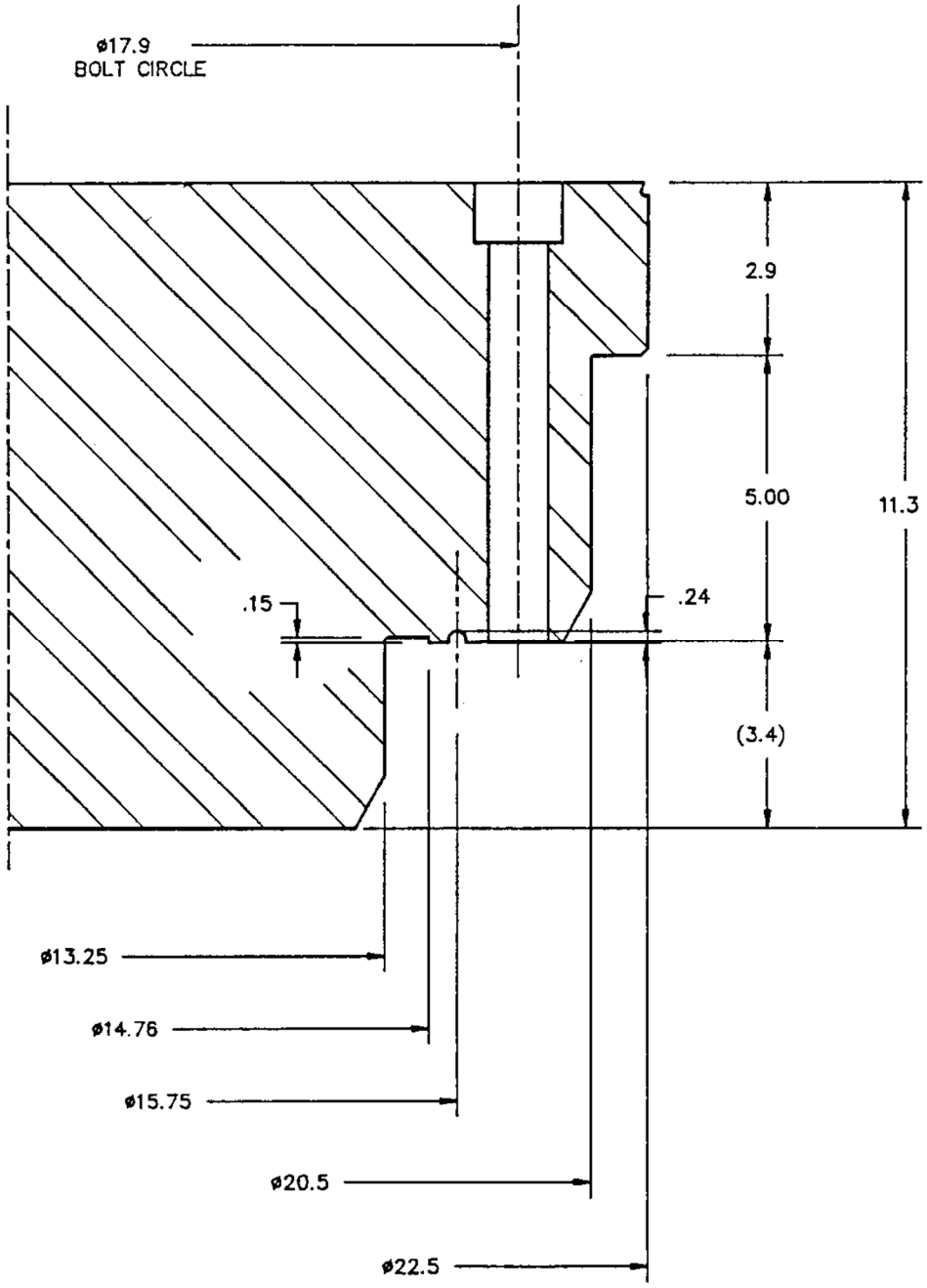

Figure 2.7.2-3 NAC-LWT Cask Bottom Design Configuration

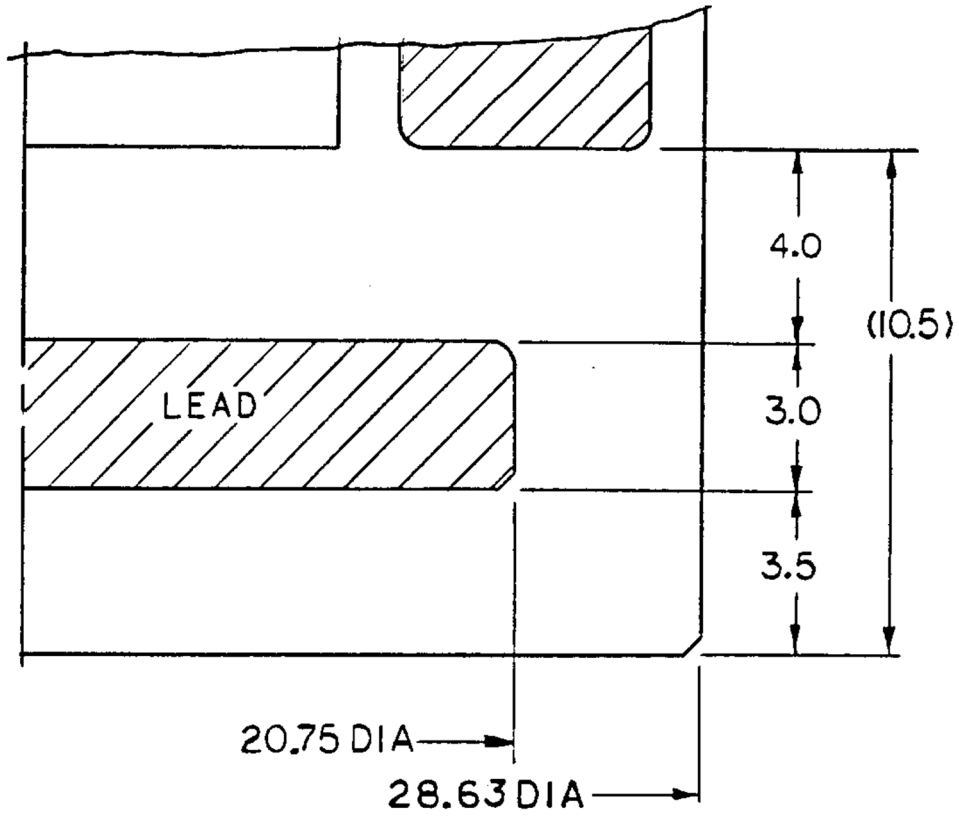

Figure 2.7.2-4 Port Cover Geometry

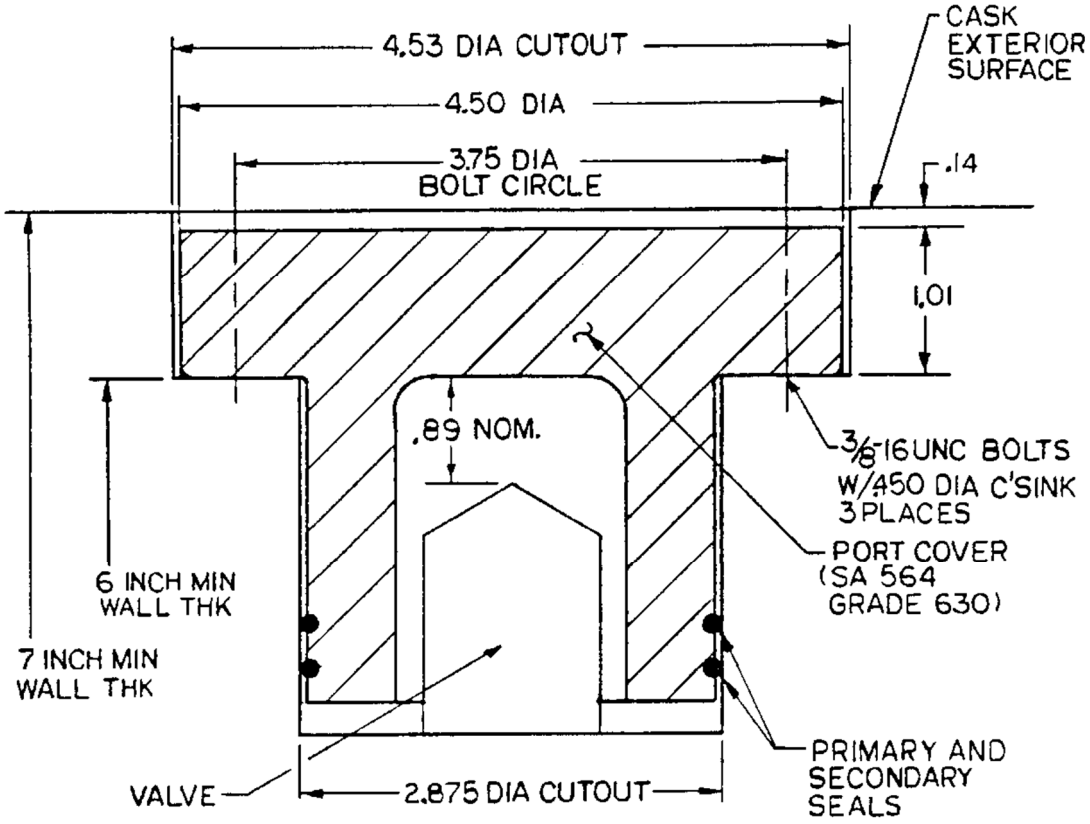

Figure 2.7.2-5 Puncture of Cask at Valve Cover Region

(Free Body Diagram)

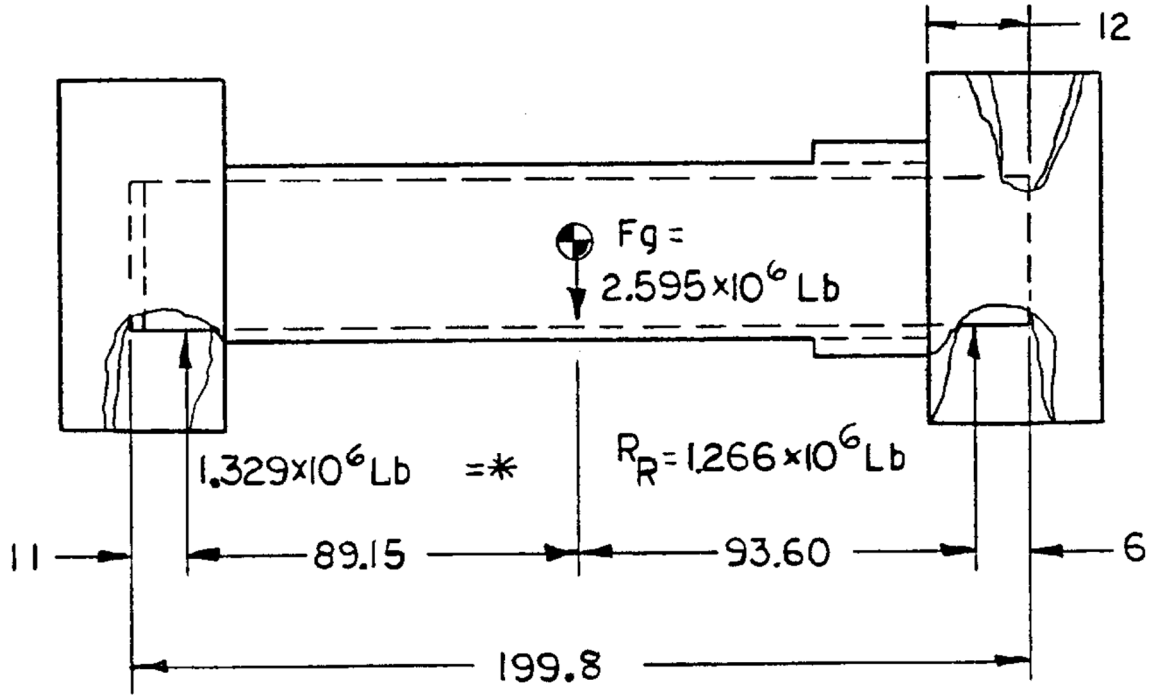

* Applied Puncture Pin Load

Figure 2.7.2-6 Alternate Port Cover Thermal Analysis Geometry

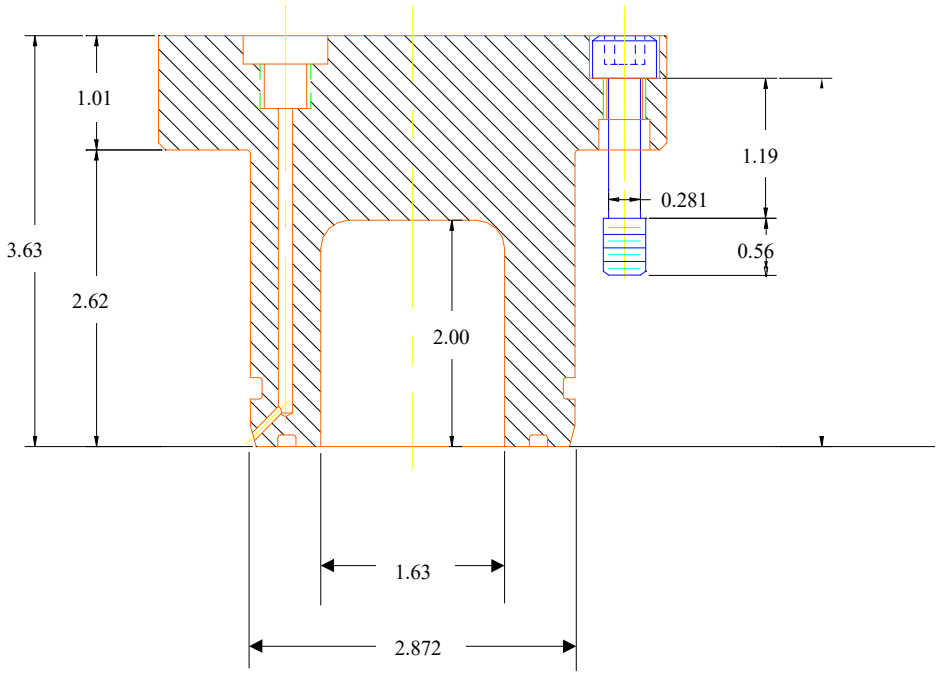

2.7.3 Fire

2.7.3.1 Discussion

The NAC-LWT is analyzed for structural adequacy in accordance with the requirements of 10 CFR 71.73 (c)(3) fire (hypothetical accident condition). The cask is assumed to be subjected to a surrounding environment of 1,475°F for a period of 30 minutes. The structural evaluation of the cask is performed using a linear elastic finite element model.

2.7.3.2 Thermal Stress Evaluation

Differential thermal expansion stresses and through-thickness thermal gradient stresses are induced in the NAC-LWT as a result of the thermal (fire) accident event. All of these thermal stresses are classified as secondary, displacement-limited stresses according to the ASME Code. Limits on secondary stresses do not apply for accident conditions (Table 2.1.2-1); the secondary stresses, in themselves, do not compromise the integrity of the cask. To satisfy the requirement regarding the extreme total stress intensity range as specified in Paragraph C.7 of Regulatory Guide 7.6 (as discussed in Section 2.1.3.3), a finite element analysis is performed to determine the maximum stresses associated with the thermal (fire) accident event.

The thermal analysis of the NAC-LWT for the fire accident event is performed using an ANSYS two-dimensional, axisymmetric finite element model described in Section 3.5. For the corresponding structural analyses, the elements are changed to be PLANE42, a two-dimensional structural element. The thermal stress model includes the lead, with the lead allowed to expand against the walls of the cavity that contains the lead. No gap is considered to exist between the lead and stainless steel walls. The elastic modulus is used for lead as this results in a pressure being applied to the inner and outer shell walls that is conservative. Displacement boundary conditions were added to prevent rigid body motion from occurring.

To ensure that the maximum thermal stress is calculated, the temperatures for each time step are employed to compute the corresponding stresses. A uniform temperature of 70°F is input as the initial stress free condition of the structural finite element model. Temperature dependent material properties allow the ANSYS model to use the correct properties for each nodal temperature. The temperature dependent material properties are obtained from the ASME Code, Section III, Division 1, Appendix I. Material properties from the ASME Code, Section III, Subsection NH (1995 Edition), Appendix I-14 are used for temperatures greater than 800°F. The material properties of XM-19 at elevated temperatures are not listed in Subsection NH. Since Type 304 and Type 316 stainless steel belong to the same austenitic stainless steel group as

XM-19 and exhibit the same mechanical behavior, the material properties of Type 304 and Type 316 stainless steel are used at elevated temperatures.

The maximum primary plus secondary nodal stress intensity, calculated for the containment vessel by the ANSYS model for all the time steps considered in the fire accident, is 165 ksi, which occurs at the outer shell surface near the bottom of the trunnion.

To conservatively evaluate the stress states, the maximum primary plus secondary (P+Q) stress intensity in the containment vessel (165 ksi) is used. It is demonstrated in other sections of the SAR that the maximum combined primary membrane plus primary bending stress intensities for all of the other normal conditions of transport and hypothetical accident conditions satisfy Regulatory Guide 7.6, i.e., they are less than 1.0 S_u. It is, therefore, conservative to assume that the maximum allowable value for the primary stresses, 1.0 S_u, actually develops within the NAC-LWT containment vessel.

The maximum S_u value for the containment vessel material is 100.0 ksi (type XM-19 stainless steel). Adding this value to the maximum P+Q stress intensity calculated for the thermal accident, the maximum total primary plus secondary stress intensity is 165 + 100 = 265 ksi. The maximum possible stress intensity range, S_n, is conservatively assumed to be twice this value, or S_n = (2) (265) = 530 ksi. The appropriate alternating stress intensity, S_{alt}, is one-half of this value, or S_{alt} = (0.5)(530) = 265 ksi. To account for the temperature effects, the variation in modulus of elasticity of the material is factored into the calculation of S_{alt} as:

$$S_{alt}(1250°F) = (E_{70}/E_{1250})(S_{alt})$$

$$= [28.3 \times 10^6/20.8 \times 10^6](265)$$

$$= 360.6 \text{ ksi}$$

At 1,250°F, Appendix T-1420 of the ASME Code, Section III, Subsection NH (1995 Edition with Addenda through 1997), limits the 10-cycles fatigue strain, ε_t, to 0.0316 inch/inch for 304 stainless steel and to 0.0266 inch/inch for Type 316 stainless steel. In accordance with Appendix I-14 of Subsection NH of the ASME Code, Section III (1995 Edition with Addenda through 1997), the modulus of elasticity for Type 304 and Type 316 stainless steel at 1,250°F is 20,800 ksi. Therefore, the adjusted ASME allowable alternating stress, S_{alt}, for austenitic stainless steel at 10 cycles at 1,250°F is limited to (0.0266)(20,800 ksi) or 553.3 ksi.

The margin of safety is:

$$MS = (553.3/360.6) - 1 = +0.53$$

Considering the conservative assumptions used in the evaluation, i.e., (1) use of the allowable primary stress rather than the actual value; (2) assuming fully reversing primary and secondary stress states to determine stress intensity ranges; and (3) assuming the worst case fire transient stresses, the actual margin of safety is considered to be significantly larger than +0.53. Thus, the requirements of Paragraph C.7 of Regulatory Guide 7.6 are satisfied.

2.7.3.3 Bolts – Closure Lid (Hypothetical Accident – Fire)

During the hypothetical fire accident, the NAC-LWT cask closure and lid bolts are conservatively predicted to experience a temperature of 642°F, which is the maximum average temperature of the lid bolts. To evaluate the bolt stress, a temperature of 750°F is conservatively used. Mating surfaces between the cask lid and cask body maintain contact since the coefficient of thermal expansion for the lid is larger than the coefficient of thermal expansion for the bolts. The cask closure lid and body (top forging) are forgings of SA-182, Type 304 stainless steel, whereas the lid bolts are SA-453, Grade 660 high alloy steel bolting material. Considering the temperature increase in the fire accident, the maximum thermal stress induced in a lid bolt resulting from the lid and bolt expansion is:

$$S_{th} = \Delta T[E_{\ell}\alpha_{\ell} - E_b\alpha_b]$$
$$= 14{,}500 \text{ psi}$$

where:

ΔT = 680°F, thermal differential (750°F - 70°F); the fire temperature less the ambient temperature when the bolts were torqued

$E_t = 24.4 \times 10^6$, lid modulus at 750°F

$\alpha_t = 9.76 \times 10^{-6}$, lid expansion coefficient at 750°F

$E_b = 23.8 \times 10^6$, bolt modulus at 750°F

$\alpha_b = 9.11 \times 10^{-6}$, bolt expansion coefficient at 750°F

Bolt preload is 57,497 psi (Section 2.1.3.2.2) and the pressure stress for a 168 psig internal pressure is:

$$S_p = 3.36 \times 1342 = 4{,}509 \text{ psi}$$

where:

3.36 is the ratio of the pressures, (168 psi/ 50 psi)

1,342 is the stress at 50 psi (Table 2.7.1-60)

The total bolt tension stress is the sum of preload stress, thermal stress and pressure stress:

$$S_t = S_i + S_{th} + S_p$$

$$= 76{,}506 \text{ psi}$$

Based upon a bolt yield stress, S_y = 80.1 ksi, extrapolated at 750°F, the margin of safety is:

MS = 80.1/76.5 – 1 = +0.05

Under hypothetical fire accident conditions, containment integrity is maintained as required by 10 CFR 71.73(c)(3).

2.7.3.4 Inner Shell Evaluation

During a hypothetical fire accident, assuming 100% fuel failure, the internal pressure of the cask is calculated to be 125.8 psia (Section 3.5.4). Conservatively, 168 psig is used in the inner shell stress calculation. Neglecting the strength of the lead liner and the outer shell, the load generated by the internal pressure, from Roark, 5th Edition Table 29, Case 1c, is:

$$S_r = \text{radial stress} = -168 \text{ psi}$$

$$S_a = \frac{P_f \times \pi \times \left(r_i - t_i\right)^2}{\pi \times \left(r_i^2 - \left(r_i - t_i\right)^2\right)} = 700 \text{ psi}$$

$$S_t = \frac{P_f \times 2 \times r_i}{2 \times t_i} = 1{,}647 \text{ psi}$$

where:

P_f=168 psig r_i=7.45 inches t_i=0.76 in

The resulting stress intensities are:

$$\left|S_a - S_t\right| = 947 \text{ psi} \qquad \left|S_t - S_r\right| = 1{,}815 \text{ psi} \qquad \left|S_r - S_a\right| = 868 \text{ psi}$$

The allowable primary membrane stress in the accident condition for XM-19 stainless steel at 500°F is the lesser of:

$2.4\ S_m = (2.4)(29.7) = 71.28$ ksi $\qquad 0.7S_u = (0.7)(89.1) = 62.37$ ksi

$$\text{Margin of Safety} = \frac{62{,}370}{1{,}815} - 1 = +\underline{\text{Large}}$$

The allowable primary membrane plus bending stress for XM-19 stainless steel at 500°F is the lesser of:

$3.6\ S_m = (3.6)(29.7) = 106.92$ ksi $\qquad S_u = 89.1$ ksi

$$\text{Margin of Safety} = \frac{89{,}100}{1{,}815} - 1 = +\underline{\text{Large}}$$

Therefore, the inner shell of the transport cask maintains its structural integrity under an internal pressure of 168 psig caused by a hypothetical fire accident with 100% fuel failure.

2.7.3.5 Conclusion

The NAC-LWT cask shells, bottom, and closure lid bolts are demonstrated to be structurally adequate, providing a minimum margin of safety of +0.05 against loss of containment. Therefore, the NAC-LWT cask satisfied the structural requirements of 10 CFR 71 for the fire accident event.

2.7.4 Immersion – Fissile Material

The criticality evaluation of the NAC-LWT cask presented in Chapter 6 considers the effect of water inleakage; therefore, the requirement of 10 CFR 71.73(c)(4) is satisfied.

2.7.5 Immersion-Irradiated Nuclear Fuel Packages

The NAC-LWT cask has been designed to withstand immersion in water at an external pressure of 2 MPa (290 psi) for at least one hour as prescribed in 10 CFR 71.61. This pressure corresponds to a depth of water of 200 meters. As demonstrated in this section, the containment seal remains intact, and the minimum margin of safety for the cask structure is + 20.7.

This evaluation bounds the 0.9 meter water immersion required for fissile material packages in accordance with 10 CFR 71.73 (c) (5) and the 15 meter water immersion required for all packages in accordance with 10 CFR 71.73 (c) (6).

2.7.5.1 Method of Analysis

Three types of loads are present on a submerged NAC-LWT cask: (1) thermal due to decay heat of contained fuel; (2) internal pressure due to decay heat of contained fuel; and (3) external pressure due to submersion in water. The maximum decay heat load for the contained fuel is 2.5 kW. The secondary (thermal) stresses are not considered in the accident condition primary stress analyses. Stresses in the cask due to the low internal pressure are very small and are conservatively neglected. Thus, the external pressure load on the cask is the only load considered in the primary stress analyses for this accident event.

Classical methods are used to calculate the stress intensities resulting from the external pressure. These stress intensities are evaluated with respect to the accident condition allowable stresses presented in Tables 2.1.2-1 and 2.1.2-2.

2.7.5.2 Closure Lid Stresses

The external pressure principal stresses at the center of the closure lid are calculated from Table X, Case 1 in Roark, 4th Edition, for a flat circular plate (13.4 inches OD) with the outer edge simply supported under loading of uniform pressure. The hydrostatic pressure, P_h, is 290 psi.

The weight of the water is calculated as:

$W = P_h(\pi/4)\ (13.4)^2 = 41{,}000$ lbs

The stress is calculated as:

$$S_r = S_t = \frac{3W}{8\pi m t^2}(3m+1) = 257 \text{ psi}$$

where:

$m = 1/\nu = 3.636$

$t = 7.9$ inches

$S_a = -290$ psi

The stress intensities are calculated as:

$| S_a - S_t | = 547$ psi

$| S_t - S_r | = 0$

$| S_r - S_a | = 547$ psi

Considering the accident condition containment structure allowable stresses for primary membrane and primary membrane plus primary bending, Table 2.1.2-1, the margin of safety for the lid primary membrane stress, subjected to the 200 meter immersion, is:

$$\text{Margin of Safety} = \frac{48{,}000}{547} = + \underline{\text{Large}}$$

Where the allowable primary membrane stress for 304 stainless steel at 200°F is the lesser of:

$2.4\ S_m = (2.4)\ (20.0) = 48.0$ ksi

or

$0.7\ S_u = (0.7)\ (71.0) = 49.7$ ksi

Allowable primary membrane plus bending stress for 304 stainless steel at 200°F is the lesser of:

$3.6\ S_m - (3.6)\ (20.0) = 72.0$ ksi

or

$S_u = 71.0$ ksi

thus

$$\text{Margin of Safety} = \frac{71{,}000}{547} = + \underline{\text{Large}}$$

2.7.5.3 Outer Bottom Head Forging Stresses

The principal stresses due to the external pressure at the inner diameter of the bottom forging are calculated from Table X, Case 6 on Roark, 4th Edition, for a flat circular plate with the outer edge fixed under a uniform pressure load. The diameter of the bottom forging is 20.75 inches.

$W = (P_h)\ (\pi/4)\ (20.75)^2 = 98{,}400$ lbs

$S_a = -290$ psi

$$S_t = \frac{3W}{4\pi mt^2} = 527 \text{ psi}$$

$$S_r = \frac{3W}{4mt^2} = 1{,}657 \text{ psi}$$

where:

m = 3.636

t = 3.5 inches

The stress intensities are calculated as:

$| S_a - S_t | = 818$ psi

$| S_t - S_r | = 1{,}130$ psi

$| S_r - S_a | = 1{,}948$ psi

The margin of safety for the outer bottom head forging based on the accident condition allowable stress for primary membrane, Table 2.1.2-2 is:

$$\text{Margin of Safety} = \frac{48{,}000}{1{,}948} = + \underline{\text{Large}}$$

The margin of safety for the primary membrane plus bending stress, using the allowable values from Table 2.3.1-1, is:

$$\text{Margin of Safety} = \frac{71{,}000}{1{,}948} - 1 = + \underline{\text{Large}}$$

2.7.5.4 Cask Cylindrical Shell Stresses

The stresses generated in the shells of the cask in the 200 meter water immersion (290 psi) are evaluated using the formula for elastic stability from Table 35, Case 20 in Roark, 5th Edition.

The relevant dimensions, material properties, and the design basis of the cask are:

$t_i = 0.76$ in (inner shell thickness)

$t_l = 5.73$ inches (lead shell thickness)

$t_o = 1.2$ inches (outer shell thickness)

$r_i = 7.45$ inches (inner shell, outer radius)

$r_o = 14.38$ inches (outer shell, outer radius)

L = 160.3 inches (unsupported length of the inner shell)

E = 27.6 x 10^6 psi (modulus of elasticity for XM-19 at 200°F)

S_u = 99.5 ksi (ultimate stress at 200°F)

S_m = 33.2 ksi (allowable stress at 200°F)

P_h = - 290 psi (hydrostatic pressure under 200 meter of water)

Neglecting the strength of the lead and the outer shell in resisting the load generated by the external pressure, the stresses in the inner shell are:

S_r = radial stress = - 290 psi

S_a = axial stress = $\frac{P_h \cdot \pi \cdot r_o^2}{\pi \cdot [r_i^2 - (r_i - t_i)^2]}$ = - 5,580 psi

S_t = tangential stress = $\frac{P_h \cdot 2 \cdot r_i}{2 \cdot (t_i)}$ = - 2,843 psi

The stress intensities are:

$| S_a - S_t |$ = 2,737 psi

$| S_t - S_r |$ = 2,553 psi

$| S_r - S_a |$ = 5,290 psi

The allowable primary membrane stress for XM-19 stainless steel at 200°F is the lesser of:

2.4 S_m = (2.4)(33.2) = 79.7 ksi, or

0.7 S_u = (0.7) (99.5) = 69.7 ksi

Therefore, the margin of safety for primary membrane stress is:

Margin of safety = $\frac{69{,}700}{5{,}290}$ -1 = + Large

The allowable primary membrane plus bending stress for XM-19 stainless steel at 200°F is the lesser of:

3.6 S_m = (3.6)(33.2) = 119.5 ksi, or

S_u = 99.5 ksi

Therefore, the margin of safety for primary membrane plus bending stress is conservatively calculated as:

$$\text{Margin of Safety} = \frac{99{,}500}{5{,}290} - 1 = +\underline{\text{Large}}$$

Conservatively assuming that the outer shell in not functional and only the inner shell exists, the containment boundary is evaluated for buckling using the formula for elastic stability from Roark, 5th Edition, Table 35, Case 20:

$$\text{The ratio of: } \left(\frac{L}{r_i}\right)^2\left(\frac{r_i}{t_i}\right) = 4{,}538 > 300$$

Therefore, the critical pressure, q′, can be approximated by:

$$q' = \frac{0.92E}{\left(\frac{L}{r_i}\right)\left(\frac{r_i}{t_i}\right)^{2.5}} = 3{,}923 \text{ psi}$$

Using Roark's recommended design external pressure that is 80% of the theoretical critical pressure and a factor of safety of 1.34 for buckling:

$$q' = 0.8 \times \frac{3{,}923}{1.34} = 2{,}342 \text{ psi.}$$

The margin of safety is:

$$\text{Margin of Safety} = \frac{2{,}342}{290} - 1 = +\underline{\text{Large}}$$

2.7.5.5 Containment Seal Evaluation

Immersion of the NAC-LWT cask in 200 meters of water subjects the cask and closure system to an external pressure load of 290 psi. The external pressure produces additional compression force on the sealing surfaces of the cask.

Increasing the sealing surface compression load without increasing cask internal loads results in an increase in seal margins and does not challenge design conditions. Therefore, the containment seals are acceptable for cask immersion to 200 meters.

2.7.6 Damage Summary

The analysis results reported in Sections 2.7.1 through 2.7.5 are summarized in Table 2.7.6-1 through Table 2.7.6-3.

They indicate that the damage incurred by the NAC-LWT cask during the hypothetical accident is minimal and does not diminish its ability to maintain the containment boundary. The 30-foot fall or the 40-inch fall onto the pin may cause the failure of the neutron shield tank and resultant loss of the neutron shielding. However, the gamma shielding remains intact to provide the required shielding following the accident.

Also, in a 30-foot hypothetical drop accident, the impact limiters may crush to a maximum depth of 15.70 inches and the lead may slump to a maximum of 0.33 inch. These potential consequences have no adverse structural effects.

Based on the analyses of Section 2.7, the NAC-LWT cask fulfills the structural requirements of 10 CFR 71 and the shielding requirements of 49 CFR 173 for all of the hypothetical accident conditions.

Table 2.7.6-1 Summary of Maximum Calculated Stresses – 30-Foot Drop

30-Foot Drop	Conditions* 1 (130°F)	1 (-40°F)	2	3	4	5	Maximum Calculated Stress Type	Value (ksi)	Allowable Stress Type	Value (ksi)	Margin of Safety
Containment**		✓		✓	✓	✓	P_m	12.28	$0.7 S_u$	66.0	+4.37
(on end)	✓		✓	✓	✓	✓	$P_m + P_b$	14.10	$1.0 S_u$	94.3	+5.68
Noncontainment***		✓					P_m	10.93	$0.7 S_u$	46.2	+3.22
(on end)		✓					$P_m + P_b$	20.23	$1.0 S_u$	66.0	+2.26
Containment**	100°F		✓	✓	✓	✓	P_m	31.77	$0.7 S_u$	66.0	+1.08
(on side)	100°F		✓	✓	✓	✓	$P_m + P_b$	33.71	$1.0 S_u$	94.3	+1.80
Noncontainment***	100°F		✓	✓	✓	✓	P_m	65.19	$1.0 S_u$	66.0	+0.01
(on side)	100°F		✓	✓	✓	✓	$P_m + P_b$	68.23	$1.0 S_u$	94.3	+0.38
Containment**	✓		✓	✓	✓	✓	P_m	45.35	$0.7 S_u$	46.2	+0.02
(oblique)	✓		✓	✓	✓	✓	$P_m + P_b$	60.21	$1.0 S_u$	66.0	+0.10
Noncontainment***		✓		✓	✓	✓	P_m	44.20	$0.7 S_u$	66.0	+0.49
(oblique)		✓		✓	✓	✓	$P_m + P_b$	63.73	$1.0 S_u$	66.0	+0.04

* 1. Ambient Temperature
2. Insolance
3. Decay Heat
4. Internal Pressure
5. Weight of Contents

** The containment structure includes the lid, upper ring, inner shell, and bottom closure plate. See Figure 2.10.2-5 for component identification.

*** The noncontainment structure includes the outer shell and the cask bottom.

Table 2.7.6-2 Summary of Maximum Calculated Stresses – 40-Inch Free Drop

40-Inch Free Drop	Conditions*					Maximum Calculated Stress		Allowable Stress		Margin of Safety
	1		2	3	4	5	Type	Value (ksi)	Type	Value (ksi)	
	130°F	-40°F									
Containment** (on lid center)	✓		✓			✓	$P_m + P_b$	13.95	S_y	22.5	+0.61
		✓				✓					
Noncontainment*** (on mid-length)	✓		✓			✓	-	-	-	-	+0.71****
		✓				✓					
Noncontainment** (on bottom center)	✓		✓			✓	$P_m + P_b$	55.63	1.0 S_u	66.0	+0.19
		✓				✓					

* 1. Ambient Temperature
2. Insolance
3. Decay Heat
4. Internal Pressure
5. Weight of Contents

** The containment structure includes the lid, upper ring, inner shell, and bottom closure plate. See Figure 2.10.2-5 for component identification.

*** The noncontainment structure includes the outer shell and the cask bottom.

**** Result obtained from the displacement criteria, not from the stress criteria.

Table 2.7.6-3 Summary of Maximum Calculated Stresses – Fire

Fire	Conditions*					Maximum Calculated Stress		Allowable Stress		Margin of Safety
	1		2	3	4	5	Type	Value (ksi)	Type	Value (ksi)	
	130°F	-40°F									
Containment** (inner shell)				✓	✓	✓	$P_m + P_b + Q$	36.67	$2.4\ S_m$	70.1	+0.91
Noncontainment*** (outer shell)				✓	✓	✓	$P_m + P_b + Q$	38.51	$2.4\ S_m$	70.1	+0.82
Bottom				✓	✓	✓	$P_m + P_b + Q$	31.51	S_u	64.0	+1.03
Lid Bolts				✓	✓	✓	$P_m + Q$	53.25	S_y	70.0	+0.31

* 1. Ambient Temperature
2. Insolance
3. Decay Heat
4. Internal Pressure
5. Weight of Contents

** The containment structure includes the lid, upper ring, inner shell, and bottom closure plate. See Figure 2.10.2-5 for component identification.

*** The noncontainment structure includes the outer shell and the cask bottom.

2.7.7 Fuel Basket / Container Accident Analysis

2.7.7.1 Discussion

Aluminum and stainless steel fuel baskets support NAC-LWT cask contents and retain them in a subcritical and safe geometry. Various fuel basket designs are analyzed for accident condition loads: the PWR basket (Section 2.7.7.2); the BWR basket (Section 2.7.7.4); the metallic fuel basket (Section 2.7.7.5); the MTR basket (Section 2.7.7.6); the failed metallic fuel basket (Section 2.10.13); the TRIGA fuel basket (Section 2.7.7.9); the DIDO basket (Section 2.7.7.10); the GA IFM basket (Section 2.7.7.11); the TPBAR basket (Section 2.7.7.12) ; the NRU/NRX basket (Section 2.7.7.16), the HEUNL container (Section 2.7.7.17); the SLOWPOKE Fuel Core basket (Section 2.7.7.18); the SrF_2 baskets (Section 2.7.7.19); and the LANL MOX fuel transfer tubes (Section 2.7.7.20). Side and end impact orientations are the two limiting accident cases. In the side drop orientation, the basket is supported in bearing on the inner shell, and all structural loads are transmitted to the cask structure. Analysis shows that the structural load occurring during the end drop will not cause the basket assemblies or the analyzed spacers to buckle.

2.7.7.2 PWR Basket Construction

The PWR basket is cylindrical in shape, and constructed from 6061-T6 aluminum. A central hollow, square cavity supports the cask contents during transport. An aluminum spacer assembly is welded to the bottom of the PWR basket. It supports the fuel basket and contents longitudinally and limits their movement within the cask cavity. Additional spacers may be bolted to the cask lid as required by the length of the contents. A complete description of the basket and its construction is provided in Section 2.6.12. For the shipment of up to 25 individual PWR rods, a spacer canister will be utilized to position the PWR rods within the PWR or BWR basket. The PWR rods and canister are bounded by the PWR basket analyses of Section 2.7.7.3.

2.7.7.3 PWR Basket Analysis

The NAC-LWT cask maximum inner shell diameter is 13.405 inches at 70°F. The basket body outside diameter is 13.25 inches at 70°F. Except when the cask is empty, the cask cavity temperature is always higher than 70°F. The 6061-T6 aluminum alloy expands approximately 1.5 times more per degree Fahrenheit than does stainless steel. During the -40°F ambient, high heat load, normal transport condition, the average inner cavity wall temperature is 151°F. Accounting for the thermal response of the basket, the diameter of the basket body is 13.26 inches. The maximum as-designed gap between the basket and the cavity, when the basket is centered in the cavity, is 0.094 inch (both inner baskets are considered to be at 70°F). The basket is assumed to be in bearing contact with the inner shell during a side drop accident. All

loads from the contents are transmitted through the basket to the inner shell and the cask structure.

2.7.7.3.1 Bearing Stress Calculation – Side Drop

The bearing stress is calculated using Case 6 (Roark, page 320), which models the cylindrical basket in a circular groove. The maximum compressive stress is calculated using:

$$S_{c_{max}} = 0.798 \left[\frac{\frac{P(D_1 - D_2)}{D_1 D_2}}{\frac{1 - \nu_1^2}{E_1} + \frac{1 - \nu_2^2}{E_2}} \right]^{0.5}$$

$$= 2242 \text{ psi}$$

where the material properties at 250°F are:

Stainless Steel

D_1 = 13.405

E_1 = 27.3 x 10^6 psi

ν_1 = 0.275

Aluminum (6061-T6)

D_2 = 13.25 inches

E_2 = 9.4 × 10^6 psi

ν_2 = 0.334

contents + basket weight = 4,000 lbs

P_{lg} = 4,000 lb/178 in = 22.5 lb/in

$P_{49.7g}$ = (22.5 lb/in)(49.7 g) = 1,118 lbs/in

The side drop g load, 49.7 g, is determined in Section 2.6.7.4.

The allowable bearing stress is the lesser value of the yield strength of aluminum or of stainless steel, which is 23,800 psi; the yield strength (S_y) of Type 304 stainless steel at 250°F. The margin of safety is calculated as:

$$M.S. = \frac{S_y}{S_{c_{max}}} - 1 = \underline{+Large}$$

2.7.7.3.2 Compressive Buckling Stress Calculations – End Drop

The PWR basket and inner cavity length are designed to ensure that there is very limited movement of the basket and contents relative to the cask during transport. Spacers are attached to the cask lid or placed at the bottom of the basket prior to fuel loading, if the contents do not fill the cavity. However, adequate clearance is maintained so that differential thermal expansion does not produce longitudinal loads on the basket body. The basket must be able to support itself during an end drop accident. To determine if the basket is self-supporting, it is treated like a column, acted upon by its own weight. The basket weighs 840 lbs. During the end drop accident, the basket weight is decelerated at 58.2 g (Table 2.6.7-34), for a total compressive force, P_c = 48,890 lbs. The compressive force acts over the 59.2-square inch basket body cross section. The compressive stress (S_c) acting on the basket is 826 psi (48,890 lb/59.2 in^2), which is negligible. An Euler column analysis is used to determine the critical buckling load of the basket. Assuming that the impacting end is fixed and the other is free, the critical buckling stress (Shigley, page 116) is calculated:

$$P_{cr} = \frac{n\pi^2 EI}{L^2}$$

$$= 670,700 \text{ psi}$$

where:

n = 0.25, end fixity coefficient

$E_{Al_{250°F}} = 9.4 \times 10^6$ psi

$I_{basket\ body}$ = 870 in^4 (Roark, Case 10, page 75)

L = inner cavity length = 178 inches

$$M.S. = \frac{P_{cr}}{P_c} - 1 = \underline{+Large}$$

2.7.7.4 BWR Basket Construction

The BWR basket is cylindrical in shape, and constructed from 6061-T6 aluminum. A central, hollow, rectangular cavity is divided into two square cavities by an aluminum plate, which supports the basket contents during transport. A complete description of the basket and its construction is provided in Section 2.6.12.4.

2.7.7.4.1 BWR Basket Analysis

The BWR basket is constructed from the same aluminum material as the PWR basket. Therefore, it displays similar thermal expansion characteristics. Similar to Section 2.7.7.3, the BWR basket is in contact bearing with the inner shell, and all loads from the contents are transmitted through the basket to the inner shell and the cask structure.

2.7.7.4.2 Bearing Stress Calculation – Side Drop

The bearing stress is calculated using Case 6 (Roark, page 320), which models the cylindrical basket in a circular groove. The maximum compressive stress is calculated using:

$$S_{c_{max}} = 0.798 \left[\frac{\frac{P(D_1 - D_2)}{D_1 D_2}}{\frac{1 - \nu_1^2}{E_1} + \frac{1 - \nu_2^2}{E_2}} \right]^{0.5}$$

$$= 1969 \text{ psi}$$

where the material properties at 250°F are:

Stainless Steel

D_1 = 13.405

E_1 = 27.3 x 10^6 psi

ν_1 = 0.275

Aluminum (6061-T6)

D_2 = 13.25 inches

E_2 = 9.4 × 10^6 psi

ν_2 = 0.334

contents + basket weight = 2,624 lbs

P_{lg} = 2,624 lb/178 in = 14.7 lb/in

$P_{49.7g}$ = (14.7 lb/in)(49.7 g) = 733 lb/in

The side drop g load, 49.7 g, is obtained from Table 2.6.7-34.

The allowable bearing stress is the lesser value of the yield strength of aluminum or of stainless steel, which is 23,800 psi; the yield strength (S_y) of Type 304 stainless steel at 250°F. The margin of safety is calculated as:

$$M.S. = \frac{S_y}{S_{c_{max}}} - 1 = \underline{+Large}$$

2.7.7.4.3 Compressive Buckling Stress Calculations - End Drop

The BWR basket and inner cavity length are designed to ensure that there is very limited movement of the basket and its contents relative to the cask during transport. However, adequate clearance is maintained to ensure that differential thermal expansion does not produce longitudinal loads on the basket body. The basket must be able to support itself during an end drop accident. To determine if the basket is self-supporting, it is treated like a column, acted upon by its own weight. The basket weighs 1,124 lbs. During the end drop accident, the basket weight is decelerated at 58.2 g (Table 2.6.7-34), for a total compressive force, P_c = 65,417 pounds. The compressive force acts over the 72.5-square inch basket body cross section. The compressive stress (S_c) acting on the basket is 65,417 lb/72.5 in = 902 psi, which is negligible. An Euler column analysis is used to determine the critical buckling stress of the basket. Assuming that the impacting end is fixed and the other is free, the critical buckling stress (Shigley, page 116) is calculated:

$$P_{cr} = \frac{n\pi^2 EI}{L^2}$$

$$= 1.0 \times 10^6 \text{ psi}$$

where:

n = 0.25, end fixity coefficient

$E_{Al_{250°F}} = 9.4 \times 10^6$ psi

$I_{basket\ body} = 1{,}298\ in^4$ (Roark, Case 10, page 75)

L = inner cavity length = 178 inches

$$M.S. = \frac{P_{cr}}{P_c} - 1 = \underline{+Large}$$

2.7.7.5 Metallic Fuel Basket Analysis

The metallic fuel basket consists of three aluminum tubes held in position by five 0.25-inch bulkhead plates, forming a cylindrical shape. The tube centers are hollow cavities, which support the fuel contents during transport. A complete description of the basket and its construction is provided in Section 2.6.12.5.

The metallic fuel basket is constructed from aluminum as is the PWR basket. Therefore, it displays similar thermal expansion characteristics. Similar to Section 2.7.7.3, the metallic fuel basket is in contact bearing with the cask inner shell; thus, all loads from the contents are transmitted through the basket to the cask inner shell.

2.7.7.5.1 Bearing Stress Calculation – Side Drop

The bearing stress between the cask inner shell and the basket bulkhead plates is calculated using Case 6 (Roark, page 320), which models the cylindrical basket in a circular groove. The maximum compressive stress is calculated using:

$$S_{c_{max}} = 0.798 \left[\frac{\frac{P(D_1 - D_2)}{D_1 D_2}}{\frac{1 - \nu_1^2}{E_1} + \frac{1 - \nu_2^2}{E_2}} \right]^{0.5}$$

$$= 19{,}537 \text{ psi}$$

where the material properties at 250°F are:

Stainless Steel

D_1 = 13.405

E_1 = 27.3 x 10^6 psi

ν_1 = 0.275

Aluminum (6061-T6)

D_2 = 13.25 inches

E_2 = 9.4 x 10^6 psi

ν_2 = 0.334

contents + basket weight = 2,208 lbs

P_{lg} = 2,208 lb/1.25 in = 1,766 lb/in

$P_{49.7g}$ = (1,766 lb/in)(49.7 g) = 87,790 lb/in

The side drop g load, 49.7 g, is obtained from Table 2.6.7-34.

The allowable bearing stress is the lesser value of the yield strength of aluminum or of stainless steel, which is 23,800 psi; the yield strength (S_y) of Type 304 stainless steel at 250°F. The margin of safety is calculated as:

$$M.S. = \frac{S_y}{S_{c_{max}}} - 1 = \underline{+0.22}$$

2.7.7.5.2 Compressive Buckling Stress Calculations – End Drop

The metallic fuel basket and inner cavity length are designed to minimize the movement of the basket and its contents relative to the cask. The basket length is designed to provide adequate clearance to ensure that differential thermal expansion will not produce longitudinal loads on the basket body. The basket is self-supporting during an end drop accident. Therefore, the basket components are examined for compressive column stability, to ensure that the basket structure is adequate. The fuel tubes are considered to support the weight of the metallic fuel basket (128 lbs) in a top end drop. The spacer tube supports the basket and contents (2,208 lbs) during a bottom end drop. The maximum end drop load results from a 58.2 g cask deceleration. The fuel tubes have a total cross-sectional area of 6.48 square inches; therefore, the accident compressive stress ($S_{c_{fuel}}$) in each tube is (128 lbs)(58.2 g)/6.48 in^2 = 1,150 psi. During a bottom end drop, the spacer tube sustains a compressive stress ($S_{c_{spacer}}$) of (2,208)(58.2)/6.87 = 18,705 psi.

An Euler column analysis is used to determine the critical buckling stress of the basket fuel tubes and the spacer. Assuming that the impacting end is fixed and the other is free, the critical buckling stress (Shigley, page 116) is calculated:

Fuel Tubes (3)	Spacer Tube
P_{max} = (128)(58.2) = 7450 lbs	P_{max} = (2,208)(58.2) = 128,506 lbs

Fuel Tubes (3)	Spacer Tube
$P_{cr} = \frac{n\pi^2 EI}{L^2}$ = 26,930 lbs	$P_{cr} = \frac{n\pi^2 EI}{L^2}$ = 1,754,000 lbs

where:

n = 0.25, end fixity coefficient	n = 0.25, end fixity coefficient
$E_{AL250°F}$ = 9.4 x 10^6 psi	$E_{AL250°F}$ = 9.4 x 10^6 psi
$I_{fuel\ tubes}$ = 45.8 in^4	$I_{spacer\ tube}$ = 65.8 in^4
L = 145.3 in, fuel tube length	L = 29.5 in, spacer tube length
MS = P_{cr} / P_{max} - 1 = +LARGE	MS = P_{cr} / P_{max} - 1 = +LARGE

2.7.7.6 MTR Fuel Basket Construction

The MTR modular basket assembly has five configurations. One configuration is for intact fuel; the second is for 35 partially cut fuel elements that have had portions of the upper and lower end fittings removed; the third configuration is for 42 MTR fuel assemblies with the end fittings removed; and the fourth is for PULSTAR fuel elements loaded in the 28 MTR basket. The PULSTAR fuel elements may be intact fuel assemblies, intact fuel elements (rods) loaded in a fuel rod insert or a PULSTAR can, or failed fuel elements loaded in a PULSTAR failed fuel can or a PULSTAR screened fuel can. The fifth MTR basket configuration is for SLOWPOKE fuel rods contained in canisters. For SLOWPOKE fuel, up to four (4) canisters (each containing up to 100 SLOWPOKE intact and/or damaged fuel rods) may be loaded in both the top and upper intermediate MTR-28 basket modules. The lower intermediate and bottom MTR-28 basket modules are installed as axial spacers. Each basket configuration consists of one base module, one top module, and either two, three or four intermediate modules for the 28-, 35- and 42-element configurations, respectively. Each 28 MTR basket module is capable of holding up to seven MTR type fuel assemblies or up to seven PULSTAR fuel assemblies.

The hypothetical accident analyses for the MTR fuel baskets are not affected by the specific fuel element design or enrichment as long as the fuel characteristics are in compliance with the fuel characteristics listed in Table 1.2-4.

Each module, fabricated from Type 304 stainless steel, is a weldment made up of two 1/2-inch thick, 13.625-inch diameter, and circular plates at each end of the longitudinal divider plates creating seven MTR fuel assembly compartments. The outside wall of the four symmetric outermost fuel tubes is fabricated from 11- gage Type 304 stainless steel sheet. The 1/2-inch thick plate at the top end of the MTR basket module is welded to all webs and divider plates. The 1/2-inch thick baseplate is continuously welded to the 1/4-inch thick divider plates and the 5/16-inch thick web plates. The 11-gage sheet metal and the 5/16-inch intermediate webs are discontinued at 1/4 inches from the surface of the baseplate to provide full tube drainage. The 5/16-inch plate material may be machined to a minimum thickness of 0.28 inch. In addition, a 1-inch

diameter hole is located at the center of each of the compartments in each basket module. The MTR basket base module sits on a 1.5-inch long, 10-inch schedule 80S pipe welded to the 1/2-inch thick baseplate. The 10-inch schedule 80S pipe carries the total weight of the MTR basket assembly and bears directly on the bottom forging of the cask.

The MTR fuel basket base module and intermediate modules have guide pins fixed to the surface of the top support plate. The guide pins fit into holes in the base plate of the top and intermediate modules and provide controlled alignment of the basket assembly. A groove slot on the outside of each basket unit support plate is provided for the cask drain tube clearance and to provide for the basket assembly circumferential alignment.

2.7.7.6.1 MTR Fuel Basket Analysis

The MTR basket assembly and the inner shell are both fabricated from Type 304 stainless steel material. The nominal radial gap between the MTR basket assembly and the cask inner shell is 0.055 inch. The nominal radial gap between the basket and the inner shell is 0.0531 inch at the design base fuel normal operation steady state temperature. As defined for other NAC-LWT fuel-specific basket designs, since the gap between the basket and cask inner shell wall is small, it is assumed that there is no relative motion between the basket and the cask, and that the basket is in contact bearing on the inner shell during a side drop. The basket bearing loads are transmitted to the inner shell and cask structure.

2.7.7.6.2 Bearing Stress Calculation – Bottom Forging

The MTR basket assembly, when in the vertical position, is supported by a, 0.5-inch thick, 10-inch nominal diameter schedule 80S pipe. The 1.5-inch long pipe is welded to the baseplate of the base unit. The compressive stress is calculated as:

$$S_c = gW/A = 8{,}430 \text{ psi}$$

where:

A = Cross-sectional area of base pipe support = 16.1 in^2

W = Weight of MTR basket assembly and contents = 2,262 lbs

g = Dynamic load factor (31-foot end drop) = 60

The allowable stress, S_y, of Type 304 stainless steel at a conservative maximum operating temperature envelope of 600°F is 18,200 psi. The margin of safety is calculated as follows:

$$\text{Margin of Safety} = S_y/S_c - 1 = + 1.16$$

2.7.7.6.3 Compressive Stress Calculation – Fuel Tubes (Cask End Drop)

The MTR basket assembly and the inner cavity length are designed to ensure that there is limited longitudinal movement of the basket assembly relative to the cask cavity. The base module of the MTR basket assembly supports itself and the weight of other basket units, including fuel assemblies, during an end drop. The accident condition load compressive stress developed in the basket tube wall is:

$$\sigma_c = \frac{g \times W}{A} = 23{,}576 \text{ psi}$$

where:

W = Maximum weight of MTR basket with contents (PULSTAR) = 3,222 lbs

g = 31-foot end drop acceleration = 60 g

A = Total compartment cross-sectional area at baseplate (Figure 2.6.12.6-2) = 8.20 in^2

The allowable compressive stress, $0.7S_u$, is 44,450 psi conservatively evaluated for Type 304 stainless steel at 600°F. The margin of safety is:

$$MS = \frac{0.7S_u}{\sigma_c} - 1 = +0.89$$

The Euler elastic buckling load formulation is used to determine the critical buckling load of the MTR base module. The base module is conservatively treated as simply supported, which results in an effective length that is twice the actual length, thus reducing the critical buckling load by a factor of 4.0. The basket base module buckling load is:

$$P_{cr} = \frac{\pi^2 EI_i}{(L_e)^2} = 1.55 \times 10^6 \text{ lbs}$$

The margin of safety is:

$$MS = \frac{P_{cr}}{P_c} - 1 = +8.0$$

where:

P_c = Compressive load = 60g × W = 193,320 lbs

I_i = Basket inertia moment = 47.92 in^4

E = Elastic modulus (@ 600°F) = 25.3 × 106 psi.

L_e = Effective length of 28 assembly basket = 2 × 44.0 in = 88 inches

2.7.7.6.4 Lateral Stress Calculation

The baseplate at the end of a typical MTR basket module supports the weight of seven MTR fuel assemblies when the cask is in the vertical orientation (0 degree drop). With the cask in the horizontal orientation (90 degree drop), the fuel tubes support the entire length of the MTR fuel. The baseplate and the fuel tubes share in the support the MTR fuel at any drop orientation between a 0 degree drop and a 90 degree drop.

Baseplate Stresses (Cask End Drop)

The support plate at the top end of the basket modules is continuously welded to the outside periphery of the fuel tubes. The baseplate of a typical basket module is continuously welded to the two 11.57-inch wide, 5/16-inch (minimum 0.28-inch considering machining tolerance) thick web plates and two 3.44-inch wide, 1/4-inch thick divider plates. The ½-inch thick baseplate supports up to seven MTR fuel assemblies or PULSTAR fuel assemblies and is conservatively assumed to be supported by the main longitudinal webs mentioned above during a cask end drop. Two separate load cases are examined. The maximum stress for each case is then combined to obtain the total stress on the baseplate. Figure 2.6.12.6-2 details the baseplate support.

The first case, Case I, examines a 3.44-inch square plate with two adjacent sides fixed and the other two sides free. The applied pressure over the entire plate is uniform (Roark, 6th Ed., Table 26, Case 11a). The bending stress is:

$$\sigma_I = \frac{-g\beta_I P b^2}{at^2} = -33{,}975 \text{ psi}$$

where:

P = fuel weight = 80.0 lbs

g = 31-foot end drop acceleration = 60.0

a = Area of plate = $(3.44 \text{ in})^2 = 11.83 \text{ in}^2$

t = Plate thickness = 0.5 inch

b = Plate width = 3.44 inches

β_I = Boundary condition stress factor = 1.769

The second case, Case II, examines a rectangular plate, 11.57 inches by 3.44 inches, fixed along the long edges, free along the short edges and uniformly loaded (Roark, 5th Ed., Table 26, Case 6).

The configuration of the baseplate and supports is shown in Figure 2.6.12.6-2 (Roark's, 6th Ed., Table 26, Case 6a). The bending stress is:

$$\sigma_{II} = \frac{-g\beta_{II}Pb^2}{at^2} = -2{,}837 \text{ psi}$$

where:

a = Area of plate = 11.57×3.44 inch = 39.8 in^2

β_{II} = Boundary condition stress factor = 0.497

The total bending stress is conservatively obtained by adding the individual stresses:

$\sigma = \sigma_I + \sigma_{II} = -36{,}812$ psi

The allowable stress, S_u, is 63,500 psi for Type 304 stainless steel at the conservative maximum temperature envelope of 600°F. The margin of safety is:

$$MS = \frac{63{,}500}{36{,}812} - 1 = +0.73$$

Fuel Tube Stresses (Cask Side Drop)

The maximum stress in the fuel tubes occurs in the 0.12-inch thick, 11-gage sheet metal fuel tubes, which support the entire length of the MTR fuel assembly or the PULSTAR fuel assembly, cans or fuel rod insert. The design basis MTR fuel has a rectangular cross-section with slotted aluminum plates on each of the opposite sides of the assembly. The aluminum plates hold a nominal 18, aluminum clad fuel plates to create an assembly. There are two cases to consider. In the first case, the weight of the fuel contents is transmitted to the tube through the two aluminum plates at the sides of the fuel assembly. As shown in Figure 2.6.12.6-1, this load path creates a uniform line load along the length of the tube located about 0.315 inch from the corners. The tube is analyzed as a simple beam, 1 inch wide, 0.12 inch thick, and 3.44 inches long with a concentrated load at 0.315 inch from the ends. The maximum bending moment, M_I, is:

$$M_I = \frac{(8Pa + WL^2) \times g}{8} = 28.7 \text{ in-lb/in}$$

where:

W = Unit tube body weight = $0.288 \times t = 0.0346$ lb/in^2

L = Length = 3.44 inches

P = Bounding fuel load = $P_f / (2 \times L_f) = 1.67$ lb/in

P_f = Fuel weight = 80.0 lbs

L_f = Shortest length over which fuel load is applied = 24 inches

a = Distance from applied load, P to support = 0.315 inch

g = 31-foot side drop acceleration = 49.7g

In the second case, the weight of the fuel assembly is transmitted to the tube as a uniform load. The load path is shown in Figure 2.6.12.6-1. The maximum bending moment for this case, M_{II}, is:

$$M_{II} = \frac{(2PL^2 + WL^3) \times g}{8L} = 73.9 \text{ in-lb/in}$$

The maximum bending stress, σ, is:

$$\sigma = \frac{6M_{II}}{t^2} = 30{,}792 \text{ psi}$$

where:

t = Fuel tube thickness = 0.12 inch

The stress allowable, S_u, is 63,500 psi for Type 304 stainless steel at 600°F. The margin of safety is:

$$MS = \frac{63{,}500}{30{,}792} - 1 = +1.06$$

The 11-gage (0.12 inch) sheet metal tube is continuously welded to the adjacent divider plates with a ⅛-inch fillet weld. This weld resists shear developed in the simple beam analyzed above.

$$V = \frac{(2P + WL) \times g}{L} = 50.0 \text{ lb/in}$$

The shear stress, τ, is:

$$\tau = \frac{V}{t} = 417 \text{ psi.}$$

The "throat" thickness of the weld is 0.088 inch. The ratio of the plate thickness (0.12 inch) to the weld "throat" thickness (0.088 inch) is 1.36. The maximum stress of 417 psi calculated above is adjusted by a factor of 1.36 to obtain the maximum stress in the weld for the 31-foot side drop (49.7g). Maximum stress in the weld, S_w, is:

$$S_w = 1.36 \times \tau = 567 \text{ psi}$$

The ASME Code, Subsection NG-3352 recommends that the allowable stress for a fillet weld with PT or MT surface examination be decreased by the quality factor, n, of 0.4. The stress allowable, S_y, of the base metal, Type 304 stainless steel, is 18,200 psi at a conservative operating temperature envelope of 600°F. The margin of safety for the fillet weld is:

$$MS = \frac{S_y \times n}{S_w} - 1 = +\underline{Large}$$

Fuel Tube Stresses (Cask Oblique Drop)

Table 2.6.7-34 summarizes the cask drop equivalent g load factors for six drop orientations: the cask end drop (0 degrees), the cask corner drop (15.74 degrees), the cask oblique drops (30, 45 and 60 degrees) and the cask side drop (90 degrees). According to Table 2.6.7-34, the maximum axial dynamic load factor of 58.2 g (1.8g less than the g load experienced for the 31-foot end drop) occurs at the 30-degree drop orientation for any of the 31-foot oblique drops. The maximum lateral dynamic load factor of 38.5 g (11.2 g less than the g load experienced for the 31-foot side drop) occurs at the 60-degree drop orientation for any of the 31-foot oblique drops. As reported in Section 2.7.7.6.3, the maximum stress in the longitudinal dividers (fuel tubes) is 16,551 psi for the 60 g 31-foot end drop. The maximum stress of 10,467 psi is also reported in the section titled "Fuel Tube Stresses (Cask Side Drop) for the 0.12-inch thick, 11-gage sheet metal tubes for the 49.7 g 31-foot side drop.

To conservatively envelop the maximum stresses expected for all the 31-foot oblique drops, the calculated stresses of 23,576 psi in Section 2.7.7.6.3 for the end drop and 30,792 psi for the side drop in Section 2.7.7.6.4 are added as absolute values. The maximum stress in the MTR basket that envelops the maximum stresses expected for any 31-ft oblique drop is 54,368 psi. The margin of safety, against the stress allowable, S_u, of 63,500 psi, at 600°F, is:

$$MS = \frac{63{,}500}{54{,}368} - 1 = +0.17$$

2.7.7.6.5 Fuel Cans in the MTR Basket for PULSTAR Fuel

PULSTAR Damaged Fuel Can

The PULSTAR damaged fuel can is a modification of the existing failed fuel can for TRIGA fuel. The TRIGA fuel can is provided in two different lengths. The PULSTAR fuel can has the same cross-section (can width and wall thickness) as the TRIGA fuel can and is approximately four inches longer than the shorter TRIGA fuel can. The material of construction is identical for both the TRIGA and the PULSTAR fuel cans. As shown in Section 2.7.7.9.5 the TRIGA fuel can is evaluated for a maximum weight of 59.6 lbs, which includes a can weight of 20 lbs and a payload of 39.6 lbs. The weight of the PULSTAR fuel can and the payload is approximately 15

lbs and 35 lbs, respectively. The maximum internal pressure for the PULSTAR can is 59.2 psig. The calculation for the TRIGA can in Section 2.7.7.9.5 used a value of 168 psig, which bounds the maximum accident condition pressure for the PUSTAR can. Therefore, the evaluation presented in Section 2.7.7.9.5 for the TRIGA fuel can bounds the evaluation for the PULSTAR fuel can. The PULSTAR fuel can is structurally adequate for hypothetical accident conditions of transport. No additional analysis is required.

PULSTAR Screened Fuel Can

The PULSTAR screened can is a modification of the existing damaged fuel can for TRIGA fuel, which has two different design lengths. The PULSTAR screened fuel can has the same cross-section (can width and wall thickness) as the TRIGA screened fuel can and is approximately four inches longer than the shorter TRIGA screened fuel can design. Identical materials of fabrication are used for both TRIGA and PULSTAR fuel cans. As shown in Section 2.7.7.9.4, the TRIGA fuel can is evaluated for a maximum weight of 71 lbs, which includes a maximum can weight of 17 lbs and a payload of 54 lbs. The weights of the PULSTAR screened fuel can and its maximum payload are 12 lbs and 54 lbs, respectively, for a maximum total weight of 66 lbs. Therefore, the evaluation presented in Section 2.7.7.9.4 for the TRIGA screened fuel can bounds the evaluation for the PULSTAR screened fuel can, and it may be concluded that the PULSTAR screened fuel can is structurally adequate for accident conditions of transport. No additional analysis is required.

PULSTAR Fuel Rod Insert and Spacer

Intact PULSTAR fuel elements (rods) can be placed into the PULSTAR fuel rod insert. This insert is identical to the TRIGA fuel rod insert evaluated in Section 2.7.7.9.8. The weight of an individual PULSTAR fuel element is 1.31 lbs, which is bounded by the weight of an individual TRIGA rod of 1.44 lbs reported in Section 2.6.12.7.9. Therefore no additional evaluation for the PULSTAR fuel rod insert is required.

2.7.7.6.6 MTR Plate Canister Analysis

In this section, the NAC-LWT MTR Plate Canister (canister) is evaluated and found to be structurally adequate for the hypothetical accident condition. Analysis methodology is the same as that used for the normal operating conditions analysis presented in Section 2.6.12.6.6.

Stresses developed during the hypothetical accident condition meet all appropriate allowable criteria with positive margins.

Classical hand calculations are used to determine the stresses in the canister. Calculated stresses are compared to allowable stresses for non-containment structures shown in Table 2.1.2-2, “Allowable Stress Limits for Noncontainment Structures.”

Design deceleration (g) factors used in the canister analysis are shown in Table 2.6.7-34, "Summary of Cask Drop Equivalent G Load Factors."

A temperature of 295°F bounds the highest calculated canister temperature and is used for both normal and accident condition analyses.

Stresses for corner and oblique drops are considered to be enveloped by the stresses produced by the end and side drops.

Side Drop

The canister is contained within the NAC-LWT MTR 42 element basket assembly in the side-drop case. Because of the support provided by the basket, only the uppermost canister plate is subjected to bending. Bending of the plate is analyzed by considering a 1-inch section as a fixed-fixed beam equal in length to the width of the plate and uniformly loaded by the plate weight times the appropriate acceleration (g).

Hypothetical Accident Condition (30-foot drop)

With the 0.125-in thick plate uppermost:

The maximum moment (M_{max}) is:

$$M_{max} = \frac{wL^2}{12} = \frac{(0.61)(3.3^2)}{12} = 0.553 \text{ in-lb}$$

$$S_b = \frac{Mc}{I} = \frac{(0.553)(0.0625)}{1.63\times10^{-4}} = 212 \text{ psi for the hypothetical accident condition}$$

where:

$w = 0.125 \times 1.0 \times 1.0 \times 0.098 \times 49.7g = 0.61$ lb/in

With the 0.24-in-thick plate uppermost:

The maximum moment (M_{max}) is:

$$M_{max} = \frac{wL^2}{12} = \frac{(1.17)(3.3^2)}{12} = 1.06 \text{ in-lb}$$

$$S_b = \frac{Mc}{I} = \frac{(1.06)(0.125)}{1.15\times10^{-3}} = 115 \text{ psi for the hypothetical accident condition}$$

where:

$w = 0.24 \times 1.0 \times 1.0 \times 0.098 \times 49.7g = 1.17$ lb/in

$$I = \frac{bh^3}{12} = \frac{(1.0)(0.24^3)}{12} = 1.15\times10^{-3}\ in^4$$

$$MS = \frac{S_u}{S_b} - 1 = \frac{38{,}000}{212} - 1 = +\underline{Large} \text{ for the hypothetical accident condition}$$

Side Plate Buckling

The 0.125-in thick side plates are evaluated as axially loaded compression members.

The allowable load (P_a) as calculated in Section 2.6.12.6.6 is:

$$P_a = S_a \times A = 5{,}882\ psi \times 0.125\ in^2 = 735\ lbs$$

The load (P) imposed by the hypothetical accident, 30-foot side drop is:

$$P = 0.24 \times 1.0 \times 3.3 \times 0.098 \times 49.7g \cong 4\ lbs$$

This 4-pound load is conservative because the load from the thicker plate is actually shared between the two thinner plates.

Because the calculated compressive loads are much less than the allowable buckling load P_a = 735 lbs, the canister side plates are not expected to buckle under the load imposed by the hypothetical accident side drop.

End Drop

For the end drop, the can weldment is loaded by its own weight. The canister contents bear against the bottom or top of the canister, depending on drop orientation.

Under accident conditions, the canister body weldment is evaluated for a 60 g acceleration.

The compressive load (P) is:

$$P = 10\ lb \times 60g = 600\ lbs$$

The compressive stress (S_c) in the canister body weldment is:

$$S_c = \frac{P}{A} = \frac{600\ lbs}{2.24\ in^2} \cong 268\ psi$$

The margin of safety (MS) is then:

$$MS = \frac{0.7S_u}{S_c} - 1 = \frac{0.7(38{,}000)\ psi}{268\ psi} - 1 = +large \text{ for accident conditions}$$

Canister Body Buckling

The critical buckling load (P_{cr}) as calculated in Section 2.6.12.6.6 is 77,292 lbs.

Because the maximum compressive load (10 lbs × 60 g = 600 lbs under the accident condition) is much less than the critical buckling load (77,292 lbs), the canister body has adequate resistance to buckling.

Lifting Bail Compressive Stress

Under accident conditions, the lifting bail is evaluated for a 60 g acceleration.

The compressive load (P) is:

$$P = 30 \text{ lbs} \times 60 \text{ g} = 1{,}800 \text{ lbs}$$

The compressive stress (S_c) in the lifting bail is:

$$S_c = \frac{P}{A} = \frac{1{,}800 \text{ lbs}}{0.965 \text{ in.}^2} = 1{,}865 \text{ psi}$$

The margin of safety (MS) is then:

$$MS = \frac{0.7S_u}{S_c} - 1 = \frac{0.7(38{,}000) \text{ psi}}{1{,}865 \text{ psi}} - 1 = + \underline{\text{Large}} \text{ for accident conditions.}$$

2.7.7.7 Conclusion

The minimum margin of safety of + 1.16 is reported in Section 2.7.7.6.2 for the MTR basket and 30.0 lbs fuel element. Column analyses establish that each basket component is structurally stable during an end drop. Thus, all of the basket components have sufficient structural integrity to meet the requirements of 10 CFR 71.

2.7.7.8 PWR Spacer

2.7.7.8.1 Top Spacer

The top spacer for the NAC-LWT cask containing the PWR basket is shown in Figure 2.7.7-1. The spacer is subject to an impact load during an accidental drop of the cask. The most critical load occurs during a corner drop, where the axial component of the deceleration (Table 2.6.7-34) is:

$$a_{axial} = 60.4 \text{ g} \cos 15.74° = 58.2 \text{ g}$$

The design weight of the PWR basket (840 lbs) and its contents (1500 lbs) is 2340 lbs. The impact load on the spacer is:

$$P_T = 2{,}340 \ (58.2) = 136{,}188 \text{ lbs}$$

Top Plate

The top plate of the top spacer on which the weight of the basket and its contents impact during an accident is in direct contact with the cask lid. Load is transferred through the plate to the support legs without bending the plate; therefore, the plate is structurally adequate.

Support Legs

The four support legs of the top spacer are made from SA-312, Type 304 stainless steel bars. The yield strength of these bars is 22,500 psi at 300°F. The maximum compressive stress in the support legs from impact of the fuel assembly during a drop accident occurs at the area of the leg in contact with the fuel assembly basket, $A_b = (1.25)^2 - (0.5)(0.375)^2 = 1.492$ in^2. The maximum stress is calculated as follows:

$$S_{cb} = P_T/4A_b = 136{,}188/4(1.492) = 22{,}485 \text{ psi}$$

The margin of safety on the yield strength is:

$$MS = (S_y/S_{cb} - 1) = +0.00$$

The average compressive stress in the bar, to be compared with the buckling stress, is determined by computing the average area as follows:

A_a = area of bar at start of the taper = $(1.50)^2 = 2.25$ in^2

L_a = length of uniform section = 4.94 inches

L_b = length of tapered section = 4.00 inches

$$A_{avg} = [A_aL_a + (A_a + A_b)L_b/2]/(L_a + L_b)$$
$$= [(2.25)(4.94) + (2.25 + 1.492)(4.00)/2]/(4.94 + 4.00) = 2.080 \text{ in}^2$$

The average stress in the member is:

$$S_{cavg} = P_T/4A_{avg} = 136{,}188/4(2.080) = 16{,}369 \text{ psi}$$

The slenderness ratio must be determined to select the method of analyzing the member's buckling strength. The member is analyzed for block compression if its slenderness ratio is less than $(L'/\rho)_{min}$ between $(L'/\rho)_{min}$ and $(L'/\rho)_{max}$ is considered to be a short-column, and greater than $(L'/\rho)_{max}$ requires a long-column analysis. The value for $(L'/\rho)_{min}$ equals 12 (Peery, page 253). The value for $(L'/\rho)_{max}$ is calculated from the straight-line short-column formula $(L'/\rho)_{max} = \pi [(3)(27 \times 10^6)/22{,}500]^{0.5} = 188.5$.

The slenderness ratio of the member is calculated by the equation $L'/\rho = L/\rho\ (c)^{0.5}$, where L = 11.82 inches, c = 2.04 (Peery, page 352), and $\rho = (I/A)^{0.5}$. The value of ρ is determined by using the average section properties for the square bar, calculated as follows:

$b = (A_{avg})^{0.5} = (2.080)^{0.5} = 1.442$ inches

$I = b^4/12 = (1.442)_4/12 = 0.360$ in^4

$A = A_{avg} = 2.080$ in^2

$\rho = (I/A)^{0.5} = (0.360/2.080)^{0.5} = 0.416$ in

$L'/\rho = 11.82/0.416(2.04)^{0.5} = 19.893$

The member is considered to be in the short-column range because the slenderness ratio falls between $(L'/\rho)_{min}$ and $(L'/\rho)_{max}$.

The straight-line formula, the most conservative for a short-column (Peery, page 354), is used to calculate the buckling strength (S_{cr}) as follows:

$$S_{cr} = S_{co}\,[1 - 0.385(L'/\rho)/\,\pi\,(E/S_{co})^{0.5}]$$
$$= 22{,}500[1 - 0.385(19.893)/\,\pi\,[(27 \times 10^6)/22{,}500]^{0.5}]$$
$$= 20{,}831 \text{ psi}$$

The margin of safety on buckling is:

$$MS = (S_{cr}/S_{cavg}) - 1 = +0.27$$

2.7.7.8.2 Bottom Spacer

The bottom PWR spacer for the NAC-LWT cask is shown in Drawing No. 315-40-10 (Section 1.4). The top plate, which is shown as 7/8-inch thick in the bill of materials in the reference drawing, is to be machined to a 3/4-inch final thickness. The bottom spacer is subject to the same load as the top spacer (Section 2.7.7.1).

Top Plate

The top plate for the bottom spacer is 0.75-inch thick, SA-240, Type 304 stainless steel. The maximum stress due to the fuel assembly impact is (Roark, Case 15, page 220):

$$S_b = (3W/2\pi mt^2)\left[2a^2(m + 1)[\log(c/d)]/(a^2 - b^2) + (m - 1)(c^2 - d^2)/(a^2 - b^2)\right]$$
$$= 4{,}859 \text{ psi}$$

where:

$W = 136{,}188$ lbs

$m = 1/\nu = 1/0.275 = 2.636$

t = 0.75 in

a = 6.63 inches

b = 2.25 inches

c = 4.24 inches

d = 4.19 inches

The margin of safety against yield at 300°F is:

$MS = (S_y/S_b) - 1 = \underline{+Large}$

Column Support

The column support for the bottom spacer is an 8-inch schedule 80, A-312, Type 304 pipe. The net area, deducting the area removed for the openings at the base, is:

$A_{net} = 12.8 - 4(1.2)(0.50) = 10.4 \text{ in}^2$

The compressive stress is:

$S_c = 136{,}188/10.4 = 13{,}095 \text{ psi}$

The margin of safety is:

$MS = (S_y/S_c) - 1 = \underline{+0.76}$

The buckling stress is (Baker, page 230):

$S_{cr} = \gamma C_c \eta E t/R = 1{,}675{,}000 \text{ psi}$

where:

γ = 0.84 for R/t = 4.06/0.50 = 8.1

C_c = 0.6

η = 1.0 for elastic bucking

E = 27×10^6 psi at 300°F

t = 0.50 in

R = 4.06 inches

The margin of safety for buckling is:

$$MS = (S_{cr}/S_c) - 1 = \underline{+Large}$$

Thus, the PWR spacers, whose length is less than 27 inches, satisfy the yield strength criteria. (If spacer lengths exceed 27 inches, the Euler column equation must be applied.)

Figure 2.7.7-1 PWR Spacer Geometry

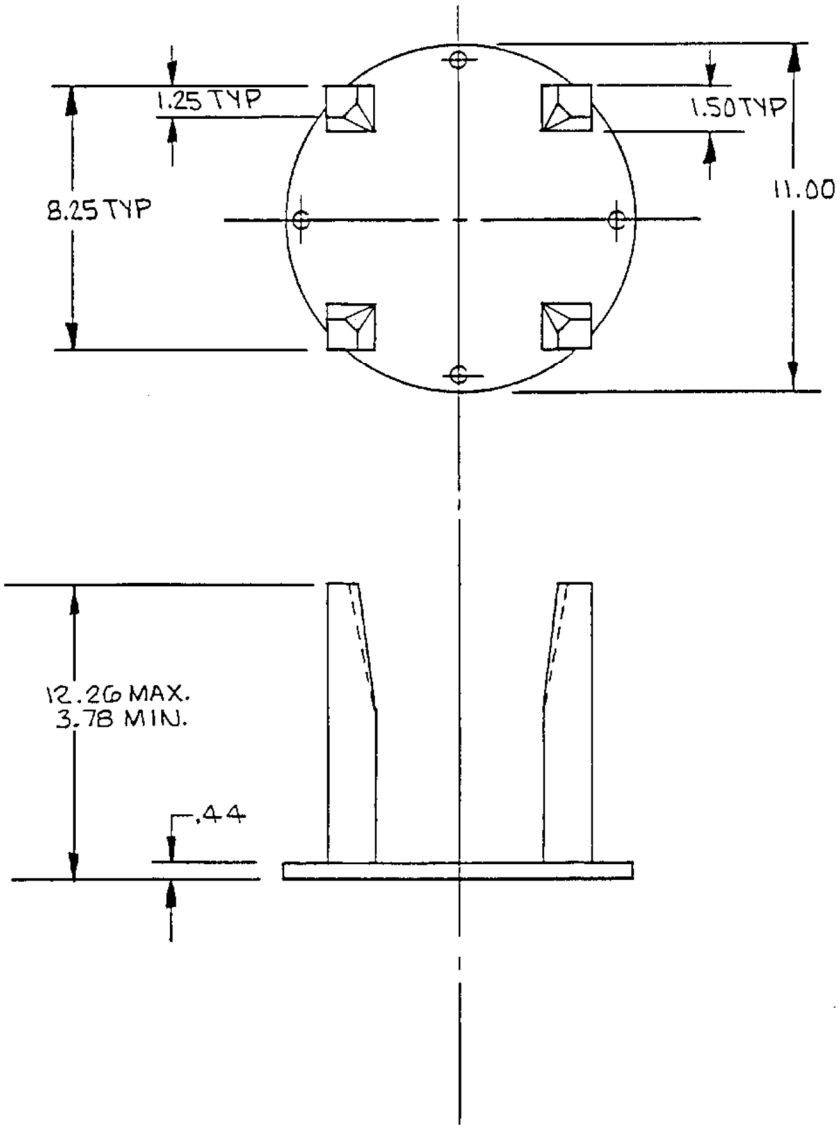

2.7.7.9 TRIGA Fuel Basket Thirty-Foot Drop Evaluation

This section evaluates the stresses developed in the TRIGA fuel basket assembly described in Section 2.6.12.7 as a result of the 30-foot drop hypothetical accident conditions. As indicated in Section 2.6.12.7, the loading produced by the TRIGA fuel cluster rods and fuel rod insert are bounded by those produced by the TRIGA fuel elements.

The weights of the TRIGA basket assembly and modules are shown below. The weight includes the weight of 140 of the heaviest fuel elements that could be installed in the module, and failed fuel can in the top and bottom modules. The calculated weight of each top and bottom module is increased by 70 lbs to account for the poison plates and to conservatively bound the analysis. Similarly, the calculated weight of the intermediate module is increased by 140 lbs.

Component	Weight of Fuel (lb) 140 Elements	Weight of Module(s)[1] (lb)	Total Weight (lb)	Length of Module(s) (in)
Bottom Module	247	356	603	34.70
3 Intermediate Modules	741	957	1,698	31.50
Top Module	370	460	830	48.30
Weight of Empty Basket		1,773		
Loaded Weight of Basket			3,131	

[1] Includes the weight of the failed fuel cans plus additional weight for conservative design evaluation.

2.7.7.9.1 NAC-LWT Bottom Forging Bearing Stress

The TRIGA basket assembly, when in the vertical position, is supported by a 0.5-inch thick 10-inch nominal diameter schedule 80S pipe. The 1.5-inch long pipe is welded to the baseplate of the base unit. The compressive stress is:

$$S_c = \frac{g \times W}{A} = 11{,}688\,\text{psi}$$

where:

g = 60, Dynamic load factor for the 30-foot end drop

W = 3,131 lbs, Total weight of the basket

A = 16.1 in^2, Area of 10-inch diameter schedule 80S pipe

The allowable stress, S_u = 63,500 psi at 600°F.

Therefore:

$$MS = \frac{63{,}500}{11{,}688} - 1 = +\underline{4.44}$$

2.7.7.9.2 TRIGA Basket Compressive Stress Analysis

The TRIGA fuel basket is designed to ensure that there is very limited longitudinal movement of the basket relative to the cask inner cavity. The fuel contents are not attached to the basket and do not impart any longitudinal structural load on the basket body. However, the basket must support itself during an end drop accident. The basket is analyzed as a column, acted upon by a structural (weight) compressive load.

The compressive stress developed in the basket compartment wall is:

$$S_c = \frac{g \times W}{A} = 22{,}910 \quad \text{psi}$$

where:

g = 60, Dynamic load factor for the 30-foot end drop

W = 3,131 lbs, Total weight of the basket

A = 8.20 in^2, Total compartment cross-section area at base plate

The allowable stress, S_u = 63,500 psi at 600°F.

Therefore:

$$MS = \frac{63{,}500}{22{,}910} - 1 = +\underline{1.77}$$

The Euler elastic buckling load formulation is used to determine the critical buckling load (P_{cr}) of the 10-inch diameter Schedule 80S pipe and the base module. The pipe and base module are conservatively treated as simply supported, which results in an effective length that is twice the actual length, reducing the critical buckling load by a factor of 4.0. For the 10-inch pipe, the critical buckling load is:

$$P_{cr} = \frac{\pi^2 EI}{L_e^{\,2}} = 5.88 \times 10^9 \text{ lbs}$$

where:

E = 25.3 x 10^6 psi at 600°F

I = 212 in^4, inertia moment

L_e = 2 x 1.5 = 3.0 in., effective length (2L)

The calculated compressive stress is:

P_c = W x g = 3,131 x 60 = 187,860 lbs

where:

g = 60, Dynamic load factor for the 30-foot end drop

W = 3,131 lbs, Total weight of the basket

Therefore:

$$MS = \frac{P_{cr}}{P_c} - 1 = \frac{5.88 \times 10^9}{187{,}860} - 1 = +\underline{\text{Large}}$$

The critical buckling load for the base module is calculated using the same equation as above, by applying the moment of inertia of the fuel support structure. The fuel web and divider support structure is shown in the following figure in Section 2.7.7.9.3.

The moment of inertia for the support structure is:

Item	$(I_o)_{yy}$	A	h	Ah^2	$(I_o)_{xx}$
2-11.57" x 0.28" web plate	0.0	6.48	1.86	22.42	72.28
2-3.44" x 0.25" divider plate	1.7	1.72	3.72	23.80	0.0
Total	1.7			46.22	72.28

$(I_o)_{yy} = I_o + \Sigma\, Ah^2 = 1.7 + 46.22 = 47.92\ in^4$

$(I_o)_{xx} = \Sigma\, I_o = 72.28\ in^4$

Choosing the smaller moment of inertia, $(I_o)_{yy}$, as I:

I = 47.92 in^4

$$P_{cr} = \frac{\pi^2 EI}{L_e^{\,2}} = \frac{\pi^2 \times 25.3 \times 10^6 \times 47.92}{(2 \times 33.2)^2} = 2.71 \times 10^6 \text{ lbs}$$

where:

L_e = 2 x 33.2 inches

P_c = W x g = 3,131 x 60 = 187,860 lbs

g = 60, Dynamic load factor for the 30 foot end drop

W = 3,131 lbs, Total weight of the basket

The margin of safety is:

$$M.S. = \frac{P_{cr}}{P_c} - 1 = \frac{2.71 \times 10^6}{187{,}860} - 1 = +\underline{\text{Large}}$$

2.7.7.9.3 TRIGA Basket Lateral Stress Analysis

The base plate at the end of a typical TRIGA basket module supports the weight of up to 28 TRIGA fuel elements when the cask is in the vertical orientation (0 degree drop). With the cask in the horizontal orientation (90 degree drop), the fuel cell divider plates support the entire length of the TRIGA fuel. The base plate and the divider plates share in the support of the TRIGA fuel at drop orientations between 0 and 90 degrees.

Baseplate Stress Due to End Drop

The support plate at the top end of the modules is continuously welded to the outside periphery of the plates, including the support plates that form the fuel cells. The baseplate of the basket module is continuously welded to the two 11.57-inch wide, 5/16-inch thick web plates (0.28 inches, minimum thickness), and to the two 3.44-inch wide, 1/4-inch thick divider plates as shown below.

The baseplate supports up to 28 fuel elements and is conservatively assumed to be supported by the main longitudinal support plates during a cask end drop. Two separate load cases are evaluated. The maximum stresses for each case are combined to obtain the total stress on the baseplate.

The first case (Case I), evaluates a 3.44-inch square plate with adjacent sides fixed and the other sides free. The applied pressure over the entire plate is uniform (Young, page 471, case 11). The second case, Case II, examines a rectangular plate, 11.57 inches by 3.44 inches, fixed along the long edges, free along the short edges and uniformly pressurized (Young, page 462, case 6).

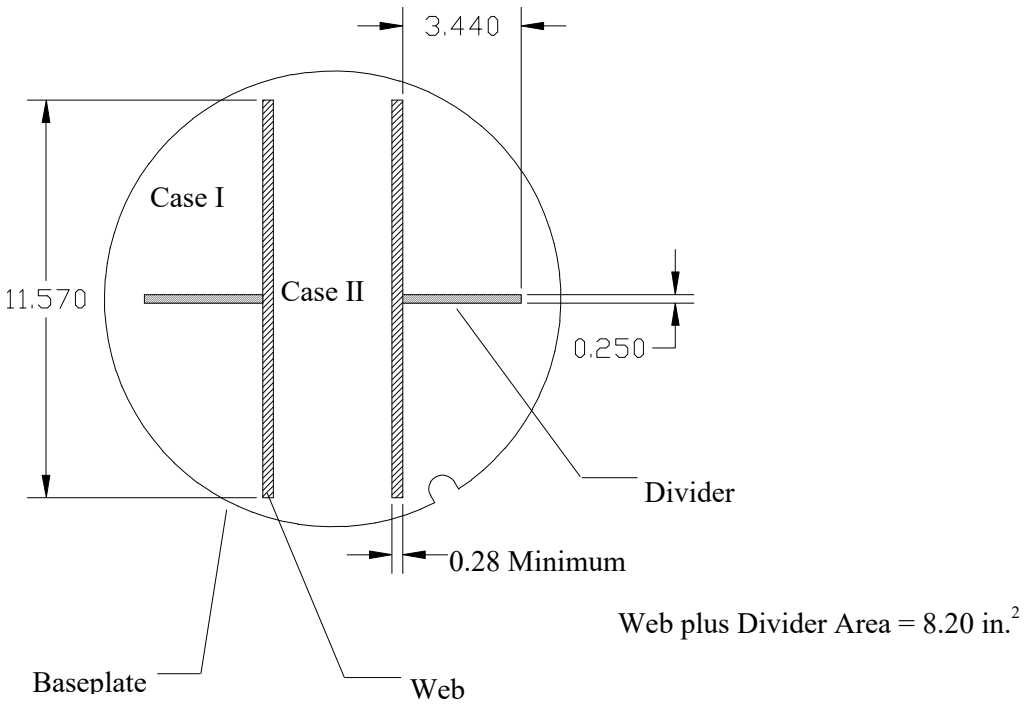

For Case I, the 3.44-inch square plate is analyzed as a cantilevered plate supported at two adjacent sides with the other two sides free. Load is assumed uniform over the area of the plate. The bounding fuel weight is applied. The maximum stress is expressed as (Young, page 471, case 11):

$$S_I = \frac{-g \times B_I \times P \times b^2}{A \times t^2} = -33{,}965\,\text{psi}$$

where:

g = 60, Dynamic load factor for the 30-foot end drop

B_I = 1.769, Boundary condition stress factor

P = 80 lbs, Bounding module fuel weight

b = 3.44 inches, Width of plate

A = $(3.44)^2$ sq. inches, Plate area

t = 0.5 in, Plate thickness

Case II, evaluates a plate 3.44-inch by 3.44-inch (width x length), fixed on two opposite sides, with the other two sides free. The maximum stress is expressed as (Young, page 462, case 6):

$$S_{II} = \frac{-g \times B_{II} \times P \times b^2}{A \times t^2} = -9{,}600 \quad \text{psi}$$

where:

g = 60, Dynamic load factor for the 30-foot end drop

B_{II} = 0.5, Boundary condition stress factor

P = 80 lbs, Bounding module fuel weight

b = 3.44 inches, Width of plate

A = $(3.44)^2$ sq. inches, Plate area

t = 0.5 in., Plate thickness

Total bending stress from Case I and Case II is:

$S_{total} = S_I + S_{II} = -43{,}565$ psi $< S_u = 63{,}500$ psi

Therefore:

$$MS = \frac{63{,}500}{43{,}565} - 1 = +\underline{0.46}$$

Support Plate Stress Due to the Screened Failed Fuel Can in the Side Drop

The maximum stress in the support plates that form the fuel cells occurs in the 0.12-inch thick 11 gage sheet metal tubes which support the entire length of the TRIGA fuel element. The weight of the TRIGA fuel element is transmitted through the can walls to the support plates that form the fuel cell. This load path creates a uniform pressure load over the entire area as shown below.

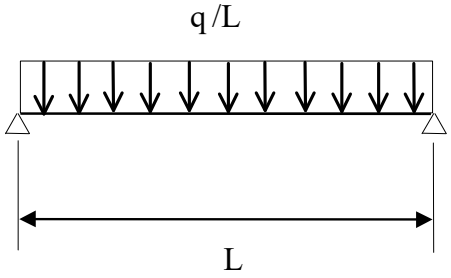

The fuel weight per unit length for all fuel types is presented in Section 2.6.12.7.4.

The intact fuel bounding load, q_i, along the length of the tube is:

$$q_i = \frac{W_i}{L_s} = 1.850 \quad \text{lb / in}$$

The uniform pressure load for the shorter (L_s) failed fuel in the screened can is:

$$q_f = \frac{W_f}{L_s} = 1.950 \quad \text{lb / in}$$

The uniform pressure load of the longer (L_L) failed fuel in the screened can is:

$$q_f = \frac{W_f}{L_L} = 1.778 \quad \text{lb / in}$$

where:

L_s = 29.88 inches = length of short fuel element

L_L = 45 inches = length of long fuel element

Weight of long failed fuel can = 17 lbs

Weight of short failed fuel can = 13 lbs

Added weight for fuel can calculation = 10 lbs

The weight calculation below includes 4 fuel elements, added weight, plus the screened failed fuel can.

W_f = 58.28 lbs for fuel can with fuel elements having a length of 29.88 inches (L_s)

W_f= 80 lbs for fuel can with fuel elements having a length of 45 inches (L_L)

W_i = 55.28 lbs for fuel can with intact fuel

The bounding load for TRIGA fuel is 1.950 lb/in.

The maximum bending moment is:

$$M_{max} = \frac{(q_f + w) \times gL}{8} = 44.21 \quad \text{in} - \text{lb}$$

where:

q_f = 1.950 lb/in

g = 49.7

t = 0.12 (11 gage)

L = 3.44 inches = width of side support plate (11 gage)

w = 0.288 x 3.44 × t = 0.1185 lb/in, steel beam weight

$$S = \frac{6 \times M_{max}}{t^2} = 18{,}544 \quad \text{psi}$$

Therefore:

$$MS = \frac{63,500}{18,544} - 1 = +\underline{2.42}$$

The 11 gage sheet metal is continuously welded to the adjacent divider plates with a 1/8-inch fillet weld. This weld resists the shear developed in the simple beam analysis above.

$$V = \frac{(W_f + wL_s) \times g}{2 \text{ x } L_s} = 51.41 \text{ lbs}$$

where:

$W_f = 58.28$ lbs

$L_s = 29.88$ inches

and,

$$S_v = \frac{V}{t \times 1} = 430 \text{ psi}$$

The throat thickness of 1/8-inch fillet weld is 0.707 × 0.125 = 0.088 in. The square of the ratio of the plate thickness (0.12 in) to the weld throat thickness (0.088 in) is 1.86. ASME Code Subsection NG - 3352 recommends that the calculated stress in a fillet weld be increased by a factor of 1/0.35 = 2.86.

The maximum weld stress is:

$S_w = S_v$ (1.86) (2.86) = 2,287 psi

The allowable stress is $0.42S_u$= 26,670 psi at 600°F.

Therefore,

$$MS = \frac{26,670}{2,287} - 1 = +\underline{\text{Large}}$$

Support Plate Stress Due To Side Drop For Sealed Failed Fuel Can

The stress of the support plates on the LWT-TRIGA basket is checked when the support plate is loaded with the sealed failed fuel can. The total bounding weight of the sealed can is 59.6 lbs, which includes 20 lbs for the canister and 39.6 lbs for the follower control elements.

The maximum stress in the support plates occurs in the 0.12-inch thick (11 gage) sheet metal tubes which supports the entire length of the sealed can. Since the can is cylindrical, its weight is transmitted as a line load over the entire length to the supporting plate. For a unit cross-section

of the supporting plate, the line load is treated as a concentrated load over the supporting plate as shown in the following loading diagram.

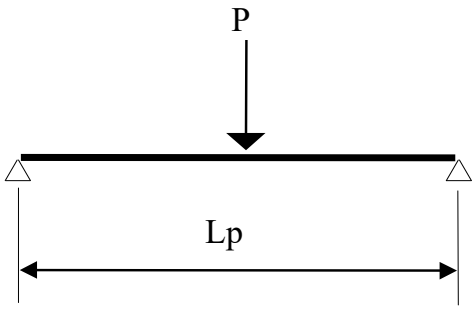

The load of the sealed can and its contents is represented by a uniformly distributed line load along the basket length that is in contact with the can. For a unit length, the concentrated load is:

For the longer can: $P = \frac{W_f \times g}{L} = 77.12 \quad lb / in.$

where:

W_f = 59.6 lbs, weight of the long sealed can (20 lbs) and follower control elements (39.6 lbs)

g = 49.7, dynamic load factor for 30-foot side drop

L = 38.41 inches, length of the longer tube body

For the shorter can: $P = \frac{W_f \times g}{L} = 92.53 \quad lb / in.$

where:

W_f = 43.4 lbs, weight of the short sealed can (17 lbs) and three fuel elements (26.4 lbs)

g = 49.7, dynamic load factor for 30-foot side drop

L = 23.31 inches, length of the shorter tube body

The concentrated load from the shorter can (P = 92.53 lb/in.), enveloping both the longer can and short can, is used to calculate the maximum bending moment. The unit length of the basket supporting plate with the 92.53 lbs concentrated force in the middle is treated as a simply supported beam. The maximum bending moment is:

$$M_{max} = \frac{P \times L_p}{4} = 79.58 \quad in - lb$$

where:

P = 92.53 lbs, concentrated load

L_p = 3.44 inches, width of the 11 gage support plate

The maximum bending stress is:

$$S = \frac{6 \times M_{max}}{t^2} = 33{,}380 \text{ psi}$$

where:

M_{max} = 79.58 in-lb, maximum bending moment

t = 0.12 in (thickness of the 11 gage support plate)

The margin of safety is:

$$MS = \frac{S_u}{S} - 1 = \frac{63{,}500}{33{,}380} - 1 = +\underline{0.9}$$

The 11 gage sheet metal is continuously welded to the adjacent divider plates with a 1/8-inch fillet weld. This weld resists shear developed in simple beam analyzed above.

$$S_v = \frac{P}{t \times 1} = 774 \quad \text{psi}$$

where:

P = 92.53 lbs, load of unit length

t = 0.12 in., thickness of 11 gage support plate

The throat thickness of 1/8-inch fillet weld is 0.707 × 0.125 = 0.088-inch. The square of the ratio of the plate thickness (0.12-inch) to the weld throat thickness (0.088-inches) is 1.86. ASME Code Subsection NG - 3352 recommends that the calculated stress in a fillet weld be increased by a factor of 1/0.35 = 2.86.

Maximum weld stress is the calculated stress in the material times these factors:

$S_w = S_v$ (1.86) (2.86) = (774)(1.86)(2.86) = 4,117 psi

The allowable stress = $0.42S_u$= 26,670 psi @ 600°F.

The margin of safety is:

$$MS = \frac{26{,}670}{4{,}117} - 1 = +\underline{\text{Large}}$$

Maximum Basket Stress Due To Oblique Drop

As shown in the side drop calculations presented in the two previous sections, between the two different configurations of failed fuel cans, the sealed failed fuel can induces greater stress to the basket supporting plates due to its cylindrical cross-section. Therefore, the maximum stress in the basket is bounded by the stress induced by the sealed can.

The maximum stress in the basket during oblique drop is found by absolutely combining the maximum stresses found in the basket during side drop and end drop determined in the previous sections. Although the stresses in the two different drop configurations do not occur in the same location, the stress combination method conservatively envelopes the maximum possible stress states during the oblique drop.

The maximum calculated stresses for the 30-foot end drop and the 30-foot side drop are:

Maximum stress = 22,910 psi for end drop

Maximum stress = 33,380 psi for side drop

Adding the two stress values above to obtain oblique drop stress, the maximum oblique drop stress = 22,910 + 33,380 = 56,290 psi

Allowable stress = S_u = 63,500 psi @ 600°F,

$$MS = \frac{63,500}{56,290} - 1 = +\underline{0.13}$$

2.7.7.9.4 Screened Failed Fuel Can

This section evaluates the stresses in the screened failed fuel can as a result of the 30-foot drop hypothetical accident condition. The screened failed fuel can is described in Section 2.6.12.7. The screened failed fuel can is analyzed for side and end drop during transportation.

Screened Failed Fuel Can Compressive Stress Analysis

The fuel contents are not attached to the screened failed fuel can, and do not impart any longitudinal structural load on the screened can. The can must support itself during an end drop accident. It is analyzed as a column acted upon by a structural (weight) compressive load consisting of the weight of the can and its contents. The screened failed fuel can for fuel follower control rods is used since it is heavier, carries a heavier load, and bounds the shorter screened failed fuel can.

The compressive stress developed in the screened can wall is:

S_c = Wg/A = 4,347 psi

where:

W = 71 lbs, weight of can and contents

g = 60.0, dynamic load factor for 30-foot end drop

A = 0.98 sq. inch, cross-section area of can

The allowable stress, $0.7S_u$, = 44,450 psi at 600°F.

Therefore:

MS = (44,450/4,347) - 1 = +Large

The Euler elastic buckling load formulation is used to determine the critical buckling load (P_{cr}) of the screened failed fuel can. The screened failed fuel can is conservatively treated as simply supported, which results in an effective length that is twice the actual length. For the screened failed fuel can, the critical buckling load is:

$$P_{cr} = (\pi^2)EI/(L_e)^2 = 49{,}262 \text{ lbs}$$

where:

E = 25,300,000 psi at 600°F

I = 1.68 in^4

L_e = 2 x 46.14 = 92.28 in., effective length (2L)

The calculated compressive stress is:

$$P_c = gW = 60 \times 71 = 4{,}260 \text{ lbs}$$

where:

g = 60, dynamic load factor for 30 foot end drop

W = 71 lbs, total weight of screened can and contents

Therefore:

MS = (49,262/4,260) - 1 = +Large

Screened Failed Fuel Can Plate Stress Due to Side Drop

The plate making up the screened can is analyzed for bending as a result of loads applied resulting from a side drop. To bound the analysis, the weight of the longer can is used and this load is distributed over the length of the shorter fuel can to determine the load acting on a one inch wide strip of the fuel can cross-section. This total load on a 1-inch strip is conservatively applied to the area between fuel elements (1.5-inches). This is the longest span of plate subject to bending from a side drop.

The bending moment in the plate is:

$$M = gPL/8 = 21.1 \text{ in.-lb.}$$

where:

g = 49.7, dynamic load factor for 30 foot side drop

P = 2.26 lbs, total load on one-inch wide strip

L = 1.5 inches, spacing between fuel elements

The section modulus of the cross-section resisting the bending moment is:

$$S = t^2/6 = 0.00093 \text{ in}^3$$

where:

t = 0.075 in, thickness of plate making up the can

The bending stress is:

$$S_b = M/S = 22{,}646 \text{ psi}$$

The allowable stress is, $S_u = 63{,}500$ psi

Therefore:

$$MS = (63{,}500/22{,}646) - 1 = +1.80$$

2.7.7.9.5 Sealed Failed Fuel Can

This section evaluates the stresses in the sealed failed fuel can as a result of the hypothetical accident 30-foot end and side drops. The sealed can is described in Section 2.6.12.7.

Sealed Failed Fuel Can Compressive Stress Analyses Due to End Drop

This section analyzes the compressive stress and buckling load of the fuel tube, bottom tube and lifting lugs. The bounding weight of the sealed can used in this analysis is 59.6 lbs, which includes 20 lbs for the canister and 39.6 lbs for the follower control elements.

Fuel Tube

The fuel elements are not attached to the round tube that forms the wall of the can. However, it is conservatively assumed that the shell of the can carries the entire weight of the can and contents. The compressive stress is:

$$\sigma_C = \frac{W \times g}{A} = 5{,}498 \text{ psi}$$

where:

W = 59.6 lbs, total weight of the can and contents

g = 60.0, dynamic load factor for 30-foot end drop

A = π (1.625^2 - 1.56^2) = 0.6504 in^2, cross-sectional area of the can

For the 30-foot end drop, the dynamic load applied by its contents and a conservative 11.4 atm external pressure load caused by 100% fuel failure is applied to the sealed can.

Considering the sealed can as a thin wall cylinder with internal pressure of 168 (11.4 ×14.7) psi, the stresses in circumferential, radial and longitudinal directions are:

$$\sigma_\theta = \frac{P \times r}{t} = \quad -4{,}200 \text{ psi}$$

$$\sigma_r = -P = -168 \text{ psi}$$

$$\sigma_Z = \frac{P \times r}{2 \times t} \quad = -2{,}100 \text{ psi}$$

where:

P = 168 psi

r = 3.25/2 inches, the radius of the can

t = 0.065 in, the thickness of the can

Combining the stresses caused by can contents (30-ft end drop) and external pressure, the longitudinal stress becomes:

$$\sigma_Z + \sigma_C = -7{,}598 \text{ psi}$$

The stress intensity is:

$$S_{int} = \sigma_q - (\sigma_Z + \sigma_C) = 11{,}798 \text{ psi}$$

Margin of safety for 30-foot side drop plus 100% fuel failure is:

$$MS = \frac{3.6\ S_m}{\sigma_C} - 1 = +\underline{4.0}$$

The compressive stress for the bottom tube (2.5-inch OD, 1/8-inch wall tube) is:

$$\sigma_C = \frac{W \times g}{A} \quad = 3{,}834 \text{ psi}$$

where:

W = 59.6 lbs, weight of the can and contents

g = 60.0, dynamic load factor for the 30-foot end drop

A = π (1.25^2 - 1.125^2) = 0.9327 in^2 cross-section area of bottom tube

The margin of safety is:

$$MS = \frac{2.4S_m}{\sigma_C} - 1 = \frac{39{,}360}{3{,}834} - 1 = +\underline{\text{Large}}$$

Lifting Lugs

The can lifting lugs may be subject to compressive or buckling loads in drop accident events. The load is considered evenly distributed to both lugs.

The compressive stress for two lift lugs is:

$$\sigma_C = \frac{W \times g}{A} = 13{,}887 \text{ psi}$$

where:

W = 59.6 lbs, weight of the can and contents

g = 60.0, dynamic load factor for the 30-foot end drop

A = 2 x 0.515 x 0.25 = 0.2575 in.^{2} smallest cross-section area of the two lift lugs

The margin of safety is:

$$MS = \frac{2.4S_m}{\sigma_C} - 1 = \frac{39{,}360}{13{,}887} - 1 = +\underline{1.83}$$

Considering the lift lug as a cantilever beam with fixed end, the load is carried by an equivalent moment M, where:

M = (P/2) x d x 60 = 434 in-lb

where:

g = 60.0, dynamic load factor for the 30-foot end drop

P = 59.6 lbs, weight of can and contents

d = 0.2425 in, the length of moment arm, measured from the center of the section to the point of load application (0.5 - 0.515/2)

The total stress acting on the neck section is:

$$\sigma = \frac{(M)(c)}{I} + \sigma_C = 53{,}063\,\text{psi}$$

where:

σ_C is the compressive stress previously calculated, 13,887 psi

M = 434 in-lb, equivalent moment

c = 0.515/2 in., distance from the center of neck section to the edge

I = 0.25 x $(0.515)^3/12$ = 2.85 x 10^{-3} in.^{4}, moment of inertia of the cross-section

The margin of safety is:

$$MS = \frac{S_u}{\sigma_C} - 1 = \frac{63{,}500}{53{,}063} - 1 = +\underline{0.20}$$

The Euler elastic buckling load formulation is used to determine the critical buckling load of the tube body and bottom tube. The tubes and lugs are conservatively treated as simply supported which results in an effective length that is twice the actual length, thus reducing the critical bucking load by a factor of 4.0.

Buckling of the Sealed Failed Fuel Can

Only the body tube with longer length is analyzed since the shorter one is bounded by the longer tube.

$$P_{cr} = \frac{\pi^2 EI}{L_e^{\,2}} = 35{,}324 \text{ lbs}$$

where:

E = 25.3 x 10^6 psi @ 600 °F

I = $\pi r^3 t$ = 0.8762 in^4, inertia moment of body tube

L_e = 2 x 39.35= 78.7 in, effective length (2L)

The compressive load is:

P_c = W x g = 3,576 lbs

where:

g = 60.0, dynamic load factor for the 30-foot end drop

W = 59.6 lbs, weight of can and contents

$$MS = \frac{P_{cr}}{P_c} - 1 = \frac{35{,}324}{3{,}576} - 1 = +\underline{\text{Large}}$$

Buckling of the Bottom Tube

The critical buckling load for bottom tube is:

$$P_{cr} = \frac{\pi^2 EI}{L_e^{\,2}} = 4{,}615 \times 10^3 \text{ lbs}$$

where:

E = 25.3 x 10^6 psi @ 600°F

I = $\pi r^3 t$ = 0.5591 in^4, inertia moment of body tube

L_e = 2 x 2.75 = 5.50 inches, effective length (2L)

The compressive load is:

$P_c = Wg = 59.6 \times 60.0 = 3{,}576$ lbs

where:

g = 60.0, dynamic load factor for the 30-foot end drop

W = 59.6 lbs, weight of can and contents

$$MS = \frac{P_{cr}}{P_c} - 1 = \frac{4{,}615 \times 10^3}{3{,}576} - 1 = +\underline{\text{Large}}$$

Buckling of the Lifting Lug

The critical buckling load for a lift lug is:

$$P_{cr} = \frac{\pi^2 EI}{L_e^{\,2}} = 2{,}319 \text{ lbs}$$

where:

E = 25.3 x 10^6 psi @ 600°F

I = 0.515 × $.25^3$ /12 = 6.71 ×10^{-4} in^4, inertia moment of smallest cross section

L_e = 2 x 4.25 = 8.5 in, effective length (2L)

The compressive load is:

$P_c = Wg/2 = 59.6 \times 60/2 = 1{,}788$ lbs

where:

g = 60, dynamic load factor for a 30-foot end drop

W = 59.6 lbs, weight of the can and contents

$$MS = \frac{P_{cr}}{P_c} - 1 = \frac{2,319}{1,788} - 1 = +\underline{0.30}$$

Sealed Failed Fuel Can Plate Stress Due to Side Drop

For the 30-foot side drop, the load applied to the sealed can is considered as a linearly distributed load over the bottom 120° arc. The radial pressure w_x varies linearly from 0 at beginning to w at the bottom point of the can, as shown in the figure below. The internal pressure of 168 psi is also considered to be acting on the failed fuel can.

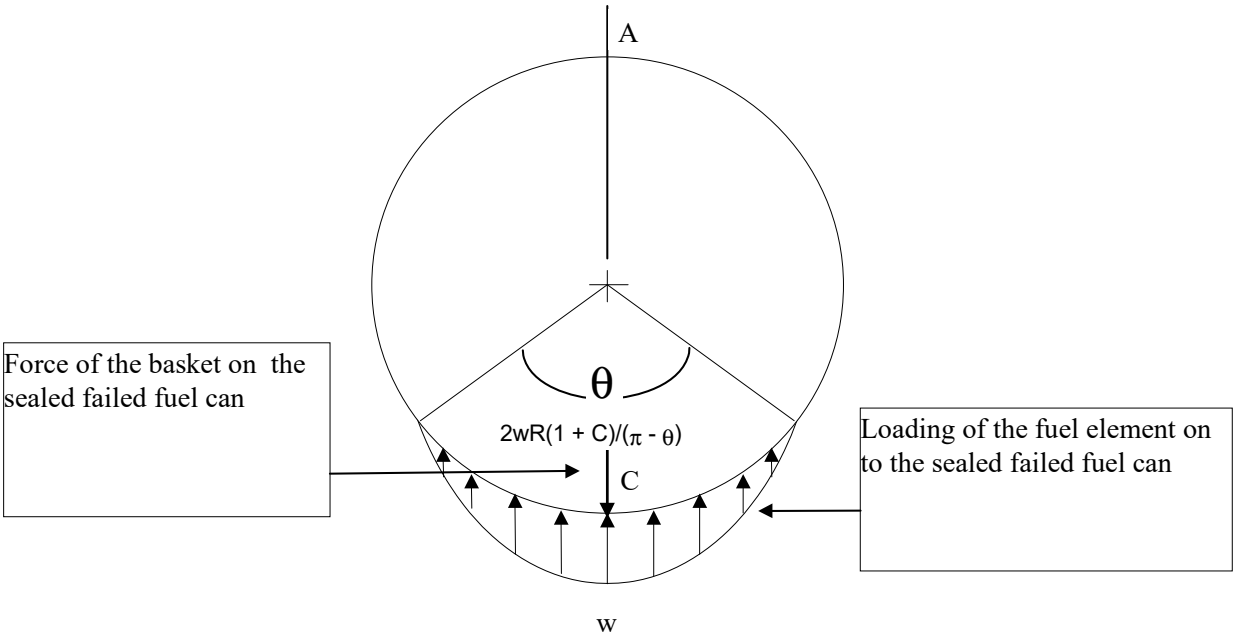

The load is uniformly distributed along the length of the can. For a unit length it can be calculated as:

For the longer can: $p = \frac{W_f \times g}{L} = 51.24 \text{ lb / in.}$

where:

W_f = 39.6 lbs, conservative fuel weight of three fuel follower control elements

g = 49.7, dynamic load factor for the 30-foot side drop

L = 38.41 inches, length of the longer body tube

For the shorter can: $p = \frac{W_f \times g}{L} = 56.29\,\text{lb / in.}$

where:

W_f = 24.4 lbs, conservative fuel weight of three fuel elements

g = 49.7, dynamic load factor for the 30-foot side drop

L = 23.31 inches, length of the shorter body tube

To bound both the longer can and short can, p = 56.29 lb/in. is used to calculate the maximum distributed load.

Since (Young, 6th Edition, Table 17, Case 13):

$$p = 2wR(1+C)/(\pi-\theta)$$

$$w = \frac{p \times (\pi-\theta)}{2R \times (1+C)} = 36.27 \text{ lb / in.}$$

where:

p = 56.29 lbs, load on this unit length of the can

θ = 120° = 2π/3, angle

C = cos (θ) = -0.5

R = 3.25/2, radius of the can

The bending moment occurring at location A and C are respectively (Young, 6th Edition, Table 17, Case 13):

$$M_A = \frac{-wR^2}{\pi(\pi-\theta)}\left\{2+2C-s(\pi-\theta)+k_2\left[1+C-\frac{(\pi-\theta)^2}{2}\right]\right\} = -2.603 \text{ in-lb}$$

$$M_C = \frac{-wR^2}{\pi(\pi-\theta)}\left\{\pi(\pi-\theta)-2-2C-s\theta+k_2\left[1+C-\frac{(\pi-\theta)^2}{2}\right]\right\} = -13.311 \text{ in-lb}$$

where:

w = 36.27 lb/in, maximum distributed load

R = 3.25/2 - 0.065/2, radius of the can

θ = 120° = 2π/3, angle

C = cos (θ) = -0.5

s = sin(θ) =0.866

$k_2 = 1 - \alpha = 1$ and $\alpha = \frac{I}{AR^2} = \frac{2.289 \text{ x } 10^{-5}}{0.6504 \times 1.593^2} = 1.388 \times 10^{-5}$

$I = \frac{1 \times 0.065^3}{12} = 2.289 \times 10^{-5}$ in^4, moment of inertia of ring cross-section

$A = \pi(1.625^2 - 1.56^2) = 0.6504$ in^2

The bending stress at location C, for a unit length, is:

$$\sigma_c = \frac{M_C}{t^2 / 6} = 18.903 \times 10^3 \text{ psi}$$

where:

M_C = 13.311 lb-in., bending moment at location C

t = 0.065 in, thickness of the sealed failed fuel canister

For the 30-foot side drop, the sealed failed fuel can needs to withstand the load applied by its contents and the pressure internal load caused by 100% fuel failure. The internal pressure is taken to be 11.4 atm, which is conservative.

Considering the sealed failed fuel can as a thin wall cylinder with an internal pressure of 168 (11.4 x 14.7) psi, the stresses in circumferential, radial and longitudinal directions are:

$$\sigma_\theta = \frac{P \times r}{t} = 4{,}200 \text{ psi}$$

$$\sigma_r = -P = -168 \text{ psi}$$

$$\sigma_Z = \frac{P \times r}{2 \times t} = 2{,}100 \text{ psi}$$

where:

P = 168 psi, pressure

r = 3.25/2 inches, radius of the can,

t = 0.065 in, thickness of the can,

Combining the stresses caused by the can contents (30 ft side drop) and internal pressure, the circumferential stress is:

$$S + \sigma_\theta = 23{,}103 \text{ psi}$$

The stress intensity is:

$$S_{int} = S + \sigma_\theta - \sigma_r = 23{,}271 \text{ psi}$$

Margin of safety:

$$\text{M.S.} = \frac{3.6\ S_m}{\sigma_C} - 1 = \frac{59{,}040}{23{,}271} - 1 = +\underline{1.54}$$

Seal Failed Fuel Can Bolt Evaluation

Bolts for the failed fuel can are qualified using worst case loading conditions. For analysis purposes, the maximum differential thermal expansion (from accident), lifting loads, and bolt preload are combined to calculate the maximum bolt stresses.

The detailed bolt evaluation is provided in Section 2.6.12.7.6.3. The analysis shows the sealed failed fuel can closure bolts are adequate for normal and accident loading conditions.

2.7.7.9.6 Borated Stainless Steel Plate Weld Stress

For the purposes of this analysis, the borated stainless steel plate is assumed to be welded along two sides to the divider plates using a 1/16-inch fillet weld. This assumption is conservative, since the borated plate is welded completely around its periphery. For the end drop condition, the only load applied on the weld is the self weight of the plate, which results in a shear stress. For side drop, the load applied on the weld is the self weight of plate, which also results in shear stress. The plate also carries the weight of the fuel, which results in compressive stress.

The welded area for one stainless steel plate is:

Parameter	Base Module	Intermediate Module	Top Module
Weight of Plate (lb)	14.44	13.64	21.61
Length of Plate (in.)	30.45	28.75	45.55
Cross-section Area (in^2)	99.27	93.73	148.49
Weld Area (in^2)	3.81	3.59	5.69

Using the smallest area, 3.59 in^2 and largest weight, 21.61 lbs, the accident condition shear stress is:

$$S_{se} = \frac{g \times W}{A} = 361.17 \text{ psi}$$

where:

g = 60.0, 30-foot end drop load factor

W = 21.61 lbs, bounding poison plate weight

A = 3.59 in^2, bounding weld area

The allowable shear stress for accident conditions is 0.42 S_u = 26,670 psi. The margin of safety is:

$$\text{Margin of Safety} = \frac{26{,}670}{361.17} - 1 = +\underline{\text{Large}}$$

Using the smallest area, 3.59 in^2 and the largest weight, 21.61 lbs, the 30-foot side drop shear stress is:

$$S_{ss} = \frac{g \times W}{A} = 299.17 \text{ psi}$$

where:

g = 49.7, 30-foot side drop load factor

W = 21.61 lbs, bounding poison plate weight

A = 3.59 in^2, bounding weld area

The allowable shear stress for accident conditions is 0.42 S_u = 26,670 psi. The margin of safety is

$$\text{Margin of Safety} = \frac{26{,}670}{299.17} - 1 = +\underline{\text{Large}}$$

The compressive stress is evaluated using a bounding fuel cell weight of 80 lbs and the minimum cross-section area of 93.73 in^2.

$$S_c = \frac{g \times W}{A} = 42.42 \text{ psi}$$

where:

g = 49.7, the 30-foot side drop load factor

W = 80 lbs, bounding fuel cell weight

A = 93.73 in^2, bounding cross-section area

The allowable stress for accident conditions is 0.70 S_u = 44,450 psi. The margin of safety is:

$$\text{Margin of Safety} = \frac{44{,}450}{42.42} - 1 = +\underline{\text{Large}}$$

This evaluation shows that the borated stainless steel plates and welds have large margins of safety for the stresses that could occur in accident conditions.

2.7.7.9.7 TRIGA Fuel Spacer Evaluation

A spacer fabricated from Type 304 stainless steel is used in poisoned TRIGA basket Configuration 2 (base module and 4 intermediate modules). The spacer consists of 8-inch diameter pipe with a 1 inch thick plate welded to the bottom, and a 0.5 inch thick plate welded to the top. The top plate is attached to the underside of the NAC-LWT cask lid using four 1/2-inch diameter SA-193, Grade B6, bolts. The spacer has a calculated weight of 85 lbs.

The spacer and bolts are analyzed for the effects of a normal condition 1-foot side and end drop. The material temperatures and properties are the same as those imposed on the fuel baskets. The compression load is calculated as 192,960 lbs, which results in a calculated stress of 22,971 psi (Margin of Safety = +0.94). The stress on the bolts in combined shear and tension is 24,307 psi. All margins of safety are positive with a minimum Margin of Safety of +1.68 for the bolts in shear and tension as a result of the side drop condition.

2.7.7.9.8 TRIGA Fuel Cluster Rods 30-Foot Drop Evaluation

During the 30-foot side drop, load is transferred to the adjacent 0.75-inch outer diameter 6061-T6 aluminum insert tube. The maximum stress occurring in the 0.75-inch tube will be a bending stress due to the diametrical line loads. This evaluation was also performed for the 1-foot operational side drop using an acceleration of 24.3 g in Section 2.6.12.7.9. For the 30-foot drop, the acceleration is 49.7 g. Since the bending stress is directly proportional to the acceleration, the bending stress for the 30-foot drop is computed by applying a ratio of 49.7/24.3 to the bending stress of 3,969 psi (from Section 2.6.12.7.9), which results in a stress of 8,117 psi for the accident condition. The allowable primary stress for this accident condition is 16,800 (at 400°F), which results in a Margin of Safety of 16,800/8,117-1 or +1.07. This verifies that the aluminum tube maintains acceptable stress during the 30-foot accident condition.

2.7.7.9.9 Conclusion

Loads generated in the TRIGA fuel basket assembly in the hypothetical accident conditions result in stresses, which are below allowable limits. Analyses show that all basket bearing stresses during a postulated 30-foot side drop are less than the material ultimate strength. Column analyses demonstrate that the basket assembly is self-supporting during the postulated 30-foot end drop. The minimum margin of safety is 0.13 (Section 2.7.7.9.3). Therefore, the TRIGA fuel basket has sufficient structural integrity in the hypothetical accident conditions.

2.7.7.10 DIDO Fuel Basket Construction

The DIDO modular basket assembly consists of a top module, four intermediate modules, and a base module. The top module is 29.8 inches long and the intermediate modules are each 29.3 inches long and all have an outer diameter of 13.27 inches. The base module has a length of 29.8 inches and an outer diameter of 13.27 inches. Each module is capable of holding seven DIDO fuel assemblies. Each module is a weldment made up of a 13.27-inch diameter 1/2-inch thick base plate and two 13.27-inch diameter 1/2-inch thick support plates scalloped on the inner diameter to fit around six peripheral fuel tubes. The weldment structure, fuel tubes and base and support plates are fabricated from Type 304 stainless steel. Each fuel tube has an inner diameter of 4.01 inches and a wall thickness of 0.12 inch. The bottom of each fuel tube is welded to the 1/2-inch thick base plate. The bottom of each fuel tube has a slot at the bottom to permit water to drain from the fuel tube. The base plate supports the fuel in the end drop orientation. The base module sits on a 0.5-inch long, 10-inch diameter schedule 80S pipe that is welded to the base plate. The total weight of the DIDO basket assembly bears directly on the bottom forging of the cask through the schedule 80S pipe. The two scalloped 1/2-inch thick support plates and the base plate of each basket module provide lateral support and maintain the fuel configuration in the side drop orientation.

Heat rejection from the DIDO fuel and basket structure is augmented by six aluminum shunts, which are mechanically attached to the center stainless steel fuel tube, and two heat transfer shells, which wrap around the 6 outer fuel tubes. The heat shunts are machined to match the outer diameter of the center fuel tube and are held in place by two shunt posts and shunt retainers. The shunt post at the bottom of each basket module is assembled with a tight fit between the shunt post, shunt retainer and base plate to provide a good conductive heat transfer path. The shunt post at the top of the basket is assembled with a slotted hole in the shunt to permit unrestricted differential thermal expansion between the fuel tube and thermal shunt. The aluminum sheet heat transfer shell is held in place against the outside fuel tubes by bolting the edge of the aluminum sheet to the drain tube guide bars. The heat shunts and heat transfer shell are not structural components and are not included in the structural analysis as load carrying components. The mass of the heat shunts and heat transfer shell has been included as a load in the structural analysis.

2.7.7.10.1 DIDO Fuel Basket Cask Interface Analysis

Structural analysis of the DIDO modular fuel basket and the MTR modular fuel basket are similar. DIDO fuel baskets and MTR fuel baskets are made from the same type of stainless steel. The contact points between the basket structure and the cask inner shell and between the basket structure and cask bottom forging are similar. DIDO fuel baskets have an additional lateral support ring, reducing the side drop bearing stresses. A loaded DIDO fuel basket base

module weighs approximately 250 lbs, assuming each DIDO fuel assembly weighs 15 lbs. The bounding assembly weight accounts for the fuel assembly and tube spacer and any variations in the weight of either. Loaded top and intermediate modules weigh 247.4 lbs each. A full cask load of six DIDO basket modules represents a total contents weight of 1,487 lbs. The weight of a loaded 28-element MTR basket is 289 lbs, which bounds the loaded weight of the loaded base DIDO basket module. Therefore, the bearing stress between the basket and the cask inner shell created by the DIDO basket module is bounded by the 28-element MTR fuel basket interface analysis.

The cask contents weight for the loaded 42-element MTR basket is 2,262 lbs, which bounds the cask contents weight of 1,487 lbs for the loaded DIDO basket. Therefore, the bearing stresses between the basket and cask bottom forging and between the basket and the cask lid created by the DIDO fuel baskets, are bounded by the 42-element MTR fuel basket interface analysis.

2.7.7.10.2 DIDO Fuel Basket Structural Analysis

Structural analyses of the DIDO fuel basket for the 30-foot end drop and the 30-foot side drop are performed using a finite element model, Figure 2.6.12-1 and Figure 2.6.12-2, and the ANSYS general purpose computer program. Eight node brick elements (SOLID45) are used to construct the model. Stainless steel material properties are used for each of the solid elements. The elements representing the seven 4.01-inch inner diameter tubes are joined to the base support plates at locations where the welds are specified to connect the tubes to the plates. All seven tubes are connected to the 1/2-inch thick base plate. By design, the center tube is also connected to the base plate, but it is not connected to any of the six outer tubes. In this evaluation, the center tube is not considered to have any interaction with the outer six tubes, which is conservative, particularly in the side drop orientation where the tube is cantilevered from the base plate.

DIDO Fuel Basket 30-Foot Side Drop Analysis

The 30-foot side drop analysis of the DIDO fuel basket considers the weight of the center tube and fuel to be transferred to the circular base plate. To model the interaction of the two support plates and the base plate with the 13.375-inch cask inner shell diameter, CONTAC52 elements are used. The CONTACT52 element consists of two nodes which correspond to a 3D-line element, limiting transmitted loads to compression. One node of the CONTACT52 element is located on a circular plate, while the second node represents the inner shell, and is constrained in all three degrees of freedom. This boundary condition is considered to be conservative, since it models the inner shell as a rigid surface and minimizes the angle of contact between a circular plate and the cask inner shell, resulting in a more concentrated load at the point of contact. The aluminum heat shunts and aluminum heat transfer shell are not considered to be structural

components. Inclusion of these components in the structural model is limited to their representation as lumped masses using the MASS21 element. These lumped masses are distributed along the outside of the center tube to represent the distributed weight of the heat shunt. The heat transfer shell is represented with lump masses distributed along the outer six fuel tubes at the points of contact with the heat transfer shell.

The 30-foot side drop accident condition is analyzed using an acceleration of 47.9g applied in each of three orientations: 0°, -60°, and -90° with respect to the model's X-axis. Maximum primary membrane stresses for each of the side drop orientations are shown in Table 2.7.7-1. The minimum margin of safety is calculated to be +3.7 for the -60° orientation. The maximum primary membrane plus bending stresses for each of the side drop orientations are shown in Table 2.7.7-2. The minimum margin of safety is calculated to be +0.35 for the -60° orientation.

DIDO Fuel Basket 30-Foot End Drop Configuration

For the 30-foot end drop analysis, the finite element model load orientation and boundary conditions are specified to represent axial loading and consideration of the base basket module supporting five stacked modules above it. Equivalent pressure was applied to the area inside of the fuel tube at the top surface of the base plate to represent the fuel in each of the fuel tube locations in each basket module. The weight of the five loaded fuel basket modules, which rest on the base fuel basket module, multiplied by the equivalent acceleration, is applied as an equivalent pressure to the top edges of the fuel tubes in the base module. Therefore, the total weight resting on the top of the base module is 1,237 pounds. This load was applied as a pressure load on the ends of the fuel tubes.

Total end area of tubes = $7 \times \pi/4 \times (4.25^2 - 4.01^2) = 10.9$ in^2

Equivalent pressure = 1237 lbs/10.9 in^2 = 113.5 psi

The end drop finite element model reflects the base basket design shown on the drawings provided in Section 1.0. The height of the base skirt below the bottom support is 0.5 inches. Four full height drain slots are cut into the base skirt.

For the 30-foot end drop condition, the equivalent pressure load is increased to represent the maximum acceleration of 60g. The maximum primary membrane stress for the end drop orientations is 43.3 ksi (shown in Table 2.7.7-1) results in a minimum margin of safety of +0.07. The maximum primary membrane plus bending stress is 50.0 ksi (shown in Table 2.7.7-2) results in a minimum margin of safety of +0.32.

Based on these results it is concluded that the DIDO fuel basket is structurally adequate for hypothetical drop accident conditions.

Table 2.7.7-1 Maximum Primary Membrane Stress for the 30-Foot Drop

Location	Load Case 30-ft Drop	Membrane (ksi)	Allowable (ksi) [1]	Margin of Safety [2]
Fuel Tube Wall	Side @ 0 Deg[3]	9.8	46.2	3.70
Fuel Tube Wall	Side @ 60 Deg[3]	9.9	46.2	3.70
Fuel Tube Wall	Side @ 90 Deg[3]	9.6	46.2	3.80
Fuel Tube Wall	End drop	43.3[4]	46.2	0.07

Table 2.7.7-2 Maximum Primary Membrane Plus Bending Stress for the 30-Foot Drop

Location	Load Case 30-ft Drop	Membrane + Bending (ksi)	Allowable (ksi) [1]	Margin of Safety[2]
Fuel Tube Wall	Side @ 0 Deg[3]	48.3	66.0	0.37
Fuel Tube Wall	Side @ 60 Deg[3]	49.0	66.0	0.35
Fuel Tube Wall	Side @ 90 Deg[3]	45.1	66.0	0.46
Fuel Tube Wall	End drop	50.0[4]	66.0	0.32

1 $P_m \leq S_m$.
2 Margin of safety = (Allowable-Stress/Actual Stress) – 1.
3 Angle orientation shown on Figure 2.6.12-1.
4 The linearized stresses for the end drop case are scaled by the ratio of 360/178.65, which is the full arc length to arc length of the tube welded to the base plate.

2.7.7.11 General Atomics IFM Basket Construction

The General Atomics IFM basket consists of a top module assembly designed to carry two IFM FHU. Each fuel container is associated with a RERTR fuel element or HTGR fuel materials. A spacer assembly is used to permit the top module assembly to be positioned next to the transport cask lid.

The top module is 43.7 inches long and is made up of two fuel tubes and three support plates. All components are made from ASME SA240 Type 304 stainless steel. The fuel tubes have a 6.0-inch outer diameter and a 0.25-inch wall thickness. Two of the support plates are 0.50-inch thick and the third, center plate, is 1.0-inch thick. The support plates are welded to the fuel tubes with 1/8-inch bevel welds.

Two types of IFM FHU are carried by the basket. One FHU carries irradiated HTGR fuel material and is 5.25 inches in diameter (0.12-inch thick wall) and is 39.0 inches long. The other FHU contains irradiated RERTR fuel material and is 4.75 inches in diameter (0.12-inch thick wall) and is 37.25 inches long.

Each end of the FHU is comprised of a 0.25-inch thick plate welded to the container shell. The weld connecting the end plate to the container shell is labeled as a full penetration butt weld. The dimensions of the end plate and the container shell provide a minimal gap (2 mils when considering maximum tolerances) to permit the end plate to be inserted into the container end. The close tolerances ensure that the two components are effectively in contact along the 0.5-inch common interface length of the end plate and the container. Once the end plate is inserted, a fusion weld procedure is employed to weld the lip of the end plate to the wall of the container. The depth of the weld along the interface between the end plate and the container is equal to approximately 70% of the thickness of the end plate lip or the container lip.

Due to the location of the weld for the end plate, the weld does not transfer any load for the drop conditions. Additionally, since the heat loads are insignificant (13w) and the backfill for the FHU and the cask cavity is limited to atmospheric pressure, the pressure differential across the welded plates is insignificant. Each of these FHUs also has an additional smaller container, which holds the fuel. In these evaluations, the inner container is neglected.

The spacer assembly is 133.0 inches in length, excluding guide pins. The assembly is made up of one spacer tube and five support plates. The spacer tube consists of a Type 304 stainless steel 8-inch Schedule 80S pipe. The tube has an outside diameter of 8.63 inches and a wall thickness of 0.50 inch. The spacer plates are 1.0-inch thick and are welded to the tube with 1/8-inch bevel welds. Two guide pins are located at the top of the spacer assembly to facilitate alignment with the top module.

2.7.7.11.1 General Atomics IFM Basket Interface Analysis

The structural evaluation of the fuel basket assembly is performed using classical hand calculations. The weight of the top module is bounded by 200 lbs, and the maximum weight of one FHU is 76 lbs (General Atomics, April 2002). Therefore, the total weight of a loaded top module system is 200 + 2(76) or 352 lbs. The weight of the spacer assembly is 760 lbs. The total loaded system weight is 1,112 lbs, and this weight is bounded by the design basis contents weight for the LWT system. Therefore, no analysis of the LWT cask is required.

2.7.7.11.2 General Atomics IFM Basket Structural Analysis

Structural analyses for the General Atomics basket for the 30-foot end drop and 30-foot side drop are performed using classical hand calculations.

General Atomics 30-Foot Side Drop Analysis

Top Module:

Using the 1 g bending stress, 26 psi, calculated in the subsection titled "General Atomics Top Module Structural Analysis," the margin of safety for a 30-foot side drop is:

$$MS = \frac{S_u}{S_b} - 1 = \frac{65200}{55 \times 26} - 1 = +\text{Large}$$

During a side drop, the top and bottom support plate welds are in shear. Using the stress in the weld for 1g, 26.4 psi, calculated in the subsection titled "General Atomics Top Module Structural Analysis," and the visual inspection weld factor, the margin of safety for shear, 30-foot side drop (55 g), is:

$$MS = \frac{0.25 \times 0.42 S_u}{55S} - 1 = \frac{0.25 \times 0.42 \times 65{,}200}{55 \times 26.4} - 1 = +3.71$$

Spacer Assembly:

Using the 1g bending stress, 31 psi, calculated in the subsection titled "General Atomics Top Module Structural Analysis," the margin of safety for bending during a 30-foot side drop is:

$$MS = \frac{S_u}{S_b} - 1 = \frac{65{,}200}{55 \times 31} - 1 = +\text{Large}$$

During a side drop, the top support plate weld is in shear. From the subsection titled "General Atomics Top Module Structural Analysis," the weld shear stress for a 1 g loading is 31 psi. Using a 0.25-inch weld quality factor, the margin of safety for a 30-foot side drop is:

$$MS = \frac{0.25 \times 0.42 S_u}{55S} - 1 = \frac{0.25 \times 0.42 \times 65{,}200}{55 \times 31} - 1 = +3.0$$

Fuel Handling Unit (FHU):

The FHUs are analyzed in accordance with ASME Section III, Subsection NG. From the subsection titled General Atomics Top Module Structural Analysis, the stress in the FHU for a 1g side drop is 0.63 ksi. For a 30-foot side drop, the margin of safety is

$$MS = \frac{S_u}{55S} - 1 = \frac{65.2}{55 \times 0.63} - 1 = +0.88$$

Because the internal and external pressures on the container are essentially identical, no additional ASME Section III, Subsection NG analysis is required.

General Atomics 30-Foot End Drop Analysis

Top Module:

During an end drop, the stress in the fuel tubes is 22 psi for a 1 g end drop (see subsection titled General Atomics 1-Foot End Drop Analysis). The margin of safety for a 30-foot end drop is:

$$MS = \frac{0.7S_u}{60S} - 1 = \frac{0.7 \times 65{,}200}{60 \times 22} - 1 = +\underline{\text{Large}}$$

Since the stress in the tubes is significantly below yield, no buckling evaluation is required.

During an end drop, the stress in the support plate weld for a 1g end drop is 6.0 psi (see subsection titled "General Atomics 1-Foot End Drop Analysis"). For a 30-foot end drop, the margin of safety in the weld is:

$$MS = \frac{0.25 \times 0.6S_m}{20S} - 1 = \frac{0.25 \times 0.6 \times 19{,}350}{20 \times 6} - 1 = +\underline{\text{Large}}$$

Spacer Assembly:

During an end drop, the stress in the tube for a 1 g end drop is 87 psi. For a 30-foot end drop, the margin of safety is:

$$MS = \frac{0.7S_u}{60S} - 1 = \frac{0.7 \times 65{,}200}{60 \times 87} - 1 = +\underline{\text{Large}}$$

Since the stress in the tube is significantly below yield, no buckling evaluation is required.

During a 1 g end drop, the stress in the support disk weld is 5.2 psi. Since the weld stress is less than the weld stress in the top module support disk, no additional analysis is required.

Fuel Handling Unit:

During a 30-foot end drop, the stress in the tube is:

$$S = \frac{60 \times 76}{1.62} = 2.8 \text{ ksi}$$

$$MS = \frac{0.7S_u}{S} - 1 = \frac{0.7 \times 65.2}{2.8} - 1 = + \underline{\text{Large}}$$

Since the stresses in the tube are significantly below the yield stress allowable, no buckling evaluation is required.

2.7.7.12 TPBAR Basket Analysis

The TPBAR basket is a modified NAC-LWT PWR basket that has had material removed to increase free volume in the cask cavity. The cylindrical basket is fabricated from 6061-T651 aluminum alloy. A central opening, 8.82 inches square, extends the length of the basket and provides lateral support for the two TPBAR content conditions: the TPBAR consolidation canister; and the TPBAR waste canister. A 13.25-inch outside diameter, 8.25-inch long stainless steel upper fitting is bolted to the top of the basket body. This fitting provides lifting points for installation and removal of the basket from the cask. Additionally, this fitting prevents the basket from applying load to the TPBAR consolidation canister or waste container during the top-end drop. The lifting bail for both the consolidation canister and the waste container are fabricated from Type 17-4 precipitation hardened stainless steel. A second stainless steel fitting is bolted to the bottom of the basket body. The lower fitting assembly supports the fuel basket and contents longitudinally and limits movement within the cask. A TPBAR spacer assembly is bolted to the underside of the cask lid to prevent the TPBAR contents from shifting axially within the basket, and maintains the waste container rotational orientation. A groove on the periphery of the basket body provides for the cask drain tube. The drain tube is connected to a fitting on the cask body and is used to drain or fill the cask during cask loading or unloading operations.

The first TPBAR content condition is for the transport of up to 300 production TPBARs in an open (unsealed), Type 304 stainless steel consolidation canister with optional top insert. The canister is considered a nonstructural component and is only used to position the TPBARs within the basket and to handle the TPBARs during loading and unloading operations. The second content condition is for the transport of up to 55 TPBARs, which have been segmented from PIE, in a welded, Type 316L stainless steel waste container. The container is also considered a nonstructural component only used for handling the TPBAR segments and debris during cask loading and unloading operations. Therefore, for purposes of the basket structural analyses, the canister and container are both considered to fail and to not protect the contents from damage. The effects of damage to the TPBARs are evaluated in other sections of the SAR.

Once the cask lid is bolted to the cask body, the configuration of the TPBAR contents (i.e., consolidation canister or waste container) are maintained by the TPBAR basket without consideration of the strength of the canister or container. The TPBAR basket provides a boundary for support on all sides and for the full length of the contents. The TPBAR basket upper end-fitting spacer guides carry the weight of the basket and prevent the contents from being loaded by the TPBAR basket in any drop orientation. The TPBAR spacer assembly attached to the bottom of the cask lid restricts the axial movement of the contents. Therefore, no additional evaluation is required for either the TPBAR consolidation canister or the TPBAR waste container and extension. The analyses for the loaded consolidation canister weight of 1,000 lbs bounds the loaded weight of the TPBAR waste container (700 lbs).

2.7.7.12.1 TPBAR Basket Body

Structural analyses of the TPBAR basket for 30-foot end and side drops are performed using classical hand calculations.

TPBAR Basket Body 30-Foot Side-drop Analysis

The TPBAR basket body is constructed of four machined segments held together with aluminum bands at five locations along the axial length of the basket, as well as the upper and lower fittings, which are bolted to the aluminum basket. During a side drop, the TPBAR basket is subjected to bending and bearing stresses. The maximum bending stress occurs at Location 'A' shown in the following sketch and is due to the content weight. The maximum bending stress is calculated using a cantilevered beam. This is conservative since it neglects any support of the load due to the edges of the basket being supported by the cask inner shell. The maximum bending stress is:

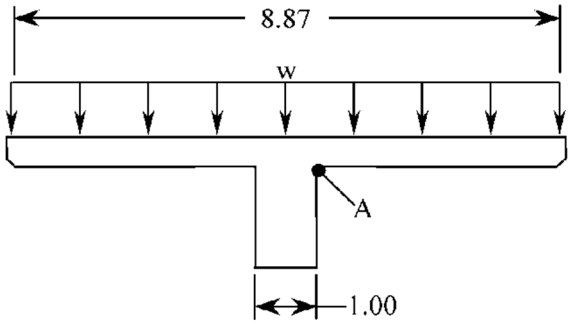

$$S_b = \frac{6M}{t^2} = \frac{6 \times 364}{0.5^2} = 8.7 \text{ ksi}$$

where:

$$M = w \times \left(\frac{b}{2} - \frac{1}{2}\right) \times \frac{1}{2}\left(\frac{b}{2} - \frac{1}{2}\right)$$

$$= 47 \times \left(\frac{8.87}{2} - \frac{1}{2}\right) \times \frac{1}{2}\left(\frac{8.87}{2} - \frac{1}{2}\right) = 364 \text{in-lb/in, the maximum bending moment}$$

$w = \frac{W_c \times g}{L \times b} = \frac{1000 \times 60}{144 \times 8.87} = 47 \text{ psi}$, the distributed load of the TPBAR consolidation canister

W_c = 1,000 lbs, bounding TPBAR canister weight (with TPBAR rods)

L = 144 inches, length of consolidation canister

b = 8.87 inches, TPBAR basket opening width

g = 60 g, side-drop acceleration

t = 0.5 in, thickness of the flange

The margin of safety is:

$$MS = \frac{S_u}{S_b} - 1 = \frac{31.5}{8.7} - 1 = +2.6$$

where:

S_u = 31.5 ksi, ultimate strength of 6061-T651 aluminum @300°F

TPBAR Basket Body 30-Foot End Drop Analysis

During end drops, the maximum compressive stress on the minimum cross- section of the basket body is:

$$S_{comp} = \frac{g \times W_b}{A} = \frac{60 \times 900}{32.26} = 1.7 \text{ ksi}$$

where:

W_b = 900 lbs, the bounding weight of the TPBAR basket

g = 60 g, accident end drop acceleration

A = $9.87^2 - 8.87^2 + 4(1.00 \times (13.25 - 9.87)) = 32.26 \text{ in}^2$, the minimum cross- sectional area of the basket

The margin of safety is:

$$MS = \frac{0.7S_u}{S_{comp}} - 1 = \frac{0.7 \times 31.5}{1.7} - 1 = +\underline{\text{Large}}$$

where:

S_u = 31.5 ksi, ultimate strength of 6061-T651 aluminum @ 300°F

2.7.7.12.2 TPBAR Basket Upper Fitting

The upper fitting of the TPBAR basket prevents the basket from loading the TPBAR contents during a top-end drop. Four spacer guides of the upper fitting fabricated from Type 304 stainless steel are provided for this purpose. The spacer guides have a length of 7.63 inches, a width of 2.0 inches, and a thickness of 1.00 inch with a 45° × 0.25-inch chamfer. A bounding weight of 900 pounds is used for the TPBAR basket. The temperature of the lid and upper region of the

NAC-LWT cask body during TPBAR shipment is conservatively assumed to be 300°F. From Chapter 3, Table 3.4-16, the maximum temperature of the TPBARs under NCT is 300°F. Therefore, a temperature of 300°F bounds the maximum temperature of the TPBAR basket for a maximum TPBAR heat load of 1.063 kW and using 300°F for the analysis of the TPBAR upper fitting is conservative.

TPBAR Basket Upper Fitting 30-foot Side Drop

During a side drop, the welds that hold the spacer guides to the top fitting are in shear and bending. The shear load on the welds is:

$$P = (b \times t \times L) \times \rho \times g = (2.0 \times 1.0 \times 7.63) \times 0.288 \times 60 = 264 \text{ lbs}$$

where:

b = 2.0 inches, spacer guide width

t = 1.0 in, spacer guide thickness

L = 7.63 inches, spacer guide length

ρ = 0.288 lb/in^3, density of Type 304 stainless steel

g = 60 g, side-drop acceleration

The welds for the spacer are ⅛-inch fillet welds on three sides. The shear stress in the welds is:

$$\tau = \frac{P}{A} = \frac{264}{0.354} = 747 \text{ psi} \approx 0.8 \text{ ksi}$$

where:

$A = 0.125 \times 0.707 \times (2.0 + 2 \times 1.0) = 0.354$ in^2, weld area

The bending moment is:

$$M = \frac{wL^2}{2} = \frac{(b \times t \times \rho \times g) \times L^2}{2} = \frac{(2 \times 1 \times 0.288 \times 60) \times 7.63^2}{2} = 1{,}006 \text{ in-lb}$$

The stress in the weld due to bending is:

$$S = \frac{M}{t \times S_w} = \frac{1{,}006}{(0.125 \times 0.707)0.56} = 20.3 \text{ ksi}$$

where:

t = weld throat

$$S_w = \frac{d^2(2b+d^2)}{3(b+d)} = \frac{1^2(2\times 2+1^2)}{3(2+1)} = 0.56 \text{ in}^2, \text{ section modulus of weld (Blodgett)}$$

The maximum shear stress, τ_{max}, in the weld that is equivalent to the stress intensity divided by two is:

$$\tau_{max} = \frac{\sqrt{S^2+4\tau^2}}{2} = \frac{\sqrt{20.3^2+4\times 0.8^2}}{2} = 10.2 \text{ ksi}$$

The margin of safety is:

$$MS = \frac{0.5\times S_u}{SI} - 1 = \frac{0.5\times 66.0}{10.2} - 1 = +2.2$$

where:

S_u = 66.0 ksi, ultimate strength of Type 304 stainless steel @ 300°F

TPBAR Basket Upper Fitting 30-Foot Top-End Drop

For a top-end drop, the weight of the TPBAR basket will load the four spacer guides. The membrane stress in the spacer guide is:

$$S = \frac{W_b\times g}{A} = \frac{900\times 60}{(2.0\times 1.0)\times 4} = 6.8 \text{ ksi}$$

where:

W_b = 900 lbs, bounding TPBAR basket weight

A = $(2.0 \times 1.0) \times 4 = 8$ in^2, cross-sectional area of the spacer guide

g = 60 g, end-drop acceleration

The margin of safety is:

$$MS = \frac{0.7\times S_u}{S} - 1 = \frac{46.2}{6.8} - 1 = +5.8$$

where:

S_u = 66.0 ksi, ultimate strength of Type 304 stainless steel @300°F

The critical buckling load for the spacer is determined by using Euler's buckling equation. The critical buckling load is:

$$W_{cr} = K_c \frac{EI}{L^2} = 2.47 \frac{27 \times 10^6 (0.1667)}{7.63^2} \approx 190.9 \text{ kip}$$

where:

E = 27×10^6 psi, modulus of elasticity of Type 304 stainless steel @ 300°F

K_c = 2.47, buckling constant (Blake, Table 10.3)

I = $\frac{bt^3}{12}$ = 0.1667 in^4, minimum moment of inertia for cross-section

b = 2.0 inches, spacer guide width

t = 1.0 in, spacer guide thickness

L = 7.63 inches, length of spacer guide

The margin of safety against buckling of the four spacer guides is:

$$MS = \frac{190{,}900}{60 \times 900/4} - 1 = +\underline{\text{Large}}$$

2.7.7.12.3 TPBAR Basket Lower Fitting

The TPBAR basket lower fitting is identical to the bottom fitting of the PWR basket. The weight of the loaded TPBAR basket is less than the weight of the loaded PWR basket. Therefore, additional analyses are not required.

2.7.7.12.4 TPBAR Spacer

The TPBAR spacer is designed to maintain the location of the TPBARs during transport and to prevent the consolidation canister from loading the TPBAR contents during a top-end drop. The spacer is constructed of a circular base plate, two triangular spacer bases, two tubes, and two triangular top plates. The circular base plate is used to attach the spacer to the lower surface of the NAC-LWT cask closure lid. The circular base plate is attached with Type 304 stainless steel bolts. The two triangular spacer bases are bolted to the circular base plate. The tubes, constructed of 3-inch schedule 80 pipes, are welded to the spacer base and the triangular top plates that provide the interface with the TPBARs. The triangular top plates are arranged to form a square that fits inside the consolidation canister. A gap between the triangular top plates

provides a recess to accommodate the lifting bail of the canister and container. The weight of the spacer assembly is bounded by 115 pounds. The bounding weight of the consolidation canister is 184 lbs (978 lbs when loaded with 300 TPBARs). During top-end drop conditions, the weight of the consolidation canister is carried by the bail and directly transmitted into the NAC-LWT cask lid. Therefore, only the weight of the TPBARs is supported by the spacer for top-end drop conditions. The temperature of the lid and upper region of the NAC-LWT cask body during TPBAR shipment is conservatively assumed to be 300°F. From Chapter 3, Table 3.4-16, the maximum temperature of the TPBARs under NCT is 300°F. Therefore, a temperature of 300°F bounds the maximum temperature of the TPBAR basket and spacer for a maximum TPBAR heat load of 1.063 kW and using 300°F for the analysis of the TPBAR spacer is conservative. In the case of the TPBAR waste container, the entire loaded weight of the container of 700 lbs is conservatively assumed to be supported by the spacer. This loading condition is bounded by the loading of the 794-pound maximum TPBAR weight in the consolidation canister.

TPBAR Spacer 30-foot Side Drop

Bolts

During 30-foot side-drop conditions, the weight of the spacer applies a shearing and tensile load to the bolts. The tensile load is due to the couple reacting out the moment generated by the cantilever action of the spacer. The shear stress is:

$$\tau = \frac{P}{A_t} = \frac{1{,}725}{0.1419} = 12.2 \text{ ksi}$$

where:

$$P = \frac{W \times g}{4} = \frac{115 \times 60}{4} = 1{,}725 \text{ lbs}$$

W = 115 lbs, spacer assembly weight

g = 60 g, side-drop acceleration

$$A_t = 0.7854\left(D - \frac{0.9743}{n}\right)^2 = 0.7854\left(0.5 - \frac{0.9743}{13}\right)^2 = 0.1419 \text{ in}^2$$, tensile area of bolt thread with ultimate strength up to 100 ksi

For ½-13UNC bolts (Machinery's Handbook):

n = 13, number of threads per inch

D = 0.50 in, bolt diameter

Kn_{max} = 0.434 in, maximum minor diameter of internal thread

Es_{min} = 0.4435 in, minimum major diameter of external thread

En_{max} = 0.4565 in, maximum pitch diameter of internal thread

Ds_{min} = 0.4876 in, minimum major diameter of external thread

L_e = 1.0 in, thread engagement

The bolt tensile load is:

$$P = \frac{M}{d} = \frac{40{,}538}{2 \times 4.95} = 4{,}095 \text{ lbs}$$

d = 9.9 inches, maximum distance between bolts

$$M = \frac{wL^2}{2} \times g = \frac{\left(\frac{115}{11.75}\right)(11.75^2)}{2} \times 60 = 40{,}538 \text{ in-lb}$$, the prying moment generated by the cantilever action of the spacer

The bolt tensile stress due to the moment, M, is:

$$S = \frac{P}{A_t} = \frac{4{,}095}{0.1419} = 28.9 \text{ ksi}$$

The membrane stress intensity on the bolt is:

$$SI = \sqrt{S^2 + 4\tau^2} = \sqrt{28.9^2 + 4 \times 12.2^2} = 37.8 \text{ ksi}$$

The margin of safety is:

$$MS = \frac{0.7\, S_u}{SI} - 1 = \frac{0.7(66.0)}{37.8} - 1 = +0.22$$

where:

S_u = 66.0 ksi, yield strength of Type 304 stainless steel @ 300°F

The shear stress on the external threads is:

$$\tau = \frac{P}{A_S} = \frac{4{,}095}{0.7789} = 5.3 \text{ ksi}$$

where:

$$A_s = 3.1416 n L_e Kn_{max} \left[\frac{1}{2n} + 0.57735(Es_{min} - Kn_{max})\right]$$

$$= 3.1416(13)(1.00)(0.434)\left[\frac{1}{2(13)} + 0.57735(0.4435 - 0.434)\right]$$

= 0.7789 in^2, shear area of the bolt threads

The margin of safety is:

$$MS = \frac{0.5S_u}{\tau} - 1 = \frac{0.5(66.0)}{5.3} - 1 = +5.23$$

where:

S_u = 66.0 ksi, ultimate strength of Type 304 stainless steel @ 300°F

Spacer Welds

Using a bounding weight (W) of 25 pounds for the tube and triangular plates, the shear load on the welds is:

$$P = W \times g = 25 \times 60 = 1{,}500 \text{ lbs}$$

where:

g = 60 g, side-drop acceleration

The welds for the spacer are ¼-inch fillet weld. The shear stress in the weld is:

$$\tau = \frac{P}{t_w 0.707 \pi d} = \frac{1{,}500}{0.25 \times 0.707 \times (\pi \times 3.5)} = 772 \text{ psi} = 0.77 \text{ ksi}$$

where:

t_w = 0.25 in, weld size

d = 3.5 inches, outside diameter of 3 inch schedule 80 pipe

The stress in the weld due to bending is:

$$S = \frac{M}{t \times S_w} = \frac{12{,}630}{(0.25 \times 0.707)9.62} = 7.4 \text{ ksi}$$

where:

$M = wL = 25 \times 60 \times 8.42 = 12{,}630$ in - lb , the bending moment

$S_w = \frac{\pi d^2}{4} = \frac{\pi \times 3.5^2}{4} = 9.62 \text{ in}^2$, section modulus of the weld (Blodgett)

The maximum shear stress (τ_{max}) in the weld, which is equivalent to the stress intensity divided by two, is:

$$\tau_{max} = \frac{\sqrt{S^2+4\tau^2}}{2} = \frac{\sqrt{7.4^2+4\times0.77^2}}{2} = 3.8 \text{ ksi}$$

The margin of safety is:

$$MS = \frac{0.5S_u}{SI} - 1 = \frac{0.5\times66.0}{3.8} - 1 = +7.7$$

where:

S_u== 66 ksi, ultimate strength of Type 304 stainless steel @ 300ºF

TPBAR Spacer 30-Foot Top-End Drop

The maximum content of 300 TPBARs is retained in the consolidation canister in the shape of a square and this configuration loads the spacer tubes via the triangular top plates during top-end drop conditions. The compressive load applied to the tubes during the top-end drop is the weight of the TPBARs, 794 lbs (300 × 2.65 lb/TPBAR), times the bounding acceleration of 60 g. For this analysis, W_c = 1,000 lbs, is conservatively used. This conservatively bounds the loaded weight of the TPBAR waste container of 700 lbs.

Tube

The compressive stress in the tubes is:

$$S = \frac{W_c\times g}{A} = \frac{1000\times60}{2\times\left(\frac{\pi}{4}(3.5^2-2.9^2)\right)} = 9.9 \text{ ksi}$$

where:

A = the cross-sectional area of a 3-inch schedule 80 pipe with an outer diameter of 3.5 inches and a thickness of 0.3 inch

The margin of safety is:

$$MS = \frac{0.7S_u}{S} - 1 = \frac{46.2}{9.9} - 1 = +3.7$$

where:

S_u = 66.0 ksi, ultimate strength of Type 304 stainless steel @ 300°F

Triangular Top Plate

Referring to the dimensions provided in Figure 2.6.12-6, the pressure applied to a triangular plate is:

$$p_{TP} = \frac{1}{2} \times \frac{1000}{0.5 \times 7.43 \times 7.43} \times 60 = 1{,}087 \text{ psi}$$

The bending moment in the top plate is (see Line A in Figure 2.6.12-6):

$$M = 1{,}087 \times \left(0.5 \times 4.18^2\right) \times \left(\frac{1}{3} \times 4.18\right) = 13{,}231 \text{ in-lbs}$$

The bending stress in the plate is:

$$S = \frac{6M}{bt^2} = \frac{6 \times 13{,}231}{4.18 \times 0.75^2} = 33.8 \text{ ksi}$$

The margin of safety is:

$$MS = \frac{S_u}{S} - 1 = \frac{66.0}{11.2} - 1 = +0.95$$

where:

S_u = 66.0 ksi, ultimate strength of Type 304 stainless steel @300°F

TPBAR Spacer 30-Foot Bottom-End Drop

During the 30-foot bottom-end drop, the inertial load of the spacer is applied to the bolts that affix the spacer to the NAC-LWT cask lid and the welds used to fabricate the spacer assembly. The maximum bottom-end drop acceleration is 60 g.

Bolts

Four bolts (½-13UNC, Type 304 stainless steel bolts) hold the spacer assembly to the bottom of the NAC-LWT cask lid and six fasteners hold the two spacer bases to the circular base plate. For this evaluation, only the four spacer assembly bolts are considered since the individual bolt load is higher and the thread engagement length is shorter. Internal lid threads are not required since high- strength Helicoils are utilized. Using the spacer assembly weight of 115 lbs and an acceleration of 60 g, the critical bolt load is:

$$P = \frac{115 \times 60}{4} = 1{,}725 \text{ lbs}$$

The tensile stress is:

$$S = \frac{P}{A_t} = \frac{1{,}725}{0.1419} = 12.2 \text{ ksi}$$

The margin of safety is:

$$MS = \frac{0.7\,S_u}{S} - 1 = \frac{0.7(66.0)}{12.2} - 1 = +2.79$$

where:

S_u = 66.0 ksi, ultimate strength of Type 304 stainless steel @300°F

The shear stress in the bolt thread is:

$$\tau = \frac{P}{A_S} = \frac{1{,}725}{0.7789} = 2.2 \text{ ksi}$$

The margin of safety is:

$$MS = \frac{0.5S_u}{\tau} - 1 = \frac{0.5(66.0)}{2.2} - 1 = +\underline{\text{Large}}$$

where:

S_u = 66.0 ksi, ultimate strength of Type 304 stainless steel @ 300°F

Spacer Welds

During a 30-foot bottom-end drop (60 g), the spacer weld is loaded by the inertial load of the spacer tube and the triangular top plate (25 lbs bounding). The weld is a ¼-inch fillet weld. The weld stress is:

$$S_w = \frac{W \times g}{t(0.707)(\pi d)} = \frac{25 \times 60}{0.25 \times 0.707 \times (\pi \times 3.5)} = 772 \text{ psi} \approx 0.8 \text{ ksi}$$

where:

d = 3.5 inches, outside diameter of 3-inch schedule 80 pipe

t = 0.25 in, weld size

The margin of safety is:

$$MS = \frac{0.5S_u}{S_w} - 1 = \frac{0.5(66.0)}{0.8} - 1 = +\underline{\text{Large}}$$

where:

S_u = 66.0 ksi, ultimate strength of Type 304 stainless steel @ 300°F

2.7.7.13 ANSTO Basket Analysis

The ANSTO modular basket assembly consists of a top module, four intermediate modules, and a base module. The top and base modules are each 29.8 inches long; each of the four intermediate modules is 29.3 inches long; and all six modules have an outer diameter of 13.27 inches. Each module is capable of holding up to seven spiral fuel assemblies or MOATA plate bundles. Each module is a weldment made up of a 13.27-inch-diameter 1/2-inch-thick base plate and six 13.27-inch-diameter, 1/2-inch-thick support plates scalloped on the inner diameter to fit around six peripheral fuel tubes. The weldment structure, fuel tubes, and base and support plates are fabricated from Type 304 stainless steel. Each of the seven fuel tubes in each module has an outer diameter of 4.375 inches and a wall thickness of 0.125 inch. The bottom of each fuel tube is welded to the 1/2-inch-thick base plate. At the bottom of each fuel tube, where it is welded to the base plate, there is a 0.3-inch slot to permit water to drain from the tube. The base plate supports the fuel in the end drop orientation. The base module sits on a 0.5-inch-long, 10-inch-diameter ring that is welded to the base plate. The total weight of the ANSTO basket assembly bears directly on the bottom forging of the cask through the ring. The six scalloped 1/2-inch-thick support plates and the base plate of each basket module provide lateral support and maintain the fuel configuration in the side drop orientation.

2.7.7.13.1 ANSTO Basket Body 30-Foot Side Drop Analysis

Structural analyses of the ANSTO basket for 30-foot side and end drops are performed using classical hand calculations.

The inertia load for the LWT for a 30-foot side drop is 60 g. A conservative loading condition (Table 17, Case 1, Roark) is considered, which neglects any load distribution. Also, it is conservative to assume that there are three loaded fuel tubes acting on the top of a fuel tube since, in reality, there are only two of them. The stresses in the circumferential direction and in the longitudinal direction are added without regard to their signs. Since the circumferential direction and the longitudinal direction also correspond to the direction of the principal stresses, the addition of the two magnitudes reflects the possibility of the principal stresses being of opposite signs.

The maximum applied load to a fuel tube for the circumferential bending stress is:

$$P_s = \left(3W_{FT} + 3W\right) \times 60 = 5{,}796 \text{ lbs}$$

where:

W_{FT} = 14.2 lbs, maximum fuel tube weight

W = 18.0 lbs, maximum fuel assembly weight

The bending moment in the fuel tube is:

$$M = \frac{wRk_2}{\pi} = \frac{201 \times 2.13 \times 1.0}{\pi} = 136 \text{ in-lb/in} \qquad \text{(Table 17 Case 1, Roark)}$$

where:

$w = \frac{P_s}{L_t} = 201$ lb/in

L_t = 28.81 inches, shortest fuel tube length

R = 2.13 inches, mean radius of fuel tube

$k_2 = 1-\alpha = 1.00$

$$\alpha = \frac{I}{A \times R^2} = \frac{bt^3/12}{b \times t \times R^2} = 2.87 \times 10^{-4}$$

b = 1.0 in, unit length

t = 0.125 in, tube wall thickness

The circumferential bending stress in the fuel tube is:

$$\sigma_c = \frac{6M}{bt^2} = \frac{6 \times 136}{1 \times 0.125^2} = 52.2 \text{ ksi}$$

where:

b = 1.0 in, unit length

t = 0.125 in, tube wall thickness

The stress in the fuel tube in the longitudinal direction is calculated assuming the fuel tube acts like a beam. The maximum bending moment occurs at the top of the basket where the fuel tube acts like a cantilever beam. (The maximum moment for a cantilevered beam with a uniform loading of w (lb/in) and length (l) is $wl^2/2$, as compared to the maximum moment $wl^2/8$ for a simply supported beam.) The bending moment in the tube is:

$$M = \frac{wl^2}{2} = \frac{201 \times 4.^2}{2} = 1{,}608 \text{ in-lb}$$

where:

l = 4.0 inches, the length of the tube extending beyond the support plates

The bending stress is:

$$\sigma_l = F\frac{Mc}{I} = \frac{1{,}608 \times 2.19}{3.77} = 2.5 \text{ ksi}$$

where:

c = 2.19 inches, distance to extreme outer fiber of tube from centroid of tube

I = 3.77 in^4, tube moment of inertia

F = 2.725, factor to account for the effect of the small diameter to length ratio on bending for a cantilevered tube. This is obtained for a uniformly loaded beam in Article 7.10 in Roark.

The maximum stress in the tube is:

$$\sigma_b = 52.2 + 2.5 = 54.7 \text{ ksi}$$

The margin of safety is:

$$MS = \frac{S_u}{\sigma_b} - 1 = +0.20$$

where:

S_u = 65.6 ksi, ultimate strength, Type 304 stainless steel, 350°F

2.7.7.13.2 ANSTO Basket Body 30-Foot End Drop Analysis

The inertia load for the LWT for a 30-foot end drop is 60g. The applied load to the ANSTO basket is:

$$P = W \times 60 = 106{,}200 \text{lbs}$$

where:

W = 1,770 lbs, total weight of the loaded basket, which bounds the calculated value of 1,667 lbs

The minimum cross-sectional area is at the base of the fuel tubes where the cutouts for water drainage are located. The cross-sectional area is:

$$A = \frac{\left[\frac{\pi}{4}(D_o^2 - D_i^2) \times 6\right]}{2} + \left[\frac{\pi}{4}(D_o^2 - D_i^2) - 6 \times l_c \times t_t\right] = 5.93 \text{ in}^2$$

where:

D_o = 4.375 inches, tube outer diameter

D_i = 4.125 inches, tube inner diameter

l_c = 1.00 in, cutout length in center tube

t_t = 0.125 in, tube wall thickness

The membrane stress in the basket is:

$$\sigma = \frac{P}{A} = \frac{106{,}200}{5.93} = 17.9 \text{ ksi}$$

The margin of safety is:

$$MS = \frac{0.7S_u}{\sigma} - 1 = +1.5$$

where:

S_u = 65.6 ksi, ultimate strength, Type 304 stainless steel, 350°F

The welds between the support plates and the fuel tube, and the welds between the base plate and the fuel tube for the accident condition are qualified in Section 2.6.12.11.2

Localized buckling of a fuel tube is evaluated using the methodology presented in Blake. The critical stress is:

$$S_{CR} = E\frac{0.605 - 10^{-7}m^2}{m(1+0.004\varphi)} = 160.0 \text{ ksi}$$

where:

E = 25.7×10^6 psi, modulus of elasticity, Type 304 stainless steel, 350°F

$m = \frac{r_m}{t} = \frac{2.125}{0.125} = 17$

r_m = 2.125 inches, mean radius of fuel tube

t = 0.125 in, fuel tube thickness

$\phi = \frac{E}{S_y} = \frac{25.7 \times 10^6}{21{,}800} = 1{,}179$

S_y = 21.8 ksi, yield strength, Type 304 stainless steel, 350°F

This critical stress, which is required to result in tube buckling, is much larger than the stress of 17.9 ksi for the fuel tube during the 30-foot end drop condition. Therefore, the fuel tube remains stable during the drop.

2.7.7.14 TPBAR Basket with the PWR/BWR Rod Transport Canister

This section provides the structural analysis for the shipment of up to 25 individual TPBARs in the PWR/BWR Rod Transport Canister, the PWR insert and the TPBAR basket under accident conditions. Section 2.7.7.12 provides the structural evaluation of the TPBAR basket with 300 TPBARs, considering a slightly lower content weight (1800 lbs) than the TPBARs in the PWR/BWR Rod Transport Canister configuration (1901 lbs). The effects of the increased weight loading for the TPBAR basket are addressed in this section. The structural evaluation of the PWR/BWR Rod Transport Canister and the PWR insert is presented in Section 2.7.1.7.

TPBAR Basket Body 30-Foot Side Drop Analysis – Accident Condition

The TPBAR basket body is constructed of four machined segments that are held together with aluminum bands at five locations along the axial length of the basket, as well as the top and bottom fittings, which are bolted to the aluminum basket. During a side drop, the TPBAR basket is subjected to bending and bearing stresses. The maximum bending stress occurs at Location 'A' in the following figure and is due to the content weight. The maximum bending stress is calculated using a cantilevered beam. This is conservative since it neglects any support of the load due to the edges of the basket being supported by the cask inner shell. The maximum bending stress is:

$$S_b = \frac{6M}{t^2} = \frac{6\times542}{0.5^2} = 13 \text{ ksi}$$

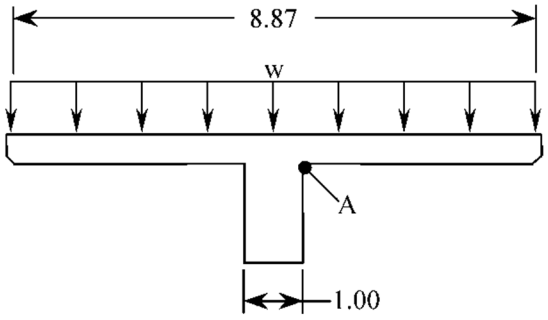

where:

$w = \frac{W_c \times g}{L \times b} = \frac{1{,}650\times60}{159.5\times8.87} = 70$ psi, the distributed load of the TPBAR consolidation canister

W_c = 1,650 lb, bounding TPBAR contents weight (with TPBARs, PWR/BWR Rod Transport Canister assembly and the PWR insert)

L = 159.5 in, loadable length of the TPBAR basket

b = 8.87 in, TPBAR basket opening width

g = 60g, side drop acceleration

$M = w \times \left(\frac{b}{2} - \frac{1}{2}\right) \times \frac{1}{2}\left(\frac{b}{2} - \frac{1}{2}\right)$

$= 70 \times \left(\frac{8.87}{2} - \frac{1}{2}\right) \times \frac{1}{2}\left(\frac{8.87}{2} - \frac{1}{2}\right) = 542$ in-lb/in, the maximum bending moment

t = 0.5 in, thickness of the flange

The margin of safety is

$$MS = \frac{S_u}{S_b} - 1 = \frac{31.5}{13} - 1 = +1.42$$

where:

S_u = 31.5 ksi, ultimate strength of 6061-T6 aluminum @300°F

TPBAR Basket – End Drop

In an end drop scenario, the basket is only loaded by its own weight. The TPBAR basket weight is bounded by what was considered for the end drop analysis of the TPBAR basket in Section 2.7.7.12.1. Therefore, the results of the previous analysis are bounding and no further analysis is required.

TPBAR Basket Upper Fitting

The TPBAR basket upper fitting is identical to what was analyzed for the TPBAR basket in Section 2.7.7.12. The TPBAR basket weight and component temperatures considered in Section 2.7.7.12 are conservative. Therefore, the results of the 2.7.7.12 are bounding and no further analysis is required.

TPBAR Basket Lower Fitting

The TPBAR basket lower fitting is identical to the lower fitting of the PWR basket. The weight of the loaded TPBAR basket is less than the weight of the loaded PWR basket. Therefore, no further analysis is required.

PWR Insert

The PWR insert contains the PWR/BWR Rod Transport Canister assembly for insertion into the TPBAR basket. The PWR insert is not a structural component and, therefore, an analysis for accident conditions is not required.

PWR/BWR Rod Transport Canister Assembly Analysis

The PWR/BWR Rod Transport Canister is identical to what was analyzed in Section 2.7.1.7. The fuel weight considered in the Section 2.7.1.7 analysis for the PWR/BWR fuel (350 lbs) bounds the weight of 25 TPBARs in the PWR/BWR Rod Transport Canister (66 lbs). Therefore, no further analysis is required for the PWR/BWR Rod Transport Canister.

Internal Spacer

The internal spacer for the PWR/BWR Rod Transport Canister is identical to what was analyzed in Section 2.7.1.7. The fuel weight considered in the Section 2.7.1.7 analysis for the PWR/BWR fuel (350 lbs) bounds the fuel weight of 25 TPBARs in the PWR/BWR Rod Transport Canister (66 lbs). Therefore, no further analysis is required for the internal spacer.

4×4 and 5×5 Inserts

The 4×4 and 5×5 inserts for the PWR/BWR Rod Transport Canister are identical to what was analyzed in Section 2.7.1.7. The fuel weight considered in the Section 2.7.1.7 analysis for the PWR/BWR fuel (350 lbs) bounds the weight of up to 25 TPBARs in the PWR/BWR Rod Transport Canister (66 lbs max.). Therefore, no further analysis is required for 4×4 and 5×5 inserts.

2.7.7.15 SLOWPOKE Fuel Canister Assembly

Evaluation of the SLOWPOKE fuel canister assembly for accident conditions of transport includes evaluation of the canister weldment and the lid assembly for both lateral (side) and longitudinal (end) 30-foot drops. Based on canister, basket, and cask drawings, the maximum gap between the canister assembly and the cask lid is 0.71" (0.15+0.56), the maximum gap between the canister insert and the canister lid is 0.5", and the maximum gap between the fuel and the lid is 1.09" (0.5+ 0.59) as shown in Table 2.7.7-3.

The 'g' load on the cask for the 30-foot end drop is calculated using the experimental 30-foot end drop force-deflection curve (Figure 2.10.12-18) of the quarter scale model of the NAC-LWT cask system. The maximum force experienced by the quarter scale NAC-LWT cask system for the 30-foot end drop is 138 kips. Therefore the maximum 'g' load on the full scale NAC-LWT cask system is:

$$G = \frac{F_Q \times C}{W} = \frac{138 \times 10^3 \times 16}{48 \times 10^3} = 46 g's$$

where:

F_Q = 138 kips, Maximum force on the quarter scale cask
W = 48 kips, Weight of the full scale NAC LWT cask (Table 2.2.1-1)
C = 16, Conversion factor between quarter and full scale model

The axial loading on SLOWPOKE fuel canister components is due to the inertial load of the components on the cask cavity end in the end drop orientation. For the 30-foot side drop, the 'g' load is taken as 60 g's (Table 2.6.7-34).

The relative velocity of the components and the cask end at the time of the contents' contact with the end is determined by performing numerical integration of the accelerations and velocities. The initial position of the fuel, the canister, and lid are assumed to correspond to the maximum gap condition (Table 2.7.7-3).

All components have an initial velocity of 527.5 in/sec, which corresponds to the terminal velocity for a free fall of 30 feet. The components continue to free fall under a 1g acceleration. The cask lid also has the same initial velocity, but a deceleration of 46 g's from Figure 2.10.12-18 (factored by 1/4) is applied to the cask lid to allow the components to contact the cask lid. Contact occurs when the gaps between the components are closed.

Table 2.7.7-4 gives the summary of the initial and cumulative gap and the relative velocity of the canister components. ANSYS is used for computing the force between the SLOWPOKE fuel canister components by modeling them as lumped mass and gap elements (compression only elements). The force obtained from the ANSYS is used in evaluating the SLOWPOKE fuel canister components. The stiffness of the components to be used in the ANSYS finite element model is calculated as follows:

The stiffness of the canister weldment is calculated as:

$$K = \frac{EA}{L} = \frac{9.54 \times 10^6 \times 2.8 \times 0.25 \times 4}{39.81} = 670{,}987 lbs/in.$$

where:

E = 9.54×10^6 psi, Elastic modulus of the aluminum at 200°F
A = $2.8 \times 0.25 \times 4 = 2.8$ in^2, Cross sectional area of the canister weldment
L = 39.81 in, Length of the canister weldment

The stiffness of the canister insert is calculated as:

$$K = \frac{EA}{L} = \frac{E \times \pi \times {(D^2 - d^2)}/{4} \times n}{L \times m} = \frac{9.54 \times 10^6 \times \pi \times {(0.5^2 - 0.402^2)}/{4} \times 25}{9.25 \times 4} = 447{,}517 \rightleftarrows lbs/in.$$

where:

D = 0.5 in, Outer diameter of the canister insert tube
d = 0.402 in, Inner diameter of the canister insert tube
L = 9.25 in, Length of the canister insert tube
n = 25, Number of insert in 5×5 matrix
m = 4, Number of 5×5 matrix insert per canister assembly

The stiffness of the fuel is calculated as:

$$K = \frac{EA}{L} = \frac{E \times \pi \times {(D^2 - d^2)}/{4} \times n}{L \times m}$$

$$= \frac{9.54 \times 10^6 \times \pi \times {(0.206^2 - 0.166^2)}/{4} \times 25}{8.66 \times 4} = 80{,}464 lbs/in.$$

where:

D = 0.206 in, Outer diameter of the SLOWPOKE fuel tube
d = 0.166 in, Inner diameter of the SLOWPOKE fuel tube
L = 8.66 in, Length of the SLOWPOKE fuel tube
n = 25, Number of fuel tubes in 5×5 matrix insert
m = 4, Number of 5×5 matrix insert per canister assembly

Table 2.7.7-3 Length and Initial Gap of SLOWPOKE Fuel Canister Assembly Components

Component	Length/Gap (inches)
LWT Cask Inner Length	177.65
Length of Four Baskets	44×3+45.5=177.5
Gap between Cask Lid and Basket	177.65-177.5=0.15
Basket Length	43.5
Total Length of Slowpoke Assembly	0.38+39.44+0.62+2.5=42.94
Gap between Basket and Slowpoke Canister Assembly	43.5-42.94=0.56
Total Gap between Slowpoke Canister and Cask Lid	0.15+0.56=0.71
Inside Length of Slowpoke Canister	39.44-0.38-0.56=38.5
Total Length of Four Canister Insert	9.5×4=38
Gap between Insert and Canister Lid	38.5-38=0.5
Length of Canister Insert	9.25
Length of Fuel	8.66
Gap between Insert and Fuel	9.25-8.66=0.59
Maximum Gap between the Fuel and Lid	.05+0.59=1.09

Table 2.7.7-4 Summary of Gap and Relative Velocity between SLOWPOKE Fuel Canister Assembly Components

Components		Gap, in	Cumulative Gap	Relative Velocity, in/s
Lid Handle	Cask Lid	0.71	0.71	160
Canister Insert	Lid Housing	0.50	0.71+0.5=1.21	210
Fuel	Lid Housing	0.59	1.21+0.59=1.8	256

Note: These velocities are calculated by the procedure described in Section 2.7.7. A complete listing of velocities and displacements for all times, up to contact, are given in Table 2.7.7-5.

Table 2.7.7-5 Summary of Gap and Relative Velocity between SLOWPOKE Fuel Canister Assembly Components Over Time

Time, s	Cask Acceleration		Cask Velocity	Cask Displacement	Canister Velocity	Canister Displacement	Relative Displacement Canister-Cask	Relative Velocity Canister-Cask
	in/s^2	g	in/s	in	in/s	in	in	in/s
Relative Velocity between Cask and Canister for Initial Gap of 0.71”								
0	17774	46	-527.5	0.00	-527.5	0.71	0.71	0.0
0.001	17774	46	-509.7	-0.52	-527.9	0.18	0.70	-18.2
0.002	17774	46	-492.0	-1.02	-528.3	-0.35	0.67	-36.3
0.003	17774	46	-474.2	-1.50	-528.7	-0.87	0.63	-54.5
0.004	17774	46	-456.4	-1.97	-529.0	-1.40	0.56	-72.6
0.005	17774	46	-438.6	-2.42	-529.4	-1.93	0.48	-90.8
0.006	17774	46	-420.9	-2.85	-529.8	-2.46	0.38	-109.0
0.007	17774	46	-403.1	-3.26	-530.2	-2.99	0.27	-127.1
0.008	17774	46	-385.3	-3.65	-530.6	-3.52	0.13	-145.3
0.0088	17774	46	-371.1	-3.95	-530.9	-3.95	0.01	-159.8
Relative Velocity between Canister Lid and Insert for Initial Gap of 1.21”								
0	17774	46	-527.5	0.00	-527.5	1.21	1.21	0.0
0.001	17774	46	-509.7	-0.52	-527.9	0.68	1.20	-18.2
0.002	17774	46	-492.0	-1.02	-528.3	0.15	1.17	-36.3
0.003	17774	46	-474.2	-1.50	-528.7	-0.37	1.13	-54.5
0.004	17774	46	-456.4	-1.97	-529.0	-0.90	1.06	-72.6
0.005	17774	46	-438.6	-2.42	-529.4	-1.43	0.98	-90.8
0.006	17774	46	-420.9	-2.85	-529.8	-1.96	0.88	-109.0
0.007	17774	46	-403.1	-3.26	-530.2	-2.49	0.77	-127.1
0.008	17774	46	-385.3	-3.65	-530.6	-3.02	0.63	-145.3
0.009	17774	46	-367.5	-4.03	-531.0	-3.55	0.47	-163.4
0.01	17774	46	-349.8	-4.39	-531.4	-4.08	0.30	-181.6
0.011	17774	46	-332.0	-4.73	-531.8	-4.62	0.11	-199.8
0.0116	17774	46	-321.3	-4.92	-532.0	-4.93	-0.01	-210.7

Table 2.7.7-5 Summary of Gap and Relative Velocity between SLOWPOKE Fuel Canister Assembly Components Over Time (Continued)

Time, s	Cask Acceleration		Cask Velocity in/s	Cask Displacement in	Canister Velocity in/s	Canister Displacement in	Relative Displacement Canister-Cask in	Relative Velocity Canister-Cask in/s
	in/s^2	g						
Relative Velocity between Canister Lid and Fuel for Initial Gap of 1.8”								
0	17774	46	-527.5	0.00	-527.5	1.80	1.80	0.0
0.001	17774	46	-509.7	-0.52	-527.9	1.27	1.79	-18.2
0.002	17774	46	-492.0	-1.02	-528.3	0.74	1.76	-36.3
0.003	17774	46	-474.2	-1.50	-528.7	0.22	1.72	-54.5
0.004	17774	46	-456.4	-1.97	-529.0	-0.31	1.65	-72.6
0.005	17774	46	-438.6	-2.42	-529.4	-0.84	1.57	-90.8
0.006	17774	46	-420.9	-2.85	-529.8	-1.37	1.47	-109.0
0.007	17774	46	-403.1	-3.26	-530.2	-1.90	1.36	-127.1
0.008	17774	46	-385.3	-3.65	-530.6	-2.43	1.22	-145.3
0.009	17774	46	-367.5	-4.03	-531.0	-2.96	1.06	-163.4
0.01	17774	46	-349.8	-4.39	-531.4	-3.49	0.89	-181.6
0.011	17774	46	-332.0	-4.73	-531.8	-4.03	0.70	-199.8
0.012	17774	46	-314.2	-5.05	-532.1	-4.56	0.49	-217.9
0.013	17774	46	-296.4	-5.36	-532.5	-5.09	0.27	-236.1
0.014	17774	46	-278.7	-5.64	-532.9	-5.62	0.02	-254.3
0.0141	17774	46	-276.9	-5.67	-532.9	-5.68	-0.01	-256.1

Note that the time where the gap of 0.71 inch between the canister and the lid would be closed is 0.0088 seconds. The relative velocity at this time is 160 in/sec. Likewise, the point where the gap of 1.21 inches becomes closed is at the time of 0.0116 seconds with a relative velocity of 210 in/sec. Finally, the point where the total gap of 1.8 inches would become closed occurs at the time of 0.0141 seconds and the relative velocity is 256 in/sec. These initial velocities are imposed on the canister weldment, the canister insert and the fuel, respectively, within the model shown in Figure 2.7.7-4.

Contact Force on the SLOWPOKE Fuel Canister Assembly Components

The force on the components due to end drop is calculated in two cases. In the first case, the force (F1) on the canister weldment and the canister lid outer edge is calculated, and in the second case the total force (F2) on the canister lid handle is calculated. The force on the lid housing is the difference of the above two forces (F3 = F2-F1). In both the cases, the cask weight is taken as 48,000 lbs (Table 2.2.1-1).

In the first case, the force developed in the canister weldment is determined using the model shown in Figure 2.7.7-2. This model contains the mass for the canister weldment assembly and cask body. The initial velocity for the contact associated with the 0.71 inch gap between the canister and cask lid is 160 in/sec from Table 2.7.7-4. The force acting on the weldment is obtained from the transient solution of two lumped mass and a contact element with stiffness K modeled between the lump masses for the canister weldment and the cask lid. The contact element is used to simulate the compression loading of the weldment onto the cask lid. Since the initial velocity of the lump mass for the canister is specified, the contact element is also specified to have a zero gap. The stiffness K for the contact element is 670,987 lb/in. The resulting force time history developed during the contact of the weldment onto the cask is shown in Figure 2.7.7-3 and shows that the peak force is F1=24, 833 pounds.

In the second case, the total contact force developed on the lid handle due to the canister weldment, canister insert, and fuel is determined using the model shown in Figure 2.7.7-4. This model contains the lumped mass for the canister weldment, insert, fuel, and cask. This model and the transient solution procedure are similar to the model in the first case except that it has additional components. The initial velocity of the canister contacting the lid (associated with the 0.71 inch gap between the canister and cask lid) is 160 in/sec. Initial gap and velocity for the insert is 1.21 inches and 210 in/sec and for fuel the initial gap and velocity are 1.8 inches and 256 in/sec respectively (Table 2.7.7-4). Gap elements (compression only elements) are modeled between the lumped masses representing the canister components and cask. The stiffness of the canister weldment, insert, and fuel tubes are 670,987 lb/in, 447,517 lb/in, and 80,464 lb/in, respectively. The resulting force time history on the canister lid developed during the contact of all the canister components on the cask is shown in Figure 2.7.7-5 and shows a peak force of F2 = 31,424 pounds. This peak force is used in evaluating the canister lid handle.

During the end drop, the insert and fuel contact the canister housing, which is mounted on the canister lid. The force on the housing is the difference of the peak forces from the above two cases. Therefore, the force on the housing is F3 = F2 - F1 = 31,424 – 24,833 = 6,591 lb. Table 2.7.7-5 gives the summary of the contact force on the canister components for the 30-foot end drop.

Table 2.7.7-6 End Drop Force on the SLOWPOKE Fuel Canister Assembly Components

Component	Contact Force, lbs
Force on canister lid due to canister weldment	F1 = 24833
Force on handle due to canister weldment, insert and fuel	F2 = 31424
Force on canister housing due to insert and fuel	F3 = F2-F1 = 6591

Figure 2.7.7-2 Mass and Gap Element ANSYS Model of the Cask and Canister Weldment

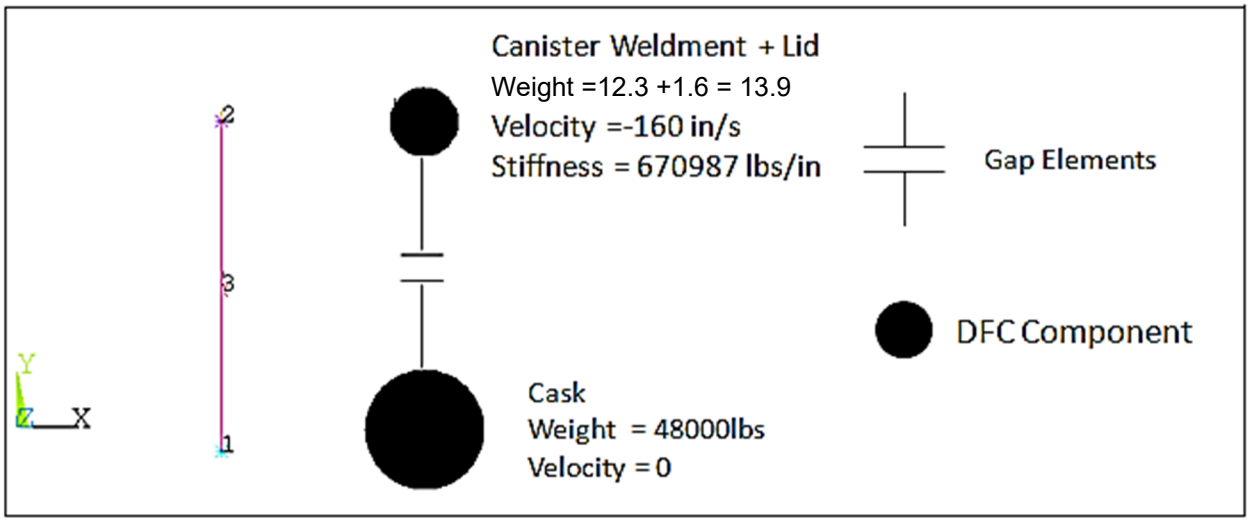

Figure 2.7.7-3 Force on the Canister Weldment for the 30-Foot End Drop

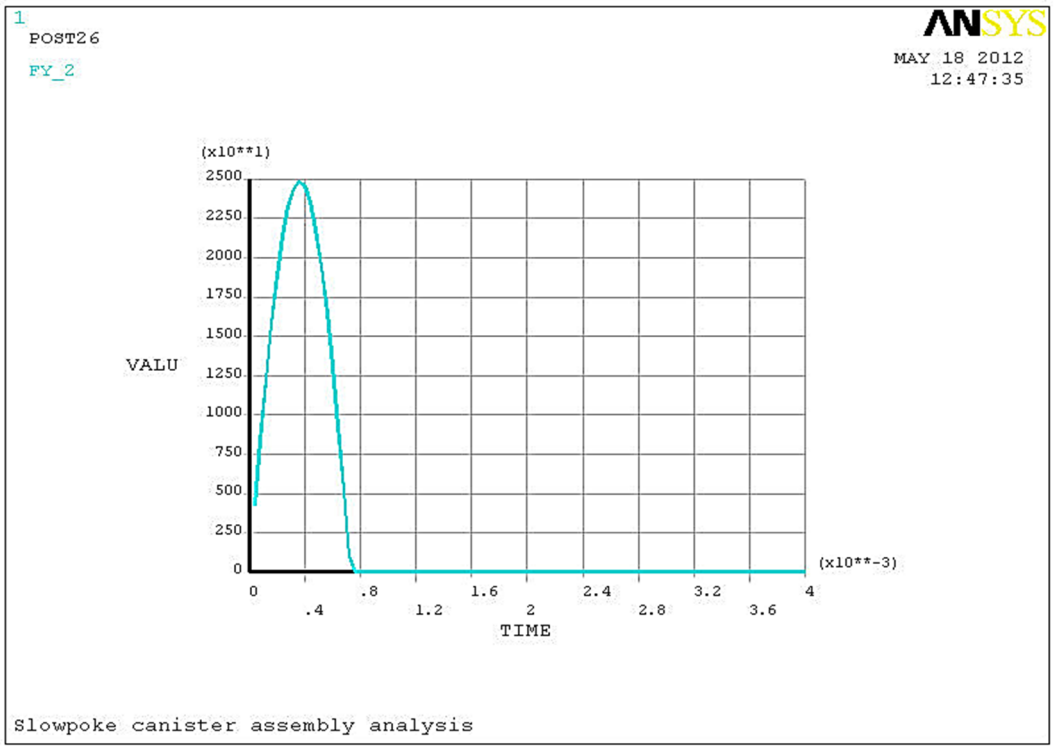

Figure 2.7.7-4 Mass and Gap Element ANSYS Model of the Cask, Canister Weldment, Insert and Fuel

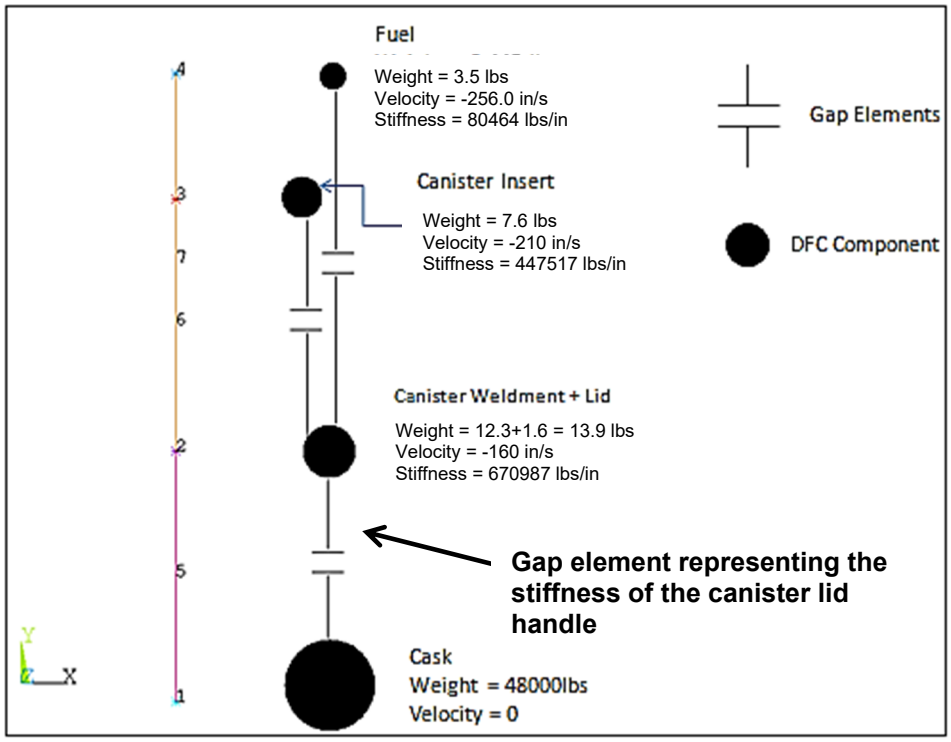

Figure 2.7.7-5 Force on the Canister Lid Handle for the 30-Foot End Drop

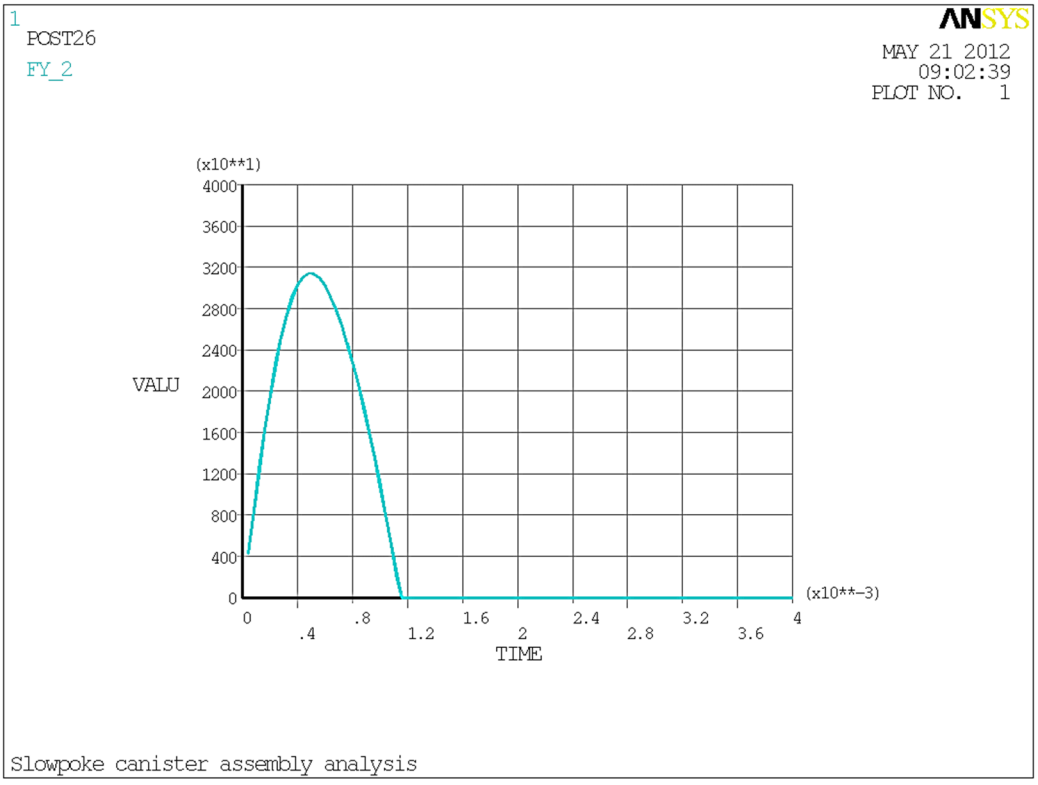

Canister Weldment

Canister weldment is a square tube constructed of four quarter inch thick aluminum plates welded along the length of the plate. The canister weldment is evaluated for longitudinal (end) and lateral (side) drops for accident conditions of transport. The area of the canister weldment is calculated near the lid where the cross sectional area is smallest. The detailed analysis of the canister weldment is given below.

Evaluation of canister weldment for end drop:

The compressive stress on the canister weldment is calculated as:

$$\sigma_c = \frac{F1}{2(A1 + A2)} = \frac{24833}{2(0.5225 + 0.4975)} = 12{,}173\ psi$$

where:

F1 = 24,833 lbs, force on the canister weldment for 30-foot drop
A1 = (2.8-0.71)×0.25=0.5225 in^2, Cross sectional area of Side wall-A
A2 = (2.8-0.81)×0.25=0.4975 in^2, Cross sectional area of Side wall-B

Margin of safety is:

$$MS = \frac{Membrane\ Allowable}{Compressive\ Stress} - 1 = \frac{25200}{12173} - 1 = +1.07$$

Buckling Analysis of canister weldment:

Column slenderness ratio separating elastic and inelastic buckling:

$$C_C = \sqrt{\frac{2\pi^2 E}{F_y}} = \sqrt{\frac{2\pi^2 \times 9.54 \times 10^6}{3.12 \times 10^4}} = 77.65$$

Slenderness ratio Kl/r:

$$kl/r = \frac{1.0 \times l}{\sqrt{I/A}} = \frac{1.0 \times 39.44}{\sqrt{3.66/2.04}} = 29.42$$

where:

E = 9.54×10^6 psi, Elastic modulus of aluminum at 200°F
F_y = 3.12×10^4 psi, Yield strength of aluminum at 200°F
l = 39.44 in, Length of canister weldment wall
I = $2\times\left(\frac{2.8\times0.25^3}{12} + 2.8\times0.25\times\left(2.8/2\right)^2\right) + 2\times\left(\frac{0.25\times2.8^3}{12}\right) = 3.66\ in^4$, Moment of inertia
A = $2\times(0.523 + 0.498) = 2.04\ in^2$, Cross sectional area

If Kl/r < C_C, then

Allowable compressive stress on the tube:

$$F_a = \frac{\left[1-\frac{(kl/r)^2}{2C_C^2}\right]F_y}{\frac{5}{3}+\frac{3(kl/r)}{8C_C}-\frac{(kl/r)^3}{8C_C^3}} = \frac{\left[1-\frac{(29.42)^2}{2\times 77.65^2}\right]3.12\times 10^4}{\frac{5}{3}+\frac{3(29.42)}{8\times 77.65}-\frac{(29.42)^3}{8\times 77.65^3}} = 16{,}089$$

Margin of safety is:

$$MS = \frac{Allowable\ Comp\ Stress}{Maximum\ Comp\ Stress} - 1 = \frac{16089}{12173} - 1 = +0.32$$

For the 30-foot side drop, the weldment wall is assumed to be fixed on all four edges.

The bending stress on the canister weldment wall is calculated as (Roark's, 7th Edition, Table 11.4):

$$\sigma_b = \frac{-\beta_1 q b^2}{t^2} = \frac{-(0.5\times 1.671\times 2.8^2)}{0.25^2} = -104.8\ psi$$

where:

β_1 = 0.5, Parameter for a/b = ∞

q = $\frac{W}{4}\times G_{S1}\times\frac{1}{A} = \frac{12.3}{4}\times 60\times\frac{1}{39.44\times 2.8} = 1.671\ psi$, Uniformly distributed load

W = 12.3 lbs, Weight of the canister weldment

G_{S1} = 60 g, 30-foot side drop 'g' load

A = 39.44×2.8 = 110.43in^2, Area of the weldment wall

Margin of safety is:

$$MS = \frac{Bending\ Allowable}{Compressive\ Stress} - 1 = \frac{36710}{104.8} - 1 = +Large$$

Canister Lid

The canister lid is a one-inch thick aluminum plate which closes the top end of canister weldment. The lid assembly includes the lid plate, handle, housing, latch, and handle cap screw. In the 30-foot end drop, the canister lid experiences bending due to the canister insert inertial loading and shearing or puncturing from the lid handle and also by a shear load applied at the lid outer edges. The bending stress on the canister lid is evaluated using ANSYS for accident condition of transport. Figure 2.7.7-6 shows the quarter scale shell model of the canister lid with loads on each portion of the lid. In the FE model of the lid, the handle load (F2= 31,424 lbs) is applied on the area representing the handle location, the canister weldment load (F1 = 24,833 lbs) is applied on the lid plate edge and the insert and fuel load (F3 = 6,591 lbs) is applied on the

remaining part of the lid. The symmetry boundary condition is used on the inner edges of the lid. The maximum bending stress intensity on the lid is 24,247 psi. Therefore, the margin of safety is +0.51 (36,710/24,247-1).

The detailed evaluation of the lid shearing by the handle and the weldment for the accident conditions of transport is given in below.

During the 30-foot end drop, the handle can shear or puncture the canister lid. The shear stress on the lid due to the handle is:

$$\tau_{l-h} = \frac{F2}{A_1} = \frac{F2}{2(w_1 + t_1)\times 2} = \frac{31424}{2(1.0+0.65)\times 2} = 4{,}761\, psi$$

where:

F2 = 31424 lbs, Force on the canister handle for 30-foot drop
w_1 = 1.0 in, Width of the handle
t_1 = 0.65 in, Thickness of the handle

Margin of safety is:

$$MS = \frac{Shear\ Allowable}{Shear\ Stress} - 1 = \frac{18355}{4761} - 1 = +2.86$$

During the 30-foot end drop, the canister weldment will apply a shear load to the outer edges of the lid. The shear stress on the lid due to the canister weldment is:

$$\tau_{l-w} = \frac{F1}{A_2} = \frac{F1}{4w_2 t_2} = \frac{24833}{(4\times 2.75\times(1-0.38))} = 3{,}641\, psi$$

where:

F1 = 24833 lbs, Force on the canister weldment for 30-foot drop
w_2 = 2.75 in, Width of the lid at the canister weldment seating
t_2 = 1-0.38=0.62 in, Thickness of the lid at the canister weldment seating

Margin of safety is:

$$MS = \frac{Shear\ \ Allowable}{Shear\ \ Stress} - 1 = \frac{18355}{3641} - 1 = +4.04$$

Figure 2.7.7-6 Quarter Symmetry Model of the Lid

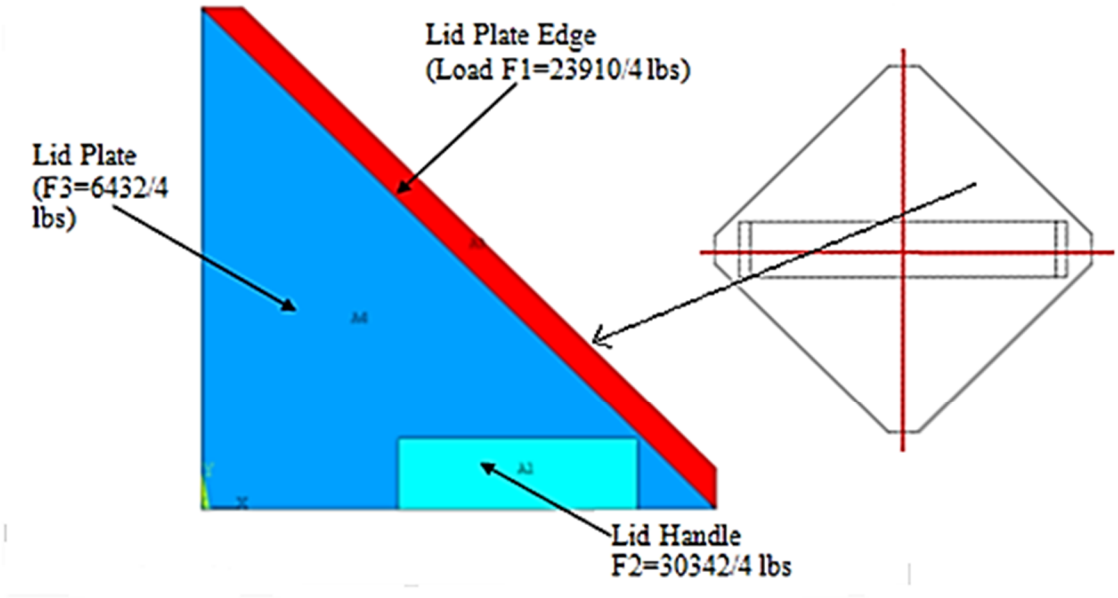

Lid Handle

The aluminum lid handle is 0.65" thick and 2.5" tall and is fastened to the lid plate using two socket head cap screws. For the end drop, the entire inertial load is transferred through the lid handle. The total force on the handle is F2 = 31,424 lbs. The handle evaluation for the accident condition of transport is given below.

For 30-foot end drop:

The membrane or compressive stress on the lid handle is calculated as:

$$\sigma_{mh} = \frac{F2}{A_3} = \frac{F2}{2 \times w_3 t_3} = \frac{31424}{2 \times 1.0 \times 0.65} = 24{,}172 psi$$

where:

F2 = 31424 lbs, Force on the canister handle for 30-foot drop
w_3 = 1.0 in, Width of the lid handle
t_3 = 0.65 in, Thickness of the lid handle

Margin of safety is:

$$MS = \frac{MembraneAllowable}{MembraneStress} - 1 = \frac{25200}{24172} - 1 = +0.04$$

Housing

The housing supports the latch and the spring mechanism; these three components keep the lid securely on the canister weldment. Figure 2.7.7-7 shows the housing with dimensions and critical locations for evaluation. On the housing, compressive or membrane stresses are evaluated at Location MN, the stress intensity is evaluated at Location A.

For the 30-foot end drop, the canister insert, along with fuel, contacts the housing at Location RS (Figure 2.7.7-7). The load on the housing is F3 = 6,432 lbs.

The membrane stress on the housing Location MN (Figure 2.7.7-7) is calculated as:

$$\sigma_{mHo} = \frac{F3}{A_5} = \frac{F3}{2(w_5 - d)t_5} = \frac{6591}{2(0.75 - 0.38)0.75} = 11{,}876 psi$$

where:

F3 = 6591 lbs, Load on the canister housing for 30-foot end drop
W_5-d = (0.75-0.38) = 0.37 in, Width of the housing at Location MN
t_5 = 0.75 in, Thickness of the housing at Location MN

Margin of safety is:

$$MS = \frac{Membrane\ \ Allowable}{Membrane\ \ Stress} - 1 = \frac{25200}{11876} - 1 = +1.12$$

The shearing stress on the housing Location A (Figure 2.7.7-7) is:

$$\tau_A = \frac{F3/_2 \times (R)}{A_7} = \frac{F3/_2 \times (R)}{2h_1 \times 2t} = \frac{6591/_2 \times \left(0.38/_{0.75}\right)}{2 \times 0.25 \times 2 \times 0.75} = 2{,}226 psi$$

where:

F3/2 = 6591/2 = 3296 lbs, Load on each canister housing for the 30-foot end drop

R = Ratio of load on the curved section

$$= \frac{\text{Thickness of curved section (Length AA)}}{\text{Thickness of housing (Length RS)}} = \frac{0.38}{0.75} = +0.51$$

(Note: R = 0.51, Half of the load on the housing is conservatively applied on the curved section of the housing)

h_1 = 0.25 in, Height of the housing at Location A

t = 0.75 in, Thickness of the housing at Location A

Margin of safety is:

$$MS = \frac{Shear\ Allowable}{Shear\ \ Stress} - 1 = \frac{18355}{2226} - 1 = +7.24$$

The bending stress on the housing at Location A is (assumed as beam fixed at two ends):

$$\sigma_A = M\frac{Y}{I} = \frac{W_a L^2}{12}\frac{Y}{I} = \frac{F3/_2 \times R}{L}\frac{L^2}{12}\frac{Y}{I}$$

$$= \frac{6591/_2\left(0.38/_{0.75}\right)}{0.38}\frac{0.38^2}{12}\frac{0.25/_2}{9.77\times10^{-4}} = 6{,}768\ psi$$

where:

I = $(bh_1^3/12) = (0.75\times0.25^3/12) = 9.77\times10^{-4}$ in^4, Moment of inertia at Location A

Y = 0.25/2 in, Height of the housing from mid point at Location A

L = 0.38 in, Length of the curved section of the housing (Length AA)

The stress intensity on the housing at Location A is:

$$\sigma_S = \sqrt{\sigma_A^2 + 4\tau_A^2} = \sqrt{6768^2 + 4\times2226^2} = 8{,}101\ psi$$

Margin of safety is:

$$MS = \frac{Bending\ \ Allowable}{Stress\ Intensity} - 1 = \frac{36710}{8101} - 1 = +3.53$$

Figure 2.7.7-7 SLOWPOKE Fuel Canister Assembly Housing

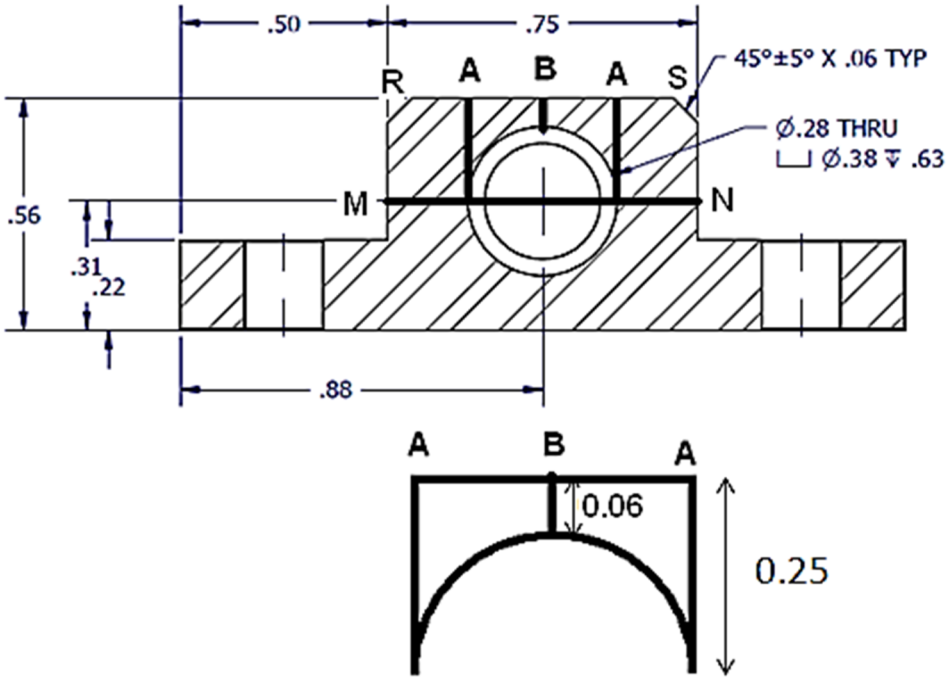

2.7.7.16 NRU/NRX Fuel Basket

Evaluation of the NRU/NRX fuel basket and spacer assemblies for accident conditions of transport includes evaluation for both lateral (side) and longitudinal (end) 30-foot drop. Each fuel tube is capable of holding a single NRU/NRX fuel assembly, or equivalent number of fuel rods, positioned inside the aluminum caddy. Note, the use of the caddy plug is not required for NRU or NRX shipments. The aluminum NRU/NRX caddy and caddy plug may also be loaded with EFN rods, Booster rods, or Moly targets. The total weight inside each fuel tube is limited to 20 pounds, which includes the weight of the aluminum caddy, caddy plug, the NRU/NRX fuel, EFN rods, Booster rods, or Moly targets and dunnage.

Top End Drop

The 'g' load on the cask for the 30 foot top end drop is 61 g.

Fuel Tube Assembly

The compressive stress on the fuel tube assembly is calculated as:

$$\sigma_c = Wg/18(A_{tube}) = 4.53 \text{ ksi for 61 g}$$

where; W = Weight of (basket assembly + 18 fuel assemblies + spacer assembly)
= 695 lbs + 30 lbs + 18(20 lbs) + 115 lbs = 1,200 lbs

Note: This is conservative since the weight of the top disk (5 lbs) is not carried by the fuel tubes in a top end drop.

and

$A_{tube} = \pi/4(OD^2-ID^2) = 0.897 \text{ in}^2$
OD = 2.5 in
ID = 2.26 in

Margin of safety:

$$MS = (0.7S_u/\sigma_c) -1 = 8.89$$

where S_u = 64 ksi for SA240, Type 304 at 400 °F

Fuel tube buckling analysis

The column length to radius ratio is;

$L/r_m = 20.5/1.19 = 17.2$

where;

L= distance between disks = 20.5 in
r_m = mean radius of fuel tube = ¼(OD+ID)

This means that the tube will not buckle as a classical Euler column, instead the buckling mode would be localized buckling (bellows or diamond pattern). For this mode of buckling, the critical compressive shape is given by;

$$S_{cr} = E\frac{0.605 - m^2 x 10^{-7}}{m(1 + 0.004\phi)} = 264.1 \text{ ksi}$$

where;

$E = 26.5 \times 10^6$ psi for SA240, Type 304 at 400 °F
$S_y = 20.7$ ksi for SA240, Type 304 at 400 °F
$ø = E/S_y = 1{,}280$
$m = r_m/t = 9.92$
$r_m = 1/2(OD/2+ID/2) = 1.19$ in
$t = 1/2(OD-ID) = 0.12$ in

Margin of safety:

$$MS = (S_{cr}/ \sigma_c) -1 = \text{large}$$

Note: All margins of safety greater than 10 are reported as large.

Support Disk to Tube Welds

The welds for the support disks are evaluated for normal conditions of transport in Section 2.6.12.14.

The primary stress in these attachment welds is shear.

$$\tau = Wg/A_{eff} = 0.22 \text{ ksi for 61 g}$$

where:

W = middle disk weight = 5 lbs
$A_{eff} = 12[2(60/360)(\pi D_{tube})(t_{eff})] = 1.39$ in^2
$D_{tube} = 2.5$ inch
$t_{eff} = 0.7071(1/16) = 0.0442$ in

Margin of safety:

$$MS = (0.42S_u/ \tau) -1 = \text{large}$$

where:

$S_u = 64$ ksi for SA240, Type 304 at 400 °F

Center Tube to Bottom Disk Weld

The center tube assembly attachment weld is evaluated in Section 2.6.12.14 for normal conditions of transport.

The primary stress in these attachment welds is shear.

$\tau = Wg/A_{eff} = 3.22$ ksi for 61 g

where;

W = center tube assembly weight = 56 lbs
$A_{eff} = 2(\pi D_{center\ tube})(t_{eff}) = 1.06$ in^2
$D_{tube} = 1.9$ inch
$t_{eff} = 0.7071(1/8) = 0.0884$ in

Margin of safety:

$MS = (0.35 \times 0.42S_u/\tau) - 1 = 1.92$

where $S_u = 64$ ksi for SA240, Type 304 at 400 °F
0.35 = weld quality factor for visual inspection, ASME Section III Subsection NG, Table 3352-1.

Basket Tube End Cap to Bottom Disk Weld

The basket tube end cap is welded to the base disk with a 3/16 fillet weld around the circumference. However, the end cap fits inside of a hole in the base disk so this weld would not be loaded significantly by the top end drop. The reaction load for the top end drop would be carried primarily by bearing between the end cap and the base disk.

Basket Lid Assembly

The basket lid assembly is evaluated in Section 2.6.12.14. A complete discussion and illustration of the FEA model used to evaluate the basket lid assembly is given in that section.

The linearized membrane stress and membrane plus bending stress for a 1 g load from section 2.6.12.14 are 281 psi and 676 psi, respectively. Since this is a linear model, these stresses can be scaled. Therefore, for a 61 g load;

$P_m = 17.1$ ksi
$P_m + P_b = 41.2$ ksi

Margin of safety:

$MS_m = (0.7S_u/P_m) - 1 = 1.62$

$MS_{m+b} = (1.0S_u/P_m+P_b) -1 = 0.55$

where S_u = 64.0 ksi for SA240, Type 304 at 400 °F

Lid Collar Tube

The lid collar tube is attached to the top of the basket lid. The lid collar tube is also subjected to compressive stress in the top end drop:

$\sigma_c = Wg/A_{collar\ tube}$ = 24.6 ksi for 61 g

where;

W = Weight of (basket assembly + basket lid assembly + 18 fuel assemblies + spacer assembly)
= 695 lbs + 30 lbs + 18(20 lbs) = 115 lbs = 1,200 lbs

$A_{collar\ tube} = \pi/4(OD^2-ID^2) = 2.97\ in^2$

for

OD = 8.0 in
ID = 7.76 in

Margin of safety:

$MS = (0.7S_u/\sigma_c)-1 = 0.82$

where S_u = 64 ksi for SA240, Type 304 at 400 °F

Bottom Support Disk

This disk will only support the weight of the spacer assembly (115 lbs) for the top end drop whereas it will support the total weight of the basket assembly, the basket lid assembly and the 18 fuel assemblies (1,085 lbs) in the bottom end drop case. Therefore, the bottom end drop will be controlling for the bottom support disk.

Spacer Assembly

For the top end drop the spacer assembly is only subjected to its own weight. However, in the bottom end drop the spacer assembly will have to carry the weight of the basket assembly and fuel assemblies. Therefore, the bottom end drop will be controlling for the spacer assembly.

Fuel Caddy

The fuel assembly may be contained in an aluminum caddy. The caddy consists of a cylinder with an end cap on the bottom. The cylinder has a 2.0-inch outer diameter and a 0.065-inch wall thickness and is constructed from 6061-T6 aluminum.

The only loading that the caddy will experience is its own weight of 5 lbs during the bottom end drop.

The compressive stress on the fuel caddy is calculated as:

$\sigma_c = Wg/A_{net} = 1.1$ ksi for 61 g

where; W = Weight of fuel caddy = 5 lbs

$A_{net} = \pi/4(OD^2-ID^2)[360-2\theta)/360] = 0.334$ in^2

OD = 2.0 in

ID = 2.0-2(0.065) = 1.87 in

and

$\Theta = 2\ Sin^{-1}\ (L/2r) = 53.5°$

where; L = 0.9 in (lateral width of cut-out in caddy wall) and r = OD/2

Margin of safety:

$MS = (0.7S_u/\ \sigma_c)-1 =$ large

where; $S_u = 16.8$ ksi for 6061-T6 aluminum at 400 °F

Bottom End Drop

The acceleration for a 30 foot bottom end drop is 61 g.

Fuel Tube Assembly

The compressive stress on the fuel tube assembly is less than the top end drop since only the weight of the basket assembly and the basket lid assembly is supported in this case.

where; W = Weight of basket assembly + Weight of basket lid assembly = 695 lbs + 30 lbs = 725 lbs

Since this is less than the weight of 1,200 lbs supported by the tubes in the top end drop, the top end drop is controlling.

Support Disk to Basket Tube Welds

The load on these welds is the same for the bottom end drop as the top end drop therefore the shear stress would be the same.

Center Tube to Bottom Disk Weld

The center tube assembly consists of a cylindrical tube attached to the bottom support disk. This weld was evaluated in Section 2.6.12.14 for normal conditions of transport.

The primary stress in these attachment welds is shear.

$\tau = Wg/18A_{eff} = 5.73$ ksi for 61 g

where;

W = basket + lid + fuel assemblies – bottom disk

= 695 lbs + 30 lbs +18(20 lbs) – 15 lbs = 1,070 lbs

$A_{eff} = (\pi D_{bottom\ disk\ opening})(t_{eff}) = 0.845\ in^2$

$D_{bottom\ disk\ opening} = 1.52$ inch

$t_{eff} = 0.7071(3/16) = 0.1326$ in

Margin of safety:

$MS = (0.35 \times 0.42S_u/\tau) - 1 = 3.69$

where $S_u = 64$ ksi for SA240, Type 304 at 400 °F

0.35 = weld quality factor for visual inspection, ASME Section III Subsection NG, Table 3352-1.

Basket Lid Assembly

The basket lid assembly will not experience any significant loading in the bottom end drop.

Bottom Support Disk

The bottom support disk was evaluated in Section 2.6.12.14 with a FEA model. A complete discussion of the FEA model is discussed and illustrated in Section 2.6.12.14.

The membrane stress and membrane plus bending stress for a 1 g load are 351 psi and 961 psi, respectively. Since this is a linear model, these stresses can be scaled.

Therefore for a 61 g load;

$P_m = 21.4$ ksi

$P_m + P_b = 58.6$ ksi

Margin of safety:

$MS_m = (0.7S_u/P_m) - 1 = 1.09$

$MS_{m+b} = (1.0S_u/P_m+P_b) - 1 = 0.09$

where S_m = 64.0 ksi for SA240, Type 304 at 400 °F

Spacer Assembly

The spacer assembly will be subjected to its own weight plus the weight of the basket, lid and fuel assemblies.

Spacer Tube

The spacer tube will experience a compressive stress from the bottom end drop. The compressive stress is given by;

$\sigma_c = Wg/A_{spacer\ tube}$ = 24.2 ksi for 61 g

where;

W = Weight of (basket assembly + basket lid assembly + 18 fuel assemblies + spacer assembly- base disk)

= 695 lbs + 20 lbs + 18(20 lbs) = 115 lbs – 20 lbs = 1,180 lbs

$A_{spacer\ tube} = \pi/4(OD^2-ID^2)$ = 2.97 in^2

for

OD = 8.0 in
ID = 7.76 in

Margin of safety:

$MS = (0.7S_u/\sigma_c) - 1 = 0.85$

where S_u = 64.0 ksi for SA240, Type 304 at 400 °F

Spacer tube buckling analysis

The column length to radius ratio is;

$L/r_m = 23.5/3.94 = 5.96$

where:

L= distance between disks = 23.5 in

r_m = mean radius of fuel tube = ¼(OD+ID) = 3.94

This means that the tube will not buckle as a classical Euler column, instead the buckling mode would be localized buckling (bellows or diamond pattern). For this mode of buckling, the critical compressive shape is given by;

$$S_{cr} = E\frac{0.605 - m^2 x10^{-7}}{m(1+0.004\phi)} = 79.8 \text{ ksi}$$

where;

$E = 26.5x10^6$ psi for SA240, Type 304 at 400 °F
$S_y = 20.7$ ksi for SA240, Type 304 at 400 °F
$ø = E/S_y = 1280$
$m = r_m/t = 32.83$
$r_m = 1/2(OD/2+ID/2) = 3.94$ in
$t = 1/2(OD-ID) = 0.12$ in

Margin of safety:

$$MS = (S_{cr}/\sigma_c) - 1 = 2.3$$

Spacer Base Disk

The spacer base disk was evaluated in Section 2.6.12.14 for normal conditions of transport

$$\sigma_c = Wg/A_{spacer\ base} = 5.01 \text{ ksi for } 61 \text{ g}$$

where;

W = Weight of (basket assembly + basket lid assembly + 18 fuel assemblies + spacer assembly)

= 695 lbs + 30 lbs + 18(20 lbs) + 115 lbs = 1,200 lbs

$A_{spacer\ base} = \pi/4(OD^2-ID^2)-2(\text{slot width})(\text{tube thickness}) = 14.6 \text{ in}^2$

OD = 10.75 in
ID = 9.75 in
Slot width = 0.75 in
Tube thickness = ½(OD-ID) = 0.5 in

Margin of safety:

$$MS = (0.7S_u/\sigma_c) - 1 = 7.94$$

where $S_u = 64.0$ ksi for SA240, Type 304 at 400 °F

Fuel caddy

The fuel caddy will only experience the self-weight of the aluminum cylinder for the bottom end drop. This weight is less than the total weight of the cylinder plus the bottom plate. Therefore the top end drop is controlling for this component.

Side Drop

The acceleration for a 30 foot side drop is 61 g.

Fuel Tube Assembly

The fuel tube assemblies were evaluated in Section 2.6.12.14 for normal conditions of transport.

From Roark, Table 3, Case 2c;

$M_{max} = wl^2/8 = 23.74$ in-lbs

where;

$w = (W_{tube} + W_{fuel})/L = 0.452$ lbs/in
$W_{tube} = 32$ lbs
$W_{fuel} = 20$ lbs
L = length of fuel = 9'7" = 115 in
l = disk spacing = 20.5 in

then the bending stress will be given by;

$\sigma_b = Mc/I = 2.85$ ksi for 61 g

where;

$c = OD_{tube}/2 = 1.25$ in
$I = \pi/64(OD^4-ID^4) = 0.369$ in^4
$OD_{tube} = 2.5$ in
$ID_{tube} = 2.26$ in

Margin of safety:

$MS = (1.0S_u/\sigma_c) -1 =$ large

where; $S_u = 64.0$ ksi for SA240, Type 304 at 400 °F

Center Tube Assembly

The center tube assembly was evaluated in Section 2.6.12.14.

From Roark 7, Table 3, Case 2c;

$M_{max} = g(wl^2/8) = 994$ in-lbs for 61 g

where;

$w = \rho A = 0.3103$ lbs/in
$\rho = 0.29$ lbs/in^3
$A = \pi/4(OD^2-ID^2) = 1.07$
$OD_{tube} = 1.90$ in
$ID_{tube} = 1.50$ in
L = length of between center locators = 20.5 in

Then the bending stress in the center tube assembly is given by;

$\sigma_b = Mc/I = 2.41$ ksi for 61 g

where;

$c = OD_{tube}/2 = 0.95$ in
$I = \pi/64(OD^4-ID^4) = 0.391$ in^4

Margin of safety:

$MS = (1.0S_u/\sigma_c) -1 =$ large

where; $S_u = 64.0$ ksi for SA240, Type 304 at 400 °F

2.7.7.17 HEUNL Container

This section provides the structural analysis of the HEUNL container, which is filled with HEUNL liquid, for accident conditions of transport. The container is constructed from ASME SA-240, type 304 stainless steel. A detailed description of the HEUNL container is given in Section 2.6.12.15.

There will be a total of 4 HEUNL containers in the LWT cask. A support spacer will be located at the bottom of the LWT cask between the bottom container and the bottom forging of the LWT cask. The HEUNL containers and the support ring are structurally evaluated with a combination of standard handbook formulas and finite element models.

2.7.7.17.1 Finite Element Models

Drop Cases Model

The finite element model (FEA) used to evaluate the accident drop cases is the same as that used for the normal conditions drop cases. This model was described in detail in Section 2.6.12.15.1. Refer to that section for a complete description.

Internal Pressure Case Model

For the fire transient, a significant internal pressure would occur. For the internal pressure case, a 30° sector of the 180° FEA model used for the drop cases was developed. Since the HEUNL container has 6 guide rails spaced 60° apart, a 30° sector is sufficient for the pressure case. The internal elements representing the HEUNL fluid was removed. This model is shown in the Figure 2.7.7-8.

Figure 2.7.7-8 Internal Pressure Case – 30° Sector Model



2.7.7.17.2 HEUNL Container 30 Foot Drop Case

The HEUNL container is evaluated for both end drops (top and bottom drops) and a side drop. An equivalent acceleration of 61 g is used to evaluate the 30 foot drops.

For each drop case, the container and the support ring FEA models are utilized. The linearized stresses are checked at 14 section locations for the container model. The sections used were shown in Figures 2.6.12-15 and 2.6.12-16, previously.

The allowable stresses are based on either S_m, which is 20.0 ksi, or S_u, which is 66.2 ksi for SA 240, Type 304 at 300 °F. The allowable stress for membrane is either 2.4 S_m or 0.7 S_u, whichever is smaller, and the allowable stress for membrane + bending is either 3.6 S_m or 1.0 S_u, whichever is smaller. For SA-240, Type 304, the lower allowable stresses are 0.7 S_u and 1.0 S_u. The pressure inside the canister is the 100 psig normal condition pressure during the accident drop.

30 Foot Side Drop

For the side drop each container rests against the inner shell of the of the LWT cask. The gap elements on the outside surface of the guide bars have two nodes. The outermost nodes are constrained in the radial, tangential and axial direction. This boundary condition represents the inner surface of the LWT cask as rigid, which is a conservative approach since this produces higher loads on the container guide rails.

For the side drop case an acceleration of 61 g is applied in the lateral (X) direction.

For the 30-foot side drop loading, the maximum membrane stress intensity from the 14 section cuts was 4.73 ksi and the maximum membrane plus bending stress intensity was 8.68 ksi. To determine the stress intensity combined with the 100 psig pressure, the maximum membrane stress intensity of 3.24 ksi and the maximum membrane plus bending stress intensity of 4.83 ksi of the 150 psig pressure case are conservativvely added to internal loading stress intensities to generate a combined value of 7.97 ksi for membrane and 13.51 ksi for membrane plus bending. This gives a margin of safety of 4.81 for the membrane stress intensity and 3.9 for the membrane plus bending stress intensity. For additional details, refer to item 1 in Section 2.7.7.17.4.

30 Foot Bottom End Drop

For the bottom end drop case, an acceleration of 61 g is applied in the vertical (Z) direction. The lowest container rests on the bottom forging of the LWT cask. The vertical acceleration accounts for the weight of the lowest container; however, the remaining 3 containers are stacked on the top of the lowest container. To account for the weight of the other three containers an equivalent pressure load is applied to the top of the FEA model of the bottom container.

The maximum membrane stress intensity from the 14 section cuts was 10.80 ksi and the maximum membrane plus bending stress intensity was 14.70 ksi. To determine the stress intensity combined with the 100 psig pressure, the maximum membrane stress intensity of 3.24 ksi and the maximum membrane plus bending stress intensity of 4.83 ksi of the 150 psig pressure case are conservatively added to inertial loading stress intensities to generate a combined value of 14.04 ksi for membrane and 19.53 ksi for membrane plus bending. This gives a margin of safety of 2.3 for the membrane stress and 2.39 for the membrane plus bending stress intensity. For additional details, refer to item 1 in Section 2.7.7.17.4.

The container wall was also evaluated for potential buckling with a standard closed form solution. The calculated critical buckling stress calculated was 119 ksi. Compared to the calculated compressive stress in the container wall of 13.22 ksi, the margin of safety is 8.00. For additional details, refer to item 1 in Section 2.7.7.17.4.

The revised support ring FEA model was utilized to evaluate this case. The maximum membrane stress intensity calculated was 16.36 ksi and the maximum membrane plus bending stress intensity was 42.8 ksi. Comparing this to the allowable stress gives a margin of safety of 1.83 for the membrane stress and 0.55 for the membrane plus bending stress. For additional details, refer to item 1 in Section 2.7.7.17.4.

30 Foot Top End Drop

For the top end drop case an acceleration of 61 g is applied in the vertical (-Z) direction. The topmost container rests on the closure lid of the LWT cask. The vertical acceleration accounts for the weight of the lowest container; however, the remaining 3 containers are stacked on the top of the lowest container. To account for the weight of the other three containers, an equivalent pressure load is applied to the bottom of the FEA model of the top container. Again the total reaction load was checked to ensure that the weight of all 4 containers was accounted for.

The maximum membrane stress intensity from the 14 section cuts was 12.23 ksi and the maximum membrane plus bending stress intensity was 14.57 ksi. To determine the stress intensity combined with the 100 psig pressure, the maximum membrane stress intensity of 3.24 ksi and the maximum membrane plus bending stress intensity of 4.83 ksi of the 150 psig pressure case are conservatively added to inertial loading stress intensities to generate a combined value of 15.47 ksi for membrane and 19.4 ksi for membrane plus bending. This gives a margin of safety of 2.0 for the membrane stress and 2.41 for the membrane plus bending stress. For additional details, refer to item 1 in Section 2.7.7.17.4.

The container wall was evaluated for potential buckling with a standard closed form solution. The calculated critical buckling stress calculated was 119 ksi. The calculated compressive stress in the container wall is 14.54 ksi; therefore, the margin of safety is 7.18. For additional details, refer to item 1 in Section 2.7.7.17.4.

Internal Pressure Case

[redacted]

Thermal Expansion

T
g [redacted]

[redacted]

2.7.7.17.3 Closure Assembly Model

Accident Condition Pressure Case

The stresses are linearized through the closure lid at two locations; 1) the center of the lid and 2) at the location of the maximum stress which is from the bottom of the counter-bore to the bottom of the lid. These paths are shown in Figure 2.6.12-20.

The accident condition pressure of 200 psi was applied to the lower surface of the closure lid from the center out to the inner diameter of the inner O-ring. The maximum stress occurs at the counter-bore for the cap screws in the lid. The linearized stresses at the two locations were checked. The maximum membrane stress was 13.67 ksi and the maximum membrane plus bending stress was 20.87 ksi. Comparing these stresses to the allowable stress gives a margin of safety of 2.39 for membrane stress and 2.17 for membrane plus bending.

The contact pressure on the inner seal is checked to ensure that full contact between the closure lid and the inner seal is maintained. This validates the assumption that the pressure load only extends to the inner radius of the inner seal.

The maximum axial bolt load calculated for the 200 psi case was 3,573 lbs. Using the thread tensile area, the bolt tensile stress calculated was 25.97 ksi. The maximum bolt moment calculated was 167.9 in-lbs. This produces a bending stress of 23.27 ksi. The combined axial plus bending stress is 49.24 ksi.

Bolt Stresses

Using an allowable stress of S_y = 93.0 ksi and S_u = 135.0 ksi for SA 705, Type 630 (17-4 PH) at 200 °F gives a margin of safety of 2.58 for the axial stress and 1.74 for axial plus bending stress.

Thread shear stress

The shear stress for the internal threads in the container is limiting since the bolt is SA 705, Type 630 and the container is SA 240, Type 304. The internal thread shear stress for a bolt load of 3,573 lbs is 3.94 ksi. Using the allowable for shear stress gives a margin of safety of 6.06.

For additional details refer to item 1 in Section 2.7.7.17.4.

2.7.7.17.4 HEUNL Structural Calculations

1. 65008500-2010, “Canister Structural Evaluation for HEUNL in the NAC-LWT”

2.7.7.18 SLOWPOKE Fuel Core Basket for the Accident Conditions of Transport

This section includes the evaluation of the SLOWPOKE basket, lid and spacer assemblies for longitudinal (end) and lateral (side) drop cases. The accelerations for the 30-foot drop cases are: an acceleration of 60 g for the end drop case, and 55 g for the side drop case.

The structural evaluation of the SLOWPOKE basket utilizes classic hand calculations.

Top End Drop

The acceleration used for the 30-foot top end drop is 60 g. The components which resist the load in a top end drop are: the lid assembly, which is subjected to the weight of the loaded SLOWPOKE basket, plus the 5 MTR spacers. For conservatism, a bounding weight of 350 pounds is used for the loaded SLOWPOKE basket. The MTR basket assemblies have a bounding weight of 200 pounds each. The actual weights of these components are less.

A summary of the calculated stresses and margins of safety for the top end drop case are given in Table 2.7.7-7. Details of the calculations are given in Item 1 of Section 2.7.7.18.1.

Table 2.7.7-7 Stress Summary for Top End Drop Case

Assembly	Component	Stress Category	Calculated Stress (ksi)	Margin of Safety
Basket	Base Plate	Bearing	N/A	N/A
	Shell	Compression	4.47	9.2
Lid	Collar	Compression	27.3	0.67
	Collar cover plate	Bearing	N/A	N/A
Spacer	Shell	Compression	0.66	68.0
	Spacer/lid(1)	Bearing	N/A	N/A
	Spacer/lid(1)	Shear	0.48	66.4

Note:
(1) The spacer assembly bears against the base plate of the lid assembly for the top end drop case.

Bottom End Drop

The top end drop is the limiting case for the SLOWPOKE basket assembly, since the basket components are only subjected to the weight of the loaded basket and will not be subjected to the weight of the empty MTR basket assemblies used as spacers below the SLOWPOKE basket. There is an increase in the bottom end drop bolt loads for the bolts attaching the basket lid spacer to the lid. However, the bolt loads for the basket lid spacer are bounded by the side drop case.

Side Drop

The acceleration used for the 30-foot side drop is 55 g. The components which resist the load in a side drop are the basket base plate and annular rings. In addition, the spacer assembly is cantilevered from the lid assembly in the side drop case, which produces bending and shear stresses in the spacer shell. This load case also produces increased bolt loads for both the socket head screws and the cone head bolts.

A summary of the calculated stresses and margins of safety for the side drop case are given in Table 2.7.7-8. Details of the calculations are given in Item 1 of Section 2.7.7.18.1.

Table 2.7.7-8 Stress Summary for Side Drop Case

Assembly	Component	Stress Category	Calculated Stress (ksi)	Margin of Safety
Basket	Shell	Bending	3.12	19.9
		Shear	0.467	26.8
	Base plate/rings	Bearing	N/A	N/A
Spacer	Shell	Bending	1.98	31.9
		Shear	0.44	78.2
Lid	Socket head screws	Tensile	20.6	0.51
		Thread shear(1)	3.13	8.5
Lid	Cone head bolts	Tensile(2)	23.39	0.80
		Thread shear(1)	7.44	5.22

Notes:
(1) Bounding thread shear stress for external/internal shear
(2) For the reduced section of the cone head bolt

2.7.7.18.1 SLOWPOKE Structural Calculation

1. NAC Calculation 50026-2001, "Structural Evaluation of the SLOWPOKE Fuel Core Basket."

2.7.7.19 SrF_2 Baskets

[redacted]

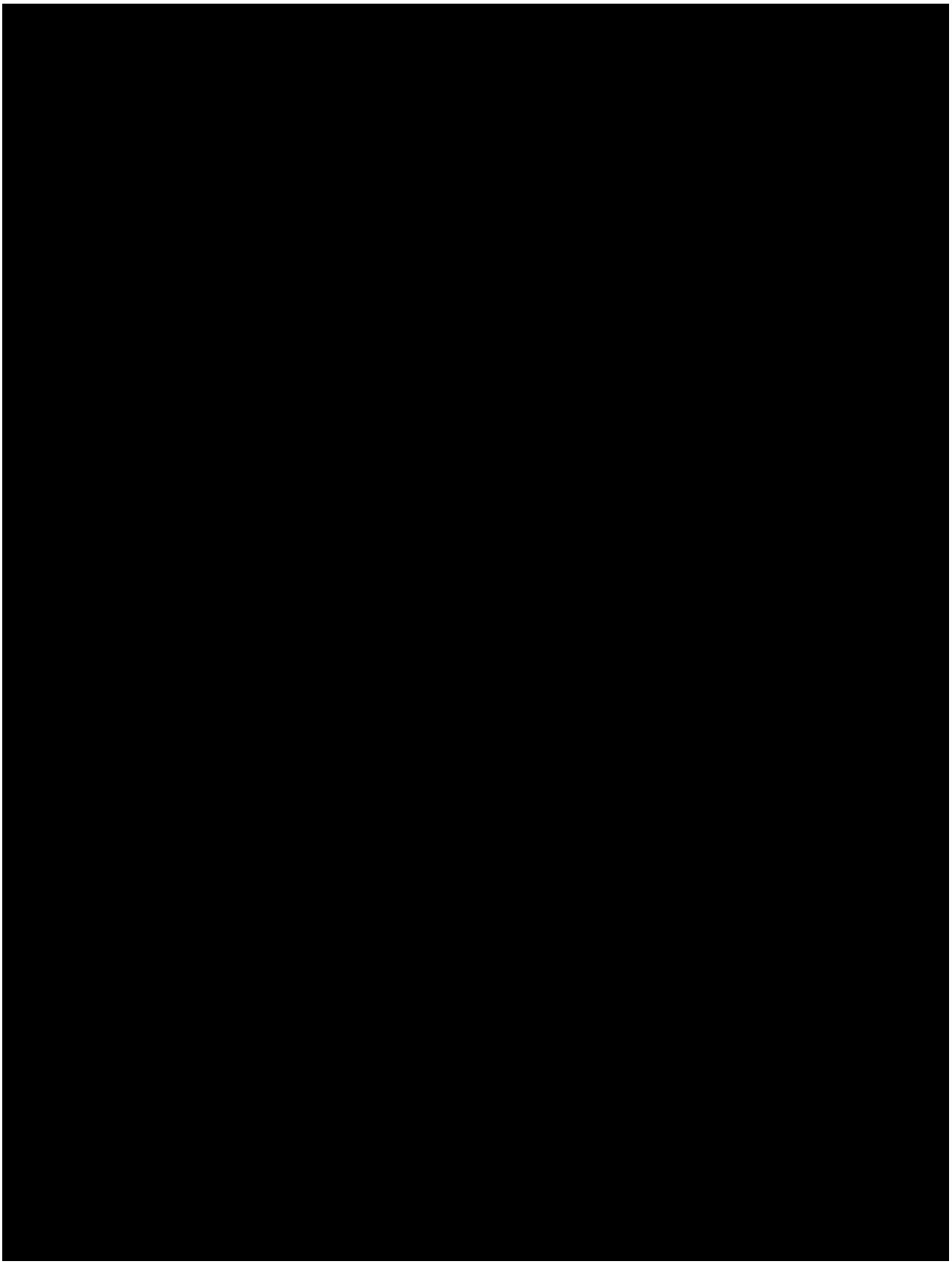

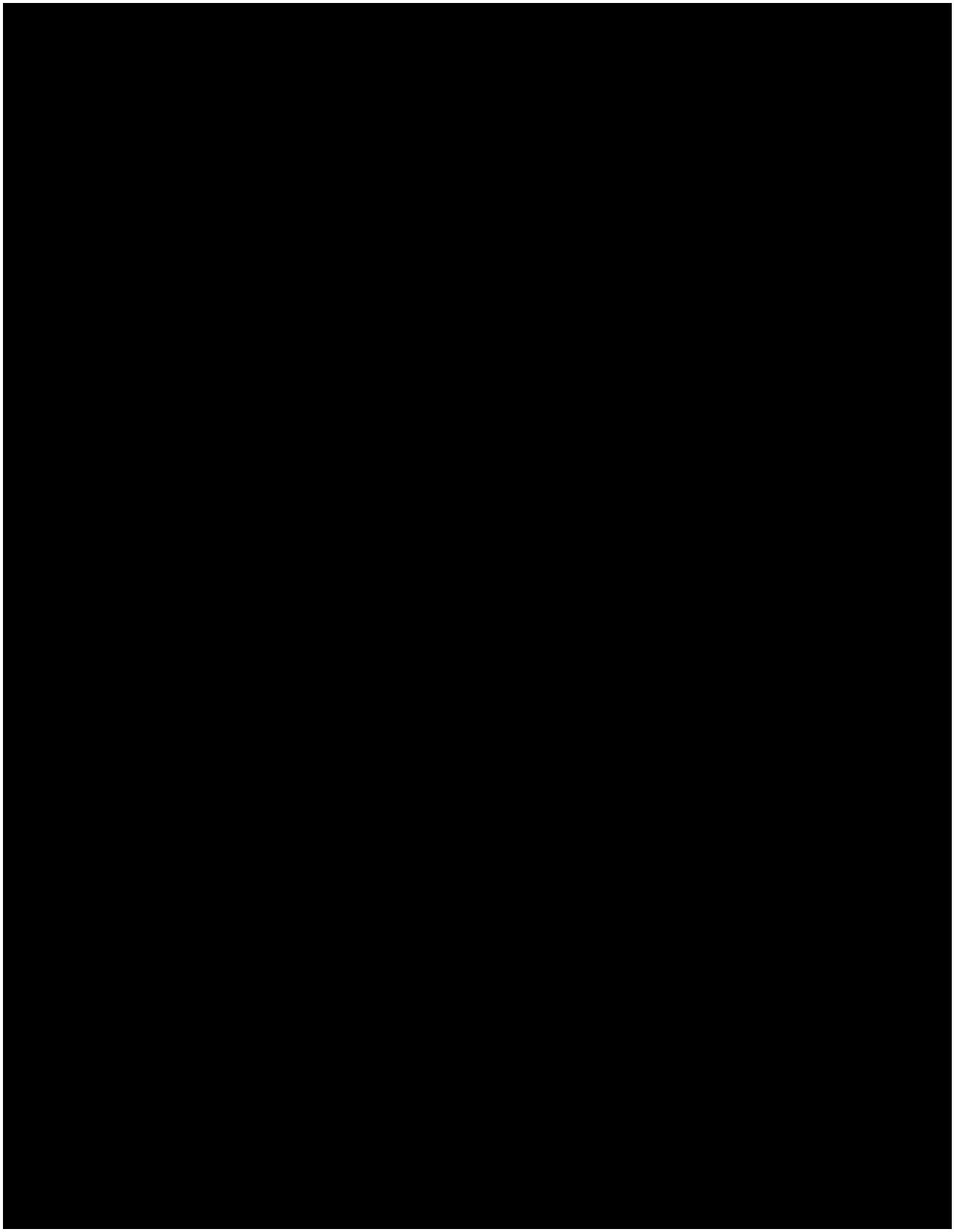

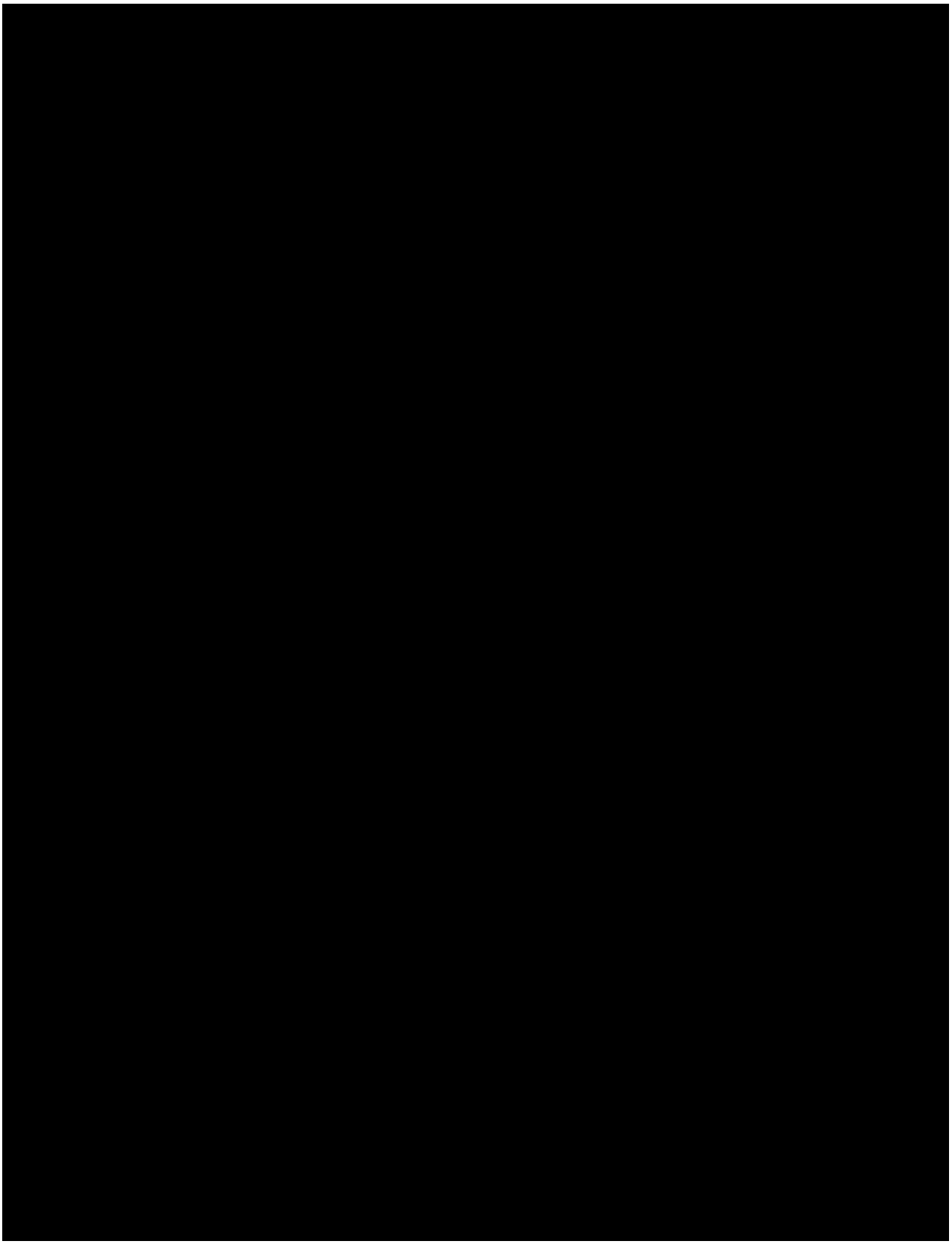

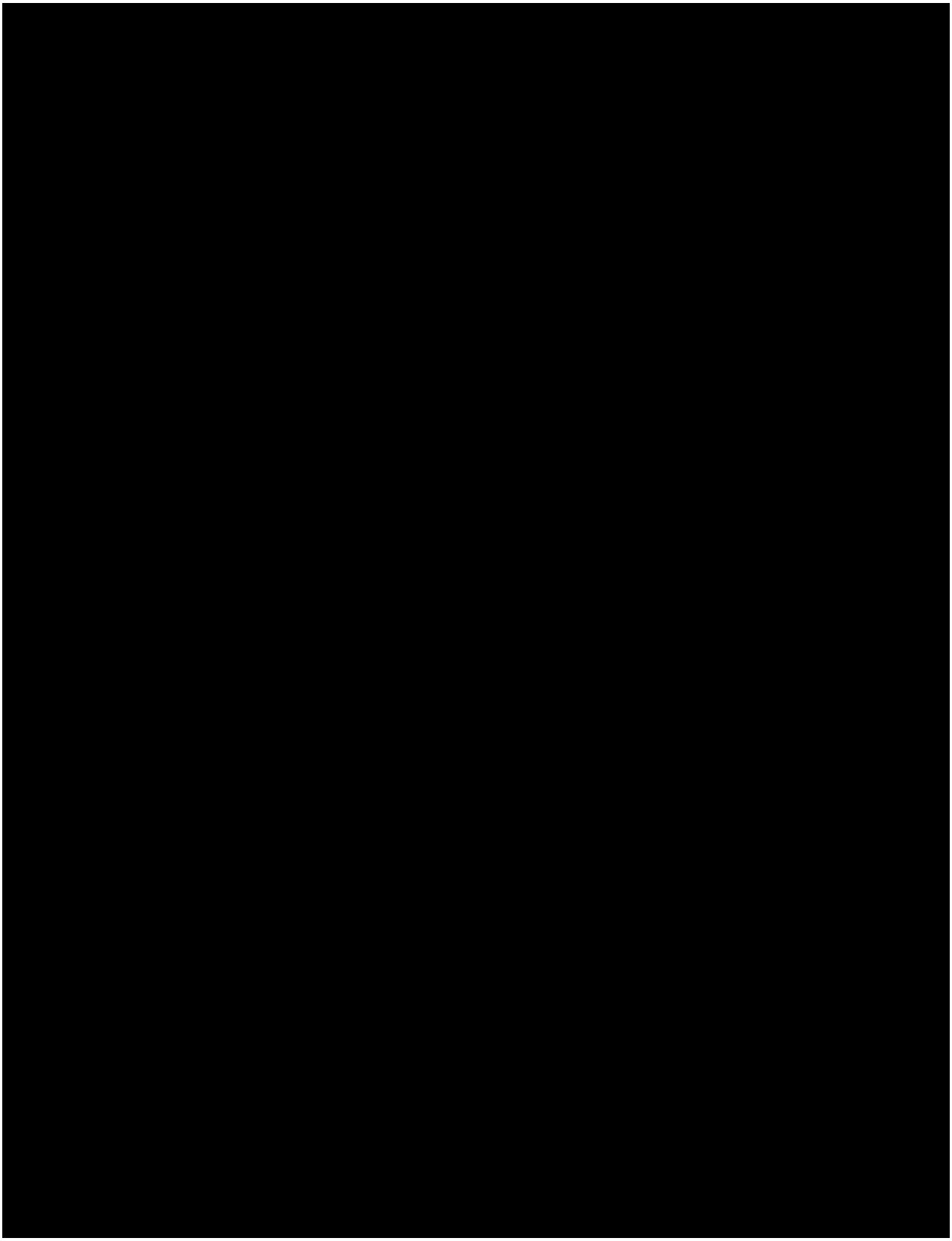

[redacted]

2.7.7.19.3 UCS Basket Analysis

[redacted]

UCS LWT Lid Spacer

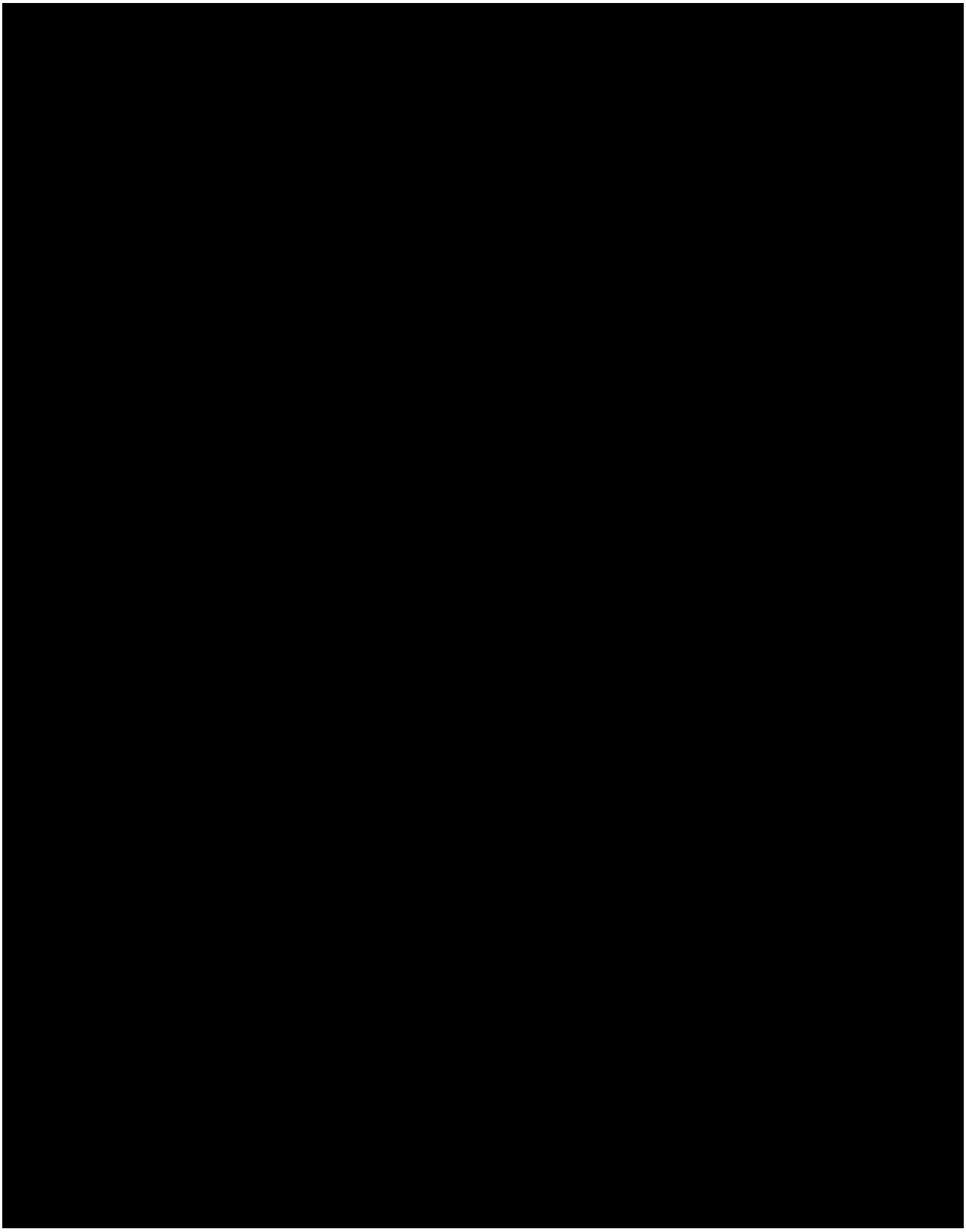

Side Drop Evaluation

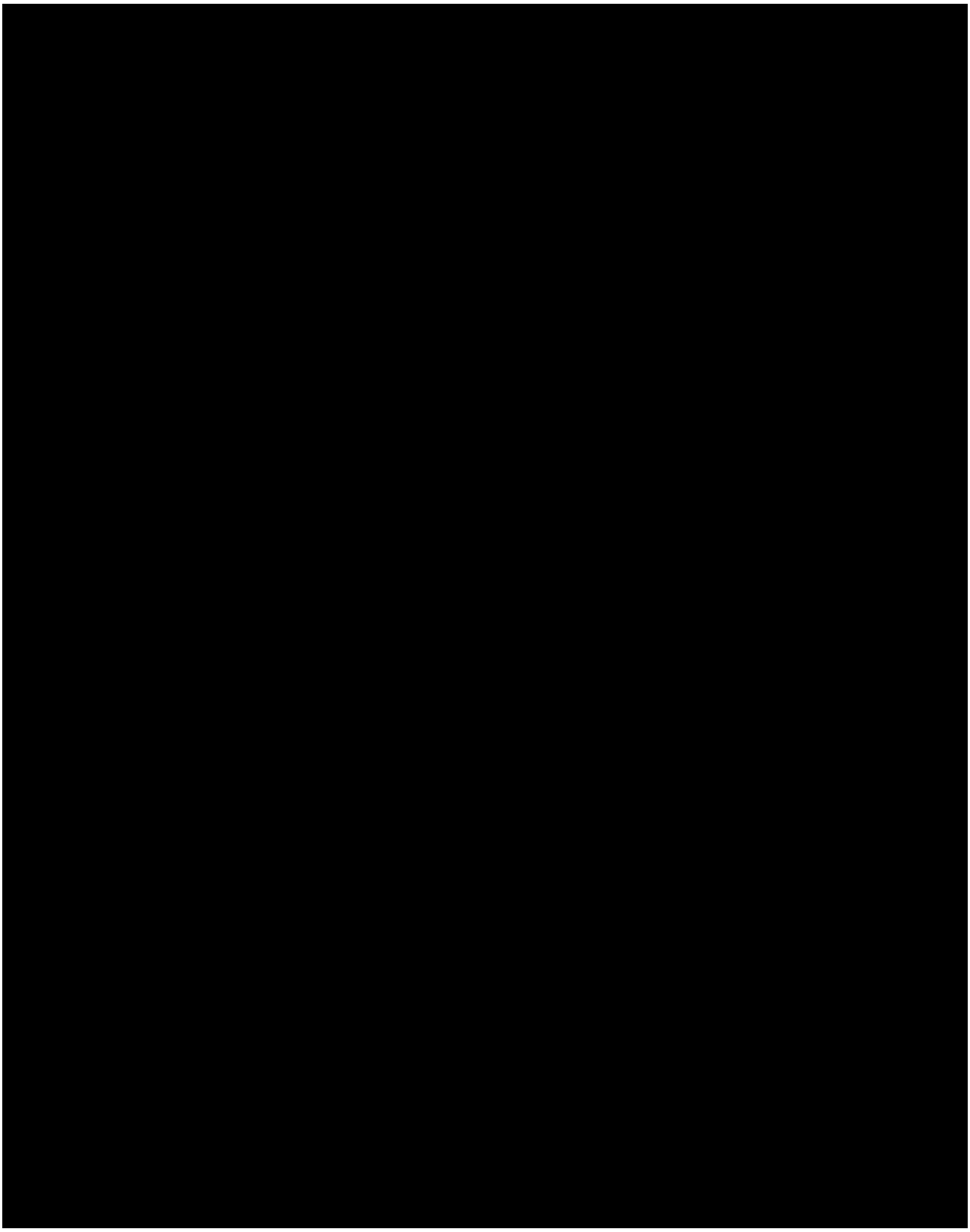



2.7.7.20 LANL MOX Fuel Transfer Tubes

As discussed in Section 2.6.12.18, the LWT Transport Cask LANL MOX shipping configuration consists of the LWT cask body assembly, the PWR basket assembly, PWR insert and the rod transport canister assembly, containing 16 transfer tubes loaded with LANL MOX Fuel Rods. The evaluation of the rod transport canister assembly in Section 2.7.1.7 for accident conditions of transport for the high burnup rod configuration are bounding and applicable to the same rod transport canister assembly with LANL MOX content. No further evaluation is required for the rod transport canister assembly or other cask internal structures. The following sections present the evaluation of the transfer tubes for the end drop and side drop of accident conditions of transport.

2.7.7.20.1 Transfer Tubes – End Drop

In the end drop condition, the transfer tubes are subjected to inertia load due to self-weight (W_t) with an end drop acceleration (g_{end}) of 60g (bounding g-load for 30-foot end drop as shown in Table 2.6.7-33). The transfer tubes are evaluated for membrane stresses (σ_m) as shown in the following table. 0.7×Ultimate strength (S_u) is used as the allowable stress limit for primary membrane stresses for accident conditions per Table 2.1.2-2. The transfer tubes are made of Type 304 stainless steel. S_u is 66.2 ksi for Type 304 stainless steel at 300°F. As shown in the following table, the margins of safety are Large.

[redacted]

Transfer tube spacer may be used between the LANL MOX Fuel Rods inside the transfer tube. The membrane stress for the tube spacer is calculated to be 2.82 ksi using a bounding weight of 12.2 lb. for the transfer tube content (with the end drop acceleration of 60g), a cross-sectional area of 0.26 in^2. The margin of safety is also Large based on an allowable ($0.7S_u$) of 37.1 ksi (S_u is 53.0 ksi for Type 430 stainless steel at 300°F).

The shear stress in the optional fillet weld between the transfer tube wall and the end cap is evaluated. In the end drop, the weld is subjected to the inertia load of the transfer tube wall (43.9 lb.) only. The shear stress in the weld is calculated to be 4.28 ksi based on the effective area of the fillet weld (0.039 in^2). The margin of safety is +0.25 based on the allowable stress of 1.7 × 0.4 × Yield Strength (S_y) for shear stress (ASME B&PV Code, Appendix F, F-1337and NF-3324.5, Table NF-3324.5(a)-1) and a weld quality factor of 0.35 (ASME B&PV Code, Section III, Subsection NG, Table NG-3352-2). S_y is 22.4 ksi for the base metal (Type 304 stainless steel at 300°F).

2.7.7.20.2 Transfer Tubes – Side Drop

Based on the discussion in Section 2.6.12.18.2 comparing the geometry, material, temperature, and loaded tube weight between the tube evaluations for the high burnup shipping configuration and the LANL MOX fuel shipping configuration, the evaluations for the side drop accident conditions for the 5×5 insert tubes as presented in Section 2.7.1.7 for the high burnup configuration are applicable and bounding for the LANL MOX transfer tubes and no additional side drop evaluations are required for the LANL MOX transfer tubes.

2.8 Special Form

This section is not applicable to the NAC-LWT cask because the fuel to be transported in the cask fails to satisfy the definition for special form radioactive material in 10 CFR 71.4

2.9 Spent Fuel Contents

2.9.1 PWR and BWR Fuel Rods

Regulatory Guide 7.9 requires that analysis or test data be provided showing that the fuel rod cladding has structural integrity, justifying the amount of integrity claimed. This section is not applicable to the NAC-LWT cask, since no fuel rod structural integrity is claimed. However, it is noted that according to "Dynamic Impact Effects on Spent Fuel Assemblies" (Chun), damage is not likely to occur to the Westinghouse 17×17 fuel assembly for a 63 g side drop or an 82 g end drop load. (Of the fuel assemblies examined, the Westinghouse 17×17 had the "weakest" structural parameters.) Fuel rod resistance to impact load is dependent on clad temperature and cool time. The NAC-LWT cask impact limiter analyses (Section 2.6.7.4) demonstrate that the maximum design side drop and end drop are 49.7 g and 60 g, respectively. Since the cask g loads are less than the g loads reported in the reference noted above, damage to the fuel rods in the NAC-LWT cask is not likely to occur.

2.9.2 TRIGA Fuel Elements

This section shows that the TRIGA fuel cladding remains intact when hypothetical accident deceleration loads (end and side drops) are applied to the NAC-LWT cask. Hand calculations are used to analyze the TRIGA fuel cladding. All analyses are performed using temperature dependent material properties and a bounding temperature value of 600°F. The following table summarizes the properties used to evaluate the aluminum cladding (1100-0 alloy) and stainless steel cladding (Type 304).

	Aluminum	Steel
Ultimate tensile strength, S_u	2,900 psi	63,500 psi
Tensile yield strength, S_y	2,000 psi	18,200 psi
Modulus of Elasticity, E	7.0×10^6 psi	25.3×10^6 psi 28.3×10^6 psi @70°F (conservative value for bearing)
Poisson's ratio, ν	0.3	0.275
Density, ρ	0.1	0.288 lb/in^3

ASME Code Section III, Subsection NG stress allowables are used for this evaluation. As stated in the previous section, design g values are 60.0 g and 49.7 g for the end and side drops, respectively.

The weight of the standard stainless steel fuel element is 4 kg (8.82 lbs) and the weight of the fuel follower control elements is 6 kg (13.2 lbs). There are a maximum of four (4) elements in any fuel can resulting in a maximum weight of 53 lbs. The aluminum (0.03-inches thick) and stainless steel (0.02-inches thick) cladding are described in TRIGA fuel characterization reports (Tomsio). The bounding weight of the cladding is:

$$W_{cladding} = \frac{\pi}{4}(D_o^2 - D_i^2) \times L \times \rho = 2 \text{ lbs}$$

where:

Do = 1.47 inches, outside diameter of cladding
Di = 1.41 inches, inside diameter of cladding
L = 45 inches, length of cladding (fuel follower rod)
ρ = 0.288 lb/in^3, density of steel

2.9.2.1 End Drop

The end drop evaluation determines if the cladding is structurally stable under its own weight with dynamic load factors to account for cask drop deceleration. Because it is longer and heavier, the fuel follower control element is investigated for buckling. For conservatism, the thinnest cladding is used in conjunction with stainless steel density and aluminum properties. The fuel is taken as self supporting. The buckling load is the weight of the cladding times the end drop design g value of 60g.

$$P_c = 60 \times 2 = 120 \text{ lbs}$$

The critical buckling load is:

$$P_{cr} = \frac{\pi^2 EI}{(2L)^2} = 205 \text{ lbs}$$

where:

I = 0.0491 × (1.47^4-1.43^4) = 0.024 in^4
E = 7.0 × 10^6 psi
L = 45 inches, length of the fuel follower control element

The effective length factor is taken as 2.

The margin of safety is:

$$MS = \frac{P_{cr}}{P_c} - 1 = +0.71$$

Therefore, the cladding will not buckle under its own weight due to the cask end drop.

2.9.2.2 Side Drop

In the side drop, two fuel elements can bear on each other and two elements (one on top of the other) can bear on the flat surface of the module cell wall.

Because of aluminum's lower strength, the bearing stress in the aluminum clad fuel element is the governing case.

For the aluminum clad fuel elements, the bearing stresses will cause local cladding deformation in the radial direction along the line of contact. The deformation will be limited to the distance producing an area, A, sufficient to limit bearing stress to the yield stress of the aluminum cladding.

$$A = \frac{p}{S_y} = \frac{0.51(49.7)}{2{,}000} = 0.0127 \text{in}^2$$

where:

$$p = \frac{W}{L} = \frac{15.2 \text{ lb}}{30} = 0.51 \text{ lb / in.}$$

W = ss clad fuel element, 8.8 lbs (4 kg) + aluminum clad fuel element, 6.4 lbs (2.9 kg) = 15.2 lbs. (Tomsio)

L= fuel element length = 30 inches (Tomsio)

Acceleration from side drop = 49.7 g

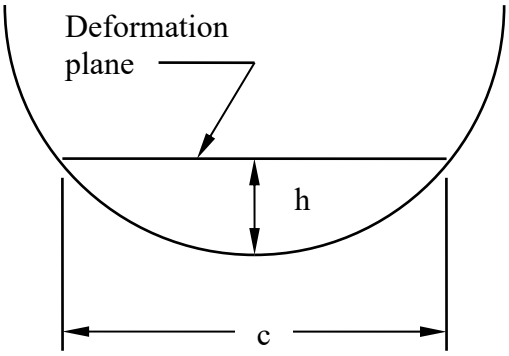

The area, A, of the deformation plane is:

$A = c \times \text{unit length} = 0.0127 \text{ in}^2$, therefore,

$c = 0.0127$ inches

The deformation depth, h, is then:

$$h = r - \frac{1}{2}\sqrt{4r^2 - c^2} = 0.735 - \frac{1}{2}\sqrt{4(0.735)^2 - 0.0127^2} = 2.7 \times 10^{-5} \text{ inches}$$

This deformation is insignificant when compared to the 0.030-inch wall thickness of the aluminum cladding.

The slight local deformation (0.000027 in) along the line of contact between fuel elements reduces the bearing stress in the aluminum cladding at this point to the yield strength of the cladding. The small linear deformation of the cladding has no adverse effect on its ability to contain the fuel and does not impede its insertion into or removal from the fuel basket cell.

Therefore, the integrity and function of the fuel element cladding is not impaired.

2.9.3 PULSTAR Intact Fuel Elements

There are two configurations for the PULSTAR intact fuel elements:

1. Intact PULSTAR fuel assemblies that are comprised of a 5 × 5 array of fuel elements. Elements in the assembly are spaced by a tie plate at each end and by periodic spacer tabs on each fuel element (see Figure 1.2-13).
2. Intact PULSTAR fuel elements that are loaded into the TRIGA fuel rod insert (Drawing 315-40-096).

In the item a) configuration, the PULSTAR fuel assembly is inserted in a cell of a MTR basket module that provides full-length support of the fuel assembly. The tabs connecting the individual fuel elements are separated by 6.37 inches and each fuel element has a 0.47-inch outer diameter. The span between PULSTAR fuel element supports is bounded by a standard PWR fuel assembly, while the outer diameter of 0.47 inch bounds a standard PWR rod diameter of 0.37 inch. As the PULSTAR fuel assembly is fully supported, similar to a PWR assembly in the LWT basket, it is concluded that the PULSTAR fuel assembly will remain intact during normal and accident conditions, as is presented for a PWR assembly in the LWT SAR.

In the item b) configuration, the individual elements are supported for the full length of the fuel element. The stresses being developed in the fuel element for the normal and accident conditions for either the end drop or the side drop are considered to be minimal since the fuel element is supported for the full length of the element. The tube has been evaluated in Section 2.6.12.7.9 for the normal transport condition 1-foot drops and in Section 2.7.7.9.8 for the hypothetical accident condition 30-foot drops. The evaluations concluded that in either of the configurations described, the fuel assembly, or the individual fuel elements, will remain intact for the normal transport and hypothetical accident conditions.

2.9.4 ANSTO Fuels

The structural integrity of the MARK III spiral fuel assemblies, the MOATA plate bundles and the DIDO fuel assemblies is evaluated in this section for normal and accident conditions of transport. Table 1.1-1 defines the condition of the ANSTO degraded fuel (and for undamaged aluminum clad fuel elements) as fuel with a maximum damaged or degraded area of 5% of the total cross-sectional area. The calculations presented in this section on ANSTO fuel integrity use methodologies that evaluate the overall cross-section of the fuel. This is based on the requirement that localized stresses are not required to be evaluated under accident conditions. Localized damage or degradation is defined as being limited to 5% or less, which can only result in stresses in the structure of a localized nature. Small through holes in the active fuel region (for removed PIE samples) would represent the bounding condition of damage/degradation, and these would generate stress concentrations only locally around the hole. These local stresses would not affect the overall performance of the cross-section in consideration of primary stresses, which are the stresses that would challenge the integrity of the fuel.

2.9.4.1 MARK III Spiral Fuel Assemblies

The Mark III spiral fuel assembly is comprised of a center tube, an outer tube and 10 fuel plates that are 25 inches long (see Figure 1.2.3-14). The fuel plates are curved and are positioned between the center tube and the outer tube in a spiral configuration, as opposed to forming a radial type “spoke” between the center and the outer tubes. Evaluations are performed for the center tube and the outer tube since they are the components that must transfer the weight of the plates during normal and accident conditions. Aluminum 1100 properties, which are considered to provide minimal values for the stress allowables, are used in the plates and tubes.

Center Tube

A structural evaluation of the center tube of the MARK III spiral fuel is performed. Two loads are considered: the tube self-weight and 50% of the weight of the fuel plates. Five out of 10 of the fuel plates can transfer their weight to the inner tube; therefore, 50% of the weight of the fuel plates is considered. The weight of the center tube is increased to account for 50% of the fuel plate weight. The formula for the circular rings from Case 15 (ring supported at the base at a single point and loaded by their own weight per unit length of circumference w) of Table 17 in Roark is used for this evaluation. It is conservatively assumed that the tube weight and 50% of the fuel plate weight are supported at a single point.

There are 10 fuel plates in a fuel assembly. A fuel plate of MARK III spiral fuel weighs 0.4431 lb (201 g). The weight of the five fuel plates (2.22 lbs) contributes to the load and pushes the

tube down during the basket side drop. The weight of the five plates, converted to its own weight per unit length of circumference, w_p, is (before considering the g load factor):

$$w_p = \frac{m_p}{L \times 2\pi R} = 0.0121 \text{ lb/in}$$

where:

m_p = 2.22 lbs, the weight of five plates

L = 25 inches, the length of the plate

R = 1.1678, median radius of the fuel inner tube

The tube weight per unit length of circumference, w_t, is (before considering the g load factor):

$$w_t = \frac{m_t}{2\pi R} = 0.0058 \text{ lb/in.}$$

where:

m_t = 1.0582/25 = 0.0423 lb, the weight of tube (480 g) per inch

R = 1.1678, median radius of the fuel inner tube

Normal Condition

The maximum bending moment at the support point for the normal condition is:

$$M_c = \frac{3}{2} \times f_{GN} \times (w_p + w_t) \times R^2 = 0.9154 \text{ lb} - \text{in}$$

where:

f_{GN} = 25, the side drop g load for the normal condition

The circumferential bending stress in the tube for the normal condition is:

$$\sigma_c = \frac{6M_c}{bt^2} = \frac{6 \times 0.9154}{1 \times 0.0443^2} = 2{,}799 \text{ psi}$$

where:

t = 0.0443 inch, tube thickness

b = 1 inch, unit length of tube

The margin of safety corresponding to the allowable for the normal condition is:

$$MS = \frac{1.5S_m}{\sigma_c} - 1 = +0.58$$

where:

Sm = 2.95 ksi, Design Stress Intensity, Aluminum 1100, 250°F (Table 2.2, "Aluminum Standards and Data," The Aluminum Association)
(S_m is the lesser of $S_u/3$ and $2S_y/3$)

Accident Condition

The maximum bending moment at the support point for the accident condition is:

$$M_c = \frac{3}{2} \times f_{GA} \times (w_p + w_t) \times R^2 = 2.197 \text{ lb} - \text{in}$$

where:

f_{GA} = 60, the side drop g load for the accident condition

The circumferential bending stress in the fuel tube for the accident condition is:

$$\sigma_c = \frac{6M_c}{bt^2} = \frac{6 \times 2.197}{1 \times 0.0443^2} = 6{,}717 \text{ psi}$$

The margin of safety corresponding to the allowable for the accident condition is:

$$MS = \frac{S_u}{\sigma_c} - 1 = +0.36$$

where:

Su = 9.14 ksi, ultimate stress of Aluminum 1100 at 250°F (Table 2.2, "Aluminum Standards and Data," The Aluminum Association)

Outer Tube

A structural evaluation of the outer tube of the MARK III spiral fuel is performed. Three loads are considered: the tube self-weight, the weight of the fuel plates, and the weight of the inner tube. The weight of the outer tube is increased to account for the fuel plate weight and the weight of the inner tube. The formula for a curved beam (pinned arch under uniform load) from Blake is used for this evaluation. Since the diametrical gap between the MARK III spiral fuel and the basket tube inner surface is 0.125 inch, the use of the pin-pin configuration is adequate.

There are 10 fuel plates in a fuel assembly. A fuel plate of MARK III spiral fuel weighs 0.4431 pound (201 g). The weight of the inner tube (1.0582 lbs) and the 10 fuel plates (4.431 lbs) contributes to the load and pulls the tube down during the basket side drop. The weight of the inner tube and the fuel plates, converted to its own weight per unit length of circumference, q_c, is (before considering the g load factor):

$$q_c = \frac{m_p + m_i}{Lp \times 2\pi R} = 0.0177 \text{ lb/in}$$

where:

m_p = 4.431 lbs, the weight of 10 plates

m_i = 1.0582 lbs, the weight of inner tube (480 g)

Lp = 25 inches, the length of the plate

R = 1.9695, median radius of the fuel outer tube

The outer tube weight per unit length of circumference, q_t, is (before considering the g load factor):

$$q_t = \frac{m_t}{2\pi R} = 0.0078 \text{ lb/in.}$$

where:

m_t = 2.4251/25 = 0.0970 lb, the weight of outer tube (1,100 g) per inch

R = 1.9695, median radius of the fuel outer tube

The combined load factor, q_{total}, is 1.53 lb/in [$60 \times (q_c + q_t)$, 60 is the side drop g load factor] for the accident condition of the side drop case.

The maximum moment (Equation 27.63, Blake) for the accident conditions is:

$$M = q_{total} \times R^2 \times B = 0.5460 \text{ lb-in for accident condition}$$

where:

R = 1.9695, median radius of the fuel outer tube

B = 0.092, the maximum absolute value of the bending moment factor
(B is from Figure 27.17 in Blake)

Based on Equation 28.1 from Blake, the stress due to this bending is:

$$S = \frac{M}{A \times R}\left[1 + \frac{c}{\lambda(R + c)}\right] = 879 \text{ psi for accident condition}$$

where:

A = 0.061 in^2, the cross-section area (thickness of the outer tube is 0.061 in)

R = 1.9695, median radius of the fuel outer tube

c = 0.03 in, half of the thickness of the outer tube

λ = 7.8×10^{-5}, the Winkler's factor for rectangular cross-section, as calculated:
(Table 28.1, Blake)

$$\lambda = \frac{1}{3}\left(\frac{c}{R}\right)^2 + \frac{1}{5}\left(\frac{c}{R}\right)^4 + \frac{1}{7}\left(\frac{c}{R}\right)^6 + \cdots = 7.8\times10^{-5}$$

Conservatively, the allowable for the normal condition is used for calculating the margin of safety in the accident condition. The margin of safety corresponding to the allowable for the normal condition is:

$$MS = \frac{1.5S_m}{S} - 1 = +4.0$$

where:

S_m = 2.95 ksi, Design Stress Intensity, Aluminum 1100, 250°F

Therefore, the Mark III spiral fuel remains intact for the normal and accident conditions of transport.

2.9.4.2 MOATA Plate Bundles

Two 6.35-mm aluminum plates are required to carry the weight of the MOATA plate bundle during transport. The aluminum plates sandwich the 14 or the 9 aluminum fuel plates (see the following illustration). At each end of the plate bundle is an end fitting that permits handling. Each end fitting also contains a bolt assembly that threads into the walls of the end fitting. The outer diameter of the end fitting is 3.449 inches. The diametrical gap between the end fitting and the inner diameter of the basket tube is 4.125 – 3.449 or 0.68 inch. During transport, it is not possible for the bolt to become disengaged from the end fitting due to the 0.68-inch gap. Therefore, the configuration of the fuel plates and the aluminum plates will not be altered during transport. The bolt assembly is considered to experience negligible loading stress due to its own weight. Likewise, the stresses occurring in the end fittings are expected to be minimal and are bounded by stresses occurring in the aluminum plates.

For the stress evaluation of the aluminum plates, the bounding condition is the side drop. To compute the minimum margin for both the normal condition and the accident condition, the stress is computed using the accident loading case, but the margin of safety is computed using the stress allowable for the normal condition.

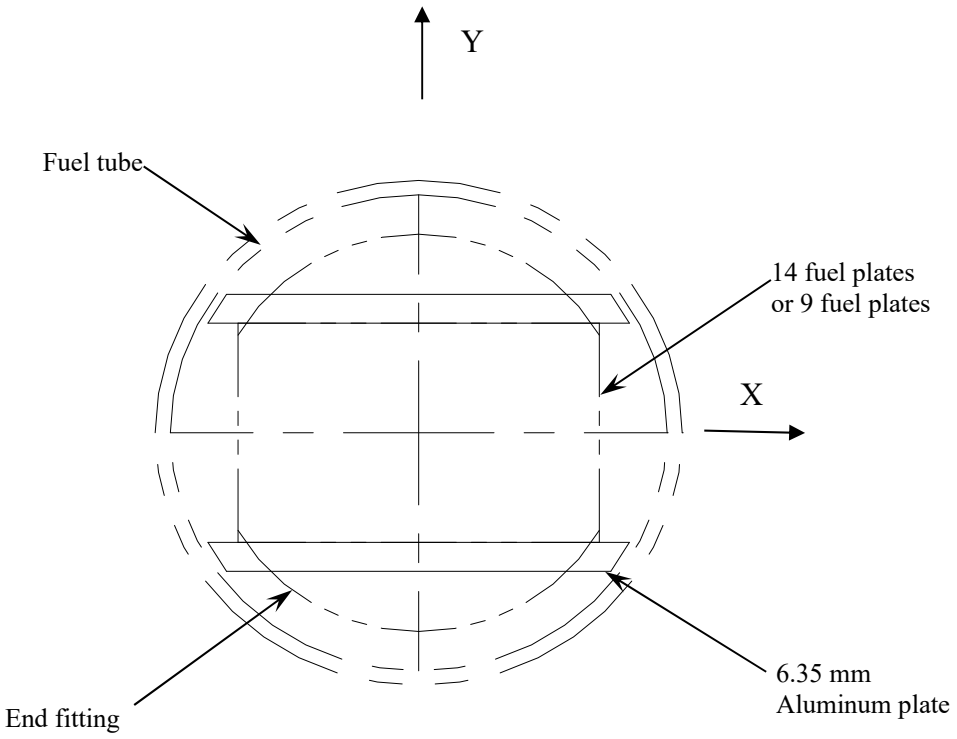

.

For a 30-foot side drop in the direction aligned with the Y axis, the maximum stress in the aluminum plate is calculated by representing the plate as a uniformly loaded, simply supported beam. Since the plate is supported at the edges along the 26-inch length of the plate, the length of the beam in this calculation is its width, or 3.7 inches. The bending moment on the center of the plate is:

$$M = \frac{Pw^2}{8} = \frac{36.5 \times 3.7^2}{8} = 62.5 \text{ in-lb}$$

where:

$$P = \frac{Wg}{L} = \frac{15.8 \times 60}{26} = 36.5 \text{ lb/in}$$

W =18-2.2 = 15.8 lbs, since the top aluminum plate is significantly stiffer than the fuel elements below the top aluminum plate and does not load the bottom plate

w = 3.7 inches (94 mm), maximum plate width

L = 26 inches, length of the aluminum plate

The bending stress in the plate (0.25-in thick) is:

$$\sigma = \frac{6M}{bt^2} = \frac{6 \times 62.5}{1 \times 0.25^2} = 6.0 \text{ ksi}$$

Conservatively using the membrane plus bending allowable for normal conditions, the margin of safety is:

$$MS = \frac{1.5S_m}{\sigma} - 1 = +1.9$$

where:

S_u = 34.6, ultimate strength, 6061-T6, 250°F

(design stress intensity, S_m, is the lesser of $S_u/3$ and $2 \times S_y/3$)

For a 30-foot side drop of the fuel aligned with the X axis, the fuel plates are not supported by the 6.35-mm aluminum plates. The maximum stress in the fuel plate (Aluminum 1100) is calculated by representing the plate (26 inches long) as a uniformly loaded, simply supported beam. The bending moment on the center of the plate is:

$$M = \frac{PL^2}{8} = \frac{1.53 \times 26^2}{8} = 129.3 \text{ in-lb}$$

where:

$$P = \frac{Wg}{L} = \frac{0.66 \times 60}{26} = 1.53 \text{ lb/in}$$

W = 0.66 lb (300 g);

L = 26 inches, length of the fuel plate

The bending stress in the plate (0.08-in thick) is:

$$\sigma = \frac{6M}{bt^2} = \frac{6 \times 129.3}{0.08 \times 3^2} = 1.1 \text{ ksi}$$

Conservatively using the allowable for normal conditions, the margin of safety is:

$$MS = \frac{1.5S_m}{\sigma} - 1 = +3.0$$

where:

S_m = 2.95 ksi, Design Stress Intensity, Aluminum 1100, 250°F

(design stress intensity, S_m, is the lesser of $S_u/3$ and $2 \times S_y/3$)

During an end drop, a compressive load is developed in the aluminum plates and in the fuel elements. Due to the proximity of the end of the fuel elements to the lifting bracket or to the

bottom of the basket, the axial load of the fuel elements will be transmitted directly into the lifting bracket or the bottom of the basket. The compressive load on the aluminum plates is the weight of the end fittings and the self-weight of the aluminum plates. However, the inertial load in the end drop of the aluminum plates is not uniform, but rather is at a maximum at the bottom of the plate nearest the plane of impact. The maximum compressive stress is the product of the 26-inch length, the density of 0.098 lb/in^3, and the acceleration of 60g's or 153 psi. This compressive stress is considered to be minimal and only occurs at the base. The load that is considered to be uniform over the length of the aluminum plate is the weight of the end fitting, or 4.34 lbs. Since there are two plates of equal stiffness, the load is considered to be distributed equally to the two plates.

For a 60g end drop, the load on one plate is:

$$P = W_a g = \left(\frac{4.34}{2}\right) \times 60 = 130.2 \text{ lbs}$$

The stress in the aluminum plate is:

$$\sigma = \frac{P}{bt} = \frac{130.2}{3.38 \times 0.25} = 154 \text{ psi}$$

Using the Euler buckling methodology from the "Manual of Steel Construction," the critical buckling stress, for $KL/r > C_c$ is:

$$F_a = \frac{12\pi^2 E}{23(KL/r)^2} = 371 \text{ psi}$$

where:

b = 3.38 inches, plate width

t = 0.25 in (6.35 mm), plate thickness

L = 26.0 inches, plate length between bolt supports

K = 1.0, buckling end fixity constant – simply supported at each end due to the retaining pin

E = 9.1×10^6 psi, modulus of elasticity, 6061-T6, 250°F

F_y = 29.8 ksi, yield strength, 6061-T6, 250°F

$$r = \sqrt{\frac{I}{A}} = 0.072$$

$$I = \frac{bt^3}{12} = 0.0044 \text{ in}^4$$

$$A = bt = 0.84 \text{ in}^2$$

$$KL/r = 361$$

$$C_c = \sqrt{\frac{2\pi^2 E}{F_y}} = 79$$

The safety factor against the plate buckling is calculated to be larger than unity, as shown in the following equation. Therefore, aluminum plates will not buckle.

$$FS = \frac{F_a}{\sigma} = \frac{371}{154} = 2.4$$

Since the aluminum plates do not buckle, the fuel elements will only be loaded by their own self-weight. The compressive loading on the fuel elements also varies uniformly from zero at the top of the fuel element to the base. This stress is the ratio of the total compressive load (0.66 lb × 60g's) to the cross-sectional area (7.6 cm × 0.203 cm or 0.24 in^2), or 166 psi. This is considered to be a minimal compressive stress that would not result in damage to the fuel element. Since the aluminum plates do not buckle and are further restrained by the fuel basket tubes, the buckling of the fuel elements cannot occur during the end drop. Therefore, the fuel is not damaged.

2.9.4.3 DIDO Fuel Assemblies

The DIDO fuel assembly is comprised of four cylinders, each made from three electron beam welded curved fuel plates. During operation, the cylinders are held concentrically by combs in the end pieces. In preparation for storage and shipment, the assemblies are cropped leaving only the four individual unattached cylinders, which are then held clipped together to aid in handling. Evaluations are performed to determine the structural acceptability of the DIDO fuel assembly under normal and accidental drop conditions.

End Drop

During an end drop, a compressive load is developed in the fuel cylinders. The compressive stress is the product of the 25.13-inch length, the density of 0.098 lb/in^3, and the acceleration of 60 g (Table 2.6.7-33). It varies uniformly from zero at the top of the fuel cylinder to a maximum stress that occurs at the base of the cylinder.

For a 60 g end drop, the load in the smallest of the fuel cylinders is:

$$P = W \times g = 1.15 \times 60 = 69 \text{ lbs}$$

where:

t = 0.06 in (0.15 cm), fuel cylinder thickness

L = 25.13 in (63.82 cm), fuel cylinder length

D = 2.47 in (6.28 cm), fuel cylinder median diameter

A = $\pi \times D \times t$ = 0.466 in^2, cross-sectional area of the fuel cylinder

W = $A \times L \times \rho$ = 1.15 lb, weight of the fuel cylinder

The maximum stress in the fuel cylinder is:

$$\sigma = \frac{P}{A} = \frac{69}{0.466} = 148 \text{ psi}$$

Using "MIL-HDBK-5G", the lowest yield strength for 2024-T-42 alloy was 14.28 ksi at 338ºF (maximum fuel temperature, Table 3.4-12). The ASME design allowable, S_m, for ductile metals is generally set to 2/3 of the yield strength.

Therefore:

S_m = 9.5 ksi, Design Stress Intensity, Aluminum 2024-T-42, 338°F

Conservatively using the allowable for normal conditions, the margin of safety is:

$$MS = \frac{1.5S_m}{\sigma} - 1 = +96$$

By computing the margin of safety using the allowable for normal conditions, while using the loading for accident conditions, the compressive stress in the fuel cylinders is shown to be minimal and no damage would occur under normal or accident conditions.

Side Drop

For the 30-foot side drop accident condition, a two-dimensional (2D) half-symmetry model of the fuel assembly was constructed using Rev 5.5 of the ANSYS finite element software. The model was constructed using SOLID42 (2D quadrilateral elements) and CONTAC48 (2D gap elements) ANSYS elements. The fuel elements and fuel tube were modeled with the 2D solid elements, and the 2D contact elements were placed between the outer diameter of the fuel assembly and the inner diameter of the fuel tube wall. The analysis uses an equivalent acceleration of 49.7 g (Table 2.6.7-33) applied along the Y axis of the model to simulate the impact condition of the 30-foot side drop. Additionally, a modulus of elasticity (E) of 9.1×10^6 psi and density (ρ) of 0.098 lb/in^3 was applied to the DIDO fuel cylinder elements. A plot of the fuel assembly model with the boundary conditions used is shown in Figure 2.9.4-1.

The resulting stress intensities are shown in Figure 2.9.4-2.

The maximum stress intensity calculated for the 30-foot side drop is 2.0 ksi. Conservatively using the allowable for normal conditions, the margin of safety is:

$$MS = \frac{1.5S_m}{\sigma} - 1 = +6.0$$

where:

S_m = 9.5 ksi, Design Stress Intensity, Aluminum 2024-T-42, 338°F

The stress levels in the DIDO fuel assembly under accident conditions are well within the allowable levels for aluminum 2024-T-42 alloy under normal conditions. Therefore, this evaluation bounds the normal condition. In conclusion, the fuel assembly would not be adversely affected by the normal or accidental drop conditions.

ANSTO Damaged Fuel Canister

Degraded ANSTO assemblies (MOATA, spiral or DIDO fuel element types) will be placed in an ANSTO damaged fuel can (DFC) (see Figure 1.2.3-18) to further aid with handling. This configuration will supplement the structural stability of the fuel assemblies contained in the DFC.

The bounding lateral loading on the DFC is the 49.7 g accident side drop. The following table compares the diameters and gaps of the outer cylinder of the DIDO fuel, the DFC and the ANSTO basket tube.

	Inner Diameter	Outer Diameter	Wall Thickness	Material
DIDO Outer Cylinder	3.54”	3.66”	0.060”	Aluminum
DIDO Basket Tube	4.01”	N/A	N/A	N/A
DFC	3.87”	4.00”	0.063”	Aluminum
ANSTO Basket Tube	4.125”	N/A	N/A	N/A

From this table, the diametrical gap between the DIDO fuel and the DIDO basket is 0.35 inch, whereas the gap between the DFC and the ANSTO basket tube is 0.125 inch. The DFC wall thickness is larger than the wall thickness of the DIDO cylinder. Since the stresses in the tube wall increase as the gap increases, and decrease with wall thickness, the stresses developed in the DFC will be bounded by the stresses in the DIDO basket.

Conservatively using the allowable for normal conditions, the margin of safety is:

$$MS = \frac{1.5S_m}{\sigma} - 1 = +6.8$$

where:

S_m = 10.37 ksi, Design Stress Intensity, Aluminum 6061-T6, 338°F

σ = 2.0 ksi, bounding stress intensity from the DIDO fuel side drop case

For the 60 g end drop condition, a compressive load is developed in the 6061 aluminum DFC tube. This compressive load is generated by the weight of the DFC lid and the self-weight of the DFC tube. The maximum compressive stress occurs at the bottom of the DFC tube and is the product of the 27.6-inch length, the density of 0.098 lb/in^3, the weight of the lid and the acceleration of 60 g.

The estimated self-weight of the DFC tube is:

$$W_1 = \pi \times D \times t \times L \times \rho = 2.1 \text{ lbs}$$

where:

D = 3.94 in (10.0 cm), DFC tube median diameter

L = 27.56 in (70.0 cm), DFC tube length

t = 0.063 in (0.16 cm), DFC tube thickness

The estimated weight of the DFC lid is:

$$W_2 = \pi \times D \times t \times L \times \rho = 1.1 \text{ lbs}$$

where:

D = 3.19 in (8.1 cm), DFC lid median diameter

L = 1.42 in (3.6 cm), DFC lid length

t = 0.82 in (2.08 cm), DFC lid thickness

For a 60 g end drop, the load in the DFC tube is:

$$P = (W_1 + W_2) \times g = 3.2 \times 60 = 192 \text{ lbs}$$

The maximum stress in the fuel cylinder is:

$$\sigma = \frac{P}{A} = \frac{192}{0.780} = 246 \text{ psi}$$

where:

t = 0.063 in (0.16 cm), DFC tube thickness

D = 3.94 in (10.0 cm), DFC tube median diameter

A = $\pi \times D \times t$ = 0.780 in^2, cross-sectional area of the DFC tube

Conservatively using the allowable for normal conditions, the margin of safety is:

$$MS = \frac{1.5S_m}{\sigma} - 1 = +62$$

Based on the comparison to the conservative analysis performed for the DIDO fuel assembly and the end drop calculation, the DFC would not be adversely affected by the normal or accidental drop conditions.

Figure 2.9.4-1 DIDO Fuel Assembly Model and Boundary Conditions

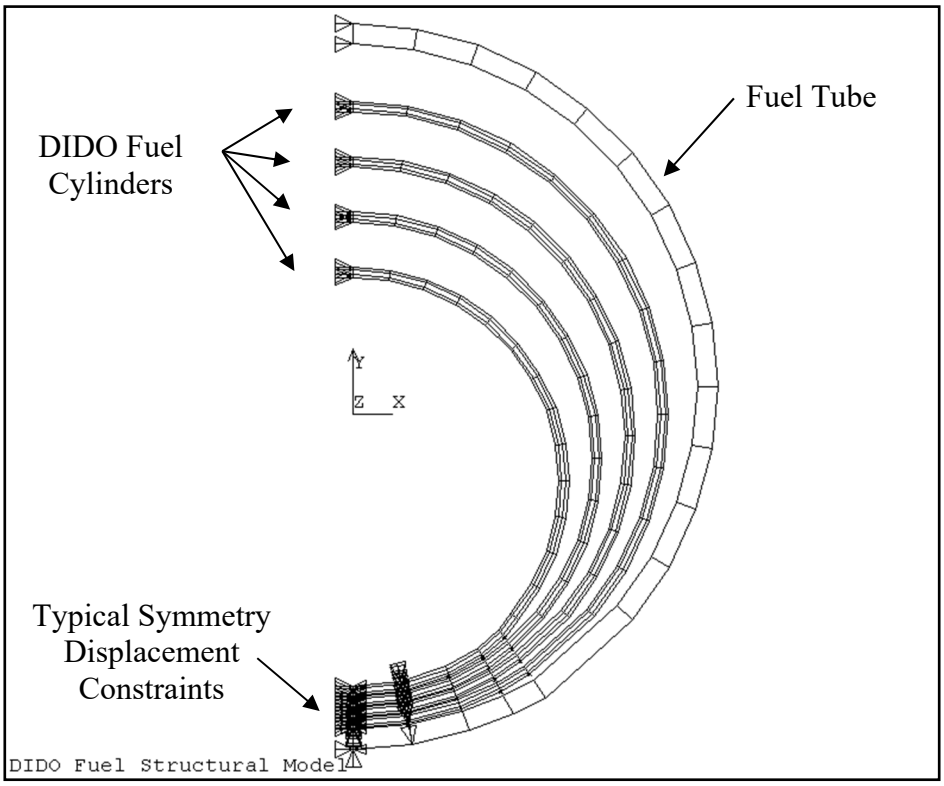

Figure 2.9.4-2 DIDO Stress Intensities for 30-Foot Side Drop

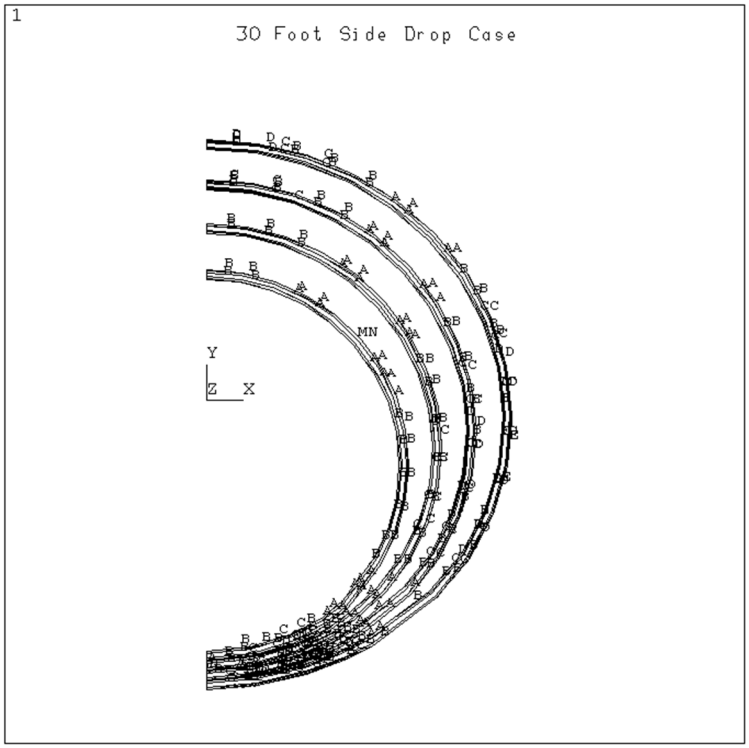

2.9.5 SLOWPOKE Fuel Core Assembly

The structural integrity of the SLOWPOKE fuel core is evaluated in this section for normal and accident conditions of transport. The SLOWPOKE fuel Core assembly consists of 298 fuel pins supported by a circular cage. The fuel cage consists of two perforated plates (upper and lower) that the fuel pins pass through. The two plates are held in position by three round posts between the two that are plug welded on both ends. The lower plate has three bottom pins that project beyond the bottom surface which act as spacers. The upper plate has two rivet pins that project beyond the top surface. The fuel pins have an end cap with a reduced section that penetrates through the lower plate. These ends of the fuel pins are peened into the lower plate. This restrains the fuel pins with respect to the cage.

The maximum loading for each condition is due to the drop cases. For the end drop cases the load is due to a 20 g acceleration for the Normal Conditions of Transport and a 60 g acceleration for the Accident Conditions of Transport. For the side drop cases the load is due to a 25 g acceleration for the Normal Conditions of Transport and a 55 g acceleration for the Accident Conditions of Transport.

2.9.5.1 Normal Conditions of Transport

End Drop Cases

Top End Drop

For the top end drop, the members evaluated are the fuel pins, the rivet pins located on the upper plate and the posts between the upper and lower plates. The fuel pins are restrained at the bottom plate and the fuel core assembly weight is reacted by the two rivet pins on the upper plate.

Component	Stress Category	Calculated Stress (ksi)	Margin of Safety
Fuel Pins	Tensile	0.06	55
Rivet Pins	Bearing	1.96	3.17
Posts	Compressive	1.3	5.28

The posts separating the upper and lower plates were also checked for potential buckling. The Euler buckling load was conservatively calculated to be 609 lbs. The load on each post was calculated to be 75 lbs. Then the margin of safety for buckling is 7.12.

Detailed calculations are contained in Item 1 of Section 2.9.5.3.

Bottom End Drop

For the bottom end drop, the members evaluated are the fuel pins and the bottom pins located on the lower plate. The fuel core assembly weight is reacted by the three bottom pins attached to the lower plate.

Component	Stress Category	Calculated Stress (ksi)	Margin of Safety
Fuel Pins	Compressive	0.06	55
Bottom Pins	Compressive	1.3	5.25
Posts	Compressive	1.3	5.28

Note that the load on the posts for the bottom end drop is the same as for the top end drop.

Detailed calculations are contained in Item 1 of Section 2.9.5.3.

Side Drop Case

For the side drop case, the members evaluated are the fuel pins, the upper and lower plates and the posts.

Component	Stress Category	Calculated Stress (ksi)	Margin of Safety
Fuel Pins	Bending	3.83	0.32
Fuel Pins	Shear	0.038	52.2
Posts	Bending	1.21	9.10
Posts	Shear	0.01	489
Support plates	Shear Tear Out	0.125	38.2
Support plates	Bearing	0.81	23.4

Detailed calculations are contained in Item 1 of Section 2.9.5.3.

2.9.5.2 Accident Conditions of Transport

End Drop Cases

Top End Drop

For the top end drop, the members evaluated are the fuel pins, the rivet pins located on the upper plate and the posts between the upper and lower plates. The fuel pins are restrained at the bottom plate and the fuel core assembly weight is reacted by the two rivet pins on the upper plate.

Component	Stress Category	Calculated Stress (ksi)	Margin of Safety
Fuel Pins	Tensile	0.18	38.3
Rivet Pins	Compressive	5.88	3.17
Posts	Compressive	3.9	5.26

The posts separating the upper and lower plates were also checked for potential buckling. The Euler buckling load was conservatively calculated to be 609 lbs. The load on each post was calculated to be 75 lbs. Therefore, the margin of safety for buckling is 7.12.

Detailed calculations are contained in Item 1 of Section 2.9.5.3.

Based on the comparison to the conservative analysis performed for the SLOWPOKE fuel core assembly, the SLOWPOKE fuel core would not be adversely affected by the normal or accidental drop conditions.

Bottom End Drop

For the bottom end drop, the members evaluated are the fuel pins and the bottom pins located on the lower plate. The fuel core assembly weight is reacted by the three bottom pins attached to the lower plate.

Component	Stress Category	Calculated Stress (ksi)	Margin of Safety
Fuel Pins	Compressive	0.12	57.9
Bottom Pins	Compressive	3.9	5.26
Posts	Compressive	3.9	5.26

Note that the load on the posts for the bottom end drop is the same as for the top end drop.

Detailed calculations are contained in Item 1 of Section 2.9.5.3.

Side Drop Case

For the side drop case, the members evaluated are the fuel pins, the upper and lower plates and the posts.

Component	Stress Category	Calculated Stress (ksi)	Margin of Safety
Fuel Pins	Bending	8.42	0.2
Fuel Pins	Shear	0.083	59.8
Posts	Bending	2.66	8.21
Posts	Shear	0.022	556
Support plates	Shear Tear Out	0.275	43.5
Support plates	Bearing	N/A	N/A

Detailed calculations are contained in Item 1 of Section 2.9.5.3.

2.9.5.3 SLOWPOKE Structural Calculation

1. NAC Calculation 50026-2001, "Structural Evaluation of the SLOWPOKE Fuel Core Basket."

2.9.6 SrF_2 Capsules

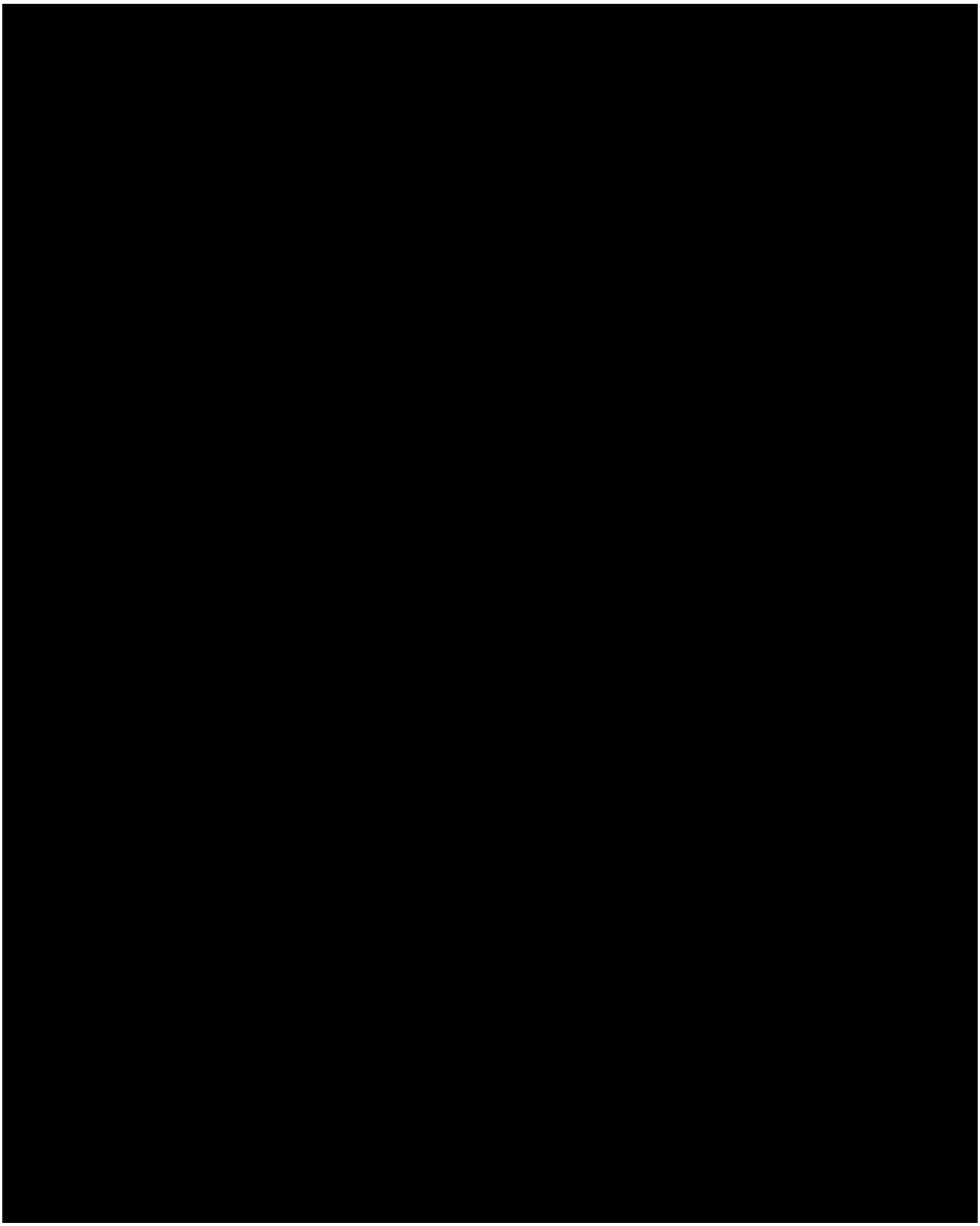

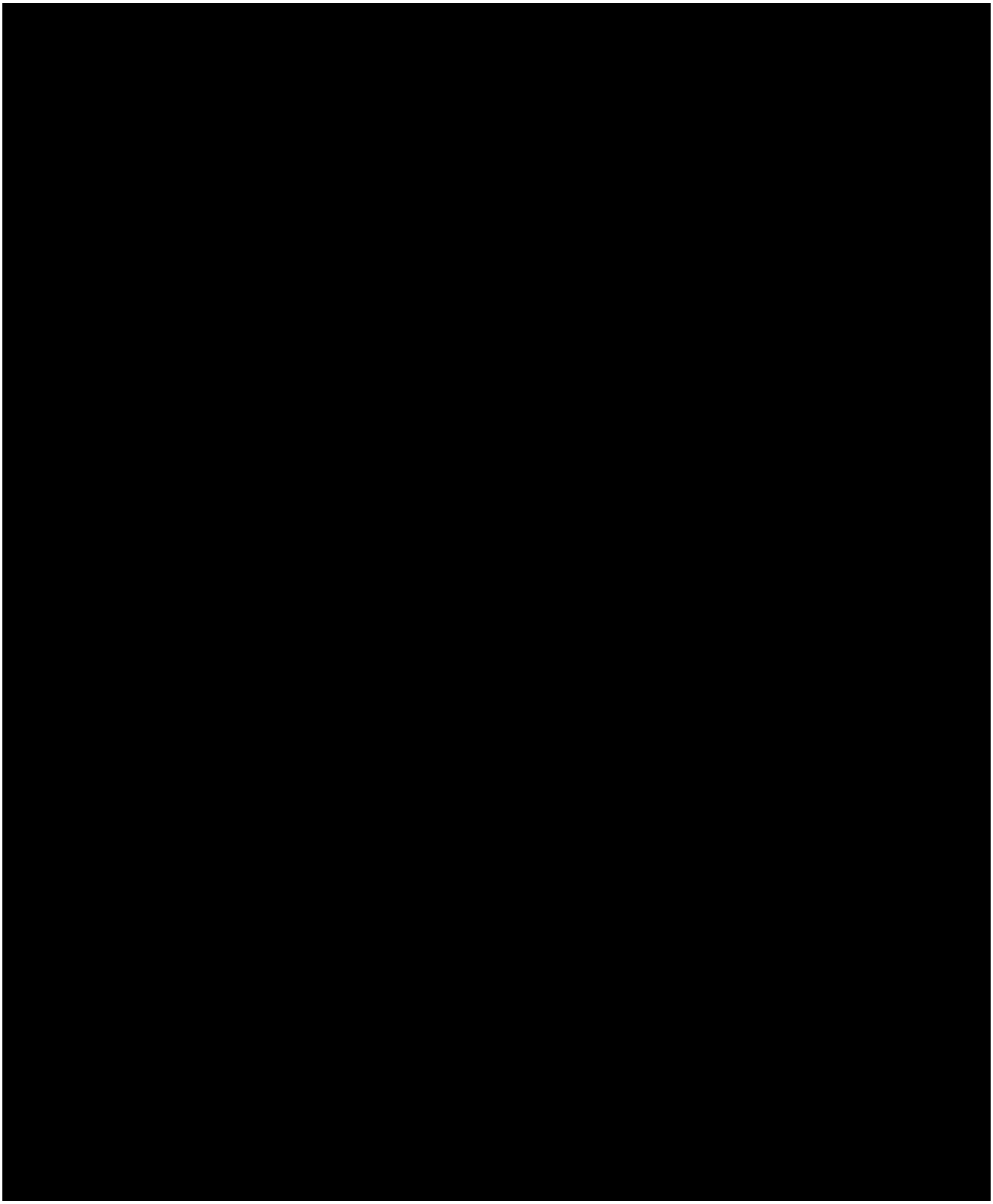

2.10 Appendices

2.10.1 Computer Program Descriptions

Structural evaluation of the NAC-LWT cask body is accomplished by two computer codes, ANSYS and RBCUBED. Each program is described in the following sections.

2.10.1.1 ANSYS

The structural analysis of the main body of the NAC-LWT cask is performed using a finite element model and the ANSYS structural analysis computer program ('ANSYS' Computer Code for Large-Scale General Purpose Engineering Analysis). The ANSYS computer program is a large-scale, general purpose computer program for the solution of several classes of engineering analyses, including: static and dynamic; elastic, plastic, creep and swelling; buckling; and small and large deflections. The matrix displacement method of analysis based on finite element idealization is employed throughout the program. The large variety of element types available gives ANSYS the capability of analyzing 2- and 3-dimensional frame structures, piping systems, 2-dimensional plane and axisymmetric solids, 3-dimensional solids, flat plates, axisymmetric and 3-dimensional shells, and nonlinear problems, including gap element interfaces. The use of the axisymmetric elements permits accurate modeling of the cask body with a half-section model. The interface gap elements provide the capability of realistic modeling and evaluation of the interactions between the lead and the stainless steel shells and between the upper ring, closure lid and bolts.

Typically, the ANSYS program is run by sequential implementation of three options: pre-processing (or model building); analysis (calculation of stiffness matrix, displacements and reaction forces solution, element stresses); and post-processing (selection of analysis results). Each option may be run in the interactive or batch mode computer environment.

The ANSYS pre-processor (PREP7) is used to construct the finite element mesh, describe each cask component material (temperature-dependent) property, assign unique identifiers for cask components, model displacement boundary conditions and prescribe temperature, point loads, or surface tractions of appropriate element faces or nodes. The PREP7 graphics option is a valuable tool that permits the user to check the model for completeness. The ANSYS analysis option uses the PREP7 file to generate a solution file and to provide a user-oriented printout of the solution phase. In general, each solution provides: a complete echo of the model data, model displacement solution, element stresses, nodal forces, reaction forces, and any warnings or errors related to the analysis.

A variety of ANSYS post-processors (e.g., Postl and Post29) utilize the solution file to sort, print, or plot selected results from the ANSYS analysis. The post-processors can provide many useful features including a maximum set of variables (such as stress components or displacements) or section stresses along a designated path. Additionally, the structural behavior can be viewed by model displacement and stress contour plots.

2.10.1.2 RBCUBED – A Program to Calculate Impact Limiter Dynamics

This section presents a general description of the RBCUBED program. The methods described in this section are used by the RBCUBED program in the NAC-LWT cask impact limiter analyses.

RBCUBED, an impact limiter analysis computer program, utilizes quasistatic methodology; that is, each iteration freezes an instant in time during which all calculations are performed, and then, proceeds to the next time increment. The methodology employed in the program sizes the impact limiter and calculates the deceleration forces used to calculate the stresses imposed on the cask structure, but does not implement any load factor. There are several assumptions that are attendant to this methodology:

- Gravity is the only force that acts on the cask during free fall. While falling, the cask is translating vertically and continues to do so until the initial (first) impacting end has been brought to rest. In oblique and side drop cases after the first end has been stopped, the cask rotates until the second limiter strikes the unyielding surface and absorbs the remaining kinetic energy.
- There is no sliding or lateral motion of the cask at any time during the impact(s).
- The cask weight includes the impact limiters, but the length of the cask does not.
- The deceleration force generated during crushing of the isotropic absorption material acts at the area centroid of the area engaged in crushing for that increment in time.
- Crushing of the absorption material occurs from the outside toward the cask body.
- The component of the cask weight acting downward and the crush force acting upward are assumed to act colinearly. The magnitude of the weight component is very small compared to the crush force.
- The impact limiter material that is not between the cask and the unyielding surface does not absorb any kinetic energy. The extraneous limiter material is ineffective for the purposes of this impact limiter analysis.

RBCUBED is capable of analyzing any cask impact orientation from vertical (0°) to horizontal (90°).

The input data for RBCUBED includes the following: (1) height of drop; (2) weight of cask system; (3) cask length; (4) impact orientation angle; (5) deflection increment; (6) material crush properties (stress-strain curve or force deflection curve); and (7) impact limiter geometry.

Geometric modeling of the impact limiter is performed using combinatorial geometry based on the MORSE-CG computer program.

The output data from RBCUBED includes the following: (1) a verbatim input return; (2) a processed input of general problem parameters and material properties; (3) the results of the RBCUBED execution - deflection; (4) resultant force; (5) remaining kinetic energy; (6) velocity; (7) elapsed time since the beginning of impact; (8) area currently involved in crushing; and (9) a series of crush “footprints” at crush intervals of one inch.

The computer program, RBCUBED--A Program to Calculate Impact Limiter Dynamics, was benchmarked for validity by comparison of analysis results to manual calculations using crush areas determined by drafting methods.

2.10.2 Finite Element Model Description

The finite element analysis technique is well suited for the evaluation of the axisymmetric cask body structure, especially with respect to the following: (1) the interaction between the lead cylinder and the stainless steel shells and end plates; (2) the discontinuity effects at the shell and bottom forging intersections; and (3) the interaction of the top ring forging, closure lid and bolts in the vicinity of the bolted region. Furthermore, finite element analysis must consider (1) the stresses in the inner and outer shell induced by the lateral pressure from the lead during 30-foot drop conditions; (2) the differential thermal expansion of the lead and stainless steel shells under both hot and cold temperature conditions; and (3) the fact that no physical bonding exists between the lead and the surrounding stainless steel.

The finite element model of the NAC-LWT cask body is generated utilizing the ANSYS PREP7 routine. The cask body is modeled as an assembly of axisymmetric elements about its longitudinal centerline (Figure 2.10.2-1). The aspect ratio of finite elements and the density of geometric mesh are carefully arranged, especially at the locations of geometric discontinuity and force boundary. This minimizes the numerical instability situation incurred by the finite element method.

The cask components considered in the finite element model include the cask closure lid, top ring, closure lid bolts, inner and outer shells, lead middle shell, bottom, bottom cover plate, and lead bottom plate. All of the cask components, except the closure lid bolts, are modeled with isoparametric quadrilateral axisymmetric elements.

The closure lid bolt is modeled as a beam element connected just below the countersink in the lid to the cask body at the bolt circle centerline. The cross-sectional properties of the bolt are input on a “per radian” basis. The bolt preload is applied to the finite element model as an initial strain on the beam element.

A significant number of gap elements are used to model (1) the interfaces between the lead shell and the inner and outer stainless steel shells, and (2) the interface between the lead bottom plate and the bottom. The “gap” element represents two surfaces, which may maintain or break physical contact and may slide relative to each other. Note that the gap element is only capable of supporting compression in the direction normal to the surfaces and friction in the tangential direction. Gap elements completely surround the lead shell in the cask wall. According to whether or not there is contact between the lead and stainless steel surfaces, the gap elements transmit compressive load, but permit no tensile load between the lead and stainless steel. This means that the gap element allows the lead to move freely inside the space surrounded by the stainless steel. When an acceleration is imposed on the entire mass of the cask model, which includes the lead shell, to account for the inertial effect of a drop impact condition, the

acceleration applied to the lead shell causes the lead to slump and, consequently, creates lateral pressures on the inner and outer shells, wherever the lead contacts them.

Similarly, when the lead shell has a higher thermal expansion coefficient than the stainless steel, the lead has a larger thermal growth or contraction and is restrained by the surrounding stainless steel. The gap element again allows the lead to move freely inside the space surrounded by the stainless steel. Pressures resulting from the thermal expansion restraints develop wherever the lead contacts the surrounding stainless steel.

Thus, accurate modeling is achieved for the lead slump during an impact load condition and for differential thermal expansion and contraction during temperature excursions.

A large stiffness of 10^9 is specified to maintain the boundary between the lead/steel surfaces. Similarly, gap elements are used to model the interface between the closure lid and the top ring. A stiffness of 10^9 is specified to maintain the boundary between these surfaces.

It should be noted that there are tapered transitions at each end of the outer shell. The results of parametric studies combined with previous cask analyses have shown that a tapered transition region will not significantly affect the stress concentration on the junctions of the outer shell and the end forgings. The finite element model of the NAC-LWT cask, therefore, conservatively gives no consideration to tapered transitions at each end of the outer shell.

License drawings in Section 1.4 are used to define the cask dimensions for the model. The material properties used in the ANSYS analyses are tabulated in Section 2.3.

Figure 2.10.2-1 presents an entire cask view of the finite element model identifying view regions. There are a total of 2,013 nodes and 1,890 elements. Figure 2.10.2-2 through Figure 2.10.2-8 are detailed views of each region showing the nodal point numbers on the edge nodes. The broken lines represent the gap between the lead and the steel.

For identification and ease of evaluation of component critical section stresses, the finite element cask components are uniquely designated as shown in Figure 2.10.2-9.

A list of nodal coordinates is reported in Table 2.10.2-1. This helps to identify the actual locations of component critical sections, which are widely used in the expression of finite element stress results.

2.10.2.1 Boundary and Loading Conditions Used in the 30-Foot Drop Finite Element Analysis

The constrained nodes and the loading conditions for each 30-foot drop finite element analysis are summarized below for illustration purposes. The 1-foot drop conditions are identical to those of the 30-foot drops, except that the g-load factors are different.

2.10.2.1.1 Displacement Boundary Conditions

Case 1	Top end drop,	$\phi = 0°$
	Boundary constraint	UX: all the nodes located on the cask vertical centerline; for example, 1, 26, 51, 76, etc. UY: node 25
Case 2	Side drop,	$\phi = 90°$
	Boundary constraint	UX: node 1, 2561 UY: node 1 UZ: node 1, 2561
Case 3	Bottom end drop,	$\phi = 180°$
	Boundary constraint	UX: all the nodes located on the cask vertical centerline; for example, 1, 26, 51, 76, etc. UY: node 2176
Case 4	Top oblique drop,	$\phi = 15.74°, 30°, 45°, 60°$
	Boundary constraint	UX: node 1, 25, 2561 UY: node 1 UZ: node 1, 25, 2561
Case 5	Bottom oblique drop,	$\phi = 120°, 135°, 150°, 164.26°$
	Boundary constraint	UX: node 1, 2176, 2561 UY: node 2561 UZ: node 1, 2176, 2561

where:

ϕ = drop orientation or, in other words, the angle between the impact direction and the cask centerline. When ϕ equals 120°, 135°, 150° or 164.26°, it represents the bottom oblique drops at 60°, 45°, 30° and 15.74°.

UX = translational displacement restraints along the cask radial direction.

UY = translational displacement restraints along the longitudinal (vertical) direction.

UZ = translational displacement restraints along the circumferential direction.

2.10.2.1.2 Loading Conditions

For each of the side or oblique drop orientations, the impact loads are applied as a cosine-shaped distribution over the impact region (See Figure 2.7.1-6 and Figure 2.7.1-9). This cosine-shaped pressure distribution is represented in terms of a Fourier series of harmonic functions, as discussed in Section 2.7.1.2.2, equations 1 through 4, for the side drop condition and Table 2.7.1-22 for the oblique drop condition. The applied impact pressure loadings for each of the 30-foot hypothetical accident conditions are tabulated in Table 2.10.2-2. In addition, the inertial load is applied on the mass of the cask model for each drop. Table 2.6.7-34 provides the cask drop g load factors. The impact pressures for each of the 1-foot drop conditions are calculated by multiplying the 31-foot impact pressure by the ratio of the 1-foot g load to the 31-foot g load.

Figure 2.10.2-1 ANSYS Finite Element Model – NAC-LWT Cask

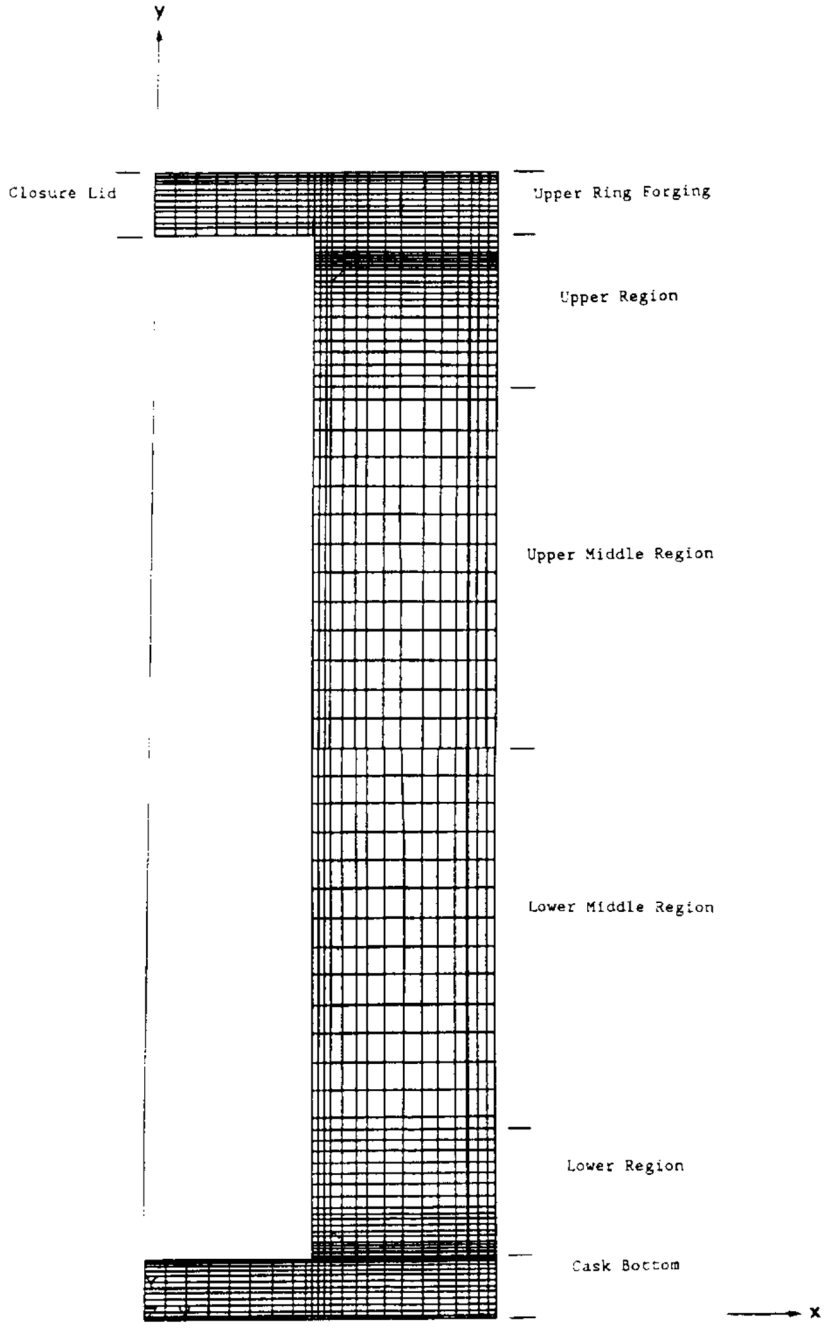

Figure 2.10.2-2 Cask Bottom of Model

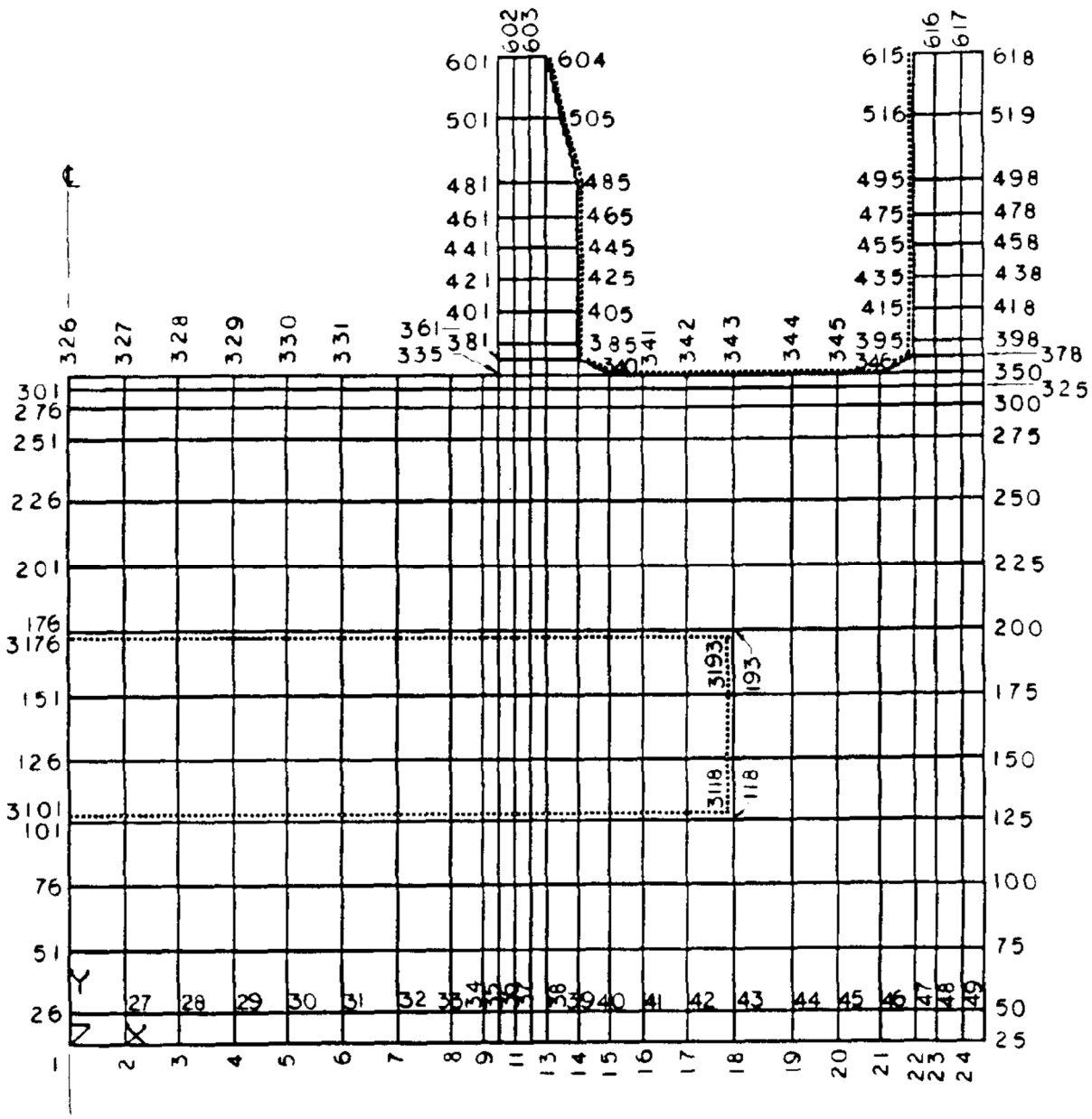

Broken lines indicate where the ANSYS gap element was used to represent no physical bonding.

Figure 2.10.2-3 Inner, Lead and Outer Shells – Lower Region of Model

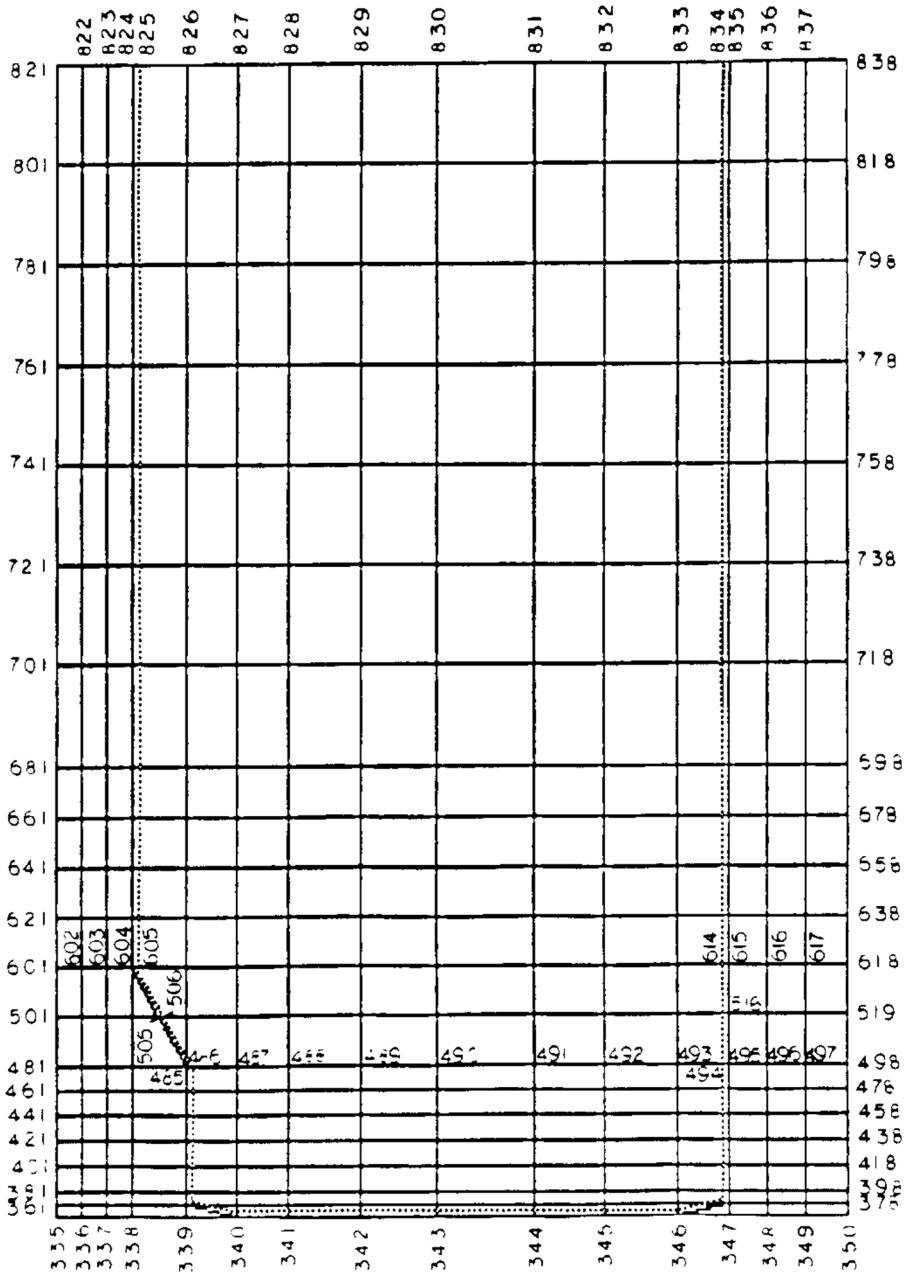

Broken lines indicate where the ANSYS gap element was used to represent no physical bonding.

Figure 2.10.2-4 Inner, Lead and Outer Shells – Lower Middle Region of Model

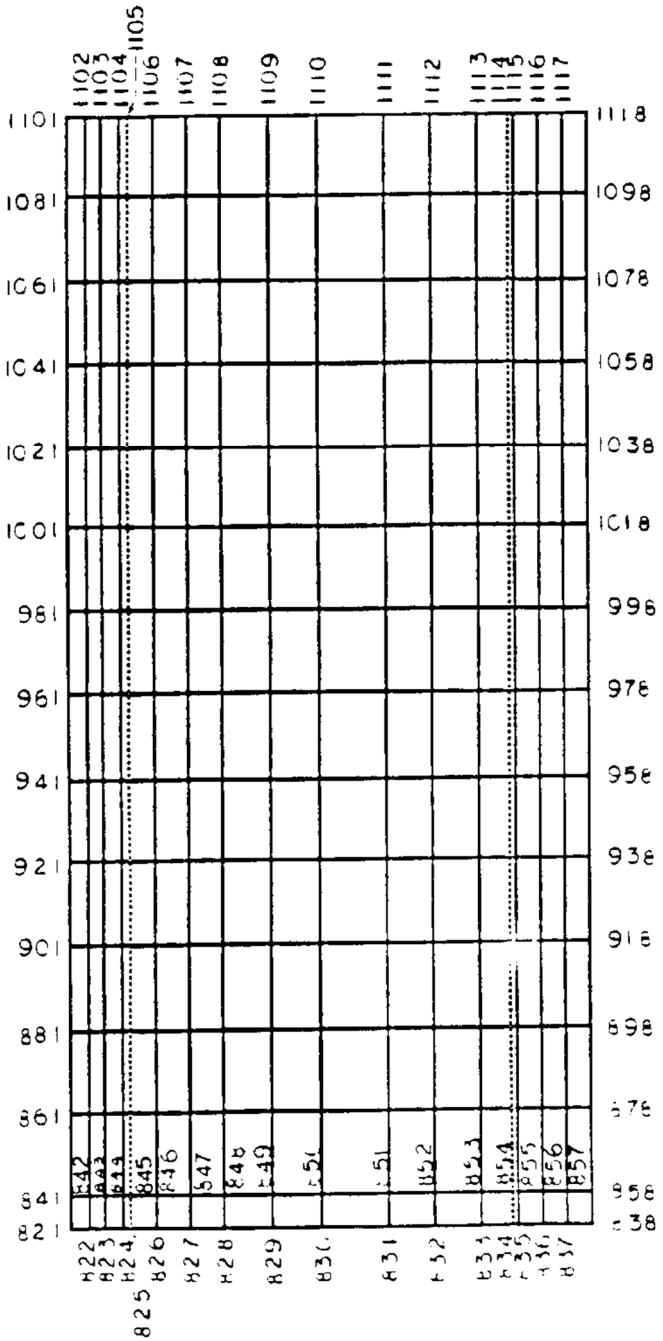

Broken lines indicate where the ANSYS gap element was used to represent no physical bonding.

Figure 2.10.2-5 Inner, Lead and Outer Shell – Upper Middle Region of Model

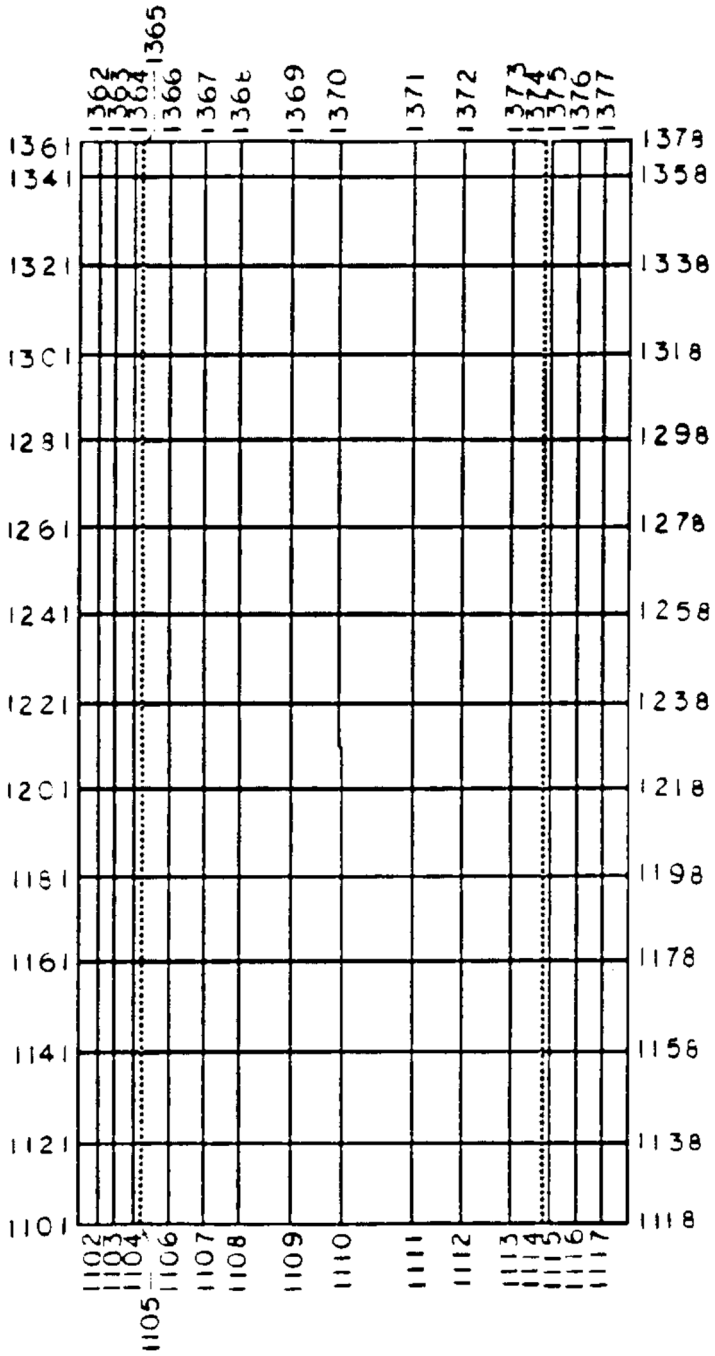

Broken lines indicate where the ANSYS gap element was used to represent no physical bonding.

Figure 2.10.2-6 Inner, Lead and Outer Shells – Upper Region of Model

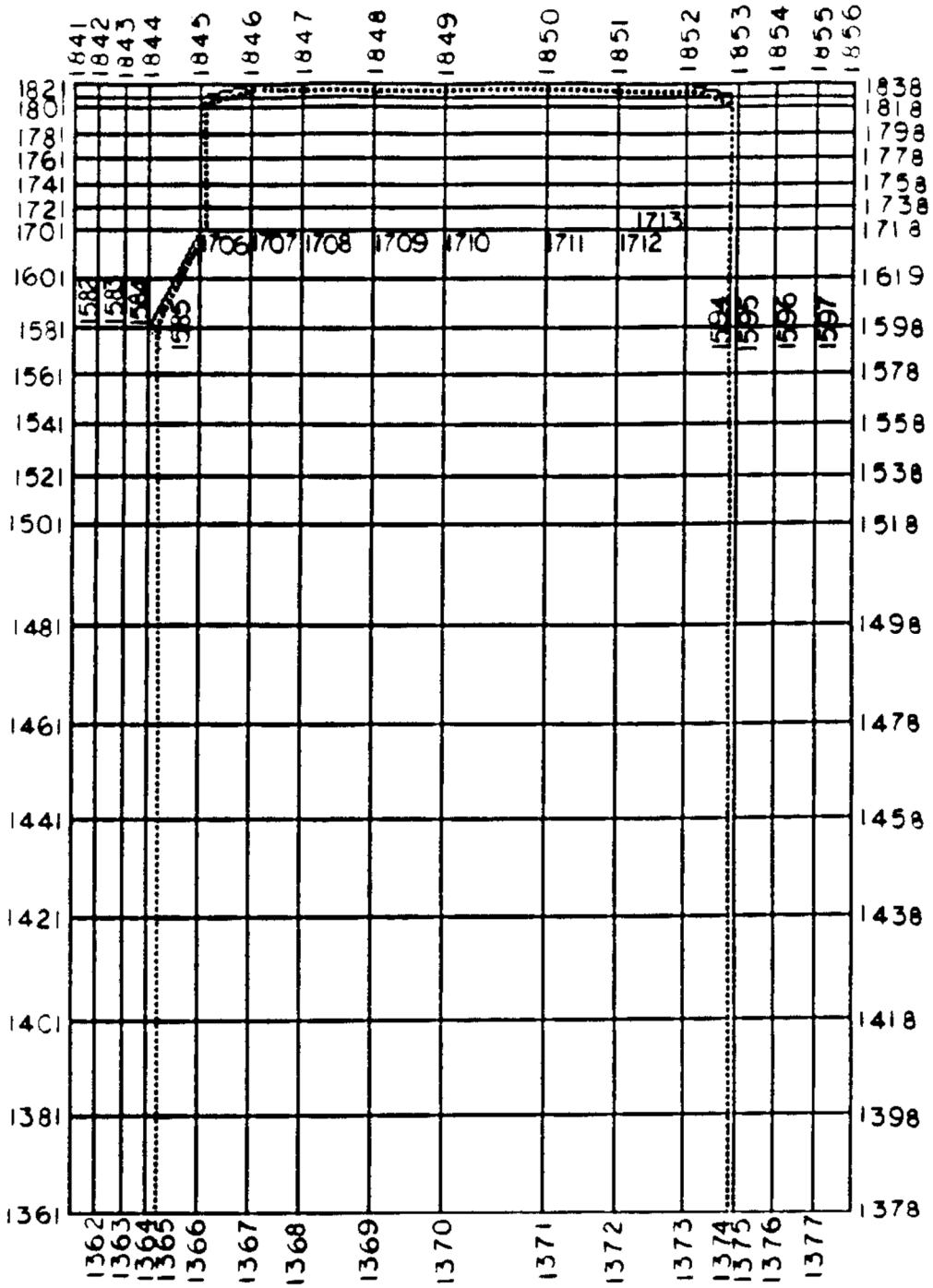

Broken lines indicate where the ANSYS gap element was used to represent no physical bonding.

Figure 2.10.2-7 Upper Ring Forging on Model

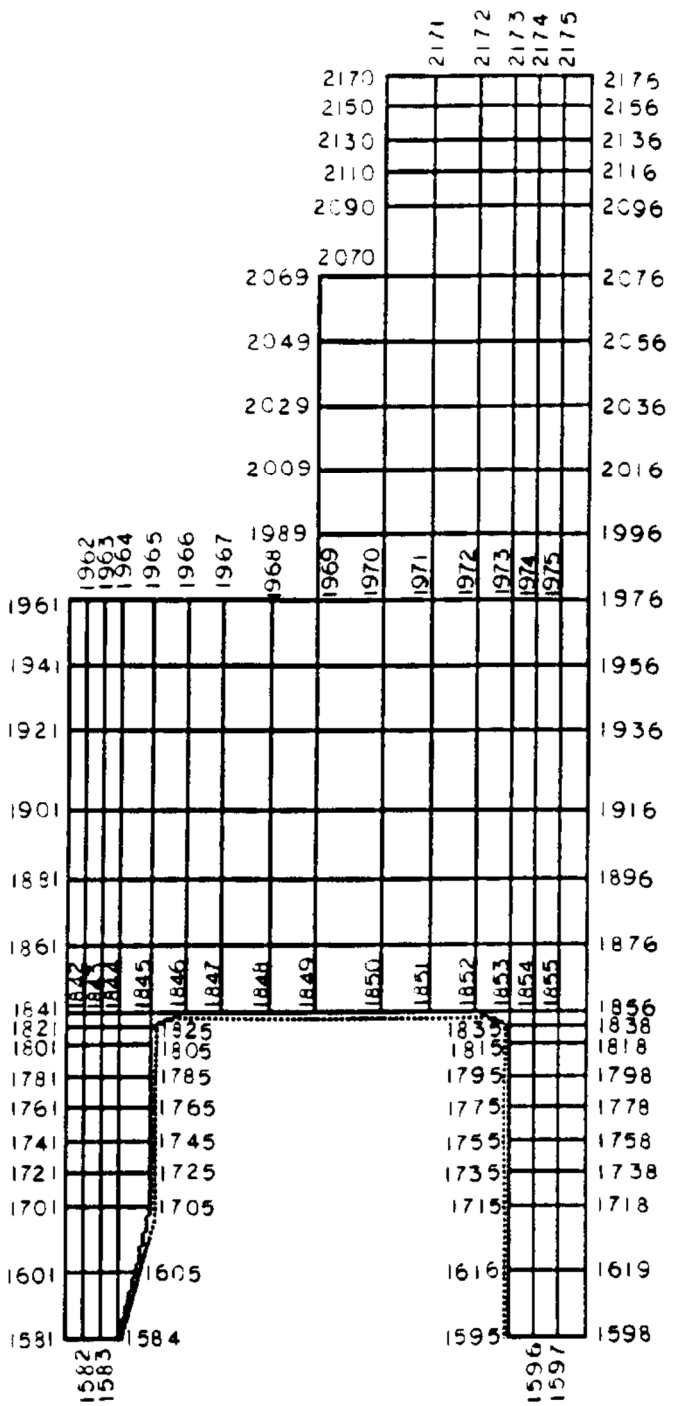

Broken lines indicate where the ANSYS gap element was used to represent no physical bonding.

Figure 2.10.2-8 Closure Lid on Model

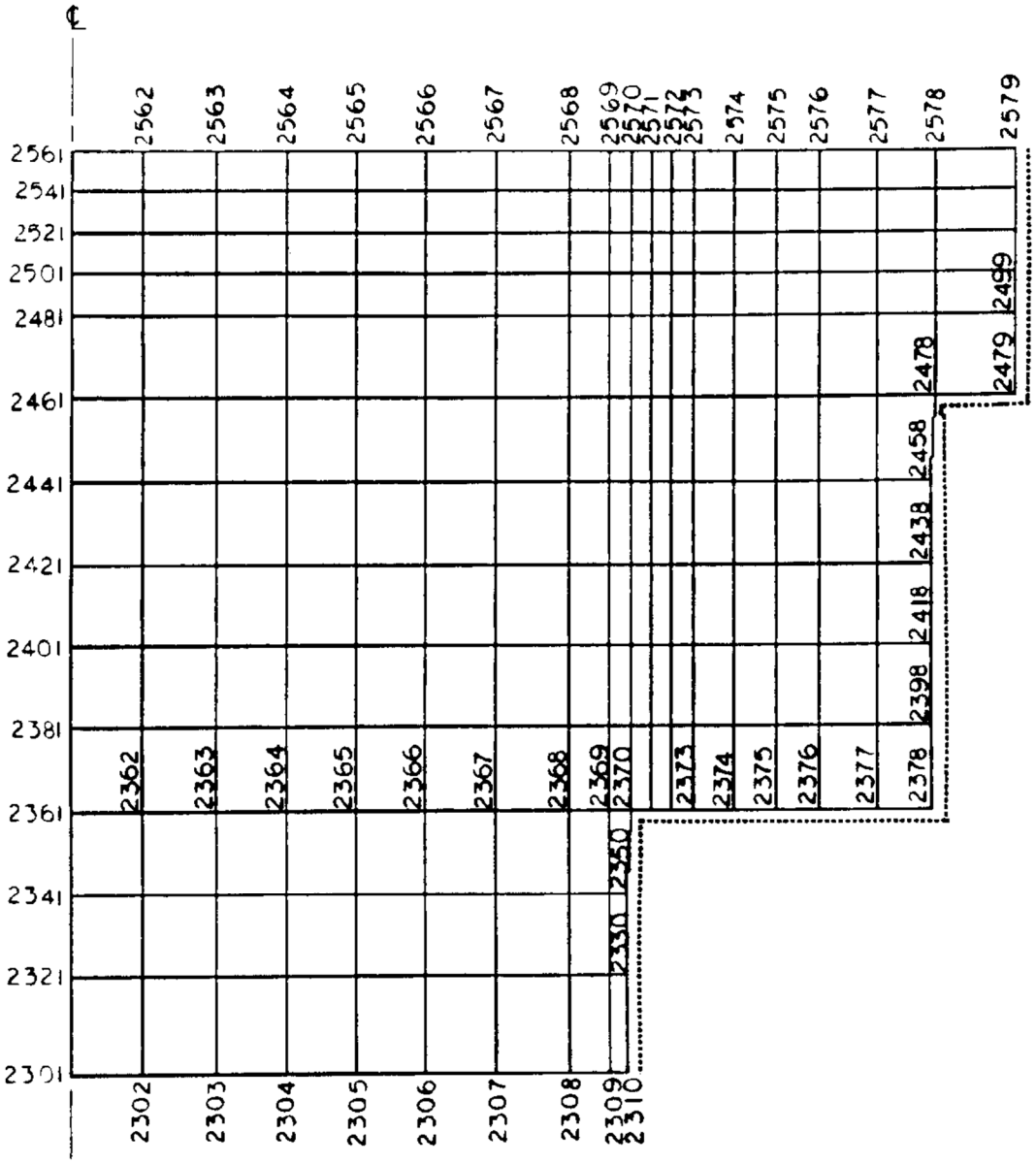

Broken lines indicate where the ANSYS gap element was used to represent no physical bonding.

Figure 2.10.2-9 ANSYS Finite Element Model – Component Identification

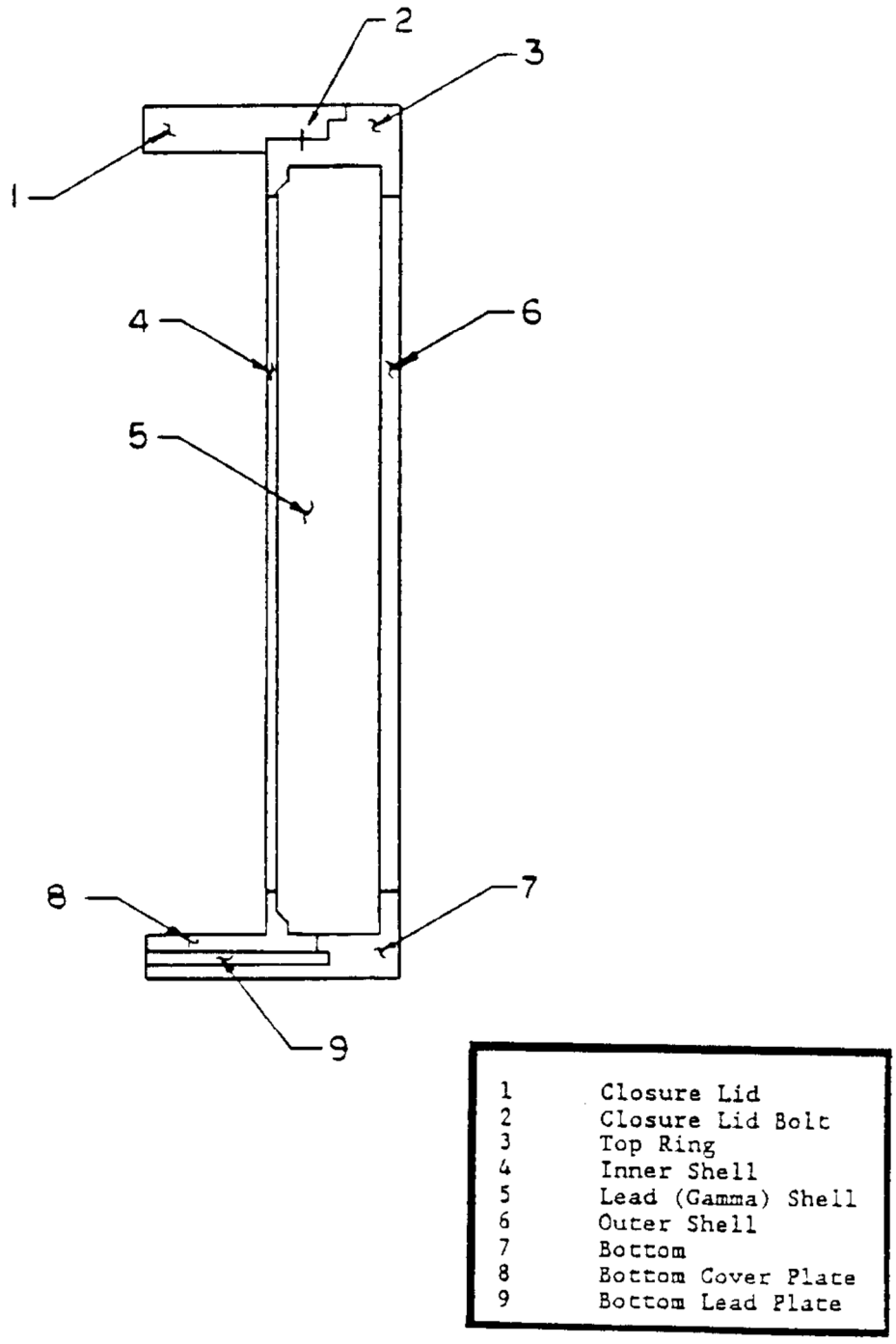

Table 2.10.2-1 Node Definitions

NODE	X (inch)	Y (inch)
1	.00000	.00000
2	.85000	.00000
3	1.7000	.00000
4	2.5500	.00000
5	3.4000	.00000
6	4.2500	.00000
7	5.1000	.00000
8	5.9500	.00000
9	6.4375	.00000
10	6.6875	.00000
11	6.9375	.00000
12	7.1875	.00000
13	7.4375	.00000
14	7.9375	.00000
15	8.4375	.00000
16	8.9375	.00000
17	9.6375	.00000
18	10.375	.00000
19	11.315	.00000
20	12.001	.00000
21	12.688	.00000
22	13.188	.00000
23	13.561	.00000
24	13.934	.00000
25	14.301	.00000
26	.00000	.50000
27	.85000	.50000
28	1.7000	.50000
29	2.5500	.50000
30	3.4000	.50000
31	4.2500	.50000
32	5.1000	.50000
33	5.9500	.50000
34	6.4375	.50000
35	6.6875	.50000
36	6.9375	.50000
37	7.1875	.50000
38	7.4375	.50000
39	7.9375	.50000
40	8.4375	.50000
41	8.9375	.50000
42	9.6375	.50000
43	10.375	.50000
44	11.315	.50000
45	12.001	.50000
46	12.688	.50000
47	13.188	.50000
48	13.561	.50000
49	13.934	.50000
50	14.307	.50000
51	.00000	1.5000
52	.85000	1.5000
53	1.7000	1.5000
54	2.5500	1.5000

Table 2.10.2-1 Node Definitions (Continued)

NODE	X (inch)	Y (inch)
55	3.4000	1.5000
56	4.2500	1.5000
57	5.1000	1.5000
58	5.9500	1.5000
59	6.4375	1.5000
60	6.6875	1.5000
61	6.9375	1.5000
62	7.1875	1.5000
63	7.4375	1.5000
64	7.9375	1.5000
65	8.4375	1.5000
66	8.9375	1.5000
67	9.6375	1.5000
68	10.375	1.5000
69	11.315	1.5000
70	12.001	1.5000
71	12.688	1.5000
72	13.188	1.5000
73	13.561	1.5000
74	13.934	1.5000
75	14.307	1.5000
76	.00000	2.5000
77	.85000	2.5000
78	1.7000	2.5000
79	2.5500	2.5000
80	3.4000	2.5000
81	4.2500	2.5000
82	5.1000	2.5000
83	5.9500	2.5000
84	6.4375	2.5000
85	6.6875	2.5000
86	6.9375	2.5000
87	7.1875	2.5000
88	7.4375	2.5000
89	7.9375	2.5000
90	8.4375	2.5000
91	8.9375	2.5000
92	9.6375	2.5000
93	10.375	2.5000
94	11.315	2.5000
95	12.001	2.5000
96	12.688	2.5000
97	13.188	2.5000
98	13.561	2.5000
99	13.964	2.5000
100	14.307	2.5000
101	.00000	3.5000
102	.85000	3.5000
103	1.7000	3.5000
104	2.5500	3.5000
105	3.4000	3.5000
106	4.2500	3.5000
107	5.1000	3.5000
108	5.9500	3.5000
109	6.4375	3.5000
110	6.6875	3.5000
111	6.9375	3.5000
112	7.1875	3.5000
113	7.4375	3.5000
114	7.9375	3.5000

Table 2.10.2-1 Node Definitions (Continued)

NODE	X (inch)	Y (inch)
115	8.4375	3.5000
116	8.9375	3.5000
117	9.6375	3.5000
118	10.375	3.5000
119	11.315	3.5000
120	12.001	3.5000
121	12.688	3.5000
122	13.188	3.5000
123	13.561	3.5000
124	13.934	3.5000
125	14.307	3.5000
126	.00000	4.5000
127	.85000	4.5000
128	1.7000	4.5000
129	2.5500	4.5000
130	3.4000	4.5000
131	4.2500	4.5000
132	5.1000	4.5000
133	5.9500	4.5000
134	6.4375	4.5000
135	6.6875	4.5000
136	6.9375	4.5000
137	7.1875	4.5000
138	7.4375	4.5000
139	7.9375	4.5000
140	8.4375	4.5000
141	8.9375	4.5000
142	9.6375	4.5000
143	10.375	4.5000
144	11.315	4.5000
145	12.001	4.5000
146	12.683	4.5000
147	13.188	4.5000
148	13.561	4.5000
149	13.934	4.5000
150	14.307	4.5000
151	.00000	5.5000
152	.85000	5.5000
153	1.7000	5.5000
154	2.5500	5.5000
155	3.4000	5.5000
156	4.2500	5.5000
157	5.1000	5.5000
158	5.9500	5.5000
159	6.4375	5.5000
160	6.6875	5.5000
161	6.9375	5.5000
162	7.1875	5.5000
163	7.4375	5.5000
164	7.9375	5.5000
165	8.4375	5.5000
166	8.9375	5.5000
167	9.6375	5.5000
168	10.375	5.5000
169	11.315	5.5000
170	12.001	5.5000
171	12.688	5.5000
172	13.188	5.5000
173	13.561	5.5000
174	13.934	5.5000

Table 2.10.2-1 Node Definitions (Continued)

NODE	X (inch)	Y (inch)
175	14.307	5.5000
176	.00000	6.5000
177	.85000	6.5000
178	1.7000	6.5000
179	2.5500	6.5000
180	3.4000	6.5000
181	4.2500	6.5000
182	5.1000	6.5000
183	5.9500	6.5000
184	6.4375	6.5000
185	6.6875	6.5000
186	6.9378	6.5000
187	7.1875	6.5000
188	7.4375	6.5000
189	7.9375	6.5000
190	8.4375	6.5000
191	8.9375	6.5000
192	9.6375	6.5000
193	10.375	6.5000
194	11.315	6.5000
195	12.001	6.5000
196	12.688	6.5000
197	13.188	6.5000
198	13.561	6.5000
199	13.934	6.5000
200	14.307	6.5000
201	.00000	7.5000
202	.85000	7.5000
203	1.7000	7.5000
204	2.5500	7.5000
205	3.4000	7.5000
206	4.2500	7.5000
207	5.1000	7.5000
208	5.9500	7.5000
209	6.4375	7.5000
210	6.6875	7.5000
211	6.9375	7.5000
212	7.1875	7.5000
213	7.4375	7.5000
214	7.9375	7.5000
215	8.4375	7.5000
216	8.9375	7.5000
217	9.6375	7.5000
218	10.375	7.5000
219	11.315	7.5000
220	12.001	7.5000
221	12.688	7.5000
222	13.188	7.5000
223	13.561	7.5000
224	13.934	7.5000
225	14.307	7.5000
226	.00000	8.5000
227	.85000	8.5000
228	1.7000	8.5000
229	2.5500	8.5000
230	3.4000	8.5000
231	4.2500	8.5000
232	5.1000	8.5000
233	5.9500	8.5000
234	6.4375	8.5000

Table 2.10.2-1 Node Definitions (Continued)

NODE	X (inch)	Y (inch)
235	6.6875	8.5000
236	6.9375	8.5000
237	7.1875	8.5000
238	7.4375	8.5000
239	7.9375	8.5000
240	8.4375	8.5000
241	8.9375	8.5000
242	9.6375	8.5000
243	10.375	8.5000
244	11.315	8.5000
245	12.001	8.5000
246	12.688	8.5000
247	13.188	8.5000
248	13.561	8.5000
249	13.934	8.5000
250	14.307	8.5000
251	.00000	9.5000
252	.85000	9.5000
253	1.7000	9.5000
254	2.5500	9.5000
255	3.4000	9.5000
256	4.2500	9.5000
257	5.1000	9.5000
258	5.9500	9.5000
259	6.4375	9.5000
260	6.6875	9.5000
261	6.9375	9.5000
262	7.1875	9.5000
263	7.4375	9.5000
264	7.9375	9.5000
265	8.4375	9.5000
266	8.9375	9.5000
267	9.6375	9.5000
268	10.375	9.5000
269	11.315	9.5000
270	12.001	9.5000
271	12.688	9.5000
272	13.188	9.5000
273	13.561	9.5000
274	13.934	9.5000
275	14.307	9.5000
276	.00000	10.000
277	.85000	10.000
278	1.7000	10.000
279	2.5500	10.000
280	3.4000	10.000
281	4.2500	10.000
282	5.1000	10.000
283	5.9500	10.000
284	643.75	10.000
285	6.6875	10.000
286	6.9375	10.000
287	7.1875	10.000
288	7.4375	10.000
289	7.9375	10.000
290	8.4375	10.000
291	8.9375	10.000
292	9.6375	10.000
293	10.375	10.000
294	11.315	10.000

Table 2.10.2-1 Node Definitions (Continued)

NODE	X (inch)	Y (inch)
295	12.001	10.000
296	12.688	10.000
297	13.188	10.000
298	13.561	10.000
299	13.934	10.000
300	14.307	10.000
301	.00000	10.250
302	.85000	10.250
303	1.7000	10.250
304	2.5500	10.250
305	3.4000	10.250
306	4.2500	10.250
307	5.1000	10.250
308	5.9500	10.250
309	6.4375	10.250
310	6.6875	10.250
311	6.9375	10.250
312	7.1875	10.250
313	7.4375	10.250
314	7.9375	10.250
315	8.4375	10.250
316	8.9375	10.250
317	9.6375	10.250
318	10.375	10.250
319	11.315	10.250
320	12.001	10.250
321	12.688	10.250
322	13.188	10.250
323	13.561	10.250
324	13.934	10.250
325	14.307	10.250
326	.00000	10.500
327	.85000	10.500
328	1.7000	10.500
329	2.5500	10.500
330	3.4000	10.500
331	4.2500	10.500
332	5.1000	10.500
333	5.9500	10.500
334	6.4375	10.500
335	6.6875	10.500
336	6.9375	10.500
337	7.1875	10.500
338	7.4375	10.500
339	7.9375	10.500
340	8.4375	10.500
341	8.9375	10.500
342	9.6375	10.500
343	10.375	10.500
344	11.315	10.500
345	12.001	10.500
346	12.688	10.500
347	13.188	10.500
348	13.561	10.500
349	13.934	10.500
350	14.307	10.500
361	6.6875	10.750
362	6.9375	10.750
363	7.1875	10.750
364	7.4375	10.750

Table 2.10.2-1 Node Definitions (Continued)

NODE	X (inch)	Y (inch)
365	7.9375	10.750
366	7.9375	10.750
367	8.4375	10.750
368	8.9375	10.750
369	9.6375	10.750
370	10.375	10.750
371	11.315	10.750
372	12.001	10.750
373	12.688	10.750
374	13.133	10.750
375	13.188	10.750
376	13.561	10.750
377	13.934	10.750
378	14.307	10.750
381	6.6875	11.000
382	6.9375	11.000
383	7.1875	11.000
384	7.4375	11.000
385	7.9375	11.000
386	7.9375	11.000
387	8.4375	11.000
388	8.9375	11.000
389	9.6375	11.000
390	10.375	11.000
391	11.315	11.000
392	12.001	11.000
393	12.688	11.000
394	13.133	11.000
395	13.188	11.000
396	13.561	11.000
397	13.934	11.000
398	14.307	11.000
401	6.6875	11.500
402	6.9375	11.500
403	7.1875	11.500
404	7.4375	11.500
405	7.9375	11.500
406	7.9375	11.500
407	8.4375	11.500
408	8.9375	11.500
409	9.6375	11.500
410	10.375	11.500
411	11.315	11.500
412	12.001	11.500
413	12.688	11.500
414	13.133	11.500
415	13.188	11.500
416	13.561	11.500
417	13.934	11.500
418	14.307	11.500
421	6.6875	12.000
422	6.9375	12.000
423	7.1875	12.000
424	7.4375	12.000
425	7.9375	12.000
426	7.9375	12.000
427	8.4375	12.000
428	8.9375	12.000
429	9.6375	12.000
430	10.375	12.000

Table 2.10.2-1 Node Definitions (Continued)

NODE	X (inch)	Y (inch)
431	11.315	12.000
432	12.001	12.000
433	12.688	12.000
434	13.133	12.000
435	13.188	12.000
436	13.561	12.000
437	13.934	12.000
438	14.307	12.000
441	6.6875	12.500
442	6.9375	12.500
443	7.1875	12.500
444	7.4375	12.500
445	7.9375	12.500
446	7.9375	12.500
447	8.4375	12.500
448	8.9375	12.500
449	9.6375	12.500
450	10.375	12.500
451	11.315	12.500
452	12.001	12.500
453	12.688	12.500
454	13.133	12.500
455	13.188	12.500
456	13.561	12.500
457	13.934	12.500
458	14.307	12.500
461	6.6875	13.000
462	6.9375	13.000
463	7.1875	13.000
464	7.4375	13.000
465	7.9375	13.000
466	7.9375	13.000
467	8.4375	13.000
468	8.9375	13.000
469	9.6375	13.000
470	10.375	13.000
471	11.315	13.000
472	12.001	13.000
473	12.688	13.000
474	13.133	13.000
475	13.188	13.000
476	13.561	13.000
477	13.934	13.000
478	14.307	13.000
481	6.6875	13.500
482	6.9375	13.500
483	7.1875	13.500
484	7.4375	13.500
485	7.9375	13.500
486	7.9375	13.500
487	8.4375	13.500
488	8.9375	13.500
489	9.6375	13.500
490	10.375	13.500
491	11.315	13.500
492	12.001	13.500
493	12.688	13.500
494	13.133	13.500
495	13.188	13.500
496	13.561	13.500

Table 2.10.2-1 Node Definitions (Continued)

NODE	X (inch)	Y (inch)
497	13.934	13.500
498	14.307	13.500
501	6.6875	14.500
502	6.9375	14.500
503	7.1875	14.500
504	7.4375	14.500
505	7.6875	14.500
506	7.6875	14.500
507	7.9375	14.500
508	8.4375	14.500
509	8.9375	14.500
510	9.6375	14.500
511	10.375	14.500
512	11.315	14.500
513	12.001	14.500
514	12.688	14.500
515	13.133	14.500
516	13.188	14.500
517	13.561	14.500
518	13.934	14.500
519	14.307	14.500
601	6.6875	15.500
602	6.9375	15.500
603	7.1875	15.500
604	7.4375	15.500
605	7.4375	15.500
606	7.9375	15.500
607	8.4375	15.500
608	8.9375	15.500
609	9.6375	15.500
610	10.375	15.500
611	11.315	15.500
612	12.001	15.500
613	12.688	15.500
614	13.133	15.500
615	13.188	15.500
616	13.561	15.500
617	13.934	15.500
618	14.307	15.500
621	6.6875	16.500
622	6.9375	16.500
623	7.1875	16.500
624	7.4375	16.500
625	7.4375	16.500
626	7.9375	16.500
627	8.4375	16.500
628	8.9375	16.500
629	9.6375	16.500
630	10.375	16.500
631	11.315	16.500
632	12.001	16.500
633	12.688	16.500
634	13.133	16.500
635	13.188	16.500
636	13.561	16.500
637	13.934	16.500
638	14.307	16.500
641	6.6875	17.500
642	6.9375	17.500
643	7.1875	17.500

Table 2.10.2-1 Node Definitions (Continued)

NODE	X (inch)	Y (inch)
644	7.4375	17.500
645	7.4375	17.500
646	7.9375	17.500
647	8.4375	17.500
648	8.9375	17.500
649	9.6375	17.500
650	10.375	17.500
651	11.315	17.500
652	12.001	17.500
653	12.688	17.500
654	13.133	17.500
655	13.188	17.500
656	13.561	17.500
657	13.934	17.500
658	14.307	17.500
661	6.6875	18.500
662	6.9375	18.500
663	7.1875	18.500
664	7.4375	18.500
665	7.4375	18.500
666	7.9375	18.500
667	8.4378	18.500
668	8.9375	18.500
669	9.6375	18.500
670	10.375	18.500
671	11.315	18.500
672	12.001	18.500
673	12.688	18.500
674	13.133	18.500
675	13.188	18.500
676	13.561	18.500
677	13.934	18.500
678	14.307	18.500
681	6.6875	19.500
682	6.9375	19.500
683	7.1875	19.500
684	7.4375	19.500
685	7.4375	19.500
686	7.9375	19.500
687	8.4375	19.500
688	8.9375	19.500
689	9.6375	19.500
690	10.375	19.500
691	11.315	19.500
692	12.001	19.500
693	12.688	19.500
694	13.133	19.500
695	13.188	19.500
696	13.561	19.500
697	13.934	19.500
698	14.307	19.500
701	6.6875	21.500
702	6.9375	21.500
703	7.1875	21.500
704	7.4375	21.500
705	7.4375	21.500
706	7.9375	21.500
707	8.4375	21.500
708	8.9375	21.500
709	9.6375	21.500

Table 2.10.2-1 Node Definitions (Continued)

NODE	X (inch)	Y (inch)
710	10.375	21.500
711	11.315	21.500
712	12.001	21.500
713	12.688	21.500
714	13.133	21.500
715	13.188	21.500
716	13.561	21.500
717	13.934	21.500
718	14.307	21.500
721	6.6875	23.500
722	6.9375	23.500
723	7.1875	23.500
724	7.4375	23.500
725	7.4375	23.500
726	7.9375	23.500
727	8.4375	23.500
728	8.9375	23.500
729	9.6375	23.500
730	10.375	23.500
731	11.315	23.500
732	12.001	23.500
733	12.688	23.500
734	13.133	23.500
735	13.188	23.500
736	13.561	23.500
737	13.934	23.500
738	14.307	23.500
741	6.6875	25.500
742	6.9375	25.500
743	7.1875	25.500
744	7.4375	25.500
745	7.4375	25.500
746	7.9375	25.500
747	8.4375	25.500
748	8.9375	25.500
749	9.6375	25.500
750	10.375	25.500
751	11.315	25.500
752	12.001	25.500
753	12.688	25.500
754	13.133	25.500
755	13.188	25.500
756	13.561	25.500
757	13.934	25.500
758	14.307	25.500
761	6.6875	27.500
762	6.9375	27.500
763	7.1875	27.500
764	7.4375	27.500
765	7.4375	27.500
766	7.9375	27.500
767	8.4375	27.500
768	8.9375	27.500
769	9.6375	27.500
770	10.375	27.500
771	11.315	27.500
772	12.001	27.500
773	12.688	27.500
774	13.133	27.500
775	13.188	27.500

Table 2.10.2-1 Node Definitions (Continued)

NODE	X (inch)	Y (inch)
776	13.561	27.500
777	16.934	27.500
778	14.307	27.500
781	6.6875	29.500
782	6.9375	29.500
783	7.1875	29.500
784	7.4375	29.500
785	7.4375	29.500
786	7.9375	29.500
787	8.4375	29.500
788	8.9375	29.500
789	9.6375	29.500
790	10.375	29.500
791	11.315	29.500
792	12.001	29.500
793	12.688	29.500
794	13.133	29.500
795	13.188	29.500
796	13.561	29.500
797	13.934	29.500
798	14.307	29.500
801	6.6875	31.500
802	6.9375	31.500
803	7.1875	31.500
804	7.4375	31.500
805	7.4375	31.500
806	7.9375	31.500
807	8.4375	31.500
808	8.9375	31.500
809	9.6375	31.500
810	10.375	31.500
811	11.315	31.500
812	12.001	31.500
813	12.688	31.500
814	13.133	31.500
815	13.183	31.500
816	13.561	31.500
817	13.934	31.500
818	14.307	31.500
821	6.6875	33.500
822	6.9375	33.500
823	7.1875	33.500
824	7.4375	33.500
825	7.4375	33.500
826	7.9375	33.500
827	8.4375	33.500
828	8.9375	33.500
829	9.6375	33.500
830	10.375	33.500
831	11.315	33.500
832	12.001	33.500
833	12.688	33.500
834	13.133	33.500
835	13.188	33.500
836	13.561	33.500
837	13.934	33.500
838	14.307	33.500
841	6.6875	35.500
842	6.9375	35.500
843	7.1875	35.500

Table 2.10.2-1 Node Definitions (Continued)

NODE	X (inch)	Y (inch)
844	7.4375	35.500
845	7.4375	35.500
846	7.9375	35.500
847	8.4375	35.500
848	8.9375	35.500
849	9.6375	35.500
850	10.375	35.500
851	11.315	35.500
852	12.001	35.500
853	12.688	35.500
854	13.133	35.500
855	13.188	35.500
856	13.561	35.500
857	13.934	35.500
858	14.307	35.500
861	6.6875	40.500
862	6.9375	40.500
863	7.1875	40.500
834	7.4375	40.500
835	7.4375	40.500
866	7.9375	40.500
867	8.4375	40.500
868	8.9375	40.500
869	9.6375	40.500
870	10.373	40.500
871	11.315	40.500
872	12.001	40.500
873	12.688	40.500
874	13.133	40.500
875	13.188	40.500
876	13.561	40.500
877	13.934	40.500
878	14.307	40.500
881	6.6875	45.500
882	6.9375	45.500
883	7.1875	45.500
884	7.4375	45.500
885	7.4375	45.500
886	7.9375	45.500
887	8.4375	45.500
888	8.9375	45.500
889	9.6375	45.500
890	10.370	45.500
891	11.315	45.500
892	12.001	45.500
893	12.688	45.500
894	13.133	45.500
895	13.188	45.500
896	13.561	45.500
897	13.934	45.500
898	14.307	45.500
901	6.6875	50.500
902	6.9375	50.500
903	7.1875	50.500
904	7.4375	50.500
905	7.4375	50.500
906	7.9375	50.500
907	8.4375	50.500
908	8.9375	50.500
909	9.6375	50.500

Table 2.10.2-1 Node Definitions (Continued)

NODE	X (inch)	Y (inch)
910	10.368	50.500
911	11.315	50.500
912	12.001	50.500
913	12.688	50.500
914	13.133	50.500
915	13.188	50.500
916	13.561	50.500
917	13.934	50.500
918	14.307	50.500
921	6.6875	55.500
922	6.9375	55.500
923	7.1875	55.500
924	7.4375	55.500
925	7.4375	55.500
926	7.9375	55.500
927	8.4375	55.500
928	8.9375	55.500
929	9.6375	55.500
930	10.365	55.500
931	11.315	55.500
932	12.001	55.500
933	12.688	55.500
934	13.133	55.500
935	13.188	55.500
936	13.561	55.500
937	13.934	55.500
938	14.307	55.500
941	6.6875	60.500
942	6.9375	60.500
943	7.1875	60.500
944	7.4375	60.500
945	7.4375	60.500
946	7.9375	60.500
947	8.4375	60.500
948	8.9375	60.500
949	9.6375	60.500
950	10.363	60.500
951	11.315	60.500
952	12.001	60.500
953	12.688	60.500
954	13.133	60.500
955	13.188	60.500
956	13.561	60.500
957	13.934	60.500
958	14.307	60.500
961	6.6875	65.500
962	6.9375	65.500
963	7.1875	65.500
964	7.4375	65.500
965	7.4375	65.500
966	7.9375	65.500
967	8.4375	65.500
968	8.9375	65.500
969	9.6375	65.500
970	10.361	65.500
971	11.315	65.500
972	12.001	65.500
973	12.688	65.500
974	13.133	65.500
975	13.188	65.500

Table 2.10.2-1 Node Definitions (Continued)

NODE	X (inch)	Y (inch)
976	13.561	65.500
977	13.934	65.500
978	14.307	65.500
981	6.6875	70.500
982	6.9375	70.500
983	7.1875	70.500
984	7.4375	70.500
985	7.4375	70.500
986	7.9375	70.500
987	8.4375	70.500
988	8.9375	70.500
989	9.6375	70.500
990	10.358	70.500
991	11.315	70.500
992	12.001	70.500
993	12.688	70.500
994	13.133	70.500
995	13.188	70.500
996	13.561	70.500
997	13.934	70.500
998	14.307	70.500
1001	6.6875	75.500
1002	6.9375	75.500
1003	7.1875	75.500
1004	7.4375	75.500
1005	7.4375	75.500
1006	7.9375	75.500
1007	8.4375	75.500
1008	8.9375	75.500
1009	9.6375	75.500
1010	10.356	75.500
1011	11.315	75.500
1012	12.001	75.500
1013	12.688	75.500
1014	13.133	75.500
1015	13.188	75.500
1016	13.561	75.500
1017	13.934	75.500
1018	14.307	75.500
1021	6.6875	80.500
1022	6.9375	80.500
1023	7.1875	80.500
1024	7.4375	80.500
1025	7.4375	80.500
1026	7.9375	80.500
1027	8.4375	80.500
1028	8.9375	80.500
1029	9.6375	80.500
1030	10.353	80.500
1031	11.315	80.500
1032	12.001	80.500
1033	12.688	80.500
1034	13.133	80.500
1035	13.188	80.500
1036	13.561	80.500
1037	13.934	80.500
1038	14.307	80.500
1041	6.6875	85.500
1042	6.9375	85.500
1043	7.1875	85.500

Table 2.10.2-1 Node Definitions (Continued)

NODE	X (inch)	Y (inch)
1044	7.4375	85.500
1045	7.4375	85.500
1046	7.9375	85.500
1047	8.4375	85.500
1048	8.9375	85.500
1049	9.6375	85.500
1050	10.351	85.500
1051	11.315	85.500
1052	12.001	85.500
1053	12.688	85.500
1054	13.133	85.500
1055	13.188	85.500
1056	13.561	85.500
1057	13.934	85.500
1058	14.307	85.500
1061	6.6875	90.500
1062	6.9375	90.500
1063	7.1875	90.500
1064	7.4375	90.500
1065	7.4375	90.500
1066	7.9375	90.500
1067	8.4375	90.500
1068	8.9375	90.500
1069	9.6375	90.500
1070	10.349	90.500
1071	11.315	90.500
1072	12.001	90.500
1073	12.688	90.500
1074	13.133	90.500
1075	13.188	90.500
1076	13.561	90.500
1077	13.934	90.500
1078	14.307	90.500
1081	6.6875	95.500
1082	6.9375	95.500
1083	7.1875	95.500
1084	7.4375	95.500
1085	7.4375	95.500
1086	7.9375	95.500
1087	8.4375	95.500
1088	8.9375	95.500
1089	9.6375	95.500
1090	10.346	95.500
1091	11.315	95.500
1092	12.001	95.500
1093	12.688	95.500
1094	13.133	95.500
1095	13.188	95.500
1096	13.561	95.500
1097	13.934	95.500
1098	14.307	95.500
1101	6.6875	100.50
1102	6.9375	100.50
1103	7.1875	100.50
1104	7.4375	100.50
1105	7.4375	100.50
1106	7.9375	100.50
1107	8.4375	100.50
1108	8.9375	100.50
1109	9.6375	100.50

Table 2.10.2-1 Node Definitions (Continued)

NODE	X (inch)	Y (inch)
1110	10.344	100.50
1111	11.315	100.50
1112	12.001	100.50
1113	12.688	100.50
1114	13.133	100.50
1115	13.188	100.50
1116	13.561	100.50
1117	13.934	100.50
1118	14.307	100.50
1121	6.6875	105.50
1122	6.9375	105.50
1123	7.1875	105.50
1124	7.4375	105.50
1125	7.4375	105.50
1126	7.9375	105.50
1127	8.4375	105.50
1128	8.9375	105.50
1129	9.6375	105.50
1130	10.341	105.50
1131	11.315	105.50
1132	12.001	105.50
1133	12.688	105.50
1134	13.133	105.50
1135	13.188	105.50
1136	13.561	105.50
1137	13.934	105.50
1138	14.307	105.50
1141	6.6875	110.50
1142	6.9375	110.50
1143	7.1875	110.50
1144	7.4375	110.50
1145	7.4375	110.50
1146	7.9375	110.50
1147	8.4375	110.50
1148	8.9375	110.50
1149	9.6375	110.50
1150	10.339	110.50
1151	11.315	110.50
1152	12.001	110.50
1153	12.688	110.50
1154	13.133	110.50
1155	13.188	110.50
1156	13.561	110.50
1157	13.934	110.50
1158	14.307	110.50
1161	6.6875	115.50
1162	6.9375	115.50
1163	7.1875	115.50
1164	7.4375	115.50
1165	7.4375	115.50
1166	7.9375	115.50
1167	8.4375	115.50
1168	8.9375	115.50
1169	9.6375	115.50
1170	10.337	115.50
1171	11.315	115.50
1172	12.001	115.50
1173	12.688	115.50
1174	13.133	115.50
1175	13.188	115.50

Table 2.10.2-1 Node Definitions (Continued)

NODE	X (inch)	Y (inch)
1176	13.561	115.50
1177	13.934	115.50
1178	14.307	115.50
1181	6.6875	120.50
1182	6.9375	120.50
1183	7.1875	120.50
1184	7.4375	120.50
1185	7.4375	120.50
1186	7.9375	120.50
1187	8.4375	120.50
1188	8.9375	120.50
1189	9.6375	120.50
1190	10.334	120.50
1191	11.315	120.50
1192	12.001	120.50
1193	12.688	120.50
1194	13.133	120.50
1195	13.188	120.50
1196	13.561	120.50
1197	13.934	120.50
1198	14.307	120.50
1201	6.6875	125.50
1202	6.9375	125.50
1203	7.1875	125.50
1204	7.4375	125.50
1205	7.4375	125.50
1206	7.9375	125.50
1207	8.4375	125.50
1208	8.9375	125.50
1209	9.6375	125.50
1210	10.332	125.50
1211	11.315	125.50
1212	12.001	125.50
1213	12.688	125.50
1214	13.133	125.50
1215	13.188	125.50
1216	13.561	125.50
1217	13.934	125.50
1218	14.307	125.50
1221	6.6875	130.50
1222	6.9375	130.50
1223	7.1875	130.50
1224	7.4375	130.50
1225	7.4375	130.50
1226	7.9375	130.50
1227	8.4375	130.50
1228	8.9375	130.50
1229	9.6375	130.50
1230	10.339	130.50
1231	11.315	130.50
1232	12.001	130.50
1233	12.688	130.50
1234	13.133	130.50
1235	13.188	130.50
1236	13.561	130.50
1237	13.934	130.50
1238	14.307	130.50
1241	6.6875	135.50
1242	6.9375	135.50
1243	7.1875	135.50

Table 2.10.2-1 Node Definitions (Continued)

NODE	X (inch)	Y (inch)
1244	7.4375	135.50
1245	7.4375	135.50
1246	7.9375	135.50
1247	8.4375	135.50
1248	8.9375	135.50
1249	9.6375	135.50
1250	10.327	135.50
1251	11.315	135.50
1252	12.001	135.50
1253	12.688	135.50
1254	13.133	135.50
1255	13.188	135.50
1256	13.561	135.50
1257	13.934	135.50
1258	14.307	135.50
1261	6.6875	140.50
1262	6.9375	140.50
1263	7.1875	140.50
1264	7.4375	140.50
1265	7.4375	140.50
1266	7.9375	140.50
1267	8.4375	140.50
1268	8.9375	140.50
1269	9.6375	140.50
1270	10.325	140.50
1271	11.315	140.50
1272	12.001	140.50
1273	12.688	140.50
1274	13.133	140.50
1275	13.188	140.50
1276	13.561	140.50
1277	13.934	140.50
1278	14.307	140.50
1281	6.6875	145.50
1282	6.9375	145.50
1283	7.1875	145.50
1284	7.4375	145.50
1285	7.4375	145.50
1286	7.9375	145.50
1287	8.4375	145.50
1288	8.9375	145.50
1289	9.6375	145.50
1290	10.322	145.50
1291	11.315	145.50
1292	12.001	145.50
1293	12.688	145.50
1294	13.133	145.50
1295	13.188	145.50
1296	13.561	145.50
1297	13.934	145.50
1298	14.307	145.50
1301	6.6875	150.50
1302	6.9375	150.50
1303	7.1875	150.50
1304	7.4375	150.50
1305	7.4375	150.50
1306	7.9375	150.50
1307	8.4375	150.50
1308	8.9375	150.50
1309	9.6375	150.50

Table 2.10.2-1 Node Definitions (Continued)

NODE	X (inch)	Y (inch)
1310	10.320	150.50
1311	11.315	150.50
1312	12.001	150.50
1313	12.688	150.50
1314	13.133	150.50
1315	13.188	150.50
1316	13.561	150.50
1317	13.934	150.50
1318	14.307	150.50
1321	6.6875	155.50
1322	6.9375	155.50
1323	7.1875	155.50
1324	7.4375	155.50
1325	7.4375	155.50
1326	7.9375	155.50
1327	8.4375	155.50
1328	8.9375	155.50
1329	9.6375	155.50
1330	10.317	155.50
1331	11.315	155.50
1332	12.001	155.50
1333	12.688	155.50
1334	13.133	155.50
1335	13.188	155.50
1336	13.561	155.50
1337	13.934	155.50
1338	14.307	155.50
1341	6.6875	160.50
1342	6.9375	160.50
1343	7.1875	160.50
1344	7.4375	160.50
1345	7.4375	160.50
1346	7.9375	160.50
1347	8.4375	160.50
1348	8.9375	160.50
1349	9.6375	160.50
1350	10.315	160.50
1351	11.315	160.50
1352	12.001	160.50
1353	12.688	160.50
1354	13.133	160.50
1355	13.188	160.50
1356	13.561	160.50
1357	13.934	160.50
1358	14.307	160.50
1361	6.6875	162.50
1362	6.9375	162.50
1363	7.1875	162.50
1364	7.4375	162.50
1365	7.4375	162.50
1366	7.9375	162.50
1367	8.4375	162.50
1368	8.9375	162.50
1369	9.6375	162.50
1370	10.315	162.50
1371	11.315	162.50
1372	12.001	162.50
1373	12.688	162.50
1374	13.133	162.50
1375	13.188	162.50

Table 2.10.2-1 Node Definitions (Continued)

NODE	X (inch)	Y (inch)
1376	13.561	162.50
1377	13.934	162.50
1378	14.307	162.50
1381	6.6875	164.50
1382	6.9375	164.50
1383	7.1875	164.50
1384	7.4375	164.50
1385	7.4375	164.50
1386	7.9375	164.50
1387	8.4375	164.50
1388	8.9375	164.50
1389	9.6375	164.50
1390	10.315	164.50
1391	11.315	164.50
1392	12.001	164.50
1393	12.688	164.50
1394	13.133	164.50
1395	13.188	164.50
1396	13.561	164.50
1397	13.934	164.50
1398	14.307	164.50
1401	6.6875	166.50
1402	6.9375	166.50
1403	7.1875	166.50
1404	7.4375	166.50
1405	7.4375	166.50
1406	7.9375	166.50
1407	8.4375	166.50
1408	8.9375	166.50
1409	9.6375	166.50
1410	10.315	166.50
1411	11.315	166.50
1412	12.001	166.50
1413	12.688	166.50
1414	13.133	166.50
1415	13.188	166.50
1416	13.561	166.50
1417	13.934	166.50
1418	14.307	166.50
1421	6.6875	168.50
1422	6.9375	168.50
1423	7.1875	168.50
1424	7.4375	168.50
1425	7.4375	168.50
1426	7.9375	168.50
1427	8.4375	168.50
1428	8.9375	168.50
1429	9.6375	168.50
1430	10.315	168.50
1431	11.315	168.50
1432	12.001	168.50
1433	12.688	168.50
1434	13.133	168.50
1435	13.188	168.50
1436	13.561	168.50
1437	13.934	168.50
1438	14.307	168.50
1441	6.6875	170.50
1442	6.9375	170.50
1443	7.1875	170.50

Table 2.10.2-1 Node Definitions (Continued)

NODE	X (inch)	Y (inch)
1444	7.4375	170.50
1445	7.4375	170.50
1446	7.9375	170.50
1447	8.4375	170.50
1448	8.9375	170.50
1449	9.6375	170.50
1450	10.315	170.50
1451	11.315	170.50
1452	12.001	170.50
1453	12.688	170.50
1454	13.133	170.50
1455	13.188	170.50
1456	13.561	170.50
1457	13.934	170.50
1458	14.307	170.50
1461	6.6875	172.50
1462	6.9375	172.50
1463	7.1875	172.50
1464	7.4375	172.50
1465	7.4375	172.50
1466	7.9375	172.50
1467	8.4375	172.50
1468	8.9375	172.50
1469	9.6375	172.50
1470	10.315	172.50
1471	11.315	172.50
1472	12.001	172.50
1473	12.688	172.50
1474	13.133	172.50
1475	13.188	172.50
1476	13.561	172.50
1477	13.934	172.50
1478	14.307	172.50
1481	6.6875	174.50
1482	6.9375	174.50
1483	7.1875	174.50
1484	7.4375	174.50
1485	7.4375	174.50
1486	7.9375	174.50
1487	8.4375	174.50
1488	8.9375	174.50
1489	9.6375	174.50
1490	10.315	174.50
1491	11.315	174.50
1492	12.001	174.50
1493	12.688	174.50
1494	13.133	174.50
1495	13.188	174.50
1496	13.561	174.50
1497	13.934	174.50
1498	14.307	174.50
1501	6.6875	176.50
1502	6.9375	176.50
1503	7.1875	176.50
1504	7.4375	176.50
1505	7.4375	176.50
1506	7.9375	176.50
1507	8.4375	176.50
1508	8.9375	176.50
1509	9.6375	176.50

Table 2.10.2-1 Node Definitions (Continued)

NODE	X (inch)	Y (inch)
1510	10.315	176.50
1511	11.315	176.50
1512	12.001	176.50
1513	12.688	176.50
1514	13.133	176.50
1515	13.188	176.50
1516	13.561	176.50
1517	13.934	176.50
1518	14.307	176.50
1521	6.6875	177.50
1522	6.9375	177.50
1523	7.1875	177.50
1524	7.4375	177.50
1525	7.4375	177.50
1526	7.9375	177.50
1527	8.4375	177.50
1528	8.9375	177.50
1529	9.6375	177.50
1530	10.315	177.50
1531	11.315	177.50
1532	12.001	177.50
1533	12.688	177.50
1534	13.133	177.50
1535	13.188	177.50
1536	13.561	177.50
1537	13.934	177.50
1538	14.307	177.50
1541	6.6875	178.50
1542	6.9375	178.50
1543	7.1875	178.50
1544	7.4375	178.50
1545	7.4375	178.50
1546	7.9375	178.50
1547	8.4375	178.50
1548	8.9375	178.50
1549	9.6375	178.50
1550	10.315	178.50
1551	11.315	178.50
1552	12.001	178.50
1553	12.688	178.50
1554	13.133	178.50
1555	13.188	178.50
1556	13.561	178.50
1557	13.934	178.50
1558	14.307	178.50
1561	6.6875	179.50
1562	6.9375	179.50
1563	7.1875	179.50
1564	7.4375	179.50
1565	7.4375	179.50
1566	7.9375	179.50
1567	8.4375	179.50
1568	8.9375	179.50
1569	9.6375	179.50
1570	10.315	179.50
1571	11.315	179.50
1572	12.001	179.50
1573	12.688	179.50
1574	13.133	179.50
1575	13.188	179.50

Table 2.10.2-1 Node Definitions (Continued)

NODE	X (inch)	Y (inch)
1576	13.561	179.50
1577	13.934	179.50
1578	14.307	179.50
1581	6.6875	180.50
1582	6.9375	180.50
1583	7.1875	180.50
1584	7.4375	180.50
1585	7.4375	180.50
1586	7.9375	180.50
1587	8.4375	180.50
1588	8.9375	180.50
1589	9.6375	180.50
1590	10.315	180.50
1591	11.315	180.50
1592	12.001	180.50
1593	12.688	180.50
1594	13.133	180.50
1595	13.188	180.50
1596	13.561	180.50
1597	13.934	180.50
1598	14.307	180.50
1601	6.6875	181.50
1602	6.9375	181.50
1603	7.1875	181.50
1604	7.4375	181.50
1605	7.6875	181.50
1606	7.6880	181.50
1607	7.9375	181.50
1608	8.4375	181.50
1609	8.9375	181.50
1610	9.6375	181.50
1611	10.315	181.50
1612	11.315	181.50
1613	12.001	181.50
1614	12.688	181.50
1615	13.133	181.50
1616	13.188	181.50
1617	13.561	181.50
1618	13.934	181.50
1619	14.307	181.50
1701	6.6875	182.50
1702	6.9375	182.50
1703	7.1875	182.50
1704	7.4375	182.50
1705	7.9375	182.50
1706	7.9385	182.50
1707	8.4375	182.50
1708	8.9375	182.50
1709	9.6375	182.50
1710	10.315	182.50
1711	11.315	182.50
1712	12.001	182.50
1713	12.688	182.50
1714	13.133	182.50
1715	13.188	182.50
1716	13.561	182.50
1717	13.934	182.50
1718	14.307	182.50
1721	6.6875	183.00
1722	6.9375	183.00

Table 2.10.2-1 Node Definitions (Continued)

NODE	X (inch)	Y (inch)
1723	7.1875	183.00
1724	7.4375	183.00
1725	7.9375	183.00
1726	7.9385	183.00
1727	8.4375	183.00
1728	8.9375	183.00
1729	9.6375	183.00
1730	10.315	183.00
1731	11.315	183.00
1732	12.001	183.00
1733	12.688	183.00
1734	13.133	183.00
1735	13.188	183.00
1736	13.561	183.00
1737	13.934	183.00
1738	14.307	183.00
1741	6.6875	183.50
1742	6.9375	183.50
1743	7.1875	183.50
1744	7.4375	183.50
1745	7.9375	183.50
1746	7.9385	183.50
1747	8.4375	183.50
1748	8.9375	183.50
1749	9.6375	183.50
1750	10.315	183.50
1751	11.315	183.50
1752	12.001	183.50
1753	12.688	183.50
1754	13.133	183.50
1755	13.188	183.50
1756	13.561	183.50
1757	13.934	183.50
1758	14.307	183.50
1761	6.6875	184.00
1762	6.9375	184.00
1763	7.1875	184.00
1764	7.4375	184.00
1765	7.9375	184.00
1766	7.9385	184.00
1767	8.4375	184.00
1768	8.9375	184.00
1769	9.6375	184.00
1770	10.315	184.00
1771	11.315	184.00
1772	12.001	184.00
1773	12.688	184.00
1774	13.133	184.00
1775	13.188	184.00
1776	13.561	184.00
1777	13.934	184.00
1778	14.307	184.00
1781	6.6875	184.50
1782	6.9375	184.50
1783	7.1875	184.50
1784	7.4375	184.50
1785	7.9375	184.50
1786	7.9385	184.50
1787	8.4375	184.50
1788	8.9375	184.50

Table 2.10.2-1 Node Definitions (Continued)

NODE	X (inch)	Y (inch)
1789	9.6375	184.50
1790	10.315	184.50
1791	11.315	184.50
1792	12.001	184.50
1793	12.688	184.50
1794	13.133	184.50
1795	13.188	184.50
1796	13.561	184.50
1797	13.934	184.50
1798	14.307	184.50
1801	6.6875	185.00
1802	6.9375	185.00
1803	7.1875	185.00
1804	7.4375	185.00
1805	7.9375	185.00
1806	7.9385	185.00
1807	8.4375	185.00
1808	8.9375	185.00
1809	9.6375	185.00
1810	10.315	185.00
1811	11.315	185.00
1812	12.001	185.00
1813	12.688	185.00
1814	13.133	185.00
1815	13.188	185.00
1816	13.561	185.00
1817	13.934	185.00
1818	14.307	185.00
1821	6.6875	185.25
1822	6.9375	185.25
1823	7.1875	185.25
1824	7.4375	185.25
1825	7.9375	185.25
1826	7.9385	185.25
1827	8.4375	185.25
1828	8.9375	185.25
1829	9.6375	185.25
1830	10.315	185.25
1831	11.315	185.25
1832	12.001	185.25
1833	12.688	185.25
1834	13.133	185.25
1835	13.188	185.25
1836	13.561	185.25
1837	13.934	185.25
1838	14.307	185.25
1841	6.6875	185.50
1842	6.9375	185.50
1843	7.1875	185.50
1844	7.4375	185.50
1845	7.9375	185.50
1846	8.4375	185.50
1847	8.9375	185.50
1848	9.6375	185.50
1849	10.315	185.50
1850	11.315	185.50
1851	12.001	185.50
1852	12.688	185.50
1853	13.188	185.50
1854	13.561	185.50

Table 2.10.2-1 Node Definitions (Continued)

NODE	X (inch)	Y (inch)
1855	13.934	185.50
1856	14.307	185.50
1861	6.6875	186.50
1862	6.9375	186.50
1863	7.1875	186.50
1864	7.4375	186.50
1865	7.9375	186.50
1866	8.4375	186.50
1867	8.9375	186.50
1868	9.6375	186.50
1869	10.315	186.50
1870	11.315	186.50
1871	12.001	186.50
1872	12.688	186.50
1873	13.188	186.50
1874	13.561	186.50
1875	13.934	186.50
1876	14.307	186.50
1881	6.6875	187.50
1882	6.9375	187.50
1883	7.1875	187.50
1884	7.4375	187.50
1885	7.9375	187.50
1886	8.4375	187.50
1887	8.9375	187.50
1888	9.6375	187.50
1889	10.315	187.50
1890	11.315	187.50
1891	12.001	187.50
1892	12.688	187.50
1893	13.188	187.50
1894	13.561	187.50
1895	13.934	187.50
1896	14.307	187.50
1901	6.6875	188.50
1902	6.9375	188.50
1903	7.1875	188.50
1904	7.4375	188.50
1905	7.9375	188.50
1906	8.4375	188.50
1907	8.9375	188.50
1908	9.6375	188.50
1909	10.315	188.50
1910	11.315	188.50
1911	12.001	188.50
1912	12.688	188.50
1913	13.188	188.50
1914	13.561	188.50
1915	13.934	188.50
1916	14.307	188.50
1921	6.6875	189.75
1922	6.9375	189.75
1923	7.1875	189.75
1924	7.4375	189.75
1925	7.9375	189.75
1926	8.4375	189.75
1927	8.9375	189.75
1928	9.6375	189.75
1929	10.315	189.75
1930	11.315	189.75

Table 2.10.2-1 Node Definitions (Continued)

NODE	X (inch)	Y (inch)
1931	12.001	189.75
1932	12.688	189.75
1933	13.188	189.75
1934	13.561	189.75
1935	13.934	189.75
1936	14.307	189.75
1941	6.6875	190.75
1942	6.9375	190.75
1943	7.1875	190.75
1944	7.4375	190.75
1945	7.9375	190.75
1946	8.4375	190.75
1947	8.9375	190.75
1948	9.6375	190.75
1949	10.315	190.75
1950	11.315	190.75
1951	12.001	190.75
1952	12.688	190.75
1953	13.188	190.75
1954	13.561	190.75
1955	13.934	190.75
1956	14.307	190.75
1961	6.6875	191.75
1962	6.9375	191.75
1963	7.1875	191.75
1964	7.4375	191.75
1965	7.9375	191.75
1966	8.4375	191.75
1967	8.9375	191.75
1968	9.6375	191.75
1969	10.315	191.75
1970	11.315	191.75
1971	12.001	191.75
1972	12.688	191.75
1973	13.188	191.75
1974	13.561	191.75
1975	13.934	191.75
1976	14.307	191.75
1989	10.315	192.75
1990	11.315	192.75
1991	12.001	192.75
1992	12.688	192.75
1993	13.188	192.75
1994	13.561	192.75
1995	13.934	192.75
1996	14.307	192.75
2009	10.315	193.75
2010	11.315	193.75
2011	12.001	193.75
2012	12.688	193.75
2013	13.188	193.75
2014	13.561	193.75
2015	13.934	193.75
2016	14.307	193.75
2029	10.315	194.75
2030	11.315	194.75
2031	12.001	194.75
2032	12.688	194.75
2033	13.188	194.75
2034	13.561	194.75

Table 2.10.2-1 Node Definitions (Continued)

NODE	X (inch)	Y (inch)
2035	13.934	194.75
2036	14.307	194.75
2049	10.315	195.75
2050	11.315	195.75
2051	12.001	195.75
2052	12.688	195.75
2053	13.188	195.75
2054	13.561	195.75
2055	13.934	195.75
2056	14.307	195.75
2069	10.315	196.69
2070	11.315	196.69
2071	12.001	196.69
2072	12.688	196.69
2073	13.188	196.69
2074	13.561	196.69
2075	13.934	196.69
2076	14.307	196.69
2090	11.315	197.75
2091	12.001	197.75
2092	12.688	197.75
2093	13.188	197.75
2094	13.561	197.75
2095	13.934	197.75
2096	14.307	197.75
2110	11.315	198.25
2111	12.001	198.25
2112	12.688	198.25
2113	13.188	198.25
2114	13.561	198.25
2115	13.934	198.25
2116	14.307	198.25
2130	11.315	198.25
2131	12.001	198.25
2132	12.688	198.25
2133	13.188	198.25
2134	13.561	198.25
2135	13.934	198.25
2136	14.307	198.25
2150	11.315	199.25
2151	12.001	199.25
2152	12.688	199.25
2153	13.188	199.25
2154	13.561	199.25
2155	13.934	199.25
2156	14.307	199.25
2170	11.315	199.25
2171	12.001	199.25
2172	12.688	199.25
2173	13.188	199.25
2174	13.561	199.25
2175	13.934	199.25
2176	14.307	199.25
2301	.00000	188.50
2302	.85000	188.50
2303	1.7000	188.50
2304	2.5500	188.50
2305	3.4000	188.50
2306	4.2500	188.50
2307	5.1000	188.50

Table 2.10.2-1 Node Definitions (Continued)

NODE	X (inch)	Y (inch)
2308	5.9500	188.50
2309	6.4375	188.50
2310	6.6250	188.50
2321	.00000	189.75
2322	.85000	189.75
2323	1.7000	189.75
2324	2.5500	189.75
2325	3.4000	189.75
2326	4.2500	189.75
2327	5.1000	189.75
2328	5.9500	189.75
2329	6.4375	189.75
2330	6.6250	189.75
2341	.00000	190.75
2342	.85000	190.75
2343	1.7000	190.75
2344	2.5500	190.75
2345	3.4000	190.75
2346	4.2500	190.75
2347	5.1000	190.75
2348	5.9500	190.75
2349	6.4375	190.75
2350	6.6250	190.75
2361	.00000	191.75
2362	.85000	191.75
2363	1.7000	191.75
2364	2.5500	191.75
2365	3.4000	191.75
2366	4.2500	191.75
2367	5.1000	191.75
2368	5.9500	191.75
2369	6.4375	191.75
2370	6.6875	191.75
2371	6.9375	191.75
2372	7.1875	191.75
2373	7.4375	191.75
2374	7.9375	191.75
2375	8.4375	191.75
2376	8.9375	191.75
2377	9.6375	191.75
2378	10.250	191.75
2381	.00000	192.75
2382	.85000	192.75
2383	1.7000	192.75
2384	2.5500	192.75
2385	3.4000	192.75
2386	4.2500	192.75
2387	5.1000	192.75
2388	5.9500	192.75
2389	6.4375	192.75
2390	6.6875	192.75
2391	6.9375	192.75
2392	7.1875	192.75
2393	7.4375	192.75
2394	7.9375	192.75
2395	8.4375	192.75
2396	8.9375	192.75
2397	9.6375	192.75
2398	10.250	192.75
2401	.00000	193.75

Table 2.10.2-1 Node Definitions (Continued)

NODE	X (inch)	Y (inch)
2402	.85000	193.75
2403	1.7000	193.75
2404	2.5500	193.75
2405	3.4000	193.75
2406	4.2500	193.75
2407	5.1000	193.75
2408	5.9500	193.75
2409	6.4375	193.75
2410	6.6875	193.75
2411	6.9375	193.75
2412	7.1875	193.75
2413	7.4375	193.75
2414	7.9375	193.75
2415	8.4375	193.75
2416	8.9375	193.75
2417	9.6375	193.75
2418	10.250	193.75
2421	.00000	194.75
2422	.85000	194.75
2423	1.7000	194.75
2424	2.5500	194.75
2425	3.4000	194.75
2426	4.2500	194.75
2427	5.1000	194.75
2428	5.9500	194.75
2429	6.4375	194.75
2430	6.6875	194.75
2431	6.9375	194.75
2432	7.1875	194.75
2433	7.4375	194.75
2434	7.9375	194.75
2435	8.4375	194.75
2436	8.9375	194.75
2437	9.6375	194.75
2438	10.250	194.75
2441	.00000	195.75
2442	.85000	195.75
2443	1.7000	195.75
2444	2.5500	195.75
2445	3.4000	195.75
2446	4.2500	195.75
2447	5.1000	195.75
2448	5.9500	195.75
2449	6.4375	195.75
2450	6.6875	195.75
2451	6.9375	195.75
2452	7.1875	195.75
2453	7.4375	195.75
2454	7.9375	195.75
2455	8.4375	195.75
2456	8.9375	195.75
2457	9.6375	195.75
2458	10.250	195.75
2461	.00000	196.75
2462	.85000	196.75
2463	1.7000	196.75
2464	2.5500	196.75
2465	3.4000	196.75
2466	4.2500	196.75
2467	5.1000	196.75

Table 2.10.2-1 Node Definitions (Continued)

NODE	X (inch)	Y (inch)
2468	5.9500	196.75
2469	6.4375	196.75
2470	6.6875	196.75
2471	6.9375	196.75
2472	7.1875	196.75
2473	7.4375	196.75
2474	7.9375	196.75
2475	8.4375	196.75
2476	8.9375	196.75
2477	9.6375	196.75
2478	10.315	196.75
2479	11.250	196.75
2481	.00000	197.75
2482	.85000	197.75
2483	1.7000	197.75
2484	2.5500	197.75
2485	3.4000	197.75
2486	4.2500	197.75
2487	5.1000	197.75
2488	5.9500	197.75
2489	6.4375	197.75
2490	6.6875	197.75
2491	6.9375	197.75
2492	7.1875	197.75
2493	7.4375	197.75
2494	7.9375	197.75
2495	8.4375	197.75
2496	8.9375	197.75
2497	9.6375	197.75
2498	10.315	197.75
2499	11.250	197.75
2501	.00000	198.25
2502	.85000	198.25
2503	1.7000	198.25
2504	2.5500	198.25
2505	3.4000	198.25
2506	4.2500	198.25
2507	5.1000	198.25
2508	5.9500	198.25
2509	6.4375	198.25
2510	6.6875	198.25
2511	6.9375	198.25
2512	7.1875	198.25
2513	7.4375	198.25
2514	7.9375	198.25
2515	8.4375	198.25
2516	8.9375	198.25
2517	9.6375	198.25
2518	10.315	198.25
2519	11.250	198.25
2521	.00000	198.75
2522	.85000	198.75
2523	1.7000	198.75
2524	2.5500	198.75
2525	3.4000	198.75
2526	4.2500	198.75
2527	5.1000	198.75
2528	5.9500	198.75
2529	6.4375	198.75
2530	6.6875	198.75

Table 2.10.2-1 Node Definitions (Continued)

NODE	X (inch)	Y (inch)
2531	6.9375	198.75
2532	7.1875	198.75
2533	7.4375	198.75
2534	7.9375	198.75
2535	8.4375	198.75
2536	8.9375	198.75
2537	9.6375	198.75
2538	10.315	198.75
2539	11.250	198.75
2541	.00000	199.25
2542	.85000	199.25
2543	1.7000	199.25
2544	2.5500	199.25
2545	3.4000	199.25
2546	4.2500	199.25
2547	5.1000	199.25
2548	5.9500	199.25
2549	6.4375	199.25
2550	6.6875	199.25
2551	6.9375	199.25
2552	7.1875	199.25
2553	7.4375	199.25
2554	7.9375	199.25
2555	8.4375	199.25
2556	8.9375	199.25
2557	9.6375	199.25
2558	10.315	199.25
2559	11.250	199.25
2561	.00000	199.25
2562	.85000	199.25
2563	1.7000	199.25
2564	2.5500	199.25
2565	3.4000	199.25
2566	4.2500	199.25
2567	5.1000	199.25
2568	5.9500	199.25
2569	6.4375	199.25
2570	6.6875	199.25
2571	6.9375	199.25
2572	7.1875	199.25
2573	7.4375	199.25
2574	7.9375	199.25
2575	8.4375	199.25
2576	8.9375	199.25
2577	9.6375	199.25
2578	10.315	199.25
2579	11.250	199.25
3101	.00000	3.5010
3102	.85000	3.5010
3103	1.7000	3.5010
3104	2.5500	3.5010
3105	3.4000	3.5010
3106	4.2500	3.5010
3107	5.1000	3.5010
3108	5.9500	3.5010
3109	6.4375	3.5010
3110	6.6875	3.5010
3111	6.9375	3.5010
3112	7.1875	3.5010
3113	7.4375	3.5010

Table 2.10.2-1 Node Definitions (Continued)

NODE	X (inch)	Y (inch)
3114	7.9375	3.5010
3115	8.4375	3.5010
3116	8.9375	3.5010
3117	9.6375	3.5010
3118	10.375	3.5010
3143	10.374	4.5000
3168	10.374	5.5000
3176	.00000	6.4990
3177	.85000	6.4990
3178	1.7000	6.4990
3179	2.5500	6.4990
3180	3.4000	6.4990
3181	4.2500	6.4990
3182	5.1000	6.4990
3183	5.9500	6.4990
3184	6.4375	6.4990
3185	6.6875	6.4990
3186	6.9375	6.4990
3187	7.1875	6.4990
3188	7.4375	6.4990
3189	7.9375	6.4990
3190	8.4375	6.4990
3191	8.9375	6.4990
3192	9.6375	6.4990
3193	10.375	6.4990
3340	8.4375	10.501
3341	8.9375	10.501
3342	9.6375	10.501
3343	10.375	10.501
3344	11.315	10.501
3345	12.001	10.501
3346	12.688	10.501
3846	8.4375	185.50
3847	8.9375	185.50
3848	9.6375	185.50
3849	10.315	185.50
3850	11.315	185.50
3851	12.001	185.50
3852	12.688	185.50

Table 2.10.2-2 Applied Impact Pressure Loadings – 30-Foot Hypothetical Accident Conditions

Impact Case	ϕ[1] (degree)	θ[2] (degree)	Node to Node		Impact Pressure[3] (psi)	Impact Type
1	0	360	1	25	4852	Bottom End
			326	335	1708	Content End
2	90	45	25	418	8495	Bottom Side
			1916	2176	8693	Top Side
			335	1901	177.1	Content Side
3	180	360	2176	2561	4852	Top End
			2301	2310	1740	Content End
4	15.74	60.4	2176	2561	14768	Top End
			1916	2176	3370	Top Side
			2301	2310	5299	Content End
			335	1901	35	Content Side
4	30	54.4	2176	2561	12925	Top End
			1916	2176	5831	Top Side
			2301	2310	4638	Content End
			335	1901	61	Content Side
4	45	43.8	2176	2561	10840	Top End
			1916	2176	7812	Top Side
			2301	2310	3889	Content End
			335	1901	81	Content Side
4	60	44.4	2176	2561	9599	Top End
			1916	2176	11470	Top Side
			2301	2310	3444	Content End
			335	1901	119	Content Side

Table 2.10.2-2 Applied Impact Pressure Loadings – 30-Foot Hypothetical Accident Conditions (Continued)

Impact Case	ϕ[1] (degree)	θ[2] (degree)	Node to Node		Impact Pressure[3] (psi)	Impact Type
5	120	44.4	1	25	9191	Bottom End
			25	418	10820	Bottom Side
			326	335	3236	Content End
			335	1901	115	Content Side
5	135	43.8	1	25	10359	Bottom End
			25	418	7389	Bottom Side
			326	335	3647	Content End
			335	1901	78	Content Side
5	150	54.4	1	25	12294	Bottom End
			25	418	5549	Bottom Side
			326	335	4329	Content End
			335	1901	59	Content Side
5	164.26	60.4	1	25	14768	Bottom End
			25	418	3292	Bottom Side
			326	335	5200	Content End
			335	1901	35	Content Side

1 ϕ = drop orientation

2 The angle θ determines the pressure distribution arc in the circumferential direction. (See Figure 2.7.1-6 and Figure 2.7.1-9.) The same arc is applied for both the impact pressure and the content pressure.

3 See Section 2.7.1 for the methodology used to calculate the impact pressures for the 30-foot end drop, the 30-foot side drop and the 30-foot oblique drops, respectively.

2.10.3 Finite Element Evaluations

This section presents (1) the temperature information required for the finite element stress analysis of the NAC-LWT cask, and (2) the NAC procedures to determine the maximum stress intensities for each cask component (designated in Section 2.10.2).

2.10.3.1 Isothermal Plot – Hot Case

This section presents the temperature distribution in the body of the NAC-LWT cask for the hot case (130°F ambient temperature with maximum insolation and decay heat load). The cask temperatures are obtained from the results of the heat transfer analysis for the hot environment (Section 3.4.2). The plot is shown in Figure 2.10.3-1.

2.10.3.2 Isothermal Plot – Cold Case

This section presents the results obtained from the heat transfer analysis performed in Section 3.4.3 for the cold case. The cask temperatures are determined for the cold environment (-40°F ambient temperature with maximum decay heat load and no insolation). The plot is shown in Figure 2.10.3-2.

2.10.3.3 Determination of Component Critical Stresses

This section presents the procedure that is used to determine the maximum stress intensities for each cask component for the analyses performed by the ANSYS finite element program. As required by Regulatory Guide 7.6, the calculated stresses are categorized into the P_m stress intensity, the $P_m + P_b$ stress intensity, the S_n stress intensity, and the total stress intensity categories. These stress intensities must be less than the allowable stress intensities defined by Regulatory Guide 7.6. The procedure is explained in the following steps:

1. Apply the ANSYS plotting option to produce a stress intensity contour plot for each cask component.
2. Review the plot and identify the component cross sections where significant P_m, $P_m + P_b$, and S_n stresses occur (close contour spacing).
3. Run the ANSYS post-processing program to determine the P_m, $P_m + P_b$, and S_n stress intensities for each cross section identified.
4. Sort through all of the P_m, $P_m + P_b$, and S_n stresses to obtain the maximum value for each stress category.
5. Tabulate the critical cross section, the stress intensity, and the resulting margin of safety for each component of the cask.

A FORTRAN program is set up to execute the evaluation of the stress data generated in step 3. The program then applies an algorithm to search for the maximum stress intensity for each cask

component. In addition, the program prints out the cask component, the critical cross section, the stress intensity, etc. Because steps 3 and 4 are performed by computer, many cross sections can be identified and evaluated.

An example is provided to illustrate the aforementioned procedures. Figure 2.10.2-3 is the stress contour plot of cask component 3 (upper ring), resulting from the normal operations heat condition with 130°F ambient temperature; see Section 2.6.1 for a detailed description of this load case.

In reviewing the plot, it is expected that the maximum stress intensity will occur at section (1) or (2). However, P_m and $P_m + P_b$ stresses are calculated for 44 sections at different locations of the upper ring to assure that the maximum stress locations are identified. These stress data are listed in Table 2.10.3-1 and Table 2.10.3-2, and the sections with maximum P_m or $P_m + P_b$ stresses are identified by the algorithm mentioned in step 4.

Figure 2.10.3-1 NAC-LWT Cask Isotherms (Hot Case)

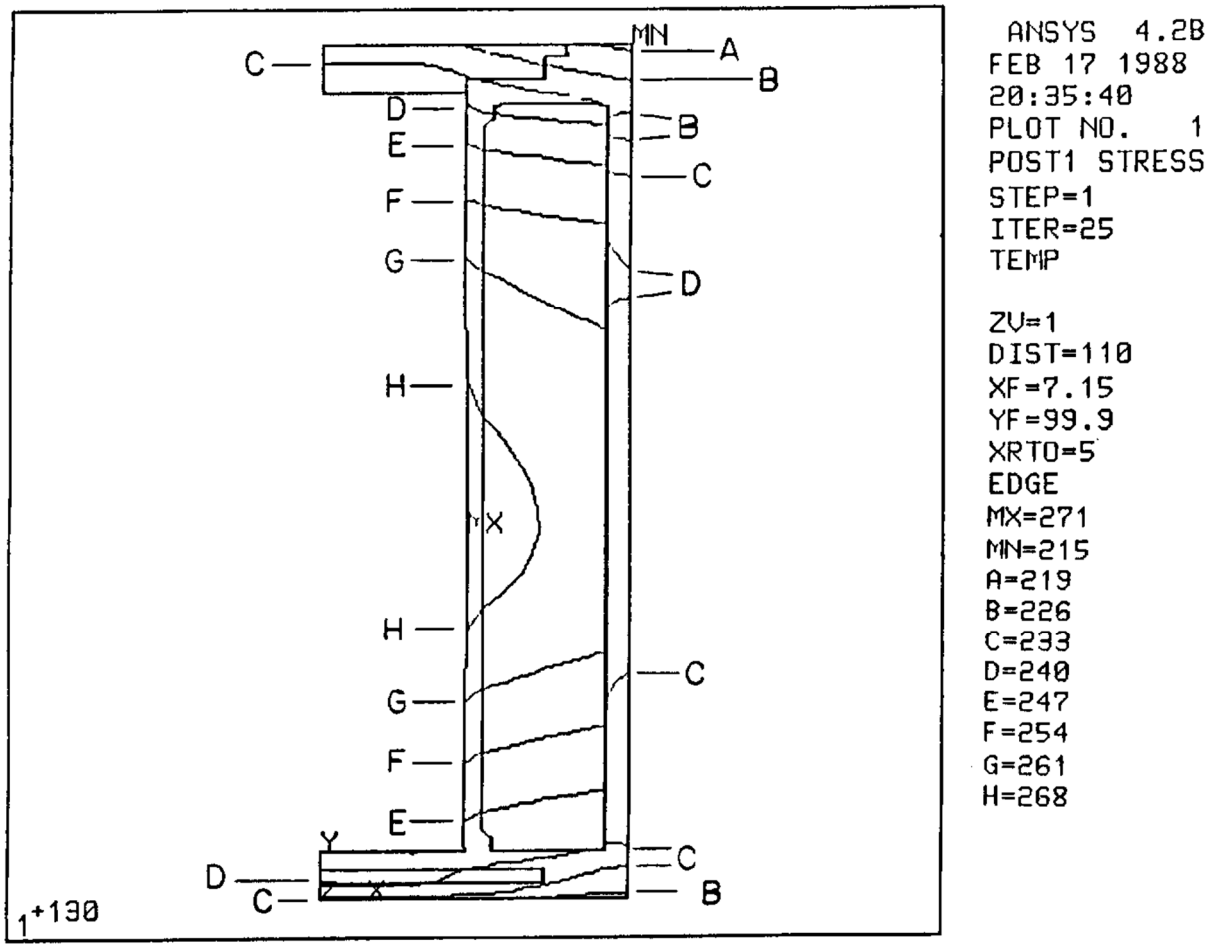

Figure 2.10.3-2 NAC-LWT Cask Isotherms (Cold Case)

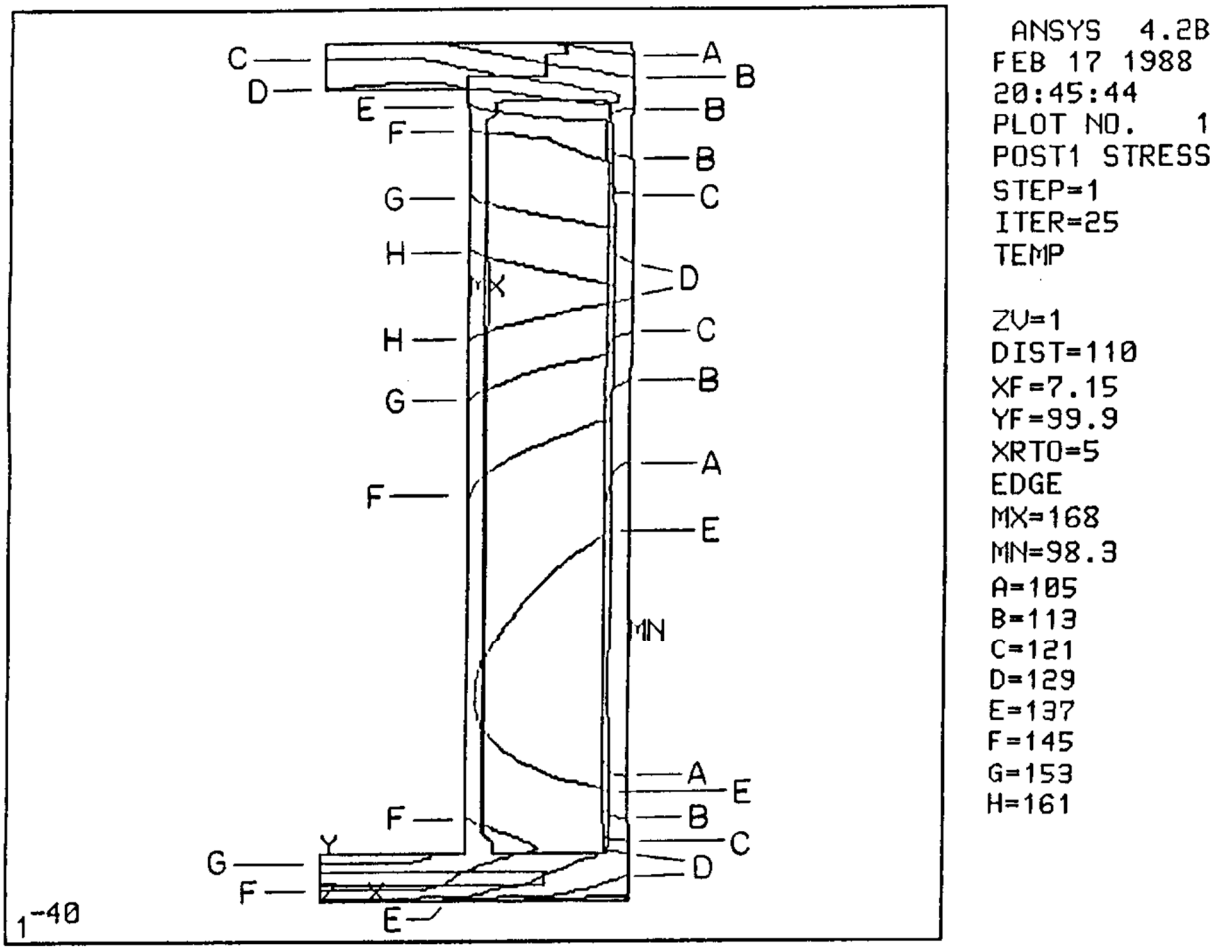

Figure 2.10.3-3 Stress Contour Plot – Hot Case

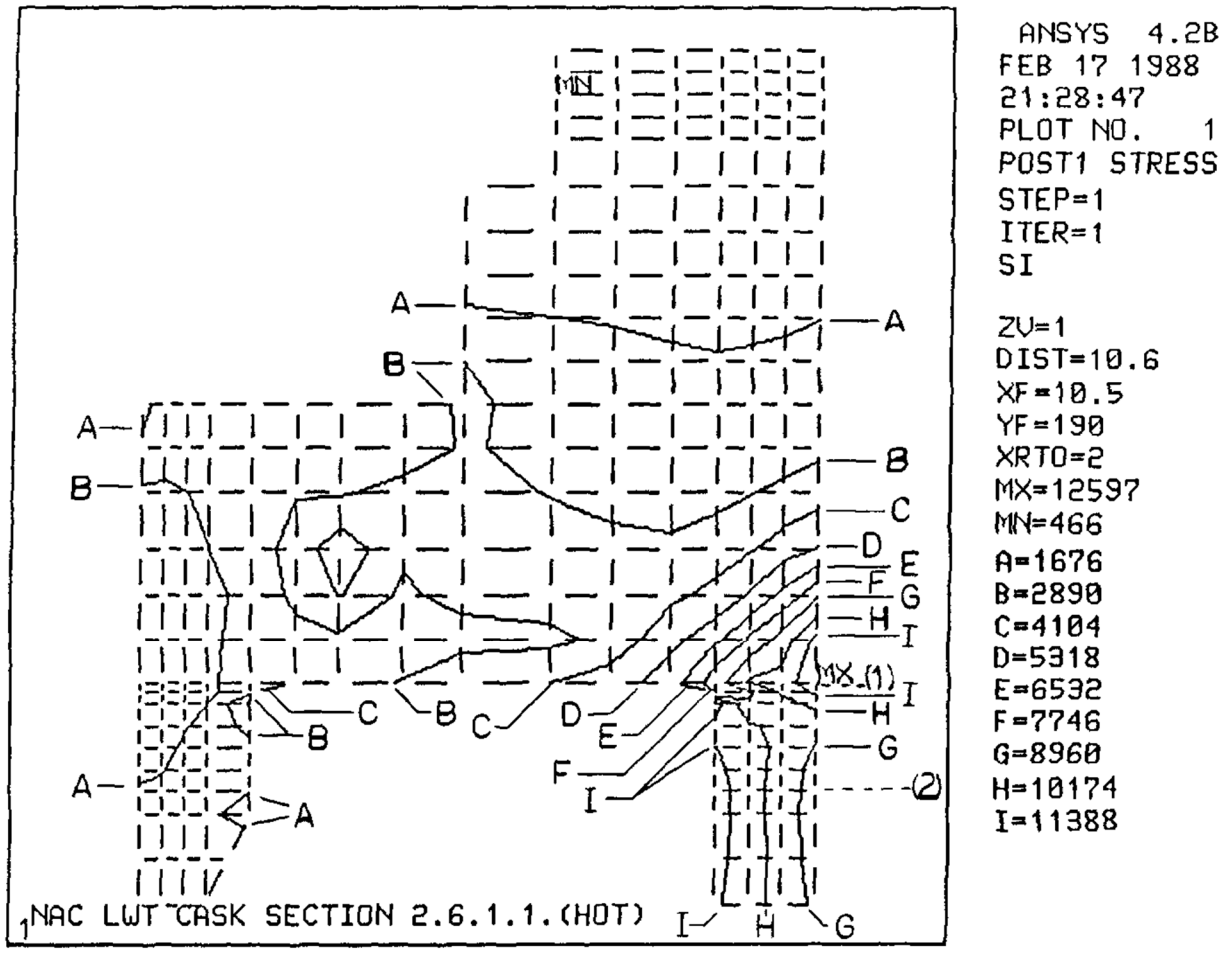

Table 2.10.3-1 P_m Stress Summary – Upper Ring Critical Section

LOADING CONDITION: SEC261(HEAT)
COMPONENT TYPE: TYPE3.

THE MAXIMUM PM STRESS OCCURS AT SECTION

FROM NODE 1595 TO NODE 1598

SX =	3.
SY =	10200.
SZ =	269.
SXY =	-63.
SYZ =	0.
SXZ =	0.
SIG1=	10200.
SIG2=	269.
SIG3=	2.
SI =	10200.
SIGE=	10070.

INSIDE NODE = 1581 OUTSIDE NODE = 1584
** MEMBRANE **

SX	SY	SZ	SXY	SYZ	SXZ
10.84	2754.	924.2	125.9	.0000	.0000
SIG1	SIG2	SIG3	SI	SIGE	
2760.	924.2	5.073	2754.	2429.	

INSIDE NODE = 1601 OUTSIDE NODE = 1605
** MEMBRANE **

SX	SY	SZ	SXY	SYZ	SXZ
22.03	2407.	749.2	196.2	.0000	.0000
SIG1	SIG2	SIG3	SI	SIGE	
2423.	749.2	5.992	2417.	2144.	

INSIDE NODE = 1701 OUTSIDE NODE = 1705
** MEMBRANE **

SX	SY	SZ	SXY	SYZ	SXZ
-28.80	1743.	515.3	177.2	.0000	.0000
SIG1	SIG2	SIG3	SI	SIGE	
1760.	515.3	-46.35	1807.	1601.	

INSIDE NODE = 1721 OUTSIDE NODE = 1725
** MEMBRANE **

SX	SY	SZ	SXY	SYZ	SXZ
-39.65	1750.	526.7	186.0	.0000	.0000
SIG1	SIG2	SIG3	SI	SIGE	
1769.	526.7	-58.78	1828.	1616.	

Table 2.10.3-1 P_m Stress Summary – Upper Ring Critical Section (Continued)

INSIDE NODE =	1741	OUTSIDE NODE =	1745		
** MEMBRANE **					
SX	SY	SZ	SXY	SYZ	SXZ
-32.68	1746.	550.0	205.8	.0000	.0000
SIG1	SIG2	SIG3	SI	SIGE	
1770.	550.0	-56.19	1826.	1611.	
INSIDE NODE =	1761	OUTSIDE NODE =	1765		
** MEMBRANE **					
SX	SY	SZ	SXY	SYZ	SXZ
-38.52	1743.	557.1	226.2	.0000	.0000
SIG1	SIG2	SIG3	SI	SIGE	
1771.	557.1	-66.79	1838.	1619.	
INSIDE NODE =	1781	OUTSIDE NODE =	1785		
** MEMBRANE **					
SX	SY	SZ	SXY	SYZ	SXZ
-2.336	1741.	531.6	242.9	.0000	.0000
SIG1	SIG2	SIG3	SI	SIGE	
1774.	531.6	-35.55	1810.	1604.	
INSIDE NODE =	1801	OUTSIDE NODE =	1805		
** MEMBRANE **					
SX	SY	SZ	SXY	SYZ	SXZ
166.1	1734.	465.4	238.8	.0000	.0000
SIG1	SIG2	SIG3	SI	SIGE	
1769.	465.4	130.6	1639.	1499.	
INSIDE NODE =	1821	OUTSIDE NODE =	1825		
** MEMBRANE **					
SX	SY	SZ	SXY	SYZ	SXZ
372.6	1401.	340.4	157.0	.0000	.0000
SIG1	SIG2	SIG3	SI	SIGE	
1424.	349.1	340.4	1084.	1079.	
INSIDE NODE =	1841	OUTSIDE NODE =	1846		
** MEMBRANE **					
SX	SY	SZ	SXY	SYZ	SXZ
67.89	1119.	112.2	283.9	.0000	.0000
SIG1	SIG2	SIG3	SI	SIGE	
1191.	112.2	-3.883	1195.	1141.	
INSIDE NODE =	1595	OUTSIDE NODE =	1598		
** MEMBRANE **					
SX	SY	SZ	SXY	SYZ	SXZ
2.844	.1020+005	269.4	-62.79	.0000	.0000
SIG1	SIG2	SIG3	SI	SIGE	
.1020+005	269.4	2.458	.1020+005	.1007+005	
INSIDE NODE =	1616	OUTSIDE NODE =	1619		
** MEMBRANE **					
SX	SY	SZ	SXY	SYZ	SXZ
3.317	.1018+005	547.6	-41.72	.0000	.0000
SIG1	SIG2	SIG3	SI	SIGE	
.1018+005	547.6	3.146	.1017+005	9912.	
INSIDE NODE =	1715	OUTSIDE NODE =	1718		
** MEMBRANE **					
SX	SY	SZ	SXY	SYZ	SXZ
1.050	.1015+005	968.7	3.222	.0000	.0000
SIG1	SIG2	SIG3	SI	SIGE	
.1015+005	968.7	1.049	.1015+005	9702.	
INSIDE NODE =	1735	OUTSIDE NODE =	1738		
** MEMBRANE **					
SX	SY	SZ	SXY	SYZ	SXZ
-6.316	.1014+005	1224.	33.66	.0000	.0000
SIG1	SIG2	SIG3	SI	SIGE	
.1014+005	1224.	-6.428	.1014+005	9588.	

Table 2.10.3-1 P_m Stress Summary – Upper Ring Critical Section (Continued)

```
      INSIDE NODE =   1755     OUTSIDE NODE =   1758
            ** MEMBRANE **
   SX           SY           SZ          SXY          SYZ          SXZ
-11.67       .1012+005    1512.        71.43        .0000        .0000
  SIG1         SIG2         SIG3          SI          SIGE
.1013+005    1512.       -12.17       .1014+005    9468.
      INSIDE NODE =   1775     OUTSIDE NODE =   1778
            ** MEMBRANE **
   SX           SY           SZ          SXY          SYZ          SXZ
-36.04       .1011+005    1812.        116.7        .0000        .0000
  SIG1         SIG2         SIG3          SI          SIGE
.1011+005    1812.       -37.38       .1015+005    9364.
      INSIDE NODE =   1795     OUTSIDE NODE =   1798
            ** MEMBRANE **
   SX           SY           SZ          SXY          SYZ          SXZ
68.56        .1010+005    2155.        170.4        .0000        .0000
  SIG1         SIG2         SIG3          SI          SIGE
.1010+005    2155.        65.66       .1004+005    9173.
      INSIDE NODE =   1795     OUTSIDE NODE =   1818
            ** MEMBRANE **
   SX           SY           SZ          SXY          SYZ          SXZ
2019.         8317.        2367.        3901.        .0000        .0000
  SIG1         SIG2         SIG3          SI          SIGE
.1018+005    2367.        155.2        .1003+005    9123.
      INSIDE NODE =   1795     OUTSIDE NODE =   1838
            ** MEMBRANE **
   SX           SY           SZ          SXY          SYZ          SXZ
3571.         6865.        2479.        4792.        .0000        .0000
  SIG1         SIG2         SIG3          SI          SIGE
.1029+005    2479.        151.0        .1013+005    9194.
      INSIDE NODE =   1815     OUTSIDE NODE =   1818
            ** MEMBRANE **
   SX           SY           SZ          SXY          SYZ          SXZ
264.1        .1009+005    2521.        238.5        .0000        .0000
  SIG1         SIG2         SIG3          SI          SIGE
.1009+005    2521.        258.3        9836.        8922.
      INSIDE NODE =   1815     OUTSIDE NODE =   1838
            ** MEMBRANE **
   SX           SY           SZ          SXY          SYZ          SXZ
770.4         9536.        2591.        2400.        .0000        .0000
  SIG1         SIG2         SIG3          SI          SIGE
.1015+005    2591.        156.5        9993.        9026.
      INSIDE NODE =   1815     OUTSIDE NODE =   1856
            ** MEMBRANE **
   SX           SY           SZ          SXY          SYZ          SXZ
1872.         8251.        2622.        3914.        .0000        .0000
  SIG1         SIG2         SIG3          SI          SIGE
.1011+005    2622.        13.23       .1010+005    9078.
      INSIDE NODE =   1835     OUTSIDE NODE =   1838
            ** MEMBRANE **
   SX           SY           SZ          SXY          SYZ          SXZ
149.0         9430.        2449.        349.3        .0000        .0000
  SIG1         SIG2         SIG3          SI          SIGE
9443.         2449.        135.9        9307.        8393.
      INSIDE NODE =   1835     OUTSIDE NODE =   1856
            ** MEMBRANE **
   SX           SY           SZ          SXY          SYZ          SXZ
154.4         8850.        2375.        2151.        .0000        .0000
  SIG1         SIG2         SIG3          SI          SIGE
9353.         2375.       -348.5        9701.        8667.
```

Table 2.10.3-1 P_m Stress Summary – Upper Ring Critical Section (Continued)

INSIDE NODE = 1852			OUTSIDE NODE = 1856		
** MEMBRANE **					
SX	SY	SZ	SXY	SYZ	SXZ
-2286.	6576.	1023.	-558.9	.0000	.0000
SIG1	SIG2	SIG3	SI	SIGE	
6611.	1023.	-2321.	8932.	7816.	
INSIDE NODE = 1861			OUTSIDE NODE = 1876		
** MEMBRANE **					
SX	SY	SZ	SXY	SYZ	SXZ
-1032.	128.8	-294.6	-502.6	.0000	.0000
SIG1	SIG2	SIG3	SI	SIGE	
316.2	-294.6	-1219.	1536.	1339.	
INSIDE NODE = 1901			OUTSIDE NODE = 1916		
** MEMBRANE **					
SX	SY	SZ	SXY	SYZ	SXZ
301.2	-444.4	222.5	-488.2	.0000	.0000
SIG1	SIG2	SIG3	SI	SIGE	
542.7	222.5	-685.8	1229.	1104.	
INSIDE NODE = 1941			OUTSIDE NODE = 1956		
** MEMBRANE **					
SX	SY	SZ	SXY	SYZ	SXZ
179.9	-451.5	554.6	-404.6	.0000	.0000
SIG1	SIG2	SIG3	SI	SIGE	
554.6	377.4	-649.0	1204.	1125.	
INSIDE NODE = 1969			OUTSIDE NODE = 1976		
** MEMBRANE **					
SX	SY	SZ	SXY	SYZ	SXZ
-143.6	141.0	1091.	-485.3	.0000	.0000
SIG1	SIG2	SIG3	SI	SIGE	
1091.	504.4	-507.0	1598.	1400.	
INSIDE NODE = 1969			OUTSIDE NODE = 1996		
** MEMBRANE **					
SX	SY	SZ	SXY	SYZ	SXZ
-378.2	233.0	1038.	-363.6	.0000	.0000
SIG1	SIG2	SIG3	SI	SIGE	
1038.	402.3	-547.6	1585.	1382.	
INSIDE NODE = 1969			OUTSIDE NODE = 2016		
** MEMBRANE **					
SX	SY	SZ	SXY	SYZ	SXZ
-528.5	258.3	982.6	-231.4	.0000	.0000
SIG1	SIG2	SIG3	SI	SIGE	
982.6	321.3	-591.5	1574.	1369.	
INSIDE NODE = 1969			OUTSIDE NODE = 2036		
** MEMBRANE **					
SX	SY	SZ	SXY	SYZ	SXZ
-599.5	240.7	927.8	-133.4	.0000	.0000
SIG1	SIG2	SIG3	SI	SIGE	
927.8	261.4	-620.2	1548.	1345.	
INSIDE NODE = 1989			OUTSIDE NODE = 1996		
** MEMBRANE **					
SX	SY	SZ	SXY	SYZ	SXZ
-151.2	-4.381	1006.	-409.8	.0000	.0000
SIG1	SIG2	SIG3	SI	SIGE	
1006.	338.5	-494.1	1500.	1302.	
INSIDE NODE = 2009			OUTSIDE NODE = 2016		
** MEMBRANE **					
SX	SY	SZ	SXY	SYZ	SXZ
-71.20	-3.681	948.3	-331.7	.0000	.0000
SIG1	SIG2	SIG3	SI	SIGE	
948.3	296.0	-370.9	1319.	1143.	

Table 2.10.3-1 P_m Stress Summary – Upper Ring Critical Section (Continued)

INSIDE NODE = 2029			OUTSIDE NODE = 2036		
** MEMBRANE **					
SX	SY	SZ	SXY	SYZ	SXZ
-21.69	-2.435	867.2	-256.9	.0000	.0000
SIG1	SIG2	SIG3	SI	SIGE	
867.2	245.0	-269.2	1136.	985.6	
INSIDE NODE = 2049			OUTSIDE NODE = 2056		
** MEMBRANE **					
SX	SY	SZ	SXY	SYZ	SXZ
-2.420	-1.452	779.8	-189.0	.0000	.0000
SIG1	SIG2	SIG3	SI	SIGE	
779.8	187.1	-191.0	970.7	847.5	
INSIDE NODE = 2070			OUTSIDE NODE = 2076		
** MEMBRANE **					
SX	SY	SZ	SXY	SYZ	SXZ
-104.0	33.41	765.9	-146.4	.0000	.0000
SIG1	SIG2	SIG3	SI	SIGE	
765.9	126.4	-197.0	962.9	848.8	
INSIDE NODE = 2070			OUTSIDE NODE = 2096		
** MEMBRANE **					
SX	SY	SZ	SXY	SYZ	SXZ
-161.8	66.08	720.3	-77.73	.0000	.0000
SIG1	SIG2	SIG3	SI	SIGE	
720.3	90.06	-185.8	906.1	804.5	
INSIDE NODE = 2070			OUTSIDE NODE = 2116		
** MEMBRANE **					
SX	SY	SZ	SXY	SYZ	SXZ
-172.8	63.77	699.7	-52.64	.0000	.0000
SIG1	SIG2	SIG3	SI	SIGE	
699.7	74.95	-184.0	883.7	786.9	
INSIDE NODE = 2070			OUTSIDE NODE = 2136		
** MEMBRANE **					
SX	SY	SZ	SXY	SYZ	SXZ
-180.7	56.78	679.9	-35.13	.0000	.0000
SIG1	SIG2	SIG3	SI	SIGE	
679.9	61.87	-185.8	865.7	772.3	
INSIDE NODE = 2090			OUTSIDE NODE = 2096		
** MEMBRANE **					
SX	SY	SZ	SXY	SYZ	SXZ
-23.81	-.4666	694.1	-109.8	.0000	.0000
SIG1	SIG2	SIG3	SI	SIGE	
694.1	98.32	-122.6	816.7	731.7	
INSIDE NODE = 2110			OUTSIDE NODE = 2116		
** MEMBRANE **					
SX	SY	SZ	SXY	SYZ	SXZ
-19.01	-.4233	665.4	-83.96	.0000	.0000
SIG1	SIG2	SIG3	SI	SIGE	
665.4	74.76	-94.19	759.6	690.8	
INSIDE NODE = 2130			OUTSIDE NODE = 2136		
** MEMBRANE **					
SX	SY	SZ	SXY	SYZ	SXZ
-43.37	-.2781	632.9	-59.62	.0000	.0000
SIG1	SIG2	SIG3	SI	SIGE	
632.9	41.57	-85.23	718.1	663.9	
INSIDE NODE = 2150			OUTSIDE NODE = 2156		
** MEMBRANE **					
SX	SY	SZ	SXY	SYZ	SXZ
-149.4	-.1861	590.7	-37.46	.0000	.0000
SIG1	SIG2	SIG3	SI	SIGE	
590.7	8.687	-158.3	749.0	681.1	

Table 2.10.3-2 $P_m + P_b$ Stress Summary – Upper Ring Critical Section

LOADING CONDITION: SEC261(HEAT)
COMPONENT TYPE: TYPE3.

THE MAXIMUM PM + PB STRESS OCCURS AT SECTION

FROM NODE 1852 TO NODE 1856

SX =	-297.
SY =	13090.
SZ =	3904.
SXY =	-559.
SYZ =	0.
SXZ =	0.
SIG1=	13110.
SIG2=	3904.
SIG3=	-321.
SI =	13430.
SIGE=	11900.

INSIDE NODE = 1581 OUTSIDE NODE = 1584
** MEMBRANE PLUS BENDING ** I=INSIDE C=CENTER O=OUTSIDE

	SX	SY	SZ	SXY	SYZ	SXZ
I	-23.79	2331.	781.4	125.9	.0000	.0000
C	-13.15	2746.	924.2	125.9	.0000	.0000
O	-2.511	3162.	1067.	125.9	.0000	.0000

	SIG1	SIG2	SIG3	SI	SIGE
I	2337.	781.4	-30.51	2368.	2084.
C	2752.	924.2	-18.89	2771.	2440.
O	3167.	1067.	-7.515	3175.	2797.

INSIDE NODE = 1601 OUTSIDE NODE = 1605
** MEMBRANE PLUS BENDING ** I=INSIDE C=CENTER O=OUTSIDE

	SX	SY	SZ	SXY	SYZ	SXZ
I	-66.43	2278.	636.4	196.2	.0000	.0000
C	62.08	2404.	749.2	196.2	.0000	.0000
O	190.6	2530.	862.0	196.2	.0000	.0000

	SIG1	SIG2	SIG3	SI	SIGE
I	2294.	636.4	-82.74	2377.	2111.
C	2420.	749.2	45.76	2374.	2112.
O	2546.	862.0	174.3	2372.	2114.

Table 2.10.3-2 $P_m + P_b$ Stress Summary – Upper Ring Critical Section (Continued)

INSIDE NODE = 1701 OUTSIDE NODE = 1705
** MEMBRANE PLUS BENDING ** I=INSIDE C=CENTER O=OUTSIDE

	SX	SY	SZ	SXY	SYZ	SXZ
I	-76.27	2299.	585.7	177.2	.0000	.0000
C	-12.63	1758.	515.3	177.2	.0000	.0000
O	51.01	1218.	445.0	177.2	.0000	.0000

	SIG1	SIG2	SIG3	SI	SIGE
I	2312.	585.7	-89.42	2401.	2145.
C	1776.	515.3	-30.18	1806.	1604.
O	1244.	445.0	24.70	1219.	1073.

INSIDE NODE = 1721 OUTSIDE NODE = 1725
** MEMBRANE PLUS BENDING ** I=INSIDE C=CENTER O=OUTSIDE

	SX	SY	SZ	SXY	SYZ	SXZ
I	-52.67	1829.	477.1	186.0	.0000	.0000
C	-34.90	1752.	526.7	186.0	.0000	.0000
O	-17.13	1675.	576.4	186.0	.0000	.0000

	SIG1	SIG2	SIG3	SI	SIGE
I	1848.	477.1	-70.88	1918.	1712.
C	1771.	526.7	-54.06	1825.	1615.
O	1695.	576.4	-37.34	1732.	1521.

INSIDE NODE = 1741 OUTSIDE NODE = 1745
** MEMBRANE PLUS BENDING ** I=INSIDE C=CENTER O=OUTSIDE

	SX	SY	SZ	SXY	SYZ	SXZ
I	-64.41	1351.	365.5	205.8	.0000	.0000
C	-27.54	1735.	550.0	205.8	.0000	.0000
O	9.334	2119.	734.5	205.8	.0000	.0000

	SIG1	SIG2	SIG3	SI	SIGE
I	1381.	365.5	-93.73	1474.	1307.
C	1759.	550.0	-51.25	1810.	1597.
O	2139.	734.5	-10.56	2150.	1891.

INSIDE NODE = 1761 OUTSIDE NODE = 1765
** MEMBRANE PLUS BENDING ** I=INSIDE C=CENTER O=OUTSIDE

	SX	SY	SZ	SXY	SYZ	SXZ
I	-53.49	828.0	231.6	226.2	.0000	.0000
C	-27.07	1717.	557.1	226.2	.0000	.0000
O	-.6480	2607.	882.6	226.2	.0000	.0000

	SIG1	SIG2	SIG3	SI	SIGE
I	882.7	231.6	-108.1	990.8	872.1
C	1746.	557.1	-55.92	1802.	1587.
O	2626.	882.6	-20.13	2647.	2330.

INSIDE NODE = 1781 OUTSIDE NODE = 1785
** MEMBRANE PLUS BENDING ** I=INSIDE C=CENTER O=OUTSIDE

	SX	SY	SZ	SXY	SYZ	SXZ
I	-27.39	257.3	35.40	242.9	.0000	.0000
C	11.46	1700.	531.6	242.9	.0000	.0000
O	50.32	3143.	1028.	242.9	.0000	.0000

	SIG1	SIG2	SIG3	SI	SIGE
I	396.5	35.40	-166.6	563.1	494.1
C	1734.	531.6	-22.79	1757.	1556.
O	3162.	1028.	31.35	3131.	2770.

INSIDE NODE = 1801 OUTSIDE NODE = 1805
** MEMBRANE PLUS BENDING ** I=INSIDE C=CENTER O=OUTSIDE

	SX	SY	SZ	SXY	SYZ	SXZ
I	2.605	-264.9	-222.6	238.8	.0000	.0000
C	50.43	1678.	465.4	238.8	.0000	.0000
O	98.25	3621.	1153.	238.8	.0000	.0000

	SIG1	SIG2	SIG3	SI	SIGE
I	142.6	-222.6	-404.9	547.4	482.8
C	1712.	465.4	16.12	1696.	1522.
O	3637.	1153.	82.13	3555.	3159.

Table 2.10.3-2 $P_m + P_b$ Stress Summary – Upper Ring Critical Section (Continued)

INSIDE NODE = 1821 OUTSIDE NODE = 1825
** MEMBRANE PLUS BENDING ** I=INSIDE C=CENTER O=OUTSIDE

	SX	SY	SZ	SXY	SYZ	SXZ
I	9.905	3.544	-373.6	157.0	.0000	.0000
C	440.8	1362.	340.4	157.0	.0000	.0000
O	871.7	2720.	1054.	157.0	.0000	.0000
	SIG1	SIG2	SIG3	SI	SIGE	
I	163.7	-150.3	-373.6	537.4	467.6	
C	1388.	414.8	340.4	1048.	1012.	
O	2734.	1054.	858.5	1875.	1785.	

INSIDE NODE = 1841 OUTSIDE NODE = 1846
** MEMBRANE PLUS BENDING ** I=INSIDE C=CENTER O=OUTSIDE

	SX	SY	SZ	SXY	SYZ	SXZ
I	-78.52	883.3	-232.8	283.9	.0000	.0000
C	109.6	1110.	112.2	283.9	.0000	.0000
O	297.6	1338.	457.2	283.9	.0000	.0000
	SIG1	SIG2	SIG3	SI	SIGE	
I	960.8	-156.1	-232.8	1194.	1157.	
C	1185.	112.2	34.63	1151.	1114.	
O	1410.	457.2	225.2	1185.	1088.	

INSIDE NODE = 1595 OUTSIDE NODE = 1598
** MEMBRANE PLUS BENDING ** I=INSIDE C=CENTER O=OUTSIDE

	SX	SY	SZ	SXY	SYZ	SXZ
I	-8.812	.1159+005	482.7	-62.79	.0000	.0000
C	.1007	.1022+005	269.4	-62.79	.0000	.0000
O	9.014	8843.	56.14	-62.79	.0000	.0000
	SIG1	SIG2	SIG3	SI	SIGE	
I	.1159+005	482.7	-9.152	.1160+005	.1137+005	
C	.1022+005	269.4	-.2852	.1022+005	.1009+005	
O	8843.	56.14	8.567	8835.	8811.	

INSIDE NODE = 1616 OUTSIDE NODE = 1619
** MEMBRANE PLUS BENDING ** I=INSIDE C=CENTER O=OUTSIDE

	SX	SY	SZ	SXY	SYZ	SXZ
I	-17.39	.1183+005	852.5	-41.72	.0000	.0000
C	-.7916	.1020+005	547.6	-41.72	.0000	.0000
O	15.81	8565.	242.8	-41.72	.0000	.0000
	SIG1	SIG2	SIG3	SI	SIGE	
I	.1183+005	852.5	-17.54	.1185+005	.1144+005	
C	.1020+005	547.6	-.9623	.1020+005	9937.	
O	8565.	242.8	15.61	8549.	8438.	

INSIDE NODE = 1715 OUTSIDE NODE = 1718
** MEMBRANE PLUS BENDING ** I=INSIDE C=CENTER O=OUTSIDE

	SX	SY	SZ	SXY	SYZ	SXZ
I	-26.58	.1191+005	1331.	3.222	.0000	.0000
C	-4.097	.1017+005	968.7	3.222	.0000	.0000
O	18.38	8437.	606.8	3.222	.0000	.0000
	SIG1	SIG2	SIG3	SI	SIGE	
I	.1191+005	1331.	-26.58	.1194+005	.1132+005	
C	.1017+005	968.7	-4.098	.1018+005	9728.	
O	8437.	606.8	18.38	8419.	8141.	

INSIDE NODE = 1735 OUTSIDE NODE = 1738
** MEMBRANE PLUS BENDING ** I=INSIDE C=CENTER O=OUTSIDE

	SX	SY	SZ	SXY	SYZ	SXZ
I	-38.11	.1185+005	1594.	33.66	.0000	.0000
C	-11.76	.1016+005	1224.	33.66	.0000	.0000
O	14.58	8467.	854.4	33.66	.0000	.0000
	SIG1	SIG2	SIG3	SI	SIGE	
I	.1185+005	1594.	-38.21	.1189+005	.1116+005	
C	.1016+005	1224.	-11.88	.1017+005	9614.	
O	8467.	854.4	14.45	8453.	8065.	

Table 2.10.3-2 $P_m + P_b$ Stress Summary – Upper Ring Critical Section (Continued)

INSIDE NODE = 1755 OUTSIDE NODE = 1758
** MEMBRANE PLUS BENDING ** I=INSIDE C=CENTER O=OUTSIDE

	SX	SY	SZ	SXY	SYZ	SXZ
I	-46.78	.1169+005	1861.	71.43	.0000	.0000
C	-15.64	.1015+005	1512.	71.43	.0000	.0000
O	15.49	8600.	1162.	71.43	.0000	.0000
	SIG1	SIG2	SIG3	SI	SIGE	
I	.1169+005	1861.	-47.21	.1174+005	.1091+005	
C	.1015+005	1512.	-16.15	.1016+005	9491.	
O	8601.	1162.	14.89	8586.	8073.	

INSIDE NODE = 1775 OUTSIDE NODE = 1778
** MEMBRANE PLUS BENDING ** I=INSIDE C=CENTER O=OUTSIDE

	SX	SY	SZ	SXY	SYZ	SXZ
I	-83.33	.1142+005	2107.	116.7	.0000	.0000
C	-39.87	.1013+005	1812.	116.7	.0000	.0000
O	3.589	8844.	1517.	116.7	.0000	.0000
	SIG1	SIG2	SIG3	SI	SIGE	
I	.1142+005	2107.	-84.52	.1150+005	.1058+005	
C	.1013+005	1812.	-41.21	.1017+005	9384.	
O	8845.	1517.	2.049	8843.	8191.	

INSIDE NODE = 1795 OUTSIDE NODE = 1798
** MEMBRANE PLUS BENDING ** I=INSIDE C=CENTER O=OUTSIDE

	SX	SY	SZ	SXY	SYZ	SXZ
I	47.28	.1101+005	2344.	170.4	.0000	.0000
C	82.92	.1011+005	2155.	170.4	.0000	.0000
O	118.6	9219.	1965.	170.4	.0000	.0000
	SIG1	SIG2	SIG3	SI	SIGE	
I	.1101+005	2344.	44.63	.1096+005	.1001+005	
C	.1012+005	2155.	80.03	.1004+005	9176.	
O	9222.	1965.	115.4	9106.	8337.	

INSIDE NODE = 1795 OUTSIDE NODE = 1818
** MEMBRANE PLUS BENDING ** I=INSIDE C=CENTER O=OUTSIDE

	SX	SY	SZ	SXY	SYZ	SXZ
I	1928.	8893.	2245.	3901.	.0000	.0000
C	2031.	8325.	2367.	3901.	.0000	.0000
O	2134.	7756.	2489.	3901.	.0000	.0000
	SIG1	SIG2	SIG3	SI	SIGE	
I	.1064+005	2245.	181.5	.1046+005	9594.	
C	.1019+005	2367.	166.1	.1002+005	9124.	
O	9753.	2489.	137.0	9616.	8682.	

INSIDE NODE = 1795 OUTSIDE NODE = 1838
** MEMBRANE PLUS BENDING ** I=INSIDE C=CENTER O=OUTSIDE

	SX	SY	SZ	SXY	SYZ	SXZ
I	3532.	7244.	2184.	4792.	.0000	.0000
C	3747.	6870.	2479.	4792.	.0000	.0000
O	3962.	6496.	2773.	4792.	.0000	.0000
	SIG1	SIG2	SIG3	SI	SIGE	
I	.1053+005	2184.	249.2	.1028+005	9460.	
C	.1035+005	2479.	268.7	.1008+005	9177.	
O	.1019+005	2773.	272.7	9913.	8930.	

INSIDE NODE = 1815 OUTSIDE NODE = 1818
** MEMBRANE PLUS BENDING ** I=INSIDE C=CENTER O=OUTSIDE

	SX	SY	SZ	SXY	SYZ	SXZ
I	98.74	.1051+005	2531.	238.5	.0000	.0000
C	116.5	.1009+005	2521.	238.5	.0000	.0000
O	134.3	9683.	2510.	238.5	.0000	.0000
	SIG1	SIG2	SIG3	SI	SIGE	
I	.1051+005	2531.	93.28	.1042+005	9437.	
C	.1010+005	2521.	110.8	9989.	9028.	
O	9689.	2510.	128.4	9560.	8620.	

T

Table 2.10.3-2 $P_m + P_b$ Stress Summary – Upper Ring Critical Section (Continued)

INSIDE NODE = 1815 OUTSIDE NODE = 1838
** MEMBRANE PLUS BENDING ** I=INSIDE C=CENTER O=OUTSIDE

	SX	SY	SZ	SXY	SYZ	SXZ
I	511.0	9585.	2393.	2400.	.0000	.0000
C	627.9	9537.	2591.	2400.	.0000	.0000
O	744.9	9488.	2789.	2400.	.0000	.0000

	SIG1	SIG2	SIG3	SI	SIGE
I	.1018+005	2393.	-84.49	.1027+005	9278.
C	.1014+005	2591.	22.74	.1012+005	9111.
O	.1010+005	2789.	129.7	9974.	8946.

INSIDE NODE = 1815 OUTSIDE NODE = 1856
** MEMBRANE PLUS BENDING ** I=INSIDE C=CENTER O=OUTSIDE

	SX	SY	SZ	SXY	SYZ	SXZ
I	1806.	8043.	2289.	3914.	.0000	.0000
C	1847.	8248.	2622.	3914.	.0000	.0000
O	1888.	8454.	2955.	3914.	.0000	.0000

	SIG1	SIG2	SIG3	SI	SIGE
I	9929.	2289.	-79.45	.1001+005	9059.
C	.1010+005	2622.	-8.103	.1011+005	9086.
O	.1028+005	2955.	62.44	.1022+005	9121.

INSIDE NODE = 1835 OUTSIDE NODE = 1838
** MEMBRANE PLUS BENDING ** I=INSIDE C=CENTER O=OUTSIDE

	SX	SY	SZ	SXY	SYZ	SXZ
I	-2.180	7501.	1824.	349.3	.0000	.0000
C	-3.885	9404.	2449.	349.3	.0000	.0000
O	-5.590	.1131+005	3074.	349.3	.0000	.0000

	SIG1	SIG2	SIG3	SI	SIGE
I	7517.	1824.	-18.40	7536.	6804.
C	9417.	2449.	-16.84	9434.	8474.
O	.1132+005	3074.	-16.37	.1133+005	.1015+005

INSIDE NODE = 1835 OUTSIDE NODE = 1856
** MEMBRANE PLUS BENDING ** I=INSIDE C=CENTER O=OUTSIDE

	SX	SY	SZ	SXY	SYZ	SXZ
I	120.5	6844.	1564.	2151.	.0000	.0000
C	242.9	8823.	2375.	2151.	.0000	.0000
O	365.3	.1080+005	3186.	2151.	.0000	.0000

	SIG1	SIG2	SIG3	SI	SIGE
I	7473.	1564.	-508.7	7982.	7174.
C	9332.	2375.	-266.1	9598.	8588.
O	.1123+005	3186.	-60.60	.1129+005	.1007+005

INSIDE NODE = 1852 OUTSIDE NODE = 1856
** MEMBRANE PLUS BENDING ** I=INSIDE C=CENTER O=OUTSIDE

	SX	SY	SZ	SXY	SYZ	SXZ
I	-5378.	-203.5	-1857.	-558.9	.0000	.0000
C	-2838.	6443.	1023.	-558.9	.0000	.0000
O	-297.2	.1309+005	3904.	-558.9	.0000	.0000

	SIG1	SIG2	SIG3	SI	SIGE
I	-143.8	-1857.	-5438.	5294.	4679.
C	6477.	1023.	-2871.	9348.	8133.
O	.1311+005	3904.	-320.5	.1343+005	.1190+005

INSIDE NODE = 1861 OUTSIDE NODE = 1876
** MEMBRANE PLUS BENDING ** I=INSIDE C=CENTER O=OUTSIDE

	SX	SY	SZ	SXY	SYZ	SXZ
I	-87.62	-3319.	-1662.	-502.6	.0000	.0000
C	-182.7	-243.3	-294.6	-502.6	.0000	.0000
O	-277.9	2833.	1073.	-502.6	.0000	.0000

	SIG1	SIG2	SIG3	SI	SIGE
I	-11.26	-1662.	-3396.	3384.	2931.
C	290.5	-294.6	-716.5	1007.	875.9
O	2912.	1073.	-357.1	3269.	2838.

Table 2.10.3-2 $P_m + P_b$ Stress Summary – Upper Ring Critical Section (Continued)

INSIDE NODE = 1901 OUTSIDE NODE = 1916
** MEMBRANE PLUS BENDING ** I=INSIDE C=CENTER O=OUTSIDE

	SX	SY	SZ	SXY	SYZ	SXZ
I	7.805	-3976.	-1710.	-488.2	.0000	.0000
C	72.37	-825.5	222.5	-488.2	.0000	.0000
O	136.9	2325.	2155.	-488.2	.0000	.0000
	SIG1	SIG2	SIG3	SI	SIGE	
I	66.76	-1710.	-4035.	4102.	3563.	
C	286.7	222.5	-1040.	1327.	1296.	
O	2429.	2155.	32.94	2396.	2272.	

INSIDE NODE = 1941 OUTSIDE NODE = 1956
** MEMBRANE PLUS BENDING ** I=INSIDE C=CENTER O=OUTSIDE

	SX	SY	SZ	SXY	SYZ	SXZ
I	141.5	-3071.	-841.4	-404.6	.0000	.0000
C	87.81	-734.2	554.6	-404.6	.0000	.0000
O	34.09	1603.	1951.	-404.6	.0000	.0000
	SIG1	SIG2	SIG3	SI	SIGE	
I	191.7	-841.4	-3122.	3313.	2936.	
C	554.6	253.5	-900.0	1455.	1330.	
O	1951.	1701.	-64.12	2015.	1902.	

INSIDE NODE = 1969 OUTSIDE NODE = 1976
** MEMBRANE PLUS BENDING ** I=INSIDE C=CENTER O=OUTSIDE

	SX	SY	SZ	SXY	SYZ	SXZ
I	-239.2	-2119.	248.0	-485.3	.0000	.0000
C	-115.5	25.14	1091.	-485.3	.0000	.0000
O	8.328	2170.	1935.	-485.3	.0000	.0000
	SIG1	SIG2	SIG3	SI	SIGE	
I	248.0	-121.4	-2237.	2485.	2323.	
C	1091.	445.2	-535.5	1627.	1419.	
O	2273.	1935.	-95.64	2369.	2219.	

INSIDE NODE = 1969 OUTSIDE NODE = 1996
** MEMBRANE PLUS BENDING ** I=INSIDE C=CENTER O=OUTSIDE

	SX	SY	SZ	SXY	SYZ	SXZ
I	-739.1	-1522.	273.5	-363.6	.0000	.0000
C	-338.2	143.0	1038.	-363.6	.0000	.0000
O	62.72	1808.	1802.	-363.6	.0000	.0000
	SIG1	SIG2	SIG3	SI	SIGE	
I	273.5	-596.3	-1665.	1938.	1682.	
C	1038.	338.4	-533.6	1571.	1363.	
O	1881.	1802.	-9.987	1891.	1852.	

INSIDE NODE = 1969 OUTSIDE NODE = 2016
** MEMBRANE PLUS BENDING ** I=INSIDE C=CENTER O=OUTSIDE

	SX	SY	SZ	SXY	SYZ	SXZ
I	-1312.	-948.8	300.9	-231.4	.0000	.0000
C	-557.9	196.4	982.6	-231.4	.0000	.0000
O	196.1	1342.	1664.	-231.4	.0000	.0000
	SIG1	SIG2	SIG3	SI	SIGE	
I	300.9	-836.3	-1424.	1725.	1519.	
C	982.6	261.7	-623.2	1606.	1393.	
O	1664.	1387.	151.1	1513.	1395.	

INSIDE NODE = 1969 OUTSIDE NODE = 2036
** MEMBRANE PLUS BENDING ** I=INSIDE C=CENTER O=OUTSIDE

	SX	SY	SZ	SXY	SYZ	SXZ
I	-1794.	-522.4	330.4	-133.4	.0000	.0000
C	-760.9	201.6	927.8	-133.4	.0000	.0000
O	272.0	925.6	1525.	-133.4	.0000	.0000
	SIG1	SIG2	SIG3	SI	SIGE	
I	330.4	-508.6	-1808.	2138.	1866.	
C	927.8	219.7	-779.0	1707.	1485.	
O	1525.	951.7	245.8	1279.	1110.	

Table 2.10.3-2 $P_m + P_b$ Stress Summary – Upper Ring Critical Section (Continued)

INSIDE NODE = 1989 OUTSIDE NODE = 1996

** MEMBRANE PLUS BENDING ** I=INSIDE C=CENTER O=OUTSIDE

	SX	SY	SZ	SXY	SYZ	SXZ
I	-117.5	-2025.	230.3	-409.8	.0000	.0000
C	-58.36	-108.0	1006.	-409.8	.0000	.0000
O	.8085	1809.	1782.	-409.8	.0000	.0000

	SIG1	SIG2	SIG3	SI	SIGE
I	230.3	-33.20	-2109.	2339.	2219.
C	1006.	327.4	-493.7	1500.	1301.
O	1897.	1782.	-87.74	1985.	1930.

INSIDE NODE = 2009 OUTSIDE NODE = 2016

** MEMBRANE PLUS BENDING ** I=INSIDE C=CENTER O=OUTSIDE

	SX	SY	SZ	SXY	SYZ	SXZ
I	-71.13	-1430.	315.8	-331.7	.0000	.0000
C	-33.63	-76.82	948.3	-331.7	.0000	.0000
O	3.869	1276.	1581.	-331.7	.0000	.0000

	SIG1	SIG2	SIG3	SI	SIGE
I	315.8	5.536	-1507.	1822.	1689.
C	948.3	277.2	-387.7	1336.	1157.
O	1581.	1358.	-77.43	1658.	1559.

INSIDE NODE = 2029 OUTSIDE NODE = 2036

** MEMBRANE PLUS BENDING ** I=INSIDE C=CENTER O=OUTSIDE

	SX	SY	SZ	SXY	SYZ	SXZ
I	-26.70	-955.9	338.9	-256.9	.0000	.0000
C	-9.613	-51.33	867.2	-256.9	.0000	.0000
O	7.470	853.2	1395.	-256.9	.0000	.0000

	SIG1	SIG2	SIG3	SI	SIGE
I	338.9	39.61	-1022.	1361.	1239.
C	867.2	227.3	-288.2	1155.	1003.
O	1395.	925.2	-64.46	1460.	1291.

INSIDE NODE = 2049 OUTSIDE NODE = 2056

** MEMBRANE PLUS BENDING ** I=INSIDE C=CENTER O=OUTSIDE

	SX	SY	SZ	SXY	SYZ	SXZ
I	42.19	-599.4	337.9	-189.0	.0000	.0000
C	24.09	-32.11	779.8	-189.0	.0000	.0000
O	5.988	535.2	1222.	-189.0	.0000	.0000

	SIG1	SIG2	SIG3	SI	SIGE
I	337.9	93.75	-650.9	988.9	892.2
C	779.8	187.1	-195.1	974.9	850.8
O	1222.	595.7	-54.60	1276.	1105.

INSIDE NODE = 2070 OUTSIDE NODE = 2076

** MEMBRANE PLUS BENDING ** I=INSIDE C=CENTER O=OUTSIDE

	SX	SY	SZ	SXY	SYZ	SXZ
I	-237.7	-408.0	397.1	-146.4	.0000	.0000
C	-116.1	16.87	765.9	-146.4	.0000	.0000
O	5.387	441.7	1135.	-146.4	.0000	.0000

	SIG1	SIG2	SIG3	SI	SIGE
I	397.1	-153.5	-492.2	889.3	777.4
C	765.9	111.2	-210.4	976.3	861.8
O	1135.	486.3	-39.17	1174.	1018.

INSIDE NODE = 2070 OUTSIDE NODE = 2096

** MEMBRANE PLUS BENDING ** I=INSIDE C=CENTER O=OUTSIDE

	SX	SY	SZ	SXY	SYZ	SXZ
I	-379.8	-204.8	411.0	-77.73	.0000	.0000
C	-175.0	55.93	720.3	-77.73	.0000	.0000
O	29.87	316.7	1030.	-77.73	.0000	.0000

	SIG1	SIG2	SIG3	SI	SIGE
I	411.0	-175.3	-409.3	820.4	732.0
C	720.3	79.66	-198.7	919.0	816.2
O	1030.	336.4	10.16	1019.	901.7

Table 2.10.3-2 $P_m + P_b$ Stress Summary – Upper Ring Critical Section (Continued)

INSIDE NODE = 2070 OUTSIDE NODE = 2116
** MEMBRANE PLUS BENDING ** I=INSIDE C=CENTER O=OUTSIDE

	SX	SY	SZ	SXY	SYZ	SXZ
I	-439.7	-128.0	416.1	-52.64	.0000	.0000
C	-196.4	56.58	699.7	-52.64	.0000	.0000
O	47.04	241.1	983.4	-52.64	.0000	.0000
	SIG1	SIG2	SIG3	SI	SIGE	
I	416.1	-119.3	-448.4	864.5	755.7	
C	699.7	67.10	-206.9	906.6	805.4	
O	983.4	254.5	33.68	949.7	860.8	

INSIDE NODE = 2070 OUTSIDE NODE = 2136
** MEMBRANE PLUS BENDING ** I=INSIDE C=CENTER O=OUTSIDE

	SX	SY	SZ	SXY	SYZ	SXZ
I	-487.3	-72.28	420.3	-35.13	.0000	.0000
C	-209.7	51.94	679.9	-35.13	.0000	.0000
O	67.85	176.2	939.5	-35.13	.0000	.0000
	SIG1	SIG2	SIG3	SI	SIGE	
I	420.3	-69.33	-490.2	910.5	789.3	
C	679.9	56.58	-214.3	894.3	794.3	
O	939.5	186.6	57.45	882.1	825.1	

INSIDE NODE = 2090 OUTSIDE NODE = 2096
** MEMBRANE PLUS BENDING ** I=INSIDE C=CENTER O=OUTSIDE

	SX	SY	SZ	SXY	SYZ	SXZ
I	15.34	-296.5	383.3	-109.8	.0000	.0000
C	10.44	-11.56	694.1	-109.8	.0000	.0000
O	5.536	273.4	1005.	-109.8	.0000	.0000
	SIG1	SIG2	SIG3	SI	SIGE	
I	383.3	50.14	-331.3	714.7	619.4	
C	694.1	109.8	-110.9	805.0	720.5	
O	1005.	312.7	-33.74	1039.	915.9	

INSIDE NODE = 2110 OUTSIDE NODE = 2116
** MEMBRANE PLUS BENDING ** I=INSIDE C=CENTER O=OUTSIDE

	SX	SY	SZ	SXY	SYZ	SXZ
I	-22.61	-153.0	385.8	-83.96	.0000	.0000
C	-8.556	-6.142	665.4	-83.96	.0000	.0000
O	5.495	140.8	945.0	-83.96	.0000	.0000
	SIG1	SIG2	SIG3	SI	SIGE	
I	385.8	18.49	-194.1	579.9	508.1	
C	665.4	76.62	-91.32	756.7	688.3	
O	945.0	180.9	-34.68	979.7	891.7	

INSIDE NODE = 2130 OUTSIDE NODE = 2136
** MEMBRANE PLUS BENDING ** I=INSIDE C=CENTER O=OUTSIDE

	SX	SY	SZ	SXY	SYZ	SXZ
I	-20.71	-76.97	374.5	-59.62	.0000	.0000
C	-7.937	-3.152	632.9	-59.62	.0000	.0000
O	4.831	70.66	891.2	-59.62	.0000	.0000
	SIG1	SIG2	SIG3	SI	SIGE	
I	374.5	17.09	-114.8	489.3	438.5	
C	632.9	54.13	-65.22	698.1	646.7	
O	891.2	105.9	-30.36	921.6	861.6	

INSIDE NODE = 2150 OUTSIDE NODE = 2156
** MEMBRANE PLUS BENDING ** I=INSIDE C=CENTER O=OUTSIDE

	SX	SY	SZ	SXY	SYZ	SXZ
I	-109.4	-26.89	355.8	-37.46	.0000	.0000
C	-77.32	-1.187	590.7	-37.46	.0000	.0000
O	-45.28	24.52	825.6	-37.46	.0000	.0000
	SIG1	SIG2	SIG3	SI	SIGE	
I	355.8	-12.42	-123.8	479.6	434.7	
C	590.7	14.15	-92.66	683.4	636.7	
O	825.6	40.81	-61.58	887.2	840.7	

2.10.4 Oblique Drop Slapdown

The NAC-LWT cask is analyzed and a scale model was tested for the secondary impact resulting from a 30-foot oblique drop (hypothetical accident condition) onto a flat, unyielding, horizontal surface.

2.10.4.1 Discussion

The NAC-LWT cask geometry is presented in the license drawings of Section 1.4 and in Figure 2.10.4-1. Section 2.6.7.4 has outlined an analysis of the NAC-LWT cask impact forces developed during the 30-foot hypothetical accident free drop. This analysis assumes that the impact limiter is crushed by a 1-foot fall before the 30-foot accident begins, for a total of 31 feet. The analysis of Section 2.6.7.4 addresses the maximum force imparted to one limiter resulting from the initial impact with the unyielding surface for various cask orientation angles. This section addresses the primary impact loads on the cask structure and the adequacy of the impact limiter to absorb the remaining energy during the secondary impact on the unyielding surface for an oblique cask orientation based on test results.

2.10.4.2 Analysis

In Section 2.10.12, the total amount of energy (ET) to be dissipated after the cask has fallen is calculated as:

$$ET = El + ER + EP + ES$$

where:

El = energy absorbed during the first impact

ER = remaining energy after the first impact

EP = rotational potential energy

ES = elastically stored energy

The sum of the last three terms equals the energy absorbed by the second impact limiter (secondary impact). Terms El, ER and EP can be calculated; however, testing of the aluminum honeycomb in an impact limiter configuration was necessary to determine ES.

A quarter-scale model of the NAC-LWT cask has been tested and the secondary impact phenomenon has been reviewed. It has been concluded that the rebound energy (5 to 10 percent of the primary impact energy) may be restored to the cask in such a manner as to cause the first impacted end of the cask to lift from the ground several inches during the secondary impact (slapdown). Thus, the stored rebound energy must be dissipated by the second impact limiter.

Table 2.10.4-1 shows that at a drop angle of 75 degrees, the energy dissipated in the secondary impact (E2) is greater than energy dissipated in a secondary side impact, so that the cask "slaps down." This is because the residual drop energy not absorbed in the first impact (energy transformed to rotational energy), impact limiter rebound energy (elastic rebound), and potential energy converted to kinetic energy as the cask rotates to the second impact, all combine to exceed the energy absorbed by one limiter in a pure side drop orientation. Results of the scale impact limiter tests show that the impact limiters do have sufficient energy dissipation margin to absorb the 75-degree oblique secondary impact energy.

The calculation of El in RBCUBED is done by solving the equations of motion for the cask. These equations are based on the force developed by the impact limiter as it crushes. The limiter force is equal to the crush strength of the aluminum honeycomb multiplied by the backed-up crush area. The RBCUBED program calculates this area as a function of impact angle and crush depth using a system of solid geometry subroutines developed by Oak Ridge National Laboratories as part of the MORSE shielding code. These crush area calculations have been verified by manual calculation of crush area using graphical drafting techniques for several impact angles and crush depths. The accuracy of the area calculation may be shown by inspection of the scale limiter results presented in Figure 2.10.4-2 through Figure 2.10.4-4, which show that the RBCUBED force (the crush area times the crush strength) accurately tracks the measured force.

The impact limiter force is normal to the unyielding surface and is applied to the cask body, as shown in Figure 2.10.4-5. The weight of the cask continues to accelerate the cask downward as the impact limiter decelerates, producing a crush force (FD), decelerating the cask. During the initial contact of an impact limiter with the unyielding surface, the cask weight may cause the net force to accelerate the cask downward until the crush area (footprint) becomes large enough to overcome the cask weight and produce a net deceleration.

The net force applied to the cask produces a force and deceleration parallel to the cask long axis and a force and angular acceleration perpendicular to the cask axis, as shown in Figure 2.10.4-5 The parallel force component acts on the cask center of mass to slow the cask down, but the perpendicular component transforms translational kinetic energy from the drop into rotational energy that must be absorbed in the secondary impact.

The calculations to determine the energy to be dissipated for each drop angle shown in Figure 2.10.4-1 include the potential energy resulting from the cask tipping over (for $0° \leq \theta \leq 15°$) and elastically stored rebound energy from the first impact.

2.10.4.3 Energy Calculation

The cask and impact limiters are considered to be a mass (m). When the mass is released from rest a distance (H), it is accelerated uniformly by gravity (g). Because the mass is not acted upon by any off-center forces while free falling, it will remain in the same attitude that it had when it was released. The change in potential energy equals the change in kinetic energy. The vertical velocity of the mass at the time of contact with the unyielding surface is calculated as:

where:

V_i = initial vertical velocity of cask at time of impact (t = 0 sec)

g = the gravitational constant (ft/sec^2)

H = the drop height (ft)

The cask may impact at any angle (0° to 90°). In the case of impact angles from 0 degrees (end drop) through 15 degrees (corner drop), the cask could be expected to remain upright after the total energy of the first impact is absorbed; as a result, the center of gravity does not have a moment arm, which would provide a rotational moment about the cask base, causing the cask to tip over. However, the calculated energies shown in Table 2.10.4-1 do include the energy of the tip-over for conservatism. Ignoring elastically stored energy, which is absorbed by one impact limiter, the total kinetic energy is:

$$ET = mgH, 0° \leq 0 \leq 15°$$

where:

E_T = total energy to be absorbed (in-lbf)

m = mass of the cask and limiters (lbm)

g = acceleration due to gravity (ft/sec^2)

H = height of drop (ft)

For oblique drops within the angular range from corner drop to side drop, the total energy absorbed is greater than that for the 0-degree to 15-degree range, if one ignores cask tip-over and elastically stored energy. Cask impact angles greater than 75 degrees are considered to be side drops because the first impact limiter stops the cask as the second begins to absorb energy.

Oblique drops ($15° \leq \theta \leq 75°$) have four constituent energy dissipation components, which account for all the potential energy given to a cask prior to being dropped. Oblique drops are two-step phenomena. First, the cask vertically translates toward the unyielding surface and the lower impact limiter decelerates the lower end of the cask. The amount of energy dissipated while stopping the vertical translation of the lower end of the cask is El (inch-pounds). Second, the cask pivots on the crushed impact limiter until the cask is near horizontal and the second impact limiter begins to crush. The remaining three constituent energy components (remaining energy from the free drop, ER, which is transformed to rotational energy; potential energy from

pivoting to the horizontal, EP; and elastically stored energy, ES) are all absorbed in the second limiter in the side drop orientation (A more detailed discussion of potential to kinetic energy conversion, cask motion and energy dissipation is found in Appendix 2.10.12).

Thus, in oblique drops, the center of gravity will fall a distance greater than the drop height, H. The additional distance the center of gravity must fall is L/2 (cosθ) (Figure 2.10.4-2), where L is the length of the cask body. Therefore, the total kinetic energy that must be absorbed to bring the cask to rest for angles greater than 15 degrees is:

$$E_T = mg\,(H + \frac{L}{2}\cos\theta),\ 15° \le \theta \le 90°$$

The total energy to be absorbed is greatest for the 0-degree cask impact angle because the first impact limiter stops the cask and the second impact limiter absorbs the other energy components (ER + EP + ES). The total energy absorption is determined by summing El and E2 for each drop angle.

2.10.4.4 Rotational Velocity Change

For cask angles greater than 15 degrees, the center of gravity of the cask is unsupported. The net crush force is applied at one end of the cask, resulting in a torque (T), possibly causing rotation of the cask about its center of gravity. As the cask is translating vertically while decelerating, it is also rotating around the end that is crushing. The cask is also attempting to rotate around the center of gravity due to the torque applied to the decelerating end of the cask by the perpendicular component ($F_{d\perp}$) of the crush force. The applied torque is:

$$T = F_{d\perp}\frac{L}{2}$$

$$= Fd \sin\theta\frac{L}{2}$$

where:

T = torque (in-lb)

L = cask length (in)

F_d = deceleration force (lb)

The impulse equation for an applied torque is:

$$T\Delta t = I\Delta\omega$$

where:

Δt = increment of time (sec)

I = moment of inertia of a cylinder (cask) about its center of gravity

$$= \frac{mL^2}{12}$$

$\Delta\omega =$ change in angular velocity (rad/sec)

The angular velocity is equal to the rotational velocity change (ΔVt) divided by the radius:

$$\Delta\omega = \frac{\Delta V_t}{L/2}$$

Substituting for $\Delta\omega$ in the impulse equation:

$$T\Delta t = I\frac{\Delta V_t}{L/2}$$

Substituting and solving for ΔV_t:

$$\Delta V_t = \frac{F_d \sin\theta\ \Delta t\ L^2}{4I}$$

Substituting the formula for I_{cofm} for a cylinder yields:

$$\Delta V_t = \frac{F_d \sin\theta\ \Delta t\ 3g}{W_T}$$

Note that the same result for ΔV_t is obtained by regarding the cask as rotating about one end.

This change in transverse velocity is subtracted from the transverse component of the initial velocity to determine the transverse velocity of the cask at the beginning of the next deformation step (δ'). When the sum of the transverse velocity changes equals the initial velocity, the impacting end of the cask has been stopped along an axis normal to the longitudinal axis of the cask.

Figure 2.10.4-1 Cask Slapdown Geometry

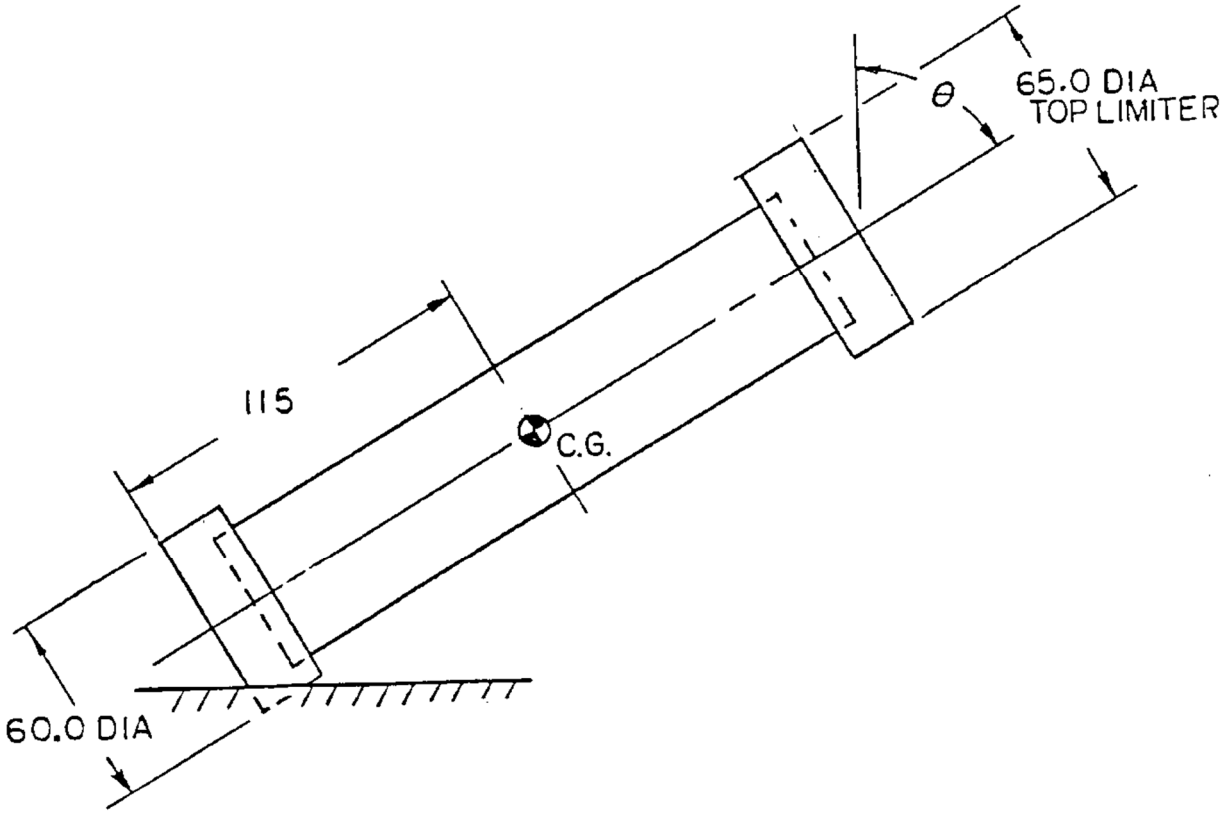

Figure 2.10.4-2 Force Deflection Curve of Drop Tested Limiter – 0-Degree Impact

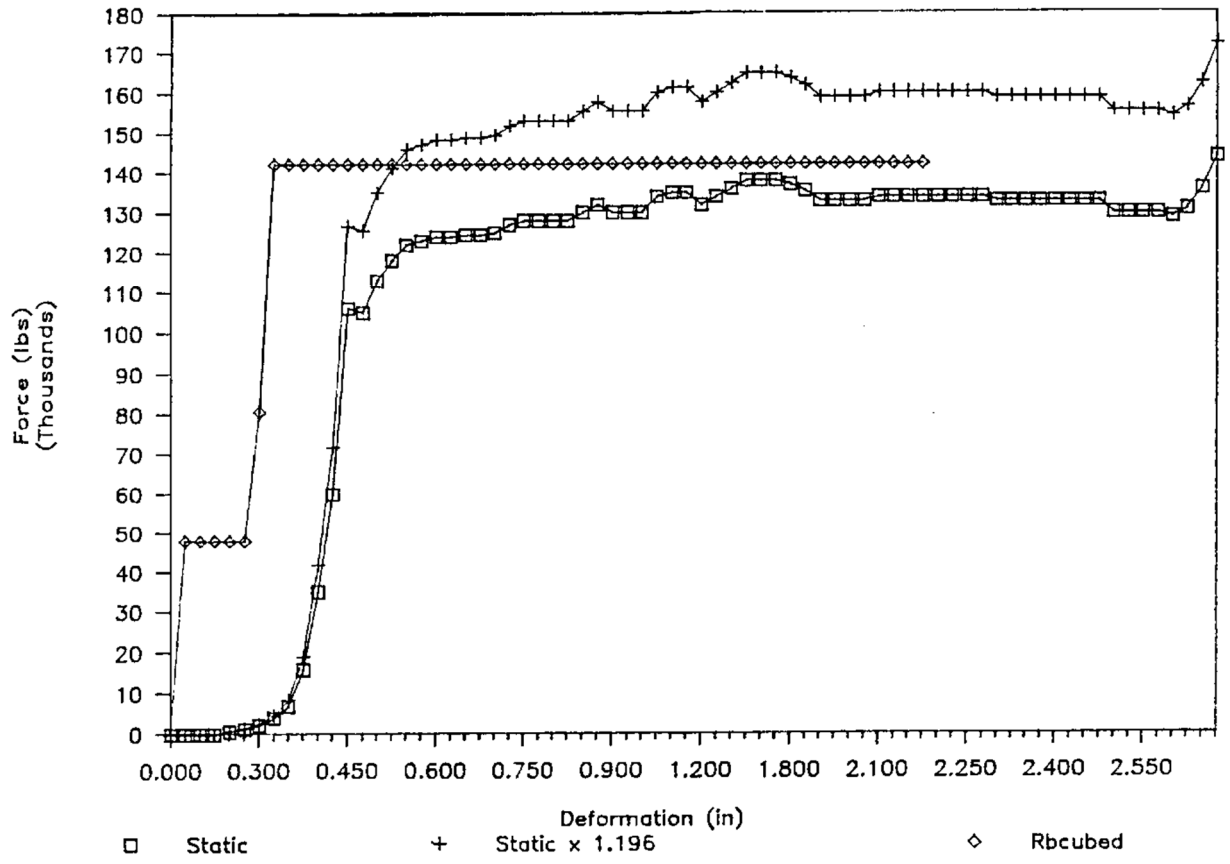

Figure 2.10.4-3 Force Deflection Curve of Drop Tested Limiter – 14-Degree Impact

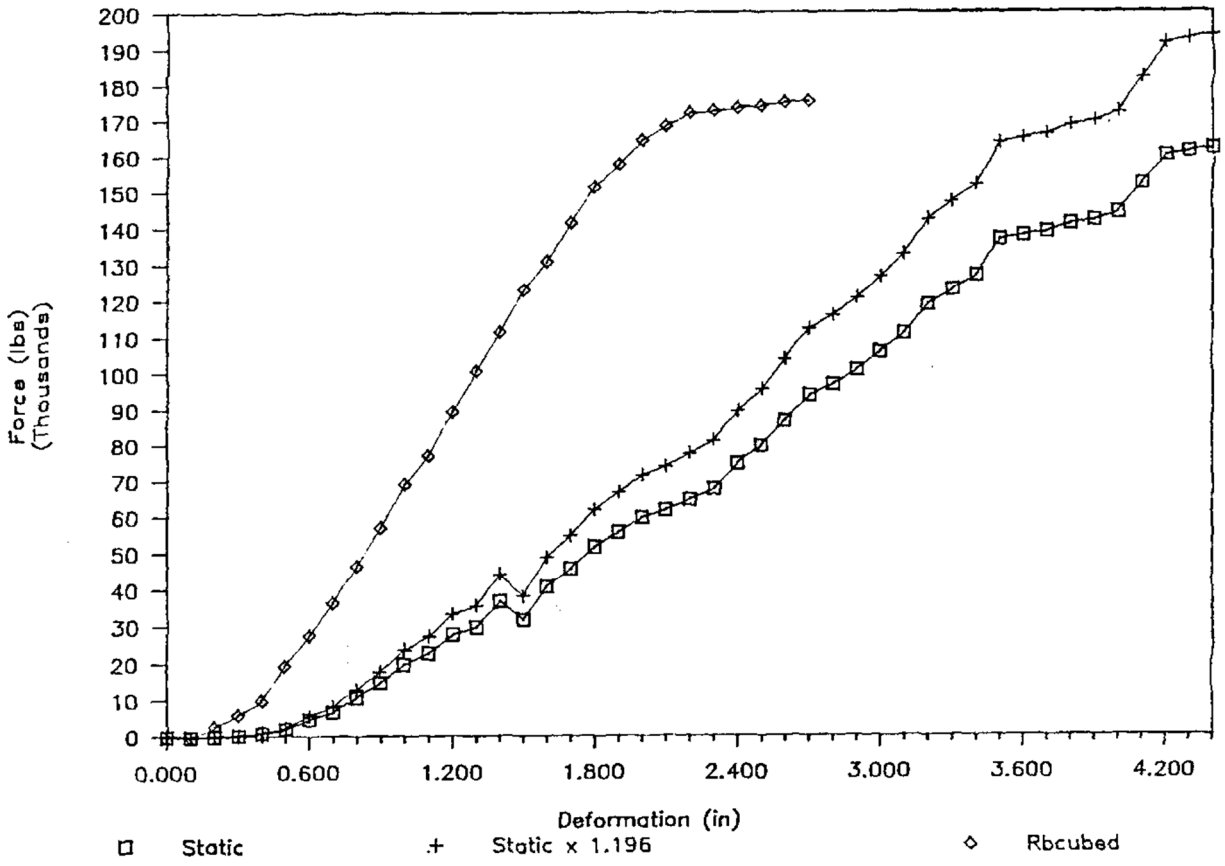

Figure 2.10.4-4 Force Deflection Curve of Drop Tested Limiter – 90 Degree Impact

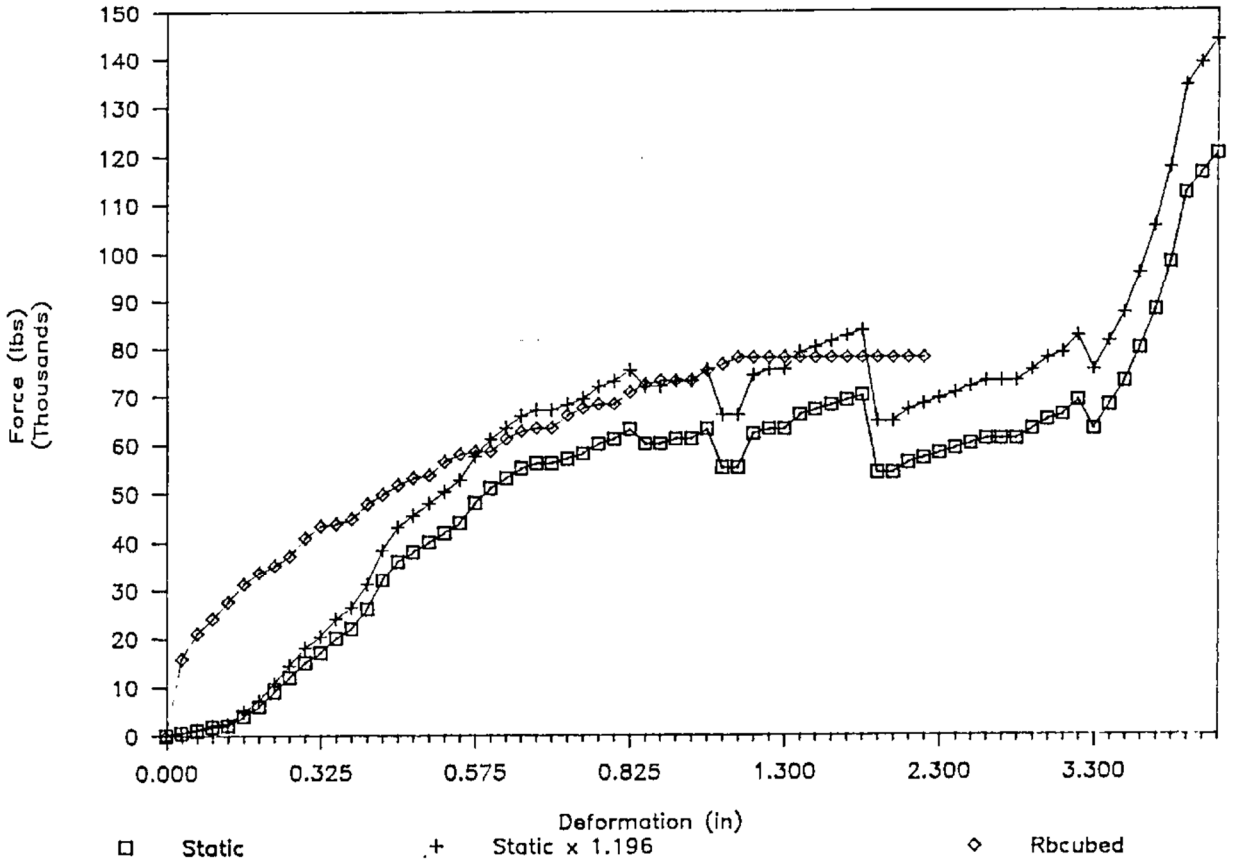

Figure 2.10.4-5 Oblique Drop

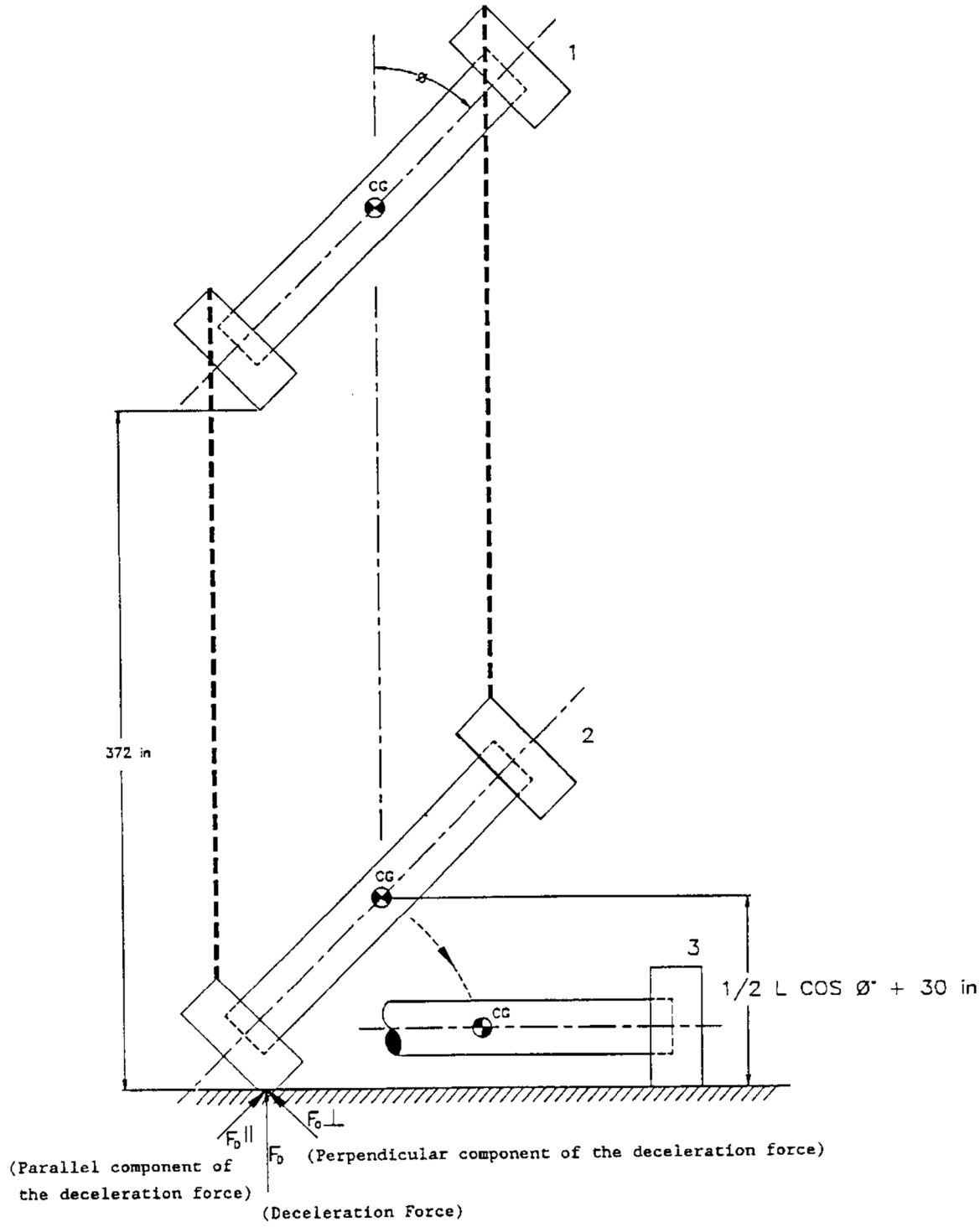

Table 2.10.4-1 Determination of Maximum Energy for Secondary Impact – Full-Scale Impact Limiter

Drop Angle (degrees)	0	15	30	45	60	75	90
EI Energy absorbed by first limiter (in-lb).	1.93×10^7	1.88×10^7	1.74×10^7	1.52×10^7	1.23×10^7	1.03×10^7	9.67×10^6
ER Energy remaining after first impact (in-lb).	0.00	5.40×10^5	1.94×10^6	4.14×10^6	7.04×10^6	9.02×10^6	9.67×10^6
EP Potential energy of cask after first impact (in-lb).	6.04×10^6*	4.97×10^6	4.40×10^6	3.45×10^6	2.21×10^6	7.68×10^5	0.00
ES Energy stored in first limiter; absorbed in second limiter in side drop orientation (in-lb).	1.87×10^6 (9.7%)	1.24×10^6 (6.6%)	1.04×10^6 (6.0%)**	8.66×10^5 (5.7%)**	6.77×10^5 (5.5%)**	5.56×10^5 (5.4%)**	5.13×10^5 (5.3%)
E2 Secondary impact total of ER + EP + ES (in-lb).	7.91×10^6	6.75×10^6	7.38×10^6	8.46×10^6	9.93×10^6	1.03×10^7	1.02×10^7
E_{max}-Side Drop Maximum energy absorption capability of impact limiter in side drop orientation (in-lb).	1.49×10^7	1.49×10^7	1.49×10^7	1.49×10^7	1.49×10^7	1.49×10^7	1.49×10^7
Energy Absorption Margin	88.32%	120.71%	101.79%	76.20%	50.10%	44.04%	46.33%

* Assumes tip-over of cask onto the second impact limiter.
** Interpolated values.

2.10.5 Lead Slump – End Drop

The magnitude of lead slump that occurs during the end drop accident is assessed from the results of the finite element analyses as previously addressed in Section 2.7.1.1. Since ANSYS gap elements are used to model the interfaces between the lead shell and the stainless steel shells, the finite element model of the cask is adequate to represent the lead slump effect during an end drop condition. The maximum axial gap that occurs between the lead and the steel due to the 30-foot end drop is summarized as follows:

Condition*	Gap (inch)
(1)	0.0**
(2)	0.0658***
(3)	0.3216
(4)	0.0**
(5)	0.0693***

* (1) Bottom end drop with 130°F ambient temperature and maximum decay heat load.

(2) Bottom end drop with -40°F ambient temperature and maximum decay heat load.

(3) Bottom end drop with -40°F ambient temperature and no decay heat load.

(4) Top end drop with 130°F ambient temperature and maximum decay heat load.

(5) Top end drop with -40°F ambient temperature and maximum decay heat load.

** The lead slump effect has been offset by the thermal expansion effect, which is equal to:

$$175\ (16.9 \times 10^{-6})(250 - 70) = 0.532 \text{ in}$$

*** The lead slump effect has been offset by the thermal expansion of the lead, which is evaluated as:

$$175\ (16.5 \times 10^{-6})(160 - 70) = 0.260 \text{ in}$$

This slump assessment includes the initial gaps, developed at the top and bottom ends of the lead shell, induced by the fabrication process. The maximum lead slump, based on the finite element analysis, due to the end drop, is 0.33 inch.

2.10.6 Inner Shell Buckling Design Criteria and Evaluation

Code Case N-284 (Metal Containment Shell Buckling Design Methods) of the "ASME Boiler and Pressure Vessel Code," is used to analyze the NAC-LWT cask inner shell for structural stability. Structural stability assures that the inner shell does not buckle during cask fabrication, normal operations, or hypothetical accident conditions. The buckling evaluation requirements of Regulatory Guide 7.6, Paragraph C.5, are shown to be satisfied by the results of the interaction equation calculations of Code Case N-284.

2.10.6.1 Code Case N-284

The "ASME Boiler and Pressure Vessel Code," sets forth service limits that are analogous to load conditions found in 10 CFR 71. As stated in Regulatory Guide 7.6, the normal transport conditions correspond to Level A Service Limits and the hypothetical accident conditions correspond to Level D Service Limits. Service condition A and D allowable stresses are used in performing the buckling assessment of the inner shell. Level A (normal transport) conditions use a buckling factor of safety of 2.0 and Level D (accident) conditions use a buckling factor of safety of 1.34. Code Case N-284 addresses both elastic and inelastic buckling. Interaction equations are used to combine hoop compressive, axial compressive, and in-plane shear loadings. Also, Appendix F of the "ASME Boiler and Pressure Vessel Code," (for Level D Service Loadings) specifically identifies use of "a code case for metal containment shell buckling" as an acceptable means of addressing buckling issues (paragraph F-1331.5(c)).

Buckling of the inner shell, which is the primary component of containment, is evaluated in the following manner:

1. Determine the theoretical elastic buckling stresses using classical theory.
2. Apply the appropriate factors of safety and interaction equations to elastic and inelastic buckling cases and establish the worst case compressive and in-plane shear stresses.
3. Calculate and apply capacity reduction factors, which account for differences between classical theory and predicted instability stress for fabricated shells.
4. Calculate plasticity reduction factors and apply them in cases where elastically determined buckling stresses are above the proportional limit.

2.10.6.2 Theoretical Elastic Buckling Stresses

Inner shell geometric parameters and material properties necessary for the elastic buckling evaluation are presented in Table 2.10.6-1 and Table 2.10.6-2. The theoretical elastic buckling stresses for the inner shell are calculated using the equations of Code Case N-284 and the data presented in Table 2.10.6-1 and Table 2.10.6-2. The values of the theoretical elastic buckling stresses for the inner shell are presented in Table 2.10.6-3 and Table 2.10.6-4.

The equations from Code Case N-284 are:

$$S_{\phi eL} = C_{\phi} \frac{Et}{R}$$

$$S_{\theta eL} = S_{reL} = C_{\theta r} \frac{Et}{R}$$

$$S_{heL} = C_{\theta h} \frac{Et}{R}$$

$$S_{\phi\theta eL} = C_{\phi\theta} \frac{Et}{R}$$

These elastic buckling stress formulas are for cylindrical shells that are unstiffened. The values tabulated in Table 2.10.6-3 are resultant numerical values, excluding the modulus of elasticity (E). The modulus of elasticity is excluded because of its temperature dependent nature.

Table 2.10.6-4 is generated by substituting the value of E, corresponding to the temperature of interest, into the formulas in Table 2.10.6-3.

2.10.6.3 Capacity Reduction Factors

Capacity reduction factors, as stated earlier, compensate for differences between classically determined and predicted instability stresses for fabricated shells. The capacity reduction factors were determined using methods described in Section-1500 of Code Case N-284. For the NAC-LWT cask inner shell geometry, the factors are determined by the following expression:

1. Axial Compression

   $$\alpha_{\phi L} = \left[1.0 \times 10^{-5} \ (S_y)\right] - 0.033$$

2. Hoop Compression

   $$\alpha_{\theta L} = 0.8$$

3. Shear

   $$\alpha_{\phi\theta L} = 0.8$$

Table 2.10.6-5 summarizes the capacity reduction factors for the NAC-LWT cask inner shell (Type XM-19 stainless steel) based on the material yield strengths tabulated in Table 2.10.6-2.

In order to directly use the capacity reduction factors from Table 2.10.6-5, the tolerance requirements of NE-4220 of the "ASME Boiler and Pressure Vessel Code," Subsection NE, must be satisfied. NE-4221.1 and NE-4221.2 set forth the "maximum difference in cross-sectional diameters" and "maximum deviation from true theoretical form for external pressure." Table 2.10.6-6 shows that the requirements of NE-4221.1 and NE-4221.2 are satisfied, if the maximum tolerances and configuration constraints are met during manufacturing.

2.10.6.4 Plasticity Reduction Factors

Plasticity reduction factors account for nonlinear material behavior, occurring when buckling stresses exceed the proportional limit of the material. Reduction factors chosen are dependent on the magnitude of the applied compressive or in-plane shear stress, S_i. Because values for S_i are not directly calculated, the equations used to determine the reduction factors (Section-1600 of Code Case N-284) are presented.

1. Axial Compression

   $\eta_\phi = 1.0$; if $[(S_\phi)(FS)/S_y] < 0.55$

   $\eta_\phi = 0.18/(1-[0.45S_y/(S_\phi)(FS)])$;

   if $0.55 < [(S_\phi)(FS)/S_y] \leq 0.738$

   $\eta_\phi = 1.31 - [1.15(S_\phi)(FS)/S_y]$; if $0.738 < [(S_\phi)(FS)/S_y] < 1.0$

2. Hoop Compression

   $\eta_\theta = 1.0$; if $[(S_\theta)(FS)/S_y] < 0.67$

   $\eta_\theta = 2.53 - 2.29[(S_\theta)(FS)/S_y]$; if $0.67 < [(S_\theta)(FS)/S_y] < 1.0$

3. Shear

   $\eta_{\phi\theta} = 1.0$; if $[(S_{\phi\theta})(FS)/S_y] \leq 0.48$

   $\eta_{\phi\theta} = 0.1/1 - [0.43S_y/(S_{\phi\theta})(FS)]$;

   if $0.48 < [(S_{\phi\theta})(FS)/S_y] \leq 0.6$

2.10.6.5 Upper Bound Magnitudes for Compressive Stresses and In-Plane Shear Stresses

From Section-1600 of Code Case N-284, as an upper limit, the compressive stresses, S_i ($i = \phi$ or θ) must be less than the yield strength, S_y, divided by the appropriate factor of safety ($S_i < S_y/FS$). Similarly, for shear, $S_{\phi\theta}$ must be less than, or equal to, 0.6 S_y divided by the appropriate factor of safety ($S_{\phi\theta} < 0.6\ S_y/FS$). As stated in Section 2.10.6, there is a factor of safety of 2.0 for normal transport and a factor of safety of 1.34 for hypothetical accident conditions. Table 2.10.6-7 presents the elastic upper bound compressive and shear stresses, evaluated using normal and accident condition factors of safety. Under no circumstances can the elastic values presented in the table be exceeded. However, satisfying these limits alone is not sufficient to demonstrate that buckling will not occur. As stated in Section 2.10.6, the interaction equations must also be satisfied.

2.10.6.6 Interaction Equations

Elastic and inelastic interaction equations must be satisfied for all states of compressive and in-plane shear stress. The interaction equations for cylindrical shells are directly available from paragraph-1713.1.1 and paragraph-1713.2.1 of Code Case N-284. Once a stress state is established for a specific shell, plasticity reduction factors can be determined and all appropriate interaction equations checked. Elastic interaction equations must be satisfied, and if any of the uniaxial critical stress values exceed the proportional limit of the fabricated material, the inelastic interaction equations must also be satisfied.

2.10.6.7 Detailed Buckling Evaluation - Sample Calculation

The maximum P_m stress in the NAC-LWT cask inner shell for each load condition is identified and tabulated in Table 2.10.6-8. Stresses shown for the normal operations conditions 1-foot bottom and top end drops are obtained by ratioing from the corresponding accident condition 30-foot bottom or top end drop stress; the ratio (15.8/60.0 - 0.263) represents the 1-foot drop condition g factor divided by the actual 30-foot drop condition g factor used in the ANSYS finite element analysis (Section 2.6.1.1). The stresses shown for the 30-foot side drop accident condition are obtained from Table 2.7.1-17 for component No. 4. All other stresses tabulated in Table 2.10.6-8 are obtained directly from the ANSYS analysis results (Sections 2.6 and 2.7). Load condition "r" is used to demonstrate the step-by-step analysis procedure, which reflects the procedure diagrammed in paragraph-1800 of Code Case N-284.

Step 1

Stresses for each specified loading are found in Table 2.10.6-8. Load condition "r", accident condition, 130°F, maximum decay heat load (inner shell maximum temperature = 280°F), is examined below.

Step 2

For load condition "r" (Table 2.10.6-9), the maximum compressive stresses are:

$$S_\phi = 23{,}247 \text{ psi}$$

$$S_\theta = 360 \text{ psi}$$

$$S_{\phi\theta} = 0 \text{ psi}$$

Step 3

For accident conditions, the factor of safety (FS) is 1.34. Multiplying the stress components by this factor of safety yields:

$$FS\ (S_\phi) = 31{,}151 \text{ psi}$$

FS (S_θ) = 482 psi

FS ($S_{\phi\theta}$) = 0 psi

Step 4

Capacity reduction factors are available from Section 2.10.6.3 and are as follows for the load condition "r" inner shell temperature of 280°F:

$$\alpha_{\phi L} = 0.408$$

$$\alpha_{\theta L} = 0.8$$

$$\alpha_{\phi\theta L} = 0.8$$

Step 5

Plasticity reduction factors are determined using the equations presented in Section 2.10.6.4 as follows (S_y available from Table 2.10.6-2):

1. Axial Compression

$$S_\phi\,(FS)/S_y = 31{,}151/44{,}120 = 0.7060$$

$$\eta_\phi = 0.18/[1 - (0.45)(1/0.7060)] = 0.496$$

2. Hoop Compression

$$S_\theta\,(FS)/S_y = 482/44{,}120 = 0.0109$$

$$\eta_\theta = 1.0$$

3. Shear

$$S_{\phi\theta}\,(FS)/S_y = 0/44{,}120 = 0.00$$

$$\eta_{\phi\theta} = 1.0$$

Step 6

Compute elastic stress components per the following equation:

$$S_{is} = S_i\,(FS)/\alpha_{iL}$$

$$S_{\phi s} = S_\phi\,(FS)/\alpha_{\phi L} = 31{,}151/0.408 = 76{,}349 \text{ psi}$$

$$S_{\theta s} = S_\theta\,(FS)/\alpha_{\theta L} = 482/0.8 = 603 \text{ psi}$$

$$S_{\varphi\theta s} = S_{\varphi\theta}\,(FS)/\alpha_{\varphi\theta L} = 0/0.8 = 0 \text{ psi}$$

Step 7

Compute inelastic stress components per the following equation:

$$S_{ip} = S_{is}/\eta_i$$

$S_{\phi p} = S_{\phi s} / \eta_{\phi} = 76{,}349 / 0.496 = 153{,}820$ psi

$S_{\theta p} = S_{\theta s} / \eta_{\theta} = 603 / 1.0 = 603$ psi

$S_{\phi\theta p} = S_{\phi\theta s} / \eta_{\phi\theta} = 0 / 1.0 = 0$ psi

Step 8

For the NAC-LWT cask, the buckling evaluation approach, consistent with the vessel design and method of analysis, is that of paragraph-1710 of Code Case N-284 (By Formulae).

Step 9

Theoretical uniaxial buckling values are available from Section 2.10.6.2. For the outer cask inner shell at 280°F, these theoretical values are as follows:

$S_{\phi eL} = 1{,}742{,}406$

$S_{\theta eL} = S_{reL} = 84{,}262$

$S_{heL} = 84{,}262$

$S_{\phi\theta eL} = 246{,}385$

Applicable elastic and inelastic interaction equations in paragraph-1713.1.1 and paragraph-1713.2.1 of Code Case N-284 are checked as follows:

1. Elastic Buckling (paragraph-1713.1.1)
   a. Axial Compression Plus Hoop Compression

   $(S_{\phi s} < 0.5\ S_{\theta s})$

   76,349 > (0.5)(603); therefore, not applicable.

   b. Axial Compression Plus Hoop Compression

   $(S_{\phi s} < 0.5\ S_{\theta s})$

   $\left[(S_{\phi s} - 0.5\ S_{heL}) / (S_{\phi eL} - 0.5\ S_{heL})\right] + (S_{\phi s} / S_{heL})^2 \le 1.0$

   $[76{,}349 - (0.5)(84{,}262)] / [1{,}742{,}406 - (0.5)(84{,}262) +$

   $(76{,}349/84{,}262)^2 = 0.8411 \le 1.0$

   c. Axial Compression Plus Shear

   $(S_{\phi s} / S_{\phi eL}) + (S_{\phi\theta s} / S_{\phi\theta eL})^2 \le 1.0$

   $(76{,}349/1{,}742{,}406) + (0/246{,}385)^2 = 0.0438 < 1.0$

   d. Hoop Compression Plus Shear

   $(S_{\theta s} / S_{reL}) + (S_{\phi\theta s}/S_{\phi\theta eL})^2 \le 1.0$

   $(603/84{,}262) + (0/246{,}385)^2 = 0.0072 < 1.0$

e. Axial Compression Plus Hoop Compression Plus Shear

$K = 1 - (S_{\phi\theta s} / S_{\phi\theta eL})^2 = 1 - (0/246{,}385)^2 = 1.00$

and equations a and b above remain unchanged.

2. Inelastic Buckling (paragraph-1713.2.1)

a. Axial Compression Plus Shear

(153,820/1,742,406)2 + (0/246,385)2 = 0.0078 < 1.0

b. Hoop Compression Plus Shear

$(S_{\theta p} / S_{reL})^2 + (S_{\phi\theta p} / S_{\phi\theta eL})^2 \leq 1.0$

$(603/84{,}262)^2 + (0/246{,}385)^2 = 0.0001 < 1.0$

Since all interaction equations are satisfied, and there are no concentrated loads on the shell which, lead to localized buckling, it is concluded that buckling of the NAC-LWT cask inner shell will not occur.

The remainder of this section presents tabulations (Table 2.10.6-10) of the results from the interaction equations for the maximum P_m load cases identified in Table 2.10.6-8. As shown, all interaction equations yield values less than 1.0; thus, it is concluded that buckling of the NAC-LWT cask inner shell will not occur.

2.10.6.8 Conclusion

The buckling interaction equations yield values less than 1.0 for all of the NAC-LWT cask load conditions. Therefore, it is concluded that the cask inner shell will not buckle.

Table 2.10.6-1 Inner Shell Geometry Parameters

Parameter	Inner Shell
R = Radius (in) [to centerline of shell]	7.0625
t = thickness (in)	0.75
$(Rt)^{0.5}$	2.3015
L_ϕ = length (in)	175.00
$L_\theta = 2\pi R$ = circumference (in)	44.375
$M_\phi = L_\phi/(Rt)^{0.5}$	76.0374
$M_\theta = L_\theta/(Rt)^{0.5}$	19.2809
M = lesser of M_ϕ or M_θ	19.2809
ν = Poisson's Ratio	0.275

Table 2.10.6-2 Material Properties of Type XM-19 Stainless Steel for Buckling Analysis Input (ASME, Section III, Appendix I)

Parameter/Temperature (°F)	-40	170	280
E (psi)	28.82×10^6	27.76×10^6	27.12×10^6
S_y (psi)	66.2×10^3	49.4×10^3	44.1×10^3

Table 2.10.6-3 Theoretical Elastic Buckling Stress Values (Temperature Independent Form)

Elastic Buckling Stress	Inner Shell	Load Description
$S_{\phi eL}$	0.064248E	axial
$S_{\theta eL} = S_{reL}$	0.003107E	hoop, without end pressure
S_{heL}	0.003107E	hoop, with end pressure
$S_{\phi\theta eL}$	0.009085E	shear

Table 2.10.6-4 Theoretical Elastic Buckling Stresses for Selected Temperatures

Parameter	Location	Theoretical Elastic Buckling Stress (psi)		
Modulus of Elasticity		T = -40ºF E = 28.82 × 10^6	T= 170ºF E = 27.76 × 10^6	T = 280ºF E = 27.12 × 10^6
$S_{\phi eL}$	Inner Shell	1,851,627	1,784,167	1,742,406
$S_{\theta eL} = S_{reL}$	Inner Shell	89,544	86,281	84,262
S_{heL}	Inner Shell	89,544	86,281	84,262
$S_{\phi\theta eL}$	Inner Shell	261,830	254,290	246,385

Table 2.10.6-5 Capacity Reduction Factors for the Type XM-19 Stainless Steel Inner Shell

Capacity Reduction Factor	Temperature (ºF)		
	-40	170	280
$\alpha_{\phi L}$ (axial)	0.629	0.461	0.408
$\alpha_{\theta L}$ (hoop)	0.8	0.8	0.8
$\alpha_{\phi\theta L}$ (shear)	0.8	0.8	0.8

Table 2.10.6-6 Fabrication Tolerances for the NAC-LWT Cask Inner Shell

Requirement	Parameter	Inner Shell Data (in)
NE-4221.1	Maximum Inside Diameter (I.D.) Minimum I.D. Nominal I.D.	13.390 13.360 13.375
	a) (Max I.D. – Min I.D.) b) (0.01) × (Nominal I.D.)	0.030 0.134
	Tolerance Check (a < b)	Yes (0.030 in < 0.134 in)
NE-4221.2	Nominal Shell Thickness Minimum Shell Thickness Shell Length Nominal Shell Outside Diameter (O.D.) Minimum Shell O.D.	0.7575 0.745 181.25 14.890 14.880
	c) Permissible Deviation, e (Figure –4221.2-1) d) Actual Deviation*	0.225 0.005
	Tolerance Check (d < c)	Yes (0.005 in < 0.225 in)

* (Nominal O.D. – Minimum O.D.)/2 = (14.890 – 14.880)/2 = 0.005

Table 2.10.6-7 Upper Bound Buckling Stresses

	Load Condition	-40ºF	170ºF	280ºF
Elastic, Upper Bound Compressive Stress S_ϕ or S_θ (psi)	Normal	33,100	24,700	22,060
	Accident	49,403	36,866	32,925
Elastic, Upper Bound In-Plane Shear Stress $S_{\phi\theta}$ (psi)	Normal	19,860	14,820	13,236
	Accident	29,642	22,120	19,755

Table 2.10.6-8 Calculated Maximum Compressive Stresses in the Inner Shell

Load Case	Load Condition (Peak Shell Temperature Shown)	Primary Membrane		
		S-Axial	S-Hoop	S-Shear
	Fabrication (l)			
a	at 170ºF	9515	4136	0
b	Heat	3380	450	0
c	Cold	2590	130	10
	Normal – 1-Foot Top End Drop			
d	at 170ºF – Max. Decay Heat	11770	240	40
e	at 280ºF – Max. Decay Heat	8190	520	20
	Normal – 1-Foot Bottom End Drop			
f	at -40ºF – No Decay Heat	7760	1050	240
g	at 170ºF – Max. Decay Heat	12080	200	30
h	at 280ºF – Max. Decay Heat	8440	510	20
	Normal – 1-Foot Side Drop			
i	at 250ºF – Max. Decay Heat	15430	250	0
	Normal – 1-Foot Corner Drop Top End			
j	at -40ºF – No Decay Heat	2720	330	110
k	at 280ºF – Max. Decay Heat	3110	360	10
	Normal – 1-Foot Corner Drop Bottom End			
l	at 280ºF – Max. Decay Heat	2980	280	20

Table 2.10.6-8 Calculated Maximum Compressive Stresses in the Inner Shell (Continued)

Load Case	Load Condition (Peak Shell Temperature Shown)	Primary Membrane		
		S-Axial	S-Hoop	S-Shear
	Accident – 30-Foot Top End Drop			
m	at 170ºF – Max. Decay Heat	11170	240	40
n	at 280ºF – Max. Decay Heat	8190	520	20
	Accident – 30-Foot Bottom End Drop			
o	at -40ºF – No Decay Heat	7760	1050	240
p	at 170ºF – Max. Decay Heat	12080	200	30
q	at 280ºF – Max. Decay Heat	8440	510	20
	Accident – 30-Foot Side Drop			
r	at 280ºF – Max. Decay Heat	31550	520	0
	Accident – 30-Foot Oblique Top End Drop			
s	at -40ºF – No Decay Heat – 15.74º D.O.	13570	2030	540
t	at -40ºF – No Decay Heat – 30º D.O.	11940	150	0
u	at -40ºF – No Decay Heat – 45º D.O.	14900	160	0
v	at -40ºF – No Decay Heat – 60º D.O.	19850	180	0
w	at 280ºF – Max. Decay Heat – 15.74º D.O.	17160	2010	630
x	at 280ºF – Max. Decay Heat – 30º D.O.	14410	820	0
y	at 280ºF – Max. Decay Heat – 45º D.O.	17880	840	10
z	at 280ºF – Max. Decay Heat – 60º D.O.	23480	650	30
	Accident – 30-Foot Oblique Bottom End Drop			
A	at 280ºF – Max. Decay Heat – 15.74º D.O.	16150	1450	480
B	at 280ºF – Max. Decay Heat – 30º D.O.	16360	810	0
C	at 280ºF – Max. Decay Heat – 45º D.O.	19420	870	0
D	at 280ºF – Max. Decay Heat – 60º D.O.	24940	910	20

Table 2.10.6-9 Calculated Stresses with ASME Factors of Safety

Load Case	Normal or Accident	Inner Shell Temp. (ºF)	Meridonal Stress (psi)	Circ. Stress (psi)	Inplane Shear Stress (psi)	Factor of Safety	Meridonal Stress (psi)	Circ. Stress (psi)	Inplane Shear Stress (psi)
a	Normal	170	9515	4136	0	2.00	19030	8272	0
b	Normal	280	3380	450	0	2.00	6760	900	0
c	Normal	-40	2590	130	10	2.00	5180	260	20
d	Normal	170	11770	240	40	2.00	23540	480	80
e	Normal	280	8190	520	20	2.00	16380	1040	40
f	Normal	-40	7760	1050	240	2.00	15520	2100	480
g	Normal	170	12080	200	30	2.00	24160	400	60
h	Normal	280	8440	510	20	2.00	16880	1020	40
i	Normal	250	15430	250	0	2.00	30860	500	0
j	Normal	-40	2720	330	110	2.00	5440	660	220
k	Normal	280	3110	360	10	2.00	6220	720	20
l	Normal	280	2980	280	20	2.00	5960	560	40
m	Accident	170	11170	240	40	1.34	14968	322	54
n	Accident	280	8190	520	20	1.34	10975	697	27
o	Accident	-40	7760	1050	240	1.34	10398	1407	322
p	Accident	170	12080	200	30	1.34	16187	268	40
q	Accident	280	8440	510	20	1.34	11310	683	27
r	Accident	250	31550	520	0	1.34	42277	697	0
s	Accident	-40	13570	2030	540	1.34	18184	2720	724
t	Accident	-40	11940	150	0	1.34	16000	201	0
u	Accident	-40	14900	160	0	1.34	19966	214	0
v	Accident	-40	19850	180	0	1.34	26599	241	0
w	Accident	280	17160	2010	630	1.34	22994	2693	844
x	Accident	280	14410	820	0	1.34	19309	1099	0
y	Accident	280	17880	840	10	1.34	23959	1126	13
z	Accident	280	23480	650	30	1.34	31463	871	40
A	Accident	280	16150	1450	480	1.34	21641	1943	643
B	Accident	280	16360	810	0	1.34	21922	1085	0
C	Accident	280	19420	870	0	1.34	26023	1166	0
D	Accident	280	24940	910	20	1.34	33420	1219	27

Table 2.10.6-10 Results – Interaction Equations

Load Case	Elastic Interaction*					Inelastic Interaction*	
	(1)	(2)	(3)	(4)	(5)	(6)	(7)
a	N/A	N/A	0.0231	0.1199	N/A	0.0005	0.0144
b	N/A	N/A	0.0093	0.0133	N/A	0.0001	0.0002
c	N/A	N/A	0.0044	0.0036	N/A	0.0000	0.0000
d	N/A	0.0046	0.0286	0.0070	0.0046	0.0008	0.0000
e	N/A	N/A	0.0224	0.0153	N/A	0.0005	0.0002
f	N/A	N/A	0.0132	0.0293	N/A	0.0002	0.0009
g	N/A	0.0054	0.0294	0.0058	0.0054	0.0009	0.0000
h	N/A	N/A	0.0231	0.0151	N/A	0.0005	0.0002
i	N/A	0.0185	0.0422	0.0074	0.0185	0.0065	0.0001
j	N/A	N/A	0.0047	0.0092	N/A	0.0000	0.0001
k	N/A	N/A	0.0085	0.0106	N/A	0.0001	0.0001
l	N/A	N/A	0.0082	0.0083	N/A	0.0001	0.0001
m	N/A	N/A	0.0182	0.0047	N/A	0.0003	0.0000
n	N/A	N/A	0.0150	0.0103	N/A	0.0002	0.0001
o	N/A	N/A	0.0088	0.0196	N/A	0.0001	0.0004
p	N/A	N/A	0.0197	0.0039	N/A	0.0004	0.0000
q	N/A	N/A	0.0155	0.0101	N/A	0.0002	0.0001
r	N/A	0.0346	0.0578	0.0103	0.0346	0.0632	0.0001

Table 2.10.6-10 Results – Interaction Equations (Continued)

Load Case	Elastic Interaction*					Inelastic Interaction*	
	(1)	(2)	(3)	(4)	(5)	(6)	(7)
s	N/A	N/A	0.0156	0.0380	N/A	0.0003	0.0015
t	N/A	N/A	0.0137	0.0028	N/A	0.0002	0.0000
u	N/A	N/A	0.0171	0.0030	N/A	0.0003	0.0000
v	N/A	N/A	0.0228	0.0034	N/A	0.0005	0.0000
w	N/A	0.0091	0.0315	0.0398	0.0091	0.0010	0.0016
x	N/A	0.0026	0.0264	0.0162	0.0026	0.0007	0.0003
y	N/A	0.0091	0.0328	0.0166	0.0091	0.0011	0.0003
z	N/A	0.0195	0.0431	0.0129	0.0195	0.0073	0.0002
A	N/A	0.0064	0.0296	0.0287	0.0064	0.0009	0.0008
B	N/A	0.0062	0.0300	0.0160	0.0062	0.0009	0.0003
C	N/A	0.0120	0.0356	0.0172	0.0120	0.0019	0.0003
D	N/A	0.0224	0.0457	0.0180	0.0224	0.0100	0.0003

All values are less than or equal to 1.0; therefore, buckling of the inner shell will not occur.

*1 – Axial compression plus hoop compression (< 0.5).
2 – Axial compression plus hoop compression (> 0.5).
3 – Axial compression plus shear.
4 – Hoop compression plus shear.
5 – Axial compression plus hoop compression plus shear.
6 – Axial compression plus shear.
7 – Hoop compression plus shear.

2.10.7 Detailed Finite Element Stress Summary

This section presents the finite element stresses at representative sections throughout the cask components resulting from the different loading cases for normal operations conditions and hypothetical accident conditions. The representative sections are plotted in Figure 2.10.7-1 and their locations are tabulated in Table 2.10.7-1.

2.10.7.1 Finite Element Stress Tables – Normal Operation Hot Condition

This section presents the detailed stress Table 2.10.7-2 and Table 2.10.7-3 to document the critical stresses reported in Section 2.6.1.

2.10.7.2 Finite Element Stress Tables – Normal Operation Cold Condition

This section presents the detailed stress Table 2.10.7-4 and Table 2.10.7-5 to document the critical stresses reported in Section 2.6.2.

2.10.7.3 Finite Element Stress Tables – 1-Foot End Drop

This section presents the detailed stress Table 2.10.7-6 through Table 2.10.7-15 to document the critical stresses reported in Section 2.6.7.1.

2.10.7.4 Finite Element Stress Tables – 1-Foot Side Drop

This section presents the detailed stress Table 2.10.7-16 through Table 2.10.7-18 to document the critical stresses reported in Section 2.6.7.2.

2.10.7.5 Finite Element Stress Tables – 1-Foot Corner Drop

This section presents the detailed stress Table 2.10.7-19 through Table 2.10.7-27 to document the critical stresses reported in Section 2.6.7.3.

2.10.7.6 Finite Element Stress Tables – 30-Foot End Drop

This section presents the detailed stress Table 2.10.7-28 through Table 2.10.7-37 to document the critical stresses reported in Section 2.7.1.1.

2.10.7.7 Finite Element Stress Tables – 30-Foot Side Drop

This section presents the detailed stress Table 2.10.7-38 and Table 2.10.7-39 to document the critical stresses reported in Section 2.7.1.2.

2.10.7.8 Finite Element Stress Tables – 30-Foot Oblique Drop

This section presents the detailed stress Table 2.10.7-40 through Table 2.10.7-63 to document the critical stresses reported in Section 2.7.1.3.

Figure 2.10.7-1 Representative Section Cut Diagram

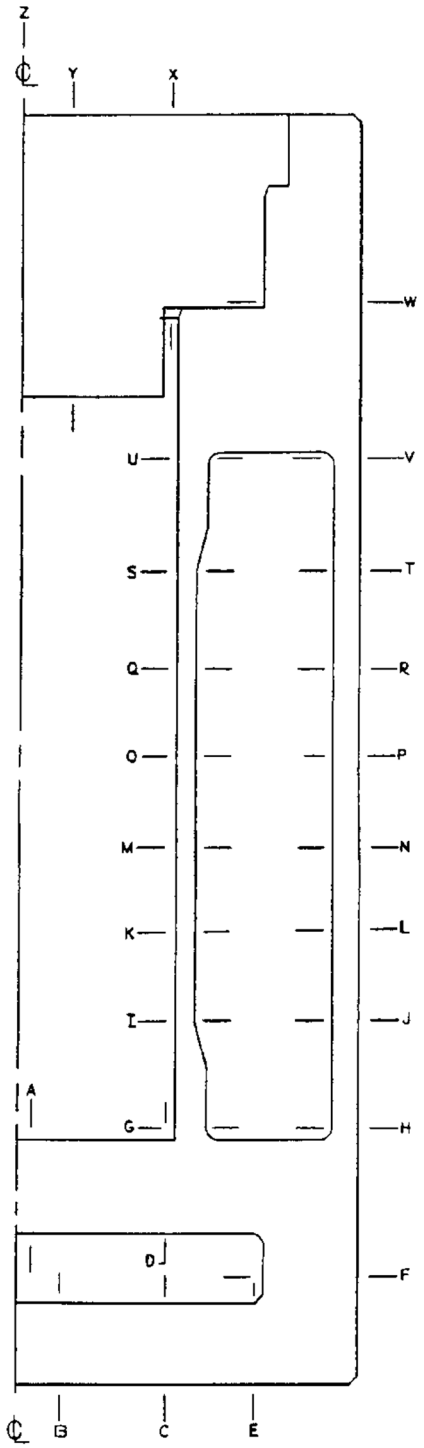

Table 2.10.7-1 Section Cut Identification

Section[1]	Node to Node	Location[2] (in)
A	177 - 327	0.85
B	4 - 104	2.55
C	10 – 110	6.6875
D	185 – 335	6.6875
E	18 – 118	10.375
F	143 – 150	4.50
G	335 – 340	10.50
H	346 – 350	10.50
I	621 – 624	16.50
J	635 – 638	16.50
K	841 – 844	35.50
L	855 – 858	35.50
M	941 – 944	60.50
N	955 – 958	60.50
O	1101 – 1104	100.50
P	1115 – 1118	100.50
Q	1261 – 1264	140.50
R	1275 – 1278	140.50
S	1561 – 1564	179.50
T	1575 – 1578	179.50
U	1841 – 1846	185.50
V	1852 – 1856	185.50
W	1969 – 1976	191.75
X	2370 – 2570	6.6875
Y	2305 – 2565	3.40
Z	2301 - 2561	0.0

[1] Refer to Figure 2.10.7-1 for section cut diagram.
[2] Location of section is measured either from the cask centerline or from the cask bottom surface.

Table 2.10.7-2 P_m Stress Summary (Hot Case)

Section	Node to Node	S_X	S_Y	S_Z	S_{XY}	SI
A	177 - 327	-0.11	-1.62	-1.54	0.03	1.51
B	4 - 104	0.11	2.77	1.79	-0.31	2.73
C	10 – 110	-0.41	2.34	2.29	-0.25	2.80
D	185 – 335	-2.24	-1.22	-1.54	0.30	1.18
E	18 – 118	-0.10	1.51	2.77	-1.43	3.71
F	143 – 150	-4.52	1.94	1.23	1.25	6.93
G	335 – 340	3.78	1.47	5.30	-1.32	4.44
H	346 – 350	-3.33	6.67	1.98	0.01	10.00
I	621 – 624	-0.02	2.94	0.79	0.01	2.96
J	635 – 638	0.00	10.13	0.17	0.06	10.13
K	841 – 844	-0.03	3.11	0.44	0.02	3.14
L	855 – 858	0.00	10.55	0.04	0.00	10.55
M	941 – 944	-0.03	3.27	0.44	0.00	3.30
N	955 – 958	-0.01	10.94	0.05	0.00	10.94
O	1101 – 1104	-0.03	3.38	0.45	0.00	3.41
P	1115 – 1118	-0.01	11.18	0.05	0.00	11.19
Q	1261 – 1264	-0.03	3.30	0.47	0.00	3.33
R	1275 – 1278	-0.01	10.91	-0.05	0.00	10.97
S	1561 – 1564	-0.04	3.06	0.92	0.07	3.10
T	1575 – 1578	0.00	10.22	0.09	-0.07	10.22
U	1841 – 1846	0.07	1.12	0.11	0.28	1.19
V	1852 – 1856	-2.29	6.58	1.02	-0.56	8.93
W	1969 – 1976	-0.14	0.14	1.09	-0.48	1.60
X	2370 – 2570	-0.20	-0.27	0.09	0.16	0.48
Y	2305 – 2565	-0.09	-0.19	-0.47	0.13	0.47
Z	2301 - 2561	0.04	0.00	-0.35	0.00	0.39

Table 2.10.7-3 $P_m + P_b$ Stress Summary (Hot Case)

Section	Node to Node	S_X	S_Y	S_Z	S_{XY}	SI
A	177 - 327	0.02	-1.62	-1.54	0.03	1.64
B	4 - 104	0.00	2.77	1.79	-0.31	2.85
C	10 – 110	-0.80	2.34	2.29	-0.25	3.18
D	185 – 335	-7.81	-1.22	-1.54	0.30	6.61
E	18 – 118	-2.94	1.51	2.77	-1.43	6.13
F	143 – 150	-10.01	0.44	-0.32	1.25	10.75
G	335 – 340	0.51	-4.89	2.41	-1.32	7.61
H	346 – 350	-0.22	15.10	5.80	0.01	15.32
I	621 – 624	-0.05	3.40	0.88	0.01	3.45
J	635 – 638	-0.01	11.23	0.36	0.06	11.24
K	841 – 844	0.00	3.34	0.62	0.02	3.34
L	855 – 858	0.00	10.82	0.29	0.00	10.82
M	941 – 944	0.00	3.56	0.68	0.00	3.56
N	955 – 958	0.00	11.31	0.36	0.00	11.31
O	1101 – 1104	0.00	3.68	0.68	0.00	3.68
P	1115 – 1118	0.00	11.58	0.38	0.00	11.58
Q	1261 – 1264	0.00	3.54	0.65	0.00	3.54
R	1275 – 1278	-0.01	11.30	0.20	0.00	11.32
S	1561 – 1564	-0.04	3.57	1.08	0.07	3.62
T	1575 – 1578	0.00	11.27	0.20	-0.07	11.28
U	1841 – 1846	-0.08	0.88	-0.23	0.28	1.19
V	1852 – 1856	-0.30	13.09	3.90	-0.56	13.43
W	1969 – 1976	-0.24	-2.12	0.25	-0.48	2.48
X	2370 – 2570	-0.40	-0.27	0.09	0.16	0.59
Y	2305 – 2565	0.00	-0.19	-0.47	0.13	0.54
Z	2301 - 2561	0.01	0.00	-0.35	0.00	0.36

Table 2.10.7-4 P_m Stress Summary (Cold Case)

Section	Node to Node	S_X	S_Y	S_Z	S_{XY}	SI
A	177 - 327	-0.15	-2.55	-2.48	0.03	2.40
B	4 - 104	0.07	0.81	-0.16	-0.30	1.08
C	10 – 110	-0.20	0.43	0.93	-0.37	1.30
D	185 – 335	-1.38	-2.01	-1.58	0.22	0.77
E	18 – 118	-0.40	0.51	2.05	-0.66	2.80
F	143 – 150	-2.06	0.82	1.64	0.90	3.97
G	335 – 340	-1.22	-1.08	0.32	-0.26	1.74
H	346 – 350	-2.74	4.43	2.04	-0.29	7.19
I	621 – 624	0.00	-2.64	-0.13	0.06	2.64
J	635 – 638	0.00	6.79	0.36	0.06	6.78
K	841 – 844	-0.01	-2.47	0.11	0.01	2.58
L	855 – 858	0.00	7.19	0.05	0.00	7.20
M	941 – 944	-0.01	-2.31	0.11	0.00	2.42
N	955 – 958	-0.01	7.58	0.05	0.00	7.59
O	1101 – 1104	-0.01	-2.20	0.11	0.00	2.31
P	1115 – 1118	-0.01	7.82	0.06	0.00	7.83
Q	1261 – 1264	-0.01	-2.27	-0.10	0.00	2.27
R	1275 – 1278	-0.02	7.55	-0.16	0.00	7.70
S	1561 – 1564	-0.01	-2.52	-0.02	-0.02	2.51
T	1575 – 1578	0.00	6.88	0.31	-0.05	6.88
U	1841 – 1846	-0.96	-1.14	-2.43	-0.25	1.64
V	1852 – 1856	-1.96	4.45	0.93	-0.19	6.42
W	1969 – 1976	-0.46	0.17	1.13	-0.50	1.87
X	2370 – 2570	-0.29	-0.39	0.05	0.15	0.55
Y	2305 – 2565	-0.06	-0.29	-0.59	0.13	0.58
Z	2301 - 2561	0.11	0.00	-0.44	0.00	0.55

Table 2.10.7-5 $P_m + P_b$ Stress Summary (Cold Case)

Section	Node to Node	S_X	S_Y	S_Z	S_{XY}	SI
A	177 - 327	-0.02	-2.55	-2.48	0.03	2.53
B	4 - 104	0.03	0.81	-0.16	-0.30	1.08
C	10 – 110	-0.40	0.43	0.93	-0.37	1.47
D	185 – 335	-5.15	-2.01	-1.58	0.22	3.58
E	18 – 118	-2.34	0.51	2.05	-0.66	4.55
F	143 – 150	-4.52	-1.72	-0.03	0.90	4.76
G	335 – 340	-3.04	-3.44	-0.90	-0.26	2.66
H	346 – 350	-0.23	11.86	5.77	-0.29	12.10
I	621 – 624	0.04	-2.84	0.02	0.06	2.89
J	635 – 638	-0.01	8.06	0.50	0.06	8.07
K	841 – 844	-0.01	-2.71	-0.11	0.01	2.70
L	855 – 858	0.00	7.57	0.42	0.00	7.56
M	941 – 944	-0.01	-2.62	-0.16	0.00	2.61
N	955 – 958	0.00	8.03	0.46	0.00	8.03
O	1101 – 1104	-0.01	-2.52	-0.16	0.00	2.51
P	1115 – 1118	0.00	8.30	0.48	0.00	8.30
Q	1261 – 1264	0.00	-2.66	-0.38	0.00	2.66
R	1275 – 1278	-0.03	8.26	0.31	0.00	8.29
S	1561 – 1564	-0.02	-2.85	-0.28	-0.02	2.83
T	1575 – 1578	-0.01	8.01	0.33	-0.05	8.02
U	1841 – 1846	-0.08	-0.57	-2.64	-0.25	2.66
V	1852 – 1856	-0.26	10.30	3.87	-0.19	10.57
W	1969 – 1976	0.00	2.48	2.30	-0.50	2.68
X	2370 – 2570	-0.47	-0.39	0.05	0.15	0.64
Y	2305 – 2565	0.00	-0.29	-0.59	0.13	0.64
Z	2301 - 2561	0.01	0.00	-0.44	0.00	0.45

Table 2.10.7-6 P_m Stress Summary (1-Foot Bottom End Drop) – Loading Condition 1

LOADING CONDITION 1: 130°F Ambient Temperature and Maximum Decay Heat Load

Section	Node to Node	S_X	S_Y	S_Z	S_{XY}	SI
A	177 - 327	-2.81	0.86	0.86	0.25	3.70
B	4 - 104	-4.47	1.22	1.22	0.20	5.70
C	10 – 110	-5.23	1.26	1.61	-0.09	6.84
D	185 – 335	-5.81	0.88	0.56	2.15	7.96
E	18 – 118	-3.44	1.18	2.81	-1.27	6.58
F	143 – 150	-3.86	-3.70	1.95	0.98	6.71
G	335 – 340	-0.98	-4.20	3.28	-1.13	7.84
H	346 – 350	-1.69	-2.09	1.96	-0.23	4.15
I	621 – 624	0.03	-8.53	-0.81	0.28	8.58
J	635 – 638	0.00	-1.55	0.20	0.04	1.75
K	841 – 844	-0.03	-8.11	0.44	0.02	8.55
L	855 – 858	0.00	-1.12	0.00	0.00	1.12
M	941 – 944	-0.03	-7.57	0.44	0.00	8.01
N	955 – 958	0.00	-0.58	0.00	0.00	0.58
O	1101 – 1104	-0.03	-6.69	0.44	0.00	7.13
P	1115 – 1118	0.00	0.30	0.00	0.00	0.31
Q	1261 – 1264	-0.03	-5.80	0.47	0.00	6.27
R	1275 – 1278	-0.01	1.18	-0.10	0.00	1.28
S	1561 – 1564	-0.01	-4.94	-0.08	-0.08	4.93
T	1575 – 1578	0.00	2.05	0.26	-0.03	2.05
U	1841 – 1846	-1.11	-2.08	-2.04	-0.27	1.10
V	1852 – 1856	-0.96	1.43	0.61	0.07	2.39
W	1969 – 1976	-0.31	-0.07	0.68	-0.29	1.19
X	2370 – 2570	-0.30	-0.37	0.12	-0.03	0.50
Y	2305 – 2565	-0.18	-0.35	-0.40	-0.03	0.23
Z	2301 - 2561	0.03	0.00	-0.33	0.00	0.35

Table 2.10.7-7 $P_m + P_b$ Stress Summary (1-Foot Bottom End Drop) – Loading Condition 1

LOADING CONDITION 1: 130°F Ambient Temperature and Maximum Decay Heat Load

Section	Node to Node	S_X	S_Y	S_Z	S_{XY}	SI
A	177 - 327	-3.80	0.86	0.86	0.25	4.69
B	4 - 104	-4.84	1.22	1.22	0.20	6.07
C	10 – 110	-5.54	1.26	1.61	-0.09	7.15
D	185 – 335	-13.08	0.88	0.56	2.15	14.61
E	18 – 118	-4.79	1.18	2.81	-1.27	7.87
F	143 – 150	-9.99	-5.56	0.41	0.98	10.60
G	335 – 340	-3.75	-8.88	1.98	-1.13	11.11
H	346 – 350	-4.78	-5.93	-0.12	-0.23	5.86
I	621 – 624	0.15	-10.37	-1.16	0.28	10.54
J	635 – 638	0.01	-2.43	0.07	0.04	2.50
K	841 – 844	-0.05	-8.31	0.27	0.02	8.58
L	855 – 858	0.00	-1.36	-0.24	0.00	1.35
M	941 – 944	-0.05	-7.84	0.21	0.00	8.05
N	955 – 958	0.00	-0.90	-0.31	0.00	0.90
O	1101 – 1104	-0.05	-6.96	0.21	0.00	7.17
P	1115 – 1118	0.00	0.63	0.32	0.00	0.63
Q	1261 – 1264	-0.05	-6.01	0.30	0.00	6.31
R	1275 – 1278	-0.01	1.52	0.15	0.00	1.53
S	1561 – 1564	0.06	-5.15	-0.04	-0.08	5.21
T	1575 – 1578	-0.01	2.92	0.32	-0.03	2.92
U	1841 – 1846	-0.11	-1.72	-2.00	-0.27	1.93
V	1852 – 1856	-0.13	4.34	2.22	0.07	4.47
W	1969 – 1976	-0.75	-1.72	-0.15	-0.29	1.66
X	2370 – 2570	-1.36	-0.37	0.12	-0.03	1.49
Y	2305 – 2565	0.00	-0.35	-0.40	-0.03	0.40
Z	2301 - 2561	0.01	0.00	-0.33	0.00	0.34

Table 2.10.7-8 P_m Stress Summary (1-Foot Bottom End Drop) – Loading Condition 2

LOADING CONDITION 2: -40°F Ambient Temperature and Maximum Decay Heat Load

Section	Node to Node	S_X	S_Y	S_Z	S_{XY}	SI
A	177 - 327	-2.90	-0.61	-0.61	0.27	2.36
B	4 - 104	-4.58	-0.59	-0.57	0.15	4.02
C	10 – 110	-4.67	-0.41	0.50	0.20	5.18
D	185 – 335	-5.31	-0.38	-0.11	1.93	6.26
E	18 – 118	-5.85	0.23	1.56	0.09	7.41
F	143 – 150	-2.63	-5.32	2.26	0.39	7.64
G	335 – 340	-3.57	-5.67	0.67	-0.42	6.41
H	346 – 350	-1.82	-3.00	2.18	-0.45	5.33
I	621 – 624	0.05	-12.18	-1.52	0.32	12.24
J	635 – 638	0.00	-2.83	0.37	0.04	3.19
K	841 – 844	-0.01	-11.75	0.11	0.01	11.86
L	855 – 858	0.00	-2.39	0.01	0.00	2.40
M	941 – 944	-0.01	-11.21	0.10	0.00	11.32
N	955 – 958	-0.01	-1.86	0.00	0.00	1.86
O	1101 – 1104	-0.01	-10.33	0.11	0.00	10.44
P	1115 – 1118	0.00	-0.97	0.00	0.00	0.98
Q	1261 – 1264	-0.01	-9.44	-0.10	0.00	9.44
R	1275 – 1278	-0.02	-0.10	-0.20	0.00	0.18
S	1561 – 1564	0.01	-8.58	-0.82	-0.16	8.60
T	1575 – 1578	0.00	0.77	0.44	-0.02	0.77
U	1841 – 1846	-1.37	-3.46	-3.17	-0.61	2.43
V	1852 – 1856	-1.26	0.57	0.90	0.27	2.20
W	1969 – 1976	-0.42	-0.06	0.76	-0.31	1.36
X	2370 – 2570	-0.29	-0.44	0.14	-0.04	0.60
Y	2305 – 2565	-0.16	-0.40	-0.47	-0.04	0.31
Z	2301 - 2561	0.07	0.00	-0.37	0.00	0.45

Table 2.10.7-9 $P_m + P_b$ Stress Summary (1-Foot Bottom End Drop) – Loading Condition 2

LOADING CONDITION 2: -40°F Ambient Temperature and Maximum Decay Heat Load

Section	Node to Node	S_X	S_Y	S_Z	S_{XY}	SI
A	177 - 327	-4.00	-0.61	-0.61	0.27	3.44
B	4 - 104	-4.81	-0.59	-0.57	0.15	4.24
C	10 – 110	-4.83	-0.41	0.50	0.20	5.34
D	185 – 335	-12.66	-0.38	-0.11	1.93	12.87
E	18 – 118	-8.64	0.23	1.56	0.09	10.20
F	143 – 150	-5.57	-11.51	-0.28	0.39	11.25
G	335 – 340	-6.48	-8.95	-0.32	-0.42	8.70
H	346 – 350	-4.85	-7.40	-0.46	-0.45	7.02
I	621 – 624	0.18	-13.91	-1.67	0.32	14.10
J	635 – 638	0.01	-4.00	0.25	0.04	4.26
K	841 – 844	-0.01	-11.96	-0.11	0.01	11.95
L	855 – 858	0.00	-2.73	-0.36	0.00	2.73
M	941 – 944	-0.01	-11.49	-0.16	0.00	11.48
N	955 – 958	0.00	-2.26	-0.41	0.00	2.26
O	1101 – 1104	-0.01	-10.61	-0.16	0.00	10.59
P	1115 – 1118	0.00	-1.39	-0.42	0.00	1.39
Q	1261 – 1264	0.00	-9.79	-0.39	0.00	9.79
R	1275 – 1278	0.00	-0.77	-0.67	0.00	0.77
S	1561 – 1564	0.10	-8.94	-0.67	-0.16	9.04
T	1575 – 1578	-0.01	1.90	0.46	-0.02	1.91
U	1841 – 1846	-0.09	-3.21	-3.39	-0.61	3.42
V	1852 – 1856	-0.16	4.29	3.11	0.27	4.48
W	1969 – 1976	-0.01	1.50	1.80	-0.31	1.87
X	2370 – 2570	-1.48	-0.44	0.14	-0.04	1.62
Y	2305 – 2565	0.00	-0.40	-0.47	-0.04	0.47
Z	2301 - 2561	0.01	0.00	-0.37	0.00	0.39

Table 2.10.7-10 P_m Stress Summary (1-Foot Bottom End Drop) – Loading Condition 3

LOADING CONDITION 3: -40°F Ambient Temperature and No Decay Heat Load

Section	Node to Node	S_X	S_Y	S_Z	S_{XY}	SI
A	177 - 327	-1.79	1.47	1.47	0.41	3.37
B	4 - 104	-4.27	-1.47	-1.45	0.40	2.91
C	10 – 110	-3.52	-1.43	-1.29	1.50	3.66
D	185 – 335	-2.89	1.55	1.16	2.22	6.28
E	18 – 118	-10.02	-0.60	-2.85	2.62	10.78
F	143 – 150	-1.23	-8.11	0.50	-1.39	8.88
G	335 – 340	-3.07	-3.85	0.69	-0.47	4.76
H	346 – 350	0.68	-5.74	-0.06	0.10	6.43
I	621 – 624	0.04	-7.76	-1.05	0.24	7.81
J	635 – 638	0.00	-6.83	-0.06	-0.01	6.83
K	841 – 844	-0.05	-7.34	-0.82	-0.04	7.28
L	855 – 858	0.00	-6.39	0.00	0.00	6.40
M	941 – 944	-0.11	-6.80	-1.78	0.00	6.69
N	955 – 958	0.00	-5.86	0.00	0.00	5.86
O	1101 – 1104	-0.19	-5.91	-3.29	0.00	5.73
P	1115 – 1118	0.00	-4.97	0.00	0.00	4.97
Q	1261 – 1264	-0.27	-5.03	-4.81	0.00	4.76
R	1275 – 1278	0.00	-4.09	0.00	0.00	4.09
S	1561 – 1564	-0.28	-4.17	-5.87	-0.07	5.59
T	1575 – 1578	0.00	-3.23	0.06	0.01	3.29
U	1841 – 1846	0.70	-1.62	-0.89	0.36	2.43
V	1852 – 1856	0.44	-2.22	-0.21	0.13	2.67
W	1969 – 1976	-0.06	-0.96	-0.19	-0.12	0.93
X	2370 – 2570	-0.16	0.02	-0.03	-0.08	0.23
Y	2305 – 2565	-0.02	0.02	0.01	-0.04	0.08
Z	2301 - 2561	-0.01	0.00	0.02	0.00	0.02

Table 2.10.7-11 $P_m + P_b$ Stress Summary (1-Foot Bottom End Drop) – Loading Condition 3

LOADING CONDITION 3: -40°F Ambient Temperature and No Decay Heat Load

Section	Node to Node	S_X	S_Y	S_Z	S_{XY}	SI
A	177 - 327	-3.42	1.47	1.47	0.41	4.96
B	4 - 104	-4.73	-1.47	-1.45	0.40	3.35
C	10 – 110	-4.75	-1.43	-1.29	1.50	4.48
D	185 – 335	-8.83	1.55	1.16	2.22	11.29
E	18 – 118	-20.14	-0.60	-2.85	2.62	20.23
F	143 – 150	0.08	-19.42	-2.13	-1.39	19.70
G	335 – 340	-5.11	-5.41	0.81	-0.47	6.56
H	346 – 350	0.08	-8.13	-0.82	0.10	8.21
I	621 – 624	0.12	-8.99	-1.30	0.24	9.13
J	635 – 638	0.00	-7.03	-0.12	-0.01	7.03
K	841 – 844	-0.01	-7.36	-0.87	-0.04	7.34
L	855 – 858	0.00	-6.39	0.00	0.00	6.40
M	941 – 944	-0.01	-6.80	-1.87	0.00	6.78
N	955 – 958	0.00	-5.86	0.00	0.00	5.86
O	1101 – 1104	-0.01	-5.91	-3.46	0.00	5.90
P	1115 – 1118	0.00	-4.97	0.00	0.00	4.97
Q	1261 – 1264	-0.01	-5.03	-5.05	0.00	5.03
R	1275 – 1278	0.00	-4.09	0.00	0.00	4.09
S	1561 – 1564	0.01	-3.85	-6.08	-0.07	6.10
T	1575 – 1578	0.00	-3.34	0.03	0.01	3.37
U	1841 – 1846	0.06	-4.16	-2.04	0.36	4.29
V	1852 – 1856	0.07	-3.50	-0.65	0.13	3.58
W	1969 – 1976	-0.01	-1.47	-0.29	-0.12	1.48
X	2370 – 2570	-0.59	0.02	-0.03	-0.08	0.63
Y	2305 – 2565	-0.01	0.02	0.01	-0.04	0.08
Z	2301 - 2561	-0.01	0.00	0.02	0.00	0.02

Table 2.10.7-12 P_m Stress Summary (1-Foot Top End Drop) – Loading Condition 1

LOADING CONDITION 1: 130°F Ambient Temperature and Maximum Decay Heat Load

Section	Node to Node	S_X	S_Y	S_Z	S_{XY}	SI
A	177 - 327	-0.06	-0.20	-0.20	0.02	0.14
B	4 - 104	-0.05	1.35	1.34	-0.04	1.41
C	10 – 110	-0.96	1.39	1.70	-0.81	2.91
D	185 – 335	-2.42	-0.20	-0.32	0.76	2.69
E	18 – 118	3.42	1.02	3.52	-2.23	5.06
F	143 – 150	-2.34	2.43	1.38	1.32	5.46
G	335 – 340	-0.11	-1.73	1.65	-0.40	3.47
H	346 – 350	-1.87	1.69	1.73	-0.33	3.64
I	621 – 624	0.00	-4.69	-0.19	0.14	4.70
J	635 – 638	0.00	2.47	0.27	0.03	2.46
K	841 – 844	-0.02	-5.13	0.44	0.02	5.57
L	855 – 858	0.00	2.03	0.00	0.00	2.03
M	941 – 944	-0.03	-5.67	0.44	0.00	6.11
N	955 – 958	0.00	1.49	0.00	0.00	1.50
O	1101 – 1104	-0.03	-6.55	0.44	0.00	7.00
P	1115 – 1118	0.00	0.61	0.00	0.00	0.61
Q	1261 – 1264	-0.03	-7.43	0.47	0.00	7.91
R	1275 – 1278	-0.01	-0.28	-0.10	0.00	0.27
S	1561 – 1564	0.02	-8.29	-0.70	-0.22	8.32
T	1575 – 1578	0.00	-1.13	0.35	-0.04	1.48
U	1841 – 1846	-0.23	-4.69	0.73	0.55	5.48
V	1852 – 1856	-1.43	-1.80	1.55	0.03	3.35
W	1969 – 1976	0.37	-3.95	0.29	-0.20	4.34
X	2370 – 2570	-4.28	-0.22	0.01	-1.02	4.54
Y	2305 – 2565	-3.45	-0.16	-0.21	-0.43	3.40
Z	2301 - 2561	-3.26	0.00	-0.14	0.00	3.26

Table 2.10.7-13 $P_m + P_b$ Stress Summary (1-Foot Top End Drop) – Loading Condition 1

LOADING CONDITION 1: 130°F Ambient Temperature and Maximum Decay Heat Load

Section	Node to Node	S_X	S_Y	S_Z	S_{XY}	SI
A	177 - 327	-0.01	-0.20	-0.20	0.02	0.20
B	4 - 104	-0.21	1.35	1.34	-0.04	1.56
C	10 – 110	-1.71	1.39	1.70	-0.81	3.61
D	185 – 335	-6.70	-0.20	-0.32	0.76	6.67
E	18 – 118	9.55	1.02	3.52	-2.23	9.62
F	143 – 150	-7.67	6.60	1.37	1.32	14.52
G	335 – 340	-1.76	-5.05	0.40	-0.40	5.50
H	346 – 350	-0.18	6.27	4.03	-0.33	6.49
I	621 – 624	0.08	-5.54	-0.31	0.14	5.62
J	635 – 638	0.00	3.41	0.42	0.03	3.42
K	841 – 844	-0.05	-5.34	0.27	0.02	5.60
L	855 – 858	0.00	2.26	0.24	0.00	2.26
M	941 – 944	-0.05	-5.94	0.21	0.00	6.14
N	955 – 958	0.00	1.80	0.30	0.00	1.80
O	1101 – 1104	-0.05	-6.82	0.21	0.00	7.03
P	1115 – 1118	0.00	0.94	0.32	0.00	0.94
Q	1261 – 1264	-0.05	-7.64	0.30	0.00	7.94
R	1275 – 1278	0.00	-0.63	-0.35	0.00	0.63
S	1561 – 1564	0.12	-9.50	-0.89	-0.22	9.64
T	1575 – 1578	0.01	-2.28	0.20	-0.04	2.48
U	1841 – 1846	-0.11	-6.10	0.36	0.55	6.51
V	1852 – 1856	-3.44	-5.74	-0.38	0.03	5.36
W	1969 – 1976	0.02	-4.40	0.51	-0.20	4.92
X	2370 – 2570	-4.84	-0.22	0.01	-1.02	5.07
Y	2305 – 2565	-4.82	-0.16	-0.21	-0.43	4.74
Z	2301 - 2561	-4.79	0.00	-0.14	0.00	4.79

Table 2.10.7-14 P_m Stress Summary (1-Foot Top End Drop) – Loading Condition 2

LOADING CONDITION 2: -40°F Ambient Temperature and Maximum Decay Heat Load

Section	Node to Node	S_X	S_Y	S_Z	S_{XY}	SI
A	177 - 327	-0.15	-1.64	-1.64	0.04	1.50
B	4 - 104	-0.16	-0.49	-0.49	-0.09	0.38
C	10 – 110	-0.36	-0.32	0.56	-0.48	1.38
D	185 – 335	-1.87	-1.43	-0.96	0.51	1.25
E	18 – 118	0.91	0.06	2.21	-0.82	2.66
F	143 – 150	-1.12	0.77	1.69	0.70	3.04
G	335 – 340	-2.64	-3.14	-0.92	0.33	2.38
H	346 – 350	-2.05	0.79	1.95	-0.54	4.10
I	621 – 624	0.02	-8.27	-0.89	0.18	8.30
J	635 – 638	0.00	1.25	0.43	0.04	1.25
K	841 – 844	-0.01	-8.71	0.10	0.01	8.81
L	855 – 858	0.00	0.81	0.00	0.00	0.81
M	941 – 944	-0.01	-9.25	0.10	0.00	9.35
N	955 – 958	-0.01	0.28	0.00	0.00	0.28
O	1101 – 1104	-0.01	-10.13	0.11	0.00	10.24
P	1115 – 1118	0.00	-0.61	0.00	0.00	0.61
Q	1261 – 1264	-0.01	-11.02	-0.10	0.00	11.01
R	1275 – 1278	-0.02	-1.51	-0.20	0.00	1.48
S	1561 – 1564	0.04	-11.87	-1.44	-0.30	11.93
T	1575 – 1578	0.00	-2.35	0.53	-0.03	2.88
U	1841 – 1846	-0.48	-6.05	-0.39	0.20	5.67
V	1852 – 1856	-1.74	-2.62	1.84	0.23	4.52
W	1969 – 1976	0.27	-3.94	0.38	-0.21	4.32
X	2370 – 2570	-4.27	-0.30	0.03	-1.03	4.55
Y	2305 – 2565	-3.43	-0.21	-0.28	-0.44	3.34
Z	2301 - 2561	-3.21	0.00	-0.18	0.00	3.21

Table 2.10.7-15 $P_m + P_b$ Stress Summary (1-Foot Top End Drop) – Loading Condition 2

LOADING CONDITION 2: -40°F Ambient Temperature and Maximum Decay Heat Load

Section	Node to Node	S_X	S_Y	S_Z	S_{XY}	SI
A	177 - 327	-0.02	-1.64	-1.64	0.04	1.62
B	4 - 104	-0.02	-0.49	-0.49	-0.09	0.51
C	10 – 110	-0.67	-0.32	0.56	-0.48	1.56
D	185 – 335	-6.21	-1.43	-0.96	0.51	5.31
E	18 – 118	0.04	0.06	2.21	-0.82	2.99
F	143 – 150	-3.24	0.51	0.66	0.70	4.02
G	335 – 340	-4.44	-5.12	-1.91	0.33	3.35
H	346 – 350	-0.23	6.01	4.87	-0.54	6.34
I	621 – 624	0.11	-9.00	-0.82	0.18	9.12
J	635 – 638	-0.01	2.50	0.56	0.04	2.51
K	841 – 844	-0.01	-8.93	-0.11	0.01	8.92
L	855 – 858	0.00	1.14	0.37	0.00	1.14
M	941 – 944	-0.01	-9.52	-0.16	0.00	9.51
N	955 – 958	0.00	0.67	0.41	0.00	0.67
O	1101 – 1104	-0.01	-10.41	-0.16	0.00	10.40
P	1115 – 1118	0.00	-1.03	-0.42	0.00	1.03
Q	1261 – 1264	0.00	-11.37	-0.39	0.00	11.37
R	1275 – 1278	0.00	-2.17	-0.67	0.00	2.17
S	1561 – 1564	0.17	-13.22	-1.52	-0.30	13.40
T	1575 – 1578	0.02	-3.75	0.43	-0.03	4.18
U	1841 – 1846	-0.08	-7.57	-1.01	0.20	7.50
V	1852 – 1856	-4.13	-7.44	-0.71	0.23	6.74
W	1969 – 1976	0.01	-4.33	0.80	-0.21	5.14
X	2370 – 2570	-4.84	-0.30	0.03	-1.03	5.10
Y	2305 – 2565	-4.82	-0.21	-0.28	-0.44	4.69
Z	2301 - 2561	-4.79	0.00	-0.18	0.00	4.79

Table 2.10.7-16 P_m Stress Summary (1-Foot Side Drop) – Loading Condition 1

LOADING CONDITION 1: 100°F Ambient Temperature and Maximum Decay Heat Load

Section	Node to Node	S_X	S_Y	S_Z	S_{XY}	SI
A	177 - 327	-3.76	-0.84	0.93	-0.22	4.71
B	4 - 104	-3.19	-0.78	0.05	-0.44	3.32
C	10 – 110	-3.91	-0.21	-1.00	0.22	3.72
D	185 – 335	-4.37	-0.09	-1.47	-0.18	4.29
E	18 – 118	-4.44	0.61	-2.66	-0.03	5.05
F	143 – 150	-2.31	0.18	-4.82	-0.39	5.06
G	335 – 340	-2.47	-0.66	-1.12	0.42	2.00
H	346 – 350	-3.13	3.07	-5.60	-0.24	8.68
I	621 – 624	-0.08	2.48	1.09	-0.03	2.56
J	635 – 638	-0.07	7.31	1.23	-0.06	7.37
K	841 – 844	-0.08	8.97	0.56	0.01	9.05
L	855 – 858	-0.02	17.11	0.95	-0.01	17.13
M	941 – 944	-0.09	13.34	0.44	0.01	13.44
N	955 – 958	-0.03	26.18	1.12	0.01	26.21
O	1101 – 1104	-0.10	15.36	0.27	0.00	15.46
P	1115 – 1118	-0.05	31.36	1.31	0.00	31.40
Q	1261 – 1264	-0.08	14.15	0.55	-0.01	14.24
R	1275 – 1278	-0.04	25.93	1.00	0.00	25.98
S	1561 – 1564	-0.08	4.01	1.20	0.06	4.10
T	1575 – 1578	-0.07	11.86	1.38	0.03	11.93
U	1841 – 1846	0.25	0.24	1.04	-0.09	0.88
V	1852 – 1856	2.33	6.99	-0.91	-1.26	8.22
W	1969 – 1976	10.14	1.89	-4.53	-1.65	12.47
X	2370 – 2570	-1.94	-0.89	0.09	0.52	2.24
Y	2305 – 2565	-1.50	-0.03	0.56	0.26	2.10
Z	2301 - 2561	-1.10	0.08	0.66	1.09	2.47

Table 2.10.7-17 $P_m + P_b$ Stress Summary (1-Foot Side Drop) – Loading Condition 1

LOADING CONDITION 1: 100°F Ambient Temperature and Maximum Decay Heat Load

Section	Node to Node	S_X	S_Y	S_Z	S_{XY}	SI
A	177 - 327	-8.25	-1.80	0.27	-1.47	8.85
B	4 - 104	-4.89	-1.65	-1.52	-0.64	3.49
C	10 – 110	-5.50	-0.44	-2.48	0.01	5.07
D	185 – 335	-6.75	-0.75	-2.88	-0.01	5.99
E	18 – 118	-4.23	1.45	-2.97	-0.41	5.74
F	143 – 150	-0.95	3.51	-1.76	-0.39	5.30
G	335 – 340	-4.63	-2.10	-2.43	0.42	2.66
H	346 – 350	-2.52	8.15	-2.54	-0.24	10.69
I	621 – 624	-0.05	3.05	1.14	-0.03	3.10
J	635 – 638	-0.01	9.61	1.08	-0.06	9.63
K	841 – 844	-0.03	9.69	1.13	0.01	9.72
L	855 – 858	0.02	17.90	0.66	-0.01	17.88
M	941 – 944	-0.05	14.24	1.05	0.02	14.29
N	955 – 958	0.01	27.38	1.03	0.01	27.37
O	1101 – 1104	-0.07	16.34	0.88	0.00	16.41
P	1115 – 1118	0.01	33.37	1.50	0.00	33.36
Q	1261 – 1264	-0.04	15.10	1.16	-0.01	15.14
R	1275 – 1278	0.02	27.35	1.67	0.00	27.34
S	1561 – 1564	-0.07	4.88	1.57	0.06	4.95
T	1575 – 1578	0.01	13.85	2.29	0.03	13.84
U	1841 – 1846	-0.07	0.04	1.42	-0.09	1.54
V	1852 – 1856	4.97	9.12	0.92	-1.26	8.56
W	1969 – 1976	-21.00	-6.92	-5.29	-1.65	15.91
X	2370 – 2570	-5.54	-1.99	-0.67	0.84	5.06
Y	2305 – 2565	-1.21	-0.19	0.78	0.76	2.40
Z	2301 - 2561	-0.78	0.06	0.82	3.96	7.96

Table 2.10.7-18 S_n Stress Summary (1-Foot Side Drop) – Loading Condition 1

LOADING CONDITION 1: 100°F Ambient Temperature and Maximum Decay Heat Load

Section	Node to Node	S_X	S_Y	S_Z	S_{XY}	SI
A	177 - 327	-16.56	-1.93	-8.01	-1.48	14.92
B	4 - 104	2.59	0.13	5.70	-0.30	5.60
C	10 – 110	1.72	0.02	5.07	0.50	5.18
D	185 – 335	-12.37	-1.73	-9.50	0.51	10.69
E	18 – 118	-2.16	0.74	-0.97	2.43	5.67
F	143 – 150	-10.70	3.74	-1.87	0.84	14.53
G	335 – 340	-1.23	-4.19	2.34	-0.84	6.76
H	346 – 350	-11.73	6.02	-4.40	-0.30	17.76
I	621 – 624	-0.14	4.66	1.54	0.00	4.80
J	635 – 638	-0.01	17.65	1.00	0.01	17.66
K	841 – 844	-0.04	12.03	1.49	0.02	12.07
L	855 – 858	0.02	27.31	0.90	-0.01	27.29
M	941 – 944	-0.06	16.64	1.47	0.01	16.70
N	955 – 958	0.01	36.87	1.33	0.00	36.86
O	1101 – 1104	-0.08	18.74	1.30	0.00	18.81
P	1115 – 1118	0.01	42.87	1.82	0.00	42.86
Q	1261 – 1264	-0.05	17.43	1.55	-0.01	17.48
R	1275 – 1278	0.00	36.86	1.82	0.00	36.86
S	1561 – 1564	-0.11	7.38	2.24	0.11	7.49
T	1575 – 1578	0.01	21.87	2.22	-0.04	21.86
U	1841 – 1846	-0.09	0.59	1.04	0.12	1.14
V	1852 – 1856	0.05	17.35	1.18	-1.71	17.63
W	1969 – 1976	-21.77	-8.80	-5.04	-2.15	17.08
X	2370 – 2570	-6.17	-3.00	-1.15	1.18	5.42
Y	2305 – 2565	-1.62	-0.34	0.33	0.70	2.26
Z	2301 - 2561	-1.17	0.13	0.43	3.97	8.06

Table 2.10.7-19 P_m Stress Summary (1-Foot Top Corner Drop) – Loading Condition 1 – Drop Orientation = 15.74 Degrees

LOADING CONDITION 1: 130°F Ambient Temperature and Maximum Decay Heat Load

Section	Node to Node	S_X	S_Y	S_Z	S_{XY}	SI
A	177 - 327	-1.30	-0.47	0.11	-0.05	1.42
B	4 - 104	-1.10	1.05	1.32	-0.18	2.43
C	10 – 110	-2.22	1.28	1.32	-0.71	3.78
D	185 – 335	-3.79	-0.22	-0.80	0.68	3.81
E	18 – 118	1.85	1.19	2.54	-2.17	4.40
F	143 – 150	-3.03	2.42	-0.25	1.15	5.92
G	335 – 340	-0.92	-1.90	1.23	-0.25	3.19
H	346 – 350	-2.85	2.65	-0.17	-0.40	5.56
I	621 – 624	-0.03	-3.73	0.18	0.13	3.91
J	635 – 638	-0.02	4.81	0.67	0.01	4.83
K	841 – 844	-0.03	1.44	0.40	0.02	1.47
L	855 – 858	0.00	2.53	0.13	0.00	2.53
M	941 – 944	-0.03	1.49	0.40	0.00	1.52
N	955 – 958	0.00	2.93	0.16	0.00	2.93
O	1101 – 1104	-0.04	0.72	0.35	0.00	0.75
P	1115 – 1118	-0.01	2.31	0.20	0.00	2.32
Q	1261 – 1264	-0.03	-0.56	0.40	0.00	0.96
R	1275 – 1278	0.00	-0.03	0.16	0.00	0.19
S	1561 – 1564	0.00	-3.39	-0.14	-0.13	3.40
T	1575 – 1578	-0.01	-3.82	0.45	0.01	4.26
U	1841 – 1846	0.66	-1.96	2.32	0.23	4.30
V	1852 – 1856	0.60	-3.51	0.76	0.07	4.27
W	1969 – 1976	-1.80	-2.28	-0.95	0.05	1.33
X	2370 – 2570	-2.86	-0.60	-0.40	-0.59	2.60
Y	2305 – 2565	-1.90	-0.69	-0.10	-0.30	1.87
Z	2301 - 2561	-0.63	0.00	0.07	0.00	0.69

Table 2.10.7-20 $P_m + P_b$ Stress Summary (1-Foot Top Corner Drop) – Loading Condition 1 – Drop Orientation = 15.74 Degrees

LOADING CONDITION 1: 130°F Ambient Temperature and Maximum Decay Heat Load

Section	Node to Node	S_X	S_Y	S_Z	S_{XY}	SI
A	177 - 327	-2.73	-0.79	-0.10	-0.47	2.73
B	4 - 104	-1.82	0.77	0.80	-0.25	2.64
C	10 – 110	-3.47	1.20	0.83	-0.78	4.93
D	185 – 335	-8.73	-0.44	-1.26	0.73	8.41
E	18 – 118	7.87	1.47	2.43	-2.30	7.88
F	143 – 150	-7.75	7.56	0.75	1.15	15.49
G	335 – 340	-3.24	-5.59	-0.41	-0.25	5.20
H	346 – 350	-1.01	8.77	3.07	-0.40	9.81
I	621 – 624	0.06	-4.37	0.08	0.13	4.45
J	635 – 638	-0.00	6.48	0.76	0.01	6.48
K	841 – 844	-0.01	1.52	0.41	0.02	1.53
L	855 – 858	0.00	2.62	0.14	0.00	2.62
M	941 – 944	-0.01	1.57	0.41	0.00	1.59
N	955 – 958	0.00	3.04	0.16	0.00	3.04
O	1101 – 1104	-0.02	0.77	0.36	0.00	0.78
P	1115 – 1118	0.00	2.41	0.17	0.00	2.41
Q	1261 – 1264	-0.06	-0.56	0.41	0.00	0.96
R	1275 – 1278	-0.01	-0. 01	0.27	0.00	0.28
S	1561 – 1564	0.06	-4.51	-0.67	-0.13	4.58
T	1575 – 1578	0.00	-4.01	0.34	0.01	4.35
U	1841 – 1846	0.00	-3.90	1.88	0.23	5.79
V	1852 – 1856	0.12	-5.06	0.00	0.07	5.19
W	1969 – 1976	-4.00	-2.57	-1.31	0.05	2.70
X	2370 – 2570	-2.97	-0.60	-0.40	-0.59	2.71
Y	2305 – 2565	-2.96	-0.69	-0.10	-0.30	2.90
Z	2301 - 2561	-1.28	0.00	0.07	0.00	1.34

Table 2.10.7-21 S_n Stress Summary (1-Foot Top Corner Drop) – Loading Condition 1 – Drop Orientation = 15.74 Degrees

LOADING CONDITION 1: 130°F Ambient Temperature and Maximum Decay Heat Load

Section	Node to Node	S_X	S_Y	S_Z	S_{XY}	SI
A	177 - 327	-5.52	-0.83	-2.84	-0.47	4.78
B	4 - 104	0.81	1.35	3.18	-0.14	2.41
C	10 – 110	-0.36	1.35	3.32	-0.62	3.89
D	185 – 335	-6.43	-0.76	-3.45	0.91	5.95
E	18 – 118	2.60	1.23	3.09	-1.36	3.05
F	143 – 150	-5.80	3.59	0.72	1.56	9.90
G	335 – 340	-0.51	-3.06	2.37	-0.36	5.60
H	346 – 350	-5.68	3.63	0.23	-0.42	9.35
I	621 – 624	-0.05	-3.01	0.32	0.14	3.34
J	635 – 638	-0.00	8.22	0.59	0.03	8.22
K	841 – 844	0.00	4.24	0.70	0.02	4.24
L	855 – 858	0.01	12.46	0.38	0.00	12.45
M	941 – 944	0.00	4.36	0.76	0.00	4.36
N	955 – 958	0.00	12.96	0.47	0.00	12.96
O	1101 – 1104	-0.01	3.55	0.71	0.00	3.55
P	1115 – 1118	0.00	12.34	0.50	0.00	12.34
Q	1261 – 1264	0.00	2.16	0.72	-0.01	2.16
R	1275 – 1278	-0.01	9.88	0.20	0.00	9.89
S	1561 – 1564	0.04	-1.61	-0.01	-0.07	1.65
T	1575 – 1578	-0.03	7.13	0.72	-0.06	7.16
U	1841 – 1846	0.02	-3.14	1.53	0.43	4.73
V	1852 – 1856	-0.19	7.89	4.10	-0.42	8.12
W	1969 – 1976	-4.79	-4.26	-1.11	-0.42	3.92
X	2370 – 2570	-6.19	-0.98	-0.29	-0.51	5.95
Y	2305 – 2565	-2.96	-1.07	-0.53	-0.31	2.47
Z	2301 - 2561	-1.26	0.00	-0.29	0.00	1.26

Table 2.10.7-22 P_m Stress Summary (1-Foot Bottom Corner Drop) – Loading Condition 1 – Drop Orientation = 15.74 Degrees

LOADING CONDITION 1: 130°F Ambient Temperature and Maximum Decay Heat Load

Section	Node to Node	S_X	S_Y	S_Z	S_{XY}	SI
A	177 - 327	-1.05	-1.53	-0.54	0.19	1.06
B	4 - 104	-2.40	-2.97	-0.90	0.14	2.10
C	10 – 110	-2.22	-1.94	-1.62	0.53	1.11
D	185 – 335	-1.77	-1.33	-0.84	0.25	1.05
E	18 – 118	-4.30	-1.41	-2.63	1.27	3.84
F	143 – 150	-0.64	-4.15	-1.80	-1.19	4.25
G	335 – 340	-1.05	-1.97	0.05	0.05	2.03
H	346 – 350	-0.13	-4.31	-0.68	-0.16	4.19
I	621 – 624	-0.01	-3.18	-0.02	0.09	3.17
J	635 – 638	-0.01	-4.79	0.33	-0.03	5.13
K	841 – 844	-0.03	-1.49	0.42	0.02	1.90
L	855 – 858	0.00	-2.51	0.15	0.00	2.66
M	941 – 944	-0.03	-0.14	0.40	0.00	0.54
N	955 – 958	0.00	-0.12	0.17	0.00	0.29
O	1101 – 1104	-0.04	1.05	0.36	0.00	1.08
P	1115 – 1118	-0.01	2.23	0.20	0.00	2.24
Q	1261 – 1264	-0.03	1.89	0.40	0.00	1.92
R	1275 – 1278	0.00	2.78	0.15	0.00	2.78
S	1561 – 1564	-0.04	-3.47	0.32	-0.06	3.79
T	1575 – 1578	-0.02	5.90	0.71	-0.02	5.93
U	1841 – 1846	-0.99	-1.94	-1.64	-0.29	1.11
V	1852 – 1856	-0.16	3.69	0.29	-0.35	3.92
W	1969 – 1976	3.05	0.56	-0.84	-0.83	4.13
X	2370 – 2570	-0.93	-0.65	0.15	0.14	1.14
Y	2305 – 2565	-0.67	-0.35	-0.20	0.06	0.48
Z	2301 - 2561	-0.33	0.03	-0.10	0.36	0.80

Table 2.10.7-23 $P_m + P_b$ Stress Summary (1-Foot Bottom Corner Drop) – Loading Condition 1 – Drop Orientation = 15.74 Degrees

LOADING CONDITION 1: 130°F Ambient Temperature and Maximum Decay Heat Load

Section	Node to Node	S_X	S_Y	S_Z	S_{XY}	SI
A	177 - 327	-1.14	-1.53	-0.54	0.19	1.07
B	4 - 104	-3.16	-2.97	-0.90	0.14	2.33
C	10 – 110	-2.94	-1.94	-1.62	0.53	1.55
D	185 – 335	-3.44	-1.33	-0.84	0.25	2.63
E	18 – 118	-7.08	-1.41	-2.63	1.27	6.21
F	143 – 150	-1.59	-4.78	-2.29	-1.19	3.98
G	335 – 340	-1.79	-2.62	-0.09	0.05	2.53
H	346 – 350	-0.63	-6.85	-1.64	-0.16	6.23
I	621 – 624	0.04	-4.09	-0.52	0.09	4.14
J	635 – 638	-0.02	-4.90	0.42	-0.03	5.32
K	841 – 844	-0.05	-1.39	0.57	0.02	1.97
L	855 – 858	0.00	-2.31	0.49	0.00	2.80
M	941 – 944	-0.06	-0.14	0.41	0.00	0.55
N	955 – 958	-0.01	-0.07	0.41	0.00	0.48
O	1101 – 1104	-0.02	1.10	0.36	0.00	1.12
P	1115 – 1118	0.00	2.32	0.15	0.00	2.32
Q	1261 – 1264	-0.01	1.98	0.41	0.00	1.99
R	1275 – 1278	0.00	2.89	0.16	0.00	2.89
S	1561 – 1564	0.04	-3.39	0.48	-0.06	3.87
T	1575 – 1578	-0.01	7.40	1.07	-0.02	7.41
U	1841 – 1846	-0.13	-1.66	-1.47	-0.29	1.63
V	1852 – 1856	1.51	7.22	2.46	-0.35	5.75
W	1969 – 1976	-7.66	-3.95	-1.89	-0.83	5.94
X	2370 – 2570	-3.15	-1.02	-0.10	0.25	3.07
Y	2305 – 2565	-0.40	-0.40	-0.13	0.22	0.49
Z	2301 - 2561	-0.25	0.02	-0.05	1.31	2.63

Table 2.10.7-24 S_n Stress Summary (1-Foot Bottom Corner Drop) – Loading Condition 1 – Drop Orientation = 15.74 Degrees

LOADING CONDITION 1: 130°F Ambient Temperature and Maximum Decay Heat Load

Section	Node to Node	S_X	S_Y	S_Z	S_{XY}	SI
A	177 - 327	-1.07	-3.11	-2.11	0.20	2.08
B	4 - 104	-3.18	-0.96	1.11	0.11	4.29
C	10 – 110	-2.96	0.13	0.81	0.36	3.82
D	185 – 335	-11.74	-2.52	-2.35	0.61	9.43
E	18 – 118	-10.29	-0.03	0.29	-0.13	10.58
F	143 – 150	-11.56	-4.53	-2.48	0.01	9.08
G	335 – 340	-1.71	-7.85	2.18	-1.29	10.29
H	346 – 350	-0.86	8.07	4.25	-0.20	8.94
I	621 – 624	0.06	-2.14	-0.21	0.11	2.21
J	635 – 638	-0.02	5.88	0.71	0.03	5.90
K	841 – 844	0.00	1.15	0.55	0.02	1.15
L	855 – 858	0.00	7.14	0.07	0.00	7.14
M	941 – 944	0.00	2.65	0.75	0.00	2.65
N	955 – 958	0.00	9.74	0.24	0.00	9.74
O	1101 – 1104	-0.01	3.88	0.72	0.00	3.89
P	1115 – 1118	0.00	12.25	0.47	0.00	12.25
Q	1261 – 1264	0.00	4.71	0.73	0.00	4.71
R	1275 – 1278	-0.01	12.83	0.30	0.00	12.84
S	1561 – 1564	-0.05	-2.36	0.66	-0.04	3.02
T	1575 – 1578	0.00	9.21	0.98	-0.04	9.20
U	1841 – 1846	-1.11	-1.82	-1.64	-0.22	0.84
V	1852 – 1856	-0.91	7.11	0.98	-0.50	8.09
W	1969 – 1976	-7.48	-2.97	-1.00	-0.99	6.69
X	2370 – 2570	-2.33	-1.35	-0.26	0.36	2.18
Y	2305 – 2565	-0.71	-0.45	-0.28	0.20	0.54
Z	2301 - 2561	-0.36	0.04	-0.18	1.31	2.65

Table 2.10.7-25 P_m Stress Summary (1-Foot Top Corner Drop) – Loading Condition 3 – Drop Orientation = 15.74 Degrees

LOADING CONDITION 3: -40°F Ambient Temperature and No Decay Heat Load

Section	Node to Node	S_X	S_Y	S_Z	S_{XY}	SI
A	177 - 327	-1.39	-1.87	-1.28	-0.03	0.59
B	4 - 104	-1.21	-0.73	-0.46	-0.23	0.84
C	10 – 110	-1.64	-0.38	0.21	-0.39	1.97
D	185 – 335	-3.26	-1.42	-1.42	0.44	2.03
E	18 – 118	-0.58	0.26	1.27	-0.81	2.34
F	143 – 150	-1.85	0.81	0.05	0.55	2.87
G	335 – 340	-3.38	-3.26	-1.26	0.46	2.52
H	346 – 350	-3.02	1.78	0.04	-0.60	4.95
I	621 – 624	-0.01	-7.20	-0.50	0.16	7.20
J	635 – 638	-0.02	3.62	0.82	0.02	3.65
K	841 – 844	-0.01	1.36	0.09	0.00	1.36
L	855 – 858	0.00	2.38	0.12	0.00	2.38
M	941 – 944	-0.01	1.18	0.09	0.00	1.19
N	955 – 958	0.00	2.72	0.15	0.00	2.72
O	1101 – 1104	-0.01	0.45	0.09	0.00	0.45
P	1115 – 1118	0.00	2.10	0.17	0.00	2.10
Q	1261 – 1264	-0.01	-0.83	0.09	0.00	0.92
R	1275 – 1278	0.00	-0.06	0.15	0.00	0.21
S	1561 – 1564	0.02	-2.72	-0.33	-0.11	2.75
T	1575 – 1578	-0.01	-3.59	0.44	0.01	4.03
U	1841 – 1846	0.83	-1.64	2.47	0.35	4.16
V	1852 – 1856	0.57	-3.33	0.81	0.04	4.14
W	1969 – 1976	-1.66	-2.14	-0.87	0.08	1.28
X	2370 – 2570	-2.48	-0.56	-0.45	-0.76	2.45
Y	2305 – 2565	-1.33	-0.61	-0.07	-0.31	1.37
Z	2301 - 2561	-0.40	0.00	0.06	0.00	0.46

Table 2.10.7-26 $P_m + P_b$ Stress Summary (1-Foot Top Corner Drop) – Loading Condition 3 – Drop Orientation = 15.74 Degrees

LOADING CONDITION 3: -40°F Ambient Temperature and No Decay Heat Load

Section	Node to Node	S_X	S_Y	S_Z	S_{XY}	SI
A	177 - 327	-2.74	-2.18	-1.50	-0.45	1.49
B	4 - 104	-1.63	-1.02	-0.98	-0.30	0.86
C	10 – 110	-2.46	-0.46	-0.28	-0.46	2.29
D	185 – 335	-8.25	-1.63	-1.88	0.49	6.69
E	18 – 118	-1.36	0.54	1.16	-0.93	2.90
F	143 – 150	-3.46	1.65	0.06	0.55	5.23
G	335 – 340	-5.83	-5.66	-2.65	0.46	3.56
H	346 – 350	-1.05	8.52	3.89	-0.60	9.65
I	621 – 624	0.09	-7.72	-0.42	0.16	7.82
J	635 – 638	-0.01	5.60	0.90	0.02	5.61
K	841 – 844	0.00	1.42	0.08	0.00	1.42
L	855 – 858	0.00	2.46	0.13	0.00	2.46
M	941 – 944	0.00	1.24	0.08	0.00	1.24
N	955 – 958	0.00	2.82	0.16	0.00	2.82
O	1101 – 1104	0.00	0.48	0.08	0.00	0.48
P	1115 – 1118	0.00	2.18	0.14	0.00	2.18
Q	1261 – 1264	0.00	-0.85	0.07	0.00	0.93
R	1275 – 1278	-0.01	-0.03	0.25	0.00	0.29
S	1561 – 1564	0.06	-3.75	-0.84	-0.11	3.81
T	1575 – 1578	0.01	-3.81	0.33	0.01	4.14
U	1841 – 1846	0.05	-3.84	1.92	0.35	5.79
V	1852 – 1856	0.12	-4.75	0.11	0.04	4.87
W	1969 – 1976	-3.70	-2.35	-1.19	0.08	2.51
X	2370 – 2570	-3.37	-0.56	-0.45	-0.76	3.20
Y	2305 – 2565	-2.73	-0.61	-0.07	-0.31	2.70
Z	2301 - 2561	-1.17	0.00	0.06	0.00	1.24

Table 2.10.7-27 S_n Stress Summary (1-Foot Top Corner Drop) – Loading Condition 3 – Drop Orientation = 15.74 Degrees

LOADING CONDITION 3: -40°F Ambient Temperature and No Decay Heat Load

Section	Node to Node	S_X	S_Y	S_Z	S_{XY}	SI
A	177 - 327	-5.61	-2.23	-4.23	-0.45	3.50
B	4 - 104	0.70	-0.43	1.41	-0.19	1.87
C	10 – 110	0.22	-0.30	2.22	-0.30	2.66
D	185 – 335	-5.90	-1.96	-4.07	0.66	4.16
E	18 – 118	0.17	0.30	1.82	0.01	1.65
F	143 – 150	-4.62	1.98	1.02	0.96	6.87
G	335 – 340	-2.97	-4.43	-0.12	0.04	4.31
H	346 – 350	-5.86	2.75	0.44	-0.62	8.70
I	621 – 624	-0.03	-6.48	-0.36	0.17	6.47
J	635 – 638	-0.00	7.04	0.75	0.04	7.04
K	841 – 844	-0.01	-7.16	-10.21	-0.44	10.23
L	855 – 858	-0.01	-1.30	0.12	0.00	1.42
M	941 – 944	-0.02	-8.21	-9.58	0.00	9.57
N	955 – 958	-0.01	-0.99	0.15	0.00	1.13
O	1101 – 1104	-0.02	-8.92	-9.58	0.00	9.57
P	1115 – 1118	-0.01	-1.58	0.19	0.00	1.77
Q	1261 – 1264	-0.01	-10.13	-9.57	0.00	10.12
R	1275 – 1278	-0.01	-3.63	0.25	0.00	3.88
S	1561 – 1564	0.02	4.32	-4.30	-0.21	8.63
T	1575 – 1578	0.01	-7.53	0.46	0.02	7.99
U	1841 – 1846	0.14	-2.50	3.87	1.36	6.95
V	1852 – 1856	0.15	-7.94	0.29	0.24	8.23
W	1969 – 1976	-0.66	-3.19	-1.16	0.44	2.68
X	2370 – 2570	-2.74	-0.82	-0.66	-0.80	2.50
Y	2305 – 2565	-2.73	-0.82	-0.27	-0.31	2.51
Z	2301 - 2561	-1.17	0.00	-0.14	0.00	1.17

Table 2.10.7-28 P_m Stress Summary (30-Foot Bottom End Drop) – Loading Condition 1

LOADING CONDITION 1: 130°F Ambient Temperature and Maximum Decay Heat Load

Section	Node to Node	S_X	S_Y	S_Z	S_{XY}	SI
A	177 - 327	-2.81	0.86	0.86	0.25	3.70
B	4 - 104	-4.47	1.22	1.22	0.20	5.70
C	10 – 110	-5.23	1.26	1.61	-0.09	6.84
D	185 – 335	-5.81	0.88	0.56	2.15	7.96
E	18 – 118	-3.44	1.18	2.81	-1.27	6.58
F	143 – 150	-3.86	-3.70	1.95	0.98	6.71
G	335 – 340	-0.98	-4.20	3.28	-1.13	7.84
H	346 – 350	-1.69	-2.09	1.96	-0.23	4.15
I	621 – 624	0.03	-8.53	-0.81	0.28	8.58
J	635 – 638	0.00	-1.55	0.20	0.04	1.75
K	841 – 844	-0.03	-8.11	0.44	0.02	8.55
L	855 – 858	0.00	-1.12	0.00	0.00	1.12
M	941 – 944	-0.03	-7.57	0.44	0.00	8.01
N	955 – 958	0.00	-0.58	0.00	0.00	0.58
O	1101 – 1104	-0.03	-6.69	0.44	0.00	7.13
P	1115 – 1118	0.00	0.30	0.00	0.00	0.31
Q	1261 – 1264	-0.03	-5.80	0.47	0.00	6.27
R	1275 – 1278	-0.01	1.18	-0.10	0.00	1.28
S	1561 – 1564	-0.01	-4.94	-0.08	-0.08	4.93
T	1575 – 1578	0.00	2.05	0.26	-0.03	2.05
U	1841 – 1846	-1.11	-2.08	-2.04	-0.27	1.10
V	1852 – 1856	-0.96	1.43	0.61	0.07	2.39
W	1969 – 1976	-0.31	-0.07	0.68	-0.29	1.19
X	2370 – 2570	-0.30	-0.37	0.12	-0.03	0.50
Y	2305 – 2565	-0.18	-0.35	-0.40	-0.03	0.23
Z	2301 - 2561	0.03	0.00	-0.33	0.00	0.35

Table 2.10.7-29 $P_m + P_b$ Stress Summary (30-Foot Bottom End Drop) – Loading Condition 1

LOADING CONDITION 1: 130°F Ambient Temperature and Maximum Decay Heat Load

Section	Node to Node	S_X	S_Y	S_Z	S_{XY}	SI
A	177 - 327	-3.80	0.86	0.86	0.25	4.69
B	4 - 104	-4.84	1.22	1.22	0.20	6.07
C	10 – 110	-5.54	1.26	1.61	-0.09	7.15
D	185 – 335	-13.08	0.88	0.56	2.15	14.61
E	18 – 118	-4.79	1.18	2.81	-1.27	7.87
F	143 – 150	-9.99	-5.56	0.41	0.98	10.60
G	335 – 340	-3.75	-8.88	1.98	-1.13	11.11
H	346 – 350	-4.78	-5.93	-0.12	-0.23	5.86
I	621 – 624	0.15	-10.37	-1.16	0.28	10.54
J	635 – 638	0.01	-2.43	0.07	0.04	2.50
K	841 – 844	-0.05	-8.31	0.27	0.02	8.58
L	855 – 858	0.00	-1.36	-0.24	0.00	1.35
M	941 – 944	-0.05	-7.84	0.21	0.00	8.05
N	955 – 958	0.00	-0.90	-0.31	0.00	0.90
O	1101 – 1104	-0.05	-6.96	0.21	0.00	7.17
P	1115 – 1118	0.00	0.63	0.32	0.00	0.63
Q	1261 – 1264	-0.05	-6.01	0.30	0.00	6.31
R	1275 – 1278	-0.01	1.52	0.15	0.00	1.53
S	1561 – 1564	0.06	-5.15	-0.04	-0.08	5.21
T	1575 – 1578	-0.01	2.92	0.32	-0.03	2.92
U	1841 – 1846	-0.11	-1.72	-2.00	-0.27	1.93
V	1852 – 1856	-0.13	4.34	2.22	0.07	4.47
W	1969 – 1976	-0.75	-1.72	-0.15	-0.29	1.66
X	2370 – 2570	-1.36	-0.37	0.12	-0.03	1.49
Y	2305 – 2565	0.00	-0.35	-0.40	-0.03	0.40
Z	2301 - 2561	0.01	0.00	-0.33	0.00	0.34

Table 2.10.7-30 P_m Stress Summary (30-Foot Bottom End Drop) – Loading Condition 2

LOADING CONDITION 2: -40°F Ambient Temperature and Maximum Decay Heat Load

Section	Node to Node	S_X	S_Y	S_Z	S_{XY}	SI
A	177 - 327	-2.90	-0.61	-0.61	0.27	2.36
B	4 - 104	-4.58	-0.59	-0.57	0.15	4.02
C	10 – 110	-4.67	-0.41	0.50	0.20	5.18
D	185 – 335	-5.31	-0.38	-0.11	1.93	6.26
E	18 – 118	-5.85	0.23	1.56	0.09	7.41
F	143 – 150	-2.63	-5.32	2.26	0.39	7.64
G	335 – 340	-3.57	-5.67	0.67	-0.42	6.41
H	346 – 350	-1.82	-3.00	2.18	-0.45	5.33
I	621 – 624	0.05	-12.18	-1.52	0.32	12.24
J	635 – 638	0.00	-2.83	0.37	0.04	3.19
K	841 – 844	-0.01	-11.75	0.11	0.01	11.86
L	855 – 858	0.00	-2.39	0.01	0.00	2.40
M	941 – 944	-0.01	-11.21	0.10	0.00	11.32
N	955 – 958	-0.01	-1.86	0.00	0.00	1.86
O	1101 – 1104	-0.01	-10.33	0.11	0.00	10.44
P	1115 – 1118	0.00	-0.97	0.00	0.00	0.98
Q	1261 – 1264	-0.01	-9.44	-0.10	0.00	9.44
R	1275 – 1278	-0.02	-0.10	-0.20	0.00	0.18
S	1561 – 1564	0.01	-8.58	-0.82	-0.16	8.60
T	1575 – 1578	0.00	0.77	0.44	-0.02	0.77
U	1841 – 1846	-1.37	-3.46	-3.17	-0.61	2.43
V	1852 – 1856	-1.26	0.57	0.90	0.27	2.20
W	1969 – 1976	-0.42	-0.06	0.76	-0.31	1.36
X	2370 – 2570	-0.29	-0.44	0.14	-0.04	0.60
Y	2305 – 2565	-0.16	-0.40	-0.47	-0.04	0.31
Z	2301 - 2561	0.07	0.00	-0.37	0.00	0.45

Table 2.10.7-31 $P_m + P_b$ Stress Summary (30-Foot Bottom End Drop) – Loading Condition 2

LOADING CONDITION 2: -40°F Ambient Temperature and Maximum Decay Heat Load

Section	Node to Node	S_X	S_Y	S_Z	S_{XY}	SI
A	177 - 327	-4.00	-0.61	-0.61	0.27	3.44
B	4 - 104	-4.81	-0.59	-0.57	0.15	4.24
C	10 – 110	-4.83	-0.41	0.50	0.20	5.34
D	185 – 335	-12.66	-0.38	-0.11	1.93	12.87
E	18 – 118	-8.64	0.23	1.56	0.09	10.20
F	143 – 150	-5.57	-11.51	-0.28	0.39	11.25
G	335 – 340	-6.48	-8.95	-0.32	-0.42	8.70
H	346 – 350	-4.85	-7.40	-0.46	-0.45	7.02
I	621 – 624	0.18	-13.91	-1.67	0.32	14.10
J	635 – 638	0.01	-4.00	0.25	0.04	4.26
K	841 – 844	-0.01	-11.96	-0.11	0.01	11.95
L	855 – 858	0.00	-2.73	-0.36	0.00	2.73
M	941 – 944	-0.01	-11.49	-0.16	0.00	11.48
N	955 – 958	0.00	-2.26	-0.41	0.00	2.26
O	1101 – 1104	-0.01	-10.61	-0.16	0.00	10.59
P	1115 – 1118	0.00	-1.39	-0.42	0.00	1.39
Q	1261 – 1264	0.00	-9.79	-0.39	0.00	9.79
R	1275 – 1278	0.00	-0.77	-0.67	0.00	0.77
S	1561 – 1564	0.10	-8.94	-0.67	-0.16	9.04
T	1575 – 1578	-0.01	1.90	0.46	-0.02	1.91
U	1841 – 1846	-0.09	-3.21	-3.39	-0.61	3.42
V	1852 – 1856	-0.16	4.29	3.11	0.27	4.48
W	1969 – 1976	-0.01	1.50	1.80	-0.31	1.87
X	2370 – 2570	-1.48	-0.44	0.14	-0.04	1.62
Y	2305 – 2565	0.00	-0.40	-0.47	-0.04	0.47
Z	2301 - 2561	0.01	0.00	-0.37	0.00	0.39

Table 2.10.7-32 P_m Stress Summary (30-Foot Bottom End Drop) – Loading Condition 3

LOADING CONDITION 3: -40°F Ambient Temperature and No Decay Heat Load

Section	Node to Node	S_X	S_Y	S_Z	S_{XY}	SI
A	177 - 327	-1.79	1.47	1.47	0.41	3.37
B	4 - 104	-4.27	-1.47	-1.45	0.40	2.91
C	10 – 110	-3.52	-1.43	-1.29	1.50	3.66
D	185 – 335	-2.89	1.55	1.16	2.22	6.28
E	18 – 118	-10.02	-0.60	-2.85	2.62	10.78
F	143 – 150	-1.23	-8.11	0.50	1.39	8.88
G	335 – 340	-3.07	-3.85	0.69	-0.47	4.76
H	346 – 350	0.68	-5.74	-0.06	0.10	6.43
I	621 – 624	0.04	-7.76	-1.05	0.24	7.81
J	635 – 638	0.00	-6.83	-0.06	-0.01	6.83
K	841 – 844	-0.05	-7.34	-0.82	-0.04	7.28
L	855 – 858	0.00	-6.39	0.00	0.00	6.40
M	941 – 944	-0.11	-6.80	-1.78	0.00	6.69
N	955 – 958	0.00	-5.86	0.00	0.00	5.86
O	1101 – 1104	-0.19	-5.91	-3.29	0.00	5.73
P	1115 – 1118	0.00	-4.97	0.00	0.00	4.97
Q	1261 – 1264	-0.27	-5.03	-4.81	0.00	4.76
R	1275 – 1278	0.00	-4.09	0.00	0.00	4.09
S	1561 – 1564	-0.28	-4.17	-5.87	-0.07	5.59
T	1575 – 1578	0.00	-3.23	0.06	0.01	3.29
U	1841 – 1846	0.70	-1.62	-0.89	0.36	2.43
V	1852 – 1856	0.44	-2.22	-0.21	0.13	2.67
W	1969 – 1976	-0.06	-0.96	-0.19	-0.12	0.93
X	2370 – 2570	-0.16	0.02	-0.03	-0.08	0.23
Y	2305 – 2565	-0.02	0.02	0.01	-0.04	0.08
Z	2301 - 2561	-0.01	0.00	0.02	0.00	0.02

Table 2.10.7-33 $P_m + P_b$ Stress Summary (30-Foot Bottom End Drop) – Loading Condition 3

LOADING CONDITION 3: -40°F Ambient Temperature and No Decay Heat Load

Section	Node to Node	S_X	S_Y	S_Z	S_{XY}	SI
A	177 - 327	-3.42	1.47	1.47	0.41	4.96
B	4 - 104	-4.73	-1.47	-1.45	0.40	3.35
C	10 – 110	-4.75	-1.43	-1.29	1.50	4.48
D	185 – 335	-8.83	1.55	1.16	2.22	11.29
E	18 – 118	-20.14	-0.60	-2.85	2.62	20.23
F	143 – 150	0.08	-19.42	-2.13	-1.39	19.70
G	335 – 340	-5.11	-5.41	0.81	-0.47	6.56
H	346 – 350	0.08	-8.13	-0.82	0.10	8.21
I	621 – 624	0.12	-8.99	-1.30	0.24	9.13
J	635 – 638	0.00	-7.03	-0.12	-0.01	7.03
K	841 – 844	-0.01	-7.36	-0.87	-0.04	7.34
L	855 – 858	0.00	-6.39	0.00	0.00	6.40
M	941 – 944	-0.01	-6.80	-1.87	0.00	6.78
N	955 – 958	0.00	-5.86	0.00	0.00	5.86
O	1101 – 1104	-0.01	-5.91	-3.46	0.00	5.90
P	1115 – 1118	0.00	-4.97	0.00	0.00	4.97
Q	1261 – 1264	-0.01	-5.03	-5.05	0.00	5.03
R	1275 – 1278	0.00	-4.09	0.00	0.00	4.09
S	1561 – 1564	0.01	-3.85	-6.08	-0.07	6.10
T	1575 – 1578	0.00	-3.34	0.03	0.01	3.37
U	1841 – 1846	0.06	-4.16	-2.04	0.36	4.29
V	1852 – 1856	0.07	-3.50	-0.65	0.13	3.58
W	1969 – 1976	-0.01	-1.47	-0.29	-0.12	1.48
X	2370 – 2570	-0.59	0.02	-0.03	-0.08	0.63
Y	2305 – 2565	-0.01	0.02	0.01	-0.04	0.08
Z	2301 - 2561	-0.01	0.00	0.02	0.00	0.02

Table 2.10.7-34 P_m Stress Summary (30-Foot Top End Drop) – Loading Condition 1

LOADING CONDITION 1: 130°F Ambient Temperature and Maximum Decay Heat Load

Section	Node to Node	S_X	S_Y	S_Z	S_{XY}	SI
A	177 - 327	-0.06	-0.20	-0.20	0.02	0.14
B	4 - 104	-0.05	1.35	1.34	-0.04	1.41
C	10 – 110	-0.96	1.39	1.70	-0.81	2.91
D	185 – 335	-2.42	-0.20	-0.32	0.76	2.69
E	18 – 118	3.42	1.02	3.52	-2.23	5.06
F	143 – 150	-2.34	2.43	1.38	1.32	5.46
G	335 – 340	-0.11	-1.73	1.65	-0.40	3.47
H	346 – 350	-1.87	1.69	1.73	-0.33	3.64
I	621 – 624	0.00	-4.69	-0.19	0.14	4.70
J	635 – 638	0.00	2.47	0.27	0.03	2.46
K	841 – 844	-0.02	-5.13	0.44	0.02	5.57
L	855 – 858	0.00	2.03	0.00	0.00	2.03
M	941 – 944	-0.03	-5.67	0.44	0.00	6.11
N	955 – 958	0.00	1.49	0.00	0.00	1.50
O	1101 – 1104	-0.03	-6.55	0.44	0.00	7.00
P	1115 – 1118	0.00	0.61	0.00	0.00	0.61
Q	1261 – 1264	-0.03	-7.43	0.47	0.00	7.91
R	1275 – 1278	-0.01	-0.28	-0.10	0.00	0.27
S	1561 – 1564	0.02	-8.29	-0.70	-0.22	8.32
T	1575 – 1578	0.00	-1.13	0.35	-0.04	1.48
U	1841 – 1846	-0.23	-4.69	0.73	0.55	5.48
V	1852 – 1856	-1.43	-1.80	1.55	0.03	3.35
W	1969 – 1976	0.37	-3.95	0.29	-0.20	4.34
X	2370 – 2570	-4.28	-0.22	0.01	-1.02	4.54
Y	2305 – 2565	-3.45	-0.16	-0.21	-0.43	3.40
Z	2301 - 2561	-3.26	0.00	-0.14	0.00	3.26

Table 2.10.7-35 $P_m + P_b$ Stress Summary (30-Foot Top End Drop) – Loading Condition 1

LOADING CONDITION 1: 130°F Ambient Temperature and Maximum Decay Heat Load

Section	Node to Node	S_X	S_Y	S_Z	S_{XY}	SI
A	177 - 327	-0.01	-0.20	-0.20	0.02	0.20
B	4 - 104	-0.21	1.35	1.34	-0.04	1.56
C	10 – 110	-1.71	1.39	1.70	-0.81	3.61
D	185 – 335	-6.70	-0.20	-0.32	0.76	6.67
E	18 – 118	9.55	1.02	3.52	-2.23	9.62
F	143 – 150	-7.67	6.60	1.37	1.32	14.52
G	335 – 340	-1.76	-5.05	0.40	-0.40	5.50
H	346 – 350	-0.18	6.27	4.03	-0.33	6.49
I	621 – 624	0.08	-5.54	-0.31	0.14	5.62
J	635 – 638	0.00	3.41	0.42	0.03	3.42
K	841 – 844	-0.05	-5.34	0.27	0.02	5.60
L	855 – 858	0.00	2.26	0.24	0.00	2.26
M	941 – 944	-0.05	-5.94	0.21	0.00	6.14
N	955 – 958	0.00	1.80	0.30	0.00	1.80
O	1101 – 1104	-0.05	-6.82	0.21	0.00	7.03
P	1115 – 1118	0.00	0.94	0.32	0.00	0.94
Q	1261 – 1264	-0.05	-7.64	0.30	0.00	7.94
R	1275 – 1278	0.00	-0.63	-0.35	0.00	0.63
S	1561 – 1564	0.12	-9.50	-0.89	-0.22	9.64
T	1575 – 1578	0.01	-2.28	0.20	-0.04	2.48
U	1841 – 1846	-0.11	-6.10	0.36	0.55	6.51
V	1852 – 1856	-3.44	-5.84	-0.38	0.03	5.36
W	1969 – 1976	0.02	-4.40	0.51	-0.20	4.92
X	2370 – 2570	-4.84	-0.22	0.01	-1.02	5.07
Y	2305 – 2565	-4.82	-0.16	-0.21	-0.43	4.74
Z	2301 - 2561	-4.79	0.00	-0.14	0.00	4.79

Table 2.10.7-36 P_m Stress Summary (30-Foot Top End Drop) – Loading Condition 2

LOADING CONDITION 2: -40°F Ambient Temperature and Maximum Decay Heat Load

Section	Node to Node	S_X	S_Y	S_Z	S_{XY}	SI
A	177 - 327	-0.15	-1.64	-1.64	0.04	1.50
B	4 - 104	-0.16	-0.49	-0.49	-0.09	0.38
C	10 – 110	-0.36	-0.32	0.56	-0.48	1.38
D	185 – 335	-1.87	-1.43	-0.96	0.51	1.25
E	18 – 118	0.91	0.06	2.21	-0.82	2.66
F	143 – 150	-1.12	0.77	1.69	0.70	3.04
G	335 – 340	-2.64	-3.14	-0.92	0.33	2.38
H	346 – 350	-2.05	0.79	1.95	-0.54	4.10
I	621 – 624	0.02	-8.27	-0.89	0.18	8.30
J	635 – 638	0.00	1.25	0.43	0.04	1.25
K	841 – 844	-0.01	-8.71	0.10	0.01	8.81
L	855 – 858	0.00	0.81	0.00	0.00	0.81
M	941 – 944	-0.01	-9.25	0.10	0.00	9.35
N	955 – 958	-0.01	0.28	0.00	0.00	0.28
O	1101 – 1104	-0.01	-10.13	0.11	0.00	10.24
P	1115 – 1118	0.00	-0.61	0.00	0.00	0.61
Q	1261 – 1264	-0.01	-11.02	-0.10	0.00	11.01
R	1275 – 1278	-0.02	-1.51	-0.20	0.00	1.48
S	1561 – 1564	0.04	-11.87	-1.44	-0.30	11.93
T	1575 – 1578	0.00	-2.35	0.53	-0.03	2.88
U	1841 – 1846	-0.48	-6.05	-0.39	0.20	5.67
V	1852 – 1856	-1.74	-2.62	1.84	0.23	4.52
W	1969 – 1976	0.27	-3.94	0.38	-0.21	4.32
X	2370 – 2570	-4.27	-0.30	0.03	-1.03	4.55
Y	2305 – 2565	-3.43	-0.21	-0.28	-0.44	3.34
Z	2301 - 2561	-3.21	0.00	-0.18	0.00	3.21

Table 2.10.7-37 $P_m + P_b$ Stress Summary (30-Foot Top End Drop) – Loading Condition 2

LOADING CONDITION 2: -40°F Ambient Temperature and Maximum Decay Heat Load

Section	Node to Node	S_X	S_Y	S_Z	S_{XY}	SI
A	177 - 327	-0.02	-1.64	-1.64	0.04	1.62
B	4 - 104	-0.02	-0.49	-0.49	-0.09	0.51
C	10 – 110	-0.67	-0.32	0.56	-0.48	1.56
D	185 – 335	-6.21	-1.43	-0.96	0.51	5.31
E	18 – 118	0.04	0.06	2.21	-0.82	2.99
F	143 – 150	-3.24	0.51	0.66	0.70	4.02
G	335 – 340	-4.44	-5.12	-1.91	0.33	3.35
H	346 – 350	-0.23	6.01	4.87	-0.54	6.34
I	621 – 624	0.11	-9.00	-0.82	0.18	9.12
J	635 – 638	-0.01	2.50	0.56	0.04	2.51
K	841 – 844	-0.01	-8.93	-0.11	0.01	8.92
L	855 – 858	0.00	1.14	0.37	0.00	1.14
M	941 – 944	-0.01	-9.52	-0.16	0.00	9.51
N	955 – 958	0.00	0.67	0.41	0.00	0.67
O	1101 – 1104	-0.01	-10.41	-0.16	0.00	10.40
P	1115 – 1118	0.00	-1.03	-0.42	0.00	1.03
Q	1261 – 1264	0.00	-11.37	-0.39	0.00	11.37
R	1275 – 1278	0.00	-2.17	-0.67	0.00	2.17
S	1561 – 1564	0.17	-13.22	-1.52	-0.30	13.40
T	1575 – 1578	0.02	-3.75	0.43	-0.03	4.18
U	1841 – 1846	-0.08	-7.57	-1.01	0.20	7.50
V	1852 – 1856	-4.13	-7.44	-0.71	0.23	6.74
W	1969 – 1976	0.01	-4.33	0.80	-0.21	5.14
X	2370 – 2570	-4.84	-0.30	0.03	-1.03	5.10
Y	2305 – 2565	-4.82	-0.21	-0.28	-0.44	4.69
Z	2301 - 2561	-4.79	0.00	-0.18	0.00	4.79

Table 2.10.7-38 P_m Stress Summary (30-Foot Side Drop) – Loading Condition 1

LOADING CONDITION 1: 100°F Ambient Temperature and Maximum Decay Heat Load

Section	Node to Node	S_X	S_Y	S_Z	S_{XY}	SI
A	177 - 327	-7.70	-1.71	1.90	-0.46	9.64
B	4 - 104	-6.52	-1.60	0.11	-0.89	6.79
C	10 – 110	-7.99	-0.43	-2.04	0.44	7.61
D	185 – 335	-8.94	-0.19	-3.00	-0.36	8.78
E	18 – 118	-9.09	1.24	-5.45	-0.07	10.32
F	143 – 150	-4.72	0.37	-9.86	-0.80	10.35
G	335 – 340	-5.06	-1.34	-2.30	0.85	4.09
H	346 – 350	-6.40	6.28	-11.46	-0.50	17.76
I	621 – 624	-0.16	5.08	2.22	-0.06	5.23
J	635 – 638	-0.14	14.95	2.52	-0.12	15.08
K	841 – 844	-0.17	18.35	1.15	0.03	18.51
L	855 – 858	-0.04	34.99	1.94	-0.02	35.03
M	941 – 944	-0.19	27.29	0.90	0.03	27.48
N	955 – 958	-0.07	53.54	2.29	0.01	53.61
O	1101 – 1104	-0.21	31.42	0.56	0.00	31.63
P	1115 – 1118	-0.10	65.09	2.67	0.00	65.18
Q	1261 – 1264	-0.17	28.95	1.12	-0.01	29.12
R	1275 – 1278	-0.09	53.03	2.05	0.00	53.13
S	1561 – 1564	-0.17	8.21	2.45	0.12	8.39
T	1575 – 1578	-0.14	24.25	2.83	0.06	24.39
U	1841 – 1846	0.51	0.49	2.13	-0.18	1.81
V	1852 – 1856	4.77	14.30	-1.86	-2.58	16.81
W	1969 – 1976	20.74	3.86	-9.26	-3.37	25.51
X	2370 – 2570	-3.97	-1.82	0.18	1.06	4.59
Y	2305 – 2565	-3.07	-0.06	1.14	0.53	4.29
Z	2301 - 2561	-2.26	0.16	1.36	2.22	5.06

Table 2.10.7-39 $P_m + P_b$ Stress Summary (30-Foot Side Drop) – Loading Condition 1

LOADING CONDITION 1: 100°F Ambient Temperature and Maximum Decay Heat Load

Section	Node to Node	S_X	S_Y	S_Z	S_{XY}	SI
A	177 - 327	-16.88	-3.68	0.56	-3.01	18.10
B	4 - 104	-10.00	-3.37	-3.11	-1.31	7.14
C	10 – 110	-11.24	-0.89	-5.07	0.01	10.36
D	185 – 335	-13.80	-1.54	-5.90	-0.01	12.26
E	18 – 118	-8.66	2.96	-6.08	-0.84	11.75
F	143 – 150	-1.94	7.18	-3.59	-0.80	10.85
G	335 – 340	-9.47	-4.30	-4.96	0.85	5.45
H	346 – 350	-5.16	16.66	-5.20	-0.50	21.87
I	621 – 624	-0.11	6.23	2.33	-0.06	6.34
J	635 – 638	-0.03	19.66	2.20	-0.12	19.69
K	841 – 844	-0.07	19.82	2.32	-0.03	19.88
L	855 – 858	0.04	36.61	1.34	-0.02	36.57
M	941 – 944	-0.11	29.12	2.15	0.03	29.23
N	955 – 958	0.02	56.00	2.10	0.01	55.98
O	1101 – 1104	-0.15	33.42	1.80	0.00	33.57
P	1115 – 1118	0.02	68.25	3.06	0.00	68.23
Q	1261 – 1264	-0.08	30.88	2.38	-0.01	30.96
R	1275 – 1278	0.03	55.93	3.42	0.00	55.91
S	1561 – 1564	-0.15	9.98	3.22	0.12	10.13
T	1575 – 1578	0.01	28.32	4.68	0.06	28.31
U	1841 – 1846	-0.15	0.09	2.90	-0.18	3.15
V	1852 – 1856	10.17	18.66	1.89	-2.58	17.50
W	1969 – 1976	-42.95	-14.16	-10.81	-3.37	32.53
X	2370 – 2570	-11.33	-4.07	1.38	1.72	10.34
Y	2305 – 2565	-2.48	-0.39	1.60	1.55	4.90
Z	2301 - 2561	-1.60	0.12	1.68	8.10	16.29

Table 2.10.7-40 P_m Stress Summary (30-Foot Top Corner Drop) – Loading Condition 1 – Drop Orientation = 15.74 Degrees

LOADING CONDITION 1: 130°F Ambient Temperature and Maximum Decay Heat Load

Section	Node to Node	S_X	S_Y	S_Z	S_{XY}	SI
A	177 - 327	-2.60	-0.76	0.43	-0.13	3.04
B	4 - 104	-2.20	0.78	1.34	-0.33	3.57
C	10 – 110	-3.57	1.21	0.98	-0.64	4.94
D	185 – 335	-5.30	-0.26	-1.30	0.62	5.19
E	18 – 118	0.32	1.40	1.62	-2.19	4.50
F	143 – 150	-3.83	2.48	-1.92	1.02	6.63
G	335 – 340	-1.78	-2.12	0.84	-0.11	2.99
H	346 – 350	-3.93	3.71	-2.10	-0.49	7.70
I	621 – 624	-0.05	-2.87	0.55	0.12	3.43
J	635 – 638	-0.05	7.33	1.09	-0.01	7.38
K	841 – 844	-0.04	6.62	0.63	0.02	6.67
L	855 – 858	-0.01	12.34	0.65	-0.01	12.36
M	941 – 944	-0.05	6.88	0.63	0.00	6.93
N	955 – 958	-0.02	14.31	0.77	0.00	14.33
O	1101 – 1104	-0.06	3.09	0.38	0.00	3.15
P	1115 – 1118	-0.03	11.28	0.97	0.00	11.31
Q	1261 – 1264	-0.05	-3.17	0.63	-0.01	3.80
R	1275 – 1278	-0.02	-0.22	0.77	-0.01	0.99
S	1561 – 1564	0.12	-17.16	-2.01	-0.63	17.32
T	1575 – 1578	-0.05	-18.80	2.21	0.06	21.01
U	1841 – 1846	4.10	-9.86	10.67	0.76	20.57
V	1852 – 1856	2.83	-17.30	3.48	0.29	20.79
W	1969 – 1976	-8.81	-11.00	-5.01	0.27	6.02
X	2370 – 2570	-13.77	-2.99	-1.97	-2.99	12.57
Y	2305 – 2565	-9.19	-3.39	-0.50	-1.53	9.07
Z	2301 - 2561	-2.97	0.00	0.34	0.00	3.31

Table 2.10.7-41 $P_m + P_b$ Stress Summary (30-Foot Top Corner Drop) – Loading Condition 1 – Drop Orientation = 15.74 Degrees

LOADING CONDITION 1: 130°F Ambient Temperature and Maximum Decay Heat Load

Section	Node to Node	S_X	S_Y	S_Z	S_{XY}	SI
A	177 - 327	-5.58	-1.41	-0.01	-0.97	5.79
B	4 - 104	-3.50	0.20	0.27	-0.47	3.84
C	10 – 110	-5.37	1.05	-0.02	-0.78	6.61
D	185 – 335	-11.05	-0.70	-2.26	0.73	10.45
E	18 – 118	6.41	1.97	1.41	-2.44	6.60
F	143 – 150	-8.08	8.77	0.14	1.02	16.97
G	335 – 340	-4.83	-6.32	-1.25	-0.11	5.08
H	346 – 350	-1.88	11.58	2.19	-0.49	13.49
I	621 – 624	0.04	-3.32	0.47	0.12	3.79
J	635 – 638	-0.01	9.80	1.13	-0.01	9.81
K	841 – 844	-0.01	7.03	0.73	0.02	7.04
L	855 – 858	0.02	12.82	0.69	-0.01	12.80
M	941 – 944	-0.01	7.31	0.74	0.00	7.32
N	955 – 958	0.00	14.88	0.80	0.00	14.88
O	1101 – 1104	-0.04	3.33	0.48	0.00	3.37
P	1115 – 1118	0.00	11.76	0.86	0.00	11.76
Q	1261 – 1264	-0.02	-3.19	0.68	-0.01	3.86
R	1275 – 1278	-0.04	-0.11	1.31	-0.01	1.43
S	1561 – 1564	0.33	-22.71	-4.58	-0.63	23.07
T	1575 – 1578	0.02	-19.71	1.68	0.06	21.39
U	1841 – 1846	0.22	-18.32	8.31	0.76	26.66
V	1852 – 1856	0.59	-24.92	-0.15	0.29	25.53
W	1969 – 1976	-19.45	-11.87	-6.68	0.27	12.78
X	2370 – 2570	-14.60	-2.99	-1.97	-2.99	13.35
Y	2305 – 2565	-14.54	-3.39	-0.50	-1.53	14.25
Z	2301 - 2561	-6.27	0.00	0.34	0.00	6.61

Table 2.10.7-42 P_m Stress Summary (30-Foot Top Oblique Drop) – Loading Condition 1 – Drop Orientation = 30 Degrees

LOADING CONDITION 1: 130°F Ambient Temperature and Maximum Decay Heat Load

Section	Node to Node	S_X	S_Y	S_Z	S_{XY}	SI
A	177 - 327	-4.26	-1.09	0.88	-0.24	5.16
B	4 - 104	-3.61	0.18	1.11	-0.52	4.79
C	10 – 110	-5.12	0.86	0.22	-0.40	6.03
D	185 – 335	-6.79	-0.26	-1.89	0.40	6.58
E	18 – 118	-2.29	1.48	-0.22	-1.79	5.19
F	143 – 150	-4.42	2.11	-4.31	0.60	6.64
G	335 – 340	-2.85	-2.09	0.04	0.15	2.92
H	346 – 350	-4.97	4.76	-4.91	-0.53	9.79
I	621 – 624	-0.09	-0.90	1.07	0.08	1.98
J	635 – 638	-0.08	10.12	1.59	-0.04	10.19
K	841 – 844	-0.06	11.68	0.82	0.02	11.74
L	855 – 858	-0.03	22.04	1.08	-0.02	22.07
M	941 – 944	-0.07	14.41	0.82	0.00	14.48
N	955 – 958	-0.04	28.32	1.29	0.00	28.36
O	1101 – 1104	-0.09	11.83	0.40	0.00	11.92
P	1115 – 1118	-0.05	28.16	1.61	0.00	28.22
Q	1261 – 1264	-0.06	5.09	0.81	-0.01	5.16
R	1275 – 1278	-0.04	14.22	1.24	-0.01	14.26
S	1561 – 1564	0.09	-13.96	-1.35	-0.57	14.10
T	1575 – 1578	-0.09	-10.61	3.06	0.05	13.67
U	1841 – 1846	4.53	-8.94	11.08	0.63	20.05
V	1852 – 1856	3.59	-12.06	3.52	-0.21	15.66
W	1969 – 1976	-15.57	-8.28	-7.84	-0.45	7.75
X	2370 – 2570	-13.23	-5.19	-1.47	-3.94	13.37
Y	2305 – 2565	-8.83	-6.21	0.27	-2.93	11.00
Z	2301 - 2561	-2.30	0.00	0.69	0.00	2.99

Table 2.10.7-43 $P_m + P_b$ Stress Summary (30-Foot Top Oblique Drop) – Loading Condition 1 – Drop Orientation = 30 Degrees

LOADING CONDITION 1: 130°F Ambient Temperature and Maximum Decay Heat Load

Section	Node to Node	S_X	S_Y	S_Z	S_{XY}	SI
A	177 - 327	-9.24	-2.17	0.15	-1.63	9.75
B	4 - 104	-5.63	-0.78	-0.65	-0.75	5.10
C	10 – 110	-7.49	0.60	-1.44	-0.63	8.19
D	185 – 335	-12.81	-1.00	-3.48	0.59	11.87
E	18 – 118	2.76	2.42	-0.56	-2.21	5.37
F	143 – 150	-7.08	9.11	-0.89	0.60	16.23
G	335 – 340	-6.56	-6.32	-2.40	0.15	4.23
H	346 – 350	-2.96	14.03	0.32	-0.53	17.03
I	621 – 624	0.00	-0.94	1.03	0.08	1.98
J	635 – 638	-0.02	13.43	1.53	-0.04	13.45
K	841 – 844	-0.01	12.43	1.05	0.02	12.44
L	855 – 858	0.03	22.99	1.13	-0.02	22.96
M	941 – 944	-0.02	15.29	1.05	0.00	15.31
N	955 – 958	0.01	29.53	1.33	0.00	29.52
O	1101 – 1104	-0.07	12.56	0.63	0.00	12.62
P	1115 – 1118	0.01	29.43	1.63	0.00	29.43
Q	1261 – 1264	-0.02	5.54	0.99	-0.01	5.57
R	1275 – 1278	0.00	14.87	1.14	-0.01	14.87
S	1561 – 1564	0.29	-18.93	-3.81	-0.57	19.25
T	1575 – 1578	-0.22	-10.60	3.23	0.05	13.83
U	1841 – 1846	0.24	-17.83	8.54	0.63	26.40
V	1852 – 1856	0.69	-19.48	-0.59	-0.21	20.18
W	1969 – 1976	-34.13	-16.38	-11.80	-0.45	22.34
X	2370 – 2570	-12.73	-5.19	-1.47	-3.94	12.94
Y	2305 – 2565	-12.65	-6.21	0.27	-2.93	14.06
Z	2301 - 2561	-5.33	0.00	0.69	0.00	6.02

Table 2.10.7-44 P_m Stress Summary (30-Foot Top Oblique Drop) – Loading Condition 1 – Drop Orientation = 45 Degrees

LOADING CONDITION 1: 130°F Ambient Temperature and Maximum Decay Heat Load

Section	Node to Node	S_X	S_Y	S_Z	S_{XY}	SI
A	177 - 327	-4.84	-1.17	1.08	-0.28	5.94
B	4 - 104	-4.09	-0.30	0.76	-0.58	4.94
C	10 – 110	-5.48	0.45	-0.39	-0.14	5.94
D	185 – 335	-6.83	-0.22	-2.04	0.17	6.62
E	18 – 118	-3.90	1.30	-1.58	-1.20	5.73
F	143 – 150	-4.16	1.49	-5.44	0.18	6.93
G	335 – 340	-3.21	-1.73	-0.58	0.32	2.70
H	346 – 350	-4.96	4.79	-6.26	-0.48	11.07
I	621 – 624	-0.10	0.75	1.29	0.03	1.39
J	635 – 638	-0.09	10.61	1.71	-0.06	10.69
K	841 – 844	-0.08	13.63	0.87	0.02	13.71
L	855 – 858	-0.03	25.74	1.23	-0.02	25.77
M	941 – 944	-0.09	17.75	0.87	0.00	17.84
N	955 – 958	-0.05	34.21	1.47	0.00	34.25
O	1101 – 1104	-0.12	16.45	0.40	0.00	16.57
P	1115 – 1118	-0.06	36.16	1.82	0.00	36.22
Q	1261 – 1264	-0.08	10.41	0.85	-0.01	10.49
R	1275 – 1278	-0.05	22.61	1.38	-0.01	22.66
S	1561 – 1564	0.05	-9.41	-0.55	-0.45	9.50
T	1575 – 1578	-0.11	-2.53	3.14	0.04	5.67
U	1841 – 1846	4.45	-7.11	10.98	0.40	18.10
V	1852 – 1856	3.78	-5.81	2.67	-0.56	9.66
W	1969 – 1976	-21.29	-4.86	-9.21	-1.60	16.73
X	2370 – 2570	-12.11	-6.71	-0.63	-4.01	13.61
Y	2305 – 2565	-7.72	-7.87	1.25	-3.44	12.49
Z	2301 - 2561	-1.44	0.00	1.29	0.00	2.73

Table 2.10.7-45 $P_m + P_b$ Stress Summary (30-Foot Top Oblique Drop) – Loading Condition 1 – Drop Orientation = 45 Degrees

LOADING CONDITION 1: 130°F Ambient Temperature and Maximum Decay Heat Load

Section	Node to Node	S_X	S_Y	S_Z	S_{XY}	SI
A	177 - 327	-10.54	-2.40	0.25	-1.87	11.19
B	4 - 104	-6.35	-1.40	-1.25	-0.84	5.24
C	10 – 110	-7.90	0.16	-2.28	-0.41	8.10
D	185 – 335	-12.08	-1.06	-3.85	0.39	11.04
E	18 – 118	-0.47	2.37	-1.97	-1.68	5.13
F	143 – 150	-5.18	7.89	-1.53	0.18	13.07
G	335 – 340	-6.82	-5.29	-2.89	0.32	4.00
H	346 – 350	-3.31	13.64	-1.16	-0.48	16.98
I	621 – 624	-0.03	1.02	1.29	0.03	1.32
J	635 – 638	-0.02	14.03	1.59	-0.06	14.05
K	841 – 844	-0.02	14.57	1.31	0.02	14.58
L	855 – 858	0.04	26.88	1.28	-0.02	26.84
M	941 – 944	-0.03	18.87	1.33	0.00	18.90
N	955 – 958	0.01	35.69	1.52	0.00	35.68
O	1101 – 1104	-0.09	17.47	0.84	0.00	17.55
P	1115 – 1118	0.01	37.83	2.00	0.00	37.82
Q	1261 – 1264	-0.03	11.18	1.26	-0.01	11.21
R	1275 – 1278	0.01	23.77	1.78	-0.01	23.76
S	1561 – 1564	0.21	-13.28	-2.79	-0.45	13.52
T	1575 – 1578	-0.24	-3.43	2.82	0.04	6.25
U	1841 – 1846	0.22	-15.21	9.12	0.40	24.33
V	1852 – 1856	0.69	-11.86	-1.35	-0.56	12.60
W	1969 – 1976	-46.39	-19.15	-13.50	-1.60	32.98
X	2370 – 2570	-10.95	-6.71	-0.63	-4.01	12.73
Y	2305 – 2565	-10.90	-7.87	1.25	-3.44	14.40
Z	2301 - 2561	-3.97	0.00	1.29	0.00	5.27

Table 2.10.7-46 P_m Stress Summary (30-Foot Top Oblique Drop) – Loading Condition 1 – Drop Orientation = 60 Degrees

LOADING CONDITION 1: 130°F Ambient Temperature and Maximum Decay Heat Load

Section	Node to Node	S_X	S_Y	S_Z	S_{XY}	SI
A	177 - 327	-5.99	-1.40	1.40	-0.35	7.41
B	4 - 104	-5.07	-0.74	0.58	-0.70	5.76
C	10 – 110	-6.55	0.18	-0.95	0.04	6.73
D	185 – 335	-7.82	-0.22	-2.44	0.00	7.60
E	18 – 118	-5.78	1.34	-2.92	-0.88	7.33
F	143 – 150	-4.52	1.19	-7.13	-0.13	8.32
G	335 – 340	-3.96	-1.68	-1.17	0.51	2.90
H	346 – 350	-5.65	5.49	-8.24	-0.51	13.76
I	621 – 624	-0.12	2.20	1.65	0.01	2.33
J	635 – 638	-0.11	12.50	2.05	-0.08	12.61
K	841 – 844	-0.12	17.17	0.99	0.02	17.28
L	855 – 858	-0.04	32.55	1.53	-0.03	32.59
M	941 – 944	-0.13	23.09	0.98	0.00	23.21
N	955 – 958	-0.06	44.12	1.82	0.00	44.18
O	1101 – 1104	-0.16	22.78	0.40	0.00	22.95
P	1115 – 1118	-0.08	48.26	2.25	0.00	48.34
Q	1261 – 1264	-0.12	16.56	0.97	-0.01	16.68
R	1275 – 1278	-0.07	33.36	1.68	0.00	33.43
S	1561 – 1564	0.01	-6.35	0.06	-0.39	6.43
T	1575 – 1578	-0.15	5.18	3.53	0.03	5.33
U	1841 – 1846	4.88	-6.27	11.92	0.21	18.20
V	1852 – 1856	4.46	-0.13	1.97	-1.03	5.02
W	1969 – 1976	-31.03	-1.79	-12.13	-3.28	29.96
X	2370 – 2570	-12.10	-9.19	0.30	-4.82	15.99
Y	2305 – 2565	-7.40	-10.47	2.41	-4.52	16.11
Z	2301 - 2561	-0.93	0.00	1.95	0.00	2.89

Table 2.10.7-47 $P_m + P_b$ Stress Summary (30-Foot Top Oblique Drop) – Loading Condition 1 – Drop Orientation = 60 Degrees

LOADING CONDITION 1: 130°F Ambient Temperature and Maximum Decay Heat Load

Section	Node to Node	S_X	S_Y	S_Z	S_{XY}	SI
A	177 - 327	-13.09	-2.93	0.36	-2.33	13.95
B	4 - 104	-7.83	-2.11	-1.91	-1.03	6.09
C	10 – 110	-9.34	-0.18	-3.30	-0.29	9.19
D	185 – 335	-13.17	-1.27	-4.69	0.27	11.92
E	18 – 118	-3.18	2.67	-3.41	-1.48	6.55
F	143 – 150	-4.34	8.01	-2.28	-0.13	12.35
G	335 – 340	-7.99	-5.20	-3.70	0.51	4.39
H	346 – 350	-4.07	15.23	-2.54	-0.51	19.32
I	621 – 624	-0.06	2.78	1.69	0.01	2.83
J	635 – 638	-0.02	16.50	1.86	-0.08	16.52
K	841 – 844	-0.04	18.41	1.75	0.02	18.45
L	855 – 858	0.04	34.03	1.59	-0.03	33.98
M	941 – 944	-0.06	24.59	1.79	0.00	24.65
N	955 – 958	0.01	46.06	1.89	0.00	46.05
O	1101 – 1104	-0.12	24.21	1.18	0.00	24.34
P	1115 – 1118	0.01	50.51	2.64	0.00	50.50
Q	1261 – 1264	-0.06	17.74	1.72	-0.01	17.80
R	1275 – 1278	0.02	35.19	2.81	0.00	35.17
S	1561 – 1564	0.16	-9.42	-1.80	-0.39	9.61
T	1575 – 1578	0.01	7.20	4.66	0.03	7.19
U	1841 – 1846	0.24	-14.53	10.39	0.21	24.92
V	1852 – 1856	0.78	-5.40	-2.35	-1.03	6.51
W	1969 – 1976	-66.74	-24.51	-16.52	-3.28	50.48
X	2370 – 2570	7.81	-9.19	0.30	-4.82	19.54
Y	2305 – 2565	-9.99	-10.47	2.41	-4.52	17.16
Z	2301 - 2561	-3.06	0.00	1.95	0.00	5.02

Table 2.10.7-48 P_m Stress Summary (30-Foot Top Corner Drop) – Loading Condition 3 – Drop Orientation = 15.74 Degrees

LOADING CONDITION 3: -40°F Ambient Temperature and No Decay Heat Load

Section	Node to Node	S_X	S_Y	S_Z	S_{XY}	SI
A	177 - 327	-2.69	-2.16	-0.96	-0.11	1.75
B	4 - 104	-2.31	-1.00	-0.44	-0.38	1.97
C	10 – 110	-2.99	-0.45	-0.13	-0.32	2.90
D	185 – 335	-4.76	-1.45	-1.92	0.38	3.40
E	18 – 118	-2.12	0.47	0.35	-0.82	3.06
F	143 – 150	-2.64	0.87	-1.61	0.41	3.61
G	335 – 340	-4.23	-3.49	-1.65	0.60	2.91
H	346 – 350	-4.10	2.84	-1.89	-0.69	7.07
I	621 – 624	-0.03	-6.35	-0.13	0.15	6.32
J	635 – 638	-0.05	6.15	1.25	0.00	6.19
K	841 – 844	-0.01	6.53	0.12	0.00	6.54
L	855 – 858	-0.01	11.68	0.60	-0.01	11.70
M	941 – 944	-0.01	5.68	0.12	0.00	5.69
N	955 – 958	-0.02	13.34	0.74	0.00	13.36
O	1101 – 1104	-0.01	2.07	0.12	0.00	2.08
P	1115 – 1118	-0.02	10.30	0.82	0.00	10.32
Q	1261 – 1264	-0.01	-4.19	0.12	-0.01	4.31
R	1275 – 1278	-0.02	-0.30	0.73	-0.01	1.04
S	1561 – 1564	0.14	-13.57	-2.03	-0.54	13.75
T	1575 – 1578	-0.03	-17.64	2.17	0.06	19.82
U	1841 – 1846	4.75	-8.10	11.71	1.28	19.93
V	1852 – 1856	2.65	-16.36	3.83	0.16	20.19
W	1969 – 1976	-8.10	-10.30	-4.63	0.40	5.74
X	2370 – 2570	-11.88	-2.78	-2.20	-3.78	11.84
Y	2305 – 2565	-6.48	-3.04	-0.36	-1.52	6.69
Z	2301 - 2561	-1.96	0.00	0.27	0.00	2.23

Table 2.10.7-49 $P_m + P_b$ Stress Summary (30-Foot Top Corner Drop) – Loading Condition 3 – Drop Orientation = 15.74 Degrees

LOADING CONDITION 3: -40°F Ambient Temperature and No Decay Heat Load

Section	Node to Node	S_X	S_Y	S_Z	S_{XY}	SI
A	177 - 327	-5.59	-2.81	-1.41	-0.95	4.48
B	4 - 104	-3.32	-1.59	-1.50	-0.52	2.02
C	10 – 110	-4.36	-0.60	-1.13	-0.46	3.87
D	185 – 335	-10.58	-1.90	-2.88	0.49	8.74
E	18 – 118	-2.82	1.04	0.14	-1.07	4.41
F	143 – 150	-3.78	2.86	-0.54	0.41	6.70
G	335 – 340	-7.43	-6.39	-3.49	0.60	4.22
H	346 – 350	-1.93	11.33	3.01	-0.69	13.32
I	621 – 624	0.07	-6.67	-0.03	0.15	6.75
J	635 – 638	-0.02	8.91	1.27	0.00	8.93
K	841 – 844	0.00	6.85	0.12	0.00	6.85
L	855 – 858	0.02	12.10	0.64	-0.01	12.08
M	941 – 944	0.00	5.97	0.12	0.00	5.98
N	955 – 958	0.00	13.85	0.77	0.00	13.84
O	1101 – 1104	0.00	2.22	0.12	0.00	2.22
P	1115 – 1118	0.00	10.69	0.70	0.00	10.69
Q	1261 – 1264	0.00	-4.32	0.06	-0.01	4.39
R	1275 – 1278	-0.04	-0.18	1.24	-0.01	1.42
S	1561 – 1564	0.29	-18.60	-4.46	-0.54	18.92
T	1575 – 1578	0.03	-18.70	1.63	0.06	20.33
U	1841 – 1846	0.33	-17.50	8.96	1.28	26.55
V	1852 – 1856	0.57	-23.23	0.47	0.16	23.80
W	1969 – 1976	-17.92	-10.68	-6.08	0.40	11.86
X	2370 – 2570	-15.16	-2.78	-2.20	-3.78	14.51
Y	2305 – 2565	-13.41	-3.04	-0.36	-1.52	13.27
Z	2301 - 2561	-5.77	0.00	0.27	0.00	6.05

Table 2.10.7-50 P_m Stress Summary (30-Foot Top Oblique Drop) – Loading Condition 3 – Drop Orientation = 30 Degrees

LOADING CONDITION 3: -40°F Ambient Temperature and No Decay Heat Load

Section	Node to Node	S_X	S_Y	S_Z	S_{XY}	SI
A	177 - 327	-4.33	-2.22	-0.25	-0.22	4.10
B	4 - 104	-3.69	-1.26	-0.32	-0.56	3.49
C	10 – 110	-4.65	-0.49	-0.68	-0.14	4.18
D	185 – 335	-6.36	-1.23	-2.39	0.20	5.15
E	18 – 118	-4.26	0.73	-1.25	-0.68	5.17
F	143 – 150	-3.46	0.81	-4.07	0.11	4.88
G	335 – 340	-4.84	-3.20	-1.98	0.72	3.13
H	346 – 350	-5.11	4.06	-4.74	-0.70	9.27
I	621 – 624	-0.07	-3.71	0.52	0.11	4.23
J	635 – 638	-0.08	9.16	1.72	-0.03	9.24
K	841 – 844	0.00	11.15	0.15	0.00	11.15
L	855 – 858	-0.02	20.26	1.00	-0.02	20.29
M	941 – 944	-0.01	11.94	0.15	0.00	11.95
N	955 – 958	-0.04	25.86	1.23	0.00	25.90
O	1101 – 1104	-0.01	9.51	0.15	0.00	9.52
P	1115 – 1118	-0.04	25.43	1.35	0.00	25.47
Q	1261 – 1264	-0.01	2.63	0.15	-0.01	2.63
R	1275 – 1278	-0.03	12.71	1.18	-0.01	12.74
S	1561 – 1564	0.12	-8.97	-1.34	-0.43	9.13
T	1575 – 1578	-0.07	-10.41	3.03	0.07	13.44
U	1841 – 1846	5.46	-6.32	12.54	1.33	19.01
V	1852 – 1856	3.54	-11.76	3.89	-0.36	15.66
W	1969 – 1976	-14.36	-7.79	-7.31	-0.22	7.05
X	2370 – 2570	-11.45	-4.83	-1.71	-4.49	12.01
Y	2305 – 2565	-6.42	-5.66	0.32	-2.77	9.16
Z	2301 - 2561	-1.48	0.00	0.60	0.00	2.08

Table 2.10.7-51 $P_m + P_b$ Stress Summary (30-Foot Top Oblique Drop) – Loading Condition 3 – Drop Orientation = 30 Degrees

LOADING CONDITION 3: -40°F Ambient Temperature and No Decay Heat Load

Section	Node to Node	S_X	S_Y	S_Z	S_{XY}	SI
A	177 - 327	-9.25	-3.30	-0.98	-1.62	8.68
B	4 - 104	-5.49	-2.23	-2.09	–0.79	3.62
C	10 – 110	-6.67	-0.74	-2.33	-0.37	5.98
D	185 – 335	-12.42	-1.96	-3.98	0.39	10.49
E	18 – 118	-4.71	1.67	-1.59	-1.10	6.74
F	143 – 150	-3.60	4.33	-1.45	0.11	7.94
G	335 – 340	-8.67	-6.37	-4.21	0.72	4.66
H	346 – 350	-3.00	13.83	0.98	-0.70	16.89
I	621 – 624	0.03	-3.66	0.63	0.11	4.29
J	635 – 638	-0.02	12.72	1.64	-0.03	12.74
K	841 – 844	0.00	11.73	0.15	0.00	11.72
L	855 – 858	0.03	21.10	1.05	-0.02	21.07
M	941 – 944	0.00	12.57	0.15	0.00	12.57
N	955 – 958	0.01	26.95	1.27	0.00	26.94
O	1101 – 1104	0.00	10.05	0.15	0.00	10.05
P	1115 – 1118	0.01	26.53	1.36	0.00	26.52
Q	1261 – 1264	0.00	2.84	0.09	-0.01	2.84
R	1275 – 1278	0.00	13.28	1.07	-0.01	13.28
S	1561 – 1564	0.23	-13.23	-3.71	-0.43	13.49
T	1575 – 1578	0.03	-10.65	2.81	0.07	13.46
U	1841 – 1846	0.38	-16.54	9.46	1.33	26.11
V	1852 – 1856	0.69	-18.81	-0.05	-0.36	19.51
W	1969 – 1976	-31.55	-14.73	-10.87	-0.22	20.69
X	2370 – 2570	-11.75	-4.83	-1.73	-4.49	12.25
Y	2305 – 2565	-11.67	-5.66	0.32	-2.77	13.08
Z	2301 - 2561	-4.91	0.00	0.60	0.00	5.51

Table 2.10.7-52 P_m Stress Summary (30-Foot Top Oblique Drop) – Loading Condition 3 – Drop Orientation = 45 Degrees

LOADING CONDITION 3: -40°F Ambient Temperature and No Decay Heat Load

Section	Node to Node	S_X	S_Y	S_Z	S_{XY}	SI
A	177 - 327	-4.88	-1.91	0.34	-0.27	5.24
B	4 - 104	-4.15	-1.25	-0.18	-0.60	4.09
C	10 – 110	-5.17	-0.43	-0.98	0.03	4.74
D	185 – 335	-6.55	-0.86	-2.37	0.04	5.69
E	18 – 118	-5.20	0.80	-2.26	-0.47	6.08
F	143 – 150	-3.52	0.63	-5.28	-0.14	5.91
G	335 – 340	-4.52	-2.46	-1.91	0.70	2.83
H	346 – 350	-5.05	4.33	-6.14	-0.59	10.51
I	621 – 624	-0.09	-1.11	0.93	0.06	2.03
J	635 – 638	-0.09	9.98	1.79	-0.05	10.06
K	841 – 844	0.00	12.84	0.16	0.00	12.84
L	855 – 858	-0.03	23.40	1.14	-0.02	23.42
M	941 – 944	-0.01	14.72	0.16	0.00	14.72
N	955 – 958	-0.04	31.03	1.41	0.00	31.07
O	1101 – 1104	-0.01	13.52	0.16	0.00	13.53
P	1115 – 1118	-0.05	32.56	1.53	0.00	32.61
Q	1261 – 1264	-0.01	7.24	0.16	-0.01	7.25
R	1275 – 1278	-0.05	20.28	1.31	-0.01	20.32
S	1561 – 1564	0.10	-4.17	-0.60	-0.31	4.31
T	1575 – 1578	-0.08	-3.11	3.13	0.06	6.24
U	1841 – 1846	5.49	-4.20	12.47	1.16	16.80
V	1852 – 1856	3.83	-6.08	3.03	-0.70	10.00
W	1969 – 1976	-19.66	-4.60	-8.62	-1.29	15.27
X	2370 – 2570	-10.54	-6.24	-0.87	-4.32	12.34
Y	2305 – 2565	-5.75	-7.20	1.21	-3.18	10.95
Z	2301 - 2561	-0.89	0.00	1.16	0.00	2.05

Table 2.10.7-53 $P_m + P_b$ Stress Summary (30-Foot Top Oblique Drop) – Loading Condition 3 – Drop Orientation = 45 Degrees

LOADING CONDITION 3: -40°F Ambient Temperature and No Decay Heat Load

Section	Node to Node	S_X	S_Y	S_Z	S_{XY}	SI
A	177 - 327	-10.54	-3.14	-0.50	-1.86	10.49
B	4 - 104	-6.25	-2.36	-2.19	-0.86	4.26
C	10 – 110	-7.36	-0.72	-2.87	-0.24	6.66
D	185 – 335	-11.82	-1.70	-4.18	0.26	10.13
E	18 – 118	-5.38	1.88	-2.65	-0.95	7.50
F	143 – 150	-2.89	4.74	-1.90	-0.14	7.63
G	335 – 340	-8.20	-5.33	-4.08	0.70	4.28
H	346 – 350	-3.34	13.50	-0.73	-0.59	16.88
I	621 – 624	-0.01	-0.77	1.03	0.06	1.80
J	635 – 638	-0.02	13.56	1.66	-0.05	13.58
K	841 – 844	0.00	13.52	0.16	0.00	13.52
L	855 – 858	0.03	24.41	1.19	-0.02	24.38
M	941 – 944	0.00	15.50	0.16	0.00	15.50
N	955 – 958	0.01	32.36	1.45	0.00	32.36
O	1101 – 1104	0.00	14.26	0.16	0.00	14.27
P	1115 – 1118	0.01	34.01	1.68	0.00	34.00
Q	1261 – 1264	0.00	7.68	0.11	-0.01	7.68
R	1275 – 1278	0.01	21.31	1.67	-0.01	21.30
S	1561 – 1564	0.15	-7.42	-2.94	-0.31	7.60
T	1575 – 1578	-0.20	-3.71	2.91	0.06	6.62
U	1841 – 1846	0.38	-13.80	9.98	1.16	23.87
V	1852 – 1856	0.70	-12.12	-0.93	-0.70	12.90
W	1969 – 1976	-42.93	-17.26	-12.49	-1.29	30.50
X	2370 – 2570	-10.11	-6.24	-0.87	-4.32	12.04
Y	2305 – 2565	-10.06	-7.20	1.21	-3.18	13.33
Z	2301 - 2561	-3.66	0.00	1.16	0.00	4.82

Table 2.10.7-54 P_m Stress Summary (30-Foot Top Oblique Drop) – Loading Condition 3 – Drop Orientation = 60 Degrees

LOADING CONDITION 3: -40°F Ambient Temperature and No Decay Heat Load

Section	Node to Node	S_X	S_Y	S_Z	S_{XY}	SI
A	177 - 327	-6.02	-1.93	0.87	-0.34	6.92
B	4 - 104	-5.11	-1.42	-0.10	-0.72	5.15
C	10 – 110	-6.33	-0.45	-1.37	0.16	5.88
D	185 – 335	-7.62	-0.68	-2.68	-0.09	6.95
E	18 – 118	-6.71	0.98	-3.41	-0.36	7.72
F	143 – 150	-4.07	0.57	-7.02	-0.36	7.62
G	335 – 340	-4.90	-2.20	-2.12	-0.78	3.12
H	346 – 350	-5.72	5.16	-8.16	-0.59	13.35
I	621 – 624	-0.12	0.88	1.39	0.02	1.51
J	635 – 638	-0.11	12.05	2.11	-0.08	12.16
K	841 – 844	0.00	16.05	0.18	0.00	16.05
L	855 – 858	-0.03	29.41	1.42	-0.02	29.45
M	941 – 944	-0.01	19.16	0.18	0.00	19.17
N	955 – 958	-0.05	39.89	1.74	0.00	39.94
O	1101 – 1104	-0.01	18.94	0.18	0.00	18.94
P	1115 – 1118	-0.06	43.40	1.89	0.00	43.47
Q	1261 – 1264	-0.01	12.37	0.18	-0.01	12.37
R	1275 – 1278	-0.06	29.97	1.60	0.00	30.04
S	1561 – 1564	0.08	-0.19	-0.02	-0.22	0.52
T	1575 – 1578	-0.11	3.77	3.54	0.06	3.89
U	1841 – 1846	6.18	-2.71	13.69	1.13	16.54
V	1852 – 1856	4.60	-0.99	2.39	-1.17	6.06
W	1969 – 1976	-28.67	-1.76	-11.37	-2.82	27.50
X	2370 – 2570	-10.60	-8.54	0.02	-4.93	14.63
Y	2305 – 2565	-5.68	-9.61	2.26	-4.14	14.49
Z	2301 - 2561	-0.54	0.00	1.78	0.00	2.32

Table 2.10.7-55 $P_m + P_b$ Stress Summary (30-Foot Top Oblique Drop) – Loading Condition 3 – Drop Orientation = 60 Degrees

LOADING CONDITION 3: -40°F Ambient Temperature and No Decay Heat Load

Section	Node to Node	S_X	S_Y	S_Z	S_{XY}	SI
A	177 - 327	-13.09	-3.46	-0.17	-2.32	13.45
B	4 - 104	-7.76	-2.79	-2.59	-1.05	5.39
C	10 – 110	-8.96	-0.81	-3.72	-0.17	8.16
D	185 – 335	-12.99	-1.72	-4.93	0.18	11.28
E	18 – 118	-6.70	2.32	-3.89	-0.95	9.21
F	143 – 150	-2.70	5.75	-2.54	-0.36	8.49
G	335 – 340	-8.98	-5.23	-4.55	0.78	4.59
H	346 – 350	-4.08	15.14	-2.23	-0.59	19.26
I	621 – 624	-0.04	1.50	1.50	0.02	1.55
J	635 – 638	-0.03	16.16	1.91	-0.08	16.19
K	841 – 844	0.00	16.92	0.19	0.00	16.91
L	855 – 858	0.04	30.73	1.46	-0.02	30.68
M	941 – 944	0.00	20.18	0.18	0.00	20.18
N	955 – 958	0.01	41.63	1.81	0.00	41.62
O	1101 – 1104	0.00	19.96	0.18	0.00	19.96
P	1115 – 1118	0.01	45.38	2.23	0.00	45.37
Q	1261 – 1264	0.00	13.06	0.13	-0.01	13.03
R	1275 – 1278	0.02	31.62	2.62	0.00	31.60
S	1561 – 1564	0.10	-2.70	-2.29	-0.22	2.83
T	1575 – 1578	0.03	5.41	4.51	0.06	5.38
U	1841 – 1846	0.44	-12.84	11.41	1.13	24.34
V	1852 – 1856	0.80	-6.59	-1.97	-1.17	7.75
W	1969 – 1976	-61.79	-22.13	-15.33	-2.82	46.66
X	2370 – 2570	5.18	-8.54	0.02	-4.93	16.90
Y	2305 – 2565	-9.21	-9.61	2.26	-4.14	15.82
Z	2301 - 2561	-2.82	0.00	1.78	0.00	4.60

Table 2.10.7-56 P_m Stress Summary (30-Foot Bottom Corner Drop) – Loading Condition 1 – Drop Orientation = 15.74 Degrees

LOADING CONDITION 1: 130°F Ambient Temperature and Maximum Decay Heat Load

Section	Node to Node	S_X	S_Y	S_Z	S_{XY}	SI
A	177 - 327	-5.04	-7.56	-2.67	0.94	5.20
B	4 - 104	-11.78	-14.59	-4.43	0.67	10.31
C	10 – 110	-10.88	-9.54	-7.98	2.63	5.43
D	185 – 335	-8.96	-6.55	-4.24	1.37	5.35
E	18 – 118	-21.09	-6.96	-12.91	6.23	18.84
F	143 – 150	-3.14	-20.39	-8.86	-5.88	20.87
G	335 – 340	-5.27	-9.88	0.17	0.13	10.06
H	346 – 350	-0.63	-21.20	-3.34	-0.78	20.63
I	621 – 624	0.07	-16.15	-1.45	0.48	16.26
J	635 – 638	-0.04	-23.59	1.64	-0.15	25.24
K	841 – 844	-0.03	-7.74	0.70	0.01	8.44
L	855 – 858	0.01	-12.37	0.76	0.00	13.13
M	941 – 944	-0.05	-1.11	0.63	0.01	1.74
N	955 – 958	-0.01	-0.67	0.84	0.01	1.51
O	1101 – 1104	-0.06	4.72	0.41	0.00	4.78
P	1115 – 1118	-0.03	10.89	0.98	0.01	10.92
Q	1261 – 1264	-0.05	8.86	0.63	0.00	8.91
R	1275 – 1278	-0.02	13.57	0.73	0.00	13.59
S	1561 – 1564	-0.07	-2.08	0.73	-0.04	2.81
T	1575 – 1578	-0.05	9.99	1.19	-0.01	10.04
U	1841 – 1846	-0.91	-1.86	-1.28	-0.32	1.14
V	1852 – 1856	0.64	6.11	-0.02	-0.78	6.24
W	1969 – 1976	6.54	1.21	-2.40	-1.39	9.28
X	2370 – 2570	-1.60	-0.96	0.18	0.32	1.91
Y	2305 – 2565	-1.19	-0.36	-0.01	0.15	1.20
Z	2301 - 2561	-0.72	0.05	0.13	0.73	1.65

Table 2.10.7-57 $P_m + P_b$ Stress Summary (30-Foot Bottom Corner Drop) – Loading Condition 1 – Drop Orientation = 15.74 Degrees

LOADING CONDITION 1: 130°F Ambient Temperature and Maximum Decay Heat Load

Section	Node to Node	S_X	S_Y	S_Z	S_{XY}	SI
A	177 - 327	-5.39	-7.56	-2.67	0.94	5.24
B	4 - 104	-15.50	-14.59	-4.43	0.67	11.42
C	10 – 110	-14.43	-9.54	-7.98	2.63	7.60
D	185 – 335	-18.44	-6.55	-4.24	1.37	14.36
E	18 – 118	-34.78	-6.96	-12.91	6.23	30.48
F	143 – 150	-7.82	-23.43	-11.25	-5.88	19.54
G	335 – 340	-9.77	-13.87	-0.88	0.13	12.99
H	346 – 350	-3.07	-33.67	-8.05	-0.78	30.65
I	621 – 624	0.27	-20.83	-3.90	0.48	21.12
J	635 – 638	-0.10	-24.10	2.07	-0.15	26.17
K	841 – 844	-0.08	-7.29	1.38	0.01	8.67
L	855 – 858	-0.02	-11.43	2.39	0.00	13.82
M	941 – 944	-0.01	-1.10	0.68	0.01	1.78
N	955 – 958	-0.03	-0.39	2.02	0.01	2.40
O	1101 – 1104	-0.04	4.97	0.51	0.00	5.01
P	1115 – 1118	0.00	11.34	0.72	0.01	11.34
Q	1261 – 1264	-0.01	9.30	0.73	0.00	9.32
R	1275 – 1278	0.00	14.14	0.77	0.00	14.14
S	1561 – 1564	0.01	-1.70	1.02	-0.04	2.73
T	1575 – 1578	-0.01	12.18	1.85	-0.01	12.18
U	1841 – 1846	-0.16	-1.64	-0.98	-0.32	1.62
V	1852 – 1856	3.23	10.37	2.78	-0.78	7.68
W	1969 – 1976	-14.90	-6.34	-3.71	-1.39	11.41
X	2370 – 2570	-5.06	-1.70	-0.34	0.54	4.80
Y	2305 – 2565	-0.82	-0.47	0.14	0.48	1.30
Z	2301 - 2561	-0.52	0.04	0.23	2.67	5.38

Table 2.10.7-58 P_m Stress Summary (30-Foot Bottom Oblique Drop) – Loading Condition 1 – Drop Orientation = 30 Degrees

LOADING CONDITION 1: 130°F Ambient Temperature and Maximum Decay Heat Load

Section	Node to Node	S_X	S_Y	S_Z	S_{XY}	SI
A	177 - 327	-4.71	-9.11	-2.31	0.76	6.93
B	4 - 104	-11.36	-24.02	-2.05	4.49	23.40
C	10 – 110	-9.23	-13.86	-7.32	2.84	7.88
D	185 – 335	-7.64	-8.19	-5.65	1.45	3.74
E	18 – 118	-17.97	-9.99	-12.77	5.48	13.56
F	143 – 150	-4.32	-17.17	-10.50	-5.71	17.20
G	335 – 340	-6.62	-8.91	-1.93	0.45	7.07
H	346 – 350	-2.40	-16.98	-7.21	-0.82	14.67
I	621 – 624	0.04	-13.10	-0.77	0.39	13.16
J	635 – 638	-0.08	-16.81	2.03	-0.18	18.84
K	841 – 844	-0.04	-1.80	0.88	0.02	2.67
L	855 – 858	0.00	-1.42	1.19	-0.01	2.60
M	941 – 944	-0.06	6.91	0.81	0.01	6.98
N	955 – 958	-0.02	14.24	1.35	0.01	14.26
O	1101 – 1104	-0.09	13.08	0.45	0.00	13.16
P	1115 – 1118	-0.05	28.16	1.63	0.01	28.21
Q	1261 – 1264	-0.06	16.36	0.81	0.00	16.42
R	1275 – 1278	-0.04	27.63	1.22	0.00	27.67
S	1561 – 1564	-0.10	0.61	1.28	0.00	1.38
T	1575 – 1578	-0.08	14.87	1.75	0.01	14.95
U	1841 – 1846	-0.59	-1.36	-0.44	-0.31	1.04
V	1852 – 1856	1.86	8.94	-0.54	-1.36	9.73
W	1969 – 1976	11.10	2.06	-4.53	-2.07	16.08
X	2370 – 2570	-2.41	-1.29	-0.19	0.56	2.83
Y	2305 – 2565	-1.82	-0.31	0.31	0.27	2.18
Z	2301 - 2561	-1.21	0.09	0.48	1.21	2.75

Table 2.10.7-59 $P_m + P_b$ Stress Summary (30-Foot Bottom Oblique Drop) – Loading Condition 1 – Drop Orientation = 30 Degrees

LOADING CONDITION 1: 130°F Ambient Temperature and Maximum Decay Heat Load

Section	Node to Node	S_X	S_Y	S_Z	S_{XY}	SI
A	177 - 327	-4.80	-9.11	-2.31	0.76	6.93
B	4 - 104	-13.71	-24.02	-2.05	4.49	23.65
C	10 – 110	-6.73	-13.86	-7.32	2.84	9.11
D	185 – 335	-14.58	-8.19	-5.65	1.45	9.24
E	18 – 118	-29.74	-9.99	-12.77	5.48	22.59
F	143 – 150	-6.73	-18.06	-11.46	-5.71	16.09
G	335 – 340	-9.60	-11.15	-1.85	0.45	9.42
H	346 – 350	-5.17	-31.54	-12.91	-0.82	26.42
I	621 – 624	0.22	-16.96	-3.03	0.39	17.19
J	635 – 638	-0.16	-19.06	2.05	-0.18	21.11
K	841 – 844	-0.10	-1.75	1.37	0.02	3.11
L	855 – 858	-0.05	-1.02	2.73	-0.01	3.75
M	941 – 944	-0.02	7.38	0.97	0.01	7.40
N	955 – 958	-0.01	14.64	0.27	0.01	14.65
O	1101 – 1104	-0.06	13.80	0.64	0.00	13.85
P	1115 – 1118	0.01	29.38	1.41	0.01	29.38
Q	1261 – 1264	-0.02	17.25	1.01	0.00	17.27
R	1275 – 1278	0.00	28.83	1.27	0.00	28.83
S	1561 – 1564	-0.03	1.42	1.73	0.00	1.76
T	1575 – 1578	-0.00	17.78	2.81	0.01	17.79
U	1841 – 1846	-0.17	-1.30	0.02	-0.31	1.40
V	1852 – 1856	5.46	13.61	2.78	-1.36	11.06
W	1969 – 1976	-24.08	-9.10	-6.03	-2.07	18.33
X	2370 – 2570	-7.27	-2.52	-0.66	0.92	6.78
Y	2305 – 2565	-1.36	-0.49	0.56	0.82	2.42
Z	2301 - 2561	-0.87	0.07	0.66	4.43	8.91

Table 2.10.7-60 P_m Stress Summary (30-Foot Bottom Oblique Drop) – Loading Condition 1 – Drop Orientation = 45 Degrees

LOADING CONDITION 1: 130°F Ambient Temperature and Maximum Decay Heat Load

Section	Node to Node	S_X	S_Y	S_Z	S_{XY}	SI
A	177 - 327	-3.87	-9.73	-0.29	0.58	9.49
B	4 - 104	-10.17	-27.98	0.97	6.07	30.82
C	10 – 110	-7.65	-16.13	-4.98	2.51	11.83
D	185 – 335	-6.10	-9.77	-4.22	1.14	5.87
E	18 – 118	-14.95	-12.23	-11.27	4.82	10.02
F	143 – 150	-5.61	-14.31	-10.29	-4.78	12.93
G	335 – 340	-8.44	-7.75	-1.86	0.77	7.08
H	346 – 350	-5.80	-13.03	-9.52	-1.62	7.92
I	621 – 624	0.02	-9.59	-0.10	0.32	9.62
J	635 – 638	-0.08	-11.09	2.16	-0.18	13.26
K	841 – 844	-0.07	2.54	0.92	0.02	2.61
L	855 – 858	0.00	5.96	1.37	0.00	5.96
M	941 – 944	-0.08	11.48	0.86	0.01	11.57
N	955 – 958	-0.03	22.46	1.54	0.01	22.49
O	1101 – 1104	-0.11	17.00	0.44	0.00	17.11
P	1115 – 1118	-0.05	36.18	1.85	0.01	36.24
Q	1261 – 1264	-0.09	19.23	0.86	0.00	19.32
R	1275 – 1278	-0.04	33.48	1.39	0.00	33.53
S	1561 – 1564	-0.11	2.57	1.49	0.03	2.68
T	1575 – 1578	-0.09	16.19	1.90	0.02	16.28
U	1841 – 1846	-0.26	-0.77	0.27	-0.25	1.15
V	1852 – 1856	2.48	9.66	-0.85	-1.57	10.84
W	1969 – 1976	12.78	2.37	-5.43	-2.25	18.67
X	2370 – 2570	-2.63	-1.33	0.17	0.65	3.07
Y	2305 – 2565	-2.01	-0.22	0.50	0.32	2.57
Z	2301 - 2561	-1.39	0.10	0.67	1.39	3.15

Table 2.10.7-61 $P_m + P_b$ Stress Summary (30-Foot Bottom Oblique Drop) – Loading Condition 1 – Drop Orientation = 45 Degrees

LOADING CONDITION 1: 130°F Ambient Temperature and Maximum Decay Heat Load

Section	Node to Node	S_X	S_Y	S_Z	S_{XY}	SI
A	177 - 327	-3.95	-9.73	-0.29	0.58	9.49
B	4 - 104	-12.31	-27.98	0.97	6.07	31.03
C	10 – 110	-10.26	-16.13	-4.98	2.51	12.07
D	185 – 335	-11.09	-9.77	-4.22	1.14	7.53
E	18 – 118	-24.07	-12.23	-11.27	4.82	15.27
F	143 – 150	-5.19	-13.85	-8.50	-4.78	12.90
G	335 – 340	-10.88	-8.50	-0.86	0.77	10.25
H	346 – 350	-7.65	-26.92	-15.76	-1.62	19.54
I	621 – 624	0.16	-12.80	-2.60	0.32	12.98
J	635 – 638	-0.17	-13.78	2.91	-0.18	16.69
K	841 – 844	-0.02	2.79	0.64	0.02	2.81
L	855 – 858	0.00	5.78	-0.59	0.00	6.37
M	941 – 944	-0.03	12.26	1.27	0.01	12.29
N	955 – 958	-0.01	23.18	0.33	0.01	23.19
O	1101 – 1104	-0.08	18.00	0.89	0.00	18.08
P	1115 – 1118	0.01	37.75	1.62	0.01	37.75
Q	1261 – 1264	-0.03	20.37	1.31	0.00	20.40
R	1275 – 1278	0.01	34.96	1.45	0.00	34.96
S	1561 – 1564	-0.06	3.56	1.99	0.03	3.63
T	1575 – 1578	0.00	19.18	3.09	0.02	19.18
U	1841 – 1846	-0.15	-0.83	0.78	-0.25	1.69
V	1852 – 1856	6.28	13.89	2.33	-1.57	11.87
W	1969 – 1976	-27.19	-9.73	-6.82	-2.25	20.65
X	2370 – 2570	-7. 77	-2.73	-0.80	1.06	7.19
Y	2305 – 2565	-1.55	-0.42	0.79	0.95	2.88
Z	2301 - 2561	-0.99	0.07	0.88	5.05	10.17

Table 2.10.7-62 P_m Stress Summary (30-Foot Bottom Oblique Drop) – Loading Condition 1 – Drop Orientation = 60 Degrees

LOADING CONDITION 1: 130°F Ambient Temperature and Maximum Decay Heat Load

Section	Node to Node	S_X	S_Y	S_Z	S_{XY}	SI
A	177 - 327	-3.61	-11.52	1.18	0.46	12.73
B	4 - 104	-10.12	-35.55	3.96	8.66	42.18
C	10 – 110	-6.86	-20.80	-3.07	2.57	18.19
D	185 – 335	-5.25	-12.67	-3.71	1.14	9.13
E	18 – 118	-13.40	-16.29	-10.75	4.53	9.51
F	143 – 150	-7.49	-12.73	-11.58	-4.70	10.76
G	335 – 340	-11.15	-7.37	-2.40	1.11	9.05
H	346 – 350	-9.69	-10.22	-13.54	-2.47	6.07
I	621 – 624	-0.01	-7.13	0.49	0.29	7.63
J	635 – 638	-0.10	-6.43	2.43	-0.20	8.87
K	841 – 844	-0.10	6.98	1.02	0.02	7.07
L	855 – 858	0.00	14.00	1.69	-0.01	14.00
M	941 – 944	-0.12	17.26	0.97	0.01	17.38
N	955 – 958	-0.04	33.19	1.89	0.02	33.23
O	1101 – 1104	-0.15	22.91	0.46	0.00	23.06
P	1115 – 1118	-0.07	48.40	2.29	0.00	48.47
Q	1261 – 1264	-0.12	24.45	0.97	0.00	24.57
R	1275 – 1278	-0.06	43.35	1.72	0.00	43.40
S	1561 – 1564	-0.14	4.53	1.87	0.06	4.67
T	1575 – 1578	-0.11	19.55	2.29	0.04	19.66
U	1841 – 1846	-0.02	-0.39	0.90	-0.24	1.40
V	1852 – 1856	3.34	11.61	-1.22	-1.97	13.27
W	1969 – 1976	15.96	2.97	-6.92	-2.72	23.43
X	2370 – 2570	-3.19	-1.55	0.18	0.81	3.70
Y	2305 – 2565	-2.45	-0.18	0.74	0.40	3.25
Z	2301 - 2561	-1.74	0.12	0.93	1.72	3.91

Table 2.10.7-63 $P_m + P_b$ Stress Summary (30-Foot Bottom Oblique Drop) – Loading Condition 1 – Drop Orientation = 60 Degrees

LOADING CONDITION 1: 130°F Ambient Temperature and Maximum Decay Heat Load

Section	Node to Node	S_X	S_Y	S_Z	S_{XY}	SI
A	177 - 327	-3.65	-11.52	1.18	0.46	12.73
B	4 - 104	-12.00	-35.55	3.96	8.66	42.36
C	10 – 110	-9.45	-20.80	-3.07	2.57	18.29
D	185 – 335	-8.71	-12.67	-3.71	1.14	9.27
E	18 – 118	-20.92	-16.29	-10.75	4.53	12.94
F	143 – 150	-4.57	-10.25	-6.79	-4.70	10.98
G	335 – 340	-13.00	-6.63	-0.22	1.11	12.98
H	346 – 350	-9.03	5.39	-6.19	-2.47	15.24
I	621 – 624	0.12	-9.80	-2.10	0.29	9.94
J	635 – 638	-0.21	-10.17	3.63	-0.20	13.79
K	841 – 844	-0.03	7.57	1.09	0.02	7.61
L	855 – 858	0.01	14.14	-0.50	-0.01	14.64
M	941 – 944	-0.05	18.43	1.69	0.01	18.48
N	955 – 958	-0.01	34.68	0.68	0.02	34.39
O	1101 – 1104	-0.11	24.31	1.20	0.00	24.41
P	1115 – 1118	0.01	50.52	2.08	0.00	50.51
Q	1261 – 1264	-0.05	25.97	1.72	0.00	26.02
R	1275 – 1278	0.01	45.27	1.80	0.00	45.26
S	1561 – 1564	-0.09	5.83	2.48	0.06	5.92
T	1575 – 1578	0.00	23.03	3.75	0.04	23.02
U	1841 – 1846	-0.16	-0.57	1.51	-0.24	2.18
V	1852 – 1856	7.83	16.07	2.29	-1.97	14.23
W	1969 – 1976	-33.56	-11.61	-8.43	-2.72	25.46
X	2370 – 2570	-9.28	-3.29	-1.03	1.32	8.54
Y	2305 – 2565	-1.92	-0.43	1.09	1.19	3.67
Z	2301 - 2561	-1.24	0.09	1.18	6.28	12.63

2.10.8 Quarter-Scale Model Drop Test Program for the NAC-LWT Cask

2.10.8.1 Introduction

This appendix provides a detailed presentation of the Quarter-Scale Model Drop Test Program, which was carried out for confirmatory support of the analysis and licensing effort for the design qualification of the NAC-LWT cask. The analyses presented elsewhere in this report demonstrate that the NAC-LWT cask design meets all of the requirements for use in the packaging and transportation of radioactive material (10 CFR 71), especially PWR, BWR, and metallic spent-fuel rods. The test results presented in this appendix confirm the analyses and provide additional confidence that the cask design provides for the safe transport of radioactive material. This test program considered the 30-foot (9-meter) Free Drop and the 1-meter (40-in) Puncture events of the 10 CFR 71 Hypothetical Accident Conditions, but the test results also lend credence to the analyses performed for the 10 CFR 71 Normal Conditions of Transport.

2.10.8.2 Purpose

The purpose of the Quarter-Scale Model Drop Test Program was to verify that the NAC-LWT cask design satisfies the Free Drop and the Puncture requirements of 10 CFR 71.73, Hypothetical Accident Conditions; each test simulated a specific load condition. The tests verified the structural adequacy of the NAC-LWT cask packaging in: (1) the performance of its containment function, (2) the performance of the impact limiters, (3) reacting dynamic loadings, and (4) resisting puncture by a pin.

2.10.8.3 Summary

The detailed quarter-scale model of the body of the NAC-LWT cask, which was fabricated for use in this test program, is presented in NAC drawings: 315-40-30, 315-40-31 (sheets 1 through 3), and 315-40-32 (Figure 2.10.8-1 through Figure 2.10.8-3).

The details of the impact limiters, which were fabricated for this test program, are presented in NAC drawings 315-40-33 and 315-40-34 (Figure 2.10.8-4 and Figure 2.10.8-5). The full-scale cask cavity contents weight (4000 lbs) is simulated in the quarter-scale model by the steel cylinder, shown on Drawing 315-40-35 (Figure 2.10.8-6), whose weight is appropriately scaled, $Ws = (4000)/(4)^3 = 62.5$ lbs.

The model of the body of the NAC-LWT cask, which was used in the Drop Test Program, was a quarter-scale duplication of the full-scale cask in all aspects, except as described in subsequent paragraphs of this appendix. The model was fabricated of Type 304 stainless steel inner and

outer shells, upper and lower end forgings, and closure lid; the port cover was Type 17-4PH stainless steel; and the gamma shield was chemical copper lead per ASTM B29. The impact limiters were fabricated of 5052 aluminum honeycomb enclosed in 6061-T6 aluminum alloy shells. The closure lid bolts were SA-453, Grade 660 high strength alloy steel bolting material. A carbon steel tube was used to simulate the fuel basket and payload in the cask cavity.

The quarter-scale model lead gamma shield forms an annulus 1.438 inches thick and 43.75 inches long. The lead was enclosed between the 0.1875 inch thick, 3.344-inch inside diameter inner shell and the 0.28-inch thick, 7.155-inch outer diameter outer shell. The ends of the inner shell include 0.75-inch long by 0.314-inch thick transition regions. The bottom end forging of the quarter-scale model cask was 1.0 inch thick. The bottom also included a 0.75-inch thick, 5.19-inch diameter lead disk enclosed by a 0.875-inch thick end cover. The upper ring forging was 3.5625 inches thick with a machined interior to accept the closure lid. The model closure lid was 5.625 inches in diameter and 2.81 inches thick. The 12 closure lid bolts were 1/4-32 UNEF-2B × 2 1/4 long socket head cap screws, which were selected to provide a tensile stress area equal to 1/(4)2 times that of the full-scale closure bolts. Since the applied impact load on the model is four times that applied to the full-scale cask, the proper bolt stress results. The port cover was a 0.748-inch outer diameter, 0.406-inch inner diameter, piston-type cylinder with an integral 0.25-inch thick, 1.125-inch diameter cover plate. The model impact limiters were quarter-size replicas of the full-scale limiters with full-strength aluminum honeycomb energy absorption material to produce the properly scaled impact loads on the model cask (3500 psi multidirectional and 1200 psi unidirectional crush strengths). The honeycomb sections' pie-shapes, joints, and bonds duplicated those of the full-scale limiters. The aluminum honeycomb of the model limiters was enclosed in 0.062-inch thick aluminum shells with epoxy-bonded joints; the model limiter attachment lugs were 0.062-inch thick aluminum alloy sheet. The model upper impact limiter had an outside diameter of 16.25 inches, a depth of 7.06 inches, an inner cup diameter of 7.22 inches, a cup depth of 3.00 inches, and four 0.75-inch × 1.28-inch trunnion cutouts. The model lower impact limiter had an outside diameter of 15.00 inches, a depth of 7.09 inches, an inner cup diameter of 7.22 inches, and a cup depth of 3.00 inches. The model load was a steel tube 43.75 inches long with a 3.22-inch outside diameter, a 2.00-inch inside diameter, and 0.25-inch thick end plates.

The inner shell, end forgings, and the closure lid establish a model cask cavity of 44.50 inches in length and 3.344 inches in diameter. The weight of the quarter-scale model cask with impact limiters and cavity load was 860 lbs (approximately 6 percent heavier than the design weight).

Three significant differences do exist between the quarter-scale model cask body and the full-scale cask body: (1) the model does not include the neutron shield and expansion tanks; the weight of these tanks and their contents are simulated on the model by segmented steel bars

welded on the exterior surface of the outer shell; (2) the inner and outer shells of the model are Type 304 stainless steel, with a yield strength of S_y = 30 ksi and an ultimate strength of S_u = 75 ksi, while the inner and outer shells of the full-scale cask are Type XM-19 stainless steel with S_y = 55 ksi and S_u = 100 ksi; and (3) the outer shell of the model did not include the transition regions at each end, which are present on the full-scale Type XM-19 stainless steel outer shell. The use of segmented weights to simulate the neutron shield prevents the weights from contributing to the strength of the cask, and conservatively neglects the effect of the neutron shell. The impact limiter attachment lugs were 0.062-inch thick on the impact limiters and 0.037-inch thick on the cask body, while the full-scale lugs are 0.50-inch thick on both components. The quarter-scale model impact limiter joints were riveted and/or epoxyed; whereas, on the full-scale model, the joints are all welded. Some other minor differences do exist between the quarter-scale model and the full-scale cask, but based on the absence of the shield/expansion tanks and the reduced strength of the inner and outer shells, the model is a conservative, fully representative replica of the full-scale cask. The differences, which do exist, are considered in detail in Section 2.10.8.4.

Prior to the start of testing, the model was instrumented with tri-axial accelerometers (one near each end of the cask body) and rosette strain gauges (a set of four, located at 90-degree intervals near the upper end, near the lower end, and at the midpoint of the body), so that a record of the model's response to the various tests could be obtained. The tests were performed at Oak Ridge National Laboratory (ORNL) in Oak Ridge, Tennessee. A detailed description of the test facility can be found in the Drop Test Facility's Information Brochure (Shappert and Box). A description of the test procedures and instrumentation is presented in Section 2.10.8.5 of this report. The test sequence followed at ORNL is summarized as follows:

- Inspect cask model.
- Perform pretest weight and geometry measurements.
- Assemble packaging for the 30-foot End Drop Test (install simulated cavity load, cask closure lid, and port cover, and attach upper impact limiter).
- Pressurize and leak test the cask cavity.
- Perform 30-foot Top End Drop (impact on lid end).
- Observe cask condition and perform leak test.
- Repeat packaging assembly and leak test for each drop.
- Perform 30-foot Top Corner Drop (15.7° from vertical).
- Perform 30-foot Side Drop (cask axis horizontal).
- Perform 30-foot Oblique Drop (cask axis 60° from vertical).
- Perform 40-inch Side Drop on puncture pin (impact at midpoint of side of cask).
- Disassemble cask model and perform final geometry measurement inspection.

This test sequence is summarized in the photographs presented in Figure 2.10.8-7 through Figure 2.10.8-31. The significant results obtained from the LWT Cask Quarter-Scale Drop Test Program are presented in Section 2.10.8.6.

The test program was very successful in confirming the structural adequacy of the NAC-LWT Spent Fuel Shipping Cask for the Hypothetical Accident Condition Free Drop and Puncture events. Based on the pre-test and post-test dimensional measurements, nearly all permanent deformation of the packaging model was limited to the impact limiters, as expected and desired. The only significant deformation of the cask body model occurred in the side puncture test, where local deformation of the outer shell and the lead shielding did occur; as designed, the outer shell was not punctured. This local deformation was fully expected and produced a very slight, local dimple in the inner shell wall (0.05 in) of the model. These local puncture deformations are of no consequence since the containment vessel and its contents are protected.

Because no deformation to the package was observed, except as previously discussed, and the containment vessel sustained essentially no deformation, leakage was not expected and did not occur. As noted in the detailed test results in Section 2.10.8.6, some experimental problems precluded actual "contained" pressure measurements before and after each test; however, leaktightness of the cavity was verified before and after each test. The test results were as expected. The results correlated well with the assumptions made and the analyses performed elsewhere in this report. An accurate detailed analysis of the cask body in the local region of the impact for the side drop puncture test is very difficult, even with state-of-the-art finite element analysis computer programs, but the observed test results confirm the adequacy of the NAC-LWT cask design. The test conservatively did not include the neutron shield shell or the higher strength Type XM-19 stainless steel inner and outer shells. Although the quarter-scaled attachment lugs were significantly undersized through a manufacturing error, the impact limiters remained in position on the cask body and performed their energy absorption function as designed for the entirety of each test. On the basis of the good agreement shown between the test results and those expected (based on analyses), and on the observed physical condition of the test model, it is concluded that this test program has confirmed the adequacy of the NAC-LWT cask design to meet the requirements of the Free Drop (30-ft) and the Puncture (40-in) events specified by 10 CFR 71.73.

2.10.8.4 Description of Quarter-Scale LWT Cask Model

Quarter-scale modeling was achieved by reducing dimensions to precisely one-fourth of the full-scale dimensions. The scaling relations are defined in Table 2.10.8-1. With the exceptions noted below, the quarter-scale model was a duplicate of the full-scale design.

1. Deviations

   The items/components omitted from the quarter-scale model included the neutron shield and expansion tank shells and their contents, the rotation trunnions, and the valve ports. It was determined that omission of these items/components would have either a conservative effect, or no effect, on the test results.

2. Differences

   Some modifications were made to the quarter-scale model to eliminate complex operations, to allow installation of instrumentation, and to meet schedular concerns based on material availability. These modifications included a single external pressure port valve, a single closure lid O-ring (O-ring cross sections and thicknesses do not scale), Type 304 stainless steel inner and outer shells (Type XM19 stainless steel is not commonly available), and lifting trunnions that were not final machined. All of the bolts used in the quarter-scale model - closure lid, port cover, and impact limiter attachment - were chosen with a minimum tensile area equal (as near as practical) to 1/(4)2 = 1/16 of the minimum tensile area of the corresponding full-scale bolt. The cask cavity contents, the fuel basket and payload, were simulated in the quarter-scale model by an appropriately scaled steel cylinder. The weights of the rotation trunnions, the neutron shield and expansion tanks, and the shield fluid were simulated by segments of steel bar welded on the exterior surface of the outer shell. These 4.25-inch × 2.5-inch × 1.0-inch steel bars were spaced along the length of the model body to represent the distribution of the shield/expansion tanks and fluid, but away from the cask midpoint (Puncture Test region). The steel bars were also spaced circumferentially for load distribution and to preclude strengthening the outer shell in that direction.

   In summary, the NAC-LWT cask quarter-scale model that was tested reflects all of the significant structural characteristics of the full-scale cask design, which is defined and analyzed elsewhere in this report. The quarter-scale model weight of 860 lbs, corresponding to a full-scale cask weight of 860 × 43 = 55,040 lbs, provided a 5.8 percent conservative margin over the 52,000-lb cask design weight used in the analyses of this report. With only one impact limiter attached for the top end and top corner drops, the model weight was 840 lbs, providing a 3.4 percent conservative margin.

2.10.8.5 Description of Test Procedures and Instrumentation

The test program for the quarter-scale model consisted of the following five drop tests:

Test No. 1	Vertical top end drop of 30 feet.
Test No. 2	Top corner drop of 30 feet at an angle of 15.7 degrees from the vertical. (At this angle, the center of gravity of the cask is directly over the edge of the cask body, which prohibits rotation of the cask on initial impact.)
Test No. 3	Side drop from a height of 30 feet.
Test No. 4	Bottom oblique drop of 30 feet at an angle of 60 degrees from the vertical.
Test No. 5	A 40-inch drop onto a pin at the mid-point side of the cask.

The tests were performed in this order so as to make the puncture test more severe. All cask drops employed an impact pad located at the ORNL facilities. The impact pad was a 600-metric-ton, reinforced concrete structure (2-inch diameter rebar). The concrete structure is a stepped pyramid arrangement with a large base and a 70-metric-ton armor plate surface (24 inches thick). The massive structure was considered to be unyielding so as to minimize any significant energy absorption by the impact surface.

2.10.8.5.1 Equipment

The ancillary equipment for drop testing the quarter-scale model included the following:

- still and normal speed photography (30 frames/second)
- high speed photography (500 frames/second)
- video recorders
- strain gauge recorders
- computerized drop test timing sequencer (DTTS).

The DTTS is a small computer, which receives a feedback message that stops the sequence leading to the drop of the cask if predetermined messages are not received from each component. When all systems are functional, the computer advances the program to the next step and will automatically fire the release mechanism that drops the cask model. One of the important checks performed by the DTTS is the continuity check of the firing circuits of the explosive release mechanism.

2.10.8.5.2 Instrumentation

The primary data to be used in the assessment of cask integrity is the strain gauge time history data obtained during the cask impact event. Nine rosette strain gauges (each rosette allowed unidirectional strains to be measured in 0/45/90 degree directions) were bonded to the cask. The locations of the strain gauges are shown in Figure 2.10.8-32. The nine rosettes were attached at three longitudinal locations. At each longitudinal location, three rosettes were placed 120 degrees apart around the circumference of the outer surface of the cask model. Such an arrangement permitted the maximum bending stresses to be determined, as well as, the

maximum plastic strains observed during the tests. The strain gauges employed in the test had a rise time of 50 kHz, which would enable the strain gauge to track the high strain rates accompanying the impact. To ensure proper operation of the strain gauges, positive and negative calibrations of the strain gauges were performed prior to the drop. These calibrations are retained with the strain time histories on FM tape.

2.10.8.5.3 Drop Test Sequence

This section describes the test procedures used for each time the cask was dropped. ORNL personnel performed all tasks related to instrumentation and the actual sequence leading up to the drop.

1. Cask Preparation
   - Install the model cask lid using a new cask lid O-ring. The O-ring is inspected for defects prior to installation.
   - Install the port cover on the model cask using a new O-ring for the port cover lid. The O-ring is inspected for defects prior to installation.
   - Verify the lid and port cover seals by pressurizing the cavity to 30 (+5/-0) psig. Observe the cavity pressure over a 10-minute period to ensure leaktightness.
   - Attach limiters to the model cask.
2. Performing the Drop Test
   - Check umbilical cord connection to data recorders.
   - Ensure safety of cask hook assembly prior to lift and correct angle of orientation of the cask.
   - Final check to ascertain if all systems are ready for the drop.
   - Turn on the recorders for the strain gauges.
   - Initiate the 10-second countdown in preparation of the drop.
   - At the 5-second mark, start high speed (500 frames/second) photography and normal speed photography.
   - When the countdown reaches zero, energize the explosive mechanism.

When the explosive mechanism fragments, the nut and bolt assembly restraining the cask in the hook allows the hook to open, which allows the cask to initiate the fall unimpeded.

2.10.8.6 Detailed Test Results

Data obtained from the tests consists of both qualitative information with respect to observations about the cask and the limiter and quantitative data obtained from the recorders. The data for each test to be presented consists of:

- Impact limiter deformation.
- Strain gauge results and stress calculations (for the end drop and side drop only).
- Observations of the cask and attachments.

The strain gauge data is only presented for the end drop and the side drop since the loads developed in those tests are the most severe from an overall structural consideration. The end drop corresponds to the maximum axial loading condition, while the side drop developed the maximum lateral loading on the overall cask body. The puncture test involves larger strains, but only on a localized area at the point of impact. The amount of energy available for the puncture impact is one-ninth of the energy for the 30-foot drop, which limits the amount of the lateral load that can be generated.

2.10.8.6.1 Top End Drop Test

Impact Limiter Deformation Data

Essentially all deformation of the impact limiter occurred at the interface of the cask body outside diameter and the limiter inside diameter (Figure 2.10.8-11 and Figure 2.10.8-12). The cask body moved into the limiter shearing and crushing the aluminum honeycomb at the 7.2-inch diameter to an average depth of 1.2 inches. There was some slight variation of the crush depth around the perimeter of the cask body. This is confirmed by the slight tilt of the cask body after the impact as shown in Figure 2.10.8-10. There was some hoop expansion of the top limiter near the surface of impact, but it was minimal since the limiter shell did not show any signs of tearing Figure 2.10.8-12). The 1.2-inch crush corresponded to an overall crush strain of 33 percent. The soft pad of the 1200 psi crush strength material compressed completely and became solid as expected, since it is designed for the 1-foot drop (Note that the soft pad was changed to 250 psi material since the tests showed that the soft pad is backed up by the harder impact limiter material over its entire diameter). It was also observed that the attachment lugs for the limiter failed; however, once the limiter is engaged in the crushing action, the lugs do not provide additional functionality in the end drop condition.

Strain Gauge Data

Strain gauge time histories for the end drop at the midpoint locations are shown in Figure 2.10.8-33 through Figure 2.10.8-35. The corresponding location on the circumference is shown in Figure 2.10.8-32. The maximum axial strain observed in the test was 560 microstrains. This value is approximately 25 percent larger than the maximums (450 microstrains) recorded on the other two channels, indicating some amount of unequal loading due to variation of the axial stress wave propagation in the cask body. Because of the orientation of the gauges, a positive value in the graphs is associated with a compressive strain. This was as expected. By using elastic properties for the cask body from NUREG/CR-0481, the corresponding axial stress is E (modulus of elasticity) times the strain value, which gives:

$$\sigma = \left(28.3 \times 10^{3}\right)\left(560 \times 10^{-6}\right)$$

$$= 15.8 \text{ ksi} << \text{yield strength.}$$

Test Observations

As the limiter was driven onto the cask, the test valve used to pressurize the interior was broken off, which prevented the pressure from being measured after the test. A new valve was installed and the cavity was pressurized to 30 psig and was maintained to determine if the cask containment boundary was damaged. There was no measurable pressure loss. The loss of this valve has no implications for the full-scale cask, since the full-scale version does not have this valve.

2.10.8.6.2 Top Corner Drop Test

Impact Limiter Deformation

The corner drop did not produce any significant rotation of the cask about the surface of impact as observed in the high speed photography and by the final upright position of the cask. The final position of the cask after the drop is shown in Figure 2.10.8-15. The crushing of the limiter occurred as in the end drop. The shearing at the outer diameter of the cask is supported by Figure 2.10.8-16. The amount of crush and the distribution of the crush are shown as follows.

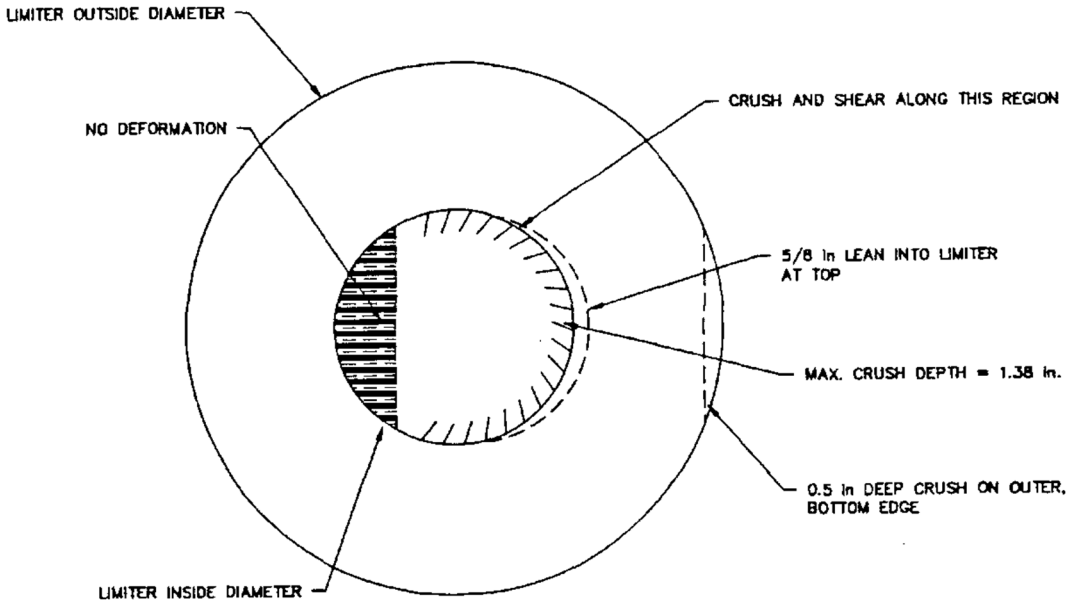

Limiter Deformation for the Top Corner Drop

The maximum amount of crush was determined to be 1.38 inches, which is a strain of 38 percent. It was also observed that the attachment lugs for the limiter failed; however, once the limiter is engaged in the crushing action, the lugs do not provide additional functionality in the corner drop condition.

Test Observations

During the impact event, the coupling connected to the valve used to pressurize the interior was loosened, which prevented the pressure from being measured after the test. The coupling was tightened and the cavity was pressurized to 29.2 psig and was maintained to determine if the cask containment boundary was damaged. There was no measurable pressure loss.

Tethers were attached to the cask to prevent a tip-over after the impact event. In observing the photographic results, the tethers also responded to the fall by vibrating in an oscillatory manner. This additional oscillating load allowed the cask to incur a secondary impact, which would not occur for an untethered cask with an impact limiter attached over each end.

2.10.8.6.3 Side Drop Test

Impact Limiter Deformation

Limiters in the side drop condition were crushed only in regions that are backed by the cask body. The amount of crush and the variation of the crush for the top and bottom limiters for the side drop are described as follows.

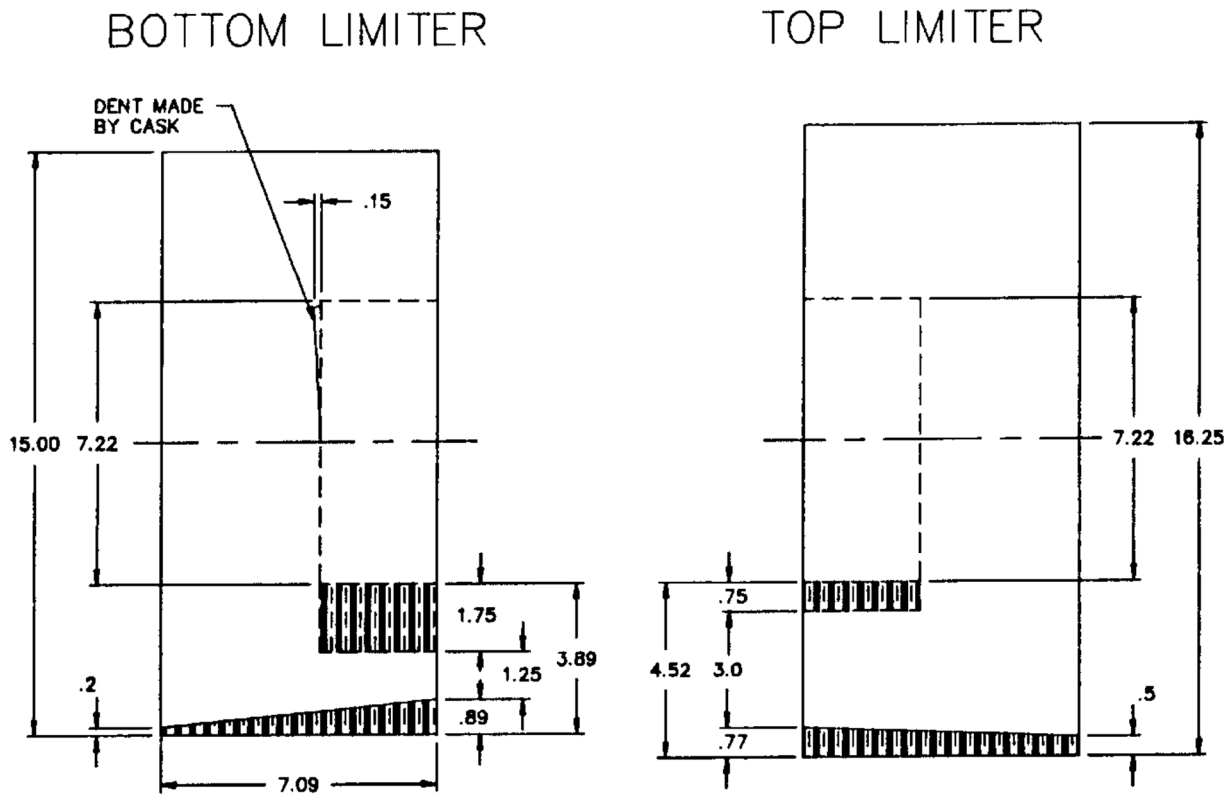

ALL DIMENSIONS ARE IN INCHES
Limiter Deformation for the Side Drop

The uniform crushed surface of the limiters resulting from the side drop can be seen in Figure 2.10.8-19, Figure 2.10.8-20 and Figure 2.10.8-21. Note that the surface is uniform in both the axial direction and the lateral direction. The maximum strain for the side drop was 68 percent for the bottom limiter and 34 percent for the top limiter. The average strains under the backed areas were 30 percent for the top limiter and 59 percent for the bottom limiter. The larger strains correspond to the bottom limiter, since it was significantly smaller than the top limiter.

As shown in the previous sketch, both limiters showed evidence of a small rotation relative to the cask (Figure 2.10.8-17). This accounts for the greater deformation of the circumferential surface along the inner face of the impact limiter and the smaller compression on the outer diameter of the cask. The limiter shell also experienced large deformations that had no effect on the limiter performance.

Strain Gauge Data

Strain gauge time histories for the side drop at the midpoint locations are shown in Figure 2.10.8-36 through Figure 2.10.8-38. The corresponding locations on the circumference are shown in Figure 2.10.8-32. The maximum axial strain observed in the test was 2500 microstrains, which also resulted in a permanent set of 750 microstrains. Due to the manner in which the cask is loaded, the maximum strains occurred at the midpoint. The strains from channels 4 and 5 can be used to estimate the maximum stresses and strains in the side drop test.

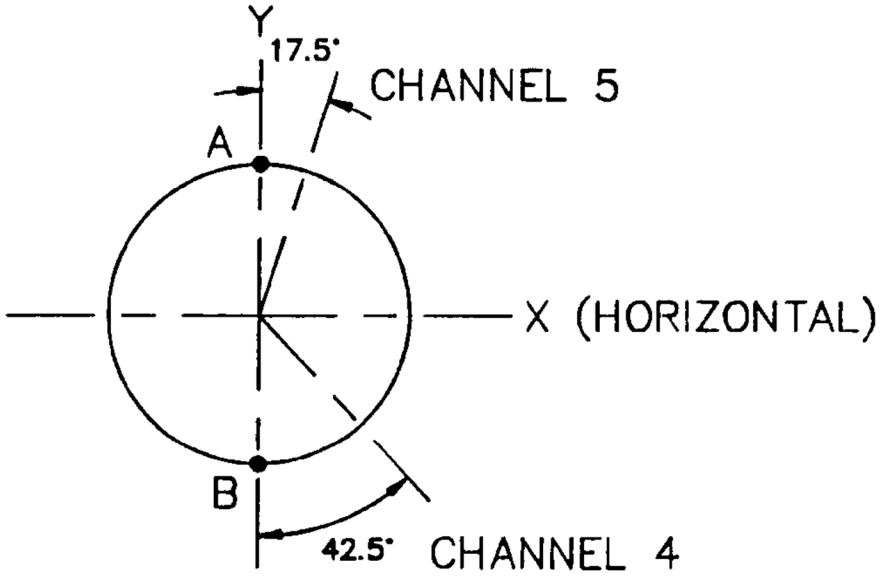

Definition of Channel Orientation for the Side Drop

The maximum strains are expected to occur at points A and B as shown above. Assuming that the cask cross-section remains plane, the values for the maximum strain and plastic strain at

locations A and B can be obtained by factoring the test data by 1/cos(17.5°) and 1/cos(42.5°), respectively.

To estimate the σy and σmax, the stress strain curve for Type 304 stainless steel is required. The static values for Type 304 stainless steel were extracted from NUREG/CR-0481 as:

E = 28.3 x 103 ksi (75°)

E_T = 370 ksi

This assumes that the stress strain curve takes the form shown as follows.

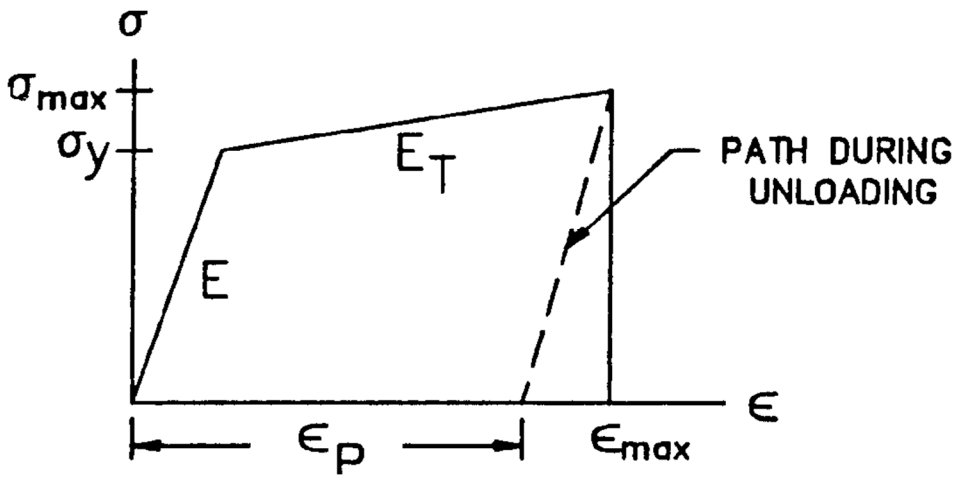

Typical Stress Strain Curve for Type 304 Stainless Steel

The plastic strain recorded from the strain gauge corresponds to εp. The relations for the stress and strain can be written as:

$$\varepsilon_{max} = \frac{\sigma_y}{E} + \varepsilon_p \qquad (1)$$

$$\sigma_{max} = \sigma_y + E_T\left(\varepsilon_p\right) \qquad (2)$$

By equation (1)

$$\sigma_y = \left(\varepsilon_{max} - \varepsilon_p\right)E \qquad (3)$$

The calculated maximum strains from the strain gauge data are as follows.

	Strain Gauge		Extrapolated			
	ε_{max}	ε_p	ε_{max}	ε_p	σ_Y	σ_{max}
Channel	(microstrain)		(microstrain)		(ksi)	(ksi)
4	2200	1000	2984	1356	46.1	46.6
5	2500	750	2621	786	51.9	52.2

Test Observations

In reviewing the high speed photographic results, the side drop actually represents a drop angle that is the most conducive to the slapdown effect. The drop is actually estimated to be 80 degrees rather than 90 degrees. The pressure in the cask was checked prior to the test and afterwards. It was found to be 30.4 psig. This indicates that pressure containment was maintained during the impact.

2.10.8.6.4 Bottom Oblique Drop Test

Impact Limiter Deformation

In the 60-degree oblique drop test, the bottom impact limiter is initially crushed at the corner as shown below. During the deceleration, the cask body also initiates crushing at the inner surface of the limiter. The upper limiter results in a pattern similar to the side drop in which crushing occurs at both the inner surface of the limiter and at the plane of impact. The maximum crush strains for the bottom and top limiters were 60.7 percent and 45 percent, respectively. The strain direction for the 60.7 percent strain is shown as follows.

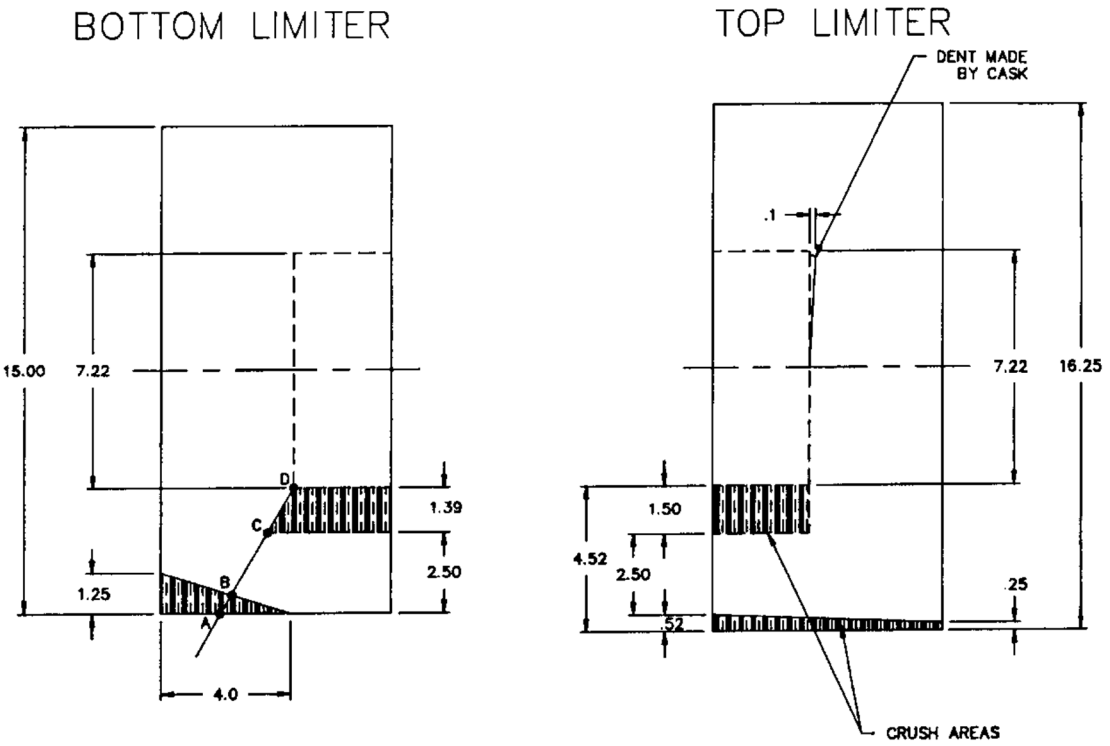

ALL DIMENSIONS ARE IN INCHES
Limiter Deformation for Oblique (60°) Drop

The following equation was used to determine the crush strain for the impact limiter as shown.

$$\text{Crush strain} + \frac{AB + CD}{AD} = 60.7 \text{ percent}$$

where:

CD = 1.39/cos(30) = 1.605 inches

AD = (1.39 + 2.50)/cos(30) = 4.492 inches

AB - AD[sin(30)][sin(30)] = 1.123 inches

Test Observations

The pressure measurement indicated that the cavity pressure did not change as a result of the oblique drop test. Cavity pressure was measured to be 30.2 psig before and after the test.

2.10.8.6.5 One-Meter Puncture Test

As a result of dropping the cask body onto the steel pin, the containment of the cask body was not violated. This was confirmed by the pressure measurements before and after the test. All permanent strain was local to the region of impact of the pin. The resulting shape of the pin impact is shown in Figure 2.10.8-30 and Figure 2.10.8-31. The maximum deformation of the outer shell was 0.5 inch deep and a localized depression of 0.05 inch occurred in the inner shell. Note that the pin puncture impact was directed against the portion of the outer shell that was stressed most severely in the 30-foot drop tests to show that the outer shell retained its puncture capability after the dynamic stress of the 30-foot fall impact.

2.10.8.7 Metrology Results

Prior to the drop tests, the NAC-LWT cask was submitted to the ORNL Plant and Equipment Division to obtain metrology data that would be compared after completion of the drop tests. The cask model was placed on a certified flat surface. The inner diameter was measured in a vertical direction and in a horizontal direction at seven locations starting at the front of the cask cavity and proceeding to the rear of the cavity. The casks' outer diameter measurements were taken at three different locations starting just inside the circumferential welds at either end and in the middle. In addition, external longitudinal measurements were made starting at the open end of the cask and ending at the back end of the external blocks used to simulate the weight of the neutron shield. These measurements, taken before the tests, are given in inches and are shown in Table 2.10.8-2 through Table 2.10.8-4. The same measurements were taken after the last drop test was completed. These values are given in Table 2.10.8-5 through Table 2.10.8-7.

Changes to the inner diameter as a result of the four 30-foot drops onto a solid surface and one 1-meter drop onto a punch can be determined by comparing Table 2.10.8-2 and Table 2.10.8-5. The changes are very small, less than about 0.005 inch at every measured location except in the

cask middle. At the midpoint, some 26 inches from the closure, the changes to the vertical and horizontal diameters were -0.0568 inch and +0.0490 inch, respectively, due to the action of the punch in the 1-meter puncture drop. The change in vertical diameter measurement is equivalent to less than a quarter inch on the full-scale cask.

Changes to the outer diameter measurements as a result of the tests can be determined by comparing Table 2.10.8-3 and Table 2.10.8-6. As before, these dimensions changed little, less than about 0.006 inch at every measured location except in the cask middle. At the midpoint, the vertical change was approximately -0.5 inch, equivalent to 2 inches in a full-scale cask. The change in the horizontal diameter at that location was +0.02 inch, equivalent to less than 0.1 inch in a full-scale cask. These changes were again due to the action of the punch on the outer cask shell in the 1-meter puncture drop.

Changes to the cask length measurements as a result of the tests can be determined by comparing Table 2.10.8-4 and Table 2.10.8-7. With the exception of two data points, all after-drop measurements were within 0.031 (1/32) inch of the beginning data points. This is less than a quarter inch deviation on the full-scale cask. The two exceptions include a 0.14 inch change in length measured at the 180-degree point on the first block set, and at the 270 degree point on the second block set. These exceptions are attributed to error in replicating the exact measuring locations as opposed to a real change in length, since other measurements, even at that block set, showed little or no change.

2.10.8.8 Discussion of Test Results

As previously noted, pre- and post-test measurements showed that nearly all permanent deformation of the packaging model was limited to the impact limiters. The only significant exception to this occurred for the side puncture test, where local deformation of the outer shell and the lead shielding did occur, but the outer shell was not punctured. The local deformation was as expected and produced only a very slight, local dimple in the inner shell wall (0.05 inch).

Before each test, the model closure lid was installed with a new O-ring and with a bolt torque of 44 inch-pounds, which was calculated to produce a bolt tensile stress equal to one-half the yield strength of the bolt material (same as full-scale criteria). This bolt load exceeds the calculated maximum bolt load for the accident conditions. The model cavity was pressurized to 30 psig and held with a gauge reading verifying that leakage was not occurring. After each test, the leaktightness of the cavity was checked. For the side drop, the oblique drop, and the side puncture drop, the pressure gauge provided this verification; for the end drop and the corner drop, verification was provided by repressurizing the cavity and maintaining a gauge reading after repairing the external pressure test valve. The unprotected external pressure test valve was sheared off during the end drop as the model body moved into the upper impact limiter during

the impact. During the corner drop, the valve piping loosened due to shock loading. These occurrences are not a concern in the full-scale cask because the valve ports are protectively recessed in the upper ring forging, where containment is provided by double O-rings in the port covers. Thus, it is concluded that the structural adequacy of the containment vessel is confirmed.

The aluminum honeycomb materials of the model impact limiters were identical in all aspects to those of the full-scale cask. Since the crush area of the limiters and the stress area of the body of the model are reduced by the (scale factor)^2 = 1/16, the impact acceleration is 1/(scale factor) = 4 times that of the full-scale cask and the crush deformation is the (scale factor) = (1/4) times that of the full-scale cask. The measured crush deformations of the model limiters were essentially the same as the values scaled from the full-size impact limiter analyses of this report. Visual observation of the model impact limiter deformations confirmed that for every cask drop orientation, only the "backed" areas of the limiters are effective in absorbing the impact energy. This result supports the "backed" area principle established by previous testing programs and confirms the impact limiter analyses performed elsewhere in this report. As previously described, the model impact limiter attachment lugs were undersized and failed. The four 30-foot drop tests confirmed the analysis results for each cask orientation, which determined that the impact limiters will remain in position on the cask during the impact(s), whether or not there are attachment lugs present; the attachment lugs retain the impact limiters on the cask body until an impact occurs. Thus, it is concluded that the structural and functional adequacy of the NAC-LWT cask impact limiters is confirmed.

The report analyses were confirmed, as the cask body sustained a 30-foot drop test for each of the four drop orientations without incurring any measurable permanent deformation. Since the model did not include the neutron shield and expansion tank shells, the model is conservative. Additionally, the model inner and outer shells are Type 304 stainless steel (S_u = 75 ksi, S_y = 30 ksi), while the full-scale inner and outer shells are Type XM-19 stainless steel (S_u = 100 ksi, S_y = 55 ksi). Therefore, it is concluded that the structural adequacy of the NAC-LWT cask body is confirmed for the 30-foot Free Drop Hypothetical Accident Condition.

Based on visual observation of the model tests; i.e., the side drop and the 60-degree oblique drop, and inspection of the crushed region of the model limiters, no "slapdown"/rebound effects were apparent. This confirms the results of the "slapdown" evaluation analysis found in Section 2.10.4.

The side puncture test was performed last in the testing sequence because some local deformation of the outer shell was expected. Since an accurate, reliable analysis of the local puncture region of the cask body is very difficult, an empirical relationship based on testing of lead-backed shells was used to establish the outer shell thickness. The outer shell of the model cask body incurred significant permanent deformation in a very local region around the point of

impact during the side puncture test. As expected, the outer shell was not penetrated. Based on post-test measurements, a very slight, local deformation (0.05 inch) of the inner shell occurred at the midpoint. Since the full-scale cask will include a well-supported 0.25-inch thick neutron shield tank and the stronger, Type XM-19 stainless steel inner and outer shells, the deformation of the outer shell will be substantially reduced and the deformation of the inner shell will be eliminated. Furthermore, the isolation of the inner shell provided by the lead, as it diffuses the shock of a pin puncture, will be enhanced by the factor of four increase in lead thickness of the full-size cask. It is concluded that the side puncture test has confirmed the adequacy of the puncture protection of the NAC-LWT cask and the design criteria and methodology of this report.

In summary, the detailed results of the Quarter-Scale Model Drop Test Program for the NAC-LWT cask described in this appendix, confirm the analyses found elsewhere in this report and the structural adequacy of the cask design for the Free Drop and Puncture events specified by the Hypothetical Accident Conditions of 10 CFR 71.73.

2.10.8.9 Post-Test Revisions

As discussed in prior paragraphs of this appendix, the impact limiter attachment lugs and bolts (cask and limiter) failed during some of the 30-foot drop tests without any effect on the protection of the cask provided by the impact limiters. The attachment lug thickness on the quarter-scale model impact limiters was 0.062 inch (0.25/4). The actual thickness of the impact limiter attachment lugs on the model cask body was 0.037 inch due to a fabrication error (the lug thickness was designed to be 0.25/4 = 0.062 inch). The model limiter attachment bolts, No. 4-40 NC, were selected to have a cross-sectional area equal to one-fourth that of the full-scale bolts. After the initial drop test (30-foot end drop), the 0.037-inch thick limiter attachment lugs on the model cask body were replaced with 0.125-inch thick lugs and no subsequent failures of those lugs occurred during the ensuing drop tests. Thus, the full-scale impact limiter attachment lug design was revised to include 0.50-inch (0.125 x 4) thick lugs on both the cask body and the impact limiters along with 0.50-inch diameter attachment pins to alleviate concerns about their adequacy.

The purpose of the aluminum impact limiter shell is to provide a sealed container unit for the aluminum honeycomb energy absorbing material since the energy absorption capability of the shell is negligible; a 0.062-inch thickness was selected for the shell of the model impact limiters as the minimum thickness desirable for fabrication. Overlapped and epoxyed joints were used in the model impact limiters, since long-term sealing was not a concern. Because some of the model impact limiters split open at one or more joints during the crushing phase of some of the

drop tests, the full-scale impact limiter design was revised to include 0.125-inch thick aluminum shells with groove-welded joints all around (same as the NLI 1/2 cask.)

Examination of the model impact limiter following the 30-foot top end drop test showed that the 0.38-inch thick layer of lower strength (1,200 psi crush strength) unidirectional honeycomb located at the outer end of the impact limiter was crushed over the full diameter of the model impact limiter. This crushing resulted because the lower strength layer of honeycomb was effectively "backed" by the 3,500 psi crush strength multidirectional honeycomb, which makes up the remainder of the model impact limiter. The 3,500 psi crush strength honeycomb was not crushed over the full model impact limiter diameter; it only crushed over the diameter of the model cask body on the inside of the impact limiter directly under the model cask body. Thus, the calculated maximum design impact force for the 30-foot end drop is not affected by the crushing behavior of the lower strength layer of honeycomb, since that force was calculated based on the "backed" area of the cask body diameter. The purpose of the lower strength layer of honeycomb in the impact limiter is to control the g load applied to the cask during a 1-foot drop. Since the 1,200 psi crush strength of the lower strength honeycomb layer was designed based on the "backed" area of the cask body only, the design crush strength of that honeycomb layer was revised to 250 psi to account for the effective "backed" area of the full diameter of the impact limiter: average $P_{new} = (1200)(D^2_{body} / D^2_{Limiter}) = 250$ psi, where $D_{body} = 7.155$ inches and $D_{Limiter} = 16.25$ inches for the quarter-scale model upper limiter and $D_{Limiter} = 15.00$ inches for the quarter-scale model lower limiter. Thus, the design impact forces for the 1-foot end drops that are used in this report remain unchanged.

Figure 2.10.8-1 Drawing of Quarter-Scale Model

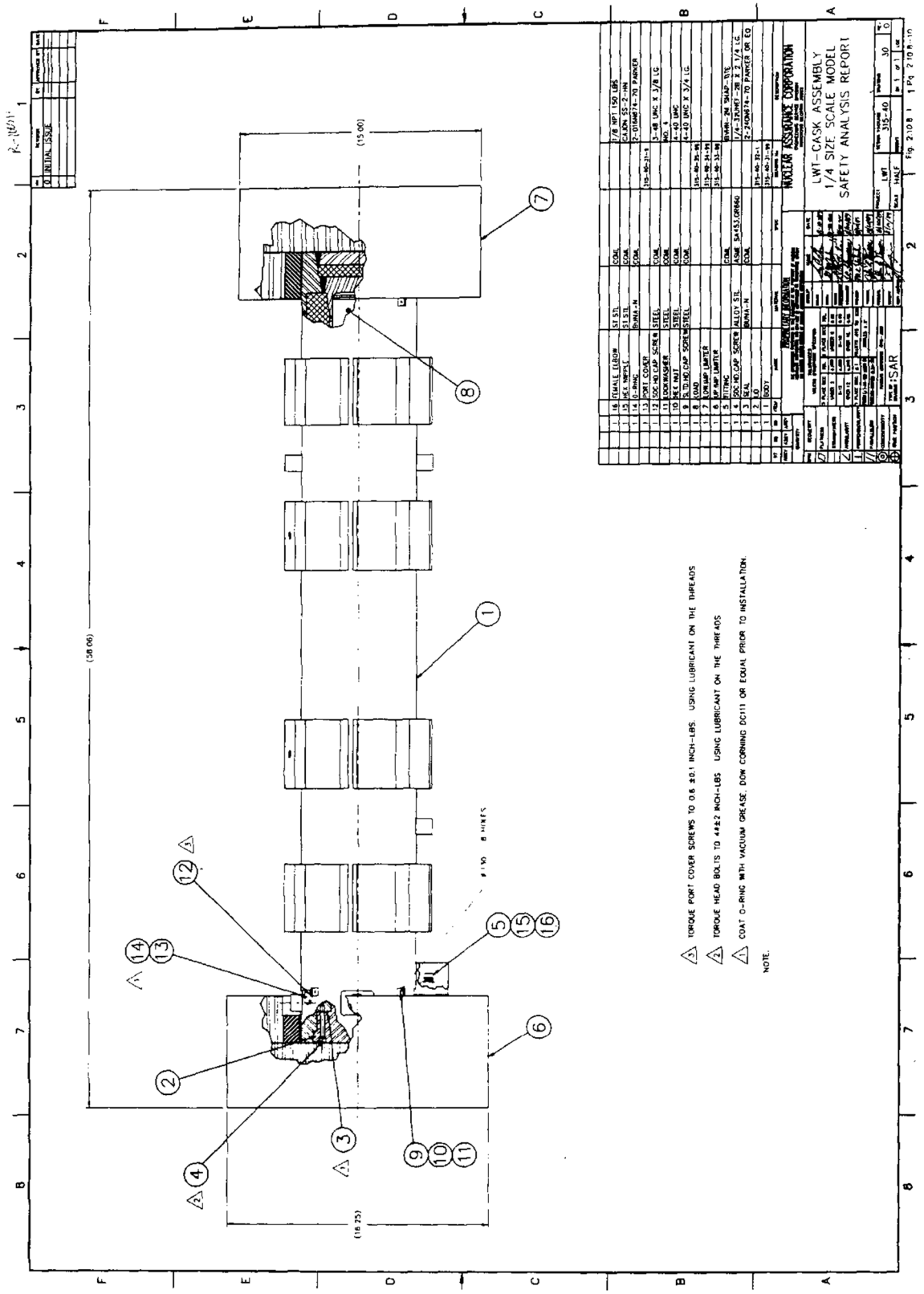

Figure 2.10.8-2 Drawing of Model Body

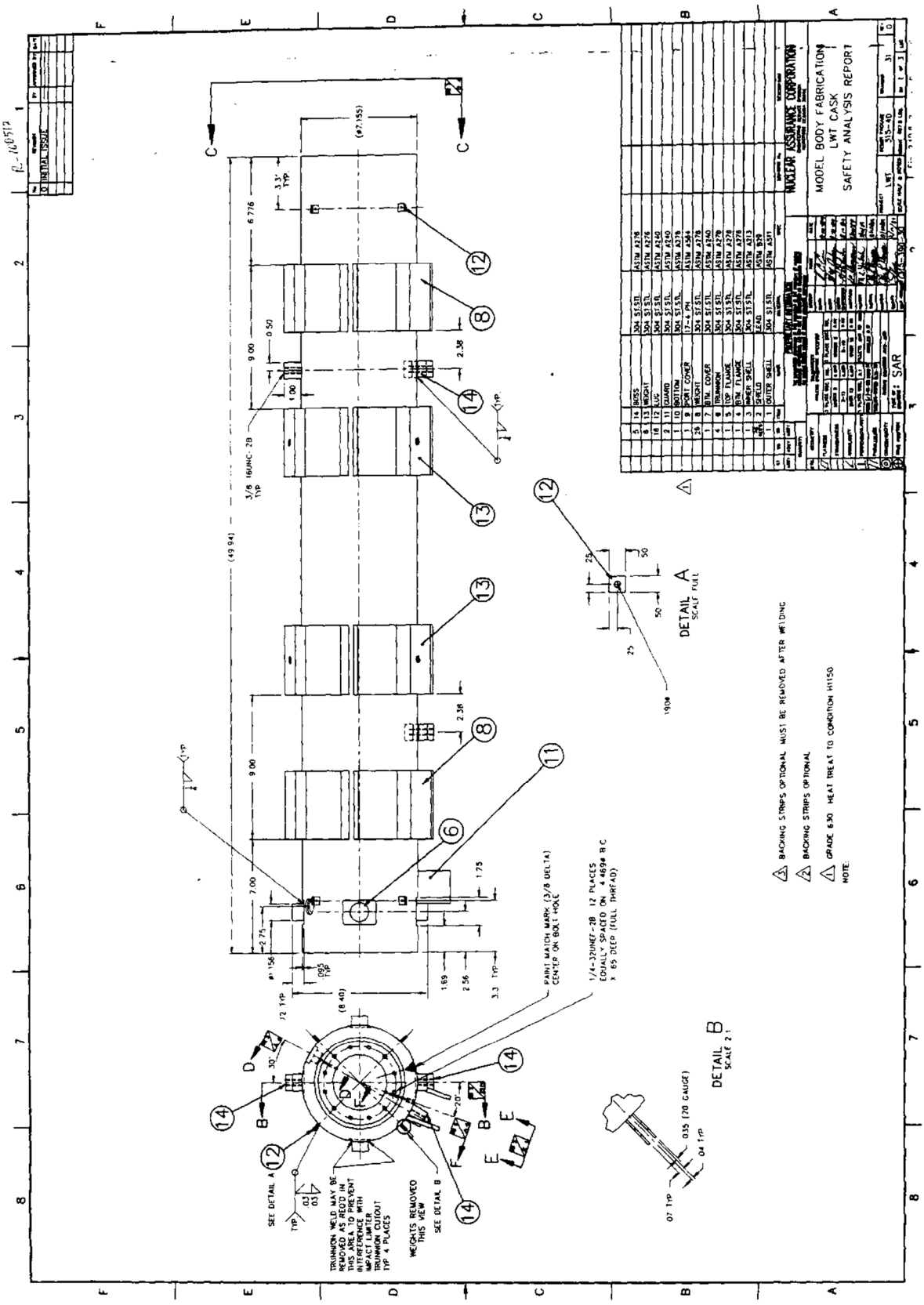

Figure 2.10.8-2 Drawing of Model Body(Continued)

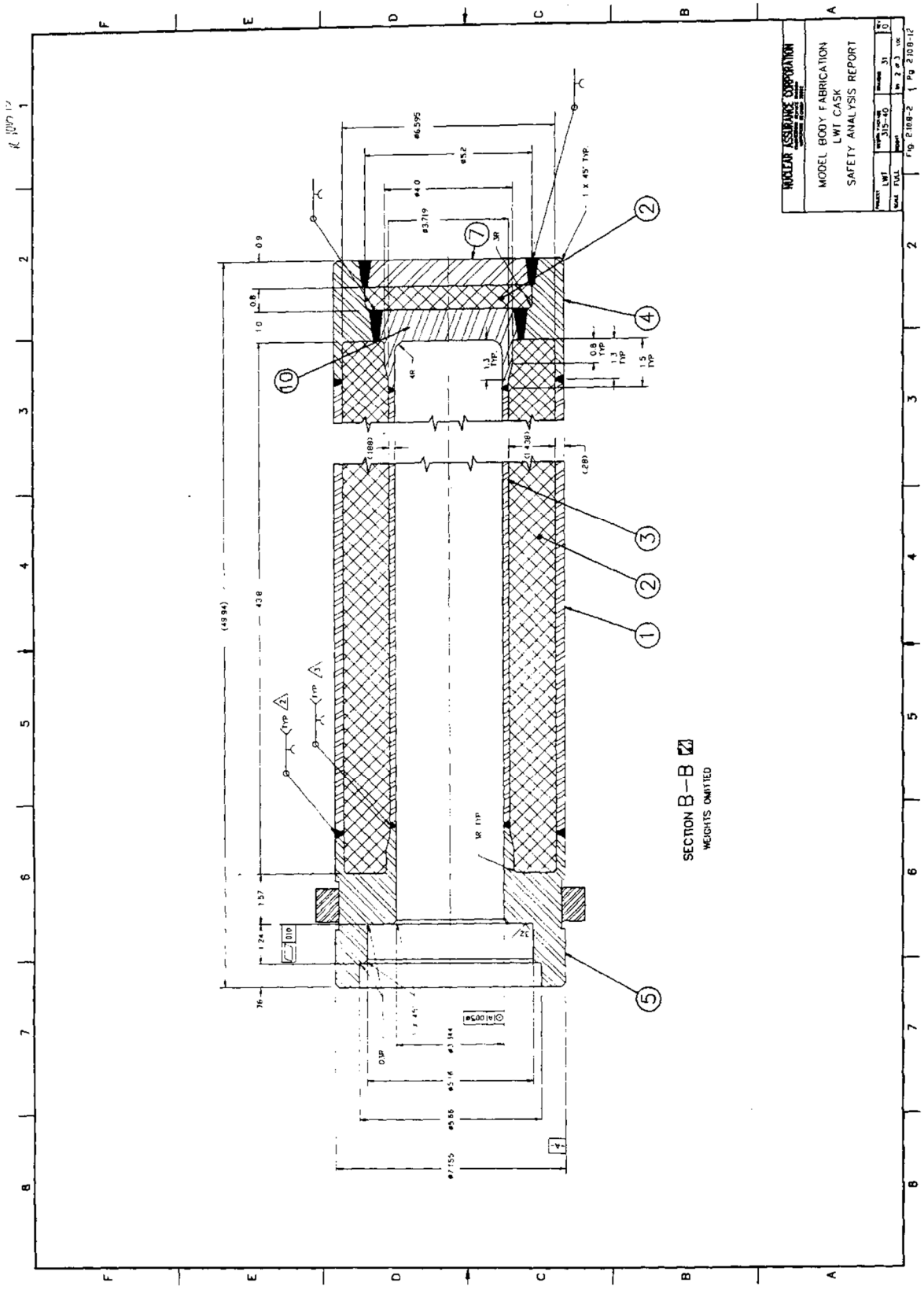

Figure 2.10.8-2 Drawing of Model Body (Continued)

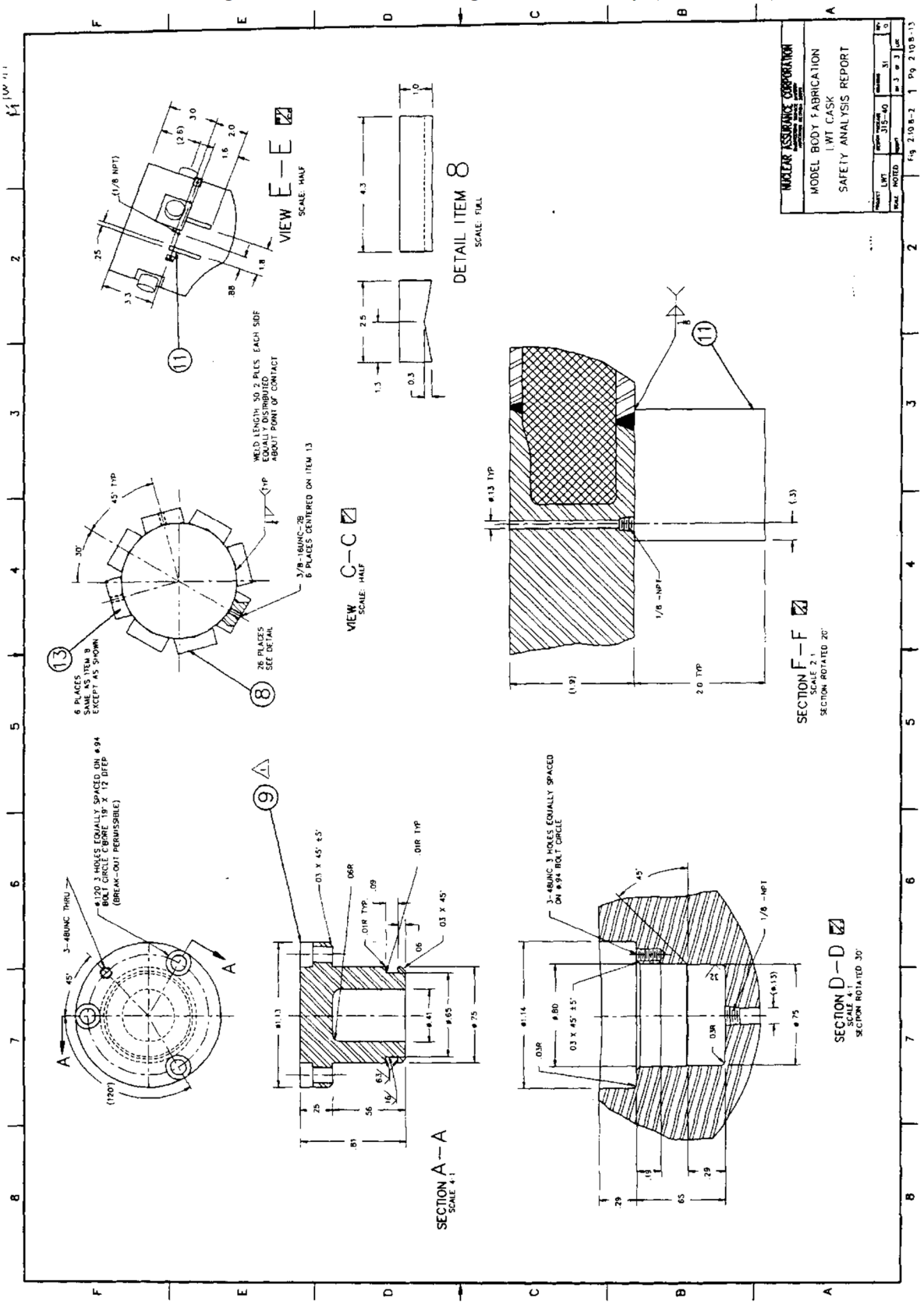

Figure 2.10.8-3 Drawing of Model Lid

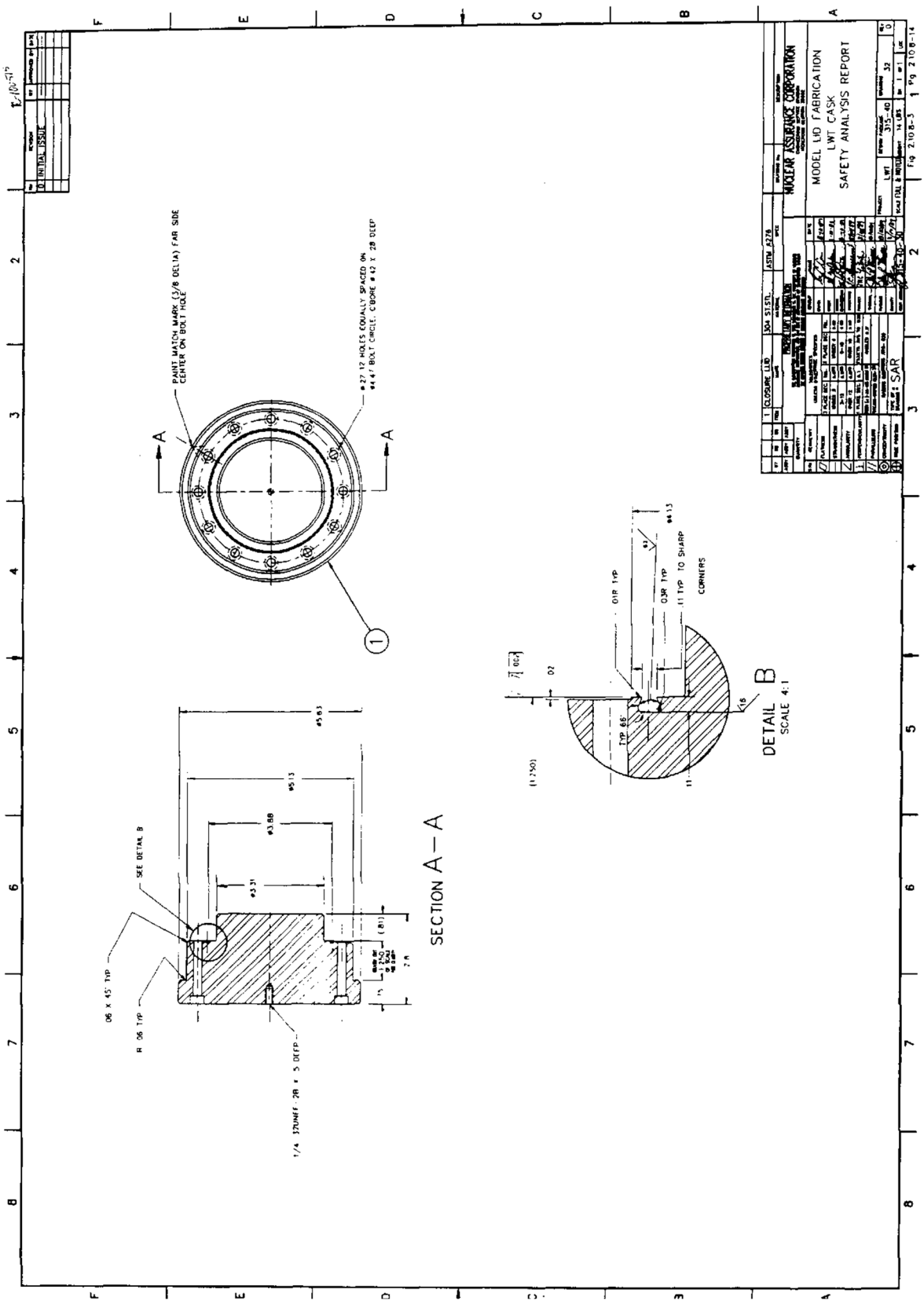

Figure 2.10.8-4 Drawing of Model Upper Impact Limiter

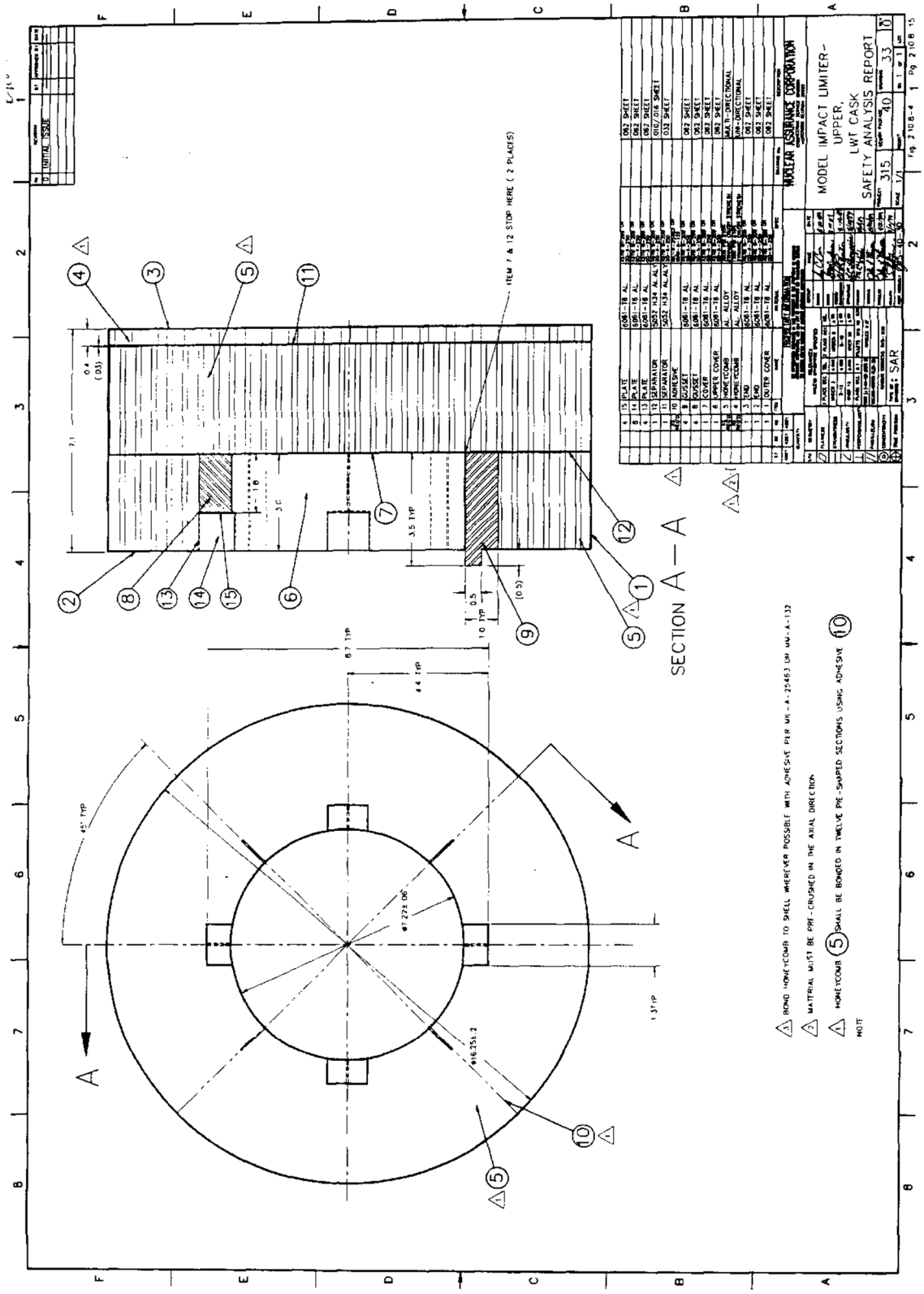

Figure 2.10.8-5 Drawing of Model Lower Impact Limiter

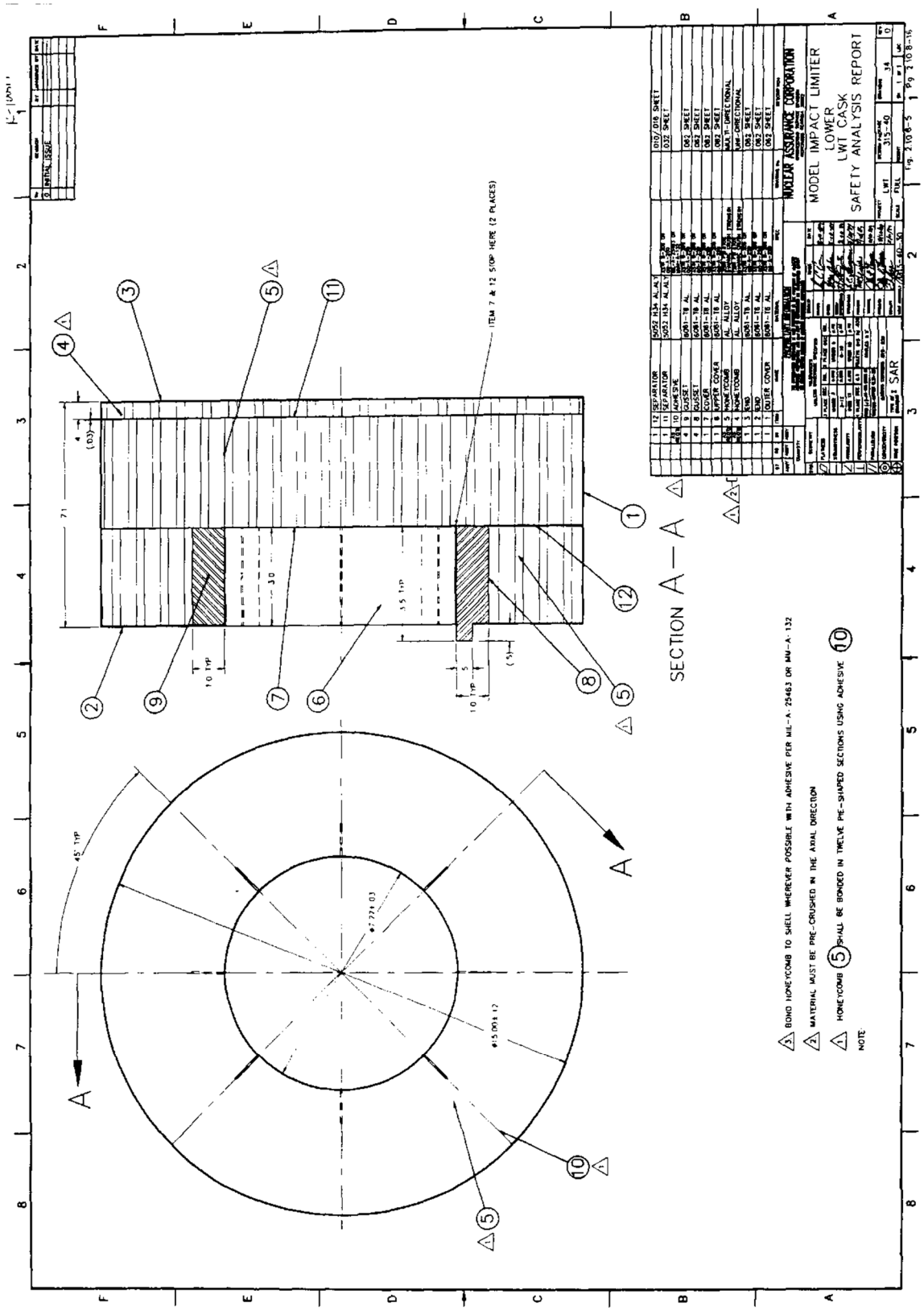

Figure 2.10.8-6 Drawing of Model Simulated Cask Contents

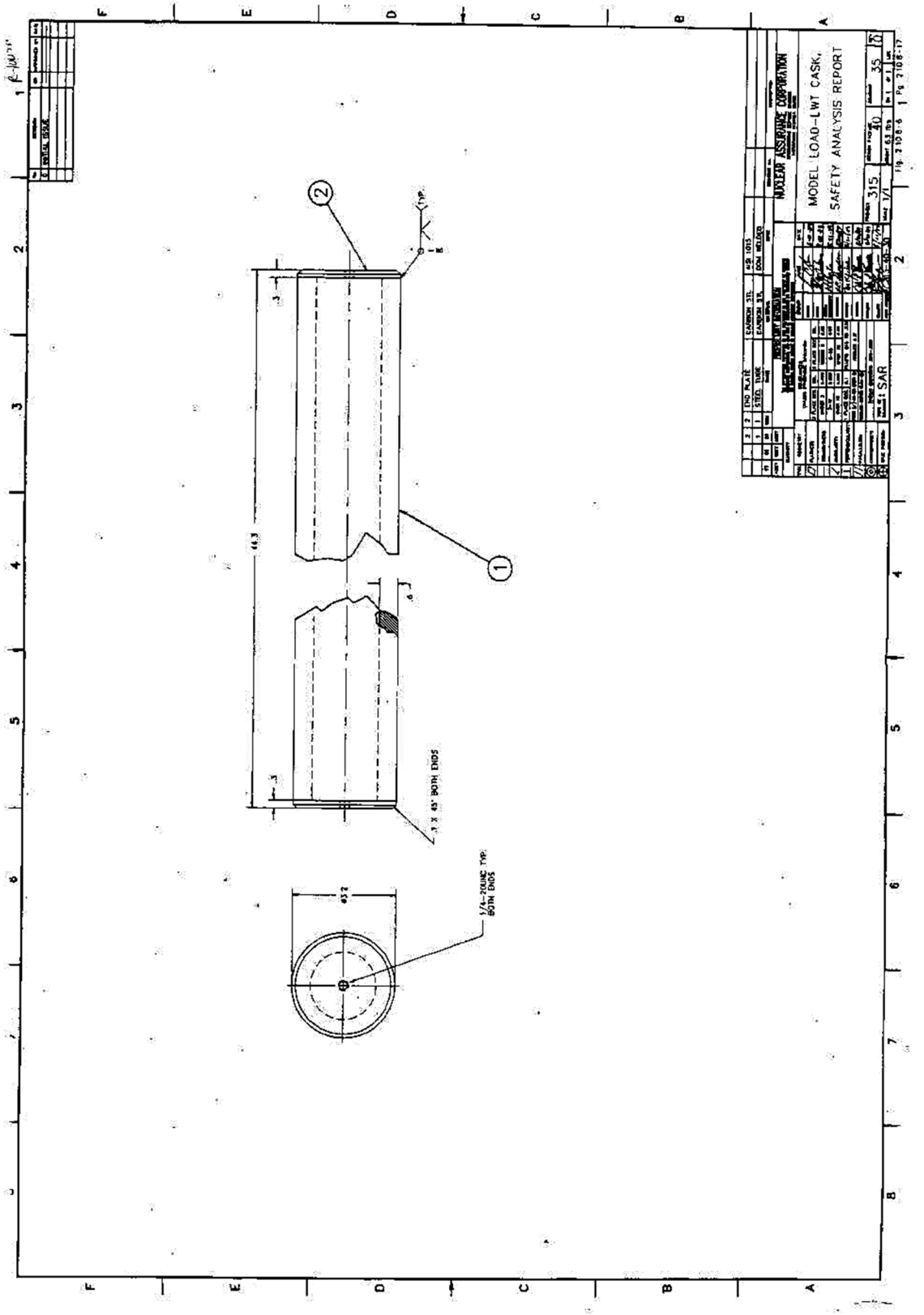

Figure 2.10.8-7 Quarter-Scale Model

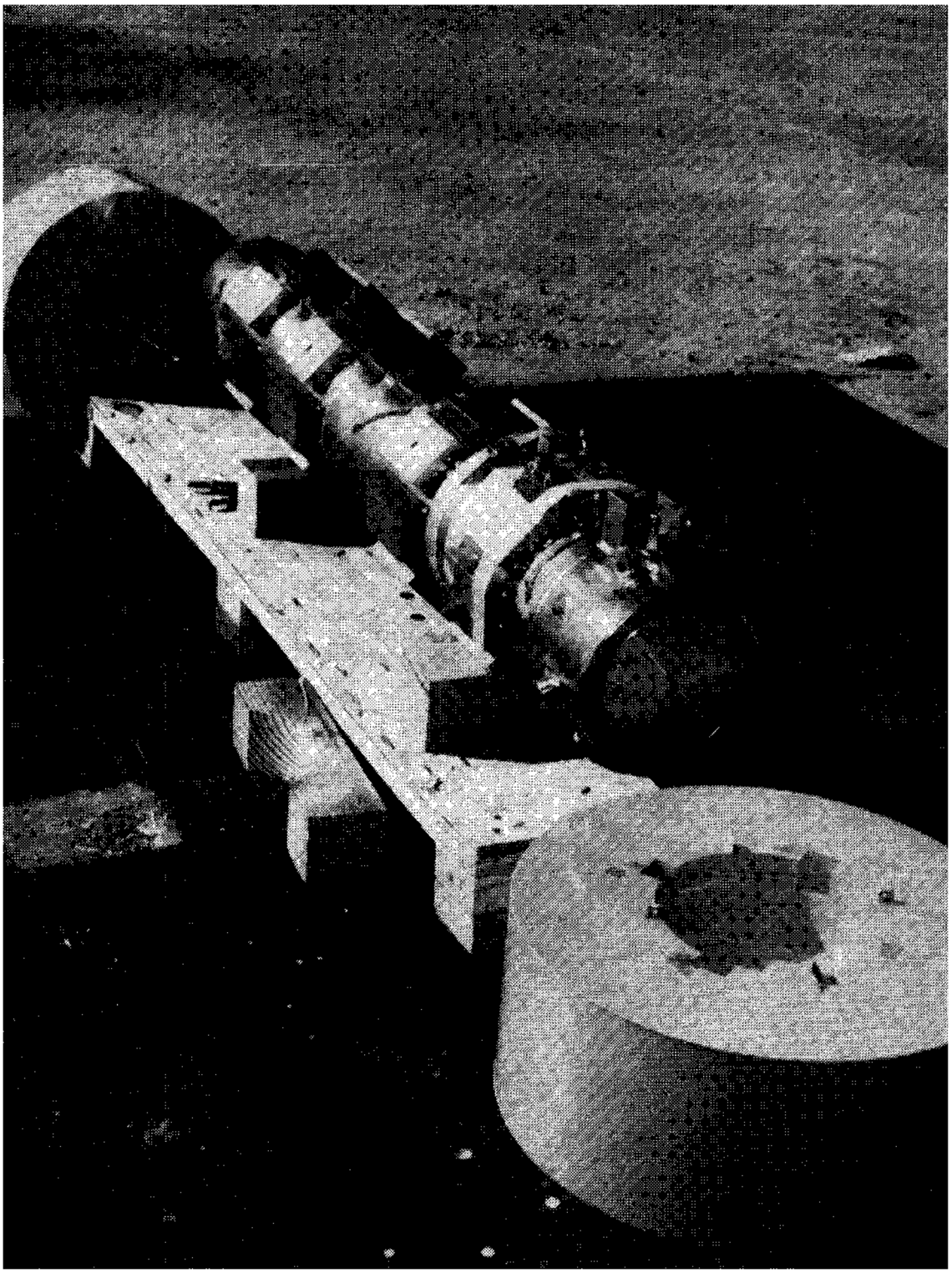

Figure 2.10.8-8 Model Rigged for 30-Foot End Drop



Figure 2.10.8-9 Model Positioned for 30-Foot End Drop



Figure 2.10.8-10 Model Position Following 30-Foot End Drop



Figure 2.10.8-11 Top End Impact Limiter Following 30-Foot End Drop

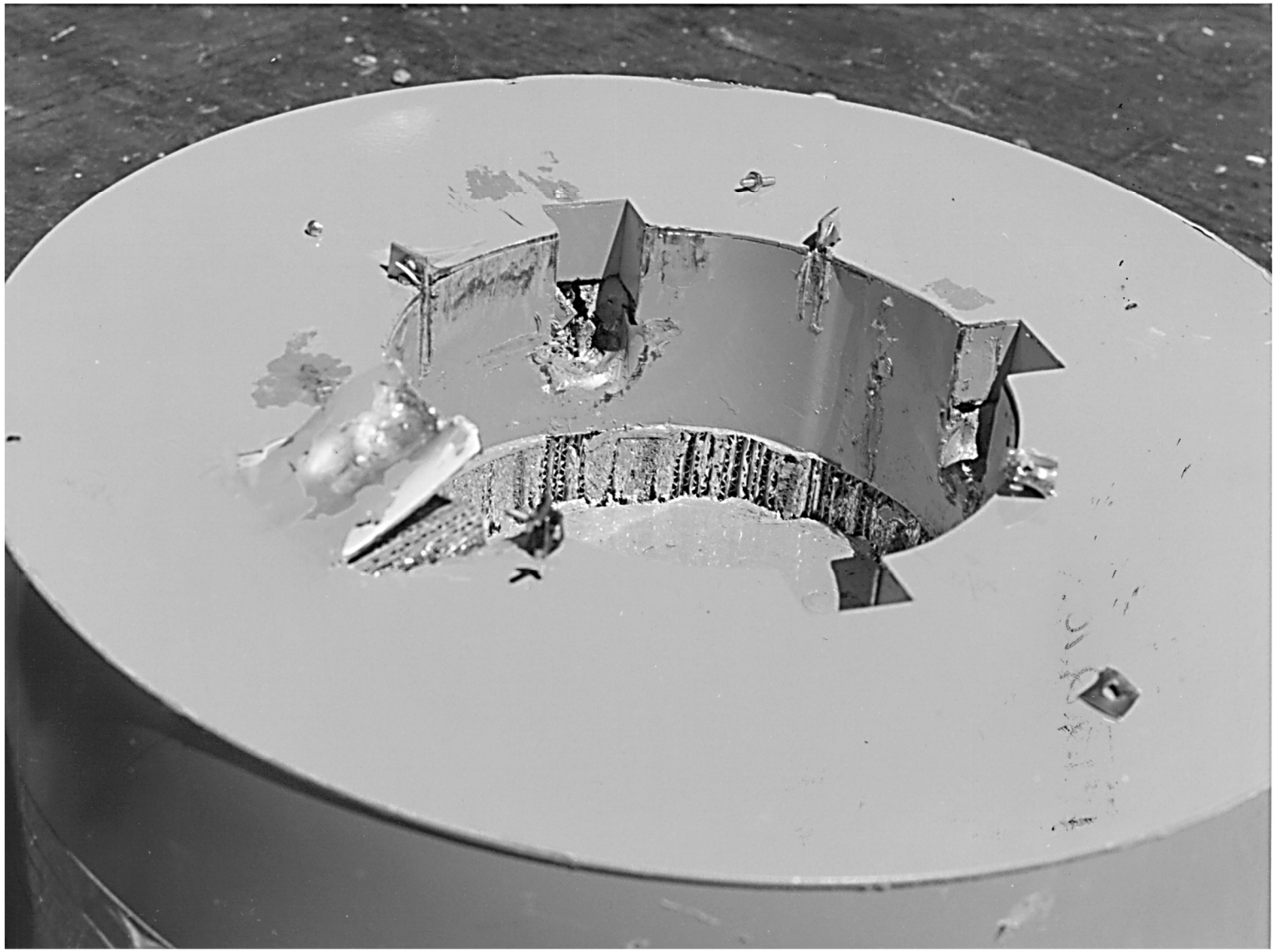

Figure 2.10.8-12 Exterior of Top Impact Limiter Following 30-Foot End Drop

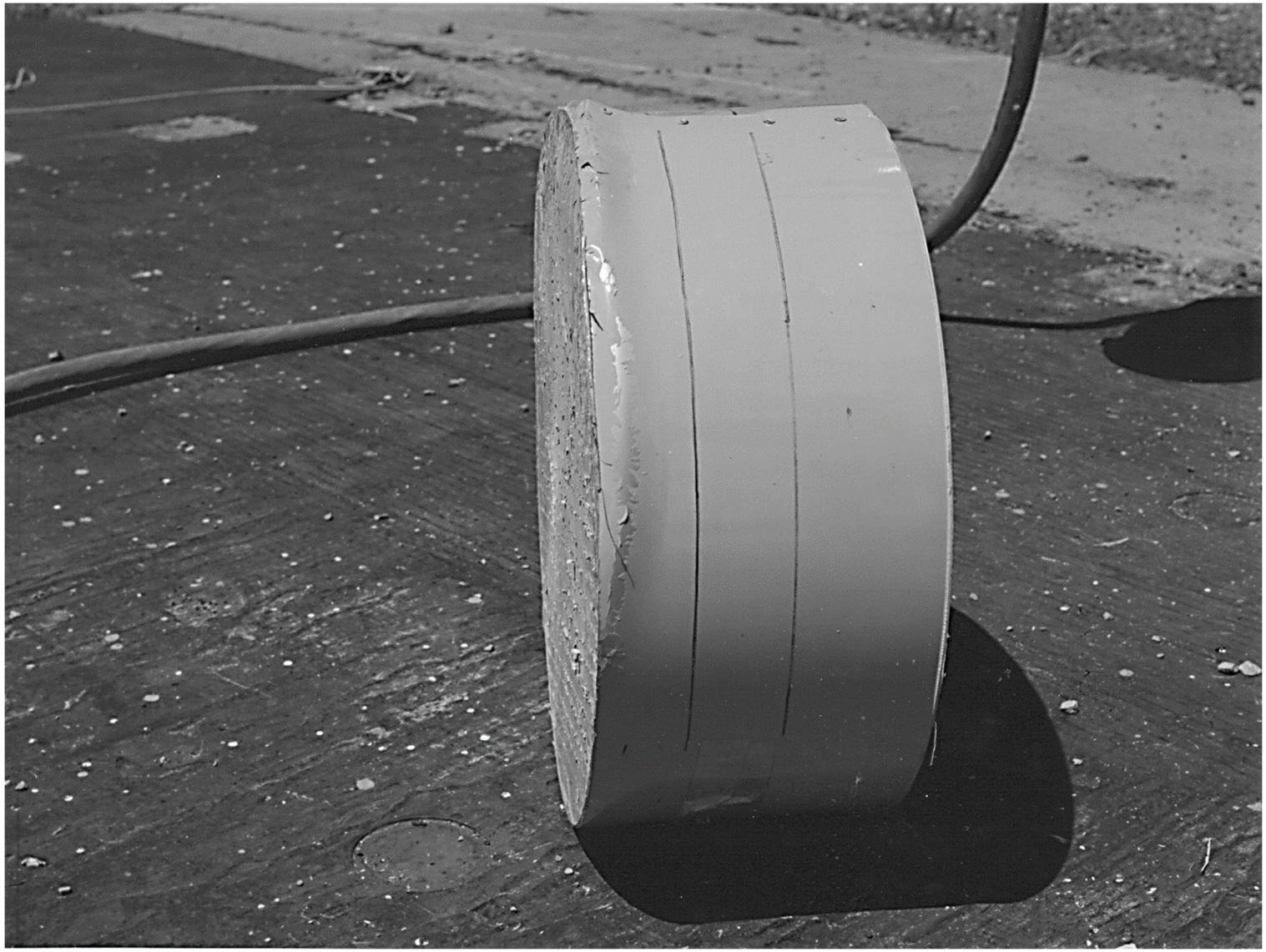

Figure 2.10.8-13 Model Rigged for 30-Foot Corner Drop



Figure 2.10.8-14 Model Positioned for 30-Foot Corner Drop



Figure 2.10.8-15 Model Following 30-Foot Corner Drop



Figure 2.10.8-16 Top Impact Limiter Following 30-Foot Corner Drop



Figure 2.10.8-17 Model Position Following 30-Foot Side Drop – View 1

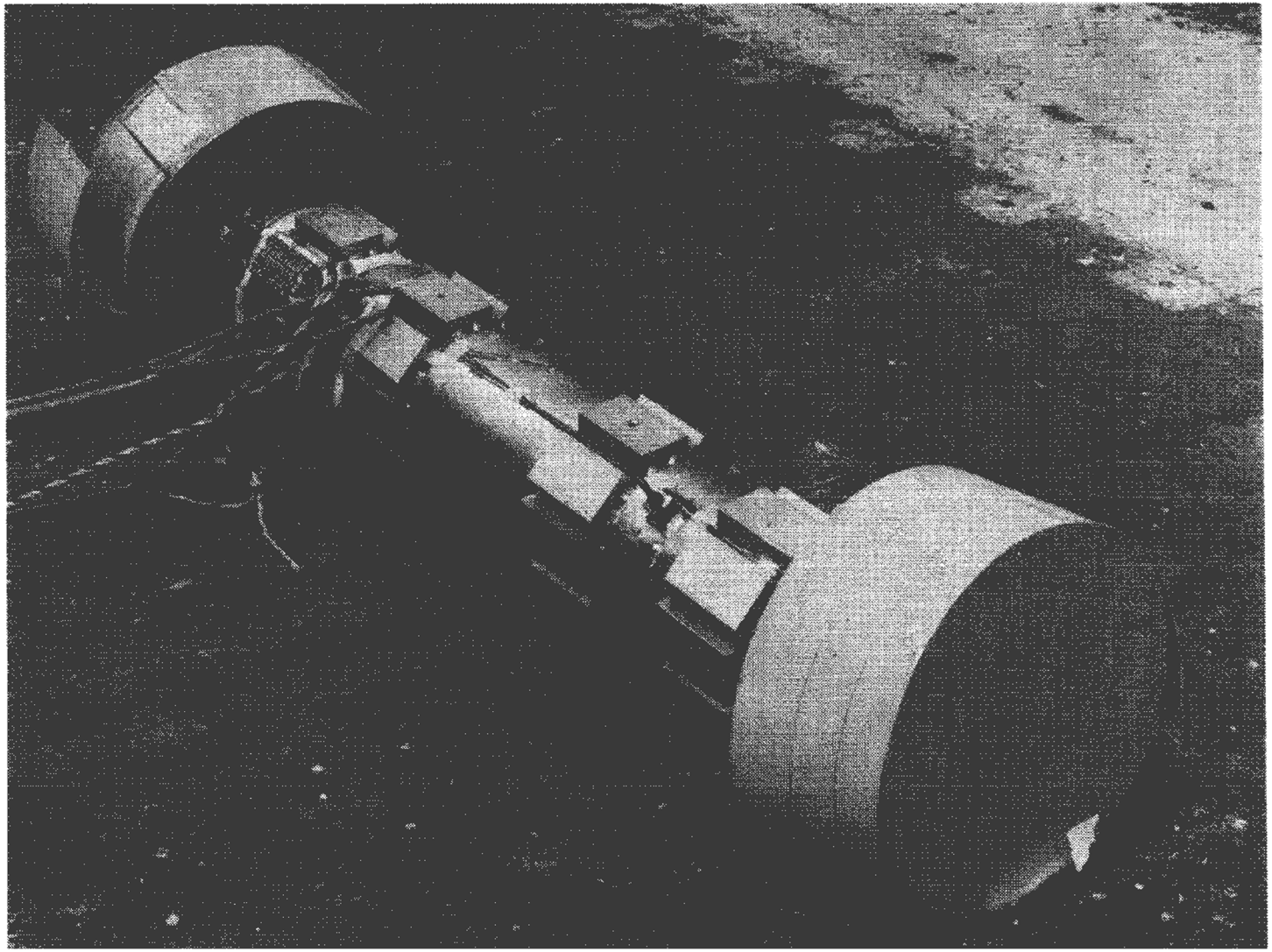

Figure 2.10.8-18 Model Position Following 30-Foot Side Drop – View 2

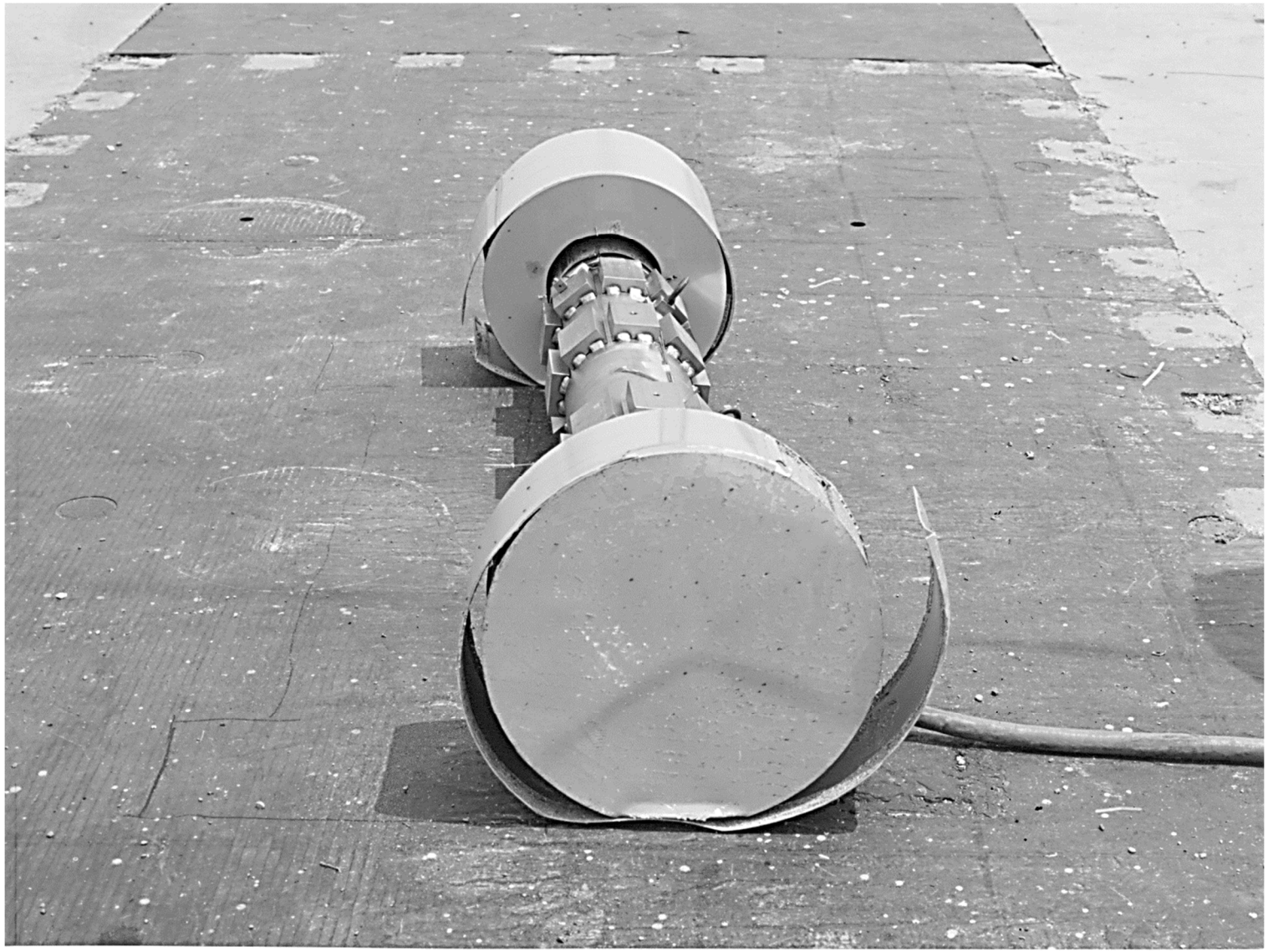

Figure 2.10.8-19 Top Impact Limiter Following 30-Foot Side Drop

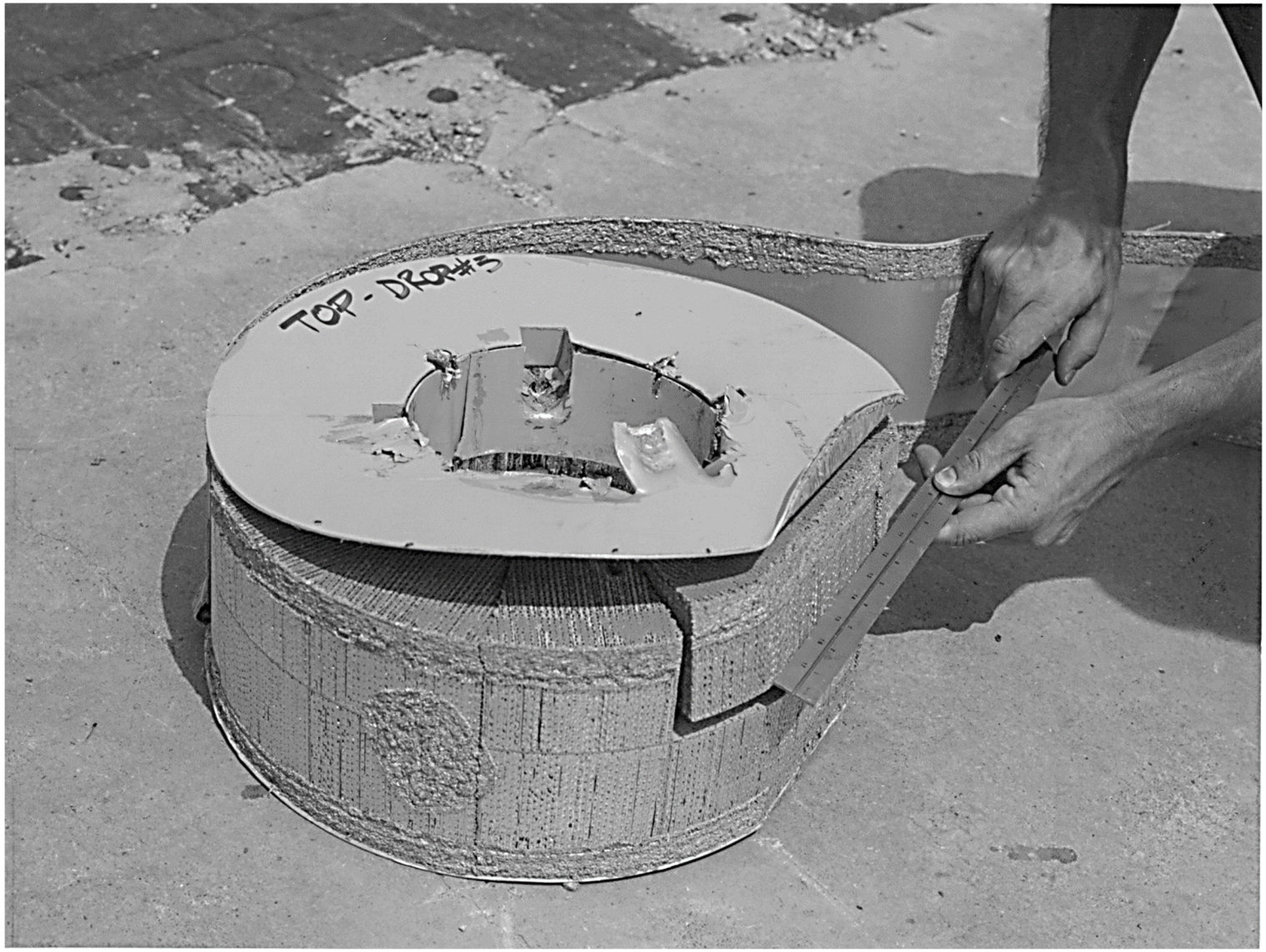

Figure 2.10.8-20 Bottom Impact Limiter Following 30-Foot Side Drop – View 1



Figure 2.10.8-21 Bottom Impact Limiter Following 30-Foot Side Drop – View 2

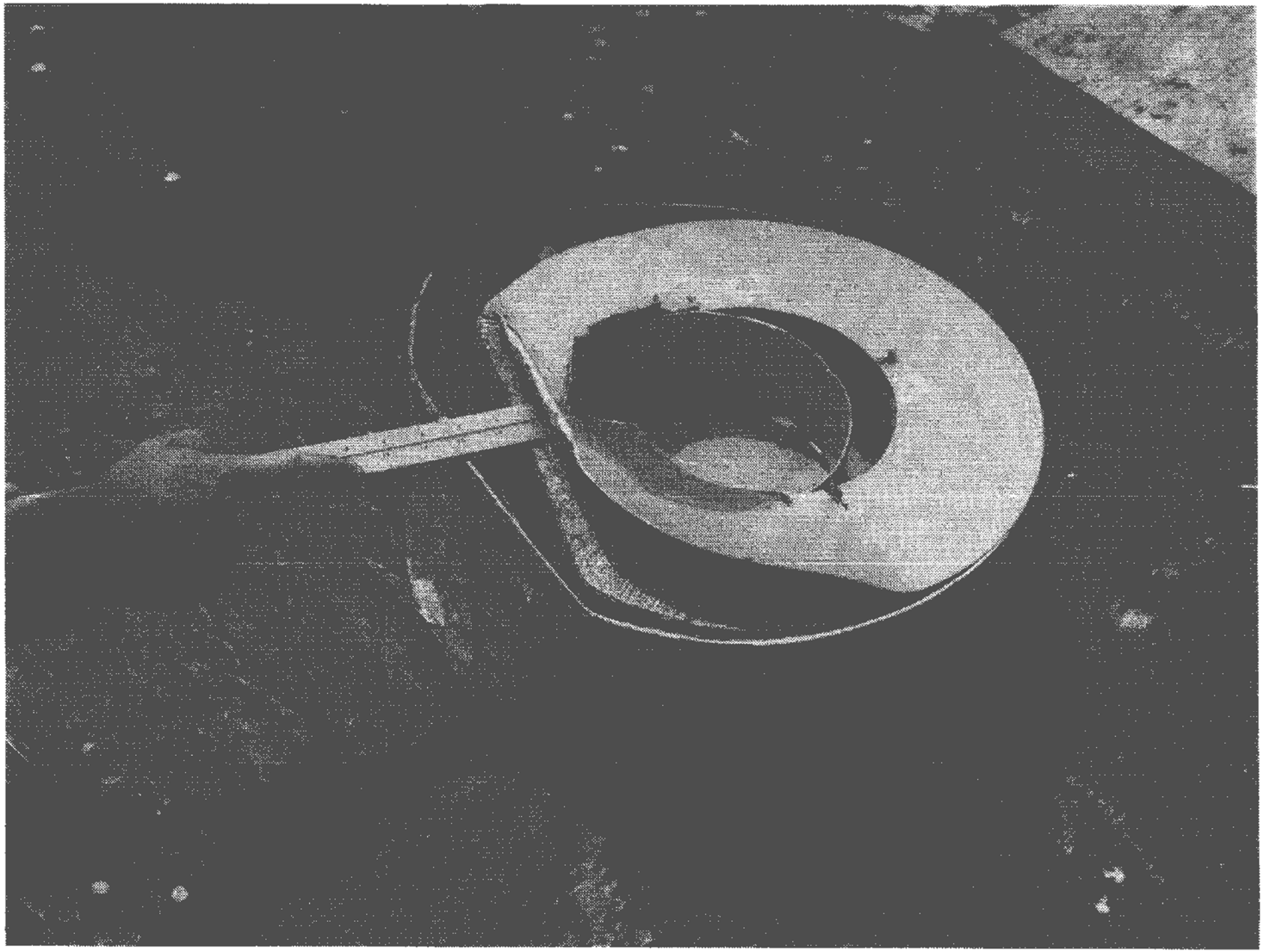

Figure 2.10.8-22 Model Rigged for 30-Foot Oblique Drop

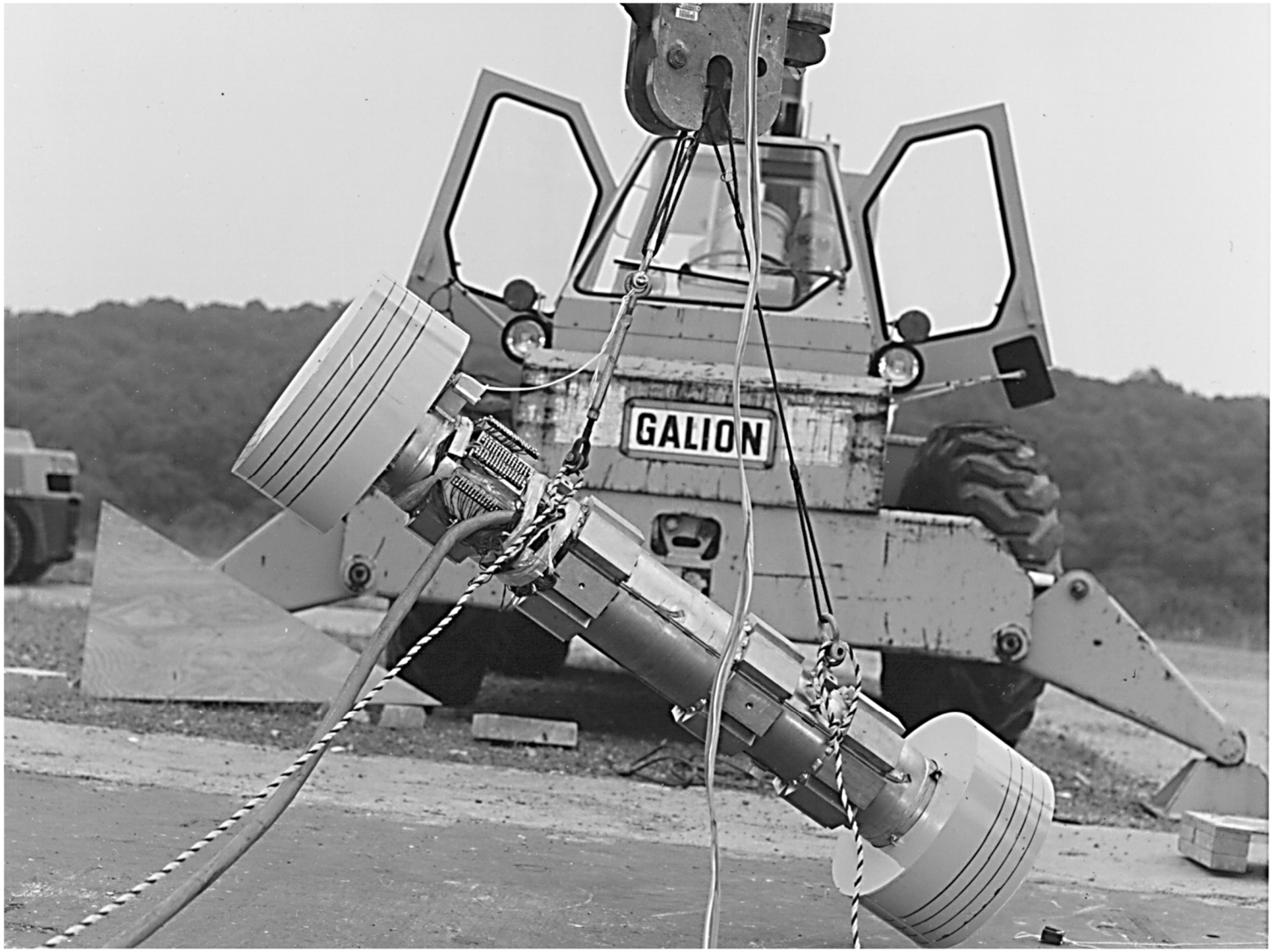

Figure 2.10.8-23 Model Positioned for 30-Foot Oblique Drop

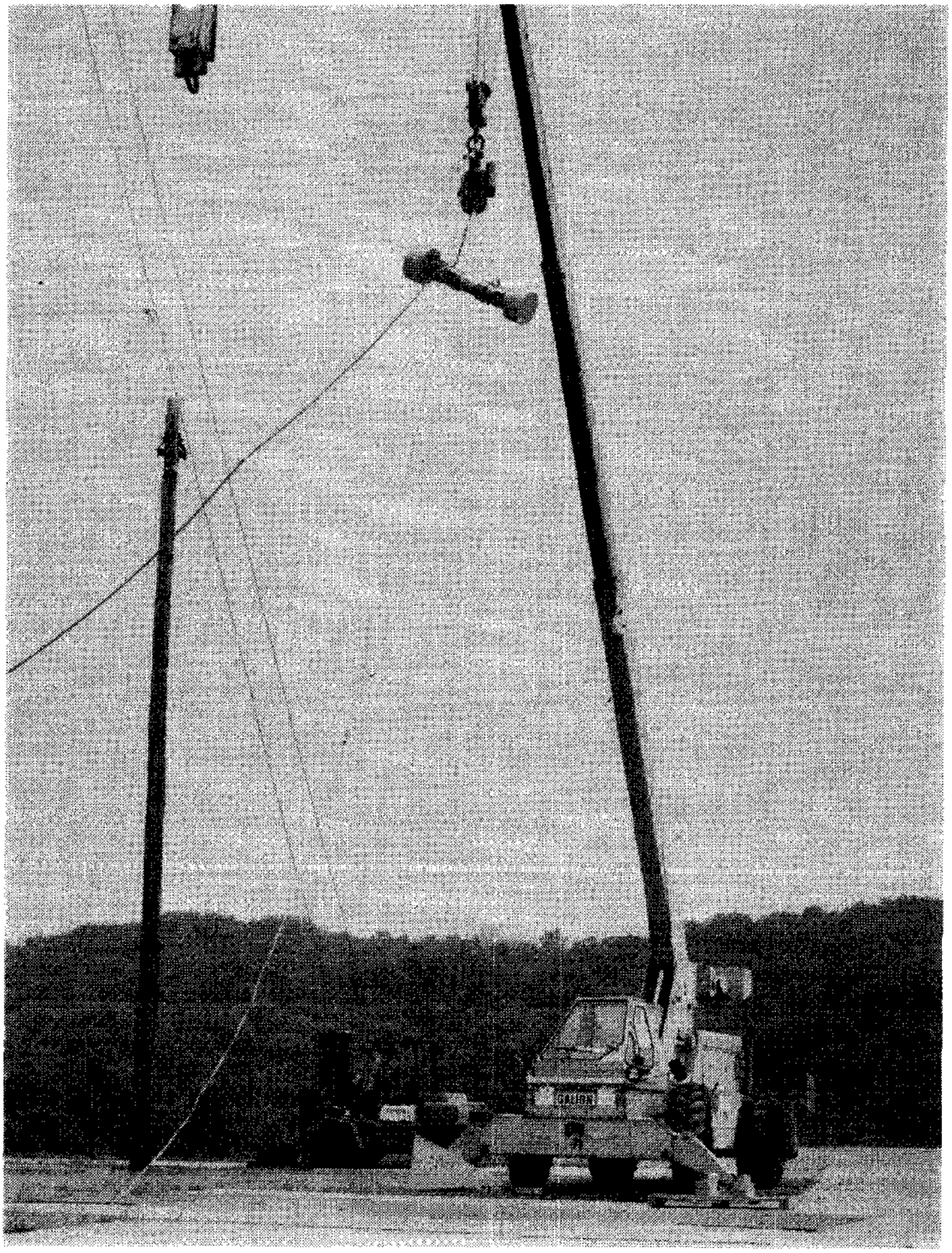

Figure 2.10.8-24 Model Position Following 30-Foot Oblique Drop

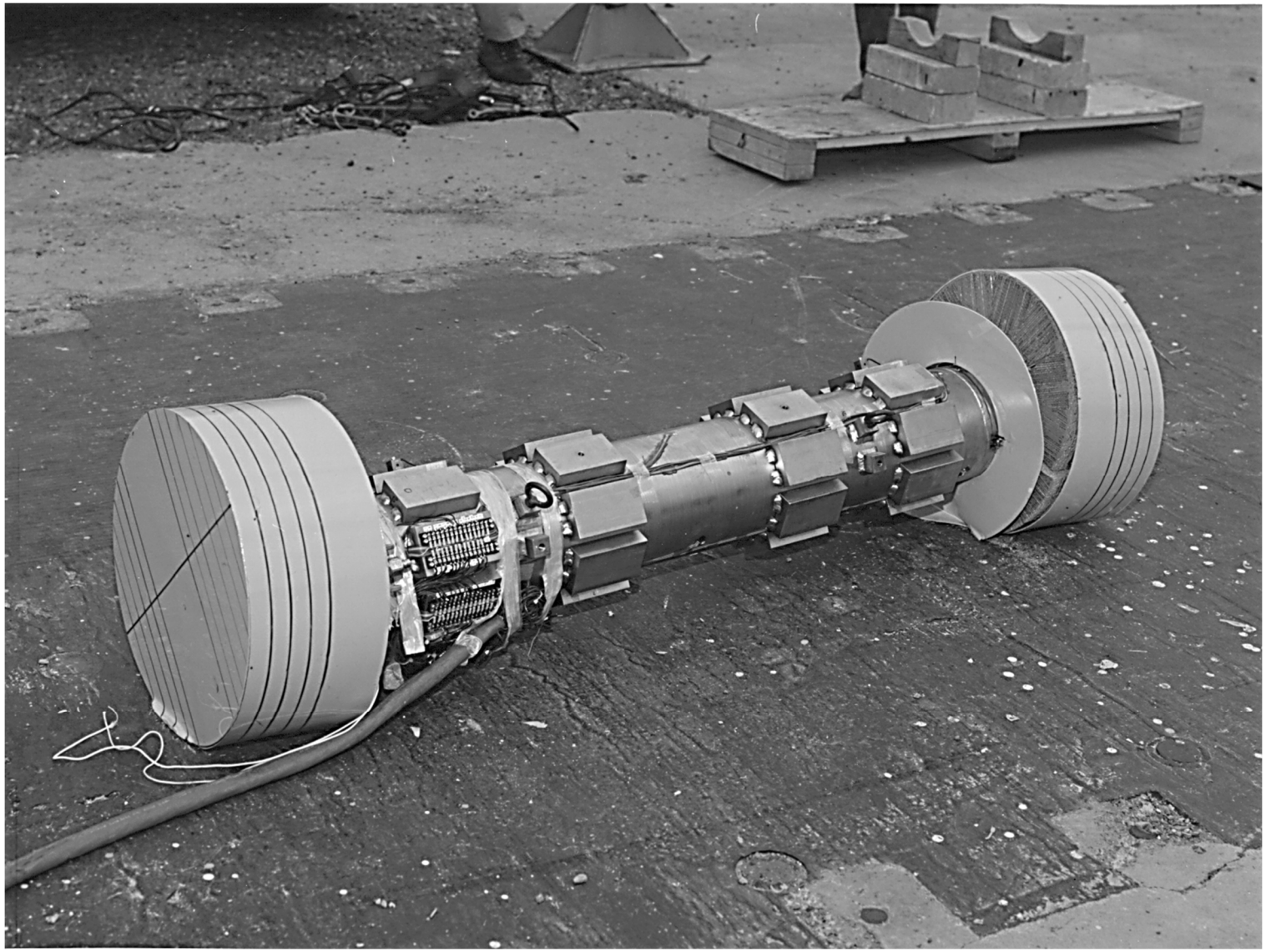

Figure 2.10.8-25 Bottom Impact Limiter Following 30-Foot Oblique Drop



Figure 2.10.8-26 Top Impact Limiter Following 30-Foot Oblique Drop



Figure 2.10.8-27 Model Rigged for Midpoint 40-Inch Pin Drop

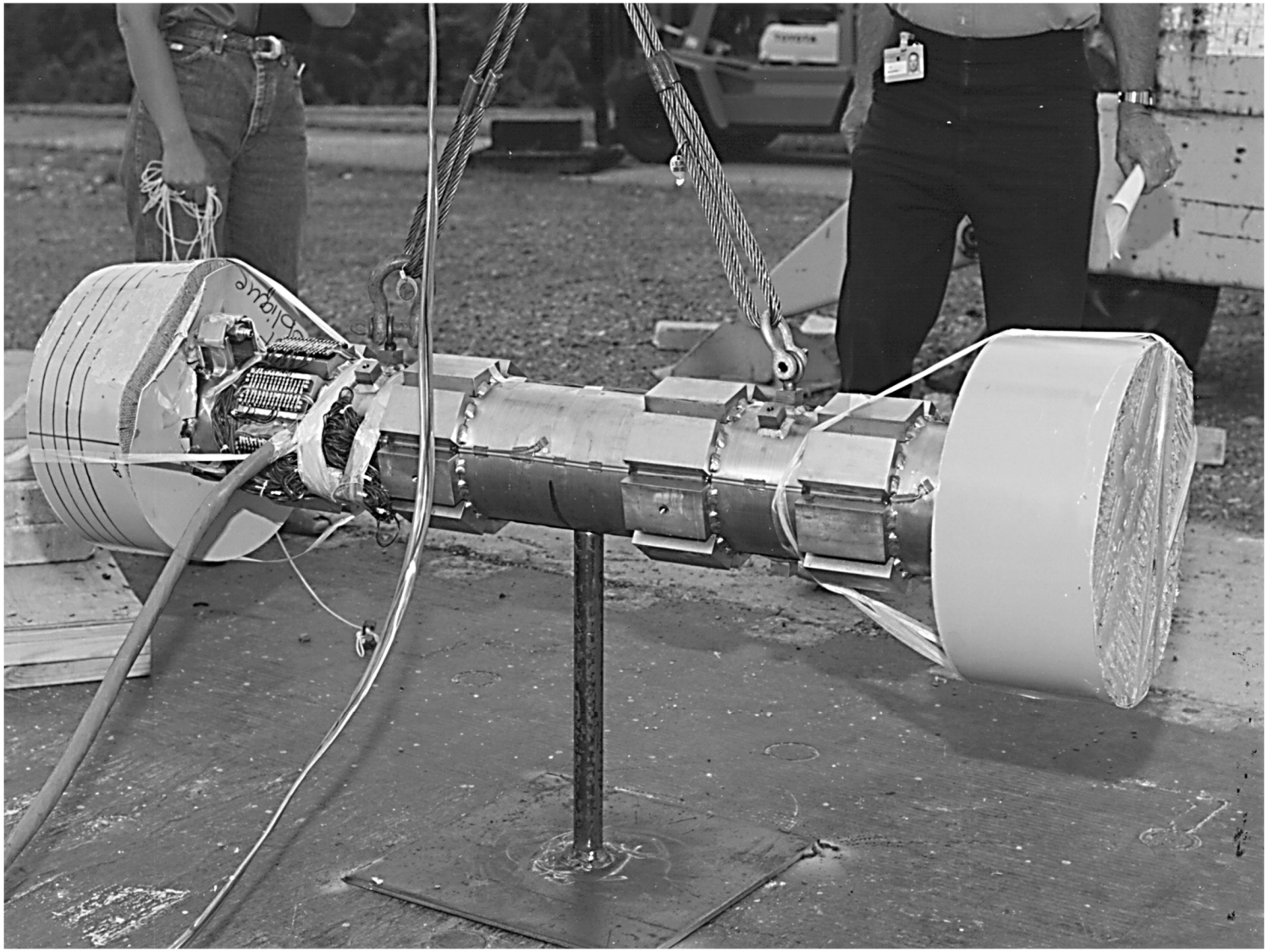

Figure 2.10.8-28 Model Positioned for 40-Inch Pin Drop



Figure 2.10.8-29 Instant Before Midpoint 40-Inch Pin Drop



Figure 2.10.8-30 Model Position Following Midpoint 40-Inch Pin Drop

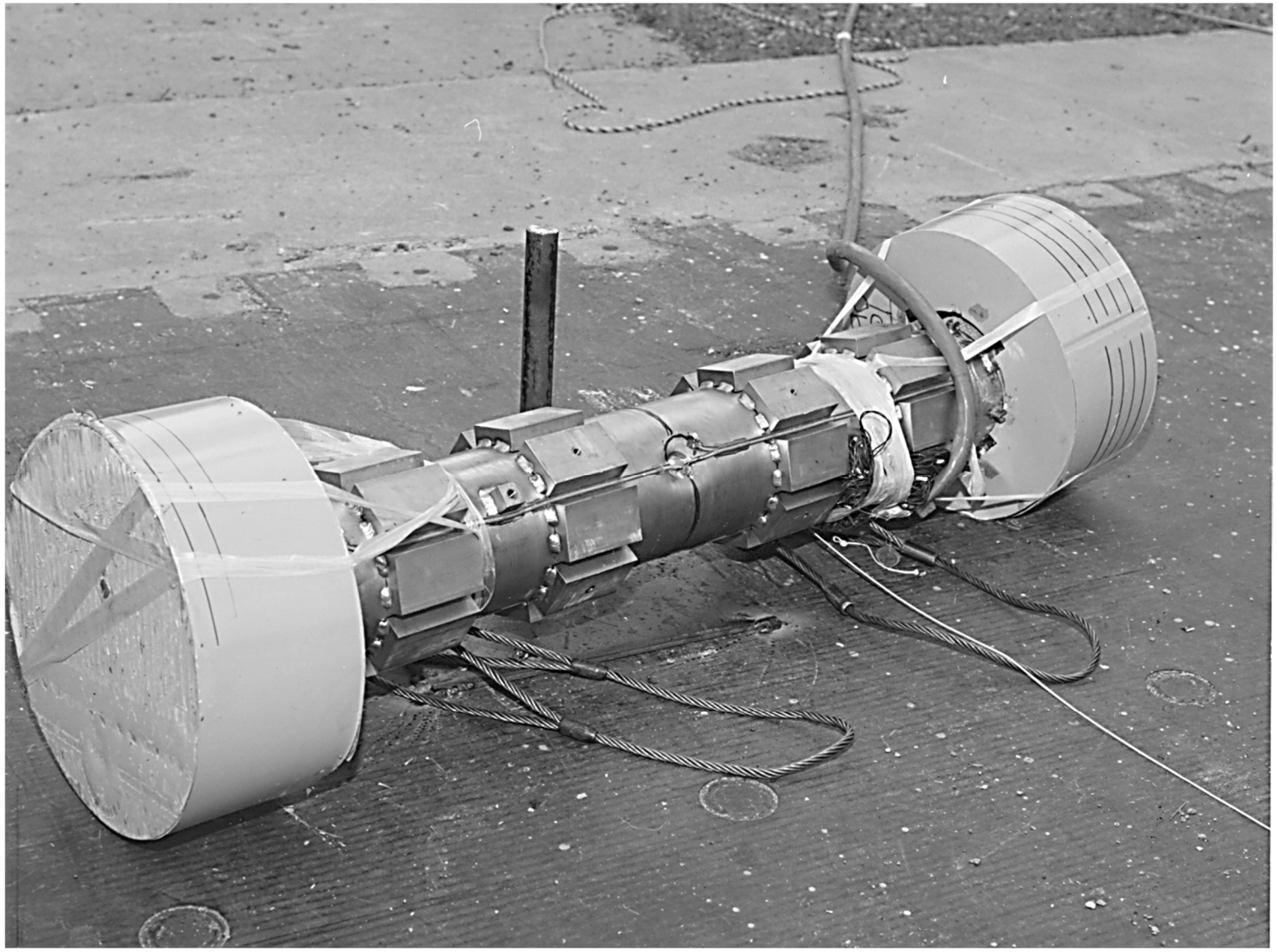

Figure 2.10.8-31 Impact Location – Midpoint 40-Inch Pin Drop

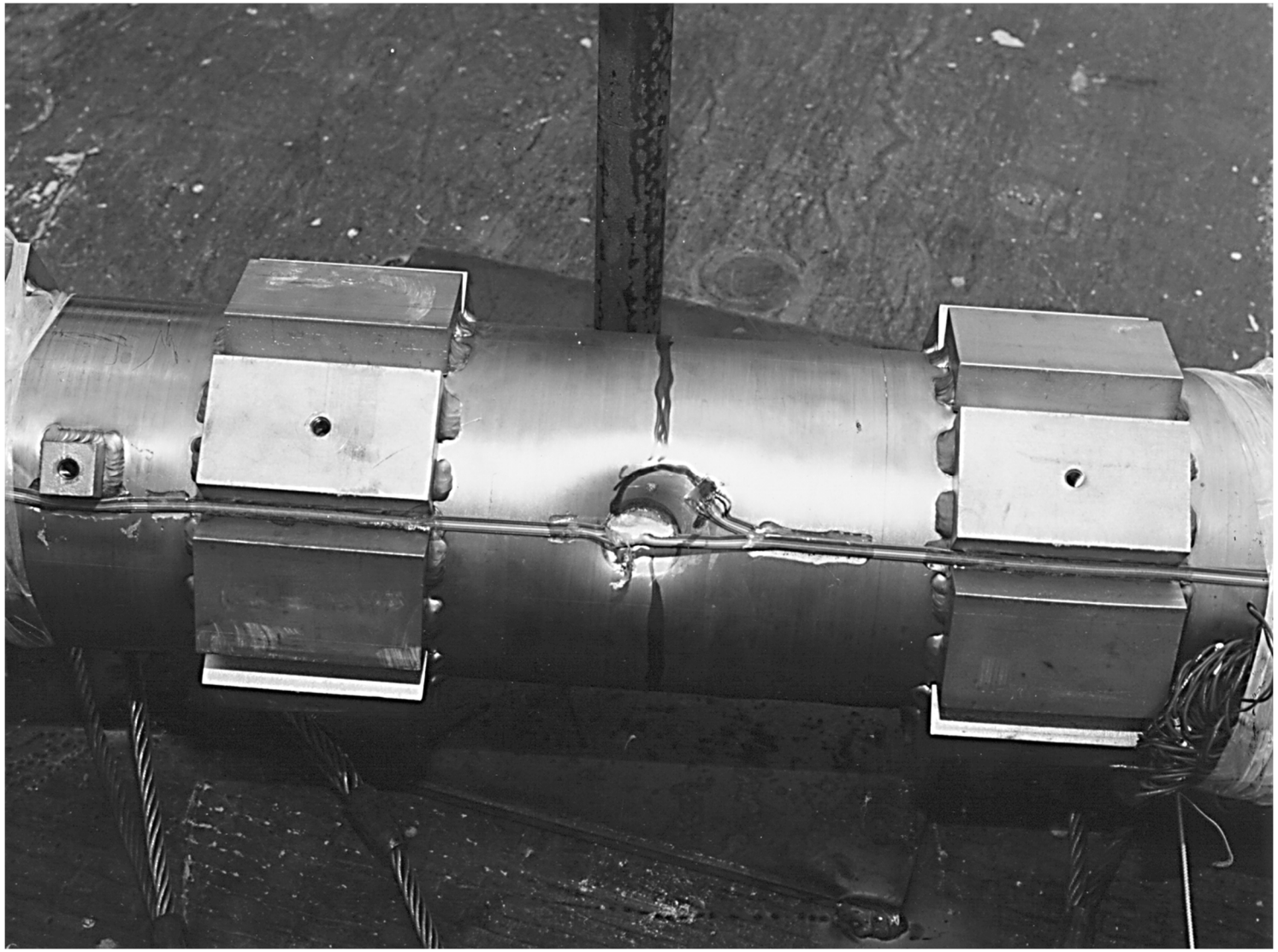

Figure 2.10.8-32 Angular Orientation of Instrumentation

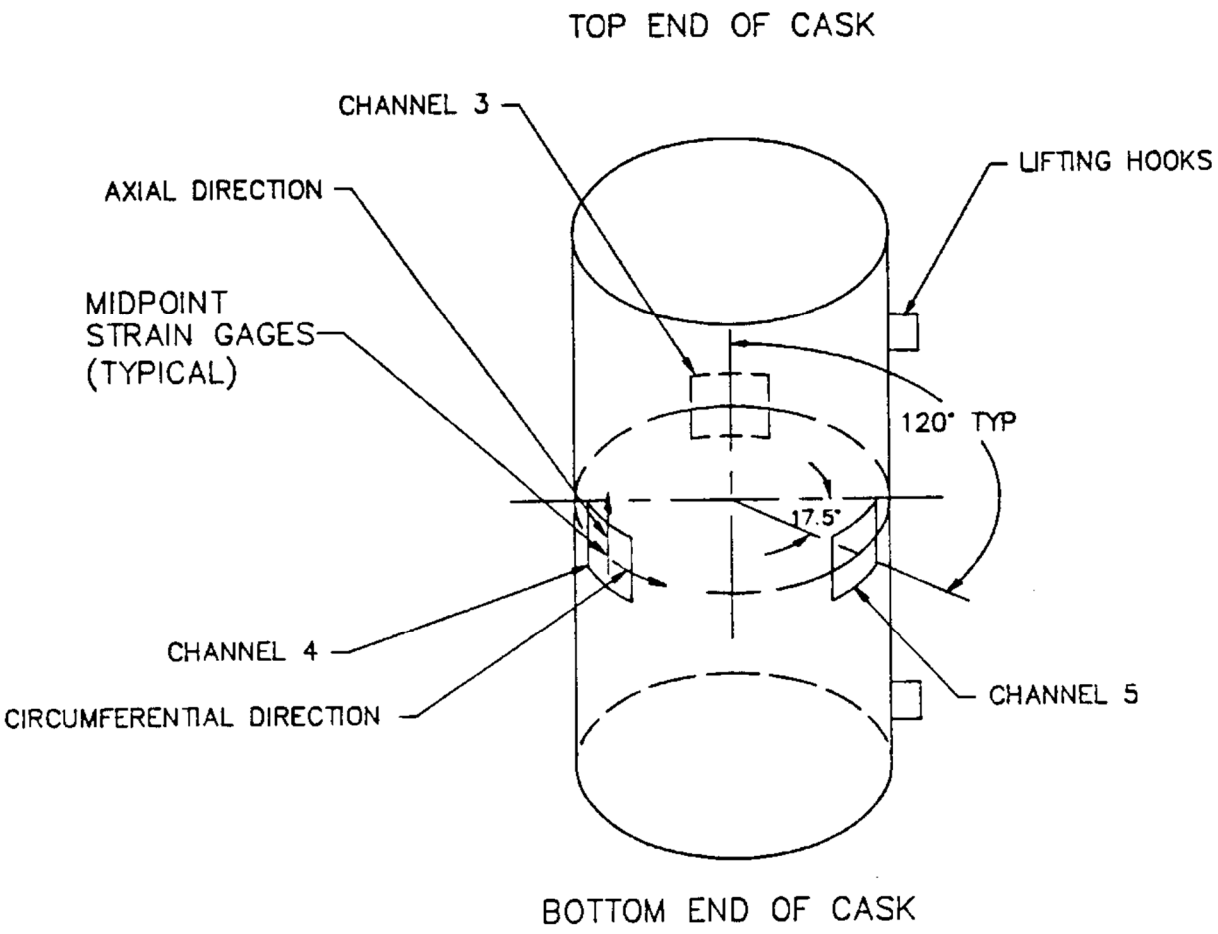

Figure 2.10.8-33 Strain Gauge Time History for Channel 3 – End Drop

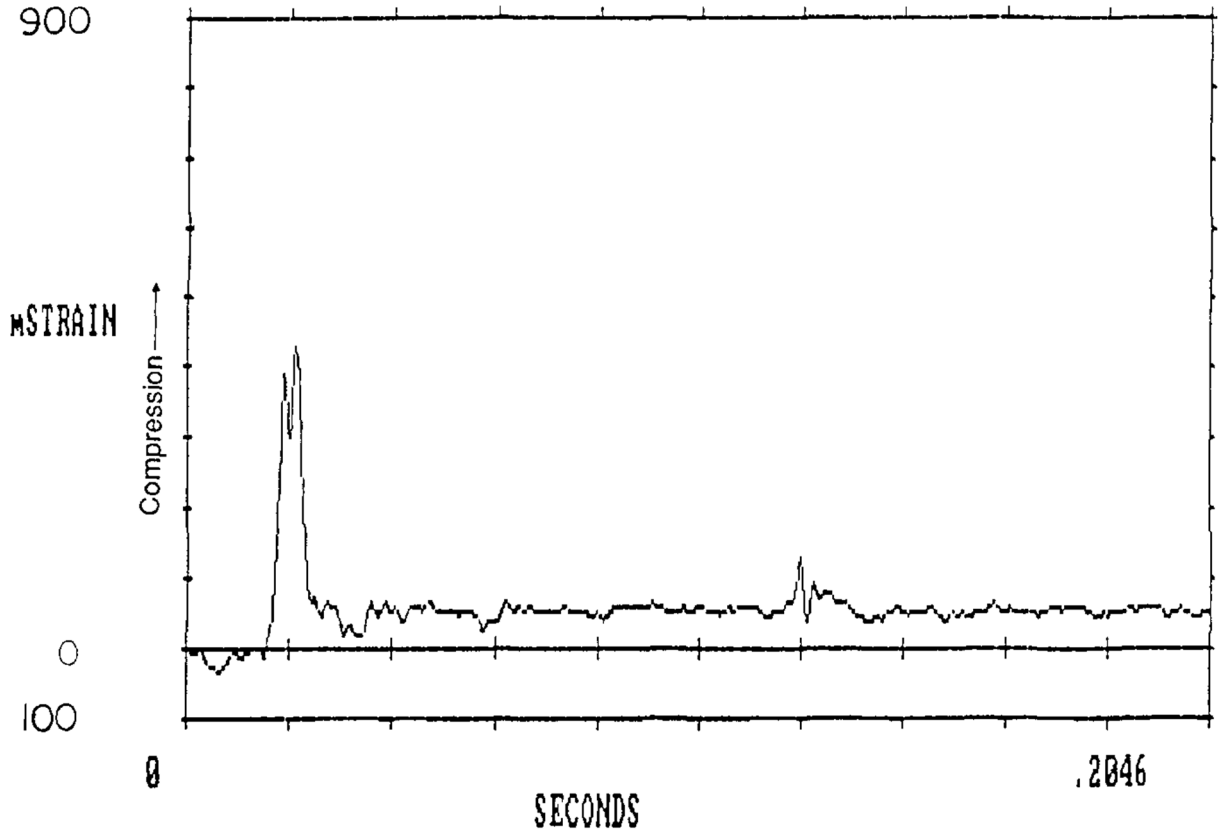

Figure 2.10.8-34 Strain Gauge Time History for Channel 4 – End Drop

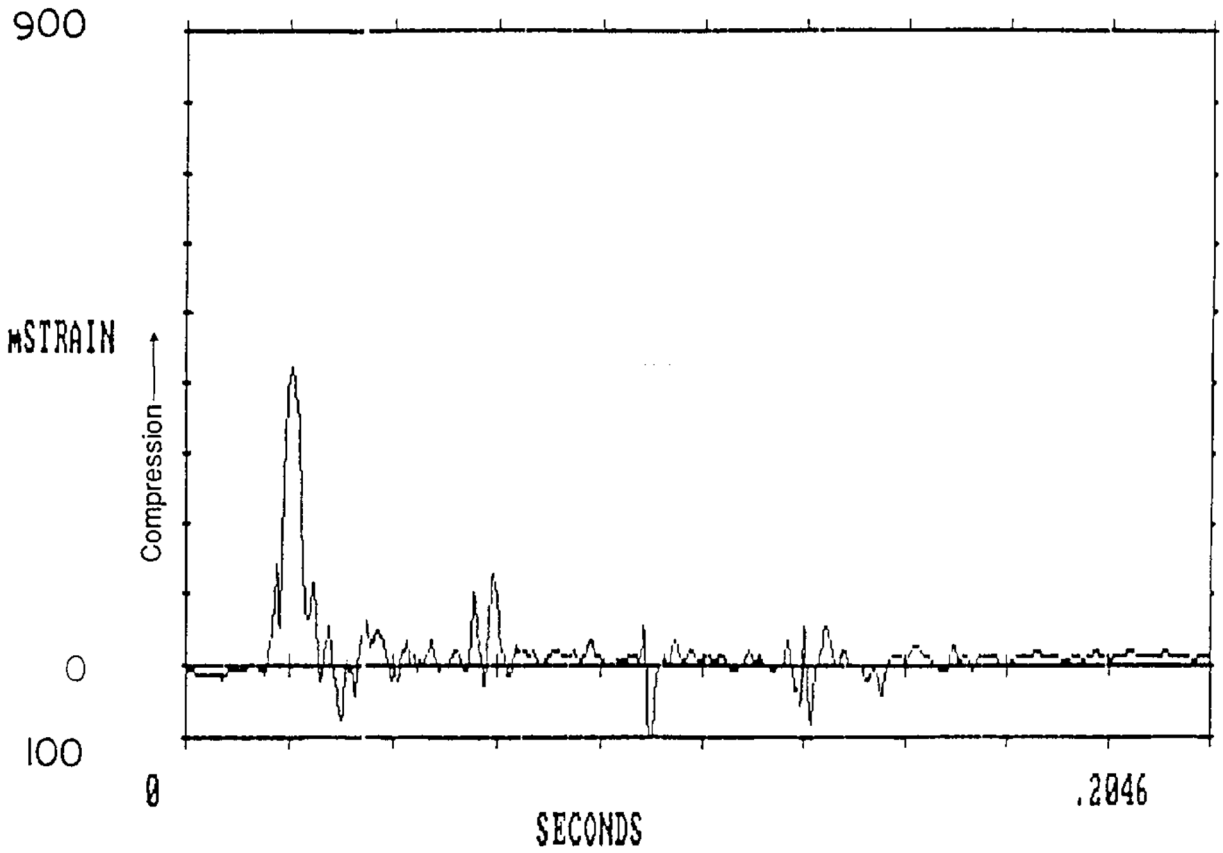

Figure 2.10.8-35 Strain Gauge Time History for Channel 5 – End Drop

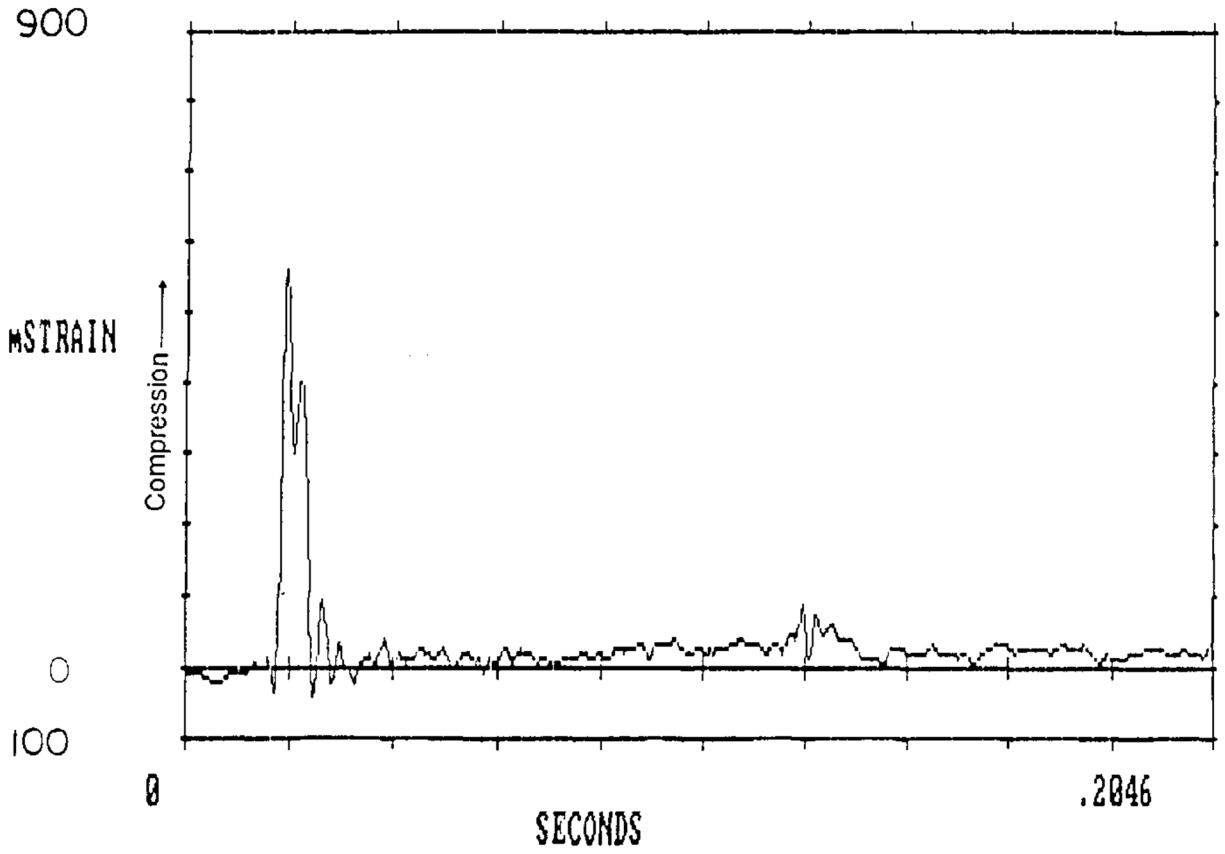

Figure 2.10.8-36 Strain Gauge Time History for Channel 3 – Side Drop

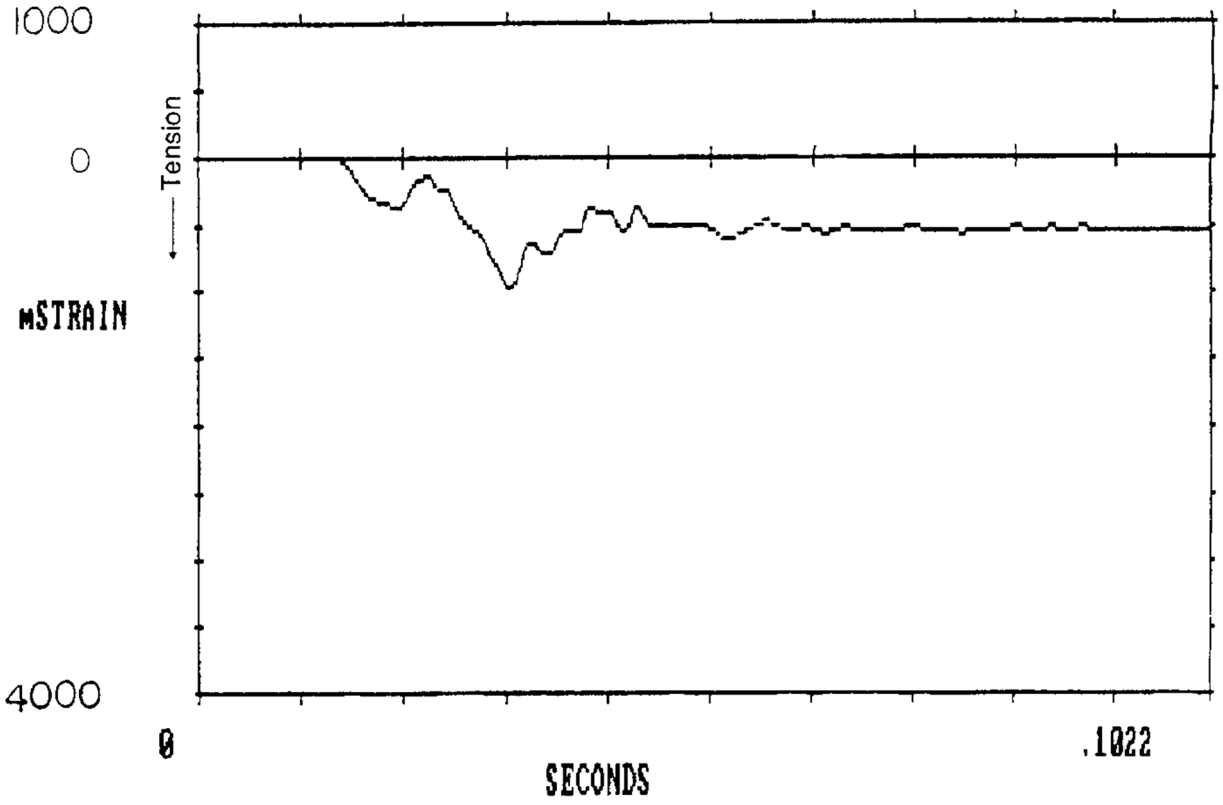

Figure 2.10.8-37 Strain Gauge Time History for Channel 4 – Side Drop

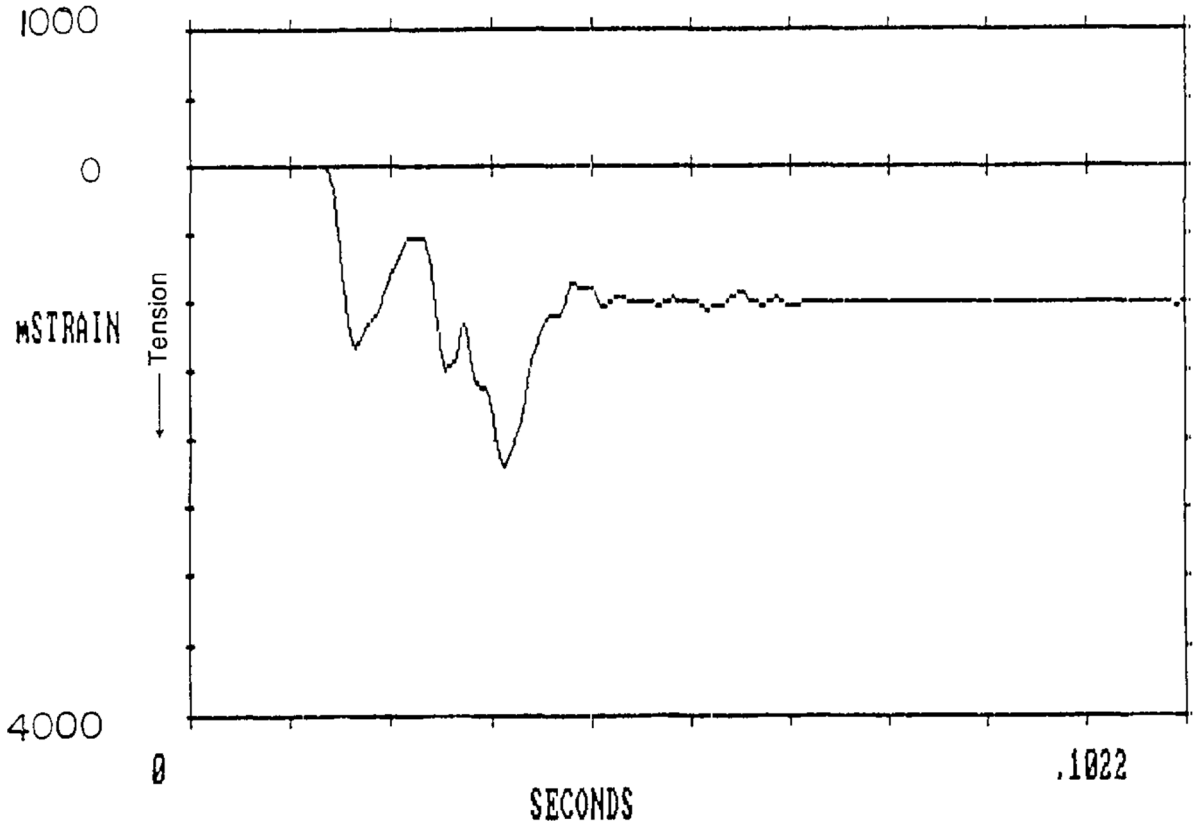

Figure 2.10.8-38 Strain Gauge Time History for Channel 5 – Side Drop

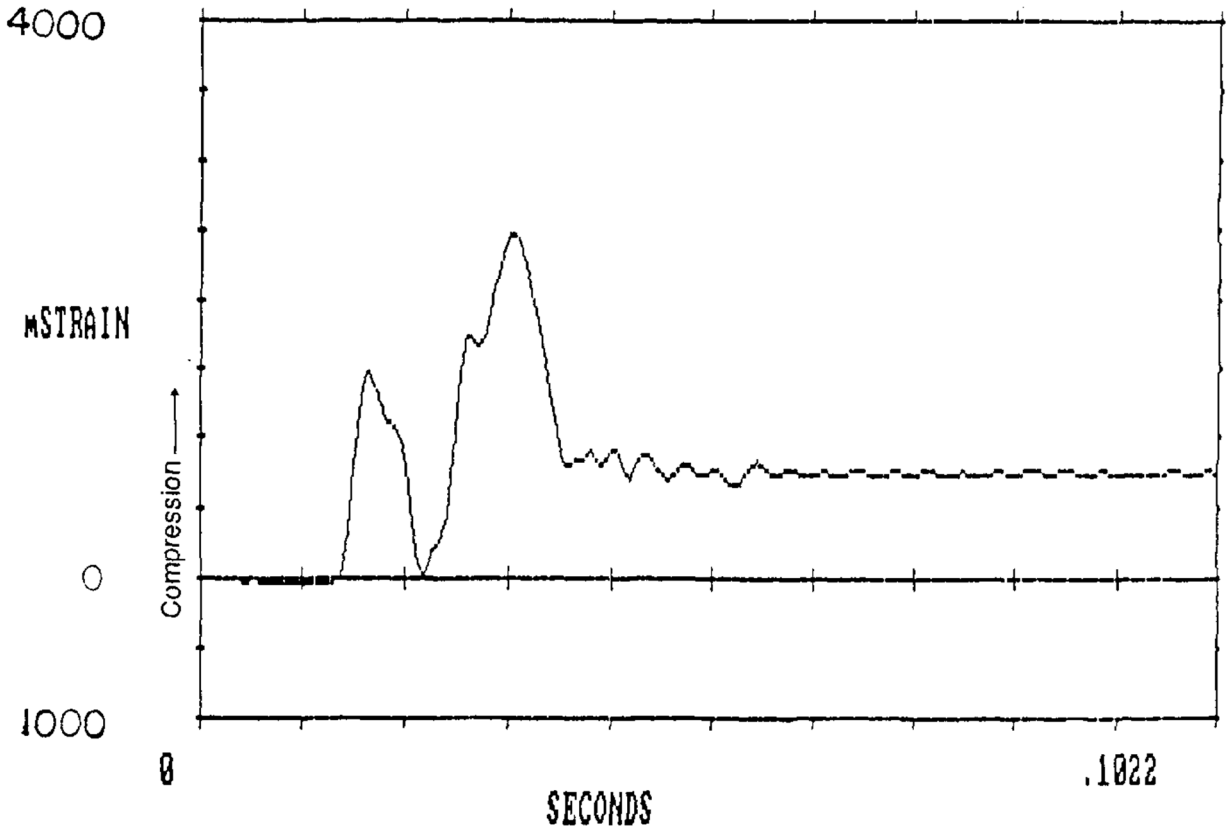

Figure 2.10.8-39 Location of Block Sets[1]

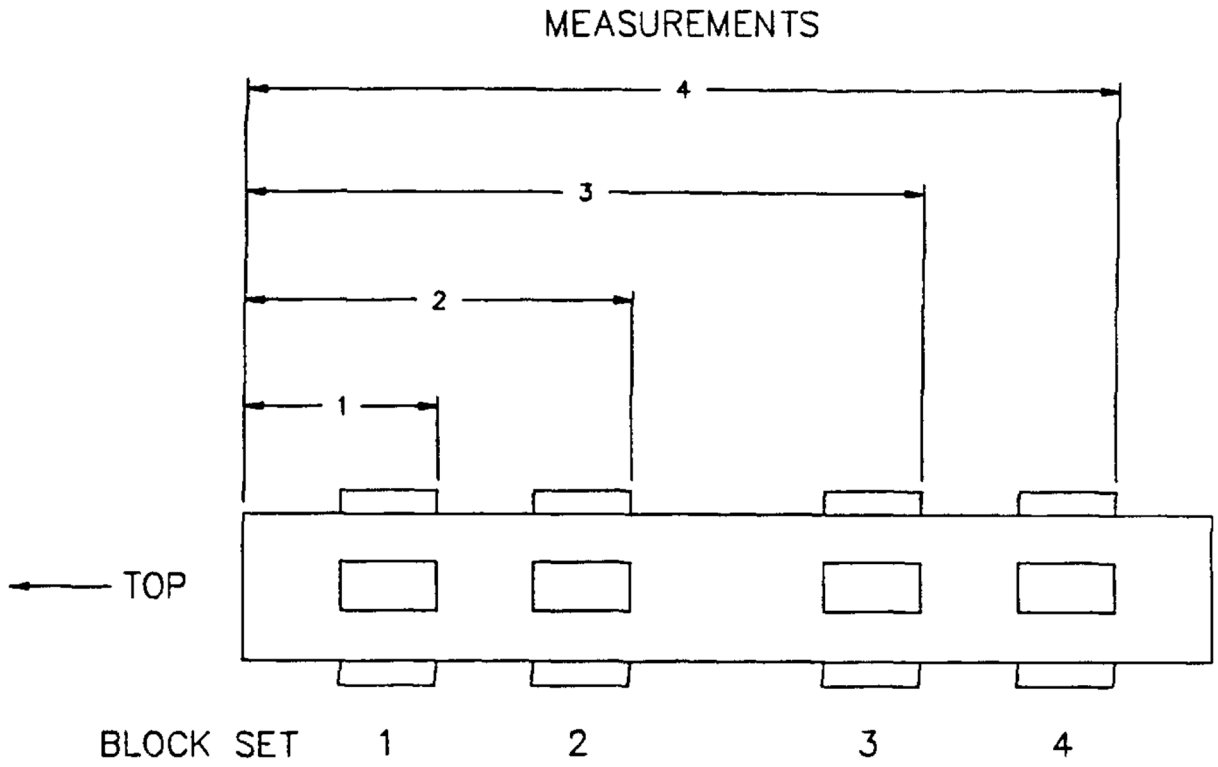

[1] This figure identifies the location of the block sets referred to in Tables 2.10.8-4 and 2.10.8-7.

Table 2.10.8-1 Scaling Relations

For 1/4-Scale Model		
		Law II [1,2]
Weight		1.56%
Velocity		100%
Kinetic Energy		1.56%
Momentum		1.56%
Duration		Scaled (25%)
Deformation		25%
Acceleration		400%
Applied Force	$F_m = \ell^2_m F_p$	$\pi_{lm} = \ell^2_m \pi_{lp}$
Mass	$M_m = \ell^3_m M_p$	
Momentum	$M\theta_m = \ell^3_m M\theta_p$	

[1] Percentages refer to model as percent of full-scale (1/64 = 1.56%).
[2] LAW II – Does not account for strain-rate effects or gravity.

Table 2.10.8-1 Scaling Relations (Continued)

Energy	$E_m = \ell_m^3 E_p$
Velocity	$V_m = V_p$
Applied Acceleration	$N_{Gm} = \frac{N_{Gp}}{\ell_m}$
Duration	$\tau_m = \ell_m \tau_p$
Deformation	$\delta_m = \ell_m \delta_p$
Natural Frequency	$f_m = \frac{1}{\ell_m} f_p$

Table 2.10.8-2 Metrology Results of Inner Diameter Measurements Before Drop

No.	Location	Vertical (in)	Horizontal (in)
1	1 inch from end	3.3443	3.3436
2	13 inches from end	3.3379	3.3513
3	26 inches from end	3.3358	3.3501
4	38 inches from end	3.3390	3.3480
5	At weld joint	3.3153	3.3246
6	At large bore	5.6591	5.6585
7	At middle bore	5.1550	5.1546

Table 2.10.8-3 Metrology Results of Outer Diameter Measurements Before Drop

No.	Location	Vertical (in)	Horizontal (in)
1	Top 1 inch inside weld	7.1378	7.1448
2	Midpoint	7.1449	7.1474
3	Bottom 1 inch inside weld	7.1562	7.1527

Table 2.10.8-4 Metrology Results of External Length Measurements Before Drop*

No.	Location	0°	90°	180°	270°
1	1st block set	11.219	11.234	11.234	11.234
2	2nd block set	20.203	20.203	20.203	20.234
3	3rd block set	34.047	34.094	34.141	34.094
4	4th block set	43.031	43.078	43.125	43.063

* Length measurements are made from the top (closure) end to the back of the steel blocks, welded to the outside of the cask to simulate the weight of the neutron shield. Four measurements were made at each position down the cask starting with a vertical location and proceeding every 90 degrees around the cask periphery (Figure 2.10.8-39).

Table 2.10.8-5 Metrology Results of Inner Diameter Measurements After Drop

No.	Location	Vertical (in)	Horizontal (in)
1	1 inch from end	3.3445	3.3434
2	13 inches from end	3.3369	3.3524
3	26 inches from end	3.2790	3.3991
4	38 inches from end	3.338	3.3523
5	At weld joint	—	—
6	At large bore	5.6590	5.6585
7	At middle bore	5.1548	5.6585

Table 2.10.8-6 Metrology Results of Outer Diameter Measurements After Drop

No.	Location	Vertical (in)	Horizontal (in)
1	Top 1 inch inside weld	7.1400	7.1450
2	Midpoint	6.6600	7.1680
3	Bottom 1 inch inside weld	7.1500	7.1560

Table 2.10.8-7 Metrology Results of External Length Measurements After Drop

No.	Location	0°	90°	180°	270°
1	1st block set	11.219	11.234	11.375	11.234
2	2nd block set	20.188	20.203	20.203	20.375
3	3rd block set	34.016	34.078	34.156	34.125
4	4th block set	43.000	43.063	43.125	43.094

2.10.9 Bolts – Closure Lid (Stress Evaluations)

Bolt stress analysis results for normal and accident conditions are summarized in four tables. Table 2.6.7-35 and Table 2.6.7-36 summarize bolt stresses for hot and cold normal conditions, respectively. Table 2.7.1-60 and Table 2.7.1-61 summarize bolt stresses under hot and cold accident conditions, respectively.

2.10.9.1 Analysis Approach

The bolt stress analyses for normal and accident conditions consider the impact loads, pressure loads, thermal loads and bolt preloads. Each table is preceded with an explicit listing of relevant geometry, mechanical properties and constant loading data (bolt torque, pressure, etc.) taken directly from Sections 2.1, 2.2, 2.3, and the license drawings in Section 1.4.

Impact loads are expressed in g acceleration loads as summarized in Table 2.6.7-33. The "hot" initial condition bolt temperature for normal and accident impact evaluations is taken at 227°F, as summarized in Table 3.4-2. The "cold" initial condition bolt temperature for normal and accident impact evaluations is -20°F, per regulatory requirements. Allowables and properties for the SA-453, Grade 660 bolts are conservatively taken at 300°F and room temperature (70°F) for hot and cold conditions, respectively. Allowable bolt stress is taken as S_y, for normal and accident conditions. For conservatism, external energy absorber reaction forces, which resist separation of the cask lid and body, are completely neglected in all calculations.

An explanatory discussion of bolt stress analytics is found within Section 2.10.9.2. Table 2.10.9-1, which is identical to 2.7.1-60, is fully annotated to "key" to this explanation. An example calculation is included with each note to verify the accuracy of the tabular calculation.

The analysis methodology, allowables and basic assumptions used are consistent with conventional design/analysis codes, such as "AISC Manual of Steel Construction," 8th Edition, and "ASME Boiler and Pressure Vessel Code," Section III, Appendix F, Paragraph F-1335, but this analysis is more conservative. Specifically, this analysis includes stresses associated with preloads. Conventional design/analysis codes consider only externally applied loads and ignore preloads because "the ultimate shear strength of a high-strength bolt is independent of the clamping force. Only the slip resistance and fatigue life are improved by high clamping force" ("AISC Manual of Steel Construction," pages 5-222).

Like the methodology given in the "ASME Boiler and Pressure Vessel Code," Appendix F, Paragraph F-1335, this analysis uses nominal tensile and shear stresses based on the tabulated stress area of the bolts. It should be noted that the elliptic interaction equations of Paragraph F1335.2 of the "ASME Boiler and Pressure Vessel Code" and the approach used here give nearly

identical results when adjustments in loadings are made to account for the differing treatment of preload tension (This method conservatively includes preloads, whereas, the other ignores preloads).

2.10.9.2 Closure Bolt Analyses – Analytics and Assumptions

All numerical examples pertain to the evaluation of the NAC-LWT cask under hypothetical accident conditions (Table 2.10.9-1). The numbering of equations shown below reflects the annotation of values appearing within Table 2.10.9-1.

W_A = weight acting in longitudinal (axial) direction supported by lid bolts, includes payload and lid (a)

= 4000 + 941 lb

= 4941 lb

W_L = weight acting in lateral direction. This amounts to lid weight only (b)

= 941 lb

F_t = bolt thermal load, with example evaluation: (c)

$= A_b \Delta T[E_\ell \alpha_\ell - E_b \alpha_b]$

= 1423 lb

where:

A_b = 6051 in^2 nominal bolt area

ΔT = 157°F thermal differential.

For this illustrative case, the thermal differential, ΔT, is the hot service temperature, 227°F, less the temperature at which the cask bolting was torqued, here taken as room temperature, 70°F. Thus, $\Delta T = 227 - 70 = 157$°F.

E_ℓ = 27.0×10^6 lid modulus

α_ℓ = 9.0×10^{-6} lid expansion coefficient

E_b = 26.7×10^6 bolt modulus

α_b = 8.54×10^{-6} bolt expansion coefficient

Fi = bolt preload calculated from torque relation given in Section 2.1.3.2.2 (d)

$= 12T/(0.08973d) = (12)(260)/[(0.08973)(1.0)]$

$= 34{,}770$ lbs

where:

T = preload torque, ft-lb

d = nominal bolt diameter, in

F_p = bolt pressure load (e)

$= P_p A_p / Nr$

$= 812$ lbs

where:

P_p = internal pressure, 125 psig

$A_p = \pi d_s^2 / 4$

$= 194.8$ in^2, pressure area

d_s = seal diameter

$= 15.75$ inches

N_r = number of bolts

$= 12$

K_b = bolt stiffness (f)

$= A_b E_b / L$

$= 1.903 \times 10^6$ lb/in

where:

$A_b = 0.6051$ in^2

$E_b = 26.7 \times 10^6$ psi

L = (grip length) + 1/2 (nominal diameter)

$= 7.99 + 0.50$

$= 8.49$ inches

K_m = lid stiffness (g)

$= A_L E_\ell / L_g$

$= 2.122 \times 10^7$ lb/in

where:

A_L= an assumed cross-sectional area equal to a thick-walled cylinder with an inner diameter equal to the nominal bolt diameter and an outer diameter equal to three times the nominal bolt diameter (Shigley)

$= \pi/4\ (9d^2 - d2) = 2\pi d^2$

$= 6.28\ in^2$

$E_\ell = 27 \times 10^6$ psi

L_g = grip length

= 7.99 inches

n_g = Impact acceleration based on impact force predictions (Table 2.6.7-33). The (+) mark in the adjoining column denotes a value determined from linear interpolation. (h)

F_A = end impact bolt force (i)

$= P_A/Nr = (296,460)/12$

= 24,705 lbs

where:

$P_A = n_g W_A \sin\theta = (60.0)(4941)(1)$

= 296,460 lbs

F_A = oblique impact bolt force

$= P_A[R_L\ (R_L + R_B)/Io]A_b$

= 33,641 lbs

where:

$P_A = n_g W_A \sin\theta = (60.13)(4941)(\cos 5°)$

= 295,972 lbs

A_b = bolt stress area

$= 0.6051\ in^2$

R_L = lid radius

= 11.25 inches

R_B = bolt circle radius

= 8.94 inches

I_o = bolt circle moment of inertia = $\pi R_B^3 t + A_b N_r R_L^2$

= 1209 in^4

t = equivalent ring thickness

= $A_b N_r / (2\pi R_B) = (0.6051)(12)/(17.875\pi)$

= 0.1293 in

The derivation of this relationship for tensile bolt stresses assumes the lid pivots about the outer edge of the lid, point "o". The bolts are approximated as a thin, circular ring with a thickness equivalent to (total bolt area) = (ring area).

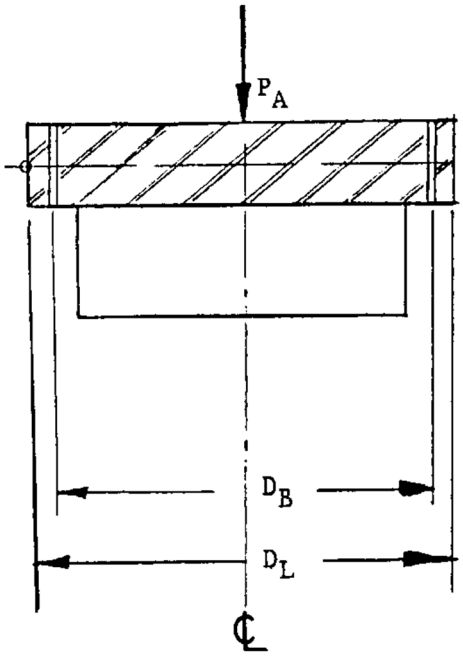

Bolt Circle

$R_B = D_B/2$
$= 8.94$ in

Lid

$R_L = D_L/2$
$= 11.25$ in

Equivalent ring thickness is found as:

$A = \pi D_B t$

or

$T = A/(\pi D_B)$

= 0.1293 in

where:

$A = (12 \text{ bolts})(0.6051 \text{ in/bolt})$; Baumeister, pages 8-10

$= 7.26 \text{ in}^2$

The moment of inertia of the bolt ring about point "o" is:

$$I_o = \pi R_B^3 t + A R_L^2$$

$= 1209 \text{ in}^4$

The applied bending moment about point "o" resulting from the impact force, P_A, is:

$$M_o = P_A R_L$$

Thus, the extreme bolt tension stress is found as:

$$f_a = Mc/I$$

$$= \left[(P_A R_L)(R_L + R_B)\right]/(\pi R_B^3 t + A R_L^2)$$

or

$$F_A = f_a A_b$$

$$= P_A \left[R_L (R_L + R_B)/I_o\right] A_b$$

In this analysis, which sweeps from vertical (end) impacts through side impacts, the two bolt tension relations, equations (i) and (j), must transition from one to the other at some orientation angle. Both conservatively neglect reaction forces from external energy absorbers. This neglect is extraordinarily conservative for near vertical impacts, but becomes more realistic as the package approaches side impact orientations. Specifically, the center of pressure of the external energy absorber reaction force on the lid moves from the center of the lid towards the impacting corner of the package as the impact orientation moves from near vertical to near horizontal.

For conservatism, this transition from an end relation, equation (i), for bolt force to an oblique relation, equation (j), is assumed to occur reasonably close to vertical; hence, only the 0-degree case uses the uniform force assumption.

FL = lateral (shear) bolt load (k)

$= PL/Nr = 4931/12$

$= 411$ lbs

where:

$P_L = n_g W_L \sin\theta = (60.13)(941) \sin 5°$

$= 4931$ lbs

P = total applied external bolt load (1)

$= F_p$ (pressure) + F_A (impact)

$= 812 + 24{,}705$

$= 25{,}517$ lbs

F_b = net bolt tension, considering applied external loads, thermal loads and pretension loads (Shigley) (m)

$= K_b P/(K_b + K_m) + F_i + F_t$

$= 38{,}292$ lbs (at 0°); $Fm < 0$

$= P$; $F_m \geq 0$

where:

P = external load, equation (1)

$= 25{,}517$ lbs

F_t = thermal load, equation (c)

$= 1423$ lbs

F_i = preload, equation (d)

$= 34{,}770$ lbs

K_b = bolt stiffness, equation (f)

$= 1.903 \times 10^6$ lb/in

K_m = lid stiffness, equation (g)

$= 2.112 \times 10^7$ lb/in

F_m = clamping force = $K_m P/(K_b + K_m) - F_i - F_t$

$= -12{,}785$ lbs

f_b = bolt tension stress (n)

$= F_b/A_b = 38{,}292/0.6051$

$= 63{,}282$ psi

f_v = bolt nominal shear stress (o)

$= F_L/A_b$

Principal Stresses (σ_l, σ_2) $= f_b/2 \pm [(fb/2)^2 + f_v^2]^{0.5}$ (p)

$= (59{,}924)/2 \pm [(59{,}924/2)^2 + 6752^2]^{0.5}$ (at 90°)

$= 29{,}962 \pm 30{,}713$

$= -751$ psi and $60{,}675$ psi

Stress Intensity (at 90°) (q)

$S_I = \sigma_l - \sigma_2 = -751 - 60{,}675$

$= 61{,}427$ psi

Margin of Safety (at 90°) (r)

$MS = S_y/S_I - 1 = 81.9/61.427 - 1$

$= +0.33$

Table 2.10.9-1 NAC-LWT Cask Hot Bolt Analysis Hypothetical Accident Conditions

Nominal Diameter (in):	1.00	
Number of Bolts:	12	
Service Stress, Sy (ksi):	81.9	at a 300
Bolt Expansion (in/in):	9E-06	degree-F
Bolt Modulus (ksi):	26700	Service
Lid Expansion (in/in):	9E-06	Temperature
Lid Modulus (ksi):	27000	
Stress Area (in2):	0.6051	
Grip Length (in):	7.99	
Maximum Pressure (psi):	50	
Seal Diameter (in):	15.750	
Preload Torque (ft-lbs):	260	at RT
Nominal Room Temp, RT:	70	deg-F
Bolt Circle Diameter (in):	17.88	
Lid Diameter (in):	22.50	

Longitudinal Weight (lbs):	4941
Lateral Weight (lbs):	941
Service DT (degrees):	157
[default value =]	230
CALCULATED LOADS & STIFFNESS	
Bolt Thermal Load (lbs):	1423
Bolt Preload (lbs):	34770
Bolt Pressure Load (lbs):	812
Bolt Stiffness (lbs/in):	1.9E+06
Lid Stiffness (lbs/in):	2.1E+07

Angle wrt Vert. (Deg)	Impact Accel. (g)	<**** LOADS (lbs.) Impact Tension	Impact Shear	Bolt Tension Applied	Bolt Tension Net ****	<**** STRESSES (psi) Direct Tension	Direct Shear	Principal Sig-1	Principal Sig-2	Stress Intens. ****	Margin of Safety
0 End	15.80	6506	0	7317	36795	60808	0	0	60808	60808	0.35
5 (+)	14.69	8216	100	9028	36936	61041	166	0	61041	61042	0.34
10 (+)	13.57	7506	185	8318	36877	60944	305	-2	60946	60947	0.34
15.7 Corner	12.30	6650	261	7462	36807	60828	431	-3	60831	60834	0.35
20 (+)	12.99	6858	349	7670	36824	60856	576	-5	60862	60867	0.35
25 (+)	13.80	7025	457	7837	36838	60879	756	-9	60888	60898	0.34
30 (+)	14.61	7106	573	7918	36845	60890	947	-15	60905	60919	0.34
35 (+)	15.42	7093	693	7905	36843	60888	1146	-22	60910	60931	0.34
40 (+)	16.22	6980	818	7792	36834	60873	1352	-30	60903	60933	0.34
45 (+)	17.03	6764	944	7576	36816	60844	1561	-40	60884	60924	0.34
50 (+)	17.84	6440	1072	7252	36790	60800	1771	-52	60851	60903	0.34
55 (+)	18.65	6007	1198	6819	36754	60741	1980	-64	60805	60870	0.35
60 (+)	19.45	5463	1321	6275	36709	60667	2183	-78	60745	60824	0.35
65 (+)	20.26	4809	1440	5621	36656	60578	2380	-93	60671	60765	0.35
70 (+)	21.07	4047	1553	4859	36593	60474	2566	-109	60583	60692	0.35
75 (+)	21.88	3180	1657	3992	36522	60356	2739	-124	60480	60604	0.35
80 (+)	22.68	2212	1752	3024	36442	60225	2895	-139	60364	60503	0.35
85 (+)	23.49	1150	1835	1962	36355	60080	3033	-153	60233	60386	0.36
90 Side	24.30	0	1906	812	36260	59924	3149	-165	60089	60254	0.36

Minimum Margin of Safety: 0.34

2.10.10 Finite Element Stress Results for the 30-Foot Drop Accident Conditions

2.10.10.1 Discussion

The following accident conditions were identified for a detailed finite element stress presentation:

- A 30-foot top end drop (drop orientation = $\phi = 0°$, where ϕ is defined as the impact orientation; that is, the angle between the impact direction and the cask centerline), 130°F ambient temperature, maximum decay heat load.
- A 30-foot top corner drop (drop orientation = $\phi = 15.74°$), 130°F ambient temperature, maximum decay heat load.
- A 30-foot top oblique drop (drop orientation = $\phi = 60°$), 130°F ambient temperature, maximum decay heat load.
- A 30-foot side drop (drop orientation = $\phi = 90°$), 130°F ambient temperature, maximum decay heat load.

The top end ($\phi = 0°$), top corner ($\phi = 15.74°$), top oblique ($\phi = 60°$) and side ($\phi = 90°$) drops envelope all of the drop orientations.

A 1.12-inch outer shell thickness is considered in the finite element analyses for the top end, top corner and top oblique drop conditions. The analyses results are conservative because the current NAC-LWT cask design has a 1.20-inch thick outer shell. The 30-foot side drop analysis considers the 1.20-inch outer shell thickness. The structural stiffness of the neutron shield shell is not considered in the finite element stress analyses.

2.10.10.2 Procedures

The analysis procedures for the above selected events are as follows:

- Perform an ANSYS analysis for each of the individual loadings:
  a. Thermal Hot (130°F)
  b. Maximum Internal Pressure (50 psi)
  c. Bolt Preload (250,000 lbs)[1]
  d. Impact and Inertial Loads/30-Foot Top End Drop (60 g impact load; $\phi = 0°$)
  e. Impact and Inertial Loads/30-Foot Top Corner Drop (60.4 g impact load; $\phi = 15.74°$)

[1] The total bolt preload has been increased to 418,116 lbs (34,843 lb/bolt) to provide the required compression force for the metal O-ring seal. Since the stresses at the locations evaluated in this analysis are less than 0.3 ksi for the bolt preload condition, this change is negligible.

f. Impact and Inertial Loads/30-Foot Top Oblique Drop (44.4 g impact load; $\phi = 60°$)

g. Impact and Inertial Loads/30-Foot Side Drop (49.7 g impact load; $\phi = 90°$)

Note that the fabrication stresses are considered negligible as explained in Section 2.6.11. The puncture analysis is performed using classical hand calculations and, therefore, is not discussed here.

- Tabulate the stress results that are calculated for the 123 selected points on the cask for each load condition. Both the stress components and the principal stresses are included. The 123 selected points are located at the 26 selected sections shown in Figure 2.10.10-1. The stress point locations are tabulated in Table 2.10.10-1. The constraint forces for the 30-foot top end drop ($\phi = 0°$), the 30-foot top corner drop ($\phi = 15.74°$), the 30-foot top oblique drop ($\phi = 60°$), and the 30-foot side drop ($\phi = 90°$) conditions are tabulated in Table 2.10.10-2 through Table 2.10.10-5, respectively.

  For the thin cylinder sections (those selected in the central region of the inner and outer shells), it is only necessary to show the stresses at the inner surface and the outer surface because a linear stress distribution is present for the stress linearization calculations. For thick sections and for thin sections at structural discontinuities, the stresses are presented for several points through the thickness to adequately define the stress distribution for the stress linearization calculations.

- Provide additional stress tables, which show the combined stresses (that is, the primary and the primary plus secondary stress categories) at the same selected points mentioned in step 2. The primary stress is obtained from the stress results induced by all of the primary loads (that is, internal pressure, bolt preload, impact and inertial loads). The primary plus secondary stress is the result of all of the primary loads plus the thermal load.

  As explained in Appendix 2.10.2, the ANSYS STIF12 element (the gap or interface element) is used in the finite element model to accurately represent the fact that no physical bonding exists between the lead and the surrounding stainless steel. The gap (interface) element is nonlinear; that is, the element operates bilinearly and requires an iterative solution process with the stiffness matrix reformulated during each iteration. This implies that the gap element status (being active or not) could change between the load analyses; therefore, it is preferable to calculate the primary stresses using the combined load finite element analysis. The same is true for the primary plus secondary stresses.

- Use the results of the combined stresses obtained in step 3 (the primary stresses) to calculate the primary membrane (P_m) and primary membrane plus primary bending ($P_m + P_b$) stresses, as specified in Regulatory Guide 7.6. The P_m and $P_m + P_b$ stresses will be calculated for 26 selected sections in the cask. The methodology used to calculate the P_m and $P_m + P_b$ stresses at a selected section is explained in detail on pages 5.2.2 through 5.2.12 in the ANSYS Theoretical Manual, Rev. 4.2, "Stress Linearization."

- The P_m and $P_m + P_b$ stresses calculated in step 4 are then compared with the allowable stresses in accordance with the stress requirements specified in Regulatory Guide 7.6.

2.10.10.3 Analysis and Results

A thorough discussion of the NAC-LWT cask finite element model can be found in Section 2.10.2.

Figure 2.10.10-1 presents a sketch of the selected sections in the cask. Each section contains two or more nodal points. The locations for the 123 selected nodal points are given in Table 2.10.10-1.

The stress results, calculated for each individual loading (hot temperature, internal pressure, bolt preload and impact loads) at the 123 nodal points on the cask, are tabulated in Table 2.10.10-6 through Table 2.10.10-14. The combined stresses, classified as the primary, primary plus secondary, P_m and $P_m + P_b$ stress categories, are derived from performing steps 3 and 4 of Section 2.10.10.2 and are tabulated for each drop accident. The stress qualifications of P_m and $P_m + P_b$ are derived from step 5, in accordance with Regulatory Guide 7.6, and are tabulated for each drop accident.

2.10.10.3.1 30-Foot Top End Drop ($\phi = 0°$)

The event scenario is that the cask, equipped with impact limiters, falls through a distance of 30 feet and strikes the unyielding surface on the top end of the package.

The types of loading involved in a top end drop accident include: (1) thermal, (2) internal pressure, (3) closure lid bolt preload, and (4) impact and inertial loads resulting from the end impact. These loadings and the boundary conditions, used in the finite element top end drop analysis, have been discussed in Section 2.7.1.1.2. In addition, the displacement constrained nodes and applied forces used for the 30-foot top end drop are given in Appendix 2.10.2.

The primary, primary plus secondary, P_m, and $P_m + P_b$ stresses induced by the 30-foot top end drop are documented in Table 2.10.10-15 through Table 2.10.10-18. As discussed in Step 3, Section 2.10.10.2, the primary stresses are preferably obtained from the stress results induced by all of the primary loads; that is, internal pressure, bolt preload, impact and inertial loads. The primary stress may also be obtained by algebraically adding the stresses induced by each of the primary loads. A comparison was made of the primary stresses calculated from the combined load method versus the superposition method, which adds the stress results of each separate loading to obtain the primary stresses. The difference is insignificant. The same is true for the primary plus secondary stresses. The stress qualification of P_m and $P_m + P_b$ is presented in Table 2.10.10-19. The P_m and $P_m + P_b$ stress tables, documented in Table 2.10.7-34 and Table 2.10.7-35, are derived based on the primary plus secondary stresses. This provides conservative results

for the P_m and $P_m + P_b$ stresses because the primary plus secondary stresses are larger than the primary stresses.

The hand-calculated method used to evaluate the cask stress for a 30-foot top end drop impact condition is provided in Section 2.10.11.1. The compressive stresses calculated by the finite element method are -3,260 psi and -2,990 psi at the cask midsection in the inner and outer shell, respectively, with an average of -3,125 psi. The hand-calculated stress at the cask midsection is -3,213 psi. The difference is less than three percent.

All margins of safety are positive. Thus, the NAC-LWT cask satisfies the 10 CFR 71 requirements for the end drop accident condition.

2.10.10.3.2 30-Foot Top Corner Drop (ϕ = 15.74°)

The event scenario is that the cask, equipped with impact limiters, falls through a distance of 30 feet and strikes the unyielding surface on the top corner of the package with the package center of gravity directly above the point of impact.

The types of loading involved in a top corner drop accident include: (1) thermal, (2) internal pressure, (3) closure lid bolt preload, and (4) impact and inertial loads resulting from the corner drop impact. These loadings and the boundary conditions, used in the finite element top corner drop analysis, have been discussed in Section 2.7.1.3.2. In addition, the displacement constrained nodes and applied forces used for the 30-foot top corner drop are given in Appendix 2.10.2.

The primary, primary plus secondary, P_m, and $P_m + P_b$ stresses induced by the 30-foot top corner drop are documented in Table 2.10.10-20 through Table 2.10.10-23. The stress qualification of P_m and $P_m + P_b$ is presented in Table 2.10.10-24. An unrealistic stress is induced by the boundary effect because of the displacement restraints at node 2561. Stresses in the region near the restraint are disregarded. As discussed in Section 2.7.1.3.3, the oblique drop condition induces an eccentric (angular) momentum, which causes a rigid body rotation of the cask and a secondary impact onto the unyielding surface. To provide dynamic equilibrium of the cask body in the oblique drop evaluation, displacement restraints are imposed on the finite element model. These restraints cause localized peak stresses in the immediate vicinity of boundary conditions.

This boundary effect attenuates very rapidly at locations slightly away from the boundary region.

To obtain a more realistic stress distribution in the free end of the cask, the method of superposition described in Section 2.7.1.3.3 is used. By this method, the stresses for the following nodes and sections have been revised for the tables in Section 2.10.10.

Impact End	Section Cuts[1]	Node Number (S)[2]
Top	A through J	1 through 698
Bottom	S through Z	1481 through 2561

All margins of safety are positive. Thus, the NAC-LWT cask satisfies the 10 CFR 71 requirements for the corner drop accident condition.

2.10.10.3.3 30-Foot Top Oblique Drop (ϕ = 60°)

The event scenario is that the cask, equipped with impact limiters, falls with a drop orientation of 60 degrees from vertical through a distance of 30 feet and strikes the unyielding surface on the top corner of the cask.

The types of loading involved in a top oblique drop accident include: (1) thermal, (2) internal pressure, (3) closure lid bolt preload, and (4) impact and inertial loads resulting from the oblique drop impact. These loadings and the boundary conditions, used in the finite element top oblique drop analysis, have been discussed in Section 2.7.1.3.2. In addition, the displacement constrained nodes and applied forces used for the 30-foot top oblique drop are given in Appendix 2.10.2.

The primary, primary plus secondary, P_m, and $P_m + P_b$ stresses induced by the 30-foot top oblique drop are documented in Table 2.10.10-25 through.Table 2.10.10-28. The stress qualification of P_m and $P_m + P_b$ is presented in Table 2.10.10-29. The unrealistic stresses induced by the boundary effect at node 2561 should be disregarded as explained in Section 2.10.10.3.2. For this drop evaluation, the stresses in the vicinity of the free end are revised as described in Section 2.7.1.3.3.

All margins of safety are positive. Thus, the NAC-LWT cask satisfies the 10 CFR 71 requirements for the top oblique drop accident condition.

2.10.10.3.4 30-Foot Side Drop (ϕ = 90°)

The event scenario is that the cask, equipped with impact limiters, falls with a drop orientation of 90 degrees through a distance of 30 feet and strikes the unyielding surface in the horizontal position.

The types of loading involved in a side drop accident include: (1) thermal, (2) internal pressure, (3) closure lid bolt preload, and (4) impact and inertial loads resulting from the side drop impact. These loadings and the boundary conditions, used in the finite element side drop analysis, have been discussed in Section 2.7.1.2. The 30-foot side drop analysis includes a 1.20-inch thick outer shell. Furthermore, the impact g load has been revised to 49.7 g from 52.1 g to reflect the

[1] The section cuts are identified in Figure 2.10.7-1 and their coordinates are listed in Table 2.10.7-1.
[2] The node numbers versus nodal coordinates are specified in Table 2.10.2-1.

final impact limiter design criteria. Based on improved fabrication techniques, the honeycomb crush strength tolerance has been revised to 3,500 psi, +5, -10 percent; thus, the maximum tolerance crush strength of the honeycomb is 3,675 psi. Since the impact load is directly proportional to the honeycomb crush strength, the maximum side impact g-load is (3,675/3,850)(52.1) = 49.7 g. This value has been verified by an RBCUBED program analysis.

The displacement constrained nodes and applied forces used for the 30-foot side drop are given in Appendix 2.10.2.

The finite element stress results are compared with the hand-calculated stress results (Section 2.10.11.2). The finite element method calculates the most critical stress as 68.23 ksi versus 67.24 ksi from the hand-calculated method. The difference is less than 1.5 percent.

The primary, primary plus secondary, P_m, and $P_m + P_b$ stresses induced by the 30-foot side drop are documented in Table 2.10.10-30 through Table 2.10.10-33. In addition, the P_m and $P_m + P_b$ stresses at circular locations 90° and 180° are provided in Table 2.10.10-34 through Table 2.10.10-37. The stresses at circular location 0° are the most critical; therefore, they are the ones used for the stress qualification. Table 2.10.10-38 presents the stress qualification of P_m and $P_m + P_b$.

All margins of safety are positive. Thus, the NAC-LWT cask satisfies the 10 CFR 71 requirements for the side drop accident condition.

2.10.10.4 Conclusion

Based on the finite element stress analysis results for the four critical 30-foot drop conditions selected, the NAC-LWT cask design satisfies the allowable stress criteria specified in Regulatory Guide 7.6.

Figure 2.10.10-1 Stress Point Locations

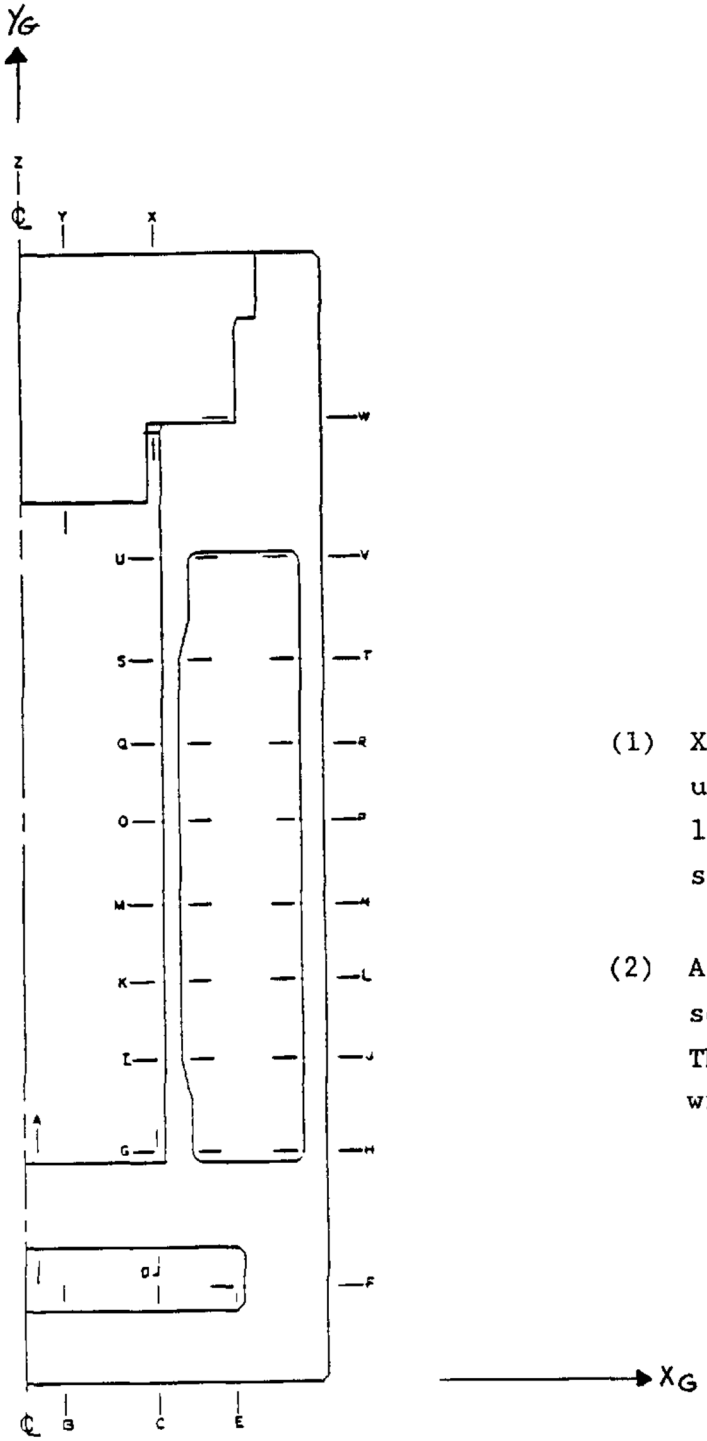

(1) X_G and Y_G are global axes used to measure the location of selected sections.

(2) A, ...Z are selected section designations. There are 26 sections with 52 stress points.

Table 2.10.10-1 Stress Point Locations

Designation	Node No.	Location	
		x	y
A1	327	0.85	10.50
A2	302	0.85	10.25
A3	277	0.85	10.00
A4	252	0.85	9.50
A5	227	0.85	8.50
A6	202	0.85	7.50
A7	177	0.85	6.50
B1	104	2.55	3.50
B2	79	2.55	2.50
B3	54	2.55	1.50
B4	29	2.55	0.50
B5	4	2.55	0.00
C1	110	6.6875	3.50
C2	85	6.6875	2.50
C3	60	6.6875	1.50
C4	35	6.6875	0.50
C5	10	6.6875	0.00
D1	335	6.6875	10.50
D2	310	6.6875	10.25
D3	285	6.6875	10.00
D4	260	6.6875	9.50
D5	235	6.6875	8.50
D6	210	6.6875	7.50
D7	185	6.6875	6.50
E1	118	10.375	3.50
E2	93	10.375	2.50
E3	68	10.375	1.50
E4	43	10.375	0.50
E5	18	10.375	0.00
F1	143	10.375	4.50
F2	144	11.315	4.50

Table 2.10.10-1 Stress Point Locations (Continued)

Designation	Node No.	Location	
		x	y
F3	145	12.001	4.50
F4	146	12.688	4.50
F5	147	13.188	4.50
F6	148	13.561	4.50
F7	149	13.934	4.50
F8	150	14.307	4.50
G1	335	6.6875	10.50
G2	336	6.9375	10.50
G3	337	7.1875	10.50
G4	338	7.4375	10.50
G5	339	7.9375	10.50
G6	340	8.4375	10.50
H1	346	12.688	10.50
H2	347	13.188	10.50
H3	348	13.561	10.50
H4	349	13.934	10.50
H5	350	14.307	10.50
I1	621	6.6875	16.50
I2	624	7.4375	16.50
J1	635	13.188	16.50
J2	638	14.307	16.50
K1	841	6.6875	35.50
K2	844	7.4375	35.50
L1	855	13.188	35.50
L2	858	14.307	35.50
M1	941	6.6875	60.50
M2	944	7.4375	60.50
N1	955	13.188	60.50
N2	958	14.307	60.50
O1	1101	6.6875	100.50
O2	1104	7.4375	100.50

Table 2.10.10-1 Stress Point Locations (Continued)

Designation	Node No.	Location	
		x	y
P1	1115	13.188	100.50
P2	1118	14.307	100.50
Q1	1261	6.6875	140.50
Q2	1264	7.4375	140.50
R1	1275	13.188	140.50
R2	1278	14.307	1450.50
S1	1561	6.6875	179.50
S2	1564	7.4375	179.50
T1	1575	13.188	179.50
T2	1578	14.307	179.50
U1	1841	6.6875	185.50
U2	1844	8.4375	185.50
V1	1852	12.688	185.50
V2	1856	14.307	185.50
W1	1969	10.315	191.75
W2	1970	11.315	191.75
W3	1971	12.001	191.75
W4	1972	12.688	191.75
W5	1973	13.188	191.75
W6	1974	13.561	191.75
W7	1975	13.934	191.75
W8	1976	14.307	191.75
X1	2370	6.6875	191.75
X2	2390	6.6875	192.75
X3	2410	6.6875	193.75
X4	2430	6.6875	194.75
X5	2450	6.6875	195.75
X6	2470	6.6875	196.75
X7	2490	6.6875	197.75
X8	2510	6.6875	198.25
X9	2530	6.6875	198.75

Table 2.10.10-1 Stress Point Locations (Continued)

Designation	Node No.	Location	
		x	y
X10	2550	6.6875	199.25
X11	2570	6.6875	199.75
Y1	2305	3.40	188.50
Y2	2325	3.40	189.75
Y3	2345	3.40	190.75
Y4	2365	3.40	191.75
Y5	2385	3.40	192.75
Y6	2405	3.40	193.75
Y7	2425	3.40	194.75
Y8	2445	3.40	195.75
Y9	2465	3.40	196.75
Y10	2485	3.40	197.75
Y11	2505	3.40	198.25
Y12	2525	3.40	198.75
Y13	2545	3.40	199.25
Y14	2565	3.40	199.75
Z1	2301	0.00	188.50
Z2	2321	0.00	189.75
Z3	2341	0.00	190.75
Z4	2361	0.00	191.75
Z5	2381	0.00	192.75
Z6	2404	0.00	193.75
Z7	2421	0.00	194.75
Z8	2441	0.00	195.75
Z9	2461	0.00	196.75
Z10	2481	0.00	197.75
Z11	2501	0.00	198.25
Z12	2521	0.00	198.75
Z13	2541	0.00	199.25
Z14	2561	0.00	199.75

Table 2.10.10-2 Constraint Forces for the 30-Foot Top End Drop Condition ($\phi = 0°$)

Node	FX	FY	FZ
1	0.722137		
25		-3487.13	
26	0.509030		
51	0.242975		
76	-0.581758		
101	-0.893385		
126	0.417712-001		
151	-0.425787-001		
176	1.21218		
201	0.902732		
226	-0.669590-001		
251	-0.522695		
276	-0.406303		
301	-0.717323		
326	-0.401629		
2301	-9.15600		
2321	-5.97171		
2341	-0.331048		
2361	2.36181		
2381	2.07107		
2401	-0.284169		
2421	-2.24827		
2441	-2.50453		
2461	-0.548714		
2481	1.73193		
2501	2.51800		
2521	3.71850		
2541	3.87877		
2561	4.73436		
3101	0.789074-001		
3176	-0.780999-001		
TOTAL	-0.280365-011	-3487.13	0.000000

Table 2.10.10-3 Constraint Forces for the 30-Foot Top Corner Drop Condition (ϕ = 15.74°)

Node	FX	FY	FZ
1	-3122.0370	-3760.2436	1159.4410
25	-183131.11		58533.923
2561	50113.502		-44114.872
TOTAL	-136139.64	-3760.2436	15578.492

Table 2.10.10-4 Constraint Forces for the 30-Foot Top Oblique Drop Condition (ϕ = 60°)

Node	FX	FY	FZ
1	-5429.7002	-2619.1410	3662.7469
2561	151886.32		-134475.85
TOTAL	146456.62	-2619.1410	-130813.10

Table 2.10.10-5 Constraint Forces for the 30-Foot Side Drop Condition (ϕ = 90°)

Node	FX	FY	FZ
1	4322.1611	1098.7180	-3316.9233
2561	7223.3599		-6394.6917
TOTAL	11545.521	1098.7180	-9711.6149

Table 2.10.10-6 Stress Components – Thermal; 130°F; 1.12-Inch Outer Shell Thickness

Stress Points		Stresses						
Location	Node	S_X	S_Y	S_Z	S_{XY}	S_1	S_2	S_3
A1	327	5.32	0.07	5.30	0.24	5.33	5.30	0.06
A2	302	4.45	0.07	4.45	-0.02	4.45	4.45	0.07
A3	277	3.58	0.01	3.57	-0.10	3.58	3.57	0.01
A4	252	1.85	-0.03	1.85	-0.02	1.85	1.85	-0.03
A5	227	-1.57	-0.05	-1.58	-0.02	-0.05	-1.57	-1.58
A6	202	-4.97	-0.08	-4.98	-0.01	-0.08	-4.97	-4.98
A7	177	-8.41	-0.09	-8.36	0.00	-0.09	-8.36	-8.41
B1	104	0.27	0.03	0.25	0.08	0.30	0.25	0.01
B2	79	1.18	0.05	1.19	0.05	1.19	1.18	0.04
B3	54	2.13	0.09	2.15	0.04	2.15	2.13	0.09
B4	29	3.14	0.05	3.13	0.07	3.14	3.13	0.05
B5	4	4.87	-0.03	4.82	-0.41	4.91	4.82	-0.06
C1	110	0.53	-0.79	0.72	0.22	0.72	0.56	-0.83
C2	85	1.27	-0.64	1.54	0.22	1.54	1.29	-0.66
C3	60	2.09	-0.32	5.52	0.24	2.52	2.11	-0.35
C4	35	3.15	-0.10	3.64	0.08	3.64	3.15	-0.10
C5	10	5.05	-0.02	5.47	-0.12	5.47	5.05	-0.03
D1	335	0.10	-8.29	1.64	-0.89	1.64	0.19	-8.38
D2	310	2.81	-4.74	2.74	-0.98	2.93	2.74	-4.86
D3	285	2.62	-3.03	2.62	-0.87	2.75	2.62	-3.16
D4	260	1.45	-2.10	1.46	-0.80	1.63	1.46	-2.27
D5	235	-0.83	-1.81	-1.23	-0.61	-0.54	-1.23	-2.10
D6	210	-3.47	-1.74	-4.13	0.02	-1.74	-3.47	-4.13
D7	185	-6.52	-1.67	-7.26	0.95	-1.49	-6.70	-7.26
E1	118	3.57	-3.22	2.02	3.56	5.10	2.02	-4.75
E2	93	0.78	0.62	2.50	1.53	2.50	2.24	-0.83
E3	68	0.99	0.23	2.89	1.13	2.89	1.80	-0.58
E4	43	1.03	0.05	3.42	0.54	3.42	1.27	-0.19
E5	18	2.13	0.02	4.88	0.16	4.88	2.14	0.01
F1	143	-9.96	-8.38	-1.96	6.23	-1.96	-2.89	-15.45
F2	144	-8.66	5.37	1.53	3.39	6.15	1.53	-9.44

Table 2.10.10-6 Stress Components – Thermal; 130°F; 1.12-Inch Outer Shell Thickness (Continued)

Stress Points		Stresses						
Location	Node	S_X	S_Y	S_Z	S_{XY}	S_1	S_2	S_3
F3	145	-5.57	3.38	1.40	0.44	3.40	1.40	-5.59
F4	146	-2.45	2.61	1.89	-0.26	2.62	1.89	-2.46
F5	147	-1.21	2.14	2.08	-0.40	2.18	2.08	-1.26
F6	148	-0.61	1.92	2.19	-0.38	2.19	1.98	-0.66
F7	149	-0.27	1.83	2.29	-0.24	2.29	1.86	-0.30
F8	150	-0.12	1.98	2.40	-0.14	2.40	1.99	-0.13
G1	335	0.10	-8.29	1.64	-0.89	1.64	0.19	-8.38
G2	336	0.33	-4.60	2.80	0.11	2.80	0.33	-4.60
G3	337	1.57	-1.77	3.93	0.59	3.93	1.67	-1.87
G4	338	2.62	1.52	5.11	-0.04	5.11	2.62	1.52
G5	339	5.97	6.96	7.44	-2.85	9.36	7.44	3.58
G6	340	7.46	1.89	6.59	-3.30	8.99	6.59	0.36
H1	346	-9.25	-3.91	-2.66	0.10	-2.66	-3.90	-9.26
H2	347	-4.69	3.46	0.77	0.32	3.47	0.77	-4.70
H3	348	-2.27	7.91	2.87	-0.15	7.91	2.87	-2.28
H4	349	-0.79	10.55	4.07	-0.31	10.55	4.07	-0.80
H5	350	-0.23	14.21	5.20	-0.27	14.22	5.20	-0.24
I1	621	0.00	3.12	0.38	0.03	3.12	0.38	0.00
I2	624	0.01	1.94	0.19	0.01	1.94	0.19	0.01
J1	635	0.00	10.71	0.23	0.05	10.71	0.23	0.00
J2	638	0.01	8.43	-0.14	0.05	8.43	0.00	-0.14
K1	841	0.00	2.27	-0.21	-0.01	2.27	0.00	-0.21
K2	844	0.00	2.69	0.19	0.01	2.69	0.19	0.00
L1	855	0.00	9.25	-0.36	0.00	9.25	0.00	-0.36
L2	858	0.00	9.78	0.18	0.00	9.78	0.18	0.00
M1	941	0.00	2.21	-0.27	0.00	2.21	0.00	-0.27
M2	944	0.00	2.75	0.25	0.00	2.75	0.25	0.00
N1	955	0.00	9.13	-0.45	0.00	9.13	0.00	-0.45
N2	958	0.00	9.84	0.23	0.00	9.84	0.23	0.00
O1	1101	0.00	2.22	-0.27	0.00	2.22	0.00	-0.27
O2	1104	0.00	2.75	0.25	0.00	2.75	0.25	0.00

Table 2.10.10-6 Stress Components – Thermal; 130°F; 1.12-Inch Outer Shell Thickness (Continued)

Stress Points		Stresses						
Location	Node	S_X	S_Y	S_Z	S_{XY}	S_1	S_2	S_3
P1	1115	0.00	9.10	-0.49	0.00	9.10	0.00	-0.49
P2	1118	0.00	9.85	0.24	0.00	9.85	0.24	0.00
Q1	1261	0.00	2.28	-0.18	0.00	2.28	0.00	-0.18
Q2	1264	0.00	2.69	0.22	0.00	2.69	0.22	0.00
R1	1275	0.00	9.15	-0.46	0.00	9.15	0.00	-0.46
R2	1278	-0.01	9.88	0.09	0.00	9.88	0.09	-0.01
S1	1561	0.00	2.12	0.24	0.04	2.12	0.24	0.00
S2	1564	-0.03	2.90	0.56	0.05	2.90	0.56	-0.03
T1	1575	0.00	10.66	0.09	-0.06	10.66	0.09	0.00
T2	1578	0.00	8.45	-0.12	-0.05	8.45	0.00	-0.12
U1	1841	0.02	0.16	-0.54	-0.09	0.21	-0.03	-0.54
U2	1844	0.21	1.24	0.17	-0.07	1.24	0.21	0.17
V1	1852	-5.69	-2.17	-2.44	-1.18	-1.81	-2.44	-6.05
V2	1856	-0.31	12.07	3.55	0.16	12.07	3.55	-0.32
W1	1969	-0.77	-1.85	0.01	-0.81	0.01	-0.34	-2.28
W2	1970	-0.02	-0.76	0.70	-0.68	0.70	0.38	-1.16
W3	1971	-0.11	-0.09	0.96	-0.56	0.96	0.46	-0.65
W4	1972	-0.09	0.54	1.21	-0.48	1.21	0.80	-0.35
W5	1973	-0.07	0.95	1.37	-0.38	1.37	1.07	-0.20
W6	1974	-0.06	1.27	1.52	-0.26	1.52	1.32	-0.11
W7	1975	-0.03	1.55	1.66	-0.13	1.66	1.56	-0.04
W8	1976	0.01	1.81	1.79	-0.07	1.81	1.79	0.01
X1	2370	-1.24	-0.33	-0.33	0.60	-0.03	-0.33	-1.54
X2	2390	-0.33	-0.94	-0.24	0.44	-0.10	-0.24	-1.17
X3	2410	-0.36	-0.54	-0.07	0.06	-0.07	-0.34	-0.56
X4	2430	-0.34	-0.39	0.00	-0.13	0.00	-0.23	-0.50
X5	2450	-0.40	-0.23	0.06	-0.26	0.06	-0.04	-0.60
X6	2470	-0.41	-0.13	0.13	-0.33	0.13	0.08	-0.63
X7	2490	-0.38	-0.06	0.25	-0.34	0.25	0.15	-0.59
X8	2510	-0.34	-0.03	0.34	-0.32	0.34	0.17	-0.54
X9	2530	-0.28	-0.01	0.46	-0.26	0.46	0.15	-0.44

Table 2.10.10-6 Stress Components – Thermal; 130°F; 1.12-Inch Outer Shell Thickness (Continued)

Stress Points		Stresses						
Location	Node	S_X	S_Y	S_Z	S_{XY}	S_1	S_2	S_3
X10	2550	-0.22	0.00	0.61	-0.17	0.61	0.09	-0.31
X11	2570	0.62	0.00	1.58	-0.05	1.58	0.62	-0.01
Y1	2305	0.57	-0.03	0.49	-0.04	0.57	0.49	-0.03
Y2	2325	0.02	-0.05	-0.01	0.05	0.05	-0.01	-0.08
Y3	2345	-0.28	-0.11	-0.34	0.05	-0.10	-0.29	-0.34
Y4	2365	-0.55	-0.16	-0.61	0.04	-0.16	-0.56	-0.61
Y5	2385	-0.71	-0.21	-0.78	0.05	-0.20	-0.74	-0.78
Y6	2405	-0.80	-0.25	-0.87	0.04	-0.25	-0.80	-0.87
Y7	2425	-0.78	-0.27	-0.87	0.00	-0.27	-0.78	-0.87
Y8	2445	-0.71	-0.25	-0.80	-0.05	-0.25	-0.72	-0.80
Y9	2465	-0.61	-0.19	-0.67	-0.08	-0.17	-0.63	-0.67
Y10	2485	-0.43	-0.11	-0.44	-0.08	-0.09	-0.44	-0.45
Y11	2505	-0.29	-0.05	-0.29	-0.04	-0.04	-0.29	-0.30
Y12	2525	-0.11	-0.02	-0.11	-0.01	-0.02	-0.11	-0.11
Y13	2545	0.13	0.00	0.11	-0.01	0.13	0.11	0.00
Y14	2565	1.25	0.00	1.15	0.07	1.26	1.15	0.00
Z1	2301	0.51	0.01	0.49	0.00	0.51	0.49	0.01
Z2	2321	0.08	0.03	0.08	0.00	0.08	0.08	0.03
Z3	2341	-0.24	0.07	-0.24	0.00	0.07	-0.24	-0.24
Z4	2361	-0.51	0.09	-0.50	0.00	0.09	-0.50	-0.51
Z5	2381	-0.68	0.11	-0.68	0.00	0.11	-0.68	-0.68
Z6	2401	-0.78	0.11	-0.78	0.00	0.11	-0.78	-0.78
Z7	2421	-0.80	0.11	-0.80	0.00	0.11	-0.80	-0.80
Z8	2441	-0.73	0.10	-0.72	0.00	0.10	-0.72	-0.73
Z9	2461	-0.58	0.09	-0.58	0.00	0.09	-0.58	-0.58
Z10	2481	-0.35	0.07	-0.34	0.00	0.07	-0.34	-0.35
Z11	2501	-0.21	0.05	-0.21	0.00	0.05	-0.21	-0.21
Z12	2521	-0.05	0.03	-0.06	0.00	0.03	-0.05	-0.06
Z13	2541	0.11	0.01	0.10	0.00	0.11	0.10	0.01
Z14	2561	1.06	0.01	1.06	0.00	1.06	1.06	0.01

Table 2.10.10-7 Stress Components – Internal Pressure; 50 psi; 1.12-Inch Outer Shell Thickness

Stress Points		Stresses						
Location	Node	S_X	S_Y	S_Z	S_{XY}	S_1	S_2	S_3
A1	327	-0.11	-0.05	-0.11	0.00	-0.05	-0.11	-0.11
A2	302	-0.09	-0.05	-0.09	0.00	-0.05	-0.09	-0.09
A3	277	-0.07	-0.05	-0.07	0.01	-0.05	-0.07	-0.07
A4	252	-0.04	-0.04	-0.04	0.01	-0.03	-0.04	-0.05
A5	227	0.01	-0.03	0.01	0.01	0.01	0.01	-0.03
A6	202	0.06	-0.01	0.06	0.01	0.06	0.06	-0.01
A7	177	0.12	0.00	0.12	0.00	0.12	0.12	0.00
B1	104	0.01	0.00	0.01	0.00	0.01	0.01	0.00
B2	79	0.01	0.00	0.01	0.00	0.01	0.01	0.00
B3	54	0.00	0.00	0.00	0.00	0.00	0.00	0.00
B4	29	0.00	0.00	0.00	0.00	0.00	0.00	0.00
B5	4	0.00	0.00	0.00	0.00	0.00	0.00	0.00
C1	110	0.01	0.00	0.01	0.00	0.01	0.01	0.00
C2	85	0.01	0.00	0.01	0.00	0.01	0.01	0.00
C3	60	0.00	0.00	0.00	0.00	0.00	0.00	0.00
C4	35	0.00	0.00	0.00	0.00	0.00	0.00	0.00
C5	10	0.00	0.00	0.00	0.00	0.00	0.00	0.00
D1	335	0.24	0.39	0.16	0.11	0.45	0.19	0.16
D2	310	0.05	0.23	0.07	0.08	0.23	0.07	0.02
D3	285	0.02	0.14	0.03	0.06	0.16	0.03	0.00
D4	260	0.00	0.07	0.02	0.04	0.09	0.02	-0.02
D5	235	-0.01	0.03	0.01	0.03	0.04	0.01	-0.02
D6	210	-0.01	0.01	0.02	0.02	0.02	0.02	-0.02
D7	185	-0.02	0.00	0.03	0.01	0.03	0.00	-0.03
E1	118	-0.01	-0.01	0.01	0.00	0.01	0.01	-0.01
E2	93	0.00	0.00	0.00	0.00	0.00	0.00	0.00
E3	68	0.00	0.00	0.00	0.00	0.00	0.00	0.00
E4	43	0.00	0.00	0.00	0.00	0.00	0.00	0.00
E5	18	0.00	0.00	0.00	0.00	0.00	0.00	0.00
F1	143	0.00	-0.02	0.00	0.00	0.00	0.00	-0.02
F2	144	0.00	-0.01	0.00	0.01	0.00	0.00	-0.01

Table 2.10.10-7 Stress Components – Internal Pressure; 50 psi; 1.12-Inch Outer Shell Thickness (Continued)

Stress Points		Stresses						
Location	Node	S_X	S_Y	S_Z	S_{XY}	S_1	S_2	S_3
F3	145	0.00	0.00	0.01	0.01	0.01	0.01	-0.01
F4	146	0.00	0.00	0.01	0.01	0.01	0.01	-0.01
F5	147	0.00	0.01	0.01	0.01	0.01	0.01	0.00
F6	148	0.00	0.01	0.01	0.00	0.01	0.01	0.00
F7	149	0.00	0.01	0.01	0.00	0.01	0.01	0.00
F8	150	0.00	0.01	0.01	0.00	0.01	0.01	0.00
G1	335	0.24	0.39	0.16	0.11	0.45	0.19	0.16
G2	336	0.14	0.19	0.08	0.06	0.23	0.10	0.08
G3	337	0.06	0.12	0.04	0.02	0.12	0.05	0.04
G4	338	0.02	0.04	0.01	0.01	0.05	0.01	0.01
G5	339	-0.04	-0.08	-0.04	0.03	-0.02	-0.04	-0.10
G6	340	-0.06	-0.04	-0.04	0.04	-0.01	-0.04	-0.10
H1	346	0.00	0.01	0.00	0.00	0.01	0.00	0.00
H2	347	0.00	0.02	0.00	0.00	0.02	0.00	0.00
H3	348	0.00	0.02	0.00	0.00	0.02	0.00	0.00
H4	349	0.00	0.01	0.00	0.00	0.01	0.00	0.00
H5	350	0.00	0.01	0.00	0.00	0.01	0.00	0.00
I1	621	-0.05	0.08	0.34	-0.01	0.34	0.08	-0.05
I2	624	-0.02	0.16	0.33	0.00	0.33	0.16	-0.02
J1	635	0.00	0.02	0.00	0.00	0.02	0.00	0.00
J2	638	0.00	0.02	0.00	0.00	0.02	0.00	0.00
K1	841	-0.05	0.10	0.36	0.02	0.36	0.10	-0.05
K2	844	-0.01	0.10	0.32	0.02	0.32	0.10	-0.01
L1	855	0.00	0.02	0.00	0.00	0.02	0.00	0.00
L2	858	0.00	0.02	0.00	0.00	0.02	0.00	0.00
M1	941	-0.05	0.10	0.36	0.00	0.36	0.10	-0.05
M2	944	-0.01	0.11	0.32	0.00	0.32	0.10	-0.01
N1	955	0.00	0.02	0.00	0.00	0.02	0.00	0.00
N2	958	0.00	0.02	0.00	0.00	0.02	0.00	0.00
O1	1101	-0.05	0.10	0.36	0.00	0.36	0.10	-0.05
O2	1104	-0.01	0.10	0.32	0.00	0.32	0.10	-0.01

Table 2.10.10-7 Stress Components – Internal Pressure; 50 psi; 1.12-Inch Outer Shell Thickness (Continued)

Stress Points		Stresses						
Location	Node	S_X	S_Y	S_Z	S_{XY}	S_1	S_2	S_3
P1	1115	0.00	0.02	0.00	0.00	0.02	0.00	0.00
P2	1118	0.00	0.02	0.00	0.00	0.02	0.00	0.00
Q1	1261	-0.05	0.10	0.36	0.00	0.36	0.10	-0.05
Q2	1264	-0.01	0.10	0.32	0.00	0.32	0.10	-0.01
R1	1275	0.00	0.02	0.00	0.00	0.02	0.00	0.00
R2	1278	0.00	0.02	0.00	0.00	0.02	0.00	0.00
S1	1561	-0.05	0.10	0.35	0.00	0.35	0.10	-0.05
S2	1564	-0.02	0.14	0.32	0.00	0.32	0.14	-0.02
T1	1575	0.00	0.03	0.00	0.00	0.03	0.00	0.00
T2	1578	0.00	0.01	0.00	0.00	0.01	0.00	0.00
U1	1841	-0.05	0.14	0.15	-0.01	0.15	0.14	-0.05
U2	1844	-0.06	0.09	0.11	-0.01	0.11	0.09	-0.06
V1	1852	-0.03	-0.01	0.02	0.01	0.02	-0.01	-0.03
V2	1856	0.00	0.05	0.04	0.00	0.05	0.04	0.00
W1	1969	0.01	0.01	0.01	0.00	0.01	0.01	0.01
W2	1970	0.01	0.00	0.01	0.00	0.01	0.01	0.00
W3	1971	0.00	0.00	0.01	0.00	0.01	0.00	0.00
W4	1972	0.00	0.00	0.01	0.00	0.01	0.00	0.00
W5	1973	0.00	0.00	0.01	0.00	0.01	0.00	0.00
W6	1974	0.00	0.00	0.01	0.00	0.01	0.00	0.00
W7	1975	0.00	-0.01	0.01	0.00	0.01	0.00	-0.01
W8	1976	0.00	-0.01	0.00	0.00	0.00	0.00	-0.01
X1	2370	0.06	0.00	0.03	-0.04	0.08	0.03	-0.02
X2	2390	0.00	0.04	0.02	-0.04	0.06	0.02	-0.03
X3	2410	0.00	0.01	0.01	-0.02	0.03	0.01	-0.02
X4	2430	0.00	0.01	0.01	-0.02	0.02	0.01	-0.01
X5	2450	0.00	0.01	0.01	-0.01	0.02	0.01	-0.01
X6	2470	0.00	0.00	0.01	-0.01	0.01	0.01	-0.01
X7	2490	0.00	0.00	0.01	-0.01	0.01	0.01	-0.01
X8	2510	0.00	0.00	0.01	-0.01	0.01	0.01	0.00
X9	2530	0.00	0.00	0.01	0.00	0.01	0.01	0.00

Table 2.10.10-7 Stress Components – Internal Pressure; 50 psi; 1.12-Inch Outer Shell Thickness (Continued)

Stress Points		Stresses						
Location	Node	S_X	S_Y	S_Z	S_{XY}	S_1	S_2	S_3
X10	2550	0.00	0.00	0.01	0.00	0.01	0.00	0.00
X11	2570	0.00	0.00	0.01	0.00	0.01	0.00	0.00
Y1	2305	-0.07	-0.05	-0.07	0.01	-0.05	-0.07	-0.08
Y2	2325	-0.05	-0.05	-0.05	0.00	-0.05	-0.05	-0.06
Y3	2345	-0.04	-0.05	-0.04	0.00	-0.03	-0.04	-0.05
Y4	2365	-0.02	-0.04	-0.02	-0.01	-0.02	-0.02	-0.05
Y5	2385	0.00	-0.04	0.00	-0.01	0.00	0.00	-0.04
Y6	2405	0.00	-0.03	0.00	-0.01	0.01	0.00	-0.04
Y7	2425	0.01	-0.03	0.01	-0.01	0.01	0.01	-0.03
Y8	2445	0.01	-0.02	0.01	-0.01	0.01	0.01	-0.02
Y9	2465	0.01	-0.01	0.01	-0.01	0.01	0.01	-0.02
Y10	2485	0.01	-0.01	0.01	-0.01	0.01	0.01	-0.01
Y11	2505	0.01	0.00	0.01	-0.01	0.01	0.01	-0.01
Y12	2525	0.01	0.00	0.02	-0.01	0.02	0.01	0.00
Y13	2545	0.01	0.00	0.02	0.00	0.02	0.01	0.00
Y14	2565	0.02	0.00	0.02	0.00	0.02	0.02	0.00
Z1	2301	-0.08	-0.05	-0.08	0.00	-0.05	-0.08	-0.08
Z2	2321	-0.05	-0.05	-0.05	0.00	-0.05	-0.05	-0.05
Z3	2341	-0.04	-0.05	-0.04	0.00	-0.04	-0.04	-0.05
Z4	2361	-0.02	-0.05	-0.02	0.00	-0.02	-0.02	-0.05
Z5	2381	-0.01	-0.04	-0.01	0.00	-0.01	-0.01	-0.04
Z6	2401	0.00	-0.04	0.00	0.00	0.00	0.00	-0.04
Z7	2421	0.01	-0.03	0.00	0.00	0.01	0.00	-0.03
Z8	2441	0.01	-0.02	0.01	0.00	0.01	0.01	-0.02
Z9	2461	0.01	-0.02	0.01	0.00	0.01	0.01	-0.02
Z10	2481	0.01	-0.01	0.01	0.00	0.01	0.01	-0.01
Z11	2501	0.02	-0.01	0.02	0.00	0.02	0.02	-0.01
Z12	2521	0.02	0.00	0.02	0.00	0.02	0.02	0.00
Z13	2541	0.02	0.00	0.02	0.00	0.02	0.02	0.00
Z14	2561	0.03	0.00	0.03	0.00	0.03	0.03	0.00

Table 2.10.10-8 Stress Components – Bolt Preload; 1.12-Inch Outer Shell Thickness

Stress Points		Stresses						
Location	Node	S_X	S_Y	S_Z	S_{XY}	S_1	S_2	S_3
A1	327	0.00	0.00	0.00	0.00	0.00	0.00	0.00
A2	302	0.00	0.00	0.00	0.00	0.00	0.00	0.00
A3	277	0.00	0.00	0.00	0.00	0.00	0.00	0.00
A4	252	0.00	0.00	0.00	0.00	0.00	0.00	0.00
A5	227	0.00	0.00	0.00	0.00	0.00	0.00	0.00
A6	202	0.00	0.00	0.00	0.00	0.00	0.00	0.00
A7	177	0.00	0.00	0.00	0.00	0.00	0.00	0.00
B1	104	0.00	0.00	0.00	0.00	0.00	0.00	0.00
B2	79	0.00	0.00	0.00	0.00	0.00	0.00	0.00
B3	54	0.00	0.00	0.00	0.00	0.00	0.00	0.00
B4	29	0.00	0.00	0.00	0.00	0.00	0.00	0.00
B5	4	0.00	0.00	0.00	0.00	0.00	0.00	0.00
C1	110	0.00	0.00	0.00	0.00	0.00	0.00	0.00
C2	85	0.00	0.00	0.00	0.00	0.00	0.00	0.00
C3	60	0.00	0.00	0.00	0.00	0.00	0.00	0.00
C4	35	0.00	0.00	0.00	0.00	0.00	0.00	0.00
C5	10	0.00	0.00	0.00	0.00	0.00	0.00	0.00
D1	335	0.00	0.00	0.00	0.00	0.00	0.00	0.00
D2	310	0.00	0.00	0.00	0.00	0.00	0.00	0.00
D3	285	0.00	0.00	0.00	0.00	0.00	0.00	0.00
D4	260	0.00	0.00	0.00	0.00	0.00	0.00	0.00
D5	235	0.00	0.00	0.00	0.00	0.00	0.00	0.00
D6	210	0.00	0.00	0.00	0.00	0.00	0.00	0.00
D7	185	0.00	0.00	0.00	0.00	0.00	0.00	0.00
E1	118	0.00	0.00	0.00	0.00	0.00	0.00	0.00
E2	93	0.00	0.00	0.00	0.00	0.00	0.00	0.00
E3	68	0.00	0.00	0.00	0.00	0.00	0.00	0.00
E4	43	0.00	0.00	0.00	0.00	0.00	0.00	0.00
E5	18	0.00	0.00	0.00	0.00	0.00	0.00	0.00
F1	143	0.00	0.00	0.00	0.00	0.00	0.00	0.00
F2	144	0.00	0.00	0.00	0.00	0.00	0.00	0.00

Table 2.10.10-8 Stress Components – Bolt Preload; 1.12-Inch Outer Shell Thickness (Continued)

Stress Points		Stresses						
Location	Node	S_X	S_Y	S_Z	S_{XY}	S_1	S_2	S_3
F3	145	0.00	0.00	0.00	0.00	0.00	0.00	0.00
F4	146	0.00	0.00	0.00	0.00	0.00	0.00	0.00
F5	147	0.00	0.00	0.00	0.00	0.00	0.00	0.00
F6	148	0.00	0.00	0.00	0.00	0.00	0.00	0.00
F7	149	0.00	0.00	0.00	0.00	0.00	0.00	0.00
F8	150	0.00	0.00	0.00	0.00	0.00	0.00	0.00
G1	335	0.00	0.00	0.00	0.00	0.00	0.00	0.00
G2	336	0.00	0.00	0.00	0.00	0.00	0.00	0.00
G3	337	0.00	0.00	0.00	0.00	0.00	0.00	0.00
G4	338	0.00	0.00	0.00	0.00	0.00	0.00	0.00
G5	339	0.00	0.01	0.00	0.00	0.01	0.00	0.00
G6	340	0.01	0.00	0.00	0.00	0.01	0.00	0.00
H1	346	0.00	0.00	0.00	0.00	0.00	0.00	0.00
H2	347	0.00	0.00	0.00	0.00	0.00	0.00	0.00
H3	348	0.00	0.00	0.00	0.00	0.00	0.00	0.00
H4	349	0.00	0.00	0.00	0.00	0.00	0.00	0.00
H5	350	0.00	0.00	0.00	0.00	0.00	0.00	0.00
I1	621	0.00	0.01	0.00	0.00	0.01	0.00	0.00
I2	624	0.00	0.01	0.00	0.00	0.01	0.00	0.00
J1	635	0.00	0.00	0.00	0.00	0.00	0.00	0.00
J2	638	0.00	0.00	0.00	0.00	0.00	0.00	0.00
K1	841	0.00	0.01	0.00	0.00	0.01	0.00	0.00
K2	844	0.00	0.01	0.00	0.00	0.01	0.00	0.00
L1	855	0.00	0.00	0.00	0.00	0.00	0.00	0.00
L2	858	0.00	0.00	0.00	0.00	0.00	0.00	0.00
M1	941	0.00	0.01	0.00	0.00	0.01	0.00	0.00
M2	944	0.00	0.01	0.00	0.00	0.01	0.00	0.00
N1	955	0.00	0.00	0.00	0.00	0.00	0.00	0.00
N2	958	0.00	0.00	0.00	0.00	0.00	0.00	0.00
O1	1101	0.00	0.01	0.00	0.00	0.01	0.00	0.00
O2	1104	0.00	0.01	0.00	0.00	0.01	0.00	0.00

Table 2.10.10-8 Stress Components – Bolt Preload; 1.12-Inch Outer Shell Thickness (Continued)

Stress Points		Stresses						
Location	Node	S_X	S_Y	S_Z	S_{XY}	S_1	S_2	S_3
P1	1115	0.00	0.00	0.00	0.00	0.01	0.00	0.00
P2	1118	0.00	0.00	0.00	0.00	0.01	0.00	0.00
Q1	1261	0.00	0.01	0.00	0.00	0.01	0.00	0.00
Q2	1264	0.00	0.01	0.00	0.00	0.01	0.00	0.00
R1	1275	0.00	0.00	0.00	0.00	0.01	0.00	0.00
R2	1278	0.00	0.00	0.00	0.00	0.01	0.00	0.00
S1	1561	0.00	0.04	0.00	0.00	0.04	0.00	0.00
S2	1564	0.00	-0.02	-0.01	0.00	0.00	-0.01	-0.02
T1	1575	0.00	0.00	-0.01	0.00	0.00	0.00	-0.01
T2	1578	0.00	0.00	-0.01	0.00	0.00	0.00	-0.01
U1	1841	-0.01	-0.30	0.07	0.01	0.07	-0.01	-0.30
U2	1844	-0.07	-0.10	0.09	0.12	0.09	0.03	-0.20
V1	1852	0.10	0.02	0.05	0.01	0.10	0.05	0.02
V2	1856	0.00	-0.05	0.01	0.01	0.01	0.01	-0.05
W1	1969	-0.06	-0.20	0.05	0.18	0.06	0.05	-0.32
W2	1970	-0.01	-0.14	0.07	0.02	0.07	0.00	-0.15
W3	1971	0.00	-0.08	0.08	-0.05	0.08	0.02	-0.10
W4	1972	0.00	-0.03	0.09	-0.05	0.09	0.04	-0.07
W5	1973	0.00	0.01	0.10	-0.05	0.10	0.05	-0.04
W6	1974	0.00	0.04	0.10	-0.04	0.10	0.06	-0.03
W7	1975	0.00	0.07	0.10	-0.02	0.10	0.07	-0.01
W8	1976	0.00	0.09	0.11	-0.01	0.11	0.09	0.00
X1	2370	-0.06	0.00	-0.02	0.13	0.11	-0.02	-0.17
X2	2390	-0.05	-0.21	-0.09	0.10	0.00	-0.09	-0.26
X3	2410	0.06	-0.22	-0.04	-0.01	0.06	-0.04	-0.22
X4	2430	0.03	-0.09	-0.01	-0.06	0.05	-0.01	-0.12
X5	2450	0.01	-0.05	0.00	-0.06	0.05	0.00	-0.08
X6	2470	0.00	-0.01	0.01	-0.04	0.04	0.01	-0.04
X7	2490	0.01	0.00	0.02	-0.02	0.03	0.02	-0.02
X8	2510	0.01	0.00	0.03	-0.02	0.03	0.03	-0.01
X9	2530	0.02	0.00	0.03	-0.01	0.03	0.02	-0.01

Table 2.10.10-8 Stress Components – Bolt Preload; 1.12-Inch Outer Shell Thickness (Continued)

Stress Points		Stresses						
Location	Node	S_X	S_Y	S_Z	S_{XY}	S_1	S_2	S_3
X10	2550	0.02	0.00	0.04	-0.01	0.04	0.02	0.00
X11	2570	0.02	0.00	0.04	0.00	0.04	0.02	0.00
Y1	2305	0.02	0.00	0.02	0.00	0.02	0.02	0.00
Y2	2325	0.01	0.00	0.01	0.00	0.01	0.01	0.00
Y3	2345	0.00	-0.01	0.00	0.00	0.00	0.00	-0.01
Y4	2365	-0.01	-0.01	-0.01	0.00	-0.01	-0.01	-0.01
Y5	2385	-0.02	-0.01	-0.02	0.00	-0.01	-0.02	-0.02
Y6	2405	-0.02	-0.01	-0.02	0.00	-0.01	-0.02	-0.02
Y7	2425	-0.01	-0.01	-0.01	0.00	-0.01	-0.01	-0.02
Y8	2445	-0.01	-0.02	0.00	0.00	0.01	0.00	-0.02
Y9	2465	0.02	-0.01	0.01	0.00	0.02	0.01	-0.01
Y10	2485	0.03	-0.01	0.02	0.00	0.03	0.02	-0.01
Y11	2505	0.03	0.00	0.03	-0.01	0.03	0.03	-0.01
Y12	2525	0.04	0.00	0.04	0.00	0.04	0.04	0.00
Y13	2545	0.05	0.00	0.05	0.00	0.05	0.05	0.00
Y14	2565	0.06	0.00	0.06	0.00	0.06	0.06	0.00
Z1	2301	0.02	0.00	0.02	0.00	0.02	0.02	0.00
Z2	2321	0.01	0.00	0.01	0.00	0.01	0.01	0.00
Z3	2341	0.00	0.00	0.00	0.00	0.00	0.00	0.00
Z4	2361	-0.01	0.00	-0.01	0.00	0.01	-0.01	-0.01
Z5	2381	-0.01	0.01	-0.01	0.00	0.01	-0.01	-0.01
Z6	2401	-0.01	0.01	-0.01	0.00	0.01	-0.01	-0.01
Z7	2421	-0.01	0.00	-0.01	0.00	0.00	-0.01	-0.01
Z8	2441	0.00	0.00	0.00	0.00	0.00	0.00	0.00
Z9	2461	0.01	0.00	0.01	0.00	0.01	0.01	0.00
Z10	2481	0.03	0.00	0.03	0.00	0.03	0.03	0.00
Z11	2501	0.03	0.00	0.03	0.00	0.03	0.03	0.00
Z12	2521	0.04	0.00	0.04	0.00	0.04	0.04	0.00
Z13	2541	0.05	0.00	0.05	0.00	0.05	0.05	0.00
Z14	2561	0.06	0.00	0.06	0.00	0.06	0.06	0.00

Table 2.10.10-9 Stress Components – Impact and Inertial Loads; 30-Foot Top End Drop; $\phi = 0°$; 1.12-Inch Outer Shell Thickness

Stress Points		Stresses						
Location	Node	S_X	S_Y	S_Z	S_{XY}	S_1	S_2	S_3
A1	327	0.75	0.01	0.76	0.03	0.76	0.75	0.01
A2	302	0.66	0.01	0.67	-0.01	0.67	0.66	0.01
A3	277	0.58	0.01	0.59	-0.03	0.59	0.58	0.00
A4	252	0.42	-0.01	0.43	-0.02	0.43	0.42	-0.02
A5	227	0.14	-0.04	0.14	-0.03	0.14	0.14	-0.05
A6	202	-0.15	-0.07	-0.15	-0.02	-0.06	-0.15	-0.15
A7	177	-0.48	-0.08	-0.49	-0.01	-0.08	-0.48	-0.49
B1	104	0.31	0.01	0.33	0.00	0.33	0.31	0.01
B2	79	0.04	0.01	0.05	-0.04	0.07	0.05	-0.02
B3	54	-0.21	-0.01	-0.22	-0.05	0.00	-0.21	-0.23
B4	29	-0.47	-0.01	-0.48	-0.04	0.00	-0.47	-0.48
B5	4	-0.61	0.00	-0.63	0.04	0.01	-0.61	-0.63
C1	110	0.02	0.00	0.17	-0.04	0.17	0.06	-0.03
C2	85	-0.09	0.00	-0.02	-0.08	0.05	-0.02	-0.14
C3	60	-0.17	0.00	-0.19	-0.10	0.05	-0.19	-0.22
C4	35	-0.25	0.00	-0.36	-0.06	0.01	-0.27	-0.36
C5	10	-0.31	0.00	-0.46	-0.01	0.00	-0.31	-0.46
D1	335	-0.32	-1.10	-0.01	-0.22	-0.01	-0.25	-1.18
D2	310	0.11	-0.70	0.17	-0.22	0.19	0.15	-0.77
D3	285	0.17	-0.50	0.21	-0.20	0.23	0.21	-0.56
D4	260	0.22	-0.35	0.20	-0.17	0.27	0.20	-0.40
D5	235	0.18	-0.23	0.10	-0.13	0.22	0.10	-0.27
D6	210	0.11	-0.15	-0.02	-0.08	0.13	-0.02	-0.17
D7	185	0.07	-0.12	-0.16	-0.04	0.07	-0.13	-0.16
E1	118	-0.45	-0.42	-0.22	-0.17	-0.22	-0.25	-0.62
E2	93	-0.12	-0.26	-0.15	-0.11	-0.06	-0.15	-0.32
E3	68	-0.06	-0.11	-0.17	-0.06	-0.02	-0.14	-0.18
E4	43	0.00	-0.04	-0.21	-0.02	0.01	-0.05	-0.21
E5	18	0.06	-0.01	-0.23	0.00	0.06	-0.01	-0.23
F1	143	0.03	-0.32	-0.08	-0.16	0.09	-0.08	-0.38
F2	144	-0.03	-0.11	-0.04	-0.19	0.13	-0.04	-0.27

Table 2.10.10-9 Stress Components – Impact and Inertial Loads; 30-Foot Top End Drop; $\phi = 0°$; 1.12-Inch Outer Shell Thickness (Continued)

Stress Points		Stresses						
Location	Node	S_X	S_Y	S_Z	S_{XY}	S_1	S_2	S_3
F3	145	-0.07	-0.10	-0.05	-0.21	0.12	-0.05	-0.29
F4	146	-0.04	-0.09	-0.04	-0.17	0.11	-0.04	-0.24
F5	147	-0.02	-0.09	-0.03	-0.14	0.09	-0.03	-0.20
F6	148	-0.01	-0.08	-0.03	-0.10	0.06	-0.03	-0.15
F7	149	-0.01	-0.07	-0.02	-0.05	0.03	-0.02	-0.10
F8	150	0.00	-0.05	-0.01	-0.03	0.02	-0.01	-0.07
G1	335	-0.32	-1.10	-0.01	-0.22	-0.01	-0.25	-1.18
G2	336	-0.23	-0.76	0.10	-0.11	0.10	-0.19	-0.79
G3	337	-0.10	-0.62	0.16	-0.03	0.16	-0.09	-0.62
G4	338	-0.02	-0.53	0.19	0.02	0.19	-0.02	-0.53
G5	339	0.05	-0.27	0.27	0.05	0.27	0.05	-0.27
G6	340	0.15	-0.06	0.34	0.03	0.34	0.16	-0.07
H1	346	0.10	-0.21	0.23	-0.14	0.23	0.15	-0.26
H2	347	0.00	-0.74	0.05	-0.13	0.06	0.03	-0.77
H3	348	0.03	-0.96	0.00	0.00	0.03	0.00	-0.96
H4	349	0.01	-0.84	0.03	0.05	0.03	0.01	-0.84
H5	350	-0.01	-0.78	0.04	0.04	0.04	0.00	-0.78
I1	621	0.00	-1.17	-0.15	0.03	0.00	-0.15	-1.17
I2	624	0.02	-1.64	-0.25	0.03	0.02	-0.25	-1.64
J1	635	0.00	-1.12	0.05	0.00	0.05	0.00	-1.12
J2	638	0.00	-1.16	0.03	0.00	0.03	0.00	-1.16
K1	841	0.00	-1.84	0.00	0.00	0.00	0.00	-1.84
K2	844	0.00	-1.83	0.00	0.00	0.00	0.00	-1.83
L1	855	0.00	-1.57	0.00	0.00	0.00	0.00	-1.57
L2	858	0.00	-1.57	0.00	0.00	0.00	0.00	-1.57
M1	941	0.00	-2.37	0.00	0.00	0.00	0.00	-2.37
M2	944	0.00	-2.37	0.00	0.00	0.00	0.00	-2.37
N1	955	0.00	-2.11	0.00	0.00	0.00	0.00	-2.11
N2	958	0.00	-2.11	0.00	0.00	0.00	0.00	-2.11
O1	1101	0.00	-3.26	0.00	0.00	0.00	0.00	-3.26
O2	1104	0.00	-3.26	0.00	0.00	0.00	0.00	-3.26

Table 2.10.10-9 Stress Components – Impact and Inertial Loads; 30-Foot Top End Drop; $\phi = 0°$; 1.12-Inch Outer Shell Thickness (Continued)

Stress Points		Stresses						
Location	Node	S_X	S_Y	S_Z	S_{XY}	S_1	S_2	S_3
P1	1115	0.00	-2.99	0.00	0.00	0.00	0.00	-2.99
P2	1118	0.00	-2.99	0.00	0.00	0.00	0.00	-2.99
Q1	1261	0.00	-4.14	0.00	0.00	0.00	0.00	-4.14
Q2	1264	0.00	-4.14	0.00	0.00	0.00	0.00	-4.14
R1	1275	0.00	-3.88	0.00	0.00	0.00	0.00	-3.88
R2	1278	0.00	-3.88	0.00	0.00	0.00	0.00	-3.88
S1	1561	0.00	-3.75	-0.59	-0.13	0.01	-0.59	-3.76
S2	1564	0.09	-6.30	-1.16	-0.16	0.10	-1.16	-6.31
T1	1575	0.00	-4.40	0.24	-0.01	0.24	0.00	-4.40
T2	1578	0.00	-5.07	0.04	0.00	0.04	0.00	-5.07
U1	1841	0.02	-6.64	2.17	-0.17	2.17	0.03	-6.65
U2	1844	0.83	-3.38	2.99	-0.17	2.99	0.86	-3.40
V1	1852	-1.06	-5.38	0.68	-0.19	0.68	-1.03	-5.40
V2	1856	0.01	-3.42	1.29	-0.04	1.29	0.01	-3.42
W1	1969	1.83	-1.34	0.29	1.37	2.34	0.29	-1.85
W2	1970	1.22	-3.04	-0.21	0.55	1.29	-0.21	-3.11
W3	1971	0.68	-3.78	-0.46	-0.06	0.69	-0.46	-3.79
W4	1972	0.38	-4.48	-0.66	-0.19	0.39	-0.66	-4.50
W5	1973	0.23	-4.98	-0.78	-0.22	0.24	-0.78	-4.99
W6	1974	0.13	-5.36	-0.88	-0.19	0.14	-0.88	-5.37
W7	1975	0.06	-5.77	-0.97	-0.11	0.07	-0.97	-5.77
W8	1976	0.02	-6.21	-1.07	-0.06	0.02	-1.07	-6.21
X1	2370	4.51	1.44	3.44	2.33	5.77	3.44	0.18
X2	2390	0.34	-2.34	0.68	2.04	1.44	0.68	-3.44
X3	2410	0.11	-4.34	-0.20	1.09	0.36	-0.20	-4.59
X4	2430	-0.65	-4.17	-0.57	1.03	-0.37	-0.57	-4.45
X5	2450	-0.68	-4.58	-0.75	1.01	-0.43	-0.75	-4.83
X6	2470	-0.57	-4.60	-0.67	1.01	-0.33	-0.67	-4.84
X7	2490	-0.14	-4.73	-0.46	0.93	0.04	-0.46	-4.91
X8	2510	0.11	-4.75	-0.33	0.82	0.25	-0.33	-4.88
X9	2530	0.43	-4.81	-0.22	0.63	0.51	-0.22	-4.89

Table 2.10.10-9 Stress Components – Impact and Inertial Loads; 30-Foot Top End Drop; $\phi = 0°$; 1.12-Inch Outer Shell Thickness (Continued)

Stress Points		Stresses						
Location	Node	S_X	S_Y	S_Z	S_{XY}	S_1	S_2	S_3
X10	2550	0.78	-4.83	-0.11	0.36	0.81	-0.11	-4.86
X11	2570	1.18	-4.84	-0.04	0.20	1.19	-0.04	-4.85
Y1	2305	0.81	-1.90	1.22	0.12	1.22	0.82	-1.91
Y2	2325	0.95	-2.05	1.07	0.51	1.07	1.03	-2.14
Y3	2345	1.15	-2.40	1.08	0.59	1.26	1.08	-2.51
Y4	2365	1.16	-2.72	1.00	0.46	1.21	1.00	-2.77
Y5	2385	0.80	-2.93	0.71	0.31	0.83	0.71	-2.96
Y6	2405	0.26	-3.08	0.32	0.29	0.32	0.29	-3.11
Y7	2425	-0.17	-3.28	-0.05	0.41	-0.05	-0.12	-3.34
Y8	2445	-0.41	-3.58	-0.30	0.55	-0.29	-0.32	-3.68
Y9	2465	-0.50	-3.95	-0.46	0.63	-0.38	-0.46	-4.07
Y10	2485	-0.51	-4.30	-0.57	0.59	-0.42	-0.57	-4.39
Y11	2505	-0.55	-4.53	-0.68	0.53	-0.48	-0.68	-4.60
Y12	2525	-0.60	-4.68	-0.79	0.40	-0.56	-0.79	-4.72
Y13	2545	-0.70	-4.78	-0.96	0.23	-0.68	-0.96	-4.80
Y14	2565	-0.86	-4.82	-1.19	0.04	-0.86	-1.19	-4.82
Z1	2301	1.78	-1.88	1.78	0.00	1.78	1.78	-1.88
Z2	2321	1.26	-2.02	1.26	0.00	1.26	1.26	-2.02
Z3	2341	1.05	-2.32	1.05	0.00	1.05	1.05	-2.32
Z4	2361	0.87	-2.63	0.87	0.00	0.87	0.87	-2.63
Z5	2381	0.63	-2.91	0.63	0.00	0.63	0.63	-2.91
Z6	2401	0.34	-3.18	0.34	0.00	0.34	0.34	-3.18
Z7	2421	0.04	-3.44	0.04	0.00	0.04	0.04	-3.44
Z8	2441	-0.22	-3.74	-0.22	0.00	-0.22	-0.22	-3.74
Z9	2461	-0.45	-4.06	-0.45	0.00	-0.45	-0.45	-4.06
Z10	2481	-0.67	-4.35	-0.67	0.00	-0.67	-0.67	-4.35
Z11	2501	-0.84	-4.53	-0.84	0.00	-0.84	-0.84	-4.53
Z12	2521	-1.03	-4.66	-1.03	0.00	-1.03	-1.03	-4.66
Z13	2541	-1.28	-4.76	-1.28	0.00	-1.28	-1.28	-4.76
Z14	2561	-1.59	-4.80	-1.59	0.00	-1.59	-1.59	-4.80

Table 2.10.10-10 Stress Components – Impact and Inertial Loads; 30-Foot Top Corner Drop; ϕ = 15.74°; 1.12-Inch Outer Shell Thickness

Stress Points		Stresses						
Location	Node	S_X	S_Y	S_Z	S_{XY}	S_1	S_2	S_3
A1	327	-0.28	0.01	1.55	0.08	1.55	0.03	-0.29
A2	302	-0.53	-0.00	1.36	0.15	1.36	0.04	-0.57
A3	277	-0.70	0.03	1.23	0.34	1.23	0.16	-0.84
A4	252	-1.06	-0.02	0.96	0.46	0.96	0.16	-1.23
A5	227	-1.77	-0.74	0.64	0.30	0.64	-0.66	-1.86
A6	202	-0.03	-1.21	2.68	-1.23	2.68	0.75	-1.99
A7	177	-13.24	-0.82	-3.97	-0.56	-0.79	-3.97	-13.27
B1	104	-3.25	-1.05	-0.84	-0.56	-0.84	-0.91	-3.38
B2	79	-2.44	-0.82	-0.29	-0.26	-0.29	-0.78	-2.48
B3	54	-2.17	-0.44	-0.01	-0.40	-0.01	-0.35	-2.26
B4	29	-1.89	-0.11	0.29	-0.28	-0.29	-0.06	-1.94
B5	4	-1.52	-0.02	-0.48	-0.06	0.48	0.02	-1.52
C1	110	-3.71	-0.27	-1.54	-0.26	-0.25	-1.54	-3.73
C2	85	-3.17	-0.22	-1.10	0.12	-0.22	-1.10	-3.18
C3	60	-2.65	-0.12	-0.73	0.14	-0.11	-0.73	-2.66
C4	35	-2.13	-0.03	-0.32	0.14	-0.02	-0.32	-2.14
C5	10	-1.85	-0.00	-0.08	0.15	0.01	-0.08	-1.86
D1	335	-1.22	-0.13	0.21	-0.30	0.21	-0.05	-1.30
D2	310	-1.40	-0.24	0.02	-0.27	0.02	-0.18	-1.46
D3	285	-1.63	-0.28	-0.13	-0.32	-0.13	-0.21	-1.70
D4	260	-2.03	-0.34	-0.39	-0.41	-0.24	-0.39	-2.13
D5	235	-2.82	-0.41	-0.90	-0.35	-0.36	-0.90	-2.87
D6	210	-3.63	-0.44	-1.46	-0.25	-0.42	-1.46	-3.65
D7	185	-4.41	-0.44	-2.13	0.25	-0.42	-2.13	-4.42
E1	118	-3.12	0.84	-2.09	-0.60	0.93	-2.09	-3.21
E2	93	-3.18	0.28	-2.10	-0.17	0.29	-2.10	-3.19
E3	68	-3.07	0.11	-1.98	0.03	0.11	-1.98	-3.07
E4	43	-3.04	0.03	-1.82	0.09	0.03	-1.82	-3.05
E5	18	-3.12	0.01	-1.74	0.14	0.02	-1.74	-3.13
F1	143	-0.61	3.17	-1.06	-0.82	3.34	-0.78	-1.06
F2	144	-0.72	0.80	-2.33	-0.69	1.07	-0.99	-2.33

Table 2.10.10-10 Stress Components – Impact and Inertial Loads; 30-Foot Top Corner Drop; ϕ = 15.74°; 1.12-Inch Outer Shell Thickness (Continued)

Stress Points		Stresses						
Location	Node	S_X	S_Y	S_Z	S_{XY}	S_1	S_2	S_3
F3	145	-1.06	0.15	-2.95	-0.52	0.35	-1.25	-2.95
F4	146	-1.78	-0.28	-3.58	-0.33	-0.21	-1.85	-3.58
F5	147	-2.25	-0.63	-4.07	-0.24	-0.59	-2.29	-4.07
F6	148	-2.54	-0.95	-4.49	-0.17	-0.93	-2.56	-4.49
F7	149	-2.75	-1.35	-4.92	-0.09	-1.35	-2.75	-4.92
F8	150	-2.85	-1.89	-5.39	-0.04	-1.89	-2.85	-5.39
G1	335	-1.22	-0.13	0.21	-0.30	0.21	-0.05	-1.30
G2	336	-1.01	-0.31	0.01	-0.28	0.01	-0.21	-1.11
G3	337	-1.07	-0.62	-0.25	-0.17	-0.25	-0.56	-1.13
G4	338	-1.37	-0.98	-0.55	0.08	-0.55	-0.96	-1.38
G5	339	-2.17	-1.48	-1.03	0.68	-1.03	-1.06	-2.58
G6	340	-2.96	-0.74	-0.97	0.77	-0.49	-0.97	-3.21
H1	346	-1.61	1.41	-2.58	1.04	1.73	-1.93	-2.58
H2	347	-1.42	4.42	-2.33	0.58	4.48	-1.48	-2.33
H3	348	-2.35	3.00	-3.46	-0.80	3.12	-2.47	-3.46
H4	349	-2.55	-0.63	-4.93	-0.93	-0.25	-2.93	-4.93
H5	350	-2.77	-4.41	-6.40	-0.62	-2.56	-4.61	-6.40
I1	621	-0.06	0.13	0.44	-0.03	0.44	0.13	-0.06
I2	624	-0.01	0.43	0.42	0.04	0.43	0.42	-0.01
J1	635	-0.09	-2.23	0.99	-0.13	2.24	0.99	-0.09
J2	638	-0.01	5.36	0.77	0.05	5.36	0.77	-0.01
K1	841	-0.03	6.09	0.16	-0.01	6.09	0.16	-0.03
K2	844	0.00	6.92	0.41	0.01	6.92	0.41	0.00
L1	855	-0.05	11.83	0.61	-0.04	11.83	0.61	-0.05
L2	858	0.02	12.80	0.69	0.01	12.81	0.69	0.02
M1	941	-0.03	6.32	0.16	0.00	6.32	0.16	-0.03
M2	944	-0.01	7.20	0.41	0.00	7.20	0.41	-0.01
N1	955	-0.05	13.70	0.75	-0.01	13.70	0.75	-0.05
N2	958	0.00	14.87	0.80	0.01	14.87	0.80	0.00
O1	1101	-0.04	2.72	-0.09	0.01	2.72	-0.04	-0.09
O2	1104	-0.03	3.22	0.15	-0.01	3.22	0.15	-0.03

Table 2.10.10-10 Stress Components – Impact and Inertial Loads; 30-Foot Top Corner Drop; ϕ = 15.74°; 1.12-Inch Outer Shell Thickness (Continued)

Stress Points		Stresses						
Location	Node	S_X	S_Y	S_Z	S_{XY}	S_1	S_2	S_3
P1	1115	-0.07	10.77	1.09	0.03	10.78	1.09	-0.07
P2	1118	0.00	11.75	0.86	-0.03	11.75	0.86	0.00
Q1	1261	-0.03	-3.27	0.21	0.02	0.21	-0.03	-3.27
Q2	1264	-0.01	-3.30	0.35	-0.03	0.35	-0.01	-3.30
R1	1275	-0.04	-0.13	1.33	0.06	1.33	-0.01	-0.16
R2	1278	0.00	-0.34	0.24	-0.07	0.24	0.01	-0.36
S1	1561	-0.04	-11.67	0.24	-0.40	0.24	-0.02	-11.68
S2	1564	0.34	-23.09	-4.92	-0.60	0.36	-4.92	-23.11
T1	1575	-0.14	-17.88	2.76	0.15	2.76	-0.14	-17.88
T2	1578	0.02	-19.72	1.70	-0.06	1.70	0.02	-19.72
U1	1841	0.28	-19.99	8.13	-0.19	8.13	0.29	-19.99
U2	1844	3.40	-11.67	9.78	-0.69	9.78	3.43	-11.70
V1	1852	6.10	-10.08	7.23	0.13	7.23	6.10	-10.08
V2	1856	0.59	-23.74	0.54	-0.42	0.60	0.54	-23.75
W1	1969	-19.40	-16.45	-8.37	3.91	-8.37	-13.75	-22.11
W2	1970	-14.06	-8.78	-5.45	1.32	-5.45	-8.47	-14.37
W3	1971	-7.44	-9.92	-4.43	-0.56	-4.43	-7.32	-10.04
W4	1972	-5.36	-10.65	-4.36	-0.73	-4.36	-5.26	-10.75
W5	1973	-4.37	-11.07	-4.37	-0.72	-4.29	-4.37	-11.15
W6	1974	-3.83	-11.20	-4.36	-0.60	-3.78	-4.36	-11.25
W7	1975	-3.57	-11.11	-4.37	-0.36	-3.55	-4.37	-11.13
W8	1976	-3.50	-10.64	-4.31	-0.25	-3.50	-4.31	-10.65
X1	2370	-6.70	-8.14	-1.89	1.84	-1.89	-5.44	-9.39
X2	2390	-5.84	-11.37	-2.73	3.06	-2.73	-4.48	-12.73
X3	2410	-5.21	-12.98	-2.78	3.61	-2.78	-3.79	-14.40
X4	2430	-4.12	-14.33	-2.51	3.72	-2.51	-2.90	-15.55
X5	2450	-3.36	-14.88	-2.09	3.64	-2.09	-2.30	-15.94
X6	2470	-2.49	-15.02	-1.63	3.50	-1.57	-1.63	-15.93
X7	2490	-1.31	-14.92	-1.25	3.23	-0.59	-1.25	-15.65
X8	2510	-0.55	-14.80	-1.14	2.79	-0.03	-1.14	-15.33
X9	2530	0.33	-14.69	-1.14	2.16	0.64	-1.14	-15.00

Table 2.10.10-10 Stress Components – Impact and Inertial Loads; 30-Foot Top Corner Drop; ϕ = 15.74°; 1.12-Inch Outer Shell Thickness (Continued)

Stress Points		Stresses						
Location	Node	S_X	S_Y	S_Z	S_{XY}	S_1	S_2	S_3
X10	2550	1.43	-14.62	-1.27	1.24	1.52	-1.27	-14.72
X11	2570	2.78	-14.60	-1.55	0.73	2.81	-1.55	-14.63
Y1	2305	-0.37	-5.19	1.81	-0.20	1.81	-0.36	-5.20
Y2	2325	-0.64	-5.37	1.53	-0.42	1.53	-0.60	-5.40
Y3	2345	-1.22	-5.61	1.09	-0.49	1.09	-1.16	-5.66
Y4	2365	-2.12	-5.93	0.53	-0.32	0.53	-2.09	-5.96
Y5	2385	-2.85	-6.52	-0.04	0.17	-0.04	-2.84	-6.53
Y6	2405	-3.08	-7.53	-0.47	0.91	-0.47	-2.91	-7.71
Y7	2425	-2.89	-9.01	-0.69	1.79	-0.69	-2.41	-9.50
Y8	2445	-2.65	-10.83	-0.74	2.81	-0.74	-1.78	-11.70
Y9	2465	-3.02	-12.59	-0.74	3.94	-0.74	-1.61	-14.00
Y10	2485	-5.09	-13.75	-1.13	4.77	-1.13	-2.98	-15.86
Y11	2505	-7.13	-14.32	-1.93	4.59	-1.93	-4.89	-16.55
Y12	2525	-8.44	-14.62	-2.95	3.70	-2.95	-6.71	-16.35
Y13	2545	-9.98	-14.55	-4.58	2.23	-4.58	-9.07	-15.46
Y14	2565	-11.04	-14.54	-7.14	0.91	-7.14	-10.82	-14.77
Z1	2301	-0.59	-2.18	2.56	0.14	2.56	-0.58	-2.19
Z2	2321	-1.21	-1.70	2.32	-0.01	2.32	-1.21	-1.70
Z3	2341	-1.56	-1.85	1.74	-0.12	1.74	-1.51	-1.89
Z4	2361	-1.90	-2.04	1.27	-0.33	1.27	-1.63	-2.31
Z5	2381	-2.08	-2.27	0.85	-0.46	0.85	-1.70	-2.65
Z6	2401	-2.04	-2.54	0.46	-0.53	0.46	-1.71	-2.88
Z7	2421	-1.78	-2.88	0.11	-0.56	0.11	-1.54	-3.11
Z8	2441	-1.32	-3.26	-0.20	-0.56	-0.20	-1.17	-3.41
Z9	2461	-0.71	-3.64	-0.50	-0.06	-0.50	-0.71	-3.64
Z10	2481	0.02	-4.03	-0.78	2.71	1.37	-0.78	-5.38
Z11	2501	0.37	-4.21	-1.08	10.55	8.88	-1.08	-12.72
Z12	2521	0.73	-4.37	-1.44	34.89	33.17	-1.44	-36.80
Z13	2541	0.88	-4.93	-2.15	164.65	162.65	-2.15	-166.70
Z14	2561	1.59	-6.27	-4.64	215.93	213.63	-4.64	-218.31

Table 2.10.10-11 Impact and Inertial Loads; 30-Foot Top Oblique Drop; $\phi = 60°$; 1.12-Inch Outer Shell Thickness

Stress Points		Stresses						
Location	Node	S_X	S_Y	S_Z	S_{XY}	S_1	S_2	S_3
A1	327	-2.08	-0.00	2.19	0.12	2.19	0.00	-2.09
A2	302	-2.50	-0.03	1.92	0.37	1.92	0.03	-2.55
A3	277	-2.76	0.04	1.75	0.86	1.75	0.28	-3.00
A4	252	-3.29	-0.02	1.42	1.12	1.42	0.33	-3.64
A5	227	-4.44	-1.67	1.23	0.76	1.23	-1.47	-4.63
A6	202	0.22	-2.72	6.57	-2.85	6.57	1.96	-4.45
A7	177	-30.18	-1.77	-8.38	-1.30	-1.71	-8.38	-30.24
B1	104	-8.22	-2.48	-2.60	-1.31	-2.19	-2.60	-8.51
B2	79	-5.81	-1.94	-0.78	-0.53	-0.78	-1.87	-5.89
B3	54	-4.70	-1.01	0.40	-0.84	0.40	-0.83	-4.89
B4	29	-3.55	-0.23	1.60	-0.59	1.60	-0.13	-3.65
B5	4	-2.40	0.05	2.32	0.06	2.32	0.05	-2.40
C1	110	-8.76	-0.64	-3.94	-0.54	-0.60	-3.94	-8.79
C2	85	-7.28	-0.53	-2.53	0.44	-0.50	-2.53	-7.31
C3	60	-5.90	-0.28	-1.34	0.51	-0.23	-1.34	-5.95
C4	35	-4.52	-0.06	-0.07	0.44	-0.02	-0.07	-4.56
C5	10	-3.76	-0.01	0.70	0.37	0.70	0.03	-3.79
D1	335	-2.25	1.79	0.52	-0.29	1.81	0.52	-2.27
D2	310	-3.50	0.77	-0.27	-0.22	0.76	-0.27	-3.51
D3	285	-4.15	0.30	-0.71	-0.37	0.33	-0.71	-4.18
D4	260	-5.19	-0.13	-1.31	-0.64	-0.05	-1.31	-5.27
D5	235	-6.96	-0.53	-2.31	-0.58	-0.48	-2.31	-7.02
D6	210	-8.72	-0.74	-3.39	-0.44	-0.71	-3.39	-8.75
D7	185	-10.48	-0.80	-4.69	0.67	-0.75	-4.69	-10.53
E1	118	-6.47	2.78	-4.49	-1.08	2.91	-4.49	-6.60
E2	93	-7.24	1.15	-4.64	-0.20	1.16	-4.64	-7.24
E3	68	-7.11	0.47	-4.33	0.18	0.48	-4.33	-7.11
E4	43	-7.15	0.15	-3.87	0.26	0.16	-3.87	-7.15
E5	18	-7.44	0.05	-3.65	0.32	0.06	-3.65	-7.45
F1	143	-1.49	8.06	-2.34	-1.62	8.33	-1.76	-2.34
F2	144	-1.63	2.10	-5.40	-1.26	2.49	-2.02	-5.40

Table 2.10.10-11 Impact and Inertial Loads; 30-Foot Top Oblique Drop; $\phi = 60°$; 1.12-Inch Outer Shell Thickness (Continued)

Stress Points		Stresses						
Location	Node	S_X	S_Y	S_Z	S_{XY}	S_1	S_2	S_3
F3	145	-2.35	0.54	-6.82	-0.83	0.77	-2.57	-6.82
F4	146	-4.11	-0.48	-8.33	-0.45	-0.43	-4.16	-8.33
F5	147	-5.25	-1.30	-9.51	-0.30	-1.28	-5.27	-9.51
F6	148	-5.95	-2.08	-10.49	-0.22	-2.06	-5.96	-10.49
F7	149	-6.43	-3.05	-11.52	-0.12	-3.04	-6.43	-11.52
F8	150	-6.70	-4.35	-12.64	-0.04	-4.35	-6.70	-12.64
G1	335	-2.25	1.79	0.52	-0.29	1.81	0.52	-2.27
G2	336	-1.94	0.72	-0.16	-0.44	0.79	-0.16	-2.01
G3	337	-2.33	-0.28	-0.89	-0.35	-0.22	-0.89	-2.39
G4	338	-3.17	-1.29	-1.66	0.15	-1.28	-1.66	-3.18
G5	339	-5.18	-2.97	-2.92	1.50	-2.21	-2.92	-5.94
G6	340	-7.24	-1.62	-2.94	1.76	-1.11	-2.94	-7.75
H1	346	-3.96	3.72	-6.50	2.70	4.57	-4.82	-6.50
H2	347	-3.33	11.79	-5.57	1.61	11.96	-3.50	-5.57
H3	348	-5.58	8.88	-8.13	-1.88	9.12	-5.83	-8.13
H4	349	-6.00	0.12	-11.64	-2.28	0.88	-6.76	-11.64
H5	350	-6.49	-8.86	-15.10	-1.53	-5.74	-9.61	-15.10
I1	621	-0.14	2.53	-1.32	-0.12	2.53	1.32	-0.14
I2	624	-0.06	4.13	1.47	0.04	4.13	1.47	-0.06
J1	635	-0.20	7.38	2.23	-0.29	7.39	2.23	-0.21
J2	638	-0.02	14.80	1.74	0.11	14.80	1.74	-0.02
K1	841	-0.12	15.76	-0.17	-0.07	15.76	-0.12	-0.17
K2	844	-0.03	18.29	1.41	0.07	18.30	1.41	-0.03
L1	855	-0.12	31.01	1.46	-0.14	31.01	1.46	-0.12
L2	858	0.04	34.02	1.59	0.08	34.02	1.59	0.04
M1	941	-0.12	21.41	-0.22	-0.01	21.41	-0.12	-0.22
M2	944	-0.05	24.48	1.44	0.01	24.48	1.44	-0.05
N1	955	-0.13	42.12	1.74	-0.07	42.12	1.74	-0.13
N2	958	0.01	46.04	1.89	0.06	46.04	1.89	0.01
O1	1101	-0.13	21.18	-0.78	0.00	21.18	-0.13	-0.78
O2	1104	-0.11	24.10	0.83	-0.01	24.10	0.83	-0.11

Table 2.10.10-11 Impact and Inertial Loads; 30-Foot Top Oblique Drop; $\phi = 60°$; 1.12-Inch Outer Shell Thickness (Continued)

Stress Points		Stresses						
Location	Node	S_X	S_Y	S_Z	S_{XY}	S_1	S_2	S_3
P1	1115	-0.17	45.92	1.85	0.03	45.92	1.85	-0.17
P2	1118	0.01	50.50	2.64	-0.03	50.50	2.64	0.01
Q1	1261	-0.12	15.22	-0.19	0.04	15.22	-0.12	-0.19
Q2	1264	-0.05	17.63	1.38	-0.05	17.63	1.38	-0.05
R1	1275	-0.14	31.45	0.52	0.11	31.45	0.52	-0.14
R2	1278	0.02	35.18	2.79	-0.11	35.18	2.79	0.02
S1	1561	-0.11	-3.35	1.59	-0.18	1.59	-0.10	-3.36
S2	1564	0.17	-9.66	-2.11	-0.41	0.19	-2.11	-9.68
T1	1575	-0.30	3.08	2.37	0.21	3.09	2.37	-0.31
T2	1578	0.01	7.19	4.65	-0.11	7.19	4.65	0.01
U1	1841	0.30	-16.34	10.62	-0.13	10.62	0.30	-16.34
U2	1844	3.93	-7.62	11.06	-0.84	11.06	3.99	-7.68
V1	1852	9.88	1.29	5.59	-2.99	10.82	5.59	0.35
V2	1856	0.78	-7.74	-2.34	0.06	0.78	-2.34	-7.74
W1	1969	-66.69	-41.51	-24.01	-0.65	-24.01	-41.49	-66.71
W2	1970	-48.82	-4.73	-12.06	-3.65	-4.43	-12.06	-49.12
W3	1971	-27.03	-1.84	-8.96	-5.41	-0.73	-8.96	-28.14
W4	1972	-19.48	2.31	-9.40	-4.62	3.25	-9.40	-20.42
W5	1973	-15.85	5.40	-10.14	-3.65	6.01	-10.14	-16.46
W6	1974	-13.87	8.22	-10.72	-2.66	8.53	-10.72	-14.19
W7	1975	-12.85	11.77	-11.35	-1.48	11.86	-11.35	-12.94
W8	1976	-12.54	16.63	-11.84	-0.65	16.64	-11.84	-12.56
X1	2370	-34.36	-16.88	-7.62	1.24	-7.62	-16.79	-34.45
X2	2390	-16.19	-14.00	-1.50	4.84	-1.50	-10.13	-20.06
X3	2410	-12.71	-11.84	0.08	7.40	0.08	-4.86	-19.68
X4	2430	-8.05	-13.16	1.09	7.27	1.09	-2.90	-18.31
X5	2450	-6.21	-12.61	1.72	6.36	1.72	-2.30	-16.53
X6	2470	-5.21	-11.98	1.94	5.21	1.94	-2.38	-14.81
X7	2490	-4.60	-11.11	1.71	4.19	1.71	-2.55	-13.17
X8	2510	-4.03	-10.62	1.43	3.25	1.43	-2.69	-11.95
X9	2530	-3.30	-10.25	0.91	2.35	0.91	-2.58	-10.98

Table 2.10.10-11 Impact and Inertial Loads; 30-Foot Top Oblique Drop; $\phi = 60°$; 1.12-Inch Outer Shell Thickness (Continued)

Stress Points		Stresses						
Location	Node	S_X	S_Y	S_Z	S_{XY}	S_1	S_2	S_3
X10	2550	-2.22	-10.08	0.08	1.28	0.08	-2.02	-10.28
X11	2570	-0.71	-10.03	-1.13	0.85	-0.63	-1.13	-10.11
Y1	2305	-0.46	-3.26	2.57	-0.40	2.57	-0.40	-3.32
Y2	2325	-2.95	-3.23	2.89	-0.90	2.89	-2.18	-4.00
Y3	2345	-5.69	-3.25	2.66	-0.90	2.66	-2.96	-5.98
Y4	2365	-8.34	-3.57	2.37	0.16	2.37	-3.56	-8.35
Y5	2385	-9.41	-4.50	2.28	2.00	2.28	-3.79	-10.13
Y6	2405	-8.79	-6.18	2.42	4.01	2.42	-3.27	-11.70
Y7	2425	-7.68	-8.46	2.68	5.92	2.68	-2.14	-14.01
Y8	2445	-7.43	-10.82	3.07	8.05	3.07	-0.89	-17.36
Y9	2465	-9.60	-12.26	3.66	10.53	3.66	-0.31	-21.55
Y10	2485	-16.60	-12.11	3.71	12.23	3.71	-1.92	-26.79
Y11	2505	-22.30	-11.70	2.69	11.42	2.69	-4.42	-29.59
Y12	2525	-25.19	-11.20	1.52	8.79	1.52	-6.96	-29.43
Y13	2545	-27.90	-10.20	-0.77	5.06	-0.77	-8.85	-29.24
Y14	2565	-28.38	-9.99	-5.27	2.37	-5.27	-9.69	-28.68
Z1	2301	-2.89	-0.88	2.35	-0.10	2.35	-0.88	-2.90
Z2	2321	-3.57	-0.45	2.73	-0.22	2.73	-0.44	-3.59
Z3	2341	-4.26	-0.43	2.69	-0.18	2.69	-0.42	-4.27
Z4	2361	-4.90	-0.43	2.68	-0.02	2.68	-0.43	-4.90
Z5	2381	-5.16	-0.47	2.62	0.27	2.62	-0.45	-5.18
Z6	2401	-4.97	-0.58	2.45	0.60	2.45	-0.49	-5.06
Z7	2421	-4.39	-0.75	2.18	0.94	2.18	-0.52	-4.62
Z8	2441	-3.54	-0.96	1.86	1.42	1.86	-0.33	-4.17
Z9	2461	-2.54	-1.17	1.51	3.69	1.90	1.51	-5.61
Z10	2481	-1.50	-1.38	1.18	12.69	11.25	1.18	-14.14
Z11	2501	-1.00	-1.49	0.99	36.68	35.44	0.99	-37.93
Z12	2521	-0.51	-1.56	0.76	110.29	109.25	0.76	-111.32
Z13	2541	-0.23	-1.98	0.30	500.97	499.87	0.30	-502.08
Z14	2561	0.45	-3.06	-1.58	655.17	653.86	-1.58	-656.48

Table 2.10.10-12 Stress Components – Impact and Inertial Loads; 30-Foot Side Drop; ϕ = 90°; 1.20-Inch Outer Shell Thickness; Circumferential Location = 0°

Stress Points		Stresses						
Location	Node	S_X	S_Y	S_Z	S_{XY}	S_1	S_2	S_3
A1	327	-3.04	-0.01	2.46	0.14	2.46	0.00	-3.04
A2	302	-3.54	-0.04	2.16	0.48	2.16	0.02	-3.60
A3	277	-3.84	0.05	1.98	1.12	1.98	0.35	-4.14
A4	252	-4.45	-0.02	1.63	1.45	1.63	0.41	-4.88
A5	227	-5.79	-2.13	1.52	1.00	1.52	-1.87	-6.05
A6	202	0.36	-3.47	8.55	-3.67	8.55	2.59	-5.69
A7	177	-38.71	-2.24	-10.58	-1.67	-2.17	-10.58	-38.78
B1	104	-10.76	-3.20	-3.51	-1.69	-2.84	-3.51	-11.12
B2	79	-7.52	-2.51	-1.03	-0.67	-1.03	-2.42	-7.61
B3	54	-5.97	-1.30	0.62	-1.06	0.62	-1.07	-6.20
B4	29	-4.36	-0.29	2.29	-0.74	2.29	-0.16	-4.50
B5	4	-2.81	0.06	3.30	0.06	3.30	0.07	-2.81
C1	110	-11.31	-0.82	-5.16	0.68	-0.78	-5.16	-11.35
C2	85	-9.35	-0.68	-3.26	0.60	-0.64	-3.26	-9.39
C3	60	-7.53	-0.36	-1.64	0.71	-0.29	-1.64	-7.60
C4	35	-5.71	-0.08	0.08	0.59	0.08	-0.02	-5.77
C5	10	-4.70	-0.01	1.12	0.48	1.12	0.04	-4.75
D1	335	-2.75	2.83	0.68	-0.27	2.85	0.68	-2.77
D2	310	-4.57	1.33	-0.43	-0.18	1.34	-0.43	-4.57
D3	285	-5.44	0.62	-1.01	-0.38	0.64	-1.01	-5.46
D4	260	-6.80	0.00	-1.78	-0.75	0.09	-1.78	-6.88
D5	235	-9.07	-0.58	-3.03	-0.69	-0.52	-3.03	-9.13
D6	210	-11.31	-0.88	-4.37	-0.53	-0.86	-4.37	-11.34
D7	185	-13.56	-0.97	-5.98	0.89	-0.91	-5.98	-13.63
E1	118	-8.14	3.79	-5.69	-1.31	3.94	-5.69	-8.29
E2	93	-9.28	1.61	-5.92	-0.20	1.61	-5.92	-9.28
E3	68	-9.14	0.66	-5.50	0.26	0.67	-5.50	-9.15
E4	43	-9.22	0.21	-4.89	0.34	0.22	-4.89	-9.23
E5	18	-9.63	0.07	-4.60	0.41	0.09	-4.60	-9.64
F1	143	-1.94	10.55	-2.98	-2.02	10.87	-2.26	-2.98
F2	144	-2.09	2.76	-6.95	-1.54	3.20	-2.53	-6.95

Table 2.10.10-12 Stress Components – Impact and Inertial Loads; 30-Foot Side Drop; ϕ = 90°; 1.20-Inch Outer Shell Thickness; Circumferential Location = 0° (Continued)

Stress Points		Stresses						
Location	Node	S_X	S_Y	S_Z	S_{XY}	S_1	S_2	S_3
F3	145	-3.00	0.75	-8.78	-0.97	0.99	-3.24	-8.78
F4	146	-5.28	-0.58	-10.73	-0.50	-0.53	-5.33	-10.73
F5	147	-6.76	-1.64	-12.26	-0.32	-1.62	-6.78	-12.26
F6	148	-7.67	-2.64	-13.52	-0.23	-2.63	-7.68	-13.52
F7	149	-8.29	-3.90	-14.85	-0.13	-3.90	-8.30	-14.85
F8	150	-8.64	-5.59	-16.31	-0.04	-5.59	-8.64	-16.31
G1	335	-2.75	2.83	0.68	-0.27	2.85	0.68	-2.77
G2	336	-2.39	1.29	-0.25	-0.52	1.36	-0.25	-2.46
G3	337	-2.96	-0.07	-1.22	-0.44	-0.01	-1.22	-3.03
G4	338	-4.08	-1.41	-2.23	0.18	-1.40	-2.23	-4.09
G5	339	-6.71	-3.70	-3.90	1.91	-2.78	-3.90	-7.63
G6	340	-9.42	-2.06	-3.95	2.26	-1.42	-3.95	-10.05
H1	346	-5.16	4.90	-8.50	3.55	6.03	-6.29	-8.50
H2	347	-4.30	15.57	-7.21	2.14	15.80	-4.53	-7.21
H3	348	-7.22	11.92	-10.49	-2.43	12.22	-7.52	-10.49
H4	349	-7.75	0.56	-15.03	-2.97	1.51	-8.70	-15.03
H5	350	-8.37	-11.06	-19.50	-1.99	-7.32	-12.12	-19.50
I1	621	-0.18	3.82	1.77	-0.17	3.83	1.77	-0.18
I2	624	-0.09	6.11	2.02	0.04	6.11	2.02	-0.09
J1	635	-0.26	10.06	2.86	-0.38	10.07	2.86	-0.27
J2	638	-0.03	19.65	2.23	0.14	19.65	2.23	-0.03
K1	841	-0.19	16.70	-0.42	-0.10	16.70	-0.19	-0.42
K2	844	-0.06	19.71	1.97	0.10	19.71	1.97	-0.06
L1	855	-0.14	33.28	2.54	-0.22	33.29	2.54	-0.14
L2	858	0.04	36.59	1.36	0.14	36.60	1.36	0.04
M1	941	-0.18	25.27	-0.76	0.01	25.27	-0.18	-0.76
M2	944	-0.10	29.01	1.80	0.06	29.01	1.80	-0.10
N1	955	-0.16	50.99	2.49	-0.12	50.99	2.49	-0.16
N2	958	0.02	55.99	2.11	0.11	55.99	2.11	0.02
O1	1101	-0.19	29.22	-1.08	0.00	29.22	-0.19	-1.08
O2	1104	-0.14	33.31	1.44	0.01	33.31	1.44	-0.14

Table 2.10.10-12 Stress Components – Impact and Inertial Loads; 30-Foot Side Drop; ϕ = 90°; 1.20-Inch Outer Shell Thickness; Circumferential Location = 0° (Continued)

Stress Points		Stresses						
Location	Node	S_X	S_Y	S_Z	S_{XY}	S_1	S_2	S_3
P1	1115	-0.21	61.81	2.28	0.01	61.81	2.28	-0.21
P2	1118	0.02	68.23	3.05	-0.01	68.23	3.05	0.02
Q1	1261	-0.18	26.83	-0.54	0.03	26.83	-0.18	-0.54
Q2	1264	-0.07	30.77	2.02	-0.04	30.77	2.02	-0.07
R1	1275	-0.19	50.03	0.64	0.12	50.03	0.64	-0.19
R2	1278	0.03	55.92	3.40	-0.12	55.92	3.40	0.03
S1	1561	-0.17	6.33	1.32	0.19	6.34	1.32	-0.17
S2	1564	-0.13	9.95	2.91	0.03	9.95	2.91	-0.13
T1	1575	-0.24	20.03	0.94	0.26	20.03	0.94	-0.25
T2	1578	0.01	28.31	4.66	-0.11	28.31	4.66	0.01
U1	1841	-0.09	-0.34	2.86	0.01	2.86	-0.09	-0.34
U2	1844	0.52	0.75	1.96	-0.38	1.96	1.03	0.24
V1	1852	10.10	10.65	-0.06	-7.17	17.55	3.20	-0.06
V2	1856	0.69	5.00	-6.41	0.52	5.06	0.63	-6.41
W1	1969	-42.89	-26.04	-16.32	-3.90	-16.32	-25.18	-43.75
W2	1970	-32.16	0.28	-8.46	-4.48	0.89	-8.46	-32.77
W3	1971	-18.52	3.25	-6.83	-4.78	4.25	-6.83	-19.52
W4	1972	-13.78	6.93	-7.57	-3.93	7.66	-7.57	-14.50
W5	1973	-11.51	9.51	-8.43	-3.02	9.93	-8.43	-11.94
W6	1974	-10.24	11.82	-9.20	-2.15	12.03	-9.20	-10.45
W7	1975	-9.59	14.59	-10.02	-1.17	14.64	-9.65	-10.02
W8	1976	-9.43	18.26	-10.75	-0.43	18.27	-9.44	-10.75
X1	2370	-20.82	-8.25	-5.44	-0.92	-5.44	-8.19	-20.89
X2	2390	-8.75	-3.95	-0.74	0.91	-0.74	-3.78	-8.91
X3	2410	-6.38	-1.85	0.14	2.51	0.14	-0.74	-7.49
X4	2430	-3.31	-2.19	0.55	2.27	0.55	-0.41	-5.09
X5	2450	-1.90	-1.64	0.72	1.63	0.72	-0.13	-3.41
X6	2470	-1.04	-1.20	0.75	0.97	0.75	-0.15	-2.09
X7	2490	-0.58	-0.65	0.76	0.51	0.76	-0.10	-1.13
X8	2510	-0.32	-0.41	0.81	0.29	0.81	-0.07	-0.66

Table 2.10.10-12 Stress Components – Impact and Inertial Loads; 30-Foot Side Drop; ϕ = 90°; 1.20-Inch Outer Shell Thickness; Circumferential Location = 0° (Continued)

Stress Points		Stresses						
Location	Node	S_X	S_Y	S_Z	S_{XY}	S_1	S_2	S_3
X9	2530	-0.05	-0.19	0.88	0.16	0.88	0.05	-0.29
X10	2550	0.30	-0.06	0.98	0.05	0.98	0.30	-0.07
X11	2570	0.76	-0.01	1.15	0.06	1.15	0.76	-0.02
Y1	2305	-0.12	0.28	0.92	-0.23	0.92	0.38	-0.22
Y2	2325	-1.93	0.19	0.78	-0.67	0.78	0.38	-2.12
Y3	2345	-3.60	0.26	0.80	-0.77	0.80	0.41	-3.75
Y4	2365	-5.05	0.33	0.86	-0.29	0.86	0.35	-5.06
Y5	2385	-5.42	0.26	1.02	0.49	1.02	0.30	-5.46
Y6	2405	-4.76	0.02	1.21	1.13	1.21	0.28	-5.02
Y7	2425	-3.76	-0.26	1.32	1.42	1.32	0.25	-4.27
Y8	2445	-2.87	-0.44	1.33	1.46	1.33	0.24	-3.55
Y9	2465	-2.24	-0.45	1.33	1.38	1.33	0.30	-2.99
Y10	2485	-1.96	-0.30	1.35	1.21	1.35	0.34	-2.59
Y11	2505	-1.96	-0.25	1.35	1.07	1.35	0.27	-2.47
Y12	2525	-1.82	-0.13	1.40	0.78	1.40	0.18	-2.13
Y13	2545	-1.66	-0.01	1.47	0.43	1.47	0.09	-1.76
Y14	2565	-1.36	0.03	1.56	0.19	1.56	0.05	-1.39
Z1	2301	-1.64	0.12	0.74	-0.01	0.74	0.12	-1.64
Z2	2321	-2.03	0.13	0.98	-0.04	0.98	0.13	-2.03
Z3	2341	-2.54	0.20	1.19	-0.04	1.19	0.20	-2.54
Z4	2361	-2.97	0.27	1.39	0.01	1.39	0.27	-2.97
Z5	2381	-3.18	0.31	1.52	0.07	1.52	0.31	-3.19
Z6	2401	-3.12	0.31	1.57	0.15	1.57	0.31	-3.12
Z7	2421	-2.82	0.27	1.56	0.21	1.56	0.28	-2.83
Z8	2441	-2.39	0.21	1.49	0.25	1.49	0.23	-2.42
Z9	2461	-1.93	0.14	1.42	0.36	1.42	0.21	-1.99
Z10	2481	-1.50	0.10	1.36	0.77	1.36	0.41	-1.81
Z11	2501	-1.32	0.05	1.39	1.88	1.39	1.36	-2.63
Z12	2521	-1.16	0.05	1.43	5.35	4.83	1.43	-5.94
Z13	2541	-1.05	0.04	1.49	23.86	23.35	1.49	-24.37
Z14	2561	-1.03	0.03	1.57	31.16	30.66	1.57	-31.66

Table 2.10.10-13 Stress Components – Thermal; 130°F; 1.20-Inch Outer Shell Thickness

Stress Points		Stresses						
Location	Node	S_X	S_Y	S_Z	S_{XY}	S_1	S_2	S_3
A1	327	5.20	0.07	5.19	0.23	5.21	5.19	0.06
A2	302	4.34	0.07	4.34	-0.02	4.34	4.34	0.07
A3	277	3.48	0.01	3.48	-0.10	3.48	3.48	0.01
A4	252	1.77	-0.04	1.77	-0.02	1.77	1.77	-0.04
A5	227	-1.61	-0.06	-1.61	-0.03	-0.06	-1.61	-1.61
A6	202	-4.97	-0.10	-4.98	-0.01	-0.10	-4.97	-4.98
A7	177	-8.36	-0.11	-8.32	0.00	-0.11	-8.32	-8.36
B1	104	0.17	0.03	0.14	0.07	0.20	0.14	0.00
B2	79	1.14	0.05	1.15	0.06	1.15	1.14	0.04
B3	54	2.17	0.10	2.19	0.04	2.19	2.17	0.10
B4	29	3.26	0.05	3.24	0.07	3.26	3.24	0.05
B5	4	5.03	-0.03	4.97	-0.42	5.06	4.97	-0.06
C1	110	0.36	-0.85	0.58	0.23	0.58	0.40	-0.89
C2	85	1.26	-0.69	1.50	0.24	1.50	1.29	-0.72
C3	60	2.13	-0.36	2.55	0.27	2.55	2.16	-0.39
C4	35	3.23	-0.11	3.75	0.10	3.75	3.24	-0.11
C5	10	5.17	-0.02	5.61	-0.11	5.61	5.17	-0.03
D1	335	-0.14	-8.26	1.45	-0.93	1.45	-0.03	-8.37
D2	310	2.59	-4.75	2.56	-1.01	2.72	2.56	-4.89
D3	285	2.42	-3.05	2.46	-0.90	2.57	2.46	-3.19
D4	260	1.31	-2.12	1.35	-0.84	1.51	1.35	-2.32
D5	235	-0.85	-1.84	-1.25	-0.66	-0.52	-1.25	-2.17
D6	210	-3.33	-1.79	-4.06	-0.02	-1.79	-3.33	-4.06
D7	185	-6.26	-1.74	-7.10	0.91	-1.56	-6.44	-7.10
E1	118	3.74	-2.61	2.21	3.55	5.33	2.21	-4.20
E2	93	0.78	0.82	2.56	1.59	2.56	2.39	-0.79
E3	68	0.98	0.29	2.93	1.17	2.93	1.85	-0.58
E4	43	0.97	0.06	3.46	0.55	3.46	1.23	-0.20
E5	18	2.03	0.02	4.91	0.16	4.91	2.04	0.01
F1	143	-9.75	-8.25	-1.88	6.09	-1.88	-2.87	-15.13
F2	144	-8.47	5.17	1.53	3.40	5.97	1.53	-9.27

Table 2.10.10-13 Stress Components – Thermal; 130°F; 1.20-Inch Outer Shell Thickness (Continued)

Stress Points		Stresses						
Location	Node	S_X	S_Y	S_Z	S_{XY}	S_1	S_2	S_3
F3	145	-5.46	3.27	1.42	0.59	3.31	1.42	-5.50
F4	146	-2.43	2.55	1.90	-0.12	2.56	1.90	-2.43
F5	147	-1.22	2.11	2.09	-0.28	2.14	2.09	-1.24
F6	148	-0.61	1.87	2.19	-0.29	2.19	1.91	-0.65
F7	149	-0.27	1.76	2.27	-0.19	2.27	1.78	-0.29
F8	150	-0.11	1.87	2.37	-0.12	2.37	1.88	-0.12
G1	335	-0.14	-8.26	1.45	-0.93	1.45	-0.03	-8.37
G2	336	0.15	-4.60	2.62	0.06	2.62	0.15	-4.60
G3	337	1.39	-1.85	3.73	0.55	3.73	1.48	-1.94
G4	338	2.41	1.34	4.88	-0.02	4.88	2.41	1.34
G5	339	5.62	6.62	7.12	-2.70	8.87	7.12	3.37
G6	340	7.01	1.74	6.29	-3.12	8.46	6.29	0.29
H1	346	-9.21	-3.92	-2.76	0.17	-2.76	-3.92	-9.21
H2	347	-4.67	3.43	0.67	0.34	3.44	0.67	-4.68
H3	348	-2.25	7.59	2.68	-0.20	7.59	2.68	-2.26
H4	349	-0.76	10.01	3.82	-0.34	10.02	3.82	-0.77
H5	350	-0.23	13.48	4.89	-0.29	13.48	4.89	-0.23
I1	621	0.00	2.73	0.33	0.03	2.73	0.33	0.00
I2	624	0.01	1.51	0.14	0.01	1.51	0.14	0.01
J1	635	0.00	10.28	0.27	0.05	10.28	0.27	0.00
J2	638	0.01	8.00	-0.11	0.05	8.00	0.01	-0.11
K1	841	0.00	1.87	-0.21	-0.01	1.87	0.00	-0.21
K2	844	0.00	2.29	0.19	0.01	2.29	0.19	0.00
L1	855	0.00	8.82	-0.36	0.00	8.82	0.00	-0.36
L2	858	0.00	9.35	0.18	0.00	9.35	0.18	0.00
M1	941	0.00	1.81	-0.27	0.00	1.81	0.00	-0.27
M2	944	0.00	2.34	0.25	0.00	2.34	0.25	0.00
N1	955	0.00	8.70	-0.45	0.00	8.70	0.00	-0.45
N2	958	0.00	9.41	0.23	0.00	9.41	0.23	0.00
O1	1101	0.00	1.81	-0.27	0.00	1.81	0.00	-0.27
O2	1104	0.00	2.34	0.25	0.00	2.34	0.25	0.00

Table 2.10.10-13 Stress Components – Thermal; 130°F; 1.20-Inch Outer Shell Thickness (Continued)

Stress Points		Stresses						
Location	Node	S_X	S_Y	S_Z	S_{XY}	S_1	S_2	S_3
P1	1115	0.00	8.67	-0.49	0.00	8.67	0.00	-0.49
P2	1118	0.00	9.42	0.24	0.00	9.42	0.24	0.00
Q1	1261	0.00	1.87	-0.18	0.00	1.87	0.00	-0.18
Q2	1264	0.00	2.28	0.22	0.00	2.28	0.22	0.00
R1	1275	0.00	8.71	-0.47	0.00	8.71	0.00	-0.47
R2	1278	-0.01	9.46	0.09	0.00	9.46	0.09	-0.01
S1	1561	0.00	1.74	0.20	0.03	1.74	0.20	0.00
S2	1564	-0.03	2.46	0.51	0.05	2.46	0.51	-0.03
T1	1575	0.00	10.28	0.14	-0.06	10.28	0.14	0.00
T2	1578	0.00	7.98	-0.10	-0.05	7.98	0.00	-0.10
U1	1841	0.02	0.16	-0.68	-0.08	0.20	-0.02	-0.68
U2	1844	0.16	1.04	-0.02	-0.08	1.04	0.15	-0.02
V1	1852	-5.61	-2.18	-2.49	-1.23	-1.79	-2.49	-6.00
V2	1856	-0.29	11.50	3.33	0.18	11.50	3.33	-0.29
W1	1969	-0.74	-1.93	0.01	-0.86	0.01	-0.29	-2.38
W2	1970	0.00	-0.82	0.71	-0.72	0.71	0.42	-1.24
W3	1971	-0.10	-0.13	0.97	-0.59	0.97	0.47	-0.71
W4	1972	-0.08	0.52	1.22	-0.52	1.22	0.82	-0.39
W5	1973	-0.07	0.95	1.39	-0.42	1.39	1.10	-0.22
W6	1974	-0.06	1.30	1.54	-0.29	1.54	1.36	-0.12
W7	1975	-0.03	1.61	1.68	-0.15	1.68	1.62	-0.05
W8	1976	0.01	1.88	1.81	-0.07	1.88	1.81	0.01
X1	2370	-1.24	-0.34	-0.33	0.62	-0.03	-0.33	-1.56
X2	2390	-0.31	-0.98	-0.24	0.45	-0.08	-0.24	-1.21
X3	2410	-0.34	-0.56	-0.07	0.06	-0.07	-0.33	-0.58
X4	2430	-0.33	-0.41	0.01	-0.14	0.01	-0.22	-0.51
X5	2450	-0.39	-0.24	0.07	-0.27	0.07	-0.04	-0.60
X6	2470	-0.40	-0.14	0.14	-0.33	0.14	0.09	-0.63
X7	2490	-0.38	-0.06	0.26	-0.34	0.26	0.16	-0.60
X8	2510	-0.33	-0.03	0.35	-0.32	0.35	0.17	-0.54

Table 2.10.10-13 Stress Components – Thermal; 130°F; 1.20-Inch Outer Shell Thickness (Continued)

Stress Points		Stresses						
Location	Node	S_X	S_Y	S_Z	S_{XY}	S_1	S_2	S_3
X9	2530	-0.28	-0.01	0.47	-0.27	0.47	0.15	-0.44
X10	2550	-0.22	0.00	0.62	-0.17	0.62	0.09	-0.31
X11	2570	0.62	0.00	1.59	-0.05	1.59	0.63	-0.01
Y1	2305	0.57	-0.03	0.50	-0.04	0.57	0.50	-0.03
Y2	2325	0.03	-0.05	-0.01	0.05	0.05	-0.01	-0.08
Y3	2345	-0.28	-0.11	-0.33	0.05	-0.10	-0.29	-0.33
Y4	2365	-0.55	-0.17	-0.60	0.05	-0.16	-0.55	-0.60
Y5	2385	-0.73	-0.21	-0.78	0.05	-0.21	-0.73	-0.78
Y6	2405	-0.79	-0.25	-0.87	0.04	-0.25	-0.79	-0.87
Y7	2425	-0.77	-0.28	-0.87	0.00	-0.28	-0.77	-0.87
Y8	2445	-0.71	-0.26	-0.79	-0.05	-0.25	-0.71	-0.79
Y9	2465	-0.60	-0.19	-0.66	-0.08	-0.18	-0.62	-0.66
Y10	2485	-0.42	-0.11	-0.44	-0.09	-0.09	-0.44	-0.44
Y11	2505	-0.28	-0.05	-0.28	-0.04	-0.04	-0.28	-0.29
Y12	2525	-0.10	-0.02	-0.10	-0.01	-0.02	-0.10	-0.10
Y13	2545	0.14	0.00	0.12	-0.01	0.14	0.12	0.00
Y14	2565	1.26	0.00	1.16	0.07	1.27	1.16	0.00
Z1	2301	0.51	0.01	0.50	0.00	0.51	0.50	0.01
Z2	2321	0.09	0.03	0.09	0.00	0.09	0.09	0.03
Z3	2341	-0.23	0.07	-0.23	0.00	0.07	-0.23	-0.23
Z4	2361	-0.50	0.09	-0.50	0.00	0.09	-0.50	-0.50
Z5	2381	-0.68	0.10	-0.68	0.00	0.10	-0.68	-0.68
Z6	2401	-0.78	0.10	-0.78	0.00	0.10	-0.78	-0.78
Z7	2421	-0.79	0.10	-0.79	0.00	0.10	-0.79	-0.79
Z8	2441	-0.72	0.10	-0.72	0.00	0.10	-0.72	-0.72
Z9	2461	-0.57	-0.09	-0.57	0.00	0.09	-0.57	-0.57
Z10	2481	-0.34	0.07	-0.33	0.00	0.07	-0.33	-0.34
Z11	2501	-0.20	0.05	-0.20	0.00	0.05	-0.20	-0.20
Z12	2521	-0.04	0.03	-0.05	0.00	0.03	-0.04	-0.05
Z13	2541	0.11	0.01	0.10	0.00	0.11	0.10	0.01
Z14	2561	1.07	0.01	1.07	0.00	1.07	1.07	0.01

Table 2.10.10-14 Stress Components – 50 psi Internal Pressure and Bolt Preload; 1.20-Inch Outer Shell Thickness

Stress Points		Stresses						
Location	Node	S_X	S_Y	S_Z	S_{XY}	S_1	S_2	S_3
A1	327	-0.10	-0.05	-0.11	0.00	-0.05	-0.10	-0.11
A2	302	-0.09	-0.05	-0.09	0.00	-0.05	-0.09	-0.09
A3	277	-0.07	-0.05	-0.07	0.01	-0.05	-0.07	-0.07
A4	252	-0.04	-0.04	-0.04	0.01	-0.03	-0.04	-0.05
A5	227	0.01	-0.03	0.01	0.01	0.01	0.01	-0.03
A6	202	0.06	-0.01	0.06	0.01	0.06	0.06	-0.01
A7	177	0.12	0.00	0.12	0.00	0.12	0.12	0.00
B1	104	0.01	0.00	0.01	0.00	0.01	0.01	0.00
B2	79	0.00	0.00	0.00	0.00	0.00	0.00	0.00
B3	54	0.00	0.00	0.00	0.00	0.00	0.00	0.00
B4	29	0.00	0.00	0.00	0.00	0.00	0.00	0.00
B5	4	0.00	0.00	0.00	0.00	0.00	0.00	0.00
C1	110	0.01	0.00	0.01	0.00	0.01	0.01	0.00
C2	85	0.00	0.00	0.00	0.00	0.00	0.00	0.00
C3	60	0.00	0.00	0.00	0.00	0.00	0.00	0.00
C4	35	0.00	0.00	0.00	0.00	0.00	0.00	0.00
C5	10	0.00	0.00	0.00	0.00	0.00	0.00	0.00
D1	335	0.25	0.39	0.17	0.11	0.45	0.19	0.17
D2	310	0.06	0.23	0.07	0.08	0.27	0.07	0.02
D3	285	0.02	0.14	0.04	0.06	0.16	0.04	0.00
D4	260	0.00	0.07	0.02	0.04	0.09	0.02	-0.02
D5	235	-0.01	0.03	0.01	0.03	0.04	0.01	-0.02
D6	210	-0.01	0.01	0.02	0.02	0.02	0.02	-0.02
D7	185	-0.03	0.00	0.03	0.01	0.03	0.00	-0.03
E1	118	0.01	0.00	0.01	0.00	0.01	0.01	0.00
E2	93	0.00	0.00	0.00	0.00	0.00	0.00	0.00
E3	68	0.00	0.00	0.00	0.00	0.00	0.00	0.00
E4	43	0.00	0.00	0.00	0.00	0.00	0.00	0.00
E5	18	0.00	0.00	0.00	0.00	0.00	0.00	0.00
F1	143	0.00	-0.01	0.00	0.00	0.00	0.00	-0.01
F2	144	0.00	-0.01	0.00	0.00	0.00	0.00	-0.01

Table 2.10.10-14 Stress Components – 50 psi Internal Pressure and Bolt Preload; 1.20-Inch Outer Shell Thickness (Continued)

Stress Points		Stresses						
Location	Node	S_X	S_Y	S_Z	S_{XY}	S_1	S_2	S_3
F3	145	0.00	0.00	0.01	0.01	0.01	0.00	-0.01
F4	146	0.00	0.00	0.01	0.01	0.01	0.01	0.00
F5	147	0.00	0.00	0.01	0.00	0.01	0.01	0.00
F6	148	0.00	0.01	0.01	0.00	0.01	0.01	0.00
F7	149	0.00	0.01	0.01	0.00	0.01	0.01	0.00
F8	150	0.00	0.01	0.01	0.00	0.01	0.01	0.00
G1	335	0.25	0.39	0.17	0.11	0.45	0.19	0.17
G2	336	0.14	0.20	0.09	0.06	0.23	0.11	0.09
G3	337	0.06	0.12	0.04	0.02	0.13	0.06	0.04
G4	338	0.02	0.05	0.01	0.01	0.05	0.02	0.01
G5	339	-0.03	-0.07	-0.03	0.03	-0.01	-0.03	-0.09
G6	340	-0.06	-0.04	-0.03	0.04	-0.01	-0.03	-0.09
H1	346	0.00	0.00	0.00	0.00	0.01	0.00	0.00
H2	347	0.00	0.01	0.00	0.00	0.01	0.00	0.00
H3	348	0.00	0.01	0.00	0.00	0.01	0.00	0.00
H4	349	0.00	0.01	0.00	0.00	0.01	0.00	0.00
H5	350	0.00	0.01	0.00	0.00	0.01	0.00	0.00
I1	621	-0.05	0.10	0.35	-0.01	0.35	0.10	-0.05
I2	624	-0.02	0.18	0.33	0.00	0.33	0.18	-0.02
J1	635	0.00	0.01	0.00	0.00	0.01	0.00	0.00
J2	638	0.00	0.01	0.00	0.00	0.01	0.00	0.00
K1	841	-0.05	0.11	0.36	0.02	0.36	0.11	-0.05
K2	844	-0.01	0.10	0.32	0.03	0.32	0.11	-0.01
L1	855	0.00	0.01	0.00	0.00	0.01	0.00	0.00
L2	858	0.00	0.01	0.00	0.00	0.01	0.00	0.00
M1	941	-0.05	0.11	0.36	0.00	0.36	0.11	-0.05
M2	944	-0.01	0.11	0.32	0.00	0.32	0.11	-0.01
N1	955	0.00	0.01	0.00	0.00	0.01	0.00	0.00
N2	958	0.00	0.01	0.00	0.00	0.01	0.00	0.00
O1	1101	-0.05	0.11	0.36	0.00	0.36	0.11	-0.05
O2	1104	-0.01	0.11	0.32	0.00	0.32	0.11	-0.01

Table 2.10.10-14 Stress Components – 50 psi Internal Pressure and Bolt Preload; 1.20-Inch Outer Shell Thickness (Continued)

Stress Points		Stresses						
Location	Node	S_X	S_Y	S_Z	S_{XY}	S_1	S_2	S_3
P1	1115	0.00	0.01	0.00	0.00	0.01	0.00	0.00
P2	1118	0.00	0.01	0.00	0.00	0.01	0.00	0.00
Q1	1261	-0.05	0.11	0.36	0.00	0.36	0.11	-0.05
Q2	1264	-0.01	0.11	0.32	0.00	0.32	0.11	-0.01
R1	1275	0.00	0.01	0.00	0.00	0.01	0.00	0.00
R2	1278	0.00	0.01	0.00	0.00	0.01	0.00	0.00
S1	1561	-0.05	0.11	0.35	0.00	0.35	0.11	-0.05
S2	1564	-0.01	0.14	0.32	0.00	0.32	0.14	-0.01
T1	1575	0.00	0.03	0.00	0.00	0.03	0.00	0.00
T2	1578	0.00	0.00	-0.01	0.00	0.00	0.00	-0.01
U1	1841	-0.06	-0.17	0.22	0.01	0.22	-0.06	-0.17
U2	1844	-0.13	-0.01	0.21	0.10	0.21	0.05	-0.19
V1	1852	0.07	0.01	0.07	0.01	0.07	0.07	0.01
V2	1856	0.00	0.00	0.05	0.01	0.05	0.01	0.00
W1	1969	-0.05	-0.19	0.07	0.18	0.07	0.07	-0.31
W2	1970	0.00	-0.14	0.08	0.02	0.08	0.00	-0.14
W3	1971	0.01	-0.08	0.09	-0.05	0.09	0.03	-0.10
W4	1972	0.00	-0.03	0.10	-0.05	0.10	0.04	-0.07
W5	1973	0.00	0.01	0.10	-0.05	0.10	0.05	-0.05
W6	1974	0.00	0.03	0.11	-0.04	0.11	0.06	-0.03
W7	1975	0.00	0.06	0.11	-0.02	0.11	0.07	-0.01
W8	1976	0.00	0.08	0.11	-0.01	0.11	0.08	0.00
X1	2370	0.01	-0.04	-0.01	0.09	0.08	-0.01	-0.10
X2	2390	-0.05	-0.20	-0.08	0.05	-0.03	-0.08	-0.21
X3	2410	0.06	-0.20	-0.03	-0.04	0.07	-0.03	-0.21
X4	2430	0.03	-0.09	0.00	-0.08	0.07	0.00	-0.12
X5	2450	0.01	-0.04	0.01	-0.07	0.06	0.01	-0.09
X6	2470	0.00	-0.01	0.02	-0.05	0.05	0.02	-0.05
X7	2490	0.01	0.00	0.03	-0.03	0.04	0.03	-0.03
X8	2510	0.02	0.00	0.04	-0.02	0.04	0.03	-0.02

Table 2.10.10-14 Stress Components – 50 psi Internal Pressure and Bolt Preload; 1.20-Inch Outer Shell Thickness (Continued)

Stress Points		Stresses						
Location	Node	S_X	S_Y	S_Z	S_{XY}	S_1	S_2	S_3
X9	2530	0.02	0.00	0.04	-0.02	0.04	0.03	-0.01
X10	2550	0.02	0.00	0.05	-0.01	0.05	0.03	0.00
X11	2570	0.03	0.00	0.05	0.00	0.05	0.03	0.00
Y1	2305	-0.05	-0.05	-0.05	0.01	-0.04	-0.05	-0.06
Y2	2325	-0.04	-0.05	-0.04	0.00	-0.04	-0.04	-0.05
Y3	2345	-0.03	-0.05	-0.04	0.00	-0.03	-0.04	-0.05
Y4	2365	-0.03	-0.05	-0.03	-0.01	-0.03	-0.03	-0.05
Y5	2385	-0.03	-0.05	-0.03	-0.01	-0.02	-0.03	-0.05
Y6	2405	-0.02	-0.05	-0.02	-0.01	-0.01	-0.02	-0.05
Y7	2425	0.00	-0.04	-0.01	-0.01	0.00	-0.01	-0.04
Y8	2445	0.01	-0.03	0.01	-0.01	0.02	0.01	-0.04
Y9	2465	0.03	-0.02	0.02	-0.02	0.03	0.02	-0.03
Y10	2485	0.04	-0.01	0.04	-0.01	0.04	0.04	-0.02
Y11	2505	0.04	-0.01	0.05	-0.01	0.05	0.05	-0.01
Y12	2525	0.05	0.00	0.06	-0.01	0.06	0.05	-0.01
Y13	2545	0.06	0.00	0.07	-0.01	0.07	0.06	0.00
Y14	2565	0.07	0.00	0.08	0.00	0.08	0.07	0.00
Z1	2301	-0.05	-0.05	-0.05	0.00	-0.05	-0.05	-0.05
Z2	2321	-0.04	-0.05	-0.04	0.00	-0.04	-0.04	-0.05
Z3	2341	-0.04	-0.04	-0.04	0.00	-0.04	-0.04	-0.04
Z4	2361	-0.03	-0.04	-0.03	0.00	-0.03	-0.03	-0.04
Z5	2381	-0.03	-0.04	-0.03	0.00	-0.03	-0.03	-0.04
Z6	2401	-0.02	-0.03	-0.02	0.00	-0.02	-0.02	-0.03
Z7	2421	0.00	-0.03	0.00	0.00	0.00	0.00	-0.03
Z8	2441	0.01	-0.02	0.01	0.00	0.01	0.01	-0.02
Z9	2461	0.02	-0.01	0.02	0.00	0.02	0.02	-0.01
Z10	2481	0.04	-0.01	0.04	0.00	0.04	0.04	-0.01
Z11	2501	0.05	0.00	0.05	0.00	0.05	0.05	0.00
Z12	2521	0.06	0.00	0.06	0.00	0.06	0.06	0.00
Z13	2541	0.08	0.00	0.08	0.00	0.08	0.08	0.00
Z14	2561	0.09	0.00	0.09	0.00	0.09	0.09	0.00

Table 2.10.10-15 Primary Stresses; 30-Foot Top End Drop; ϕ = 0°; 1.12-Inch Outer Shell Thickness

Stress Points		Stresses						
Location	Node	S_X	S_Y	S_Z	S_{XY}	S_1	S_2	S_3
A1	327	0.64	-0.04	0.65	0.03	0.65	0.64	-0.04
A2	302	0.57	-0.04	0.58	-0.01	0.58	0.57	-0.04
A3	277	0.50	-0.04	0.51	-0.02	0.51	0.50	-0.04
A4	252	0.38	-0.05	0.38	-0.02	0.38	0.38	-0.05
A5	227	0.14	-0.07	0.14	-0.02	0.14	0.14	-0.07
A6	202	-0.09	-0.08	-0.10	-0.02	-0.07	-0.10	-0.10
A7	177	-0.36	-0.09	-0.37	-0.01	-0.09	-0.36	-0.37
B1	104	0.32	0.01	0.34	0.00	0.34	0.32	0.01
B2	79	0.04	0.01	0.05	-0.04	0.07	0.05	-0.02
B3	54	-0.21	-0.01	-0.21	-0.05	0.00	-0.21	-0.22
B4	29	-0.46	-0.01	-0.48	-0.04	-0.01	-0.47	-0.48
B5	4	-0.61	0.00	-0.63	0.04	0.00	-0.61	-0.63
C1	110	0.03	0.00	0.18	-0.04	0.18	0.06	-0.03
C2	85	-0.08	0.00	-0.02	-0.08	0.05	-0.02	-0.13
C3	60	-0.17	0.00	-0.19	-0.10	0.05	-0.19	-0.22
C4	35	-0.25	0.00	-0.36	-0.06	0.01	-0.26	-0.36
C5	10	-0.31	0.00	-0.46	-0.01	0.00	-0.31	-0.46
D1	335	-0.08	-0.71	0.15	-0.12	0.15	-0.06	-0.73
D2	310	0.16	-0.47	0.24	-0.14	0.24	0.19	-0.50
D3	285	0.19	-0.36	0.24	-0.15	0.24	0.23	-0.40
D4	260	0.21	-0.28	0.21	-0.13	0.25	0.21	-0.31
D5	235	0.17	-0.20	0.12	-0.11	0.20	0.12	-0.23
D6	210	0.10	-0.14	0.01	-0.07	0.12	0.01	-0.16
D7	185	0.05	-0.12	-0.13	-0.03	0.05	-0.12	-0.13
E1	118	-0.44	-0.43	-0.22	-0.17	-0.22	-0.27	-0.60
E2	93	-0.12	-0.26	-0.15	-0.11	-0.06	-0.15	-0.32
E3	68	-0.06	-0.11	-0.16	-0.06	-0.02	-0.15	-0.16
E4	43	0.00	-0.04	-0.21	-0.02	0.01	-0.05	-0.21
E5	18	0.06	-0.01	-0.23	0.00	0.06	-0.01	-0.23
F1	143	0.03	-0.33	-0.08	-0.16	0.09	-0.08	-0.39
F2	144	-0.03	-0.12	-0.03	-0.18	0.11	-0.03	-0.26

Table 2.10.10-15 Primary Stresses; 30-Foot Top End Drop; ϕ = 0°; 1.12-Inch Outer Shell Thickness (Continued)

Stress Points		Stresses						
Location	Node	S_X	S_Y	S_Z	S_{XY}	S_1	S_2	S_3
F3	145	-0.07	-0.10	-0.04	-0.20	0.11	-0.04	-0.28
F4	146	-0.04	-0.09	-0.03	-0.17	0.10	-0.03	-0.23
F5	147	-0.02	-0.08	-0.02	-0.13	0.08	-0.02	-0.19
F6	148	-0.01	-0.07	-0.02	-0.09	0.06	-0.02	-0.14
F7	149	-0.01	-0.06	-0.01	-0.05	0.03	-0.01	-0.09
F8	150	0.00	-0.04	0.00	-0.03	0.01	0.00	-0.05
G1	335	-0.08	-0.71	0.15	-0.12	0.15	-0.06	-0.73
G2	336	-0.09	-0.56	0.18	-0.05	0.18	-0.08	-0.57
G3	337	-0.03	-0.51	0.20	-0.01	0.20	-0.03	-0.51
G4	338	0.00	-0.50	0.20	0.03	0.20	0.00	-0.50
G5	339	0.01	-0.36	0.22	0.08	0.22	0.02	-0.37
G6	340	0.08	-0.10	0.29	0.08	0.29	0.11	-0.13
H1	346	0.10	-0.21	0.23	-0.13	0.23	0.15	-0.26
H2	347	0.00	-0.72	0.05	-0.13	0.05	0.02	-0.74
H3	348	0.03	-0.93	0.00	0.00	0.03	0.00	-0.93
H4	349	0.01	-0.82	0.03	0.05	0.03	0.01	-0.83
H5	350	0.00	-0.77	0.04	0.04	0.04	0.00	-0.77
I1	621	-0.05	-1.12	0.32	0.02	0.32	-0.05	-1.12
I2	624	0.02	-1.40	0.22	0.03	0.22	0.02	-1.40
J1	635	0.00	-1.09	0.05	0.00	0.05	0.00	-1.09
J2	638	0.00	-1.13	0.03	0.00	0.03	0.00	-1.13
K1	841	-0.05	-1.68	0.47	0.03	0.47	-0.05	-1.68
K2	844	0.00	-1.69	0.42	0.02	0.42	0.00	-1.69
L1	855	0.00	-1.55	0.00	0.00	0.00	0.00	-1.55
L2	858	0.00	-1.55	0.00	0.00	0.00	0.00	-1.55
M1	941	-0.05	-2.22	0.47	0.00	0.47	-0.05	-2.22
M2	944	0.00	-2.22	0.42	0.00	0.42	0.00	-2.22
N1	955	0.00	-2.09	0.00	0.00	0.00	0.00	-2.09
N2	958	0.00	-2.09	0.00	0.00	0.00	0.00	-2.09
O1	1101	-0.05	-3.11	0.47	0.00	0.47	-0.05	-3.11
O2	1104	0.00	-3.11	0.42	0.00	0.42	0.00	-3.11

Table 2.10.10-15 Primary Stresses; 30-Foot Top End Drop; ϕ = 0°; 1.12-Inch Outer Shell Thickness (Continued)

Stress Points		Stresses						
Location	Node	S_X	S_Y	S_Z	S_{XY}	S_1	S_2	S_3
P1	1115	0.00	-2.97	0.00	0.00	0.00	0.00	-2.97
P2	1118	0.00	-2.97	0.00	0.00	0.00	0.00	-2.97
Q1	1261	-0.05	-3.99	0.47	0.00	0.47	-0.05	-3.99
Q2	1264	0.00	-3.99	0.42	0.00	0.42	0.00	-3.99
R1	1275	0.00	-3.85	0.00	0.00	0.00	0.00	-3.85
R2	1278	0.00	-3.86	0.00	0.00	0.00	0.00	-3.86
S1	1561	-0.05	-3.64	-0.12	-0.13	-0.04	-0.12	-3.64
S2	1564	0.09	-6.12	-0.72	-0.16	0.09	-0.72	-6.12
T1	1575	0.00	-4.36	0.24	-0.01	0.24	0.00	-4.36
T2	1578	0.00	-5.06	0.04	-0.01	0.04	0.00	-5.06
U1	1841	-0.05	-6.77	2.41	-0.16	2.41	-0.04	-6.78
U2	1844	0.71	-3.39	3.21	-0.07	3.21	0.71	-3.39
V1	1852	-1.00	-5.38	0.75	-0.18	0.75	-0.99	-5.38
V2	1856	0.02	-3.40	1.35	-0.03	1.35	0.02	-3.40
W1	1969	1.88	-1.46	0.39	1.51	2.46	0.39	-2.04
W2	1970	1.30	-3.17	-0.12	0.55	1.36	-0.12	-3.24
W3	1971	0.71	-3.85	-0.36	-0.11	0.71	-0.36	-3.85
W4	1972	0.39	-4.51	-0.56	-0.25	0.40	-0.56	-4.52
W5	1973	0.23	-4.97	-0.69	-0.27	0.24	-0.69	-4.99
W6	1974	0.13	-5.33	-0.78	-0.23	0.14	-0.78	-5.34
W7	1975	0.06	-5.71	-0.87	-0.13	0.07	-0.87	-5.72
W8	1976	0.02	-6.14	-0.97	-0.07	0.02	-0.97	-6.14
X1	2370	4.33	1.35	3.33	2.45	5.71	3.33	-0.02
X2	2390	0.30	-2.59	0.57	2.12	1.42	0.57	-3.71
X3	2410	0.19	-4.58	-0.24	1.04	0.41	-0.24	-4.80
X4	2430	-0.61	-4.28	-0.57	0.94	-0.38	-0.57	-4.50
X5	2450	-0.67	-4.63	-0.74	0.93	-0.47	-0.74	-4.83
X6	2470	-0.57	-4.61	-0.64	0.95	-0.35	-0.64	-4.82
X7	2490	-0.12	-4.73	-0.43	0.89	0.04	-0.43	-4.90
X8	2510	0.14	-4.75	-0.29	0.79	0.26	-0.29	-4.87
X9	2530	0.46	-4.81	-0.17	0.61	0.53	-0.17	-4.88

Table 2.10.10-15 Primary Stresses; 30-Foot Top End Drop; ϕ = 0°; 1.12-Inch Outer Shell Thickness (Continued)

Stress Points		Stresses						
Location	Node	S_X	S_Y	S_Z	S_{XY}	S_1	S_2	S_3
X10	2550	0.81	-4.83	-0.05	0.35	0.84	-0.05	-4.85
X11	2570	1.22	-4.84	0.02	0.20	1.22	0.02	-4.85
Y1	2305	0.76	-1.95	1.17	0.12	1.17	0.77	-1.95
Y2	2325	0.90	-2.10	1.01	0.50	1.01	0.98	-2.19
Y3	2345	1.10	-2.45	1.03	0.58	1.19	1.03	-2.54
Y4	2365	1.10	-2.76	0.94	0.46	1.15	0.94	-2.82
Y5	2385	0.75	-2.97	0.66	0.31	0.77	0.66	-3.00
Y6	2405	0.23	-3.13	0.28	0.29	0.28	0.25	-3.15
Y7	2425	-0.18	-3.32	-0.06	0.40	-0.06	-0.13	-3.38
Y8	2445	-0.40	-3.62	-0.30	0.54	-0.30	-0.31	-3.70
Y9	2465	-0.47	-3.98	-0.43	0.61	-0.37	-0.43	-4.08
Y10	2485	-0.47	-4.32	-0.53	0.57	-0.39	-0.53	-4.40
Y11	2505	-0.50	-4.54	-0.62	0.51	-0.44	-0.62	-4.60
Y12	2525	-0.54	-4.68	-0.72	0.39	-0.50	-0.72	-4.72
Y13	2545	-0.62	-4.78	-0.87	0.22	-0.61	-0.87	-4.80
Y14	2565	-0.77	-4.82	-1.09	0.04	-0.77	-1.09	-4.82
Z1	2301	1.72	-1.93	1.72	0.00	1.72	1.72	-1.93
Z2	2321	1.21	-2.07	1.21	0.00	1.21	1.21	-2.07
Z3	2341	1.00	-2.36	1.00	0.00	1.00	1.00	-2.36
Z4	2361	0.82	-2.66	0.82	0.00	0.82	0.82	-2.66
Z5	2381	0.59	-2.94	0.59	0.00	0.59	0.59	-2.94
Z6	2401	0.31	-3.20	0.31	0.00	0.31	0.31	-3.20
Z7	2421	0.03	-3.46	0.03	0.00	0.03	0.03	-3.46
Z8	2441	-0.22	-3.75	-0.22	0.00	-0.22	-0.22	-3.75
Z9	2461	-0.42	-4.07	-0.42	0.00	-0.42	-0.42	-4.07
Z10	2481	-0.62	-4.35	-0.62	0.00	-0.62	-0.62	-4.35
Z11	2501	-0.78	-4.54	-0.78	0.00	-0.78	-0.78	-4.54
Z12	2521	-0.96	-4.66	-0.96	0.00	-0.96	-0.96	-4.66
Z13	2541	-1.19	-4.76	-1.19	0.00	-1.19	-1.19	-4.76
Z14	2561	-1.49	-4.80	-1.49	0.00	-1.49	-1.49	-4.80

Table 2.10.10-16 Primary Plus Secondary Stresses; 30-Foot Top End Drop; ϕ = 0°; 1.12-Inch Outer Shell Thickness

Stress Points		Stresses						
Location	Node	S_X	S_Y	S_Z	S_{XY}	S_1	S_2	S_3
A1	327	2.83	-0.01	2.82	0.13	2.84	2.82	-0.01
A2	302	2.43	-0.01	2.43	-0.01	2.43	2.43	-0.01
A3	277	2.04	-0.03	2.04	-0.06	2.04	2.04	-0.03
A4	252	1.26	-0.04	1.27	-0.01	1.27	1.26	-0.04
A5	227	-0.24	-0.06	-0.24	-0.03	-0.05	-0.24	-0.25
A6	202	-1.68	-0.09	-1.68	-0.03	-0.09	-1.68	-1.68
A7	177	-3.11	-0.10	-3.12	0.00	-0.10	-3.11	-3.12
B1	104	-4.55	-0.21	-4.57	-0.25	-0.20	-4.56	-4.57
B2	79	-1.30	-0.14	-1.30	0.16	-0.12	-1.30	-1.32
B3	54	2.04	0.03	2.06	0.16	2.06	2.05	0.02
B4	29	5.50	0.04	5.49	0.18	5.51	5.49	0.04
B5	4	8.51	-0.05	8.41	-0.71	8.57	8.41	-0.11
C1	110	-2.98	-1.71	-3.67	0.33	-1.63	-3.07	-3.67
C2	85	-0.30	-1.44	-0.61	0.94	0.23	-0.61	-1.97
C3	60	1.84	-0.83	2.30	1.20	2.31	2.30	-1.29
C4	35	4.12	-0.27	5.36	0.67	5.36	4.22	-0.37
C5	10	6.86	-0.07	8.31	0.08	8.31	6.86	-0.07
D1	335	-1.76	-6.70	-0.25	-1.20	-0.25	-1.48	-6.98
D2	310	0.59	-4.20	0.79	-1.20	0.87	0.79	-4.49
D3	285	0.75	-2.97	0.96	-1.11	1.05	0.96	-3.28
D4	260	0.61	-2.27	0.69	-1.01	0.93	0.69	-2.59
D5	235	0.03	-2.00	-0.16	-0.85	0.34	-0.16	-2.31
D6	210	-0.71	-1.98	-1.10	-0.50	-0.54	-1.10	-2.15
D7	185	-1.58	-2.00	-2.14	-0.11	-1.55	-2.03	-2.14
E1	118	8.44	9.55	5.26	4.18	13.22	5.26	4.77
E2	93	0.81	5.31	3.04	2.95	6.77	3.04	-0.65
E3	68	0.07	1.54	2.88	1.97	2.90	2.88	-1.30
E4	43	-1.46	0.42	3.42	0.94	3.42	0.81	-1.85
E5	18	-1.68	0.15	4.84	0.35	4.84	0.22	-1.75
F1	143	-7.67	6.79	1.34	2.96	7.37	1.34	-8.26
F2	144	-4.89	5.03	1.29	2.40	5.58	1.29	-5.44

Table 2.10.10-16 Primary Plus Secondary Stresses; 30-Foot Top End Drop; ϕ = 0°; 1.12-Inch Outer Shell Thickness (Continued)

Stress Points		Stresses						
Location	Node	S_X	S_Y	S_Z	S_{XY}	S_1	S_2	S_3
F3	145	-1.64	2.90	1.49	1.57	3.40	1.49	-2.13
F4	146	-0.56	1.59	1.48	0.95	1.95	1.48	-0.92
F5	147	-0.23	0.80	1.42	0.65	1.42	1.11	-0.55
F6	148	-0.11	0.25	1.36	0.44	1.36	0.54	-0.40
F7	149	-0.04	-0.29	1.30	0.23	1.30	0.10	-0.43
F8	150	0.00	-0.83	1.23	0.12	1.23	0.02	-0.85
G1	335	-1.76	-6.70	-0.25	-1.20	-0.25	-1.48	-6.98
G2	336	-1.24	-4.36	0.63	-0.45	0.63	-1.17	-4.43
G3	337	-0.40	-3.09	1.26	0.05	1.26	-0.40	-3.09
G4	338	-0.04	-1.87	1.72	0.13	1.72	-0.03	-1.88
G5	339	0.56	0.61	2.52	-0.54	2.52	1.12	0.04
G6	340	0.66	-0.58	2.19	-0.86	2.19	1.09	-1.02
H1	346	-4.63	-1.72	-0.36	-1.06	-0.36	-1.38	-4.97
H2	347	-2.72	-1.01	0.62	-0.74	0.62	-0.73	-2.99
H3	348	-1.24	1.65	2.03	-0.03	2.03	1.66	-1.24
H4	349	-0.52	4.14	3.03	0.07	4.14	3.03	-0.52
H5	350	-0.18	6.96	3.92	0.05	6.96	3.92	-0.18
I1	621	-0.06	-3.85	-0.07	0.10	-0.05	-0.07	-3.85
I2	624	0.08	-5.60	-0.33	0.12	0.08	-0.33	-5.60
J1	635	-0.01	3.34	0.36	0.03	3.34	0.36	-0.01
J2	638	0.01	1.52	0.09	0.02	1.52	0.09	0.01
K1	841	-0.05	-5.34	0.26	0.02	0.26	-0.05	-5.34
K2	844	0.00	-4.93	0.61	0.03	0.61	0.00	-4.93
L1	855	0.00	1.67	-0.37	0.00	1.67	0.00	-0.37
L2	858	0.00	2.21	0.18	0.00	2.21	0.18	0.00
M1	941	-0.05	-5.94	0.20	0.00	0.20	-0.05	-5.94
M2	944	0.00	-5.41	0.67	0.00	0.67	0.00	-5.41
N1	955	0.00	1.03	-0.45	0.00	1.03	0.00	-0.45
N2	958	0.00	1.73	0.23	0.00	1.73	0.23	0.00
O1	1101	-0.05	-6.82	0.21	0.00	0.21	-0.05	-6.82
O2	1104	0.00	-6.29	0.68	0.00	0.68	0.00	-6.29

Table 2.10.10-16 Primary Plus Secondary Stresses; 30-Foot Top End Drop; ϕ = 0°; 1.12-Inch Outer Shell Thickness (Continued)

Stress Points		Stresses						
Location	Node	S_X	S_Y	S_Z	S_{XY}	S_1	S_2	S_3
P1	1115	0.00	0.11	-0.49	0.00	0.11	0.00	-0.49
P2	1118	0.00	0.86	0.24	0.00	0.86	0.24	0.00
Q1	1261	-0.05	-7.65	0.29	0.00	0.29	-0.05	-7.65
Q2	1264	0.00	-7.24	0.64	0.00	0.64	0.00	-7.24
R1	1275	0.00	-0.73	-0.46	0.00	0.00	-0.46	-0.73
R2	1278	-0.01	0.00	0.09	0.00	0.09	0.00	-0.01
S1	1561	-0.06	-7.10	-0.52	-0.16	-0.05	-0.52	-7.11
S2	1564	0.12	-9.61	-0.92	-0.20	0.13	-0.92	-9.61
T1	1575	-0.01	-0.04	0.42	-0.03	0.42	0.02	-0.06
T2	1578	0.01	-2.33	0.16	-0.03	0.16	0.01	-2.33
U1	1841	-0.11	-6.70	0.01	-0.10	0.01	-0.11	-6.70
U2	1844	-0.07	-5.11	0.73	-0.20	0.73	-0.06	-5.12
V1	1852	-3.44	-6.09	-0.58	-0.03	-0.58	-3.44	-6.09
V2	1856	-0.13	2.31	3.33	-0.04	3.33	2.31	-0.13
W1	1969	1.02	-3.29	0.10	0.75	1.15	0.10	-3.41
W2	1970	0.69	-3.78	0.17	0.02	0.69	0.17	-3.78
W3	1971	0.34	-3.90	0.24	-0.48	0.39	0.24	-3.95
W4	1972	0.16	-4.04	0.31	-0.54	0.31	0.23	-4.11
W5	1973	0.08	-4.14	0.36	-0.49	0.36	0.13	-4.19
W6	1974	0.03	-4.19	0.43	-0.37	0.43	0.07	-4.22
W7	1975	0.01	-4.27	0.50	-0.21	0.50	0.02	-4.28
W8	1976	0.02	-4.39	0.55	-0.11	0.55	0.02	-4.40
X1	2370	3.53	1.78	3.46	3.07	5.84	3.46	-0.53
X2	2390	-0.35	-3.06	0.36	2.67	1.29	0.36	-4.70
X3	2410	-0.15	-5.23	-0.35	1.21	0.12	-0.35	-5.50
X4	2430	-0.98	-4.64	-0.58	0.88	-0.58	-0.79	-4.84
X5	2450	-1.05	-4.91	-0.69	0.70	-0.69	-0.93	-5.03
X6	2470	-0.97	-4.74	-0.52	0.65	-0.52	-0.86	-4.85
X7	2490	-0.49	-4.81	-0.18	0.57	-0.18	-0.42	-4.88
X8	2510	-0.20	-4.77	0.05	0.47	0.05	-0.15	-4.82
X9	2530	0.18	-4.83	0.28	0.35	0.28	0.20	-4.86

Table 2.10.10-16 Primary Plus Secondary Stresses; 30-Foot Top End Drop; ϕ = 0°; 1.12-Inch Outer Shell Thickness (Continued)

Stress Points		Stresses						
Location	Node	S_X	S_Y	S_Z	S_{XY}	S_1	S_2	S_3
X10	2550	0.59	-4.83	0.54	0.19	0.60	0.54	-4.84
X11	2570	1.84	-4.84	1.60	0.15	1.84	1.60	-4.85
Y1	2305	1.30	-1.98	1.65	0.10	1.65	1.30	-1.98
Y2	2325	0.94	-2.16	1.03	0.57	1.04	1.03	-2.26
Y3	2345	0.88	-2.57	0.75	0.64	1.00	0.75	-2.69
Y4	2365	0.64	-2.94	0.41	0.49	0.70	0.41	-3.01
Y5	2385	0.09	-3.18	-0.05	0.33	0.12	-0.05	-3.21
Y6	2405	-0.54	-3.36	-0.55	0.31	-0.51	-0.55	-3.39
Y7	2425	-0.96	-3.56	-0.92	0.39	-0.90	-0.92	-3.62
Y8	2445	-1.12	-3.84	-1.09	0.49	-1.03	-1.09	-3.93
Y9	2465	-1.09	-4.15	-1.10	0.55	-1.00	-1.10	-4.24
Y10	2485	-0.91	-4.41	-0.98	0.50	-0.84	-0.98	-4.48
Y11	2505	-0.80	-4.58	-0.92	0.49	-0.74	-0.92	-4.64
Y12	2525	-0.66	-4.70	-0.85	0.39	-0.62	-0.85	-4.73
Y13	2545	-0.51	-4.78	-0.79	0.22	-0.49	-0.79	-4.80
Y14	2565	0.46	-4.82	0.03	0.11	0.46	0.03	-4.82
Z1	2301	2.24	-1.92	2.24	0.00	2.24	2.24	-1.92
Z2	2321	1.32	-2.04	1.32	0.00	1.32	1.32	-2.04
Z3	2341	0.80	-2.31	0.80	0.00	0.80	0.80	-2.31
Z4	2361	0.36	-2.59	0.36	0.00	0.36	0.36	-2.59
Z5	2381	-0.04	-2.85	-0.04	0.00	-0.04	-0.04	-2.85
Z6	2401	-0.43	-3.10	-0.43	0.00	-0.43	-0.43	-3.10
Z7	2421	-0.75	-3.36	-0.75	0.00	-0.75	-0.75	-3.36
Z8	2441	-0.93	-3.65	-0.93	0.00	-0.93	-0.93	-3.65
Z9	2461	-1.00	-3.98	-1.00	0.00	-1.00	-1.00	-3.98
Z10	2481	-0.98	-4.28	-0.98	0.00	-0.98	-0.98	-4.28
Z11	2501	-1.01	-4.49	-1.01	0.00	-1.01	-1.01	-4.49
Z12	2521	-1.04	-4.63	-1.04	0.00	-1.04	-1.04	-4.63
Z13	2541	-1.12	-4.74	-1.12	0.00	-1.12	-1.12	-4.74
Z14	2561	-0.46	-4.79	-0.46	0.00	-0.46	-0.46	-4.79

Table 2.10.10-17 Primary Membrane (P_m) Stresses; 30-Foot Top End Drop; $\phi = 0°$; 1.12-Inch Outer Shell Thickness

		Stresses* (ksi)							
Section	Node to Node	S_x	S_y	S_z	S_{xy}	S_1	S_2	S_3	SI
A	327 – 177	0.14	-0.07	0.14	-0.01	0.14	0.14	-0.07	0.21
B	104 – 4	-0.14	0.00	-0.14	-0.03	0.01	-0.14	-0.15	0.16
C	110 – 10	-0.14	0.00	-0.14	-0.07	0.03	-0.14	-0.17	0.21
D	335 – 185	0.14	-0.24	0.10	-0.10	0.16	0.10	-0.26	0.42
E	118 – 18	-0.11	-0.18	-0.18	-0.08	-0.06	-0.18	-0.22	0.17
F	143 – 150	-0.03	-0.11	-0.03	-0.14	0.08	-0.03	-0.22	0.30
G	335 – 340	-0.01	-0.42	0.21	0.02	0.21	-0.01	-0.42	0.63
H	346 – 350	0.02	-0.72	0.06	-0.04	0.06	0.03	-0.73	0.79
I	621 – 624	-0.02	-1.25	0.27	0.03	0.27	-0.02	-1.25	1.52
J	635 – 638	0.00	-1.11	0.04	0.00	0.04	0.00	-1.11	1.15
K	841 – 844	-0.02	-1.69	0.44	0.02	0.44	-0.02	-1.69	2.13
L	855 – 858	0.00	-1.55	0.00	0.00	0.00	0.00	-1.55	1.55
M	941 – 944	-0.02	-2.22	0.45	0.00	0.45	-0.02	-2.22	2.67
N	955 – 958	0.00	-2.09	0.00	0.00	0.00	0.00	-2.09	2.09
O	1101 – 1104	-0.02	-3.11	0.45	0.00	0.45	-0.02	-3.11	3.55
P	1115 – 1118	0.00	-2.97	0.00	0.00	0.00	0.00	-2.97	2.97
Q	1261 – 1264	-0.02	-3.99	0.45	0.00	0.45	-0.02	-3.99	4.44
R	1275 – 1278	0.00	-3.85	0.00	0.00	0.00	0.00	-3.85	3.85
S	1561 – 1564	0.01	-4.85	-0.41	-0.18	0.02	-0.41	-4.85	4.88
T	1575 – 1578	0.00	-4.72	0.14	-0.01	0.14	0.00	-4.72	4.85
U	1841 – 1846	0.79	-3.15	3.22	0.85	3.22	0.97	-3.32	6.54
V	1852 – 1856	-0.37	-4.23	1.11	0.05	0.00	-0.37	-4.23	5.34
W	1969 – 1976	0.73	-4.16	-0.40	0.14	0.74	-0.40	-4.17	4.90
X	2370 – 2570	0.16	-4.04	-0.13	1.06	0.41	-0.13	-4.29	4.71
Y	2305 – 2565	0.20	-3.31	0.20	0.43	0.25	0.20	-3.36	3.61
Z	2301 – 2561	0.20	-3.33	0.20	0.00	0.20	0.00	-3.33	3.52

* Stresses are taken at 0 degrees (under the load) at each section.

Table 2.10.10-18 Primary Membrane Plus Primary Bending ($P_m + P_b$) Stresses; 30-Foot Top End Drop; $\phi = 0°$; 1.12-Inch Outer Shell Thickness

		Stresses* (ksi)							
Section	Node to Node	S_x	S_y	S_z	S_{xy}	S_1	S_2	S_3	SI
A	327 – 177	0.63	-0.04	0.63	-0.01	0.63	0.63	-0.04	0.67
B	104 – 4	-0.60	-0.01	-0.62	-0.03	-0.01	-0.60	-0.62	0.61
C	110 – 10	-0.30	0.00	-0.45	-0.06	0.01	-0.31	-0.45	0.46
D	335 – 185	0.19	-0.43	0.29	-0.16	0.29	0.23	-0.46	0.75
E	118 – 18	-0.31	-0.39	-0.16	-0.16	-0.16	-0.19	-0.51	0.35
F	143 – 150	0.03	-0.22	-0.06	-0.14	0.09	-0.06	-0.28	0.38
G	335 – 340	-0.08	-0.68	0.16	0.02	0.16	-0.08	-0.68	0.83
H	346 – 350	0.00	-0.97	-0.02	-0.04	0.00	-0.02	-0.97	0.96
I	621 – 624	0.02	-1.39	0.22	0.03	0.22	0.02	-1.39	1.61
J	635 – 638	0.00	-1.13	0.03	0.00	0.03	0.00	-1.13	1.16
K	841 – 844	-0.05	-1.68	0.47	0.02	0.47	-0.05	-1.68	2.15
L	855 – 858	0.00	-1.55	0.00	0.00	0.00	0.00	-1.55	-1.55
M	941 – 944	-0.05	-2.22	0.47	0.00	0.47	-0.05	-2.22	2.69
N	955 – 958	0.00	-2.09	0.00	0.00	0.00	0.00	-2.09	2.09
O	1101 – 1104	-0.05	-3.11	0.47	0.00	0.47	-0.05	-3.11	3.58
P	1115 – 1118	0.00	-2.97	0.00	0.00	0.00	0.00	-2.97	2.97
Q	1261 – 1264	-0.05	-3.99	0.47	0.00	0.47	-0.05	-3.99	4.46
R	1275 – 1278	0.00	-3.85	0.00	0.00	0.00	0.00	-3.85	3.85
S	1561 – 1564	0.09	-6.05	-0.70	-0.18	0.09	-0.70	-6.06	6.15
T	1575 – 1578	0.00	-5.06	0.04	-0.01	0.04	0.00	-5.06	5.09
U	1841 – 1846	-0.05	-5.53	2.76	0.85	2.76	0.08	-5.66	8.42
V	1852 – 1856	-1.00	-4.81	0.90	0.05	0.90	-1.00	-4.81	5.71
W	1969 – 1976	0.02	-6.20	-1.04	0.14	0.03	-1.04	-6.20	6.23
X	2370 – 2570	-0.23	-5.65	-0.77	0.34	-0.21	-0.77	-5.67	5.46
Y	2305 – 2565	-0.87	-4.81	-1.00	0.44	-0.82	-1.00	-4.86	4.04
Z	2301 – 2561	-1.22	-4.89	-1.22	0.00	-1.22	-1.22	-4.89	3.67

* Stresses are taken at 0 degrees (under the load) at each section.

Table 2.10.10-19 Primary Membrane (P_m) and Primary Membrane Plus Primary Bending ($P_m + P_b$) Stress Qualification; 30-Foot Top End Drop; $\phi = 0°$; 1.12-Inch Outer Shell Thickness

Section	Node to Node	Max. Temp. (°F)	P_m Stresses (ksi)			$P_m + P_b$ Stresses (ksi)		
			Allow. * 0.7 S_u	Calc.	MS	Allow. * 1.0 S_u	Calc.	MS
A	327 – 177	222	48.93	0.21	+Large	69.90	0.67	+Large
B	104 – 4	215	49.18	0.16	+Large	70.25	0.61	+Large
C	110 – 10	212	49.28	0.21	+Large	70.40	0.46	+Large
D	335 – 185	221	48.96	0.42	+Large	69.95	0.75	+Large
E	118 – 18	208	49.42	0.17	+Large	70.60	0.35	+Large
F	143 – 150	209	49.38	0.30	+Large	70.55	0.38	+Large
G	335 – 340	221	48.96	0.63	+Large	69.95	0.83	+Large
H	346 – 350	212	49.28	0.79	+Large	70.40	0.96	+Large
I	621 – 624	222	48.93	1.52	+Large	69.90	1.61	+Large
J	635 – 638	199	49.73	1.15	+Large	71.04	1.16	+Large
K	841 – 844	232	68.49	2.13	+Large	97.84	2.15	+Large
L	855 – 858	204	69.50	1.55	+Large	99.29	1.55	+Large
M	941 – 944	247	67.94	2.67	+Large	97.06	2.69	+Large
N	955 – 958	211	69.25	2.09	+Large	98.93	2.09	+Large
O	1101 – 1104	255	67.65	3.55	+Large	96.64	3.58	+Large
P	1115 – 1118	216	69.07	2.97	+Large	98.67	2.97	+Large
Q	1261 – 1264	251	67.80	4.44	+Large	96.85	4.46	+Large
R	1275 – 1278	216	69.07	3.85	+Large	98.67	3.85	+Large
S	1561 – 1564	217	49.10	4.88	+Large	70.15	6.15	+Large
T	1575 – 1578	197	49.78	4.85	+Large	71.12	5.09	+Large
U	1841 – 1846	212	49.28	6.54	+Large	70.40	8.42	+Large
V	1852 – 1856	205	49.52	5.34	+Large	70.75	5.71	+Large
W	1969 – 1976	198	49.76	4.90	+Large	71.08	6.23	+Large
X	2370 – 2570	201	49.66	4.71	+Large	70.95	5.46	+Large
Y	2305 – 2565	205	49.52	3.61	+Large	70.75	4.04	+Large
Z	2301 – 2561	204	49.56	3.52	+Large	70.80	3.67	+Large

* Allowable stresses for sections “K” through “R” are taken from Type XM-19 stainless steel; all others are from Type 304 stainless steel.

Table 2.10.10-20 Primary Stresses; 30-Foot Top Corner Drop; $\phi = 15.74°$; 1.12-Inch Outer Shell Thickness

Stress Points		Stresses						
Location	Node	S_X	S_Y	S_Z	S_{XY}	S_1	S_2	S_3
A1	327	-0.42	-0.06	1.41	0.07	1.41	-0.04	-0.43
A2	302	-0.64	-0.07	1.25	0.15	1.25	-0.03	-0.68
A3	277	-0.81	-0.04	1.13	0.35	1.13	0.10	-0.94
A4	252	-1.11	-0.07	0.89	0.46	0.89	0.10	-1.29
A5	227	-1.77	-0.78	0.64	0.31	0.64	-0.69	-1.86
A6	202	0.05	-1.23	2.74	-1.23	2.74	0.80	-1.97
A7	177	-13.08	-0.83	-3.81	-0.56	-0.80	-3.81	-13.11
B1	104	-3.24	-1.05	-0.83	-0.56	-0.83	-0.91	-3.37
B2	79	-2.44	-0.82	-0.29	-0.26	-0.29	-0.78	-2.48
B3	54	-2.17	-0.44	0.00	-0.40	0.00	-0.35	-2.26
B4	29	-1.89	-0.11	0.29	-0.28	0.29	-0.06	-1.93
B5	4	-1.52	0.02	0.48	0.06	0.48	0.02	-1.52
C1	110	-3.70	-0.27	-1.52	-0.26	-0.25	-1.52	-3.72
C2	85	-3.16	-0.22	-1.10	0.12	-0.22	-1.10	-3.17
C3	60	-2.65	-0.12	-0.73	0.14	-0.11	-0.73	-2.66
C4	35	-2.13	-0.03	-0.32	0.14	-0.02	-0.32	-2.14
C5	10	-1.85	-0.00	-0.08	0.15	0.01	-0.08	-1.86
D1	335	-0.90	0.38	0.43	-0.17	0.43	0.40	-0.93
D2	310	-1.33	0.06	0.12	-0.17	0.12	0.08	-1.35
D3	285	-1.60	-0.10	-0.09	-0.25	-0.06	-0.09	-1.65
D4	260	-2.04	-0.25	-0.38	-0.36	-0.17	-0.38	-2.11
D5	235	-2.83	-0.38	-0.88	-0.32	-0.33	-0.88	-2.87
D6	210	-3.64	-0.43	-1.43	-0.24	-0.41	-1.43	-3.66
D7	185	-4.44	-0.44	-2.09	0.27	-0.42	-2.09	-4.45
E1	118	-3.11	0.83	-2.09	-0.60	0.92	-2.09	-3.20
E2	93	-3.18	0.28	-2.10	-0.17	0.29	-2.10	-3.19
E3	68	-3.07	0.11	-1.97	0.03	0.11	-1.97	-3.07
E4	43	-3.04	0.03	-1.82	0.09	0.03	-1.82	-3.05
E5	18	-3.12	0.01	-1.74	0.14	0.02	-1.74	-3.13
F1	143	-0.61	3.16	-1.06	-0.82	3.33	-0.78	-1.06
F2	144	-0.72	0.79	-2.32	-0.68	1.05	-0.98	-2.32

Table 2.10.10-20 Primary Stresses; 30-Foot Top Corner Drop; ϕ = 15.74°; 1.12-Inch Outer Shell Thickness (Continued)

Stress Points		Stresses						
Location	Node	S_X	S_Y	S_Z	S_{XY}	S_1	S_2	S_3
F3	145	-1.06	0.15	-2.94	-0.51	0.34	-1.25	-2.94
F4	146	-1.78	-0.28	-3.57	-0.33	-0.21	-1.85	-3.57
F5	147	-2.25	-0.62	-4.06	-0.23	-0.58	-2.28	-4.06
F6	148	-2.54	-0.94	-4.48	-0.16	-0.92	-2.56	-4.48
F7	149	-2.75	-1.34	-4.91	-0.09	-1.34	-2.75	-4.91
F8	150	-2.85	-1.88	-5.38	-0.04	-1.88	-2.85	-5.38
G1	335	-0.90	0.38	0.43	-0.17	0.43	0.40	-0.93
G2	336	-0.83	-0.05	0.12	-0.20	0.12	-0.01	-0.88
G3	337	-0.99	-0.48	-0.20	-0.15	-0.20	-0.44	-1.02
G4	338	-1.34	-0.93	-0.54	0.09	-0.54	-0.91	-1.36
G5	339	-2.21	-1.59	-1.09	0.71	-1.09	-1.12	-2.68
G6	340	-3.05	-0.79	-1.04	0.84	-0.51	-1.04	-3.32
H1	346	-1.61	1.42	-2.58	1.05	1.74	-1.93	-2.58
H2	347	-1.42	4.44	-2.33	0.58	4.50	-1.48	-2.33
H3	348	-2.35	3.03	-3.46	-0.80	3.15	-2.47	-3.46
H4	349	-2.55	-0.61	-4.93	-0.93	-0.23	-2.92	-4.93
H5	350	-2.76	-4.40	-6.40	-0.62	-2.55	-4.60	-6.40
I1	621	-0.12	0.21	1.01	-0.04	1.01	0.21	-0.13
I2	624	-0.02	0.72	0.99	0.04	0.99	0.72	-0.02
J1	635	-0.09	2.27	0.99	-0.13	2.27	0.99	-0.09
J2	638	-0.01	5.39	0.77	0.05	5.39	0.77	-0.01
K1	841	-0.08	6.20	0.52	0.00	6.20	0.52	-0.08
K2	844	-0.01	7.03	0.73	0.03	7.03	0.73	-0.01
L1	855	-0.05	11.85	0.61	-0.04	11.85	0.61	-0.05
L2	858	0.02	12.82	0.69	0.01	12.82	0.69	0.02
M1	941	-0.08	6.43	0.52	0.00	6.43	0.52	-0.08
M2	944	-0.02	7.31	0.74	0.00	7.31	0.74	-0.02
N1	955	-0.05	13.71	0.75	-0.01	13.71	0.75	-0.05
N2	958	0.00	14.88	0.80	0.01	14.88	0.80	0.00
O1	1101	-0.09	2.83	0.28	0.01	2.83	0.28	-0.09
O2	1104	-0.04	3.33	0.48	-0.01	3.33	0.48	-0.04

Table 2.10.10-20 Primary Stresses; 30-Foot Top Corner Drop; $\phi = 15.74°$; 1.12-Inch Outer Shell Thickness (Continued)

Stress Points		Stresses						
Location	Node	S_X	S_Y	S_Z	S_{XY}	S_1	S_2	S_3
P1	1115	-0.07	10.79	1.09	0.03	10.79	1.09	-0.07
P2	1118	0.00	11.76	0.86	-0.03	11.76	0.86	0.00
Q1	1261	-0.08	-3.16	0.58	0.02	0.58	-0.08	-3.16
Q2	1264	-0.02	-3.19	0.67	-0.03	0.67	-0.02	-3.19
R1	1275	-0.04	-0.11	1.33	0.06	1.33	0.00	-0.15
R2	1278	0.00	-0.33	0.24	-0.07	0.24	0.01	-0.34
S1	1561	-0.09	-11.56	0.60	-0.40	0.60	-0.07	-11.57
S2	1564	0.33	-22.95	-4.59	-0.60	0.34	-4.59	-22.97
T1	1575	-0.14	-17.85	2.76	0.15	2.76	-0.14	-17.85
T2	1578	0.02	-19.72	1.69	-0.06	1.69	0.02	-19.72
U1	1841	0.23	-20.15	8.35	-0.18	8.35	0.23	-20.15
U2	1844	3.27	-11.67	9.99	-0.59	9.99	3.29	-11.69
V1	1852	6.17	-10.07	7.30	0.15	7.30	6.17	-10.07
V2	1856	0.60	-23.74	0.58	-0.41	0.60	0.58	-23.75
W1	1969	-19.47	-16.62	-8.31	4.08	-8.31	-13.72	-22.37
W2	1970	-14.06	-8.92	-5.38	1.34	-5.38	-8.59	-14.39
W3	1971	-7.43	-10.00	-4.34	-0.60	-4.34	-7.29	-10.13
W4	1972	-5.37	-10.68	-4.26	-0.78	-4.26	-5.25	-10.79
W5	1973	-4.37	-11.06	-4.27	-0.77	-4.27	-4.28	-11.15
W6	1974	-3.83	-11.17	-4.26	-0.63	-3.78	-4.26	-11.22
W7	1975	-3.57	-11.06	-4.26	-0.38	-3.55	-4.26	-11.08
W8	1976	-3.50	-10.56	-4.20	-0.26	-3.49	-4.20	-10.57
X1	2370	-6.70	-8.27	-1.94	1.91	-1.94	-5.42	-9.55
X2	2390	-5.86	-11.62	-2.81	3.08	-2.81	-4.52	-12.96
X3	2410	-5.16	-13.15	-2.80	3.56	-2.80	-3.81	-14.51
X4	2430	-4.08	-14.42	-2.50	3.65	-2.50	-2.93	-15.58
X5	2450	-3.35	-14.91	-2.08	3.57	-2.08	-2.34	-15.93
X6	2470	-2.48	-15.03	-1.61	3.45	-1.59	-1.61	-15.92
X7	2490	-1.30	-14.93	-1.22	3.20	-0.59	-1.22	-15.64
X8	2510	-0.54	-14.80	-1.11	2.76	-0.02	-1.11	-15.32
X9	2530	0.35	-14.70	-1.10	2.14	0.65	-1.10	-15.00

Table 2.10.10-20 Primary Stresses; 30-Foot Top Corner Drop; $\phi = 15.74°$; 1.12-Inch Outer Shell Thickness (Continued)

Stress Points		Stresses						
Location	Node	S_X	S_Y	S_Z	S_{XY}	S_1	S_2	S_3
X10	2550	1.45	-14.62	-1.22	1.23	1.54	-1.22	-14.71
X11	2570	2.80	-14.60	-1.49	0.73	2.83	-1.49	-14.63
Y1	2305	-0.42	-5.24	1.76	-0.19	1.76	-0.41	-5.25
Y2	2325	-0.68	-5.42	1.49	-0.43	1.49	-0.64	-5.46
Y3	2345	-1.25	-5.66	1.05	-0.50	1.05	-1.20	-5.72
Y4	2365	-2.15	-5.98	0.49	-0.32	0.49	-2.12	-6.01
Y5	2385	-2.88	-6.57	-0.07	0.16	-0.07	-2.87	-6.58
Y6	2405	-3.10	-7.58	-0.49	0.90	-0.49	-2.93	-7.75
Y7	2425	-2.89	-9.05	-0.70	1.78	-0.70	-2.42	-9.53
Y8	2445	-2.63	-10.87	-0.74	2.79	-0.74	-1.78	-11.73
Y9	2465	-3.00	-12.61	-0.72	3.93	-0.72	-1.60	-14.01
Y10	2485	-5.06	-13.76	-1.09	4.76	-1.09	-2.96	-15.86
Y11	2505	-7.08	-14.33	-1.89	4.58	-1.89	-4.87	-16.55
Y12	2525	-8.39	-14.62	-2.89	3.69	-2.89	-6.68	-16.33
Y13	2545	-9.92	-14.55	-4.51	2.23	-4.51	-9.02	-15.45
Y14	2565	-10.96	-14.54	-7.06	0.92	-7.06	-10.74	-14.76
Z1	2301	-0.64	-2.23	2.51	0.14	2.51	-0.63	-2.24
Z2	2321	-1.26	-1.75	2.27	-0.01	2.27	-1.26	-1.75
Z3	2341	-1.60	-1.89	1.70	-0.12	1.70	-1.55	-1.94
Z4	2361	-1.94	-2.08	1.24	-0.33	1.24	-1.67	-2.35
Z5	2381	-2.11	-2.30	0.82	-0.46	0.82	-1.73	-2.68
Z6	2401	-2.06	-2.57	0.44	-0.53	0.44	-1.73	-2.90
Z7	2421	-1.78	-2.90	0.10	-0.56	0.10	-1.55	-3.14
Z8	2441	-1.31	-3.28	-0.19	-0.56	-0.19	-1.17	-3.43
Z9	2461	-0.68	-3.66	-0.48	-0.06	-0.48	-0.68	-3.66
Z10	2481	0.06	-4.04	-0.74	2.70	1.40	-0.74	-5.38
Z11	2501	0.42	-4.21	-1.03	10.55	8.90	-1.03	-12.70
Z12	2521	0.79	-4.37	-1.38	34.89	33.20	-1.38	-36.77
Z13	2541	0.96	-4.93	-2.08	164.70	162.74	-2.08	-166.71
Z14	2561	1.68	-6.27	-4.55	215.90	213.64	-4.55	-218.23

Table 2.10.10-21 Primary Plus Secondary Stresses; 30-Foot Top Corner Drop; ϕ = 15.74°; 1.12-Inch Outer Shell Thickness

Stress Points		Stresses						
Location	Node	S_X	S_Y	S_Z	S_{XY}	S_1	S_2	S_3
A1	327	3.42	-0.01	5.22	0.24	5.22	3.44	-0.02
A2	302	2.59	-0.02	4.48	0.14	4.48	2.60	-0.02
A3	277	1.84	-0.02	3.76	0.28	3.76	1.88	-0.06
A4	252	0.32	-0.07	2.34	0.46	2.34	0.63	-0.38
A5	227	-2.67	-0.79	-0.26	0.30	-0.26	-0.74	-2.72
A6	202	-3.13	-1.27	-0.44	-1.24	-0.44	-0.65	-3.75
A7	177	-18.51	-0.87	-9.22	-0.55	-0.86	-9.22	-18.53
B1	104	-7.90	-1.25	-5.54	-0.77	-1.16	-5.54	-7.99
B2	79	-3.37	-0.95	-1.22	-0.05	-0.95	-1.22	-3.37
B3	54	0.72	-0.37	2.93	-0.18	2.93	0.75	-0.40
B4	29	4.97	-0.04	7.15	-0.05	7.15	4.97	-0.04
B5	4	8.98	-0.04	10.88	-0.81	10.88	9.06	-0.11
C1	110	-6.50	-2.21	-5.07	0.17	-2.21	-5.07	-6.51
C2	85	-2.96	-1.85	-1.17	1.19	-1.09	-1.17	-3.72
C3	60	0.00	-1.04	2.53	1.49	2.53	1.06	-2.09
C4	35	3.18	-0.32	6.46	0.88	6.43	3.39	-0.53
C5	10	6.81	-0.08	10.28	0.20	10.28	6.82	-0.08
D1	335	-2.58	-8.16	0.52	-1.53	0.52	-2.19	-8.55
D2	310	-0.06	-5.12	1.49	-1.53	1.49	0.36	-5.55
D3	285	-0.26	-3.64	1.42	-1.48	1.42	0.29	-4.19
D4	260	-1.22	-2.88	0.53	-1.49	0.53	-0.34	-3.76
D5	235	-3.25	-2.73	-1.56	-1.26	-1.56	-1.70	-4.27
D6	210	-5.53	-2.80	-3.84	-0.66	-2.65	-3.84	-5.68
D7	185	-8.08	-2.83	-6.38	0.49	-2.79	-6.38	-8.13
E1	118	6.73	9.65	3.96	4.79	13.20	3.96	3.18
E2	93	-2.02	5.95	1.84	3.32	7.15	1.84	-3.22
E3	68	-2.62	1.81	1.95	2.38	2.85	1.95	-3.66
E4	43	-4.14	0.50	2.85	1.21	2.85	0.79	-4.43
E5	18	-4.14	0.18	4.80	0.53	4.80	0.24	-4.20
F1	143	-11.30	7.34	-0.30	4.21	8.25	-0.30	-12.21
F2	144	-8.23	7.49	-0.54	2.95	8.03	-0.54	-8.76

Table 2.10.10-21 Primary Plus Secondary Stresses: 30-Foot Top Corner Drop; φ = 15.74°; 1.12-Inch Outer Shell Thickness (Continued)

Stress Points		Stresses						
Location	Node	S_X	S_Y	S_Z	S_{XY}	S_1	S_2	S_3
F3	145	-4.38	4.14	-0.98	1.40	4.36	-0.98	-4.61
F4	146	-3.09	2.20	-1.48	0.72	2.29	-1.48	-3.18
F5	147	-2.86	0.93	-1.98	0.43	0.98	-1.98	-2.91
F6	148	-2.84	-0.01	-2.42	0.26	0.01	-2.42	-2.87
F7	149	-2.86	-0.98	-2.89	0.12	-0.98	-2.87	-2.89
F8	150	-2.89	-2.03	-3.40	0.07	-2.02	-2.89	-3.40
G1	335	-2.58	-8.16	0.52	-1.53	0.52	-2.19	-8.55
G2	336	-1.89	-5.26	1.42	-0.57	1.42	-1.80	-5.35
G3	337	-0.89	-3.59	2.06	0.09	2.06	-0.88	-3.59
G4	338	-0.58	-1.82	2.55	0.18	2.55	-0.56	-1.85
G5	339	0.17	1.53	3.49	-0.78	3.49	1.89	-0.18
G6	340	-0.17	-0.68	2.89	-1.10	2.89	0.71	-1.56
H1	346	-9.23	-1.35	-4.06	0.20	-1.34	-4.06	-9.24
H2	347	-5.60	5.29	-1.56	0.10	5.29	-1.56	-5.60
H3	348	-4.33	8.04	-0.61	-0.90	8.11	-0.61	-4.39
H4	349	-3.31	7.51	-0.76	-1.02	7.60	-0.76	-3.40
H5	350	-3.01	7.55	-1.02	-0.70	7.60	-1.02	-3.06
I1	621	-0.13	-1.54	0.74	0.05	0.74	-0.13	-1.54
I2	624	0.04	-2.86	0.50	0.14	0.50	0.05	-2.86
J1	635	-0.10	9.96	1.38	-0.08	9.96	1.38	-0.10
J2	638	0.00	10.60	0.79	0.08	10.60	0.79	0.00
K1	841	-0.08	8.51	0.42	0.00	8.51	0.42	-0.08
K2	844	0.00	9.75	1.02	0.04	9.75	1.02	0.00
L1	855	-0.05	21.09	0.25	-0.04	21.09	0.25	-0.05
L2	858	0.02	22.60	0.87	0.01	22.60	0.87	0.02
M1	941	-0.08	8.68	0.36	0.00	8.68	0.36	-0.08
M2	944	-0.01	10.09	1.08	-0.01	10.09	1.08	-0.01
N1	955	-0.06	22.85	0.30	-0.01	22.85	0.30	-0.06
N2	958	0.00	24.72	1.03	0.01	24.72	1.03	0.00
O1	1101	-0.09	5.08	0.12	0.01	5.08	0.12	-0.09
O2	1104	-0.03	6.11	0.83	-0.01	6.11	0.83	-0.03

Table 2.10.10-21 Primary Plus Secondary Stresses; 30-Foot Top Corner Drop; ϕ = 15.74°; 1.12-Inch Outer Shell Thickness (Continued)

Stress Points		Stresses						
Location	Node	S_X	S_Y	S_Z	S_{XY}	S_1	S_2	S_3
P1	1115	-0.07	19.90	0.61	0.03	19.90	0.61	-0.07
P2	1118	0.00	21.62	1.10	-0.03	21.62	1.10	0.00
Q1	1261	-0.08	-0.85	0.50	0.02	0.50	-0.08	-0.85
Q2	1264	-0.01	-0.47	0.99	-0.04	0.99	0.00	-0.47
R1	1275	-0.04	9.04	0.87	0.06	9.04	0.87	-0.04
R2	1278	-0.02	9.55	0.34	-0.07	9.56	0.34	-0.02
S1	1561	-0.09	-9.44	0.96	-0.36	0.96	-0.07	-9.46
S2	1564	0.31	-20.02	-3.92	-0.54	0.32	-3.92	-20.03
T1	1575	-0.14	-7.19	2.84	0.09	2.84	-0.14	-7.19
T2	1578	0.03	-11.27	1.57	-0.12	1.57	0.03	-11.27
U1	1841	0.24	-19.96	7.82	-0.27	7.82	0.25	-19.96
U2	1844	3.47	-10.45	10.15	-0.66	10.15	3.50	-10.48
V1	1852	0.48	-12.25	4.85	-1.04	4.85	0.56	-12.33
V2	1856	0.28	-11.67	4.13	-0.25	4.13	0.29	-11.68
W1	1969	-20.24	-18.47	-8.30	3.27	-8.30	-15.97	-22.74
W2	1970	-14.08	-9.68	-4.67	0.66	-4.67	-9.58	-14.18
W3	1971	-7.53	-10.09	-3.38	-1.16	-3.38	-7.09	-10.54
W4	1972	-5.45	-10.14	-3.05	-1.26	-3.05	-5.13	-10.46
W5	1973	-4.44	-10.11	-2.89	-1.15	-2.89	-4.22	-10.33
W6	1974	-3.89	-9.90	-2.74	-0.89	-2.74	-3.76	-10.03
W7	1975	-3.60	-9.50	-2.60	-0.52	-2.60	-3.56	-9.55
W8	1976	-3.49	-8.75	-2.42	-0.33	-2.42	-3.47	-8.77
X1	2370	-7.94	-8.60	-2.27	2.51	-2.27	-5.74	-10.80
X2	2390	-6.18	-12.56	-3.05	3.52	-3.05	-4.62	-14.12
X3	2410	-5.53	-13.69	-2.88	3.62	-2.88	-4.15	-15.07
X4	2430	-4.43	-14.82	-2.50	3.51	-2.50	-3.35	-15.90
X5	2450	-3.75	-15.15	-2.02	3.31	-2.02	-2.86	-16.04
X6	2470	-2.89	-15.16	-1.48	3.13	-1.48	-2.14	-15.91
X7	2490	-1.68	-14.99	-0.97	2.86	-0.97	-1.09	-15.58
X8	2510	-0.87	-14.83	-0.77	2.45	-0.46	-0.77	-15.25
X9	2530	0.07	-14.71	-0.64	1.88	0.30	-0.64	-14.95

Table 2.10.10-21 Primary Plus Secondary Stresses; 30-Foot Top Corner Drop; ϕ = 15.74°; 1.12-Inch Outer Shell Thickness (Continued)

Stress Points		Stresses						
Location	Node	S_X	S_Y	S_Z	S_{XY}	S_1	S_2	S_3
X10	2550	1.23	-14.63	-0.61	1.06	1.30	-0.61	-14.70
X11	2570	3.42	-14.60	0.09	0.68	3.45	0.09	-14.63
Y1	2305	0.15	-5.27	2.25	-0.22	2.25	0.16	-5.28
Y2	2325	-0.66	-5.47	1.48	-0.37	1.48	-0.63	-5.50
Y3	2345	-1.53	-5.77	0.72	-0.45	0.72	-1.49	-5.82
Y4	2365	-2.70	-6.15	-0.11	-0.28	-0.11	-2.68	-6.17
Y5	2385	-3.61	-6.78	-0.86	0.21	-0.86	-3.60	-6.79
Y6	2405	-3.90	-7.83	-1.36	0.94	-1.36	-3.69	-8.04
Y7	2425	-3.67	-9.32	-1.57	1.78	-1.57	-3.16	-9.84
Y8	2445	-3.35	-11.12	-1.54	2.75	-1.54	-2.48	-11.99
Y9	2465	-3.61	-12.80	-1.39	3.85	-1.39	-2.21	-14.20
Y10	2485	-5.49	-13.87	-1.53	4.67	-1.53	-3.40	-15.96
Y11	2505	-7.38	-14.38	-2.17	4.54	-2.17	-5.14	-16.61
Y12	2525	-8.50	-14.64	-2.99	3.68	-2.99	-6.78	-16.36
Y13	2545	-9.79	-14.55	-4.41	2.22	-4.41	-8.91	-15.43
Y14	2565	-9.71	-14.54	-5.90	0.98	-5.90	-9.52	-14.73
Z1	2301	-0.13	-2.21	3.00	0.14	3.00	-0.12	-2.22
Z2	2321	-1.17	-1.71	2.35	-0.01	2.35	-1.17	-1.71
Z3	2341	-1.84	-1.83	1.47	-0.12	1.47	-1.71	-1.95
Z4	2361	-2.44	-1.99	0.73	-0.33	0.73	-1.82	-2.62
Z5	2381	-2.79	-2.20	0.14	-0.46	0.14	-1.95	-3.04
Z6	2401	-2.84	-2.47	-0.34	-0.53	-0.34	-2.10	-3.21
Z7	2421	-2.58	-2.80	-0.69	-0.56	-0.69	-2.12	-3.26
Z8	2441	-2.04	-3.18	-0.92	-0.56	-0.92	-1.81	-3.41
Z9	2461	-1.26	-3.57	-1.05	-0.06	-1.05	-1.26	-3.57
Z10	2481	-0.29	-3.97	-1.08	2.70	1.14	-1.08	-5.40
Z11	2501	0.21	-4.16	-1.23	10.55	8.80	-1.23	-12.75
Z12	2521	0.74	-4.34	-1.43	34.89	33.18	-1.43	-36.78
Z13	2541	1.06	-4.92	-1.98	164.70	162.80	-1.98	-166.66
Z14	2561	2.74	-6.25	-3.49	215.90	214.19	-3.49	-217.70

Table 2.10.10-22 Primary Membrane (Pm) Stresses; 30-Foot Top Corner Drop; ϕ = 15.74°; 1.12-Inch Outer Shell Thickness

		Stresses* (ksi)							
Section	Node to Node	S_x	S_y	S_z	S_{xy}	S_1	S_2	S_3	SI
A	177 – 327	-2.41	-0.63	0.76	-0.16	0.76	-0.62	-2.42	3.18
B	4 – 104	-2.29	-0.53	-0.10	-0.32	-0.10	-0.47	-2.34	2.25
C	10 – 110	-2.77	-0.14	-0.81	0.08	-0.14	-0.81	-2.77	2.64
D	185 – 335	-2.81	-0.30	-0.89	-0.22	-0.28	-0.89	-2.83	2.56
E	18 – 118	-3.11	0.23	-1.97	-0.10	0.24	-1.97	-3.11	3.35
F	143 – 150	-1.59	0.02	-3.28	-0.40	0.11	-1.68	-3.28	3.39
G	335 – 340	-1.68	-0.85	-0.56	0.30	-0.56	-0.75	-1.78	1.22
H	346 – 350	-2.09	1.37	-3.72	-0.20	1.39	-2.10	-3.72	5.11
I	621 – 624	-0.07	0.46	0.99	0.01	0.99	0.46	-0.07	1.07
J	635 – 638	-0.05	3.86	0.87	-0.04	3.86	0.87	-0.05	3.90
K	841 – 844	-0.04	6.62	0.63	0.02	6.62	0.63	-0.04	6.67
L	855 – 858	-0.01	12.34	0.65	-0.01	12.34	0.65	-0.01	12.36
M	941 – 944	-0.05	6.88	0.63	0.00	6.88	0.63	-0.05	6.93
N	955 – 958	-0.02	14.31	0.77	0.00	14.31	0.77	-0.02	14.33
O	1101 – 1104	-0.06	3.09	0.38	0.00	3.09	0.38	-0.06	3.15
P	1115 – 1118	-0.03	11.28	0.97	0.00	11.28	0.97	-0.03	11.31
Q	1261 – 1264	-0.05	-3.17	0.63	-0.01	0.63	-0.05	-3.17	3.80
R	1275 – 1278	-0.02	-0.22	0.77	-0.01	0.77	-0.02	-0.22	0.99
S	1561 – 1564	0.12	-17.16	-2.01	-0.63	0.14	-2.01	-17.18	17.32
T	1575 – 1578	-0.05	-18.80	2.21	0.06	2.21	-0.05	-18.80	21.01
U	1841 – 1846	4.10	-9.86	10.67	0.76	10.67	4.14	-9.90	20.57
V	1822 – 1856	2.83	-17.30	3.49	0.29	3.49	2.84	-17.31	20.79
W	1969 – 1976	-8.82	-11.00	-5.01	0.27	-5.01	-8.78	-11.03	6.02
X	2370 – 2570	-2.99	-13.78	-1.98	2.99	-1.98	-2.22	-14.56	12.58
Y	2305 – 2565	-3.39	-9.19	-0.50	1.53	-0.50	-3.02	-9.57	9.07
Z	2301 – 2561	-1.04	-2.97	0.34	14.17	12.20	0.34	-16.21	28.42

* Stresses are taken at 0 degrees (under the load) at each section.

Table 2.10.10-23 Primary Membrane Plus Primary Bending ($P_m + P_b$) Stresses; 30-Foot Top Corner Drop; $\phi = 15.74°$; 1.12-Inch Outer Shell Thickness

		Stresses* (ksi)							
Section	Node to Node	S_x	S_y	S_z	S_{xy}	S_1	S_2	S_3	SI
A	177 – 327	-4.96	-1.25	0.80	-1.00	0.80	-1.00	-5.21	6.01
B	4 – 104	-3.88	-1.12	-1.63	-0.46	-1.05	-1.63	-3.96	2.91
C	10 – 110	-4.00	-0.29	-2.11	-0.05	-0.29	-2.11	-4.00	3.71
D	185 – 335	-4.37	-0.93	-1.67	-0.16	-0.92	-1.67	-4.38	3.46
E	18 – 118	-3.16	0.60	-2.16	-0.43	0.65	-2.16	-3.21	3.86
F	143 – 150	-0.61	2.16	-1.24	-0.40	2.21	-0.67	-1.24	3.46
G	335 – 340	-3.20	-2.08	-1.48	0.30	-1.48	-2.00	-3.28	1.80
H	346 – 350	-1.70	4.56	-1.74	-0.20	4.56	-1.71	-1.74	6.30
I	621 – 624	-0.02	0.71	0.98	0.01	0.98	0.71	-0.02	1.00
J	635 – 638	-0.01	5.39	0.76	-0.04	5.39	0.76	-0.01	5.40
K	841 – 844	-0.01	7.03	0.73	0.02	7.03	0.73	-0.01	7.04
L	855 – 858	0.02	12.82	0.69	-0.01	12.82	0.69	0.02	12.80
M	941 – 944	-0.01	7.31	0.74	0.00	7.31	0.74	-0.01	7.32
N	955 – 958	0.00	14.88	0.80	0.00	14.88	0.80	0.00	14.88
O	1101 – 1104	-0.04	3.33	0.48	0.00	3.33	0.48	-0.04	3.37
P	1115 – 1118	0.00	11.76	0.86	0.00	11.76	0.86	0.00	11.76
Q	1261 – 1264	-0.02	-3.19	0.68	-0.01	0.68	-0.02	-3.19	3.86
R	1275 – 1278	-0.04	-0.11	1.31	-0.01	1.31	-0.04	-0.11	1.43
S	1561 – 1564	0.33	-22.71	-4.58	-0.63	0.35	-4.58	-22.72	-23.07
T	1575 – 1578	0.02	-19.71	1.68	0.06	1.68	0.02	-19.71	21.39
U	1841 – 1846	0.23	-18.32	8.31	0.76	8.31	0.26	-18.35	26.66
V	1822 – 1856	0.59	-24.92	-0.15	0.29	0.60	-0.15	-24.93	25.53
W	1969 – 1976	-19.47	-11.87	-6.68	0.27	-6.68	-11.86	-19.48	12.80
X	2370 – 2570	1.23	-16.09	-1.01	2.42	1.56	-1.01	-16.42	17.98
Y	2305 – 2565	-7.29	-15.03	-3.15	4.26	-3.15	-5.40	-16.91	13.77
Z	2301 – 2561	0.12	-4.66	-2.02	53.49	51.27	-2.02	-55.81	107.10

* Stresses are taken at 0 degrees (under the load) at each section.

Table 2.10.10-24 Primary Membrane (P_m) and Primary Membrane Plus Primary Bending ($P_m + P_b$) Stresses; 30-Foot Top Corner Drop; $\phi = 15.74°$; 1.12-Inch Outer Shell Thickness

Section	Node to Node	Max. Temp. (°F)	P_m Stresses (ksi)			$P_m + P_b$ Stresses (ksi)		
			Allow. * 0.7 S_u	Calc.	MS	Allow. * 1.0 S_u	Calc.	MS
A	327 – 177	222	48.93	3.18	+Large	69.90	6.01	+Large
B	104 – 4	215	49.18	2.25	+Large	70.25	2.91	+Large
C	110 – 10	212	49.28	2.64	+Large	70.40	3.71	+Large
D	335 – 185	221	48.96	2.56	+Large	69.95	3.46	+Large
E	118 – 18	208	49.42	3.35	+Large	70.60	3.86	+Large
F	143 – 150	209	49.38	3.39	+Large	70.55	3.46	+Large
G	335 – 340	221	48.96	1.22	+Large	69.95	1.80	+Large
H	346 – 350	212	49.28	5.11	+Large	70.40	6.30	+Large
I	621 – 624	222	48.93	1.07	+Large	69.90	1.00	+Large
J	635 – 638	199	49.73	3.90	+Large	71.04	5.40	+Large
K	841 – 844	232	68.49	6.67	+Large	97.84	7.04	+Large
L	855 – 858	204	69.50	12.36	+Large	99.29	12.80	+Large
M	941 – 944	247	67.94	6.93	+Large	97.06	7.32	+Large
N	955 – 958	211	69.25	14.33	+3.83	98.93	14.88	+Large
O	1101 – 1104	255	67.65	3.15	+Large	96.64	3.37	+Large
P	1115 – 1118	216	69.07	11.31	+Large	98.67	11.76	+Large
Q	1261 – 1264	251	67.80	3.80	+Large	96.85	3.86	+Large
R	1275 – 1278	216	69.07	0.99	+Large	98.67	1.43	+Large
S	1561 – 1564	217	49.10	17.32	+1.83	70.15	23.07	+2.04
T	1575 – 1578	197	49.78	21.01	+1.37	71.12	21.39	+2.32
U	1841 – 1846	212	49.28	20.57	+1.40	70.40	26.66	+1.64
V	1852 – 1856	205	49.52	20.79	+1.38	70.75	25.53	+1.77
W	1969 – 1976	198	49.76	6.02	+Large	71.08	12.80	+Large
X	2370 – 2570	201	49.66	12.58	+2.95	70.95	17.98	+2.95
Y	2305 – 2565	205	49.52	9.07	+Large	70.75	13.77	+Large
Z	2301 – 2561	204	49.56	28.42	+0.74	70.80	107.10**	**

* Allowable stresses for sections “K” through “R” are taken from Type XM-19 stainless steel; all others are from Type 304 stainless steel.

** This stress is induced by the boundary effect from the displacement restraints at node 2561 and, therefore, is disregarded.

Table 2.10.10-25 Primary Stresses; 30-Foot Top Oblique Drop; ϕ = 60°; 1.12-Inch Outer Shell Thickness

Stress Points		Stresses						
Location	Node	S_X	S_Y	S_Z	S_{XY}	S_1	S_2	S_3
A1	327	-2.20	-0.06	2.06	0.11	2.06	-0.06	-2.20
A2	302	-2.59	-0.08	1.82	0.38	1.82	-0.03	-2.65
A3	277	-2.85	-0.01	1.67	0.87	1.67	0.24	-3.09
A4	252	-3.34	-0.06	1.37	1.12	1.37	0.28	-3.68
A5	227	-4.43	-1.70	1.24	0.78	1.24	-1.49	-4.63
A6	202	0.29	-2.73	6.63	-2.85	6.63	2.01	-4.44
A7	177	-30.04	-1.78	-8.24	-1.29	-1.72	-8.24	-30.10
B1	104	-8.21	-2.48	-2.59	-1.31	-2.19	-2.59	-8.50
B2	79	-5.81	-1.94	-0.78	-0.53	-0.78	-1.87	-5.89
B3	54	-4.70	-1.01	0.41	-0.84	0.41	-0.83	-4.89
B4	29	-3.55	-0.23	1.60	-0.59	1.60	-0.13	-3.65
B5	4	-2.40	0.05	2.32	0.06	2.32	0.05	-2.40
C1	110	-8.75	-0.64	-3.92	-0.53	-0.60	-3.92	-8.78
C2	85	-7.28	-0.53	-2.53	0.44	-0.50	-2.53	-7.30
C3	60	-5.90	-0.28	-1.34	0.51	-0.23	-1.34	-5.95
C4	35	-4.52	-0.06	-0.07	0.44	-0.02	-0.07	-4.56
C5	10	-3.76	-0.01	0.70	0.37	0.70	0.03	-3.79
D1	335	-1.97	2.24	0.71	-0.18	2.25	0.71	-1.97
D2	310	-3.44	1.04	-0.18	-0.13	1.05	-0.18	-3.44
D3	285	-4.13	0.45	-0.66	-0.30	0.47	-0.66	-4.15
D4	260	-5.19	-0.04	-1.29	-0.61	0.03	-1.29	-5.26
D5	235	-6.97	-0.50	-2.29	-0.55	-0.45	-2.29	-7.02
D6	210	-8.74	-0.73	-3.37	-0.43	-0.71	-3.37	-8.77
D7	185	-10.51	-0.80	-4.66	0.69	-0.75	-4.66	-10.56
E1	118	-6.47	2.78	-4.48	-1.08	2.90	-4.48	-6.60
E2	93	-7.24	1.15	-4.64	-0.20	1.16	-4.64	-7.24
E3	68	-7.11	0.47	-4.32	0.18	0.48	-4.32	-7.11
E4	43	-7.15	0.14	-3.87	0.26	0.15	-3.87	-7.15
E5	18	-7.44	0.05	-3.65	0.32	0.06	-3.65	-7.45
F1	143	-1.49	8.05	-2.34	-1.62	8.32	-1.76	-2.34
F2	144	-1.63	2.09	-5.40	-1.25	2.47	-2.01	-5.40

Table 2.10.10-25 Primary Stresses; 30-Foot Top Oblique Drop; ϕ = 60°; 1.12-Inch Outer Shell Thickness (Continued)

Stress Points		Stresses						
Location	Node	S_X	S_Y	S_Z	S_{XY}	S_1	S_2	S_3
F3	145	-2.35	0.54	-6.82	-0.83	0.76	-2.57	-6.82
F4	146	-4.11	-0.48	-8.33	-0.44	-0.43	-4.16	-8.33
F5	147	-5.25	-1.29	-9.50	-0.30	-1.27	-5.27	-9.50
F6	148	-5.95	-2.06	-10.49	-0.20	-2.05	-5.96	-10.49
F7	149	-6.43	-3.04	-11.51	-0.12	-3.03	-6.43	-11.51
F8	150	-6.70	-4.34	-12.63	-0.04	-4.34	-6.70	-12.63
G1	335	-1.97	2.24	0.71	-0.18	2.25	0.71	-1.97
G2	336	-1.78	0.94	-0.07	-0.38	0.99	-0.07	-1.83
G3	337	-2.26	-0.15	-0.84	-0.32	-0.10	-0.84	-2.31
G4	338	-3.15	-1.24	-1.65	0.16	-1.23	-1.65	-3.16
G5	339	-5.22	-3.05	-2.97	1.53	-2.27	-2.97	-6.01
G6	340	-7.31	-1.66	-2.98	1.81	-1.13	-2.98	-7.84
H1	346	-3.96	3.73	-6.50	2.70	4.58	-4.82	-6.50
H2	347	-3.33	11.81	-5.57	1.61	11.98	-3.50	-5.57
H3	348	-5.58	8.90	-8.13	-1.88	9.14	-5.83	-8.13
H4	349	-6.00	0.14	-11.64	-2.28	0.89	-6.76	-11.64
H5	350	-6.49	-8.86	-15.10	-1.53	-5.74	-9.60	-15.10
I1	621	-0.20	2.62	1.76	-0.13	2.63	1.76	-0.20
I2	624	-0.08	4.36	1.90	0.04	4.36	1.90	-0.08
J1	635	-0.20	7.40	2.23	-0.29	7.41	2.23	-0.21
J2	638	-0.02	14.82	1.74	0.11	14.82	1.74	-0.02
K1	841	-0.17	15.88	0.19	-0.05	15.88	0.19	-0.17
K2	844	-0.04	18.40	1.73	0.09	18.40	1.73	-0.04
L1	855	-0.12	31.03	1.46	-0.14	31.03	1.46	-0.12
L2	858	0.04	34.03	1.59	0.08	34.03	1.59	0.04
M1	941	-0.17	21.52	0.15	-0.01	21.52	0.15	-0.17
M2	944	-0.06	24.59	1.76	0.01	24.59	1.76	-0.06
N1	955	-0.13	42.13	1.74	-0.07	42.13	1.74	-0.13
N2	958	0.01	46.06	1.89	0.06	46.06	1.89	0.01
O1	1101	-0.18	21.29	-0.41	0.00	21.29	-0.18	-0.41
O2	1104	-0.12	24.21	1.16	-0.01	24.21	1.16	-0.12

Table 2.10.10-25 Primary Stresses; 30-Foot Top Oblique Drop; ϕ = 60°; 1.12-Inch Outer Shell Thickness (Continued)

Stress Points		Stresses						
Location	Node	S_X	S_Y	S_Z	S_{XY}	S_1	S_2	S_3
P1	1115	-0.17	45.94	1.85	0.03	45.94	1.85	-0.17
P2	1118	0.01	50.51	2.64	-0.03	50.51	2.64	0.01
Q1	1261	-0.17	15.33	0.18	0.04	15.33	0.18	-0.17
Q2	1264	-0.06	17.74	1.70	-0.05	17.74	1.70	-0.06
R1	1275	-0.14	31.46	0.52	0.11	31.46	0.52	-0.14
R2	1278	0.02	35.19	2.79	-0.11	35.19	2.79	0.02
S1	1561	-0.16	-3.23	1.96	-0.18	1.96	-0.15	-3.25
S2	1564	0.16	-9.52	-1.78	-0.41	0.17	-1.78	-9.54
T1	1575	-0.30	3.10	2.37	0.21	3.12	2.37	-0.31
T2	1578	0.01	7.20	4.64	-0.12	7.20	4.64	0.01
U1	1841	0.24	-16.50	10.84	-0.13	10.84	0.24	-16.50
U2	1844	3.80	-7.62	11.27	-0.74	11.27	3.85	-7.67
V1	1852	9.95	1.30	5.66	-2.98	10.88	5.66	0.37
V2	1856	0.78	-7.73	-2.30	0.06	0.78	-2.30	-7.73
W1	1969	-66.76	-41.68	-23.95	-0.48	-23.95	-41.67	-66.77
W2	1970	-48.81	-4.87	-11.98	-3.63	-4.57	-11.98	-49.11
W3	1971	-27.02	-1.92	-8.87	-5.46	-0.78	-8.87	-28.15
W4	1972	-19.49	2.28	-9.31	-4.67	3.24	-9.31	-20.45
W5	1973	-15.85	5.41	-10.04	-3.70	6.03	-10.04	-16.48
W6	1974	-13.88	8.25	-10.62	-2.69	8.57	-10.62	-14.20
W7	1975	-12.85	11.83	-11.25	-1.50	11.92	-11.25	-12.94
W8	1976	-12.54	16.71	-11.73	-0.67	16.73	-11.73	-12.56
X1	2370	-34.36	-17.01	-7.66	1.31	-7.66	-16.91	-34.46
X2	2390	-16.21	-14.25	-1.58	4.86	-1.58	-10.27	-20.19
X3	2410	-12.66	-12.01	0.06	7.35	0.06	-4.98	-19.69
X4	2430	-8.01	-13.25	1.10	7.19	1.10	-2.98	-18.29
X5	2450	-6.21	-12.65	1.73	6.28	1.73	-2.37	-16.49
X6	2470	-5.20	-11.99	1.96	5.16	1.96	-2.42	-14.77
X7	2490	-4.59	-11.11	1.74	4.16	1.74	-2.56	-13.14
X8	2510	-4.01	-10.62	1.46	3.23	1.46	-2.70	-11.93
X9	2530	-3.28	-10.25	0.95	2.34	0.95	-2.57	-10.96

Table 2.10.10-25 Primary Stresses; 30-Foot Top Oblique Drop; ϕ = 60°; 1.12-Inch Outer Shell Thickness (Continued)

Stress Points		Stresses						
Location	Node	S_X	S_Y	S_Z	S_{XY}	S_1	S_2	S_3
X10	2550	-2.20	-10.08	0.13	1.27	0.13	-2.00	-10.28
X11	2570	-0.68	-10.03	-1.07	0.85	-0.61	-1.07	-10.11
Y1	2305	-0.50	-3.31	2.52	-0.39	2.52	-0.45	-3.37
Y2	2325	-2.99	-3.28	2.85	-0.90	2.85	-2.22	-4.05
Y3	2345	-5.73	-3.30	2.62	-0.90	2.62	-3.00	-6.02
Y4	2365	-8.38	-3.62	2.34	0.15	2.34	-3.61	-8.38
Y5	2385	-9.44	-4.55	2.25	2.00	2.25	-3.84	-10.15
Y6	2405	-8.81	-6.23	2.40	4.00	2.40	-3.31	-11.73
Y7	2425	-7.68	-8.50	2.67	5.91	2.67	-2.17	-14.02
Y8	2445	-7.41	-10.86	3.08	8.04	3.08	-0.91	-17.36
Y9	2465	-9.57	-12.29	3.68	10.52	3.68	-0.32	-21.54
Y10	2485	-16.57	-12.12	3.75	12.22	3.75	-1.92	-26.77
Y11	2505	-22.26	-11.71	2.74	11.40	2.74	-4.42	-29.55
Y12	2525	-25.13	-11.21	1.58	8.78	1.58	-6.96	-29.38
Y13	2545	-27.83	-10.20	-0.70	5.06	-0.70	-8.85	-29.18
Y14	2565	-28.31	-9.99	-5.19	2.37	-5.19	-9.69	-28.61
Z1	2301	-2.94	-0.93	2.30	-0.10	2.30	-0.92	-2.95
Z2	2321	-3.62	-0.50	2.68	-0.22	2.68	-0.48	-3.63
Z3	2341	-4.30	-0.47	2.65	-0.18	2.65	-0.46	-4.31
Z4	2361	-4.93	-0.47	2.65	-0.02	2.65	-0.47	-4.93
Z5	2381	-5.19	-0.50	2.59	0.27	2.59	-0.49	-5.21
Z6	2401	-4.99	-0.61	2.43	0.60	2.43	-0.53	-5.07
Z7	2421	-4.39	-0.77	2.17	0.94	2.17	-0.54	-4.62
Z8	2441	-3.53	-0.98	1.86	1.42	1.86	-0.34	-4.17
Z9	2461	-2.52	-1.18	1.53	3.69	1.90	1.53	-5.60
Z10	2481	-1.46	-1.39	1.23	12.69	11.26	1.23	-14.12
Z11	2501	-0.95	-1.49	1.04	36.69	35.47	1.04	-37.91
Z12	2521	-0.45	-1.56	0.83	110.30	109.30	0.83	-111.31
Z13	2541	-0.15	-1.98	0.37	501.00	499.93	0.37	-502.07
Z14	2561	0.54	-3.06	-1.49	655.20	653.94	-1.49	-656.46

Table 2.10.10-26 Primary Plus Secondary Stresses; 30-Foot Top Oblique Drop; $\phi = 60°$; 1.12-Inch Outer Shell Thickness

Stress Points		Stresses						
Location	Node	S_X	S_Y	S_Z	S_{XY}	S_1	S_2	S_3
A1	327	2.64	0.00	6.89	0.33	6.89	2.68	-0.04
A2	302	1.46	-0.02	5.87	0.35	5.87	1.54	-0.10
A3	277	0.42	0.00	4.93	0.78	4.93	1.02	-0.59
A4	252	-1.64	-0.09	3.07	1.10	3.07	0.48	-2.22
A5	227	-5.82	-1.74	-0.16	0.76	-0.16	-1.61	-5.95
A6	202	-4.15	-2.81	2.18	-2.86	2.18	-0.54	-6.42
A7	177	-37.54	-1.86	-15.71	-1.29	-1.81	-15.71	-37.58
B1	104	-9.88	-2.53	-4.29	-1.34	-2.30	-4.29	-10.12
B2	79	-5.43	-1.96	-0.38	-0.41	-0.38	-1.91	-5.47
B3	54	-2.19	-0.92	2.95	-0.73	2.95	-0.59	-2.52
B4	29	1.17	-0.17	6.32	-0.45	6.32	1.31	-0.31
B5	4	4.86	0.01	9.51	-0.54	9.51	4.92	-0.05
C1	110	-9.58	-1.93	-4.90	-0.23	-1.93	-4.90	-9.59
C2	85	-6.38	-1.59	-1.59	1.00	-1.39	-1.59	-6.58
C3	60	-3.50	-0.86	1.56	1.20	1.56	-0.39	-3.97
C4	35	-0.39	-0.25	4.95	0.78	4.95	0.47	-1.10
C5	10	2.90	-0.05	8.29	0.32	8.29	2.94	-0.08
D1	335	-2.70	-6.38	1.69	-1.30	1.69	-2.29	-6.80
D2	310	-1.28	-4.02	2.00	-1.30	2.00	-0.76	-4.54
D3	285	-2.05	-2.87	1.50	-1.36	1.50	-1.04	-3.88
D4	260	-4.03	-2.42	-0.06	-1.58	-0.06	-1.45	-5.00
D5	235	-7.68	-2.59	-3.37	-1.34	-2.26	-3.37	-8.01
D6	210	-11.62	-2.80	-6.92	-0.60	-2.76	-6.92	-11.66
D7	185	-15.97	-2.84	-10.91	1.36	-2.70	-10.91	-16.11
E1	118	-0.29	4.45	-0.74	3.28	6.13	-0.74	-1.97
E2	93	-6.29	3.85	-1.48	2.17	4.29	-1.48	-6.73
E3	68	-6.30	1.31	-0.92	1.84	1.73	-0.92	-6.72
E4	43	-6.93	0.36	0.16	1.05	0.51	0.16	-7.08
E5	18	-6.51	0.13	2.03	0.57	2.03	0.17	-6.56
F1	143	-11.90	4.29	-3.27	4.25	5.33	-3.27	-12.95
F2	144	-9.99	8.00	-3.72	2.34	8.30	-3.72	-10.29

Table 2.10.10-26 Primary Plus Secondary Stresses; 30-Foot Top Oblique Drop; $\phi = 60°$; 1.12-Inch Outer Shell Thickness (Continued)

Stress Points		Stresses						
Location	Node	S_X	S_Y	S_Z	S_{XY}	S_1	S_2	S_3
F3	145	-7.16	4.19	-5.14	0.29	4.20	-5.14	-7.17
F4	146	-6.18	2.12	-6.30	-0.12	2.12	-6.18	-6.30
F5	147	-6.27	0.67	-7.35	-0.22	0.68	-6.28	-7.35
F6	148	-6.47	-0.50	-8.28	-0.24	-0.49	-6.48	-8.28
F7	149	-6.65	-1.76	-9.26	-0.16	-1.75	-6.65	-9.26
F8	150	-6.78	-3.18	-10.34	-0.07	-3.18	-6.78	-10.34
G1	335	-2.70	-6.38	1.69	-1.30	1.69	-2.29	-6.80
G2	336	-2.08	-4.03	2.13	-0.48	2.13	-1.97	-4.14
G3	337	-1.32	-2.54	2.44	0.13	2.44	-1.31	-2.55
G4	338	-1.29	-0.71	2.70	0.17	2.70	-0.66	-1.34
G5	339	-0.66	2.43	3.40	-0.80	3.40	2.63	-0.85
G6	340	-1.66	-0.49	2.60	-0.95	2.60	0.04	-2.20
H1	346	-12.85	0.12	-8.85	2.49	0.58	-8.85	-13.31
H2	347	-7.96	14.36	-4.84	1.64	14.48	-4.84	-8.08
H3	348	-7.80	15.74	-5.31	-2.05	15.92	-5.31	-7.98
H4	349	-6.78	9.73	-7.57	-2.53	10.11	-7.16	-7.57
H5	350	-6.73	4.45	-9.87	-1.75	4.72	-7.00	-9.87
I1	621	-0.20	3.73	1.87	-0.08	3.73	1.87	-0.20
I2	624	-0.05	3.97	1.81	0.09	3.98	1.81	-0.05
J1	635	-0.21	17.01	2.55	-0.24	17.02	2.55	-0.21
J2	638	-0.01	22.00	1.68	0.15	22.00	1.68	-0.01
K1	841	-0.17	18.19	0.09	-0.05	18.19	0.09	-0.17
K2	844	-0.03	21.13	2.02	0.10	21.13	2.02	-0.03
L1	855	-0.12	40.27	1.10	-0.14	40.27	1.10	-0.12
L2	858	0.05	43.81	1.77	0.08	43.81	1.77	0.05
M1	941	-0.17	23.77	-0.02	-0.02	23.77	-0.02	-0.17
M2	944	-0.05	27.37	2.11	0.01	27.37	2.11	-0.05
N1	955	-0.13	51.27	1.29	-0.06	51.27	1.29	-0.13
N2	958	0.01	55.90	2.12	0.06	55.90	2.12	0.01
O1	1101	-0.18	23.55	-0.57	0.00	23.55	-0.18	-0.57
O2	1104	-0.11	26.99	1.51	-0.01	26.99	1.51	-0.11

Table 2.10.10-26 Primary Plus Secondary Stresses; 30-Foot Top Oblique Drop; $\phi = 60°$; 1.12-Inch Outer Shell Thickness (Continued)

Stress Points		Stresses						
Location	Node	S_X	S_Y	S_Z	S_{XY}	S_1	S_2	S_3
P1	1115	-0.17	55.04	1.36	0.03	55.04	1.36	-0.17
P2	1118	0.01	60.36	2.88	-0.03	60.36	2.88	0.01
Q1	1261	-0.17	17.64	0.10	0.03	17.64	0.10	-0.17
Q2	1264	-0.05	20.46	2.02	-0.06	20.46	2.02	-0.05
R1	1275	-0.14	40.61	0.06	0.11	40.61	0.06	-0.14
R2	1278	0.01	45.07	2.88	-0.11	45.07	2.88	0.01
S1	1561	-0.16	-1.12	2.31	-0.14	2.31	-0.14	-1.14
S2	1564	0.14	-6.58	-1.11	-0.36	0.15	-1.11	-6.60
T1	1575	-0.30	13.77	2.45	0.15	13.77	2.45	-0.30
T2	1578	0.02	15.65	4.52	-0.17	15.65	4.52	0.02
U1	1841	0.26	-16.32	10.30	-0.22	10.30	0.26	-16.32
U2	1844	4.00	-6.40	11.44	-0.71	11.44	4.07	-6.46
V1	1852	4.26	-0.87	3.22	-4.16	6.58	3.22	-3.20
V2	1856	0.46	4.34	1.25	0.22	4.35	1.25	0.45
W1	1969	-67.53	-43.53	-23.94	-1.29	-23.94	-43.46	-67.60
W2	1970	-48.84	-5.63	-11.28	-4.31	-5.20	-11.28	-49.27
W3	1971	-27.13	-2.01	-7.91	-6.01	-0.64	-7.91	-28.49
W4	1972	-19.57	2.81	-8.10	-5.16	3.95	-8.10	-20.70
W5	1973	-15.93	6.35	-8.66	-4.08	7.08	-8.66	-16.65
W6	1974	-13.94	9.52	-9.09	-2.95	9.88	-9.09	-14.31
W7	1975	-12.89	13.38	-9.59	-1.63	13.48	-9.59	-12.99
W8	1976	-12.53	18.52	-9.94	-0.73	18.54	-9.94	-12.55
X1	2370	-35.61	-17.34	-7.99	1.91	-7.99	-17.14	-35.81
X2	2390	-16.54	-15.19	-1.82	5.30	-1.82	-10.52	-21.21
X3	2410	-13.03	-12.55	-0.02	7.41	-0.02	-5.37	-20.21
X4	2430	-8.36	-13.64	1.09	7.06	1.09	-3.46	-18.54
X5	2450	-6.61	-12.88	1.79	6.02	1.79	-2.95	-16.54
X6	2470	-5.61	-12.12	2.09	4.84	2.09	-3.04	-14.70
X7	2490	-4.97	-11.18	1.99	3.82	1.99	-3.15	-13.00
X8	2510	-4.35	-10.65	1.81	2.91	1.81	-3.21	-11.79
X9	2530	-3.57	-10.27	1.40	2.07	1.40	-2.98	-10.86

Table 2.10.10-26 Primary Plus Secondary Stresses; 30-Foot Top Oblique Drop; $\phi = 60°$; 1.12-Inch Outer Shell Thickness (Continued)

Stress Points		Stresses						
Location	Node	S_X	S_Y	S_Z	S_{XY}	S_1	S_2	S_3
X10	2550	-2.42	-10.09	0.74	1.10	0.74	-2.27	-10.24
X11	2570	-0.06	-10.03	0.51	0.80	0.51	0.00	-10.09
Y1	2305	0.06	-3.34	3.01	-0.43	3.01	0.12	-3.40
Y2	2325	-2.97	-3.33	2.84	-0.85	2.84	-2.28	-4.02
Y3	2345	-6.01	-3.41	2.29	-0.85	2.29	-3.16	-6.26
Y4	2365	-8.93	-3.78	1.73	0.20	1.73	-3.77	-8.94
Y5	2385	-10.17	-4.76	1.46	2.04	1.46	-4.07	-10.86
Y6	2405	-9.61	-6.48	1.53	4.04	1.53	-3.71	-12.38
Y7	2425	-8.47	-8.77	1.79	5.91	1.79	-2.71	-14.53
Y8	2445	-8.13	-11.11	2.28	7.99	2.28	-1.49	-17.75
Y9	2465	-10.18	-12.47	3.01	10.44	3.01	-0.82	-21.83
Y10	2485	-17.00	-12.23	3.30	12.13	3.30	-2.25	-26.98
Y11	2505	-22.55	-11.76	2.45	11.37	2.45	-4.57	-29.74
Y12	2525	-25.24	-11.22	1.47	8.77	1.47	-7.00	-29.46
Y13	2545	-27.70	-10.20	-0.60	5.05	-0.60	-8.85	-29.05
Y14	2565	-27.05	-9.99	-4.04	2.44	-4.04	-9.65	-27.39
Z1	2301	-2.44	-0.91	2.79	-0.10	2.79	-0.91	-2.44
Z2	2321	-3.53	-0.47	2.76	-0.22	2.76	-0.45	-3.55
Z3	2341	-4.54	-0.40	2.41	-0.18	2.41	-0.40	-4.55
Z4	2361	-5.44	-0.38	2.14	-0.02	2.14	-0.38	-5.44
Z5	2381	-5.87	-0.40	1.91	0.27	1.91	-0.39	-5.89
Z6	2401	-5.78	-0.50	1.65	0.60	1.65	-0.43	-5.84
Z7	2421	-5.19	-0.67	1.38	0.94	1.38	-0.48	-5.38
Z8	2441	-4.25	-0.88	1.14	1.42	1.14	-0.36	-4.78
Z9	2461	-3.10	-1.09	0.96	3.69	1.73	0.96	-5.92
Z10	2481	-1.81	-1.32	0.89	12.69	11.13	0.89	-14.26
Z11	2501	-1.16	-1.44	0.84	36.69	35.39	0.84	-37.99
Z12	2521	-0.50	-1.53	0.77	110.30	109.28	0.77	-111.32
Z13	2541	-0.05	-1.97	0.47	501.00	499.99	0.47	-502.01
Z14	2561	1.60	-3.05	-0.43	655.20	654.48	-0.43	-655.93

Table 2.10.10-27 Primary Membrane (P_m) Stresses; 30-Foot Top Oblique Drop; $\phi = 60°$; 1.12-Inch Outer Shell Thickness

		Stresses* (ksi)							
Section	Node to Node	S_x	S_y	S_z	S_{xy}	S_1	S_2	S_3	SI
A	177 – 327	-5.92	-1.35	1.52	-0.36	1.52	-1.32	-5.94	7.47
B	4 – 104	-5.10	-1.24	0.03	-0.70	0.03	-1.12	-5.23	5.26
C	10 – 110	-6.24	-0.33	-1.63	0.32	-0.32	-1.63	-6.26	5.94
D	185 – 335	-6.88	-0.24	-2.29	-0.32	-0.22	-2.29	-6.89	6.67
E	18 – 118	-7.09	0.89	-4.29	-0.08	0.90	-4.29	-7.09	7.98
F	143 – 150	-3.67	0.25	-7.65	-0.67	0.36	-3.78	-7.65	8.01
G	335 – 340	-3.93	-1.19	-1.70	0.67	-1.04	-1.70	-4.08	3.04
H	346 – 350	-4.95	4.60	-8.86	-0.40	4.62	-4.97	-8.86	13.48
I	621 – 624	-0.13	3.47	1.82	-0.04	3.47	1.82	-0.13	3.61
J	635 – 638	-0.11	11.18	1.97	-0.09	11.18	1.97	-0.11	11.29
K	841 – 844	-0.12	17.17	0.99	0.02	17.17	0.99	-0.012	17.28
L	855 – 858	-0.04	32.55	1.53	-0.03	32.55	1.53	-0.04	32.59
M	941 – 944	-0.13	23.09	0.98	0.00	23.09	0.98	-0.13	23.21
N	955 – 958	-0.06	44.12	1.82	0.00	44.12	1.82	-0.06	44.18
O	1101 – 1104	-0.16	22.78	0.40	0.00	22.78	0.40	-0.16	22.95
P	1115 – 1118	-0.08	48.26	2.25	0.00	48.26	2.25	-0.08	48.34
Q	1261 – 1264	-0.12	16.56	0.97	-0.01	16.56	0.97	-0.12	16.68
R	1275 – 1278	-0.07	33.36	1.68	0.00	33.36	1.68	-0.07	33.43
S	1561 – 1564	0.01	-6.35	0.06	-0.39	0.06	0.04	-6.38	6.43
T	1575 – 1578	-0.15	5.18	3.53	0.03	5.18	3.53	-0.15	5.33
U	1841 – 1846	4.88	-3.27	11.92	0.21	11.92	4.89	-6.28	18.20
V	1852 – 1856	4.46	-0.13	1.97	-1.03	4.68	1.97	-0.34	5.02
W	1969 – 1976	-31.03	-1.79	-12.13	-3.28	-1.43	-12.13	-31.40	29.97
X	2370 – 2570	-9.19	-12.12	0.30	4.82	0.30	-5.62	-15.69	15.99
Y	2305 – 2565	-10.47	-7.40	2.41	4.52	2.41	-4.17	-13.71	16.11
Z	2301 – 2561	-3.33	-0.93	1.95	45.03	42.91	1.95	-47.18	90.09

* Stresses are taken at 0 degrees (under the load) at each section.

Table 2.10.10-28 Primary Membrane Plus Primary Bending ($P_m + P_b$) Stresses; 30-Foot Top Oblique Drop; $\phi = 60°$; 1.12-Inch Outer Shell Thickness

		Stresses* (ksi)							
Section	Node to Node	S_x	S_y	S_z	S_{xy}	S_1	S_2	S_3	SI
A	177 – 327	-12.85	-2.87	0.67	-2.34	0.67	-2.35	-13.37	14.04
B	4 – 104	-7.97	-2.62	-2.64	-1.03	-2.43	-2.64	-8.16	5.74
C	10 – 110	-8.82	-0.69	-4.10	-0.01	-0.69	-4.10	-8.82	8.13
D	185 – 335	-10.62	-1.35	-4.47	-0.07	-1.35	-4.47	-10.63	9.27
E	18 – 118	-6.83	2.15	-4.77	-0.71	2.21	-4.77	-6.88	9.09
F	143 – 150	-1.49	5.48	-2.80	-0.67	5.55	-1.56	-2.80	8.35
G	335 – 340	-7.37	-3.58	-3.78	0.67	-3.47	-3.78	-7.48	4.01
H	346 – 350	-4.00	12.55	-4.04	-0.40	12.56	-4.01	-4.04	16.60
I	621 – 624	-0.08	4.31	1.89	-0.04	4.31	1.89	-0.08	4.39
J	635 – 638	-0.02	14.82	1.72	-0.09	14.82	1.72	-0.02	14.84
K	841 – 844	-0.04	18.41	1.75	0.02	18.41	1.75	-0.04	18.45
L	855 – 858	0.04	34.03	1.59	-0.03	34.03	1.59	0.04	33.98
M	941 – 944	-0.06	24.59	1.79	0.00	24.59	1.79	-0.06	24.65
N	955 – 958	0.01	46.06	1.89	0.00	46.06	1.89	0.01	46.05
O	1101 – 1104	-0.12	24.21	1.18	0.00	24.21	1.18	-0.12	24.34
P	1115 – 1118	0.01	50.51	2.64	0.00	50.51	2.64	0.01	50.50
Q	1261 – 1264	-0.06	17.74	1.72	-0.01	17.74	1.72	-0.06	17.80
R	1275 – 1278	0.02	35.19	2.81	0.00	35.19	2.81	0.02	35.17
S	1561 – 1564	0.16	-9.42	-1.80	-0.39	0.17	-1.80	-9.44	9.61
T	1575 – 1578	0.01	7.20	4.66	0.03	7.20	4.66	0.01	7.19
U	1841 – 1846	0.24	-14.53	10.39	0.21	10.39	0.24	-14.54	24.92
V	1852 – 1856	0.78	-5.40	-2.35	-1.03	0.94	-2.35	-5.57	6.51
W	1969 – 1976	-66.76	-24.50	-16.52	-3.28	-16.52	-24.25	-67.01	50.49
X	2370 – 2570	-20.23	-14.00	-1.74	6.55	-1.74	-9.86	-24.37	22.63
Y	2305 – 2565	-21.21	-13.13	1.72	11.16	1.72	-5.31	-29.04	30.75
Z	2301 – 2561	-1.37	-1.67	0.72	166.60	165.08	0.72	-168.12	333.20

* Stresses are taken at 0 degrees (under the load) at each section.

Table 2.10.10-29 Primary Membrane (P_m) and Primary Membrane Plus Primary Bending ($P_m + P_b$) Stresses; 30-Foot Top Oblique Drop; $\phi = 60°$; 1.12-Inch Outer Shell Thickness

			P_m Stresses (ksi)			$P_m + P_b$ Stresses (ksi)		
Section	Node to Node	Max. Temp. (°F)	Allow.[1] 0.7 S_u	Calc.	MS	Allow.[1] 1.0 S_u	Calc.	MS
A	327 – 177	222	48.93	7.47	+Large	69.90	14.04	+3.97
B	104 – 4	215	49.18	5.26	+Large	70.25	5.74	+Large
C	110 – 10	212	49.28	5.94	+Large	70.40	8.13	+Large
D	335 – 185	221	48.96	6.67	+Large	69.95	9.27	+Large
E	118 – 18	208	49.42	7.98	+Large	70.60	9.09	+Large
F	143 – 150	209	49.38	8.01	+Large	70.55	8.35	+Large
G	335 – 340	221	48.96	3.04	+Large	69.95	4.01	+Large
H	346 – 350	212	49.28	13.48	+2.66	70.40	16.60	+3.24
I	621 – 624	222	48.93	3.61	+Large	69.90	4.39	+Large
J	635 – 638	199	49.73	11.29	+3.40	71.04	14.84	+3.79
K	841 – 844	232	68.49	17.28	+2.96	97.84	18.45	+Large
L	855 – 858	204	69.50	32.59	+1.13	99.29	33.98	+1.92
M	941 – 944	247	67.94	23.21	+1.93	97.06	24.65	+2.94
N	955 – 958	211	69.25	44.18	+0.57	98.93	46.05	+1.15
O	1101 – 1104	255	67.65	22.95	+1.95	96.64	24.34	+2.97
P	1115 – 1118	216	69.07	48.34	+0.43	98.67	50.50	+0.95
Q	1261 – 1264	251	67.80	16.68	+3.06	96.85	17.80	+Large
R	1275 – 1278	216	69.07	33.43	+1.07	98.67	35.17	+1.81
S	1561 – 1564	217	49.10	6.43	+Large	70.15	9.61	+Large
T	1575 – 1578	197	49.78	5.33	+Large	71.12	7.19	+Large
U	1841 – 1846	212	49.28	18.20	+1.71	70.40	24.92	+1.83
V	1852 – 1856	205	49.52	5.02	+Large	70.75	6.51	+Large
W	1969 – 1976	198	49.76	29.97	+0.66	71.08	50.49	+0.41
X	2370 – 2570	201	49.66	15.99	+2.11	70.95	22.63	+2.14
Y	2305 – 2565	205	49.52	16.11	+2.07	70.75	30.75	+1.30
Z	2301 – 2561	204	49.56	90.09[2]	[1]	70.80	333.201	[1]

[1] Allowable stresses for sections "K" through "R" are taken from Type XM-19 stainless steel; all others are from Type 304 stainless steel.

[2] This stress is induced by the boundary effect from the displacement restraints at node 2561 and, therefore, is disregarded.

Table 2.10.10-30 Primary Stresses; 30-Foot Side Drop; ϕ = 90°; 1.20-Inch Outer Shell Thickness; Circumferential Location = 0°

Stress Points		Stresses (ksi)						
Location	Node	S_X	S_Y	S_Z	S_{XY}	S_1	S_2	S_3
A1	327	-3.14	-0.06	2.35	0.13	2.35	-0.05	-3.15
A2	302	-3.62	-0.09	2.07	0.49	2.07	-0.03	-3.69
A3	277	-3.91	0.01	1.91	1.13	1.91	0.31	-4.21
A4	252	-4.49	-0.06	1.58	1.45	1.58	0.37	-4.92
A5	227	-5.78	-2.16	1.53	1.01	1.53	-1.89	-6.05
A6	202	0.42	-3.48	8.60	-3.67	8.60	2.62	-5.68
A7	177	-38.59	-2.25	-10.46	-1.66	-2.17	-10.46	-38.67
B1	104	-10.75	-3.20	-3.50	-1.69	-2.84	-3.50	-11.11
B2	79	-7.52	-2.51	-1.03	-0.67	-1.03	-2.42	-7.61
B3	54	-5.97	-1.30	0.63	-1.06	0.63	-1.07	-6.20
B4	29	-4.36	-0.29	2.29	-0.74	2.29	-0.16	-4.49
B5	4	-2.81	0.06	3.30	0.06	3.30	0.07	-2.81
C1	110	-11.30	-0.82	-5.15	-0.67	-0.78	-5.15	-11.34
C2	85	-9.35	-0.68	-3.26	0.60	-0.64	-3.26	-9.39
C3	60	-7.53	-0.36	-1.64	0.71	-0.29	-1.64	-7.60
C4	35	-5.71	-0.08	0.08	0.59	0.08	-0.02	-5.77
C5	10	-4.70	-0.01	1.12	0.48	1.12	0.04	-4.75
D1	335	-2.50	3.23	0.85	-0.17	3.23	0.85	-2.51
D2	310	-4.51	1.57	-0.35	-0.10	1.57	-0.35	-4.51
D3	285	-5.42	0.75	-0.97	-0.32	0.77	-0.97	-5.43
D4	260	-6.80	0.08	-1.76	-0.72	0.15	-1.76	-6.87
D5	235	-9.08	-0.55	-3.01	-0.66	-0.50	-3.01	-9.13
D6	210	-11.33	-0.88	-4.35	-0.52	-0.85	-4.35	-11.35
D7	185	-13.59	-0.97	-5.95	0.90	-0.90	-5.95	-13.65
E1	118	-8.14	3.79	-5.68	-1.31	3.93	-5.68	-8.28
E2	93	-9.28	1.61	-5.92	-0.20	1.61	-5.92	-9.28
E3	68	-9.14	0.66	-5.50	0.26	0.66	-5.50	-9.15
E4	43	-9.22	0.20	-4.89	0.34	0.22	-4.89	-9.23
E5	18	-9.63	0.07	-4.60	0.41	0.09	-4.60	-9.64
F1	143	-1.94	10.54	-2.98	-2.02	10.86	-2.26	-2.98
F2	144	-2.09	2.75	-6.95	-1.53	3.19	-2.53	-6.95

Table 2.10.10-30 Primary Stresses; 30-Foot Side Drop; ϕ = 90°; 1.20-Inch Outer Shell Thickness; Circumferential Location = 0° (Continued)

Stress Points		Stresses (ksi)						
Location	Node	S_X	S_Y	S_Z	S_{XY}	S_1	S_2	S_3
F3	145	-3.00	0.75	-8.78	-0.97	0.98	-3.23	-8.78
F4	146	-5.28	-0.58	-10.73	-0.49	-0.53	-5.33	-10.73
F5	147	-6.76	-1.63	-12.25	-0.32	-1.61	-6.78	-12.25
F6	148	-7.67	-2.63	-13.52	-0.22	-2.62	-7.68	-13.52
F7	149	-8.29	-3.89	-14.85	-0.13	-3.89	-8.30	-14.85
F8	150	-8.64	-5.58	-16.30	-0.04	-5.58	-8.64	-16.30
G1	335	-2.50	3.23	0.85	-0.17	3.23	0.85	-2.51
G2	336	-2.25	1.48	-0.17	-0.46	1.54	-0.17	-2.30
G3	337	-2.90	0.05	-1.18	-0.41	0.11	-1.18	-2.95
G4	338	-4.06	-1.36	-2.22	0.19	-1.35	-2.22	-4.07
G5	339	-6.74	-3.77	-3.94	1.93	-2.82	-3.94	-7.69
G6	340	-9.47	-2.10	-3.99	2.30	-1.44	-3.99	-10.13
H1	346	-5.16	4.91	-8.50	3.55	6.03	-6.29	-8.50
H2	347	-4.30	15.58	-7.21	2.14	15.81	-4.52	-7.21
H3	348	-7.22	11.93	-10.49	-2.43	12.24	-7.52	-10.49
H4	349	-7.75	0.57	-15.03	-2.97	1.52	-8.70	-15.03
H5	350	-8.37	-11.06	-19.50	-1.99	-7.31	-12.11	-19.50
I1	621	-0.23	3.92	2.12	-0.18	3.93	2.12	-0.24
I2	624	-0.11	6.29	2.35	0.04	6.29	2.35	-0.11
J1	635	-0.26	10.07	2.86	-0.38	10.09	2.86	-0.27
J2	638	-0.03	19.66	2.23	0.14	19.66	2.23	-0.03
K1	841	-0.23	16.81	-0.06	-0.08	16.81	-0.06	-0.24
K2	844	-0.07	19.81	2.28	0.11	19.81	2.28	-0.07
L1	855	-0.14	33.30	2.54	-0.22	33.30	2.54	-0.14
L2	858	0.04	36.61	1.36	0.14	36.61	1.36	0.04
M1	941	-0.23	25.38	-0.40	0.01	25.38	-0.23	-0.40
M2	944	-0.11	29.12	2.12	0.06	29.12	2.12	-0.11
N1	955	-0.16	51.01	2.49	-0.12	51.01	2.49	-0.16
N2	958	0.02	56.00	2.11	0.11	56.00	2.11	0.02
O1	1101	-0.24	29.33	-0.72	0.00	29.33	-0.24	-0.72
O2	1104	-0.15	33.42	1.76	0.01	33.42	1.76	-0.15

Table 2.10.10-30 Primary Stresses; 30-Foot Side Drop; ϕ = 90°; 1.20-Inch Outer Shell Thickness; Circumferential Location = 0° continued)

Stress Points		Stresses (ksi)						
Location	Node	S_X	S_Y	S_Z	S_{XY}	S_1	S_2	S_3
P1	1115	-0.21	61.83	2.28	0.01	61.83	2.28	-0.21
P2	1118	0.02	68.25	3.05	-0.01	68.25	3.05	0.02
Q1	1261	-0.23	26.93	-0.18	0.03	26.93	-0.18	-0.23
Q2	1264	-0.08	30.88	2.34	-0.04	30.88	2.34	-0.08
R1	1275	-0.19	50.04	0.64	0.12	50.04	0.64	-0.19
R2	1278	0.03	55.93	3.40	-0.12	55.93	3.40	0.03
S1	1561	-0.22	6.45	1.68	0.19	6.45	1.68	-0.22
S2	15.64	-0.15	10.08	3.23	0.03	10.08	3.23	-0.15
T1	1575	-0.24	20.06	0.94	0.25	20.06	0.94	-0.25
T2	1578	0.01	28.31	4.65	-0.11	28.31	4.65	0.01
U1	1841	-0.15	-0.51	3.08	0.02	3.08	-0.15	-0.51
U2	1844	0.39	0.74	2.17	-0.27	2.17	0.89	0.24
V1	1852	10.17	10.66	0.01	-7.15	17.57	3.26	0.01
V2	1856	0.69	5.00	-6.36	0.52	5.06	0.63	-6.36
W1	1969	-42.95	-26.22	-16.25	-3.73	-16.25	-25.43	-43.74
W2	1970	-32.16	0.14	-8.38	-4.46	0.75	-8.38	-32.76
W3	1971	-18.51	3.17	-6.74	-4.82	4.19	-6.74	-19.54
W4	1972	-13.78	6.90	-7.47	-3.98	7.64	-7.47	-14.52
W5	1973	-11.52	9.51	-8.33	-3.07	9.95	-8.33	-11.96
W6	1974	-10.25	11.85	-9.09	-2.18	12.07	-9.09	-10.46
W7	1975	-9.60	14.64	-9.91	-1.19	14.70	-9.65	-9.91
W8	1976	-9.43	18.35	-10.64	-0.44	18.35	-9.44	-10.64
X1	2370	-20.80	-8.29	-5.45	-0.83	-5.45	-8.24	-20.86
X2	2390	-8.80	-4.14	-0.82	0.96	-0.82	-3.95	-8.99
X3	2410	-6.31	-2.06	0.11	2.47	0.11	-0.93	-7.44
X4	2430	-3.28	-2.28	0.55	2.20	0.55	-0.53	-5.04
X5	2450	-1.90	-1.68	0.73	1.56	0.73	-0.22	-3.35
X6	2470	-1.04	-1.21	0.77	0.92	0.77	-0.20	-2.05
X7	2490	-0.57	-0.66	0.79	0.48	0.79	-0.13	-1.09
X8	25.10	-0.30	-0.41	0.84	0.27	0.84	-0.08	-0.63

Table 2.10.10-30 Primary Stresses; 30-Foot Side Drop; ϕ = 90°; 1.20-Inch Outer Shell Thickness; Circumferential Location = 0° (Continued)

Stress Points		Stresses (ksi)						
Location	Node	S_X	S_Y	S_Z	S_{XY}	S_1	S_2	S_3
X9	2530	-0.03	-0.19	0.92	0.14	0.92	0.05	-0.27
X10	2550	0.32	-0.06	1.03	0.05	1.03	0.33	-0.07
X11	2570	0.78	-0.01	1.20	0.06	1.20	0.79	-0.02
Y1	2305	-0.17	0.22	0.87	-0.22	0.87	0.32	-0.26
Y2	2325	-1.97	0.14	0.73	-0.67	0.73	0.33	-2.16
Y3	2345	-3.64	0.20	0.77	-0.78	0.77	0.35	-3.79
Y4	2365	-5.08	0.28	0.82	-0.30	0.82	0.30	-5.09
Y5	2385	-5.44	0.21	0.99	0.49	0.99	0.25	-5.48
Y6	2405	-4.78	-0.02	1.19	1.13	1.19	0.23	-5.03
Y7	2425	-3.77	-0.30	1.31	1.41	1.31	0.21	-4.27
Y8	2445	-2.86	-0.47	1.34	1.44	1.34	0.21	-3.54
Y9	2465	-2.22	-0.47	1.35	1.37	1.35	0.27	-2.97
Y10	2485	-1.92	-0.31	1.39	1.20	1.39	0.33	-2.56
Y11	2505	-1.92	-0.25	1.39	1.06	1.39	0.26	-2.43
Y12	2525	-1.77	-0.14	1.45	0.77	1.45	0.17	-2.08
Y13	2545	-1.59	-0.02	1.54	0.42	1.54	0.09	-1.70
Y14	2565	-1.29	0.03	1.64	0.19	1.64	0.05	-1.32
Z1	2301	-1.69	0.08	0.69	-0.01	0.69	0.08	-1.69
Z2	2321	-2.07	0.08	0.94	-0.04	0.94	0.08	-2.07
Z3	2341	-2.58	0.16	1.15	-0.04	1.15	0.16	-2.58
Z4	2361	-3.01	0.23	1.36	0.01	1.36	0.23	-3.01
Z5	2381	-3.21	0.27	1.50	0.07	1.50	0.27	-3.21
Z6	2401	-3.13	0.28	1.56	0.15	1.56	0.28	-3.14
Z7	2421	-2.83	0.24	1.55	0.21	1.55	0.26	-2.84
Z8	2441	-2.38	0.19	1.50	0.25	1.50	0.21	-2.41
Z9	2461	-1.90	0.13	1.45	0.36	1.45	0.19	-1.97
Z10	2481	-1.46	0.09	1.40	0.77	1.40	0.40	-1.77
Z11	2501	-1.26	0.05	1.44	1.88	1.44	1.38	-2.60
Z12	2521	-1.09	0.05	1.49	5.35	4.85	1.49	-5.90
Z13	25541	-0.98	0.04	1.56	23.86	23.39	1.56	-24.33
Z14	2561	-0.94	0.03	1.65	31.16	30.70	1.65	-31.61

Table 2.10.10-31 Primary Plus Secondary Stresses; 30-Foot Side Drop; ϕ = 90°; 1.20-Inch Outer Shell Thickness; Circumferential Location = 0°

Stress Points		Stresses (ksi)						
Location	Node	S_X	S_Y	S_Z	S_{XY}	S_1	S_2	S_3
A1	327	2.06	0.01	7.54	0.36	7.54	2.12	-0.05
A2	302	0.72	-0.02	6.42	0.46	6.42	0.94	-0.25
A3	277	-0.43	0.02	5.39	1.03	5.39	0.84	-1.26
A4	252	-2.72	-0.10	3.35	1.43	3.35	0.53	-3.35
A5	227	-7.39	-2.22	-0.09	0.99	-0.09	-2.04	-7.57
A6	202	-4.55	-3.58	3.62	-3.68	3.62	-0.36	-7.77
A7	177	-46.95	-2.35	-18.78	-1.66	-2.29	-18.78	-47.01
B1	104	-10.58	-3.17	-3.36	-1.61	-2.83	-3.36	-10.92
B2	79	-6.38	-2.46	0.13	-0.61	0.13	-2.37	-6.47
B3	54	-3.80	-1.20	2.82	-1.02	2.82	-0.85	-4.15
B4	29	-1.11	-0.24	5.53	-0.67	5.53	0.12	-1.47
B5	4	2.21	0.04	8.26	-0.36	8.26	2.27	-0.02
C1	110	-10.94	-1.68	-4.57	-0.45	-1.66	-4.57	-10.96
C2	85	-8.09	-1.37	-1.76	0.84	-1.26	-1.76	-8.19
C3	60	-5.40	-0.71	0.91	0.98	0.91	-0.52	-5.60
C4	35	-2.47	-0.19	3.83	0.69	3.83	0.00	-2.67
C5	10	0.47	-0.03	6.73	0.37	6.73	0.66	-0.23
D1	335	-2.64	-5.04	2.30	-1.10	2.30	-2.21	-5.46
D2	310	-1.93	-3.18	2.20	-1.11	2.20	-1.28	-3.83
D3	285	-3.00	-2.29	1.48	-1.22	1.48	-1.37	-3.91
D4	260	-5.49	-2.04	-0.41	-1.56	-0.41	-1.44	-6.09
D5	235	-9.93	-2.39	-4.27	-1.32	-2.16	-4.27	-10.16
D6	210	-14.66	-2.67	-8.41	-0.53	-2.64	-8.41	-14.68
D7	185	-19.85	-2.71	-13.05	1.81	-2.52	-13.05	-20.04
E1	118	-4.40	1.18	-3.47	2.24	1.97	-3.47	-5.19
E2	93	-8.50	2.43	-3.36	1.39	2.60	-3.36	-8.67
E3	68	-8.16	0.95	-2.56	1.43	1.17	-2.56	-8.38
E4	43	-8.25	0.27	-1.43	0.90	0.36	-1.43	-8.34
E5	18	-7.60	0.09	0.31	0.57	0.31	0.13	-7.64
F1	143	-11.69	2.29	-4.86	4.07	3.39	-4.86	-12.78
F2	144	-10.56	7.92	-5.42	1.87	8.10	-5.42	-10.75

Table 2.10.10-31 Primary Plus Secondary Stresses; 30-Foot Side Drop; ϕ = 90°; 1.20-Inch Outer Shell Thickness; Circumferential Location = 0° (Continued)

Stress Points		Stresses (ksi)						
Location	Node	S_X	S_Y	S_Z	S_{XY}	S_1	S_2	S_3
F3	145	-8.46	4.02	-7.35	-0.38	4.03	-7.35	-8.47
F4	146	-7.71	1.98	-8.83	-0.61	2.01	-7.75	-8.83
F5	147	-7.98	0.48	-10.16	-0.60	0.52	-8.02	-10.16
F6	148	-8.29	-0.76	-11.33	-0.52	-0.72	-8.32	-11.33
F7	149	-8.56	-2.13	-12.57	-0.32	-2.12	-8.58	-12.57
F8	150	-8.75	-3.71	-13.93	-0.15	-3.71	-8.76	-13.93
G1	335	-2.64	-5.04	2.30	-1.10	2.30	-2.21	-5.46
G2	336	-2.09	-3.12	2.45	-0.40	2.45	-1.96	-3.26
G3	337	-1.51	-1.80	2.55	0.14	2.55	-1.45	-1.86
G4	338	-1.65	-0.02	2.66	0.16	2.66	-0.01	-1.67
G5	339	-1.12	2.85	3.18	-0.77	3.18	3.00	-1.26
G6	340	-2.46	-0.36	2.31	-0.82	2.31	-0.08	-2.74
H1	346	-14.37	0.98	-11.25	3.72	1.84	-11.25	-15.22
H2	347	-8.97	19.01	-6.54	2.47	19.23	-6.54	-9.18
H3	348	-9.47	19.52	-7.82	-2.63	19.76	-7.82	-9.71
H4	349	-8.50	10.58	-11.21	-3.30	11.14	-9.06	-11.21
H5	350	-8.60	2.42	-14.61	-2.28	2.87	-9.05	-14.61
I1	621	-0.23	6.65	2.45	-0.15	6.65	2.45	-0.23
I2	624	-0.10	7.80	2.49	0.06	7.80	2.49	-0.10
J1	635	-0.26	20.36	3.12	-0.33	20.36	3.12	-0.26
J2	638	-0.02	27.66	2.12	0.18	27.66	2.12	-0.02
K1	841	-0.23	18.68	-0.27	-0.09	18.68	-0.24	-0.27
K2	844	-0.07	22.10	2.48	0.12	22.10	2.48	-0.07
L1	855	-0.14	42.12	2.18	-0.21	42.12	2.18	-0.14
L2	858	0.04	45.96	1.54	0.14	45.96	1.54	0.04
M1	941	-0.23	27.19	-0.67	0.01	27.19	-0.23	-0.67
M2	944	-0.11	31.46	2.37	0.06	31.46	2.37	-0.11
N1	955	-0.16	59.71	2.04	-0.12	59.71	2.04	-0.16
N2	9.58	0.02	64.41	2.34	0.11	65.41	2.34	0.02
O1	1101	-0.24	31.14	-0.98	0.00	31.14	-0.24	-0.98
O2	1104	-0.15	35.76	2.01	0.01	35.76	2.01	-0.15

Table 2.10.10-31 Primary Plus Secondary Stresses; 30-Foot Side Drop; ϕ = 90°; 1.20-Inch Outer Shell Thickness; Circumferential Location = 0° (Continued)

Stress Points		Stresses (ksi)						
Location	Node	S_X	S_Y	S_Z	S_{XY}	S_1	S_2	S_3
P1	1115	-0.22	70.50	1.79	0.01	70.50	1.79	-0.22
P2	1118	0.02	77.67	3.29	-0.01	77.67	3.29	0.02
Q1	1261	-0.23	28.81	-0.36	0.02	28.81	-0.23	-0.36
Q2	1264	-0.08	33.16	2.56	-0.04	33.16	2.56	-0.08
R1	1275	-0.18	58.75	0.17	0.12	58.75	0.17	-0.18
R2	1278	0.01	65.39	3.49	-0.11	65.39	3.49	0.01
S1	1561	-0.22	8.19	1.88	0.23	8.20	1.88	-0.22
S2	1564	-0.17	12.54	3.74	0.08	12.54	3.74	-0.17
T1	1575	-0.24	30.33	1.07	0.19	30.33	1.07	-0.25
T2	1578	0.01	36.29	4.55	-0.16	36.29	4.55	0.01
U1	1841	-0.13	-0.35	2.40	-0.07	2.40	-0.11	-0.37
U2	1844	0.55	1.78	2.15	-0.36	2.15	1.87	0.45
V1	1852	4.57	8.47	-2.48	-8.39	15.13	-2.09	-2.48
V2	1856	0.41	16.50	-3.03	0.70	16.53	0.38	-3.03
W1	1969	-43.69	-28.15	-16.24	-4.59	-16.24	-26.90	-44.95
W2	1970	-32.16	-0.68	-7.68	-5.18	0.15	-7.68	-32.99
W3	1971	-18.61	3.03	-5.77	-5.41	4.31	-5.77	-19.89
W4	1972	-13.86	7.42	-6.25	-4.51	8.33	-6.25	-14.78
W5	1973	-11.59	10.46	-6.94	-3.49	11.00	-6.94	-12.13
W6	1974	-10.31	13.15	-7.55	-2.47	13.41	-7.55	-10.57
W7	1975	-9.63	16.25	-8.23	-1.33	16.32	-8.23	-9.70
W8	1976	-9.42	20.23	-8.83	-0.51	20.24	-8.83	-9.43
X1	2370	-22.05	-8.63	-5.78	-0.21	-5.78	-8.63	-22.05
X2	2390	-9.10	-5.13	-1.06	1.41	-1.06	-4.68	-9.55
X3	2410	-6.66	-2.62	0.05	2.53	0.05	-1.40	-7.87
X4	2430	-3.61	-2.69	0.56	2.06	0.56	-1.04	-5.26
X5	2450	-2.29	-1.91	0.80	1.29	0.80	-0.80	-3.41
X6	2470	-1.44	-1.34	0.91	0.59	0.91	-0.81	-1.98
X7	2490	-0.94	-0.72	1.05	0.14	1.05	-0.65	-1.01
X8	2510	-0.63	-0.44	1.19	-0.05	1.19	-0.43	-0.65

Table 2.10.10-31 Primary Plus Secondary Stresses; 30-Foot Side Drop; ϕ = 90°; 1.20-Inch Outer Shell Thickness; Circumferential Location = 0° (Continued)

Stress Points		Stresses (ksi)						
Location	Node	S_X	S_Y	S_Z	S_{XY}	S_1	S_2	S_3
X9	2530	-0.31	-0.20	1.38	-0.13	1.38	-0.12	-0.40
X10	2550	0.10	-0.07	1.64	-0.12	1.64	0.17	-0.13
X11	2570	1.40	-0.02	2.79	0.01	2.79	1.40	-0.02
Y1	2305	0.40	0.20	1.37	-0.25	1.37	0.57	0.03
Y2	2325	-1.94	0.08	0.73	-0.62	0.73	0.26	-2.11
Y3	2345	-3.92	0.09	0.43	-0.73	0.43	0.22	-4.04
Y4	2365	-5.62	0.12	0.22	-0.25	0.22	0.13	-5.64
Y5	2385	-6.17	0.00	0.21	0.54	0.21	0.04	-6.21
Y6	2405	-5.57	-0.28	0.33	1.16	0.33	-0.03	-5.82
Y7	2425	-4.54	-0.57	0.44	1.41	0.44	-0.12	-4.99
Y8	2445	-3.56	-0.73	0.55	1.40	0.55	-0.16	-4.13
Y9	2465	-2.82	-0.66	0.69	1.29	0.69	-0.07	-3.42
Y10	2485	-2.34	-0.42	0.96	1.11	0.96	0.09	-2.85
Y11	2505	-2.20	-0.31	1.12	1.02	1.12	0.14	-2.64
Y12	2525	-1.87	-0.15	1.36	0.76	1.36	0.14	-2.16
Y13	2545	-1.45	-0.02	1.65	0.41	1.65	0.09	-1.56
Y14	2565	-0.03	0.03	2.81	0.26	2.81	0.26	-0.26
Z1	2301	-1.18	0.09	1.19	-0.01	1.19	0.09	-1.18
Z2	2321	-1.98	0.11	1.02	-0.04	1.02	0.11	-1.98
Z3	2341	-2.81	0.22	0.92	-0.04	0.92	0.22	-2.81
Z4	2361	-3.51	0.32	0.86	0.01	0.86	0.32	-3.51
Z5	2381	-3.89	0.37	0.82	0.07	0.82	0.37	-3.89
Z6	2401	-3.91	0.38	0.78	0.15	0.78	0.38	-3.91
Z7	2421	-3.62	0.35	0.76	0.21	0.76	0.36	-3.63
Z8	2441	-3.10	0.29	0.78	0.25	0.78	0.31	-3.12
Z9	2461	-2.47	0.22	0.88	0.36	0.88	0.27	-2.52
Z10	2481	-1.80	0.16	1.07	0.77	1.07	0.42	-2.06
Z11	2501	-1.46	0.09	1.25	1.88	1.35	1.25	-2.72
Z12	2521	-1.14	0.07	1.45	5.35	4.85	1.45	-5.91
Z13	2541	-0.86	0.05	1.67	23.86	23.45	1.67	-24.27
Z14	2561	0.13	0.05	2.73	31.16	31.25	2.73	-31.07

Table 2.10.10-32 Primary Membrane (P_m) Stresses; 30-Foot Side Drop; $\phi = 90°$; 1.20-Inch Outer Shell Thickness; Circumferential Location = 0°

		Stresses* (ksi)							
Section	Node to Node	S_x	S_y	S_z	S_{xy}	S_1	S_2	S_3	SI
A	177 – 327	-7.70	-1.71	1.90	-0.46	1.90	-1.67	-7.73	9.64
B	4 – 104	-6.52	-1.60	0.11	-0.89	0.11	-1.45	-6.68	6.79
C	10 – 110	-7.99	-0.43	-2.04	0.44	-0.41	-2.04	-8.02	7.61
D	185 – 335	-8.94	-0.19	-3.00	-0.36	-0.18	-3.00	-8.96	8.78
E	18 – 118	-9.09	1.24	-5.45	-0.07	1.24	-5.45	-9.09	10.32
F	143 – 150	-4.72	0.37	-9.86	-0.80	0.49	-4.85	-9.86	10.35
G	335 – 340	-5.06	-1.34	-2.30	0.85	-1.16	-2.30	-5.25	4.09
H	346 – 350	-6.40	6.28	-11.46	-0.50	6.30	-6.42	-11.46	17.76
I	621 – 624	-0.16	5.08	2.22	-0.06	5.08	2.22	-0.16	5.23
J	635 – 638	-0.14	14.95	2.52	-0.12	14.95	2.52	-0.14	15.08
K	841 – 844	-0.17	18.35	1.15	0.03	18.35	1.15	-0.17	18.51
L	855 – 858	-0.04	34.99	1.94	-0.02	34.99	1.94	-0.04	35.03
M	941 – 944	-0.19	27.29	0.90	0.03	27.29	0.90	-0.19	27.48
N	955 – 958	-0.07	53.54	2.29	0.01	53.54	2.29	-0.07	53.61
O	1101 – 1104	-0.21	31.42	0.56	0.00	31.42	0.56	-0.21	31.63
P	1115 – 1118	-0.10	65.09	2.67	0.00	65.09	2.67	-0.10	65.18
Q	1261 – 1264	-0.17	28.95	1.12	-0.01	28.95	1.12	-0.17	29.12
R	1275 – 1278	-0.09	53.03	2.05	0.00	53.03	2.05	-0.09	53.13
S	1561 – 1564	-0.17	8.21	2.45	0.12	8.22	2.45	-0.17	8.39
T	1575 – 1578	-0.14	24.25	2.83	0.06	24.25	2.83	-0.14	24.39
U	1841 – 1846	0.51	0.49	2.13	-0.18	2.13	0.68	0.32	1.81
V	1852 – 1856	4.77	14.30	-1.86	-2.58	14.95	4.11	-1.86	16.81
W	1969 – 1976	20.74	3.86	-9.26	-3.37	4.32	-9.26	-21.20	25.51
X	2370 –2570	-3.97	-1.82	0.18	1.06	0.18	-1.38	-4.40	4.59
Y	2305 – 2565	-3.07	-0.06	1.14	0.53	1.14	0.03	-3.16	4.29
Z	2301 – 2561	-2.26	0.16	1.36	2.22	1.48	1.36	-3.58	5.06

* Stresses are taken at 0 degrees (under the load) at each section.

Table 2.10.10-33 Primary Membrane Plus Primary Bending ($P_m + P_b$) Stresses; 30-Foot Side Drop; $\phi = 90°$; 1.20-Inch Outer Shell Thickness; Circumferential Location = 0°

		Stresses* (ksi)							
Section	Node to Node	S_x	S_y	S_z	S_{xy}	S_1	S_2	S_3	SI
A	177 – 327	-16.88	-3.68	0.56	-3.01	0.56	-3.03	-17.54	18.10
B	4 – 104	-10.00	-3.37	-3.11	-1.31	-3.11	-3.12	-10.25	7.14
C	10 – 110	-11.24	-0.89	-5.07	0.01	-0.89	-5.07	-11.24	10.36
D	185 – 335	-13.80	-1.54	-5.90	-0.01	-1.54	-5.90	-13.80	12.26
E	18 – 118	-8.66	2.96	-6.08	-0.84	3.03	-6.08	-8.73	11.75
F	143 – 150	-1.94	7.18	-3.59	-0.80	7.25	-2.01	-3.59	10.85
G	335 – 340	-9.47	-4.30	-4.96	0.85	-4.16	-4.96	-9.61	5.45
H	346 – 350	-5.16	16.66	-5.20	-0.50	16.67	-5.17	-5.20	21.87
I	621 – 624	-0.11	6.23	2.33	-0.06	6.23	2.33	-0.11	6.34
J	635 – 638	-0.03	19.66	2.20	-0.12	19.66	2.20	-0.03	19.69
K	841 – 844	-0.07	19.82	2.32	0.03	19.82	2.32	-0.07	19.88
L	855 – 858	0.04	36.61	1.34	-0.02	36.61	1.34	0.04	36.57
M	941 – 944	-0.11	29.12	2.15	0.03	29.12	2.15	-0.11	29.23
N	955 – 958	0.02	56.00	2.10	0.01	56.00	2.10	0.02	55.98
O	1101 – 1104	-0.15	33.42	1.80	0.00	33.42	1.80	-0.15	33.57
P	1115 – 1118	0.02	68.25	3.06	0.00	68.25	3.06	0.02	68.23
Q	1261 – 1264	-0.08	30.88	2.38	-0.01	30.88	2.38	-0.08	30.96
R	1275 – 1278	0.03	55.93	3.42	0.00	55.93	3.42	0.03	55.91
S	1561 – 1564	-0.15	9.98	3.22	0.12	9.98	3.22	-0.15	10.13
T	1575 – 1578	0.01	28.32	4.68	0.06	28.32	4.68	0.01	28.31
U	1841 – 1846	-0.15	0.09	2.90	-0.18	2.90	0.19	-0.24	3.15
V	1852 – 1856	10.17	18.66	1.89	-2.58	19.39	9.45	1.89	17.50
W	1969 – 1976	-42.95	-14.16	-10.81	-3.37	-10.81	-13.77	-43.34	32.53
X	2370 – 2570	-11.33	-4.07	-1.38	1.72	-1.38	-3.68	-11.72	10.34
Y	2305 – 2565	-2.48	-0.39	1.60	1.55	1.60	0.43	-3.30	4.90
Z	2301 – 2561	-1.60	0.12	1.68	8.10	7.40	1.68	-8.88	16.29

* Stresses are taken at 0 degrees (under the load) at each section.

Table 2.10.10-34 Primary Membrane (P_m) Stresses; 30-Foot Side Drop; $\phi = 90°$; 1.20-Inch Outer Shell Thickness; Circumferential Location = 90°

		Stresses* (ksi)									
Section	Node to Node	S_x	S_y	S_z	S_{xy}	S_{yz}	S_{xz}	S_1	S_2	S_3	SI
A	177 – 327	1.27	-0.03	-4.99	0.02	-2.03	-0.91	1.50	0.56	-5.81	7.32
B	4 – 104	1.13	-0.01	-4.30	0.04	1.07	-0.94	1.30	0.21	-4.69	5.99
C	10 – 110	0.76	0.00	-3.08	0.07	0.23	-2.17	1.74	0.01	-4.07	5.81
D	185 – 335	0.76	0.42	-3.12	0.09	-1.46	-2.31	2.17	0.43	-4.53	6.70
E	18 – 118	0.25	0.18	-1.51	0.05	-1.33	-2.17	2.08	0.15	-3.31	5.39
F	143 – 150	-0.06	0.11	-0.92	0.03	-3.30	0.23	2.94	-0.05	-3.76	6.70
G	335 – 340	0.90	0.62	-2.01	0.18	-1.63	-2.46	2.79	0.54	-3.82	6.62
H	346 – 350	-0.03	0.06	-0.41	0.01	-11.67	-5.75	12.83	-0.02	-13.19	26.02
I	621 – 624	-0.08	0.38	0.35	-0.09	-5.88	-0.06	6.24	-0.07	-5.51	11.75
J	635 – 638	0.00	0.30	0.03	0.00	-15.87	-0.06	16.03	0.00	-15.70	31.73
K	841 – 844	-0.01	-0.08	0.55	0.03	-3.80	-0.01	4.05	-0.01	-3.58	7.63
L	855 – 858	-0.01	0.23	-0.03	0.00	-12.09	-0.03	12.19	-0.01	-11.99	24.18
M	941 – 944	-0.01	0.05	0.54	0.00	-1.33	0.01	1.65	-0.01	-1.06	2.71
N	955 – 958	0.00	0.10	-0.01	0.00	-8.08	-0.01	8.12	0.00	-8.03	16.16
O	1101 - 1104	-0.01	0.06	0.54	0.00	-0.22	0.01	0.63	-0.01	-0.03	0.66
P	1115 – 1118	0.00	0.13	0.02	0.00	0.20	-0.01	0.28	0.00	-0.13	0.42
Q	1261 – 1264	-0.01	0.05	0.54	0.00	1.83	0.00	2.15	-0.01	-1.56	3.70
R	1275 – 1278	0.02	-0.28	0.07	-0.01	8.05	-0.01	7.95	0.02	-8.16	16.11
S	1561 – 1564	-0.04	-0.20	0.26	0.03	6.00	-0.06	6.04	-0.04	-5.98	12.02
T	1575 – 1578	0.01	-2.23	0.26	0.03	15.08	0.00	14.14	0.01	-16.11	30.26
U	1841 – 1846	-0.99	0.32	-1.39	0.10	2.40	0.24	2.03	-0.99	-3.10	5.13
V	1852 – 1856	-0.30	-2.02	0.51	0.15	11.13	-5.20	11.70	-0.50	-13.01	24.71
W	1969 – 1976	3.42	-1.82	-1.43	0.61	3.63	-0.54	3.50	2.01	-5.34	8.84
X	2370 – 2570	1.47	0.99	-1.44	-0.59	0.31	-0.61	2.00	0.60	-1.58	3.58
Y	2305 – 2565	1.32	0.21	-2.02	-0.24	-0.05	-0.33	1.40	0.17	-2.06	3.45
Z	2301 –2561	1.36	0.16	-2.25	0.00	-2.45	0.00	1.69	1.36	-3.78	5.47

Table 2.10.10-35 Primary Membrane Plus Primary Bending ($P_m + P_b$) Stresses; 30-Foot Side Drop; $\phi = 90°$; 1.20-Inch Outer Shell Thickness; Circumferential Location = 90°

		Stresses* (ksi)									
Section	Node to Node	S_x	S_y	S_z	S_{xy}	S_{yz}	S_{xz}	S_1	S_2	S_3	SI
A	177 – 327	1.36	-0.05	-4.68	0.01	-1.81	-1.81	2.01	0.34	-5.72	7.73
B	4 – 104	1.56	-0.03	-4.19	0.00	1.14	-1.73	2.08	0.17	-4.92	7.00
C	10 – 110	0.79	-0.01	-3.02	0.06	0.38	-3.22	2.63	0.01	-4.89	7.52
D	185 – 335	1.41	1.07	-2.39	0.32	-2.90	-4.10	5.01	0.88	-5.81	10.82
E	18 – 118	0.56	0.41	-1.48	0.11	-2.93	-2.24	3.38	0.40	-4.28	7.66
F	143 – 150	0.01	0.47	-1.63	0.03	-3.30	0.23	2.89	0.02	-4.06	6.95
G	335 – 340	2.47	1.30	-2.16	0.18	-1.63	-2.46	3.83	1.43	-3.64	7.46
H	346 – 350	0.06	0.40	-0.45	0.01	-11.67	-5.75	12.96	0.12	-13.07	26.03
I	621 – 624	-0.07	0.88	0.78	-0.09	-5.88	-0.06	6.70	-0.07	-5.05	11.75
J	635 – 638	0.00	0.53	0.18	0.00	-15.87	-0.06	16.22	0.00	-15.51	31.73
K	841 – 844	-0.05	0.12	1.16	0.03	-3.80	-0.01	4.48	-0.05	-3.20	7.68
L	855 – 858	-0.01	0.08	-0.45	0.00	-12.09	-0.03	11.91	-0.01	-12.28	24.19
M	941 – 944	-0.05	0.24	1.25	0.00	-1.33	0.01	2.17	-0.05	-0.68	2.85
N	955 – 958	0.00	0.18	0.23	0.00	-8.08	-0.01	8.28	0.00	-7.88	16.16
O	1101 – 1104	-0.05	0.24	1.24	0.00	-0.22	0.01	1.28	0.20	-0.05	1.33
P	1115 – 1118	0.00	0.06	-0.29	0.00	0.20	-0.01	0.15	0.00	-0.38	0.54
Q	1261 – 1264	-0.05	0.24	1.25	0.00	1.83	0.00	2.65	-0.05	-1.16	3.81
R	1275 – 1278	0.02	0.11	1.33	-0.01	8.05	-0.01	8.80	0.02	-7.35	16.16
S	1561 – 1564	-0.03	-0.38	0.05	0.03	6.00	-0.06	5.84	-0.03	-6.18	12.02
T	1575 – 1578	0.01	-2.93	-0.46	0.03	15.08	0.00	13.43	0.01	-16.82	30.26
U	1841 – 1846	-0.11	0.72	-1.31	0.10	2.40	0.24	2.33	-0.12	-2.91	5.25
V	1852 – 1856	-0.03	-1.96	0.67	0.15	11.13	-5.20	11.83	-0.26	-12.89	24.72
W	1969 – 1976	9.68	2.99	-0.85	0.61	3.63	-0.54	9.74	5.17	-3.09	12.83
X	2370 – 2570	3.65	2.27	-2.21	-0.89	0.89	-1.63	4.59	1.84	-2.72	7.31
Y	2305 – 2565	1.21	0.23	-2.54	0.06	0.00	-0.55	1.30	0.22	-2.62	3.91
Z	2301 – 2561	1.67	0.12	-1.61	0.00	-9.29	0.00	8.58	1.67	-10.08	18.66

Table 2.10.10-36 Primary Membrane (P_m) Stresses; 30-Foot Side Drop; $\phi = 90°$; 1.20-Inch Outer Shell Thickness; Circumferential Location = 180°

		Stresses* (ksi)									
Section	Node to Node	S_x	S_y	S_z	S_{xy}	S_{yz}	S_{xz}	S_1	S_2	S_3	SI
A	177 – 327	-2.36	1.64	0.62	0.45	0.00	0.00	1.69	0.62	-2.41	4.10
B	4 – 104	-2.77	1.44	2.05	0.76	0.00	0.00	2.05	1.58	-2.91	4.96
C	10 – 110	-1.99	0.44	2.92	-0.68	0.00	0.00	2.92	0.62	-2.16	5.09
D	185 – 335	-1.86	0.13	3.49	0.27	0.00	0.00	3.49	0.17	-1.90	5.39
E	18 – 118	-0.99	-1.22	3.41	-0.43	0.00	0.00	3.41	-0.66	-1.55	4.96
F	143 – 150	-0.70	-1.20	4.44	0.21	0.00	0.00	4.44	-0.63	-1.27	5.71
G	335 – 340	-4.22	-0.41	1.36	-0.02	0.00	0.00	1.36	-0.41	-4.22	5.58
H	346 – 350	-5.62	-7.07	2.37	-2.99	0.00	0.00	2.37	-3.27	-9.42	11.79
I	621 – 624	-0.01	-5.43	-0.64	0.13	0.00	0.00	-0.01	-0.64	-5.43	5.42
J	635 – 638	0.15	-16.16	-3.10	0.11	0.00	0.00	0.15	-3.10	-16.16	16.32
K	841 – 844	-0.07	-18.02	-0.15	0.03	0.00	0.00	-0.07	-0.15	-18.02	17.95
L	855 – 858	0.06	-35.26	-1.88	0.03	0.00	0.00	0.06	-1.88	-35.26	35.32
M	941 – 944	-0.05	-27.22	0.12	-0.03	0.00	0.00	0.12	-0.05	-27.22	27.34
N	955 – 958	0.07	-53.61	-2.26	0.00	0.00	0.00	0.07	-2.26	-53.61	53.68
O	1101 – 1104	-0.02	-31.36	0.46	0.00	0.00	0.00	0.46	-0.02	-31.36	31.82
P	1115 – 1118	0.09	-65.21	-2.71	0.00	0.00	0.00	0.09	-2.71	-65.21	65.30
Q	1261 – 1264	-0.06	-28.88	-0.10	0.00	0.00	0.00	-0.06	-0.10	-28.88	28.81
R	1275 – 1278	0.06	-52.34	-2.20	0.02	0.00	0.00	0.06	-2.20	-52.34	52.40
S	1561 – 1564	0.00	-7.47	-0.83	-0.17	0.00	0.00	0.00	-0.83	-7.47	7.47
T	1575 – 1578	0.11	-19.27	-3.16	-0.09	0.00	0.00	0.11	-3.16	-19.27	19.39
U	1841 – 1846	0.98	-1.06	2.15	0.05	0.00	0.00	2.15	0.98	-1.06	3.22
V	1852 – 1856	-4.17	-9.23	0.78	2.62	0.00	0.00	0.78	-3.06	-10.34	11.12
W	1969 – 1976	-2.02	-0.11	0.97	0.07	0.00	0.00	0.97	-0.11	-2.02	3.00
X	2370 – 2570	-1.53	-1.48	0.89	0.20	0.00	0.00	0.89	-1.30	-1.71	2.60
Y	2305 – 2565	-1.52	0.04	1.21	-0.07	0.00	0.00	1.21	0.04	-1.52	2.73
Z	2301 – 2561	-2.26	0.16	1.36	-2.22	0.00	0.00	1.48	1.36	-3.58	5.06

Table 2.10.10-37 Primary Membrane Plus Primary Bending ($P_m + P_b$) Stresses; 30-Foot Side Drop; $\phi = 90°$; 1.20-Inch Outer Shell Thickness; Circumferential Location = 180°

		Stresses* (ksi)									
Section	Node to Node	S_x	S_y	S_z	S_{xy}	S_{yz}	S_{xz}	S_1	S_2	S_3	SI
A	177 – 327	-10.98	-0.42	-0.59	-2.11	0.00	0.00	-0.02	-0.59	-11.39	11.37
B	4 – 104	-5.81	-0.09	-0.01	0.78	0.00	0.00	0.01	-0.01	-5.91	5.92
C	10 – 110	-3.97	0.010	1.26	-0.62	0.00	0.00	1.26	0.11	-4.07	5.33
D	185 – 335	-6.48	-1.22	0.47	0.03	0.00	0.00	0.47	-1.21	-6.48	6.96
E	18 – 118	-2.52	-2.83	3.24	-0.77	0.00	0.00	3.24	-1.88	-3.46	6.70
F	143 – 150	0.81	-4.81	4.46	0.21	0.00	0.00	4.46	0.82	-4.82	9.27
G	335 – 340	-7.62	-0.86	1.22	-0.02	0.00	0.00	1.22	-0.86	-7.62	8.84
H	346 – 350	-12.20	-16.96	-2.69	-2.99	0.00	0.00	-2.69	-10.76	-18.40	15.71
I	621 – 624	0.03	-6.68	-1.18	0.13	0.00	0.00	0.04	-1.18	-6.68	6.72
J	635 – 638	0.00	-19.78	-4.04	0.11	0.00	0.00	0.00	-4.04	-19.78	19.79
K	841 – 844	-0.07	-18.98	0.27	0.03	0.00	0.00	0.27	-0.07	-18.98	19.25
L	855 – 858	-0.05	-37.16	-2.24	0.03	0.00	0.00	-0.05	-2.24	-37.16	37.11
M	941 – 944	-0.02	-28.54	0.67	-0.03	0.00	0.00	0.67	-0.02	-28.54	29.21
N	955 – 958	-0.02	-56.22	-2.56	0.00	0.00	0.00	-0.02	-2.56	-56.22	56.19
O	1101 – 1104	0.02	-32.86	1.01	0.00	0.00	0.00	1.01	0.02	-32.86	33.88
P	1115 – 1118	-0.01	-68.24	-2.47	0.00	0.00	0.00	-0.01	-2.47	-68.24	68.23
Q	1261 – 1264	-0.05	-30.30	0.44	0.00	0.00	0.00	0.44	-0.05	-30.30	30.74
R	1275 – 1278	0.01	-54.47	-1.05	0.02	0.00	0.00	0.01	-1.05	-54.47	54.48
S	1561 – 1564	0.07	-8.63	-0.90	-0.17	0.00	0.00	0.08	-0.90	-8.63	8.71
T	1575 – 1578	-0.01	-22.01	-3.35	-0.09	0.00	0.00	-0.01	-3.35	-22.01	22.00
U	1841 – 1846	0.02	-3.55	1.48	0.05	0.00	0.00	1.48	0.02	-3.55	5.03
V	1852 – 1856	-8.45	-16.56	-3.18	2.62	0.00	0.00	-3.18	-7.67	-17.33	14.15
W	1969 – 1976	-6.29	-1.31	0.67	0.07	0.00	0.00	0.67	-1.30	-6.29	6.96
X	2370 – 2570	-4.58	-3.65	0.14	0.63	0.00	0.00	0.14	-3.33	-4.90	5.04
Y	2305 – 2565	-2.72	0.03	0.92	-0.17	0.00	0.00	0.92	0.04	-2.73	3.65
Z	2301 – 2561	-1.60	0.12	1.68	-8.10	0.00	0.00	7.40	1.68	-8.88	16.28

Table 2.10.10-38 Primary Membrane (P_m) and Primary Membrane Plus Primary Bending ($P_m + P_b$) Stress Qualification; 30-Foot Side Drop; $\phi = 90°$; 1.20-Inch Outer Shell Thickness; Circumferential Location = 0°

			P_m Stresses (ksi)			$P_m + P_b$ Stresses (ksi)		
Section	Node to Node	Max. Temp. (°F)	Allow. * 0.7 S_u	Calc.	MS	Allow. * 1.0 S_u	Calc.	MS
A	177 – 327	222	48.93	9.64	+Large	69.90	18.10	+2.86
B	4 – 104	215	49.18	6.79	+Large	70.25	7.14	+Large
C	10 – 110	212	49.28	7.61	+Large	70.40	10.35	+Large
D	185 – 335	221	48.96	8.78	+Large	69.95	12.26	+Large
E	18 – 118	208	49.42	10.32	+3.79	70.60	11.75	+Large
F	143 – 150	209	49.38	10.35	+3.77	70.55	10.85	+Large
G	335 – 340	221	48.96	4.09	+Large	69.95	5.45	+Large
H	346 – 350	212	49.28	17.76	+1.77	70.40	21.87	+2.22
I	621 – 624	222	48.93	5.23	+Large	69.90	6.34	+Large
J	635 – 638	199	49.73	15.08	+2.30	71.04	19.69	+2.61
K	841 – 844	232	68.49	18.51	+2.70	97.84	19.88	+3.92
L	855 – 858	204	69.50	35.03	+0.98	99.29	36.57	+1.72
M	941 – 944	247	67.94	27.48	+1.47	97.06	29.23	+2.32
N	955 – 958	211	69.25	53.61	+0.29	98.93	55.98	+0.77
O	1101 – 1104	255	67.65	31.63	+1.14	96.64	33.57	+1.88
P	1115 – 1118	216	69.07	65.18	+0.06	98.67	68.23	+0.45
Q	1261 – 1264	251	67.79	29.12	+0.30	96.85	30.96	+2.13
R	1275 – 1278	216	69.07	53.13	+0.30	98.67	55.91	+0.76
S	1561 – 1564	217	49.10	8.39	+Large	70.15	1013	+Large
T	1575 – 1578	197	49.78	24.39	+1.04	71.12	28.31	+1.51
U	1841 – 1846	212	49.28	1.81	+Large	70.40	3.15	+Large
V	1852 – 1856	205	49.53	16.81	+1.95	70.75	17.50	+3.04
W	1969 – 1976	198	49.76	25.51	+0.95	71.08	32.53	+1.19
X	2370 – 2570	201	49.66	4.59	+Large	70.95	10.34	+Large
Y	2305 – 2565	205	49.53	4.29	+Large	70.75	4.90	+Large
Z	2301 – 2561	204	49.56	5.06	+Large	70.80	16.29	+3.35

* Allowable stresses for sections “K” through “R” are taken from Type XM-19 stainless steel; all others are from Type 304 stainless steel.

2.10.11 Hand Calculation for the 30-Foot Drop Accident Conditions

2.10.11.1 Top End Drop

The hand-calculation method is used to evaluate the stresses for a 30-foot top end drop condition. Only the stress at the midsection of the cask is evaluated. The hand-calculated stress results can be used to verify the accuracy of the finite element calculations and vice versa.

The NAC-LWT cask is considered as a hollow, circular cylinder, which contains the inner, lead and outer shells, and is subjected to a 30-foot top end impact as shown in Figure 2.10.11-1. A free body diagram (shown below) is provided for the portion of the cask above section "P-P," which is located 100.5 inches from the cask bottom.

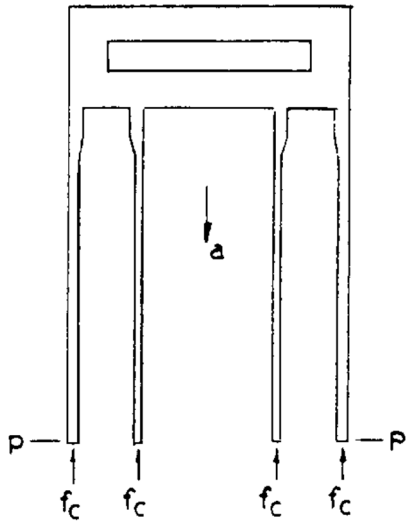

The axial (compressive) stresses developed in the cask at section "P-P" are calculated by using the following formula:

$$f_c = \frac{W}{A}$$

where:

W = cask weight above sections "O-O" and "P-P," but not including the weight of the lead shell (Figure 2.10.11-1)

= 5,440 lbs

A = cross-sectional areas of the stainless steel inner and outer shells

= π(14.30752 - 13.18752 + 7.43752 - 6.68752)

= 130.03 in^2

W is obtained from the following calculations. Table 2.10.11-1 presents the geometric dimensions of the cask.

$W = W_9 + W_8 + W_7 + W'_6 + W'_4$ (W'_4 through W_9 are the weights of components 4 through 9 as shown in Figure 2.10.2-5.)

where:

$W_9 = \pi \times 10.375^2 \times 3 \times 0.41$

$= 416$ lbs

$W_8 + W_7 = (\pi \times 14.3075^2 \times 10.5 - \pi \times 10.3752 \times 3)(0.288)$

$= 1{,}653$ lbs

$W'_6 = \pi (14.307^2 - 13.1875^2)(100.5 - 10.5)(0.288)$

$= 2{,}508$ lbs

$W'_4 = \pi (7.4375^2 - 6.6875^2)(100.5 - 10.5)(0.288)$

$= 863$ lbs

The compressive stress at the midpoint (±) of the cask resulting from its mass is:

$$f_c = \frac{-5440}{130.03} = -41.84 \text{ psi}$$

This compressive stress results from a 1 g cask weight load. To account for a 30-foot top end drop condition, multiply this result by 76.8 g. The 76.8 g is derived from the multiplication of 60 g (Table 2.6.7-34) by the factor 48,000/37,519, where 48,000 lbs is the cask body design weight and 37,519 lbs is the model weight.

$f_c = 76.8 (-41.84) = -3{,}213$ psi

The compressive stresses[1] at sections "O-O" and "P-P" calculated by the finite element method are -3,260 psi and -2,990 psi, respectively, with an average of -3,125 psi. The difference between the hand calculation and the finite element stresses is 3 percent, which compares favorably as expected.

2.10.11.2 Side Drop

The hand-calculation method is used to evaluate the stresses for the 30-foot side drop condition. The hand-calculated stress results can be used to verify the accuracy of the finite element

[1] Table 2.10.10-4 documents the compressive stresses, SY, for sections "O-O" and "P-P."

calculations and vice versa. Because of the limitation of the hand-calculation method, only the stress results at the most critical region (the central portion of the cask outer shell) are evaluated.

The cask structure is considered as a hollow, circular, cross-sectional beam that is simply supported at each end of the cask centerline and is subject to internal pressure and impact and inertial loads. The classical beam theory method is used to calculate the bending stress resulting from impact and inertial loads for a 30-foot side drop condition:

$$\sigma_b = \frac{M_c}{I_{eff}}$$

where:

σ_b = bending stress

M = bending moment in the cask

C = radial distance between the cask centerline and the selected point (location) in the cask

I_{eff} = effective moment of inertia of the cask

The geometric dimensions of the cask are:

Inner Shell (I.S.)	r_i	=	inner radius = 6.6875 inches
	r_o	=	outer radius = 7.4375 inches
	E_s	=	Young's modulus (stainless steel)
		=	27.3×10^6 psi at 250°F
Lead	r_i	=	inner radius = 7.4375 in
	r_o	=	outer radius = 13.133 in
	E_L	=	Young's modulus (lead)
		=	2.0×10^6 psi at 250°F
Outer Shell (O.S.)	r_i	=	inner radius = 13.188 in
	r_o	=	outer radius = 14.387 in
	E_s	=	Young's modulus (stainless steel)
		=	27.3×10^6 psi at 250°F

The effective bending rigidity, $(EI)_{eff}$, of the cask is:

$$(EI)_{eff} = (EI)_{I.S.} + (EI)_{Lead} + (EI)_{O.S.}$$

$$\frac{\pi}{4}[(7.4375^4 - 6.6875^4)(27.3 \times 10^6)$$

$$+ (13.1334 - 7.43754)(2.0 \times 10^6)$$

$+ (14.3874 - 13.1884)(27.3 \times 10^6]$

$= 3.347 \times 10^{11}$ lb-in^2

The effective moment of inertia for the cask is:

$$I_{eff} = \frac{(EI)_{eff}}{E_s} = \frac{3.347 \text{ x } 10^{11}}{27.3 \text{ x } 10^6} = 12{,}259 \text{ in}^4$$

The bending moments induced in the cask as a result of the 30-foot side drop condition are calculated by considering the following:

- The cask weight without content (48,000 lbs), which is assumed to be uniformly distributed over the entire cask length of 199.75 inches;
- The content weight (4,000 lbs), which is uniformly distributed over the entire cask cavity length of 178 inches; and
- Impact loads (totaling 52,000 lbs), which are assumed to be uniformly distributed over the 12 inches at each end of the cask.

2.10.11.2.1 Case A

The bending moments at locations "J," "L," "N," "P," "R" and "T" in the cask are a result of the cask weight due to a 1 g load.[1]

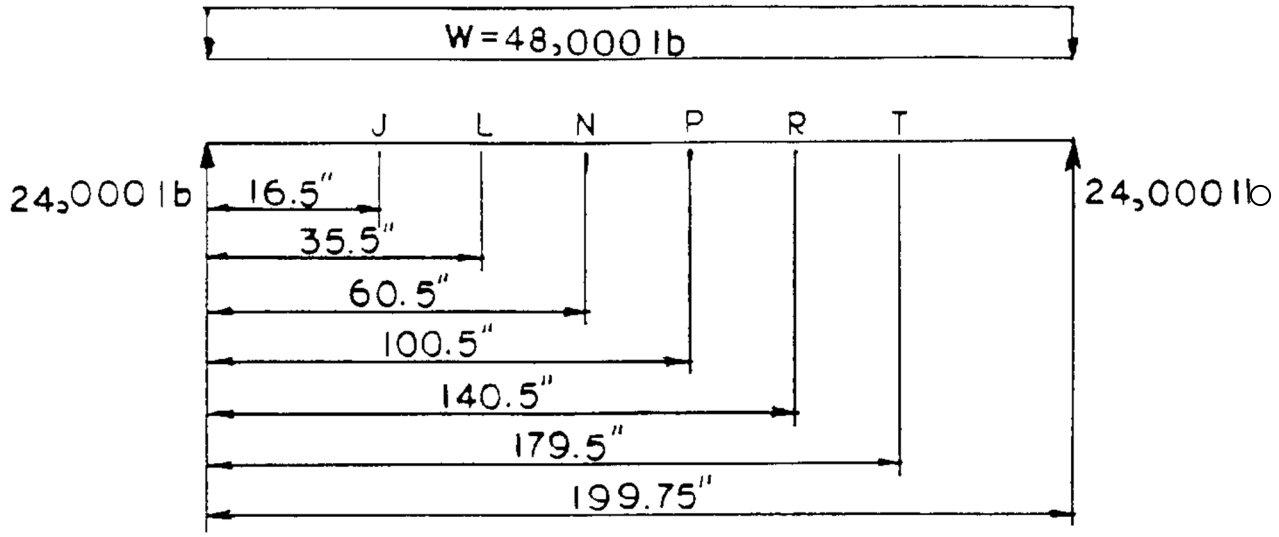

$$w = \text{cask weight/total cask length } \frac{48{,}000}{199.75} = 240.30 \text{ lb/in}$$

[1] The g load factor for the 30-foot side drop condition is 49.7 g.

$$M_J = 24{,}000\,(16.5) - \frac{w(16.5^2)}{2} = 363{,}289\ \text{in} - \text{lb}$$

$$M_L = 24{,}000\,(33.5) - \frac{w(33.5^2)}{2} = 669{,}161\ \text{in} - \text{lb}$$

$$M_N = 24{,}000\,(60.5) - \frac{w(60.5^2)}{2} = 1{,}012{,}220\ \text{in} - \text{lb}$$

$$M_P = 24{,}000\,(100.5) - \frac{w}{2}(100.5^2) = 1{,}198{,}453\ \text{in} - \text{lb}$$

$$M_R = 24{,}000\,(140.5) - \frac{w(140.5^2)}{2} = 1{,}000{,}205\ \text{in} - \text{lb}$$

$$M_T = 24{,}000\,(179.5) - \frac{w(179.5^2)}{2} = 436{,}731\ \text{in} - \text{lb}$$

2.10.11.2.2 Case B

The bending moments at locations "J," "L," "N", "P," "R" and "T" are a result of the impact and content load due to a 1 g load.[1]

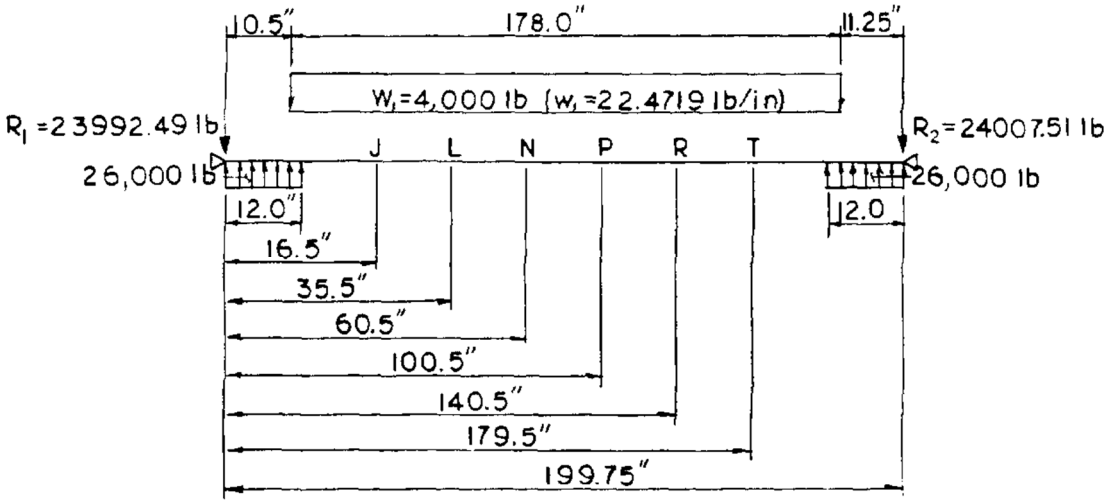

w_1 = content weight/cask cavity length = $\frac{4000}{178} = 22{,}472\ \text{lb/in}$

R_1 = reaction force at cask left end resulting from the impact and content loads

[1] The g load factor for the 30-foot side drop condition is 49.7 g.

$$M_J = 26{,}000\ (10.5) - 23{,}992.49\ (16.5) - \left(\frac{22.472}{2}\right)(6^2) = -123{,}281\ \text{in}-\text{lb}$$

$$M_L = 26{,}000\ (29.5) - 23{,}992.49\ (35.5) - \frac{w_1}{2}(25^2) = -91{,}756\ \text{in}-\text{lb}$$

$$M_N = 26{,}000\ (54.5) - R_1\ (60.5) - \frac{w_1}{2}\ (50^2) = -62{,}636\ \text{in}-\text{lb}$$

$$M_P = 26{,}000\ (94.5) - R_1\ (100.5) - \frac{w_1}{2}\ (90^2) = -45{,}256\ \text{in}-\text{lb}$$

$$M_R = 26{,}000\ (134.5) - R_1\ (140.5) - \frac{w_1}{2}\ (130^2) = -63{,}832\ \text{in}-\text{lb}$$

$$M_T = 26{,}000\ (173.5) - R_1\ (179.5 - \frac{w_1}{2}\ (169^2) = -116{,}562\ \text{in}-\text{lb}$$

The bending stresses in the cask are calculated by adding the bending moments resulting from cases A and B and by using the classical beam theory method:

$$\sigma_b = \frac{M_J C_i}{I_{eff}}$$

where:

M_J = summation of bending moments at location "J" as a result of Case A and Case B and so forth

C_i = radial distance between the cask centerline and the selected point

I_{eff} = 12,259 in^4

Table 2.10.11-2 gives the bending stresses in the cask, at different locations in the inner and outer shell regions, obtained by the above-mentioned hand-calculation method. Table 2.10.11-2 also provides the comparison of the hand-calculated and finite element stress results. At the midsection of the outer shell (location "P2" in Table 2.10.11-2), the bending stresses are 67,236 psi by the hand-calculation method and 68,230 psi by the finite element method. The difference in the stress results is less than 1.5 percent between these two methods. The stress comparison between these two methods is also provided for other locations, denoted as "K" through "O" and "Q" through "R". The average difference in the stress results between these two methods is acceptable.

In conclusion, the comparison is extremely favorable and indicates the following results:

- The finite element model was accurately constructed; the use of higher aspect ratio elements in the central portion of the finite element model does produce accurate stresses in the shells.
- The inertial weight of the cask was adequately represented in the finite element model analysis.

Figure 2.10.11-1 Mathematical Model of NAC-LWT Cask (30-Foot Top End Impact)

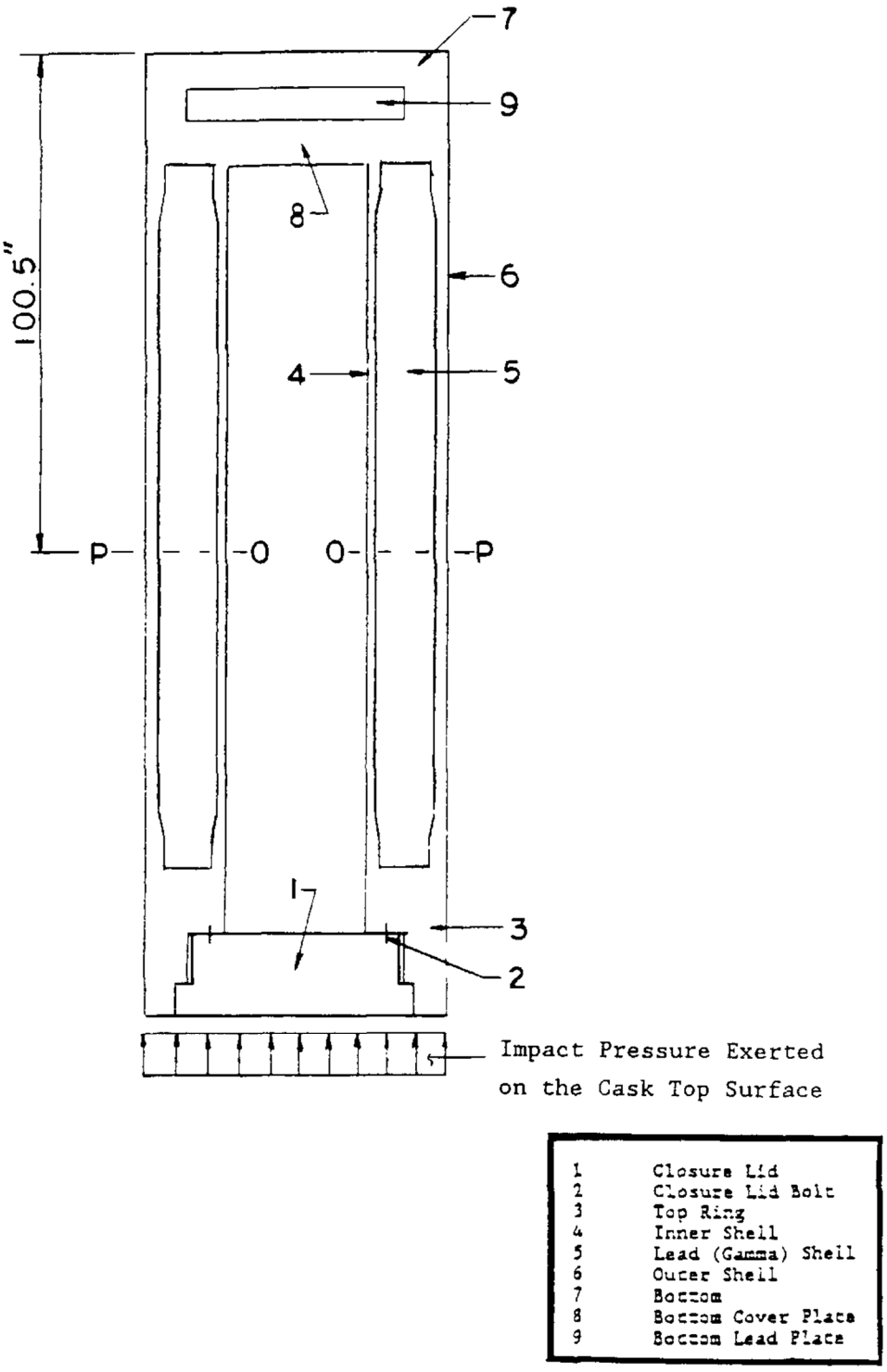

Table 2.10.11-1 Geometric Dimensions of the Cask

	Dimensions
Inner Shell (I.S.)	r_i = inner radius = 6.6875 inches
	r_o = outer radius = 7.4375 inches
	ρ_s = density for stainless steel = 0.288 lb/in^3
Outer Shell (O.S.)	r_i = inner radius = 13.1875 inches
	r_o = outer radius = 14.3075 inches
	ρ_s = density for stainless steel = 0.288 lb/in^3
Lead	ρ_L = density for lead = 0.41 lb/in^3

Table 2.10.11-2 Comparison of the Hand-Calculated and Finite Element Results

Location	C_i	Moments (in-lb)		σ_b (1 g)	Hand-Calculated	Finite[1] Element
		Case A	Case B		σ_b (49.7 g)	σ_b (49.7 g)
I1	6.6875	363,289	-123.281	130.90	6,504	3,820
I2	7.4375	363,289	-123.281	145.91	7,234	6,110
J1	13.188	363,289	-123.281	258.20	12,827	10,060
J2	14.387	363,289	-123.281	281.67	13,993	19,650
K1	6.6875	669,161	-91,756	314.98	15,648	16,700
K2	7.4375	669,161	-91,756	350.31	17,403	19,710
L1	13.188	669,161	-91,756	621.16	30,859	33,280
L2	14.387	669,161	-91,756	677.63	33,664	36,590
M1	6.6875	1,012,220	-62,636	518.01	25,735	25,270
M2	7.4375	1,012,220	-62,636	576.11	28,621	29,010
N1	13.188	1,012,220	-62,636	1021.54	50,750	50,990
N2	14.387	1,012,220	-62,636	1114.42	55,364	55,990
O1	6.6875	1,198,453	-45,256	629.09	31,253	29,220
O2	7.4375	1,198,453	-45,256	699.64	34,758	33,310
P1	13.188	1,198,453	-45,256	1240.58	61,632	61,810
P2	14.387	1,198,453	-45,256	1353.38	67,236	68,230
Q1	6.6875	1,000,205	-63,832	510.81	25,377	26,830
Q2	7.4375	1,000,205	-63,832	568.09	28,223	30,770
R1	13.188	1,000,205	-63,832	1007.33	50,044	50,030
R2	14.387	1,000,205	-63,832	1098.91	54,594	55,920
S1	6.6875	436,731	-116,562	174.65	8,677	6,330
S2	7.4375	436,731	-116,562	194.25	9,650	9,950
T1	13.188	436,731	-116,562	344.43	17,111	20,030
T2	14.387	436,731	-116,562	375.75	18,667	28,310

[1] The finite element stress values are taken from the SY stress category in Table 2.10.10-38.

2.10.12 Impact Limiter Force-Deflection Curves and Data

2.10.12.1 Potential Energy and Cask Drop Motion

The Code of Federal Regulations, 10 CFR 71, states that analyses must show that a licensed spent-fuel shipping cask is capable of sustaining a normal condition test (a 1-foot free drop) followed by a hypothetical accident test (a 30-foot free drop). This has conservatively been interpreted to mean, impact limiters must be designed to absorb or dissipate no less than the potential energy of the cask if dropped, in any orientation, from 31 feet onto an unyielding surface. When at rest on the unyielding surface (a datum surface), the cask has zero potential energy.

The distance through which the cask free falls is measured from the nearest point on the cask (either impact limiter) to the unyielding surface. This assures that center of gravity will translate a minimum of 31 feet before an impact limiter contacts the unyielding surface. Additionally, it is assumed that the cask will always seek a stable orientation after contacting the unyielding surface on both impact limiters. After an end drop, for example, the cask is assumed to tip over and reach a stable horizontal orientation.

Potential energy is calculated by multiplying the weight of the cask by the height to which the center of gravity of the cask was raised. The design weight of the cask, contents and impact limiters is 52,000 lbs. For these analyses, the NAC-LWT cask is assumed to be symmetric about the three major axes; therefore, the center of gravity is at the midpoint of the longitudinal centerline of the cask. The center of gravity is a datum point at which all the mass (weight) is located.

2.10.12.1.1 Translational Motion – Side Drop

Figure 2.10.12-1 shows the cask in the horizontal or side drop position. When released in this orientation from 31 feet (372 inches), the cask has 1.934×10^7 inch-pounds of potential energy. As shown by the heavy dashed lines in Figure 2.10.12-1, the cask translates vertically on an unyielding surface. The deceleration forces created when crushing the impact limiters opposes the translational motion of the cask. Impact limiter crushing continues until all the potential energy from the cask is absorbed; thereby, decelerating the cask to rest. Both impact limiters crush simultaneously in a side drop; therefore, once at rest, the cask is in a stable orientation.

In a side drop, the cask experiences only vertical, translational motion. Ignoring the energy stored elastically in the impact limiter during deceleration, the dissipated energy equals the initial potential energy of the cask. During the side drop, both impact limiters engage in

simultaneously decelerating the cask; therefore, each impact limiter absorbs the "energy absorbed by the first limiter" (El) as shown in Table 2.10.12-1.

2.10.12.1.2 Translational and End-Rotational Motion – End Drop

Figure 2.10.12-2 shows the cask in the end drop position. End drops are drop angles that range between 0 degrees (end drop) and 15 degrees (corner drop) and characteristically show translational and end-rotational motion. As in a side drop, a cask in the end drop position translates vertically through 31 feet and decelerates on the unyielding surface. Deceleration forces acting on the bottom of the cask are symmetric and uniform; therefore, the cask remains upright during deceleration and after the cask has come to rest. The energy absorbed by the single impact limiter while decelerating the cask (El, Table 2.10.12-1), equals the initial potential energy of the cask; however, the center of gravity is approximately 116.4 inches above the unyielding datum surface. The cask is metastable when resting on the crushed impact limiter. The cask has 6.04×10^6 inch-pounds more potential energy (EP) after the cask has come to rest. It has been assumed that the cask will seek a stable state, and a force is applied to the cask causing it to rotate on its end (crushed limiter). By tipping over, the cask will reach a stable orientation. The potential energy will be absorbed by the second impact limiter, as if the cask were in a side drop.

2.10.12.1.3 Translational, End-Rotational, Mid-Point Rotational Motion – Oblique Drops

Figure 2.10.12-3 shows the cask in an oblique drop orientation. Oblique drops are drop angles that range between 15 degrees (corner drop) and 90 degrees (side drop). The cask translates vertically after it is released, to the unyielding surface. The impact limiter, which contacts the unyielding surface first, decelerates the lower end of the cask, and brings its velocity to zero. Energy absorbed by the first limiter (El) decelerates the lower end of the cask to rest. The cask is now able to rotate or pivot on the stopped lower end. However, the energy absorbed by the first impact limiter is less than the initial energy of the cask, leaving the energy remaining (ER) to be absorbed by the second impact limiter.

Simultaneously during deceleration of the first or lower end of the cask, two other actions are taking place. First, the upper or free end of the cask rotates around the stopped end of the cask and continues to accelerate due to gravity. Second, a component of the deceleration force causes a torque perpendicular to the longitudinal axis of the cask, resulting in the cask beginning to rotate around the center of gravity. Both "actions" increase the energy to be absorbed by the second impact limiter.

During deceleration of the lower end of the cask, the upper end continues to accelerate while translating vertically because no deceleration force is applied to it. Newton's first law, "Every

body persists in its state of rest or of uniform motion in a straight line unless it is compelled to change that state by forces impressed on it..." (Resnick, page 75) requires the upper end to continue to translate vertically and continue to be accelerated by gravity until the second impact limiter contacts the unyielding surface. However, because the cask body is rigid, when the lower end of the cask stops, the upper end of the cask continues translating and the cask begins to pivot on the crushed impact limiter. This continues until the second impact limiter contacts the unyielding surface and significant deceleration forces are generated.

The second action, occurring while the lower end of the cask is decelerating, is a vector component of the deceleration force that causes the cask to rotate around its center of gravity. The deceleration force is always perpendicular to the unyielding surface. Depending on the cask angle, the deceleration force can be vectorially broken down into a force parallel to the longitudinal axis of the cask and a component perpendicular to the cask longitudinal axis. The perpendicular force component acts at a distance of approximately half the cask length. A torque, equivalent to the perpendicular force multiplied by half the cask length, attempts to spin the cask around the center of gravity. The "spin" or rotational velocity can also be thought of as rotational kinetic energy that must be absorbed by the second impact limiter. A detailed explanation of the torque and rotational kinetic energy is presented in Appendix 2.10.4.

Finally, the third component of energy that must be absorbed by the second impact limiter is the energy stored elastically in the first impact limiter. The elastically stored energy causes a force perpendicular to the unyielding surface to augment the rotational velocity of the cask and "lift" the first impact limiter, which is at rest.

Oblique drops have four distinct quantities of energy that need to be absorbed to bring the cask to rest in a stable, horizontal orientation.

- Potential energy absorbed by the impact limiter to strike the unyielding surface first (El), which brings the translational velocity of the lower end of the cask to zero. The remaining potential energy (ER), also needs to be absorbed.
- Potential energy (EP), of the center of gravity, which results from its height above the unyielding surface.
- Rotational kinetic energy given to the cask as a result of the deceleration force and elastically stored energy (ES) from the impact that brings the lower end of the cask to rest.

2.10.12.2 Potential to Kinetic Energy Conversion

Just before the release, the cask is at rest and at a given drop angle. The uniform gravitational force constantly acts on the cask and when released, accelerates the cask at a constant rate. Gravitational acceleration (g) equals 32.2 ft/sec^2. No other forces act on the cask as it falls; therefore, no additional energy is supplied to the cask that must be dissipated by the impact

limiters. Uniform forces acting on the cask mean the drop angle will not change while the cask is falling. Since energy can not be created or destroyed, the initial potential energy of the cask is converted to kinetic energy. To calculate the velocity at the time the impact limiter contacts the unyielding surface, energy conversion is used in the following way:

PE = KE

or

$$mgh = \frac{1}{2}mv^2$$

Solving for v:

$$v = (2gh)^{0.5}$$

The initial velocity (at the time crushing begins) is a constant and is only a function of drop height. For a drop height of 31 feet, the velocity of the cask at the time an impact limiter contacts the unyielding surface is 44.7 feet/second.

The correlation between potential energy and kinetic energy is the foundation on which the computer program RBCUBED is based. Translational velocity (translational kinetic energy), which the cask gained while free falling or while pivoting on end (oblique drop), is directly attributable to the initial potential energy of the cask. Rotational velocity (rotational kinetic energy) is created during an oblique drop while decelerating the lower end of the cask; elastically stored energy is a small, calculable quantity of energy. When it is shown that the total energy absorbed is at least equal to the initial potential energy, the rotational kinetic energy and the stored energy of the cask, then the cask is at rest.

2.10.12.3 Deceleration Forces and Energy Absorption Calculation

The following quotation describes how an aluminum honeycomb impact limiter works: "...the kinetic energy of a body in motion is equal to the work it can do in being brought to rest..." (Resnick, page 75). The source of kinetic energy in a cask was established in Section 2.10.12.2. Work done by crush force is the magnitude of that force multiplied by the distance (deformation) through which the crush occurs. The units of work are in inch-pounds.

The NAC-LWT cask impact limiters are right cylindrical aluminum shells filled with aluminum honeycomb. Aluminum honeycomb is used to dissipate the kinetic energy of the cask. "Honeycomb" describes cells created when multiple corrugated thin aluminum sheets are bonded together. The honeycomb cells are designed to crush when a nominal force per unit area is applied to the honeycomb. Honeycomb is anisotropic. Honeycomb shows nominal crush strength in the plane, parallel with the corrugations and a greatly reduced crush strength

perpendicular to the corrugations. Aluminum honeycomb is manufactured in batch blocks and tested to ensure that the crush strength is within specified tolerances. Wedges of tested honeycomb are bonded together giving the impact limiter isotropic crush strength for all drop angles between 0 degrees (end drop) and 90 degrees (side drop). A thin aluminum exterior skin is bonded and seal welded to the honeycomb to prevent cosmetic and contamination damage to each impact limiter.

The aluminum honeycomb crushes because it is trapped between the cask and the unyielding surface. The initial energy (PE) of the cask will have an equivalent amount of kinetic energy (KE) just before the impact limiter contacts the unyielding surface. When the limiter contacts the unyielding surface, it immediately comes to rest; however, the cask continues to move into the impact limiter until it is opposed by a force vector. To explain the work done in stopping the cask, an illustrative example of the end drop is presented:

The cask is assumed to have been dropped 8.8 inches; PE = KE = 456,000 inch-pounds; cask velocity when the limiter contacts the unyielding surface is 6.9 feet/second (82.5 in/sec).

The cask is a rigid structure and each end has an area of approximately 651 square inches. Nominal crush strength of the honeycomb material is 3,500 psi. The cask is rigid and isolates ("backs") the honeycomb material that effectively stops the cask from that which does not. The force required to crush the backed honeycomb is 2.28×10^6 pounds. When the backed honeycomb crushes 0.1 inch, 228,000 inch-pounds of work is performed:

$$W = (F)(d)$$

where:

$F = 2.28 \times 10^6$ lbs

$d = 0.1$ in

Using the definition of work and Newton's second law, F = ma, yields the following derivation:

$$W = \frac{1}{2}mv^2 - \frac{1}{2}mv_o^2$$

where:

W = work performed on a particle, in-lb (Work performed on the cask by the honeycomb is negative.)

m = mass of the cask weight of the cask divided by the gravitational constant 32.2 ft/sec^2, lbf*sec^2/ft

v = velocity of the cask after the work is performed, ft/sec

v_o = initial velocity of the cask, ft/sec

Solving for the velocity after an incremental amount of work has been performed:

$$v = \sqrt{\frac{2W}{m} + v_o^2}$$

Substituting for W, m, v_o and adjusting for correct units, the cask velocity after the first crush increment is 4.91 feet/second. Repeating this analysis for another 0.1-inch increment, shows that the cask velocity diminishes to 0.76 feet/second, and after another fraction of a crush increment, the cask is stopped.

In summary, the force (a vector quantity) that is created by crushing the honeycomb opposes the velocity of the cask, which is also a vector quantity. Crushing an incremental amount of honeycomb is a finite quantity of work performed on the cask, decreasing its velocity and kinetic energy. Once the kinetic energy is completely dissipated, the cask velocity equals zero.

RBCUBED, the impact limiter computer program used to design the aluminum honeycomb impact limiters, functions in exactly the same way as the illustrative example. Cask geometry and weight, drop angle, crush increment, honeycomb crush strengths, honeycomb lock-up stroke and honeycomb geometry are input to the program. The computer calculates an initial velocity (as the limiter touches the unyielding surface), a backed area engaged in crushing, a crush force, the energy absorbed for a crush increment, the elapsed crush time and the cask velocity at the end of the crush increment. The computation cycle is repeated until all the kinetic energy is absorbed and the end of the cask is stopped.

RBCUBED calculates the energy dissipation necessary to stop the translational motion of the end of the cask that first contacts the unyielding surface (both limiters in the side drop). In Table 2.10.12-1, the energy dissipated while reducing the translational velocity of the first end to contact the unyielding surface is the energy absorbed by the first limiter (El). If El is less than the initial kinetic energy of the cask, the difference is reported by RBCUBED as "remaining energy," and shown in Table 2.10.12-1 as energy remaining after first impact (ER).

In oblique drops, at the instant the translational velocity of the first end to contact the unyielding surface is zero, the cask is in position 2 in Figure 2.10.12-3 (Rotation of the cask around its mid-point is addressed in Appendix 2.10.4). The center of gravity of the cask has a calculable potential energy, which is the energy that increases the velocity of the cask as it pivots on the crushed ("first") impact limiter. In Table 2.10.12-1, the potential energy, which equals the velocity gain as the cask pivots on end, is the potential energy of cask after first impact (EP).

The aluminum honeycomb dissipates energy while crushing, but elastically stores a small amount of the total energy dissipated. The quantity of elastically stored energy was determined by quasi-static testing of the scale model impact limiters (Section 2.10.12.5). The quantity of stored energy ranged between 5.3 percent (side drop) to 9.7 percent (end drop) of the total energy

dissipated by the limiters tested. As stated above, once all the kinetic energy (El) has been absorbed, the stored energy is released. The force, which the stored energy creates, tends to augment the torque attempting to cause the cask to spin around the center of gravity. This analysis has conservatively ignored the cask spinning and elected to absorb the energy in the second impact limiter. In Table 2.10.12-1, the elastically stored energy is the energy stored in the first limiter and absorbed in the second limiter while in the side drop orientation (ES).

In summary, lower end translational velocity is reduced to zero by absorbing an amount of energy (El). The cask will pivot over and absorb the remaining potential energy (ER), the potential energy due to rotation to a horizontal orientation (EP) and the elastically stored energy (ES) all in the second limiter in the side drop orientation. Table 2.10.12-1 shows that the four components of energy are absorbed by both impact limiters for drop angles from 0 degrees to 90 degrees.

2.10.12.4 RBCUBED Calculated Force-Deflection Graphs

Figure 2.10.12-4 through Figure 2.10.12-17 show the deceleration force as a function of crush depth, calculated using RBCUBED for the full-scale cask. Each graph is for either the top or bottom limiter, showing the plus and minus tolerance energy absorption profile. Graphs for the top end (0°), oblique (60°) and side (90°) are broken into simple geometric shapes to facilitate checking of the energy absorbed and maximum force. Quasi-static tests substantiate RBCUBED calculated values for the quarter-scale model limiters, as described in Section 2.10.12.5.

2.10.12.5 Quarter-Scale Model Quasi-Static Force-Deflection Tests

Quasi-static force-deflection tests were performed on quarter-scale model impact limiters used in drop testing a model earlier at Oak Ridge National Laboratories. Limiter samples were selected for a particular quasi-static test based on the limiter having no damage for test orientation. Three limiter orientations - 0 degrees, 15 degrees, 90 degrees - were tested. While each limiter tested was being compressed, two calibrated linear variable differential transformers (LVDT) mechanically attached to test fixtures provided data to an X - Y recorder, which plotted crush force as the impact limiter deformed. Deformation of the limiter proceeded well into honeycomb lock-up. As the force on the limiter decreased after the limiter locked up, force and deflection continued to be monitored, revealing the amount of elastically stored energy. Based on the results of the quasi-static tests, the energy absorption capacity of each limiter is presented in Figure 2.10.12-18 through Figure 2.10.12-20. The static force for each data point is multiplied by 1.196, a static to dynamic scaling factor, enabling comparison with RBCUBED computed values. The scaling factor is an average value established by manufacturers' tests. Figure 2.10.12-18 through Figure 2.10.12-20 show for comparison, the dynamically scaled forces and

RBCUBED computed values. These figures also clearly show the energy absorption capacity of each limiter and the potential energy absorption margins.

Figure 2.10.12-18 through Figure 2.10.12-20 also show the maximum deceleration forces that occur for each of the drop angles. RBCUBED calculated force values are higher in all cases except the end drop. Closer examination of the crushed impact limiter, quasi-statically tested in the end drop orientation, revealed a shearing previously unaccounted for, causing 10 percent higher forces than calculated by RBCUBED. The shearing and shear force generation occurs simultaneously with crushing, and is a small force compared with the crush force. Figure 2.10.12-21 shows a cross section of the crushed impact limiter, with the shear plane clearly visible. Table 2.10.12-2 compares the average maximum/peak forces and g-loads calculated using RBCUBED with corresponding values from each of the quasi-static tests. Force margins are also shown in Table 2.10.12-2 along with stress (structural) margins assuring that structural margins are satisfactory.

Figure 2.10.12-1 Side Drop (θ = 90°)

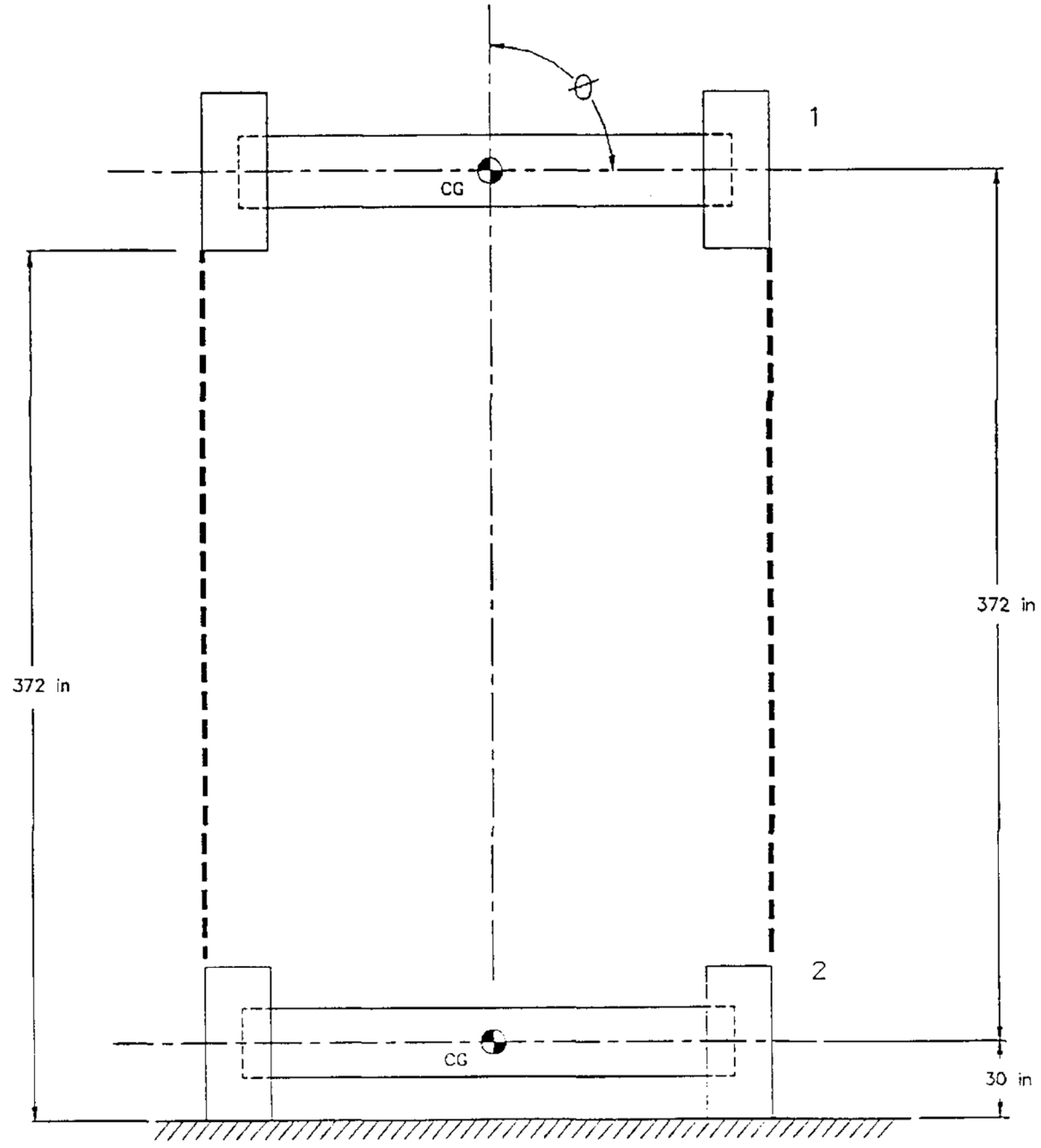

Figure 2.10.12-2 End Drop ($0° \leq \theta < 15°$)

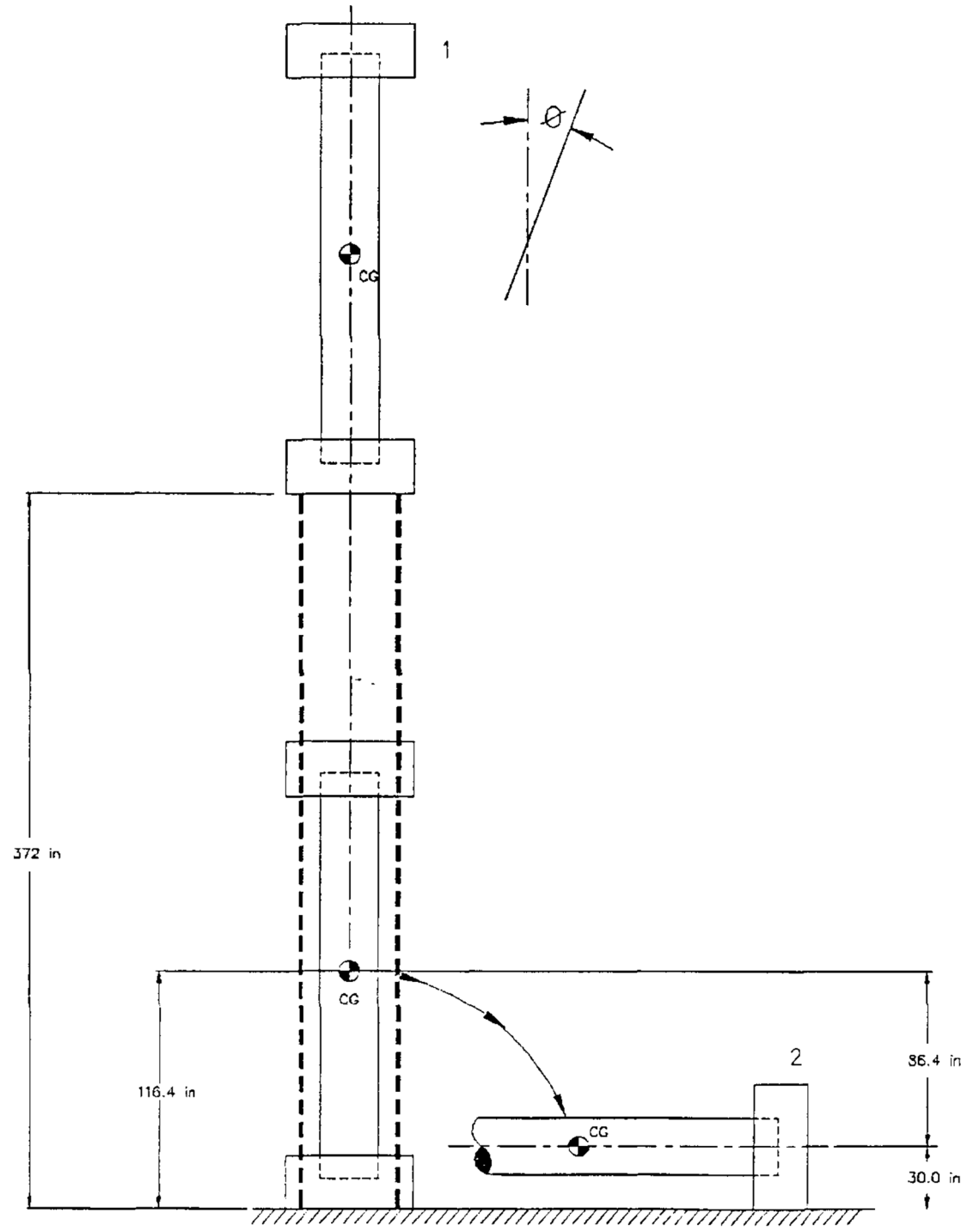

Figure 2.10.12-3 Oblique Drop (15° ≤ θ < 90°)

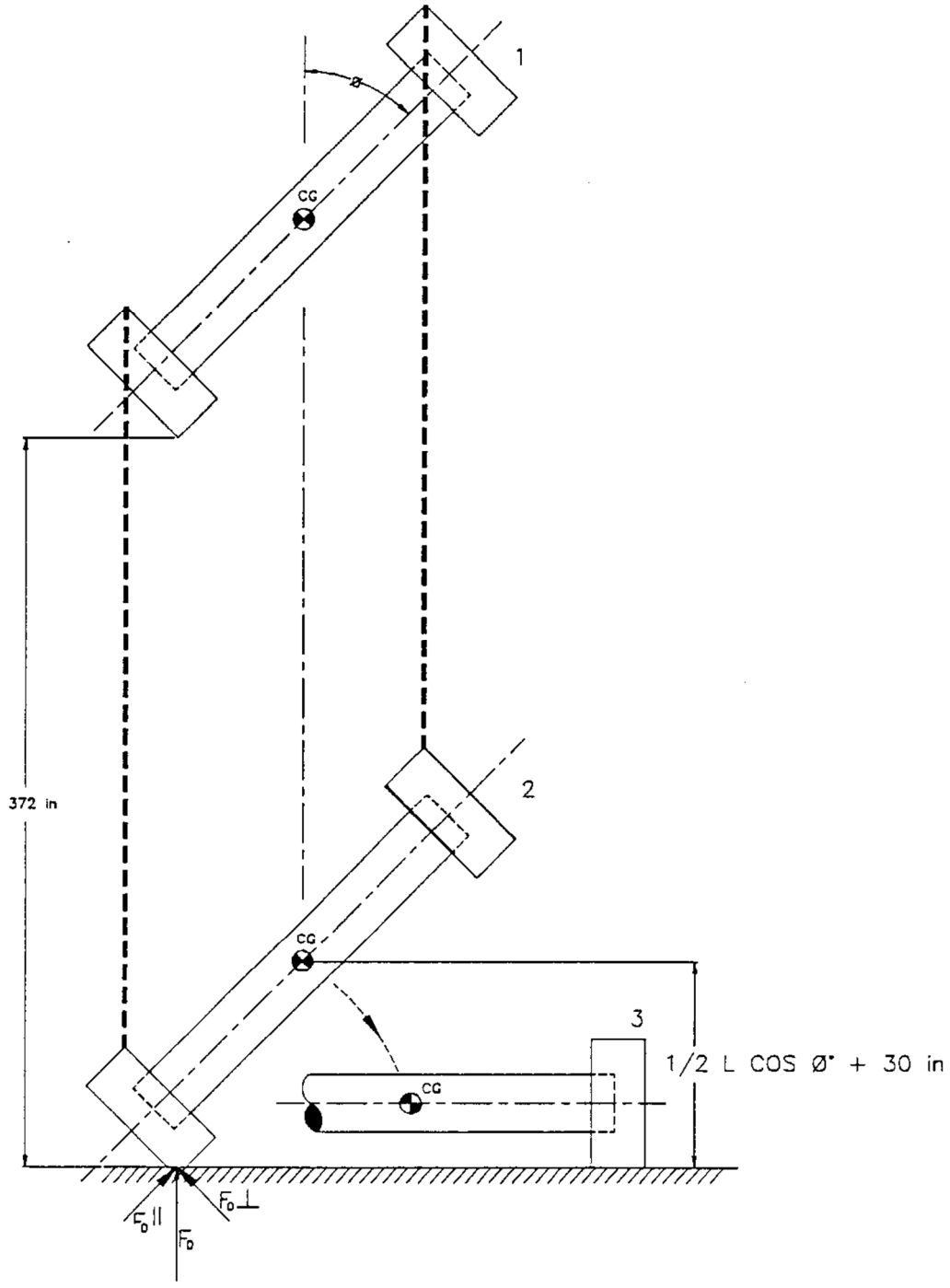

Figure 2.10.12-4 Force Deflection Graph (0-Degree, Top End Drop)

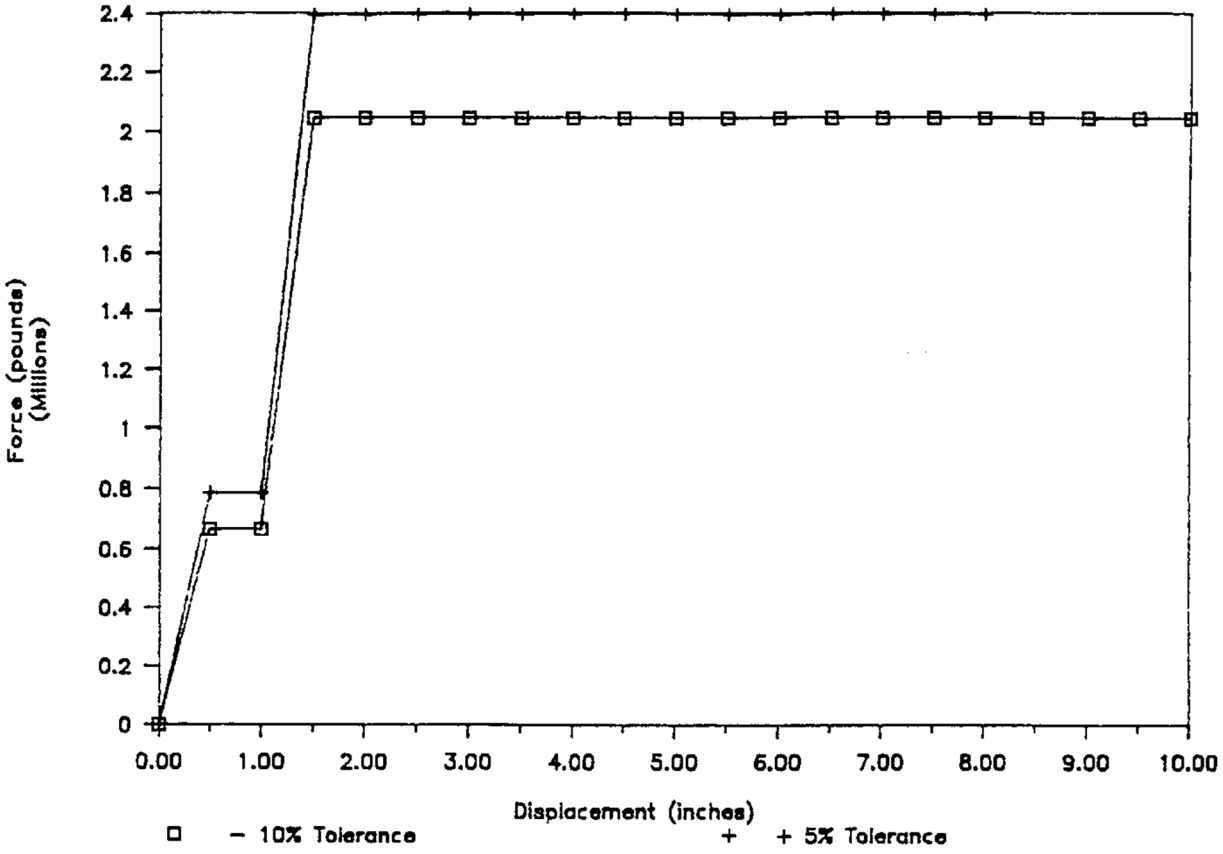

Figure 2.10.12-5 Force-Deflection Graph (0-Degree, Bottom-End Drop)

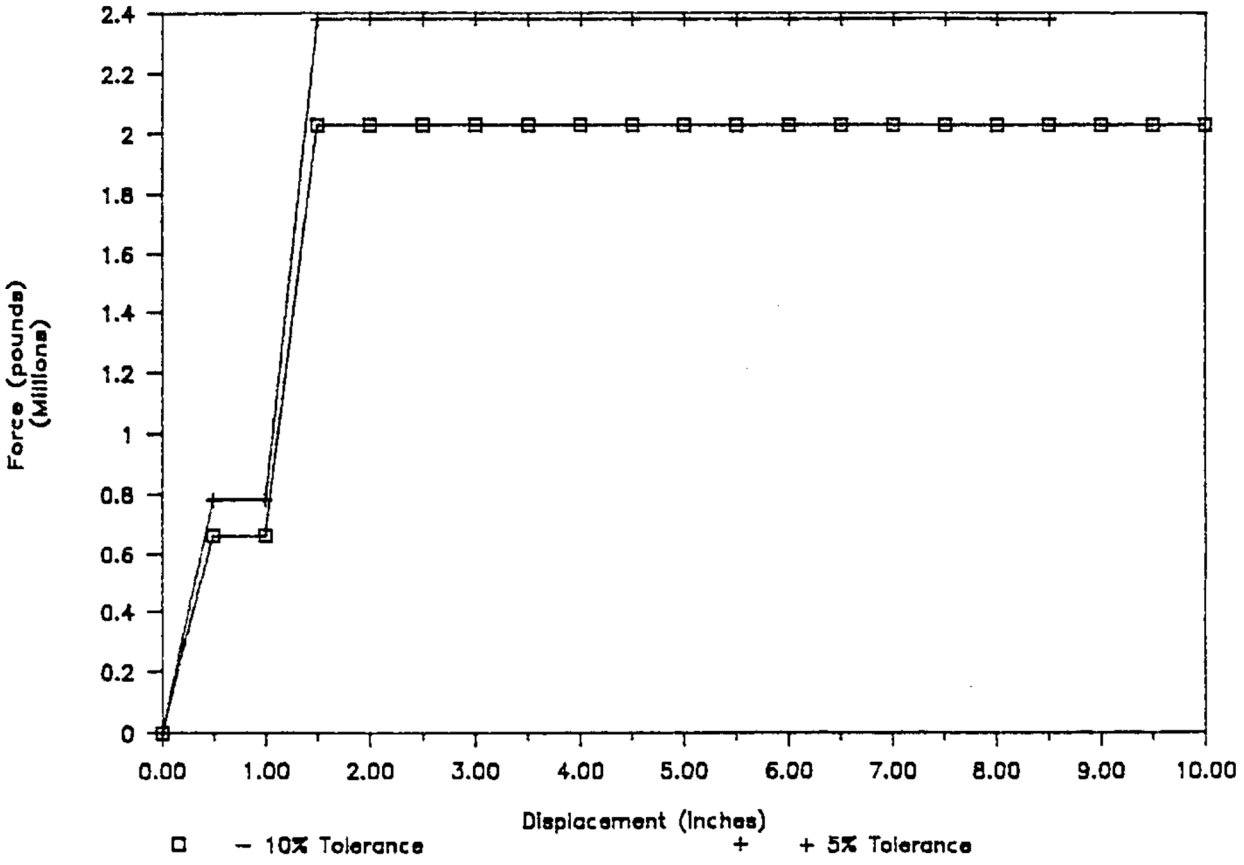

Figure 2.10.12-6 Force-Deflection Graph (15.74-Degree, Top Corner Drop)

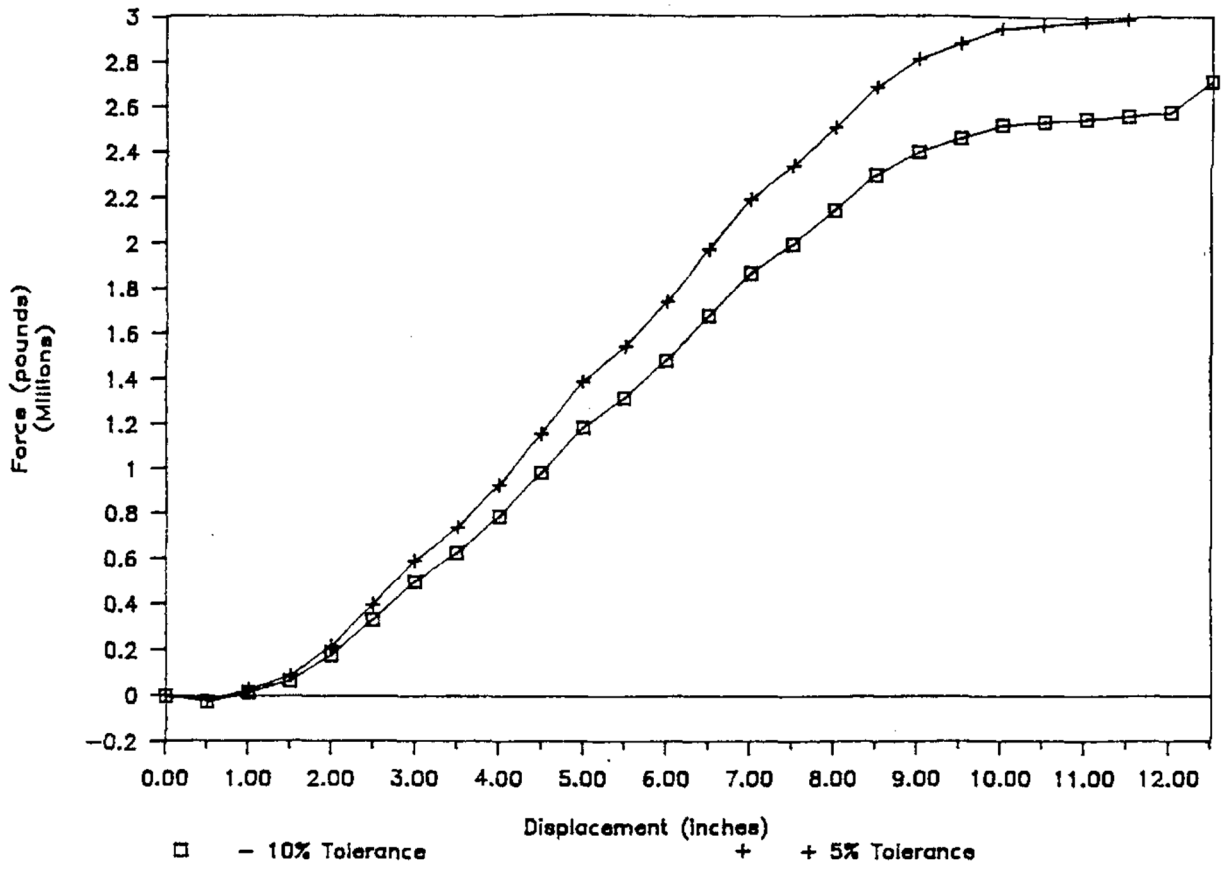

Figure 2.10.12-7 Force-Deflection Graph (14.5-Degree, Bottom Corner Drop)

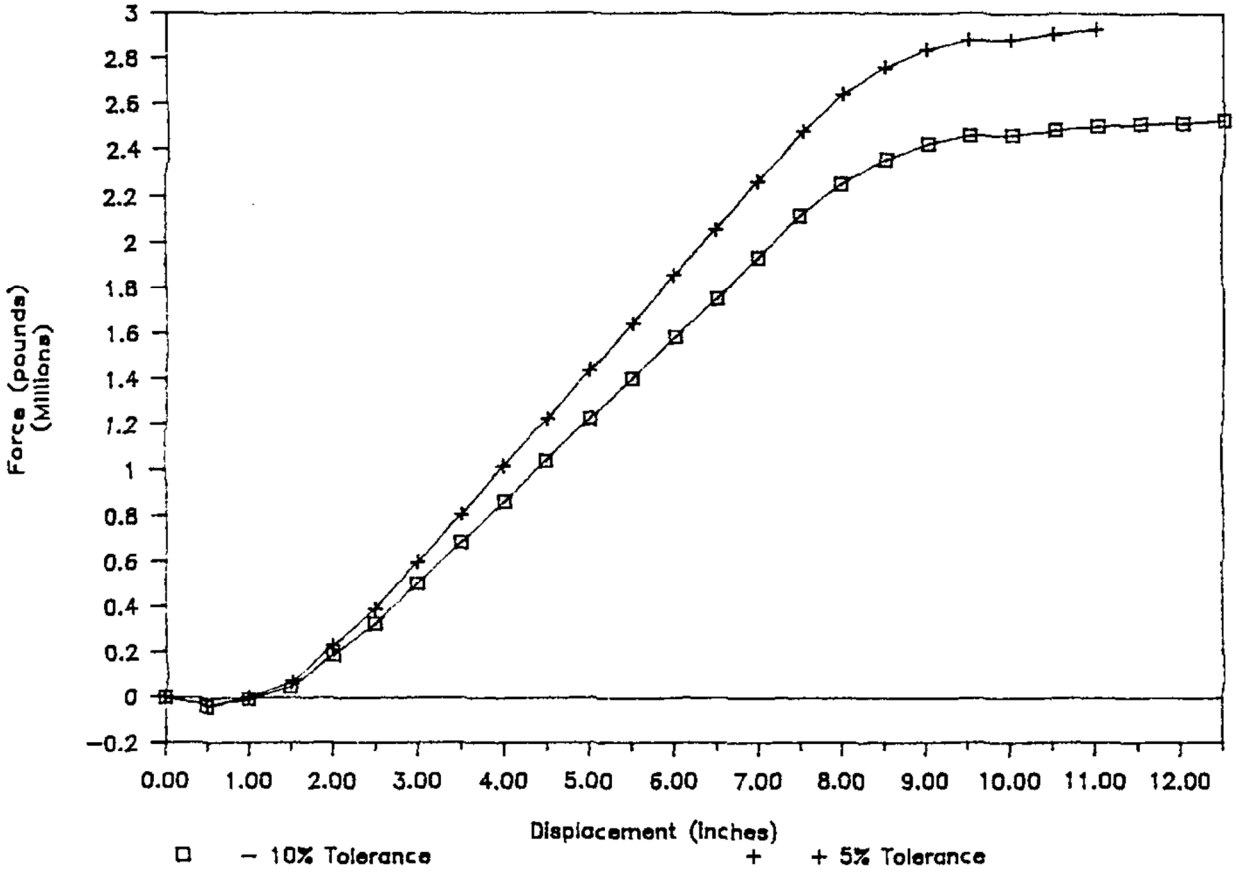

Figure 2.10.12-8 Force-Deflection Graph (30-Degree, Top Oblique Drop)

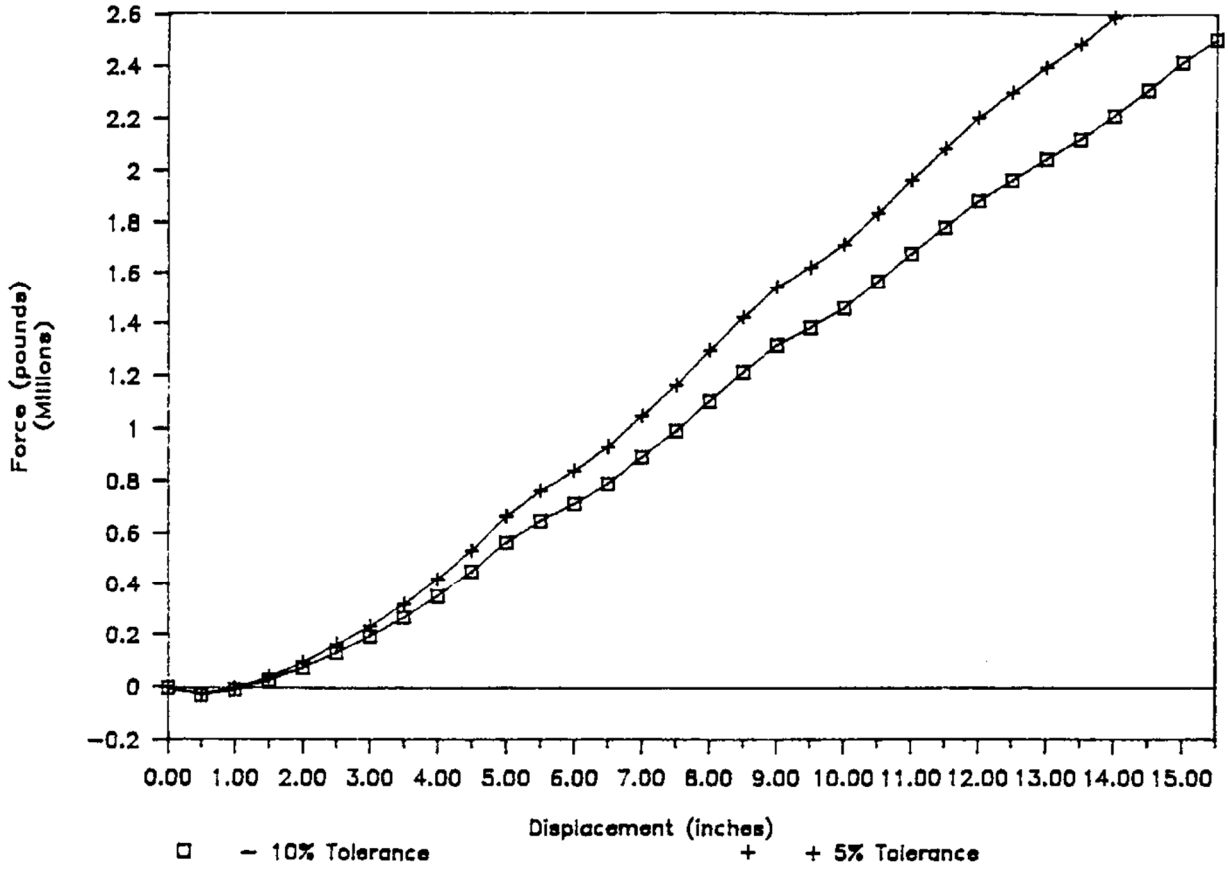

Figure 2.10.12-9 Force-Deflection Graph (30-Degree, Bottom Oblique Drop)

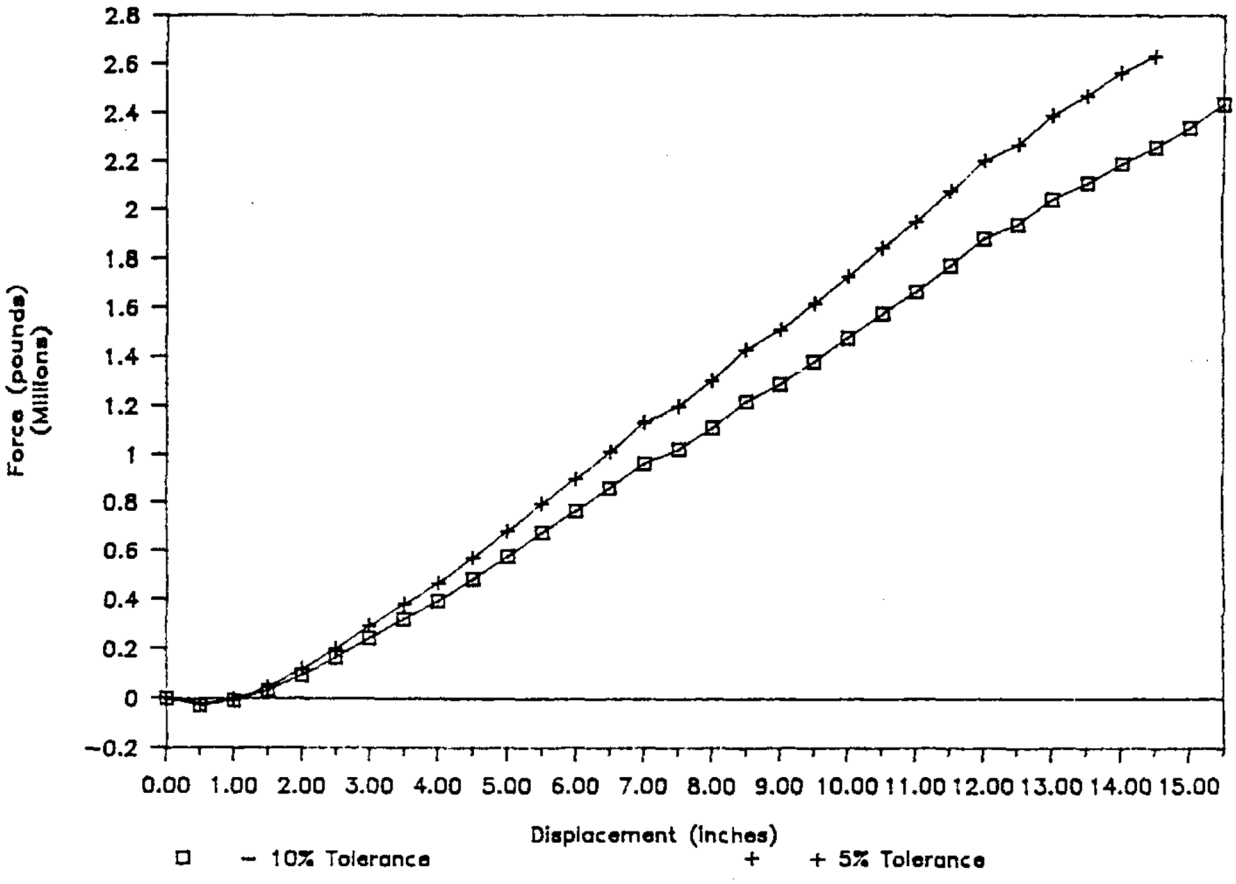

Figure 2.10.12-10 Force-Deflection Graph (45-Degree, Top Oblique Drop)

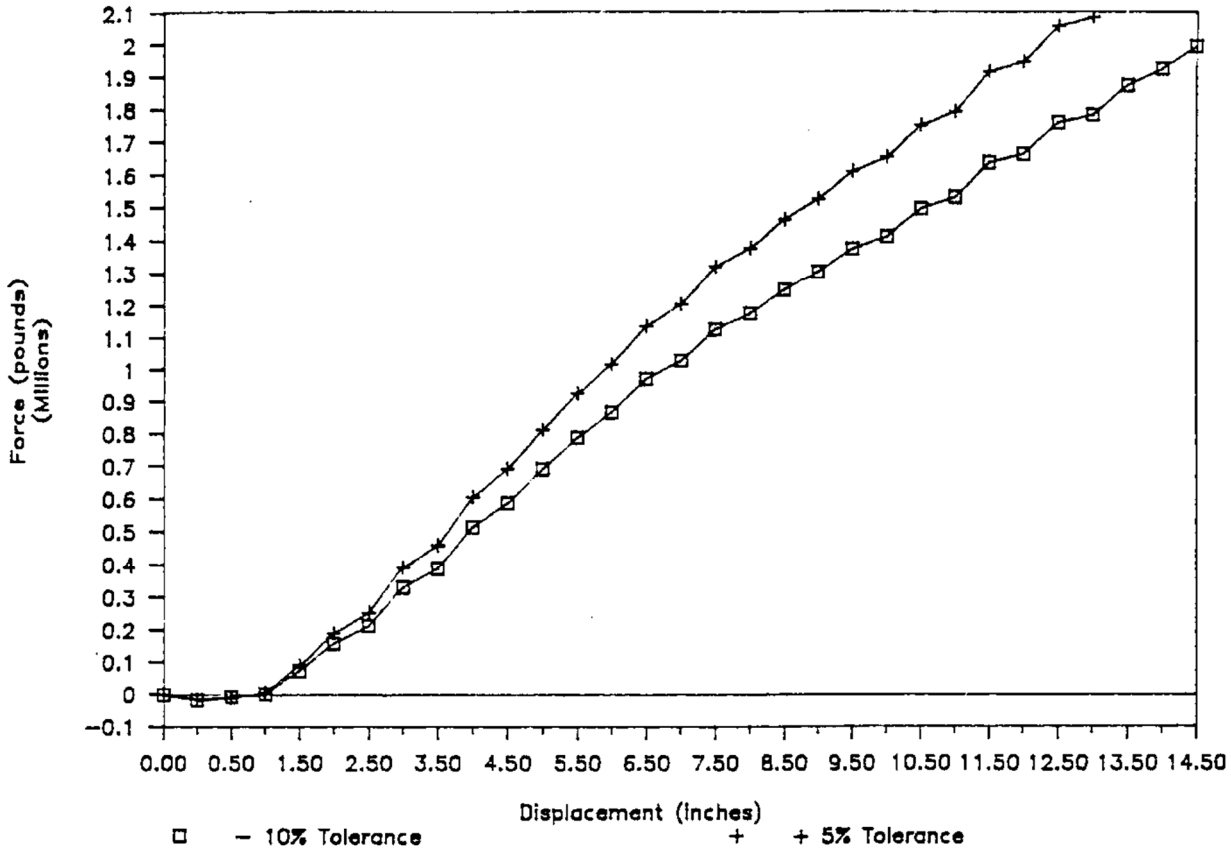

Figure 2.10.12-11 Force-Deflection Graph (45-Degree, Bottom Oblique Drop)

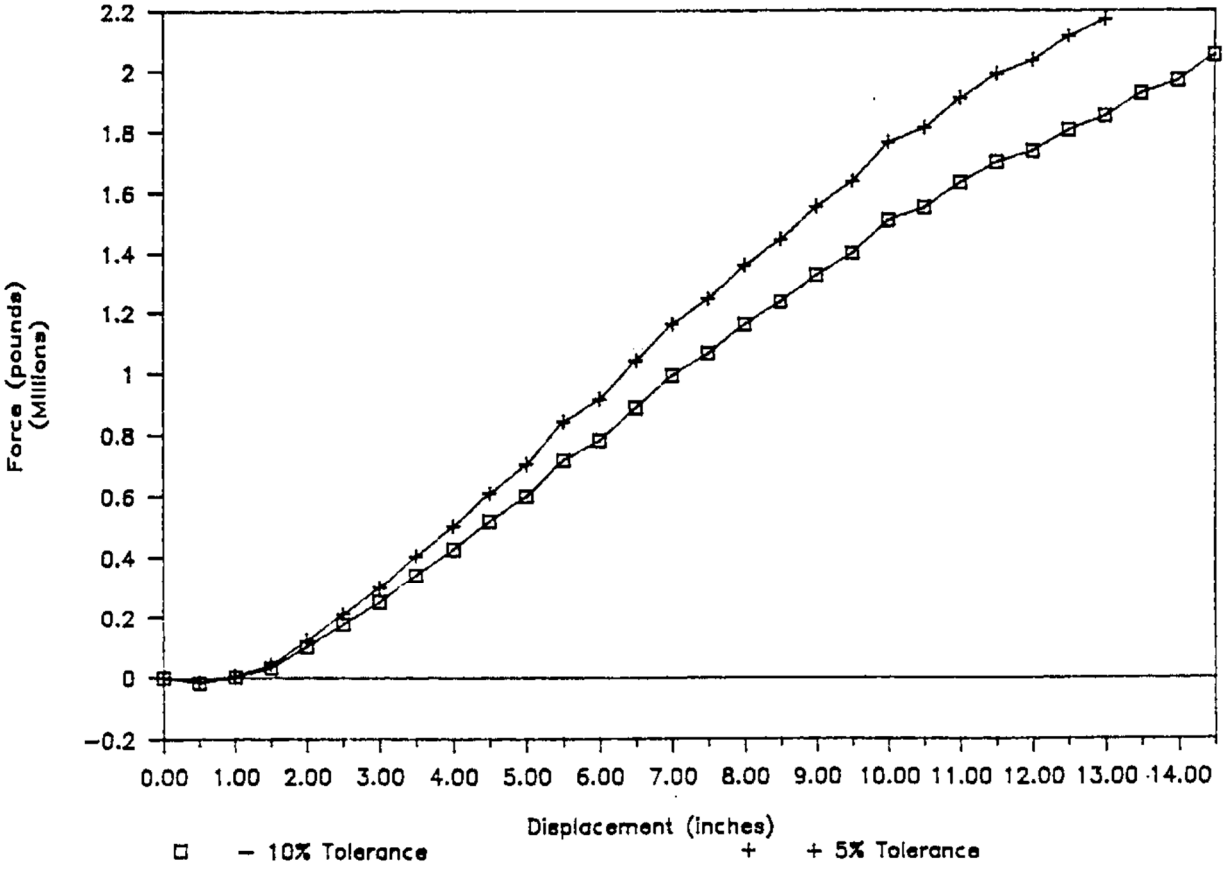

Figure 2.10.12-12 Force-Deflection Graph (60-Degree, Top Oblique Drop)

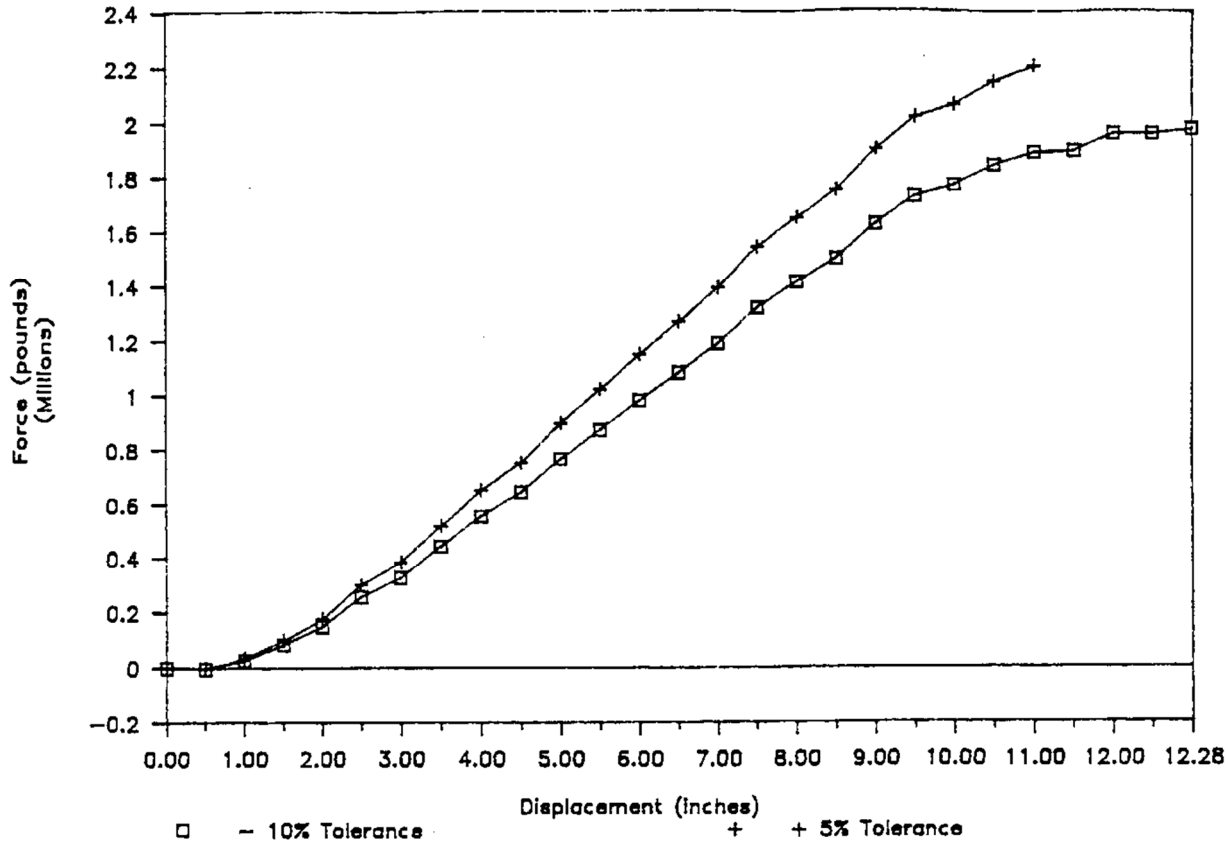

Figure 2.10.12-13 Force-Deflection Graph (60-Degree, Bottom Oblique Drop)

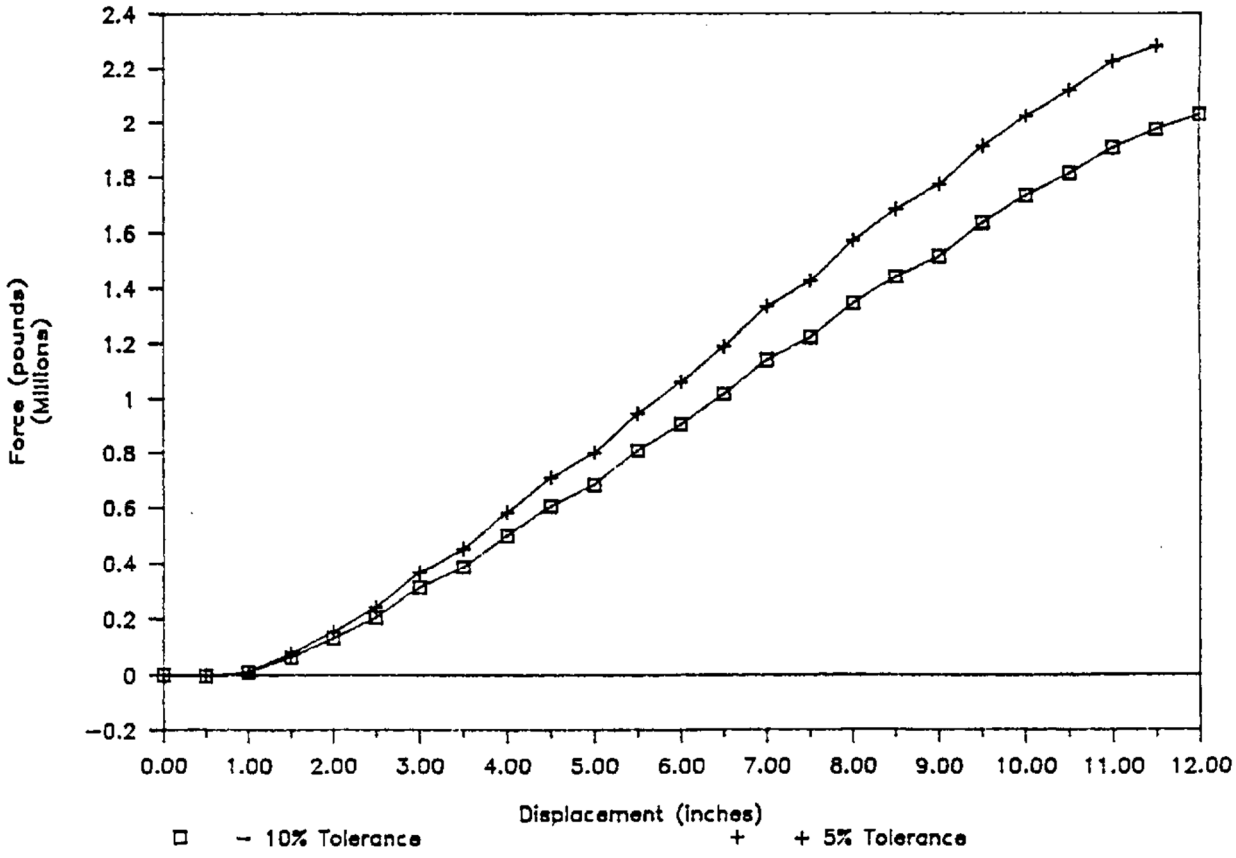

Figure 2.10.12-14 Force-Deflection Graph (75-Degree, Top Oblique Drop)

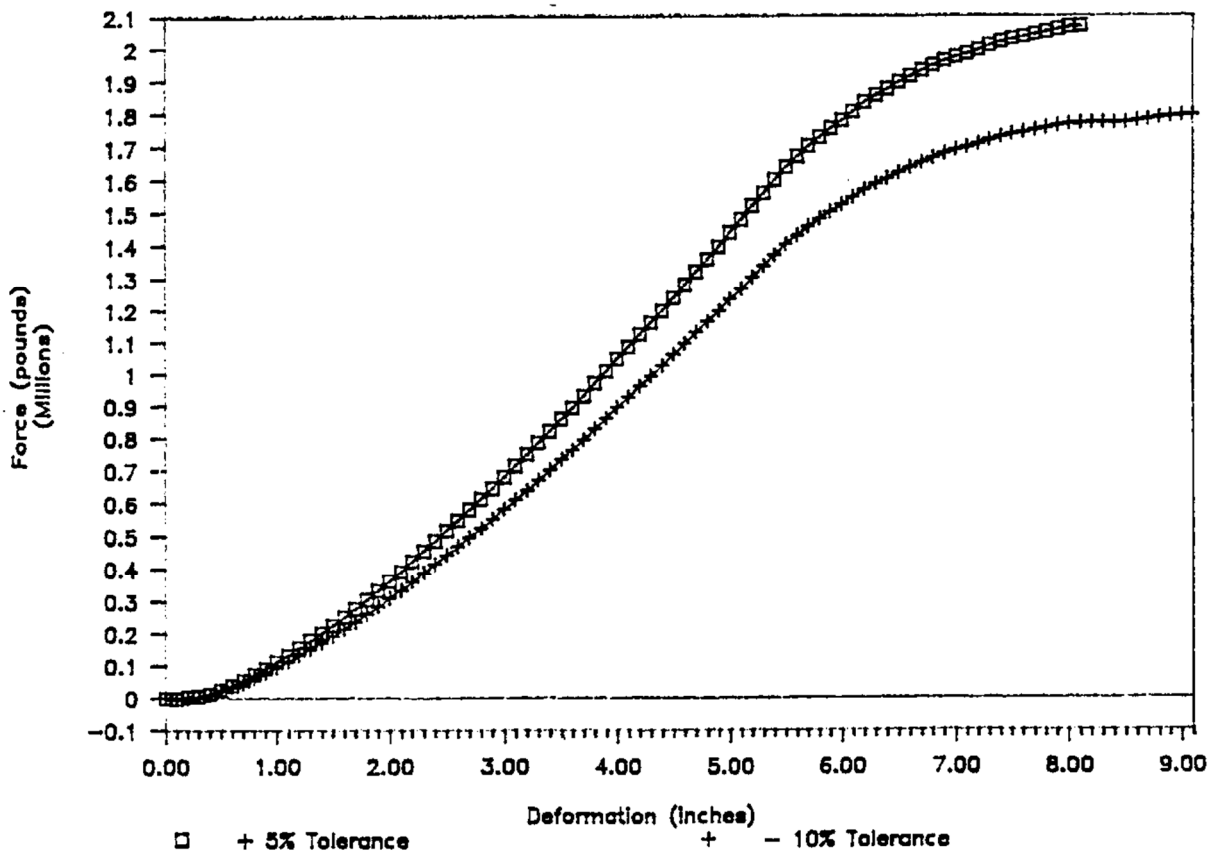

Figure 2.10.12-15 Force-Deflection Graph (75-Degree, Bottom Oblique Drop)

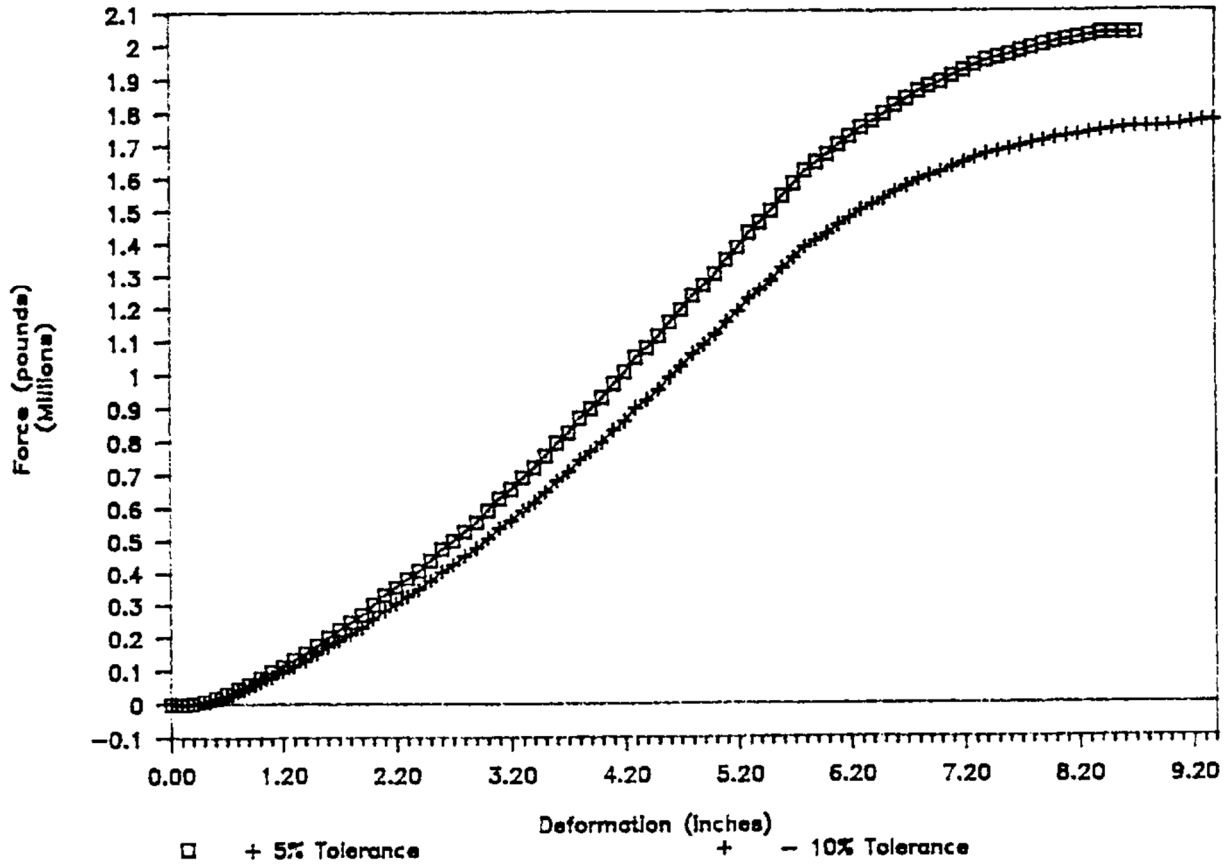

Figure 2.10.12-16 Force-Deflection Graph (90-Degree, Top Side Drop)

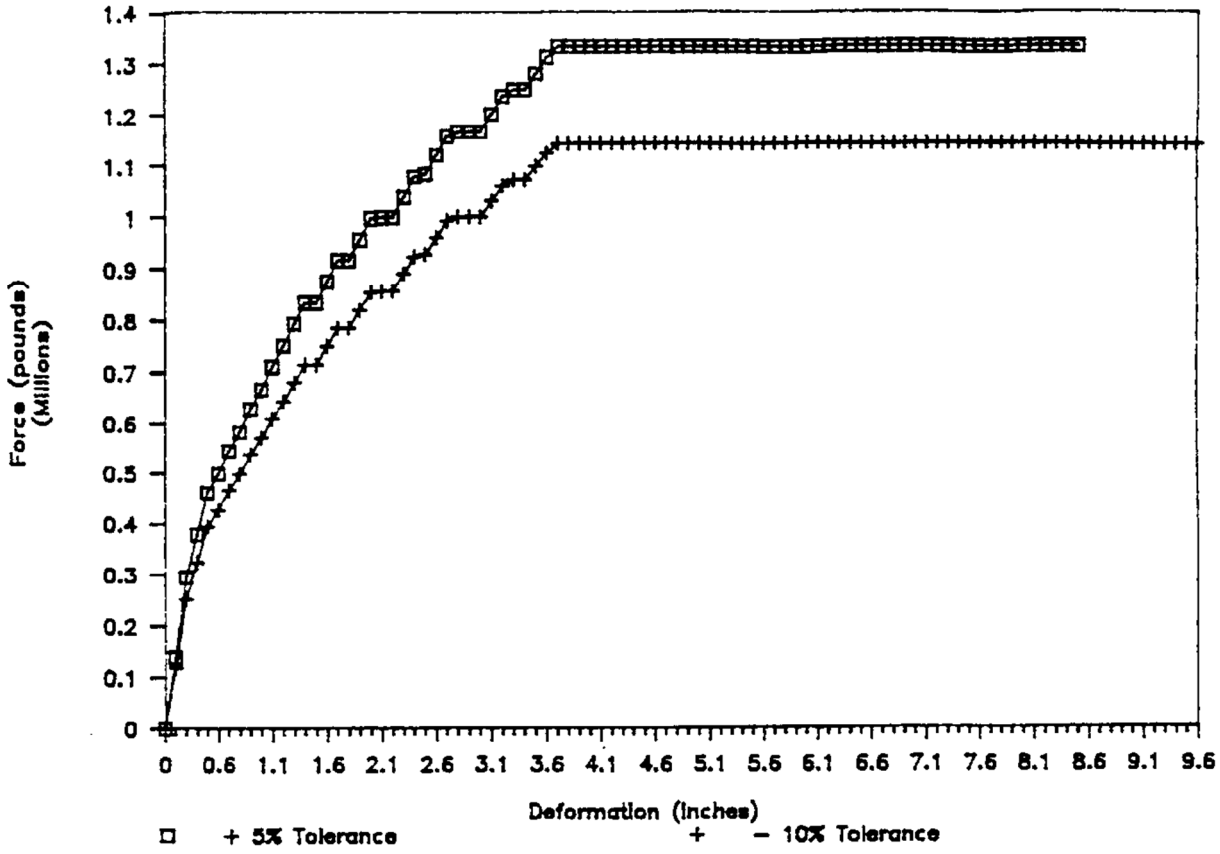

Figure 2.10.12-17 Force-Deflection Graph (90-Degree, Bottom Side Drop)

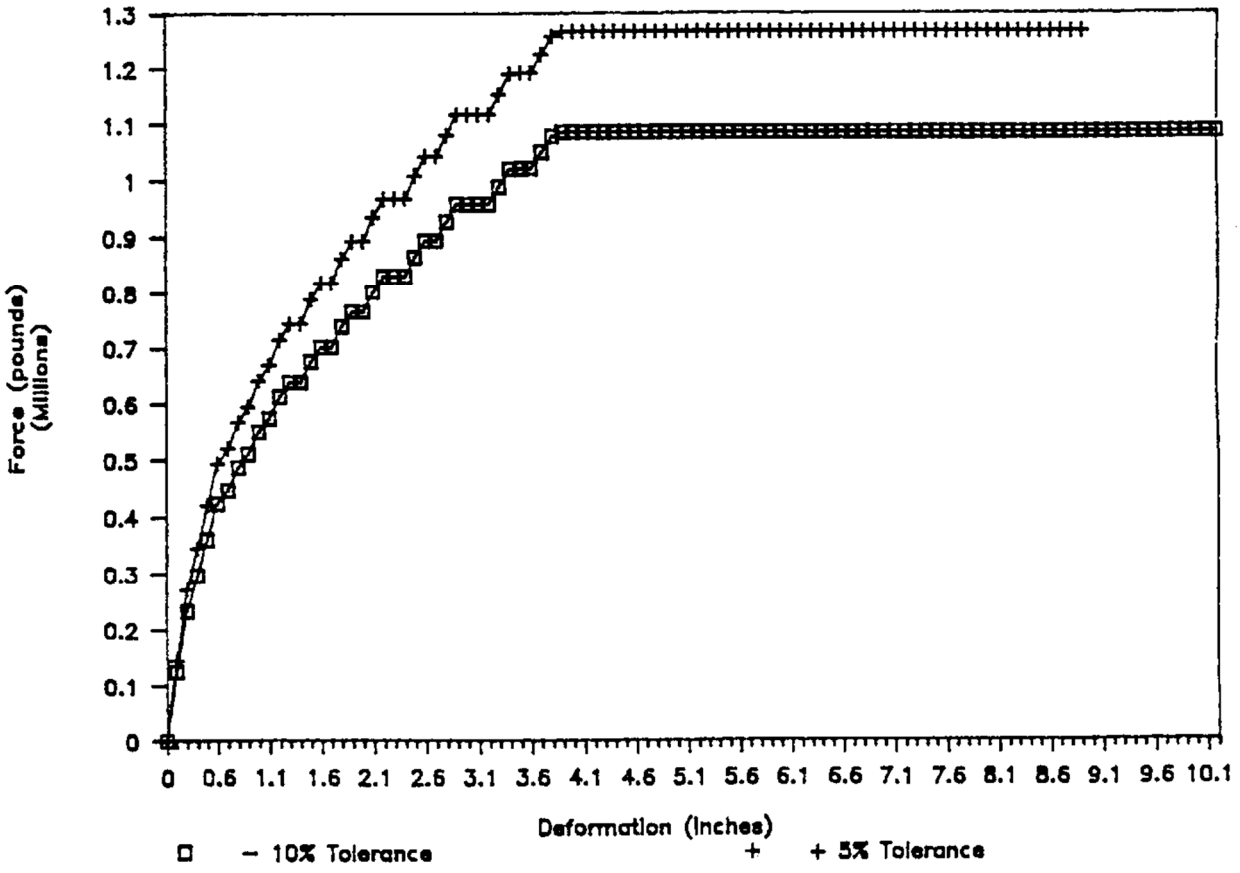

Figure 2.10.12-18 Force-Deflection Curve (0-Degree Impact, Drop Tested Limiter)

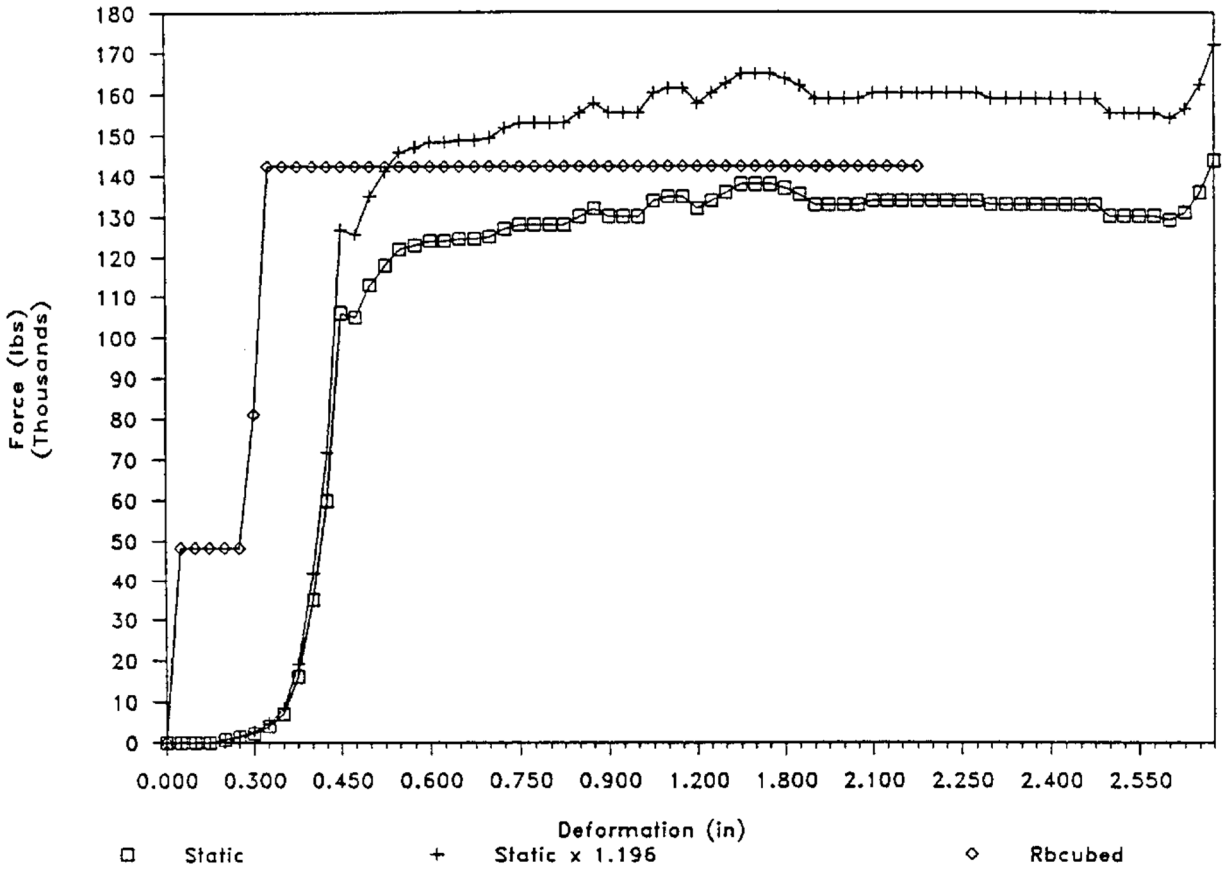

Figure 2.10.12-19 Force-Deflection Curve (14-Degree Impact, Drop Tested Limiter)

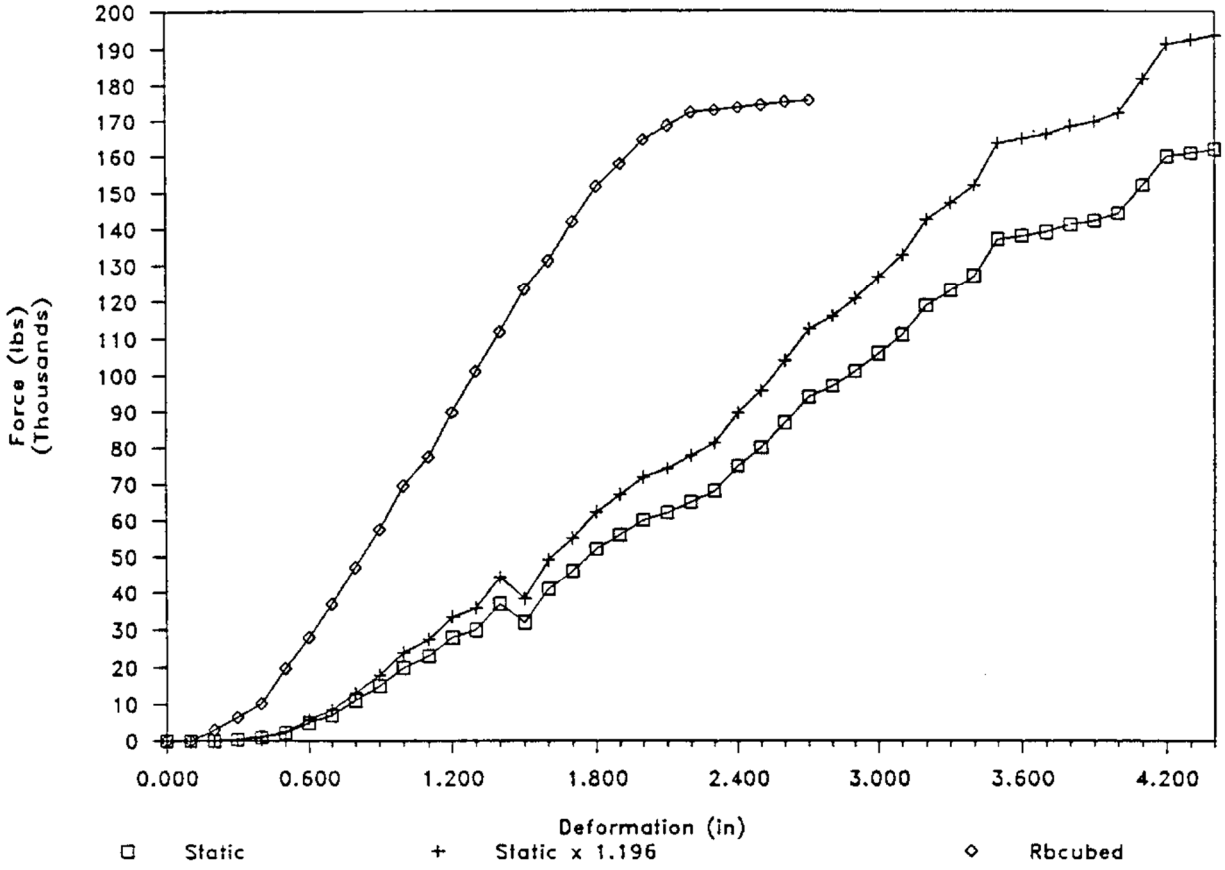

Figure 2.10.12-20 Force-Deflection Curve (90-Degree Impact, Drop Tested Limiter)

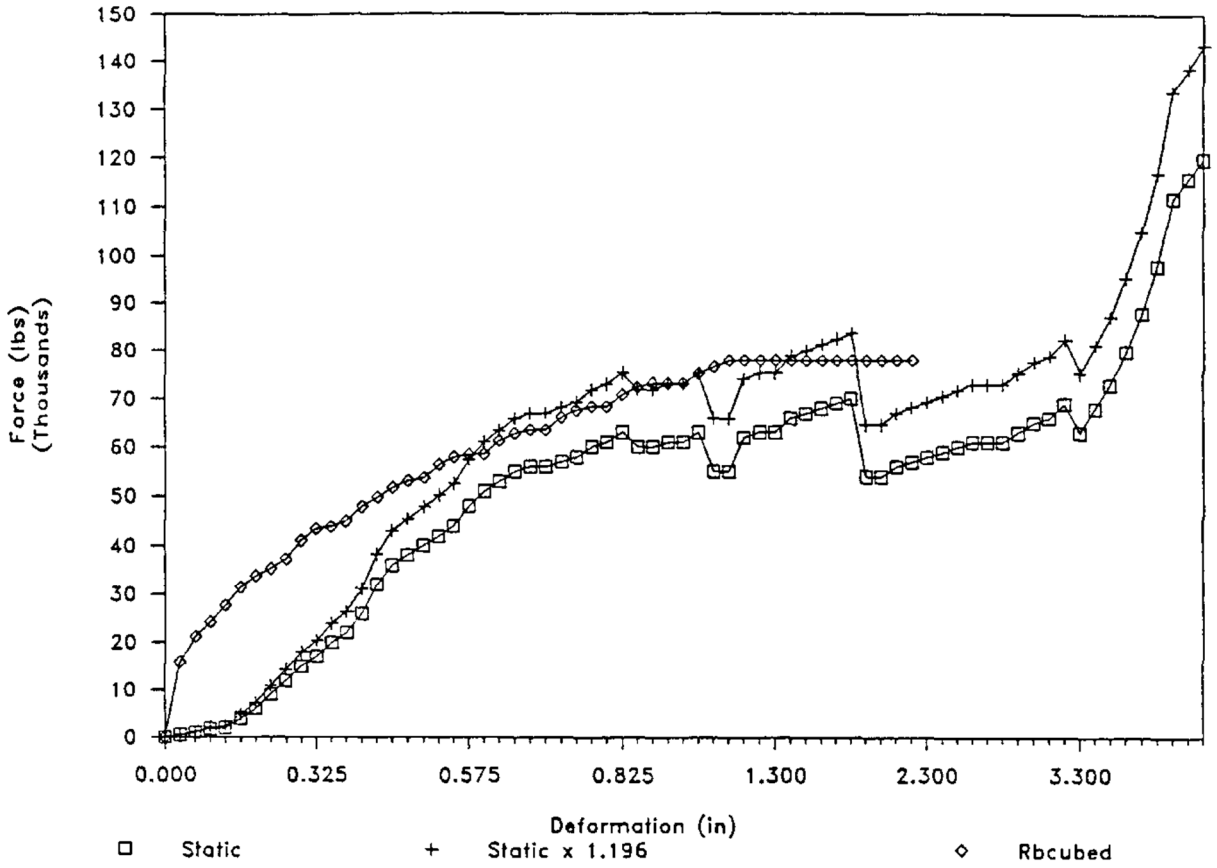

Figure 2.10.12-21 End Drop Impact Limiter Cross Section

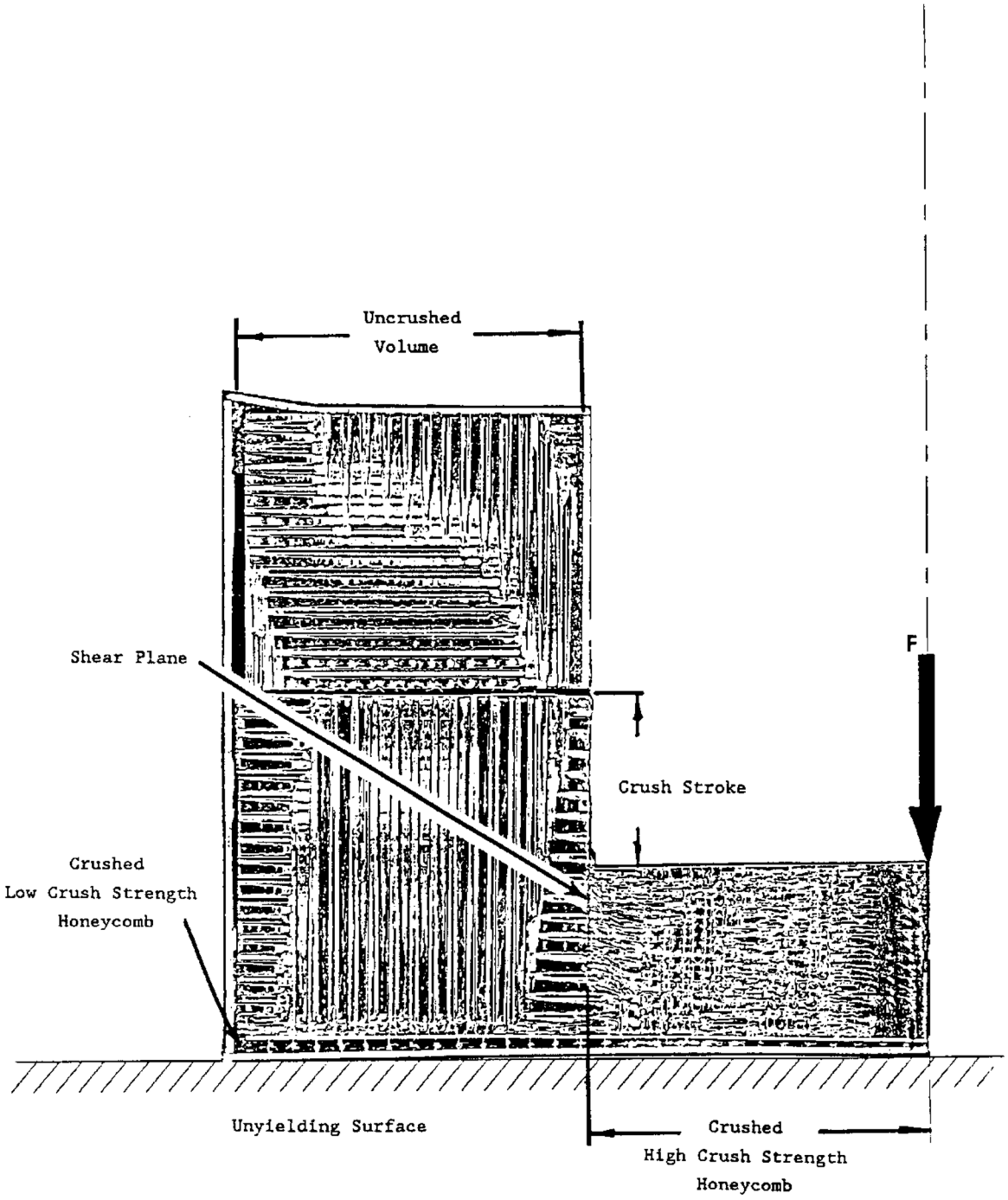

Table 2.10.12-1 Determination of Maximum Energy Remaining for Secondary Impact – Full-Scale Impact Limiter

DROP ANGLE (degrees)	0	15	30	45	60	75	90
EI Energy absorbed by first limiter (in-lb)	1.93×10^7	1.88×10^7	1.74×10^7	1.52×10^7	1.23×10^7	1.03×10^7	9.67×10^6
ER Energy remaining after first impact (in-lb)	0.00	5.40×10^5	1.94×10^6	4.14×10^6	7.04×10^6	9.02×10^6	9.67×10^6
EP Potential energy of cask after first impact (in-lb)	6.04×10^6 [1]	4.97×10^6	4.40×10^6	3.45×10^6	2.21×10^6	7.68×10^5	0.00
ES Energy stored in first limiter; absorbed in second limiter in side drop orientation (in-lb)	1.87×10^6 (9.7%)	1.24×10^6 (6.6%)	1.04×10^6 (6.0%)[2]	8.66×10^5 (5.7%)[1]	6.77×10^5 (5.5%)[1]	5.56×10^5 (5.4%)[1]	5.13×10^5 (5.3%)
E2 Secondary impact total of ER + EP + ES (in-lb)	7.91×10^6	6.75×10^6	7.38×10^6	8.46×10^6	9.93×10^6	1.03×10^7	1.02×10^7
Emax – Side Drop Maximum energy absorption capability of impact limiter in side drop orientation (in-lb)	1.49×10^7	1.49×10^7	1.49×10^7	1.49×10^7	1.49×10^7	1.49×10^7	1.49×10^7
Energy Absorption Margin	88.32%	120.71%	101.79%	76.20%	50.10%	44.04%	46.33%

[1] Assumes tip-over of cask onto the second impact limiter.
[2] Interpolated values.

Table 2.10.12-2 Determination of Extreme Force During Cask Deceleration (First Limiter) – Quarter-Scale Impact Limiter

DROP ANGLE (degrees)	0	15	90
RBCUBED Average Maximum or Peak Force	142,340	175,710	78,070
Equivalent g Load	177.9	219.6	97.6
STATIC TEST – DROP-TESTED LIMITERS Dynamic Average Maximum or Peak Force	158,382	169,000	74,152
Equivalent g Load	198.0	211.3	92.7
FORCE MARGIN	-11.27%	3.82%	5.02%
CALCULATED STRESS MARGIN	200.00%	1.00%	6.00%
REVISED STRESS MARGIN*	188.73%	4.82%	11.02%

* Approximate stress margin, which includes the effect of impact limiter testing. Quarter-scale cask model weight = 800 lbs

2.10.13 Structural Evaluation of Failed Fuel Cans and Liners (Baskets)

This evaluation documents the thermal and structural adequacy of the failed fuel cans (FFCs) and liners (baskets) for a three-hole basket and a six-hole basket to be used for the transport of failed fuel and failed fuel filters in the NAC-LWT spent fuel shipping cask. The maximum normal operating temperature is calculated to be 214°F for the FFC in the six-hole basket, and 229°F for the FFC in the three-hole basket. Each FFC in the six-hole basket has been designed to contain a single failed fuel rod. Each FFC in the three-hole basket has been evaluated for up to three failed fuel rods per FFC (up to nine failed fuel rods per cask) or up to ten failed fuel filters (up to 30 failed fuel filters per cask). The conservatively calculated minimum margin of safety for any component is +0.24. The FFCs and liners are structurally adequate to satisfy all regulatory requirements.

2.10.13.1 Discussion

Nuclear Assurance Corporation has designed an FFC and three-hole basket that will permit up to nine encapsulated failed metallic fuel rods or up to 30 encapsulated failed fuel filters to be shipped in the NAC-LWT cask. A six-hole basket containing six smaller diameter FFCs has been evaluated based on a capacity of six failed fuel rods per cask. With either basket, the FFC is a sealed, dry aluminum canister. Up to three failed metallic fuel rods or up to ten failed fuel filters are placed in each FFC when the three-hole basket is used. Only one failed metallic fuel rod may be placed in each FFC if the six-hole basket is used.

Each metallic fuel rod is assumed to weigh 125 lbs (actual weight is 53 kg or 117 lbs) and is approximately 124 inches long. Each failed fuel filter is assumed to weigh 12 pounds and is approximately 11 inches long. The failed fuel rods have a maximum decay heat load of 5 watts per rod, resulting in a maximum decay heat load of 30 watts for the six-hole basket, and 45 watts for the three-hole basket. Each FFC containing up to 10 failed fuel filters is limited to the amount of fuel in a single metallic fuel rod resulting in a maximum decay heat load of 5 watts, or a total of 15 watts for the three-hole basket.

2.10.13.2 Method of Analysis

Thermal analyses were performed using the one-dimensional SCOPE computer program to determine the maximum normal operating temperature of the FFC and liner. A total decay heat load of 30 watts was used for the six-hole basket, and 45 watts for the three-hole basket. The maximum FFC temperature was 214°F for the six-hole basket, and 229°F for the three-hole

basket. A temperature of 250°F was conservatively used to determine the material properties of the FFCs and liners. The SCOPE inputs and outputs are provided in Section 3.6.

Classical stress analysis methods are used to evaluate the FFCs for buckling during the end impact and for bending during a side impact. The tubes in the liners are also analyzed for bending during a side impact. The impact loadings include the g-factors determined in Section 2.6.7.4. The calculated stresses in the FFCs and the liners are conservatively compared to the material yield strength to demonstrate that containment is maintained by the FFCs and that no permanent deformation of the FFCs or the liners occurs.

2.10.13.3 Input Geometry & Data

1. Total Heat Load = 30 Watts (For 6 Metallic Fuel Rods).
   = 45 Watts (For 9 Metallic Fuel Rods).
   = 15 Watts (For 30 Failed Fuel Filters).

2. Metallic Fuel Rod Weight = 125 lbs/Rod.
   Failed Fuel and Filter Weight = 12 lbs/Filter.

3. NAC-LWT Cask Geometry: (Ref. Section 1.4)

Inner Shell (Cavity) I.D.	= 13.375 inches
Inner Shell Thickness	= 0.75 inch
Lead Shell Thickness	= 5.75 inches
Outer Shell Thickness	= 1.20 inches
Neutron Shield Thickness	= 5.00 inches
Neutron Shield Shell Thickness	= 0.24 inch

4. Free Drop Impact G-Loads: (Ref. Table 2.6.7-33 and Table 2.6.7-34)

Normal Operation[1]

1-Foot Side Drop	24.3 g

Accident[1]

30-Foot Top End Drop	48.3 g
30-Foot Bottom End Drop	48.1 g
30-Foot Side Drop	49.7 g
30-Foot Corner Drop	60.4 g

[1] Ref. 10 CFR 71 and Regulatory Guide 7.8.

2.10.13.4 Mechanical Properties of Materials

1. 6061-T6 Aluminum Alloy (Ref. MIL-HDBK-5E)

   $(S_u)_{70}$ = 42 ksi (70°F) $(S_y)_{70}$ = 35 ksi (70°F) (page 3-222)

   At 250°F: $(S_u)_{250}$ = 0.86 $(S_u)_{70}$ = 36.1 ksi (page 3-227)
   $(S_y)_{250}$ = 0.88 $(S_y)_{70}$ = 30.8 ksi (page 3-228)

2. 6063-T832 Aluminum Alloy (Ref. ASME B210)

   $(S_u)_{70}$ = 40 ksi $(S_y)_{70}$ = 35 ksi (page 194)

   At 250°F: $(S_u)_{250}$ = 0.86[1] $(S_u)_{70}$ = 34.4 ksi
   $(S_y)_{250}$ = 0.88[1] $(S_y)_{70}$ = 30.8 ksi

3. 6061-T6511 Aluminum Alloy (Ref. MIL-HDBK-5E)

   $(S_u)_{70}$ = 38 ksi $(S_y)_{70}$ = 35 ksi (page 3-225)

   At 250°F: $(S_u)_{250}$ = 0.86[1] $(S_u)_{70}$ = 32.7 ksi
   $(S_y)_{250}$ = 0.88[1] $(S_y)_{70}$ = 30.8 ksi

2.10.13.5 Thermal Evaluation

The SCOPE thermal analysis computer program is used to evaluate the NAC-LWT cask containing the six-hole basket with six 2.75-inch inner diameter (I.D.) FFCs loaded with one metallic fuel rod each, for a total heat load of 30 watts. The maximum temperature for the FFC is 214°F. A similar analysis for the three-hole basket with three 4.00-inch I.D. FFCs loaded with three metallic fuel rods each for a total heat load of 45 watts, resulted in a maximum temperature of 229°F for the FFCs. This is the bounding maximum thermal case for the three-hole basket.

2.10.13.6 Structural Evaluation

The FFCs are evaluated to demonstrate that containment of the failed fuel rod or the failed fuel filters is maintained for all loading conditions. The maximum stress occurs in the shells of the FFCs for the 30-foot side drop load case. Buckling of the shells is evaluated for the 30-foot end drop load case.

[1] The strength variation with temperature is assumed to be the same as that for 6061-T6 Aluminum Alloy.

The liners (baskets) for the failed fuel cans are evaluated to demonstrate that rupture (ultimate failure) does not occur for any loading condition. The maximum stress occurs in the housing (tube) of the liners for the 30-foot side drop load case.
The drawings referenced in these evaluations are included as Figure 2.10.13-1 through Figure 2.10.13-5.

2.10.13.6.1 Failed Fuel Can – 2.75-Inch Inner Diameter

Shell – Bending

Ref. Dwg. 340-108-D2 (Figure 2.10.13-4)

Loading (temperature conservatively assumed - 250°F)

30-Foot Side Drop Acceleration = 49.7 g

Support Spacing = 33.66 inches (Ref. Dwg. 315-40-12)

Weight: Fuel = 125 lbs/124 inches = 1.008 lb/in

Shell = $(\pi/4)[(3.0)^2 - (2.75)^2](1)(0.10)$ = 0.113 lb/in

Total = 1.121 lb/in

Conservatively, assume the shell is simply supported at the support disks; then, the moment during impact is:

$M = (1/8)(1.121)(33.66)^2 (49.7) = 7{,}890$ in-lb

Shell Properties:

$I/C = 0.7791$ in^3

Material Properties: (ASTM B221 Type 6061-T6)

$(S_y)250 = 30.8$ ksi

Stresses:

$S_b = 7890/0.7791 = 10{,}127$ psi

$MS = [(S_y)_{250}/S_b] - 1 = +2.04$

Shell – Buckling

Estimated Weight of Can Assembly = 20 lbs

The maximum axial acceleration is for the corner drop

Top End Drop Deceleration = 48.3 g

Maximum axial acceleration [cos(15.74°)](60.4) = 58.2 g

The compressive stress in the shell due to its weight during impact is:

$$S_c = \frac{(20)(58.2)}{[\pi/4][(3.0)^2 - (2.75)^2]} = 1{,}031 \text{ psi}$$

The margin of safety on yield is:

$$\text{M.S.} = \frac{30.8}{1.03} - 1 = +\underline{\text{Large}}$$

The buckling of the cylindrical shell under the action of uniform axial compression may be evaluated using equation 11-1 on page 458 of Theory of Elastic Stability by Timoshenko and Gere.

$$S_{cr} = \frac{Et}{r[3(1 - \upsilon^2)]^{0.5}}$$

$$= 267 \text{ ksi}$$

where:

E = (0.97)(10.IE03) = 9.8E03 ksi at 250°F

t = 0.125 in

r = 2.81 inches, env. radius for all tubes in assembly

ν = 0.33

The margin of safety on buckling is:

$$MS = S_{cr}/S_c - 1 = +\underline{\text{Large}}$$

Conclusion

The stress in the cylindrical shell caused by a corner drop with an axial component of 58.2 g deceleration is much lower than the yield stress and the critical buckling stress.

2.10.13.6.2 Liner – Failed Fuel Can – 2.75 Inner Diameter

Housing – Bending

Ref. Dwg. 315-040-43 (Figure 2.10.13-2)

Loading (temperature conservatively assumed - 250°F)

30-Foot Side Drop Deceleration = 49.7 g

Support Spacing = 33.66 inches

Weight: Fuel = 125 lbs/124 inches = 1.008 lb/in

Aluminum Shell = $[\pi/4][(3)^2 - (2.75)^2](1)(0.10)$ = 0.113 lb/in

Housing = $[\pi/4][(3.75)^2 - (3.5)^2](1)(0.10)$ = 0.142 lb/in

Total = 1.263 lb/in

Conservatively, assume the housing is simply supported at the support disks; then, the moment during impact is:

$M = (1/8)(1.263)\ (33.66)^2\ (49.7) = 8{,}890$ in-lb

Housing Properties:

$$I / C = (\pi)(d_o^4 - d_i^4) / 32d_o$$

$= (\pi)\ [3.75)^4 - (3.5)^4]/(32)(3.75) = 1.2485\ in^3$

Material Properties: (ASTM B210 Type 6063-T832)

$(S_y)_{250} = 30.8$ ksi

Stresses:

$S_b = 8{,}890/1.2485 = 7121$ psi

$MS = [(S_y)_{250}/S_b] - 1 = +3.32$

Weld Between Bulkhead and Tubes

Peak Deceleration = 60.0 g (Ref. Table 2.6.7-34, 30-Foot End Drop)

Ref. Dwg. 315-040-43 (Figure 2.10.13-2)

Weight of 1 Bulkhead = $(\pi/4)[(13)^2 - (6)(2.75)^2](1/4)(0.1)$

= 2.4 lbs

Weight of U-Bolts = 1.6 lbs

Total = 4.0 lbs

Inertial load of bulkhead on welds: P_{act} = (4)(60) = 240 lbs

Total length of weld per bulkhead: L_w = (4)(6) + (2)(3) = 30 inches

Size of fillet = 1/8 in

Assume F_u of aluminum weld: = 4,000 psi

Allowable shear stress = (0.3)(4,000) – 1,200 psi

(Ref. AISC Manual of Steel Construction, 8th Ed., Section 1.5.3)

Working capacity of welds = P_{cap}

= (0.707)(1/8)(30)(1200)

= 3,180 lbs

M.S. = [P_{cap} /P_{act}] -1 = 3,180/240 - 1 - +Large

The other accident drop conditions are:

30-Foot Top End Drop a = 48.3 g

30-Foot Bottom End Drop a = 48.1 g

30-Foot Top Corner Drop a = 60.4 g

Compared to a 30-foot side drop accident condition, with a = 49.7 g, the above accident conditions are less critical. Therefore, neither rupture nor yielding of the liner housing will occur.

2.10.13.6.3 Failed Fuel Rod Can – 4.00 Inner Diameter (3 Failed Fuel Rod Loading)

Shell – Bending

Ref. Dwg. 340-108-Dl (Figure 2.10.13-3)

Loading (Temperature conservatively assumed - 250°F)

30-Foot Side Drop Acceleration	= 49.7 g
Support Spacing	= 50.37 inches
Weight: Fuel = (125 lbs/124 inches)(3)	= 3.024 lb/in
Shell = [π/4][$(4.25)^2$ - (4.0)2](1)(0.10)	= 0.162 lb/in
Total	= 3.186 lb/in

Conservatively, assume the shell is simply supported at the support disks at four locations with the maximum spacing of 50.37 inches. The moment during impact, by Case 36 of the AISC steel manual, is:

M = (0.100)(3.186)(50.37)2(49.7) = 40,174 in-lb

Shell Properties:

I/C = (π)[(4.25)4 - (4)4]/(32)(4.25) = 1.623 in^3

Material Properties: (ASTM B210 Type 6061 T6)

$(S_y)_{250}$ = 30.8 ksi

Stresses:

S_b = 40,174/1.623 = 24,753 psi

M.S. = $[(S_y)_{250}/S_b]$ - 1 = +0.24

2.10.13.6.4 Liner – 3 Element NAC-LWT Cask (3 Failed Fuel Rods/Can)

Tube - Bending

Ref. Dwg. 315-040-12 (Figure 2.10.13-1)

Loading

30-Foot Side Drop Acceleration		= 49.7 g
Support Spacing		= 50.37 inches
Weight:	Fuel = (125 lbs/124 inches)(3)	= 3.024 lb/in
	Shell = $[\pi/4][(4.25)^2 - (4.0)^2$ (l)(0.10)	= 0.162 lb/in
	Tube = $[\pi/4][(5.625)^2 - (5.375)2(1)(0.1)$	= 0.216 lb/in
	Total	= 3.402 lb/in

Conservatively, assume the tube is simply supported at the support disks; then, the moment during impact is:

M = $(1/8)(3.402)(50.37)^2$ (49.7) = 53,622 in-lb

Tube Properties:

I/C = $(\pi)[(5.625)^4 - (5.375)^4]/(32)(5.625)$ = 2.9053 in^3

Material Properties: (ASTM B210 Type 6061-T6)

$(S_y)_{250}$ = 30.8 ksi

Stresses:

S_b = 53,622/2.9053 = 18,457 psi

M.S. = $[(S_y)_{250}/S_b]$ - 1 = +0.67

Weld Between Bulkhead and Tubes

Ref. Dwg. 315-40-12 (Figure 2.10.13-1)

Peak Deceleration = 60.0 g (30-Foot End Drop)

Weight of Bulkhead $= [\pi/4][(13)^2 - (3)(5.625)^2](1/4)(0.1)$

$= 1.5$ lbs

Weight of U-Bolts $= 1.5$ lbs

Total $= 3.0$ lbs

Inertial load of bulkhead on welds: $P = (3.0)(60) = 180$ lbs

Total length of weld per bulkhead: $L_w = (3)(3.0) = 9.0$ in min

Size of fillet $= 3/32$ in

Working capacity of welds: $P_{cap} = (0.707)(3/32)(9.0)(1200)$

$= 716$ lbs

M.S. $= [P_{cap} / P_{act}] - 1 = 716/180 - 1 = +2.98$

2.10.13.6.5 Failed Fuel Rod Can – 4.00 Inner Diameter (Ten Failed Fuel Filter Elements/Can)

Shell - Bending

Ref. Dwg 340-108-Dl, (Figure 2.10.13-3)

Ref. Dwg 491-042, (Figure 2.10.13-5)

Loading

30-Foot Side Drop Acceleration $= 49.7$ g

Support Spacing $= 50.37$ inches

Weight: Fuel $= 12$ lbs/11.2 inches $= 1.071$ lb/in

(Assumed to be effectively a distributed load; actual loading will occur near the ends of each failed fuel filter element)

Shell $= \frac{\pi}{4}\left((4.25)^2 - (4.0)^2\right)(1)(0.10) = \underline{0.162 \text{ lb/in}}$

Total $= 1.233$ lb/in

Conservatively, assume the shell is simply supported at the support disks; then, the moment during impact is:

$$M = \frac{1}{8}(1.233)(50.37)^2)(49.7)$$

$= 19{,}435$ in-lb

Shell Properties: (4.00 I.D., t = 0.125 in)

I/C = [π][(4.25)4 - (4)4]/[(32)(4.25)]

= 1.623 in^3

Material Properties: (ASTM B221 Type 6061 T6)

$(S_y)_{250}$ = 30.8 ksi

Stresses:

S_b = 19,435/1.623 = 11,974 psi

M.S. = $[(S_y)_{250} / S_b]$ - 1 = +1.57

2.10.13.6.6 Liner - 3 Element (Ten Failed Fuel Filter Elements/Can)

Tube - Bending

Ref. Dwg 315-040-12, (Figure 2.10.13-1)

Ref. Dwg 491-042, (Figure 2.10.13-5)

Loading

30-Foot Side Drop Acceleration = 49.7 g

Support Spacing = 50.37 inches

Weight: Fuel = 12 lbs/11.2 inches = 1.071 lb/in

$$\text{Shell} = \frac{\pi}{4}\left((4.25)^2 - (4.0)^2\right)(1)(0.10) = 0.162 \text{ lb/in}$$

$$\text{Tube} = \frac{\pi}{4}\left((5.625)^2 - (5.375)^2\right)(1)(0.1) = 0.216 \text{ lb/in}$$

Total = 1.449 lb/in

Conservatively assume the tube is simply supported at the support disks; then, the moment during impact is:

$$M = \frac{1}{8}(1.449)(50.37)^2(49.7)\,8$$

= 22,839 in-lb

Tube Properties:

I/C = [π][(5.625)4 - (5.375)4]/[(32)(5.625)]

= 2.9053 in^3

(The FFC is conservatively not considered to provide any bending strength for this analysis.)

Material Properties: (ASTM B210 Type 6061-T6)

$(S_y)_{250}$ = 30.8 ksi

Stresses:

S_b = 22,839/2.9053 = 7861 psi

M.S. = $[(S_y)_{250} / S_b]$ - 1 = +2.91

2.10.13.7 Results and Conclusion

The maximum normal operating temperature of the failed fuel cans and the liner (basket) is calculated to be 211°F. The structural evaluation conservatively uses material properties at 250°F.

The calculated margins of safety are:

1. Failed Fuel Can - 2.75 Inner Diameter
   - Shell – Bending +2.04
   - Shell – Buckling +Large
2. Liner - Failed Fuel Can - 2.75 Inner Diameter
   - Housing – Bending +3.32
   - Weld - Bulkhead/Tube +Large
3. Failed Fuel Rod Can - 4.00 Inner Diameter (3 Failed Fuel Rod Loading)
   - Shell – Bending +0.24
4. Liner - 3-Element (3 Failed Fuel Rods/Can)
   - Tube – Bending +0.67
   - Weld - Bulkhead/Tube +2.98
5. Failed Fuel Rod Can - 4.00 Inner Diameter (10 Failed Fuel Filter Elements/Can)
   - Shell – Bending +1.57
6. Liner - 3-Element (10 Failed Fuel Filter Elements/Can)
   - Tube - Bending + 2.91

No permanent deformation occurs in the failed fuel cans or the liners for the critical loading conditions. Containment of the failed metallic fuel rods and failed fuel filters is maintained and the liner structure remains intact; therefore, structural adequacy is ensured.

2.10.13.8 Failed Fuel Shipment Component Drawings

The drawings referenced in Section 2.10.13.6 in support of analyses associated with the transport of failed fuel rods or filters containing severely failed fuel are provided in this section.

- NAC Drawing: 340-108-D1, Failed Fuel Rod Can - 4.00 I.D., Fuel Rod Containerization
- NAC Drawing: 340-108-D2, Failed Fuel Rod Can - 2.75 I.D., Fuel Rod Containerization
- NAC Drawing: 315-40-12, LWT Cask Metal Fuel Basket Assembly Safety Analysis Report
- NAC Drawing: 315-040-43, Liner - Failed Fuel Can, 2.75 I.D., LWT Cask, Safety Analysis Report
- NAC Drawing: 491-042, Failed Fuel Filter

Figure 2.10.13-1 LWT Cask, Metal Fuel Basket Assembly Safety Analysis Report, NAC Drawing No. 315-40-12

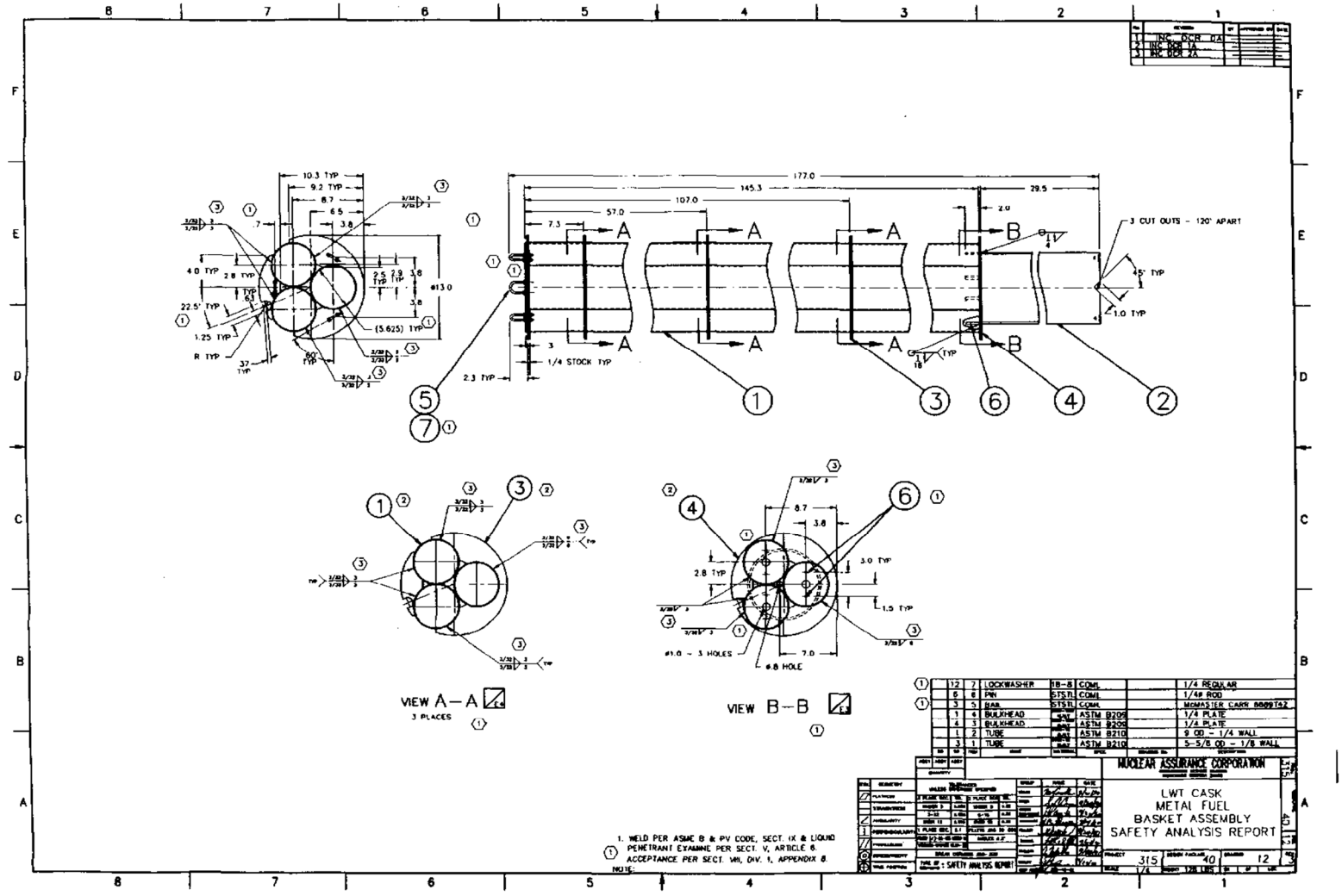

Figure 2.10.13-2 Liner-Failed Fuel Can, 2.75 I.D., LWT Cask, Safety Analysis Report, NAC Drawing No. 315-040-43

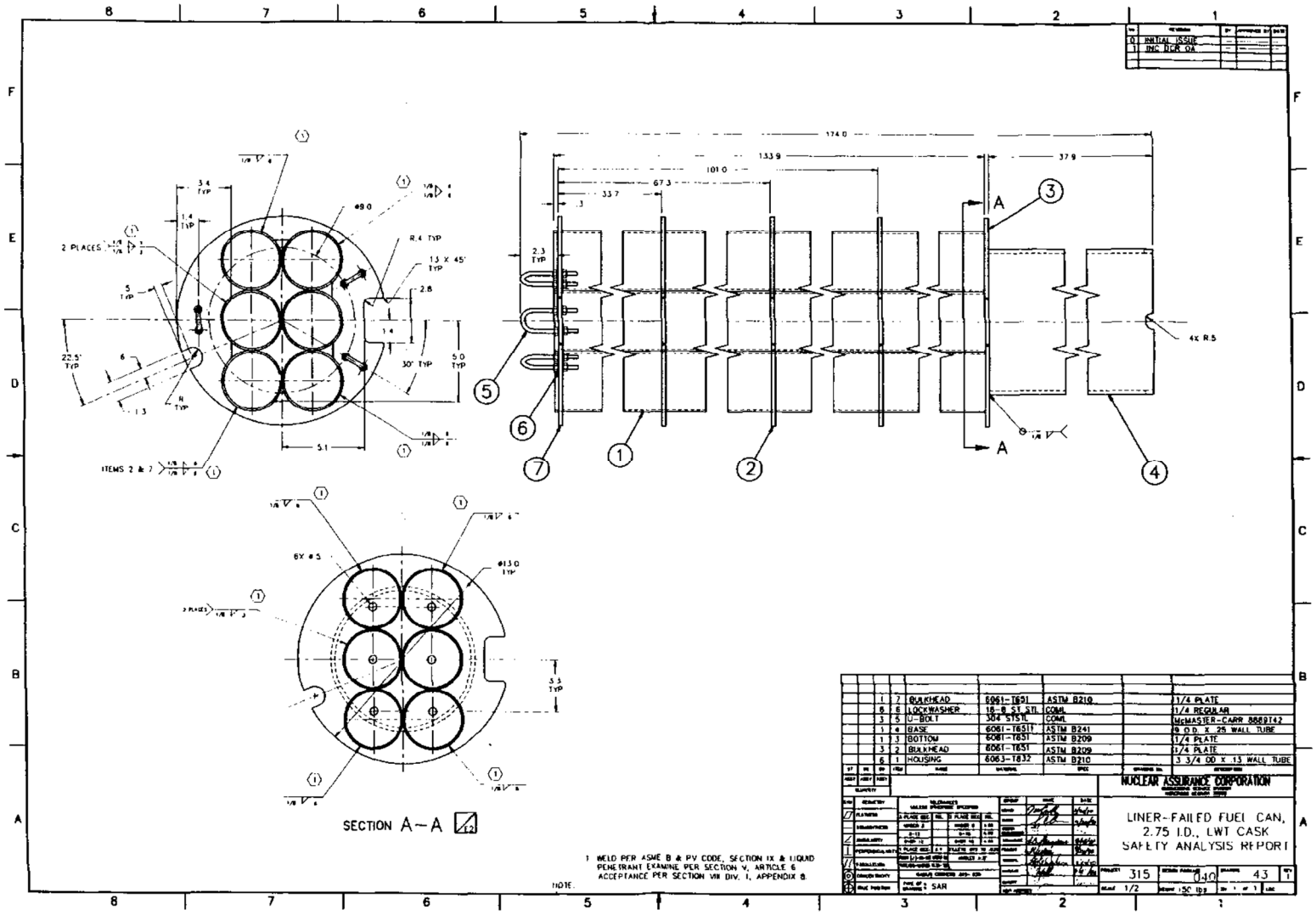

Figure 2.10.13-3 Failed Fuel Rod Can – 4.00 I.D., Fuel Rod Containerization, NAC Drawing No. 340-108-D1

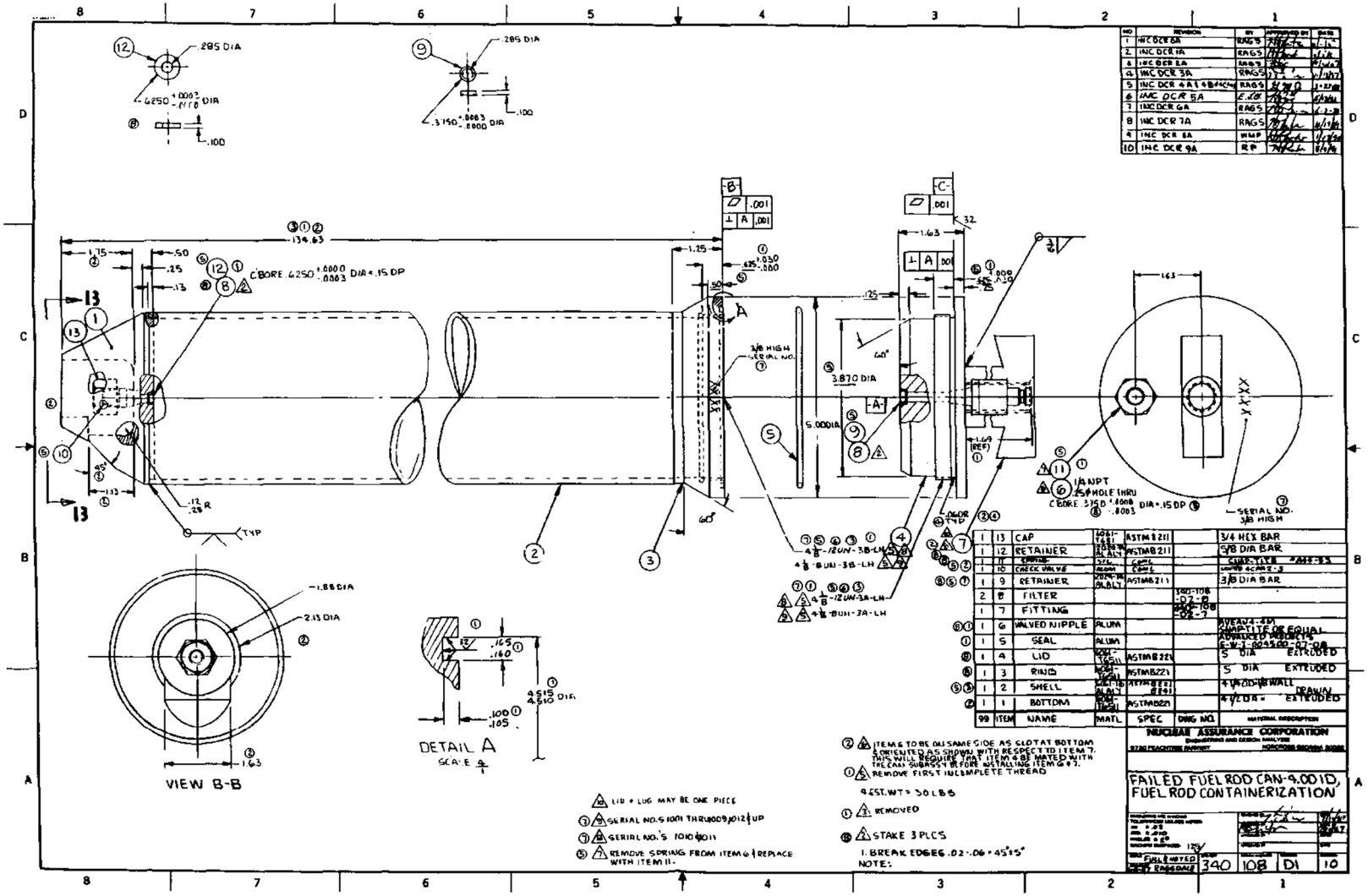

Figure 2.10.13-4 Failed Fuel Rod Can – 2.75 I.D., Fuel Rod Containerization, NAC Drawing No. 340-108-D2

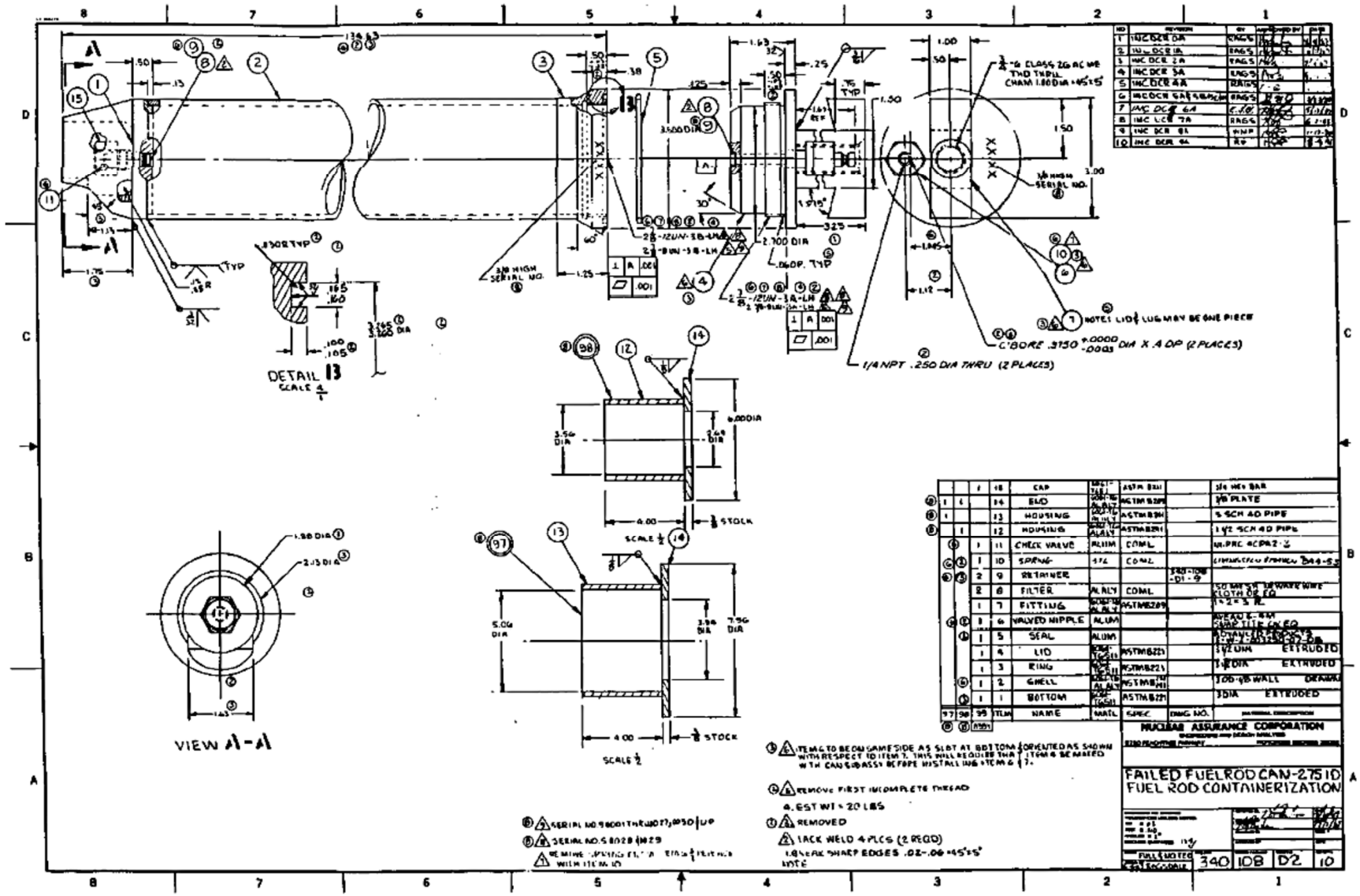

Figure 2.10.13-5 Failed Fuel Filter, NAC Drawing No. 491-042

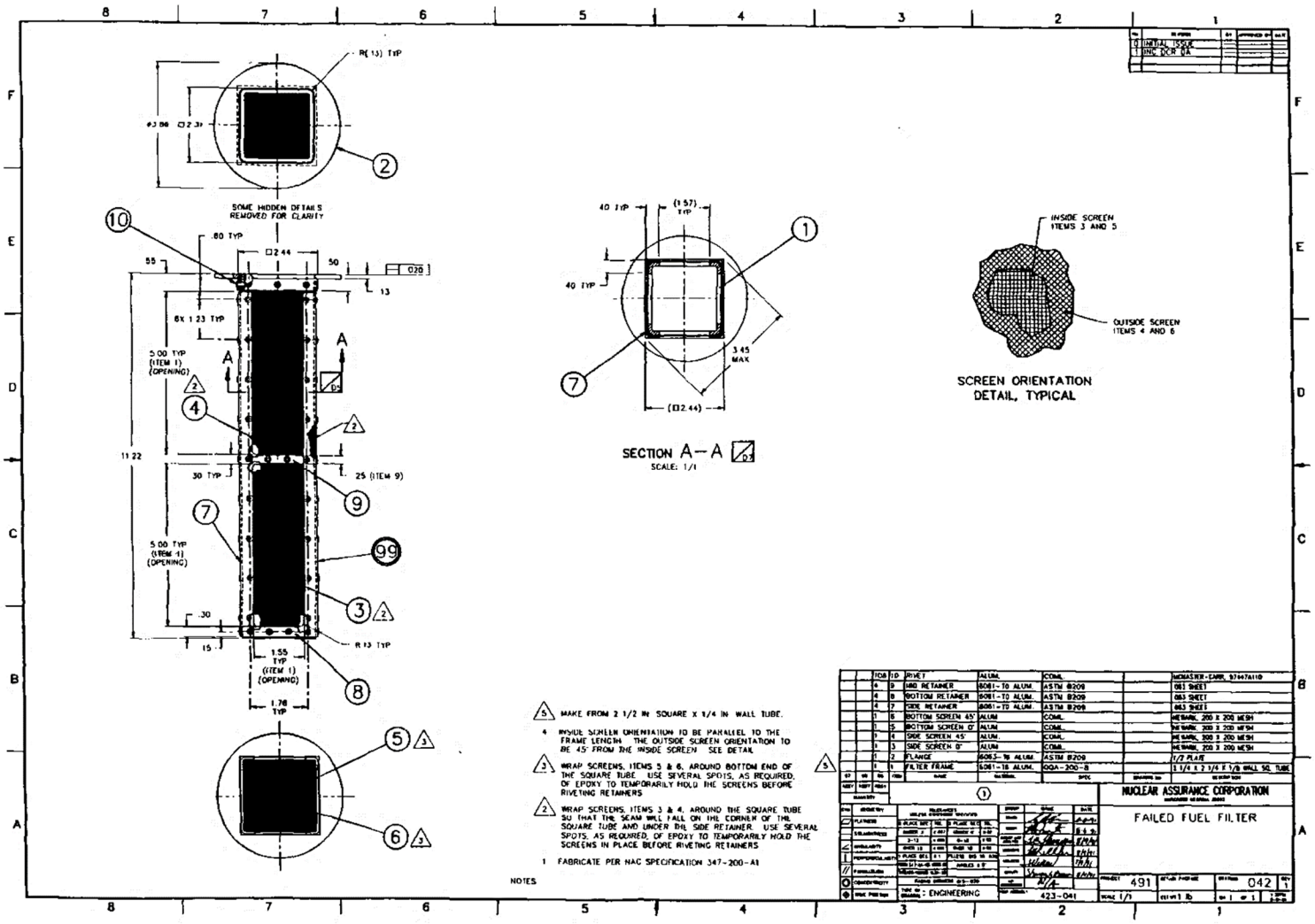

2.10.14 Structural Evaluation of the NAC-LWT Cask Body with TPBAR Contents

This section presents a structural evaluation of the NAC-LWT cask system with TPBAR contents under normal conditions of transport and hypothetical accident conditions. The NAC-LWT cask system with TPBARs is comprised of four primary components: NAC-LWT cask body, TPBAR basket, basket spacers, and TPBAR contents. The NAC-LWT cask system is structurally evaluated for two TPBAR content conditions: up to 300 production TPBARs loaded into an open (i.e., unsealed) consolidation canister; and up to 55 segmented TPBARs loaded into a welded closed waste container.

The NAC-LWT cask system containing TPBAR contents is required to have the Alternate B port covers installed and tested on the vent and drain ports to assure a leaktight containment boundary during transport. Section 2.10.15 presents the structural evaluation of the Alternate B port cover. Sections 2.6.12.10 and 2.7.7.12 present the structural evaluation for the TPBAR basket and basket spacers for the transport of the TPBAR content conditions under normal conditions of transport and hypothetical accident conditions, respectively.

2.10.14.1 Normal Conditions of Transport for Cask Body with TPBAR Contents

This section provides the cask body structural evaluation for normal conditions of transport. The following sections discuss the governing conditions of hot, cold, and drop conditions for normal transport.

2.10.14.1.1 Hot and Cold Conditions

Hot and cold conditions, as defined in 10CFR 71.71 (c) (1) and (2), are evaluated as part of the normal conditions of transport for a 1-foot free-drop evaluation (see Section 2.10.14.1.2). Since the 1-foot drop evaluations include the inertial loads and a bounding thermal load, the 1-foot drop evaluation bounds the evaluation for hot and cold conditions.

2.10.14.1.2 Free Drop (1 Foot)

The normal conditions drop orientations considered are: side drop, top-end drop, bottom-end drop, top-end CG-over-corner drop, and bottom-end CG-over-corner drop. Corner drops are defined as the CG of the cask over the impact limiter corner (15.74° from vertical).

Finite Element Model Description

A three-dimensional half-symmetry model of the LWT cask body is constructed using ANSYS solid elements (SOLID45). The finite element model contains the top and bottom forgings, cask

sidewalls, lead shielding, cask lid and bolts. The cask shells are modeled using SA-240 Type XM-19 stainless steel material properties. The cask top and bottom forgings and cask lid are modeled using SA182 Type 304 stainless steel forging material properties. The model is shown in Figure 2.10.14-1 through Figure 2.10.14-3.

The neutron shield tank and water inside the neutron shield tanks are represented with ANSYS MASS21 elements (approximately 5,600 lbs for entire cask, 2,000 lbs for tanks, and 3,600 lbs for the water). For the end drops, the MASS21 elements are applied around the outer circumference (0°–180°) of the LWT cask. For the side and corner drops, the MASS21 elements are applied to the lower half of the outer circumference (0°–90°) of the outer shell. As a modeling convenience, a small hole is modeled in the center of the lid and bottom of the cask. Symmetry boundary conditions are applied to the plane of symmetry of the cask body model. The lid bolts are modeled using beam elements (BEAM4). The preload of 35,000 lbs per bolt is modeled by applying an initial strain to the beam elements. The applied strain is 0.00273 in/in.

The lead is considered a soft material when compared with the stainless steel shells. To simulate the interface between lead and the stainless steel shells, a small gap of 0.015 inch is modeled using ANSYS CONTAC52 gap elements. Gap elements are also modeled between the lid and top forging and between the cask and the impact limiters. The interface between the cask and impact limiters simulates the pressure applied by the impact limiters during drop conditions. The gap stiffness is modeled as a cosine distribution from a maximum value of 1.0×10^6 lb/in at the line of impact to a value of 1.31×10^5 lb/in at an angle of 82.5° from the line of impact. A minimal value of 100 lb/in is used from 90° to 180°.

Inertia loads of 25 g for side drop and 20 g for the end and corner drops are used in the cask body evaluation for normal conditions. For all drop cases, a conservative internal pressure of 450 psig is applied on the cask cavity and lid interior surfaces in the outward normal direction. The pressure bounds the MNOP of 420 psig for normal conditions of transport (Section 3.4.4.5). The weight of the contents (basket, consolidation canister, and TPBARs) is also applied as a concentrated pressure loading over a single row of elements (7.5°) for side and corner drops. For end drops, the contents weight is applied to either the cask lid or bottom forging as appropriate. For other drop orientations, pressure is applied on the appropriate surface, depending on the drop angle.

To calculate the thermal stresses in the cask, the temperature results from the design basis PWR fuel configuration are used to derive a conservative temperature gradient for the calculation of thermal stresses. The heat load for the design basis PWR fuel of 2.5 kW is greater than the heat load for the TPBAR configuration (1.063 kW) and, therefore, the analysis is conservative. A temperature of 227°F is applied to the cask lid and top forging regions. At the axial center of the inner and outer shells, a temperature of 274°F and 229°F is applied, respectively. For the bottom

of the cask and interface with the inner and outer shells, a temperature of 239°F is used. Using these temperatures as input, a thermal conduction solution is obtained using the finite element model described in this section, with the exception that the ANSYS SOLID45 structural elements are replaced with the equivalent SOLID70 thermal elements. Once calculated, the temperatures from the thermal conduction solution are applied as a boundary condition to the cask body structural model to calculate thermal stresses.

Finite Element Analysis Result Summary

The most crucial sections for each cask component are shown in Figure 2.10.14-4. Table 2.10.14-1 shows the material designation at each section location. The maximum P_m, $P_m + P_b$, and P+Q stresses for each component are reported in Table 2.10.14-2 through 2.10.14-16 for the different drop orientations. Allowable stresses are conservatively reported at a temperature of 250°F. Margins of Safety greater than +10 are reported as "Large."

The minimum margin of safety is +0.13, which occurs at section 2 for the condition of P_m stress for 1-foot side-drop conditions. This section is located at the axial center of the cask outer shell. The minimum margins of safety for each stress category for 1-foot drop conditions are as follows.

Stress Category	Section	Drop Orientation	Stress Intensity, ksi	Stress Allowable, ksi	Margin of Safety
P_m	2	Side	28.62	32.3	+0.13
$P_m + P_b$	2	Side	32.81	48.45	+0.48
P+Q	12	Top End	32.27	60.0	+0.86

2.10.14.2 Hypothetical Accident Conditions for Cask Body with TPBAR Contents

This section provides the cask body structural evaluation for hypothetical accident conditions. The following sections discuss drop conditions and inner shell buckling.

2.10.14.2.1 Free Drop (30-Foot)

The hypothetical accident conditions drop orientations considered are: side drop, top-end drop, bottom-end drop, top-end CG-over-corner drop, and bottom-end CG-over-corner drop. Corner drops are defined as the CG of the cask over the impact limiter corner (15.74° from vertical).

Finite Element Model Description

The finite element model is described in Section 2.10.14.1.2. For accident conditions, an acceleration of 60 g is applied to all drop orientations. The temperature-dependent material properties presented in Section 2.3 are used in the analysis.

Finite Element Analysis Result Summary

The most critical sections for each cask component are shown in Figure 2.10.14-4. Table 2.10.14-1 shows the material at each section location. The maximum P_m and $P_m + P_b$ stresses for each component are reported in Tables 2.10.14-17 through 2.10.14-26 for different drop conditions. Allowable stresses are reported at a temperature of 250°F. Margins of Safety greater than +10.0 are reported as "Large."

The minimum margin of safety is +0.04, which occurs at section 2 for the condition of P_m stress, for 30-foot drop conditions. This section is located at the axial center of the cask outer shell. The minimum Margins of Safety for each stress category for 30-foot drop conditions are as follows.

Stress Category	Section	Drop Orientation	Stress Intensity, Ksi	Stress Allowable, ksi	Margin of Safety
P_m	2	Side	65.45	67.83	+0.04
P_m+P_b	2	Side	72.86	96.9	+0.33

2.10.14.2.2 Fire Accident

A finite element analysis is performed using the three-dimensional model as described in Section 2.10.14.1.2 for the evaluation of the fire accident conditions. The maximum calculated internal pressure for the fire accident is 459 psig (Section 3.5.4.4). A bounding internal pressure of 600 psig is conservatively used in combination with the inertial load in the model. The maximum P_m and P_m+P_b stresses for each cask component are presented in Table 2.10.14-27 and Table 2.10.14-28. The minimum Margin of Safety is +6.72 and +9.15 for the P_m and P_m+P_b stresses, respectively.

2.10.14.3 Inner Shell Buckling

Section 2.10.6 presents a buckling evaluation of the cask inner shell per ASME Code Case N-284 for the design basis cask configuration. The evaluation presented in Section 2.10.6 bounds the TPBAR contents based on the following.

- The maximum weight of the TPBAR contents of 1,000 lbs is enveloped by the weight of the design basis contents, which would reduce the compressive stresses in the cask shells due to less inertia loading for the drop conditions.
- The cask internal pressure for the TPBAR contents is significantly higher than the cask internal pressure for the design basis contents. The increase in the pressure would increase the tensile stresses in the shell that result in stiffening of the inner shell and, consequently, in reducing the compressive stresses associated with buckling.

The interaction summary presented in Table 2.10.6-10, associated with the design basis weight and the design basis pressure, is bounding for the TPBAR content conditions. Therefore, it is

concluded that the cask inner shell will not buckle with the TPBAR contents in the NAC-LWT cask.

2.10.14.4 NAC-LWT Cask Closure Lid and Bolts

The NAC-LWT cask closure lid is bolted to the cask body top forging with twelve 1-8 UNC bolts fabricated from SA-453, Grade 660 high-alloy steel. The threaded portion of the bolt engages the cask body a minimum of 1.875 inches. From Section 2.1.3.2.2, the torque on the cask lid bolts is 260 ± 20 ft-lb and the bolt preload is specified as 34,843 lbs. For the LWT cask configured to ship TPBARs, the maximum internal pressure of 600 psig is conservatively used in the closure lid evaluation. This pressure bounds the maximum pressure during the fire accident contained in Section 3.5.4.4. To ensure that the seal is not unloaded during accident conditions, the preload is calculated to account for the weight of the lid, internal weight of the cask contents, force resulting from internal pressure, force resulting from compression of the TFE O-ring, and force resulting from compression of the metallic O-ring. The load resulting from the weight of the LWT cask contents is

$$F_2 = W_c a = 1{,}800 \times 60g = 108{,}000 \text{lbs}$$

where:

W_c = 1,800 lbs (bounding weight of TPBAR basket and contents)

a = 60 g (maximum accident acceleration)

The load resulting from accident pressure (fire accident) is:

$$F_{ip} = P_{ip} A = 600 \times 171.36 = 102{,}816 \text{ lbs}$$

where:

P_{ip} = 600 psig (accident internal pressure)

$$A = \frac{\pi}{4} \times 14.771^2 = 171.36 \text{ in}^2$$

The total required bolt preload force (12 bolts) is:

$$FT = F_1 + F_2 + F_{tr} + F_{mr} + F_{ip}$$

$$= 56{,}460 + 108{,}000 + 2{,}474 + 79{,}470 + 102{,}816 = 349{,}220 \text{ lbs}$$

where:

F_{tr} = 2,474 lbs, TFE O-ring load (Section 2.1.3.2.2)

F_{mr} = 79,470 lbs, Metallic O-ring load (Section 2.1.3.2.2)

F_1 = 56,460 lbs, Lid load (Section 2.1.3.2.2)

The required bolt preload per bolt is:

$$F_{bolt} = \frac{F_T}{12} = \frac{349{,}220}{12} = 29{,}102 \text{ lbs} \quad < 34{,}843 \text{ lbs} \quad \text{(Section 2.1.3.2.2)}$$

Since the bolt preload presented in Section 2.1.3.2.2 of the NAC-LWT is bounding, no further analysis of the LWT lid bolts is required.

The preload applied to the cask lid bolts is due to the load applied to the lid. The load applied to the lid for the design basis weight and pressure for the PWR fuel bounds the load applied to the lid for the TPBAR contents. Therefore, the stresses in the cask lid due to the design basis weight and pressure also bound the stresses in the cask lid due to the TPBAR content weight and pressure.

2.10.14.5 Conclusion

Based on the evaluations presented in Sections 2.10.14.1 through 2.10.14.4, the NAC-LWT cask with TPBAR contents satisfies the requirements of 10 CFR 71 for the normal conditions of transport and for hypothetical accidents.

Figure 2.10.14-1 ANSYS Finite Element Model of the Cask Body

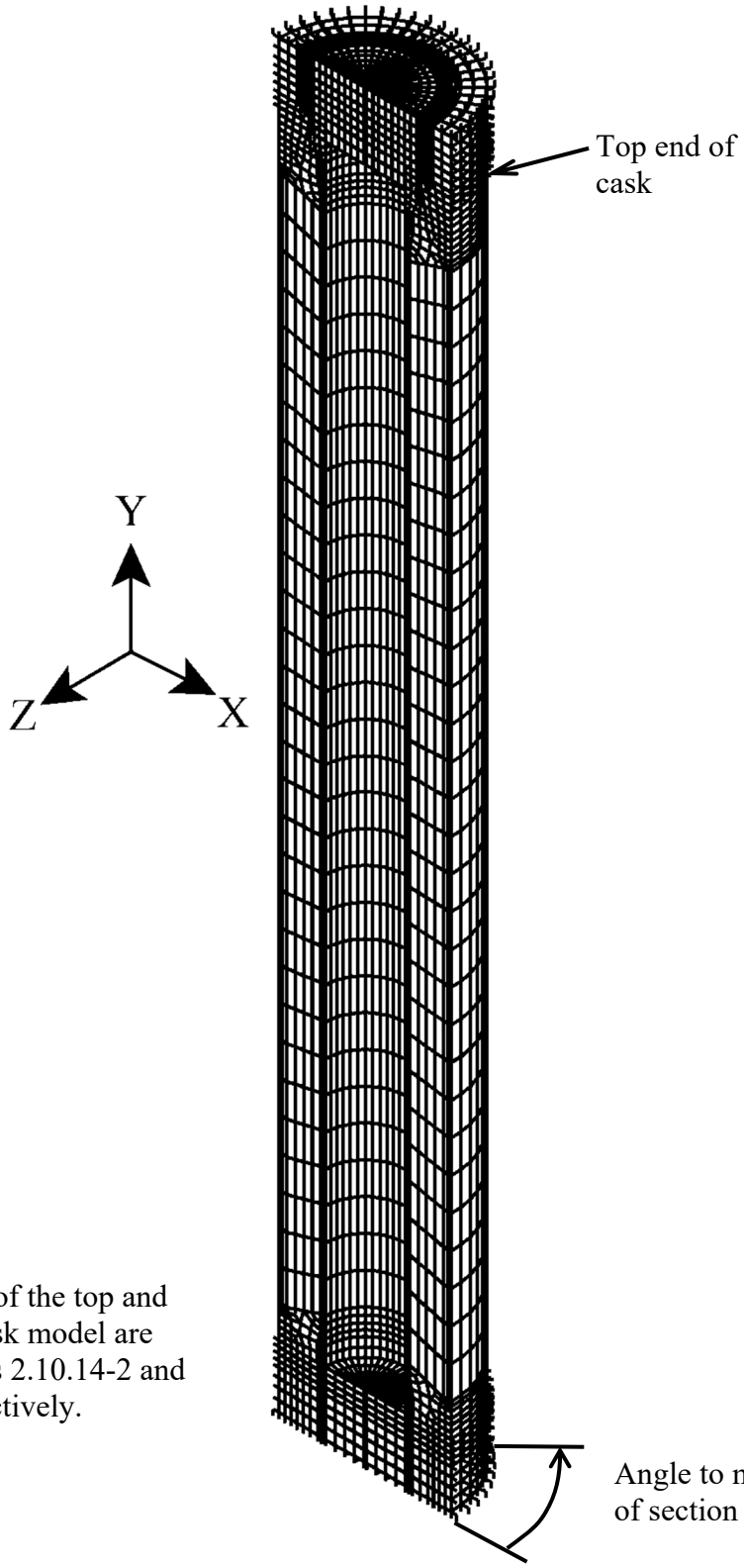

Note:
A detailed view of the top and bottom of the cask model are shown in Figures 2.10.14-2 and 2.10.14-3, respectively.

Figure 2.10.14-2 Detailed View of the Cask Body Finite Element Model Top

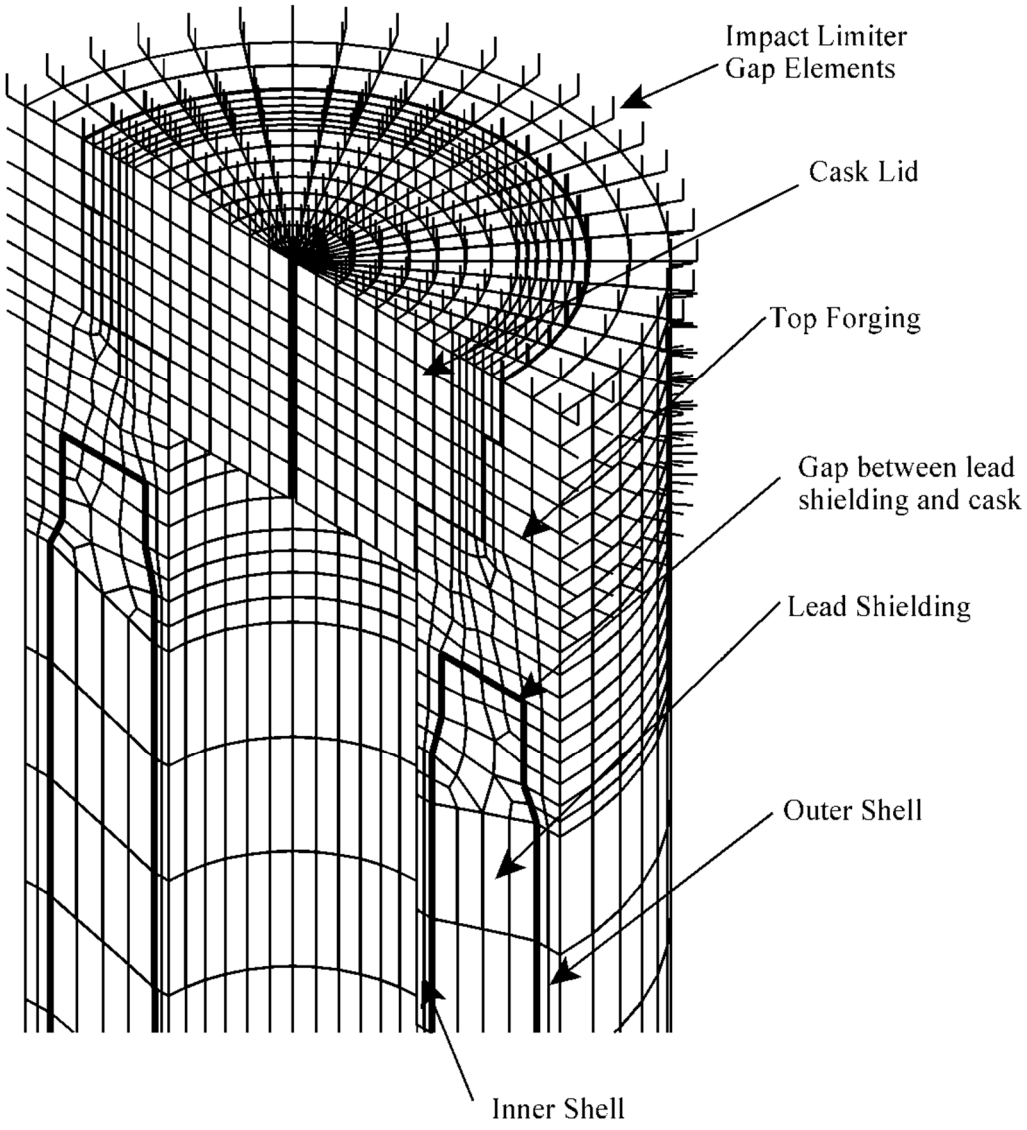

Figure 2.10.14-3 Detailed View of the Cask Body Finite Element Model Bottom

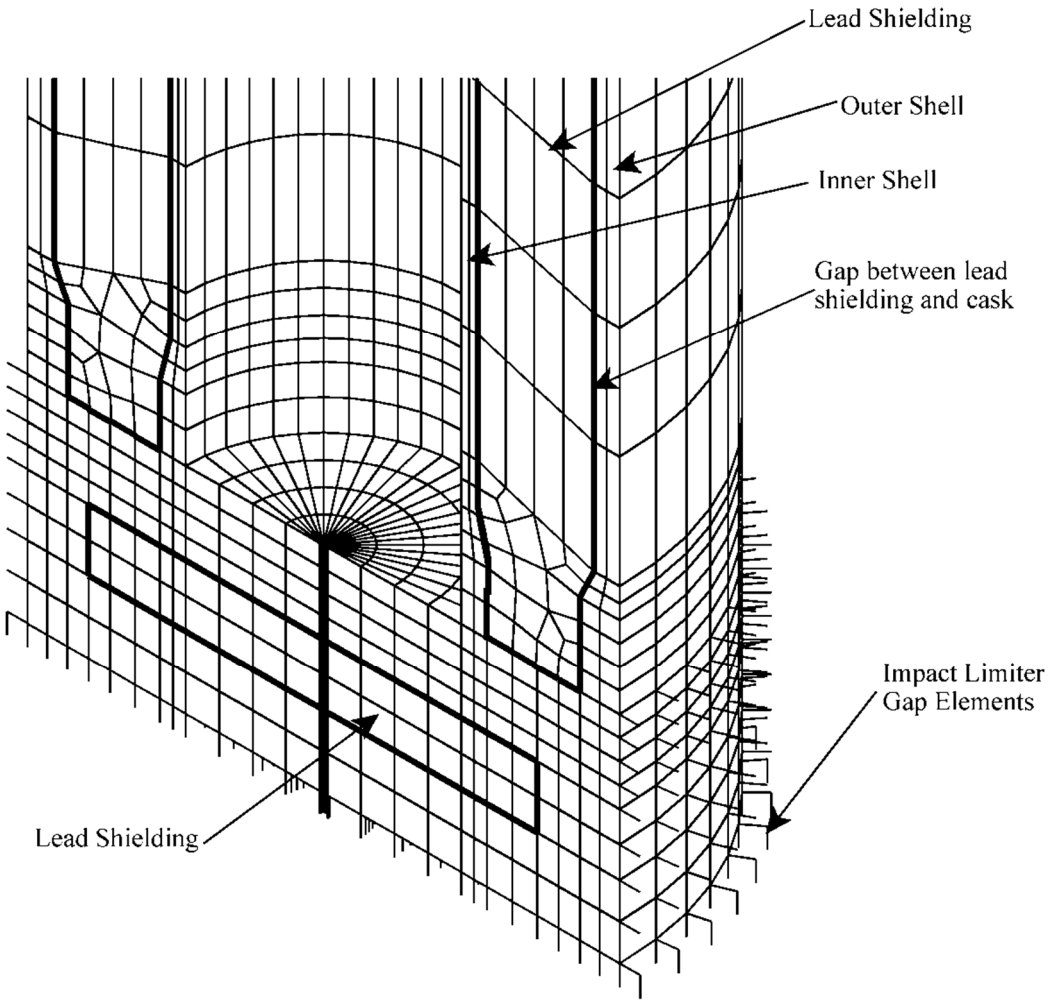

Figure 2.10.14-4 Location of Sections of the NAC-LWT Cask Body Model

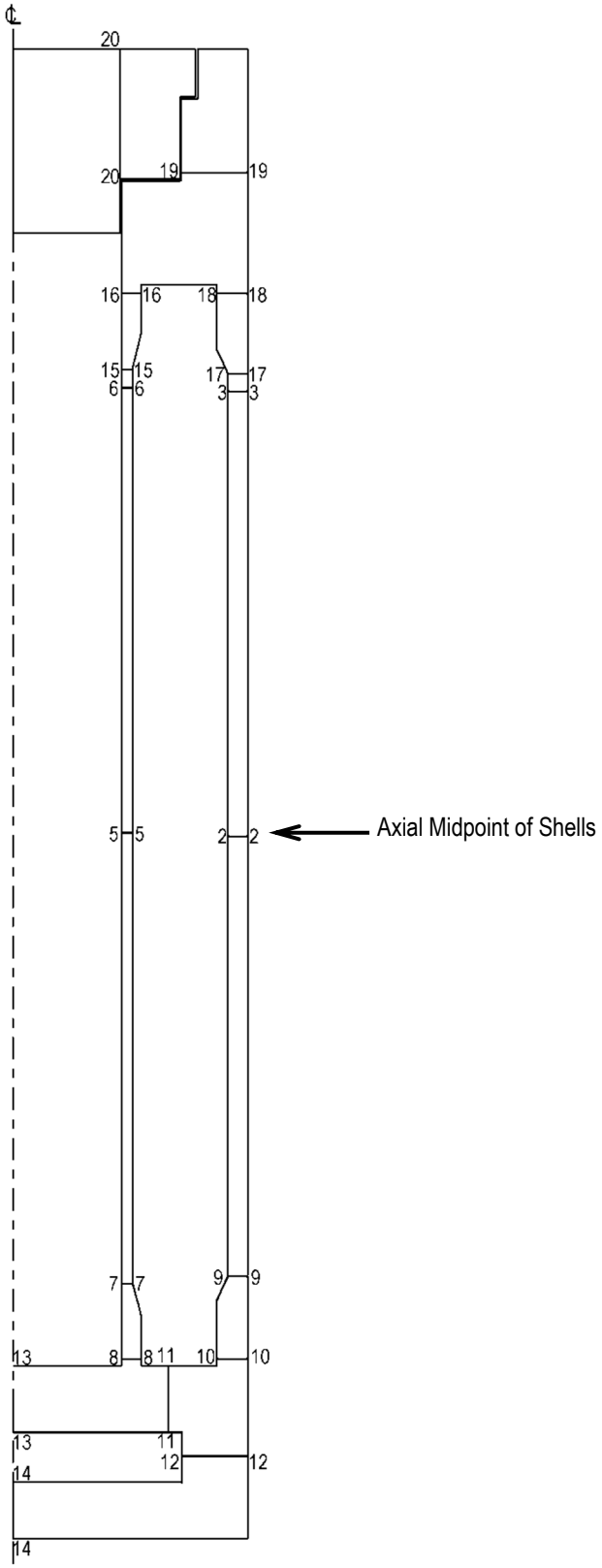

Table 2.10.14-1 Material Designations for Sections

Location	Material	Sections[1]
Outer Shell	SA240 Type XM-19	1-3
Inner Shell	SA240 Type XM-19	4-6
Bottom Forging	SA182 Type 304	7-14
Top Forging	SA182 Type 304	15-19
Lid	SA182 Type 304	20

[1] Sections are shown on Figure 2.10.14-4.

Table 2.10.14-2 1-Foot Side Drop with Internal Pressure, P_m Stresses, ksi

Sec[1]	Location (deg)[2]	S_x[3]	S_y[3]	S_z[3]	S_{xy}[3]	S_{yz}[3]	S_{xz}[3]	Stress Intensity	Stress Allow.	MS
1	75	0.03	0.27	2.72	0.08	-6.73	-0.03	13.68	32.30	1.36
2	0	-0.14	1.71	28.46	-0.18	-0.01	0.00	28.62	32.30	0.13
3	67.5	0.04	0.37	4.03	0.05	6.04	0.00	12.63	32.30	1.56
4	97.5	-0.28	3.60	1.76	0.1	-4.25	0.01	8.69	32.30	2.72
5	180	-0.24	3.87	-15.6	0.27	0.00	0.00	19.52	32.30	0.65
6	97.5	-0.29	3.57	1.59	0.09	4.18	-0.01	8.59	32.30	2.76
7	112.5	-0.32	3.25	2.41	0.00	-5.84	-0.03	11.71	20.00	0.71
8	180	-2.05	2.16	6.45	0.09	-0.31	-1.91	9.34	20.00	1.14
9	67.5	0.02	-0.44	3.03	-0.34	-6.54	0.07	13.56	20.00	0.47
10	0	1.77	-4.55	1.08	0.74	-0.43	3.57	9.82	20.00	1.04
11	0	-4.90	-4.05	-0.48	0.11	0.06	0.30	4.48	20.00	3.46
12	0	-0.02	-1.49	-0.3	0.12	0.03	-0.52	1.89	20.00	9.58
13	90	-0.72	-3.26	-0.51	-0.08	0.36	0.05	2.85	20.00	6.02
14	0	-0.24	0.86	-0.64	0.00	-0.26	-0.37	1.80	20.00	+Large
15	112.5	-0.33	2.88	2.00	-0.04	6.00	0.01	12.03	20.00	0.66
16	127.5	-0.23	1.27	2.16	0.03	4.11	0.06	8.26	20.00	1.42
17	67.5	0.04	0.23	3.45	-0.3	6.05	-0.05	12.53	20.00	0.6
18	60	0.04	-0.19	2.61	0.05	4.09	-0.16	8.65	20.00	1.31
19	0	-2.80	-3.45	-1.13	0.42	0.06	1.73	4.05	20.00	3.94
20	105	0.12	-0.08	-0.78	-0.14	0.07	-0.48	1.36	20.00	+Large

Notes:
1. See Figure 2.10.14-4 for locations of sections.
2. The location specifies the angle at which the maximum stress intensity occurs. See Figure 2.10.14-1 for definition of angular location.
3. Stress components correspond to a cylindrical coordinate system.

Table 2.10.14-3 1-Foot Side Drop with Internal Pressure, $P_m + P_b$ Stresses, ksi

Sec[1]	Location (deg)[2]	S_x[3]	S_y[3]	S_z[3]	S_{xy}[3]	S_{yz}[3]	S_{xz}[3]	Stress Intensity	Stress Allow.	MS
1	67.5	0.06	1.94	3.91	0.10	-7.44	-0.02	15.01	48.45	2.23
2	180	-0.06	5.49	-27.3	0.40	-0.01	0.00	32.81	48.45	0.48
3	67.5	0.07	2.30	4.81	0.08	6.83	-0.01	13.89	48.45	2.49
4	105	-0.11	7.76	3.25	0.04	-3.85	0.02	10.07	48.45	3.81
5	180	-0.13	4.94	-16.1	0.33	0.00	0.00	21.11	48.45	1.30
6	105	-0.13	8.01	3.02	0.03	3.82	-0.01	10.21	48.45	3.75
7	120	-0.40	-1.45	-0.17	-0.09	-6.63	-0.06	13.33	30.00	1.25
8	180	-3.35	1.35	11.83	0.02	-0.01	-1.94	15.67	30.00	0.91
9	60	-0.07	0.45	3.51	-0.65	-7.76	0.25	15.87	30.00	0.89
10	0	4.60	-8.34	-11.2	0.64	-0.03	3.96	17.69	30.00	0.70
11	0	-8.55	-6.21	-0.09	0.09	0.09	0.85	8.63	30.00	2.48
12	0	0.19	-1.58	0.67	0.08	-0.06	-0.25	2.37	30.00	Large
13	90	-1.59	-4.60	-0.56	-0.03	0.22	0.03	4.06	30.00	6.39
14	0	0.15	1.85	-2.64	0.04	-0.96	-0.36	4.93	30.00	5.09
15	120	-0.40	-2.14	-0.49	-0.18	6.71	0.04	13.52	30.00	1.22
16	180	-1.05	2.98	12.82	0.27	0.12	2.21	14.58	30.00	1.06
17	60	-0.09	1.64	4.94	-0.60	7.16	-0.32	14.75	30.00	1.03
18	37.5	-0.27	-0.42	6.60	0.12	5.16	-1.35	12.79	30.00	1.35
19	0	-1.15	-0.70	2.68	0.03	0.20	1.42	4.78	30.00	5.28
20	45	0.14	0.29	-0.82	0.40	-0.14	-1.71	3.69	30.00	7.13

Notes:
1. See Figure 2.10.14-4 for locations of sections.
2. The location specifies the angle at which the maximum stress intensity occurs. See Figure 2.10.14-1 for definition of angular location.
3. Stress components correspond to a cylindrical coordinate system.

Table 2.10.14-4 1-Foot Side Drop with Internal Pressure, P + Q Stresses, ksi

Sec[1]	Location (deg)[2]	S_x[3]	S_y[3]	S_z[3]	S_{xy}[3]	S_{yz}[3]	S_{xz}[3]	Stress Intensity	Stress Allow.	MS
1	0	-0.55	15.40	24.02	-1.59	-0.42	0.12	24.75	96.90	2.92
2	0	-0.71	19.69	44.63	-1.80	-0.01	0.00	45.49	96.90	1.13
3	0	-0.54	13.81	26.33	-1.43	0.36	-0.13	27.02	96.90	2.59
4	105	-0.12	7.66	6.87	0.04	-3.86	0.02	11.26	96.90	7.61
5	0	-0.21	7.43	24.07	-0.58	0.00	0.00	24.32	96.90	2.98
6	105	-0.12	7.87	6.61	0.03	3.82	-0.01	11.23	96.90	7.63
7	127.5	-0.38	-0.51	5.48	-0.32	-6.55	-0.05	14.42	60.00	3.16
8	180	-3.30	7.54	20.21	0.58	-0.02	-3.06	24.32	60.00	1.47
9	60	-0.93	8.87	16.75	-0.64	-7.72	1.27	22.59	60.00	1.66
10	0	0.32	6.18	26.85	0.49	-0.65	3.59	27.54	60.00	1.18
11	180	4.70	4.58	-9.21	0.03	-0.55	-3.98	16.07	60.00	2.73
12	180	-9.18	5.31	19.14	0.72	-0.15	1.69	28.56	60.00	1.10
13	90	-4.89	-9.76	0.40	-0.13	0.50	0.30	10.24	60.00	4.86
14	0	13.70	21.28	-5.45	-0.28	-1.15	-0.45	26.85	60.00	1.23
15	112.5	-0.36	8.42	9.97	-0.08	5.42	0.17	15.04	60.00	2.99
16	180	-6.26	-4.20	8.67	-0.48	0.73	5.04	18.15	60.00	2.31
17	52.5	-0.80	9.27	19.54	-0.68	6.96	-1.51	24.09	60.00	1.49
18	0	-10.52	1.95	17.29	-1.49	-0.70	-6.65	31.02	60.00	0.93
19	0	-4.65	-5.26	-4.47	0.73	-0.11	2.00	4.31	60.00	Large
20	45	-0.60	0.45	-1.83	0.39	-0.14	-3.42	7.04	60.00	7.52

Notes:
1. See Figure 2.10.14-4 for locations of sections.
2. The location specifies the angle at which the maximum stress intensity occurs. See Figure 2.10.14-1 for definition of angular location.
3. Stress components correspond to a cylindrical coordinate system.

Table 2.10.14-5 1-Foot Top-End Drop with Normal Internal Pressure, P_m Stresses, ksi

Sec[1]	S_x[2]	S_y[2]	S_z[2]	S_{xy}[2]	S_{yz}[2]	S_{xz}[2]	Stress Intensity	Stress Allow.	MS
1	0.00	-0.03	0.16	0.00	0.00	0.01	0.19	32.30	Large
2	0.00	0.00	-0.78	0.00	0.00	0.00	0.78	32.30	Large
3	0.01	0.03	-1.81	0.00	0.00	0.01	1.85	32.30	Large
4	-0.19	3.99	0.81	-0.28	0.00	0.00	4.22	32.30	6.65
5	-0.19	3.99	0.37	-0.28	0.00	0.00	4.22	32.30	6.65
6	-0.19	4.03	-0.14	-0.28	0.00	0.00	4.26	32.30	6.58
7	-0.20	4.09	0.83	-0.28	0.00	-0.06	4.33	20.00	3.62
8	-0.25	0.88	0.52	-0.07	0.02	0.24	1.20	20.00	Large
9	0.00	-0.03	0.22	0.00	0.00	0.02	0.25	20.00	Large
10	0.00	0.01	0.17	0.00	0.00	0.01	0.17	20.00	Large
11	-0.07	-0.01	-0.05	0.00	0.01	0.07	0.15	20.00	Large
12	-0.01	0.04	0.03	0.00	0.00	0.05	0.11	20.00	Large
13	-0.02	-0.04	-0.31	0.00	0.00	0.04	0.30	20.00	Large
14	0.09	0.14	-0.04	0.00	0.00	0.01	0.18	20.00	Large
15	-0.22	4.00	-0.04	-0.02	0.11	0.05	4.24	20.00	3.72
16	-2.36	-0.99	-1.13	-0.20	0.10	0.89	2.19	20.00	8.13
17	0.02	0.46	-1.78	0.00	0.01	0.05	2.24	20.00	7.93
18	-2.16	0.67	-2.04	-0.34	-0.13	-0.44	3.29	20.00	5.08
19	-0.27	0.75	-1.61	0.11	-0.08	0.42	2.50	20.00	7.00
20	-0.35	-0.57	-2.20	-0.01	-0.01	0.34	1.97	20.00	9.15

Notes: 1. See Figure 2.10.14-4 for locations of sections.

2. Stress components correspond to a cylindrical coordinate system.

Table 2.10.14-6 1-Foot Top-End Drop with Internal Pressure, $P_m + P_b$ Stresses, ksi

Sec[1]	S_x[2]	S_y[1]	S_z[1]	S_{xy}[1]	S_{yz}[1]	S_{xz}[1]	Stress Intensity	Stress Allow.	MS
1	0.00	-0.03	0.18	0.00	0.00	0.01	0.21	48.45	Large
2	0.00	0.00	-0.77	0.00	0.00	0.00	0.78	48.45	Large
3	0.01	-0.03	-1.92	0.00	0.00	0.01	1.93	48.45	Large
4	-0.31	4.26	0.88	-0.30	0.00	0.00	4.61	48.45	9.51
5	-0.30	4.27	0.43	-0.30	0.00	0.00	4.61	48.45	9.51
6	-0.31	4.38	-0.06	-0.31	0.01	0.01	4.74	48.45	9.22
7	-0.29	4.16	0.17	-0.29	0.00	-0.06	4.49	30.00	5.68
8	-0.49	1.30	1.74	-0.11	0.02	0.27	2.30	30.00	Large
9	0.00	-0.02	0.25	0.00	0.00	0.03	0.27	30.00	Large
10	0.00	0.03	0.22	0.00	0.00	0.02	0.23	30.00	Large
11	-0.09	-0.04	-0.01	0.00	0.01	0.11	0.23	30.00	Large
12	-0.02	0.03	-0.02	0.00	0.00	0.07	0.14	30.00	Large
13	0.39	0.58	-0.20	-0.01	0.00	0.04	0.79	30.00	Large
14	0.22	0.33	-0.05	-0.01	0.00	0.01	0.38	30.00	Large
15	-0.29	4.06	-1.05	-0.28	0.01	0.05	5.13	30.00	4.85
16	-3.24	-2.82	-4.43	0.39	-0.36	1.55	3.44	30.00	7.72
17	-0.02	0.35	-1.96	-0.03	0.00	0.03	2.32	30.00	Large
18	-3.46	-0.29	-4.22	-0.47	-0.38	-0.94	4.72	30.00	5.36
19	-0.57	0.72	-1.83	0.16	-0.14	0.59	2.82	30.00	9.64
20	0.07	-0.16	-1.84	0.00	-0.01	1.89	4.23	30.00	6.09

[1] See Figure 2.10.14-4 for locations of sections.
[2] Stress components correspond to a cylindrical coordinate system.

Table 2.10.14-7 1-Foot Top-End Drop with Internal Pressure, P + Q Stresses, ksi

Sec[1]	S_x[2]	S_y[1]	S_z[1]	S_{xy}[1]	S_{yz}[1]	S_{xz}[1]	Stress Intensity	Stress Allow.	MS
1	-0.52	12.92	15.31	-1.32	0.03	0.05	15.96	96.90	5.07
2	-0.64	15.83	13.40	-1.49	-0.01	0.02	16.74	96.90	4.79
3	-0.52	10.78	13.14	-1.14	-0.10	-0.06	13.78	96.90	6.03
4	-0.31	4.50	4.88	-0.01	-0.22	0.02	5.30	96.90	Large
5	-0.30	4.25	3.79	-0.30	0.00	0.00	4.59	96.90	Large
6	-0.21	4.94	3.71	-0.10	0.95	0.02	5.67	96.90	Large
7	-0.32	6.53	5.83	-0.18	-1.18	-0.14	7.74	60.00	6.75
8	-0.79	6.95	7.63	-0.38	-0.88	-0.67	9.12	60.00	5.58
9	-0.49	7.63	15.08	-0.65	0.19	0.36	15.65	60.00	2.83
10	2.38	4.06	20.22	1.25	-0.57	2.67	19.28	60.00	2.11
11	-2.20	-14.90	-8.44	2.15	0.03	-3.58	15.00	60.00	3.00
12	-11.69	-3.15	20.42	0.95	0.25	0.92	32.27	60.00	0.86
13	-12.75	-27.09	-3.36	2.41	1.70	0.20	24.37	60.00	1.46
14	14.92	25.89	-0.03	0.43	2.99	0.07	26.61	60.00	1.25
15	-0.55	7.91	6.84	-0.25	1.90	0.27	9.92	60.00	5.05
16	-2.17	-9.29	2.71	-0.47	3.58	0.48	14.03	60.00	3.28
17	-1.27	7.86	12.32	-0.79	0.05	-0.98	13.80	60.00	3.35
18	-13.44	2.38	2.82	1.97	1.51	-5.13	19.93	60.00	2.01
19	-0.37	-21.40	-6.93	1.78	2.12	-0.45	21.64	60.00	1.77
20	-4.46	-1.17	-3.63	-0.07	-0.46	6.70	13.47	60.00	3.45

[1] See Figure 2.10.14-4 for locations of sections.
[2] Stress components correspond to a cylindrical coordinate system.

Table 2.10.14-8 1-Foot Top-Corner Drop with Internal Pressure, P_m Stresses, ksi

Sec[1]	Location (deg)[2]	S_x[3]	S_y[1]	S_z[3]	S_{xy}[3]	S_{yz}[3]	S_{xz}[3]	Stress Intensity	Stress Allow.	MS
1	67.5	0.01	0.05	0.46	0.02	-1.19	0.00	2.42	32.30	Large
2	180	-0.03	-0.15	-4.64	0.01	0.02	0.00	4.62	32.30	5.99
3	0	0.04	0.28	-4.14	-0.02	0.08	0.03	4.43	32.30	6.29
4	82.5	-0.20	4.03	0.40	0.04	-0.93	0.00	4.46	32.30	6.24
5	180	-0.22	3.96	-2.83	0.25	0.01	0.00	6.80	32.30	3.75
6	0	-0.20	4.15	-2.89	-0.31	0.06	0.00	7.07	32.30	3.57
7	45	-0.18	4.00	-0.54	-0.01	-0.52	-0.04	4.67	20.00	3.28
8	180	-0.82	1.57	2.14	0.09	-0.11	-0.52	3.15	20.00	5.35
9	60	0.01	-0.07	0.55	-0.06	-1.18	0.01	2.44	20.00	7.20
10	0	0.14	-0.92	-0.15	0.11	-0.08	0.82	1.85	20.00	9.81
11	180	0.15	0.28	0.19	0.00	0.04	-0.44	0.88	20.00	Large
12	0	0.00	-0.29	-0.18	0.03	0.02	-0.22	0.49	20.00	Large
13	82.5	-0.02	-0.30	0.01	0.02	0.08	0.00	0.35	20.00	Large
14	90	0.04	-0.32	0.00	-0.01	0.09	-0.01	0.40	20.00	Large
15	0	-0.19	3.52	-3.76	-0.26	0.05	-0.07	7.30	20.00	1.74
16	180	-2.21	-0.88	0.52	-0.18	0.10	0.88	3.28	20.00	5.10
17	0	0.03	0.73	-4.41	-0.04	0.09	0.13	5.15	20.00	2.88
18	0	-2.95	0.33	-4.57	-0.43	-0.10	-0.61	5.18	20.00	2.86
19	0	-1.13	-0.40	-3.94	0.01	0.13	0.59	3.67	20.00	4.45
20	0	-0.68	-0.72	-3.01	0.04	0.06	0.42	2.50	20.00	7.00

[1] See Figure 2.10.14-4 for locations of sections.
[2] The location specifies the angle at which the maximum stress intensity occurs. See Figure 2.10.14-1 for definition of angular location.
[3] Stress components correspond to a cylindrical coordinate system.

Table 2.10.14-9 1-Foot Top-Corner Drop with Internal Pressure, $P_m + P_b$ Stresses, ksi

Sec[1]	Location (deg)[2]	S_x[3]	S_y[3]	S_z[3]	S_{xy}[3]	S_{yz}[3]	S_{xz}[3]	Stress Intensity	Stress Allow.	MS
1	52.5	0.02	0.73	0.79	0.02	-1.42	0.00	2.83	48.45	Large
2	180	-0.02	2.06	-4.10	0.15	0.02	0.00	6.17	48.45	6.85
3	0	0.05	0.45	-4.18	-0.03	0.07	0.02	4.64	48.45	9.44
4	180	-0.31	6.95	1.48	0.40	-0.07	-0.01	7.30	48.45	5.64
5	180	-0.32	4.60	-2.52	0.30	0.01	0.00	7.13	48.45	5.80
6	0	-0.07	4.33	-2.87	-0.31	0.05	-0.01	7.22	48.45	5.71
7	180	-0.41	6.20	3.06	0.33	-0.21	-0.04	6.66	30.00	3.50
8	180	-1.06	0.64	3.48	0.02	0.08	-0.54	4.67	30.00	5.42
9	45	-0.02	0.27	0.58	-0.14	-1.53	0.04	3.08	30.00	8.74
10	0	0.75	-1.33	-2.73	0.10	0.07	0.85	3.88	30.00	6.73
11	0	-1.50	-1.10	0.01	-0.02	0.02	0.27	1.60	30.00	Large
12	0	-0.08	-0.25	-0.21	0.04	0.02	-0.29	0.60	30.00	Large
13	97.5	-0.15	-0.47	0.04	-0.06	0.11	0.02	0.57	30.00	Large
14	97.5	-0.02	-0.55	0.02	-0.08	0.07	0.00	0.61	30.00	Large
15	15	-0.26	3.68	-3.88	-0.02	0.31	-0.05	7.59	30.00	2.95
16	7.5	-1.57	-2.25	-6.66	0.11	-0.21	0.46	5.19	30.00	4.78
17	0	-0.05	0.77	-4.44	-0.04	0.06	-0.01	5.21	30.00	4.76
18	0	-4.72	-0.84	-6.79	-0.62	-0.42	-1.28	6.74	30.00	3.45
19	7.5	-0.57	-1.13	-5.35	0.10	0.08	0.36	4.86	30.00	5.17
20	15	0.55	-0.17	-2.13	0.03	0.02	1.89	4.63	30.00	5.48

[1] See Figure 2.10.14-4 for locations of sections.
[2] The location specifies the angle at which the maximum stress intensity occurs. See Figure 2.10.14-1 for definition of angular location.
[3] Stress components correspond to a cylindrical coordinate system.

Table 2.10.14-10 1-Foot Top-Corner Drop with Internal Pressure, P + Q Stresses, ksi

Sec[1]	Location (deg)[2]	S_x[3]	S_y[3]	S_z[3]	S_{xy}[3]	S_{yz}[3]	S_{xz}[3]	Stress Intensity	Stress Allow.	MS
1	0	-0.60	13.88	16.25	-1.45	-0.03	0.11	17.00	96.90	4.70
2	180	-0.66	17.87	9.96	1.63	0.02	0.00	18.82	96.90	4.15
3	180	-0.57	10.71	13.36	1.13	0.14	-0.08	14.05	96.90	5.90
4	180	-0.29	6.83	5.16	0.39	-0.07	0.00	7.17	96.90	Large
5	0	-0.11	4.27	6.69	-0.30	0.01	0.00	6.83	96.90	Large
6	180	-0.33	4.07	5.56	0.30	0.05	0.00	5.91	96.90	Large
7	180	-0.42	6.54	7.55	0.35	-0.21	-0.02	8.03	60.00	6.47
8	180	-1.00	6.83	11.86	0.58	0.06	-1.66	13.33	60.00	3.50
9	37.5	-0.90	8.86	13.82	-0.14	-1.55	1.06	15.31	60.00	2.92
10	0	0.92	6.43	15.93	-0.22	-0.06	1.20	15.22	60.00	2.94
11	7.5	5.45	-1.00	-7.52	0.03	-0.02	-3.91	15.15	60.00	2.96
12	180	-9.30	4.43	18.60	0.70	-0.14	1.84	28.18	60.00	1.13
13	172.5	7.32	10.45	-0.42	-0.01	0.01	0.03	10.87	60.00	4.52
14	0	13.25	19.46	-2.77	-0.31	-0.19	-0.15	22.25	60.00	1.70
15	180	-0.29	5.15	8.71	0.35	0.04	0.27	9.04	60.00	5.64
16	180	-3.10	-2.18	8.02	-0.33	-0.42	0.73	11.33	60.00	4.30
17	180	-1.16	7.10	13.74	0.73	0.03	-1.31	15.19	60.00	2.95
18	180	-11.98	2.68	5.62	1.78	1.41	-4.81	20.53	60.00	1.92
19	0	-1.49	-0.18	-5.20	0.11	0.00	0.29	5.05	60.00	Large
20	15	1.70	0.11	-2.87	0.02	0.01	3.25	7.96	60.00	6.54

[1] See Figure 2.10.14-4 for locations of sections.
[2] The location specifies the angle at which the maximum stress intensity occurs. See Figure 2.10.14-1 for definition of angular location.
[3] Stress components correspond to a cylindrical coordinate system.

Table 2.10.14-11 1-Foot Bottom-End Drop with Internal Pressure, P_m Stresses, ksi

Sec[1]	S_x[2]	S_y[2]	S_z[2]	S_{xy}[2]	S_{yz}[2]	S_{xz}[2]	Stress Intensity	Stress Allow.	MS
1	0.01	0.17	-2.20	-0.01	0.00	-0.03	2.37	32.30	Large
2	0.00	0.00	-1.14	0.00	0.00	0.00	1.14	32.30	Large
3	0.00	-0.01	-0.20	0.00	0.00	0.00	0.20	32.30	Large
4	-0.19	4.03	-0.49	-0.28	0.00	0.00	4.54	32.30	6.11
5	-0.19	3.99	0.00	-0.28	0.00	0.00	4.22	32.30	6.65
6	-0.19	4.00	0.43	-0.28	0.00	0.00	4.23	32.30	6.64
7	-0.19	3.90	-0.58	-0.27	0.00	-0.01	4.50	20.00	3.44
8	-0.03	1.77	-0.38	-0.01	-0.01	0.09	2.17	20.00	8.22
9	0.01	0.17	-2.16	-0.01	0.00	-0.07	2.34	20.00	7.55
10	0.08	0.28	-1.60	0.01	-0.01	-0.12	1.89	20.00	9.58
11	0.70	0.19	-3.59	-0.04	-0.22	0.10	4.31	20.00	3.64
12	-0.38	0.33	-1.93	0.04	0.04	-0.26	2.31	20.00	7.66
13	0.83	1.12	-0.93	0.02	0.00	-0.14	2.07	20.00	8.66
14	-0.50	-0.85	-4.52	0.03	-0.06	-0.67	4.23	20.00	3.73
15	-0.20	4.00	0.46	-0.27	0.00	0.03	4.24	20.00	3.72
16	-0.12	1.57	0.30	-0.11	-0.01	-0.11	1.73	20.00	Large
17	0.00	0.02	-0.13	0.00	0.00	0.00	0.15	20.00	Large
18	0.01	0.12	-0.06	0.01	0.00	0.02	0.19	20.00	Large
19	-0.04	0.23	-0.21	0.00	0.00	0.02	0.44	20.00	Large
20	-0.14	0.11	-0.89	0.00	0.00	-0.29	1.11	20.00	Large

[1] See Figure 2.10.14-4 for locations of sections.
[2] Stress components correspond to a cylindrical coordinate system.

Table 2.10.14-12 1-Foot Bottom-End Drop with Internal Pressure, $P_m + P_b$ Stresses, ksi

Sec[1]	S_x[2]	S_y[2]	S_z[2]	S_{xy}[2]	S_{yz}[2]	S_{xz}[2]	Stress Intensity	Stress Allow.	MS
1	0.01	0.21	-2.26	-0.01	0.00	-0.03	2.47	48.45	Large
2	0.00	0.01	-1.13	0.00	0.00	0.00	1.14	48.45	Large
3	0.00	-0.01	-0.21	0.00	0.01	-0.01	0.21	48.45	Large
4	-0.31	4.36	-0.43	-0.31	0.00	0.00	4.81	48.45	9.07
5	-0.30	4.27	0.05	-0.30	0.00	0.00	4.61	48.45	9.51
6	-0.31	4.28	0.49	-0.30	0.00	0.00	4.63	48.45	9.46
7	-0.29	4.12	-0.87	-0.29	0.00	-0.01	5.01	30.00	4.99
8	-0.31	2.04	-0.19	0.00	-0.11	0.09	2.40	30.00	Large
9	0.04	0.16	-2.37	-0.01	-0.01	-0.16	2.54	30.00	Large
10	0.18	0.51	-1.46	0.00	-0.01	-0.15	1.99	30.00	Large
11	-0.22	-1.14	-7.60	-0.07	-0.62	0.24	7.46	30.00	3.02
12	-0.69	-0.11	-3.47	0.04	0.04	-0.39	3.42	30.00	7.77
13	2.13	3.18	-0.62	0.01	-0.02	-0.11	3.80	30.00	6.89
14	1.57	3.37	-3.26	0.00	0.06	-0.78	6.76	30.00	3.44
15	-0.29	4.13	-0.02	-0.29	0.00	0.04	4.47	30.00	5.71
16	-0.27	1.87	0.80	-0.14	-0.01	-0.11	2.18	30.00	Large
17	0.00	0.01	-0.15	0.00	0.00	-0.01	0.17	30.00	Large
18	0.01	0.12	-0.08	-0.01	0.00	0.02	0.21	30.00	Large
19	-0.05	0.24	-0.43	0.00	0.01	0.00	0.67	30.00	Large
20	-0.27	0.41	-0.89	0.00	0.00	-1.67	3.40	30.00	7.82

[1] See Figure 2.10.14-4 for locations of sections.
[2] Stress components correspond to a cylindrical coordinate system.

Table 2.10.14-13 1-Foot Bottom-End Drop with Internal Pressure, P + Q Stresses, ksi

Sec[1]	S_x[2]	S_y[2]	S_z[2]	S_{xy}[2]	S_{yz}[2]	S_{xz}[2]	Stress Intensity	Stress Allow.	MS
1	-0.50	13.08	13.02	-1.33	0.04	0.02	13.85	96.90	6.00
2	-0.64	15.83	13.05	-1.49	0.01	-0.01	16.74	96.90	4.79
3	-0.53	10.79	14.87	-1.15	-0.09	-0.09	15.52	96.90	5.24
4	-0.29	4.97	2.81	-0.36	-0.05	0.02	5.31	96.90	Large
5	-0.30	4.25	3.42	-0.30	0.00	0.00	4.59	96.90	Large
6	-0.31	4.75	4.96	0.00	0.52	-0.01	5.69	96.90	Large
7	-0.31	6.38	4.29	-0.19	-1.24	-0.09	7.29	60.00	7.23
8	-0.11	6.40	-2.72	0.09	-1.52	-1.17	10.03	60.00	4.98
9	-0.54	7.83	12.93	-0.67	0.21	0.36	13.55	60.00	3.43
10	2.70	4.52	18.75	1.26	-0.55	2.50	17.44	60.00	2.44
11	1.62	0.93	-16.74	-0.01	-1.31	-1.90	18.85	60.00	2.18
12	-12.37	-3.39	17.18	0.96	0.21	0.60	29.68	60.00	1.02
13	-13.78	-28.97	-4.51	2.44	1.74	-0.01	25.09	60.00	1.39
14	11.44	19.08	-7.70	0.45	1.90	-0.87	27.10	60.00	1.21
15	-0.49	7.66	6.93	-0.23	1.81	0.25	9.66	60.00	5.21
16	-1.38	-7.23	1.99	-0.45	3.42	0.27	11.53	60.00	4.20
17	-1.31	7.38	13.87	-0.76	0.05	-1.09	15.40	60.00	2.90
18	-10.03	2.73	6.78	1.51	1.13	-4.19	19.11	60.00	2.14
19	-0.20	-22.46	-6.97	1.67	2.23	-0.72	22.88	60.00	1.62
20	-5.63	-2.01	-2.50	-0.04	-0.44	5.31	11.12	60.00	4.40

[1] See Figure 2.10.14-4 for locations of sections.
[2] Stress components correspond to a cylindrical coordinate system.

Table 2.10.14-14 1-Foot Bottom-Corner Drop with Internal Pressure, P_m Stresses, ksi

Sec[1]	Location (deg)[2]	S_x[3]	S_y[3]	S_z[3]	S_{xy}[3]	S_{yz}[3]	S_{xz}[3]	Stress Intensity	Stress Allow.	MS
1	0	0.04	0.47	-4.79	-0.03	-0.10	-0.05	5.26	32.30	5.14
2	180	-0.03	-0.15	-4.47	0.01	-0.02	0.00	4.44	32.30	6.27
3	180	0.00	0.13	-2.39	0.01	0.04	0.01	2.52	32.30	Large
4	0	-0.20	4.14	-2.90	-0.31	-0.06	0.00	7.06	32.30	3.58
5	180	-0.22	3.96	-2.65	0.26	-0.01	0.00	6.62	32.30	3.88
6	82.5	-0.20	4.03	0.58	0.04	0.90	0.00	4.45	32.30	6.26
7	0	-0.17	3.56	-3.76	-0.26	-0.05	0.08	7.34	20.00	1.72
8	0	0.26	1.45	-2.35	-0.13	0.01	0.35	3.86	20.00	4.18
9	0	0.03	0.20	-5.10	-0.01	-0.10	-0.12	5.31	20.00	2.77
10	0	0.53	-0.28	-3.94	0.09	-0.08	0.07	4.48	20.00	3.46
11	0	-0.03	-0.15	-4.18	0.05	0.26	0.53	4.34	20.00	3.61
12	0	-1.05	-0.35	-4.40	0.03	-0.08	-0.37	4.10	20.00	3.88
13	180	0.20	0.86	-0.88	0.01	0.00	-0.27	1.80	20.00	Large
14	180	-0.48	-0.66	-4.23	-0.02	0.06	-0.85	4.11	20.00	3.87
15	105	-0.22	3.93	0.61	0.05	1.32	0.01	4.62	20.00	3.33
16	165	-0.21	2.15	2.02	-0.01	0.58	0.46	3.00	20.00	5.67
17	60	0.01	0.02	0.78	-0.05	1.07	-0.01	2.27	20.00	7.81
18	52.5	0.02	0.06	0.61	0.02	0.72	0.01	1.55	20.00	Large
19	0	-0.68	-0.45	-0.47	0.07	0.01	0.29	0.64	20.00	Large
20	82.5	0.03	-0.36	-0.98	0.10	0.02	-0.20	1.11	20.00	Large

[1] See Figure 2.10.14-4 for locations of sections.
[2] The location specifies the angle at which the maximum stress intensity occurs. See Figure 2.10.14-1 for definition of angular location.
[3] Stress components correspond to a cylindrical coordinate system.

Table 2.10.14-15 1-Foot Bottom-Corner Drop with Internal Pressure, $P_m + P_b$ Stresses, ksi

Sec[1]	Location (deg)[2]	S_x[3]	S_y[3]	S_z[3]	S_{xy}[3]	S_{yz}[3]	S_{xz}[3]	Stress Intensity	Stress Allow.	MS
1	0	0.05	0.66	-4.60	-0.04	-0.08	-0.03	5.26	48.45	8.21
2	180	-0.02	2.06	-3.92	0.15	-0.03	0.00	6.00	48.45	7.08
3	180	0.00	0.42	-2.37	0.03	0.05	0.00	2.79	48.45	Large
4	0	-0.07	4.34	-2.88	-0.31	-0.05	0.01	7.24	48.45	5.69
5	180	-0.32	4.53	-2.36	0.30	-0.01	0.00	6.91	48.45	6.01
6	180	-0.30	7.05	1.38	0.41	0.06	0.01	7.40	48.45	5.55
7	0	-0.06	3.54	-3.85	-0.25	-0.04	0.08	7.41	30.00	3.05
8	7.5	0.41	1.10	-3.11	-0.04	0.01	0.29	4.24	30.00	6.08
9	0	0.13	0.09	-5.54	-0.01	-0.14	-0.33	5.71	30.00	4.25
10	0	0.54	-0.94	-5.84	0.05	-0.08	0.20	6.40	30.00	3.69
11	0	-0.63	-1.47	-8.35	0.09	0.71	0.84	8.00	30.00	2.75
12	0	-1.07	-0.55	-5.44	0.00	-0.08	-0.51	4.95	30.00	5.06
13	7.5	1.40	2.57	-0.61	0.07	0.00	-0.01	3.19	30.00	8.40
14	7.5	1.65	3.25	-3.22	0.01	-0.01	-0.48	6.52	30.00	3.60
15	180	-0.39	6.13	3.21	0.33	0.21	-0.01	6.57	30.00	3.57
16	180	-0.10	1.66	4.30	0.16	-0.08	0.62	4.59	30.00	5.54
17	45	-0.02	0.52	1.14	-0.13	1.41	-0.08	2.91	30.00	9.31
18	22.5	-0.08	0.04	1.64	0.02	1.12	-0.33	2.84	30.00	9.56
19	180	-0.21	0.36	-0.26	0.05	-0.08	0.25	0.86	30.00	Large
20	45	-0.19	0.38	-0.88	0.12	-0.04	-1.68	3.44	30.00	7.72

[1] Figure 2.10.14-4 for locations of sections.
[2] The location specifies the angle at which the maximum stress intensity occurs. See Figure 2.10.14-1 for definition of angular location.
[3] Stress components correspond to a cylindrical coordinate system.

Table 2.10.14-16 1-Foot Bottom-Corner Drop with Internal Pressure, P + Q Stresses, ksi

Sec[1]	Location (deg)[2]	S_x[3]	S_y[3]	S_z[3]	S_{xy}[3]	S_{yz}[3]	S_{xz}[3]	Stress Intensity	Stress Allow.	MS
1	180	-0.62	12.15	14.46	1.27	-0.14	0.07	15.22	96.90	5.37
2	180	-0.66	17.87	10.13	1.63	-0.03	0.00	18.82	96.90	4.15
3	0	-0.57	12.44	16.47	-1.31	0.01	-0.12	17.17	96.90	4.64
4	180	-0.31	4.08	5.71	0.29	-0.05	0.01	6.04	96.90	Large
5	0	-0.11	4.30	6.75	-0.31	-0.01	0.00	6.88	96.90	Large
6	180	-0.31	6.90	5.10	0.40	0.07	0.00	7.25	96.90	Large
7	180	-0.32	4.73	6.32	0.33	-0.04	-0.06	6.67	60.00	8.00
8	0	0.14	5.26	-5.64	-0.31	-0.08	-0.90	11.05	60.00	4.43
9	180	-1.36	7.53	13.29	0.81	0.01	1.21	14.92	60.00	3.02
10	180	1.51	7.42	13.59	0.36	-0.24	0.33	12.12	60.00	3.95
11	0	1.50	0.85	-17.56	0.04	1.41	-1.26	19.33	60.00	2.10
12	180	-9.64	4.53	17.42	0.73	-0.17	2.07	27.41	60.00	1.19
13	7.5	8.71	12.79	-1.04	0.03	-0.01	-0.03	13.83	60.00	3.34
14	0	10.63	15.13	-9.17	-0.21	-0.33	-0.45	24.33	60.00	1.47
15	127.5	-0.26	6.09	7.37	-0.01	1.16	0.18	8.32	60.00	6.21
16	180	-5.31	-5.52	0.14	-0.60	0.52	3.45	9.12	60.00	5.58
17	30	-0.79	8.44	15.19	-0.18	1.40	-1.22	16.45	60.00	2.65
18	0	-10.19	2.26	9.63	-1.50	-0.96	-4.94	22.40	60.00	1.68
19	165	-0.09	1.27	-1.25	-0.02	-0.03	-0.22	2.57	60.00	Large
20	75	-0.92	0.47	-1.90	0.04	-0.02	-3.40	6.86	60.00	7.75

[1] See Figure 2.10.14-4 for locations of sections.
[2] The location specifies the angle at which the maximum stress intensity occurs. See Figure 2.10.14-1 for definition of angular location.
[3] Stress components correspond to a cylindrical coordinate system.

Table 2.10.14-17 30-Foot Side Drop with Internal Pressure, P_m Stresses, ksi

Sec[1]	Location (deg)[2]	S_x[3]	S_y[3]	S_z[3]	S_{xy}[3]	S_{yz}[3]	S_{xz}[3]	Stress Intensity	Stress Allow.	MS
1	75	0.04	0.86	5.85	0.11	-15.45	-0.04	31.29	67.83	1.17
2	0	-0.30	4.03	65.11	-0.43	-0.03	0.00	65.45	67.83	0.04
3	75	0.07	0.94	6.17	0.08	14.16	0.01	28.79	67.83	1.36
4	97.5	-0.37	2.87	1.55	-0.02	-8.91	0.03	17.87	67.83	2.80
5	180	-0.15	3.68	-35.47	0.23	-0.01	0.00	39.16	67.83	0.73
6	97.5	-0.38	2.79	1.01	-0.06	8.89	-0.01	17.87	67.83	2.80
7	112.5	-0.41	1.83	2.74	-0.27	-12.20	-0.06	24.43	44.70	0.83
8	180	-3.21	3.40	10.72	0.11	-0.57	-3.54	15.67	44.70	1.85
9	67.5	0.00	-0.60	6.44	-0.88	-14.99	0.20	30.85	44.70	0.45
10	0	4.52	-9.75	2.94	1.69	-0.94	7.46	21.53	44.70	1.08
11	0	-11.15	-8.84	-0.87	0.29	0.09	0.18	10.32	44.70	3.33
12	0	0.00	-3.53	-0.48	0.28	0.02	-1.19	4.54	44.70	8.85
13	90	-1.49	-7.72	-0.81	-0.19	0.72	0.07	7.07	44.70	5.32
14	0	-0.47	1.66	-0.61	0.00	-0.27	-0.65	2.90	44.70	Large
15	112.5	-0.34	1.04	1.73	-0.47	12.57	0.03	25.17	44.70	0.78
16	120	-0.20	-0.39	2.04	-0.01	8.25	-0.10	16.69	44.70	1.68
17	75	0.05	0.84	5.31	-0.72	14.06	-0.05	28.51	44.70	0.57
18	67.5	0.06	-0.06	4.54	0.03	9.58	-0.29	19.71	44.70	1.27
19	0	-6.30	-8.37	-2.07	1.00	0.16	3.94	9.66	44.70	3.63
20	15	-2.53	-0.59	-1.25	0.40	-0.28	0.39	2.29	44.70	Large

[1] See Figure 2.10.14-4 for locations of sections.
[2] The location specifies the angle at which the maximum stress intensity occurs. See Figure 2.10.14-1 for definition of angular location.
[3] Stress components correspond to a cylindrical coordinate system.

Table 2.10.14-18 30-Foot Side Drop with Internal Pressure, $P_m + P_b$ Stresses, ksi

Sec[1]	Location (deg)[2]	S_x[3]	S_y[3]	S_z[3]	S_{xy}[3]	S_{yz}[3]	S_{xz}[3]	Stress Intensity	Stress Allow.	MS
1	75	0.07	3.25	6.43	0.19	-16.90	-0.04	33.94	96.90	1.86
2	180	-0.09	8.79	-64.02	0.64	-0.03	0.00	72.86	96.90	0.33
3	75	0.12	3.93	7.49	0.14	15.59	-0.01	31.39	96.90	2.09
4	97.5	-0.60	-5.19	-1.40	-0.03	-9.85	0.01	20.06	96.90	3.83
5	180	-0.22	7.96	-32.20	0.51	-0.01	0.00	40.19	96.90	1.41
6	97.5	-0.56	-5.61	-1.97	-0.08	9.72	0.01	19.78	96.90	3.90
7	112.5	-0.46	-5.06	-1.90	-0.23	-13.86	-0.06	27.91	63.85	1.29
8	180	-5.70	3.11	21.76	0.08	-0.15	-3.56	28.37	63.85	1.25
9	67.5	-0.15	0.45	6.21	-1.48	-17.63	0.42	35.86	63.85	0.78
10	0	10.45	-18.50	-23.12	1.42	-0.18	8.47	37.70	63.85	0.69
11	0	-19.20	-13.23	-0.19	0.25	0.15	1.25	19.18	63.85	2.33
12	0	0.45	-3.75	1.79	0.18	-0.19	-0.51	5.73	63.85	10.14
13	90	-2.75	-9.88	-0.80	-0.11	0.42	0.03	9.12	63.85	6.00
14	0	0.60	3.49	-2.80	0.03	-0.97	-0.57	6.67	63.85	8.57
15	112.5	-0.42	-5.84	-2.32	-0.48	14.00	0.03	28.23	63.85	1.26
16	127.5	-0.20	-1.73	-0.05	0.05	13.00	0.52	26.07	63.85	1.45
17	67.5	-0.08	2.87	8.40	-1.37	16.21	-0.51	33.00	63.85	0.93
18	52.5	-0.35	-0.51	10.21	0.22	12.38	-1.87	27.27	63.85	1.34
19	22.5	-0.89	-4.55	6.49	0.54	0.47	1.89	11.60	63.85	4.50
20	15	-5.74	-2.30	-2.11	0.25	-0.34	2.51	6.25	63.85	9.22

[1] See Figure 2.10.14-4 for locations of sections.
[2] The location specifies the angle at which the maximum stress intensity occurs. See Figure 2.10.14-1 for definition of angular location.
[3] Stress components correspond to a cylindrical coordinate system.

Table 2.10.14-19 30-Foot Top-End Drop with Internal Pressure, P_m Stresses, ksi

Sec[1]	S_x[2]	S_y[2]	S_z[2]	S_{xy}[2]	S_{yz}[2]	S_{xz}[2]	Stress Intensity	Stress Allow.	MS
1	-0.01	-0.05	0.14	0.00	-0.01	0.03	0.20	67.83	Large
2	0.00	0.00	-2.68	0.00	0.00	0.01	2.68	67.83	Large
3	0.03	0.15	-5.76	-0.01	-0.01	0.04	5.91	67.83	Large
4	-0.20	4.01	-0.23	-0.28	0.00	0.00	4.26	67.83	Large
5	-0.19	3.99	-1.54	-0.28	0.00	0.00	5.55	67.83	Large
6	-0.19	4.13	-3.06	-0.28	0.01	0.01	7.20	67.83	8.42
7	-0.20	3.98	-0.15	-0.27	0.00	-0.04	4.24	44.70	9.54
8	-0.21	0.79	-0.05	-0.07	0.02	0.29	1.22	44.70	Large
9	0.01	-0.04	0.32	0.00	-0.01	0.05	0.37	44.70	Large
10	0.00	0.02	0.27	0.00	0.00	0.03	0.27	44.70	Large
11	-0.12	-0.01	-0.10	-0.01	0.01	0.14	0.29	44.70	Large
12	-0.03	0.07	0.03	0.00	0.01	0.08	0.17	44.70	Large
13	0.00	0.00	-0.34	0.00	0.00	0.04	0.36	44.70	Large
14	0.13	0.18	-0.03	0.00	0.00	0.01	0.21	44.70	Large
15	-0.23	3.59	-3.39	0.02	0.09	0.02	6.98	44.70	5.40
16	-6.74	-6.03	-4.94	-0.81	0.30	2.77	6.09	44.70	6.34
17	0.04	1.40	-5.65	0.00	0.01	0.18	7.06	44.70	5.33
18	-6.50	1.84	-6.32	-1.02	-0.38	-1.33	9.81	44.70	3.56
19	-0.75	1.91	-4.45	0.29	-0.20	1.23	6.77	44.70	5.60
20	-1.33	-1.41	-5.36	-0.10	-0.13	1.16	4.68	44.70	8.55

[1] See Figure 2.10.14-4 for locations of sections.
[2] Stress components correspond to a cylindrical coordinate system.

Table 2.10.14-20 30-Foot Top-End Drop with Internal Pressure, $P_m + P_b$ Stresses, ksi

Sec[1]	S_x[2]	S_y[2]	S_z[2]	S_{xy}[2]	S_{yz}[2]	S_{xz}[2]	Stress Intensity	Stress Allow.	MS
1	-0.01	-0.04	0.18	0.00	-0.01	0.02	0.22	96.90	Large
2	0.00	0.01	-2.66	0.00	-0.01	0.01	2.68	96.90	Large
3	0.04	-0.03	-6.05	0.00	-0.01	0.05	6.09	96.90	Large
4	-0.31	4.28	-0.18	-0.30	0.00	0.00	4.63	96.90	Large
5	-0.30	4.27	-1.49	-0.30	0.00	0.00	5.78	96.90	Large
6	-0.32	4.61	-2.97	-0.32	0.02	0.02	7.60	96.90	Large
7	-0.29	4.06	-0.74	-0.28	0.00	-0.04	4.83	63.85	Large
8	-0.47	1.20	1.20	-0.11	0.02	0.31	1.79	63.85	Large
9	-0.01	-0.04	0.34	0.00	0.00	0.04	0.39	63.85	Large
10	-0.01	0.05	0.37	0.00	0.00	0.03	0.39	63.85	Large
11	-0.18	-0.10	-0.02	-0.01	0.02	0.19	0.42	63.85	Large
12	-0.03	0.06	-0.09	0.00	0.00	0.12	0.25	63.85	Large
13	0.47	0.67	-0.28	-0.01	0.00	0.04	0.96	63.85	Large
14	0.28	0.42	-0.06	0.00	0.00	0.01	0.48	63.85	Large
15	-0.27	3.74	-4.63	-0.26	0.01	0.03	8.39	63.85	6.61
16	-9.64	-10.84	-13.69	1.33	-1.07	4.73	10.77	63.85	4.93
17	-0.05	1.14	-6.05	-0.08	-0.01	0.07	7.19	63.85	7.88
18	-10.40	-1.07	-12.88	-1.41	-1.14	-2.84	14.14	63.85	3.52
19	-1.59	1.91	-4.72	0.45	-0.37	1.78	7.53	63.85	7.48
20	0.17	-0.38	-3.95	0.00	-0.03	3.53	8.18	63.85	6.81

[1] See Figure 2.10.14-4 for locations of sections.
[2] Stress components correspond to a cylindrical coordinate system.

Table 2.10.14-21 30-Foot Top-Corner Drop with Internal Pressure, P_m Stresses, ksi

Sec[1]	Location (deg)[2]	S_x[3]	S_y[3]	S_z[3]	S_{xy}[3]	S_{yz}[3]	S_{xz}[3]	Stress Intensity	Stress Allow.	MS
1	67.5	0.02	0.19	1.13	0.04	-3.28	0.00	6.62	67.83	9.25
2	180	-0.04	-0.30	-12.41	0.00	0.03	0.00	12.37	67.83	4.48
3	22.5	0.10	0.96	-10.91	0.02	1.91	0.05	12.47	67.83	4.44
4	127.5	-0.22	3.55	-1.49	-0.16	-1.45	-0.02	5.82	67.83	Large
5	180	-0.14	3.65	-7.56	0.24	0.02	0.00	11.22	67.83	5.05
6	0	-0.23	3.76	-7.02	-0.31	0.01	0.04	10.81	67.83	5.27
7	112.5	-0.24	3.29	-1.48	0.03	-2.60	0.06	7.05	44.70	5.34
8	180	-1.25	1.51	2.24	0.08	-0.20	-1.02	4.08	44.70	9.96
9	67.5	0.02	-0.15	1.24	-0.16	-3.27	0.03	6.69	44.70	5.68
10	60	0.20	-0.76	0.93	0.07	-2.03	0.20	4.43	44.70	9.09
11	0	-1.84	-1.79	-0.02	0.06	-0.02	-0.22	1.90	44.70	Large
12	0	0.04	-0.87	-0.25	0.08	0.00	-0.53	1.33	44.70	Large
13	90	-0.18	-1.27	-0.09	-0.03	0.10	0.00	1.20	44.70	Large
14	112.5	0.12	-0.35	-0.01	-0.26	0.12	0.02	0.72	44.70	Large
15	37.5	-0.21	2.80	-6.88	0.08	-0.37	-0.10	9.71	44.70	3.60
16	180	-6.44	-6.67	-1.89	-0.85	0.29	2.63	7.48	44.70	4.98
17	0	0.10	1.96	-12.48	-0.13	0.31	0.37	14.47	44.70	2.09
18	0	-7.69	0.51	-13.03	-1.10	-0.22	-1.60	14.15	44.70	2.16
19	0	-2.78	-1.32	-9.99	0.03	0.36	1.74	9.11	44.70	3.91
20	0	-2.08	-1.76	-7.05	0.16	0.23	1.31	5.83	44.70	6.67

[1] See Figure 2.10.14-4 for locations of sections.
[2] The location specifies the angle at which the maximum stress intensity occurs. See Figure 2.10.14-1 for definition of angular location.
[3] Stress components correspond to a cylindrical coordinate system.

Table 2.10.14-22 30-Foot Top-Corner Drop with Internal Pressure, $P_m + P_b$ Stresses, ksi

Sec[1]	Location (deg)[2]	S_x[3]	S_y[3]	S_z[3]	S_{xy}[3]	S_{yz}[3]	S_{xz}[3]	Stress Intensity	Stress Allow.	MS
1	60	0.04	1.39	1.72	0.05	-3.72	0.00	7.45	96.90	Large
2	180	-0.03	3.24	-11.79	0.23	0.03	0.00	15.05	96.90	5.44
3	0	0.15	1.56	-11.32	-0.12	0.26	0.07	12.90	96.90	6.51
4	0	-0.30	8.69	2.11	-0.63	0.08	-0.05	9.09	96.90	9.66
5	180	-0.22	8.66	-5.72	0.57	0.02	0.00	14.42	96.90	5.72
6	0	-0.36	7.87	-5.59	-0.59	-0.05	0.06	13.50	96.90	6.18
7	127.5	-0.34	0.40	-2.51	-0.11	-3.73	0.01	8.01	63.85	6.97
8	142.5	-0.36	0.51	-0.18	0.15	-3.82	-0.03	7.68	63.85	7.31
9	52.5	-0.04	0.51	1.39	-0.35	-3.99	0.10	8.06	63.85	6.92
10	0	1.88	-3.74	-6.16	0.28	0.02	1.89	8.89	63.85	6.18
11	0	-2.59	-2.22	0.01	0.04	-0.01	-0.08	2.60	63.85	Large
12	7.5	-0.06	-0.74	-0.08	0.06	0.12	-0.67	1.47	63.85	Large
13	105	-0.04	-1.25	-0.08	-0.33	0.03	0.00	1.38	63.85	Large
14	127.5	0.02	-0.15	-0.01	-0.44	0.09	0.03	0.91	63.85	Large
15	15	-0.05	4.69	-6.56	0.14	-0.71	-0.03	11.35	63.85	4.63
16	0	-9.49	-9.01	-12.55	1.09	-0.96	4.89	10.54	63.85	5.06
17	30	0.26	1.97	-11.40	-0.27	3.09	0.73	14.77	63.85	3.32
18	0	-12.32	-2.45	-18.51	-1.59	-1.03	-3.34	17.93	63.85	2.56
19	7.5	-1.29	-3.31	-14.25	0.24	0.24	1.04	13.17	63.85	3.85
20	15	1.24	-0.41	-4.50	0.10	0.05	3.43	8.95	63.85	6.13

[1] See Figure 2.10.14-4 for locations of sections.
[2] The location specifies the angle at which the maximum stress intensity occurs. See Figure 2.10.14-1 for definition of angular location.
[3] Stress components correspond to a cylindrical coordinate system.

Table 2.10.14-23 30-Foot Bottom-End Drop with Internal Pressure, P_m Stresses, ksi

Sec[1]	S_x[2]	S_y[2]	S_z[2]	S_{xy}[2]	S_{yz}[2]	S_{xz}[2]	Stress Intensity	Stress Allow.	MS
1	0.04	0.51	-6.93	-0.03	0.00	-0.08	7.45	67.83	8.10
2	0.00	0.00	-3.73	0.00	0.00	-0.01	3.73	67.83	Large
3	0.00	0.04	-0.91	0.00	0.01	-0.01	0.95	67.83	Large
4	-0.19	4.13	-4.13	-0.28	-0.01	0.00	8.28	67.83	7.19
5	-0.19	3.99	-2.64	-0.28	0.00	0.00	6.65	67.83	9.20
6	-0.20	4.04	-1.34	-0.28	0.00	0.00	5.39	67.83	Large
7	-0.16	3.43	-4.37	-0.24	-0.01	0.12	7.82	44.70	4.72
8	0.69	3.54	-2.76	-0.02	-0.03	-0.14	6.31	44.70	6.08
9	0.02	0.61	-6.80	-0.05	-0.01	-0.22	7.42	44.70	5.02
10	0.32	1.08	-5.04	0.03	-0.01	-0.42	6.16	44.70	6.26
11	3.14	1.72	-7.92	-0.09	-0.48	0.21	11.11	44.70	3.02
12	-1.11	0.87	-5.92	0.12	0.13	-0.97	6.99	44.70	5.39
13	2.60	3.52	-2.17	0.06	0.00	-0.49	5.75	44.70	6.77
14	-1.67	-2.77	-13.06	0.08	-0.16	-1.94	12.03	44.70	2.72
15	-0.19	3.82	-1.24	-0.26	0.00	0.00	5.07	44.70	7.82
16	-0.10	1.40	-0.64	-0.10	-0.01	-0.20	2.12	44.70	Large
17	0.01	0.06	-0.70	0.00	0.00	0.00	0.77	44.70	Large
18	0.00	0.10	-0.37	0.00	0.00	0.04	0.48	44.70	Large
19	-0.05	0.28	-0.30	0.00	0.00	0.02	0.58	44.70	Large
20	-0.15	0.09	-0.92	0.00	0.00	-0.25	1.09	44.70	Large

[1] See Figure 2.10.14-4 for locations of sections.
[2] Stress components correspond to a cylindrical coordinate system.

Table 2.10.14-24 30-Foot Bottom-End Drop with Internal Pressure, $P_m + P_b$ Stresses, ksi

Sec[1]	S_x[2]	S_y[2]	S_z[2]	S_{xy}[2]	S_{yz}[2]	S_{xz}[2]	Stress Intensity	Stress Allow.	MS
1	0.03	0.63	-7.09	-0.03	-0.01	-0.09	7.73	96.90	Large
2	0.00	0.01	-3.72	0.00	0.00	-0.02	3.74	96.90	Large
3	0.00	0.04	-0.93	0.00	0.00	0.00	0.97	96.90	Large
4	-0.30	4.57	-4.08	-0.31	-0.01	-0.01	8.67	96.90	Large
5	-0.30	4.27	-2.59	-0.30	0.00	0.00	6.87	96.90	Large
6	-0.31	4.32	-1.30	-0.30	0.00	0.01	5.63	96.90	Large
7	-0.27	3.99	-3.83	-0.28	0.00	0.12	7.85	63.85	7.13
8	0.51	3.37	-5.12	0.18	-0.02	-0.28	8.51	63.85	6.50
9	0.13	0.59	-7.40	-0.04	-0.03	-0.49	8.03	63.85	6.95
10	0.66	1.77	-4.97	0.01	-0.04	-0.54	6.79	63.85	8.40
11	2.48	-0.41	-16.04	-0.18	-1.33	0.68	18.69	63.85	2.42
12	-2.00	-0.33	-10.09	0.11	0.15	-1.44	10.02	63.85	5.37
13	7.32	10.94	-1.03	0.02	-0.05	-0.41	11.99	63.85	4.33
14	4.60	9.86	-9.51	0.01	0.17	-2.26	19.73	63.85	2.24
15	-0.29	3.97	-1.59	-0.28	0.00	0.00	5.58	63.85	Large
16	0.09	1.09	-1.27	-0.07	-0.01	-0.21	2.40	63.85	Large
17	0.01	0.04	-0.80	0.00	0.01	0.05	0.84	63.85	Large
18	-0.01	0.08	-0.40	0.00	-0.01	0.03	0.49	63.85	Large
19	-0.06	0.28	-0.57	0.00	0.01	0.00	0.86	63.85	Large
20	-0.32	0.35	-0.90	0.00	0.00	-1.66	3.37	63.85	Large

[1] See Figure 2.10.14-4 for locations of sections.
[2] Stress components correspond to a cylindrical coordinate system.

Table 2.10.14-25 30-Foot Bottom-Corner Drop with Internal Pressure, P_m Stresses, ksi

Sec[1]	Location (deg)[2]	S_x[3]	S_y[3]	S_z[3]	S_{xy}[3]	S_{yz}[3]	S_{xz}[3]	Stress Intensity	Stress Allow.	MS
1	0	0.03	2.13	-13.69	-0.20	-0.35	-0.11	15.86	67.83	3.28
2	180	-0.04	-0.30	-12.72	0.00	-0.04	0.00	12.68	67.83	4.35
3	75	0.02	0.15	0.37	0.05	2.97	0.00	5.95	67.83	Large
4	0	-0.23	3.75	-7.88	-0.30	0.00	-0.04	11.65	67.83	4.82
5	180	-0.14	3.65	-8.00	0.24	-0.02	0.00	11.66	67.83	4.82
6	180	-0.24	3.35	-3.34	0.15	0.12	0.02	6.71	67.83	9.11
7	30	-0.14	2.67	-7.59	0.11	0.42	0.19	10.31	44.70	3.34
8	15	0.82	3.41	-4.21	-0.02	0.12	-0.20	7.63	44.70	4.86
9	0	0.13	0.82	-14.88	-0.04	-0.36	-0.35	15.72	44.70	1.84
10	0	1.35	-0.94	-11.87	0.24	-0.28	0.10	13.26	44.70	2.37
11	0	1.56	0.70	-8.72	0.16	0.49	0.61	10.42	44.70	3.29
12	0	-2.61	-1.22	-11.98	0.10	-0.27	-1.43	11.00	44.70	3.06
13	180	1.04	2.83	-2.06	0.04	-0.01	-0.87	5.12	44.70	7.73
14	180	-1.64	-2.30	-12.37	-0.08	0.16	-2.40	11.77	44.70	2.80
15	112.5	-0.25	3.02	-2.17	0.02	2.70	-0.08	7.50	44.70	4.96
16	127.5	-0.07	0.71	-1.03	0.08	2.18	-0.38	4.76	44.70	8.39
17	67.5	0.03	0.15	0.91	-0.14	2.99	-0.01	6.03	44.70	6.41
18	60	0.02	0.07	0.89	0.02	2.10	0.02	4.27	44.70	9.47
19	0	-1.64	-1.69	-0.83	0.21	0.05	0.77	1.81	44.70	Large
20	97.5	0.09	-0.43	-1.00	-0.14	0.00	-0.15	1.20	44.70	Large

[1] See Figure 2.10.14-4 for locations of sections.
[2] The location specifies the angle at which the maximum stress intensity occurs. See Figure 2.10.14-1 for definition of angular location.
[3] Stress components correspond to a cylindrical coordinate system.

Table 2.10.14-26 30-Foot Bottom-Corner Drop with Internal Pressure, $P_m + P_b$ Stresses, ksi

Sec[1]	Location (deg)[2]	S_x[3]	S_y[3]	S_z[3]	S_{xy}[3]	S_{yz}[3]	S_{xz}[3]	Stress Intensity	Stress Allow.	MS
1	15	0.02	1.54	-14.22	0.02	-1.62	-0.13	16.10	96.90	5.02
2	180	-0.03	3.25	-12.08	0.23	-0.04	0.00	15.35	96.90	5.31
3	67.5	0.04	1.47	1.29	0.06	3.39	0.01	6.77	96.90	Large
4	0	-0.34	7.74	-6.48	-0.57	0.05	-0.05	14.26	96.90	5.80
5	180	-0.22	8.65	-6.17	0.57	-0.02	0.00	14.86	96.90	5.52
6	180	-0.27	7.69	-1.85	0.44	0.14	0.03	9.57	96.90	9.13
7	45	-0.03	3.37	-7.88	0.03	-0.15	0.22	11.26	63.85	4.67
8	0	0.43	3.17	-7.80	-0.29	0.12	-0.27	11.02	63.85	4.79
9	7.5	0.39	0.47	-15.87	-0.09	-0.97	-0.87	16.52	63.85	2.87
10	0	1.33	-2.72	-17.10	0.13	-0.27	0.44	18.46	63.85	2.46
11	0	2.67	-0.72	-17.09	0.27	1.42	1.28	20.09	63.85	2.18
12	0	-2.76	-1.67	-14.10	0.01	-0.27	-2.04	12.80	63.85	3.99
13	7.5	5.49	9.51	-1.03	0.19	-0.01	-0.09	10.55	63.85	5.05
14	7.5	4.78	9.57	-9.39	0.03	0.00	-1.48	19.12	63.85	2.34
15	120	-0.35	-0.28	-3.81	-0.04	3.69	-0.06	8.19	63.85	6.80
16	142.5	-0.27	0.91	-0.95	0.06	4.32	0.10	8.84	63.85	6.22
17	52.5	-0.04	1.08	1.63	-0.33	3.67	-0.10	7.40	63.85	7.63
18	37.5	-0.12	0.09	2.39	0.06	3.04	-0.47	6.57	63.85	8.72
19	0	-0.69	-0.23	1.25	-0.01	0.15	0.75	2.48	63.85	Large
20	45	-0.17	0.26	-0.86	0.24	-0.06	-1.67	3.46	63.85	Large

[1] See Figure 2.10.14-4 for locations of sections.
[2] The location specifies the angle at which the maximum stress intensity occurs. See Figure 2.10.14-1 for definition of angular location.
[3] Stress components correspond to a cylindrical coordinate system.

Table 2.10.14-27 Accident Internal Pressure with Inertia Load, P_m Stresses, ksi

Sec[1]	Location (deg)[2]	S_x[3]	S_y[3]	S_z[3]	S_{xy}[3]	S_{yz}[3]	S_{xz}[3]	Stress Intensity	Stress Allow.	MS
1	0	0.00	-0.03	0.22	0.00	0.00	0.01	0.26	67.83	Large
2	60	0.00	0.00	-0.72	0.00	0.00	0.00	0.72	67.83	Large
3	0	0.01	0.02	-1.75	0.00	0.00	0.01	1.78	67.83	Large
4	0	-0.26	5.31	1.25	-0.37	0.00	0.00	5.62	67.83	Large
5	0	-0.26	5.33	0.81	-0.37	0.00	0.00	5.63	67.83	Large
6	0	-0.26	5.36	0.30	-0.37	0.00	0.00	5.66	67.83	Large
7	0	-0.27	5.47	1.26	-0.37	-0.01	-0.08	5.79	44.70	6.72
8	0	-0.33	1.18	0.79	-0.10	0.02	0.31	1.61	44.70	Large
9	0	0.00	-0.03	0.27	0.00	0.00	0.02	0.31	44.70	Large
10	0	0.00	0.02	0.21	0.00	0.00	0.02	0.21	44.70	Large
11	0	-0.11	0.00	-0.06	-0.01	0.01	0.09	0.18	44.70	Large
12	0	-0.02	0.06	0.04	0.00	0.00	0.07	0.14	44.70	Large
13	30	0.01	0.01	-0.42	0.00	0.00	0.06	0.45	44.70	Large
14	0	0.11	0.16	-0.04	0.00	0.00	0.02	0.21	44.70	Large
15	97.5	-0.29	5.36	0.39	-0.02	0.11	0.07	5.67	44.70	6.88
16	180	-2.43	-0.43	-0.89	-0.16	0.11	0.89	2.44	44.70	Large
17	15	0.02	0.47	-1.73	0.00	0.01	0.05	2.19	44.70	Large
18	180	-2.12	0.82	-1.83	0.35	0.13	-0.42	3.32	44.70	Large
19	180	-0.27	0.74	-1.60	0.10	-0.07	0.42	2.47	44.70	Large
20	180	-0.35	-0.54	-2.19	-0.01	-0.01	0.31	1.94	44.70	Large

[1] See Figure 2.10.14-4 for locations of sections.
[2] The location specifies the angle at which the maximum stress intensity occurs. See Figure 2.10.14-1 for definition of angular location.
[3] Stress components correspond to a cylindrical coordinate system.

Table 2.10.14-28 Accident Internal Pressure with Inertia Load , $P_m + P_b$ Stresses, ksi

Sec[1]	Location (deg)[2]	S_x[3]	S_y[3]	S_z[3]	S_{xy}[3]	S_{yz}[3]	S_{xz}[3]	Stress Intensity	Stress Allow.	MS
1	0	0.00	-0.03	0.24	0.00	0.00	0.01	0.28	96.90	Large
2	0	0.00	0.00	-0.71	0.00	0.00	0.00	0.72	96.90	Large
3	0	0.01	-0.05	-1.87	0.00	0.00	0.01	1.88	96.90	Large
4	0	-0.41	5.68	1.34	-0.40	0.00	0.00	6.15	96.90	Large
5	0	-0.41	5.69	0.88	-0.40	0.00	0.00	6.15	96.90	Large
6	0	-0.42	5.80	0.40	-0.41	0.01	0.01	6.27	96.90	Large
7	0	-0.39	5.56	0.37	-0.39	0.00	-0.09	6.01	63.85	9.62
8	0	-0.65	1.76	2.41	-0.15	0.03	0.35	3.15	63.85	Large
9	0	-0.01	-0.02	0.32	0.00	0.00	0.03	0.35	63.85	Large
10	0	-0.01	0.03	0.27	0.00	0.00	0.02	0.28	63.85	Large
11	0	-0.09	-0.06	-0.01	0.00	0.01	0.12	0.26	63.85	Large
12	180	-0.02	0.06	-0.02	0.00	-0.01	0.10	0.21	63.85	Large
13	0	0.69	1.01	-0.30	-0.02	0.00	0.07	1.32	63.85	Large
14	0	0.28	0.44	-0.07	-0.01	0.00	0.01	0.51	63.85	Large
15	0	-0.39	5.46	-0.79	-0.38	0.01	0.07	6.29	63.85	9.15
16	180	-1.55	1.28	2.18	0.03	-0.17	0.18	3.77	63.85	Large
17	0	-0.02	0.36	-1.93	-0.03	0.00	0.03	2.29	63.85	Large
18	0	-3.44	-0.24	-4.24	-0.47	-0.38	-0.93	4.76	63.85	Large
19	180	-0.56	0.72	-1.77	0.15	-0.14	0.60	2.77	63.85	Large
20	135	0.04	-0.16	-1.82	0.00	-0.01	1.83	4.10	63.85	Large

[1] See Figure 2.10.14-4 for locations of sections.
[2] The location specifies the angle at which the maximum stress intensity occurs. See Figure 2.10.14-1 for definition of angular location.
[3] Stress components correspond to a cylindrical coordinate system.

2.10.15 NAC-LWT Alternate B Port Cover

The Alternate B port cover has two face seals on the inner end of the port cover. The primary containment seal is provided by an inner metal face seal located in a groove on the face (towards the inner edge) of the barrel of the port cover body. The metal face seal is used to maintain a leaktight containment boundary per the requirements of ANSI N14.5-1997. The secondary (test annulus) face seal is a single Viton® O-ring located in a groove on the face (towards the outer edge) of the barrel of the port cover body. The Alternate B port cover is fabricated from Type XM-19 stainless steel and is fastened to the cask top forging using high-strength SB-637 Grade N07718 bolts (⅜-16 UNC).

2.10.15.1 Alternate B Port Cover Bolt Analysis

2.10.15.1.1 Port Cover Bolt Preload

The Alternate B port cover uses a metallic O-ring for containment and Viton® O-ring face seal for leakage rate testing. The metallic O-ring requires a 1,725 lb/in sealing force and the Viton® O-ring requires a sealing force of 120 lb/in (based on manufacturers' data).

The force required to compress the metallic O-ring seal is:

$$P1 = Y2 \times C = 1{,}898 \times (\pi \times 1.86) = 11{,}090 \text{ lbs}$$

where:

$Y2 = Km \times Kd \times Y1 = 1 \times 1.1 \times 1{,}725 = 1{,}898$ lb/in

$C = \pi \times d$, Circumference of the O-ring

d = 1.86 inches, The average diameter of the seal groove

Km = 1.0, Material Factor

Kd = 1.1, Diameter Factor

$Y1$ = 1,725 lbs, Ideal compressive load

The load due to internal pressure is:

$$P2 = P \times \frac{\pi \times d}{4} = 600 \times \frac{\pi \times 1.86^2}{4} = 1{,}630 \text{ lbs}$$

where:

P = 600 psig, which bounds the maximum pressure in the LWT cask during the fire accident (Section 3.5.4.4)

The force due to the port cover weight is:

$P3 = W_{pc} \times 60g = 600$ lbs

where:

W_{pc} = 10 lbs, The approximate weight of the port cover

The force required to compress the Viton® O-ring is:

$P4 = 120 \times \pi \times dp = 955$ lbs

where:

d_p = 2.534 in, diameter of the Viton® seal

The required bolt preload per bolt is:

$$F = \frac{P1 + P2 + P3 + P4}{3} = \frac{11{,}090 + 1{,}630 + 600 + 955}{3} = 4{,}758 \text{ lb/bolt}$$

Therefore, the required bolt torque is:

$T = 0.2Fd = 0.2 \times 4758 \times 0.281 = 267$ in-lb

where:

d = 0.281 in, the mean bolt diameter

The recommended torque is 285 ± 15 in-lb, which corresponds to a maximum bolt preload of 5,340 lbs.

The port cover is attached to the cask body with three bolts. The bolts are threaded into the SA182 Type-304 stainless steel top forging of the cask using Helicoils. The tensile stress in the bolt when the maximum bolt preload is applied is:

$$S = \frac{P}{A} = \frac{5{,}340}{0.06158} = 86.7 \text{ ksi}$$

where:

P = 5,340 lbs, the bolt preload

$A = \pi d^2/4$, bolt cross-sectional area

d = 0.28 in, the bolt shank diameter

The margin of safety is:

$$MS = \frac{S_y}{S} - 1 = \frac{142.35}{86.7} - 1 = +0.64$$

where:

S_y = 142.35 ksi, yield strength of SB-637, Grade N07718 @ 250°F

The tensile stress in the ⅜-16UNC bolt is:

$$S = \frac{P}{A_t} = \frac{5{,}340}{0.074} = 72.2\,\text{ksi}$$

where:

P = 5,340 lbs, the bolt preload

$$A_t = 3.1416\left(\frac{Es_{min}}{2} - \frac{0.16238}{n}\right)^2 = 3.1416\left(\frac{0.3266}{2} - \frac{0.16238}{16}\right)^2 = 0.074\,\text{in}^2$$

= 0.074 in^2, tensile area of the bolt

For the ⅜-16UNC bolts (Machinery's Handbook)

n 16, number of threads per inch

D 0.375 in, bolt diameter

Kn_{max} 0.321 in, maximum minor diameter of internal thread

Es_{min} 0.3266 in, minimum major diameter of external thread

En_{max} 0.3429 in, maximum pitch diameter of internal thread

Ds_{min} 0.3595 in, minimum major diameter of external thread

Le 0.75 in, thread engagement

The margin of safety is:

$$MS = \frac{S_y}{S} - 1 = \frac{142.35}{72.2} - 1 = +0.97 @ 250°F$$

where:

S_y = 142.35 ksi, yield strength of SB-637, Grade N07718 @250°F

The shear stress in the bolt thread is:

$$\tau = \frac{P}{A_s} = \frac{5{,}340}{0.348} = 15.3\,\text{ksi}$$

where:

P = 5,340 lbs, the bolt preload

$$A_s = 3.1416 n L_e Kn_{max}\left[\frac{1}{2n} + 0.57735(Es_{min} - Kn_{max})\right]$$

$= 0.348$ in^2, shear area of the bolt threads

The margin of safety is:

$$MS = \frac{0.6S_m}{t} - 1 = \frac{0.6 \times 47.5}{15.3} - 1 = +0.86$$

where:

S_m = 47.5 ksi, stress intensity of SB-637, Grade N07718 @250°F

Conservatively ignoring the strength of the Helicoil, the shear stress of the threads in the top forging is:

$$S = \frac{5{,}340}{0.461} = 11.6 \text{ ksi}$$

where:

P = 5,340 lbs, the bolt preload

$$A_n = 3.1416 n L_e Ds_{min}\left[\frac{1}{2n} + 0.57735(Ds_{min} - En_{max})\right]$$

$= 0.461$ in^2, shear area of the bolt threads

The margin of safety is:

$$MS = \frac{0.6S_m}{S} - 1 = \frac{0.6 \times 20.0}{11.6} - 1 = +0.03$$

where:

S_m = 20.0 ksi, stress intensity of Type 304 stainless steel @ 250°F

2.10.15.1.2 Port Cover Bolt Thermal Stress Evaluation

Thermal stresses generated in the port cover are due to the difference in thermal expansion of the port cover bolts and adjacent components.

Cold

During the cold condition (–40°F), the port cover will contract at a faster rate than the port cover bolt. The change in length due to thermal expansion/contraction for the components is calculated using the following equation.

$$\Delta L = \Delta T \alpha L$$

At –40°F, the changes in length of the port cover and port cover bolt due to a temperature differential of -110°F (-40 - 70) as follows.

Component	Material	Coefficient of Thermal Expansion, α (in/in-°F)	Component Length, L (in)	Change in Length, ΔL (in)
Port Cover	SA-479 Type XM-19	8.16×10^{-6}	1.0	-9.0×10^{-4}
Bolt	SB-637 Grade N07718	7.05×10^{-6}	1.0	-7.8×10^{-4}

The net change in bolt length is:

$\Delta L = (-9.0 \times 10\text{-}4) - (-7.8 \times 10\text{-}4) = -0.0001$ in

The bolt strain associated with this change in length is 0.0001 (0.0001/1.0). Since the port cover contracts more than the bolts, no additional load is applied to the port cover bolts during a –40°F condition.

To maintain the seal in the cold condition, the bolt strain must be less than the strain due to the bolt preload. From Section 2.10.15.1.1, the bolt preload (F) is 5,340 lbs. The strain associated with the preload is:

$$\varepsilon = \frac{F}{AE} = \frac{5{,}340}{0.0616 \times 29.6 \times 10^{6}} = 0.00293$$

where:

E = 29.6×10^{-6} psi, modulus of elasticity for SB-637 Grade N07718 @-40°F

A = $\frac{\pi d^2}{4} = 0.0616$ in^2, bolt cross-sectional area

d = 0.28 in, diameter of the bolt

Since the preload strain is significantly larger than the strain due to cold conditions, the seal is maintained.

Fire Accident

For the fire accident, a peak temperature of 845°F (Section 2.7.2.4.3) is used for the evaluation of the thermal stress in the port cover bolts. At 845°F, the changes in length of the port cover and port cover bolt due to a temperature differential of 775°F (845 – 70) are as follows.

Component	Material	Coefficient of Thermal Expansion, σ (in/in-°F)	Component Length, L (in)	Change in Length, ΔL (in)
Port Cover	SA-479 Type XM-19	9.26×10^{-6}	1.0	7.18×10^{-3}
Bolt	SB-637 Grade N07718	7.92×10^{-6}	1.0	6.14×10^{-3}

The net change in length of the port cover bolt is:

$$\Delta L_{bolt} = (7.18 \times 10^{-3}) - (6.14 \times 10^{-3}) = 1.0 \times 10^{-3} \text{ in}$$

The change in length of the bolt results in a uniform strain of:

$$\varepsilon b = \frac{\Delta L}{L} = \frac{1.0 \times 10^{-3}}{1.0} = 0.0010 \text{in/in}$$

where:

L = bolt length (shank) = 1.0 in

The thermal stress in the bolt is:

$$S = \varepsilon_b E = 0.0010 \times (25.7 \times 10^6) = 25{,}700 \text{ psi} = 25.7 \text{ ksi}$$

where:

E = 25.7×10^{-6} psi, modulus of elasticity for SB-637 Grade N07718 @845°F

Combining the thermal stress and preload stress (Section 2.10.15.1.1), the total stress in the bolt is:

S = 25.7 + 86.7 = 112.4 ksi

The margin of safety is:

$$MS = \frac{S_y}{S} - 1 = \frac{132.7}{112.4} - 1 = +0.18 @ 845°F$$

where:

S_y = 132.7 ksi, the yield strength of SB-637 Grade N077/8@845ºF

To determine the sealing capacity of the metallic seal during the fire accident, the thermal expansion of each component is calculated. The following gives the thermal expansion of each component.

Component	Length for Expansion, L (in)	Average Temperature (°F)	Change in Temperature, ΔT (°F)	Coefficient of Thermal Expansion, α (in/in-F)	Change in Length, ΔL (in)
Cask	2.255 (3.255-1.0)	640	570	9.59×10^{-6}	0.01233
Bolt	1.000	826	756	7.90×10^{-6}	0.00597
Port Cover	3.255 (3.63-0.375)	659	589	9.10×10^{-6}	0.01745

The displacement that tends to lift the port cover off the seals is:

$$\Delta L_{seal} = 0.01233 + 0.00597 - 0.01745$$
$$= 0.00085 \text{ in}$$

This corresponds to a strain in the bolt shank of 0.00085. Since the preload strain is 0.00293 inch and is larger than the strain due to fire accident conditions, the seal is maintained.

2.10.15.1.3 Port Cover Bolt Side-Drop Evaluation

The governing cask drop orientation that would result in reducing the force applied to the metal face seal is the side-drop condition. The side-drop condition is evaluated with the cask body in the orientation, which results in the inertia load of the port cover reducing the force applied to the port cover metal face seal.

A three-dimensional ANSYS finite element model representing one-sixth of the port cover is used to evaluate the LWT port cover during side-drop conditions (see Figure 2.10.15-1). The model is constructed using ANSYS SOLID45, CONTAC52, and BEAM4 elements. CONTAC52 elements are used to model the sealing surface of the port cover to evaluate the sealing force. Beam (BEAM4) elements are used to model the port cover bolts. An initial strain is specified in the BEAM4 elements to generate the initial preload force. Since the bolts are located at a symmetry plane in the model, the applied strain is based on one-half of the total bolt force.

Symmetry boundary conditions are applied to the model on the 0° and 60° surfaces. To prevent axial motion of the port cover, the lower node of the bolt is restrained axially. The CONTAC52 elements on the sealing surface represent the interface with the cask body. The following presents the results for the side-drop analyses for the SB-637 Grade N07718 port cover bolts.

Load Case	Seal Force (lb)	Load per Bolt (lb)	Bolt Stress (psi)	MS
Preload only	2,679	5,357	86,388	0.65
Preload + Normal Pressure	2,759	5,365	86,516	0.65
Preload + Normal Pressure + 60 g	2,501	5,377	86,698	0.64
Preload + Accident Pressure	2,172	4,762	76,788	0.85

Where the reported seal force is one-sixth of the actual port cover seal force. The material allowables during normal conditions are at 250°F; for accident conditions, allowables are at 850°F.

The required force to compress the seals is 12,045 lbs (11,090 + 955) as shown in Section 2.10.15.1.1. For a one-sixth model, the force is 2,008 lbs (12,045/6). Since the sealing forces presented above are greater than 2,008 lbs, the seal is maintained.

2.10.15.1.4 Penetration Evaluation

Using the methodology presented in Section 2.6.10.5, a finite element analysis of the port cover is performed for the penetration event for the normal conditions of transport. The finite element model described in Section 2.10.15.1.3 (Figure 2.10.15-1) is used.

The equivalent dynamic loading, from Ugural and Fenster, is calculated using the following relation.

$$P_{dyn} = W\ (1+ (1 + 2h / \delta st)^{1/2})$$

where:

P_{dyn} = dynamic load resulting from weight (W) free falling a height (h), lb

W = weight, 13 lbs

h = drop height, 40 inches

δ_{st} = static deflection resulting from weight (W) on plate, inches

The dynamic loading is calculated to be 6,799 lbs, resulting from the 13-lb, 1.25-inch diameter projectile dropped through a distance of 40 inches onto the port cover. The sealing surface bearing stress is calculated to be 2.61 ksi, which results in a margin of safety of +8.0 compared with yield strength of the upper forging. The dynamic load on the port cover is applied as a bearing load, which will pass through the port cover body to the top forging. Also, the dynamic load increases the compressive force on the inner end O-ring, trapped in an O-ring groove at the bottom of the port cover body. Thus, the primary seal is not affected.

2.10.15.1.5 Puncture Evaluation

The puncture accident follows the 30-foot drop that the cask must sustain. The impact limiters remain attached subsequent to the 30-foot free drop, as shown in Section 2.6.7.4. It is concluded in Section 2.7.1.6 that the hypothetical crush accident does not apply to the NAC-LWT cask. Therefore, the impact limiters are attached to the cask prior to the cask dropping onto the mild steel pin. The port covers are located near the top of the cask, underneath the impact limiter.

When the top impact limiter strikes the mild steel pin, it will support the top end of the cask, while the bottom of the cask continues to translate, then begins to rotate about the mild steel pin as a pivot point, until the bottom impact limiter contacts the unyielding surface. During the time in which the cask is rotating about the pin-impact limiter contact, the maximum force, which can be applied to the port cover surface, is limited by the crush strength of the impact limiter material. The force is calculated from the product of the crush strength of the impact limiter (3,500 psi) and the common area of contact between the impact limiter and the port cover (12.3 in^2). The maximum load applied to the port cover by the impact limiter is:

$$P_b = 3{,}500 \times 12.3$$
$$= 43{,}050 \text{ lbs}$$

The stress in the Alternate B port cover at the cask body interface is:

$$\frac{P_b}{A_s} = \frac{43{,}050}{A_s} \text{ psi}$$
$$= 43{,}050/2.07 \text{ psi}$$
$$= 20.8 \text{ ksi}$$

where:

A_s = Total concentric ring bearing area at inner face of port cover = 2.07 in^2

The maximum port cover temperature is less than 250ºF. For the Alternate B port cover, the margin of safety is:

$$MS = \frac{2.4 \times S_m}{20.8} - 1 = +2.7$$

where:

S_m = 32.3 ksi @ 250°F

The controlling stress in the port cover has a significant margin for the pin puncture event. Therefore, the bolt preload and the Alternate B port cover will maintain the necessary load on the metal face seal to maintain containment.

Figure 2.10.15-1 Alternate B Port Cover Finite Element Model

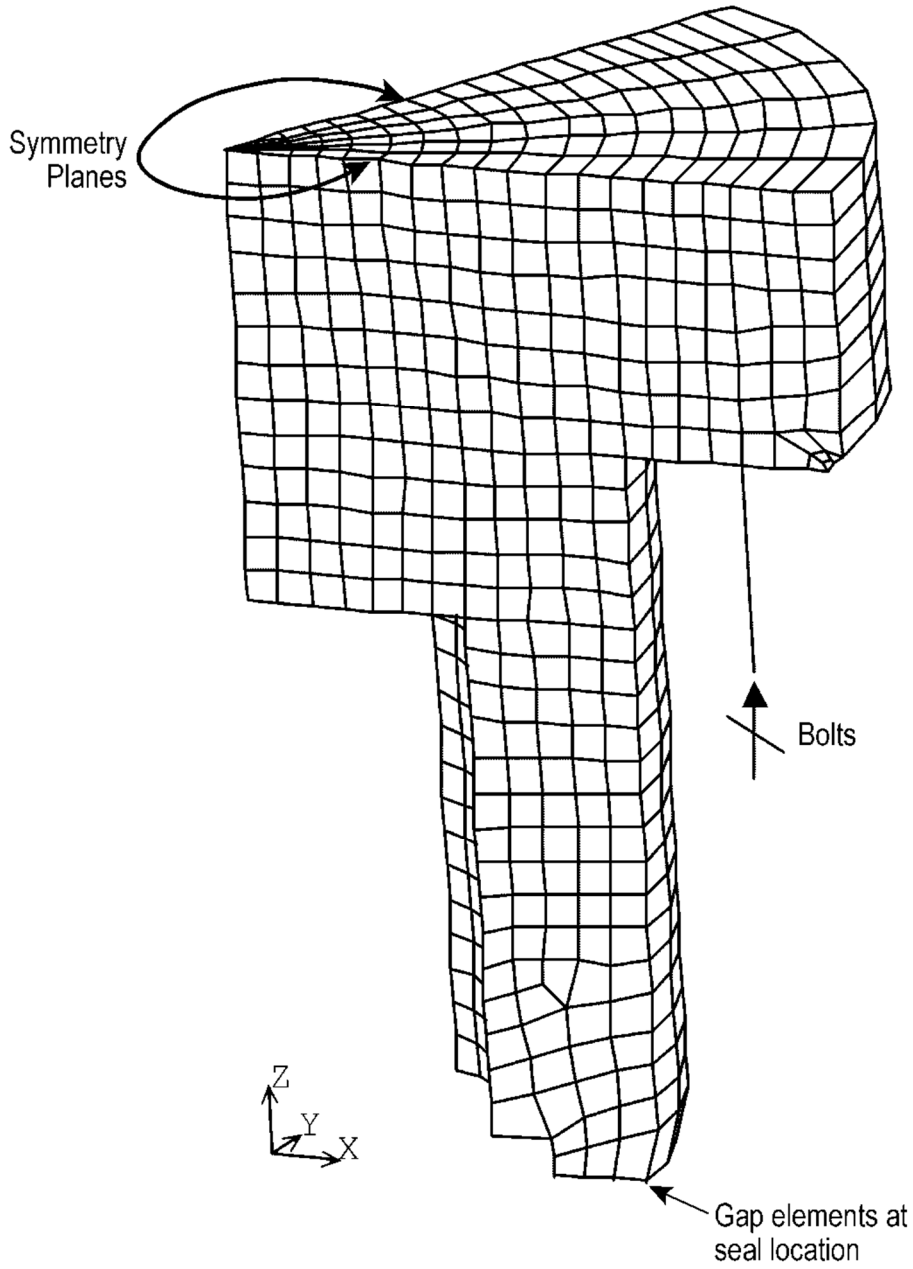

2.10.16 Structural Evaluation of the NAC-LWT Cask Body with TPBARs in the PWR/BWR Rod Transport Canister

This section presents a structural evaluation of the NAC-LWT cask system for the shipment of up to 25 individual TPBARs in the PWR/BWR Rod Transport Canister, the PWR insert and the TPBAR basket under normal conditions of transport and hypothetical accident conditions. Section 2.10.14 presents the structural evaluation of the NAC-LWT cask system for two TPBAR content conditions: up to 300 production TPBARs loaded into an open (i.e., unsealed) consolidation canister; and up to 55 segmented TPBARs loaded into a welded closed waste container. Although the analysis provided in Section 2.10.14 uses a slightly lower contents weight than the TPBARs in the PWR/BWR Rod Transport Canister configuration, the applied contents load is comparable as conservative accelerations are used. As such, the evaluation of TPBARs in the PWR/BWR Rod Transport Canister uses the results of Section 2.10.14, appropriately scaled to account for any increase in total applied contents load.

2.10.16.1 Normal Conditions of Transport for Cask Body and TPBARs in the PWR/BWR Rod Transport Canister

This section provides the cask body structural evaluation for normal conditions of transport for the shipment of TPBARs in the PWR/BWR Rod Transport Cansister, the PWR insert and the TPBAR basket. Section 2.10.14 provides the critical stress intensity results of the NAC-LWT cask system for two TPBAR content conditions: up to 300 production TPBARs loaded into an open (i.e., unsealed) consolidation canister; and up to 55 segmented TPBARs loaded into a welded closed waste container. The Section 2.10.14 analysis used a three-dimensional half-symmetry model of the LWT cask body constructed using ANSYS. A detailed description of the implemented finite element model can be found in Section 2.10.14.1.2. Both the pressure and component temperatures considered in Section 2.10.14 bound the TPBARs in the PWR/BWR Rod Transport Canister configuration.

For the side drop, the cask is loaded by both the contents weight and the weight of the cask body surrounding the cask cavity. The weight of the cask body surrounding the cavity is 34,400 lbs, which includes the lead for shielding, the inner and outer shells, as well as portions of the top and bottom forgings. The evaluation in Section 2.10.14 uses a cask contents weight of 1800 lbs, which is 101 lbs less than the TPBAR in the PWR/BWR Rod Transport Canister contents weight of 1901 lbs. The normal conditions evaluation of Section 2.10.14 uses a conservative inertial load of 25 g for the side drop, which is 0.7 g greater than the required inertial load of 24.3 g (Table 2.6.7-34). Section 2.10.14 provides the minimum margins of safety for each stress category for 1-foot drop conditions. For the analysis of the TPBARs in the PWR/BWR Rod

Transport Canister configuration, the stress-intensity results of critical sections, listed in Section 2.10.14, are scaled by the ratio of the contents weight and cask body weight surrounding the cavity, using the following scale factor.

$$SF_{sd} = \frac{W_{TPBAR\ /\ PWR} + W_{cavity\ cask\ body}}{W_{TPBAR} + W_{cavity\ cask\ body}} = \frac{1{,}901 + 34{,}400}{1{,}800 + 34{,}400} = 1.003$$

where:

SF_{sd} = side drop stress intensity scale factor

$W_{TPBAR/PWR}$ = the contents weight for the 25 TPBARs in the PWR/BWR Rod Transport Canister

W_{TPBAR} = the contents weight analyzed in Section 2.10.14.

$W_{cavity\ cask\ body}$ = the weight of the cask body radially surrounding the cask cavity

The minimum margin of safety is +0.13, which occurs at section 2 for the condition of P_m stress for 1-foot side-drop condition. This section is located at the axial center of the cask outer shell. The minimum margins of safety for each stress category for 1-foot drop conditions are as follows.

Stress Category	Section	Drop Orientation	Stress Intensity, ksi	Stress Allowable, ksi	Margin of Safety
P_m	2	Side	28.66	32.3	+0.13
$P_m + P_b$	2	Side	32.97	48.45	+0.47
P+Q	18	Side	31.39	60.0	+0.91

2.10.16.2 Hypothetical Accident Conditions for Cask Body with TPBARs and the PWR/BWR Rod Transport Canister

This section provides the cask body structural evaluation for hypothetical accident conditions. The following sections discuss drop conditions and inner shell buckling.

2.10.16.2.1 Free Drop (30-Foot)

This section provides the cask body structural evaluation for the 30-foot drop accident conditions of transport for the shipment of TPBARs in the PWR/BWR Rod Transport Cansister, the PWR insert and the TPBAR basket. Section 2.10.14 provides the critical stress intensity results of the NAC-LWT cask system for two TPBAR content conditions: up to 300 production TPBARs loaded into an open (i.e., unsealed) consolidation canister; and up to 55 segmented TPBARs loaded into a welded closed waste container. The Section 2.10.14 analysis used a three-dimensional half-symmetry model of the LWT cask body constructed using ANSYS. A detailed description of the implemented finite element model can be found in Section 2,10.14.1.2. Both

the pressure and component temperatures considered in Section 2.10.14 bound the TPBARs in the PWR/BWR Rod Transport Canister configuration.

Section 2.10.14.2.1 provides the results of the critical section stresses for the 30-foot drop accident conditions. As listed in Section 2.10.14.2.1, the minimum margins of safety resulted from the 30-foot side drop condition. The evaluation of Section 2.10.14 uses a cask contents weight of 1800 lbs, which is 101 lbs less than the TPBAR in the PWR/BWR Rod Transport Canister contents weight of 1901 lbs. The accident conditions evaluation of Section 2.10.14 uses a conservative inertial load of 60 g for side drop, which is 10.3 g greater than the required inertial load of 49.7 g (Table 2.6.7-34). As a result, the 30-foot drop evaluation of Section 2.10.14.2 uses a contents inertial load of 108,000 lb (1800 lbs × 60 g). Assuming a conservative acceleration of 55 g for the side drop inertial load, the contents inertial load for the TPBARs in the PWR/BWR Rod Transport Canister is calculated as 104,555 lbs (1901 lbs × 55 g). The total applied contents load for the critical stresses of Section 2.10.14.2.1 is greater than that for the TPBARs in the PWR/BWR Rod Transport Canister. Therefore, it is concluded that the NAC-LWT cask is structurally adequate for the shipment of TPBARs in the PWR/BWR Rod Transport Canister under the 30-foot drop accident conditions of transport.

2.10.16.2.2 Fire Accident

The pressure and component temperatures for the TPBARs in the PWR/BWR Rod Transport Canister for the fire accident conditions are bounded by the fire accident evaluation of the NAC-LWT cask body with TPBARs in a consolidation canister in Section 2.10.14.2.2. Therefore, based on the results of Section 2.10.14.2.2, presented in Table 2.10.14-27 and Table 2.10.14-28, the NAC-LWT cask is structurally adequate for the shipment of TPBARs in the PWR/BWR Rod Transport Canister under fire accident conditions.

2.10.16.3 Inner Shell Buckling

Section 2.10.6 presents a buckling evaluation of the cask inner shell per ASME Code Case N-284 for the design basis cask configuration. The evaluation presented in Section 2.10.6 bounds the TPBAR contents (up to 25 TPBARs in a rod holder in the PWR/BWR Rod Transport Canister) based on the following.

- The maximum weight of the TPBAR contents (up to 25 TPBARs in a rod holder) in the PWR/BWR Rod Transport Canister of 1901 lbs is enveloped by the weight of the design basis contents, which would reduce the compressive stresses in the cask shells due to less inertia loading for the drop conditions.
- The cask internal pressure for the TPBAR contents (up to 25 TPBARs in a rod holder in the PWR/BWR Rod Transport Canister) is significantly higher than the cask internal pressure for the design basis contents. The increase in the pressure would increase the

tensile stresses in the shell that result in stiffening of the inner shell and, consequently, in reducing the compressive stresses associated with buckling.

The interaction summary presented in Table 2.10.6-10, associated with the design basis weight and the design basis pressure, is bounding for the TPBAR content (up to 25 TPBARs in a rod holder in the PWR/BWR Rod Transport Canister) conditions. Therefore, it is concluded that the cask inner shell will not buckle with the TPBAR contents (up to 25 TPBARs in a rod holder in the PWR/BWR Rod Transport Canister) in the NAC-LWT cask.

2.10.16.4 NAC-LWT Cask Closure Lid and Bolts

The NAC-LWT cask closure lid is bolted to the cask body top forging with twelve 1-8 UNC bolts fabricated from SA-453, Grade 660 high-alloy steel. The threaded portion of the bolt engages the cask body a minimum of 1.875 inches. From Section 2.1.3.2.2, the torque on the cask lid bolts is 260 ± 20 ft-lb and the bolt preload is specified as 34,843 lbs. For the LWT cask configured to ship TPBARs in the PWR/BWR Rod Transport Canister, the maximum internal pressure of 600 psig is conservatively used in the closure lid evaluation. This pressure bounds the maximum pressure during the fire accident contained in Section 3.5.4.4. To ensure that the seal is not unloaded during accident conditions, the preload is calculated to account for the weight of the lid, internal weight of the cask contents, force resulting from internal pressure, force resulting from compression of the TFE O-ring, and force resulting from compression of the metallic O-ring. The load resulting from the weight of the LWT cask contents is:

$$F_2 = W_c a = 1{,}901 \times 60g = 114{,}060 \text{ lbs}$$

where:

W_c = 1,901 lbs (weight of TPBAR basket and contents for TPBARs in the PWR/BWR rod transport canister)

a = 60 g (maximum accident acceleration)

The load resulting from accident pressure (fire accident) is:

$$F_{ip} = P_{ip} A = 600 \times 171.36 = 102{,}816 \text{ lbs}$$

where:

P_{ip} = 600 psig (accident internal pressure)

$$A = \frac{\pi}{4} \times 14.771^2 = 171.36 \text{ in}^2$$

The total required bolt preload force (12 bolts) is:

$$FT = F_1 + F_2 + F_{tr} + F_{mr} + F_{ip}$$

$$= 56{,}460 + 114{,}060 + 2{,}474 + 79{,}470 + 102{,}816 = 355{,}280 \text{ lbs}$$

where:

F_{tr} = 2,474 lbs, TFE O-ring load (Section 2.1.3.2.2)

F_{mr} = 79,470 lbs, Metallic O-ring load (Section 2.1.3.2.2)

F_1 = 56,460 lbs, Lid load (Section 2.1.3.2.2)

The required bolt preload per bolt is:

$$F_{bolt} = \frac{F_T}{12} = \frac{355{,}280}{12} = 29{,}607 \text{ lbs} \quad < 34{,}843 \text{ lbs} \quad \text{(Section 2.1.3.2.2)}$$

Since the bolt preload presented in Section 2.1.3.2.2 of the NAC-LWT is bounding, no further analysis of the LWT lid bolts is required.

The preload applied to the cask lid bolts is due to the load applied to the lid. The load applied to the lid for the design basis weight and pressure for the PWR fuel bounds the load applied to the lid for the TPBARs in the PWR/BWR Rod Transport Canister contents. Therefore, the stresses in the cask lid due to the design basis weight and pressure also bound the stresses in the cask lid due to the TPBARs in the PWR/BWR Rod Transport Canister content weight and pressure.

2.10.16.5 Conclusion

Based on the evaluations presented in Sections 2.10.14.1 through 2.10.14.4, the NAC-LWT cask with TPBAR contents in the PWR/BWR Rod Transport Canister satisfies the requirements of 10 CFR 71 for the normal conditions of transport and for hypothetical accident conditions.

Table of Contents

3 THERMAL EVALUATION 3.1-1

3.1 Discussion 3.1-1

3.2 Thermal Properties of Materials 3.2-1
3.2.1 Conductive Properties 3.2-1
3.2.2 Radiative Properties 3.2-2
3.2.3 Convective Properties 3.2-3

3.3 Technical Specifications of Components 3.3-1

3.4 Thermal Evaluation for Normal Conditions of Transport 3.4-1
3.4.1 Thermal Model 3.4-1
3.4.2 Maximum Temperatures 3.4-51
3.4.3 Minimum Temperatures 3.4-52
3.4.4 Maximum Internal Pressures 3.4-52
3.4.5 Maximum Thermal Stresses 3.4-72
3.4.6 Evaluation of Package Performance for Normal Conditions of Transport 3.4-72

3.5 Hypothetical Accident Thermal Evaluation 3.5-1
3.5.1 Finite Element Models 3.5-1
3.5.2 Package Conditions and Environment 3.5-5
3.5.3 Package Temperatures 3.5-6
3.5.4 Maximum Internal Pressure 3.5-21
3.5.5 Maximum Thermal Stresses 3.5-26
3.5.6 Evaluation of Package Performance for Hypothetical Accident Thermal Conditions 3.5-26
3.5.7 Assessment of the Effects of the Fission Gas Release in the Fire Accident Condition 3.5-26

3.6 Failed Metallic Fuel Basket – SCOPE Evaluations 3.6-1

List of Figures

Figure 3.4-1 HEATING5 Normal Transport Conditions Thermal Model 3.4-73
Figure 3.4-2 Design Basis PWR Fuel Assembly Axial Flux Distribution 3.4-74
Figure 3.4-3 ANSYS MTR Fuel Design Basis Heat Load Thermal Model (Uniform 30-Watt/Element Configuration Heat Load) 3.4-75
Figure 3.4-4 MTR Fuel Variable Decay Heat ANSYS Thermal Model (120-Watt / 70-Watt / 20-Watt Configuration Heat Load) 3.4-76
Figure 3.4-5 Thermal Resistance Model for TRIGA Fuel Elements 3.4-77
Figure 3.4-6 Modeling Details for the MTR Fuel Assembly Resting on the Surface of the NAC-LWT MTR Basket 3.4-78
Figure 3.4-7 Finite Element Thermal Model for TRIGA Fuel Cluster Rods 3.4-79
Figure 3.4-8 Details of the TRIGA Fuel Cluster Rods in the Finite Element Model 3.4-80
Figure 3.4-9 Individual TRIGA Fuel Cluster Rod Finite Element Model Details 3.4-81
Figure 3.4-10 PWR and BWR High Burnup Fuel Rods Normal Condition ANSYS Thermal Model (Condition 1) 3.4-82
Figure 3.4-11 Close-up of PWR and BWR High Burnup Fuel Rods Normal Condition ANSYS Thermal Model 3.4-83
Figure 3.4-12 PWR and BWR High Burnup Fuel Rods Normal Condition ANSYS Thermal Model (Condition 2) 3.4-84
Figure 3.4-13 Finite Element Thermal Model for MTR Fuel Element 3.4-85
Figure 3.4-14 Detailed DIDO Basket Module Finite Element Model 3.4-86
Figure 3.4-15 Detailed DIDO Fuel Assembly Model 3.4-87
Figure 3.4-16 ANSYS Model for BWR 7 × 7 Fuel Lattice with 25 High Burnup Fuel Rods 3.4-88
Figure 3.4-17 Fuel Rod Locations in the Thermal Model for Damaged Fuel 3.4-89
Figure 3.4-18 Finite Element Model for TPBARs 3.4-90
Figure 3.4-19 Finite Element Model for MOATA Plate Fuel – ANSTO 3.4-91
Figure 3.4-20 Finite Element Model for Mark III Spiral Fuel – ANSTO 3.4-92
Figure 3.4-21 Finite Element Model for NRU/NRX Fuels in NAC-LWT Cask 3.4-93
Figure 3.4-22 Finite Element Model for HEUNL in NAC-LWT Cask 3.4-94
Figure 3.4-23 Finite Element Model for SLOWPOKE Fuel Core Basket 3.4-95
Figure 3.4-24 Finite Element Model of the BUP-500 Capsule Configuration 3.4-96
Figure 3.4-25 Finite Element Model of a Loaded BUP-500 Capsule 3.4-97
Figure 3.4-26 Finite Element Model of Radial Gaps in Capsule Region for the BUP-500 Configuration 3.4-98
Figure 3.4-27 Finite Element of Cask Components for SrF_2 Capsules 3.4-99
Figure 3.4-28 Finite Element Model for the WESF Capsule Container Configuration 3.4-100
Figure 3.4-29 Finite Element Model of a Loaded WESF Capsule 3.4-101
Figure 3.4-30 Finite Element Model of Radial Gaps in the Capsule Region for the WESF Capsule Container Configuration 3.4-102
Figure 3.4-31 Finite Element Model for the WESF Capsule Container Configuration (Cross Section Showing 400W Capsule Position) 3.4-103

List of Figures (Continued)

Figure 3.4-32 Finite Element Model for the WESF Capsule UCS Configuration..... 3.4-104
Figure 3.4-33 Finite Element Model Cross-Section of PWR Basket and UCS with Heat Load 3.4-105
Figure 3.5-1 Transient Thermal Analysis Finite Element Model of the NAC-LWT..... 3.5-28
Figure 3.5-2 Top Region of the ANSYS Model 3.5-29
Figure 3.5-3 Bottom Region of the ANSYS Model..... 3.5-30
Figure 3.5-4 Temperature History of NAC-LWT O-Rings and Valves in the Hypothetical Fire Event..... 3.5-31
Figure 3.5-5 Temperature History of NAC-LWT Components in the Hypothetical Fire Event..... 3.5-32
Figure 3.5-6 MTR Fuel Design Basis Heat Load Fire Accident ANSYS Thermal Model (Uniform 30-Watt/Element Configuration Heat Load)..... 3.5-33
Figure 3.5-7 MTR Fuel Variable Heat Load Fire Accident ANSYS Thermal Model (120-Watt/70-Watt/20-Watt Configuration Heat Load) 3.5-34
Figure 3.5-8 Temperature History in the MTR Fuel Variable Heat Load Fire Accident Analysis..... 3.5-35
Figure 3.5-9 Location of the Maximum Temperature in the MTR Fuel Variable Heat Load 3.5-36
Figure 3.5-10 Temperature History for the TRIGA Fuel Cluster Rods Design Basis Heat Load Fire Accident Analysis..... 3.5-37
Figure 3.5-11 Temperature History of NAC-LWT Cask Components with PWR and BWR High Burnup Fuel Rods in the Hypothetical Fire Event..... 3.5-38
Figure 3.5-12 End of Fire Temperatures of the Alternate Port Cover Components 3.5-39
Figure 3.5-13 Transient Temperatures of the Alternate Port Cover Components 3.5-40
Figure 3.5-14 Model for the HEUNL Fire and Cool-Down Analysis (with Ribs/Slide Bars Added)..... 3.5-41
Figure 3.5-15 Model Detail for the HEUNL Fire and Cool-Down Analysis (with Ribs/Slide Bars Added) 3.5-42
Figure 3.5-16 Temperature History of HEUNL Liquid in the Hypothetical Fire Event..... 3.5-43
Figure 3.5-17 Temperature History of HEUNL Container Shell in the Hypothetical Fire Event 3.5-44
Figure 3.5-18 Finite Element Model for the SrF_2 Capsule Fire Condition Upper Limiter Region 3.5-45
Figure 3.5-19 Finite Element Model for the SrF_2 Capsule Fire Condition Lower Limiter Region 3.5-46
Figure 3.5-20 Temperature History of the BUP-500 Capsule Configuration in the Hypothetical Fire..... 3.5-47
Figure 3.5-21 Temperature History of WESF Capsule Container Configuration in the Hypothetical Fire..... 3.5-48
Figure 3.6-1 Failed Fuel Basket SCOPE Input 3.6-2
Figure 3.6-2 Failed Fuel Basket SCOPE Output 3.6-3
Figure 3.6-3 Nine Failed Metallic Fuel Rods SCOPE Input..... 3.6-7
Figure 3.6-4 Nine Failed Metallic Fuel Rods SCOPE Output..... 3.6-8

List of Tables

Table 3.2-1 Thermal Properties of Type 304 Stainless Steel 3.2-7
Table 3.2-2 Thermal Properties of 6061-T6 Aluminum Alloy 3.2-7
Table 3.2-3 Thermal Properties of Dry Air 3.2-8
Table 3.2-4 Thermal Properties of Chemical Copper Lead 3.2-8
Table 3.2-5 Thermal Properties of 56 Percent Ethylene Glycol Solution 3.2-9
Table 3.2-6 Thermal Properties of BISCO FPC (Fireblock Silicone Foam) 3.2-10
Table 3.2-7 Thermal Properties of Helium 3.2-10
Table 3.2-8 Fiberfrax Ceramic Fiber Paper, Grades 550, 880, and 970 ..... 3.2-11
Table 3.4-1 Temperatures for Metallic Fuel Transport 3.4-106
Table 3.4-2 Maximum Component Temperatures – Design Basis PWR Fuel 3.4-107
Table 3.4-3 Limiting Cold Case Component Temperatures – Design Basis PWR Fuel 3.4-108
Table 3.4-4 Fission Product Gas Inventories and Pressures for Design Basis PWR Fuel Assembly 3.4-109
Table 3.4-5 NAC-LWT Cask Thermal Performance Summary 3.4-109
Table 3.4-6 MTR Fuel Maximum Component Temperatures – Normal Transport Condition 3.4-110
Table 3.4-7 PWR Rods (25 Total) Maximum Component Temperatures – Normal Transport Condition 3.4-111
Table 3.4-8 TRIGA Fuel Element Maximum Component Temperatures – Normal Conditions of Transport 3.4-112
Table 3.4-9 TRIGA Fuel Cluster Rod Temperatures – Normal Conditions of Transport 3.4-113
Table 3.4-10 PWR and BWR High Burnup Fuel Rods Maximum Component Temperatures – Normal Transport Condition 3.4-114
Table 3.4-11 Fission Product Gas Inventories and Pressures for the Exxon 7 × 7 BWR Fuel Assembly 3.4-115
Table 3.4-12 DIDO Fuel Maximum Component Temperatures – Normal Transport Condition 3.4-116
Table 3.4-13 General Atomics IFM Maximum Component Temperatures – Normal Transport Condition 3.4-117
Table 3.4-14 PWR and BWR High Burnup Fuel Rods in a Fuel Assembly Lattice Maximum Component Temperatures—Normal Transport Condition 3.4-118
Table 3.4-15 Maximum Component Temperatures for High Burnup Fuel Rods with Damaged Fuel Rods in a Rod Holder 3.4-118
Table 3.4-16 Maximum Component Temperatures for TPBAR Shipment – Normal Conditions of Transport 3.4-119
Table 3.4-17 Maximum Component Temperatures – PULSTAR Fuel in MTR Basket 3.4-120
Table 3.4-18 PULSTAR Fuel Dimensions 3.4-121
Table 3.4-19 PULSTAR Payload Volume Summary 3.4-121

List of Tables

Table 3.4-20 PULSTAR Fuel Assembly Fission Product Gas Inventory 3.4-122
Table 3.4-21 PULSTAR Fuel Element Normal Condition Internal Pressure Summary 3.4-122
Table 3.4-22 Maximum Component Temperatures – MOATA Plate Fuel and Mark III Spiral Fuel in ANSTO Basket 3.4-123
Table 3.4-23 Cask and Rod Condition..... 3.4-124
Table 3.4-24 Gas Isotopics (Gram)..... 3.4-125
Table 3.4-25 Molar Gas Quantity 3.4-126
Table 3.4-26 Maximum Cask Cavity Pressure 3.4-127
Table 3.4-27 Maximum Component Temperatures – SLOWPOKE Fuel in MTR Basket 3.4-128
Table 3.4-28 Maximum Component Temperatures – SLOWPOKE Fuel Core 3.4-128
Table 3.4-29 Maximum Component Temperatures (Heat Case) – SrF_2 Capsule Contents..... 3.4-129
Table 3.4-30 Maximum Component Temperatures (Cold Case)– SrF_2 Capsule Contents 3.4-130
Table 3.5-1 Maximum Component Temperatures (°F) During the Fire Accident (Design Basis PWR Fuel, 2.5 kW Heat Load)..... 3.5-49
Table 3.5-2 MTR Fuel Fire Accident Maximum Temperatures (°F), 10 Fuel Plate/120W Element Case (Bounding Configuration) 3.5-50
Table 3.5-3 TRIGA Fuel Fire Accident Maximum Temperatures (°F)..... 3.5-50
Table 3.5-4 PWR and BWR High Burnup Fuel Rods Fire Accident Maximum Temperatures (°F)..... 3.5-51
Table 3.5-5 Maximum Component Temperatures for High Burnup Fuel Rods in a Rod Holder with Damaged Fuel Rods for the Fire Accident..... 3.5-51
Table 3.5-6 TPBAR Fire Accident Maximum Temperatures..... 3.5-52
Table 3.5-7 SrF_2 Capsules Fire Accident Maximum Temperatures..... 3.5-52

3 THERMAL EVALUATION

3.1 Discussion

This chapter summarizes the thermal analyses, which are performed to demonstrate fulfillment of the thermal capability requirements established in 10 CFR 71.

The NAC-LWT cask is designed to safely contain irradiated nuclear fuel and other radioactive materials under a variety of normal transport conditions (as described in 10 CFR 71.71) and accident conditions (as described in 10 CFR 71.73). In order to verify the adequacy of the design, detailed analyses of a reference design PWR shipment are performed considering extreme normal transport and hypothetical accident conditions. The NAC-LWT cask is designed to transport one intact PWR fuel assembly; up to 2 intact BWR fuel assemblies; up to 25 individual PWR or BWR rods (including up to 14 fuel rods classified as damaged); up to 16 PWR MOX fuel rods (or a combination of PWR MOX and UO_2 PWR fuel rods); up to 42 MTR and DIDO fuel elements; up to 140 TRIGA fuel elements or 560 TRIGA fuel rod clusters; up to 300 TPBARs (of which three can be prefailed), up to 55 segmented TPBARs; or up to 700 PULSTAR fuel elements (intact or damaged); and metallic fuel. The PULSTAR fuel will be loaded in the 28 MTR basket and consist of intact fuel assemblies, intact fuel rods loaded in fuel rod inserts or fuel cans, or intact or damaged fuel and nonfuel components or fuel assemblies loaded in fuel cans. High burnup PWR/BWR fuel rods may be placed in a rod holder or in a fuel assembly lattice. Damaged PWR/BWR fuel rods must be placed in a rod holder. Up to eighteen (18) NRU or NRX fuel rod assemblies, or equivalent fuel rods, or damaged NRU or NRX fuel rods. Based on the NRU/NRX rod diameters, and the diameter of the tube containing them, the maximum compaction to concentrate the heat load in the basket is 25%. Each basket location may also be loaded with EFN rods, Booster rods, or Moly targets. All fuel will be loaded into each basket in the NAC-LWT cask enclosed in an ISO container. Four (4) HEUNL containers, empty or filled with HEUNL material such that a minimum under filled void of one gallon exists, will be loaded into the NAC-LWT cask enclosed in an ISO container.

SrF_2 capsules are loaded using the PWR basket with bespoke basket inserts. Up to two BUP-500 capsules can be transported in the BUP-500 basket assembly (PWR basket with BUP-500 insert). The total heat load for the entire cask is 2.2 kW distributed uniformly between two BUP-500 capsules. Up to eighteen WESF capsules (6 WESF capsule containers × 3 capsules for each container) can be transported in the WESF basket assembly (PWR basket with an insert for WESF capsule containers). Alternatively, up to eighteen WESF capsules (3 UCSs × 6 capsules for each UCS) can be transported in the UCS basket assembly (PWR basket with insert for UCSs). The total heat load of 2.4 kW is defined for the entire cask loaded with WESF capsules. The loaded NAC-LWT cask containing SrF_2 capsules will be enclosed in an ISO container.

High burnup PWR/BWR/PWR MOX fuel rods are placed in a rod holder (a rod holder is the term generally used in this chapter to describe a PWR/BWR Rod Transport Canister with a 4 × 4 or a 5 × 5 insert as presented on the drawings provided in Section 1.4). The high burnup PWR and BWR rods may also be placed in a fuel assembly lattice. Damaged PWR/BWR fuel rods must be placed in a rod holder. The 16 PWR MOX fuel rods are required to be placed in a rod holder with a 5 × 5 insert. Along with the maximum 16 PWR MOX rod contents (or combination of PWR MOX and UO_2 PWR fuel rods), the remaining tubes may be loaded with burnable poison rods or other intact components with negligible heat loads (total additional heat load of less than 10 watts). Up to four (4) SLOWPOKE fuel canisters each containing up to 100 SLOWPOKE fuel rods with a maximum decay heat load of 0.625 Watts/canister can be loaded in a MTR basket module. For SLOWPOKE fuel contents, only the top and upper intermediate MTR-28 modules may be loaded. The empty intermediate basket modules and bottom basket modules are installed as axial spacers. The total package decay heat for SLOWPOKE fuel contents in the fuel canister is 5 Watts. In addition, a SLOWPOKE fuel core can be loaded in a SLOWPOKE fuel basket, which is placed on top of empty intermediate basket modules and a bottom MTR-42 fuel basket module. The maximum decay heat of the fuel core is 45 Watts.

LANL MOX Fuel Rods are loaded in up to sixteen (16) transfer tubes, which in turn are loaded in the PWR/BWR transport can assembly. The total allowed heat load for this payload is 25 watts per cask.

An intact PWR fuel assembly with a maximum decay heat load of 2.5 kW is used in a majority of the thermal analyses. The failed fuel basket analysis in Section 3.6 uses a decay heat load of 30 Watts. The 42 MTR fuel assembly basket in Section 3.4.1.3 uses a decay heat load of 1.26 kW. A decay heat load of 1.05 kW is conservatively used for the TRIGA fuel basket analysis. A decay heat load of 1.063 kW is used for the TPBAR basket analysis. The maximum heat load for the PULSTAR fuel is 0.840 kW per cask. The maximum heat load for the maximum number of 16 PWR MOX fuel rods is 2.3 kW per cask (143 W per PWR MOX rod). The maximum heat load for the maximum number of (18) NRU or NRX fuel rod assemblies is 0.64 kW per cask. The maximum heat load for the damaged NRU or NRX fuels remains at 0.64 kW per cask, but 0.80 kW (0.64kW×1.25) per cask is used in thermal evaluation considering the concentration of the NRU/NRX rods. The NRU/NRX basket may also be loaded with EFN rods, Booster rods, or Moly targets and the maximum heat load for a basket slot having this content is less than 8 Watts per basket location. This is bounded by the 35.6 Watts per basket location (640 Watts per cask/18 tubes) for NRU or NRX fuels. The maximum heat load for four (4) HEUNL containers filled to capacity is 4.65 Watts per cask. As long as the decay heat load is within the design limit of 2.5 kW, any of the fuel types and other radioactive material that the NAC-LWT cask is analyzed to transport are bounded by the cask body thermal analyses of the design basis PWR assembly.

The primary heat rejection design criteria for the NAC-LWT cask are that:

1. Components important to safety shall not be subjected to temperatures outside their safe operating ranges.
2. Thermally induced stresses in the cask containment (in combination with pressure and various load condition stresses) shall not cause degradation of the cask containment capability.

The first criterion is fulfilled by thermal analysis results, which show that components important to safety are maintained within their safe operating ranges. In the event that the temperatures of the components important to safety fall outside the safe operating ranges, it is assumed that the component has failed. Temperatures of components important to safety may not fall outside the safe operating range during normal transport conditions. There are three important safety components that are subject to this thermal criterion – the tetrafluoroethylene (TFE), Viton®, and metallic O-ring seals; the lead gamma shield; and the 56 % ethylene glycol and water neutron shield.

An additional thermal consideration is associated with the liquid neutron shield tank – the reduction in neutron shielding capability caused by thermal contraction. An expansion tank is provided to ensure that the neutron shield tank remains full despite worst case contraction of the liquid in the tank during cooling. The method used by the expansion tank to keep the neutron shield tank full is described in Section 2.6.7.7.1.

The second criterion is fulfilled by the structural analysis of Chapter 2, which shows that combined load stresses (including thermally induced stresses) are less than the limits stated in Section 2.1.2.

The thermal analyses were performed for a 0.25-inch thick neutron shield tank shell, while the actual fabricated thickness is only 0.24 inches (6mm). The shell thickness difference of 0.01 inches equates to only a 0.009°F ΔT; therefore, the analyses reported in this chapter are valid.

3.2 Thermal Properties of Materials

The transfer of heat within the NAC-LWT cask is accomplished by conduction, convection and radiation. The thermal analysis of the cask requires that thermal conductivities and emissivities of the materials of construction be provided. The coefficients used to describe natural convective heat transfer in the air gaps, liquid shield tank, and from the cask surface are also provided. Thermal properties have been tabulated for the materials that form the major heat transfer pathways. Materials for small components, such as valves and trunnions, are not included in the thermal property tabulation. In addition, typical thermal values for materials of similar composition do not deviate from one another significantly. This allows the use of the same properties for A356.0-T61 and 6061-T6 aluminum alloys. The thermal properties of materials for the NAC-LWT cask are presented in Table 3.2-1 through Table 3.2-8. Specific heat and density of the thermal insulator are used in the hypothetical fire accident case. Conservatively, these values are assumed to be those of air.

Thermal expansion and contraction have been taken into account in the radial lead gamma shield. A 0.0541-inch gap is calculated for the radial lead region. This is based on the lead and the surrounding stainless steel being heated from 70°F to 620°F and then cooled to 250°F (conservatively less than the maximum temperature of this region under normal transport conditions). This represents the possible formation of a gap after the lead pour during fabrication. The lead gamma shield at the bottom of the cask is machined rather than poured; therefore, no gaps are created from thermal expansion or contraction during fabrication.

3.2.1 Conductive Properties

The values for the thermal conductivities of the major component materials of the NAC-LWT cask are shown in Table 3.2-1 through Table 3.2-8. The thermal conductivity of the thermal insulator, BISCO FPC and Fiberfrax Ceramic Fiber Paper, are shown in Table 3.2-6 and Table 3.2-8, respectively.

To evaluate the maximum fuel rod clad temperature that is found in the cask, it is necessary to describe in the HEATING5 (Turner) model a means of heat transfer within the fuel assembly. This is accomplished by use of an effective thermal conductivity for the fuel assembly. This value is determined using a method that has been developed for evaluating effective thermal conductivities following damage to a core from an accident (Cook). This method is based on the thermal conductivities of the fuel and the air in an assembly and conservatively does not take into account convection or radiation.

3.2.2 Radiative Properties

Radiation heat transfer during the normal transport conditions is accounted for by the effective heat transfer coefficient, h_r, used for describing radiation heat transfer in the HEATING5 computer code. This value is calculated for the heat transfer from the stainless steel surface of the cask to the air surrounding the cask. Radiation heat transfer is also accounted for in the cask during the fire accident. The thermal effects of the fire accident are evaluated using the SCOPE computer code (Bucholz). This computer code takes into account radiative heat transfer between components in the cask and between the cask and the environment.

The HEATING5 effective radiative heat transfer coefficient, h_r, is calculated as follows:

$$h_r = \sigma F$$

where:

σ = the Stefan-Boltzman constant = 0.1714×10^{-8} Btu/hr-ft^2 -°R^4

F = the gray body shape factor for the surfaces involved.

According to the Principles of Heat Transfer (Kreith), the gray body shape factor, F, is calculated as:

$$F = \frac{1}{\frac{P_1}{E_1} + \frac{A_1 P_2}{A_2 E_2} + 1}$$

where:

A_1 and A_2 are the areas of the two surfaces,

E_1 and E_2 are the emissivities of the two surfaces, and

P_1 and P_2 are the reflectivities of the two surfaces.

HEATING5 equates the areas A_1 and A_2 (using the smaller area) and since P + E = 1, the equation can be rewritten:

$$F = \frac{1}{\frac{1}{E_1} + \frac{1}{E_2} - 1}$$

Thus, the radiative heat transfer coefficient, h_r, is calculated as:

$$h_r = \frac{\sigma}{\frac{1}{E_1} + \frac{1}{E_2} - 1}$$

In the HEATING5 analysis, only radiation from the surface of the cask to the environment is considered. The radiative heat transfer coefficient is evaluated for this case. The value for the emissivity of stainless steel is found in Table 3.2-1. A value of 1.0 is used for the emissivity of the environment.

$$h_r = \frac{\sigma}{\frac{1}{E_1} + \frac{1}{E_2} - 1}$$

$$= \frac{0.1714 \times 10^{-8}}{\frac{1}{1.0} + \frac{1}{0.35} - 1}$$

$= 6.0 \times 10^{-10}$ Btu/hr-ft^2 -°R^4

$= 4.166 \times 10^{-12}$ Btu/hr-in^2 -°R^4

3.2.3 Convective Properties

Heat transfer by convection is also evaluated for the NAC-LWT cask. This means of heat transfer is evaluated only where its effect is of significant importance. These locations include the liquid neutron shield tank, its associated expansion tank, the air gap between the fuel assembly and the basket wall, the air gap between the basket and the cask body, and the cask surface to the environment.

The effects of convection in these locations are accounted for in the HEATING5 analysis in different ways. In the liquid regions, the conduction and convection coefficients are combined into a single term called the effective thermal conductivity (k_e). The equation for k_e (Bucholz) is:

$$k_e = 0.135\, k_c \left[\frac{Pr^2\, Gr}{1.36 + Pr}\right]^{0.278}, \qquad 10^3 < \left[\frac{Pr^2\, Gr}{1.36 + Pr}\right]^{0.278} < 10^8$$

where:

k_c = thermal conductivity of ethylene glycol mixture

Pr = Prandtl number = $\frac{c_p \mu}{k_c}$

$$Gr = g\beta \frac{\rho^2}{\mu^2} (r2 - r1)^3 \Delta T$$

where:

g = gravitational constant, ft/hr^2

β = volumetric expansion coefficient, $°F^{-1}$

ρ = density, lbm/ft^3

μ = dynamic viscosity, lbm/hr-ft

$r_2 - r_1$ = radial thickness of the region, ft

Solving for the effective conductivity using thermal properties for the ethylene glycol and water solution found in Table 3.2-5 results in a k_e for the neutron shield tank of 0.7785 Btu/hr-in-°F and a k_e for the expansion thank of 0.3573 Btu/hr-in-°F.

A similar approach is used to evaluate convective heat transfer in the air gaps. An overall heat transfer coefficient that takes into account conduction and convection is obtained. Note that this coefficient has the units of a convection heat transfer coefficient and, therefore, the heat transfer in the air gaps may be described in terms of the HEATING5 convection heat transfer coefficient, h_c. The formula for vertical free convection comes from Principles of Heat Transfer (Krieth) for enclosed air spaces.

$$\frac{Ub}{k} = 0.0317 \ Gr^{0.37}$$

where:

U = overall heat transfer coefficient, $Btu/hr\text{-}in^2$ -°F

b = radial thickness of the region, in

k = thermal conductivity of air, Btu/hr-in -°F

Gr = Grashof number = $g\beta \frac{\rho^2}{\mu^2} L^3 \Delta T$

where:

all values in the Grashof number are as described previously with L being the vertical length of the air gap region.

This formula yields an h_c for the gap between the fuel assembly and the inner basket wall of $0.21\ \Delta T^{0.37}$ Btu/hr-in^2-°F and an h_c for the gap between the basket and the cask body of $0.88\ \Delta T^{0.37}$ Btu/hr-in^2-°F.

The formula used to describe the convection coefficient, h_c, for the surface of the cask to the environment is dependent upon the surface orientation. For flat surfaces, h_c was calculated from the formula for vertical flat surfaces from Principles of Heat Transfer (Krieth):

$$h_c = 0.13\ k\ (Gr\ Pr)^{0.33}\ /\ L$$

where:

k = conductivity of air

Pr = Prandtl number as defined previously

Gr = Grashof number as defined previously

This results in a convection coefficient for vertical flat surfaces of $0.00128\ \Delta T^{0.33}$.

According to Principles of Heat Transfer (Krieth), the convection coefficient for horizontal cylindrical surfaces for $10^9 < Gr < 10^{12}$ is $0.00125\ \Delta T^{0.33}$.

A combined convective and radiative heat transfer between the cask surface and the ambient can be incorporated for the fire transient analysis by modifying the convection coefficient as follows:

$$Q_t = q_r + q_c$$

where q_r is specified as shown for the radiation heat transfer and q_c, which is the heat transfer by convection, is expressed as

$$q_c = h_c A(T_i - T_j)$$

where:

h_c = film coefficient (Btu/hr - in^2 - °F)

Radiation heat transfer for the pre-fire and post-fire conditions between two nodes, i (hotter node) and j (colder node), is accounted for in the fire transient analysis by the expression:

$$q_r = \sigma \varepsilon A F\left(T_i^4 - T_j^4\right)$$

$$q_r = \sigma \varepsilon A F(T_i^2 + T_j^2)(T_i + T_j)(T_i - T_j)$$

where:

σ = Stefan-Boltzman constant = 1.19 x 10^{-11} Btu/hr-in^2-°R^4

ε = emissivity

A = surface area

F = shape factor for the surfaces

T_i = absolute temperature of surface

T_j = absolute temperature of ambient

By combining both expressions,

$$Q_t = (\sigma\varepsilon F(T_i^2 + T_j^2)(T_i+T_j) + h_c)A(T_i - T_j)$$

or

$$Q_t = h_{eff}A(T_i - T_j)$$

where:

$h_{eff} = \sigma\varepsilon F(T_i^2 + T_j^2)(T_i+T_j) + h_c$

= the effective convection coefficient

The effective convection coefficient used for the cask surface (h_{eff}) now includes the radiation heat transfer. The form factor (F) is taken to be unity. The convective heat transfer coefficient (h_c) is $0.00125\Delta T^{0.33}$ for pre-fire and post-fire conditions and 0.02446 Btu/hr-in^2-°F during the fire.

Table 3.2-1 Thermal Properties of Type 304 Stainless Steel

Property (units)/Temperature (°F)	70	212	392	572	752	932	1112
Density (lbm/in^3)	--	0.2888	0.2872	0.2855	0.2839	0.2822	0.2805
Conductivity (Btu/hr-in-°F)	0.7143	0.7800	0.8592	0.9333	1.0042	1.0717	1.1375
Specific Heat (Btu/lbm-°F)	0.1141	0.1207	0.1272	0.1320	0.1356	0.1385	0.1412
Emissivity	0.35 (77°F)						

Reference: Nuclear Systems Materials Handbook

Table 3.2-2 Thermal Properties of 6061-T6 Aluminum Alloy

Property (units) / Temperature (°F)	200	300	400	500	600
Density (lbm/in^3) [2]	0.098	0.098	0.098	0.098	0.098
Conductivity (Btu/hr-in-°F) [1]	8.25	8.38	8.49	8.49	8.49
Specific Heat (Btu/lbm-°F) [2]	0.23				
Emissivity [3]	0.22				

Reference:

1 ASME Boiler and Pressure Vessel Code, Section II Part D –Properties, Table TCD, 1995 Edition with 1997 addendum, American Society of Mechanical Engineers, New York, NY.
2 "Metallic Material And Element For Aerospace Vehicle Structures", MIL-HDBK-5H, 1998, Figure 3.6.2.0.
3 Bucholz, J.A., Scoping Design Analyses for Optimized Shipping Casks Containing 1-, 2-, 3-, 5-, 7-, or 10- Year-old PWR Spent Fuel, Oak Ridge National Laboratory, ORNL/CSD/TM-149, 1983.

Table 3.2-3 Thermal Properties of Dry Air

Property (units) /Temperature (°F)	0	100	200	300	400	500	600	700
Conductivity (Btu/hr-in-°F)	0.00111	0.00128	0.00145	0.00161	0.00177	0.00193	0.00208	0.00223
Prandtl Number	0.73	0.72	0.72	0.71	0.689	0.683	0.685	0.690
$g\beta\rho^2/\mu^2$ (1/°F-in^3)	2430	1020	492	257	149	92.0	61.3	40.7

Reference: Kreith.

Table 3.2-4 Thermal Properties of Chemical Copper Lead

Property (units)/Temperature (°F)	68	209	400	499	581	630
Conductivity (Btu/hr-in-°F)	1.6651	1.6308	1.5260	1.4111	1.2096	1.0079

Reference: Edwards.

Table 3.2-5 Thermal Properties of 56 Percent Ethylene Glycol Solution

Property (units)/Temperature (°F)	-50[1]	0[1]	50	100	150	200	250	300
Density (lbm/in^3)	0.0401	0.0396	0.0391	0.0385	0.0378	0.0370	0.0362	0.0353
Conductivity (Btu/hr-in-°F)	0.0194	0.0191	0.0188	0.0185	0.0182	0.0179	0.0177	0.0174
Specific Heat (Btu/lbm-°F)	0.694	0.718	0.742	0.766	0.800	0.826	0.852	0.878
Dynamic Viscosity (lbm/hr-in)	57.735	5.854	1.468	0.5832	0.3008	0.1828	0.1228	0.0714
Coefficient of Thermal Expansion (in/in/°F)	0.000361	(200°F)						

[1] Values below 50°F are extrapolated.

References:

1 Cragoe

2 Bates

3 "Coefficient of Cubical Expansion for Glycol, Water and Glycol-Water Solutions."

Table 3.2-6 Thermal Properties of BISCO FPC (Fireblock Silicone Foam)

Temperature (°F)	100	176	500	700	1051
K (BTU/hr – in - °F)	4.375E-3[1]	7.222E-3[2]	6.250E-3[3]	6.389E-3[3]	9.653E-3[3]

References:
1 BISCO Products Data, "FPC (Fireblock Silicone Foam," BISCO Products, Inc., Park Ridge, IL, February 1988.
2 Letter from Rogers Corporation, BISCO Materials Unit, dated February 2, 1999 from Daniel J. Kubrick.
3 Holometrix Micromet test report NCN-2, dated May 2000.

Table 3.2-7 Thermal Properties of Helium

Property (units) / Temperature (°F)		200	400	600	800
Conductivity (Btu/hr-in-°F)		.00808	.00942	.01075	.01150
Density (lbm/in^3)		.48322 E-05	.37037E-05	.30093E-05	.25231E-05
Specific Heat (Btu/ lbm-°F)	1.24				

Reference:
Kreith

Table 3.2-8 Fiberfrax Ceramic Fiber Paper, Grades 550, 880, and 970

Property	Units
Thermal Conductivity	
500°F	0.40 Btu in/hr/ft^2/°F
1000°F	0.79 Btu in/hr/ft^2/°F
2000°F	1.29 Btu in/hr/ft^2/°F
Temperature Use Limit	≥ 2300°F

Reference:
UNIFRAX Product Specifications, Fiberfrax® Ceramic Fiber Paper, C-1423, Unifrax Corporation, Niagara Falls, NY, June 1996.

3.3 Technical Specifications of Components

There are three components important to safety that must be maintained within their safe operating temperature ranges - the TFE, metallic and Viton® O-ring seals, the lead gamma shield, and the 56 percent ethylene glycol and water neutron shield.

The safe operating ranges for the O-rings, lead gamma shield, and liquid neutron shield are as follows:

Component	Safe Operating Range
TFE O-ring	-40°F to +735°F[1]
Metallic O-ring	-40°F to +800°F
Viton® O-ring	-40°F to +550°F[2]
Lead gamma shield	-40°F to +600°F
Liquid neutron shield	-40°F to +350°F

The safe operating range of the O-rings ensures that the cask cavity contents are contained within the cask and are not released to the atmosphere because of thermal failure of the O-rings. The safe operating range of the lead gamma shield ensures that the gamma shield does not melt and, therefore, maintains full gamma shielding capability. The analyses of Sections 3.4.2 and 3.1.1 show that the temperatures of the O-rings are maintained within the safe operating range during normal transport and hypothetical accident conditions. To preclude localized lead temperatures from exceeding their safe operating range, a thermal insulator is used to shield the lead from the high temperatures that are found during the 10 CFR 71 hypothetical fire accident. A 1/8-inch layer of the material is located at the cask outer wall above the neutron shield, around the outer corners of the radial lead shield, and around the sides and the bottom of the lead disk in the cask bottom.

The maximum safe operating temperature of the 56-percent ethylene glycol and water neutron shield ensures that the neutron shield does not boil and, therefore, provides full neutron shielding capability. An expansion tank is also provided to ensure that the neutron shield remains full at the minimum safe operating temperature. The analyses of Sections 3.4.2 and 3.4.3 show that the temperature of the liquid neutron shield remains within its safe operating range during normal transport conditions. The neutron shield is lost during the hypothetical accident, removing the necessity for it to remain within its safe operating range (See Section 5.4 for a discussion of the effect of a loss of the neutron shield on the cask dose rates).

---

1 Verified through testing (Certified Test Report D9-3362-1, Applied Technical Services, Inc., Marietta, GA, February 8, 1989).

2 Verified through testing (Certified Test Report 43939-01, Wyle Laboratories, Inc., Huntsville, AL, February 21, 2000).

3.4 Thermal Evaluation for Normal Conditions of Transport

The temperatures of each of the components of the NAC LWT cask must be evaluated during normal transport conditions. The NAC-LWT cask must prevent components from exceeding their allowable temperatures by rejecting sufficient decay heat to the environment when the design basis, 2-year cooled, Westinghouse 15 × 15 fuel assembly is being transported. Since the neutron shield may be empty when metallic fuel is being transported, cask temperatures are also evaluated for this configuration. Components important to safety, identified in Section 3.3, must be maintained within their safe operating ranges. Also, the thermally induced stresses, in combination with pressure and mechanical load stresses, must be maintained below allowable stress levels.

3.4.1 Thermal Model

The temperatures of the NAC-LWT cask are evaluated for normal transport conditions. The cask is analyzed for two different cases referred to as the Heat Case and the Cold Case.

The Heat Case consists of an ambient temperature of 130°F, still air, and direct solar heating of 737 Btu/ft^2 on the vertical flat surfaces and 1,475 Btu/ft^2 on the curved surfaces for a period of 12 out of every 24 hours.

The Cold Case uses an ambient temperature of –40°F, still air, and shade (no solar heat load). This case requires no thermal analysis when a 0.0 kW decay heat load is considered because a uniform cask temperature of –40°F results. The more limiting decay heat load, from a thermal stress standpoint, is the design fuel assembly maximum decay heat load of 2.5 kW.

3.4.1.1 PWR Analytical Model

The temperatures of the NAC-LWT cask were evaluated using the HEATING5 computer code (Turner). The model used to evaluate the temperature distribution is shown in Figure 3.4-1. The model consists of the fuel basket section and the cask body.

The fuel basket section consists of several regions. These are the active fuel region, the non-power producing portion of the fuel region, the end-fittings, the spacer, an air region above the upper end-fitting, an air gap surrounding the fuel region, and an aluminum annulus (the basket wall) surrounding the gap. The fuel region is modeled as a cylinder 9.5 inches in diameter. (This diameter is actually an effective diameter for an 8.426-inch square fuel assembly.) The active fuel region is broken up into six regions of varying heat generation to closely approximate the axial power distribution shown in Figure 3.4-2. The effective diameter of the air gap is determined based on the 8.875-inch square cavity area minus the 8.426-inch square fuel assembly area. The effective diameter of the aluminum annulus is obtained by taking

the area of the basket and subtracting the area of the cavity. The cask cavity is modeled axially with an active fuel length of 144 inches, 6 inches on either side of the active fuel length as the non-power producing portion of the fuel region, a 4-inch end-fitting on the top and a 3-inch endfitting on the bottom, a 7-inch spacer at the bottom and an 8-inch air gap at the top.

The cask body is modeled based on the nominal dimensions of the license drawings in Section 1.4 with the exception of the radial lead region. The method used to obtain the dimensions of the lead region is described in Section 3.2. Because the calculation of the gap is conservative, the effect of the thermal insulator can be ignored during normal transport conditions. The resulting temperatures will still be conservative.

For ease of designing the analytical model, some of the methods of heat transfer within the NAC-LWT cask are not modeled. The effect of this simplification is an additional conservative small overestimation of overall temperatures within the cask. The heat generated by the fuel rods is transferred within the fuel assembly by conduction and to the air gap surrounding the assembly by convection. Conduction is the only axial means of heat transfer from the fuel assembly to the stainless steel at the top and bottom of the fuel basket. Heat is conducted through the aluminum surrounding the fuel assembly and then transferred by means of convection through the air gap between the fuel basket and the cask body. Heat is then conducted through the inner stainless steel wall, the air gap assumed in the lead region, the lead itself, and the outside stainless steel wall. In the liquid neutron shield, heat is transferred by both convection and conduction. It is then conducted through the stainless steel to the surface of the cask where it is transferred to the environment by means of convection and radiation. The solar heat load is evaluated using a steady-state HEATING5 analysis based on one-half of the maximum hourly solar heat load. The factor of one-half is based on the maximum insolance being applied to all cask surfaces for a period of 12 out of every 24 hours. For this report, this steady-state value for the solar heat load is referred to as full insolation.

3.4.1.2 Metallic Fuel Analytical Model

A HEATING5 computer analysis is performed for the NAC-LWT cask containing metallic fuel. When loaded with this fuel, the neutron shield tank (which is not required for neutron shielding of metallic fuel) is empty. This configuration reduces the heat transfer through the neutron shield region requiring further evaluation. The analysis is performed on the NAC-LWT cask containing the design basis metallic fuel producing 540 watts of decay heat.

This thermal analysis shows that the design basis PWR is the more limiting fuel. The results of the metallic fuel thermal analysis are presented in Table 3.4-1 and show that the temperatures are lower at all locations (except the neutron shield region) than the corresponding temperatures for the design basis PWR fuel presented in Table 3.4-2.

3.4.1.3 MTR Fuel Analytical Models

Heat transfer analysis of the NAC-LWT containing MTR fuel is performed using two separate two-dimensional planar finite element models and the general purpose ANSYS computer code. The first model represents the entire cask and uses a nominal, effective thermal conductivity to represent the fuel element in each basket location. This cask model is used to determine the maximum temperatures throughout the cask, including the temperature of the fuel element side plates. The second model represents the detailed construction of the fuel element itself. The detailed fuel model uses the results from the cask model to specify the boundary condition temperature of the fuel element side plate. This model is used to determine the maximum fuel temperature for each case. Note that the loose fuel plate configuration in the MTR canister is bounded by the assembled fuel element because the stacked loose plates have a much greater contact area for heat transfer to the basket walls. Therefore, the loose fuel plate configuration is not evaluated. Two transport conditions are evaluated:

Condition 1:

The NAC-LWT is supported in an ISO container with solar insolance applied on the surface of the ISO container, and the NAC-LWT is considered to be insulated from the environment (only for normal conditions of transport steady state conditions). The gas inside the ISO container is air. The cavity of the NAC-LWT is backfilled with helium as required by operational procedures.

Condition 2:

The NAC-LWT is not located in an ISO container and solar insolance is applied to the NAC-LWT cask surface. For the purpose of performing the thermal analyses, the cavity of the NAC-LWT is considered to be filled with air.

Of these two conditions, Condition 2 (air in cavity case) produces the higher temperatures as shown in Table 3.4-6. Therefore, the detailed fuel model is used to evaluate Condition 2 only. For each of the two conditions listed above, two different fuel configurations are considered for evaluation for steady-state normal transport conditions.

(1) Uniform design basis heat load of 30 watts per MTR fuel assembly:

This configuration consists of seven MTR fuel elements with design basis heat loads (30 watts per element) corresponding to a total MTR package contents heat load of 1.26 kilowatts (42 fuel elements).

(2) MTR fuel with variable decay heat:

As described in Section 5.3.4, MTR fuel may also be shipped in a variable decay heat configuration. In this case, a basket module may be loaded with only three elements, each having a maximum decay heat of 70 watts, or with three elements with maximum decay heats of 120 watts, 70 watts, and 20 watts. The total decay heat load for the basket must not exceed 210 watts. The same detailed heat transfer model described in Section 3.4.1.3.1 is also used for this analysis.

(3) MTR fuel with Alternative variable decay heat:

For the Alternative variable decay heat pattern, the maximum heat load for an MTR assembly is 40 Watts. A maximum of five 40-watt MTR assemblies can be transported in a single MTR basket with a total heat load per basket of 210 watts or less. For the condition in which five 40-watt MTR assemblies are being transported, the heat load in the remaining two slots in a single MTR basket is limited by the 210-watt total single MTR basket limit. Table 3.4-6 indicates that the increased single MTR assembly heat load of 120 watts results in the maximum MTR temperatures (when the total basket heat load remains to be 210 watts per basket). The preferential MTR loading using 120-watts at the basket center is the bounding gradient of heat generation from the basket periphery to the basket center as compared to the 40-watt maximum MTR heat load. This will result in the 120-watt preferential loading identifying the bounding MTR temperatures. Since the 120-watt loading is the bounding condition, further evaluation of the 40-watt maximum (with a total of 210 watts per MTR basket) is not required.

The fuel decay heat is modeled using uniform volumetric heat generation terms defined by administrative controls from Section 7.1.5. The administrative controls define bounding basket loading configurations that:

- Limit the combined basket heat load to 210 watts per basket module.
- Exclude MTR elements having decay heat loads in excess of 120 watts.
- Require MTR elements having decay heat loads between 120 watts and 70 watts to be loaded into the center basket module position.
- Require MTR elements with decay heat loads between 30 watts and 70 watts to be loaded in the center in-line row of the basket module.
- Limit decay heat loads of MTR elements placed in peripheral basket tubes, not on the center line, to a 30-watt decay heat load (per element).
- For the alternative preferential loading, the maximum heat load for any slot is 40 watts and the total heat load for each basket is limited to 210 watts.

These constraints result in two bounding loading configurations of MTR fuel elements. Assuming that individual elements have maximum decay heats of 70 watts and 120 watts, the two bounding configurations are:

1. Three 70-watt fuel elements
2. One 120-watt fuel element, one 70-watt fuel element, and one 20-watt fuel element

These combinations are depicted in Figure 3.5-7. Of these two configurations, the second configuration will produce the highest temperatures, as the center assembly contains a 120-watt MTR fuel element. This is the fuel configuration, which is analyzed for the variable decay heat loading. The thermally limiting configuration is also depicted in Figure 3.4-4, which conservatively bounds any fuel loading configuration permitted by the operating procedure presented in Section 7.1.5.

3.4.1.3.1 MTR Fuel Thermal Model of the NAC-LWT (Transported in an ISO Container)

For Condition 1, the detailed fuel model is not used because this condition is bounded by Condition 2, as shown in Section 3.4.1.3.2. Thermal analyses of the NAC-LWT cask for Condition 1 are performed using a half-symmetry, cross-sectional model of the cask in an ISO container positioned along the container centerline. Heat transfer to the environment is limited to surface convection and radiation on both horizontal and vertical surfaces of the ISO container with an emissivity of 0.36. Solar insolance is applied to the vertical surfaces and the top horizontal surface of the ISO container. Heat transfer from the cask to the ISO container is modeled as conduction, convection and radiation. Convective and conductive heat transfer are modeled in the liquid neutron shield, while heat transfer in the cask cavity is limited to conduction and radiation. Axial heat transfer is conservatively ignored in the model. The MTR fuel elements are represented in the model with homogenized fuel elements. The conductive heat flow path from the cask through the saddle support to the bottom surface of the ISO container is conservatively ignored.

Thermal conductivity for 6061-T6 aluminum alloy is based on ASME Code, Section II, Part D, Table TCD. The finite element model for the uniform 30 watts per MTR fuel element is shown in Figure 3.4-3, while the finite element model for the variable decay heat of 120 watts, 70 watts and 20 watts is shown in Figure 3.4-4. For the basket slots, which are empty for the variable decay heat, only conduction through the cavity gas is modeled. In each of these fuel models, the fuel is considered to rest on the surface of each basket slot. The details of this modeling are shown in Figure 3.4-6. While the MTR fuel assemblies are considered to rest on the surface of the basket, the basket is conservatively modeled as being in the center of the cask cavity.

Conduction (through helium) and radiation (using emissivity of stainless steel for both surfaces) are modeled from the inner shell of the cask to the basket.

The heat transfer analysis model represents the cask cavity free space using the conductivity of helium. (see Table 3.2-7). The properties for the remaining materials are contained in Table 3.2-1 through Table 3.2-6.

The air space between the NAC-LWT cask and the ISO container is modeled using air with an effective conductivity. This effective conductivity (Incropera) is:

$$\frac{k_{eff}}{k} = 0.386\left(\frac{Pr}{0.861+Pr}\right)^{1/4}\left(Ra_c^{*}\right)^{1/4}$$

$$Ra_c^{*} = \frac{\left[\ln(D_0/D_i\right]^4}{L^3\left(D_i^{-3/5}+D_0^{-3/5}\right)^5}\,Ra_L$$

$$Ra_L = \frac{g\beta(T_i-T_o)L^3}{\alpha\nu}$$

where:

Pr = Prandtl number (Krieth)

ν = kinematic viscosity (Krieth)

α = thermal diffusivity (Krieth)

β =$1/T_f$

T_f = $(T_i+T_o)/2$

T_i = inner surface temperature

T_o = outer surface temperature

D_i = inner diameter (cask surface)

D_o = outer diameter (height of the ISO container)

L = $(D_o - D_i)/2$

The effective conductivity for the neutron shield and expansion tank as well as the convection from the surface of the ISO container to an ambient temperature of 100°F are presented in Section 3.2.3.

Decay heat for the different MTR package configurations is conservatively enveloped for the heat transfer analysis. Each fuel element of the maximum capacity MTR package configuration, 42 elements, is modeled with a heat generation of 30 watts. Total MTR package contents heat

load is 1.26 kilowatts, approximately half of the NAC-LWT cask maximum decay heat load of 2.5 kilowatts. The decay heat is modeled as uniformly generated within the homogenized fuel regions.

The Condition 1 models of the NAC-LWT cask with uniform and variable decay heat MTR fuel element loadings are shown in Figure 3.4-3 and Figure 3.4-4, respectively.

3.4.1.3.2 MTR Fuel Thermal Model of the NAC-LWT (Transported via Truck Trailer)

Thermal analyses of the NAC-LWT cask for Condition 2 are performed using two separate models. The first is a half-symmetry cross-sectional model of the cask in which the outer surface of the expansion tank is the boundary of the model. This model is used to determine the temperatures throughout the cask up to and including the maximum fuel element side plate temperatures. The second is a half-symmetry cross-sectional model of the fuel element. This model is used to determine the maximum fuel temperature within the element for the worst-case fuel plate dimensions. The worst case dimensions are based on the limiting design dimensions combined with the limiting manufacturing tolerances that result in the maximum resistance to heat transfer from the fuel to the side plates.

Cask Model

The modeling of the normal steady state condition of the NAC-LWT from the center of the cask to the outer surface of the expansion tank is identical to the model described in Section 3.4.1.3.1 with the following exceptions:

1. The gas in the NAC-LWT cask cavity is considered to be air.
2. The MTR basket is shifted downward towards the inner shell leaving a minimum gap of 0.07 inch between the outer diameter of the basket end plate and the cask inner shell surface. This is an effective representation of the normal condition of transport (i.e. cask horizontal).
3. The solar insolance and convection to the ambient temperature of 100°F is applied to the outer shell of the expansion tank.

The Condition 2 models of the NAC-LWT cask with uniform and with variable decay heat MTR fuel element loadings are shown in Figure 3.5-6 and Figure 3.5-7, respectively. These same models are used to calculate both normal and accident condition temperatures for the cask.

Fuel Element Model

The fuel element model includes the side plate, the fuel, cladding, and the air between the plates and surrounding the side plate. The total element heat load is uniformly distributed throughout

the fuel. Based on symmetry, only one-half of the fuel element assembly is modeled. Figure 3.4-13 shows the model for both the minimum 10-plate and maximum 23-plate cases. These two configurations bound fuel elements with any intermediate number of plates. The boundary condition for this model is the applied side plate temperature at the lower right corner of the model. This assumes that the basket is oriented such that only the ends of the element side plates are in contact with the basket. The lateral surfaces of the side plates are assumed to be adiabatic, which results in a conservative calculation of the maximum temperature of the fuel.

	K, BTU/hr-in-°F		
Temperature, °F	Aluminum	UO_2	Fuel Matrix 75% UO_2
100	8.08	0.42	2.33
200	8.25	0.37	2.34
300	8.38	0.33	2.35
400	8.49	0.30	2.35

The worst-case fuel effective thermal conductivity occurs for the maximum UO_2 percentage of 75% and corresponds to the LEU fuel plates.

The fuel in the center of each fuel plate is a matrix of aluminum and uranium or aluminum and uranium oxide (UO_2) combined in various ratios. The effective thermal conductivity is calculated using a mass-weighted average of the conductivity of the individual materials. The fuel plates are modeled using worst-case dimensions as shown:

1. Fuel plate thickness = 0.045 inch (< 0.05 inch)
2. Cladding thickness = 0.008 inch (< 0.015 inch)

A sensitivity analysis shows that variation of the active fuel width within the fuel plate has a negligible effect. A constant value of 6.6 cm is used in the analysis. This corresponds to the worst case for reactivity considerations. Note that the case of the loose fuel plates in the MTR canister is bounded by that of the assembled fuel element and, therefore, is not evaluated.

3.4.1.3.3 MTR Fuel Heat Transfer Analyses Results

The thermal analysis is performed to demonstrate that the temperature of the MTR fuel is maintained within acceptable limits. A conservative temperature of 400°F is established as the maximum allowable MTR fuel cladding temperature for normal conditions of transport. The aluminum retains its capability to function as a mechanical component in this temperature range, and it is not close to the 1,220°F melting temperature of aluminum (Table 6.4.1, pg. 6-60, Marks' Standard Handbook for Mechanical Engineers). The material properties presented in MIL-HDBK-5F indicate that 6061-T6 aluminum alloy retains over 40% of its room temperature yield and ultimate strengths at a long-term temperature of 400°F.

Maximum temperatures for package components with the NAC-LWT configured for MTR fuel are summarized in Table 3.4-6. The reported temperatures are lower at all locations than the corresponding temperatures for the design basis PWR fuel presented in Table 3.4-2. Temperatures of the MTR fuel element cladding are maintained below 400°F for both the design basis uniform decay heat loading and the variable heat loading.

3.4.1.4 PWR Rod

Heat transfer of the NAC-LWT containing 25 PWR rods with a total heat load of 1.41 kW configured in the PWR/BWR aluminum basket in the NAC-LWT cask enclosed in an International Shipping Organization (ISO) container was evaluated using ANSYS. The model presented in Figure 3.4-3 was revised to include the PWR/BWR aluminum basket and 25 PWR rods. Results from this evaluation are summarized in Table 3.4-7.

These results show that the temperatures are lower at all locations (except the neutron shield region) than the corresponding temperatures for the design basis PWR fuel presented in Table 3.4-2. Similar to the discussion presented in Section 3.4.1.3.3 for the MTR heat transfer analysis, temperature results from the two dimensional heat transfer analysis are conservative based on the imposed limitations of the model and can be used to evaluate acceptability of component temperatures outside the modeled section. Temperature of components in the lid closure region is less than the hottest basket temperature which is directly influenced by the decay heat of the fuel. It is concluded that the temperature of the safety related O-ring seals is within the allowable range of temperature of -40°F to +735°F. The maximum temperature of the lead gamma shield in the base of the LWT cask is less than the cask inner shell and much lower than the maximum of +600°F.

3.4.1.5 Thermal Evaluation for TRIGA Fuel

The thermal evaluation for TRIGA fuel is performed using classical analysis employing a thermal resistance model. The TRIGA fuel is transported in a basket assembly consisting of five modules - a base module, a top module, and three intermediate modules. During transport all 5 modules must be installed in the cask. The three intermediate modules are interchangeable, but the top and base modules are not. Each module contains 7 cells, and each open cell holds up to 4 TRIGA fuel elements. The top module is sized to accept fuel follower control elements, which are longer than the typical element. The center cell of each module is blocked with an 11-gage stainless steel plate so that fuel cannot be loaded in the center cell. The thermal evaluation conservatively assumes that the center cell also contains 4 fuel elements, so although only 120 fuel elements may be loaded into the cask, the thermal evaluation assumes 140 elements. Consequently, the total heat load in the thermal evaluation is conservatively considered to be 1.05 kW (7.5 watt/fuel element × 140 = 1.05 kW).

TRIGA fuel elements may be transported directly in a basket module cell, in a screened failed fuel can, or in a sealed failed fuel can. The fuel cans fit in either a top or base module cell. The screened failed fuel cans hold up to four (4) TRIGA fuel elements, while the sealed failed fuel can holds up to two (2) damaged elements or equivalent fuel debris.

As described in Section 1.2.3.1, TRIGA fuel elements with minor cladding defects are loaded into screened failed fuel cans (screened cans). The screened can precludes gross particulate material from escaping the cell. The screened failed fuel cans are provided in two lengths. The screened failed fuel can is a square tube of 14-gage, Type 304 stainless steel, that holds four fuel elements. It is provided with a closure lid and an end plate that is screened to allow water draining.

TRIGA fuel debris and damaged fuel elements, which do not have structural integrity, are loaded into sealed failed fuel cans (sealed cans). The sealed cans are used to containerize the TRIGA fuel debris. The cans are provided in two lengths. The shorter can may be used in the base or top basket modules. The longer can may only be used in the top module. The cans are vacuum dried and leak tested prior to loading into a TRIGA fuel basket.

The TRIGA fuel thermal evaluation determines the maximum fuel cladding temperatures based on the maximum basket temperatures determined for the design basis heat load MTR thermal analysis presented in Section 3.4.1.3.1. An intermediate basket module with the shortest TRIGA fuel, which provides the highest heat load density, is used to obtain a bounding evaluation. Based on the maximum basket temperature and heat load density, the maximum fuel cladding temperatures are determined using a thermal resistance model.

The cross-section of the TRIGA and MTR fuel baskets are identical. As shown in Section 1.2.3 and Table 1.2-4, the maximum decay heat load for MTR fuel is 1.26 kW per cask. The maximum decay heat load for TRIGA fuel is 1.05 kW per cask. Therefore, it is conservative to use the maximum basket temperature for MTR fuel as a boundary condition for the thermal resistance model for TRIGA fuel.

Since the total decay heat load for MTR fuel bounds that for TRIGA fuel, the temperatures for cask components for the MTR fuel also bound those for the TRIGA fuel. The cask body temperatures for the MTR fuel are shown in Table 3.4-6.

3.4.1.5.1 TRIGA Model Description

The heat generated from the TRIGA fuel in the basket is transferred to the basket module by thermal conduction and radiation, and then transferred to the cask inner shell from the basket surface by the same heat transfer modes. The heat is finally transferred through the cask and International Shipping Organization (ISO) container to ambient. The thermal resistance model

and thermal analysis of TRIGA fuel considers the regions inside a single basket opening of the TRIGA fuel basket. This analysis bounds transport in the cask without an ISO container.

The thermal resistance model is shown in Figure 3.4-5. The maximum temperature of the basket (T_{basket}) is taken from the MTR design basis heat loading thermal analysis. The temperatures for the TRIGA fuel are determined by stepping through each of the resistors in the thermal circuit, from the basket to the fuel cladding. All temperatures calculated are maximums, based on the basket temperature. Each successive maximum temperature calculated is then applied uniformly over the next surface in the resistance model. Fuel may be shipped directly in a basket cell, in a screened failed fuel can, or in a sealed failed fuel can. Since the model assumes the presence of the can, the model is conservative for configurations in which a can is not used.

The gas in the cask cavity is considered to be air in the thermal resistance model. Thermal conductivities of air and stainless steel are obtained from "Fundamentals of Heat and Mass Transfer" (Incropera). Emissivities of stainless steel (basket) and aluminum (fuel clad) are obtained from the Nuclear Systems Material Handbook and from "Scoping Design Analyses for Optimized Shipping Casks Containing 1-, 2-, 3-, 5-, or 10-Year-Old PWR Spent Fuel" (Bucholz), respectively.

Assuming the maximum temperature of the basket (T_{basket}) occurs at all inside surfaces of the webs forming the central cell in the basket module, the temperature of the can (T_{can}) is then determined by considering heat conduction and radiation between the can surface and the inside surface of the basket central cell. Convection in the gap between these surfaces is conservatively ignored.

The heat transfer rate across the gap per unit length (q_{gap}) between the can surface and the inside surface of the basket central cell wall can be represented as follows:

$q_{gap} = q_{cond} + q_{rad}$

$$q_{gap} = \frac{A(k_{cond})(T1 - T2)}{L_{gap}} + \frac{A(\sigma)(T1^4 - T2^4)}{\left(\frac{1}{\varepsilon 1} + \frac{1}{\varepsilon 2} - 1\right)}$$

where:

q_{gap} = 7.5 watt × 4/14 = 2.14 watt = 7.302 Btu/hr

A = Can surface area = 3.33 × 4 = 13.32 inch^2

K_{cond} = Air conductivity @ 260°F (400°K) = 1.628×10^{-3} Btu/hr-in-°F

L_{gap} = Gap size between can and basket = (3.44-3.33)/2 = 0.055 inch

T1 = temperature at can surface (T_{can})

T2 = temperature at inside surface of the basket central cell (T_{basket}) = 267°F

σ = 1.19×10^{-11} Btu/hr-in^2-°R

$\varepsilon 1$ = emissivity of web of basket central cell (stainless steel) = 0.36

$\varepsilon 2$ = emissivity of can (stainless steel) = 0.36

The temperature at the can (T_{can}) is calculated to be 287°F.

The maximum temperature of the can (T_{can}) is then applied to all can surfaces for determining the cladding temperature of the fuel. It is assumed that there are four (4) fuel elements inside the can surrounded by air. In the equivalent resistor analogy, the fuel elements do not contact each other, neglecting heat conduction between fuel elements. For a specific fuel element, an assumed circular region equivalent to 1/4 of the area inside the can, is developed to contain a fuel element, which results in a uniform air gap. The fuel cladding temperature is determined using the formula representing a hollow cylinder. Note that convective heat transfer in the gap between the fuel clad and the can is conservatively ignored.

Heat transfer rate per unit length of the basket (Q_{leng}) can be represented as:

$Q_{leng} = q_{cond} + q_{rad}$

$$Q_{leng} = \frac{2\pi(k_{cond})(T1 - T2)}{\ln\left(\frac{r2}{r1}\right)} + \frac{\sigma(2\pi r1)(T1^4 - T2^4)}{\left(\frac{1}{\varepsilon 1}\right) + \left(\frac{1-\varepsilon 2}{\varepsilon 2}\right)\left(\frac{r1}{r2}\right)}$$

where:

r1 = fuel cladding outer radius = 0.675-inch

r2 = radius of equivalent circular region representing ¼ of the area inside a can
= 0.93 inch.

K_{cond} = Air conductivity @ 260°F (400°K) = 1.628×10^{-3} Btu/hr-in-°F

σ = 1.19×10^{-11} Btu/hr-in^2-°R

$\varepsilon 1$ = emissivity of fuel cladding (aluminum) = 0.22

$\varepsilon 2$ = emissivity of the can (stainless steel) = 0.36

T1 = fuel cladding temperature (T_{clad})

T2 = can temperature (T_{can}) = 287°F

The fuel cladding temperature (T_{clad}) is solved to be 326°F.

3.4.1.5.2 TRIGA Fuel Thermal Evaluation Results

Using the model described above, and the assumed boundary condition of 267°F for the maximum basket temperature (from Table 3.4-6), the maximum normal transport conditions temperature of the TRIGA fuel is determined as shown in Table 3.4-8.

A conservative temperature of 400°F is established as the maximum allowable temperature for aluminum-clad TRIGA fuel, as described in Section 3.4.1.3.3 for MTR fuel. Stainless steel clad TRIGA fuel is allowed a significantly higher cladding temperature, since the melting temperature of stainless steel is 2,600°F (Mark's) and stainless steel retains its capability to function as a mechanical component at temperatures up to the 800°F range. Therefore, the temperatures calculated for the TRIGA fuel cladding are acceptable.

3.4.1.6 TRIGA Fuel Cluster Rods

The TRIGA fuel cluster rods are 0.542 inches OD with 0.016-inch thick Incoloy 800 cladding. Each rod is inserted into a 6061-T6 aluminum tube (0.75 inch OD, 0.62 inch ID) that is part of the fuel rod insert. Up to sixteen rods and a fuel rod insert are placed into a single cell of the seven cell basket. This TRIGA basket has the same cross sectional dimensions and basket material as the MTR basket presented in Section 3.4.1.3. The thermal evaluation for the TRIGA fuel cluster rods is performed using two-dimensional planar finite element analyses and the general purpose ANSYS computer code. Two transport conditions are evaluated:

Condition 1:

The NAC-LWT is supported in an ISO container with solar insolance applied on the surface of the ISO container, and the NAC-LWT is considered to be insulated from the environment (only for the normal conditions of transport steady state conditions). The gas inside the ISO container is air. The cavity of the NAC-LWT is actually backfilled with helium as required by operational procedures.

Condition 2:

The NAC-LWT is not located in an ISO container and solar insolation is applied to the NAC-LWT cask surface.

For the purpose of performing these thermal analyses, the cavity of the NAC-LWT is considered to be filled with air.

For each of the two conditions listed above, only a single fuel configuration is evaluated: 16 rods in a fuel rod insert in each of the seven cells comprising a basket section. This corresponds to a total heat load of 210 watts for each basket section (30 watts per cell of a basket section

which corresponds to 30/16 or 1.875 watts per rod). Therefore, the heat load in the cask cavity corresponding to five basket sections is 5 times 210 watts or 1.05 kW.

Since the finite element model corresponds to a one inch axial length, the heat generation applied to each rod in the model was 1.875 watts divided by the length of the rod or 22 inches. Although the aluminum inserts will conduct heat in the axial direction, this was conservatively ignored.

3.4.1.6.1 Condition 1 Analysis of TRIGA Fuel Cluster Rods

Thermal analyses of the NAC-LWT cask for Condition 1 are performed using a half symmetry cross sectional model of the cask in an ISO container positioned along the container centerline. The model employed for the ISO container, cask body and the seven-celled basket is the same finite element model used in Section 3.4.1.3.1 for the MTR fuel thermal model (Condition 1). The similarity in modeling includes the finite element mesh and the material properties for conduction, convection and radiation. The 16 rods and fuel rod inserts are modeled in each of the seven cells, as shown in Figure 3.4-7. Figure 3.4-8 and Figure 3.4-9 show details of the fuel region model. The TRIGA fuel cluster rods were conservatively modeled in the center of the aluminum fuel tube, and the fuel rod inserts were modeled without any contact with the sides of the basket. The 0.13 inch aluminum shell, which surrounds the TRIGA fuel cluster, provides a heat transfer path from the rods to the basket surface. This aluminum shell was conservatively not considered in the analysis. The space between the aluminum tubes and the stainless steel basket surface was modeled with the cavity gas, and the modes of heat transfer from fuel rod insert to the basket surface included conduction through the gas and radiation from the surface of the insert to the basket surface.

3.4.1.6.2 Condition 2 Analysis of TRIGA Fuel Cluster Rods

Thermal analyses of the NAC-LWT cask for Condition 2 are performed using a half symmetry cross sectional model of the cask in which the outer surface of the expansion tank is the boundary of the model. The modeling of the normal steady state conditions of the NAC-LWT from the center of the cask to the outer surface of the expansion tank is identical to the model described in Section 3.4.1.3.1 with the following exceptions:

1. The gas in the NAC-LWT cask cavity is considered to be air.
2. The solar insolance and convection to the ambient temperature of 100°F is applied to the outer shell of the expansion tank.

3.4.1.6.3 TRIGA Fuel Cluster Rods Heat Transfer Results

The thermal analysis is performed to demonstrate that the temperature of the TRIGA fuel cluster rod is maintained within acceptable limits. A conservative temperature of 800°F is established

as the maximum allowable TRIGA fuel cladding temperature for normal conditions of transport. For aluminum 6061-T6 aluminum alloy, the allowable temperature is considered to be 400°F.

Temperatures for package components with the NAC-LWT configured for the TRIGA fuel are summarized in Table 3.4-9. In this table, the maximum fuel clad temperature is 295°F, which is significantly below the 800°F value. For the aluminum, the maximum reported temperature is 292°F, which is also well below the 400°F limit.

3.4.1.7 High Burnup PWR or BWR Rods in a PWR/BWR Rod Transport Canister

The high burnup rods may be either BWR rods or PWR rods. The decay heat for the PWR fuel rod contents is 2.3 kW with a corresponding peaking factor of 1.1. The decay heat for the BWR fuel rod contents is 2.1 kW with a peaking factor of 1.22. The thermal evaluation employs a two-dimensional planar model to ensure that the peaking factor is conservatively included and the heat load applied to the finite element model is the total heat load factored by the peaking factor. The bounding product of the heat load and the peaking factor corresponds to the BWR. The evaluation of the BWR rod is considered to bound the temperatures corresponding to the PWR rod configuration. All of the fuel rods are considered to be intact for this evaluation. The evaluation of damaged fuel rods is provided in Section 3.4.1.11. An additional configuration is also considered in which four tubes of the 5×5 insert are replaced by a single tube to accommodate a BWR water rod, which has negligible heat load. The single water rod occupies a position near the center of the matrix. However, the thermal response associated with the configuration with the water rod is bounded by the evaluation of the 5×5 matrix due to the reduced heat load and the removal of the heat generation at the center of the matrix.

The PWR/BWR Rod Transport Canister for the high burnup rod transport can accommodate three configurations: a 4×4 matrix of pin tubes containing up to 16 rods, a 5×5 matrix of pin tubes containing up to 25 rods, and an alternative 5×5 rod holder designed to contain an oversize nonfuel-bearing component (e.g., CE guide tube or BWR water rod) and up to 21 rods. Since the decay heat per rod is considered to be the same, the maximum heat load is bounded by the 25-rod configuration. For the 4×4 matrix of pin tubes, an additional 31-inch thick stainless steel insert is placed in the can weldment. This permits the can weldment to be employed for the 16-rod transport or the 25-rod transport configuration. For the can weldment, the aluminum basket and the remainder of the cask, the additional insert has a negligible affect on their temperatures. Therefore, the bounding configuration is the 25-rod configuration, since it produces 56% more heat load in the cask basket than the 16-rod configuration. The bounding configuration for the clad temperatures and the pin tubes supporting the fuel rods is also the 25-

rod configuration due to the 56% additional heat load. While the additional insert increases the thermal resistance, this is significantly offset by the additional 56% additional decay heat.

Heat transfer analysis of the NAC-LWT containing high burnup rods is performed using two-dimensional planar finite element analyses and the general purpose ANSYS computer code. Two transport conditions are evaluated:

Condition 1:

The NAC-LWT is supported in an ISO container with solar insolance applied on the surface of the ISO container, and the NAC-LWT is considered to be insulated from the environment (only for normal conditions of transport steady state conditions). The gas inside the ISO container is air.

The cavity of the NAC-LWT is backfilled with helium as required by operational procedures.

Condition 2:

The NAC-LWT is not located in an ISO container and solar insolance is applied to the NAC-LWT cask surface.

For the purpose of performing the thermal analyses, the cavity of the NAC-LWT is considered to be filled with air.

3.4.1.7.1 High Burnup PWR and BWR Fuel Rods Thermal Model of the NAC-LWT (Transported in an ISO Container)

Thermal analyses of the NAC-LWT cask for Condition 1 are performed using a half-symmetry, cross-sectional model of the cask in an ISO container. Heat transfer to the environment is limited to surface convection and radiation on both horizontal and vertical surfaces of the ISO container with an emissivity of 0.36. Solar insolance is applied to the vertical surfaces and the top horizontal surface. Heat transfer from the cask to the ISO container is modeled as conduction, convection and radiation. Convective and conductive heat transfer are modeled in the liquid neutron shield, while heat transfer in the cask cavity is limited to conduction and radiation. Axial heat transfer is conservatively ignored in the model.

Bounding configuration of BWR fuels used in analyses is based on U.S. Department of Energy, Office of Civilian Radioactive Waste Management, "Characteristics of Spent Fuel, High-Level Waste, and Other Radioactive Wastes Which May Require Long -Term Isolation," Appendix 2A, December 1987. Thermal properties of UO_2 and zirconium alloy cladding are from 1) Hagrman, D.L., Reymann, G.A., "Matpro-Version 11, A Handbook of Material Properties for Use in the Analysis of Light Water Reactor Rod Behavior," Idaho Falls, ID, EG&G Idaho, Inc., 1997; 2) Rust, J.H., "Nuclear Power Plant Engineering," Atlanta, GA, S.W., Holland Company,

1979. Thermal conductivity for 6061-T651 aluminum alloy is based on ASME Code, Section II, Part D, Table TCD.

A limited number, up to 14, non-zirconium alloy clad fuel rods, in particular rods with a FeCrAl base as the alloy, may be loaded into the 25 rod tube structure. While not evaluated using ANSYS the impact on maximum reported temperature it discussed in Section 3.4.1.7.3. The impact disposition is also applicable to the damaged fuel evaluion described in Section 3.4.1.11 and accident results discussed in Section 3.5. As no maximum allowable clad temperature is available for the non-zircaloy fuel clad this material is considered to fall within the damaged allowable contents of the 25 rod shipment configuration (up to 14 damaged rods may be loaded with no clad credit applied).

The finite element model for the condition 1 is shown in Figure 3.4-10. The fuel cladding and the inner surface of the pin tube are considered to be in point-to-point contact. The outer surface of the fuel cladding only contacts the pin tube in one point in the model. The pin tubes are conservatively considered separated and a gap of 0.0005 inch between pin tubes is modeled. This condition neglects any pin tube contact due to dead weight loading of the contents. One of the can weldment sides is modeled in contact with the aluminum insert. For the other three sides, a gap 0.042/0.084/0.042 inch between the aluminum insert and the tube of the can weldment is modeled. The details of this modeling are shown in Figure 3.4-11. Likewise, only one surface between the PWR aluminum insert and the PWR basket is considered to be in contact.

Conduction (through helium) and radiation (using emissivity of stainless steel for both surfaces) are modeled from the inner shell of the cask to the basket.

The heat transfer analysis model uses conduction in the remaining volume of the cask cavity. The conductivity of this material corresponds to helium. (see Table 3.2-7). The properties for the remaining materials are contained in Table 3.2-1 through Table 3.2-8.

The air space between the NAC-LWT cask and the ISO container is modeled using air with an effective conductivity. This effective conductivity (Incropera) is:

$$\frac{k_{eff}}{k} = 0.386\left(\frac{Pr}{0.861+Pr}\right)^{1/4}\left(Ra_c^{*}\right)^{1/4}$$

$$Ra_c^{*} = \frac{\left[\ln(D_0/D_i\right]^4}{L^3\left(D_i^{-3/5}+D_0^{-3/5}\right)^5}\,Ra_L$$

$$Ra_L = \frac{g\beta(T_i-T_o)L^3}{\alpha\nu}$$

where:

Pr = Prandtl number (Krieth)

ν = kinematic viscosity (Krieth)

α = thermal diffusivity (Krieth)

β =$1/T_f$

T_f = $(T_i + T_o)/2$

T_i = inner surface temperature

T_o = outer surface temperature

D_i = inner diameter (cask surface)

D_o = outer diameter (height of the ISO container)

L = $(D_o - D_i)/2$

3.4.1.7.2 High Burnup PWR and BWR Fuel Rods Thermal Model of the NAC-LWT (Transported via Truck Trailer)

Thermal analyses of the NAC-LWT cask for Condition 2 are performed using a half-symmetry planar cross-sectional model of the cask in which the inner surface of the inner shell is the boundary of the model. The maximum temperature of 274°F (PWR design basis fuel with 2.5 kW heat load and a peaking factor of 1.2 under normal transport condition [Table 3.4-2]) is applied to the boundary of the model. The modeling of the normal steady state condition of the NAC-LWT from the center of the cask to the inner surface of the inner shell is identical to the model described in Section 3.4.1.7.1 with the following exceptions:

1. The gas in the NAC-LWT cask cavity is considered to be air.
2. The constant temperature of 274°F is applied to the outer surface of the model, which corresponds to the inner surface of the cask inner shell. This temperature corresponds to the condition, which imposes solar insolance and convection/radiation boundary at the outer shell of the expansion tank. This is also described in Section 3.4.1.1.

The Condition 2 model of the NAC-LWT cask with high burnup PWR and BWR fuel rods is shown in Figure 3.4-12. This model is also used to calculate both normal and accident condition temperatures for the cask.

3.4.1.7.3 High Burnup PWR and BWR Fuel Rods Heat Transfer Analyses Results

The thermal analysis is performed to demonstrate that the component temperature of NAC-LWT cask loaded with high burnup PWR and BWR rods is maintained within acceptable limits.

Maximum temperatures for package components with the NAC-LWT configured for high burnup PWR and BWR rods are summarized in Table 3.4-10. As shown in Table 3.4-10, component temperatures are all maintained within their allowable temperatures.

The shipment of FeCrAl type clad rods will use the LWT 5×5 rod holder. A detailed view of the finite element model for the 5×5 rod holder is shown below. In the view shown the elements representing the cavity gas are not shown. Since radiation in the model is neglected between the clad and the tube surface, the pellet heat in the model is rejected through the pellet material and the clad. The peak clad temperature would occur opposite the side modeling the single point of contact. The pellet heat away from the contact would primarily be through the pellet material and not the clad due to the larger average cross-sectional area and reduced length of the heat transfer path in the pellet. The pellet material properties do not change even though the clad properties will be different. A reduction in the clad properties will not contribute significantly to the peak clad temperature due to the small clad radial thickness.

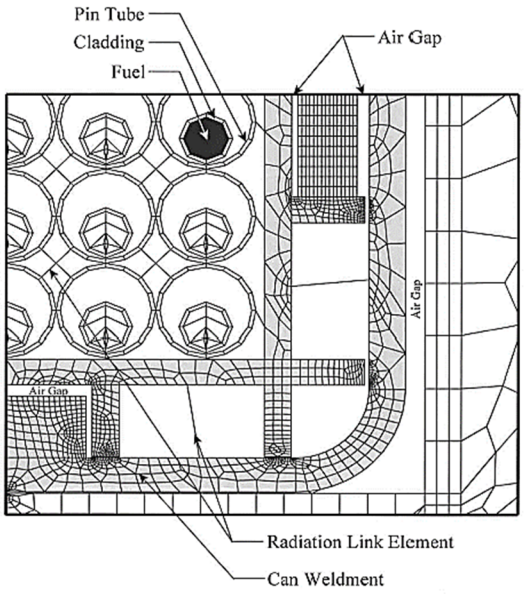

3.4.1.8 Thermal Evaluation for DIDO Fuel

3.4.1.8.1 Analytical Models for the DIDO Fuel Contents

Heat transfer analysis of the NAC-LWT containing DIDO fuel is performed using a two-dimensional planar finite element analysis and the general purpose ANSYS computer code. Two transport conditions are evaluated:

Condition 1:

The NAC-LWT is supported in an ISO container with solar insolance on the surface of the ISO container, and the NAC-LWT is considered to be insulated from the environment (only for the normal conditions of transport steady state conditions). The gas inside the ISO container is air. The cavity of the NAC-LWT is backfilled with helium as required by operational procedures.

Condition 2:

The NAC-LWT is not located in an ISO container and solar insolation is applied to the NAC-LWT cask surface. For the purpose of performing the thermal analysis, the cavity of the NAC-LWT is considered to be filled with air.

A single fuel configuration is considered for this evaluation. Each DIDO fuel assembly is limited to having a heat load of 25 W per assembly. The total contents of the NAC-LWT for the DIDO fuel are limited to having six basket modules and each module is limited to having seven DIDO fuel assemblies. This limits the heat load of a basket module to 175 W, and a total NAC-LWT heat load of 1.05 kW. The 1.05 kW total heat load is enveloped by the 1.26 kW total heat load for the NAC-LWT MTR fuel contents contained in Section 3.4.1.3. Since the NAC-LWT cask ambient conditions are the same for the DIDO fuel as for the MTR fuel, the maximum temperature of all cask body components for the DIDO contents are enveloped by the maximum temperatures for the MTR fuel contents. Therefore, the cask inner shell temperature for the MTR fuel contents bounds the maximum cask inner shell temperature for the DIDO fuel contents. The maximum cask inner shell temperature is used as the boundary condition for the finite element model for the DIDO thermal evaluation. For Condition 1 and Condition 2, the maximum inner shell temperatures are 214°F and 181°F, respectively. These values correspond to the design basis heat load values obtained from Table 3.4-6.

Two finite element models are used in the evaluation of the DIDO fuel basket and the DIDO fuel assemblies.

The evaluation of the maximum basket component temperatures for these conditions is performed using a finite element model, which is shown in Figure 3.4-14. This model is used to evaluate both conditions. This model corresponds to the 4.01-inch inside diameter stainless

steel tubes, the 1/2-inch thick plates, the 3/4-inch × 3/8-inch aluminum bars (thermal shunts) and the 0.19-inch thick aluminum sheet (heat transfer shell) on the outside of the tubes. The SOLID70, eight-noded brick element is used to represent stainless steel components, the heat transfer shell and the cavity gas between the surfaces of the circular plates and the heat transfer shell and the inner shell of the cask body. To account for the axial conductance of the thermal shunts, they are modeled as conduction elements using an area corresponding to the dimensions of the aluminum bars. Radiation is conservatively neglected from the outer surface of the heat transfer shell and the inner surface of the cask inner shell. The center tube is assumed not to be in contact with any of the six outer tubes. During transport, the NAC-LWT is in a horizontal position in which the basket modules are in contact with the inner shell of the cask. To represent the contact of the basket module with the cask inner shell, the inner shell temperature was applied to two nodes of the circular plates and the remaining nodes corresponding to the inner surface of the inner shell of the cask body. The 25 W per assembly heat load is represented by applying the heat flux along a concentrated area at the inner tube surface, which would correspond to the contact of the fuel assembly with the 4.01-inch inside diameter stainless steel tube.

For Condition 1, the elements representing the cavity gas between the basket and the inner shell correspond to helium, whereas for Condition 2, these elements use properties for air.

To determine the maximum temperature for the fuel, a separate detailed model of a DIDO fuel assembly is constructed. This model is shown in Figure 3.4-15, which consists of four circular cylinders in contact at a corresponding single point to be transported in the horizontal position. Each cylinder is comprised of a layer of fuel of 0.64 mm (0.025 in.) thickness between two aluminum shells, each being 0.46 mm (0.018 in.) thick. The boundary condition of this model is the maximum basket temperature determined from the detailed basket model and the volumetric heat generation corresponding to 25 W per assembly.

3.4.1.8.2 DIDO Fuel Heat Transfer Analyses Results

The thermal analysis is performed to demonstrate that the temperature of the DIDO fuel is maintained within acceptable limits. A conservative temperature of 400ºF is established as the maximum allowable DIDO fuel cladding temperature for normal conditions of transport. The aluminum retains it capability to function as a mechanical component in this temperature range and it is not close to the 1,220ºF melting temperature of aluminum (Table 6.4.1, p. 6-60, Marks' Mechanical Handbook for Mechanical Engineers). The material properties presented in MIL-HDBK-5F indicate that 2000 series aluminum retains over 40% of its room temperature yield and ultimate strengths at a long-term temperature of 300ºF.

Maximum temperatures for package components with the NAC-LWT configured for DIDO fuel are summarized in Table 3.4-12. The reported temperatures are lower at all locations than the corresponding temperatures for the design basis PWR fuel presented in Table 3.4-2. The DIDO fuel assembly cladding temperatures are maintained below 400ºF.

3.4.1.9 Thermal Evaluation for General Atomics IFM

The heat generated from the General Atomics IFM in the Fuel Handling Unit (FHU) is transferred to the basket by thermal conduction and radiation, and is then transferred to the cask inner shell from the basket surface by the same heat transfer modes. The heat is finally transferred through the cask and International Shipping Organization (ISO) container to ambient. The thermal resistance model and thermal analysis of General Atomics IFM consider a single FHU of the fuel. The maximum temperature from the resistor model corresponds to the FHU's stainless steel shell, while the minimum temperature corresponds to the inner surface of the transport cask inner shell. The fuel is actually stored in two FHUs, but the evaluation conservatively considers the total heat load of 13 W to be placed into a container at the center of the cask cavity. The evaluation does not consider the reduction in thermal resistance due to the contact of the FHU with the basket or of the basket with the inner shell of the transport cask. Additional conservatism is included by ignoring heat transfer by radiation across any of the gaps in the system. To ensure that a bounding temperature for the basket is calculated, air properties are used in the analysis for the gas in the cavity. Also, conservatism is included by using the inner shell temperature corresponding to the 1.26 kW condition for the cask body as opposed to 13 W. This analysis, therefore, bounds transport in the cask with and without an ISO container.

A thermal evaluation of the top module is performed by considering a heat load of 13 W in the center of the basket with only one 6.0-inch diameter top module tube. This is conservative because it maximizes the gap between the tube and the cask inner shell. Air is used as the cavity gas as an additional conservatism. The maximum temperature is computed using the resistor analogy.

For concentric cylinders, the thermal resistance (R) for the heat flow through the cylinders is taken from Krieth as:

$$R = \frac{\ln\left(\frac{r_2}{r_1}\right)}{2\pi K L}$$

where:

r_2 = outer radius of cylinder (inch)

r_1 = inner radius of cylinder (inch)

K = thermal conductivity (BTU/hr/in/°F)

The effective resistance from the secondary enclosure can be expressed as to the cask inner shell:

$$R_T = R_1 + R_2 + R_3 + \frac{1}{\frac{1}{R_4} + \frac{1}{R_5}}$$

where:

R_1 = resistor of the outer canister

R_2 = resistor of the gap between outer canister and the basket shell

R_3 = resistor basket shell

R_4 = resistor of the air from the basket shell to inner shell surface (outside of the basket disks)

R_5 = resistor of stainless steel disks supporting the basket shell in series with the air gap between the basket disks and the inner shell

The maximum temperature of the secondary enclosure can be determined by the following equation:

$$T_i = R_t Q + T_{cask}$$

where:

Q = total heat load

T_{cask} = temperature of cask inner shell

The following parameters will be used for this evaluation:

Q = 13 Watts

L = 37.0 inches – length of shortest secondary fuel closure

r1 = 2.255 inches – minimum inner radius of secondary closure

r2 = 2.375 inches – minimum outer radius of secondary closure

r3 = 2.75 inches – inner radius of module fuel cell

r4 = 3.00 inches – outer radius of module fuel cell

r5 = 6.688 inches – inner radius of LWT

r6 = 6.6325 inches – outer radius of the basket disks

K_{ss} = 0.7143 Btu/hr/in/F at 70°F for stainless steel

K_{air} = 0.00161 Btu/hr/in/F at 300°F for air

From Table 3.4-6, the maximum temperature of the LWT inner shell for a 1.26 kW heat load is 214°F, with 100°F ambient temperature with solar insolance. This is used as a bounding temperature for the cask inner shell (T_{cask}) for this evaluation.

$$R_{eff} = \frac{1}{\frac{1}{R_4} + \frac{1}{R_5}}$$

$$R_4 = \frac{\ln(6.688/3.0)}{2\pi(0.00161)(37.0-2)}$$

$$R_4 = 2.264$$

$$R_5 = \frac{\ln(6.8125/3.0)}{2\pi(0.7143)(2)} + \frac{\ln(6.688/6.6325)}{2\pi(0.00161)(2)}$$

(Stainless steel disk in series with the air between the basket disk and the inner shell)

$$R_5 = 0.503$$

$$R_{eff} = \frac{1}{\frac{1}{R_4} + \frac{1}{R_5}}$$

$$R_{eff} = 0.412$$

$$R_T = R_1 + R_2 + R_3 + R_{eff}$$

$$R_T = \frac{\ln(2.375/2.255)}{2\pi(0.7143)(37.0)} + \frac{\ln(2.75/2.375)}{2\pi(0.00161)(37.0)} + \frac{\ln(3.0/2.75)}{2\pi(0.7143)(37.0)} + 0.412$$

$$R_T = 0.0003 + 0.392 + 0.0005 + .412 = 0.805$$

The maximum temperature of the secondary enclosure (T_i) is:

$$T_i = 0.805(13 \times 3.415) + 214 = 250^\circ F$$

The maximum temperature of the basket is conservatively considered to be the same as the temperature of the secondary enclosure (250°F). Temperatures of individual components are summarized in Table 3.4-13.

The maximum content temperature for the GA IFM shipment is considered to be bounded by the TRIGA maximum fuel cladding temperature of 326°F contained in Table 3.4-8, which

corresponds to a bounding heat load of 1.05 kW (as compared to the approximately 13 watts for the GA IFM).

A conservative temperature of 800°F is established as the maximum allowable temperature for the stainless steel basket and the contents, which is comprised of the steel-clad TRIGA fuel and the HTGR pellets. The steel cladding of the TRIGA fuel is actually an inconel alloy. Mil HDBK-5G (1 November 1994), Section 6.3.2, identifies that alloys of inconel are used for parts requiring strength for temperatures exceeding 1,000°F, which significantly exceeds 800°F. The HTGR pellets were designed for operational exposure to reactor core temperatures exceeding 1,000°F, which also exceeds 800°F. Therefore, the maximum temperatures for the contents for the GA IFM are acceptable.

3.4.1.10 High Burnup PWR or BWR Fuel Rods in a Fuel Assembly Lattice

The NAC-LWT cask may transport up to 25 intact high burnup PWR or BWR fuel rods that are in a fuel assembly lattice. The decay heat for the PWR rods is 2.3 kW with a corresponding peaking factor of 1.1, and the decay heat for the BWR rods is 2.1 kW with a corresponding peaking factor of 1.22.

The thermal evaluation employs two-dimensional planar half-symmetry models of the fuel lattice with 25 fuel rods, fuel channel (for BWR fuel), PWR insert (for BWR fuel), fuel basket, and the gas inside the cask cavity. The model extends to the inner surface of the cask inner shell. The model for a 7 × 7 BWR fuel lattice with 25 fuel rods is shown in Figure 3.4-16**.** BWR arrays of
7 × 7, 8 × 8, 9 × 9, and 10 × 10 are analyzed. PWR arrays of 14 × 14, 15 × 15, 16 × 16, and 7 × 17 are analyzed. The BWR model includes a fuel channel and insert, which are absent from the PWR model.

To determine the worst-case fuel rod arrangement, the 25 fuel rods are analyzed in five different arrangements:

1. Centered (top and bottom) in the two-dimensional model (as shown in Figure 3.4-16).
2. Centered horizontally and concentrated at the bottom of the lattice cross-section.
3. Spread out horizontally and concentrated at the bottom of the lattice cross-section.
4. Centered horizontally and concentrated at the top of the lattice cross-section.
5. Spread out horizontally and concentrated at the top of the lattice cross-section.

For the even numbered fuel arrays (i.e., 8 × 8, 10 × 10, 14 × 14, and 16 × 16), only 24 fuel rods are modeled due to the use of the half-symmetry models. For these cases, a higher heat generation rate is applied at each fuel rod so that the total heat load of 2.3 kW for PWR and 2.1

kW for BWR is maintained. The empty fuel rod locations in the lattice are modeled as air. The maximum inner shell temperature (274°F) for the PWR design basis fuel with 2.5 kW heat load (Table 3.4-2) is applied to the boundary of the model.

For each fuel array and fuel rod location configuration, a steady-state thermal analysis is performed using the general purpose ANSYS computer code. The Condition 2 transport case, with the NAC-LWT not located in an ISO container is evaluated. As shown in Table 3.4-10, this results in higher maximum temperatures for the fuel cladding than transport Condition 1 where the cask is assumed to be inside of the ISO container. Transport Conditions 1 and 2 are described in Section 3.4.1.3.

3.4.1.11 High Burnup PWR and BWR Fuel Rods in a Rod Holder with Damaged Fuel Rods

The NAC-LWT may transport up to 25 PWR or BWR high burnup fuel rods in a rod holder, with up to 14 of the fuel rods classified as damaged. The maximum decay heat for these configurations is 2.3 kW for PWR and 2.1 kW for BWR. The finite element model for the evaluation of the 25 intact fuel rods in a rod holder is described in Section 3.4.1.7. This section provides the thermal evaluation for the configuration containing damaged fuel rods. The analysis conservatively assumes 15 damaged fuel rods, with the remainder of the rod holder containing intact fuel. The model used for this analysis is based on the two-dimensional half-symmetry model described in Section 3.4.1.7 (Condition 2 configuration), as shown in Figure 3.4-12. Modifications were made to the fuel regions to simulate the damaged fuel rods.

The basket design for the high burnup fuel rod transport can accommodate three configurations: a 4×4 matrix of fuel tubes containing 16 rods, a 5×5 matrix of fuel tubes containing up to 25 rods, and an alternate 5×5 rod holder designed to contain an oversize nonfuel-bearing component (e.g., CE guide tube or BWR water rod) and up to 21 rods. Since the decay heat per rod is considered the same, the maximum heat load occurs with the 5×5 matrix and is the configuration evaluated. Thermal analysis is performed for three cases with different locations of the 15 damaged fuel rods. The fuel rod locations are shown in Figure 3.4-17, which shows the matrix region of the thermal model shown in Figure 3.4-12. The nine locations in the half-symmetry model correspond to 15 actual fuel rod locations. The three cases evaluated are:

Case 1: Damaged fuel rods in locations 4 through 12

Case 2: Damaged fuel rods in locations 7 through 15

Case 3: Damaged fuel rods in locations 1 through 9

The inner surface of the inner shell is the boundary of the model. From Table 3.4-2, the maximum inner shell temperature of 274°F for PWR design basis fuel with 2.5 kW heat load for

normal transport conditions is applied to the boundary of the model. The maximum temperature of 274ºF results from the condition of solar insolation and convection/radiation to surroundings.

To simulate the damaged fuel rods, a 50% compaction of the fuel material in the fuel tubes is considered. It is assumed that the interior region of the fuel rod tube consists of 50% fuel debris and 50% gas. One half of the heat generation rate for the intact fuel rod is conservatively applied to the entire interior region of the fuel rod tube. Since the volume of the interior of the fuel rod tube is four times that of the volume of an intact fuel rod, the applied heat load for the damaged fuel is two times that of the heat load for an intact fuel rod. In addition, the heat generation rate is multiplied by a peaking factor of 1.22. The material properties in the entire interior of the fuel rod tubes for the damaged fuel are conservatively considered to be the thermal properties of the fuel (rather than 50% fuel and 50% gas), since this results in higher temperatures in the fuel rod tube walls and the surrounding components.

3.4.1.12 Thermal Evaluation for TPBARs

[redacted]

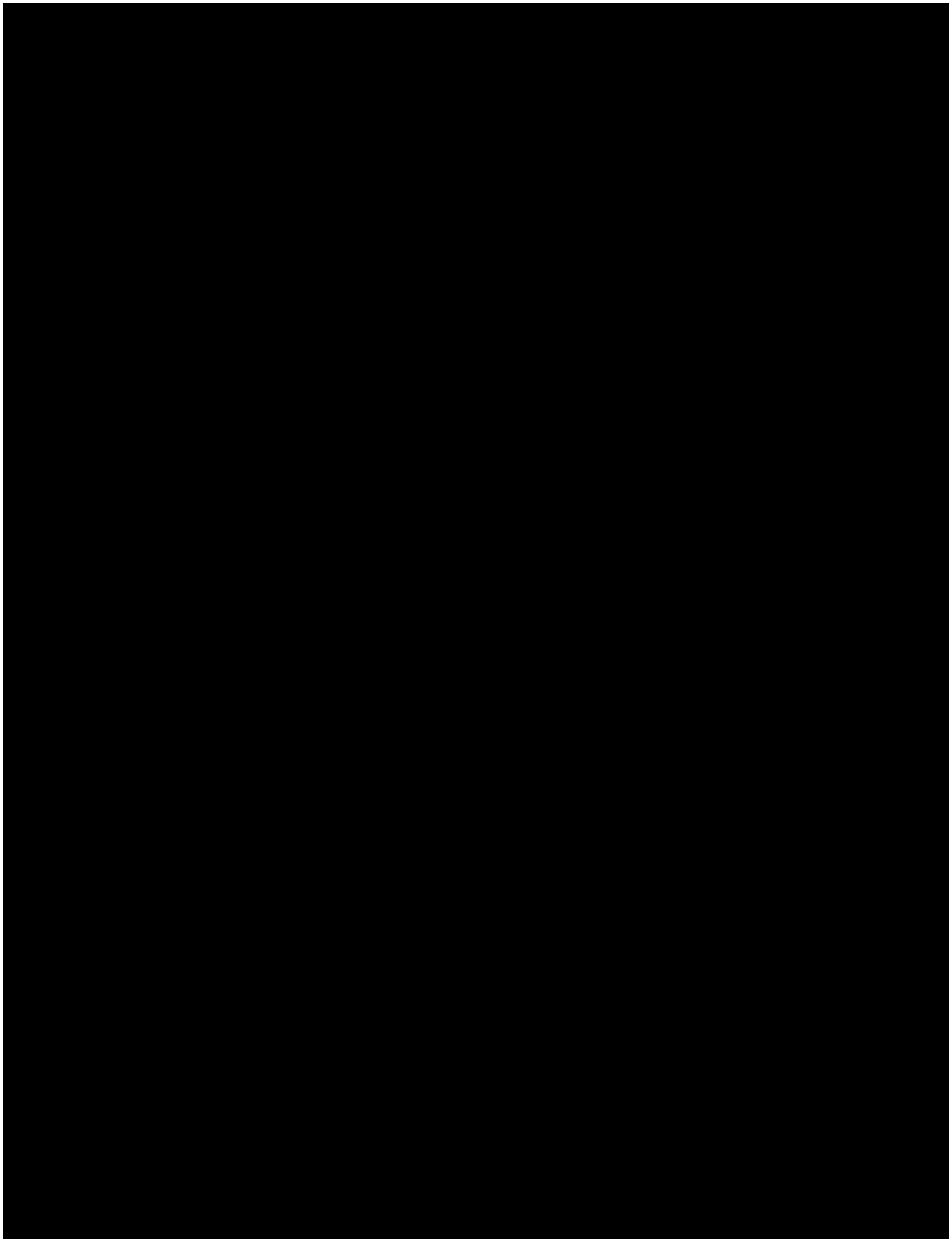



3.4.1.13 PULSTAR Fuel Elements in 28 MTR Basket

Three loading patterns for PULSTAR fuel elements are postulated for the 28 MTR basket configuration.

- Intact fuel assemblies will be directly loaded into 28 MTR basket;
- Intact fuel elements (rods) will be loaded in the fuel rod insert or the PULSTAR cans;
- Damaged fuel elements (rods) or debris will be loaded in the PULSTAR cans.

The heat load in each basket cell is limited to 30 watts. This corresponds to a maximum heat load of 210 watts for each of the four basket modules. The cask cavity is back-filled with helium.

The thermal analysis for the PULSTAR fuel contents in the 28 MTR basket is bounded by the thermal analysis for the TRIGA fuel cluster rods as presented in Section 3.4.1.6. The MTR basket (Section 3.4.1.3) has the same cross-sectional dimensions and basket material as the basket for TRIGA fuel cluster rods. The maximum modular heat load for TRIGA fuel cluster rods is identical to the maximum modular heat load of the PULSTAR fuel contents (210 watts). The bounding condition for the thermal evaluation for the TRIGA fuel cluster rods is "Condition 2" as described in Section 3.4.1.6.2. In the two-dimensional planar model for the TRIGA fuel cluster, the cask cavity is modeled as air. The model conservatively includes an air gap between the fuel cladding and the aluminum tube and between fuel tube assembly and the inner surface of the basket cell, as shown in Figure 3.4-8 and Figure 3.4-9. This is conservative since there is contact between these components, which provides a significant heat transfer path from the fuel to the basket. Note that the aluminum tubes have an insignificant effect on heat transfer, since the air gap controls the heat conduction in the in-plane direction and the model is a two-

dimensional planar model, which neglects any heat transfer in axial direction. Since the PULSTAR fuel rod insert is identical to the TRIGA rod insert, the thermal analysis results for TRIGA fuel cluster rods, Condition 2, as presented in Table 3.4-9, are used as the temperature results for the PULSTAR fuel. These temperatures are summarized in Table 3.4-17 for the PULSTAR fuel. The cask body component maximum temperatures with the NAC-LWT configured for the PULSTAR fuel conservatively use the temperatures from Condition 1 and Condition 2 in Table 3.4-17. The maximum temperatures for the cask body and basket are 222°F and 278°F, respectively, which are significantly below the allowable for stainless steel. For the configuration with intact rods or failed rods loaded in a PULSTAR can, the maximum fuel cladding temperature from Table 3.4-17 is conservatively used as the maximum temperature of the fuel can. The maximum fuel cladding temperature is 295°F, which is significantly below the allowable temperature limit of 1,058°F during transport.

3.4.1.14 Thermal Evaluation for ANSTO Fuel

Two types of ANSTO fuel may be loaded in the ANSTO basket in the NAC-LWT cask:

- MOATA plate fuel elements
- Mark III spiral fuel elements

The ANSTO basket consists of six modules with seven fuel tubes in each module. Each fuel tube may be loaded with a MOATA plate bundle or a Mark III spiral fuel assembly. The maximum heat load for a MOATA plate bundle is 0.4 watt (3 watts per assembly is conservatively considered in the thermal evaluation in this section). The maximum heat load is 18 watts per assembly for the Mark III spiral fuel. The corresponding maximum heat load per cask is 0.126 kW for the MOATA plate bundles and 0.756 kW for the Mark III spiral fuel.

The NAC-LWT is supported in an ISO container with solar insolance applied on the surface of the ISO container. The gas inside the ISO container is air. The cavity of the NAC-LWT is actually backfilled with helium as required by operational procedures.

The thermal evaluation for the MOATA plate fuel elements and Mark III spiral fuel is performed using finite element analysis with the ANSYS program. The finite element models for the MOATA plate bundles and Mark III spiral fuel are shown in Figure 3.4-19 and Figure 3.4-20, respectively. Each model corresponds to a quarter-symmetry cross-section of the fuel, the basket and the helium inside the cask cavity. The models are constructed using ANSYS PLANE55 two-dimensional planar elements. The maximum cask inner shell temperature of 222°F for the LWT cask loaded with the TRIGA fuel cluster rods (see Table 3.4-9) is conservatively used as the boundary condition for both models. The heat load used in the evaluation of the TRIGA fuel cluster rods is 1.05 kW per cask (see Section 3.4.1.6), which is significantly higher than the heat load for the MOATA fuel and Mark III spiral fuel. The

MOATA plate fuel elements are explicitly modeled with aluminum cladding on both sides of the fuel meat. A volumetric heat generation rate corresponding to 3 watts per assembly is applied to the elements for fuel meat for the MOATA plate fuel.

The MARK III spiral fuel assemblies are modeled as straight plates with effective orthotropic properties. The longitudinal (radial) properties are decreased to reflect the reduction of the length (from the actual curved plates to the straight plates in the model). The material properties for the fuel meat are conservatively used in the transverse (circumferential) direction of the fuel elements in the model (conductivity of the aluminum clad is higher than that for the fuel meat). A volumetric heat generation rate corresponding to 18 watts per assembly is applied to the fuel elements for the Mark III spiral fuel.

The thermal conductivities of the fuel matrix for MTR fuel from Section 3.4.1.3 are used as the conductivities for the fuel meat for the MOATA plate and MARK III spiral fuel elements in the thermal models. These thermal conductivities are conservative since the fuel meat for the MOATA plate fuel and Mark III spiral fuel is composed of uranium and aluminum alloy, which are significantly more conductive than the fuel matrix material for the MTR fuel. Radiation between the basket tube and the cask inner shell is conservatively not considered in the models. For the MOATA fuel, radiation is only considered between fuel plates. For the Mark III spiral fuel, radiation is modeled across the helium gap between the fuel outer tube and the basket tube.

Steady-state thermal analysis is performed to demonstrate that the temperature of the MOATA plate fuel and Mark III spiral fuel is maintained within acceptable limits. A conservative temperature of 400°F is established as the maximum allowable temperature for these aluminum-clad fuel elements, as discussed in Section 3.4.1.3.3 for the MTR fuel.

3.4.1.15 High Burnup PWR MOX Rods in a PWR/BWR Rod Transport Canister

A maximum of 16 PWR MOX fuel rods (or a combination of PWR MOX and standard PWR fuel rods) may be placed in the PWR/BWR Rod Transport Canister, including a 5 × 5 insert. Along with the maximum 16 PWR MOX rod contents, the remaining tubes may be loaded with burnable poison rods or other zirconium alloy-based hardware components with negligible activation and heat load. The maximum decay heat for the PWR MOX rods is 2.3 kW (or 143 W/rod), with a corresponding peaking factor of 1.1.

The thermal evaluation described in Section 3.4.1.7 for the high burnup PWR and BWR rods is a two-dimensional planar model in which the heat load applied to the model is based on the BWR rod decay heat load factored by the peaking factor. The bounding product of the heat load and the peaking factor for the PWR MOX rods is (2.3)(1.1) or 2.53 kW, as compared to (2.1)(1.22) or 2.56 kW for the BWR high burnup rods. The evaluation performed in Section

3.4.1.7 using the BWR high burnup rods is considered to bound the heat load for the 16 PWR MOX rods.

As described in Section 3.4.1.7, the model for the 25-rod configuration (in a 5 × 5 insert) uses a heat load of (25/16) times the product of the BWR rod decay heat and associated peaking factor. With this bounding heat load, it is, therefore, not necessary to evaluate the 16-rod configuration in the Rod Transport Canister with a 5 × 5 insert.

The thermal conductivities of the UO_2 and MOX from MATPRO-Version 11 at 600°F are 0.26 Btu/hr-in-°F and 0.22 Btu/hr-in-°F, respectively. The thermal resistance to the heat rejection of the rod canister is due to the thin tube walls and the gaps modeled between the tubes and rods and the basket insert. The reduction in the conductivity of the rod material has an insignificant effect on the thermal resistance incorporated in the gaps and thin tube walls in the model. The thermal resistance internal to each rod does not affect the rejection of the heat from other rods in the basket. Since the maximum number of PWR MOX rods is limited to 16, there are nine or more other vacant positions in the basket without the heat generation of the PWR MOX rods. The evaluation of any arbitrary configuration of tubes, with and without the PWR MOX rods, is bounded by an evaluation of the model having all tubes containing the design basis heat load of 143 W for each PWR MOX rod.

The evaluation using BWR rods in Section 3.4.1.7 is considered to bound all configurations of PWR MOX rods.

Maximum temperatures for package components with the NAC-LWT cask configured for high burnup PWR and BWR fuel rods are summarized in Table 3.4-10. As the analyzed BWR fuel rod content condition is bounding, the temperatures presented in Table 3.4-10, Condition 1 (helium cavity gas backfill) provide bounding temperatures for the PWR MOX fuel rod content configuration. As shown in Table 3.4-10, maximum calculated component temperatures for all critical safety components including the fuel rod cladding, the lid metallic containment seal, the Alternate B port cover metallic containment seals, the lead gamma shield and the liquid neutron shield are maintained within their allowable temperature limits as further defined in Section 3.3. Note that for the transport of PWR MOX fuel rods, metallic containment seals will be installed on the lid and Alternate B port cover in accordance with the NAC-LWT cask leaktight transport configuration specified for the PWR MOX fuel rod contents.

3.4.1.16 Thermal Evaluation for ANSTO-DIDO Combination Basket

The combination basket can be comprised of the following:

(1) ANSTO-DIDO basket configuration—i.e., five DIDO modules and an ANSTO basket for the top module containing up to seven damaged fuel cans (DFC) (for degraded fuel); or

(2) ANSTO basket with a possible use of a DFC—i.e., five standard ANSTO modules and an ANSTO basket top module containing up to seven DFCs (for degraded fuel).

Individual thermal evaluations for the DIDO fuel and ANSTO fuel are contained in Section 3.4.1.8 and Section 3.4.1.14, respectively. The two-dimensional analyses for the ANSTO fuels conservatively identified the maximum temperatures, since axial conduction is being neglected. With this basket configuration, degraded DIDO and degraded ANSTO fuels are also considered and are to be placed in a DFC prior to being placed in the cask. The temperature of any disassembled fuel is bounded by the assembled fuel elements, since the disassembled condition (in the horizontal position) will have significantly more contact to enhance heat rejection from the fuel elements to the basket.

For the ANSTO top module located on either an ANSTO-DIDO combination basket assembly or on an ANSTO basket, the fuel element heat loads are limited to: 10W for DIDO (Mark IV) with or without a DFC; 10W for spiral (Mark III) with a DFC and 15.7W without a DFC; and 1W for MOATA (Mark II) with a DFC and 3W without a DFC. In the lower five DIDO basket modules of the ANSTO-DIDO combination basket, the DIDO fuel elements are limited to a maximum heat load of 18W. In the lower five ANSTO basket modules of the ANSTO basket, the spiral (Mark III) fuel elements are limited to a maximum heat load of 15.7W and the MOATA (Mark II) plate elements are limited to a maximum heat load of 3W.

The following configurations of spiral, MOATA and DIDO fuels are considered.

1. Degraded DIDO fuel (complete element) in a DFC.

   In the ANSTO-DIDO basket configuration, the top ANSTO module may contain at least one degraded DIDO fuel element (10W) in a DFC. The remaining six tubes in the top module may contain Mark III spiral assemblies (15.7W) (or MOATA plate fuel elements, 3W). In the other five DIDO basket modules, only DIDO fuel (up to a maximum of 18W per element) may be contained.

   In the ANSTO basket configuration with a DFC, the top ANSTO module may contain at least one degraded DIDO fuel element (10W) in a DFC. The remaining six tubes in the top module may contain Mark III spiral assemblies (up to a maximum of 10W per element) or MOATA plate fuel elements (up to a maximum of 3W per element). The other five standard ANSTO basket modules may contain Mark III or MOATA plate fuel elements.

The per element heat load for the ANSTO basket with Mark III spiral fuel in Section 3.4.1.14 was evaluated at 18W, which bounds the DIDO (10W) in the DFC by 80 percent. Therefore, the analysis results of the ANSTO basket with Mark III spiral fuel presented in Section 3.4.1.14 bound the analysis results of the DIDO in the DFC in the ANSTO top module of the ANSTO-DIDO combination basket or the ANSTO basket. Figure 3.4-15 shows that the DIDO fuel elements are modeled in contact with adjacent cylinders since the transport cask configuration is in the horizontal position. The addition of the DFC, which is constructed of aluminum, has a minimal affect on the addition of thermal resistance. Therefore, the temperature of the DIDO elements (in the ANSTO top module) is bounded (due to the 150% increase in the heat load in the design basis) by the evaluation of the DIDO basket and fuel in Section 3.4.1.8.1. The degraded condition of the fuel does not alter the contact of the individual DIDO cylinders and the ability of the fuel to reject heat. No further evaluation is required.

When any Mark III fuel is loaded at the top module of the ANSTO-DIDO combination basket, the heat load of 15.7W for Mark III fuel is lower than the heat load (18 W) analyzed in the thermal analysis in Section 3.4.1.14.

The DIDO fuel elements loaded in the bottom five DIDO modules have a maximum per element heat load of 18 W, which is bounded by the 25W heat load employed in the evaluation of the DIDO in Section 3.4.1.8.1.

The ANSTO-DIDO basket configuration heat load bounds the heat load of the six ANSTO basket modules, since the heat load of the five other ANSTO basket modules is limited to 15.7 W per fuel element (as compared to a 18W DIDO fuel element in the five other DIDO basket modules of the ANSTO-DIDO basket combination).

The maximum temperature for the degraded DIDO fuel (10W) in the DFC at the top module of the ANSTO-DIDO combination basket is bounded by the maximum temperature of the Mark III fuel for the standard loading condition as shown in Table 3.4-22. The maximum temperature for the Mark III fuels (15.7W in ANSTO top module or 15.7W in the bottom five standard ANSTO basket assembly) is also bounded by the maximum temperatures of the Mark III fuel for the standard loading condition, shown in Table 3.4-22. The maximum temperature for the MOATA fuels (3W in ANSTO top module or in the bottom five standard ANSTO basket modules) is also bounded by the maximum temperatures of the MOATA fuel shown in Table 3.4-22. The maximum temperature for the DIDO fuel (18W) in the bottom five modules of the ANSTO-DIDO combination basket is bounded by the maximum temperature of the DIDO fuel with the

heat load of 25W, shown in Table 3.4-12 (Condition 1). The maximum basket temperature for the standard ANSTO basket is bounded by the maximum basket temperature of the Mark III fuel for the standard loading condition, shown in Table 3.4-22. The maximum basket temperature for the ANSTO-DIDO basket combination is bounded by the maximum basket temperatures of the DIDO fuel with the heat load of 25W, shown in Table 3.4-12 (Condition 1). The maximum temperatures for the cask components (inner shell, lead, outer shell and the liquid neutron shield) are bounded by the maximum temperatures of the ANSTO fuel configuration as shown in Table 3.4-22.

2. DIDO fuel element loaded in an ANSTO top module (ANSTO-DIDO basket combination or standard ANSTO basket assembly).

   In the ANSTO-DIDO basket configuration, the top ANSTO module may contain at least one DIDO fuel element (10W). The remaining six tubes in the top module may contain Mark III spiral assemblies (15.7W) or MOATA plate fuel elements (3W). In the other five DIDO basket modules, only DIDO fuel (18W) may be contained.

   In the ANSTO basket configuration, the top ANSTO module may contain at least one DIDO fuel element (10W). The remaining six tubes in the top module may contain Mark III spiral assemblies (15.7W) or MOATA plate fuel elements (3W). The other five standard ANSTO basket modules may contain Mark III or MOATA plate fuel elements.

   The maximum possible heat load in this condition (Item 2, DIDO fuel of 10W) for the top ANSTO basket module cannot exceed the maximum possible heat load for the Item 1 configuration (with a degraded DIDO heat load of 10W). The only difference between the fuel in Item 1 and in Item 2 is the state of the DIDO fuel. Since the discussion in Item 1 confirmed that the existing analyses bound the condition defined in Item 1, the existing analyses referenced in Item 1 also bound the maximum temperatures for the condition of the fuel in Item 2.

3. Degraded Mark III spiral ANSTO fuel elements (disassembled)) (10W) in a DFC.

   In the ANSTO-DIDO basket configuration, the top ANSTO module may contain at least one degraded Mark III spiral fuel element (10W) in a DFC. The remaining six tubes in the top module may contain Mark III spiral assemblies (15.7W) or MOATA plate fuel elements (3W). In the other five DIDO basket modules, only DIDO fuel (18W) may be contained.

   In the ANSTO basket configuration with a DFC, the top ANSTO module may contain at least one degraded Mark III spiral fuel element (10W) in a DFC. The remaining six tubes in the top module may contain Mark III spiral assemblies (15.7W), MOATA plate fuel

elements (3W) or DIDO Mark IV fuel elements (10W). The other five standard ANSTO basket modules may contain Mark III spiral or MOATA plate fuel elements.

The maximum possible heat load in this condition (Item 3, degraded Mark III spiral fuel of 10W) for the top ANSTO basket module cannot exceed the maximum possible heat load for the Item 1 configuration (with a degraded DIDO heat load of 10W). The only difference between the fuel in Item 1 and in Item 3 is the configuration of the fuel in the top module. The disassembled fuel will increase the contact between the segments of the fuel and the DFC and, therefore, decrease the maximum temperature of the fuel. Since the discussion in Item 1 confirmed that the existing analyses bound the condition defined in Item 1, the existing analyses referenced in Item1 also bound the maximum temperatures for the condition of the fuel in Item 3.

4. Degraded MOATA plate element (disassembled) (1W) in a DFC.

   In the ANSTO-DIDO basket configuration, the top ANSTO module may contain at least one degraded MOATA plate fuel element (1W) in a DFC. The remaining six tubes in the top module may contain Mark III spiral assemblies (15.7W), DIDO Mark IV fuel elements (10W), or MOATA plate fuel elements (3W). In the other five DIDO basket modules, only DIDO fuel (18W) may be contained.

   In the ANSTO basket configuration with a DFC, the top ANSTO module may contain at least one degraded MOATA plate fuel element (1W) in a DFC. The remaining six tubes in the top module may contain Mark III spiral assemblies (15.7W), DIDO Mark IV fuel elements (10W), or MOATA plate fuel elements (3W). The other five standard ANSTO basket modules may contain Mark III or MOATA plate fuel elements.

   The maximum possible heat load in this condition (Item 4, degraded MOATA fuel of 1W) for the top ANSTO basket module cannot exceed the maximum possible heat load for Item 1 configuration (with a degraded DIDO heat load of 10W). The only difference between the fuel in Item 1 and in Item 4 is the configuration of the fuel in the top module tube. The disassembled fuel will increase the contact between the segments of the fuel and the DFC and, therefore, decrease the maximum temperature of the fuel. Since the discussion in Item 1 confirmed that the existing analyses bound the condition defined in Item 1, the existing analyses referenced in Item1 also bound the maximum temperatures for the condition of the fuel in Item 4.

3.4.1.17 Thermal Evaluation for TPBARs in the PWR/BWR Rod Transport Canister

The thermal evaluation of the NAC-LWT transport cask loaded with up to 25 TPBARs, the PWR/BWR Rod Transport Canister, the PWR insert and the TPBAR basket is conducted for the normal conditions of transport. The evaluation relies on the results of analyses for the shipment of 300 TPBARs in the TPBAR basket (see Section 3.4.1.12), and the shipment of high burnup PWR or BWR rods in a rod holder (see Section 3.4.1.7), in which bounding total heat loads and temperatures were considered. For this analysis, each TPBAR rod is limited to a heat load of 2.31 W, which corresponds to a 90-day cooling period.



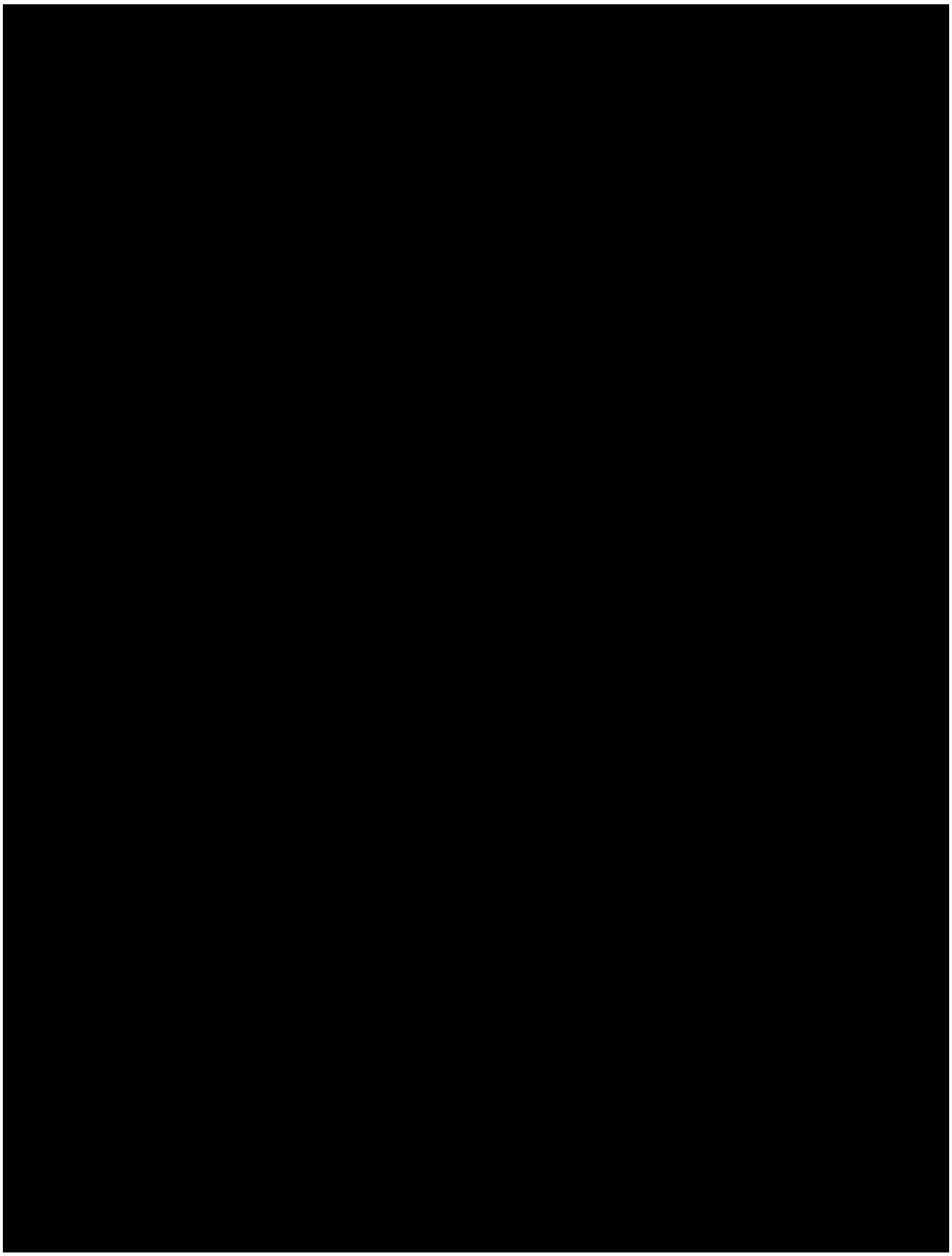



3.4.1.18 SLOWPOKE Fuel Analytical Model

Heat transfer analysis of the NAC-LWT containing SLOWPOKE fuel is performed using a two-dimensional planar finite element model and the general purpose ANSYS computer code. The model represents the entire cask and uses the thermal conductivity of helium to represent the contents inside each basket slot and cask cavity gas. This model is identical to the model of MTR fuel (Section 3.4.1.3) for Condition 1, except for the contents inside the basket slots and the cask cavity gas are modeled as helium. The cavity of air shown in Figure 3.4-4 for MTR fuel is changed to helium. The heat generation rate is applied to the two outer slots representing cavity air in Figure 3.4-4. The three center slots (containing 70W, 120W, and 20W fuel elements in Figure 3.4-4) are modeled as helium without heat generation applied as the slots are blocked for SLOWPOKE fuel contents. This modified model is used to determine the maximum component temperatures throughout the cask. The NAC-LWT is supported in an ISO

container with solar insolance applied on the surface of the ISO container, and the NAC-LWT is considered to be insulated from the environment (only for normal conditions of transport steady state conditions). The gas inside the ISO container is air. The cavity of the NAC-LWT is backfilled with helium as required by operational procedures.

This configuration consists of up to four SLOWPOKE canisters with a design basis heat load of 0.625 Watts per canister. Total decay heat for the SLOWPOKE fuel contents is 5.0 Watts and is modeled as uniformly generated within the homogenized fuel/helium regions of the outer four (4) slots for the top and upper intermediate basket modules. The detailed fuel is not modeled while the contents are conservatively modeled as helium that has low thermal conductivities.

The cask model for SLOWPOKE fuel thermal analysis is identical to the one used for the MTR fuel as described in Section 3.4.1.3, except that helium is used for the slot contents and the cask cavity gas. For details of the model, see Section 3.4.1.3.

3.4.1.18.1 SLOWPOKE Fuel Heat Transfer Analyses Results

The thermal analysis is performed to demonstrate that the temperature of the SLOWPOKE fuel is maintained within acceptable limits. Due to the low heat load, maximum temperature of the loaded cask occurs at the top of the outer surface of the ISO container. Maximum temperatures for package components with the NAC-LWT configured for SLOWPOKE fuel are summarized in Table 3.4-27. The reported temperatures are lower at all locations than the corresponding temperatures for the design basis PWR fuel presented in Table 3.4-2.

3.4.1.19 Thermal Evaluation of Intact or Damaged NRU or NRX Fuels

Thermal analysis of the NAC-LWT containing NRU or NRX fuel assemblies is performed using the general purpose ANSYS computer code and a three-dimensional finite element model representing a periodic section of the contents of the LWT cask. The model represents the cask contents inside the cask inner shell. The NAC-LWT is supported in an ISO container with solar insolance applied on the surface of the ISO container, and the NAC-LWT is considered to be insulated from the environment (only for normal conditions of transport steady state condition). The gas inside the ISO container is air. The cavity of the NAC-LWT is backfilled with helium as required by operational procedures. The ambient temperature is 100°F with solar insolance.

Half of the basket content for a periodic portion is modeled due to the symmetry of the geometry and the heat load. The three-dimensional model of NRU or NRX fuels loaded in the NAC-LWT cask, as shown in Figure 3.4-21, consists of: 1) a center tube assembly that is modeled as a hollow cylinder; 2) fuels inside the tube assemblies; 3) helium inside the cask cavity; 4) support disk with a half thickness; 5) a helium gap with a uniform thickness of 0.0525 inch between the basket and the cask inner shell; 6) stainless steel tubes. The fuel inside the tubes is

conservatively modeled as uranium oxide (UO_2). Using UO_2 thermal conductivities is conservative since the fuel meat of the NRU/NRX is composed of uranium and aluminum alloy, which are significantly more conductive than UO_2. Thermal conductivities of UO_2 are listed below. There is no contact between the tubes, as well as the support disk and the cask inner shell due to the modeling of the helium gap. The radiation between the tube assemblies is conservatively neglected.

Temperature, °F	K, BTU/hr-in-°F for UO_2
100	0.380
257	0.347
482	0.277

A constant temperature of 202°F is applied to the outer surface of the model, which corresponds to the maximum inner shell temperature. This maximum cask inner shell temperature is obtained using the two-dimensional ANSYS model for normal condition (Condition 1) from Section 3.4.1.3 after deleting all elements inside the cask inner shell. A heat flux, computed based on a heat load of 0.64 kW/cask, is applied to the inner surface of the cask inner shell of this two-dimensional model to obtain the maximum cask inner shell temperature of 202°F. For the three-dimensional model, the top and the bottom surfaces of the three-dimensional model are adiabatic due to the symmetry. The total heat load of 0.64 kW for the whole cask is used and is distributed over the active fuel length of 108 inches. The heat generation rate for fuels in the three-dimensional model is computed below.

$$H\_gen = \frac{640 \times 3.413}{18 \times \pi \times (1.185)^2 \times 108} = 0.2547 \ Btu/(hr - in.^3)$$

where, 640 Watts is the heat;
18 is the number of the fuel assemblies;
1.185 inches is the inner radius of the tube;
108 inches is the active fuel length.

The maximum temperature in the model is computed to be 245°F, which is much lower than the allowable temperature of 400°F for aluminum fuel cladding as defined in Section 3.4.1.3.3. The maximum temperature for stainless steel tubes and support disks is bounded by the maximum fuel temperature of 245°F and is lower than the allowable temperature of 800°F for stainless steel (Section 3.4.10). The heat load of the NRU/NRX material (0.64kW) is bounded by the heat load of the MTR fuel (1.26 kW, Section 3.1). Therefore, the maximum temperatures of the cask components for the MTR contents (Condition 1, Table 3.4-6) bound the maximum temperatures for the cask components for the NRU/NRX material contents.

Thermal analysis of the NAC-LWT containing damaged NRU or NRX fuels is performed using the same model and same thermal conditions as described above, except for the higher heat generation rate of 0.3184 Btu/hr-in^3 (1.25×0.2547 Btu/hr-in^3) due to the 25% heat concentration as described in Section 3.1.

The maximum temperature in the model for damaged NRU or NRX fuels is computed to be 271°F, which is much lower than the allowable temperature of 400°F for aluminum fuel cladding as defined in Section 3.4.1.3.3. The maximum temperature for stainless steel tubes and support disks is bounded by the maximum damaged fuel temperature of 271°F and is lower than the allowable temperature of 800°F for stainless steel (Section 3.4.10). The heat load of the damaged NRU or NRX fuels (0.64 kW), including the heat load of 0.80 kW used in the analysis, is bounded by the heat load of the MTR fuel (1.26 kW, Section 3.1). Therefore, the maximum temperatures of the cask components for the MTR contents (Condition 1, Table 3.4-6) bound the maximum temperatures for the cask components for the damaged NRU or NRX fuel contents.

3.4.1.20 Thermal Evaluation of HEUNL

Thermal analysis of the NAC-LWT with HEUNL containers is performed using the general purpose ANSYS computer code and a two-dimensional finite element model representing a 180-degree cross section of the LWT cask. The model represents the cask contents inside the cask inner shell. The NAC-LWT is supported in an ISO container with solar insolance applied on the surface of the ISO container, and the NAC-LWT is considered to be insulated from the environment (only for the normal conditions of transport steady state condition). The gas inside the ISO container is air. The ambient temperature is 100°F with solar insolance.

A 180-degree two-dimensional planar model of the HEUNL container, as shown in Figure 3.4-22, is generated due to the symmetry of the geometry and the heat load. [redacted] The HEUNL is modeled as water without convection. The HEUNL container is modeled with stainless steel properties. The gap between the LWT inner shell and the HEUNL container is air without radiation. A bounding total heat load of 12.88 W for the whole cask is used and is distributed over the cavities of the four (4) containers. The corresponding heat generation rate applied to the liquid in the two-dimensional model is 0.05 W/liter (0.0028 Btu/hr-in^3 which bounds the value reported in Section 4.5.6.1).

A constant temperature of 134°F is applied to the outer surface of the HEUNL container model (Figure 3.4-22), which corresponds to the maximum inner shell temperature. This maximum

cask inner shell temperature is obtained using the two-dimensional ANSYS model for normal condition (Condition 1) from Section 3.4.1.3 after deleting all elements inside the cask inner shell. A heat flux computed based on a heat load of 12.88 W/cask, as follows, is applied to the inner surface of the cask inner shell of this two-dimensional model to obtain the maximum cask inner shell temperature of 134°F.

$$H\_flux = \frac{3.22 \times 3.413}{\pi \times 13.375 \times 30} = 0.0088\ Btu/(hr - in.^2)$$

where: 3.22 Watts is the heat load for a container;
13.375 inches is the ID of the LWT cask inner shell;
30 inches is conservatively used for the axial length for one container assembly.

The maximum temperature in the HEUNL model is computed to be 139°F. This confirms that for normal condition of transport, the HEUNL remains in the liquid state and that the maximum HEUNL container temperature is significantly lower than the allowable temperature of 800°F for stainless steel (Table 3.4-10). Maximum temperature of slide bars [redacted] of the HEUNL container is bounded by the liquid temperature of 139°F, which is lower than the allowable temperature of 180°F [redacted]. This allowable temperature is established [redacted] Specifications. The heat load of the HEUNL (12.88 W) is bounded by the heat load of the MTR fuel (1.26 kW, Section 3.1). Therefore, the maximum temperatures of the cask components for the MTR contents (Condition 1, Table 3.4-6) bounds the maximum temperatures for the cask components for HEUNL.

3.4.1.21 Thermal Evaluation of SLOWPOKE Fuel Core

Heat transfer analysis of the NAC-LWT containing a SLOWPOKE fuel core is performed using a quarter-symmetry, two-dimensional, planar finite element model and the ANSYS computer code. The NAC-LWT is supported in an ISO container with solar insolance on the surface of the ISO container, and the NAC-LWT is considered to be insulated from the environment (only for the normal conditions of transport steady state conditions). The gas inside the ISO container is air. The cavity of the NAC-LWT is backfilled with helium, as required by operational procedures.

The SLOWPOKE fuel core consists of 298 undamaged SLOWPOKE fuel rods, center tube, and upper and lower plates. SLOWPOKE fuel rods are composed of highly enriched uranium-aluminum alloy fuel meat within aluminum cladding. The SLOWPOKE fuel core is packaged with a spacer in the SLOWPOKE basket, which is placed at the top of empty MTR-42 basket modules. A bounding decay heat of 45 Watts is considered in the thermal evaluation for fuel core. The 45 Watts total heat load is enveloped by the 1.26 kW total heat load for the NAC-

LWT MTR fuel contents contained in Section 3.4.1.3. Since the NAC-LWT cask ambient conditions is the same for the SLOWPOKE fuel core as for the MTR fuel, the maximum temperature of all cask body components for the SLOWPOKE contents are enveloped by the maximum cask component temperatures for the MTR fuel contents. Therefore, the cask inner shell temperature for the MTR fuel contents bounds the maximum cask inner shell temperature for the SLOWPOKE fuel core configuration. The maximum cask inner shell temperature is used as the boundary condition for the finite element model for the SLOWPOKE thermal evaluation.

The evaluation of the maximum component temperatures for SLOWPOKE fuel core is performed using a two-dimensional finite element model as shown in Figure 3.4-23. This model corresponds to the stainless steel basket shell, the SLOWPOKE fuel rods, and the helium inside the cask cavity and helium inside the basket shell.

Any axial conductance of the contents is conservatively neglected in this two-dimensional, quarter-symmetry, planar model. The ANSYS PLANE55 and MATRIX50 elements are used. While convection is conservatively ignored, radiation is considered using radiation matrix elements in the following regions.

- Between the outer surfaces of SLOWPOKE fuel rods.
- Between the outer surfaces of the SLOWPOKE fuel rods and the inner surface of the basket shell.
- Between the outer surface of the basket shell and the inner surface of the cask inner shell.

A constant temperature of 214°F (Table 3.4-6, Condition 1) is applied to the outer surface of the model, which corresponds to the inner surface of the cask inner shell.

The decay heat generated by the fuel rods is applied via a heat generation rate to the fuel meat region of each fuel rod.

The thermal analysis demonstrates that the temperature of the SLOWPOKE fuel core is maintained within a conservative limit of 400ºF for normal conditions of transport. At 400ºF, the aluminum retains its capability as a mechanical component.

Maximum component temperatures for the NAC-LWT containing SLOWPOKE fuel core are summarized in Table 3.4-28. Maximum cask component temperatures for normal conditions are conservatively obtained from the analysis results corresponding to the MTR fuel contents, as shown in Table 3.4-6 (Condition 1).

3.4.1.22 Thermal Evaluation of SrF_2 Capsules

[redacted]

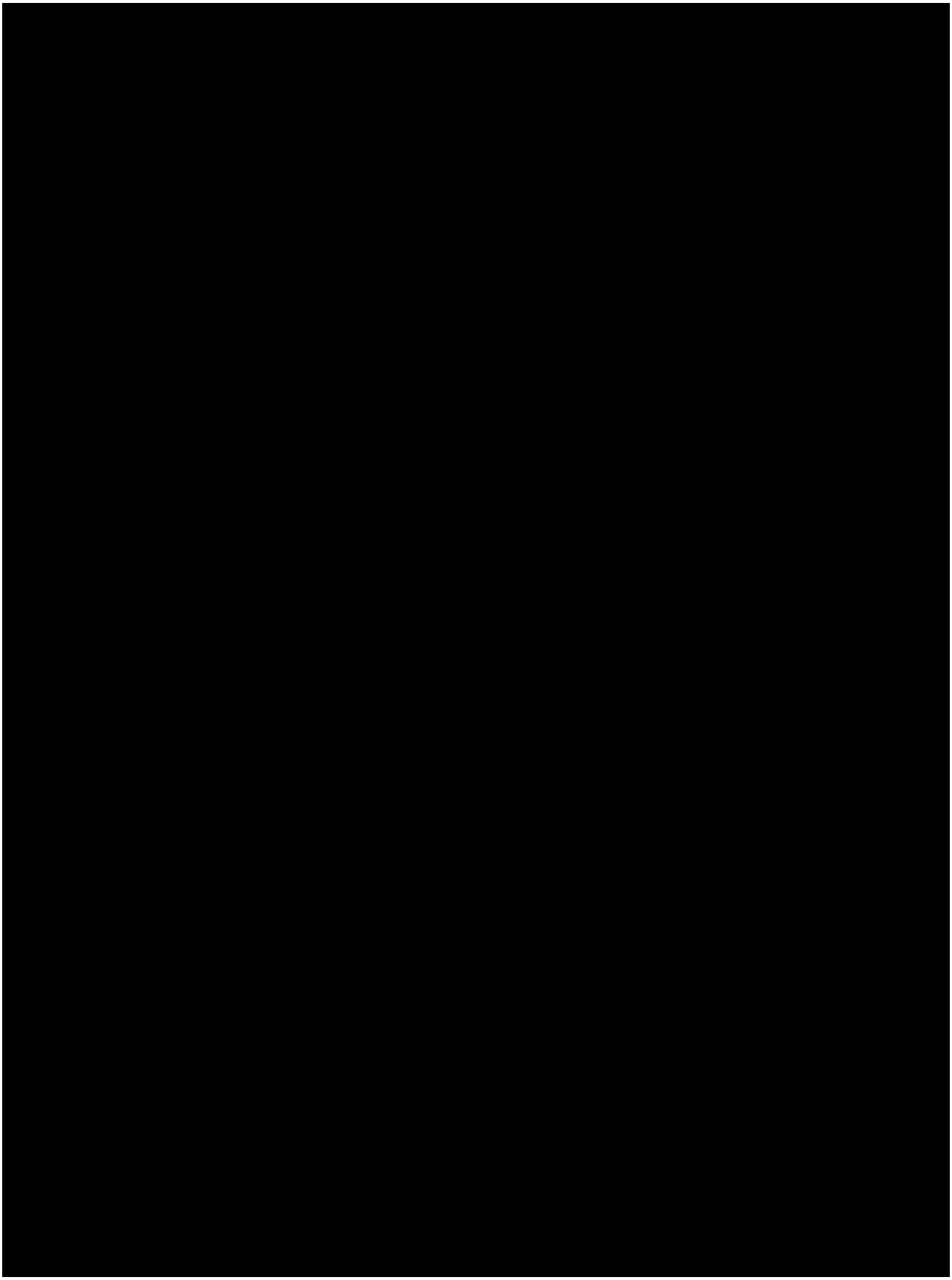

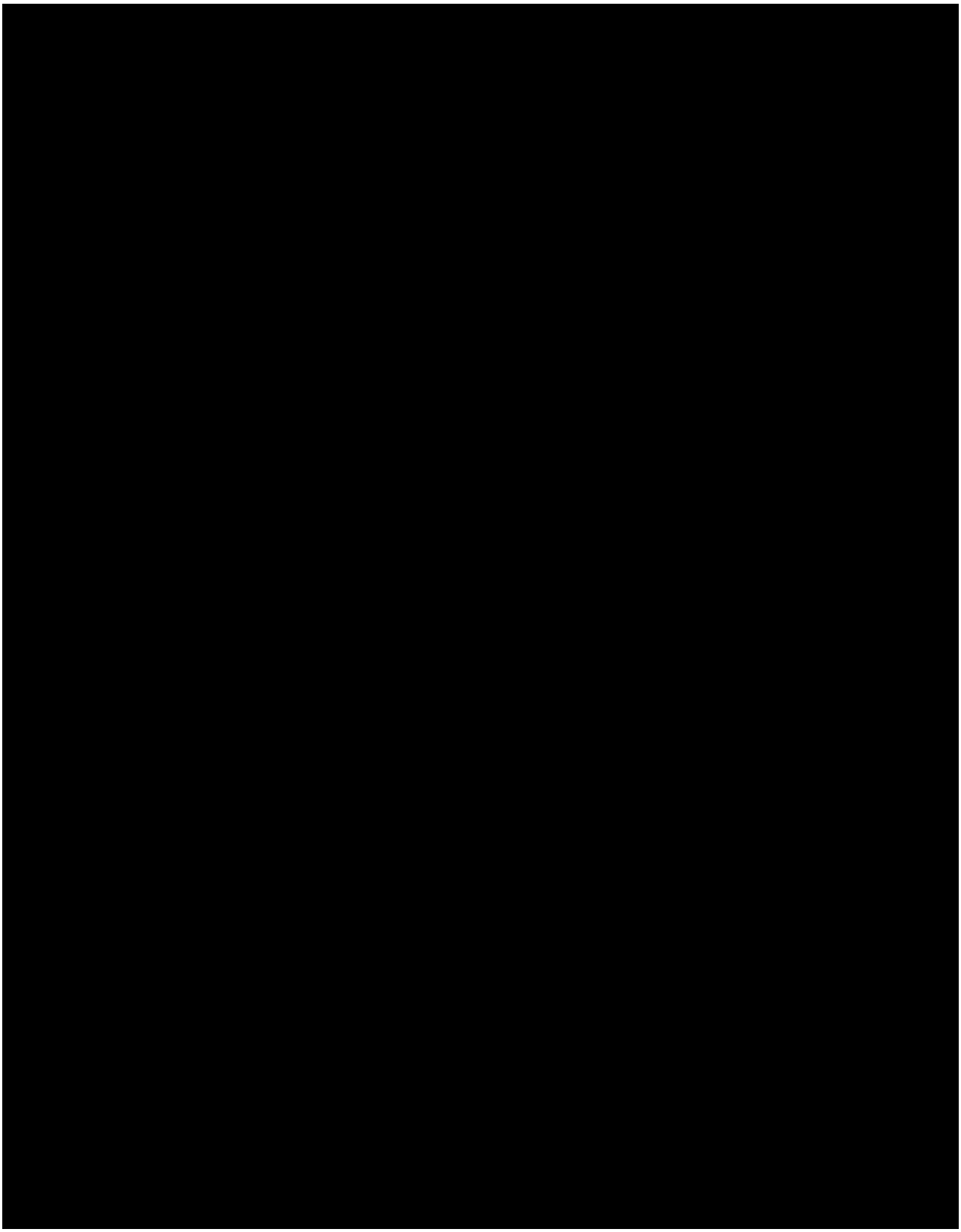

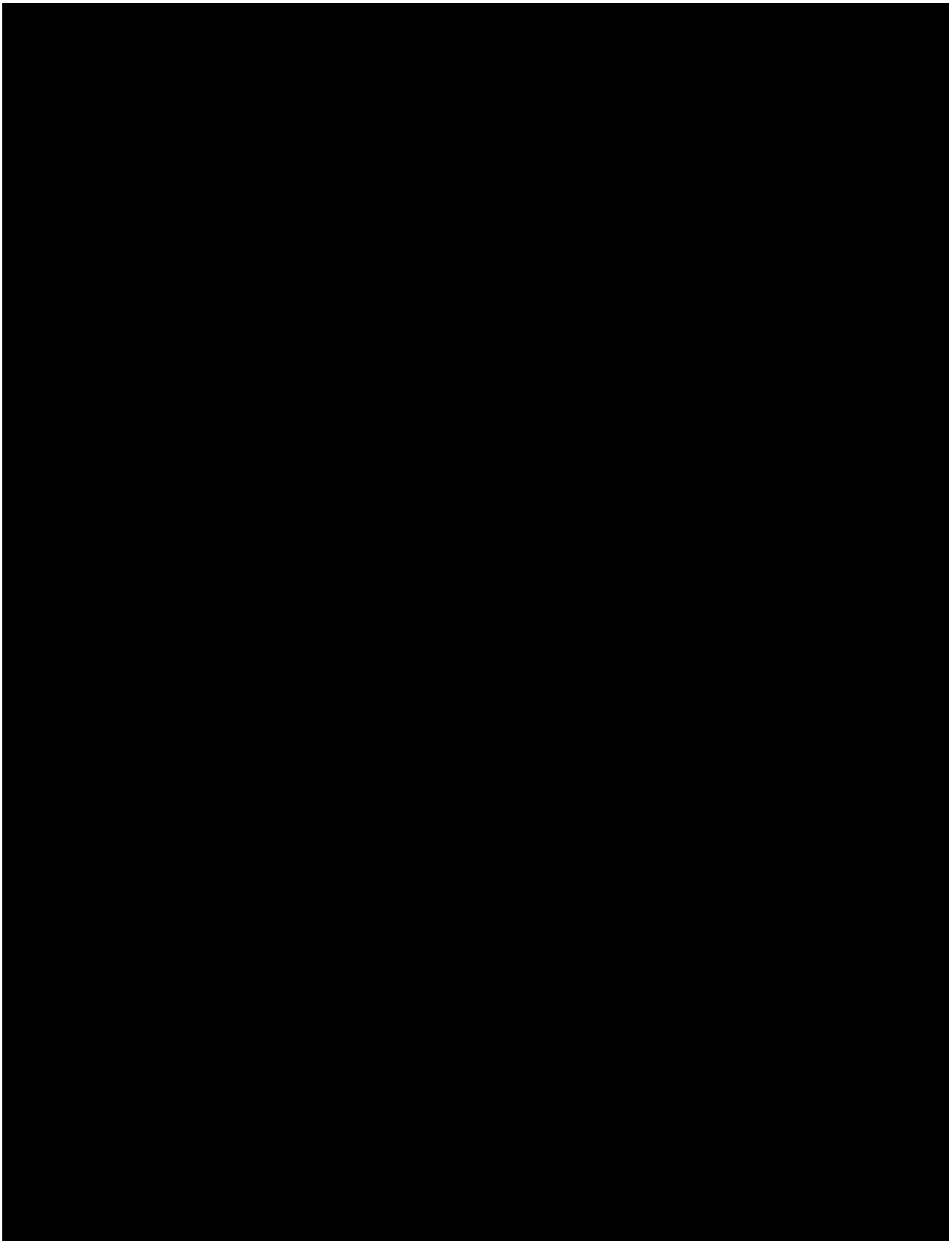

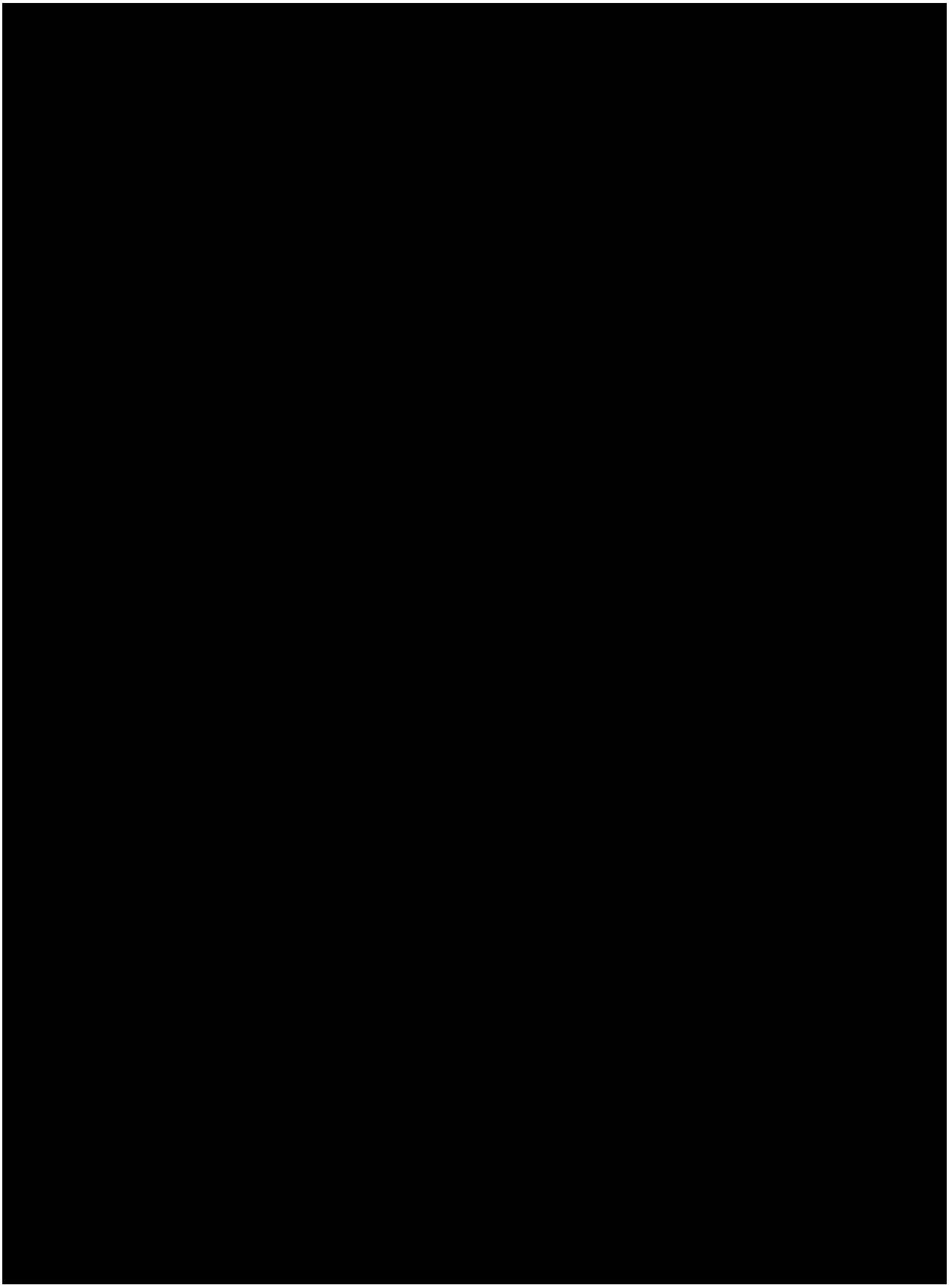



WESF Capsule UCS Configuration



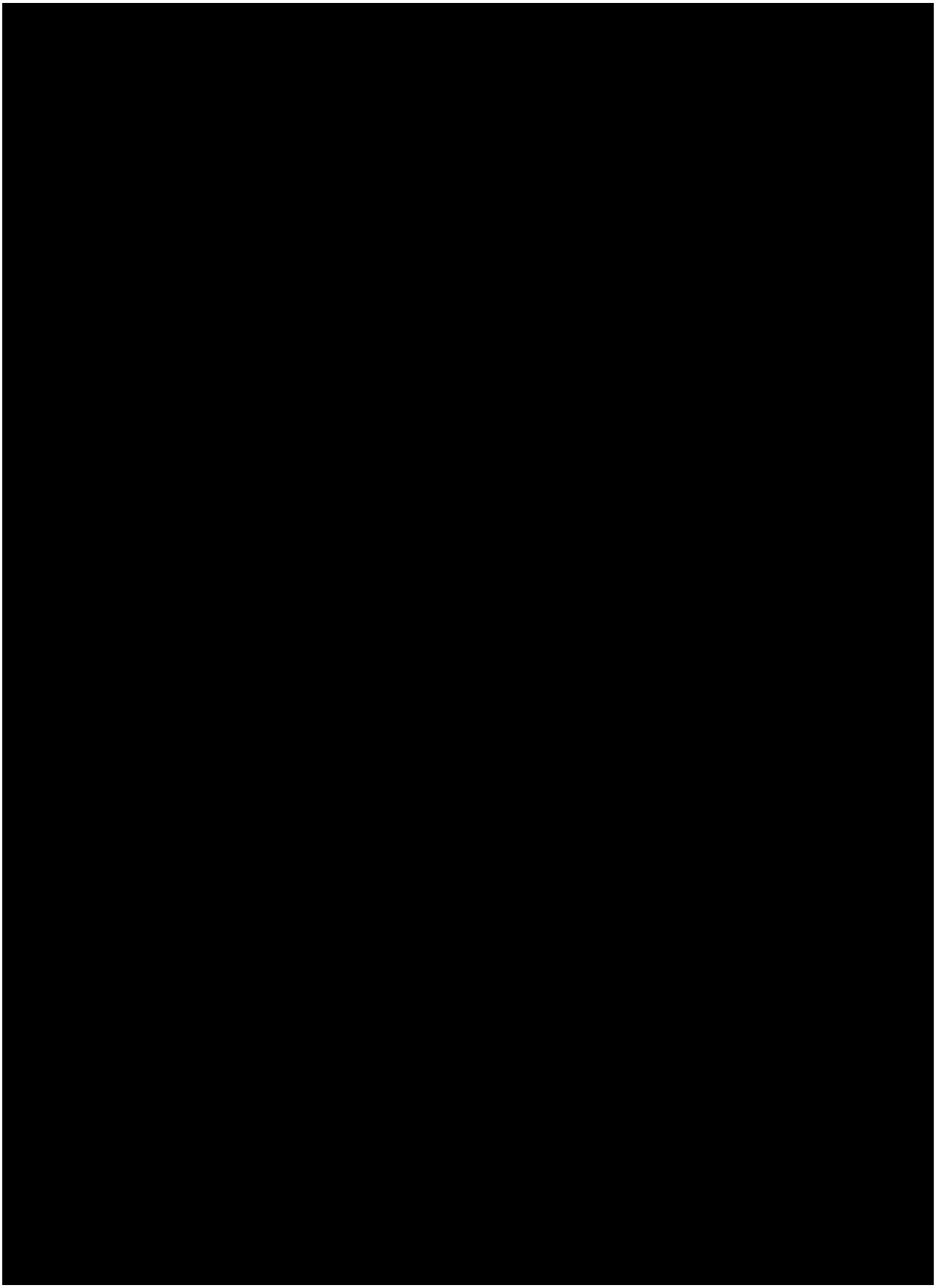



3.4.2 Maximum Temperatures

Using the models described, temperatures for the cask body and fuel rod cladding are determined for maximum normal operation conditions (2.5 kW decay heat load, 130°F ambient temperature, still air, full insolation). The maximum cask component and fuel rod cladding temperatures for PWR fuel (2.5 kW) are listed in Table 3.4-2. Not all of the cask components are explicitly modeled; their temperatures are obtained by evaluating the analytical model at the component location. Maximum normal operating temperatures for the 1.26 kW MTR fuel and the 1.05 kW TRIGA fuel configurations are shown in Table 3.4-6 and Table 3.4-8, respectively. Maximum normal operating temperatures for high burnup PWR and BWR fuel rods in a rod holder are shown in Table 3.4-10. The maximum component temperatures for DIDO fuel and General Atomics IFM for normal conditions of transport are shown in Table 3.4-12 and Table 3.4-13, respectively. The maximum component temperatures for 25 high burnup PWR and BWR fuel rods in a fuel assembly lattice are shown in Table 3.4-14. The maximum component temperatures for high burnup PWR or BWR fuel with up to 14 damaged fuel rods in a rod holder are shown in Table 3.4-15. Maximum operating component temperatures for the NAC-LWT containing TPBARs are shown in Table 3.4-16. The maximum operating temperatures for the PULSTAR fuel contents in the MTR basket are shown in Table 3.4-17. The maximum component temperatures for the NAC-LWT containing MOATA plate fuel and Mark III spiral fuel are presented in Table 3.4-22. Section 3.4.1.16 confirms that the temperatures corresponding to the ANSTO-DIDO combination basket are bounded by the temperatures of the ANSTO fuel and the DIDO fuel presented in Table 3.4-22 and Table 3.4-12, respectively. The maximum component temperatures for the NAC-LWT containing SLOWPOKE fuel are presented in Table 3.4-27. The maximum temperature inside the cask for NRU/NRX fuels is 245°F. The maximum temperature inside the cask for damaged NRU/NRX fuels (as described in Section 3.1) is 271°F. The maximum temperatures of the cask components for the MTR contents (Condition 1, Table 3.4-6) bound the maximum temperatures for the cask components for the NRU/NRX material contents and the maximum temperatures for the cask components for the damaged NRU/NRX fuels. The maximum temperature of HEUNL is 139°F. The maximum temperatures of the cask components for the MTR contents (Condition 1, Table 3.4-6) bound the maximum temperatures for the cask components for the HEUNL contents. Maximum

temperatures for package components with the NAC-LWT containing SrF_2 capsules are summarized in Tables 3.4-29 and 3.4-30 for heat and cold cases, respectively. All the component temperatures are below their temperature limits.

3.4.3 Minimum Temperatures

As stated in Section 3.4.1, the minimum temperatures in the cask occur with a 0.0 kW decay heat load and the minimum ambient conditions. Under these conditions, a uniform temperature of -40°F will exist in the cask. The maximum thermal stresses in the cask, during normal operations conditions, occur when the design basis decay heat load of 2.5 kW exists in the cask along with the minimum ambient conditions (-40°F ambient temperature and no insolance). The cask component and fuel rod clad temperatures for the 2.5 kW decay heat load with minimum ambient conditions are listed in Table 3.4-3.

3.4.4 Maximum Internal Pressures

3.4.4.1 Maximum Internal Pressure for Design Basis Fuel in Normal Conditions

The NAC-LWT cask is filled to one atmosphere (14.7 psia) upon loading. It is necessary to evaluate the internal pressure of the cask after thermal equilibrium has been attained. Assuming a maximum normal fuel cladding temperature of 472°F (932°R) from Table 3.4-2, 3 percent fuel rods rupture, and 30 percent of the fission gas and 100 percent of the rod backfill gas escape from the ruptured fuel rods, the cask internal pressure is calculated. Table 3.4-4 reports the fission gas inventories for the design basis PWR fuel assembly. Table 5.1-2 reports the design parameters of the design basis PWR fuel. Using information from Table 5.1-2, the void volume of a single fuel rod is calculated as 2.43 in^3 (39.82 cm^3) by subtracting the volume of the fuel pellets from the volume of an empty fuel rod (the plenum spring volume is disregarded). The total fuel assembly void volume is calculated as 495.16 in^3 (8,123.28 cm^3) by multiplying the single fuel rod volume by 204, the number of fuel rods in the fuel assembly. The total fuel assembly void volume, the fission gas inventory information in Table 3.4-4, and the maximum normal transport temperature (472°F) are applied to the ideal gas law (PV = nRT) to obtain the pressure in the unruptured fuel rods due to the fission gases. This fission gas pressure, 1,771.5 psia, is also reported in Table 3.4-4, based on 100% availability of fission gases, later adjusted to 30%. The releasable fission gas pressure and rod backfill pressure (assumed 565 psia) are summed to obtain the total fuel rod pressure.

The cask pressure is obtained using Dalton's Law of Partial Pressures:

$$P = P_A + P_B$$

where:

P = total pressure

P_A = partial pressure of gas A (cask cavity helium gas backfill)

P_B = partial pressure of gas B (fuel rod backfill and fission gas)

The reported cask and fuel rod backfill pressures are at standard temperature (72°F) and must be corrected to the normal transport temperature. Given that the internal volumes of the NAC-LWT Cask and the fuel rods remain constant, the resultant pressure is proportional to the temperature change according to the ideal gas law:

$$P_2 = P_1\left(\frac{T_2}{T_1}\right)$$

where:

P_1 = 14.7 psia (cask backfill pressure)

T_1 = 72°F (532°R) (cask backfill temperature)

T_2 = 472°F (932°R) (maximum normal operating condition cavity gas temperature)

Thus, the cask backfill pressure at normal operating temperature equals:

$$P_2 = 14.7\ \text{psia}\left(\frac{932°\text{R}}{532°\text{R}}\right)$$

$$P_2 = 25.8\ \text{psia}$$

For the fuel rod backfill pressure at normal operating temperature:

P_1 = 565 psia (fuel rod backfill pressure)

T_1 = 72°F (532°R) (fuel rod backfill temperature)

T_2 = 472°F (932°R) (maximum normal operating condition cavity gas temperature)

and:

$$P_2 = 565\ \text{psia}\left(\frac{932°\text{R}}{532°\text{R}}\right)$$

$$P_2 = 989.8\ \text{psia}$$

The partial pressure of the cask backfill distributed over the cask free volume (including 3% failed rods) is calculated by:

$$P_{cask\ backfill} = P_{initial}\left(\frac{V_{cask}}{V_{total}}\right)$$

where:

$P_{initial}$ = 25.8 psia (temperature adjusted cask backfill pressure)

V_{cask} = 5.196 ft^3 (147,134 cm^3)

$V_{rod\ void}$ = 244 cm^3 (volume of 3% failed fuel rods)

$V_{total} = V_{cask} + V_{rod\ void}$

V_{total} = 147,378 cm^3

Thus, the cask backfill partial pressure at normal operating temperature, including the volume of failed fuel rods equals:

$$P_{cask\ backfill} = 25.8\ psia\left(\frac{147{,}134 cm^3}{147{,}378 cm^3}\right)$$

$$P_{cask\ backfill} = 25.8\ psia$$

The partial pressure of the failed fuel rod gases in the cask cavity is calculated by:

$$P_{fuelrods} = P_{initial}\left(\frac{V_{rodvoid}}{V_{total}}\right)$$

where:

$P_{initial}$ = 1,521.3 psia (fission gas pressure (0.30 x 1,771.5 psia) plus rod backfill pressure (989.8 psia))

$V_{rod\ void}$ = 244 cm^3

V_{total} = 147,378 cm3

Thus, the failed fuel rod partial pressure at normal operating temperature, including fission gases and the volume of cask cavity void equals:

$$P_{fuel\ rods} = 1{,}521.3\ psia\left(\frac{243.7 cm^3}{147{,}378 cm^3}\right)$$

$$P_{fuelrods} = 2.5\ psia$$

Summing the two partial pressures yields the total cask pressure.

$$P_{Total} = P_{cask\ backfill} + P_{fuelrods}$$

$$P_{Total} = 25.8\,psia + 2.5\,psia$$

$$P_{Total} = 28.3\,psia$$

3.4.4.2 High Burnup Fuel Rod Canister Maximum Normal Conditions Internal Pressure

The high burnup fuel sealed canister is filled to one atmosphere (14.7 psia) upon loading. The canister internal pressure is calculated assuming that the average helium backfill gas temperature is 600°F (1060 R) and that 3 percent of the fuel rods fail in normal conditions of transport. The temperature of the canister gas is selected to conservatively bound the temperatures given in Table 3.4-10, Table 3.4-14 and Table 3.4-15. On failure, the fuel rods are assumed to release 30% of the fission gas and 100% of the rod backfill gas. To bound both the PWR and BWR analysis, the fuel type with the highest fission source, on a per rod basis, and smallest free gas volume inside the sealed canister is selected. This fuel type is the Exxon 7 × 7 BWR fuel. The fission gas inventory for this fuel is shown in Table 3.4-11, which reports the fission gas inventory for the assembly, and on a per rod basis. The design parameters for the Exxon 7 × 7 fuel rod are:

Parameter	Value
Number of Rods	49
Rod Diameter (in)	0.570
Clad Thickness (in)	0.036
Pellet Diameter (in)	0.4900
Active Fuel Length (in)	150
Rod Length (in)	170

From the values shown, the void volume of a single fuel rod is calculated as 4.82 in^3 (78.99 cm^3) by subtracting the volume of the fuel pellets from the volume of an empty fuel rod (the plenum spring volume is disregarded). For the analysis, 3% of 25 rods is taken to fail, which is 0.75 rods. Conservatively, the number of failed rods is defined as one, which is equal to a 4% fuel rod failure. The equivalent void volume is then equal to one rod, or 4.82 in^3. The fission gas inventory, provided in Table 3.4-11, and the maximum normal transport temperature (600°F) are applied to the ideal gas law (PV = nRT) to obtain the pressure in the unruptured fuel rods due to the fission gases. This fission gas pressure, 4,251 psia (Table 3.4-11), is based on 100% availability of fission gases, which is adjusted to account for the 30 percent release of the fission gas. The releasable fission gas and rod backfill pressures are summed to obtain the total fuel rod pressure.

The ideal gas law is used to analyze the effects of pressure, temperature, volume, and gas inside the cask the ideal gas law states:

$$pV = nRT$$

where:

p = pressure (atm)

V = volume (liters)

n = gram-moles of material

R = gas constant (0.0831 atm-liters/K g-mole)

T = temperature (K)

After the rods rupture, the resultant internal cask pressure is impacted by three sources: the 1-atm inert gas backfill of the canister, the fission product gas escaping from the fuel rods, and the fuel rod inert gas backfill escaping from the ruptured fuel rods. To calculate the resultant internal cask pressure after the fuel rods rupture, partial pressures are calculated using Dalton's law:

$$P = P_a + P_b$$

where:

P = total pressure

P_a = partial pressure of gas A

P_b = partial pressure of gas B

The void volume of the fuel rod is simply the volume contained within the cladding less the fuel volume. The rod is modeled as a cylinder with a 0.570-in outside diameter, a 0.036-in. wall thickness, and a 150-in. active fuel length. The volume of the plenum spring is disregarded. The void volume, which includes the plenum volume, is 4.82 in^3 per rod.

The partial pressure of the canister is calculated by:

$$P_{canister} = P_{initial}\left(\frac{V_{canister}}{V_{total}}\right)$$

where:

$$P_{initial} = P_{atm} * \frac{T_{norm}}{T_{stand}} = 14.7 \text{ psia} * \frac{588.7 \text{ K}}{295.35 \text{ K}} = 29.3 \text{ psia}$$

$P_{initial}$ = 29.3 psia

The minimum free gas volume is calculated as:

$$V_{canister} = 2{,}800\,in^3 - \pi * r_{OD}^2 * L_{rod} * 25\,rods = 2{,}800\,in^3 - \pi * \left(\frac{0.57\,in}{2}\right)^2 * 170\,in. * 25\,rods$$

$$= 2{,}800\,in^3 - 1085\,in^3 = 1715\,in^3$$

$$V_{canister} = 28.1\ liters$$

$$V_{void} = 4.82\,in^3 * (2.54\,cm/in)^3 * 0.001\,liters/cc = 0.079\,liters$$

$$V_{total} = V_{canister} + 25 * 0.04 * V_{void} = 28.1\,liters + 0.04 * 25 * 0.079 = \sim 28.2\,liters$$

$$V_{total} = \sim 28.2\ liters$$

This results in a $P_{canister}$ of 29.3 psia.

Fission product gas inventories were obtained from Table 3.4-11. Using the ideal gas law, the initial pressure of each fission product gas is calculated based upon these inventories, the normal condition temperature (600°F), and the calculated void volume of the fuel (25 rods). The partial pressure of the fuel rod volume is calculated by:

$$P_{fuel\ rods} = P_{initial}\left(\frac{V_{fuel\ rods}}{V_{total}}\right)$$

where:

$$P_{initial} = 0.3 * P_{fission} + P_{backfill}$$

$$P_{fission} = 4251\ psia$$

$$P_{backfill} = P_{initial}^{backfill} * \frac{T_{norm}}{T_{stand}} = 75\ psia * \frac{588.7\ K}{295.35\ K} = 150\ psia$$

$P_{initial}$ = ~1,425 psia

$V_{fuel\ rods}$ = ~0.079 liters (at 4% of the total fuel rod volume)

V_{total} = 28.2 liters = $V_{canister}$ + 25*0.04(V_{void})

$$P_{fuel\,rods} = 1425\,psia\left(\frac{0.079\,liters}{28.2\,liters}\right) = \sim 4.00\,psia$$

then:

$$P_{total} = P_{canister} + P_{fuelrods} = 29.3\,psia + \sim 4.00\,psia = \sim 33.3\,psia \quad (2.3\ atm)$$

An additional analysis was performed for BWR high burnup rods (>45 GWd/MTU) with a 56% failure fraction to envelope damaged fuel rod shipments. This evaluation is conservative since damaged rods are likely to have released their gas inventory prior to shipment.

Following the methodology used for calculating the pressure given above and the calculated canister free gas volume of 29.2 liters, the resulting internal canister pressure from a 56% failed fuel fraction is 82.3 psia (~ 5.6 atm). The calculation follows.

$P_{canister}$ = $P_{initial}*V_{canister}/V_{total}$

$P_{initial}$ = 29.3 psia

$V_{canister}$ = 28.1 liters

V_{total} = $V_{canister} + 14*V_{void}$ = (28.1 liters) + 14*(0.079 liters) = 29.2 liters

$P_{canister}$ = (29.3 psia)*(28.1 liters)/(29.2 liters) = 28.2 psia

$P_{fuelrods}$ = $P_{initial}*V_{fuelrods}/V_{total}$

$P_{initial}$ = 1,425 psia

$V_{fuelrods}$ = $14*V_{void}$ = 1.108 liters

$P_{fuelrods}$ = (1,425 psia)*(1.108 liters)/(29.2 liters) = 54.1 psia

P_{total} = $P_{canister} + P_{fuelrods}$ = 28.2 psia + 54.1 psia = 82.3 psia = 5.6 atm

3.4.4.3 25-Rod Maximum Cask Cavity Internal Pressure-Normal Conditions

Following the methodology used for calculating pressure in Section 3.4.4.2, the cask free gas volume is calculated as:

$$V_{cask} = 6{,}534\ \text{in}^3 - \pi * r_{OD}^2 * L_{rod} * 25\ \text{rods} = 6{,}534\ \text{in}^3 - \pi * \left(\frac{0.57\ \text{in}}{2}\right)^2 * 170\ \text{in.} * 25\ \text{rods}$$

$$= 6{,}534\ \text{in}^3 - 1{,}085\ \text{in}^3$$

$$= 5{,}449\ \text{in}^3$$

V_{cask} = 89.32 liters

Using this free gas volume in place of $V_{canister}$ and the temperatures in Section 3.4.4.2, the cask cavity pressure resulting from a 3% fuel rod failure is 31 psia (~2.1 atm). This pressure is based on the assumption that the gases in the canister are released to the cask cavity. There are no design basis events that could result in the release of the gas in the canister to the cask cavity.

An additional analysis was performed for a bounding 25 BWR high burnup rod configuration (>45 GWd/MTU) containing up to 14 damaged rods. The damaged fuel rods are conservatively assumed to release the rod gas inventory during transport.

Following the methodology used for calculating the pressures given above and the cask free gas volume of 90.4 liters, the resulting internal cask pressure from a 56% failed fuel fraction is 46.4 psia (~ 3.2 atm). The calculation is outlined below.

P_{cask} = $P_{initial}*V_{cask}/V_{total}$

$P_{initial}$ = 29.3 psia

V_{cask} = 89.3 liters

V_{total} = $V_{cask} + 14*V_{void}$ = (89.3 liters) + 14*(0.079 liters) = 90.4 liters

P_{cask} = (29.3 psia)*(89.3 liters)/(90.4 liters) = 28.9 psia

$P_{fuelrods}$ = $P_{initial}*V_{fuelrods}/V_{total}$

$P_{initial}$ = 1,425 psia

$V_{fuelrods}$ = $14*V_{void}$ = 1.108 liters

$P_{fuelrods}$ = (1,425 psia)*(1.108 liters)/(90.4 liters) = 17.5 psia

P_{total} = $P_{cask} + P_{fuelrods}$ = 28.9 psia + 17.5 psia = 46.4 psia = 3.2 atm

PWR rods may contain Integral Fuel Burnable Absorbers (with rods referred to as IFBA rods). These rods may contain integral neutron absorber comprised of gadolinium, erbium, or boron. Only boron has the potential to impact pressure calculations as the ^{10}B isotope alpha decays upon neutron activation, thereby adding gas to the system. Activation of erbium and gadolinium does not produce additional gases. The effect on system pressure of the additional gas was evaluated based on a 2.4 g ^{10}B/in coating level [ORNL/TM-200/321], considering 100% conversion to gas, and conservatively applying the fixed absorber level to the full active fuel length. A normal condition failure of 3% of the rods (1 rod, rounded to 4%) increases the cask pressurizing gas quantity by less than 0.04 mole, which translates to a pressure change of 0.3 psi. When considering a conservative in-cask failure of 14 rods, the potential increase in pressure rises to 4 psi for the IFBA rods. Given the conservative cask free volume and fission gas generation (both based on significantly larger BWR rods), in combination with a conservative (rounded up) system temperature applied in the analysis, there is no significant effect on system pressure with the inclusion of IFBA rods.

3.4.4.4 Maximum Cask Cavity Internal Pressure for the General Atomics IFM

The combined heat load of the two GA IFM FHUs is 13 watts. This heat load is distributed between two separate canisters, which have a length of approximately 40 inches. As a result, the heat generation, which would result in a temperature differential between the cavity and ambient, is insignificant.

The internal pressure in the LWT cask cavity is due to the fission gas release from the TRIGA fuel or HTGR fuel pellets in conjunction with the cavity being heated by solar insolance. No credit is taken for the pressure retention capability of the FHUs. The internal pressure that may result from the 20 TRIGA fuel rods in the GA IFM is significantly enveloped by that of the 120 TRIGA fuel rods, which are authorized for transport in the NAC-LWT cask. Likewise, the fission gas release by the HTGR elements is considered to be bounded by the current design basis PWR fuel. Since the free volume for the GA IFM shipment is significantly larger than for the design basis PWR fuel assembly with the PWR basket, the pressure increase in the cavity gas due to the GA IFM shipment is considered to be significantly bounded by the design basis condition in the current NAC-LWT cask. Therefore, the current design pressure of 50 psig for the cask cavity envelopes the cask cavity pressure for the GA IFM contents.

3.4.4.5 TPBAR Shipment Cask Cavity Internal Pressure-Normal Conditions

The method employed in the TPBAR (Tritium Producing Burnable Absorber Rod) shipment evaluation is similar to that employed in the fuel rod evaluations where the cask cavity free volume and molar gas quantities are combined with the ideal gas law (PV=nRT) to determine system pressure. The bounding TPBAR content condition consists of up to 300 production TPBARs (of which three can be prefailed) placed in a consolidation canister and loaded into a NAC-LWT with a TPBAR basket installed in the cavity.

[redacted]

located in a consolidation canister composed of three primary pieces: canister body, top insert, and bail. A spacer, attached to the NAC-LWT cask lid, assures that rods remain within the canister envelope and provides support to both the basket and canister under end-drop conditions. The TPBAR basket is a modified NAC-LWT PWR basket that increases the cavity free volume from that provided by a standard PWR basket design.

For conservatism in determining the cask internal pressure, the 297 TPBARs that are not prefailed at loading are assumed to undergo cladding failure during normal transport conditions. Prefailed rods have cladding damage that allows reactor coolant or spent fuel pool water to enter the rod cavity. Cladding failure during transport results in the release of the rod helium backfill gas, helium gas generated during the tritium production, and a portion of the tritium gas

produced. For rods not prefailed, the majority of the tritium is locked in the TPBAR structure and is not released during normal or accident conditions of cask transport. Tritium release from [redacted] in the cask cavity (see Chapter 1 appendices). The NAC-LWT is vacuum dried prior to transport, removing water from the cask cavity. This process is expected to remove water from the prefailed rod. The water content is conservatively assumed to remain in the rods for the pressure calculated. After dissociation, the total gaseous inventory in each prefailed TPBAR is [redacted]

Cask cavity gases after rod failure are therefore comprised of the cask helium backfill (one atmosphere at loading); the combined helium rod backfill, helium generated during the tritium production, helium production from tritium decay, and the tritium release itself (297 rods); and the molar inventory of the three prefailed, waterlogged rods. The total free volume available for the gas is the cask cavity volume plus the internal free volume of the failed rods, minus the canister, spacer, basket, and rod volumes.

[redacted] at sealing used in the calculation are one atmosphere pressure and a temperature of 68°F. The backfill pressure is specified in the operating procedure, while 68°F is conservative for the cask with a heat-generating payload.



The TPBAR content condition of up to 25 TPBARs contained in a 5×5 rod holder is bounded by the pressure analysis performed for the fully loaded TPBAR consolidation canister. Approximately 80% of the free volume in the consolidation canister analysis is the space associated with the volume between radial extent of the consolidation canister and cask shell (i.e., void volume within the radial cross-section of the TPBAR basket). This volume is available regardless of TPBAR basket payload. Combining the 25 TPBAR reduced releasable gases (20% of the 300 TPBAR payload for 22 intact and three prefailed TPBARs) with a similar free volume assures lower pressure in the 25 TPBAR shipment configuration.

The TPBAR content condition of 55 segmented TPBARs contained in a sealed waste container is bounded by the pressure analyses performed for the fully loaded TPBAR consolidation canister. The contents include segments, debris and vented shrouds, all placed in a vented inner storage container within the welded waste container. Due to the condition of the TPBAR segments and the cooling period since irradiation, the heat load of the waste container is 0.195 kW, significantly less than the 1.063 kW analyzed for the production TPBAR content condition of 300 TPBARs in an open consolidation canister.



Combustible Hazard Assessment





The reduced available hydrogen content of the 25 TPBAR payload, including three prefailed TPBARs, in combination with a similar free volume to the consolidation canister configuration, and cask helium backfill quantity, produces a lower maximum hydrogen concentration in the up to 25 TPBAR configuration than that of the 300 TPBAR consolidation canister configuration. No flammability hazard exists for the up to 25 TPBAR shipment configuration.

The 55 equivalent TPBARs, in segments and debris, may release up to 100% of the tritium contained in the pellets during transport. The pellets contain approximately 40% of the tritium quantity in the TPBAR. At NAC-LWT normal and accident conditions temperatures, the TPBAR components release tritium primarily as tritiated water with only a small fraction (maximum 2%) as gaseous tritium (see Appendix 1-B of Chapter 1). During a one-year transport, an additional maximum 1% of the tritiated water may undergo radiolysis and dissociate. Conservatively applying a maximum 3% release rate to the 55 equivalent TPBAR total inventory of 99 grams (1.8 grams per rod) yields an inventory of 0.49 moles T_2. Based on an inert gas cask backfill in excess of 10.2 moles, a bounding estimated maximum hydrogen

[redacted]

3.4.4.6 Maximum Internal Pressure for PULSTAR Fuel Element Payload

Based on the allowable loading configurations for PULSTAR fuel elements, cask internal pressures are calculated for a payload of 28 intact assemblies and a mixed payload of 14 intact assemblies and the equivalent of 14 canned assemblies. A payload of 28 4×4 intact rod inserts is bounded by either of these evaluated payloads.

The ideal gas law and Dalton's law of partial pressures are used to calculate internal pressures. Cask, can, and element backfill initial conditions are taken as a pressure of 1 atm and a temperature of 68°F.

PULSTAR fuel element and fuel assembly dimensions are summarized in Table 3.4-18. Elements are UO_2 pellets clad with zirconium alloy. A PULSTAR fuel assembly is a 5×5 rectangular array of elements with aluminum upper and lower fittings.

Based on the PULSTAR fuel element, PULSTAR failed fuel can, MTR basket stack, and NAC-LWT cavity dimensions, volumes are calculated and summarized in Table 3.4-19.

The remaining two inputs to the pressure calculation are the temperature and fission gas inventory. For conservatism, the average gas temperature applied is the maximum TRIGA fuel clad temperature of 295°F. The TRIGA temperatures are applicable to the PULSTAR fuel element evaluation as discussed in Section 3.4.1.13. The fission gas inventory is taken from the SAS2H results discussed in Chapter 5 and is shown in Table 3.4-20.

For a payload of 28 intact PULSTAR fuel assemblies, the partial pressures of the cask, element (rod) backfill, and fission gases are summed. The cask free volume is 217 liters and is calculated by subtracting the basket stack volume and the assembly envelope volume (multiplied by 28) from the cavity volume. The partial pressure of the cask, P_{Cask}, is simply the initial backfill pressure multiplied by the temperature ratio:

$$P_{Cask} = 1\,\text{atm}\,\frac{419.26\,\text{K}}{293.15\,\text{K}} = 1.430\,\text{atm}$$

The cask partial pressure due to a 100% release of element backfill, $P_{RodBackfill}$, is the initial backfill pressure multiplied by the temperature ratio and the backfill-to-cask volume ratio:

$$P_{RodBackfill} = 1\,\text{atm}\,\frac{419.26\,\text{K}}{293.15\,\text{K}}\,\frac{2.7\,\text{liters}}{217.0\,\text{liters}} = 0.018\,\text{atm}$$

Only 3% of this pressure contributes to the total pressure under normal conditions.

The cask partial pressure due to a 100% release of the element fission gases, $P_{FissionGas}$, is calculated using the Ideal Gas Law:

$$P_{FissionGas} = \frac{28 \cdot 0.448 \cdot 0.08205 \cdot 419.26}{217} = 1.989 \text{ atm}$$

Only 30% of the fission gases are released, and only 3% of the resultant pressure contributes to the total pressure under normal conditions.

The total cask pressure is the sum of the partial pressures, adjusted by the relevant release fractions:

$$P_{Total} = P_{Cask} + 0.03 \cdot P_{RodBackfil} + 0.03 \cdot 0.30 \cdot P_{FissionGas}$$

$$P_{Total} = 1.430 + 0.03 \cdot 0.018 + 0.03 \cdot 0.30 \cdot 1.989 = 1.449 \text{ atm}$$

Cask internal pressure for a mixed payload is calculated in a similar fashion, with a smaller cask free volume due to the difference in can and assembly envelope volume, and an assumed 100% failure rate of PULSTAR elements in either the screened or sealed can. The calculated maximum cavity pressure is 1.8 atm. Pressure in the sealed can is based on a 100% failure rate, the can cavity volume, and a payload equivalent in volume to 25 intact PULSTAR fuel elements. Normal condition pressure in the sealed can is 4.4 atm.

A summary of the pressure calculations is given in Table 3.4-21.

3.4.4.7 Maximum Internal Pressure for 16 PWR MOX/UO_2 Fuel Rods or 16 LANL MOX Fuel Rods in Transfer Tubes

3.4.4.7.1 Maximum Internal Pressure for 16 PWR MOX/UO_2 Fuel Rods in a Rod Holder

Based on the allowable loading of up to 16 PWR MOX/UO_2 fuel rods, cask internal pressures are calculated. Bounding cask free volume, gas temperatures, and rod backfill pressure are directly obtained from the BWR high burnup rod evaluations in Section 3.4.4.3.

Variable	Unit	Value
Cask Free Volume (PWR Basket with Insert/Canister/Rod Holder)	in^3	5908
Normal Condition Cask Average Gas Temperature	ºF	600
Normal Condition Cask Backfill Partial Pressure (at temperature)	psia	29.3
PWR Fuel Rod Backfill Pressure	psia	565

These values are combined with a conservative 2.9 in^3 fuel rod free volume and SAS2H calculated fission and actinide gas inventories to determine system pressure. The 2.9 in^3 free rod volume applied here is larger than the UO_2 rod volume previously employed (2.5 in^3) to

account for additional volume designed into the MOX rods to counter any potential increase in fission gas release from the PuO_2 / UO_2 MOX fuel mixture.

The ideal gas law and Dalton's law of partial pressures are used to calculate internal pressures by combining cask backfill, rod backfill, and fission/actinide gases. Fill temperature applied to the rod gases is 22ºC (standard temperature). Maximum fission and actinide gas inventories were obtained from 80 GWd/MTHM fuel rod, 3% enriched ^{235}U or 3 wt % fissile Pu, SAS2H output sets. The fuel rod corresponds to the maximum fissile mass defined in the shielding source term calculations. SAS2H runs produced a total gas inventory of 0.29 moles per rod (99+% fission gas), with bounding values obtained from the UO_2 rods (MOX rods produce approximately 98% of the UO_2 rod fission gas). Gas inventories increase as a function of reduced initial fissile material content. A 3% enrichment and/or 3% fissile Pu content is significantly below levels required to reach an 80 GWd/MTHM burnup level.

The resulting normal condition pressure for a failure fraction of 1/16 (bounds the 3% normal condition PWR rod failure fraction in the Standard Review Plan, NUREG-1617, Supplement 1) and 30% fission gas release is 17.2 psig (31.9 psia, or 2.2 atm).

Parametric studies are performed on the number of rods failing and the release fraction under normal conditions with an applied limit of 50 psig (normal condition structural analysis input value). Normal condition failure of up to 13 rods, at 100% gas release, remains below 50 psig. A similar analysis results in a maximum normal condition pressure of 48.5 psig for a normal condition failure of all 16 rods at a 75% fission gas release fraction (100% of backfill gas is released). Given that each of the rods is individually located within a support tube, no normal condition rod failures are expected during transport.

UO_2 or MOX rods included in the payload may be IFBA rods. As presented in Section 3.4.4.3, IFBA rods are expected to contribute in the range of 0.04 mole per rod to system pressure, assuming the absorber material is boron. As the MOX/UO_2 pressure calculations assumed a conservative 100% fission gas release of 0.29 mole per rod, a rod backfill of 0.075 mole, and a cask backfill of approximately 3.6 moles, the release of IFBA boron-generated gases would not significantly affect system pressure.

3.4.4.7.2 16 LANL MOX Fuel Rods in Transfer Tubes

LANL MOX fuel rods do not contain a significant heat source or fission gas quantity. Given the similarity in cask configuration to that of high burnup LWR MOX payload, which has both a significant fission gas quantity to release and a significant heat load, pressurization of the cask cavity will be bounded by that of the MOX rods.

3.4.4.8 Maximum Internal Pressure for Aluminum-Based Fuels

This section determines the bounding NAC-LWT transportation system internal pressure for the cask during normal conditions for aluminum-based research reactor fuel payloads (i.e., ANSTO, DIDO, MTR, and NRU/NRX fuels).

This analysis uses a combination of thermodynamic principles and dimensional analysis to calculate internal pressure. The basic functions employed are the Ideal Gas Law ($Pv = NRT$) and Dalton's Law of Partial Pressure. For a given cask free gas volume, internal pressure is a function of fission gas and cask backfill gas. The aluminum-based plate element does not contain any backfill gases or free volume within the clad.

Volume, temperature and backfill inputs required for the system pressure evaluations are summarized in Table 3.4-23. Standard temperature (22.2ºC) is used for the cask backfill initial temperature. This is a reasonable assumption, as backfill gas will rapidly increase in temperature during cask fill operations. As the payload generates decay heat, the average temperature at sealing is expected to be significantly higher than the standard temperature. Minor changes in temperature, translated to absolute temperature for pressure calculations, would not affect the results of the calculation significantly.

NRU/NRX payloads are not evaluated for system pressure as inputs into the analysis outlined below; all indicate a conservative system pressure being obtained from the MTR payload:

- Total heat load and temperature are below that of the MTR payload. Furthermore, total fuel and fissile material mass (U-Al, or UAl-Si) in the 18 NRU/NRX assemblies is less than MTR fuel mass (2 elements maximum).
- MTR elements were evaluated at higher burnup levels than NRU/NRX and therefore, the NRX/NRU fuel will contain less fission gas.

The void space in the NRU/NRX cask cavity is higher than that of the fully loaded MTR system as the NRU/NRX bottom basket spacer occupies very little volume versus a loaded MTR basket and the NRU/NRX fuel assembly and basket cross section contains significant void areas.

3.4.4.8.1 Fuel Fission Gas Content

SAS2H source term calculations documented in Chapter 5 were used to generate fuel gamma and neutron sources. Included in this determination are gram quantities of light elements, fission products and actinides. Fission gas inventories are extracted from the ANSTO spiral fuel, DIDO LEU, MEU and HEU, and maximum fuel mass MTR LEU, MEU and HEU cases. Only the ANSTO spiral fuel is required as ANSTO DIDO fuel is bounded by the standard DIDO fuel definition, and ANSTO MOATA fuel is bounded by the generic MTR fuel definition. Minimum transport cool times are chosen for the analysis. None of the payloads

generate significant quantities of actinide alpha decay gases, as plutonium generation is limited in the fuel elements modeled at 19% or greater ^{235}U enrichments. The negligible buildup of alpha decay gases makes the choice of cool time insignificant to the analysis results.

Fission product and actinide gas inventories in grams extracted from the SAS2H outputs are listed in Table 3.4-24. Fission gas inventories in grams are converted to inventories in moles using Avogadro's number and the atomic mass of each isotope. As illustrated in Table 3.4-25, the total molar quantity of fission gas does not vary significantly between various enrichment levels for a given fuel type. The MTR elements produce the bounding fission gas content. The majority of fission gases, ~85%, is comprised of Xenon isotopes. There is no significant quantity of helium or tritium.

3.4.4.8.2 Normal Condition Pressures

Using Dalton's Law of partial pressures, the NAC-LWT cask cavity pressure may be calculated by first determining the partial pressure of the released fission gases and adding it to the cask backfill gas. Gas available for release from the fuel elements depends on the fueled surface area exposed by clad-through damage.

Cask Backfill Gas

Based on the ideal gas law, the pressure of the cask backfill gas is simply the ratio of the backfill temperature at testing (assumed at standard temperature) to the operating condition temperature.

$$P_{\text{Cask Backfill}} = 14.7 \text{ psi} \times \frac{T_{\text{Operating Temperature}}}{T_{\text{Standard Conditions}}}$$

Partial pressures of the cask backfill at normal and accident conditions are 23.8 psi and 25.9 psi for ANSTO/DIDO and MTR payloads, respectively.

Fission Gas

The pressure of rod fission gas is calculated using release fraction (or surface area fraction assuming 100% release from the unclad fuel meat), the quantity of fission gas in the element, the cask cavity backfill temperature and the cask cavity gas temperature.

$$n = \text{Fission Gas Moles (Cask)} \times \text{Release Fraction}$$

$$P = \frac{nRT}{V}$$

For the MTR LEU fuel, a sample calculation based on a 50% surface area exposed with a 100% gas release from the exposed surface area is:

$$P_{\text{Fission Gas}} = = \frac{0.455\frac{\text{moles}}{\text{element}} \times 42\frac{\text{elements}}{\text{cask}} \times 50\% \times 0.08206\frac{\text{liters} - \text{atm}}{\text{k} - \text{mole}} \times 470.2\text{K}}{229.3\,\text{liters}}$$

$$P_{\text{Fission Gas}} = 1.61\,\text{atm} = 23.7\,\text{psi}$$

Normal Pressure

Normal and accident pressures can now be generated at the various release/surface area fractions. Only LEU MTR and DIDO elements are summarized as they produce the maximum MTR and DIDO fission gas quantities and, therefore, pressures. Results are summarized in Table 3.4-26 as partial pressure of the fission gas and total system pressure in psia and psig. To meet a 50 psig system structural analysis limit, a maximum 80% of the MTR and 100% of the DIDO/ANSTO gases can be assumed to escape from the plates. As MTR plates with significant through-clad damage will have released a portion of their gas inventory prior to transport (i.e., during in-core use, storage and cask vacuum drying), system pressure is expected to remain below 50 psig when considering all fission gas released from the MTR plates.

Note that experimental data summarized in WSRC-TR-98-00317, October 1998, "Bases for Containment Analysis for Transportation of Aluminum–Based Spent Nuclear Fuel," Section 5.3.1, indicates no significant release of gases from exposed fuel material occurs at the temperature (200°C -300°C) of the NAC-LWT cask cavity and contents with aluminum-based fuel payload.





3.4.4.10 Maximum Internal Pressure for SrF_2 Capsule Content



3.4.5 Maximum Thermal Stresses

The conditions within the range of normal transport conditions and fabrication that result in the limiting combination of thermal gradient and isothermal stresses have been evaluated. The analyses are performed in Sections 2.5 through 2.7. The resulting isothermal temperature plots are presented in Section 2.10.3.

3.4.6 Evaluation of Package Performance for Normal Conditions of Transport

Section 3.4 provides analyses of the NAC-LWT cask thermal performance for normal transport conditions. The analyses demonstrate that the NAC-LWT cask thermal performance meets the criteria of 10 CFR 71 for normal transport conditions.

The maximum fuel rod cladding temperature under normal transport conditions is 472ºF. This is well below the temperatures that can cause fuel rod cladding deterioration. Components important to safety remain within their safe operating ranges (Section 3.3) during normal transport conditions. Thermally induced stresses (in combination with pressure and mechanical load stresses) are less than allowable stresses as shown in Section 2.6. Thus, the analyses of Section 3.4 demonstrate that the NAC-LWT cask fulfills the heat rejection criteria established in Section 3.1 for normal transport conditions.

Figure 3.4-1 HEATING5 Normal Transport Conditions Thermal Model

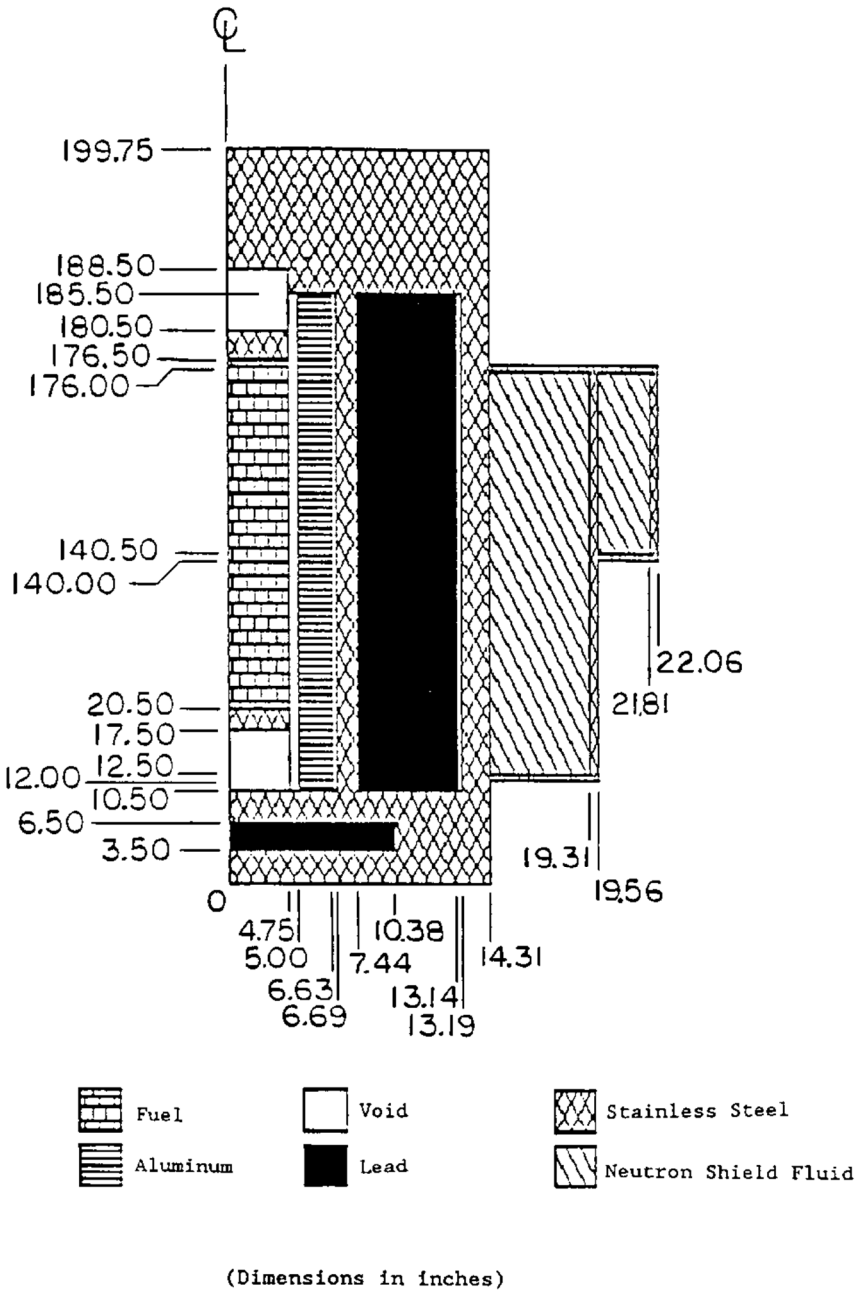

Figure 3.4-2 Design Basis PWR Fuel Assembly Axial Flux Distribution

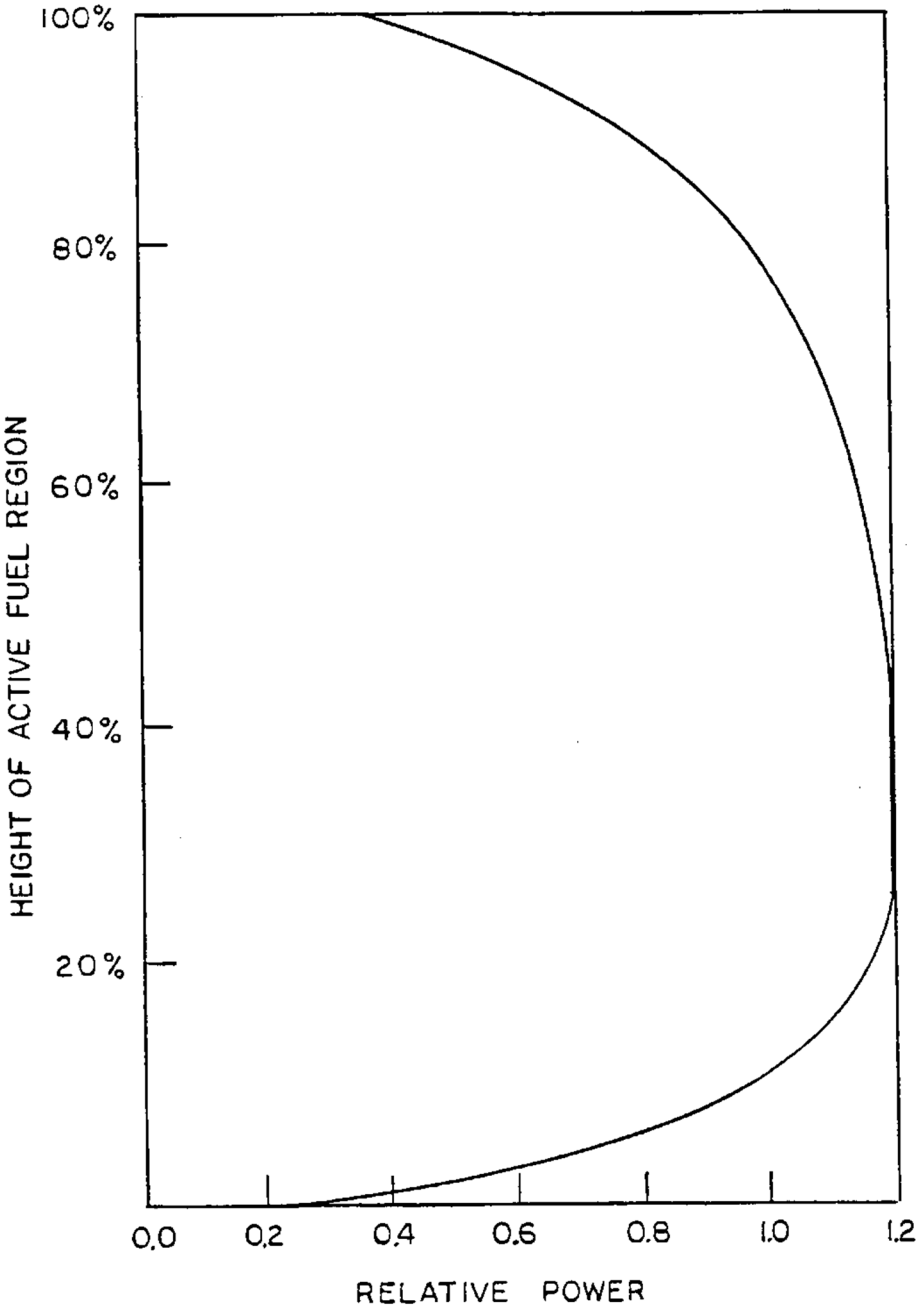

Figure 3.4-3 ANSYS MTR Fuel Design Basis Heat Load Thermal Model (Uniform 30-Watt/Element Configuration Heat Load)

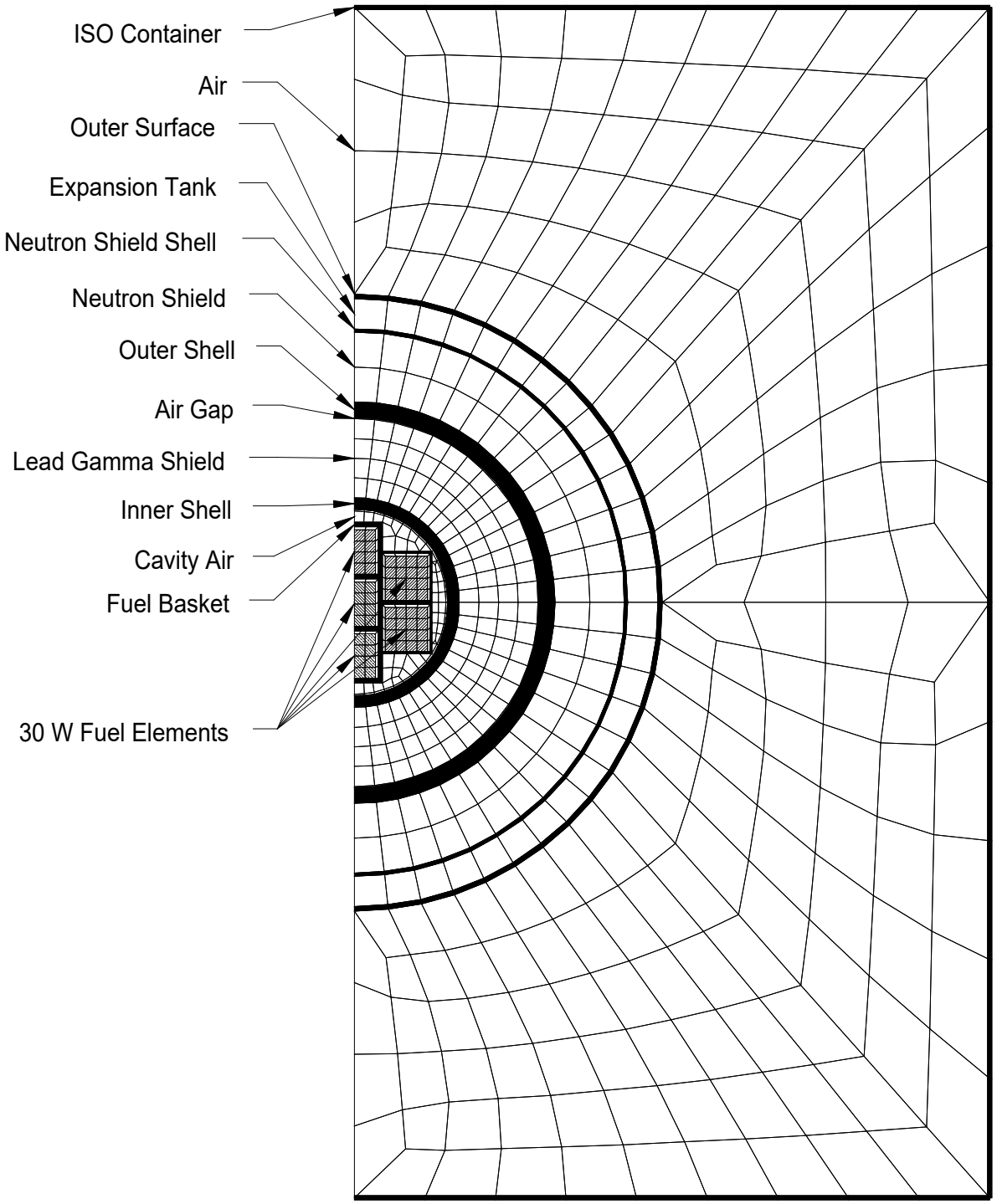

Figure 3.4-4 MTR Fuel Variable Decay Heat ANSYS Thermal Model (120-Watt / 70-Watt / 20-Watt Configuration Heat Load)

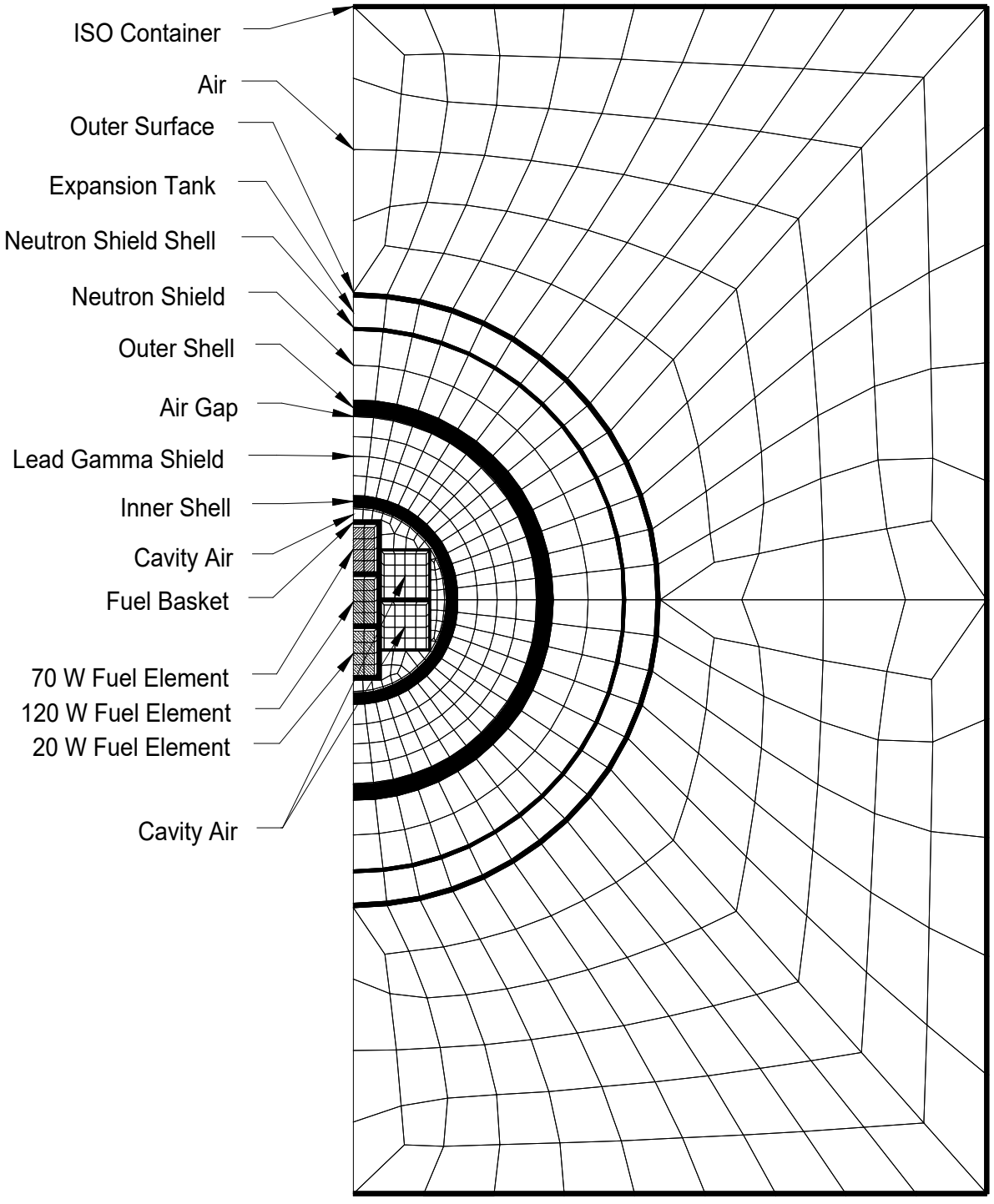

Figure 3.4-5 Thermal Resistance Model for TRIGA Fuel Elements

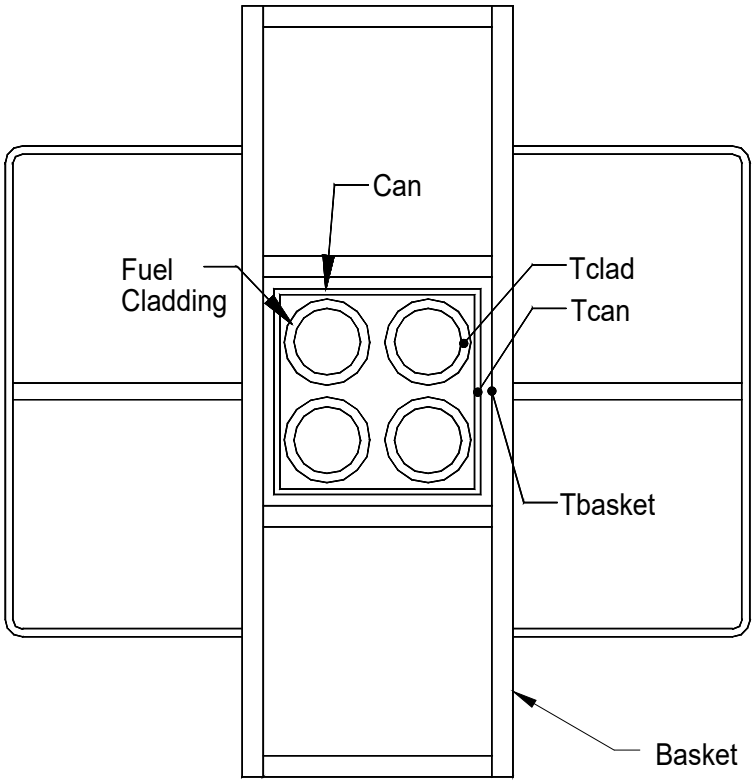

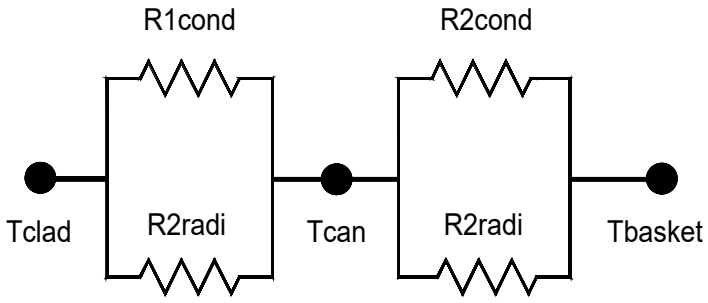

Where:

Rcond =	Thermal resistance for conduction	Tclad =	Maximum fuel cladding temperature
Rradi =	Thermal resistance for radiation	Tcan =	Maximum can temperature
Tbasket =	Maximum basket temperature		

Figure 3.4-6 Modeling Details for the MTR Fuel Assembly Resting on the Surface of the NAC-LWT MTR Basket

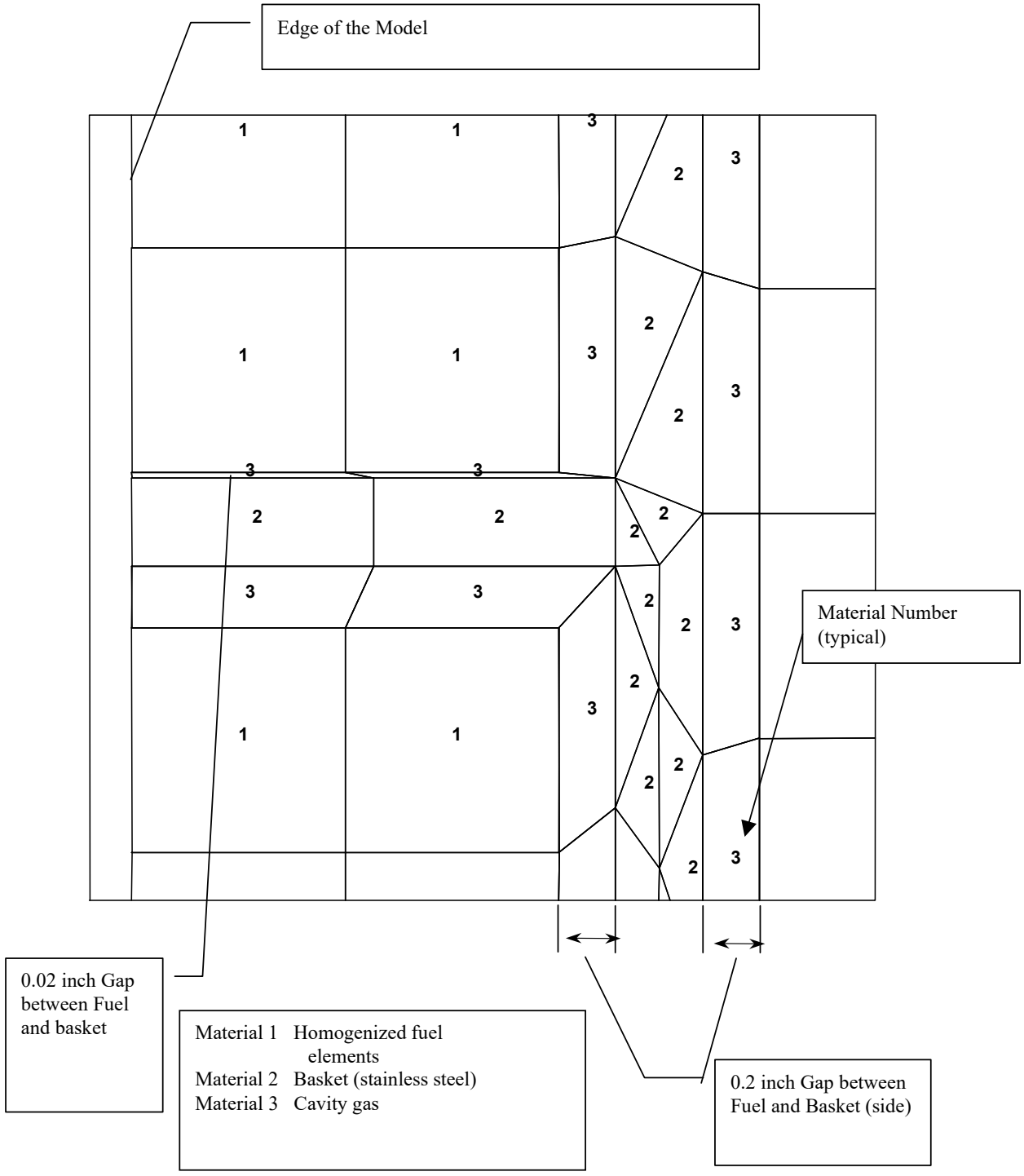

Figure 3.4-7 Finite Element Thermal Model for TRIGA Fuel Cluster Rods

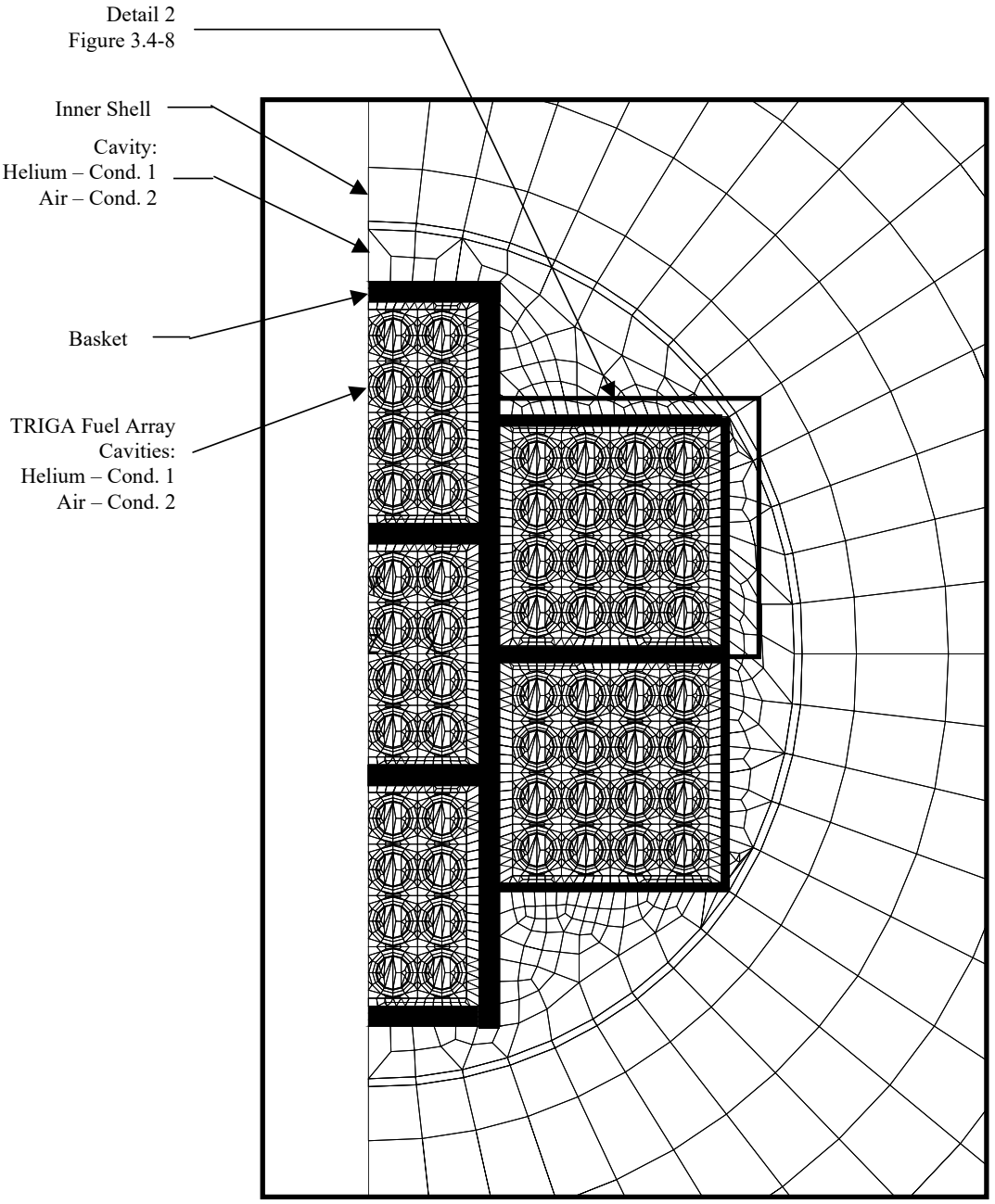

Figure 3.4-8 Details of the TRIGA Fuel Cluster Rods in the Finite Element Model

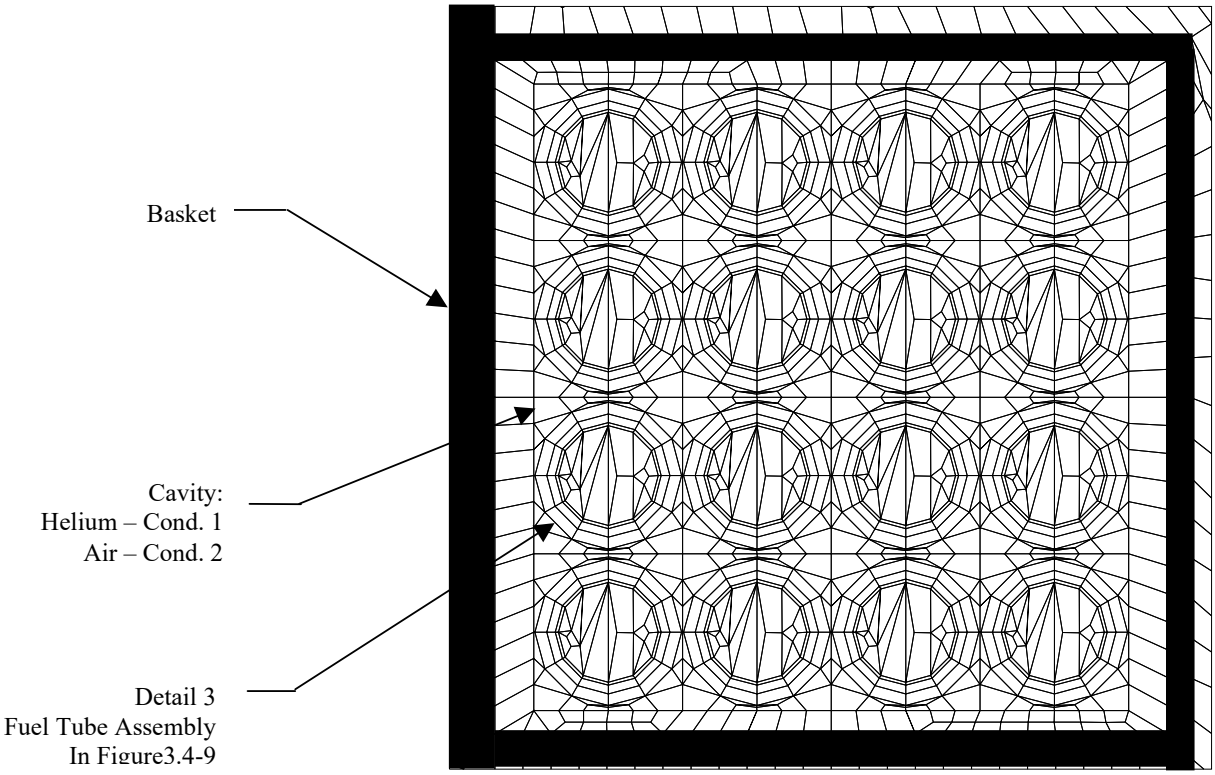

Figure 3.4-9 Individual TRIGA Fuel Cluster Rod Finite Element Model Details

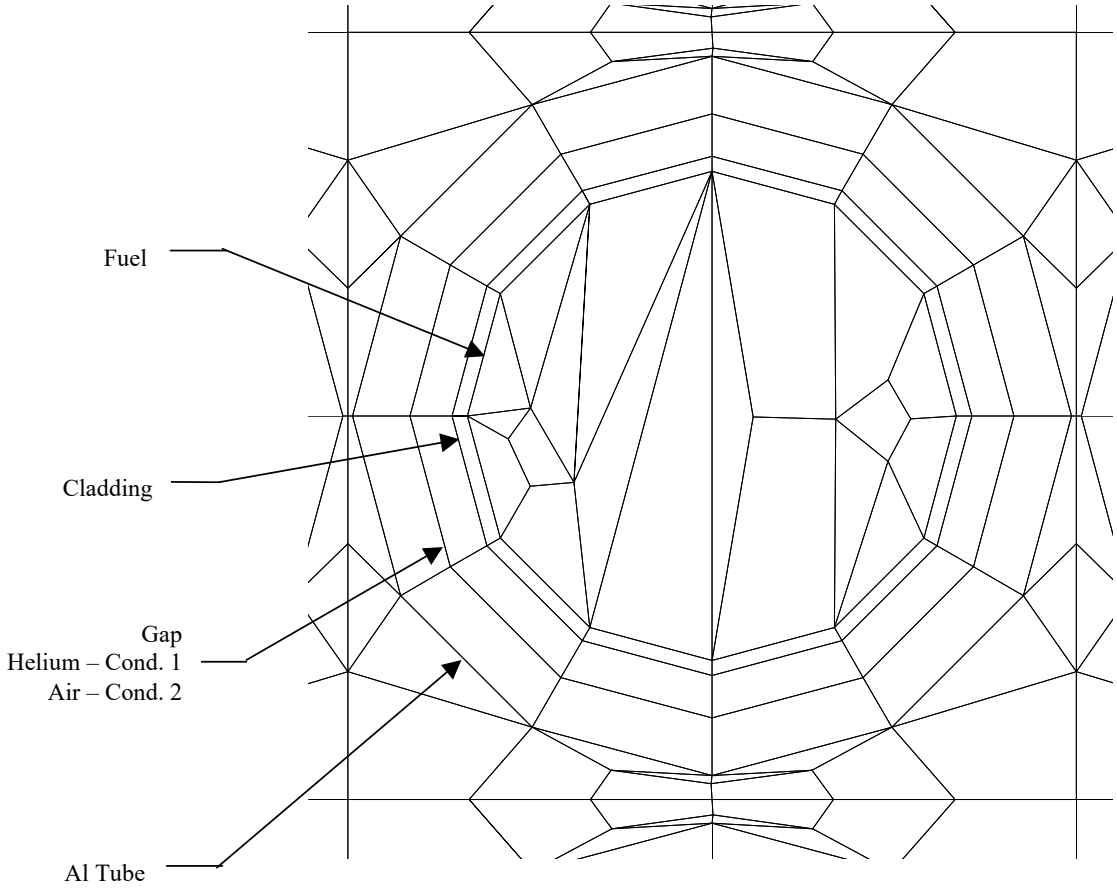

Figure 3.4-10 PWR and BWR High Burnup Fuel Rods Normal Condition ANSYS Thermal Model (Condition 1)

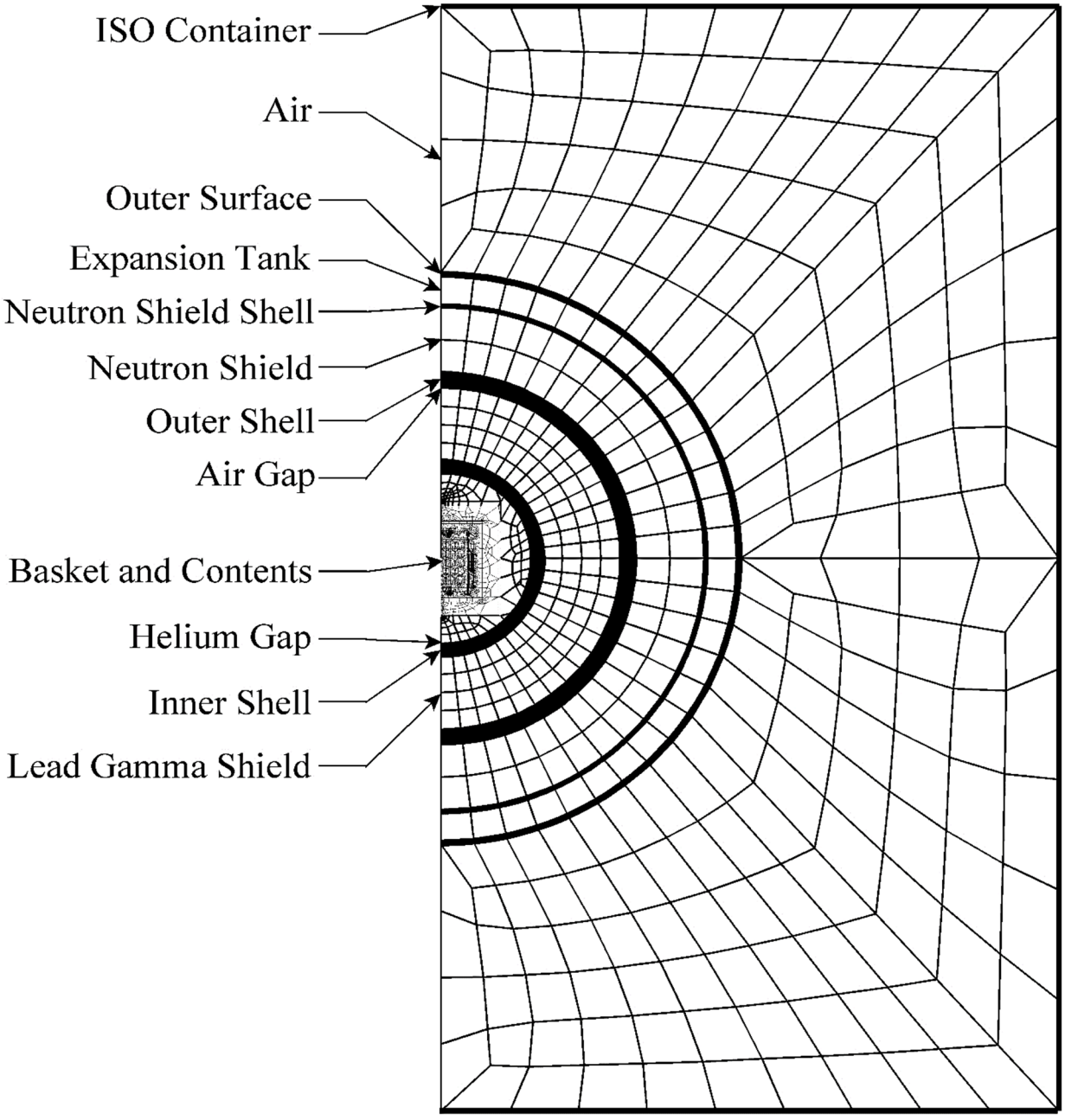

Figure 3.4-11 Close-up of PWR and BWR High Burnup Fuel Rods Normal Condition ANSYS Thermal Model

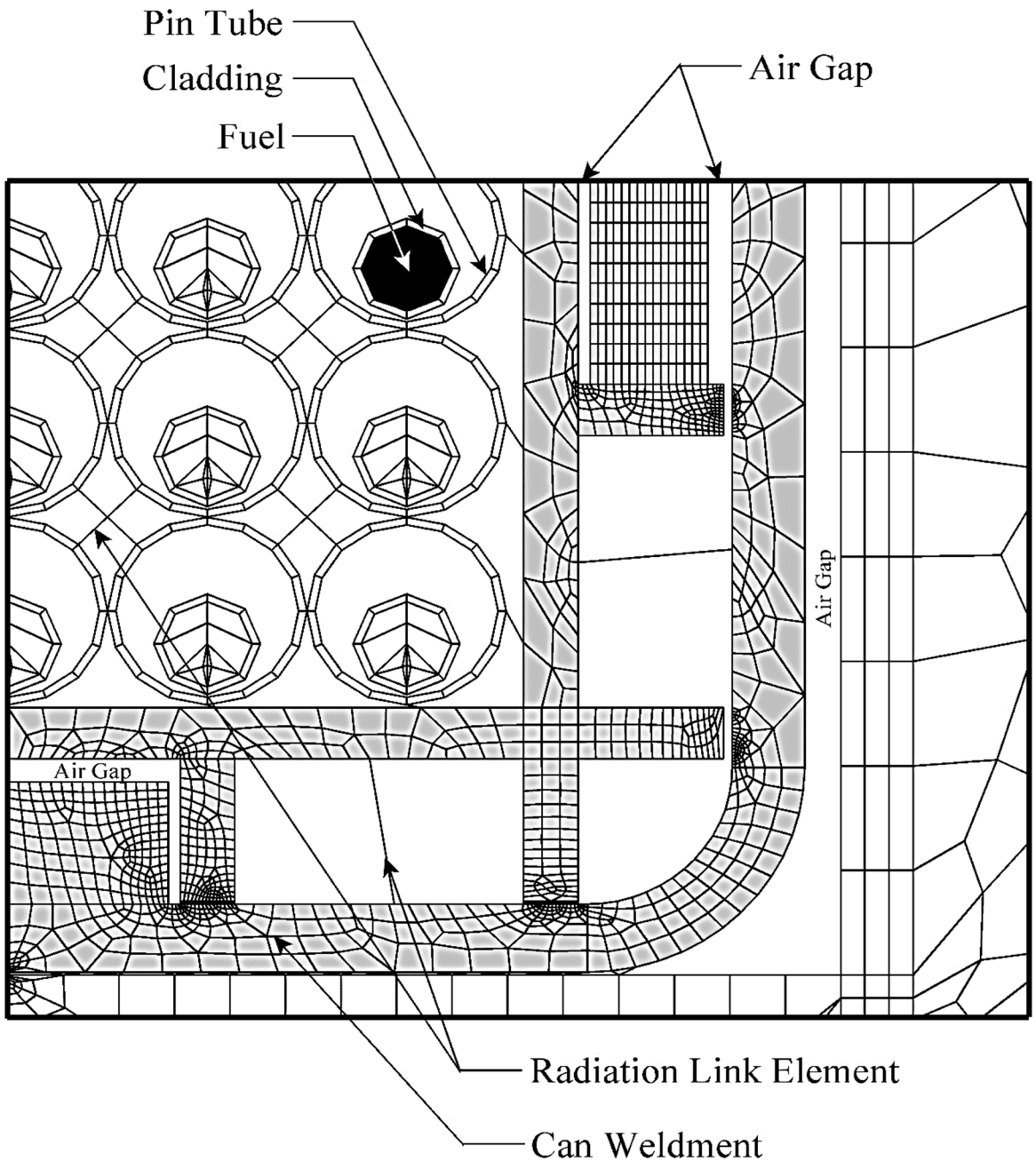

Note: air elements are not shown for clarity.

Figure 3.4-12 PWR and BWR High Burnup Fuel Rods Normal Condition ANSYS Thermal Model (Condition 2)

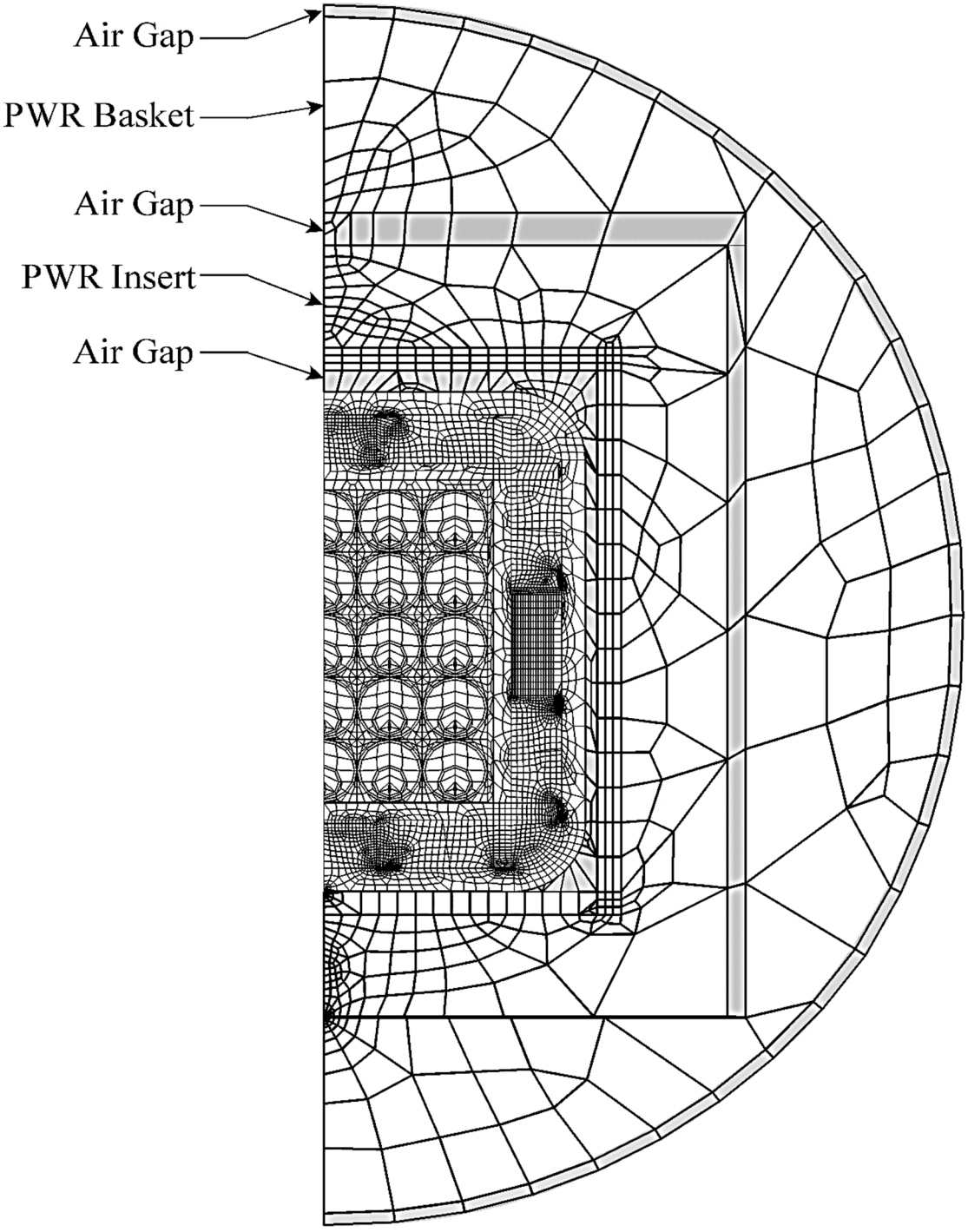

Figure 3.4-13 Finite Element Thermal Model for MTR Fuel Element

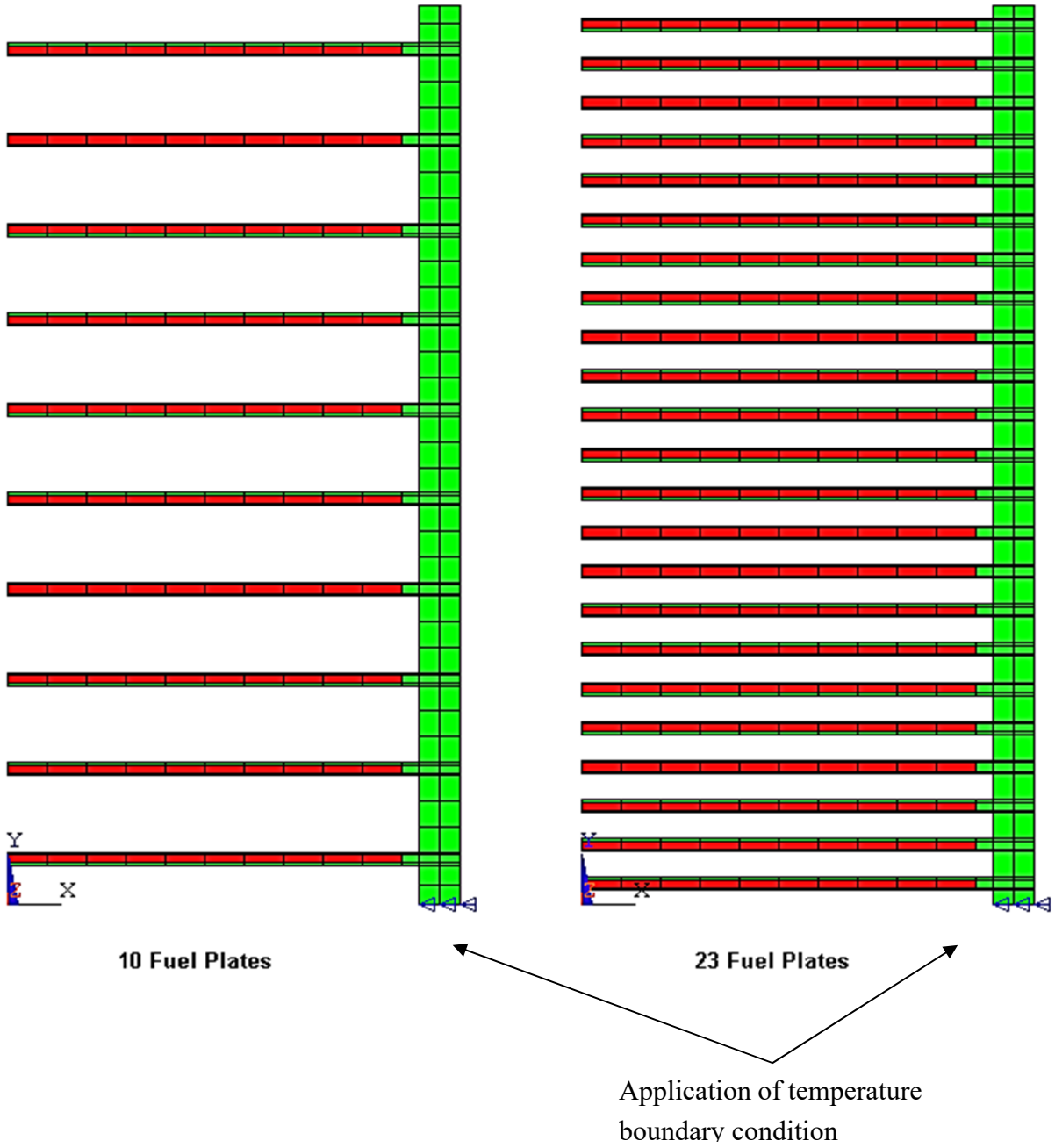

(Air elements omitted for clarity)

Figure 3.4-14 Detailed DIDO Basket Module Finite Element Model

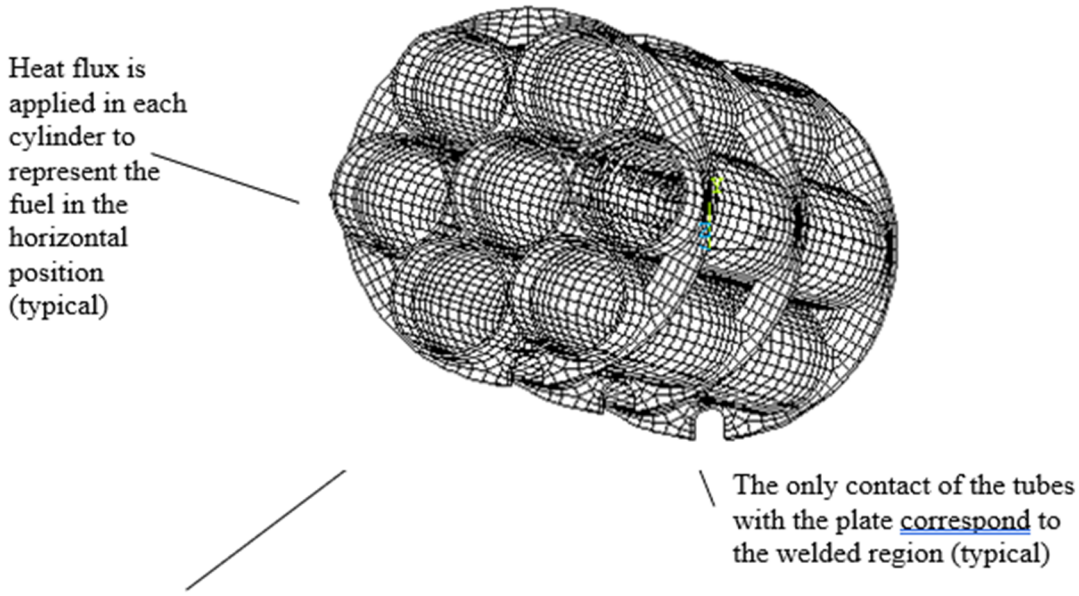

Figure 3.4-15 Detailed DIDO Fuel Assembly Model

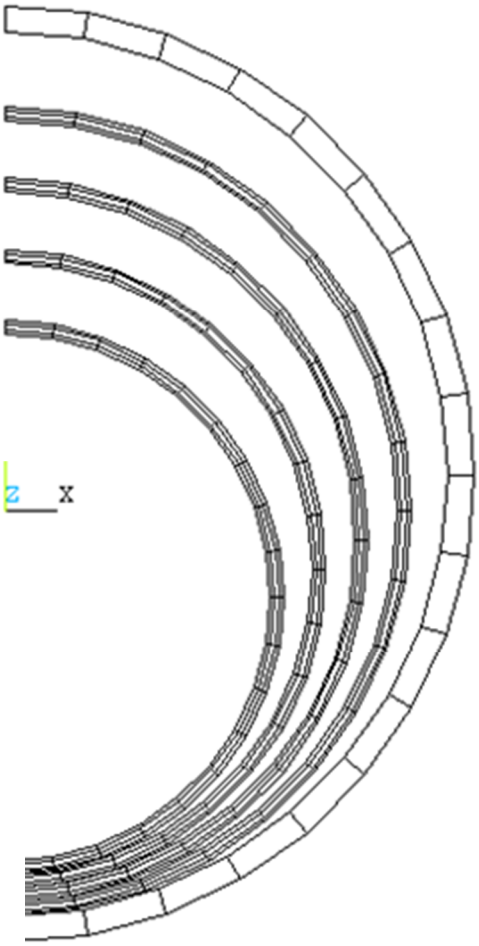

Figure 3.4-16 ANSYS Model for BWR 7 × 7 Fuel Lattice with 25 High Burnup Fuel Rods

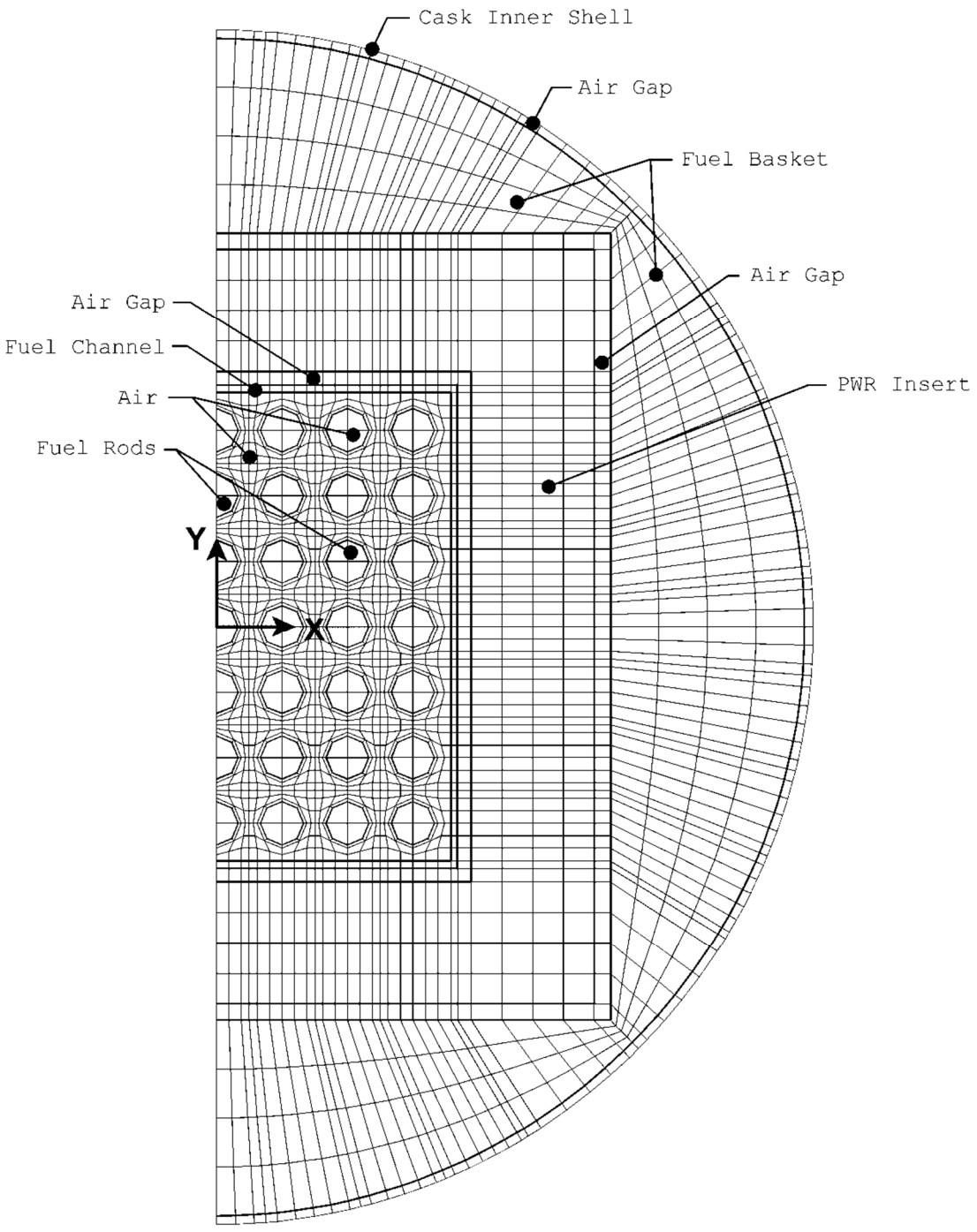

Figure 3.4-17 Fuel Rod Locations in the Thermal Model for Damaged Fuel

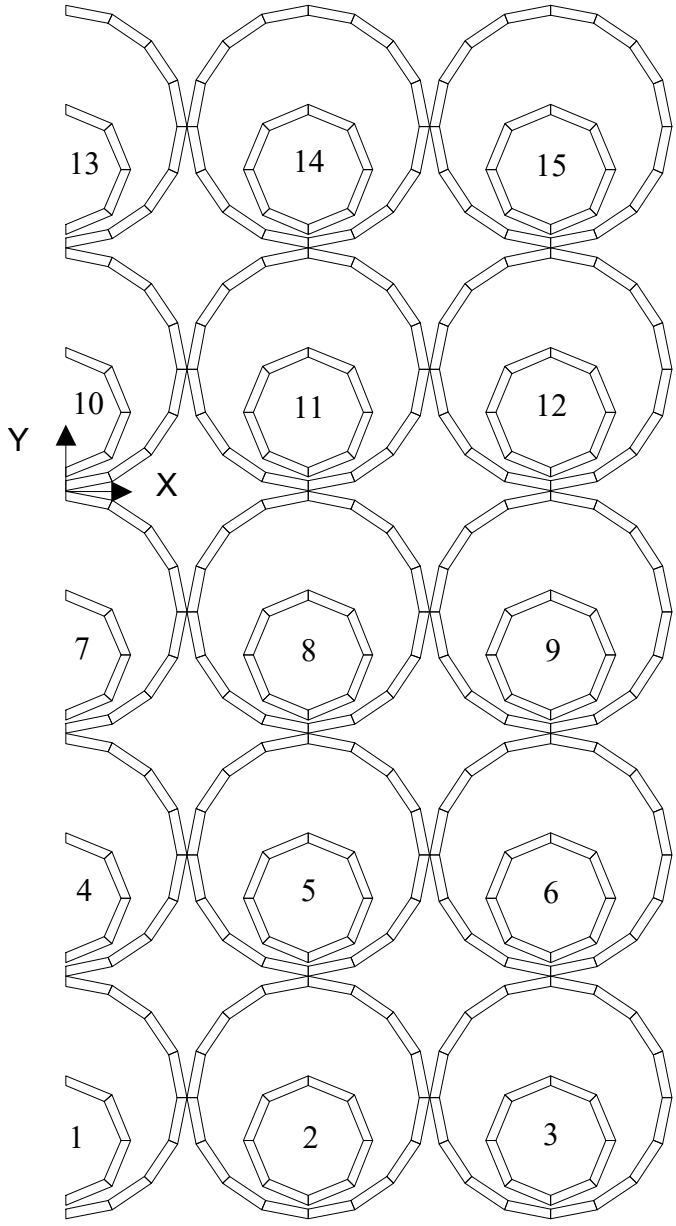

Figure 3.4-18 Finite Element Model for TPBARs

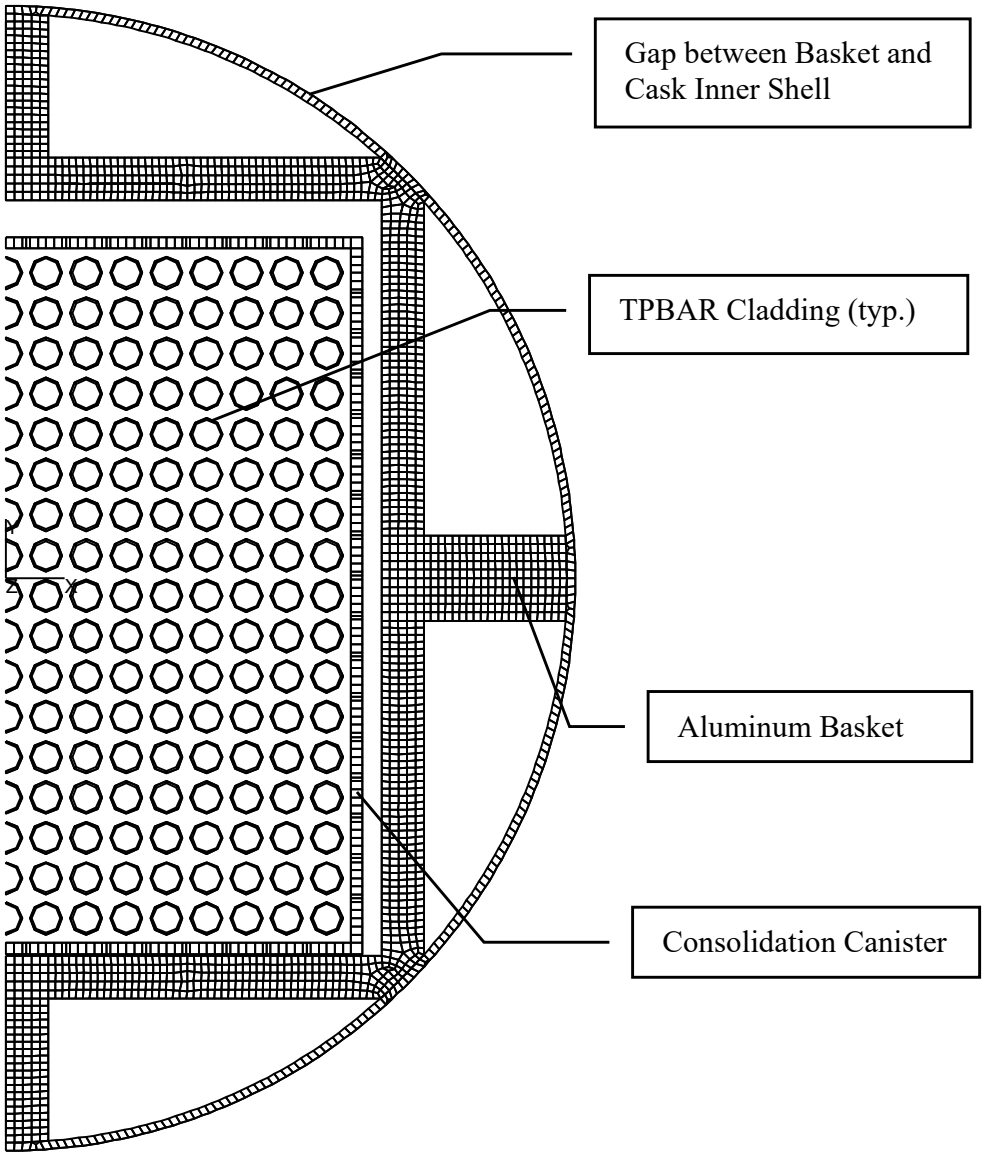

Note: Helium elements, except the gap between the basket and cask inner shell, are not shown for clarity.

Figure 3.4-19 Finite Element Model for MOATA Plate Fuel – ANSTO

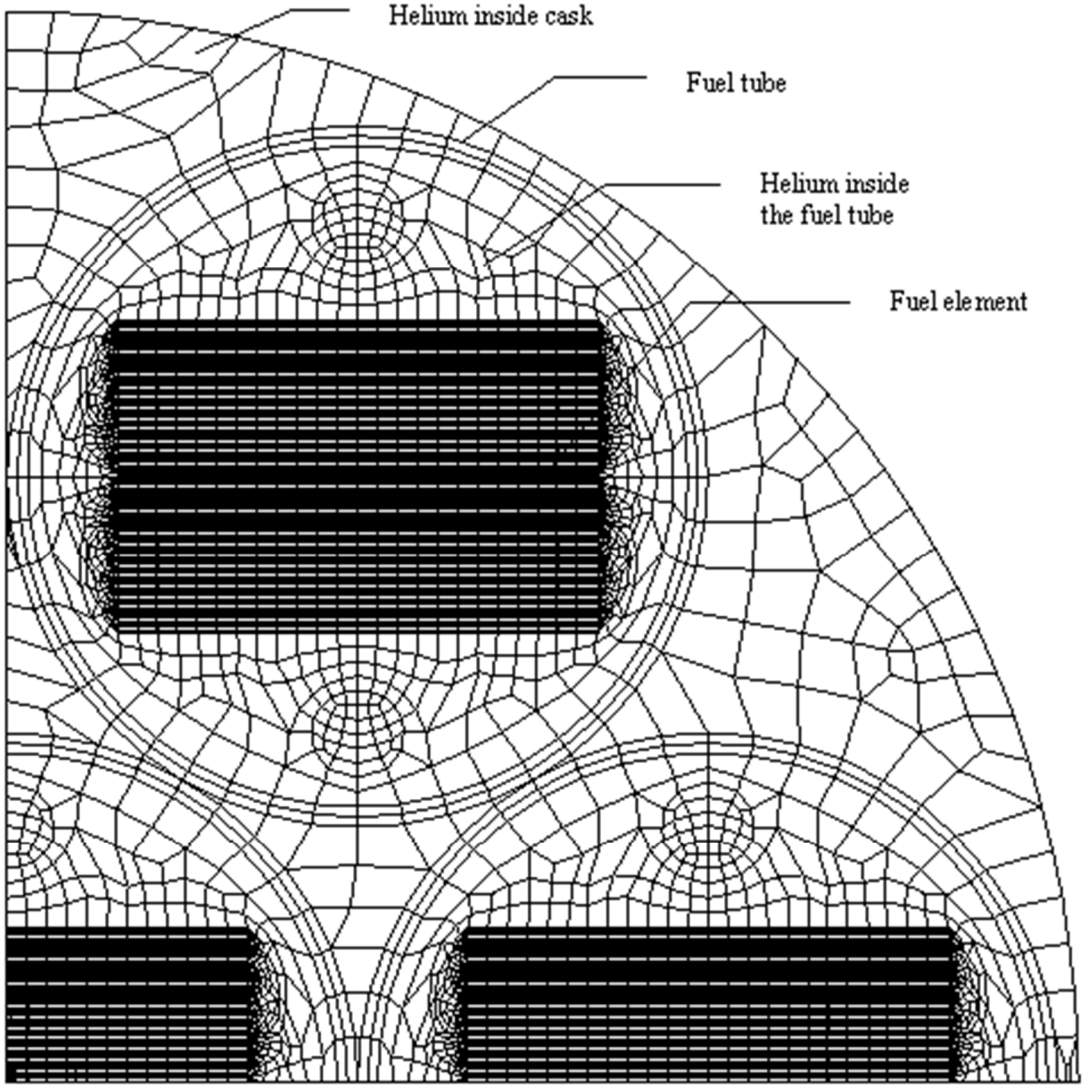

Figure 3.4-20 Finite Element Model for Mark III Spiral Fuel – ANSTO

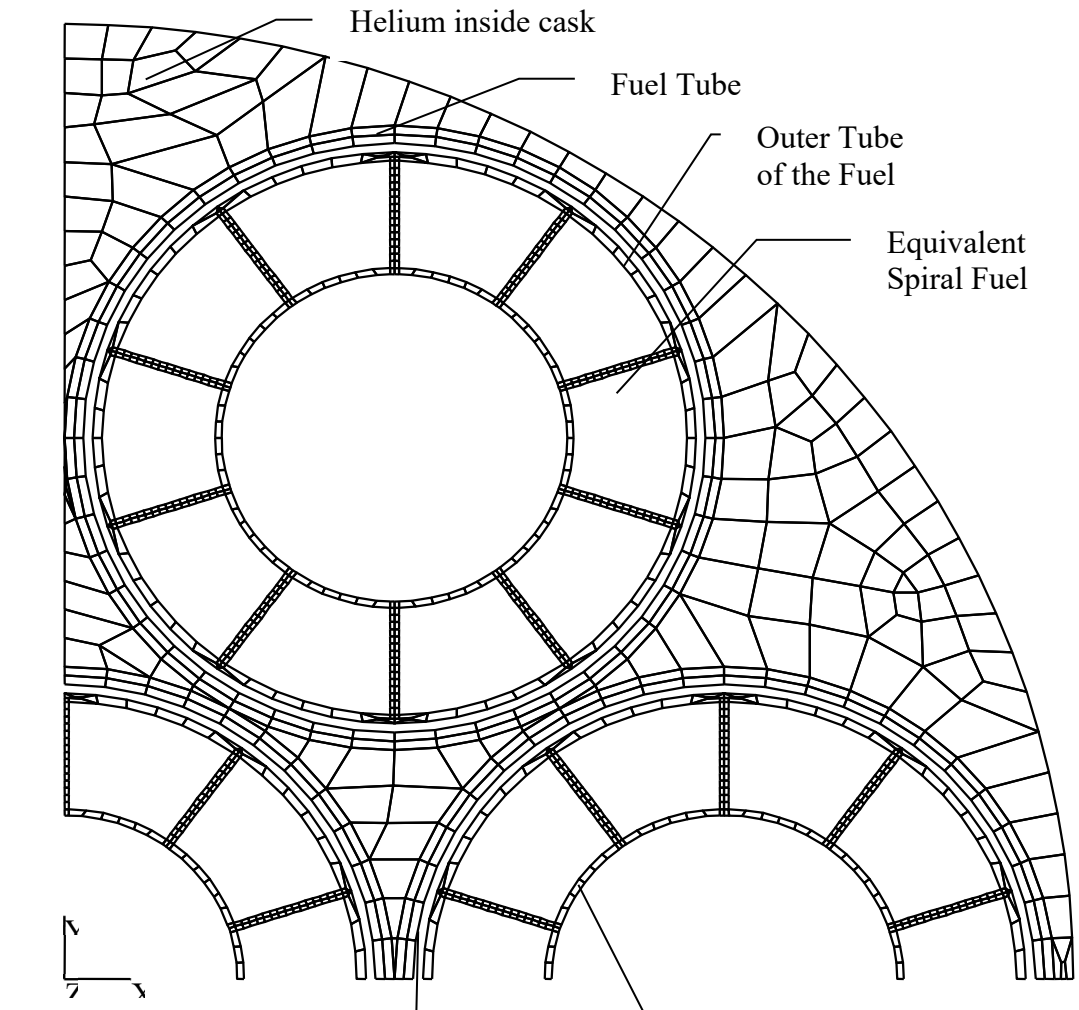

Figure 3.4-21 Finite Element Model for NRU/NRX Fuels in NAC-LWT Cask

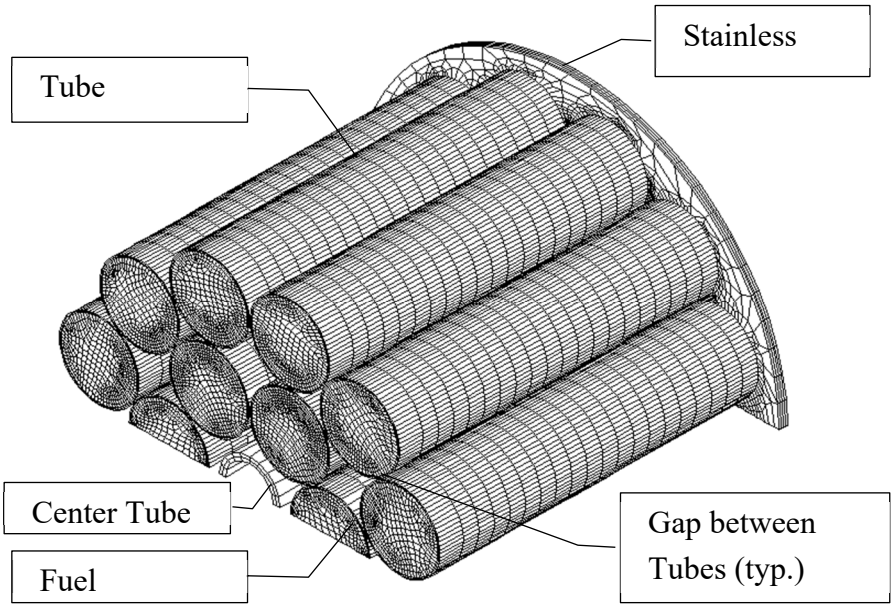

Helium elements are not shown for clarity.

Figure 3.4-22 Finite Element Model for HEUNL in NAC-LWT Cask

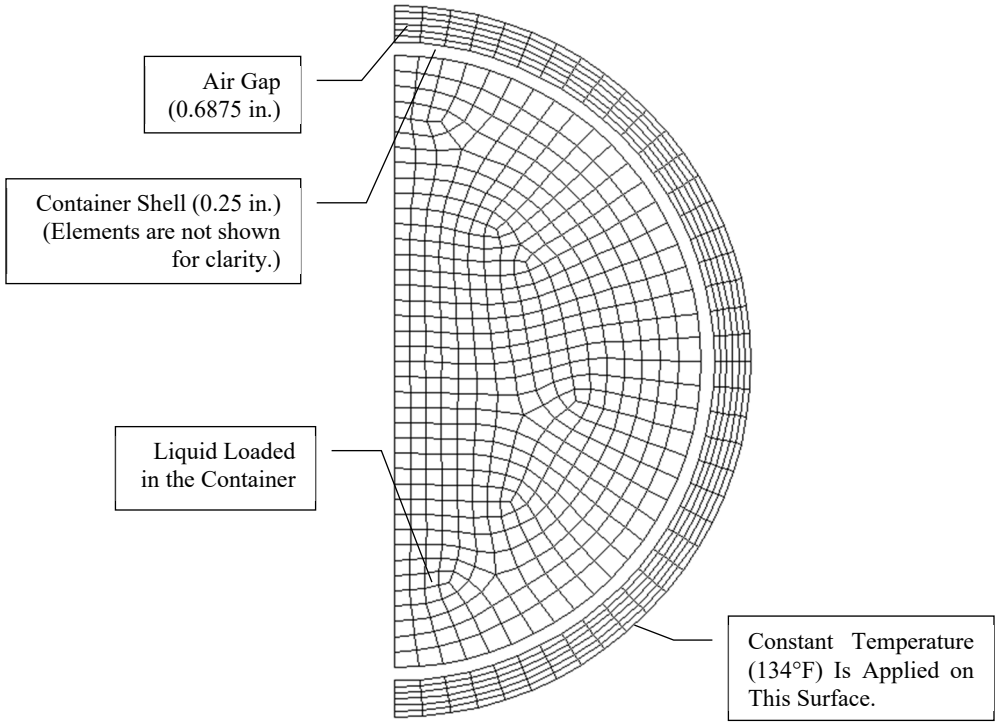

Figure 3.4-23 Finite Element Model for SLOWPOKE Fuel Core Basket

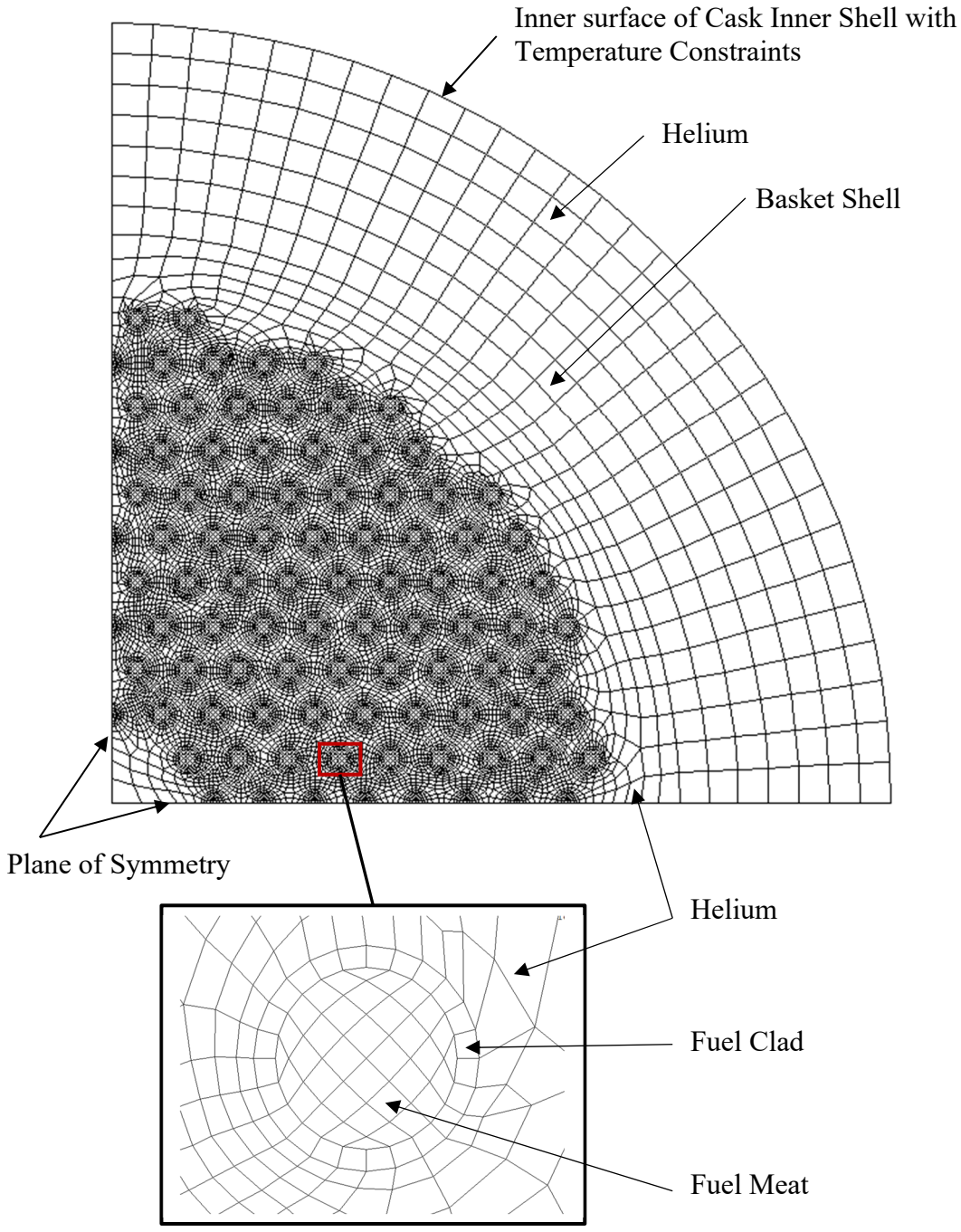

Figure 3.4-24 Finite Element Model of the BUP-500 Capsule Configuration



Figure 3.4-25 Finite Element Model of a Loaded BUP-500 Capsule

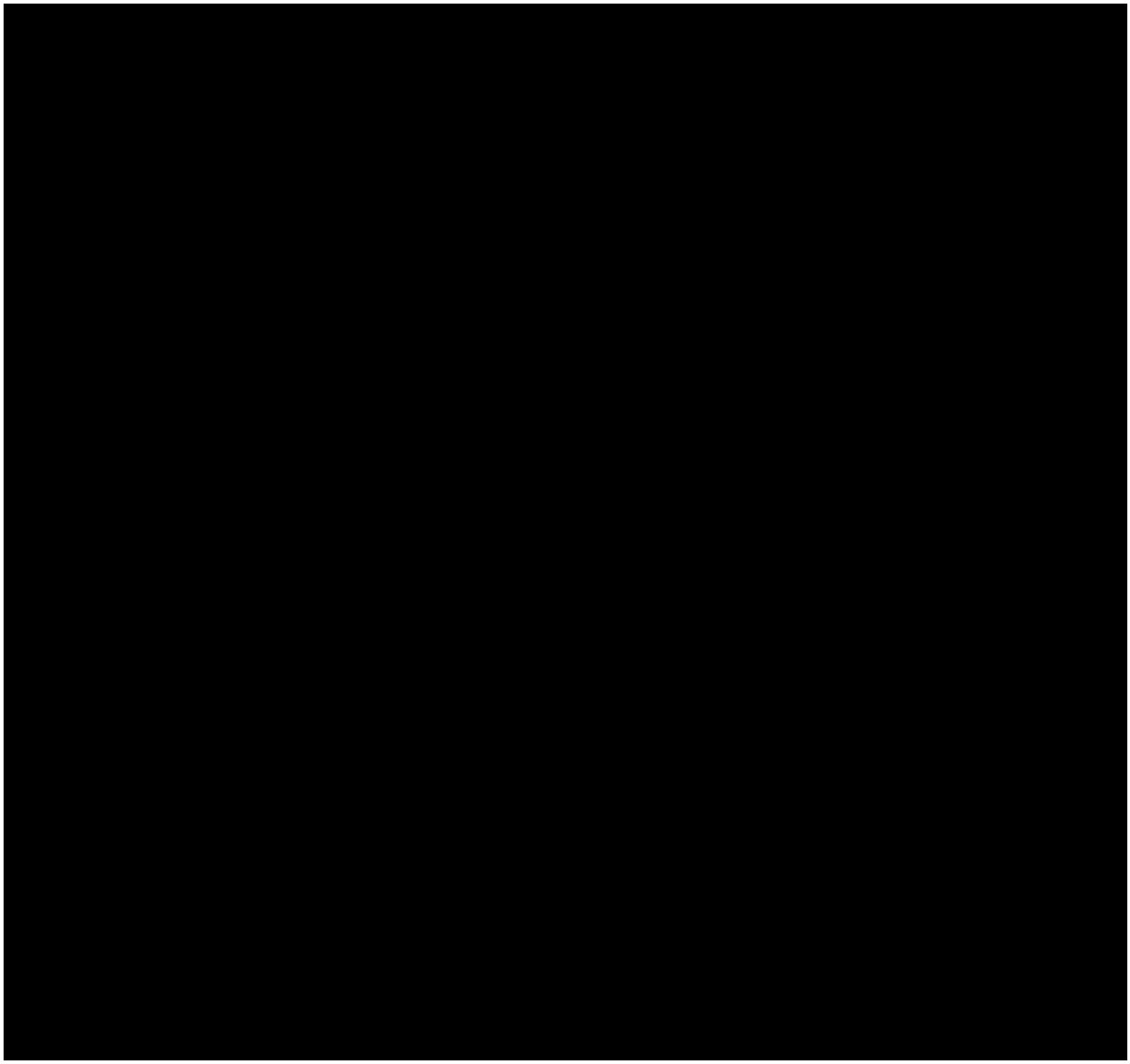

Figure 3.4-26 Finite Element Model of Radial Gaps in Capsule Region for the BUP-500 Configuration

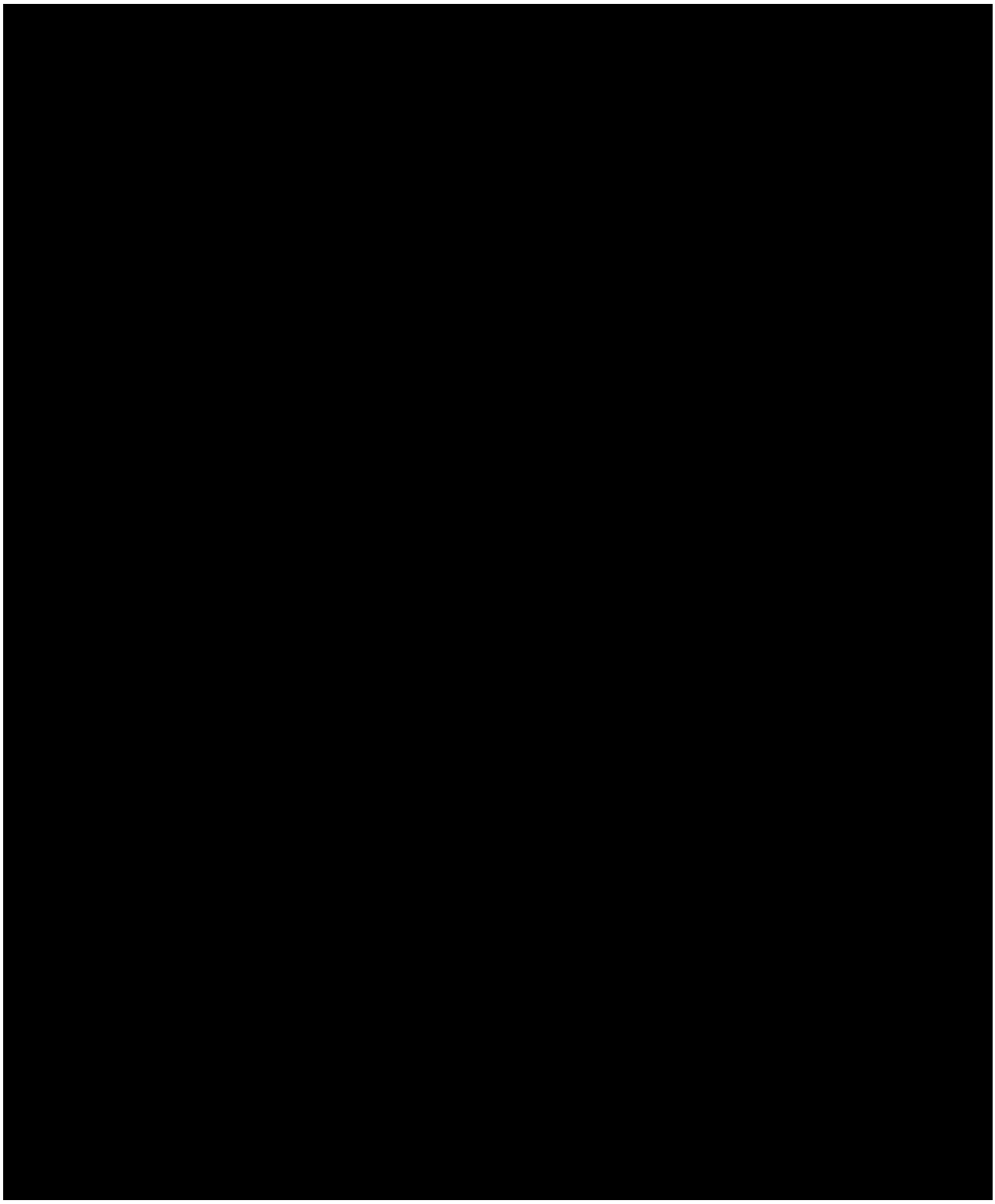

Figure 3.4-27 Finite Element Model of Cask Components for SrF_2 Capsules

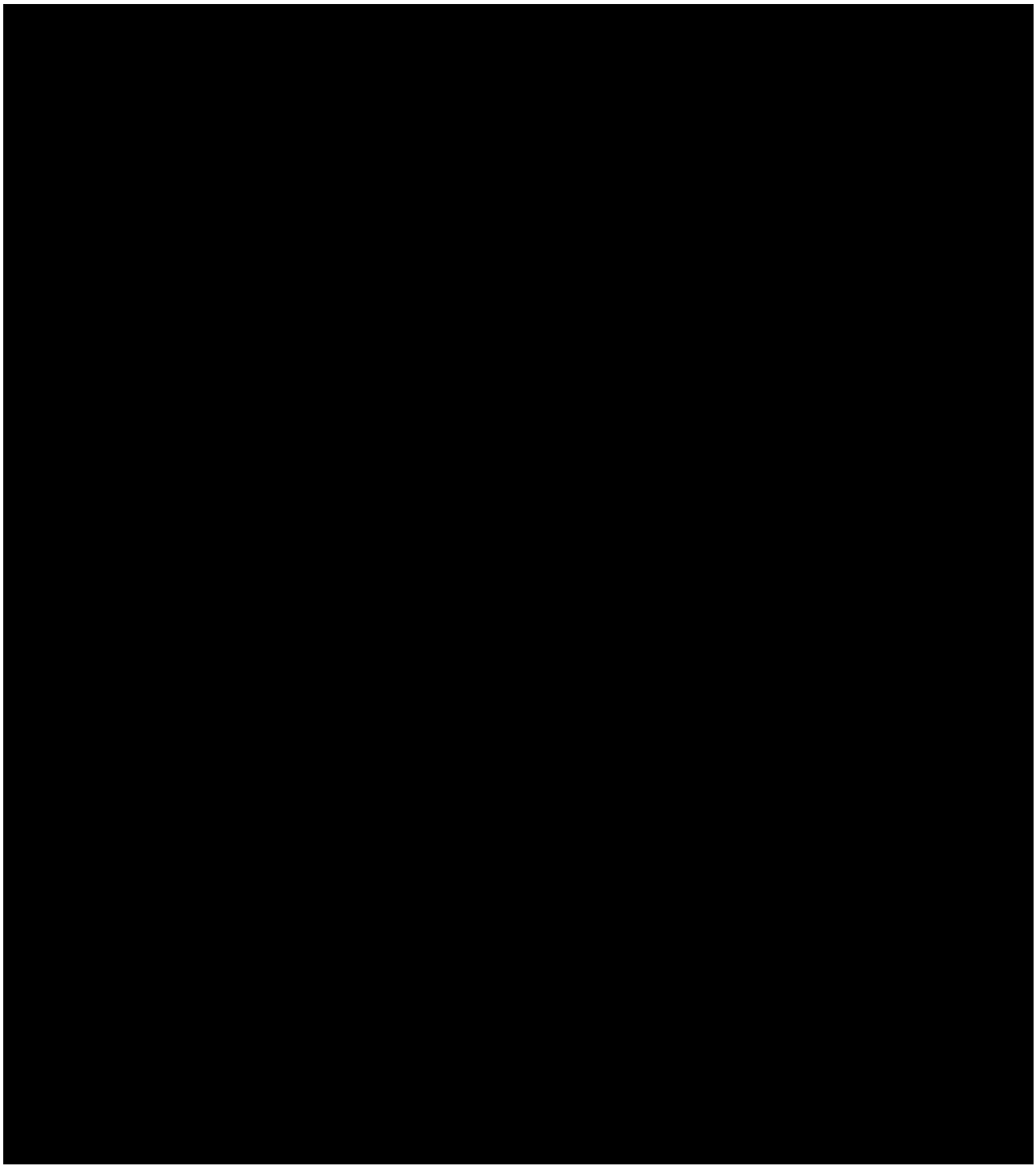

Figure 3.4-28 Finite Element Model for the WESF Capsule Container Configuration

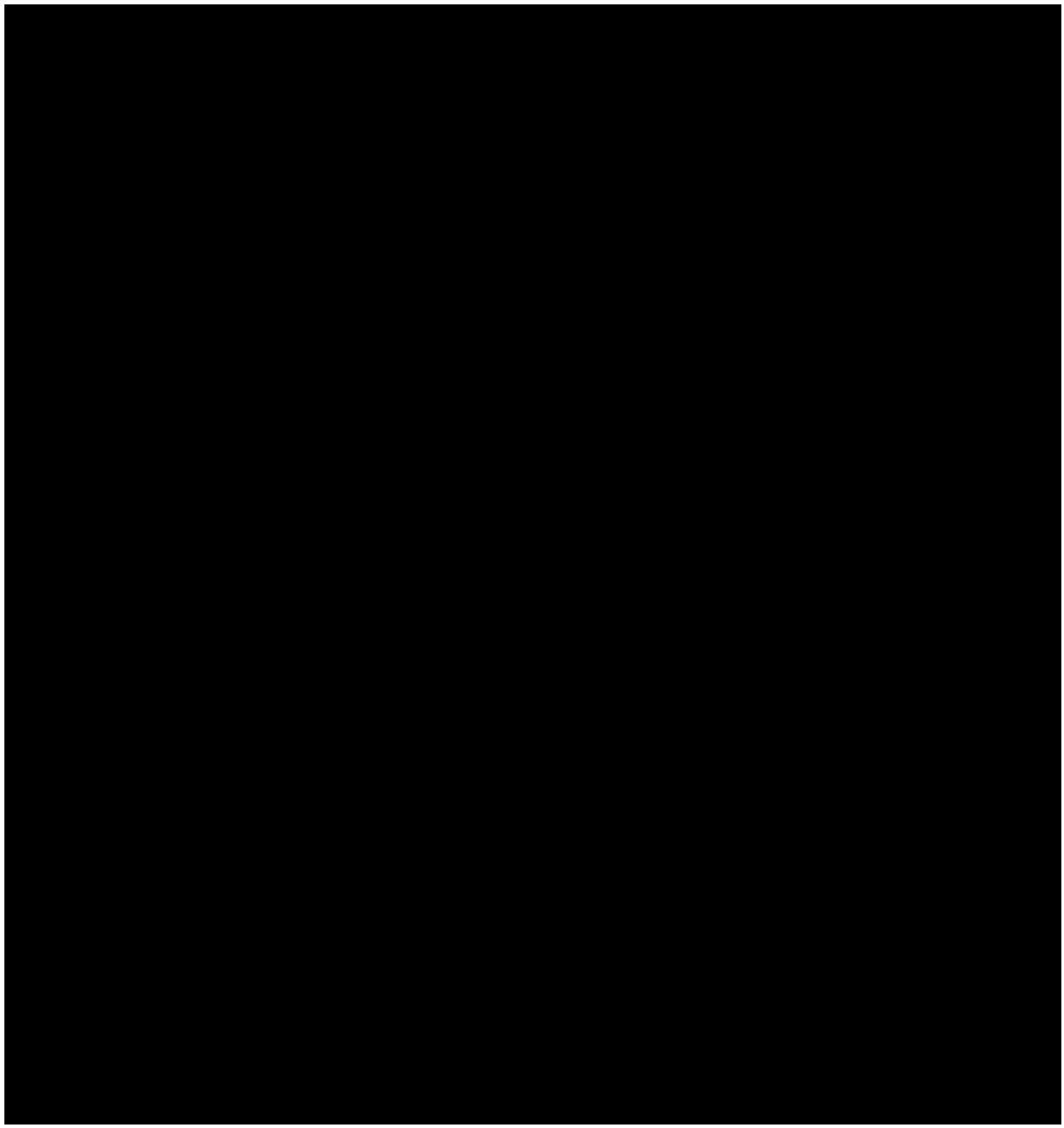

Figure 3.4-29 Finite Element Model of a Loaded WESF Capsule

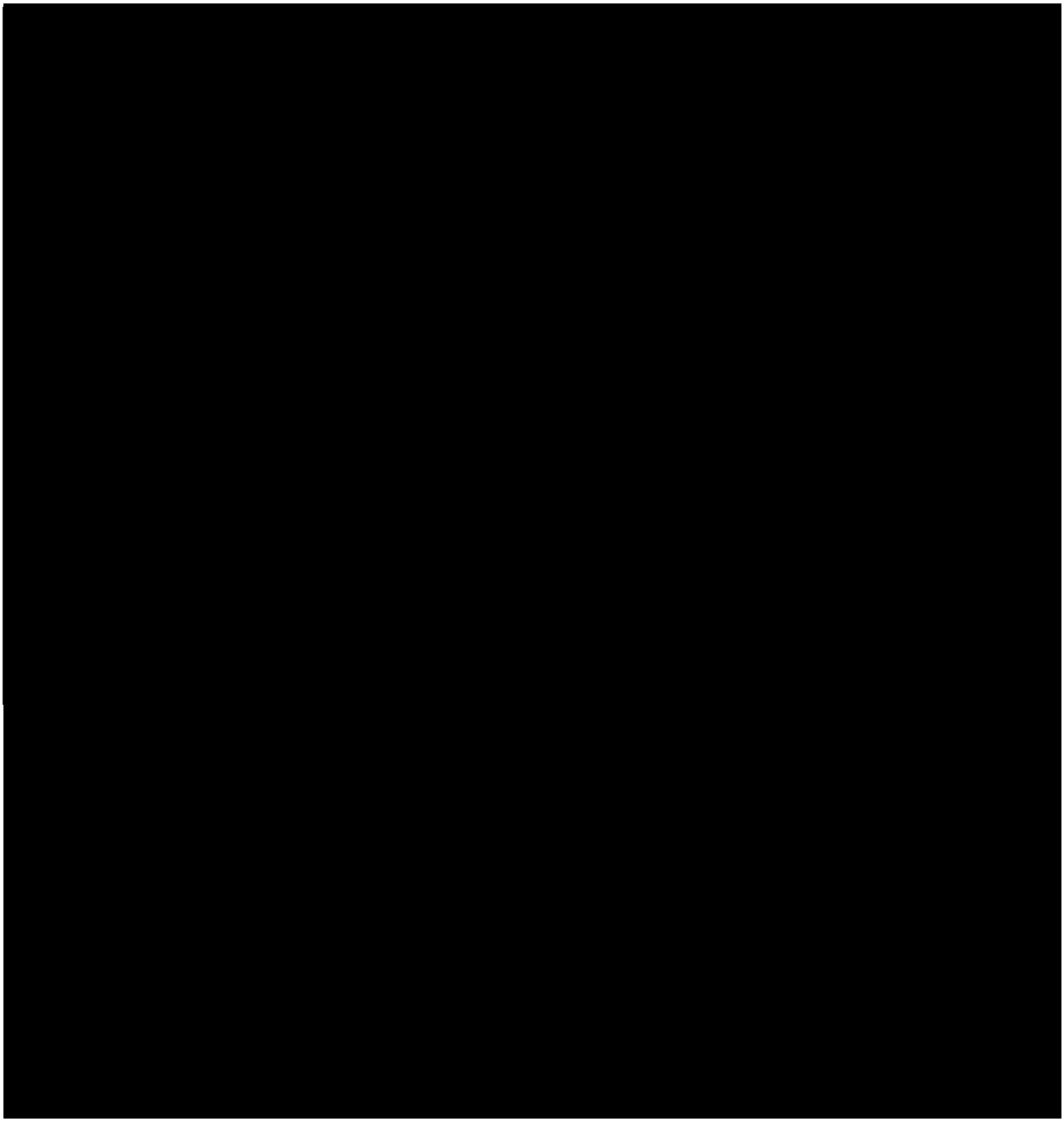

Figure 3.4-30 Finite Element Model of Radial Gaps in the Capsule Region for the WESF Capsule Container Configuration

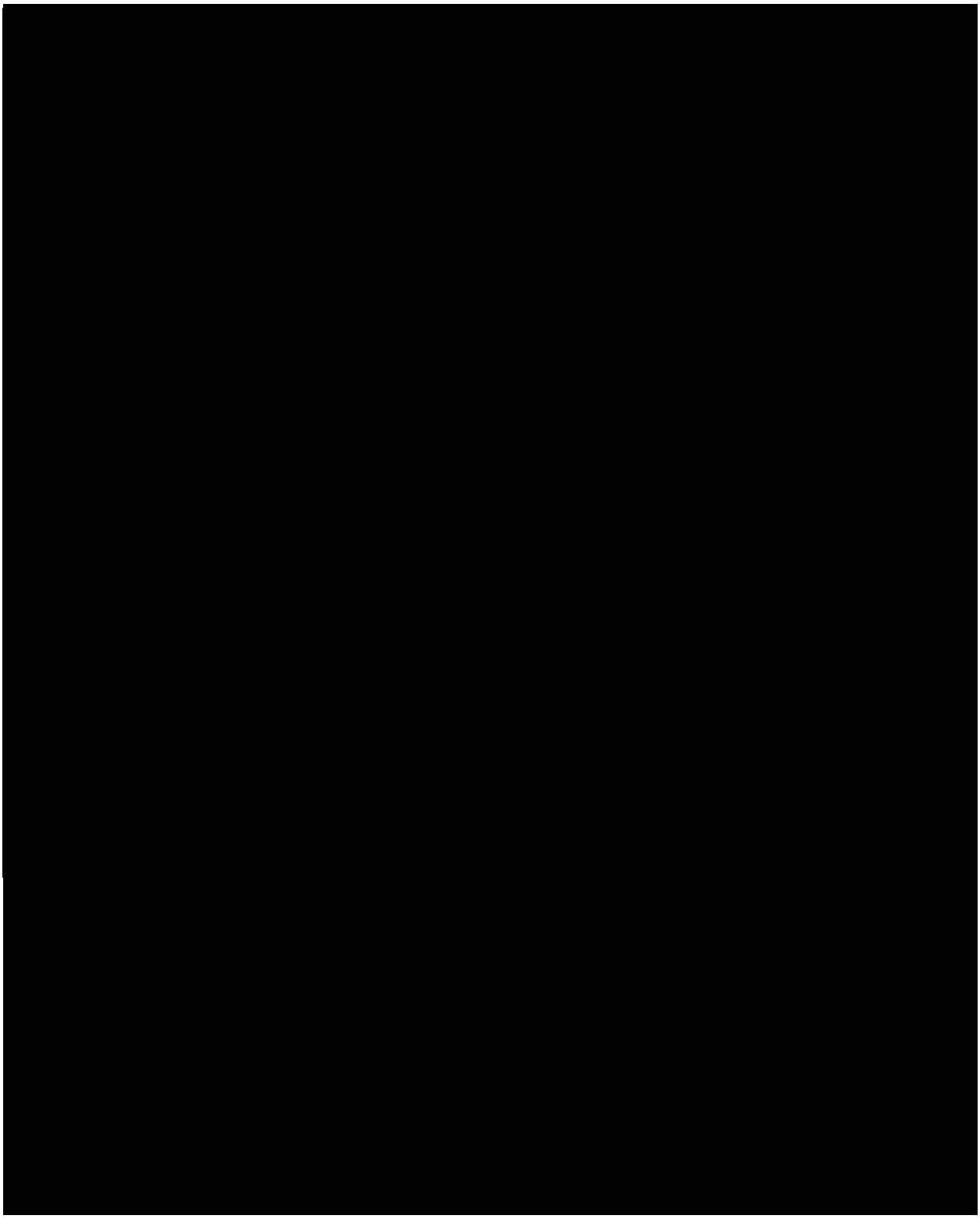

Figure 3.4-31 Finite Element Model for the WESF Capsule Container Configuration (Cross Section Showing 400W Capsule Position)

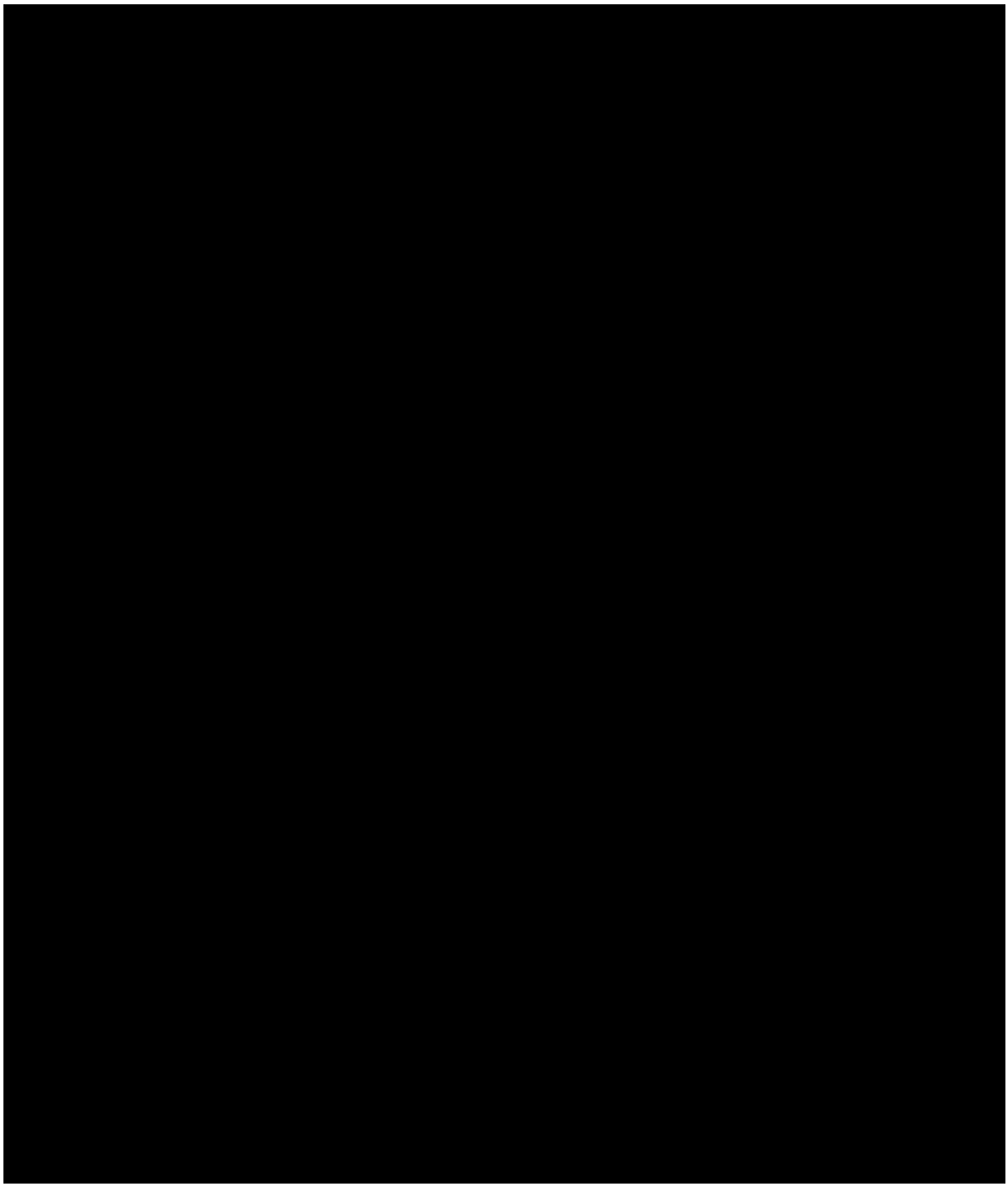

Figure 3.4-32 Finite Element Model for the WESF Capsule UCS Configuration

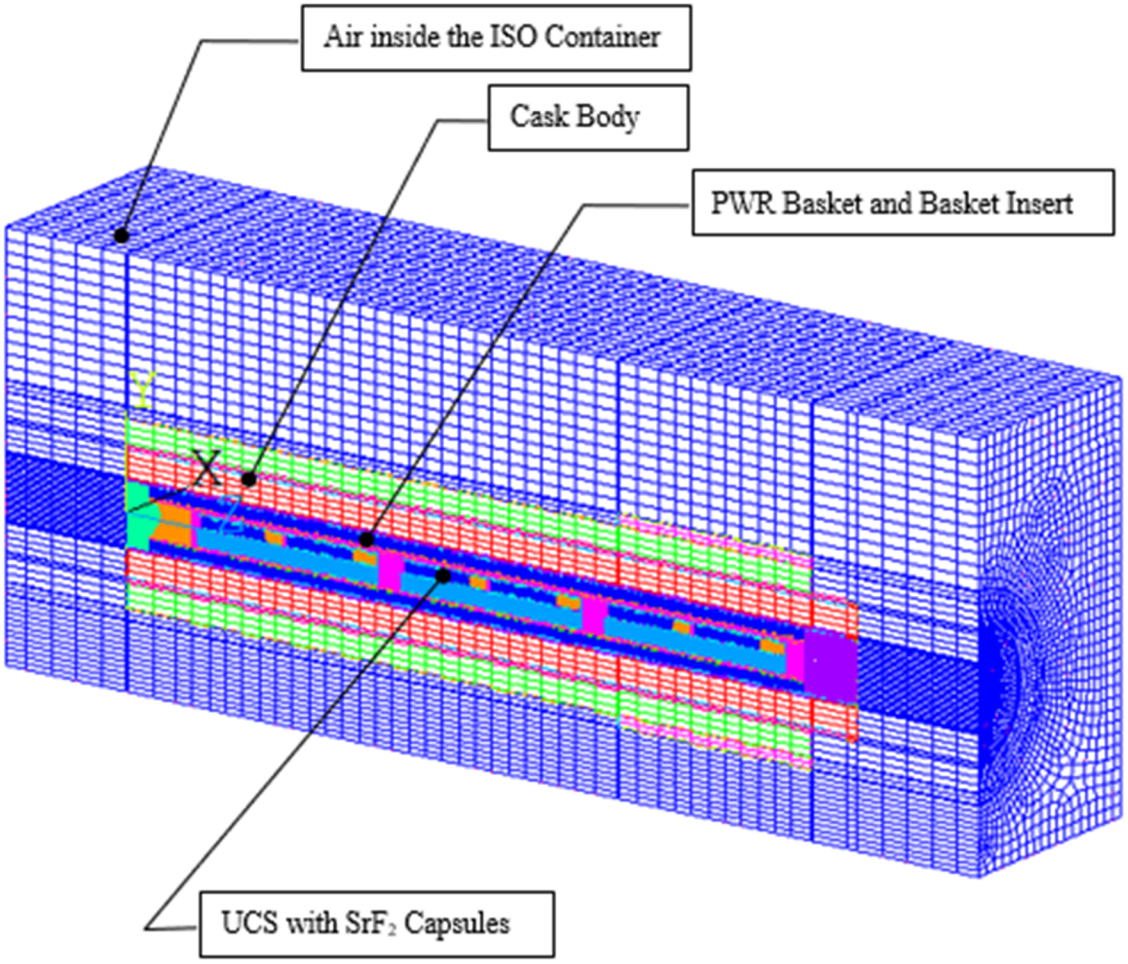

Figure 3.4-33 Finite Element Model Cross-Section of PWR Basket and UCS with Heat Load

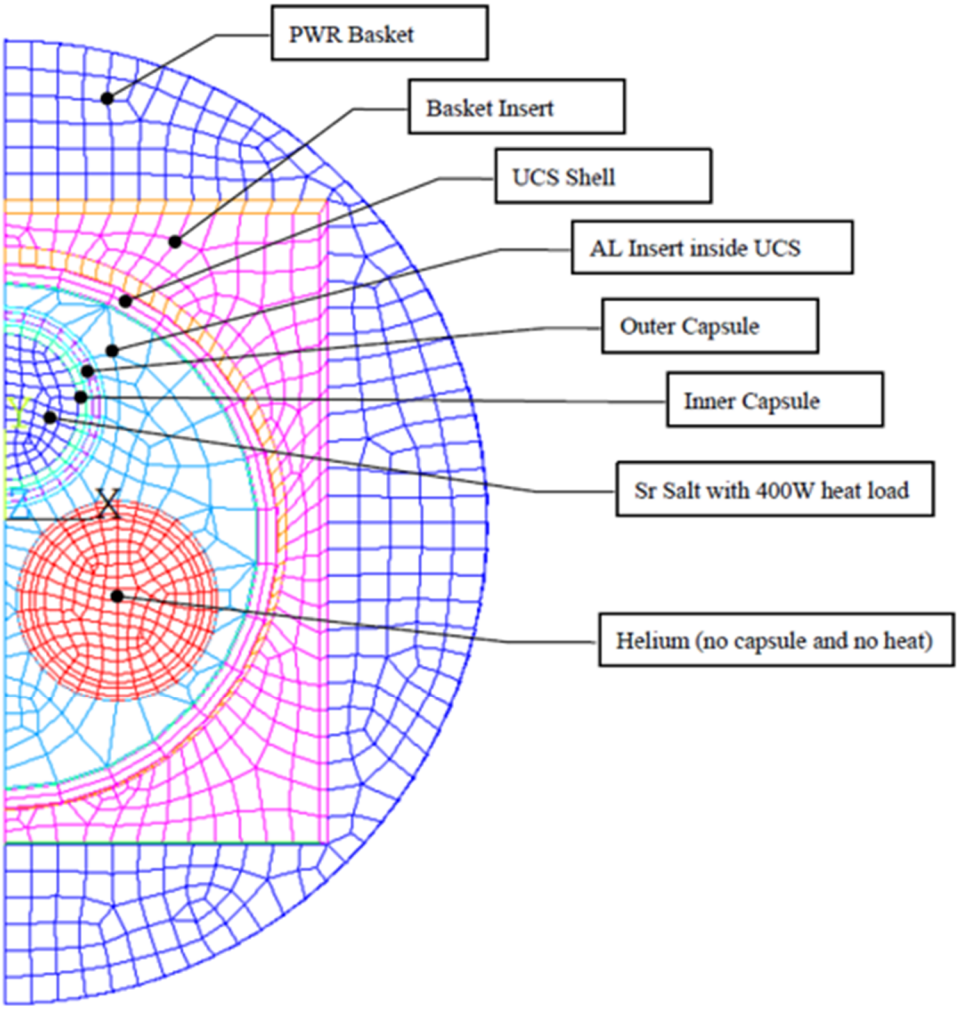

Table 3.4-1 Temperatures for Metallic Fuel Transport

Normal Transport Conditions

Component	Temperature (°F)
O-rings	200
Valves	201
Cask Radial Outer Surface	173
Neutron Shield	252
Radial Lead Gamma Shield	254
Bottom Lead Gamma Shield	210
Inner Stainless Steel Shell	255
Fuel Basket Outer Wall	255
Maximum Fuel Rod Cladding	270

Table 3.4-2 Maximum Component Temperatures – Design Basis PWR Fuel

Normal Transport Conditions

Component	Temperature (°F)
O-rings	227
Valves	231
Cask Radial Outer Surface	229
Neutron Shield	238
Radial Lead Gamma Shield	273
Bottom Lead Gamma Shield	239
Inner Stainless Steel Shell	274
Fuel Basket Outer Wall	276
Maximum Fuel Rod Cladding	472

Table 3.4-3 Limiting Cold Case Component Temperatures – Design Basis PWR Fuel

Normal Transport Conditions

Maximum Decay Heat Load, Minimum Ambient

Component	Temperature (°F)
O-rings	124
Valves	129
Cask Radial Outer Surface	128
Neutron Shield	110
Radial Lead Gamma Shield	167
Bottom Lead Gamma Shield	150
Inner Stainless Steel Shell	167
Fuel Basket Outer Wall	170
Maximum Fuel Rod Cladding	336

Table 3.4-4 Fission Product Gas Inventories and Pressures for Design Basis PWR Fuel Assembly

Fission Product	Inventory per Fuel Assembly (moles)	Initial Pressure (psia)
H-3	0.008	0.615
Kr-80	0.000	0.000
Kr-81	0.000	0.000
Kr-82	0.004	0.308
Kr-83	0.234	17.989
Kr-84	0.687	52.814
Kr-85	0.129	9.917
Kr-86	1.060	81.489
I-127	0.167	12.838
Xe-128	0.010	0.769
I-129	0.704	54.121
Xe-129	0.000	0.000
Xe-130	0.032	2.460
Xe-131	1.641	126.154
Xe-132	4.159	319.728
Xe-134	5.679	436.580
Xe-136	8.529	655.678
Total	**23.044**	**1771.5**

Table 3.4-5 NAC-LWT Cask Thermal Performance Summary

Normal Transport Conditions

Component	Minimum Temperature °F	Maximum Temperature °F	Safe Operating Range °F
TFE O-rings	-40	227	-40 to +735[1]
Metallic O-rings	-40	227	-40 to +800
Viton® O-rings	-40	227[2]	-40 to +550[3]
Lead gamma shield	-40	273	-40 to +600
Liquid neutron shield	-40	238	-40 to +350

[1] Verified through testing (Certified Test Report D9-3362-1, Applied Technical Services, Inc., Marietta, GA, February 8, 1989).

[2] Normal Transport Condition maximum O-ring temperatures were not calculated. The Viton® O-rings are located in close proximity to the TFE O-rings and there is substantial thermal margin, a new O-ring temperature is not calculated.

[3] Verified through testing (Certified Test Report 43939-01, Wyle Laboratories, Inc., Huntsville, AL, February 21, 2000).

Table 3.4-6 MTR Fuel Maximum Component Temperatures – Normal Transport Condition

Conditions: 100°F Ambient Temperature

Solar Insolation

1.26 Kilowatts Decay Heat Load

Condition 1: NAC-LWT (Transported in an ISO Container)

Cavity gas: Helium

Component	Temperature (°F)	
	Design Basis Decay Heat Load [1]	Variable Decay Heat Load [2]
Liquid Neutron Shield	198	Liquid Neutron Shield
Outer Shell	199	Outer Shell
Lead Gamma Shield	212	Lead Gamma Shield
Inner Shell	214	Inner Shell
Basket (maximum)	256	Basket (maximum)
Fuel (maximum)	< 363 [3]	Fuel (maximum)

Condition 2: NAC-LWT (Transported via Truck Trailer)

Cavity gas: Air

Component	Temperature (°F)	
	Design Basis Decay Heat Load [1]	Variable Decay Heat Load [2]
Liquid Neutron Shield	160	160
Outer Shell	161	160
Lead Gamma Shield	180	180
Inner Shell	181	180
Basket (maximum)	267	312
Fuel (maximum)	< 363 [3]	363

[1] Uniform 30-Watt/Element Configuration Heat Load.

[2] 120-Watt/70-Watt/20-Watt Configuration Heat Load. As discussed in Section 3.4.1.3, the loading configuration using the 120-Watt/70-Watt/20-Watt heat load bounds the preferential configuration of 40-Watt maximum heat load per basket slot with the same total heat load of 210-Watt per basket or 1.26 kW for the entire MTR contents.

[3] Fuel not modeled for this condition. Fuel temperature is bounded by the variable decay heat load in air case.

Table 3.4-7 PWR Rods (25 Total) Maximum Component Temperatures – Normal Transport Condition

Conditions: 100°F Ambient Temperature

Cask Inside ISO Container

Solar Insolation

1.41 Kilowatts Decay Heat Load

Component	Temperature (°F)
O-rings	< 249
Valves	< 249
Cask Radial Outer Surface	185
Lead Gamma Shield	248
Inner Shell	249
Outer Shell	235
Basket	252
Liquid Neutron Shield	235
Maximum Cladding Temperature	358

Table 3.4-8 TRIGA Fuel Element Maximum Component Temperatures – Normal Conditions of Transport

Conditions: 100°F Ambient Temperature

Solar Insolation

1.05 Kilowatts Decay Heat Load

Condition 2: NAC-LWT (Transported via Truck Trailer)

Cavity Gas: Air

Component	Temperature (°F)
Liquid Neutron Shield	< 160
Outer Shell	< 161
Lead Gamma Shield	< 180
Inner Shell	< 181
Basket (maximum)	267[1]
Cladding (maximum)	326[1]

[1] As shown in Table 3.4-6, the Condition 2 analysis produces higher basket temperatures than Condition 1. Therefore, the Condition 2 analysis for TRIGA fuel bounds transport of the cask in an ISO container.

Table 3.4-9 TRIGA Fuel Cluster Rod Temperatures – Normal Conditions of Transport

Conditions: 100°F Ambient Temperature

Solar Insolation

1.05 Kilowatts Decay Heat Load

Condition 1: NAC-LWT (Transported in an ISO Container)

Cavity gas: Helium

Component	Temperature (°F)
Liquid Neutron Shield	207
Outer shell	207
Lead Gamma shield	221
Inner shell	222
Basket (maximum)	263
Aluminum insert tube	265
Cladding (maximum)	266

Condition 2: NAC-LWT (Transported via Truck Trailer)

Cavity gas: Air

Component	Temperature (°F)
Liquid Neutron Shield	159
Outer shell	160
Lead Gamma shield	177
Inner shell	178
Basket (maximum)	278
Aluminum insert tube	292
Cladding (maximum)	295

Table 3.4-10 PWR and BWR High Burnup Fuel Rods Maximum Component Temperatures – Normal Transport Condition

Conditions: 100°F Ambient Temperature Solar Insolation

2.1 Kilowatts Decay Heat Load

Condition 1: NAC-LWT (Transported in an ISO Container)

Cavity Gas: Helium

Component	Component Temperature (°F)	Allowable Temperature (°F)
Liquid Neutron Shield	306	N/A
Outer Shell	308	800
Lead Gamma Shield	375	600
Inner Shell	385	800
Lid Metallic Containment Shell	385	800
Port Cover Containment Shell	385	550
Basket (maximum)	387	800(1)
Cladding (maximum)	671	752(2)
Aluminum PWR Insert	394	700(3)
Stainless Steel Can Weldment	500	800(2)
Average Cavity Gas	506	N/A

(1) Allowable temperatures greater than 800ºF for stainless steel can be used provided stress limits in ASME III, Subsection NH, are employed in the stress evaluations.

(2) The maximum allowable temperature under NCT for PWR, BWR and PWR MOX fuel rod cladding is 752ºF (400ºC) per ISG-11, Revision 3.

(3) The aluminum insert is not a structural component. The primary consideration in establishing the safe operating range of the aluminum is maintaining the integrity of the aluminum. According to MIL-HDBK-5F, it can be shown that aluminum at 700°F retains component performance.

Condition 2: NAC-LWT (Transported via Truck Trailer)

Cavity Gas: Air

Component	Temperature (°F)
Inner Shell	274
Basket (maximum)	280
Aluminum PWR Insert	286
Stainless Steel Can Weldment	538
Cladding (maximum)	896
Average Cavity Gas	541

Table 3.4-11 Fission Product Gas Inventories and Pressures for the Exxon 7 × 7 BWR Fuel Assembly

Fission Product	Inventory per Fuel Assembly (moles)	Initial Partial Pressure per Rod (psia)
H-3	7.670E-03	1.408E+00
Kr-80	0.000E+00	0.000E+00
Kr-81	0.000E+00	0.000E+00
Kr-82	8.110E-03	1.489E+00
Kr-83	1.270E-01	2.331E+01
Kr-84	7.060E-01	1.296E+02
Kr-85	9.590E-02	1.760E+01
Kr-86	9.330E-01	1.713E+02
I-127	1.770E-01	3.249E+01
Xe-128	3.000E-02	5.507E+00
I-129	7.030E-01	1.290E+02
Xe-129	4.260E-04	7.819E-02
Xe-130	9.040E-02	1.659E+01
Xe-131	9.710E-01	1.782E+02
Xe-132	5.030E+00	9.233E+02
Xe-134	5.690E+00	1.044E+03
Xe-136	8.590E+00	1.577E+03
Total	2.32E+01	4.251E+03

Table 3.4-12 DIDO Fuel Maximum Component Temperatures – Normal Transport Condition

Conditions: 100°F Ambient Temperature
Solar Insolation
1.05 Kilowatts Decay Heat Load

Condition 1: NAC-LWT (Transported in an ISO Container)
Cavity gas: Helium

Component	Temperature (°F)
	Design Basis Decay Heat Load
Liquid Neutron Shield	198[1,2]
Outer Shell	199[1,2]
Lead Gamma Shield	212[1,2]
Inner Shell	214[1,2]
Basket (maximum)	299[3]
Fuel (maximum)	306[3]

1 Uniform 30-Watt/Assembly Configuration Heat Load for MTR fuel.
2 Bounding values obtained from Table 3.4-6 for MTR fuel.
3 Uniform 25-Watt/Assembly Configuration Heat Load for DIDO fuel.

Condition 2: NAC-LWT (Transported via Truck Trailer)
Cavity gas: Air

Component	Temperature (°F)
	Design Basis Decay Heat Load
Liquid Neutron Shield	160[1,2]
Outer Shell	161[1,2]
Lead Gamma Shield	180[1,2]
Inner Shell	181[1,2]
Basket (maximum)	327[3]
Fuel (maximum)	338[3]

1 Uniform 30-Watt/Assembly Configuration Heat Load for MTR fuel.
2 Bounding values obtained from Table 3.4-6 for MTR fuel.
3 Uniform 25-Watt/Assembly Configuration Heat Load for DIDO fuel.

* The temperatures in the above tables bound the maximum temperatures of the fuel and components in the ANSTO-DIDO baskets presented in Section 3.4.1.16.

Table 3.4-13 General Atomics IFM Maximum Component Temperatures – Normal Transport Condition

Conditions: 100°F Ambient Temperature

Solar Insolation

13 W Decay Heat Load

NAC-LWT (Transported in an ISO Container)

Component	Temperature (°F)
	Design Basis Decay Heat Load
Liquid Neutron Shield	198[1]
Outer Shell	199[1]
Lead Gamma Shield	212[1]
Inner Shell	214[1]
Basket (maximum)	250[2]
FHU contents (maximum)	326[3]

1 Bounding values obtained from Table 3.4-6 for MTR fuel.
2 13-Watt Configuration Heat Load for General Atomics fuel.
3 Bounding value obtained from Table 3.4-8 for the 1.05 kW TRIGA fuel.

Table 3.4-14 PWR and BWR High Burnup Fuel Rods in a Fuel Assembly Lattice Maximum Component Temperatures—Normal Transport Condition

Conditions: 100°F Ambient Temperature
Solar Insolation
2.1 Kilowatts Decay Heat Load (BWR)
2.3 Kilowatts Decay Heat Load (PWR)
Transport Condition 2 (no ISO container) with air in the cavity

Component	Temperature (°F)
Inner Shell	274
Basket (maximum)	276
Aluminum PWR Insert	336
Cladding (maximum)	664
Average Cavity Gas	430

Table 3.4-15 Maximum Component Temperatures for High Burnup Fuel Rods with Damaged Fuel Rods in a Rod Holder

	Maximum Temperatures (°F)					
Case[1]	Basket	Aluminum Insert	Rod Holder Weldment	Fuel Rod Tube2	Fuel Cladding3	Cavity Gas Average
Damaged Rods at Locations #4, 5, 6, 7, 8, 9, 10, 11, 12	280	285	523	835	809	479
Damaged Rods at Locations #7, 8, 9, 10, 11, 12, 13, 14, 15	280	286	567	866	653	482
Damaged Rods at Locations #1, 2, 3, 4, 5, 6, 7, 8, 9	280	284	474	743	749	465

[1] See Figure 3.4-17 for fuel rod locations. The nine locations in the half-symmetry model correspond to fifteen actual fuel rod locations.
[2] The structural analysis of the fuel tubes in Section 2.6.7.10.2.3 uses a maximum temperature of 925°F.
[3] Maximum temperatures are reported for intact fuel rods only.

Table 3.4-16 Maximum Component Temperatures for TPBAR Shipment – Normal Conditions of Transport

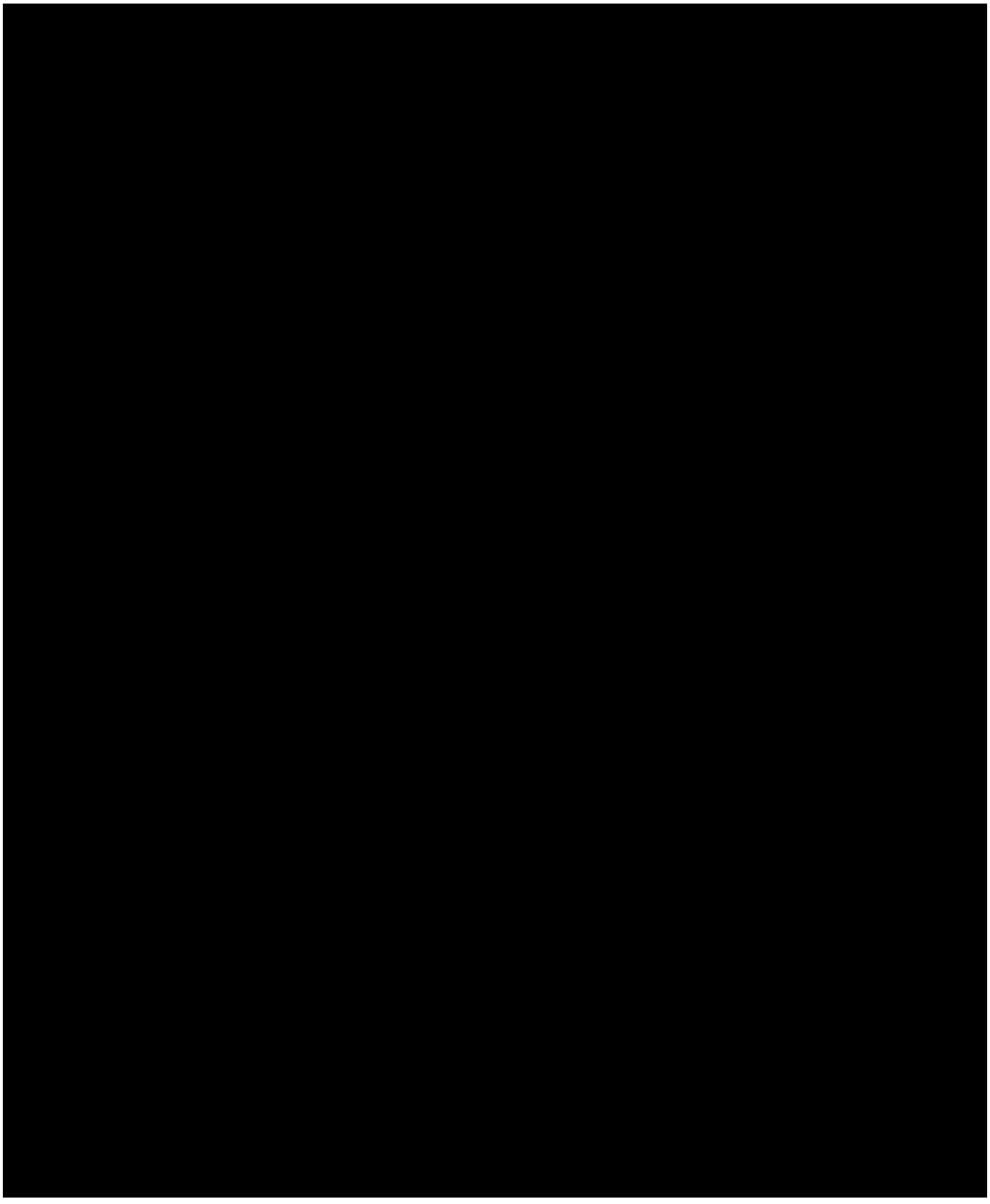

Table 3.4-17 Maximum Component Temperatures – PULSTAR Fuel in MTR Basket

Conditions: 100°F Ambient Temperature

Solar Insolation

840 watts Decay Heat Load

(30 watts in Each Basket Cell)

Condition 1: NAC-LWT (Transported in an ISO Container)
Cavity gas: Helium

Component	Temperature (ºF)
Liquid Neutron Shield	207
Outer shell	207
Lead Gamma shield	221
Inner shell	222
Basket (maximum)	263
Aluminum insert tube	265
Cladding (maximum)	266

Condition 2: NAC-LWT (Transported via Truck Trailer)
Cavity gas: Air

Component	Temperature (ºF)
Liquid Neutron Shield	159
Outer shell	160
Lead Gamma shield	177
Inner shell	178
Basket (maximum)	278
Aluminum insert tube	292
Cladding (maximum)	295

Notes:
1. The temperatures in this table correspond to the temperatures in Table 3.4-9.
2. PULSTAR fuel can (if used) = 295°F (assume same as fuel cladding temperature).

Table 3.4-18 PULSTAR Fuel Dimensions

Description	Value
Fuel Assembly Height (inch)	38
Fuel Assembly Width (inch)	3.15×2.74
Active Fuel Region Height (inch)	24.1
Fuel Rod Diameter (inch)	0.47
Fuel Clad Thickness (inch)	0.0185
Fuel Pellet Diameter (inch)	0.423
Rod Length (inch)	26.2
Plenum Length (inch)	0.5
Number of Fuel Rods	25

Table 3.4-19 PULSTAR Payload Volume Summary

Description	Dimension[cm^3]
Fuel Volume (25 Elements)	1,860
Pellet to Clad Volume (25 Elements)	97
PULSTAR Can Free Volume	1,440
PULSTAR Can Total Volume	4,230
Assembly Envelope Volume	5,370
LWT Cavity Volume	409,300
MTR Basket Stack Volume	41,900

Table 3.4-20 PULSTAR Fuel Assembly Fission Product Gas Inventory

Isotope	Moles
^{4}He	2.28E-03
^{3}H	1.30E-04
^{82}Kr	6.32E-05
^{83}Kr	7.03E-03
^{84}Kr	1.66E-02
^{85}Kr	2.41E-03
^{86}Kr	2.81E-02
^{127}I	2.87E-03
^{128}Xe	1.27E-04
^{129}I	1.42E-02
^{130}Xe	3.11E-04
^{131}Xe	3.91E-02
^{132}Xe	8.49E-02
^{134}Xe	1.27E-01
^{136}Xe	1.23E-01
Total	4.48E-01

Table 3.4-21 PULSTAR Fuel Element Normal Condition Internal Pressure Summary

Description	Free Volume (liters)	Pressure (atm)	(liters)	(atm)
Cask Pressure -28 Intact Assemblies	217.0	1.4	21.3	6.6
Cask Pressure -14 Intact Assemblies and 14 Cans	233.0	1.8	27.2	12.5
Can Pressure - PULSTAR Failed Fuel Can	1.53	4.4	65.4	50.7

Table 3.4-22 Maximum Component Temperatures – MOATA Plate Fuel and Mark III Spiral Fuel in ANSTO Basket

Conditions: 100°F Ambient Temperature

Solar Insolation

Heat Load: 126 Watts – MOATA Plate Fuel; 756 Watts – Mark III Spiral Fuel

Component	Temperature (ºF)
Liquid Neutron Shield[1]	207
Outer Shell[1]	207
Lead Gamma Shield[1]	221
Inner Shell[1]	222
Basket - MOATA Plate Fuel	230
Fuel Cladding – MOATA Plate Fuel	233
Basket – Mark III Spiral Fuel	248*
Fuel Cladding – Mark III Spiral Fuel	250*

[1] The cask component temperatures are conservatively obtain from Table 3.4-9 for the TRIGA Fuel Cluster Rod.

* These maximum temperatures are for both standard loading (all seven tubes are loaded with Mark III fuel) and the combination of the Mark III fuel or MOATA fuel.

Table 3.4-23 Cask and Rod Condition

Variable	Unit	DIDO/ANSTO	MTR
Cask Free Volume	liter	368.1	229.3
Normal Condition Average Gas Temperature	K	433.2	470.2
Accident Condition Fuel Temperature[1]	K	528.2	518.2
Cask Backfill Pressure (assumed at STD temp)	psia	14.7	
Normal Condition Cask Pressure Permitted	psig	50	

[1] Conservatively applied to the cask cavity gas.

Table 3.4-24 Gas Isotopics (Gram)

		ANSTO	DIDO			MTR		
Isotope		Spiral	LEU	MEU	Isotope	LEU[1]	MEU	HEU[2]
	g/mole	gram						
h 3	3.016	1.30E-04	1.60E-04	1.59E-04	1.58E-04	3.68E-04	3.72E-04	2.93E-04
i127	126.904	7.59E-02	9.91E-02	9.35E-02	8.85E-02	3.05E-01	2.54E-01	2.02E-01
i129	129.000	4.37E-01	5.39E-01	5.27E-01	5.16E-01	1.58E+00	1.33E+00	1.24E+00
kr 82	81.913	5.59E-04	6.03E-04	5.94E-04	5.89E-04	4.28E-03	4.80E-03	1.07E-02
kr 83	82.914	1.55E-01	1.86E-01	1.85E-01	1.84E-01	4.76E-01	3.23E-01	3.95E-01
kr 84	83.912	4.69E-01	5.37E-01	5.49E-01	5.59E-01	1.48E+00	1.49E+00	1.33E+00
kr 85	84.913	8.78E-02	1.05E-01	1.06E-01	1.08E-01	2.16E-01	2.31E-01	1.85E-01
kr 86	85.911	7.85E-01	9.08E-01	9.23E-01	9.36E-01	2.44E+00	2.26E+00	2.17E+00
xe128	127.904	1.16E-03	1.21E-03	1.21E-03	1.21E-03	1.20E-02	1.26E-02	2.96E-02
xe130	129.904	1.79E-02	1.91E-02	2.02E-02	2.14E-02	7.54E-02	1.21E-01	8.45E-02
xe131	130.905	1.51E+00	1.85E+00	1.82E+00	1.80E+00	4.57E+00	3.55E+00	2.46E+00
xe132	131.904	2.93E+00	3.46E+00	3.46E+00	3.46E+00	1.05E+01	9.99E+00	1.02E+01
xe134	133.905	4.93E+00	5.82E+00	5.84E+00	5.85E+00	1.62E+01	1.48E+01	1.39E+01
xe136	135.907	7.80E+00	9.19E+00	9.19E+00	9.20E+00	2.04E+01	2.30E+01	1.95E+01

[1] 470 gram ^{235}U per element
[2] 460 gram ^{235}U per element

Table 3.4-25 Molar Gas Quantity

Isotope	ANSTO Spiral [mole]	DIDO LEU [mole]	DIDO MEU [mole]	DIDO HEU [mole]	MTR LEU [mole]	MTR MEU [mole]	MTR HEU [mole]
h 3	4.31E-05	5.30E-05	5.27E-05	5.24E-05	1.22E-04	1.23E-04	9.71E-05
i127	5.98E-04	7.81E-04	7.37E-04	6.97E-04	2.40E-03	2.00E-03	1.59E-03
i129	3.39E-03	4.18E-03	4.09E-03	4.00E-03	1.22E-02	1.03E-02	9.61E-03
kr 82	6.82E-06	7.36E-06	7.25E-06	7.19E-06	5.23E-05	5.86E-05	1.31E-04
kr 83	1.87E-03	2.24E-03	2.23E-03	2.22E-03	5.74E-03	3.90E-03	4.76E-03
kr 84	5.59E-03	6.40E-03	6.54E-03	6.66E-03	1.76E-02	1.78E-02	1.59E-02
kr 85	1.03E-03	1.24E-03	1.25E-03	1.27E-03	2.54E-03	2.72E-03	2.18E-03
kr 86	9.14E-03	1.06E-02	1.07E-02	1.09E-02	2.84E-02	2.63E-02	2.53E-02
xe128	9.07E-06	9.46E-06	9.46E-06	9.46E-06	9.38E-05	9.85E-05	2.31E-04
xe130	1.38E-04	1.47E-04	1.56E-04	1.65E-04	5.80E-04	9.31E-04	6.50E-04
xe131	1.15E-02	1.41E-02	1.39E-02	1.38E-02	3.49E-02	2.71E-02	1.88E-02
xe132	2.22E-02	2.62E-02	2.62E-02	2.62E-02	7.96E-02	7.57E-02	7.73E-02
xe134	3.68E-02	4.35E-02	4.36E-02	4.37E-02	1.21E-01	1.11E-01	1.04E-01
xe136	5.74E-02	6.76E-02	6.76E-02	6.77E-02	1.50E-01	1.69E-01	1.43E-01
Total	1.50E-01	1.77E-01	1.77E-01	1.77E-01	4.55E-01	4.47E-01	4.04E-01

Table 3.4-26 Maximum Cask Cavity Pressure

Release Fraction	ANSTO Spiral			DIDO			MTR		
	Fission Gas	Total		Fission Gas	Total		Fission Gas	Total	
	psi	psia	psig	psi	psi	psig	psi	psia	psig
1%	0.1	23.9	9.2	0.1	23.9	9.2	0.5	26.3	11.6
5%	0.4	24.2	9.5	0.5	24.3	9.6	2.4	28.2	13.5
10.0%	0.9	24.7	10.0	1.1	24.8	10.1	4.7	30.6	15.9
20.0%	1.8	25.6	10.9	2.1	25.9	11.2	9.5	35.3	20.6
30.0%	2.7	26.5	11.8	3.2	27.0	12.3	14.2	40.0	25.3
40.0%	3.6	27.4	12.7	4.2	28.0	13.3	18.9	44.7	30.0
50.0%	4.5	28.3	13.6	5.3	29.1	14.4	23.7	49.5	34.8
60.0%	5.4	29.1	14.4	6.3	30.1	15.4	28.4	54.2	39.5
70.0%	6.3	30.0	15.3	7.4	31.2	16.5	33.1	58.9	44.2
80.0%	7.1	30.9	16.2	8.4	32.2	17.5	37.9	63.7	49.0
90.0%	8.0	31.8	17.1	9.5	33.3	18.6	42.6	68.4	53.7
100.0%	8.9	32.7	18.0	10.6	34.3	19.6	47.3	73.1	58.4

Table 3.4-27 Maximum Component Temperatures – SLOWPOKE Fuel in MTR Basket

Conditions: 100°F Ambient Temperature

Solar Insolance

5.0 Watts Decay Heat Load (2.5 Watts per basket module)

(Transported in an ISO Container)

Cavity gas: Helium

Component	Max. Temperature (ºF)
Liquid Neutron Shield	137
Outer shell	136
Lead Gamma shield	134
Inner shell	134
Basket	135
ISO Container	166
Fuel	136

Table 3.4-28 Maximum Component Temperatures – SLOWPOKE Fuel Core

Conditions: 100°F Ambient Temperature

Solar Insolation

45 W Decay Heat Load

NAC-LWT (Transported in an ISO Container)

Component	Temperature (°F)
Liquid Neutron Shield	198[1]
Outer Shell	199[1]
Lead Gamma Shield	212[1]
Inner Shell	214[1]
Basket	239
Fuel	304

[1] Bounding values obtained from Table 3.4-6 for MTR fuel (Condition 1).

Table 3.4-29 Maximum Component Temperatures (Heat Case) – SrF_2 Capsule Contents



Table 3.4-30 Maximum Component Temperatures (Cold Case)– SrF_2 Capsule Contents

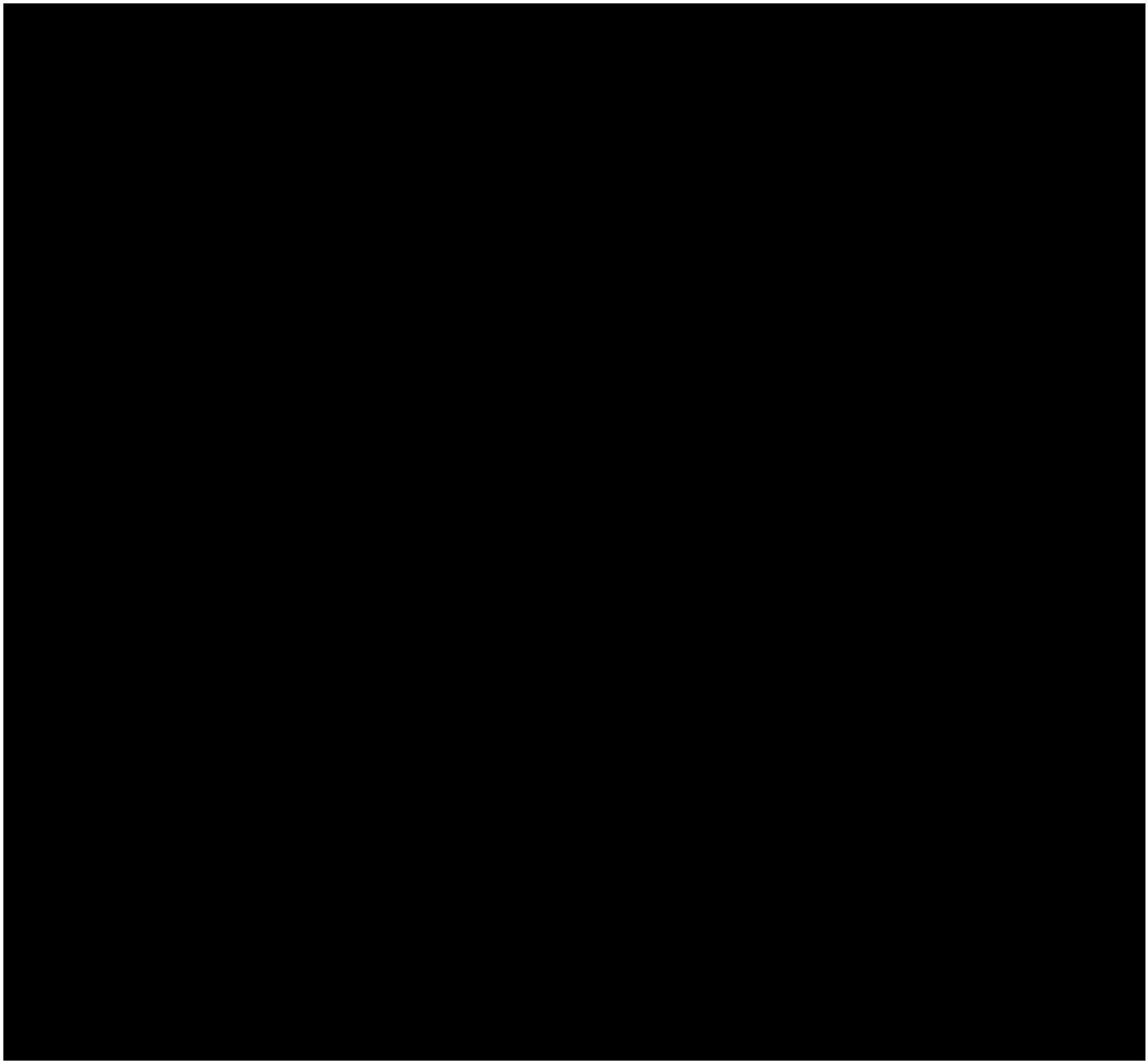

3.5 Hypothetical Accident Thermal Evaluation

The hypothetical accident scenario is a series of accidents that occur in a specified order as described in 10 CFR 71.73. The only thermal consequence as a result of the drop and puncture portions of the hypothetical accident is the assumption that the neutron shield is lost prior to the start of the fire. The remainder of the thermal analysis in this section consists of an evaluation of the thermal consequences of the fire portion of the hypothetical accident.

3.5.1 Finite Element Models

There are four finite element models used to evaluate the hypothetical fire accident condition depending on contents. The axisymmetric thermal model, as described in Section 3.5.1.1, is used to evaluate all configurations except for the SrF_2 capsules, PWR high burnup fuel rod, and BWR high burnup fuel rod configuration. For the PWR and BWR high burnup fuel rod configuration, two-dimensional planar finite element model is used. The planar model is described in Section 3.5.1.2. For the SrF_2 capsule configurations (BUP-500 and WESF), 180-degree three-dimensional models are used. The two three-dimensional models are described in Section 3.5.1.3.

3.5.1.1 Axisymmetric Thermal Model

The finite element code ANSYS (Revision 5.5) is used to generate a two-dimensional (2-D) axisymmetric finite element model and to perform thermal analyses for the pre-fire, fire and post-fire (cool down) conditions. The ANSYS finite element model is shown in Figure 3.5-1. Figure 3.5-2 and Figure 3.5-3 show the detail of the model at the locations where the thermal insulator is installed in the top and bottom regions. The ANSYS model uses thermal conductivity values for the thermal insulators that are conservative in that they are higher than the values shown in Table 3.2-6 and Table 3.2-8. The thermal insulator protects the lead gamma shield against localized melting during the fire event. As shown, the main components in the radial direction consist of the inner shell, the radial lead, the outer shell, the neutron shield tank and the expansion tank.

The model is constructed using the ANSYS thermal PLANE55 element. Thermal radiation and convection heat transfer at the cask surface is modeled using the PLANE55 and SURF19 elements. Radiation heat transfer across the neutron shield tank and neutron shield expansion tank is modeled using the ANSYS radiation LINK31 element.

The pre-fire condition is defined as the normal transport condition, and a steady-state analysis is performed to determine the temperature field of the cask body. This temperature field is used as the initial condition for the 30 minute fire transient analysis (fire condition), which is followed

by a 50-hour cool down period (post-fire condition). Analysis of the 50-hour cool down period ensures that the maximum component temperatures are determined.

The pre-fire analysis considers the convection heat transfer of the liquid neutron shielding inside the shell, but convection heat transfer of the air inside the expansion tank is conservatively neglected. During the fire and post-fire conditions, the liquid neutron shielding is considered to be lost, due to either the pin puncture accident or the failure of the relief valve in the neutron shield tank resulting from high pressure steam produced by the fire. The convection heat transfer of the air in the tank is negligible compared to the radiation heat transfer. The radiation heat transfer across the air-filled tank, and expansion tank, is explicitly modeled using the ANSYS radiation LINK31 element. An emissivity of 0.36 is used for all inner surfaces of the stainless steel neutron shield tank and the expansion tank.

The impact limiters are not discretely modeled, but are represented as thermal boundary conditions. Before the fire accident, adiabatic thermal boundary conditions are conservatively applied to the interface regions between the cask and the impact limiters so that no heat is transferred out of the cask through the impact limiters. During the fire and post-fire periods, the impact limiters are assumed to be removed. In this time period, heat transfer by convection and radiation are modeled in the regions previously covered by the impact limiters. Solar insolation is considered in the model during the pre-fire and post-fire conditions, but neglected during the fire.

The heat input from the fire considers thermal radiation and convection heat transfer. A convection heat transfer coefficient of 0.02446 Btu/hr-in2-°F is applied to account for heat transfer to the cask surface. This value is twice the theoretical value (Wix) to account for uncertainties in the fire accident condition and the data from which the recommended value is derived. These assumptions lead to maximizing the material temperatures and are conservative.

The cask contents (basket and fuel) are not directly modeled. The decay heat generated from the fuel region inside the cask is simulated using an equivalent non-uniform heat flux applied to the inner surface of the cask cavity inner shell, corresponding to the height of the active fuel region. The analysis considers the bounding fuel heat load, 2.5 kW for PWR fuel, and applies the power distribution curve shown in Figure 3.4-2 with a peaking factor of 1.2.

ANSYS 5.5 was used to calculate the maximum post-fire accident temperatures at four new locations for the alternate port cover design. Temperatures calculated for comparable locations on the port cover body vary from those temperatures presented in Table 3.5-1. Changes in the ANSYS 5.5 version and computational solvers account for the differences in calculated results. The transient temperature analysis results are presented in Figure 3.5-12 and Figure 3.5-13.

Exactly the same model described above was rerun using ANSYS 5.5 for the alternate port cover to determine the bolt head and thread temperatures and the temperatures at both O-ring locations. The output is post-processed to determine the maximum average temperatures at specific locations of interest. The temperatures calculated are presented in Table 3.5-1.

3.5.1.2 Two-Dimensional Planar Thermal Model

Thermal analysis of the NAC-LWT cask loaded with PWR and BWR high burnup fuel rods is performed using a two-dimensional planar thermal model. The thermal model is identical to the model utilized to perform the steady state analysis (condition 2, Section 3.4.1.7) for the NAC-LWT cask loaded with PWR and BWR high burnup fuel rods. The detailed model description is contained in Section 3.4.1.7.2.

The Condition 2 model was selected since it initiates the thermal transient with clad temperatures 225°F higher (from Table 3.4-10, 896°F-671°F) than the Condition 1 model steady-state condition. This increase in the initial condition temperature for the cask cavity air-filled condition overcompensates for the higher conductivity of helium as the cavity gas. The effect of the higher helium conductivity heat input during the period of fire exposure is significantly less due to the influence of the parallel heat transfer paths by conduction through the metal contents and by radiation across the gas-filled space. This influence is seen in the transient maximum temperature difference from the higher steady-state temperature of 896°F to the maximum transient temperature of 1014°F (a change of 118°F), which is significantly bounded by the steady-state temperature condition difference of 225°F, as stated previously. In addition to the conservative modeling introduced by the initial steady-state temperature, during the cooldown portion of the transient, the use of air thermal conductivity in the cavity retards the heat removal from the fuel (as compared to helium conductivity). This also results in a maximum transient temperature higher than when modeling helium as the cavity gas.

A thermal transient analysis for the design basis fuel is performed using the two-dimensional planar thermal model (see Figure 3.4-12). To impose the fire accident condition on this model, a temperature time history was applied to the outer surface of the model, which corresponds to the inner surface of the inner shell. This temperature time history at the inner shell inner surface near the axial midplane is obtained from the fire accident analysis (heat load of 2.5 kW and a peaking factor of 1.2, as described in Section 3.5.2) using the axisymmetric two-dimensional model described in Section 3.5.1.1.

Using a two-dimensional planar model of the cross-section, a 50.5-hour transient analysis is performed with a heat load of 2.1 kW with a peaking factor of 1.22. This represents the bounding heat load for the high burnup PWR and BWR fuel rods.

3.5.1.3 Three-Dimensional Thermal Models for SrF_2 Capsules

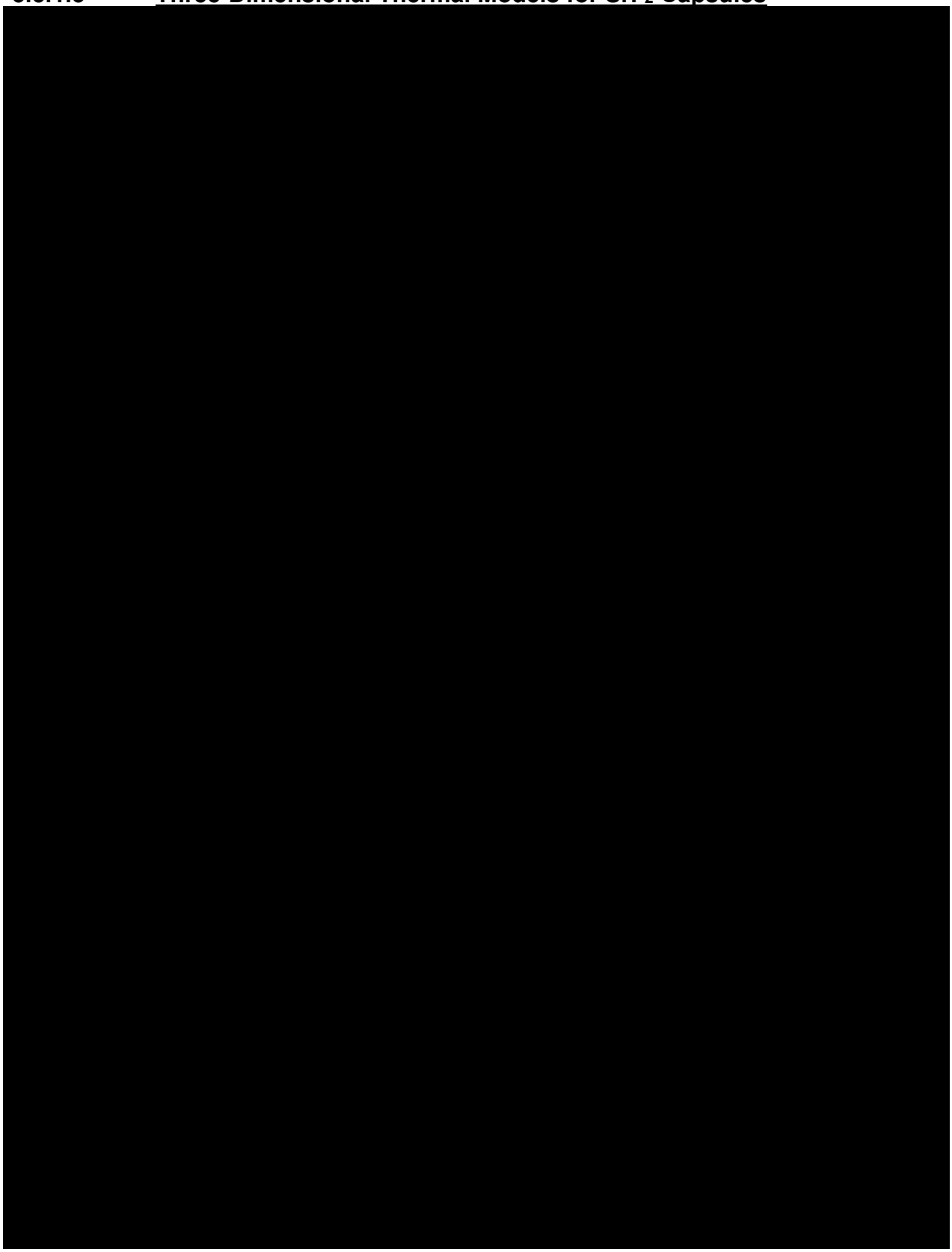



3.5.2 Package Conditions and Environment

The fire accident is preceded by the cask drop and cask puncture portions of the hypothetical accident. The only damage that occurs as a result of the drop and puncture accident events that are of importance to the cask thermal performance is the damage to the NAC-LWT cask neutron shield. As a result of these events, it is assumed that the integrity of the neutron shield has been damaged to such an extent that the entire contents of the neutron shield are no longer present.

The fuel heat load of 2.5 kW is applied using a non-uniform heat flux with a peaking factor of 1.2. Solar insolation is applied to the outer surfaces of the cask, including the area covered by the impact limiters, during the post-fire conditions, and neglected during the fire condition. The value of solar insolation, based on a 24-hour average to curved surfaces, is:

$Q_{sun}=1475/(24\times144) = 0.4268$ BTU/hr-in^2

Convection and radiation heat transfer at the outer surfaces of the cask were considered in the analysis. During the pre-fire (normal) and post-fire periods, the ambient temperature assumed is 100°F, and the cask outer surface emissivity is 0.36. During the fire, the ambient temperature is 1,475°F, and the cask surface emissivity is 0.9. The convection coefficient applied is 0.02446 Btu/hr-in^2-°F.

Using a decay heat of 2.5 kW, the conditions for the hypothetical fire accident are:

Analysis Condition	Loads and Boundary Conditions
Initial steady-state (pre-fire)	• Solar Insolation • Combined convection (using the film coefficent for the cask surface, $0.00125\Delta T^{0.33}$ Btu/hr-in^2-°F) and radiation heat transfer (as defined in Section 3.2.3) between the cask exterior (ε=0.36) and the ambient (100°F)

	• The surface of the cask in contact with the impact limiter is adiabatic
Fire transient (during fire)	• Ambient temperature 1,475°F with no solar insolation • Combined convective (additional coefficient of 0.02446 Btu/hr-in^2-°F) and radiative heat transfer using a film coefficient (as defined in Section 3.2.3) between the cask exterior (ε=0.9), including the area normally covered by impact limiters, and the fire • Neutron shield fluid lost
Cool down (post-fire)	• Ambient temperature 100°F with solar insolation • Combined convection (using the film coefficent for the cask surface, $0.00125\Delta T^{0.33}$ Btu/hr-in^2-°F) and radiation heat transfer (as defined in Section 3.2.3) between the cask exterior (ε=0.36), including the area covered by the impact limiters, and ambient • Neutron shield fluid lost

3.5.3 Package Temperatures

The temperatures of the cask body resulting from the fire are determined using ANSYS. The heat load used in the transient thermal analysis corresponds to the PWR fuel, since its heat load envelopes all other fuel types that can be transported in the NAC-LWT cask.

The maximum temperatures of the basket and fuel for the different fuel types are determined using the results of the fire transient analysis of the cask body and the maximum temperature differences between the basket and fuel and the inner shell of the cask body as computed in the steady state thermal evaluations.

3.5.3.1 Evaluation for PWR Fuel Contents

The maximum temperatures of the cask body and principal components are evaluated using the ANSYS model described in Section 3.5.1.1. A radial temperature profile is obtained during the postulated 30-minute fire and for a cooldown period of 50 hours. The maximum cask component temperatures for the hypothetical accident are presented in Table 3.5-1.

Maximum time dependent temperatures of different cask components, before, during and after the fire, are shown in Figure 3.5-4 and Figure 3.5-5. The temperatures of the components show a sharp increase during the fire and a sharp decrease that begins right after the fire. After the 50

hour cooling period, the temperatures of the components do not return to the normal conditions of transport values. This is attributed to the loss of the liquid neutron shield during the accident, which results in the loss of the (liquid) convection heat transfer across the tank.

As noted above, the fuel and the fuel basket were not directly modeled in the ANSYS analysis. To determine the maximum temperature of the components inside the basket, the following method is applied:

$$T_{max} = Tis_{max} + \Delta T_{comp}$$

where:

Tis_{max} is the maximum temperature of the inner shell, obtained in the ANSYS transient thermal analysis.

ΔT_{comp} is the difference in maximum temperatures from Table 3.4-2 between the inner shell and the fuel basket outer wall or the fuel rod cladding during normal transport.

The maximum temperatures of fuel cladding and basket wall are:

Component	ΔT_{comp} (°F) [1]	Tis_{max} (°F) [2]	T_{max} (°F)
Fuel basket outer wall	2 (276-274)	505	507
Fuel cladding	198 (472-274)	505	703

[1] Temperatures from Table 3.4-2.
[2] Temperatures obtained in the ANSYS evaluation.

As a result, the maximum average cavity gas temperature can be taken as the average of the maximum basket wall and maximum fuel cladding temperatures. This produces an average cavity gas temperature of 605°F.

As shown in Table 3.5-1, all of the cask component temperatures are within the allowable temperature limit during the fire accident event.

3.5.3.2 Evaluation of MTR Fuel Contents

The temperatures in the MTR fuel basket and MTR fuel plates produced during the fire accident were determined using the two ANSYS finite element models of the NAC-LWT cask for MTR fuel element discussed in Section 3.4.1.3.2. The gas in the NAC-LWT cask cavity is considered to be air. Other conditions applied to the model are the same as those described in Sections 3.5.1 and 3.5.2 for the axisymmetric fire transient model with respect to the liquid neutron shield and outer surface boundary conditions. The accident thermal models for MTR fuel are shown in

Figure 3.5-6 and Figure 3.5-7, for the design basis decay heat loading and the variable decay heat loading, respectively. The type, form, design or enrichment of the MTR fuel assemblies has no effect as long as the decay heat load and other fuel characteristics are in compliance with the requirements of Table 1.2-4. The presence and/or use of axial fuel spacers and spacer plates to position the fuel assemblies for ease of handling have no effect on the thermal analyses of the MTR basket assembly.

The transient calculation is performed to determine the maximum temperatures in the MTR fuel elements only for the variable decay heat loading because this is the worst-case condition. The cask model is used to determine the temperature history of the cask components, including the basket. The fuel element model is used to determine the temperature rise between the basket and the hottest point in the fuel element. The capacitance of the fuel element is negligible compared to the very large capacitance of the cask assembly. Therefore, a constant ΔT between basket and fuel is used. The temperature history for the MTR fuel variable heat load fire accident analysis is shown in Figure 3.5-8. The temperature profile within the cask model at the time of the maximum fuel temperature is shown in Figure 3.5-9. The bounding case for the uniform and preferential loading (as discussed in Section 3.4.1.3) is an element with 10 fuel plates, a decay heat of 120W and with worst-case dimensions. The maximum temperatures of the components are presented in Table 3.5-2. These results demonstrate that the maximum MTR fuel plate temperature for the variable decay heat loading is 473°F. The MIL-HDBK-5F Specification for 6061-T6 aluminum alloy indicates that the material retains more than 35% of its room temperature yield and ultimate strengths during transient exposure to temperatures as high as 500°F. Therefore, the reduction in strength for the fuel cladding as a result of the fire transient is minor when compared to the values presented in Section 3.4.1.3.3 for aluminum at 400°F. Since the fuel cladding temperatures are maintained significantly below 500°F, it is concluded that the structural integrity of the fuel cladding is maintained. Furthermore, the aluminum cladding of the MTR fuel elements is heated to a temperature of approximately 900°F during the fabrication process and it is clear that the cladding integrity is maintained during that process.

3.5.3.3 Evaluation of TRIGA Fuel Contents

The accident condition temperatures are obtained by applying the temperature differential calculated for the MTR fuel configuration to the TRIGA fuel configuration. To determine the TRIGA accident condition maximum cladding temperature, the temperature difference between the maximum basket temperatures for the normal and accident component temperatures calculated for MTR fuel in Section 3.5.3.2, is added to the maximum cladding temperature calculated for TRIGA fuel in Section 3.4.1.5.

The maximum basket temperature for the MTR fuel design basis heat load fire accident analysis is 374°F, as reported in Table 3.5-2. This temperature is 107°F higher than the normal condition

maximum temperature (267°F) reported in Table 3.4-6. The corresponding maximum TRIGA fuel cladding temperature for the fire accident condition is reported in Table 3.5-3 to be 433°F. The MIL-HDBK-5F Specification for 6061-T6 aluminum alloy indicates that the material retains more than 35% of its room temperature yield and ultimate strengths during transient exposure to temperatures as high as 500°F. Therefore, the reduction in strength for the aluminum-clad TRIGA fuel cladding as a result of the fire transient is minor when compared to the values presented in Section 3.4.1.3.3 for aluminum at 400°F. Since the fuel cladding temperatures are maintained significantly below 500°F, it is concluded that the structural integrity of the aluminum-clad TRIGA fuel is maintained. The allowable temperature for stainless steel-clad TRIGA fuel is significantly higher.

The TRIGA fuel generates small amounts of fission gases during reactor operations, but it contains no initial charge of helium gas. Consequently, the internal pressure developed in the accident condition is less for TRIGA fuel than for the design basis PWR fuel.

3.5.3.4 Evaluation of TRIGA Fuel Cluster Rod Contents

The temperatures in the TRIGA fuel cluster rod basket and cladding produced during the fire accident were determined using the ANSYS finite element model of the NAC-LWT for the TRIGA fuel discussed in Section 3.4.1.6 for Condition 2 (air in the cavity and without the ISO container). The gas in the NAC-LWT cask cavity is considered to be air. Other conditions applied to the model are the same as those described in Sections 3.5.1 and 3.5.2 for the axisymmetric fire transient model with respect to the liquid neutron shield and outer boundary conditions.

The temperatures in the basket are bounded by the maximum temperatures of the fuel region. The temperature time history for the fuel region is shown in Figure 3.5-10. The maximum temperature of the clad was determined to be 394°F. This value is below the 800°F limit for the clad or the 400°F limit for the aluminum specified in Section 3.4.1.6. Therefore, the components are determined to be acceptable for the fire accident condition.

3.5.3.5 Evaluation for PWR and BWR High Burnup Fuel Rod Contents in a Rod Holder

The maximum temperatures of the principal components are evaluated using the ANSYS model described in Section 3.5.1.2. The maximum cask component temperatures for the hypothetical accident are identical to those presented in Table 3.5-1 since the bounding temperature history from the analysis of NAC-LWT PWR contents is used as a boundary condition for the analysis for PWR and BWR high burnup fuel rod contents.

Maximum time dependent temperatures of different components, before, during and after the fire, are shown in Figure 3.5-11. For the maximum time dependent temperatures of cask components see Figure 3.5-4 and Figure 3.5-5.

As a result, the maximum average cavity gas temperature for fire accident is calculated as the average of the air contained inside the basket. This produces an average cavity gas temperature of 695°F.

Table 3.5-4 shows the can weldment and fuel rod cladding temperatures during the fire accident event.

3.5.3.6 Evaluation of DIDO Fuel Contents

The DIDO fuel maximum heat load is bounded by the maximum heat load of the MTR fuel. Therefore, in the accident condition, the maximum temperatures of the cask components for the MTR contents will bound the maximum temperatures for the cask components for the DIDO contents. It is conservative to use the results of the fire transient evaluated in Section 3.5.3.2 for the cask inner shell temperature. The maximum basket and fuel temperatures (T_{max}) for the DIDO fuel for the accident conditions are determined by adding the increase in steady state temperature from the cask inner shell to the maximum temperature of the component ($\Delta T_{component}$) to the maximum cask inner shell temperature ($T_{inner\ shell}$) obtained from the MTR evaluation. The maximum temperatures of the fuel cladding and basket wall are:

Component	$\Delta T_{component}$ (°F)	$T_{inner\ shell}$[1] (°F)	T_{max} (°F)
Fuel basket	146 = 327[2]-181	334	480
Fuel cladding	157 = 338[2]-181	334	491

[1] Obtained from Table 3.5-2 for the uniform heat distribution.
[2] Obtained from Table 3.4-12, Condition 2.

The fuel cladding temperature previously listed is bounded by those determined for the MTR contents. It is concluded that the structural integrity of the fuel cladding is maintained for the fire accident condition.

3.5.3.7 Evaluation for General Atomics Fuel Contents

The General Atomics fuel maximum heat load is bounded by the maximum heat load of the DIDO and MTR fuels. Therefore, in the accident condition, the maximum temperatures of the cask components for the MTR contents will bound the maximum temperatures for the cask components with General Atomics fuel. It is conservative to use the results of the fire transient calculation evaluated in Section 3.5.3.2 for the cask inner shell temperature. The maximum

basket temperature (T_{max}) for the General Atomics fuel for accident conditions is determined by adding the increase in steady-state temperature from the cask inner shell to the maximum temperature of the component ($\Delta T_{component}$) to the maximum cask inner shell temperature ($T_{inner\ shell}$) obtained from the MTR evaluation. The maximum temperature of the basket is:

$$T_{max} = (250 - 214) + 334 = 370^{\circ}F$$

where:

334°F is the maximum temperature of the LWT inner shell during a fire accident

This temperature is bounded by those determined for the MTR contents. It is concluded that the structural integrity of the General Atomics basket and contents is maintained for the fire accident condition.

3.5.3.8 Evaluation of PWR and BWR High Burnup Fuel Rods in Fuel Assembly Lattice

The total heat load of the PWR and BWR high burnup fuel rods (up to 25 rods) in a fuel assembly lattice is bounded by that for the PWR and BWR high burnup fuel in a rod holder as evaluated in Section 3.5.3.5. Therefore, in the accident condition, the maximum temperatures of the cask components for the design basis PWR configuration bound the maximum temperatures for the PWR or BWR high burnup fuel rods in the fuel assembly lattice. The fuel cladding is expected to have the same difference in temperature between normal conditions and the accident fire conditions as determined in Section 3.5.3.5. The temperature difference for the fuel cladding between normal and accident conditions for the high burnup fuel in a rod holder is 118°F (1,014°F – 896°F). The maximum fuel cladding temperature is 664°F for high burnup fuel rods in a fuel assembly lattice for normal conditions of transport as evaluated in Section 3.4.1.10 (Table 3.4-14). Therefore, the maximum temperature of the fuel cladding for the 25 fuel rods in the fuel assembly lattice for accident conditions is 782°F (664°F + 118°F).

3.5.3.9 Evaluation of PWR and BWR High Burnup Fuel in a Rod Holder with Damaged Rods

The damaged fuel maximum heat load is equal to the maximum heat load of the PWR and BWR high burnup fuel rods. To determine maximum temperatures of the fuel configuration with damaged fuel rods in the fire accident condition, temperatures from the normal and accident conditions for the PWR and BWR high burnup intact fuel rods (Table 3.4-10 and Table 3.5-4) are used to determine the temperature differentials that are caused by the fire accident. The increase in temperatures is added to the maximum normal conditions temperature for the fuel

rods in a rod holder with damaged rods (Table 3.4-15) to compute the maximum fire temperatures. The maximum temperatures of the fuel cladding and stainless steel rod holder are shown in Table 3.5-5. The maximum temperatures for the cask components are bounded by those for the design basis PWR fuel assembly configuration.

3.5.3.10 Evaluation of TPBAR Contents

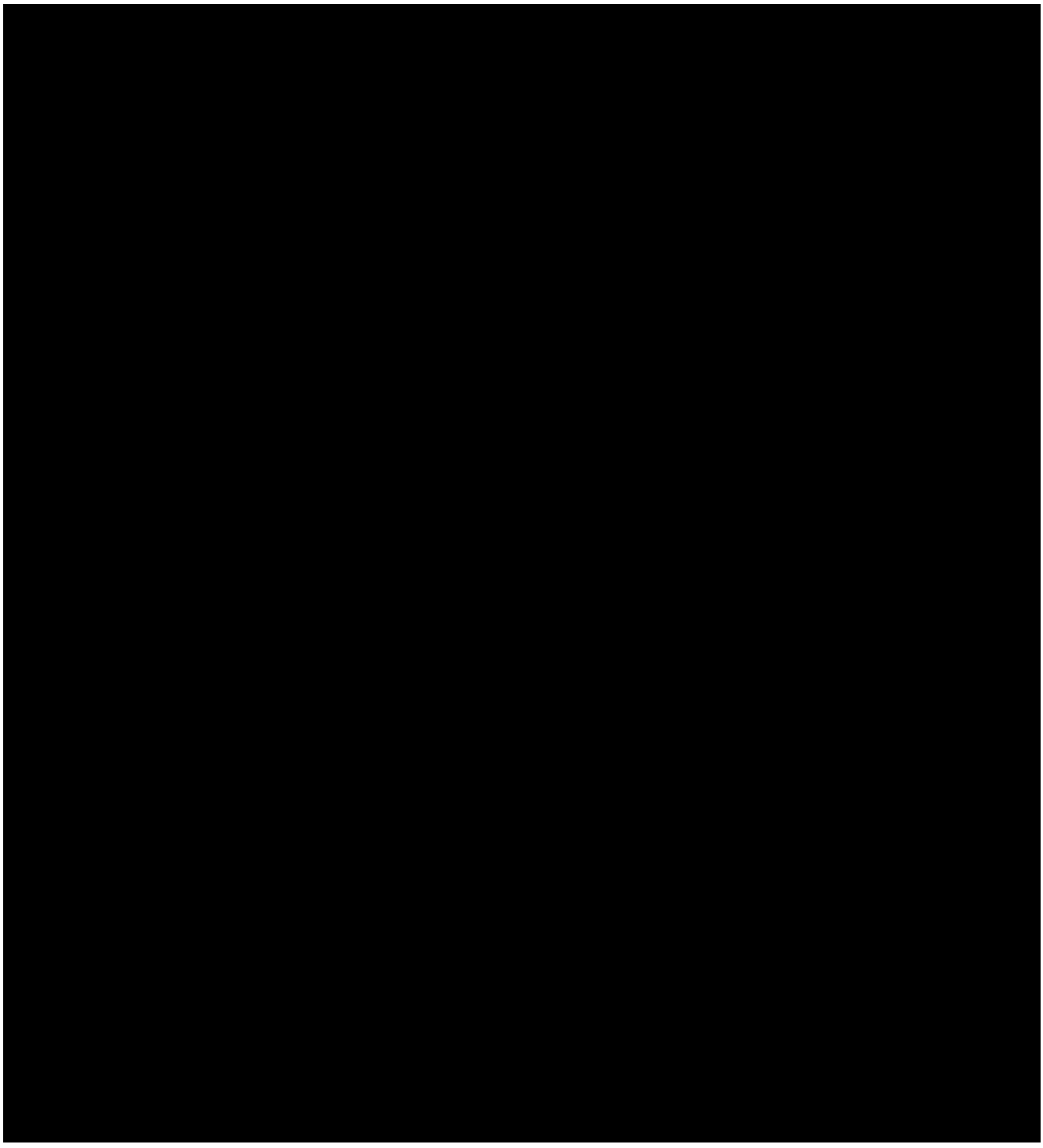

[redacted]

3.5.3.11 Evaluation of PULSTAR Fuel Elements in 28 MTR Basket

As described in Section 3.4.1.13, the thermal performance of the configuration of PULSTAR fuel elements in the 28 MTR basket is bounded by the thermal performance of the TRIGA fuel cluster rods, condition 2. The temperatures in the TRIGA fuel cluster rod basket and cladding produced during the fire accident were determined and described in Section 3.5.3.4. The

temperatures in the basket are bounded by the maximum temperatures of the fuel region. The temperature time history for the fuel region is shown in Figure 3.5-11. The maximum temperature of the cladding was determined to be 394°F. This value is below the 1,058°F limit for the fuel cladding. Therefore, the components for PULSTAR fuel elements in the 28 MTR basket are determined to be acceptable for the fire accident condition.

3.5.3.12 Evaluation of ANSTO Fuels

The maximum heat load of the spiral fuel assemblies (0.756 kW per cask) is bounded by the maximum heat load of the MTR fuel (1.05 kW per cask). Therefore, in the accident condition, the maximum temperatures of the cask components for the MTR contents will bound the maximum temperatures for the cask components for the ANSTO basket contents. It is conservative to use the results of the fire transient evaluated in Section 3.5.3.2 for the cask inner shell temperature. The maximum basket and fuel temperatures (T_{max}) for the ANSTO fuel contents for the accident condition are determined by adding the temperature difference ($\Delta T_{component}$) between the maximum temperature of the cask inner shell and the component (basket or fuel) for the normal condition to the maximum cask inner shell temperature ($T_{innershell}$) for the accident condition obtained from the MTR evaluation. The maximum temperatures of the fuel cladding and basket are computed as follows.

Component	$\Delta T_{component}$ (°F)	$T_{innershell}$[1] (°F)	T_{max} (°F)
Fuel basket – MOATA Plate Fuel	8 = 230[2]-222[2]	334	342[3]
Fuel cladding – MOATA Plate Fuel	11 = 233[2]-222[2]	334	345[3]
Fuel basket – Mark III Spiral Fuel	26 = 248[2]-222[2]	334	360[4]
Fuel cladding – Mark III Spiral Fuel	28 = 250[2]-222[2]	334	362[4]

1 Obtained from Table 3.5-2 for the uniform heat distribution.
2 Obtained from Table 3.4-22.
3 For the standard MOATA fuel standard loading condition (all seven tubes are loaded with MOATA fuels).
4 For the standard Mark III fuel standard loading condition (all seven tubes are loaded with Mark III fuels) or the mixed loading condition (each of the seven fuel tubes can be loaded with mark III fuels or MOATA fuels).

3.5.3.13 Evaluation of 16 PWR MOX High Burnup Rods

The PWR/BWR Rod Transport Canister and 5 × 5 insert used for the transport of 16 PWR MOX high burnup rods is the same design as the one used for the BWR and PWR high burnup rods. The heat load used in the evaluation of the BWR high burnup rods, which includes the effect of the peaking factor, bounds that of the PWR MOX high burnup rods (see Section 3.4.1.15). As

presented in Section 3.4.1.15, the reduced conductivity of the PWR MOX fuel rods does not affect the heat transfer through the canister or insert or, in the case of the transient, it does not affect the ability to absorb and retain heat. The initial temperatures of the fuel rods are conservative since the heat load used in the steady-state evaluation is for 25 rods of the design basis heat load (see Section 3.4.1.7), rather than the 16 PWR MOX high burnup rods. Therefore, the maximum component temperatures under the hypothetical accident condition (HAC) are identical to the results reported in Table 3.5-1 for the PWR assembly contents, which were used as the boundary condition for the analysis for PWR and BWR high burnup fuel rod contents and, therefore, are applicable to the PWR MOX fuel rod contents. Table 3.5-1 shows that the lid metallic seal, Alternate B port cover metallic face seal and lead gamma shield are below their respective temperature limits. In addition, the bounding temperatures for the PWR and BWR rod contents reported in Table 3.5-4, which are bounding for the PWR MOX fuel rod contents, show that the can weldment and fuel rod cladding temperatures under the HAC are below their respective limits.

3.5.3.14 Evaluation for ANSTO-DIDO Combination Basket

Section 3.4.1.16 demonstrates that the maximum temperature with the design basis heat loads for the ANSTO and the DIDO fuels significantly bound the temperatures of the combinations of fuel configurations for the ANSTO-DIDO basket assembly. Therefore, for the fire accident condition, the same basis would confirm that the fuel and component temperatures for the fire accident conditions evaluated in Section 3.5.3.6 for DIDO fuel and Section 3.5.3.12 for ANSTO fuel types are bounding for the maximum fuel temperature in the conditions of the ANSTO-DIDO basket assembly.

3.5.3.15 Evaluation for TPBARs in the PWR/BWR Rod Transport Canister

[redacted]

[redacted]

3.5.3.16 Evaluation of SLOWPOKE Fuel Contents

The SLOWPOKE fuel maximum heat load is bounded by the maximum heat load of the MTR fuel. Therefore, in the accident condition, the maximum component temperatures for the MTR contents will bound the maximum component temperatures for the components for the SLOWPOKE contents. The maximum component temperatures for the fire accident for the MTR contents are listed in Table 3.5-2 for the design heat load.

3.5.3.17 Evaluation of Intact or Damaged NRU or NRX Fuels

The heat load used for the intact or damaged NRU/NRX material (0.64 kW), including the higher heat load (0.64 kW×1.25 = 0.80 kW) used for the damaged fuel evaluation (as described in Section 3.1) is lower than the heat load of 1.26 kW for the MTR fuel (Section 3.1). The same LWT cask is used for loading the intact or damaged NRU/NRX material and for loading the MTR fuels. Therefore, it is conservative to use the temperature increase of the cask inner shell of the MTR configuration for the fire accident condition of the intact or damaged NRU/NRX fuels. The maximum inner shell temperature is 337°F for the fire accident (Table 3.5-2, Condition 2) and the minimum inner shell temperature for the normal condition is 180°F (Table 2.4-6, Condition 2). For the MTR configuration, the bounding temperature increase of the inner shell due to fire the accident is 157°F (337°F-180°F) during the fire and cool down stages, which corresponds to Condition 2 (cask transported via truck trailer and cavity gas is air).

To get a bounding fuel temperature of the NRU/NRX material for the fire accident condition, it is conservative to add the temperature increase of 157°F to the maximum fuel temperature of 245°F for the normal condition (Section 3.4.1.19) since it neglects the thermal inertia of the entire contents inside the NRU/NRX cask. Therefore, the maximum fuel temperature for the NRU/NRX material is conservatively determined to be 402°F (245°F+157°F) for the fire accident condition, which is lower than the allowable temperature of 500°F defined in Section 3.5.3.2. The maximum temperature of the tube and support disk is bounded by the fuel temperature of 402°F, which is lower than the normal allowable temperature of 800°F for

stainless steel, therefore, the tube and support disk are determined to be acceptable for the fire accident.

To get a bounding temperature of the damaged NRU/NRX fuels for the fire accident condition, it is conservative to add the temperature increase of 157°F (described above) to the maximum fuel temperature of 271°F for the normal condition (Section 3.4.1.19) since it neglects the thermal inertia of the entire contents inside the NRU/NRX cask. Therefore, the maximum fuel temperature for the damaged NRU/NRX material is conservatively determined to be 428°F (271°F+157°F) for the fire accident condition, which is lower than the allowable temperature of 500°F defined in Section 3.5.3.2. The maximum temperature of the tube and support disk is bounded by the fuel temperature of 428°F, which is lower than the normal allowable temperature of 800°F for stainless steel, therefore, the tube and support disk for the damaged NRU/NRX fuels are determined to be acceptable for the fire accident.

3.5.3.18 Evaluation of HEUNL

Temperatures in the HEUNL container during the fire accident were determined using two ANSYS finite element models of the NAC-LWT cask for HEUNL, one for the initial condition (Model 1) and one for the fire transient analysis (Model 2). The model used for the initial condition (Model 1) is a combination of the model described in Section 3.4.1.20 and the cask model described in Section 3.4.1.3.1 with ISO container. The models are combined by using ANSYS constraint equations to tie the dissimilar meshes. As shown in Figure 3.4-22, the slide bars and ribs are conservatively modeled as air in the Model 1. The model used for the fire transient analysis (Model 2) is also a combination of the model from Section 3.4.1.20 and the cask body model from section 3.5.3.2 with modifications. The slide bars and ribs are added in the Model 2 to allow more heat transfer into the cask, as shown in Figure 3.5-14 and Figure 3.5-15. Thermal properties for the slide bars [redacted] are listed in the following table.

Thermal Conductivity	0.02002 (Btu/hr-in-°F)
Density	0.0336 (lb/in^3)
Specific Heat	0.287 (Btu/lb-°F)

The initial condition for the fire transient analysis is the steady state condition for the normal transport condition, as described in Section 3.4.1.3.1. The LWT cask loaded with HEUNL containers is inside the ISO container. The ambient temperature is 100°F with solar insolation. The gas in the NAC-LWT cask cavity is considered to be air. The same heat load of 12.88W as used for normal transport condition is utilized.

The cask is not in the ISO container as designed for the 30 foot accident drop. The fire is to occur after the drop and pin puncture accidents. At the start of the fire accident, the steam

pressure and/or the pin puncture will force the neutron shield to be empty, thus allowing the outer shell of the neutron shield to radiate to the outer surface of the outer cask shell.

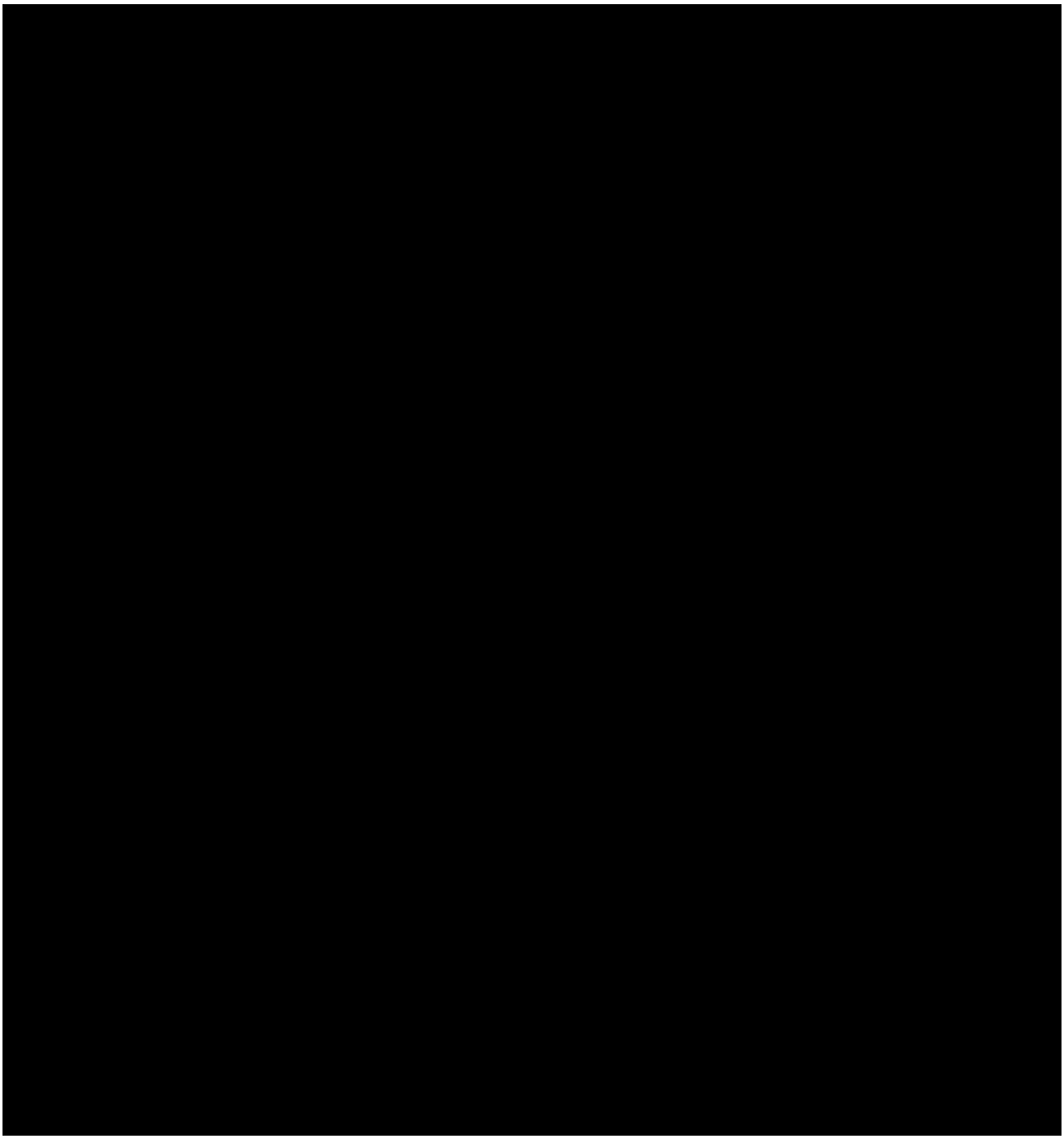

3.5.3.19 Evaluation of SLOWPOKE Fuel Core

The maximum heat load for the SLOWPOKE fuel core is bounded by the maximum heat load of the MTR fuel. Therefore, in the accident condition, the maximum temperatures of the cask components for the MTR contents will bound the maximum temperatures for the cask components for the SLOWPOKE fuel core. It is conservative to use the results of the fire

transient evaluated in Section 3.5.3.2 for the cask inner shell temperature. The maximum basket and fuel temperatures (T_{max}) for the SLOWPOKE fuel core for the accident conditions are

determined by adding the increase in steady state temperature from the cask inner shell to the maximum temperature of the component ($\Delta T_{component}$) to the maximum cask inner shell temperature ($T_{inner\ shell}$) obtained from the MTR evaluation. The maximum temperatures of the fuel cladding and basket shell are:

Component	$\Delta T_{component}$ (ºF)	$T_{inner\ shell}$[1] (ºF)	T_{max} (ºF)
Fuel basket	25 = 239[2]-214[2]	334	359
Fuel cladding	90 = 304[2]-214[2]	334	424

[1] Obtained from Table 3.5-2 (Design Basis Heat Loading)
[2] Obtained from Table 3.4-28

The maximum fuel cladding temperature is bounded by those determined for the MTR contents. It is concluded that the structural integrity of the fuel cladding is maintained for the fire accident condition.

3.5.3.20 Evaluation for SrF_2 Capsules

[redacted]



3.5.4 Maximum Internal Pressure

3.5.4.1 Maximum Internal Pressure for Design Basis Fuel in Accident Conditions

The accident internal pressure is calculated assuming an accident with 100 percent fuel rod failure combined with the design basis fire described in 10 CFR 71. The fuel rod failure assumes 30 percent of the fission gas and 100 percent of the backfill gas escapes the ruptured fuel rods.

The internal pressure due to the 100 percent fuel rod rupture is calculated using the method described in Section 3.4.4. The total cask pressure of the cask backfill and failed fuel rods is calculated by a two step procedure. First, the pressures documented under normal conditions in Section 3.4.4 are adjusted to include the increased total free volume associated with 100% fuel rod failure. Then, the revised cask pressure at normal operating temperature is adjusted to accident condition temperatures.

Adjusting the partial pressure of the cask backfill:

$$P_{cask} = P_{initial}\left(\frac{V_{cask}}{V_{total}}\right)$$

where:

$P_{initial}$ = 25.8 psia (normal condition temperature adjusted cask backfill pressure)

V_{cask} = 5.196 ft^3 (147,134 cm^3) [Section 3.4.4]

$V_{rod\ void}$ = 8,123 cm^3 [Section 3.4.4]

V_{total} = 155,257 cm^3 ($V_{cask} + V_{rod\ void}$)

$$P_{cask} = 25.8\,\text{psia}\left(\frac{147{,}134\text{cm}^3}{155{,}257\text{cm}^3}\right)$$

$$P_{cask} = 24.4\,\text{psia}$$

Adjusting the partial pressure of the fuel rod backfill and fission gases:

$$P_{fuel\,rods} = P_{initial}\left(\frac{V_{rod\,void}}{V_{total}}\right)$$

where:

$P_{initial}$ = 1,521.3 psia (fuel rod backfill pressure of 989.8 psia plus fission gas pressure of 0.30 x 1771.5 psia)

$V_{rod\ void}$ = 8,123 cm^3

V_{total} = 155,257 cm^3

$$P_{fuelrods} = 1{,}521.3 \text{ psia} \left(\frac{8{,}123.28 \text{cm}^3}{155{,}257 \text{cm}^3} \right)$$

$$P_{fuelrods} = 79.6 \text{ psia}$$

Summing the two partial pressures yields the total cask pressure at normal operating condition temperature:

$$P_{Total} = P_{cask} + P_{fuelrods}$$

$$P_{Total} = 24.4 \text{ psia} + 79.6 \text{ psia}$$

$$P_{Total} = 104.0 \text{ psia}$$

The fuel cladding has the highest temperature of any barrier with which the gas comes in contact during a design basis fire. As shown in Section 3.5.3.1, the maximum average cavity gas temperature is 605°F during the fire accident condition. For conservatism, a temperature of 667°F is used in the calculation of the maximum accident condition internal pressure. Given that the internal volume of the NAC-LWT Cask remains constant during the fire, the resultant pressure is proportional to the temperature change according to the ideal gas law:

$$P_2 = P_1 \left(\frac{T_2}{T_1} \right)$$

Thus, for the design basis fire:

$$P_{fire} = 104.0 \text{ psia} \left(\frac{1127^{\circ} \text{R}}{932^{\circ} \text{R}} \right)$$

$$P_{fire} = 125.8 \text{ psia}$$

3.5.4.2 High Burnup Fuel Rod Canister Maximum Internal Pressure

The high burnup fuel rod canister maximum internal pressure in the accident conditions is calculated assuming 100 percent fuel rod failure combined with the design basis fire maximum temperature. The fuel rod failure assumes release of 30 percent of the fission gas and 100 percent of the backfill gas.

The canister internal pressure is calculated using the method described in Section 3.4.4.2, with the BWR used as the bounding fuel type for the analysis. The total canister pressure is calculated in two steps. First, the pressures documented under normal conditions in Section 3.4.4.2 are adjusted to include the increased total free volume associated with 100 percent fuel

rod failure. Then, the canister pressure is adjusted to account for the accident condition temperature.

The partial pressure of the canister volume is calculated by:

$$P_{canister} = P_{initial}\left(\frac{V_{canister}}{V_{total}}\right)$$

where:

P_{inital} = 29.3 psia (from earlier)

$V_{canister}$ = 28.2 liters (from earlier)

V_{void} = 0.079 liters (from earlier)

V_{void} = $25*V_{void} + V_{canister}$ = 30.2 liters

V_{total} = 30.2 liters

Therefore, $P_{canister}$ is equal to 27.4 psia. The partial pressure of the fuel rods is calculated by:

$$P_{fuel\,rods} = P_{initial}\left(\frac{V_{fuel\,rods}}{V_{total}}\right)$$

where:

$P_{initial}$ = 1,425 psia (earlier from Section 3.4.4.2)

$V_{fuel\,rods}$= $25*V_{void}$

$V_{fuel\,rods}$ = ~1.97 liters (at 100% of the total fuel rod volume)

V_{total} = 30.2 liters ($V_{canister} + (25*V_{void})$)

then:

$$P_{fuel\,rods} = 1{,}425\ \text{psia}\left(\frac{1.97\ \text{liters}}{30.2\ \text{liters}}\right) = \sim 94\ \text{psia}$$

and

$$P_{total} = P_{canister} + P_{fuel\,rods} = 27.4\ \text{psia} + \sim 94\ \text{psia} = \sim 121\ \text{psia}\ (\sim 8.2\ \text{atm})$$

For the 100% fuel rod failure and the design basis fire accident temperature of 725°F, the pressure is calculated by multiplying the 100% rod failure pressure by the inverse ratio of the normal condition temperature (588.7 K) to the accident temperature (658.15 K). The pressure thus calculated is 135 psia (~9.2 atm)

3.5.4.3 25-Rod Maximum Internal Pressure-Cask Cavity

Using the same methodology used to calculate the cavity pressure in Section 3.5.4.2, the pressure from the 100% fuel rod failure and the design basis fire accident temperature of 725°F is calculated using the cask cavity free gas volume (89.32 liters from earlier). The resulting pressure in the cask cavity, assuming that the gases within the canister are released to the cask cavity, is 67 psia (~4.5 atm).

3.5.4.4 TPBAR Shipment Cask Cavity Internal Pressure-Accident Conditions

[redacted]

3.5.4.5 Maximum Internal Pressure for PULSTAR Fuel Payload

Maximum internal pressures under accident conditions are calculated using the same methodology as that employed in Section 3.4.4.6. The accident condition temperature is set to 394°F, and 100 percent of the fuel rods are assumed to fail. The resulting calculated pressures are summarized as follows.

Description	Free Volume (liters)	Pressure (atm)	Pressure (psia)	Pressure (psig)
Cask Pressure -28 Intact Assemblies	217.0	2.3	34.0	19.3
Cask Pressure -14 Intact Assemblies and 14 Cans	233.0	2.4	35.4	20.7
Can Pressure - PULSTAR Failed Fuel Can	1.53	5.0	73.9	59.2

3.5.4.6 Maximum Internal Pressure for 16 PWR MOX/UO_2 Fuel Rods in a Rod Holder

Using the same methodology used to calculate the cavity pressure in Section 3.4.4.4, the pressure from the 100% fuel rod failure with 100% gas release and the design basis fire accident temperature of 725°F is calculated. The resulting pressure in the cask cavity is 65.3 psig (80.0 psia, 5.4 atm).

3.5.4.7 Maximum Internal Pressure for Aluminum-Based Fuels

The maximum normal condition 100% fission gas release MTR payload is evaluated for accident pressure. This payload bounds the remaining aluminum based fuel payloads. The 100% release normal condition pressure in Section 3.4.4.9 is simply increased by the ratio of accident (528K) to normal (470K) temperature.

$$P_{Accident} = P_{Normal} \times \frac{T_{Accident}}{T_{Normals}} = 73.1psia \times \frac{528K}{470K} = 82.1psia = 67.4psig$$

As the DIDO accident temperature is higher than the MTR temperature, the DIDO value is used as the ratio basis. Maximum accident pressure for aluminum-based fuel is conservatively calculated to be 68 psig.

3.5.4.8 Maximum Internal Pressure for HEUNL Contents

[redacted]

3.5.4.8.2 HEUNL Container

[redacted]

3.5.4.9 Maximum Internal Pressure for SrF_2 Capsule Contents

[redacted]

3.5.5 Maximum Thermal Stresses

The most severe thermal stress conditions that occur during the fire test and subsequent cooldown have been evaluated. For conservatism, an internal pressure of 168 psig is used, in the analysis that is performed in Section 2.7.3. The temperatures corresponding to the maximum thermal stresses are reported in Table 3.5-1.

3.5.6 Evaluation of Package Performance for Hypothetical Accident Thermal Conditions

The NAC-LWT cask thermal performance has been assessed for the hypothetical accident, as specified in 10 CFR 71. The O-rings and the lead gamma shields remain within their safe operating ranges. The cask does not suffer any adverse structural consequences as a result of the thermal considerations of the hypothetical accident. The NAC-LWT cask maintains containment and does not exceed the dose rate limits of 49 CFR 173 as a result of the hypothetical accident.

3.5.7 Assessment of the Effects of the Fission Gas Release in the Fire Accident Condition

During the fire, the release of the fission gas is expected to reduce the effective thermal conductivity of the gas in the cavity or inside the sealed canisters. To assess the reduction of the thermal conductivity, the helium conductivity is factored by the ratio of the conservative initial fill pressure of 565 psia (Section 3.4.4) for the PWR fuel assemblies and the end of life pressure (which contains the fill gas plus the fission gas release) of 1,521 psia (Section 3.5.4). This ratio is computed to be 0.37. A conservative ratio of 0.24 is applied to the conductivity of helium, assuming that all fission product gases have a conductivity of zero.

For the temperatures shown, which envelope the maximum temperatures of the cavity gas in the accident condition, the reduced helium properties are larger than the thermal conductivity of air.

This is bounding because, as shown in Table 4.2-2, the volume of fission product gas produced by the design basis PWR assembly is higher than that for any other fuel loading.

The data below (Krieth) reflects the comparison of the air conductivity and the factored helium conductivity.

Temperature (°F)	Air Conductivity (K_{air}) (Btu/hr-in-F)	Helium Conductivity (Btu/hr-in-F)	Factored Helium Conductivity (K_{He}) (Btu/hr-in-F)	Ratio K_{He}/K_{air}
300	0.00161	0.00883	0.00212	1.32
400	0.00177	0.00958	0.00230	1.30
500	0.00193	0.01017	0.00244	1.26
600	0.00208	0.01075	0.00258	1.24
700	0.00223	0.01113	0.00267	1.20
800	0.00238	0.01150	0.00276	1.16

The analyses performed for the contents employed air as the gas in the cavity and containers for the accident condition. This demonstrates that the evaluation of the accident condition using air bounds the "reduced helium properties" case.

Figure 3.5-1 Transient Thermal Analysis Finite Element Model of the NAC-LWT

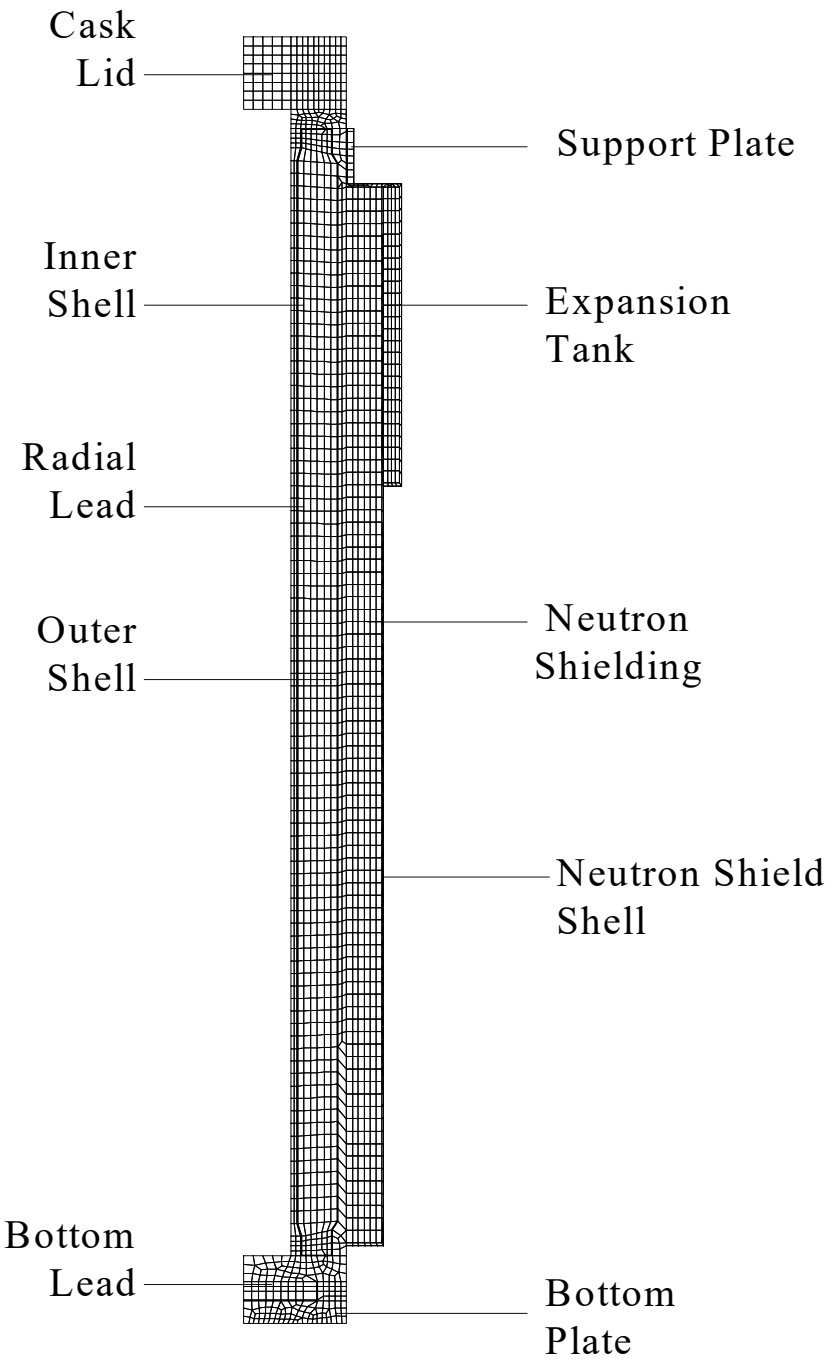

Figure 3.5-2 Top Region of the ANSYS Model

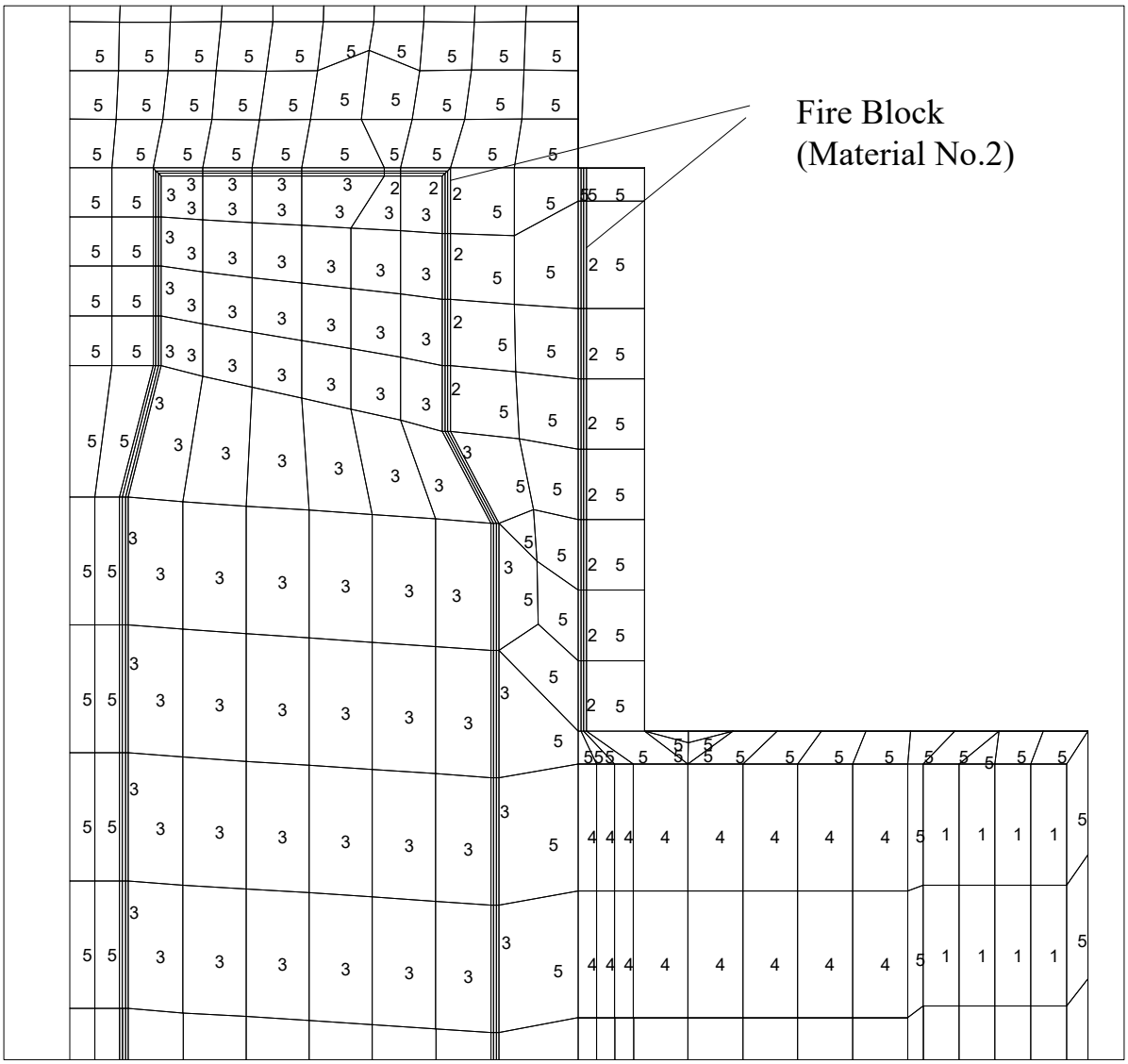

Note: Fire Block is either BISCO FPC or UNIFRAX Fiberfrax Ceramic Fiber Paper

Figure 3.5-3 Bottom Region of the ANSYS Model

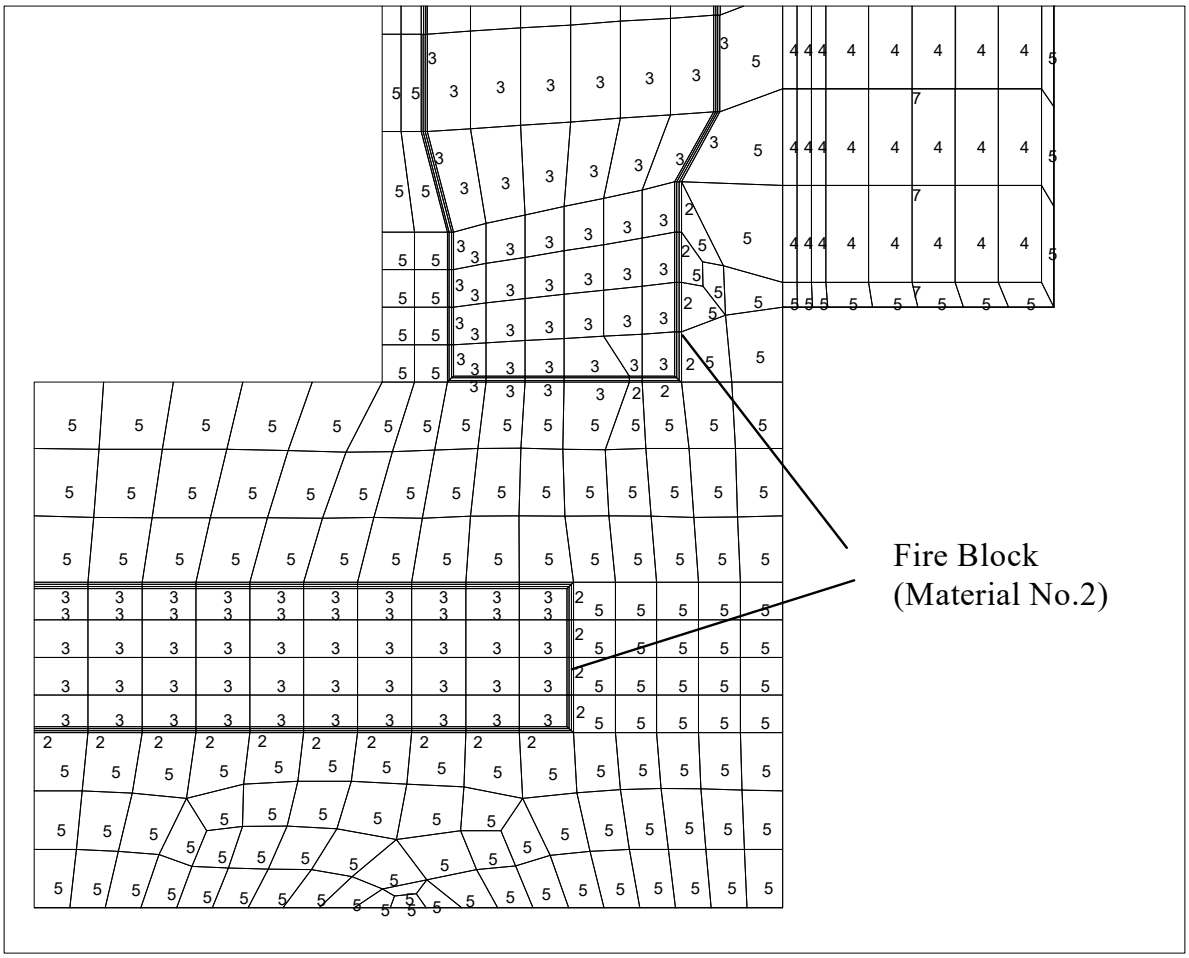

Note: Fire Block is either BISCO FPC or UNIFRAX Fiberfrax Ceramic Fiber Paper

Figure 3.5-4 Temperature History of NAC-LWT O-Rings and Valves in the Hypothetical Fire Event

1. Temperature of the Valves
2. Temperature of the O-Rings

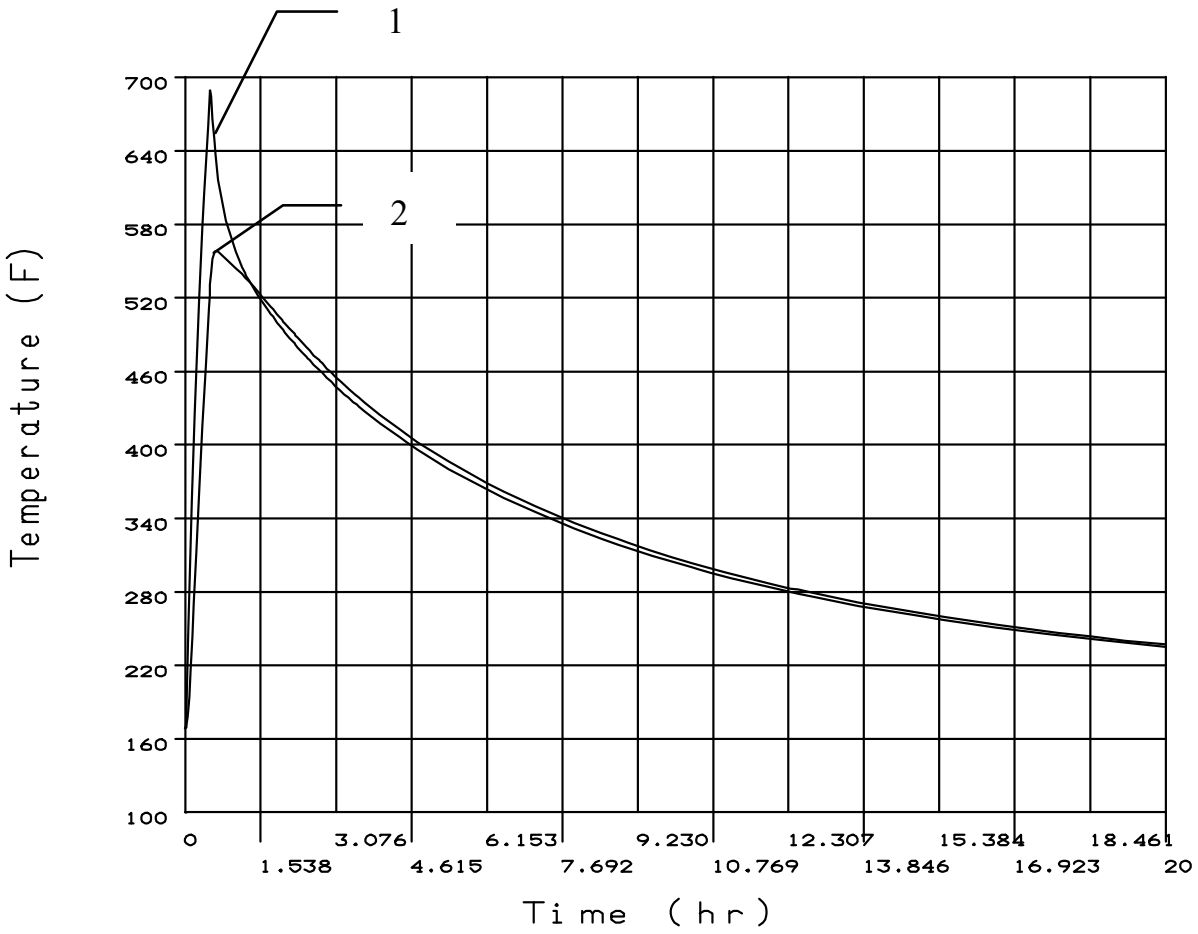

Figure 3.5-5 Temperature History of NAC-LWT Components in the Hypothetical Fire Event

1. Temperature of the Cask Outer Surface
2. Temperature of the Neutron Shield
3. Temperature of the Radial Lead Gamma Shield
4. Temperature of the Bottom Lead Gamma Shield
5. Temperature of the Inner Stainless Steel Shell

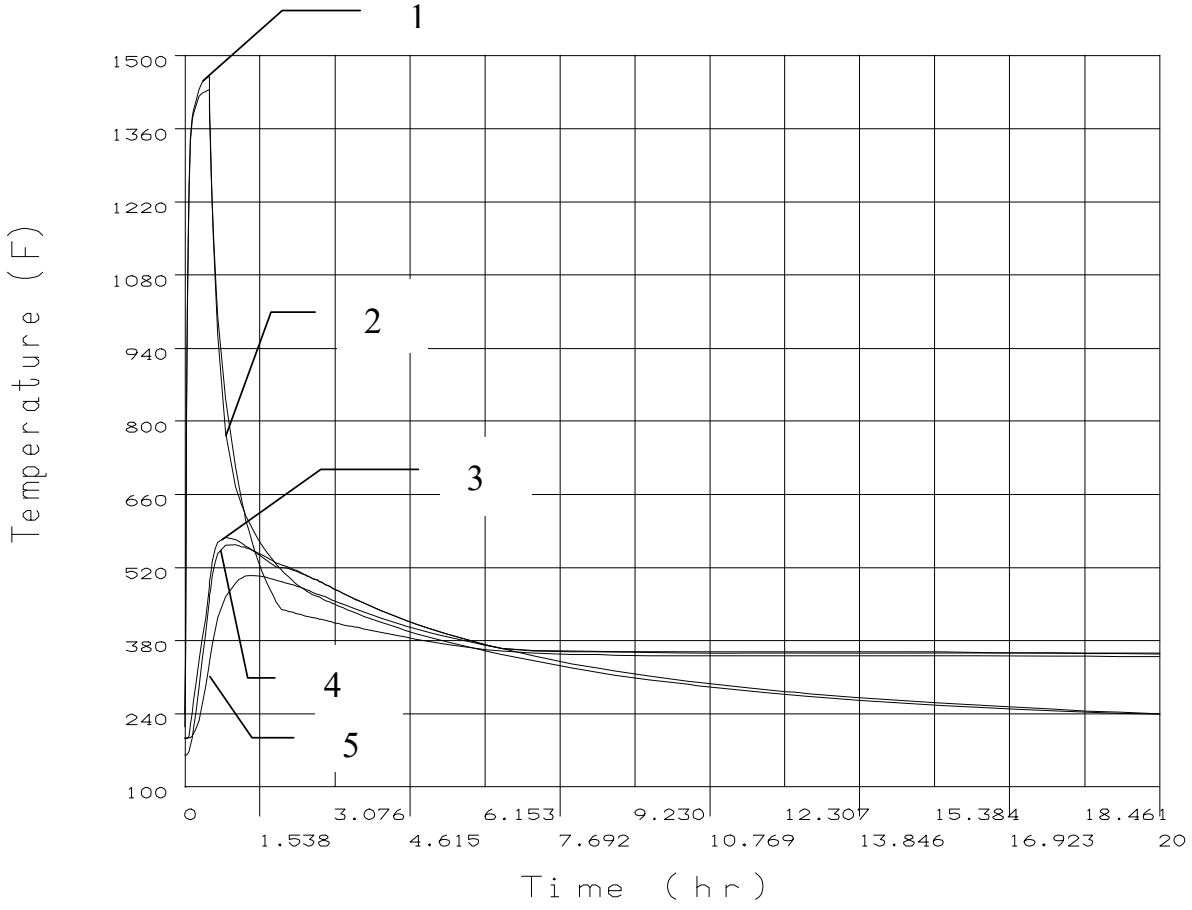

Figure 3.5-6 MTR Fuel Design Basis Heat Load Fire Accident ANSYS Thermal Model (Uniform 30-Watt/Element Configuration Heat Load)

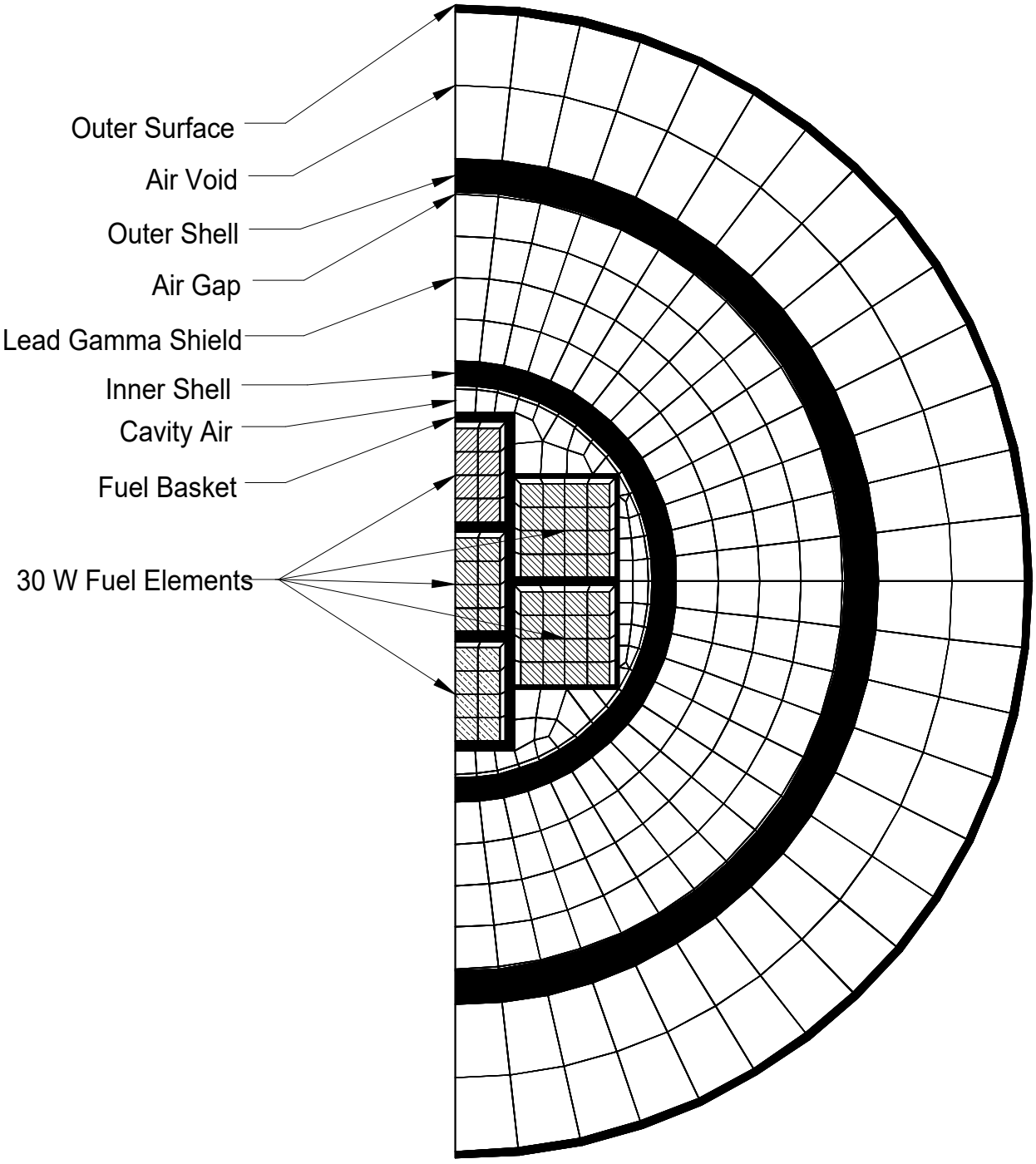

Figure 3.5-7 MTR Fuel Variable Heat Load Fire Accident ANSYS Thermal Model (120-Watt/70-Watt/20-Watt Configuration Heat Load)

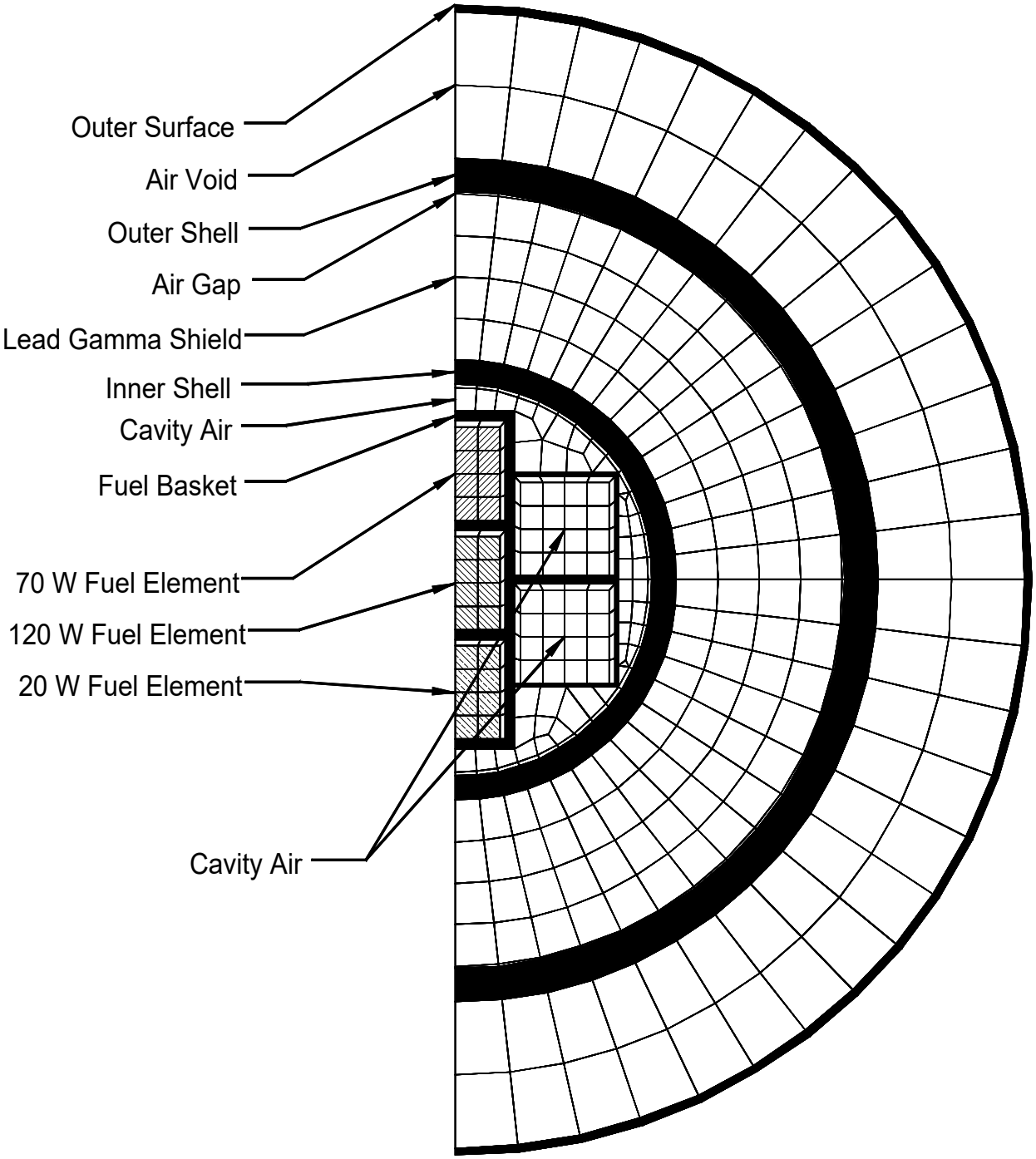

Figure 3.5-8 Temperature History in the MTR Fuel Variable Heat Load Fire Accident Analysis

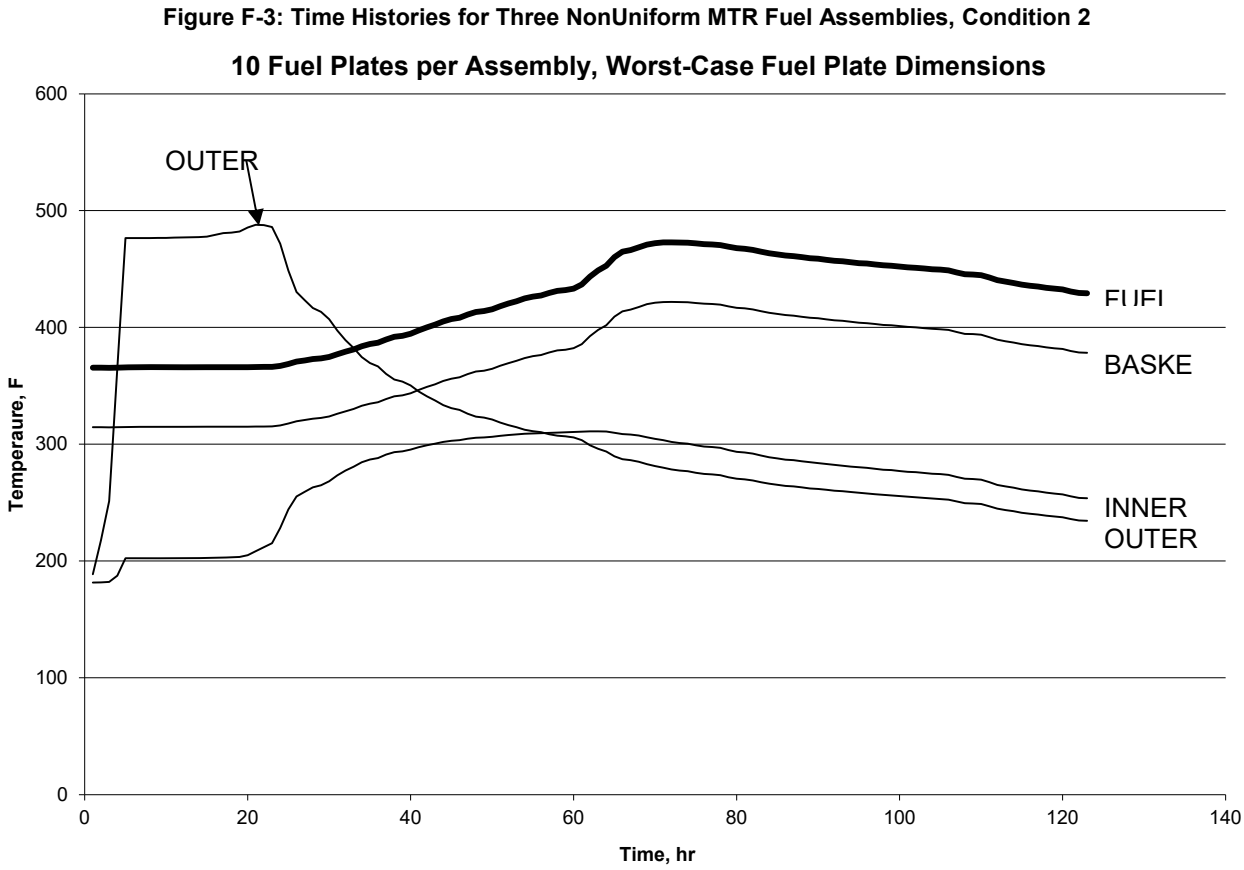

Note: 120-Watt / 70-Watt / 20-Watt Configuration Heat Load. Cavity gas is air with fire applied to cask surface.

Figure 3.5-9 Location of the Maximum Temperature in the MTR Fuel Variable Heat Load

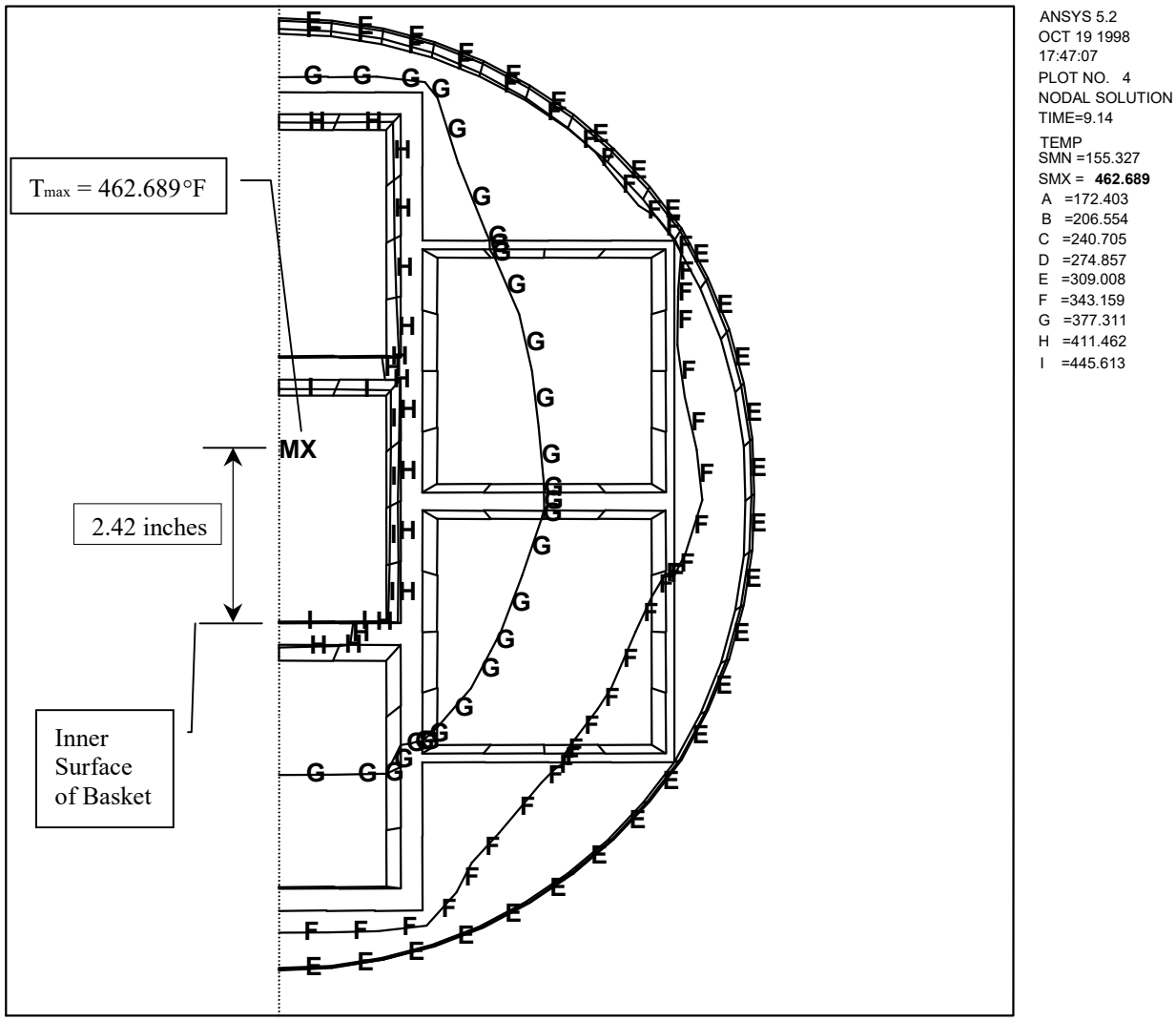

Figure 3.5-10 Temperature History for the TRIGA Fuel Cluster Rods Design Basis Heat Load Fire Accident Analysis

(Uniform 30 watt/basket cell or 210 watt/basket section or 1.05 kW total heat load)
(Cavity gas: Air, Fire is Applied to the Cask Surface)

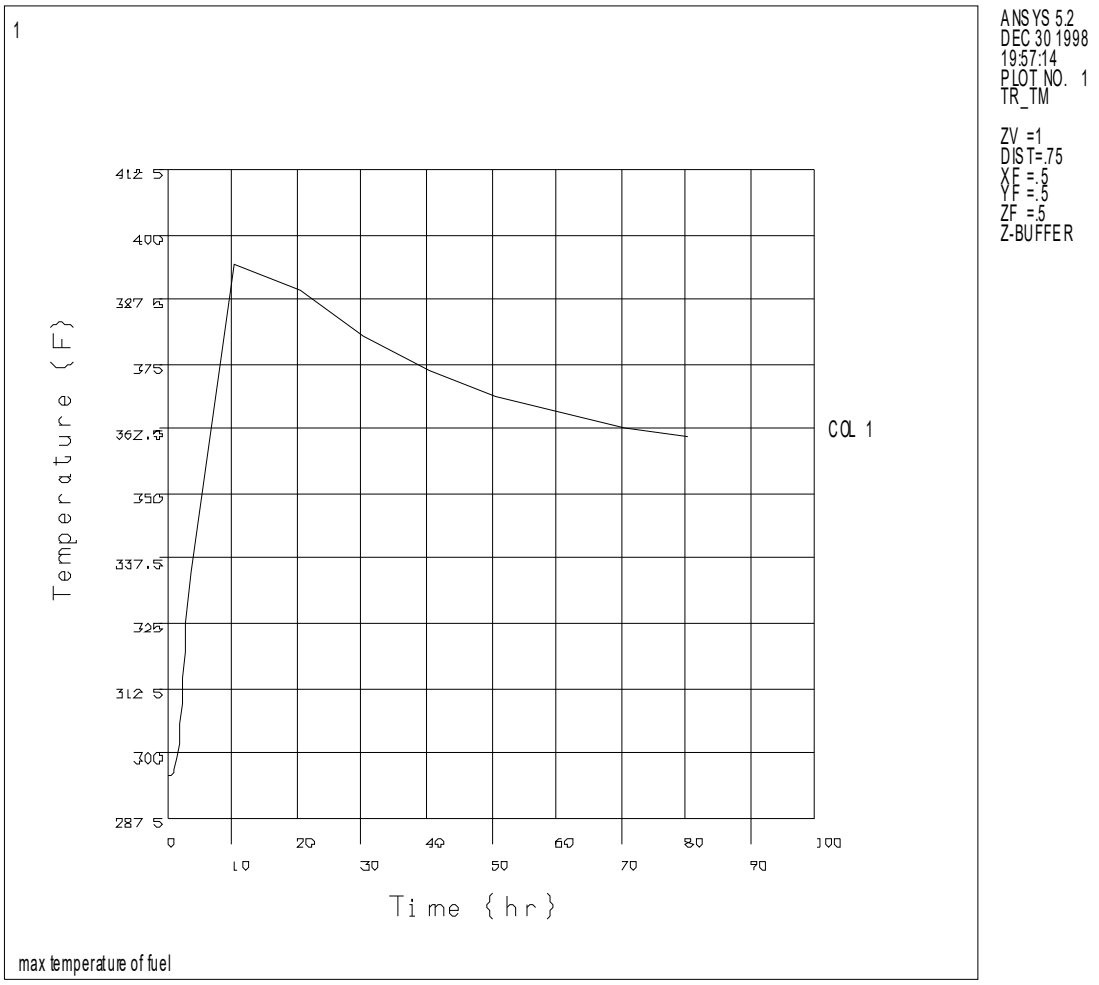

Figure 3.5-11 Temperature History of NAC-LWT Cask Components with PWR and BWR High Burnup Fuel Rods in the Hypothetical Fire Event

1. Average Temperature of Cask Cavity Gas
2. Temperature of the Fuel Cladding
3. Temperature of the Can Weldment
4. Temperature of the Aluminum Structural Component
5. Temperature of the Pin Tube

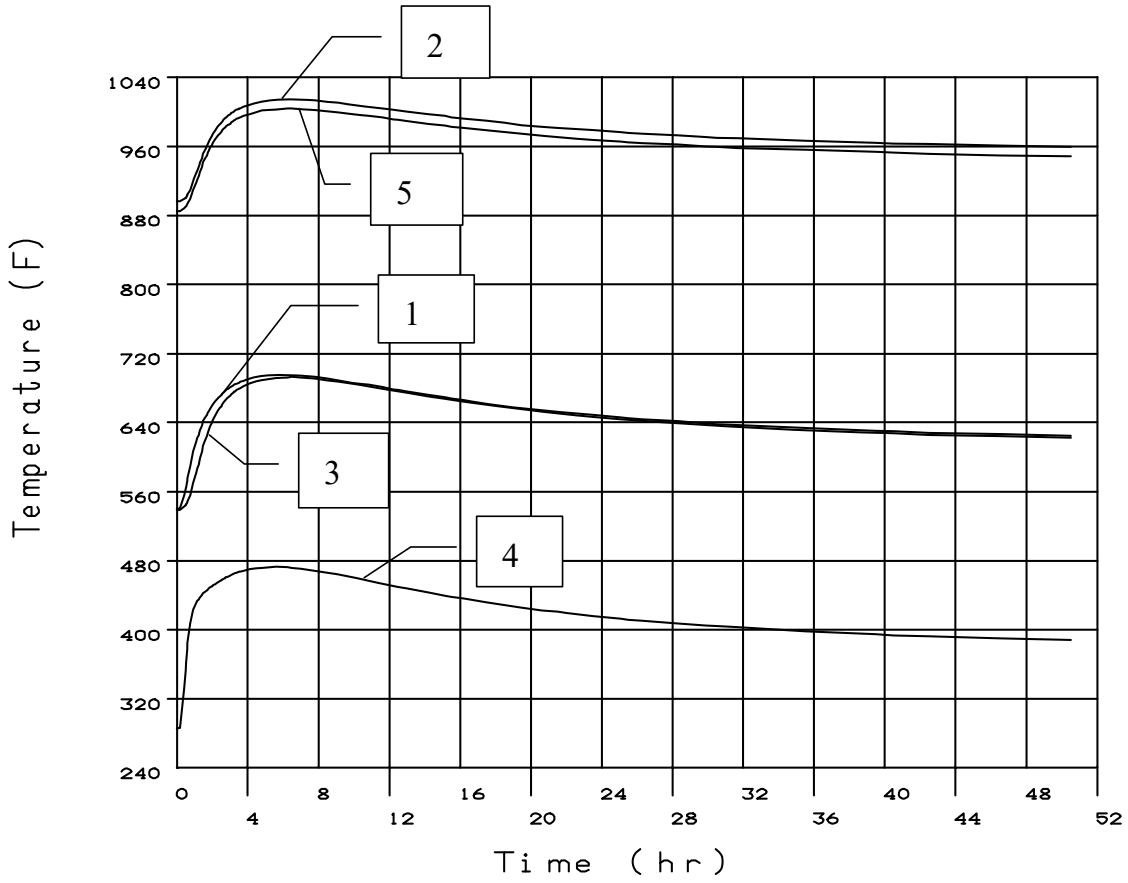

Figure 3.5-12 End of Fire Temperatures of the Alternate Port Cover Components

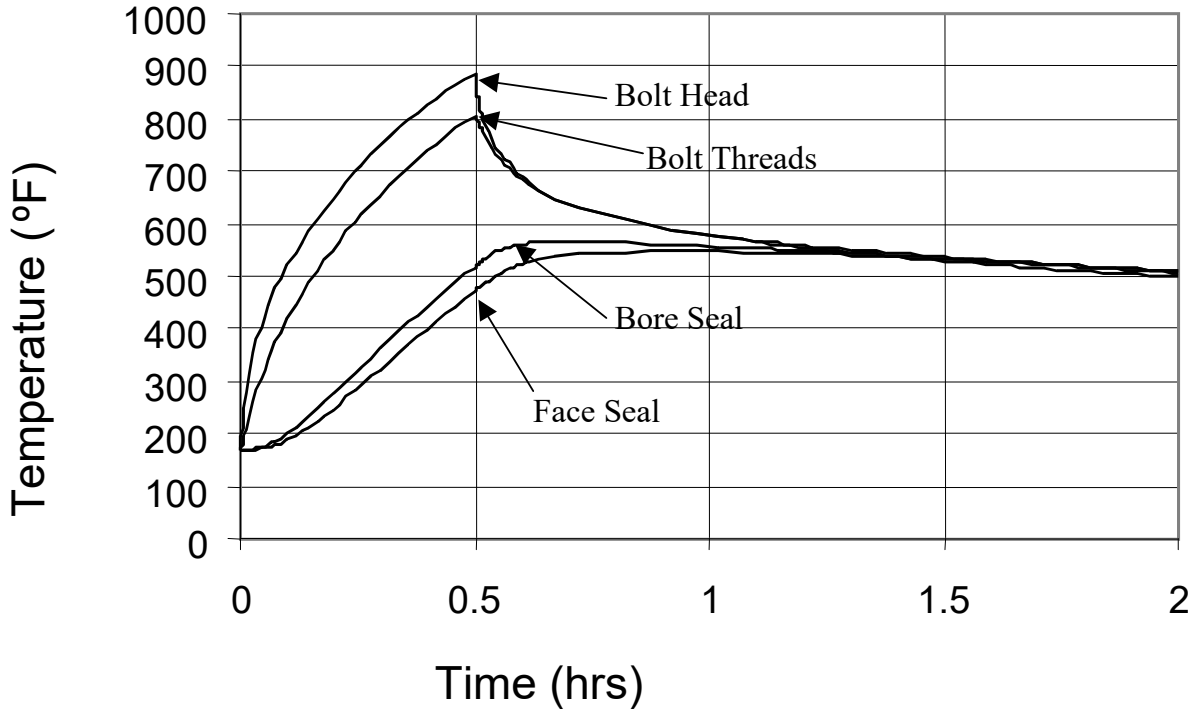

Figure 3.5-13 Transient Temperatures of the Alternate Port Cover Components

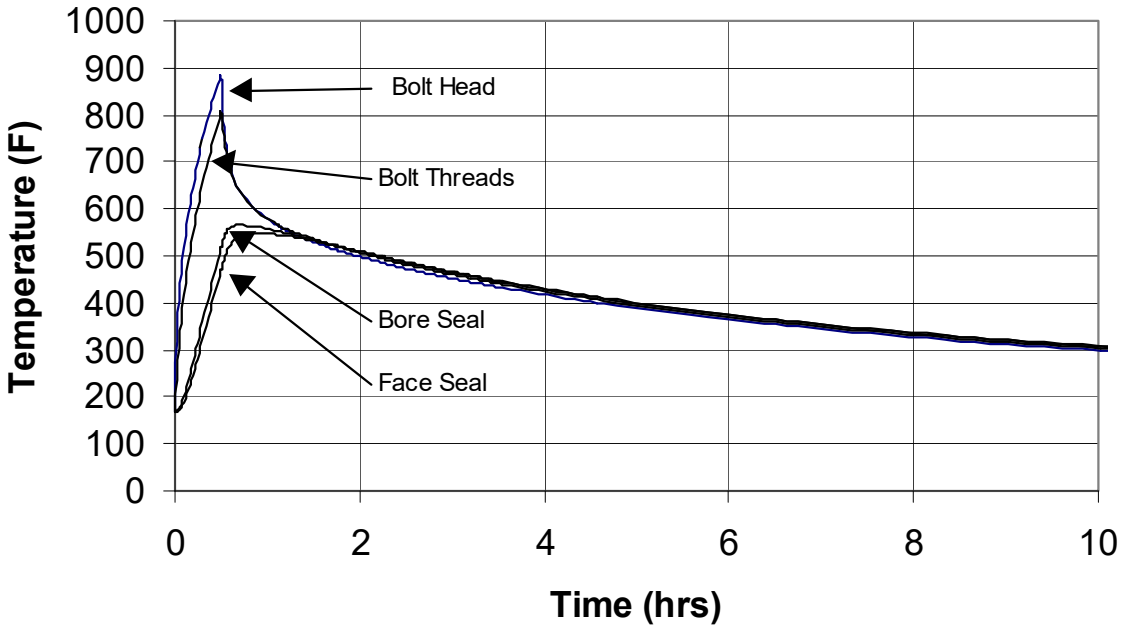

Figure 3.5-14 Model for the HEUNL Fire and Cool-Down Analysis (with Ribs/Slide Bars Added)

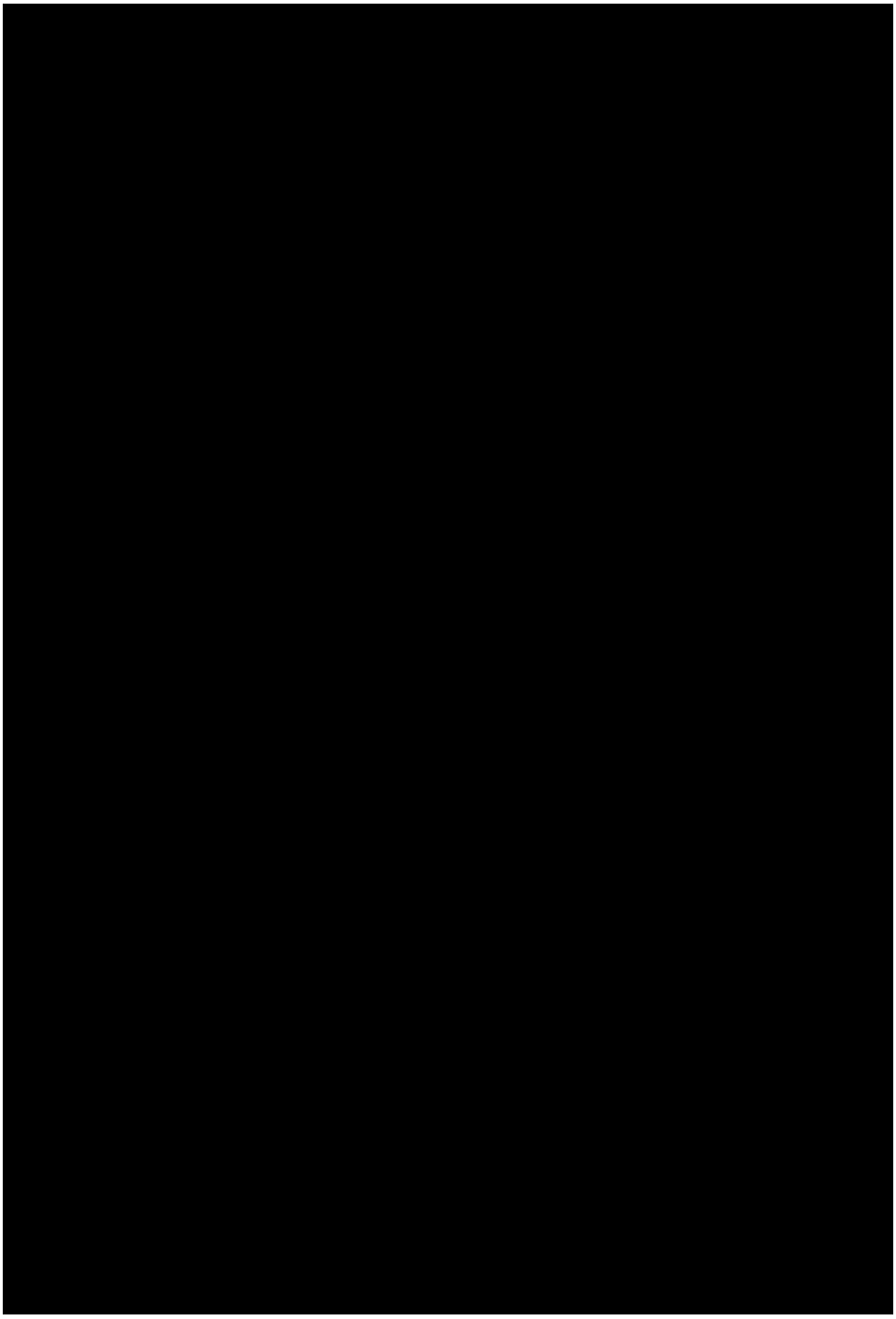

Figure 3.5-15 Model Detail for the HEUNL Fire and Cool-Down Analysis (with Ribs/Slide Bars Added)

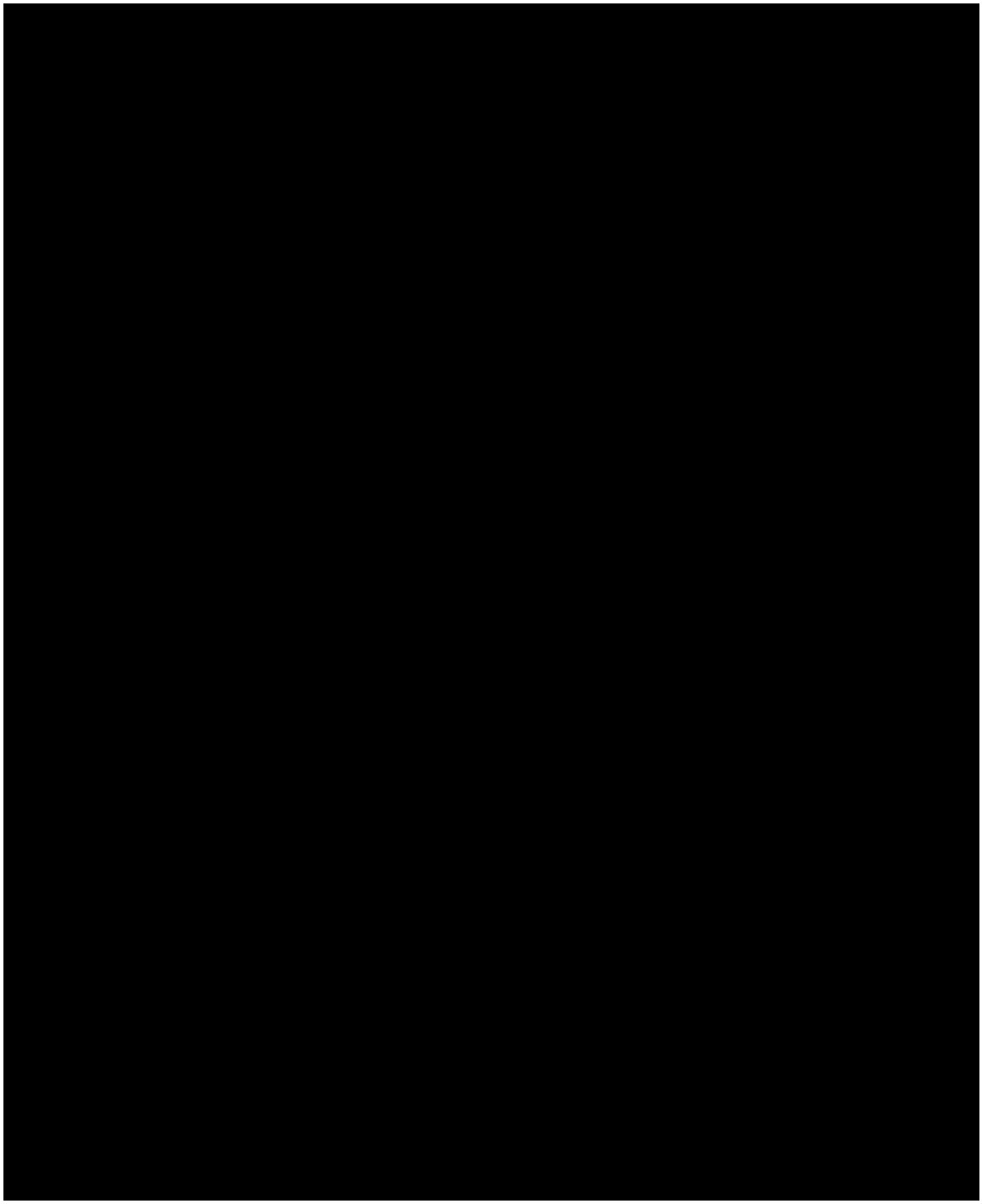

Figure 3.5-16 Temperature History of HEUNL Liquid in the Hypothetical Fire Event



Figure 3.5-17 Temperature History of HEUNL Container Shell in the Hypothetical Fire Event



Figure 3.5-18 Finite Element Model for the SrF_2 Capsule Fire Condition Upper Limiter Region



Figure 3.5-19 Finite Element Model for the SrF_2 Capsule Fire Condition Lower Limiter Region



Figure 3.5-20 Temperature History of the BUP-500 Capsule Configuration in the Hypothetical Fire



Figure 3.5-21 Temperature History of WESF Capsule Container Configuration in the Hypothetical Fire



Table 3.5-1 Maximum Component Temperatures (°F) During the Fire Accident (Design Basis PWR Fuel, 2.5 kW Heat Load)

Component	Component Temperature (°F)	Temperature Limit (°F)
O-rings: TFE	558	735
Metallic	571(3)	800
Cask radial outer surface	1460	----(1)
Neutron shield region	1435	----(1)
Radial lead gamma shield	578	600
Bottom lead gamma shield	564	600
Inner stainless steel shell	505	800
Fuel basket outer wall	507	700(2)
Fuel rod cladding	703	1058
Alternate Port Cover	--	--
Bolt head	886	900
Bolt threads	807	900
Alternate Port Cover O-ring – bore	565(4)	550
Alternate Port Cover O-ring – face	547	550
Alternate B Port Cover metallic face seal	547	800

Notes: (1) No upper limit established. The loss of the liquid neutron shield is assumed under HAC.

(2) The primary consideration in establishing the safe operating range of the aluminum is maintaining the integrity of the aluminum. According to MIL-HDBK-5F, it can be shown that aluminum at 700°F retains component performance.

(3) The maximum port cover seal temperature is conservatively used to bound the maximum temperature of the metallic seal.

(4) Should the bore seal fail post-fire accident, containment would not be breached.

Table 3.5-2 MTR Fuel Fire Accident Maximum Temperatures (°F), 10 Fuel Plate/120W Element Case (Bounding Configuration)

Condition 2: NAC-LWT (Transported via Truck Trailer)
Cavity Gas: Air

Component	Design Basis Heat Loading*	Variable Decay Heat Loading**
Cask Radial Outer Surface	***	***
Lead Shield	***	***
Inner Shell	334	337
Fuel Basket	374	420
Fuel Cladding	385	473

* Uniform 30-Watt/Element Configuration Heat Load.

** 120-Watt/70-Watt/20-Watt Configuration Heat Load. The 120-Watt/70-Watt/20-Watt Configuration bounds the configuration comprised of the 40-Watt maximum MTR heat load per slot, as discussed in Section 3.4.1.3.

*** The maximum temperatures for these components are bounded by the design basis reported.

Table 3.5-3 TRIGA Fuel Fire Accident Maximum Temperatures (°F)

Component	Temperature
Fuel Basket	374
Fuel Cladding	433

Table 3.5-4 PWR and BWR High Burnup Fuel Rods Fire Accident Maximum Temperatures (°F)

NAC-LWT (Transported via Truck Trailer)
Cavity Gas: Air

Component	Component Temperature (°F)	Temperature Limit (°F)
Stainless steel Can Weldment	692	800
Fuel Rod Cladding	1,014	1,058[1]

[1] The maximum allowable temperature under HAC for PWR, BWR and PWR MOX fuel rod cladding is 1,058°F per ISG-11, Revision 3.

Table 3.5-5 Maximum Component Temperatures for High Burnup Fuel Rods in a Rod Holder with Damaged Fuel Rods for the Fire Accident

Component	Normal Conditions Temperature[1] (T_{norm})(°F)	Temperature Difference (ΔT) (°F)	Accident Temperature $T_{acc} = T_{norm} + \Delta T$(°F)
Rod Holder Weldment	567	692[2] – 538[3] = 154	721
Fuel Cladding	809	1014[2] – 896[3] = 118	927

[1] Table 3.4-14
[2] Table 3.5-4
[3] Table 3.4-10, Condition 2

Table 3.5-6 TPBAR Fire Accident Maximum Temperatures

Component	Temperature (°F)
TPBARs	578
Aluminum Basket	481
Consolidation Canister	509

Table 3.5-7 SrF_2 Capsules Fire Accident Maximum Temperatures

Component	Temperature (°F)
Aluminum Insert (BUP-500 Config.)	375
Average Cavity Gas (BUP-500 Config.)	343
Salt Interface (BUP-500 Config.)	788
Aluminum Insert (WESF Container Config.)	389
Average Cavity Gas (WESF Container Config.)	346
Salt Interface (WESF Container Config.)	803
Aluminum Basket (WESF UCS Config.)	442
Average Cavity Gas (WESF UCS Config.)	357
Salt Interface (WESF UCS Config.)	921

3.6 Failed Metallic Fuel Basket – SCOPE Evaluations

The SCOPE thermal analysis computer program is used to evaluate the NAC-LWT cask containing the 2.75-inch inner diameter (I.D.) failed fuel can liner and six 2.75-inch I.D. failed fuel cans loaded with one metallic fuel rod each for a total heat load of 30 watts.

Figure 3.6-1 and Figure 3.6-2 present the input data and the resulting calculated temperatures from the SCOPE analysis. The calculated temperature for the failed fuel can and the liner (basket) is 214°F.

A SCOPE analysis has also been performed for the 4.0-inch I.D. failed fuel can liner (3-hole basket) and three 4.0-inch I.D. failed fuel cans loaded with three metallic fuel rods each, for a total heat load of 45 watts.

Figure 3.6-3 and Figure 3.6-4 present the input data and the results form the SCOPE analysis for transport of nine failed fuel rods. The maximum calculated temperature for the failed fuel can in the nine failed fuel rod configuration is 229°F.

Figure 3.6-1 Failed Fuel Basket SCOPE Input

```
S C O P E   INPUT (IN CARD-IMAGE FORMAT) FOLLOWS:

Evaluation of NAC LWT Containing 6 Failed Fuel Rods (30 WATTS TOTAL HEAT LOAD)
' ================================================================================
' MELEM   BURNUP    TIME    WHEAT    DHEAT    SRCN    SRCG     ITYPE   NPINS
    21    1600        2      0.0      5.0    6.31+4  1.12+14     1       1
'
' MCAN    ODCAN    TKCAN    HTCAN    HTVOID    HTFUEL
    5      3.0     0.125    12.00      0         12.00
'
' MINSRT    EMINSRT    TKINSRT    TPOISN       TKCGAP    TKIGAP    WTHICK
    5       0.22         0.01       0.0         -0.01      3.75      0.0
'
' NELEM    CASKID
    6        13.375
'
' MISHL  MOSHL  MOLIN  MFIN       TKISHL  TKOSHL  TKOLIN       MGSHLD
    6      6      6     6          0.75     1.2    0.236          1
'
' SPFIN    EMISF    EMISC    TFNMAX    WGHTMX
    1      0.587     0.50      750       200
'
' KTRANS    RHONS    TCNS1    TCNS2    CPNS2
    6       0.071    0.0154   0.0154    0.24
'
' GENERAL FORMAT FOR SHIELDING DATA:
' LTYPE, NUMPTS, (NASSYS(I,LTYPE),TKG(I,LTYPE),TKN(I,LTYPE), I=1,NUMPTS)
' --------------------------------------------------------------------------
'
' SHIELDING DATA FOR 5.75-INCH PB-METAL CASKS
' (ASSUMES A 5-INCH NEUTRON SHIELD)
1 1  6 5.75  5.0
' --------------------------------------------------------------------------
' TERMINATION FLAG (FOR THIS PARTICULAR CASE):
0
```

Figure 3.6-2 Failed Fuel Basket SCOPE Output

```
TITLE:  Evaluation of NAC LWT Containing 6 Failed Fuel Rods (30 WATTS TOTAL HEAT LOAD)


DESCRIPTION OF WASTE MATERIAL

   MELEM       21 (PWR )     MELEM---TYPE OF WASTE MATERIAL (SHOWN IN BRACKETS)
   BU        1600. MWD/MT    BU------AVERAGE BURNUP  (EDIT FOR BOOKEEPING PURPOSES ONLY;  NO LONGER USED)
   TIME       2.00 YEARS     TIME----COOLING TIME  (AGE OF FUEL SINCE DISCHARGE)
   WHEAT  0.0E+00 WATTS/CUFT WHEAT---DECAY HEAT GIVEN OFF BY THE WASTE MATERIAL; NOT USED IF ZERO
   DHEAT  5.0E+00 WATTS/ASSY DHEAT---DECAY HEAT GIVEN OFF BY EACH ASSEMBLY (OR CANISTER); NOT USED IF ZERO
   SRCN   6.3E+04 N/SEC/ASSY SRCN----NEUTRON SOURCE  (EDIT FOR BOOKEEPING PURPOSES ONLY;  NO LONGER USED)
   SRCG   1.1E+14 P/SEC/ASSY SRCG----PHOTON  SOURCE  (EDIT FOR BOOKEEPING PURPOSES ONLY;  NO LONGER USED)

DESCRIPTION OF WASTE CONTAINER

   ITYPE        1            ITYPE---1=CIRC CANISTERS, 2=SQUARE ASSYS (NO CANS), 3=SQR ASSYS WITH SQR CANS
   NPINS        1            NPINS---NUMBER OF FUEL PINS PER ASSEMBLY (IF MELEM DENOTES PWR OR BWR FUEL)
   MCAN         5 ( AL )     MCAN----TYPE OF MATERIAL USED FOR CANISTERS (NO CAN USED IF MCAN=0)
   ODCAN     3.00 INCHES     ODCAN---OUTSIDE DIAM OR WIDTH OF CAN (MCAN.GT.0), OR WIDTH OF ASSEMBLY (MCAN=0)
   TKCAN     .125 INCHES     TKCAN---WALL THICKNESS OF CANISTER (IF MCAN.GT.0)
   HTCAN    12.00 FEET       HTCAN---LENGTH OF CANISTER (ITYPE=1 OR 3), OR LENGTH OF FUEL ASSEMBLY (ITYPE=2)
   HTSABS     .00 FEET       HTSABS--LENGTH OF INTERNAL SHOCK ABSORBERS HOLDING ASSYS OR CANISTERS IN CASK
   HTFUEL   12.00 FEET       HTFUEL--ACTIVE LENGTH OF UO2 FUEL, OR HT OF SOLID WASTE MATL IN CAN (FULL IF 0)

DESCRIPTION OF INSERT

   MINSRT       5 ( AL )     MINSRT--TYPE OF MATERIAL USED FOR INSERT (SHOWN IN BRACKETS)
   EMINST    .220            EMINST--SURFACE EMISSIVITY OF THE INSERT MATERIAL (DIMENSIONLESS)
   TKINST    .010 INCHES     TKINST--THICKNESS OF INSERT BETWEEN ASSEMBLIES (INCLUDES TPOISN)
   TPOISN    .000 INCHES     TPOISN--THICKNESS OF NEUTRON POISON IMBEDDED IN INSERT MATL BETWEEN ASSEMBLIES
   TKCGAP   -.010 INCHES     TKCGAP--THICKNESS OF GAP BETWEEN CANISTER AND INSERT (HE-FILLED IF < 0)
   TKIGAP   3.750 INCHES     TKIGAP--THICKNESS OF GAP BETWEEN INSERT AND THE INNER SHELL (AIR-FILLED IF > 0)
   WTHICK    .000 INCHES     WTHICK--THICKNESS OF THE INSERT BETWEEN CANISTER AND INNER SHELL
   NELEM        6            NELEM---NUMBER OF ASSEMBLIES (OR CANISTERS) PER CASK;  IF ZERO, PERFORM SEARCH
   CASKID   13.38 INCHES     CASKID--INSIDE DIAMETER OF THE CASK (CALCULATED BY CODE IF USER ENTERS 0.0)

DESCRIPTION OF INNER & OUTER SHELL AND THE OUTSIDE LINER

   MISHL        6 ( SS )     MISHL---TYPE OF MATERIAL USED FOR THE INNER SHELL (SHOWN IN BRACKETS)
   MOSHL        6 ( SS )     MOSHL---TYPE OF MATERIAL USED FOR THE OUTER SHELL (SHOWN IN BRACKETS)
   MOLIN        6 ( SS )     MOLIN---TYPE OF MATERIAL USED FOR OUTSIDE LINER AND FINS (IF REQUIRED)
   TKISHL    .750 INCHES     TKISHL--THICKNESS OF INNER SHELL
   TKOSHL   1.200 INCHES     TKOSHL--THICKNESS OF OUTER SHELL
   TKOLIN    .236 INCHES     TKOLIN--THICKNESS OF OUTSIDE LINER

DESCRIPTION OF NEUTRON AND GAMMA SHIELDS

   MNSHLD       0 (SOLID  )  MNSHLD--TYPE OF MATERIAL USED FOR NEUTRON SHIELD (DESCRIBED BELOW IF SOLID)
   MGSHLD       1 ( PB    )  MGSHLD--TYPE OF MATERIAL USED FOR GAMMA SHIELD (SHOWN IN BRACKETS)

DESCRIPTION OF HEAT TRANSFER PARAMETERS FOR FINS (& CASK)

   MFIN         6 ( SS )     MFIN----TYPE OF MATERIAL USED FOR FINS (IF REQUIRED)
   SPFIN    1.000 INCHES     SPFIN---SPACING BETWEEN FINS
   EMISF     .587            EMISF---SURFACE EMISSIVITY OF THE FINS (DIMENSIONLESS)
   EMISC     .500            EMISC---SURFACE EMISSIVITY OF THE CASK (DIMENSIONLESS)
```

Figure 3.6-2 Failed Fuel Basket SCOPE Output (Continued)

```
CASK DESIGN PARAMETERS

   TFNMAX   750.0 DEG.F      TFNMAX--MAXIMUM ALLOWABLE SURFACE TEMPERATURE
   WGHTMX   200.0 KILO.LBS   WGHTMX--MAXIMUM ALLOWABLE WEIGHT OF LOADED CASK
   TAMB     100.0 DEG.F      TAMB----OUTSIDE AMBIENT TEMPERATURE
   NSOLAR       1 INCLUDE    NSOLAR--SOLAR HEATING IN NORMAL STEADY-STATE CALCULATION (INCLUDE/IGNORE=1/0)

KIND OF TRANSIENT THERMAL ANALYSIS TO BE PERFORMED

   KTRANS =     6 OPTION SELECTED BY USER;  OTHER POSSIBLE OPTIONS INCLUDE:

   KTRANS=4 ... ASSUME LIQUID WATER NEUTRON SHIELD IS LOST MANY HOURS BEFORE START OF FIRE (ORIGINAL SCOPE DEFAULT)
   KTRANS=5 ... ASSUME LIQUID NEUTRON SHIELD IS LOST INSTANTLY AT THE START OF THE FIRE (STANDARD NRC SCENARIO)
   KTRANS=6 ... ASSUME A SOLID NEUTRON SHIELD, USE DATA BELOW, AND SWITCH TO NEW THERMAL CONDUCTIVITY DURING FIRE

THERMAL CHARACTERISTICS OF SOLID NEUTRON SHIELD (THE FOLLOWING DATA IS NOT USED UNLESS KTRANS=6)

   RHONS      .07 LBM/CUFT      RHONS--NOMINAL DENSITY OF THE SOLID NEUTRON SHIELD
   TCNS1    .0154 BTU/HR/FT/F   TCNS1--NOMINAL THERMAL CONDUCTIVITY OF THE SOLID NEUTRON SHIELD
   TCNS2    .0154 BTU/HR/FT/F   TCNS2--THERMAL CONDUCTIVITY OF THE SOLID NEUTRON SHIELD DURING AND AFTER THE FIRE
   CPNS2    .2400 BTU/LB/DG.F   CPNS2--HEAT CAPACITY OF THE SOLID NEUTRON SHIELD DURING AND AFTER THE FIRE
```

Figure 3.6-2 Failed Fuel Basket SCOPE Output (Continued)

```
S C O P E -- THE SHIPPING CASK OPTIMIZATION AND PARAMETRIC EVALUATION CODE, VERSION 1.2  (BY J. A. BUCHOLZ, ORNL)


TITLE:  Evaluation of NAC LWT Containing 6 Failed Fuel Rods (30 WATTS TOTAL HEAT LOAD)


COMPONENT DIMENSIONS (INCHES):

  O-LINER  =     .236
  N-SHIELD =    5.000
  O-SHELL  =    1.200
  G-SHIELD =    5.750
  I-SHELL  =     .750
  I-CASK   =   16.580
  I-GAP    =    3.750
  W-POISN  =     .000
  W-INSRT  =     .010
  C/F-GAP  =     .010
  O-CANSTR =    3.000
  I-CANSTR =    2.750
  Q-LENGTH =  143.750

THERMAL PARAMETERS:

  SOLAR INSOLANCE  =  1 (INCLUDED)
  AMBIENT TEMP     =  100.000 (DEG.F)
  TOTAL DECAY HEAT =    .030 (KW)


                                NOMINAL STEADY STATE TEMPERATURES (DEGREES-F)


 SURFACE       O-LINER          N-SHIELD         O-SHELL          PB-SHIELD        I-SHELL
   T          DT   T(MAX)      DT   T(MAX)      DT   T(MAX)      DT   T(MAX)      DT   T(MAX)
 -------   ----------------  ----------------  ----------------  ----------------  ----------------
  181.16       .00  181.16      24.03  205.19       .01  205.20       .03  205.24       .01  205.25


   GAP   INSERT       INSERT          GAP   CAN          CANISTER          FUEL PIN
   DT    T(MIN)      DT   T(MAX)      DT    T(MIN)      DT   T(MAX)      DT   T(MAX)    DEG.C
 ------------------  ----------------  ----------------  ----------------  ----------------------
   8.44  213.69       .02  213.71       .09  213.79       .00  213.79      2.13  215.92   102.18


(*) OUTSIDE DIAMETER OF THE CASK BODY =  42.45 INCHES;  NO EXTERNAL COOLING FINS WERE REQUIRED.
    TOTAL WGHT OF CASK LOADED WITH  6 FUEL ASSEMBLIES OR CANISTERS IS APPROXIMATELY  39249 LBS.
```

Figure 3.6-2 Failed Fuel Basket SCOPE Output (Continued)

```
                                    PREFIRE TEMPERATURES (DEGREES-F)

TIME...(H.M.S)    *-------INSERT----*--GAP--*----I.SHELL----*---G.SHIELD----*----O.SHELL----*----N.SHIELD----*----O.LINER------*

RADIUS (FT)==>     .3082   .3451   .3783   .6908   .7228   .7533  1.0214  1.2325  1.2835  1.3325  1.5549  1.7492  1.7590  1.7688


                  REFERENCE STEADY-STATE TEMPERATURES USED IN CALCULATING TEMP RISE (ASSUMES N-SHLD PRESENT & NO SOLAR HEATING):
  .00  0. 0. 0    136.65  136.64  136.64  124.97  124.96  124.96  124.93  124.92  124.92  124.91  111.35  100.98  100.97  100.97


                  INITIAL STEADY-STATE TEMPERATURES AT START OF 30-MINUTE FIRE (SEE ASSUMPTIONS FOR KTRANS=6):
  .00  0. 0. 0    136.65  136.64  136.64  124.97  124.96  124.96  124.93  124.92  124.92  124.91  111.35  100.98  100.97  100.97

INIT TEMP RISE       .00     .00     .00     .00     .00     .00     .00     .00     .00     .00     .00     .00     .00     .00


                                    ULTIMATE POSTFIRE TEMPERATURES (DEGREES-F)

TIME...(H.M.S)    *-------INSERT----*--GAP--*----I.SHELL----*---G.SHIELD----*----O.SHELL----*----N.SHIELD----*----O.LINER------*

                  ULTIMATE STEADY-STATE TEMPERATURES, LONG AFTER THE 30-MINUTE FIRE IS OVER:
999.0  999.0.0    136.65  136.64  136.64  124.97  124.96  124.96  124.93  124.92  124.92  124.91  111.35  100.98  100.97  100.97


                                    TRANSIENT TEMPERATURES (DEGREES-F)

                  *-------INSERT----*--GAP--*----I.SHELL----*---G.SHIELD----*----O.SHELL----*----N.SHIELD----*----O.LINER------*

MAX TEMP RISE:       2.36    2.36    2.36    2.68    2.68    2.68    2.68    2.68    2.69    2.69  750.52 1322.80 1322.85 1322.89
AT TIME (HRS):      31.33   31.00   31.00    4.42    4.42    4.33    4.25    4.08    4.00    3.92     .50     .50     .50     .50

MAX FIRE TEMP:     139.01  139.01  139.00  127.65  127.64  127.64  127.62  127.61  127.60  127.60  861.87 1423.78 1423.82 1423.86


DURING AND AFTER THE 30-MINUTE FIRE:

      MAX GAMMA SHIELD TEMP..... 128 DEG.F =  53 DEG.C
      MAX BASKET INSERT TEMP..... 139 DEG.F =  59 DEG.C
      MAX FUEL PIN CLAD TEMP..... 142 DEG.F =  61 DEG.C

AS PER 10CFR73, SECT 71.73, THE EFFECTS OF SOLAR HEATING WERE
NEGLECTED PRIOR TO, DURING, AND AFTER THE 30-MINUTE FIRE.
```

Figure 3.6-3 Nine Failed Metallic Fuel Rods SCOPE Input

```
S C O P E   INPUT (IN CARD-IMAGE FORMAT) FOLLOWS:

Evaluation of NAC LWT Containing 9 Failed Fuel Rods (45 WATTS TOTAL HEAT LOAD)
' ================================================================================
' MELEM   BURNUP    TIME    WHEAT    DHEAT    SRCN    SRCG     ITYPE   NPINS
   21    1600        2      0.0      15.0    6.31+4  1.12+14     1       1
'
' MCAN    ODCAN    TKCAN    HTCAN    HTVOID    HTFUEL
   5      4.25    0.125    12.00      0         12.00
'
' MINSRT    EMINSRT    TKINSRT    TPOISN      TKCGAP    TKIGAP    WTHICK
   5        0.22         0.01       0.0         0.69      0.188     0.0
'
' NELEM    CASKID
   3        13.375
'
' MISHL  MOSHL  MOLIN  MFIN       TKISHL  TKOSHL  TKOLIN       MGSHLD
   6      6      6     6           0.75     1.2    0.236          1
'
' SPFIN    EMISF    EMISC    TFNMAX    WGHTMX
   1       0.587     0.50      750       200
'
' KTRANS    RHONS    TCNS1    TCNS2    CPNS2
   6        0.071    0.0154   0.0154    0.24
'
' GENERAL FORMAT FOR SHIELDING DATA:
' LTYPE, NUMPTS, (NASSYS(I,LTYPE),TKG(I,LTYPE),TKN(I,LTYPE), I=1,NUMPTS)
' ------------------------------------------------------------------------
'
' SHIELDING DATA FOR 5.75-INCH PB-METAL CASKS
' (ASSUMES A 5-INCH NEUTRON SHIELD)
1 1  6 5.75  5.0
' ------------------------------------------------------------------------
' TERMINATION FLAG (FOR THIS PARTICULAR CASE):
```

Figure 3.6-4 Nine Failed Metallic Fuel Rods SCOPE Output

PROPERTIES OF MATERIALS CURRENTLY IN THE SCOPE DATA LIBRARY

	MATERIAL	DENSITY (LB/CUFT)	CONDUCTIVITY (BTU/HR/FT/F)	HEAT CAPACITY (BTU/LB/F)	TEMPERATURE LIMIT (DEGREES F)	CAPITAL COST ($/LB)
1	PB	708.56	19.3000	.0320	618	7.500
2	FE	488.26	26.0000	.1200	1950	5.000
3	U	1189.25	15.0000	.0280	1450	22.500
4	CU	559.35	210.0000	.0950	1730	1.400
5	AL	168.49	80.0000	.2280	1050	.700
6	SS	494.43	9.6900	.1200	1800	10.000
7	NA	45.00	38.0000	.3000	1400	.500
8	LI	30.00	20.0000	1.0000	1400	27.500
9	PB-L	146.60	.4400	.1560	1200	4.700
10	CONC	707.60	18.0000	.0320	618	.400
11	ALSI	170.00	80.0000	.2000	1065	.880
12	DOWA	62.00	.0760	.5260	600	2.500
13	HE	.00	.1200	1.2400	1400	.000
14	AIR	.08	.0360	.2600	1400	.000
15	H2O	62.43	.3920	1.0000	250	.000
16	HUL3	81.20	.3000	.0660	1000	.000
17	SHOT	370.00	.3500	.0950	1400	.000
18	HUL1	284.00	1.2000	.0660	1000	.000
19	HLWG	212.00	.7000	.1600	1290	.000
20	HUL2	203.00	.6000	.0660	1000	.000
21	PWR	220.90	1.0000	.1000	1650	.000
22	BWR	199.30	1.0000	.1000	1650	.000
23	HLWC	113.00	.2500	.2200	932	.000

NOTE: THIS EDIT WILL BE PRINTED ONLY ONCE, EVEN THOUGH
THE USER MAY HAVE MULTIPLE SETS OF INPUT DATA.

Figure 3.6-4 Nine Failed Metallic Fuel Rods SCOPE Output (Continued)

```
TITLE:  Evaluation of NAC LWT Containing 9 Failed Fuel Rods (45 WATTS TOTAL HEAT LOAD)


DESCRIPTION OF WASTE MATERIAL

   MELEM       21 (PWR )     MELEM---TYPE OF WASTE MATERIAL (SHOWN IN BRACKETS)
   BU        1600. MWD/MT    BU------AVERAGE BURNUP  (EDIT FOR BOOKEEPING PURPOSES ONLY;  NO LONGER USED)
   TIME       2.00 YEARS     TIME----COOLING TIME  (AGE OF FUEL SINCE DISCHARGE)
   WHEAT  0.0E+00 WATTS/CUFT WHEAT---DECAY HEAT GIVEN OFF BY THE WASTE MATERIAL; NOT USED IF ZERO
   DHEAT  1.5E+01 WATTS/ASSY DHEAT---DECAY HEAT GIVEN OFF BY EACH ASSEMBLY (OR CANISTER); NOT USED IF ZERO
   SRCN   6.3E+04 N/SEC/ASSY SRCN----NEUTRON SOURCE  (EDIT FOR BOOKEEPING PURPOSES ONLY;  NO LONGER USED)
   SRCG   1.1E+14 P/SEC/ASSY SRCG----PHOTON  SOURCE  (EDIT FOR BOOKEEPING PURPOSES ONLY;  NO LONGER USED)

DESCRIPTION OF WASTE CONTAINER

   ITYPE        1            ITYPE---1=CIRC CANISTERS, 2=SQUARE ASSYS (NO CANS), 3=SQR ASSYS WITH SQR CANS
   NPINS        1            NPINS---NUMBER OF FUEL PINS PER ASSEMBLY (IF MELEM DENOTES PWR OR BWR FUEL)
   MCAN         5 ( AL )     MCAN----TYPE OF MATERIAL USED FOR CANISTERS (NO CAN USED IF MCAN=0)
   ODCAN     4.25 INCHES     ODCAN---OUTSIDE DIAM OR WIDTH OF CAN (MCAN.GT.0), OR WIDTH OF ASSEMBLY (MCAN=0)
   TKCAN     .125 INCHES     TKCAN---WALL THICKNESS OF CANISTER (IF MCAN.GT.0)
   HTCAN    12.00 FEET       HTCAN---LENGTH OF CANISTER (ITYPE=1 OR 3), OR LENGTH OF FUEL ASSEMBLY (ITYPE=2)
   HTSABS     .00 FEET       HTSABS--LENGTH OF INTERNAL SHOCK ABSORBERS HOLDING ASSYS OR CANISTERS IN CASK
   HTFUEL   12.00 FEET       HTFUEL--ACTIVE LENGTH OF UO2 FUEL, OR HT OF SOLID WASTE MATL IN CAN (FULL IF 0)

DESCRIPTION OF INSERT

   MINSRT       5 ( AL )     MINSRT--TYPE OF MATERIAL USED FOR INSERT (SHOWN IN BRACKETS)
   EMINST    .220            EMINST--SURFACE EMISSIVITY OF THE INSERT MATERIAL (DIMENSIONLESS)
   TKINST    .010 INCHES     TKINST--THICKNESS OF INSERT BETWEEN ASSEMBLIES (INCLUDES TPOISN)
   TPOISN    .000 INCHES     TPOISN--THICKNESS OF NEUTRON POISON IMBEDDED IN INSERT MATL BETWEEN ASSEMBLIES
   TKCGAP    .690 INCHES     TKCGAP--THICKNESS OF GAP BETWEEN CANISTER AND INSERT (AIR-FILLED IF > 0)
   TKIGAP    .188 INCHES     TKIGAP--THICKNESS OF GAP BETWEEN INSERT AND THE INNER SHELL (AIR-FILLED IF > 0)
   WTHICK    .000 INCHES     WTHICK--THICKNESS OF THE INSERT BETWEEN CANISTER AND INNER SHELL
   NELEM        3            NELEM---NUMBER OF ASSEMBLIES (OR CANISTERS) PER CASK;  IF ZERO, PERFORM SEARCH
   CASKID   13.38 INCHES     CASKID--INSIDE DIAMETER OF THE CASK (CALCULATED BY CODE IF USER ENTERS 0.0)

DESCRIPTION OF INNER & OUTER SHELL AND THE OUTSIDE LINER

   MISHL        6 ( SS )     MISHL---TYPE OF MATERIAL USED FOR THE INNER SHELL (SHOWN IN BRACKETS)
   MOSHL        6 ( SS )     MOSHL---TYPE OF MATERIAL USED FOR THE OUTER SHELL (SHOWN IN BRACKETS)
   MOLIN        6 ( SS )     MOLIN---TYPE OF MATERIAL USED FOR OUTSIDE LINER AND FINS (IF REQUIRED)
   TKISHL    .750 INCHES     TKISHL--THICKNESS OF INNER SHELL
   TKOSHL   1.200 INCHES     TKOSHL--THICKNESS OF OUTER SHELL
   TKOLIN    .236 INCHES     TKOLIN--THICKNESS OF OUTSIDE LINER

DESCRIPTION OF NEUTRON AND GAMMA SHIELDS

   MNSHLD       0 (SOLID  )  MNSHLD--TYPE OF MATERIAL USED FOR NEUTRON SHIELD (DESCRIBED BELOW IF SOLID)
   MGSHLD       1 ( PB    )  MGSHLD--TYPE OF MATERIAL USED FOR GAMMA SHIELD (SHOWN IN BRACKETS)

DESCRIPTION OF HEAT TRANSFER PARAMETERS FOR FINS (& CASK)

   MFIN         6 ( SS )     MFIN----TYPE OF MATERIAL USED FOR FINS (IF REQUIRED)
   SPFIN   1.000 INCHES      SPFIN---SPACING BETWEEN FINS
   EMISF    .587             EMISF---SURFACE EMISSIVITY OF THE FINS (DIMENSIONLESS)
   EMISC    .500             EMISC---SURFACE EMISSIVITY OF THE CASK (DIMENSIONLESS)
```

Figure 3.6-4 Nine Failed Metallic Fuel Rods SCOPE Output (Continued)

```
CASK DESIGN PARAMETERS

   TFNMAX   750.0 DEG.F       TFNMAX--MAXIMUM ALLOWABLE SURFACE TEMPERATURE
   WGHTMX   200.0 KILO.LBS    WGHTMX--MAXIMUM ALLOWABLE WEIGHT OF LOADED CASK
   TAMB     100.0 DEG.F       TAMB----OUTSIDE AMBIENT TEMPERATURE
   NSOLAR       1 INCLUDE     NSOLAR--SOLAR HEATING IN NORMAL STEADY-STATE CALCULATION (INCLUDE/IGNORE=1/0)

KIND OF TRANSIENT THERMAL ANALYSIS TO BE PERFORMED

   KTRANS =     6 OPTION SELECTED BY USER;  OTHER POSSIBLE OPTIONS INCLUDE:

   KTRANS=4 ... ASSUME LIQUID WATER NEUTRON SHIELD IS LOST MANY HOURS BEFORE START OF FIRE (ORIGINAL SCOPE DEFAULT)
   KTRANS=5 ... ASSUME LIQUID NEUTRON SHIELD IS LOST INSTANTLY AT THE START OF THE FIRE (STANDARD NRC SCENARIO)
   KTRANS=6 ... ASSUME A SOLID NEUTRON SHIELD, USE DATA BELOW, AND SWITCH TO NEW THERMAL CONDUCTIVITY DURING FIRE

THERMAL CHARACTERISTICS OF SOLID NEUTRON SHIELD (THE FOLLOWING DATA IS NOT USED UNLESS KTRANS=6)

   RHONS      .07 LBM/CUFT      RHONS--NOMINAL DENSITY OF THE SOLID NEUTRON SHIELD
   TCNS1    .0154 BTU/HR/FT/F   TCNS1--NOMINAL THERMAL CONDUCTIVITY OF THE SOLID NEUTRON SHIELD
   TCNS2    .0154 BTU/HR/FT/F   TCNS2--THERMAL CONDUCTIVITY OF THE SOLID NEUTRON SHIELD DURING AND AFTER THE FIRE
   CPNS2    .2400 BTU/LB/DG.F   CPNS2--HEAT CAPACITY OF THE SOLID NEUTRON SHIELD DURING AND AFTER THE FIRE
```

Figure 3.6-4 Nine Failed Metallic Fuel Rods SCOPE Output (Continued)

```
S C O P E -- THE SHIPPING CASK OPTIMIZATION AND PARAMETRIC EVALUATION CODE, VERSION 1.2  (BY J. A. BUCHOLZ, ORNL)

TITLE:  Evaluation of NAC LWT Containing 9 Failed Fuel Rods (45 WATTS TOTAL HEAT LOAD)

COMPONENT DIMENSIONS (INCHES):

  O-LINER  =     .236
  N-SHIELD =    5.000
  O-SHELL  =    1.200
  G-SHIELD =    5.750
  I-SHELL  =     .750
  I-CASK   =   13.375
  I-GAP    =     .188
  W-POISN  =     .000
  W-INSRT  =     .010
  C/F-GAP  =     .690
  O-CANSTR =    4.250
  I-CANSTR =    4.000
  O-LENGTH =  143.750

THERMAL PARAMETERS:

  SOLAR INSOLANCE  =  1 (INCLUDED)
  AMBIENT TEMP     =  100.000 (DEG.F)
  TOTAL DECAY HEAT =    .045 (KW)

                                NOMINAL STEADY STATE TEMPERATURES (DEGREES-F)

SURFACE        O-LINER          N-SHIELD         O-SHELL          PB-SHIELD        I-SHELL
   T         DT    T(MAX)     DT    T(MAX)     DT    T(MAX)     DT    T(MAX)     DT    T(MAX)
-------    ------------     ------------     ------------     ------------     ------------
 181.33        .00  181.34     39.52  220.85      .02  220.87      .06  220.93      .02  220.96

  GAP   INSERT        INSERT          GAP   CAN          CANISTER          FUEL PIN
  DT    T(MIN)      DT    T(MAX)      DT    T(MIN)     DT    T(MAX)     DT    T(MAX)    DEG.C
------------     ------------     ------------     ------------     ----------------------
  2.46  223.42        .02  223.43      5.34  228.77       .00  228.77      3.97  232.75   111.53

(*) OUTSIDE DIAMETER OF THE CASK BODY =  39.25 INCHES;  NO EXTERNAL COOLING FINS WERE REQUIRED.
    TOTAL WGHT OF CASK LOADED WITH  3 FUEL ASSEMBLIES OR CANISTERS IS APPROXIMATELY  34513 LBS.
```

Figure 3.6-4 Nine Failed Metallic Fuel Rods SCOPE Output (Continued)

PREFIRE TEMPERATURES (DEGREES-F)

TIME...(H.M.S)	*-------INSERT----*--GAP--*----I.SHELL----*---G.SHIELD----*----O.SHELL----*----N.SHIELD----*----O.LINER------*												
RADIUS (FT)==>	.4063	.4788	.5416	.5573	.5894	.6198	.8921	1.0990	1.1500	1.1990	1.4226	1.6156	1.6255	1.6353
	REFERENCE STEADY-STATE TEMPERATURES USED IN CALCULATING TEMP RISE (ASSUMES N-SHLD PRESENT & NO SOLAR HEATING):													
.00 0. 0. 0	143.83	143.82	143.81	140.93	140.92	140.91	140.87	140.85	140.84	140.83	118.31	101.51	101.51	101.50
	INITIAL STEADY-STATE TEMPERATURES AT START OF 30-MINUTE FIRE (SEE ASSUMPTIONS FOR KTRANS=6):													
.00 0. 0. 0	143.83	143.82	143.81	140.93	140.92	140.91	140.87	140.85	140.84	140.83	118.31	101.51	101.51	101.50
INIT TEMP RISE	.00	.00	.00	.00	.00	.00	.00	.00	.00	.00	.00	.00	.00	.00

ULTIMATE POSTFIRE TEMPERATURES (DEGREES-F)

TIME...(H.M.S)	*-------INSERT----*--GAP--*----I.SHELL----*---G.SHIELD----*----O.SHELL----*----N.SHIELD----*----O.LINER------*													
	ULTIMATE STEADY-STATE TEMPERATURES, LONG AFTER THE 30-MINUTE FIRE IS OVER:													
999.0 999.0.0	143.83	143.82	143.81	140.93	140.92	140.91	140.87	140.85	140.84	140.83	118.31	101.51	101.51	101.50

TRANSIENT TEMPERATURES (DEGREES-F)

	-------INSERT------GAP--*----I.SHELL----*---G.SHIELD----*----O.SHELL----*----N.SHIELD----*----O.LINER------*													
MAX TEMP RISE:	2.40	2.40	2.40	2.63	2.63	2.64	2.66	2.67	2.67	2.68	758.36	1322.30	1322.34	1322.39
AT TIME (HRS):	16.25	16.25	16.25	3.17	3.17	3.08	2.90	2.73	2.63	2.50	.50	.50	.50	.50
MAX FIRE TEMP:	146.23	146.22	146.21	143.56	143.55	143.55	143.53	143.52	143.52	143.51	876.67	1423.81	1423.85	1423.89

DURING AND AFTER THE 30-MINUTE FIRE:

MAX GAMMA SHIELD TEMP..... 144 DEG.F = 62 DEG.C
MAX BASKET INSERT TEMP..... 146 DEG.F = 63 DEG.C
MAX FUEL PIN CLAD TEMP..... 158 DEG.F = 70 DEG.C

AS PER 10CFR73, SECT 71.73, THE EFFECTS OF SOLAR HEATING WERE
NEGLECTED PRIOR TO, DURING, AND AFTER THE 30-MINUTE FIRE.

Table of Contents

4 CONTAINMENT 4.1-1

4.1 Containment Boundary 4.1-1
4.1.1 Containment Penetrations 4.1-1
4.1.2 Seals and Welds 4.1-1
4.1.3 Closure 4.1-3

4.2 Containment Requirements for Normal Conditions of Transport 4.2-1
4.2.1 Containment of Radioactive Material 4.2-1
4.2.2 Pressurization of Containment Vessel 4.2-1
4.2.3 Containment Criteria 4.2-3

4.3 Containment Requirements for Hypothetical Accident Conditions 4.3-1
4.3.1 Fission Gas Products 4.3-1
4.3.2 Containment of Radioactive Materials 4.3-1
4.3.3 Tritium Contamination Issues 4.3-4

4.4 Special Requirements 4.4-1

4.5 Appendices 4.5-1
4.5.1 Tetrafluoroethylene O-Rings 4.5-1
4.5.2 Metallic O-Rings 4.5-10
4.5.3 Viton® O-Rings 4.5-23
4.5.4 Metallic Face Seal 4.5-29
4.5.5 Containment Analysis of ANSTO Basket Payloads and ANSTO-DIDO Payloads 4.5-41
4.5.6 Pressure and Flammability Evaluation of HEUNL Container 4.5-42

List of Figures

Figure 4.1-1 Cask Containment Boundary 4.1-4
Figure 4.5-1 SAE International Aerospace Standard AS8791 ..... 4.5-2
Figure 4.5-2 Metallic O-rings Technical Bulletin 4.5-11
Figure 4.5-3 Parker Seals Material Report on the Viton® Material 4.5-25

List of Tables

Table 4.2-1 Containment Analysis Basis Cask Free Volumes and Pressures 4.2-4

4 CONTAINMENT

4.1 Containment Boundary

The containment boundary for the NAC-LWT cask consists of the 0.75-inch thick inner shell, the 4.0-inch thick bottom end plate, the 11.25-inch thick lid, the upper ring forging and the vent and drain port covers. The inner shell is fabricated from Type XM-19 stainless steel and the other components are fabricated from Type 304 stainless steel. The quick-disconnect valves used for filling and draining the cask cavity are not considered to be part of containment and are closed by the port covers. There are two port cover designs: alternate and Alternate B. The alternate port cover is fabricated from SA-705, Grade 630, condition H1150 precipitation-hardened stainless steel. The Alternate B port cover is fabricated from XM-19 stainless steel and is designed to withstand a higher MNOP. The Alternate B port covers are required to be installed for the transport of TPBAR contents. The cask containment boundary is illustrated in Figure 4.1-1.

The closure lid's metallic O-ring seal and the port cover's Viton® O-ring (alternate port cover) or metallic face seal (Alternate B port cover) are also part of the containment boundary. The sealing surfaces for O-rings and seals are machined in accordance with seal manufacturers' recommendations to a finish suitable to achieve reliable leaktight sealing of the containment.

4.1.1 Containment Penetrations

The only containment penetrations in the NAC-LWT cask cavity are the cask lid and the vent and drain ports.

4.1.2 Seals and Welds

4.1.2.1 Seals

The O-rings of the cask lid and the vent and drain port covers are the seals that provide the containment boundary for the radioactive contents of the NAC-LWT cask, as described in Section 4.1. Appendix 4.5.1 contains the military specification that prescribes the physical and chemical properties of the TFE O-rings. Appendix 4.5.2 is the manufacturer's technical bulletin for the metallic O-rings. Appendix 4.5.3 contains a description of the leakage testing performed using the Viton® O-rings on the alternate port cover design at temperatures exceeding the manufacturer's elevated temperature limit. Appendix 4.5.3 also contains the O-ring manufacturer's material report on the Viton® material. Appendix 4.5.9 contains the technical specification on the Alternate B port cover HELICOFLEX® metallic face seal.

Seal testing prior to cask acceptance from the manufacturer, during routine and annual maintenance, and following assembly prior to transportation includes the fabrication leakage rate test, the maintenance leakage rate test, and the preshipment leakage rate test. All containment O-ring tests are performed in accordance with the requirements of ANSI N14.5-1997.

4.1.2.1.1 Fabrication Leakage Rate Test

Upon completion of fabrication, the cask containment shall be leakage tested to a leaktight criteria of 1×10^{-7} ref.cm^3/sec, per ANSI N14.5-1997, as described in Section 8.1.3. The equivalent allowable helium leakage rate at reference conditions is 2×10^{-7} cm^3/sec (helium), with a minimum helium leak test sensitivity of 1×10^{-7} cm^3/sec (helium).

4.1.2.1.2 Fabrication Pressure Test

During acceptance testing, the cask containment boundary shall be hydrostatically tested using the pressure test described in Section 8.1.2. This test verifies the sealing integrity of the package with a hydrostatic test pressure of 209 psig.

As an additional post-fabrication test, prior to performing the first TPBAR shipment in a specific NAC-LWT cask, the hydrostatic test described in Section 8.1.2 shall be performed with the Alternate B port covers installed. The test pressure for the hydrostatic test shall be not less than 150% of the MNOP for the TPBAR content condition to which the cask is being qualified: 450 psig for a 300 psig MNOP, or 650 psig for a 420 psig MNOP. The hydrostatic test pressure to which a cask has been qualified establishes the maximum cask tritium content authorized for that cask, as specified in Section 1.2.3.

The hydrostatic tests are further described in Chapter 8.

4.1.2.1.3 Preshipment Leakage Rate Test

Prior to shipment of a loaded NAC-LWT cask, the containment seals of the closure lid and the vent and drain port covers shall be individually leakage tested. For the alternate port covers, a pressure drop test is performed by pressurizing the volume between the containment seal and the test seal. This preshipment leakage rate test assures that the port covers and seals are properly installed and that there is no leakage in excess of the minimum test sensitivity of 1×10^{-3} ref cm^3/s.

If the alternate port cover's Viton® containment O-ring is replaced, a maintenance leakage rate test is required to be performed per Section 8.1.3.

The closure lid and the Alternate B port cover both utilize metallic O-rings for the containment boundary seal. Metallic O-rings are designed for a single use and must be replaced prior to each loaded transport, if the component is removed. Following installation of the closure lid and

Alternate B port covers, maintenance leakage rate tests are performed on each component in accordance with the helium leak test procedures in Section 8.1.3.

4.1.2.2 Welds

All containment vessel welds are full penetration bevel or groove welds to ensure structural and containment integrity.

4.1.3 Closure

Closure of the containment vessel is provided by the twelve 1-8 UNC closure lid bolts, each tightened to 260 ± 20 ft-lb of torque. The lid bolts are SA-453, Grade 660 high alloy steel bolting material. The lid bolts are preloaded so that the lid seals remain fully compressed for all load conditions. The structural adequacy of the lid bolts is documented in Sections 2.1.3.2.2, 2.6.7.6 and 2.10.9. The closure lid O-ring seals are specified on Drawing No 315-40-02 in Section 1.4. The O-ring seals and grooves are selected based on the manufacturer's specifications to satisfy the pressure and temperature conditions incurred by the NAC-LWT cask.

The leakage tests described in Section 8.1.3 verify that the lid and port cover seal leakage rates do not exceed 2×10^{-7} cm^3/sec (helium).

Alternate port covers are retained by three 3/8 - 16 UNC bolts, each tightened to 100 ± 10 in-lb of torque. The bolt material for these port covers is SA-193, Grade B6 high alloy steel. The Alternate B port cover is retained by three 3/8 - 16 UNC bolts, made from SB-637 Grade N07718 nickel alloy steel, each tightened to 280 ± 15 in-lb of torque. The Alternate B port covers are required for the transport of TPBAR contents.

The Alternate port covers are required for the transport of HEUNL contents. Alternate port covers are required since the Alternate port cover Viton seals are compatible with the HEUNL nitrate content. No HEUNL material will be released from the HEUNL containers during any transport condition.

Figure 4.1-1 Cask Containment Boundary

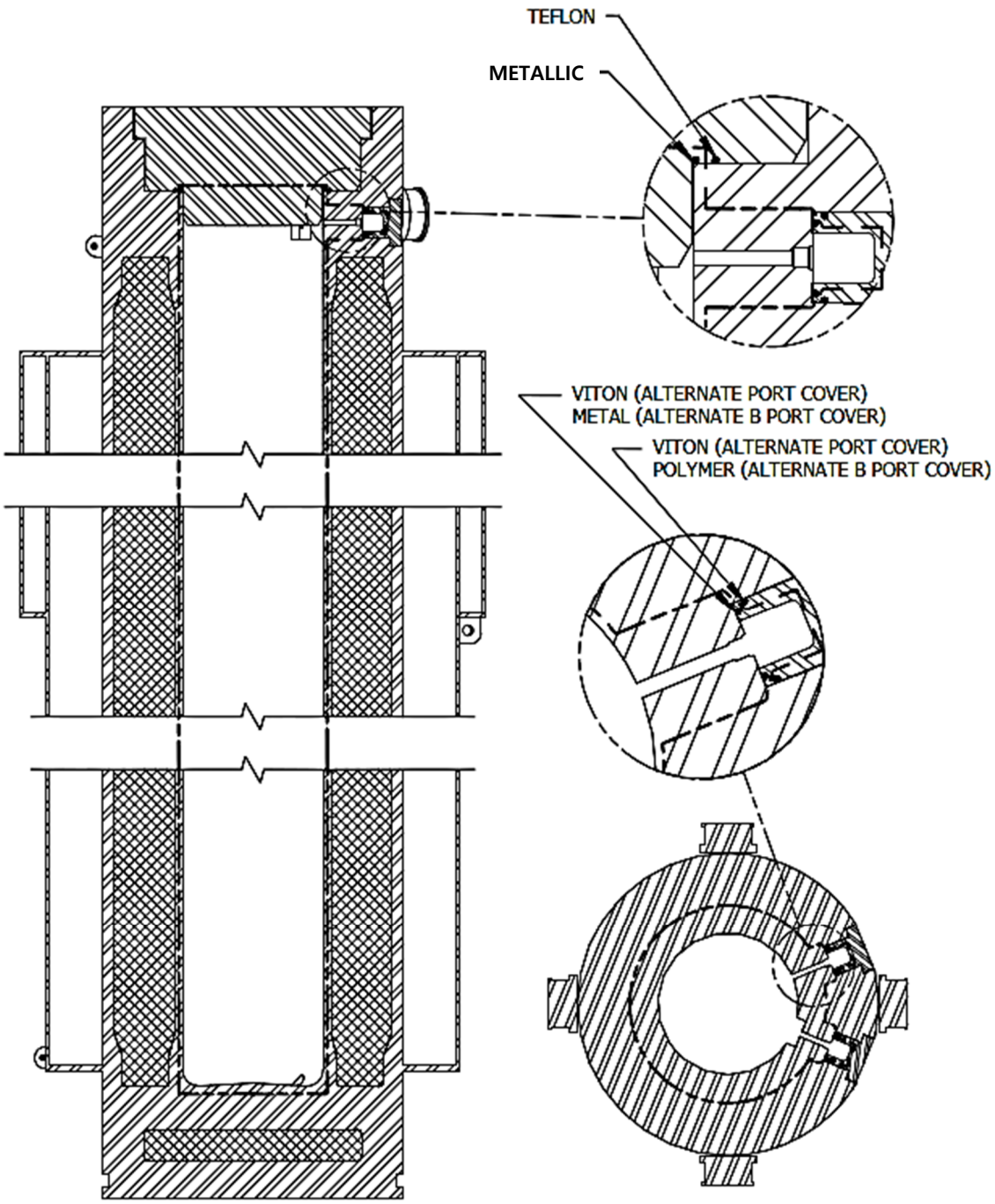

4.2 Containment Requirements for Normal Conditions of Transport

The NAC-LWT cask must maintain a radioactivity release rate less than 10^{-6} A_2/hr under normal conditions of transport, as required by 10 CFR 71.51 and IAEA Transportation Safety Standards (SSR-6). The maintaining of a leaktight containment for the NAC-LWT cask, per ANSI N14.5-1997, satisfies this condition. ANSI N14.5-1997 specifies and defines a reference (air at standard conditions) leakage rate of 1×10^{-7} ref.cm^3/s as leaktight. The equivalent allowable helium leakage rate at reference conditions is 2×10^{-7} cm^3/s (helium), with a minimum helium leak test sensitivity of 1×10^{-7} cm^3/s (helium).

For the transport of TPBAR contents, a leaktight containment boundary provided by metal containment seals is required. Therefore, for the transport of TPBARs under the package designation of USA/9225/B(M)-96, Alternate B port covers with metal seals are required to be installed.

The structural and thermal evaluations of the NAC-LWT are provided in Chapters 2 and 3, respectively. Results of these evaluations demonstrate that cask containment is maintained as leaktight during normal conditions of transport and hypothetical accident conditions. Therefore, the package satisfies the containment requirements of 10 CFR 71.51.

4.2.1 Containment of Radioactive Material

The 10 CFR 71 limit for the release of radioactive material under normal conditions of transport of 10^{-6} A_2/hr is assured by the maintenance of a leaktight containment boundary in accordance with ANSI N14.5-1997.

4.2.2 Pressurization of Containment Vessel

The maximum pressure in the cask during normal conditions of transport for other than TPBAR, SLOWPOKE and HEUNL content payloads is calculated by using the methodology presented in Section 3.4.4. Assumptions underlying this calculation for contents other than TPBAR and HEUNL are that during normal conditions of transport, 3% of the fuel rods may fail and that 30% of the fission gases in the rods are releasable. The free volumes and resulting pressures are tabulated in Table 4.2-1. In addition, for LWR high burnup rods, 56% of the rods with oxide layers greater than 70 micrometers (14 rods) are assumed to fail during transport. This is conservative since fuel rods classified as damaged may have released fission and charge gases prior to transport. Failed rods are assumed to have released the fission gas prior to transport. The cask cavity is backfilled to 1 atm with 99.9% pure helium gas.

The gas volume (e.g., plenum and pellet to cladding gap) inside the fuel rods is conservatively neglected when calculating the cask free volume. The maximum normal operating pressure (MNOP) of the cavity for the PWR fuel configuration is 1.99 atm. The maximum normal condition cavity pressure for the 25 intact PWR/BWR high burnup fuel rod contents is 2.1 atm. The maximum normal condition cavity pressure with a 56% fuel rod failure rate is 3.2 atm for the 25 BWR high burnup rods and 3.0 atm for the 25 PWR high burnup rods.

Pressure evaluations in Section 3.4.4.8 demonstrate that the MNOP is less than 50 psig for aluminum-based nuclear fuels.

MNOP for the transport of up to 300 production TPBARs (including up to 3 prefailed rods) is determined in Section 3.4.4.5 and depends on the hydrostatic test pressure to which the cask has been qualified, as listed in Section 1.2.3. A cask qualified at a 450 psig hydrostatic test pressure has an MNOP of 300 psig while a cask qualified at a 650 psig hydrostatic test pressure has an MNOP of 420 psig. The TPBAR normal condition pressure assumed clad failure of all 300 TPBARs during transport. The pressure for the TPBAR content condition of 55 segmented TPBARs contained in a waste container and 25 TPBARs contained in a PWR/BWR Rod Transport Canister is bounded by the 300 TPBAR MNOP.



4.2.3 Containment Criteria

The standard leak rate for NAC-LWT transports of 1×10^{-7} ref.cm^3/sec represents the maximum leak rate allowed if the seals were to be tested with air at an upstream pressure of 1 atm and a downstream pressure of 0.01 atm at a temperature of 25°C. This is the maximum allowable leak rate for the containment system fabrication verification, periodic and maintenance leak tests described in Section 4.1 and in Chapter 8.

The NAC-LWT leaktight containment criteria, per ANSI N14.5-1997, is 1×10^{-7} ref cm^3/s, which is equivalent to a helium leak rate of less than, or equal to, 2×10^{-7} std cm^3/sec (helium) under test conditions. The minimum test sensitivity is 1×10^{-7} cm^3/s (helium).

The gas volume (e.g., plenum and pellet to cladding gap) inside the fuel rods is conservatively neglected when calculating the cask free volume. The maximum normal operating pressure (MNOP) of the cavity for the PWR fuel configuration is 1.99 atm. The maximum normal condition cavity pressure for the 25 intact PWR/BWR high burnup fuel rod contents is 2.1 atm. The maximum normal condition cavity pressure with a 56% fuel rod failure rate is 3.2 atm for the 25 BWR high burnup rods and 3.0 atm for the 25 PWR high burnup rods.

Pressure evaluations in Section 3.4.4.8 demonstrate that the MNOP is less than 50 psig for aluminum-based nuclear fuels.

MNOP for the transport of up to 300 production TPBARs (including up to 3 prefailed rods) is conservatively determined in Section 3.4.4.5 as 300 psig. The TPBAR normal condition pressure assumed clad failure of all 300 TPBARs during transport. The pressure for the TPBAR content condition of 55 segmented TPBARs contained in a waste container and 25 TPBARs contained in a PWR/BWR Rod Transport Canister is bounded by the 300 TPBAR MNOP.

[redacted]

4.2.3 Containment Criteria

The standard leak rate for NAC-LWT transports of 1×10^{-7} ref.cm^3/sec represents the maximum leak rate allowed if the seals were to be tested with air at an upstream pressure of 1 atm and a downstream pressure of 0.01 atm at a temperature of 25°C. This is the maximum allowable leak

rate for the containment system fabrication verification, periodic and maintenance leak tests described in Section 4.1 and in Chapter 8.

The NAC-LWT leaktight containment criteria, per ANSI N14.5-1997, is 1×10^{-7} ref cm^3/s, which is equivalent to a helium leak rate of less than, or equal to, 2×10^{-7} std cm^3/sec (helium) under test conditions. The minimum test sensitivity is 1×10^{-7} cm^3/s (helium).

Table 4.2-1 Containment Analysis Basis Cask Free Volumes and Pressures

	Pressure (atm)		Temperature	Free Volume
Fuel Type	Normal	Accident	(K)	(10^5 cm^3)
PWR	1.99[1]	11.4[1]	517.4	1.471
BWR	1.99[2]	11.4[2]	517.4	1.018
Metallic Fuel	1.99[2]	11.4[2]	405.2	1.018
TRIGA[7]	1.99[2]	11.4[2]	571.4[2]	1.717
GA IFM	N/A[6]	N/A[6]	403.2	3.354
25 PWR Rods – 56% Failed Fuel Fraction	3.0	4.3[5]	588.7[4]	0.9681
25 BWR Rods – 56% Failed Fuel Fraction	3.2	4.5[5]	588.7[4]	0.8932
SLOWPOKE[8]	N/A	N/A	331 (Rods in Canister) 424 (Fuel Core)	N/A
SrF_2 Capsules[9]	N/A	N/A	416	N/A

[1] Based on Sections 3.4.4 and 3.5.4, the maximum calculated pressures for the PWR payload are 1.93 atm (28.3 psia) normal condition and 8.56 atm (125.8 psia) accident conditions.

[2] The maximum pressure for the PWR fuel is conservative.

[3] The temperature employed is approximately 4K lower than the maximum fuel clad temperature calculated. The fuel clad temperature is significantly higher than the average gas temperature in the cask.

[4] The normal condition temperature is conservatively applied to the 25 PWR and BWR high burnup rod analysis.

[5] These pressures result from the 100% fuel rod failure plus the design basis fire accident.

[6] Based on the lower temperature and larger free volume of the GA IFM, as compared to the other contents, the pressure, although not explicitly calculated, is lower than that calculated for PWR and BWR fuel.

[7] TRIGA volume and pressure conservatively applied to TRIGA cluster rod analysis. Free volume is higher in the cluster rod configuration.

[8] The SLOWPOKE contents (rods in canister or fuel core) are low mass, low burnup, low heat load materials that produce minimal temperature and fission gas quantities. Listed fuel core temperature is conservative as MTR design basis (1.26 kW) inner shell temperatures are applied in the fuel/basket thermal analysis (see Chapter 3). The metal alloy fuel will trap fission gases resulting in minimal gas release. In comparison to other licensed payloads, not significant pressure will result in the cask cavity. No payload specific data was calculated.

[9] The SrF_2 contents do not contain any fission gases. In comparison to other licensed payloads, no significant pressure will result in the cask cavity. No payload specific data was calculated.

4.3 Containment Requirements for Hypothetical Accident Conditions

The NAC-LWT cask must maintain a radioactivity release rate of not more than 10 A_2/week ^{85}Kr or 1 A_2/week for other radioactive material under hypothetical accident conditions of transport, as required by 10 CFR 71.51. Maintaining a leaktight containment, per ANSI N14.5-1997, satisfies this condition. ANSI N14.5-1997 specifies and defines a reference (air at standard conditions) leakage rate of 1×10^{-7} ref·cm^3/sec or 2×10^{-7} cm^3/sec helium at the reference conditions as leaktight.

The structural integrity of the cask containment during hypothetical accident conditions is demonstrated in Section 2.7 and the thermal evaluations are provided in Chapter 3. Therefore, the NAC-LWT cask containment is maintained under hypothetical accident conditions and satisfies the containment requirements of 10 CFR 71.51.

4.3.1 Fission Gas Products

The accident conditions for maximum fission gas release assume 100% rod failure and also assume that 30% of the radioactive fission gases, primarily ^{85}Kr, tritium and ^{129}I, are available for release to the cask cavity. The metallic fuels do not contain significant amounts of fission gas that are available for immediate release. TRIGA fuel elements are assumed to release 1% of their fission gas products under accident conditions. With a leaktight containment boundary, only radionuclides related to pressure increases in the containment boundary are relevant to the evaluations.

4.3.2 Containment of Radioactive Materials

The NAC-LWT cask is designed to maintain a release rate of less than 1 A_2/week for the hypothetical accident conditions, as required by 10 CFR 71.51. This is achieved by maintaining a leaktight boundary throughout all hypothetical accident conditions.

4.3.2.1 Containment Criteria

Leaktight cask containment is demonstrated to be maintained under hypothetical accident conditions. Leaktight requirements are used for the establishment of the maximum allowable leak rates for the containment system fabrication and periodic verification leak tests.

4.3.2.2 Tritium Permeation Rate of Seals for TPBAR Shipment

The release of tritium into the cask cavity from all 300 rods, 297 rods that are event-failed and 3 rods defined to be prefailed, has the potential of releasing a significant quantity of tritium (> $1A_2$) into the cask cavity. As shown in the structural analysis, the lid and port cover seals retain their ability to provide cask closure during all accident conditions. To assure that the accident release limit of $1A_2$/week is not exceeded under accident conditions the port and lid seal permeation rates are evaluated.

The formula for permeation through metal is:

$$PR = \Phi \times A / l \times \left(P_p\right)^{1/2}$$

where:

PR = equilibrium (steady-state) permeation rate in std cc (permeate) per sec

Φ = permeability in std cc (permeate) per second per material surface area per permeate partial pressure ½ through a unit material thickness

A = material surface area that is "exposed" to the permeate

l = material thickness through which the permeate "passes"

P_p = upstream permeate partial pressure

The formula for permeability is:

$$\Phi = \Phi_0 \times \exp\left(-\frac{E_\Phi}{RT}\right)$$

where:

Φ = permeability as stated previously

Φ_o = pre-exponential permeation factor in the same units as Φ

E_Φ/R = the activation energy of the permeation process, which has been 'normalized' by the universal gas constant

T = absolute temperature of the metal (K).

[redacted]

4.3.2.3 HEUNL Containment

[redacted]

4.3.3 Tritium Contamination Issues

Precautions will be taken to minimize the risk of excessive contamination of NAC-LWT casks during the loading and unloading of TPBAR contents to ensure the reusability of the NAC-LWT casks for transport of non-TPBAR contents. In addition to ensuring the safe handling of TPBAR contents, additional cavity gas and internal and external removable contamination surveys for tritium contamination will be implemented at all TPBAR loading and unloading facilities. The specific monitoring methods and levels of contamination to which the cask surfaces must be decontaminated are defined in the TPBAR loading and unloading procedures in Chapter 7. In addition, the TPBAR procedures also include precautions for users to observe when loading, unloading and handling TPBARs.

The procedures and precautions comply with the recommended practices of NUREG-1609, Supplement 2. The results of previous loading and unloading experiences regarding the measurement of tritium gas and contamination levels are provided in the PNNL letter in Section 1.5, Appendix 1-G of this SAR.

NAC-LWT cask units used for TPBAR transports shall comply with the specified contamination levels, or other non-TPBAR users will be advised to incorporate tritium monitoring requirements into their survey procedures and radiological control program.

4.4 Special Requirements

The NAC-LWT cask payloads do not contain any special requirements.

4.5 Appendices

4.5.1 Tetrafluoroethylene O-Rings

This appendix contains the SAE International Aerospace Standard AS8791 (Figure 4.5-1), which prescribes the physical and chemical properties of the TFE O-rings. This document replaces Military Specification MIL-R-8791D. These O-rings have an unlimited shelf life.

Figure 4.5-1 SAE International Aerospace Standard AS8791

SAE The Engineering Society For Advancing Mobility Land Sea Air and Space®
INTERNATIONAL
400 Commonwealth Drive, Warrendale, PA 15096-0001

AEROSPACE STANDARD

SAE AS8791

Issued 1997-10

Submitted for recognition as an American National Standard

Retainer, Packing, Hydraulic, and Pneumatic,
Tetrafluoroethylene Resin

NOTICE

This document has been taken directly from U.S. Military Specification MIL-R-8791D and contains only minor editorial and format changes required to bring it into conformance with the publishing requirements of SAE technical standards.

The original Military Specification was adopted as an SAE standard under the provisions of the SAE Technical Standards Board (TSB) Rules and Regulations (TSB 001) pertaining to accelerated adoption of government specifications and standards. TSB rules provide for (a) the publication of portions of unrevised government specifications and standards without consensus voting at the SAE Committee level, (b) the use of the existing government specification or standard format, and (c) the exclusion of any qualified product list (QPL) sections.

1. SCOPE:

1.1 Scope:

This specification covers tetrafluoroethylene resin (hereinafter referred to as "TFE") retainers intended for use in hydraulic and pneumatic system components as antiextrusion devices in conjunction with packings and gaskets (see 6.1).

SAE Technical Standards Board Rules provide that: "This report is published by SAE to advance the state of technical and engineering sciences. The use of this report is entirely voluntary, and its applicability and suitability for any particular use, including any patent infringement arising therefrom, is the sole responsibility of the user."

SAE reviews each technical report at least every five years at which time it may be reaffirmed, revised, or cancelled. SAE invites your written comments and suggestions.

Copyright 1997 Society of Automotive Engineers, Inc.
All rights reserved.

Printed in U.S.A.

QUESTIONS REGARDING THIS DOCUMENT: (412) 772-8510 FAX: (412) 776-0243
TO PLACE A DOCUMENT ORDER: (412) 776-4970 FAX: (412) 776-0790

Figure 4.5-1 SAE International Aerospace Standard AS8791 (Continued)

SAE AS8791

2. APPLICABLE DOCUMENTS:

2.1 Issue of Documents:

The following documents, of the issue in effect on date of invitation for bids or request for proposal, form a part of this specification to the extent specified herein:

SPECIFICATIONS

FEDERAL

PPP-B-566	Box, Folding, Paperboard
PPP-B-636	Box, Shipping, Fiberboard
PPP-B-640	Box, Fiberboard, Corrugated, Triple Wall
PPP-B-676	Boxes, Set-Up

MILITARY

MIL-P-116	Preservation - Packaging, Methods of
MIL-B-117	Bags, Interior Packaging
MIL-P-7936	Parts and Equipment, Aeronautical, Preparation for Delivery

STANDARDS

MILITARY

MIL-STD-105	Sampling Procedures and Tables for Inspection by Attributes
MIL-STD-129	Marking for Shipment and Storage
MS27595	Retainer, Packing Backup, Continuous Ring, Tetrafluoroethylene
MS28773	Retainer, Packing Backup, Tetrafluoroethylene, Straight Thread Tube Fitting Boss
MS28774	Retainer, Packing Backup, Single Turn, Tetrafluoroethylene
MS28782	Retainer, Packing Backup, Teflon
MS28783	Ring, Gasket, Backup, Teflon

(Copies of specifications, standards, drawings, and publications required by contractors in connection with specific procurement functions should be obtained from the procuring activity or as directed by the contracting officer.)

- 2 -

Figure 4.5-1 SAE International Aerospace Standard AS8791 (Continued)

SAE AS8791

2.2 Other Publications:

The following documents form a part of this specification to the extent specified herein. Unless otherwise indicated, the issue in effect on date of invitation for bids or request for proposal shall apply.

AMERICAN SOCIETY FOR TESTING AND MATERIALS

D 570 Method of Test for Water Absorption of Plastics (Tentative)
D 747 Method of Test for Stiffness in Flexure of Plastics (Tentative)
D 792 Method of Test for Specific Gravity of Plastics
D 1708 Plastics, Tensile Properties of, by Use of Microtensile Specimens

(Copies of ASTM publications may be obtained upon application to the American Society for Testing and Materials, 100 Barr Harbor Drive, West Conshohocken, PA 19428-2959.)

3. REQUIREMENTS:

3.1 Materials:

The material shall be tetrafluoroethylene resin, hereinafter referred to as "TFE". Reprocessed TFE shall not be used. Bar stock and heavy wall tubing from which parts are machined shall be molded, sintered, baked, and annealed as specified below.

3.1.1 Color: Color shall be uniformly white with no noticeable streaky or blotchy appearance. A slight brownish tint or presence of scattered brownish specks will not be considered detrimental. The surface shall have a waxy sheen. A dead chalklike appearance usually indicates porosity or other unsatisfactory properties. There shall be no noticeable grainy appearance.

3.2 Data:

Unless otherwise specified in the contract or order, no data is required by this specification or any of the documents referenced in Section 2 (see 6.2).

3.3 Design and Construction:

3.3.1 Shape and Dimensions: The shape and dimensions of the TFE retainers shall conform to MS27595, MS28773, MS28774, MS28782, and MS28783 as applicable (see 6.2).

3.4 Physical Properties:

The physical properties of the finished retainers and test specimens shall be uniform throughout and shall satisfy the following requirements, when tested as specified in 4.5.1.

- 3 -

Figure 4.5-1 SAE International Aerospace Standard AS8791 (Continued)

SAE AS8791

3.4.1 Tensile Strength: The tensile strength shall be not less than 3,000 pounds per square inch (psi), when tested in accordance with 4.5.1.1.

3.4.2 Elongation: The elongation shall be not less than 75 percent before fracture, when tested in accordance with 4.5.1.2.

3.4.3 Stiffness: The stiffness shall be a minimum of 45,000 psi when tested in accordance with 4.5.1.3.

3.4.4 Water Absorption: There shall be no water absorption in excess of 0.005 percent or decrease of soluble matter, when tested in accordance with 4.5.1.4.

3.4.5 Dimensional Stability: The circumferential length of the finished retainer shall not change more than 0.002 inch per inch and the cross-sectional dimensions of TFE material shall conform to the applicable military standard when tested in accordance with 4.5.1.5.

3.4.6 Specific Gravity: The specific gravity value shall be 2.150 to 2.220, when tested in accordance with 4.5.1.6.

3.4.7 Porosity: The retainers shall exhibit no noticeable porosity, when tested in accordance with 4.5.1.7.

3.5 Workmanship:

3.5.1 Finish: Workmanship and finish of the end product shall be uniform in quality and condition. It shall be clean, smooth, and free from foreign materials and from imperfections detrimental to fabrication, appearance, or performance.

3.5.2 Fabrication: Retainers shall be cut from stock having diameters equal to those intended for the end product, if available. If stock material is not available, semifinished machine stock may be employed and processed in accordance with 3.4.5.

4. QUALITY ASSURANCE PROVISIONS:

4.1 Responsibility for Inspection:

Unless otherwise specified in the contract, the contractor is responsible for the performance of all inspection requirements as specified herein. Except as otherwise specified in the contract, the contractor may utilize his own facilities or any commercial laboratory acceptable to the Government. The Government reserves the right to perform any of the inspections set forth in the specification where such inspections are deemed necessary to insure supplies and services conform to prescribed requirements.

- 4 -

Figure 4.5-1 SAE International Aerospace Standard AS8791 (Continued)

SAE AS8791

4.2 Sampling for Lot Acceptance:

Samples shall be selected at random from each inspection lot in accordance with MIL-STD-105 as follows:

a. Examination of product (4.4.1): Use inspection level II, and Acceptable Quality Level (AQL) 1.5 percent defective.

b. Physical properties (4.5.1): Use inspection level S-2 and AQL 1.0 percent defective.

4.2.1 Inspection Lot: A lot shall consist of all TFE retainers of one type and size made from the same batch of material and submitted for inspection at the same time and place.

4.2.1.1 Batch: A batch shall be defined as the quantity of material received from the resin manufacturer assigned the same batch number.

4.2.1.2 Test Specimen: Specimens required for use in the elongation and tensile strength tests specified in this specification are obtained by cutting a sample specimen in a longitudinal direction from the TFE tubing. The tubing must be obtained from the same lot of material as the finished items.

4.3 Test Conditions:

4.3.1 Test Specimen: All test specimens, other than finished retainers, shall be prepared and conditioned as specified in the test referenced herein.

4.3.2 Standard Temperature: Unless otherwise specified, physical properties tests (4.5.1) shall be performed at room temperature of 75 °F ± 5 °F (24 °C).

4.4 Examinations:

4.4.1 Examination of Product: Each sample retainer shall be carefully examined to determine conformance to the requirements for workmanship (3.5), color (3.1.1), and dimensions (3.4.5).

4.4.2 Packaging, Packing, and Marking: Preparation for delivery shall be examined for conformance to Section 5.

4.5 Test Methods:

4.5.1 Physical Properties:

4.5.1.1 Tensile Strength: Specimens shall be tested in accordance with ASTM D 1708 at 1 inch per minute. The mean of (5) five values of ultimate tensile strength shall be reported.

- 5 -

Figure 4.5-1 SAE International Aerospace Standard AS8791 (Continued)

SAE AS8791

4.5.1.2 Elongation: Tests shall be conducted in accordance with ASTM D 1708 at 1 inch per minute. The mean of (5) five values shall be reported.

4.5.1.3 Stiffness: The results of stiffness tests conducted in accordance with ASTM D 747 shall be a minimum of 45,000 psi.

4.5.1.4 Water Absorption: Sample retainers as required (4.2) shall be subjected to the water absorption tests, 24-hour procedure, as specified in ASTM D 570. The percent of increase or decrease of weight shall not exceed 0.005 percent.

4.5.1.5 Dimensional Stability: Sample retainers as required (4.2) shall be subjected to air aging for a minimum of 1 hour at 350 °F ± 10 °F (177 °C) and cooled to room temperature, and shall not have exhibited a change in circumferential length of more than 0.002 inch per inch.

4.5.1.6 Specific Gravity: Specific gravity shall be determined by ASTM D 792 on two finished retainers. The specific gravity value shall be 2.150 to 2.220.

4.5.1.7 Porosity: The sample part shall be dip- or brush-coated with suitable red dye penetrant. The coat shall be allowed to stand for 10 minutes and then shall be wiped off with a cloth saturated with solvent. Any retained dye, other than minor indications attributable to surface machining irregularities, is an indication of material porosity and shall be cause for rejection.

5. PACKAGING:

5.1 Packaging:

Packaging shall be level A or C in accordance with MIL-P-7936 as specified in the contract or order (see 6.2).

5.1.1 Level A packaging shall be Method III of MIL-P-116. Unless otherwise specified, 50 retainers of the same part number shall be arranged snugly side by side on a rigid cylindrical fiberboard, plastic, or metal case and retained at the ends by suitable plastic rings. Each unit shall be packaged within a container conforming to PPP-B-566 or PPP-B-676. Internal supports and centering devices shall be used on the core to prevent the retainers from contacting the inner surfaces of the container.

Figure 4.5-1 SAE International Aerospace Standard AS8791 (Continued)

SAE AS8791

5.1.2 When two retainers per unit package are specified, packaging shall be Method III of MIL-P-116. Two retainers of the same part number shall be placed on a circular mandril or core fabricated of fiber, plastic, or metal. The outside diameter of the mandril shall effect a snug fit to the inside diameter of the retainers and shall be the approximate height of the two retainers combined. The mandril shall be affixed by the use of a contact cement, to a substantially oversized (no less than 1 1/2-inch clearance from all points of circumference) fiberboard stiffener pad. Caution shall be taken to prevent contamination of retainers by the cement. An additional fiberboard pad shall be placed over the top of the mandril, effecting a sandwich construction of the cushion pads and retainers. The two-cushion pads shall then be secured with pressure-sensitive tape across all four edges. The sandwiched pads containing the two retainers shall be inserted within a bag conforming to class "B" or "C" of MIL-B-117, or equivalent. Closure shall be accomplished by any suitable means.

5.2 Packing:

Packing shall be level A, B, or C in accordance with MIL-P-7936, as specified in the contract or order (see 6.2).

5.2.1 Levels A and B: Intermediate packages of retainers shall be snugly packed in shipping containers conforming to PPP-B-636 or PPP-B-640, overseas type for level A, and domestic type for level B.

5.3 Marking of Shipment:

In addition to any special marking required by the contract or order, unit packages, intermediate packages, and shipping containers shall be marked in accordance with MIL-STD-129.

6. NOTES:

6.1 Intended Use:

The retainers are intended for use in air, nitrogen, and hydraulic applications that contain fluids conforming to MIL-H-5606, MIL-H-6083, MIL-F-17111, MIL-L-17331, MIL-L-17672, MIL-H-19457, and MIL-H-83282 with no adverse effect on the properties of the fluid, packings, or metal contained in the system through the temperature range of -65 °F (-55 °C) to +275 °F (135 °C) at operating pressure from 0 to 3,000 psi continuous and 0 to 4,500 psi intermittent.

6.2 Ordering Data:

Procurement documents should specify:

a. Title, number, and date of this specification
b. Data requirements (see 3.2)
c. MS part number of the retainer desired (see 3.3.1)
d. Levels of preservation, packaging, and packing required (see Section 5)

- 7 -

Figure 4.5-1 SAE International Aerospace Standard AS8791 (Continued)

SAE AS8791

6.3 Dimensional Stability:

Prior to finish machining, all material should be annealed or dimensionally stabilized by being subjected to air aging for a minimum of 1 hour for each 0.250 inch of thickness, at 500 °F ± 25 °F (260 °C), and then cooled to room temperature at a rate of not less than 1 °F and not more than 3 °F per minute. The annealed material should be held at a temperature of 75 °F (24 °C) or above for at least 16 hours prior to machining. Machining and subsequent inspection should be accomplished at a temperature of 75 °F (24 °C) or above. Adequate tool cooling should be provided during machining so that the temperature of the tool does not exceed 350 °F (177 °C).

PREPARED BY SAE SUBCOMMITTEE A-6C, FLUID POWER DISTRIBUTION ELEMENTS
OF COMMITTEE A-6, AEROSPACE FLUID POWER ACTUATION & CONTROL TECHNOLOGIES

- 8 -

4.5.2 Metallic O-Rings

This appendix contains the manufacturer's technical bulletins for the metallic O-rings.

Figure 4.5-2 Metallic O-rings Technical Bulletin

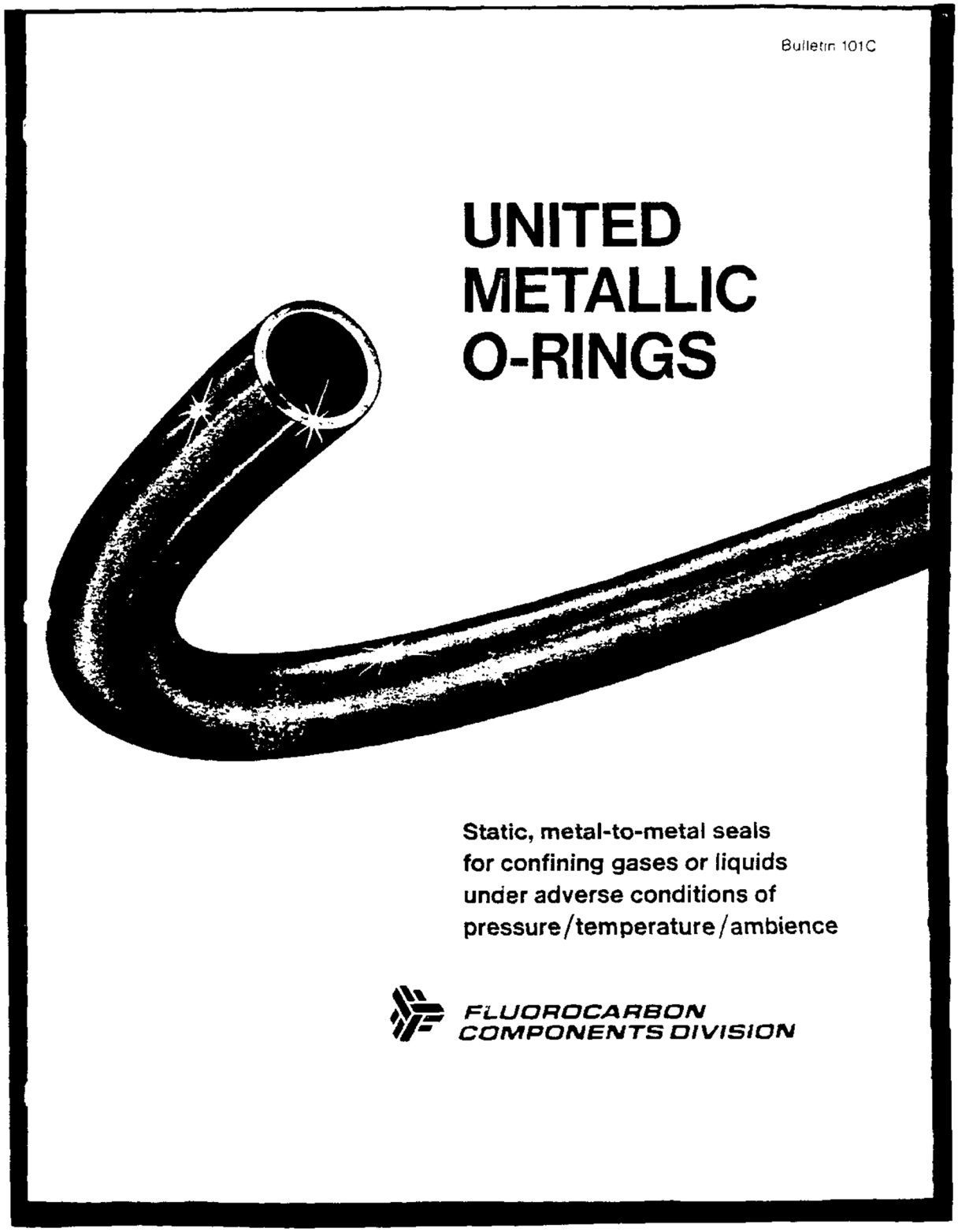

Figure 4.5-2 Metallic O-rings Technical Bulletin (Continued)

United Metallic O-Rings

United Metallic O-Rings are designed to prevent leakage of gases or liquids under adverse sealing conditions. These static, metal-to-metal seals can withstand pressures from high vacuum to 100,000 psi (6 804 atm). They can endure continuous temperatures from −425° F up to 1,800° F (−269° C. to 982° C.), or intermittent temperatures up to 3,000° F (1,650° C.). They resist radiation, chlorides, corrosives, and other hostile environments. They will not deteriorate with age, either in use or in storage.

Design, Materials, Coatings, Sizes

United Metallic O-Rings, designated MOR, are made of metal tubing (or solid rod) which is formed into circular or other shapes and the two ends welded together. The O-Ring metal is stainless steel or other alloys. The O-Ring can be electroplated with silver, copper, indium, nickel, gold, lead or other metals, or it can be coated with Teflon. The flow of the finish material improves the sealing, especially under high pressure and/or vacuum. Since tensile strength and resilience of the seal are determined in part by metal temper, Fluorocarbon Components offers a choice of heat treating to material specification or tempering to customer specifications. Tubular or solid wire rings can be manufactured in sizes ranging up to 25 feet (7.6 m) or more in diameter, or as small as .250 inches (6,4 mm) OD.

Application Characteristics

The typical application places a Metallic O-Ring in axial compression between parallel faces which are square to the fluid passage or vessel axis. The seal is usually located in an open or closed groove in one face. It can also be located in a retainer, which eliminates the need for machining a groove (see description of retainers on page 8).

Upon compression to a predetermined fixed height, the seal tubing buckles slightly, resulting in two contact areas on the seal face and maximum contact stress between the seal and the mating faces. When the flange faces are closed, the O-Ring is under compression and tends to spring back against the flanges, thus exerting a positive sealing force. If the O-Ring is the self-energizing type, the pressure of the gas or liquid on the vented side energizes the seal and further increases the sealing force by pushing the seal against the flange face.

Types of Metallic O-Rings

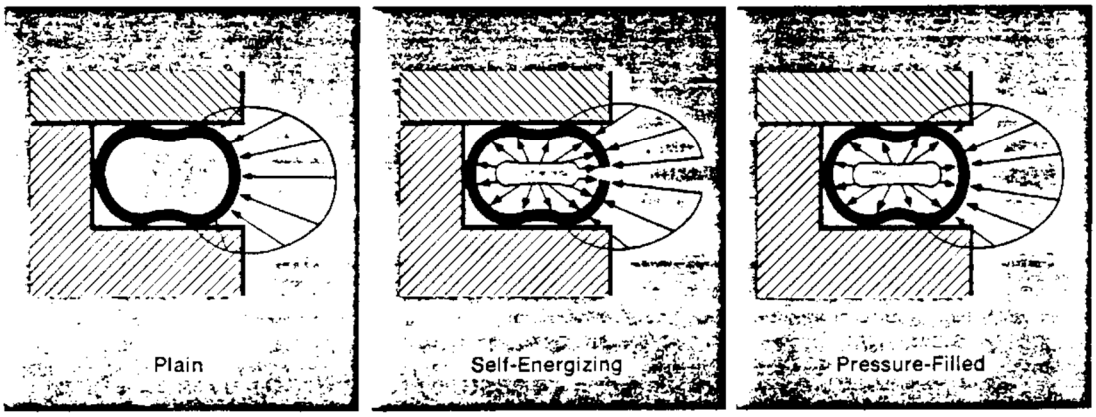

Plain

(Not Self-Energizing or Pressure-Filled)
Made of metal tubing (or solid rod) in most metals. This type is the most economical O-Ring. It is designed for low to moderate pressure and vacuum conditions.

Self-Energizing

The inner periphery of the O-Ring is vented by small holes or a slot. The pressure inside the ring becomes the same as in the system. Increasing the internal pressure increases sealing effectiveness.

Pressure-Filled

Pressure-filled O-Rings are designed for a temperature range of 800° F. to 2,000° F. (425° C. to 1093° C.). They cannot tolerate pressures as high as the self-energizing type. The ring is filled with an inert gas at about 600 psi (41 atm). At elevated temperatures, gas pressure increases, offsetting loss of strength in tubing and increasing sealing stress.

2

Figure 4.5-2 Metallic O-rings Technical Bulletin (Continued)

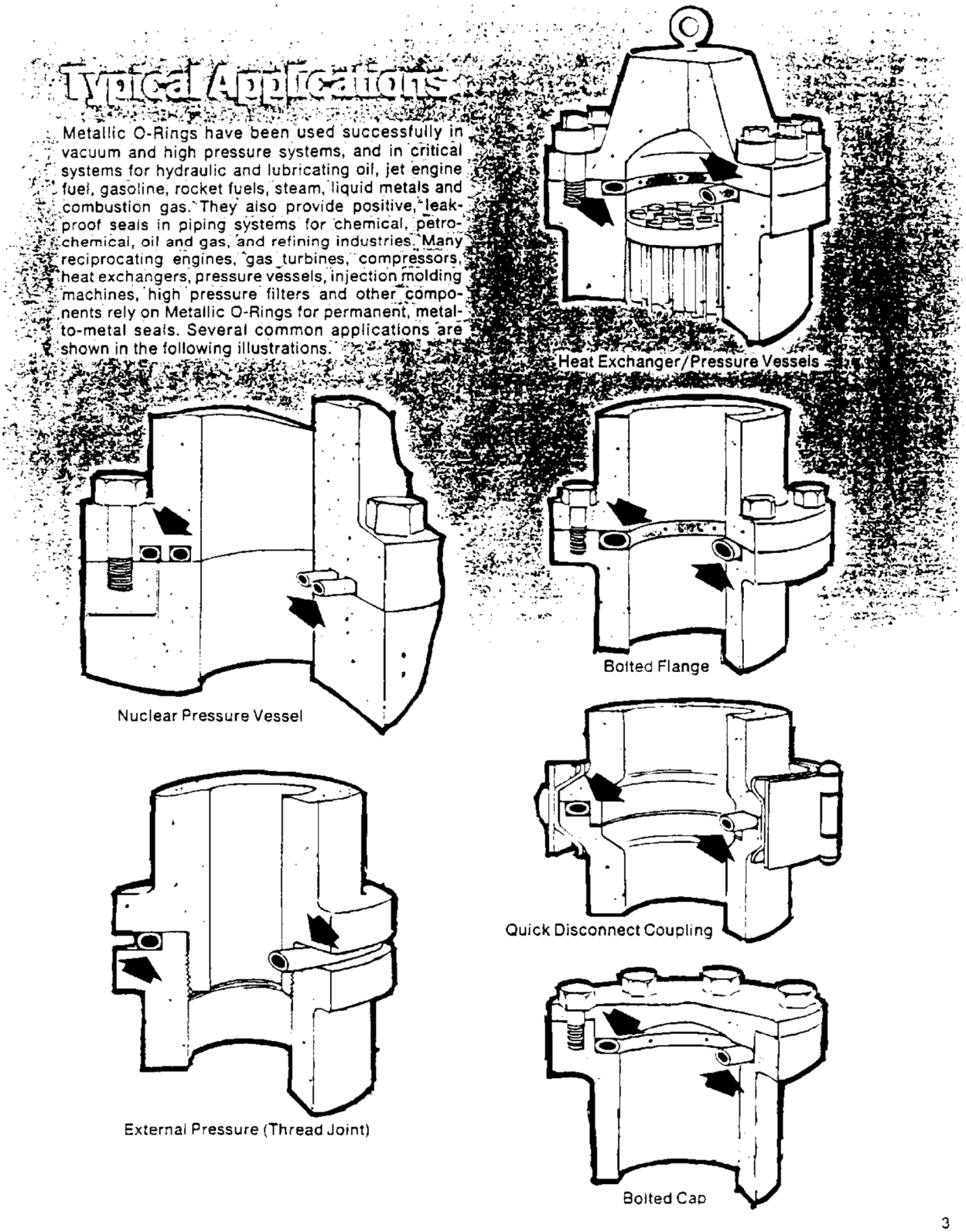

Figure 4.5-2 Metallic O-rings Technical Bulletin (Continued)

Metallic O-Ring Selection Guide

To select the proper Metallic O-Ring for a particular application, it is necessary to determine system pressure, temperature, and kind of fluid to be sealed.

1. O-Ring Type

Pressure determines if O-Ring should be self-energizing.

Pressure	O-Ring Type
Vacuum to 100 psi (6.81 atm)	Self-energizing not required
100 psi (6.81 atm and above)	Self-energizing desirable

2. O-Ring Material

Temperature determines basic O-Ring material.

Temperature	O-Ring Material
Cryogenics to 500° F. (260° C.)	321 Stainless steel
to 800° F. (427° C.)	Alloy 600
to 1800° F. (982° C.)	Alloy X-750
above 1800° F. (982° C.)	Consult Factory

3. O-Ring Size

Tubing diameter is determined by ring OD, compression force desired, and available space. See complete data for O-Ring size selection on pages 6 and 7.

4. Seal Load vs. Seal Ring Diameter

Curves on page 7 show the seal load vs. seal ring diameter to various tubing outer diameters and wall thickness for stainless steel tubing. For tubing made of Alloy 600, multiply loads shown by 1.1. For Alloy X-750, multiply by 1.4.

5. O-Ring Wall Thickness

The wall thickness should be selected to provide the proper yield under compression. The data on pages 6 and 7 include the practical wall thickness dimensions that may be used for each tube diameter. If plating is used, wall thickness for seals made with .125 inch (3.2mm) tubing and smaller should cause yielding of the plating at a load of 400 lb/in (7.14 kg/mm). For tubing over .125 inch (3.2mm) diameter, 800 lb/in (14.28 kg/mm) should be required. Teflon coatings on rings will yield at 100 lb/in (1.78 kg/mm).

6. Groove Dimensions

The proper dimensions and surface finish of the groove are as important in achieving a seal as the O-Ring itself. As a general guide in the preparation of joint surfaces, the recommended groove dimensions for internal and external pressure applications are shown on page 5.

Should you need further guidance and our recommendations, submit the following information regarding your application: 1. Temperature and pressure ranges. 2. Space available. 3. Material. 4. Medium to be sealed. 5. Available compression load. 6. Sketch of proposed application.

7. Coating or Plating

Coating or plating of the O-Ring will provide adherence and ductility (softness) to conform to microscopic groove or flange irregularities.

For unplated seals, liquid leakage can be estimated by the following expression:

$$Q = \frac{5.0 \times 10^{-5} P}{\mu}$$

(Q = leakage cc/sec; P = pressure difference psi; and μ = liquid viscosity at operating conditions, centipoise.) If the resulting calculated leakage is 10^{-3} to 10^{-4} or less, actual leakage may be zero because of surface tension. If leakage occurs, it should be proportional to seal diameter, and in the above expression, multiplied by D/2. D = seal diameter. Actual leakage will probably be less than predicted.

For coated or plated seals, helium-leaktight joints may be made with proper O-Ring and coating or plating selections. Test results range from 10^{-6} to 10^{-9} cc/sec. and lower at one atmosphere differential. Recommended coating or plating materials are:

Temperature	Plating or Coating
Cryogenic to 500° F. (260° C.)	Teflon
to 1800° F. (982° C.)	Silver
to 2200° F. (1186° C.)	Nickel

See page 12 for other coatings and plating.

8. Sealing Surface Finish

The groove and mating flange face must have a surface finish of 16 μin. rms (0.4 μmm) for bare rings and 32-100 μ in. rms (0.8 μ-2.54 μ mm) for plated or coated rings.

For gas, vacuum and light liquid (water), a finish of 16 μin. (0.4 μmm) rms is recommended. For medium liquids (hydraulic oils) and heavy liquids (tar or polymers) a finish of 32 μ in. (0.8 μ mm) rms is recommended. Machining tool marks on groove or flange face must be concentric.

Seal surfaces should be free of dirt, grit or other foreign materials.

Figure 4.5-2 Metallic O-rings Technical Bulletin (Continued)

9. Other Design Considerations

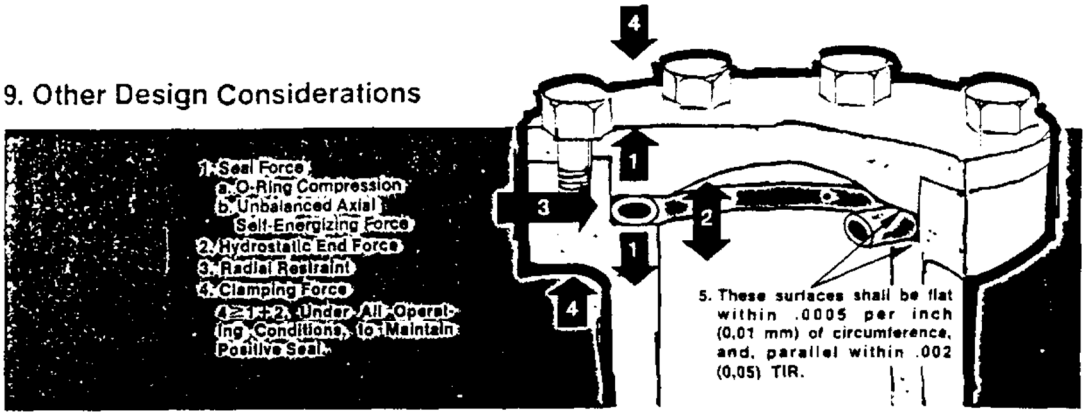

Recommended Groove Dimension

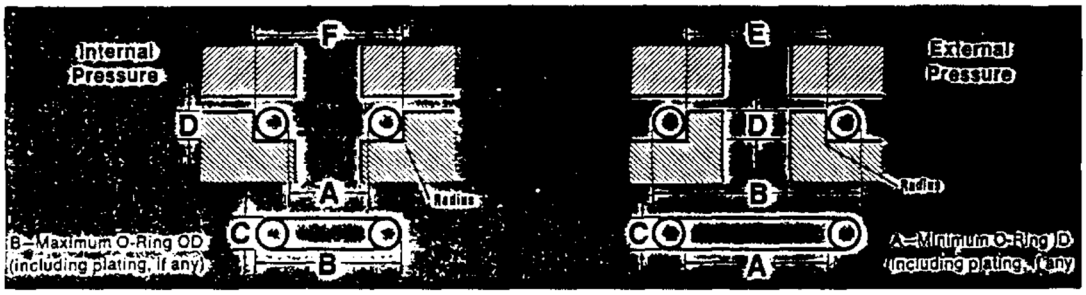

	Internal Pressure			External Pressure		
C Tube Diameter inches/mm	F Groove OD inches/mm	D Groove Depth inches/mm	Ring Tolerance A − .000 B + .000 inches/mm	E Groove ID inches/mm	Minimum Groove Width inches/mm	Springback* inches/mm
.031 0.8	B + .004/.006 B + 0.10/0.15	.020/.022 0.50/0.56	0.003 0.076	A − .004/.006 A − 0.10/0.15	.042 1.07	.002 0.05
.063 1.6	B + .004/.006 B + 0.10/0.15	.042/.045 1.07/1.14	0.003 0.076	A − .004/.006 A − 0.10/0.15	.085 2.16	.002 0.05
.093 2.4	B + .005/.009 B + 0.13/0.23	.065/.069 1.65/1.75	0.004 0.102	A − .005/.009 A − 0.13/0.23	.112 2.60	.002 0.05
.125 3.2	B + .007/.012 B + 0.18/0.30	.090/.095 2.29/2.41	0.005 0.127	A − .007/.012 A − 0.18/0.30	.144 3.66	.003 0.08
.156 4.0	B + .008/.014 B + 0.20/0.36	.115/.120 2.92/3.05	0.006 0.152	A − .008/.014 A − 0.30/0.36	.182 4.46	.004 0.10
.188 4.8	B + .009/.015 B + 0.23/0.38	.145/.150 3.68/3.8	0.007 0.178	A − .009/.015 A − 0.23/0.38	.220 5.59	.004 0.10
.250 6.4	B + .011/.019 B + 0.28/0.48	.195/.200 4.95/5.08	0.008 0.203	A − .011/.019 A − 0.28/0.48	.290 7.37	.005 0.13
.375 9.5	B + .014/.029 B + 0.36/0.74	.295/.300 7.49/7.62	0.012 0.305	A − .014/.029 A − 0.36/0.74	.445 11.3	.009 0.23
.500 12.7	B + .020/.038 B + 0.51/0.97	.415/.425 10.54/10.8	0.016 0.406	A − .020/.038 A − 0.51/0.97	.645 16.7	.013 0.33
.625 15.9	B + .020/.038 B + 0.51/0.97	.520/.530 13.21/13.46	0.016 0.406	A − .020/.038 A − 0.51/0.97	.780 19.8	.017 0.43

Dimensions in table above are for unplated rings. Increase groove depth for .031 inch (0.8mm) cross section rings by 2 times the plating or coating thickness of plated or coated rings.
Do not increase groove depth on plated or coated rings for cross section of .063 inch (1.6mm) and larger.

*Springback figures for tube diameters up to .250 inch (6.4 mm) are for stainless steel. Springback for .375, .500 and .625 inch (9.5, 12.7 and 15.9 mm) tube diameters are for precipitation hardened Alloy 718. Other values for different materials are available.

5

Figure 4.5-2 Metallic O-rings Technical Bulletin (Continued)

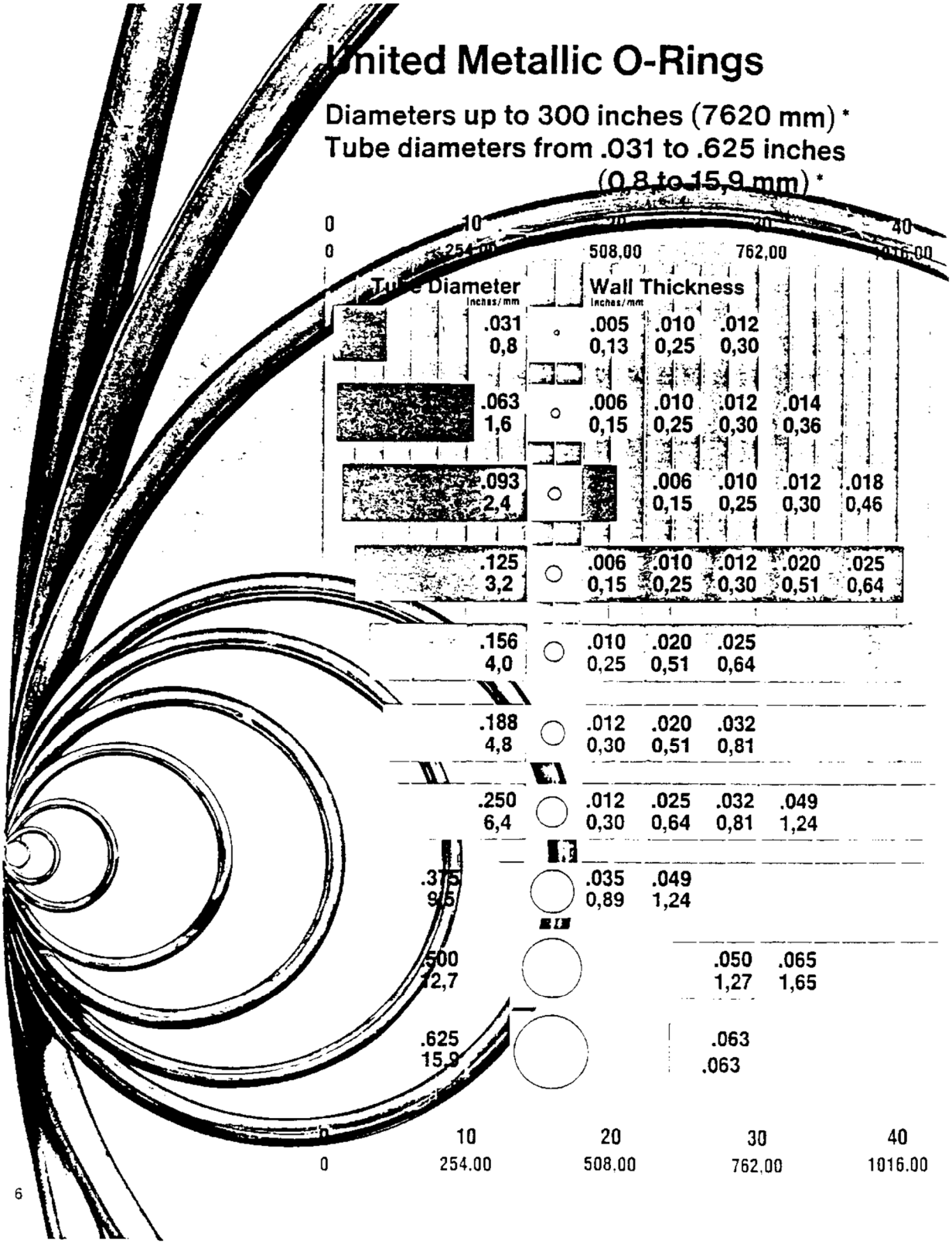

Figure 4.5-2 Metallic O-rings Technical Bulletin (Continued)

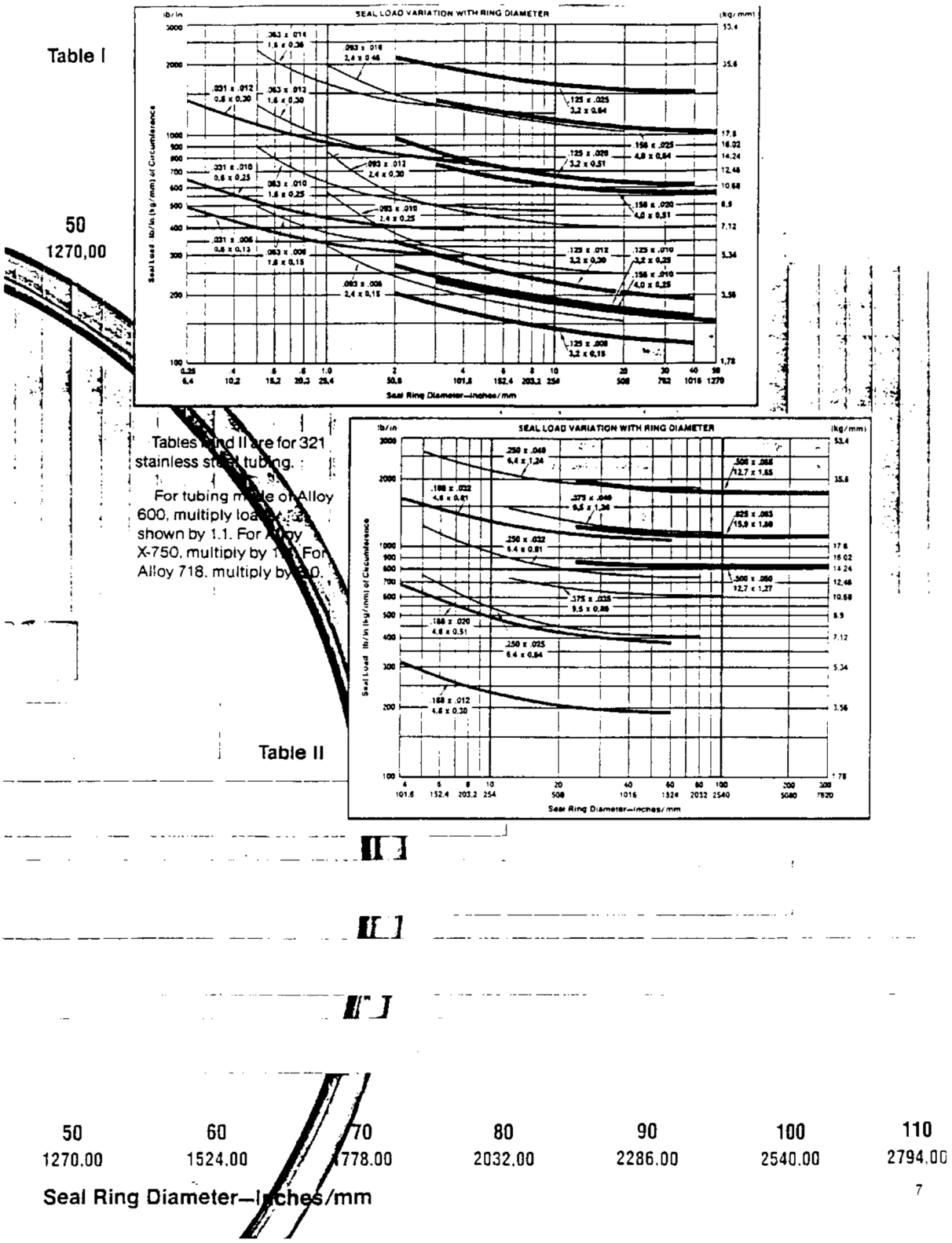

Figure 4.5-2 Metallic O-rings Technical Bulletin (Continued)

Retainer Assemblies

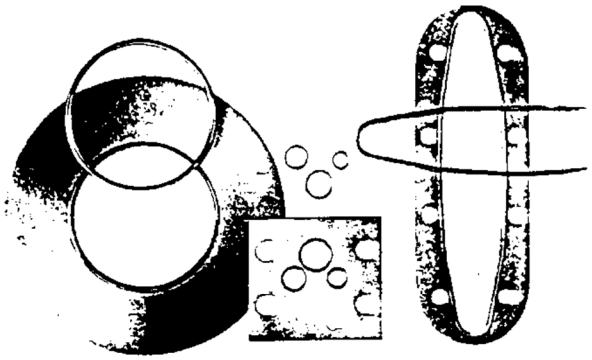

Metallic O-Rings can be used with a metal retainer plate for mechanical back-up that serves the same function as the machined groove wall in conventional installations. Retainer assemblies may incorporate several Metallic O-Rings into one all metallic assembly. The O-Rings are press-fitted without cross-section distortion, are secured against dropout and are easily handled during field assignment or retrofit programs. The retainer plate furnishes the O-Ring compression limit, controls hoop tension of the O-Ring, simplifies surface finish operation, permits interchangeability of flanges, and applies to single or multiple O-Ring requirements. A selection of several standard assemblies is described below:

ASA/API Pipe Flange Seals

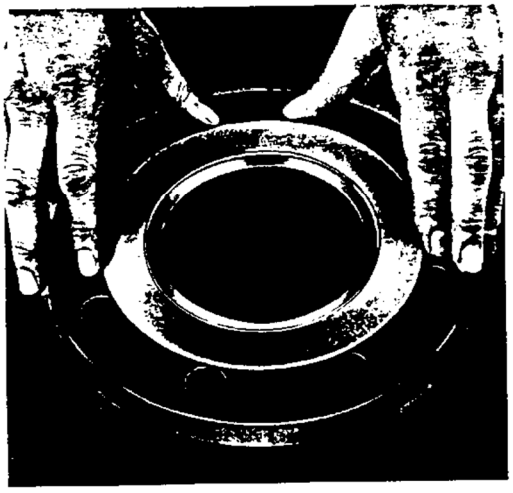

Metallic O-Rings offer static seal reliability and safety for installation or maintenance of piping. Over long periods of time, the all-metal construction of Fluorocarbon tubular Metallic O-Rings and retainer plates make them less susceptible to relaxation of sealing stresses – as compared to partially non-metallic gaskets.

In addition to their natural resilience characteristics, Metallic O-Rings provide the stability of a metal-to-metal pipe joint seal.

The natural springback of thin-wall metal tubing, and unique self-energizing design feature, create a balance of inside and outside forces which prevent collapse of the tube under pressure cycling. These same features allow Metallic O-Rings to respond to variations in sealing surface deflections without creep or cold flow and to accommodate high and low temperature cycling. For process plant piping, they withstand temperatures from cryogenic to 1,800° F. (982° C.) and pressures from vacuum to 50,000 psi (3402 atm).

To maintain seal reliability, tubular Metallic O-Rings require less bolt stress than solid, fiber, flat metal, spiral wound or jacketed gaskets. Lower seal loads allow a greater bolt and flange safety factor for a given installation.

O-Rings and retainer plates are available for .250" to 24" (6.4 to 609.6 mm) pipe in all sizes of 150 to 2500 psi (10.2 to 170.1 atm) flat or raised face flanges.

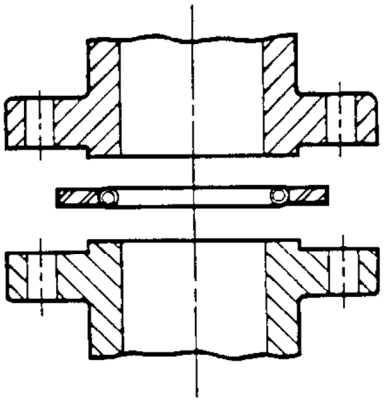

8

Figure 4.5-2 Metallic O-rings Technical Bulletin (Continued)

Boss Seals

United Metallic FIT-O-SEAL for boss joints combines a stainless steel retainer and a press fit Metallic O-Ring. The unit is self-positioning, controls ring compression, and can be reused. It won't deteriorate with age and is not affected by environment. Existing boss can be easily retrofitted. It can seal fuels and chemicals from high vacuum to 10,000 psi (680 atm) or higher, and will endure continuous temperatures of −452° F. (−269° C.) to 1,800° F. (982° C.). Standard seal assembly available for MS33656 fitting to MS33649 boss. Modifications available.

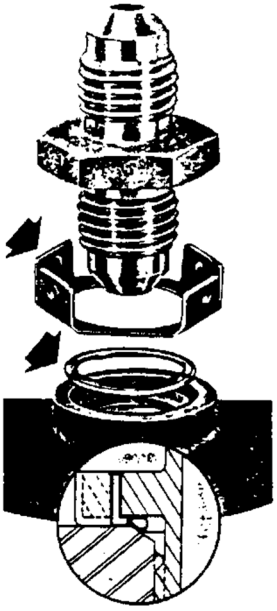

Flange-O-Seal

The Metallic O-Ring is semi-fastened into the metal retainer. The assembly is used for sealing jet engine fuel lines and exotic missile fuel lines from −452° F. (−269° C.) to 1,800° F. (982° C.).

It can be used for steel fittings MS20757 thru MS20762 and MS33786 fitting installation. The following assemblies are available from stock:

Part No. U-700490	Part No. U-700520	A Dia. Inches / mm ± .035 (0.89)	B Inches / mm ± .005 (0.13)	D Inches / mm ± .005 (0.13)
—12	—12	.863 21.92	1.156 29.36	.210 5.33
—16	—16	1.113 28.27	1.312 33.32	.210 5.33
—17	—17	1.113 28.27	1.414 35.92	.271 6.88
—20	—20	1.425 36.2	1.656 42.06	.271 6.88
—24	—24	1.613 40.97	1.812 46.02	.271 6.88
—32	—32	2.300 58.42	2.375 60.33	.333 8.46

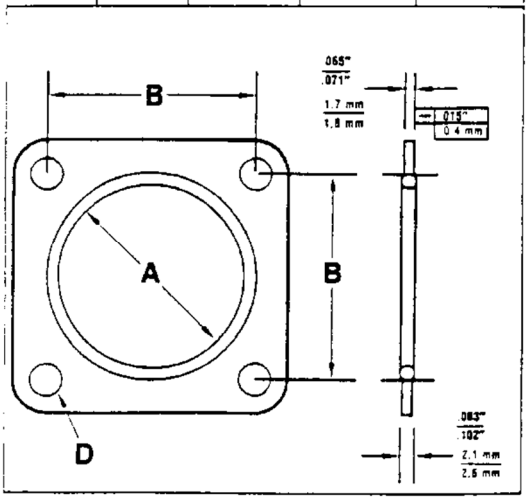

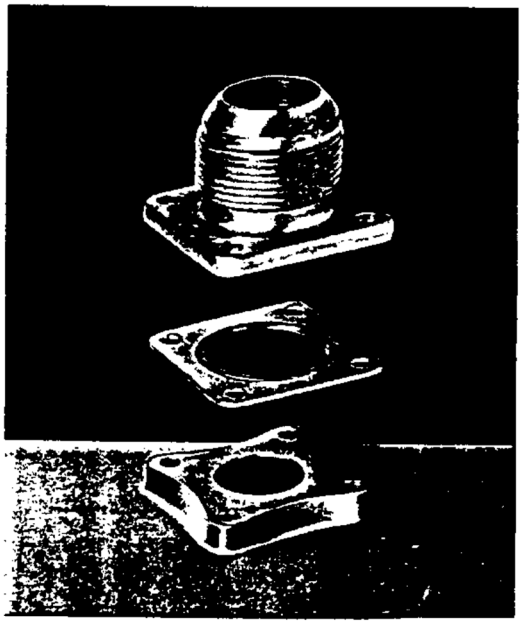

9

Figure 4.5-2 Metallic O-rings Technical Bulletin (Continued)

Nuclear Pressure Vessel Seals

The principal application of United Metallic O-Rings in nuclear power plants is the sealing of reactor pressure-vessel heads. They are also specified for sealing applications on valves, steam generators, condensers, pumps, piping and other equipment components throughout the nuclear flow chart.

United O-Rings can easily meet the three major requirements of nuclear applications: high temperature ratings, high pressure ratings, and larger than average ring diameters (see Page 2 for specifics). United Metallic O-Rings offer other significant advantages in nuclear applications: they are not normally affected by damaging environments or corrosives; they don't deteriorate with age, even in storage, and they resist radiation and chlorides.

TABLE 1 O-Ring—Alloy 718—DEFLECTION and SPRINGBACK—Inches (mm)

Load Force Unrestrained /linear inch ♦	.375 dia. x .038 wall (9.5 x 0,95)		.500 dia. x .050 wall (12,7 x 1,27)		.625 dia. x .063 wall (15,9 x 1,60)	
	2500 lb/in (45 kg/mm)		2500 lb/in (45 kg/mm)		4000 lb/in (71,5 kg/mm)	
Percentage	Deflection	Min. Springback	Deflection	Min. Springback	Deflection	Min. Springback
8%	.030 (0,76)	.009 (0,23)	.040 (1,02)	.013 (0,33)	.050 (1,27)	.017 (0,43)
10%	.037 (0,94)	.009 (0,23)	.050 (1,27)	.013 (0,33)	.062 (1,57)	.017 (0,43)
12%	.045 (1,14)	.009 (0,23)	.060 (1,52)	.013 (0,33)	.075 (1,91)	.017 (0,43)
16%*	**.060 (1,52)**	**.009 (0,23)**	**.080 (2,03)**	**.013 (0,33)**	**.100 (2,54)**	**.017 (0,43)**
17%	.064 (1,63)	.009 (0,23)	.085 (2,16)	.013 (0,33)	.106 (2,69)	.017 (0,43)

**Optimum compression percentage. 8 to 17% compression may be utilized with UAP Inconel 718. Load forces may vary slightly below 17% inch compression.*

Media to be Sealed

Media in the nuclear power plant which United O-Rings can successfully seal include: ordinary (light) water, heavy water, boiling water, steam, borated water, carbon dioxide, helium, nitrogen, liquid metals including sodium, terphenyl and other phenyl fluids, and acids including boric acid.

Flange and Groove Details

United Metallic O-Rings do not require expensive groove preparation and, being flexible, are easily installed. On pressure vessel head seals, a machined groove is required, the groove diameter being determined by the location of vessel rings so that minimum lift-off exists.

The O-Ring OD must be sufficiently large so that upon compression, the ring will expand and contact the groove outer wall. This limits hoop tension of the ring and provides a backup that restricts radial outward movement of the ring when the vessel is pressurized. Groove should be sufficiently wide so that the O-Ring ID does not contact the inside wall when the ring is compressed. Groove depth controls the amount of compression and the amount of load required to seat the ring. Table 1 shows the amount of flange load required to seat the seal.

The O-Ring and groove dimensions for internal and external pressure applications may be determined from the data on page 5.

Materials and Plating

Alloy 718 is the O-Ring material of choice on most nuclear sealing applications. Inconel 706 is also available. Alloy 718 used in United O-Rings is annealed and age hardened, offers optimum strength and springback, and resists chlorides, radiation and corrosion. Type 304 stainless steel O-Rings are also offered for applications that are less critical and where a less expensive material will suffice.

Both Alloy 718 and Type 304 stainless steel O-Rings are available with silver plating of .004" – .006" (0,10 mm – 0,15 mm) thickness. Ring OD can be controlled to .010" (0,25 mm) total tolerance after silver plating. The silver plating assures good adherence and ductility (softness) to conform to groove irregularities. Nickel plating is recommended when sealing sodium.

O-Ring Fabrication

United Metallic O-Rings are fabricated by bending straight metal tubing into circular or other desired shapes. The two ends are welded together and the weld ground flush.

Where the proposed size of the fabricated O-Ring would prohibit shipping, the company offers on-site welding fabrication that meets the same quality standards as fabrication performed in our plant.

10

Figure 4.5-2 Metallic O-rings Technical Bulletin (Continued)

Tube and Ring Dimensions

The three most common tube diameters used for nuclear applications are shown below with the recommended relationship of tube diameter and wall thickness to the O-Ring diameter. Other tube diameters are also available for nuclear applications. See pages 6 and 7.

TABLE 2

Tube Diameter inches/mm	Wall Thickness inches/mm	O-Ring Diameter inches/mm
.375 9.5	.038 1.0	Up to 180 Up to 4572
.500 12.7	.050 1.3	120 to 260 3048 to 6604
.625 15.9	.063 1.6	220 and up 5580 and up

TABLE 3

O-RING DIAMETER inches (mm)	No. Slots or Holes *
Up to 144 (3657.6)	8
144 (3657.6) and up.	12

*unless otherwise specified

TABLE 4

SLOT or HOLE DIMENSIONS inches (mm)

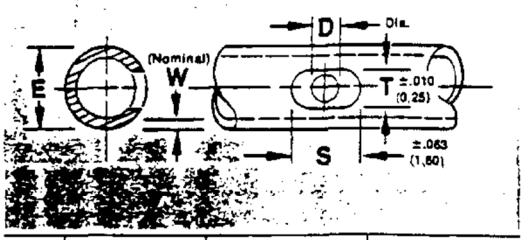

E	.375 (9,5)	.500 (12,7)	.625 (15,9)
W	.038 (1,0)	.050 (1,3)	.063 (1,6)
S	.281 (7,1)	.375 (9,5)	.438 (11,1)
T	.125 (3,2)	.205 (5,2)	.256 (6,5)
D	.070 (1,8)	.093 (2,4)	.125 (3,2)

STYLE A

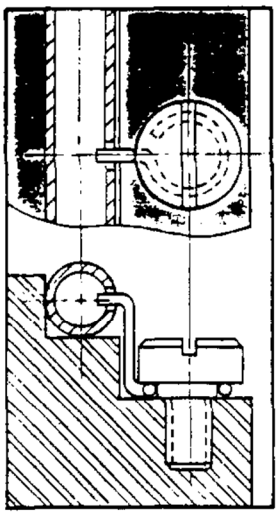

STYLE B

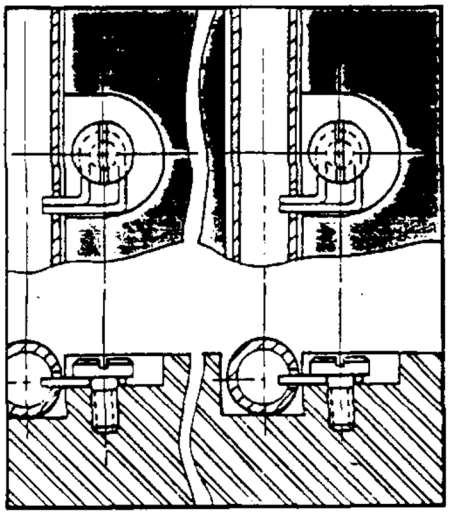

STYLE C

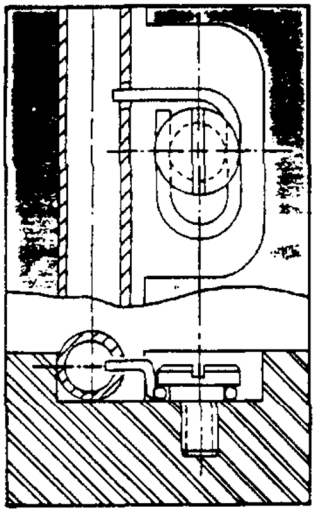

Retainer Clips

On nuclear pressure vessel heads, the rings are installed to the underside of the flange on the head. This requires clips to hold the rings in proper place and alignment during assembly of the head to the vessel. Slots are provided in the O-Ring to receive the retainer clips. In some instances the retainer clips are welded to the O-Ring. Instead of slots for retainer clips, drilled holes with additional self-energizing holes can be provided. The number of slots or holes and their size varies in relation to the ring and tube diameters (see Tables 3 and 4). The data shown assures installation without excessive O-Ring buckling in the groove and without endangering O-Ring strength. Different clipping methods are available, depending on vessel design, for both single and double ring applications (see drawings above—styles A, B and C).

11

Figure 4.5-2 Metallic O-rings Technical Bulletin (Continued)

How to Specify O-Rings

Denotes Metallic O-Ring	Tubing OD (Thirty-Seconds)		Wall Thickness (Thousandths)				
U	2	3	12	—	03	625	SE	A

Materials
1—Alloy 718
2—Stainless Steel 321
3—Aluminum
4—Copper
5—Alloy 600
6—Alloy X-750 INCONEL
7—Stainless Steel 304
8—Stainless Steel 316
9—Stainless Steel 347
X—As Specified

Metallic O-Ring OD (Inches) (Thousandths)

Type
SE—Self-energized on ID
PF—Pressure filled
NP—Not self-energized, not pressure filled
SO—Self-energized on OD
SX—Self-energized as spec.

Example:
U2312-03625SEA

The above example, U2312-03625SEA, indicates a type 321 stainless steel O-Ring, 3/32" (2,38 mm) tube size, .012 (0,30 mm) wall thickness, 3.625" (92,08 mm) OD, self-energized (ID) and .001-.002" (0,03/0,05 mm) silver coating.

Coatings

A—Silver	.001/.002 (0,03/0,05)	N—None	
B—Silver	.002/.003 (0,05/0,08)	P—Lead	.001/.002 (0,03/0,05)
D—Teflon	.001/.003 (0,03/0,08)	R—Indium	.001/.002 (0,03/0,05)
E—Teflon	.003/.004 (0,08/0,10)	T—Nickel	.001/.002 (0,03/0,05)
L—Copper	.001/.002 (0,03/0,05)	V—Gold	.0005/.001 (0,02/0,03)

X—As Specified

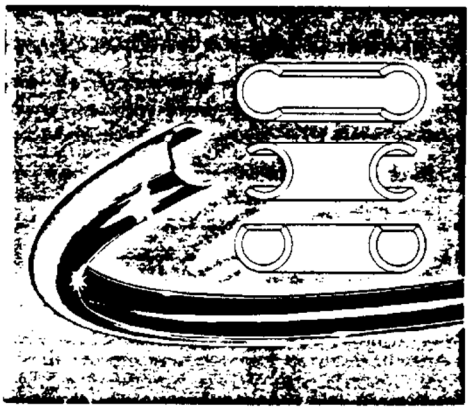

United Metallic C-Rings

United Metallic C-Rings (designated MCR) are designed for static sealing on machinery or equipment and are available for internal pressure, external pressure, or axial pressure ID/OD applications. Because C-Rings are designed with an open side on the pressure side of the installation, the seal is self-energizing. United C-Rings are offered in round or irregular shapes in a broad range of sizes from .126" (3,2 mm) OD x .032" (0,81 mm) free height to over 300" (7620 mm) OD x 2" (50,80 mm) free height. They are available in a wide variety of metal alloys and metallic or Teflon coatings. Sealing application temperature range is from cryogenic to 3,000° F. (1650° C.); pressure tolerances are from 10^{-10} torr to 100,000 psi (6,804 atm). Where customer requirements are large, the C-Ring provides the lowest unit price of any high performance seal on the market. Request **Bulletin 102C.**

FLUOROCARBON
COMPONENTS DIVISION
Post Office Box 9889/Columbia, South Carolina 29290
Phone: 803/783-1880 Telex: 57-3334

12 Bulletin 101C 5.0M-8/82 ©Copyright, Fluorocarbon Components Division 1982

4.5.3 Viton® O-Rings

This appendix provides a description of the leak testing performed using the Viton® O-rings on the alternate port cover design at temperatures exceeding the manufacturer's elevated temperature limit. In addition, it also contains the Parker Seals Material Report on the Viton® material.

4.5.3.1 Alternate Port Cover O-Ring Elevated Temperature Leak Testing

The alternate port cover provides a Viton® O-ring face seal for the containment boundary. The alternate port cover bolts are torqued to 100 inch-pounds. When torqued as specified, the inner face of the alternate port cover will contact the sealing surface in the top forging and compress the Viton® O-ring to create a seal. To evaluate the Viton® O-ring performance at temperatures greater than 400ºF, two test fixtures simulating the top forging of the cask and two alternate port covers were fabricated. Two assemblies were tested simultaneously to confirm that the test results were credible. A thermocouple was located within 0.063 inch of the centerline of the inner end O-ring and is the transducer used to report temperature during testing.

The O-ring used in conjunction with the alternate port cover is fabricated from a material with the trade name Viton®. The Viton® material is chosen because the operating temperature range for the material is low enough (-40ºF) to satisfy the low temperature requirements for cask operations. The elevated temperature limit specified is 400ºF. (The Parker Seals Material Report follows this test description.) Analyses presented in Section 3.5.1 show that the maximum post-fire accident temperature is 547ºF.

NAC, with the aid of an independent laboratory, performed leak testing in excess of 550ºF to demonstrate Viton's capability to perform at the elevated temperature and to determine the leak rate of the alternate port cover design at the elevated temperature. It was determined that the alternate port cover O-ring maintains its sealing capability at a temperature of 575ºF after prolonged heating above 400°F. Testing was done in accordance with NAC Specification Number 315-S-09, Revision 0. Two fixtures were put into a thermal test chamber. All the fittings attached to the test assemblies were checked and confirmed leaktight. The assemblies were heated in a manner that conservatively approximates the fire-transient analysis and one fixture was held at a temperature above 550ºF for more than 4 hours 37 minutes. The region inside the port cover was evacuated to below 2 psia, backfilled with helium at 0 psig, evacuated and backfilled again and then leak checked. The leak test procedure emulates the maintenance test of the port cover stated in Chapter 8, with one atmosphere of pressure acting on the O-ring during the test.

Data pertinent to the test:

	Test Assembly 16	Test Assembly 64	Fire-Transient
Time Above 400°F	~6:32 hours	~5:52 hours	4:37 hours
Time Above 550°F	~5:05 hours	~4:25 hours	0 hour
Maximum Seal Temperature	~575°F	~575°F	547°F

The test temperature of 550°F was selected because it approximates the maximum calculated O-ring temperature in the fire-transient analysis. The duration was selected because it is the calculated duration that the O-ring is above the manufacturer's maximum recommended O-ring temperature of 400°F. This results in a conservative test due to the slower heat-up rate of the oven compared to the heat-up rate of the port cover in the fire-transient analysis.

Each test assembly was leak checked after the temperature test, while at a temperature of approximately 575°F. The measured leak rate for each of the assemblies was less than 4.0×10^{-8} atm-cc/sec. In conclusion, the alternate port cover provides a leaktight seal, in accordance with ANSI N14.5, using Viton® O-rings at an elevated temperature.

Figure 4.5-3 Parker Seals Material Report on the Viton® Material

Sep-17-99 03:35P P.01

Parker Seals

Software Version: 2.0 9/17/99

Customer Identification

Company:	NAC International
Contact:	George Carver
Project Name:	
Address:	
City:	**Zip Code:**
State:	
Telephone No.:	770-447-1797 fax
Date/Time:	9-17-1999 15:27

Ordering Specifications

Application:	O-ring Only
Compound Number:	V0835-75
Size:	

Compound Information

Search Parameter

Material Selection Method:	Compound Search
Contained Media:	
Desired Temperature Range	
High:	
Low:	

Selected Material Information

Durometer (Shore A):	75
Polymer:	Fluorocarbon GLT - LOWTEMP COMPOUND.
Temperature	
Normal High:	400 °F
Extended High:	400 °F
Normal Low:	-40 °F
Color:	Black
Static Application Only:	No
Military Spec.:	MIL-R-83485
AMS NAS Spec.:	None
SAE/ASTM Spec.:	None

Seal Size Information

Sizing Selection Method:	Known: O-ring P/N. Search for: O-ring dimensions.

inPHorm Selection Summary 1

Figure 4.5-3 Parker Seals Material Report on the Viton® Material (Continued)

Sep-17-99 03:35P P.02

Parker **Compound Data Sheet**
O-Ring Division United States

MATERIAL REPORT

REPORT NUMBER: KJ0835
DATE: 10/10/89

TITLE: Test of Parker Compound V0835-75 to MIL-R-83485, Type I.

PURPOSE: To determine if V0835-75 meets MIL-R-83485, Type I.

CONCLUSION: V0835-75 meets the above specification.

Parker O-Ring Division
2360 Palumbo Drive
Lexington, Kentucky 40509
(606) 269-2351

Figure 4.5-3 Parker Seals Material Report on the Viton® Material (Continued)

Sep-17-99 03:35P P.03

REPORT DATA

Report Number: KJ0835

ORIGINAL	MIL-R-83485 TYPE 1, O-RINGS & COMPRESSION SEALS	V0835-75 ACTUAL VALUES
Specific Gravity	As determined	1.75
Hardness points	75 ± 5	78
Tensile Strength, psi. min.	1600	1708
Elongation, % min.	120	180
Temperature Retraction, 10% (TR-10), °F, max.	-20	-22
AFTER AIR AGING, 70 HRS.@ 75° + 5°F. Compression Set		
% of original deflection, max.	25	-- (14)
AFTER AGING, 70 HRS. @ 75°F IN TT-S-735, TYPE III		
Hardness Change, pts.	+5	77 (-1)
Tensile Strength decrease, %, max.	30	1662 (-3)
Elongation decrease, %, max.	20	165 (-8)
Volume change, %, max.	1 to 10	-- (+2)
AFTER AIR AGING, 70 HRS. @ 528° ± 5°F		
Hardness change, pts.	+5	78 (0)
Tensile Strength decrease, % max.	35	1136 (-33)
Elongation decrease, %, max.	10	235 (+31)
Weight loss, %, max.	12	-- (-7)
AFTER AIR AGING, 166 HRS @ 347° ± 5°F. COMPRESSION SET		
% of original deflection, max.	25	-- (15)
18 hrs. cooling		-- (24)
AFTER AIR AGING, 22 HRS @ 392° ± 5°F. COMPRESSION SET		
% of original deflection, max.	20	-- (11)

Figure 4.5-3 Parker Seals Material Report on the Viton® Material (Continued)

Sep-17-99 03:35P P.04

AFTER AGING, 70 HRS. @ 347°MIL-R-83485 ±5°F in AMS-3021	MIL-R-83485 TYPE 1, O-RINGS % COMPRESSION SEALS	V0835-75 ACTUAL VALUES
Hardness change, pts	+0, -15	73
Tensile Strength decrease, %, max.	35	1406 (-10)
Elongation decrease, %, max.	20	171 (-5)
Volume change, %	1 to 20	-- (+15)
Compression set, % of original deflection, max. 18 hr. cooling	10	-- 7 -- 9

4.5.4 Metallic Face Seal

This appendix contains the specification that describes the properties of the metallic port cover face seal.

Helicoflex Spring Energized Seals

GENERAL INFORMATION

The Helicoflex® seal represents the leading edge in seal technology for high performance sealing applications. Today's extreme sealing requirements have rendered traditional seals & gaskets obsolete. If you can't afford the lost time associated with leaks, put your trust in the leader: Helicoflex®.

SEALING CONCEPT

The sealing principle of the Helicoflex® family of seals is based upon the plastic deformation of a jacket of greater ductility than the flange materials. This occurs between the sealing face of a flange and an elastic core composed of a close-wound helical spring. The spring is selected to have a specific compression resistance. During compression, the resulting specific pressure forces the jacket to yield and fill the flange imperfections while ensuring positive contact with the flange sealing faces. Each coil of the helical spring acts independently and allows the seal to conform to surface irregularities on the flange surface. This combination of elasticity and plasticity makes the Helicoflex seal the best overall performing seal in the industry.

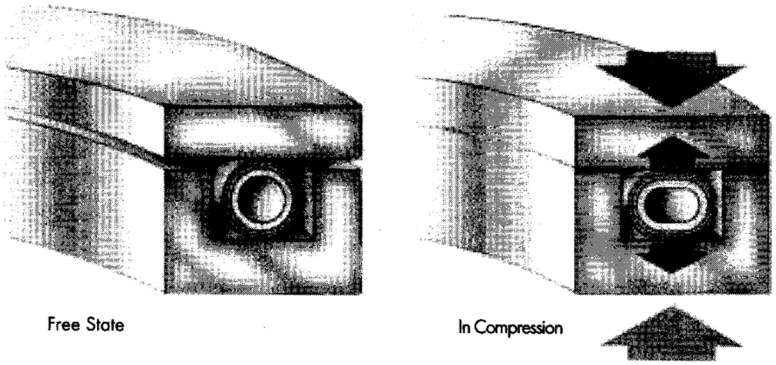

Free State

In Compression

GENERAL CHARACTERISTICS

- Wide range of applications:
  - Dimensional: Diameters from 0.250 inches (6.3 mm) to over 300 inches (7.6 m)
    Cross sections from 0.063 inches (1.6 mm) to over 0.625 inches (15.9 mm)
  - Temperature: Cryogenic to 1800°F (982°C)
  - Pressure: Ultra High Vacuum to 50,000 PSI (100,000 PSI under special conditions)
- Excellent springback: the spring energized Helicoflex is capable of compensating for flange distortions due to temperature and pressure cycling.
- Adaptable to a majority of standard flanges: ANSI, ISO, KF, ASA
- Suited to different types of assemblies: -metal/metal with groove
  -flat flanges with limiter/retainer
  -3 face contact
- Extended shelf life
- Excellent resistance to corrosion and radiation
- Minimum relaxation: the Helicoflex's resilient spring compensates for relaxation ensuring positive seal contact.

For Additional Information, Please Consult Our Engineering Staff
1-800-233-1722

Seal Configurations

CLASSIFICATION OF SEAL TYPE

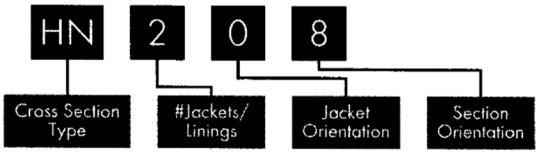

CONFIGURATION GUIDE

Cross Section Type	HN	single section
	HNR	ground spring for precise load control (Beta Spring)
	HNV	low load (Delta Seal)
	HND	tandem Helicoflex seals
	HNDE	tandem Helicoflex and elastomer seals note: "L" indicates internal limiter (ex: HLDE)

Jacket/Lining	1 = jacket only					2 = jacket with inner lining				
Jacket Orientation	0	1	2	3	4	5	6	7	8	9
Section Orientation	0	1	2	3	4	5	6	7	8	9

TYPICAL CONFIGURATIONS

HN200
Groove assemblies

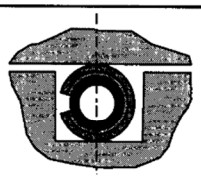

HN240
3 face compression

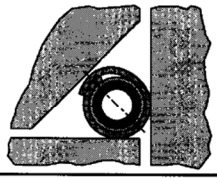

HN208
Raised face flanges - ANSI B16.5

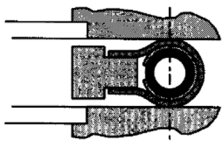

HN203
Tongue & groove

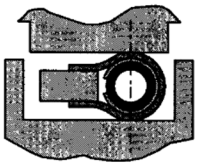

HNDE290
Leak check - inert gas purge

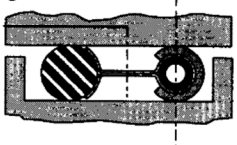

HND229
Valve seats

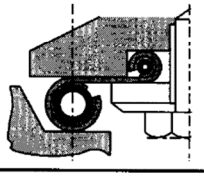

Garlock Helicoflex

For Additional Information, Please Consult Our Engineering Staff
1-800-233-1722

3

Helicoflex Seal Characteristics

CHARACTERISTIC CURVE

The resilient characteristic of the Helicoflex® seal ensures useful elastic recovery during service. This elastic recovery permits the Helicoflex® seal to accommodate minor distortions in the flange assembly due to temperature and pressure cycling. For most sealing applications the Y_0 value will occur early in the compression curve and the Y_1 value will occur near the end of the decompression curve.

The compression and decompression cycle of the Helicoflex® seal is characterized by the gradual flattening of the compression curve. The decompression curve, which is distinct from the compression curve, is the result of a hysteresis effect and permanent deformation of the spring and jacket.

DEFINITION OF TERMS

- Y_0 = load on the compression curve above which leak rate is at required level
- Y_2 = load required to reach optimum compression e_2
- Y_1 = load on the decompression curve below which leak rate exceeds required level
- e_2 = optimum compression
- e_c = compression limit beyond which there is risk of damaging the spring

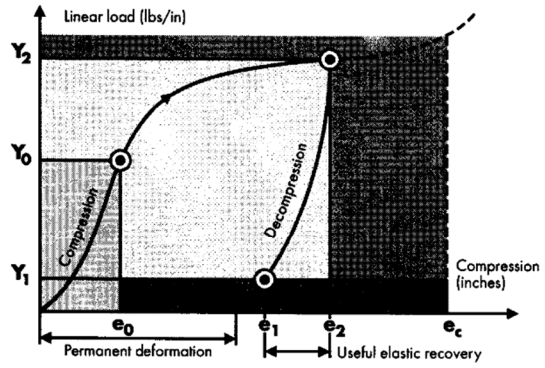

INTRINSIC POWER OF THE SEAL

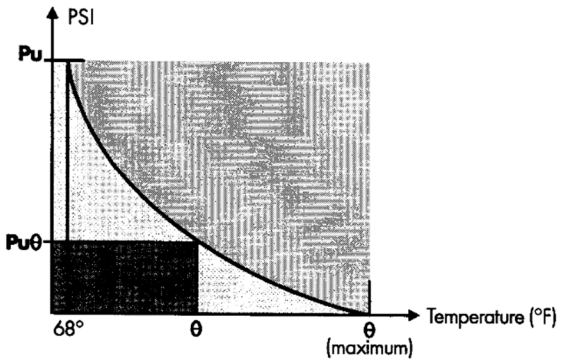

The intrinsic power of the Helicoflex seal reflects its ability to maintain and hold system pressure for a given temperature at Y_2 and e_2. This value is expressed as a specific pressure and is noted by the symbols **Pu** (room temperature) and **Puθ** (at operating temperature). The influence of temperature on Pu is shown in the graph above. The tables on pages 10 and 11 give the values of **Pu** at 68 °F (20 °C), **Puθ** at a given temperature and the maximum temperature where **Puθ** = 0.

Helicoflex Seal Specifications

DEFINITION OF CHARACTERISTIC VALUES

Dj	Mean reaction diameter of the seal. (For a double section seal, $Dj = Dj_1 + Dj_2$)	_____ inches
Y_2	Linear load corresponding to e_2 compression	_____ lbs/inch
Y_1	Linear load on the seal to maintain sealing in service at low pressure ($=Y_{m1}$)	_____ lbs/inch
Pu	Intrinsic power of the seal under pressure at 68 °F (20 °C) when the reaction force of the seal is maintained at Y_2, regardless of the operating conditions.	_____ PSI
Puθ	Value of Pu at temperature θ	_____ PSI
P	Operating or proof pressure Note: if $\frac{P}{Pu \text{ or } Pu\theta} > 1$, the definition of the seal must be modified *This ratio must never exceed 1.*	_____ PSI
Y_{m2}	Linear tightening load on the seal at room temperature to maintain sealing under pressure. $Ym_2 = Y_2 \frac{P}{Pu}$	_____ lbs/inch
$Y_{m2\theta}$	Value of Y_{m2} at temperature θ. $Y_{m2\theta} = Y_2 \frac{P}{Pu\theta}$	_____ lbs/inch
Et	Young's modulus of bolt material at 68 °F (20 °C)	_____ PSI
Et_s	Young's modulus of bolt material at operating temperature	_____ PSI

LOAD CALCULATIONS

Fj	Total tightening load to compress the seal to the operating point (Y_2; e_2) $Fj = \pi \times Dj \times Y_2$	_____ lbs
F_F	Total hydrostatic end force $F_F = \pi/4\ Dj_1^2 \times P$ ($Dj_1 = Dj$ in case of a single section seal)	_____ lbs
Fm	Minimum total load to be maintained on the seal in service to preserve sealing, i.e. $Fm = \pi\ Dj\ Ym$ where: Ym = the greater of the two values: Y_{m1} or $Y_{m2\theta}$ (see note 1 below)	_____ lbs
Fs	Total load to be applied on the bolts to maintain sealing in service. $F_S = F_F + Fm$	_____ lbs
Fs*	Increased value of F_S to compensate for Young's modulus at temperature $Fs^* = Fs\ Et / Et_s$	_____ lbs
F_B	LOAD TO BE APPLIED: If $Fs^* > Fj$ then $Fb = Fs^*$ If $Fj > Fs^*$ then $Fb = Fj$	_____ lbs

Note 1: wherever the working pressure is high and/or seal diameter is big, to such an extent that $P \cdot Dj \geq 32\ Ym$, in order to remain on the safe side, whatever the inaccuracy on the tightening load may be, it is recommended to take the Fj value in lieu of Fm for the calculation of Fs so that $Fs = F_F + Fj$.

Note 2: this information is provided as a reference only.

Garlock Helicoflex

For Additional Information, Please Consult Our Engineering Staff
1-800-233-1722

5

Groove Design - Radial Pressure

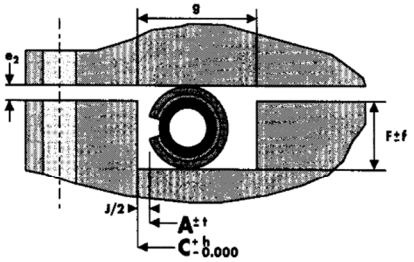

CALCULATIONS

Groove Depth (F)	= Cross Section (CS)-e_2
Depth Tolerance (f)	= e_2 X 0.12
Groove Width (g)	= See table below
Seal OD (A)	= Groove OD (C) - Clearance (J)
Groove Finish	= See table below
Flatness	= See table below

CLEARANCE AND MINIMUM GROOVE WIDTH

Seal Cross Section CS	Pressure < 300 psi (20 bar) Clearance J	Pressure < 300 psi (20 bar) Min Groove Width g	Pressure ≥ 300 psi (20 bar) Clearance J	Pressure ≥ 300 psi (20 bar) Min Groove Width g
0.059 to 0.134 (1.5 to 3.4)	$J = e_2$	$g > CS + 2e_2$	J = 0.012 J = 0.3	$g > CS + 2\,e_2$
0.138 to 0.272 (3.5 to 6.9)	$J = e_2$	$g > CS + 2e_2$	J = 0.020 J = 0.5	$g > CS + 2\,e_2$
0.276 to 0.390 (7.0 to 9.9)	$J = e_2$	$g > CS + 2e_2$	J = 0.028 J = 0.7	$g > CS + 2\,e_2$

SEAL / GROOVE TOLERANCES

Seal Diameter Range	Pressure < 300 psi (20 bar) Seal Tolerance t	Pressure < 300 psi (20 bar) Groove Tolerance h	Pressure ≥ 300 psi (20 bar) Seal Tolerance t	Pressure ≥ 300 psi (20 bar) Groove Tolerance h
0.350 to 2.000 (3.8 to 50.0)	0.005 0.13	0.005 0.13	0.004 0.10	0.004 0.10
2.001 to 12.000 (50.0 to 305.0)	0.010 0.25	0.010 0.25	0.004 0.10	0.004 0.10
12.001 to 25.000 (305.0 to 635.0)	0.010 0.25	0.010 0.25	0.006 0.15	0.006 0.15
25.001 to 48.000 (635.0 to 1220.0)	0.015 0.38	0.015 0.38	0.008 0.20	0.008 0.20
48.001 to 72.000 (1220.0 to 1830.0)	0.020 0.51	0.015 0.38	0.010 0.25	0.008 0.20
> 72.000 (> 1830.0)	Consult our engineering staff		Consult our engineering staff	

SURFACE FINISH

Nr. LCA-CEA	N10	N9	N8	N7	N6	N5	N4
Ra in µm	12.5	6.3	3.2	1.6	0.8	0.4	0.2
Rt in µm	50	37	21	11	6.2	3.4	1.9
RMS	500	250	125	63	32	16	8
Aluminum	o	o	◎	◎	◎	o	o
Silver, copper, iron		o	◎	◎	o	o	
Nickel, stainless steel		o	o	◎	◎	o	o

◎ recommended o consult our engineering staff

Note: Machining/polishing marks must follow seal circumference

SHAPED SEALS

Groove Design: Contact our engineering staff for assistance in designing non-circular grooves.
Groove Finish: Most applications will require a finish of 16-32 RMS (0.4 to 0.8 Ra µm). All machining & polishing marks must follow seal circumference.
Min. Seal Radius: The minimum seal bending radius is six times the seal cross section (CS).
Seating Load: The load (Y2) to seat the seal is approximately 30% higher due to a slightly stiffer spring design.

FLATNESS

Seal Diameter Range	Amplitude	Tangential Slope	Radial Slope
0.350 to 20.000 (10 to 500)	0.008 0.2	1:1000	1:100
20.001 to 80.000 (500 to 2000)	0.016 0.4	2:1000	2:100

Dimensions in inches | Dimensions in mm

6 **Garlock Helicoflex**

For Additional Information, Please Consult Our Engineering Staff
1-800-233-1722

Cavity Design - Axial Pressure

THREE FACE COMPRESSION

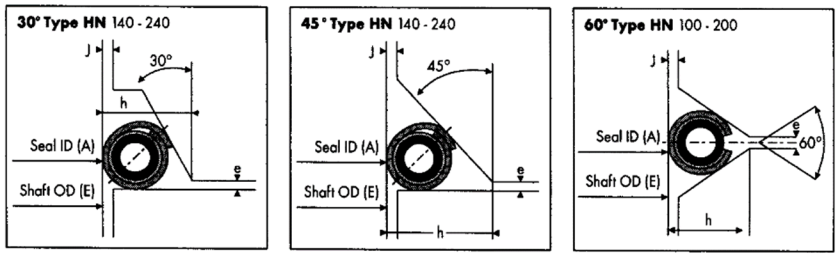

E = Shaft OD $^{+0.000}_{-0.002}$ $^{+0.00}_{-0.05}$ A = Seal D $^{+0.002}_{-0.000}$ $^{+0.05}_{-0.00}$

CALCULATIONS	
Axial Load (Ya)	= K • Y2
Shaft OD (E)	= Seal ID (A)
Clearance (J)	< CS / 10
Axial Compression (e)	= a • e_2
Cavity Finish	< 32 RMS (0.8 um)

COEFFICIENT VALUES			
Coefficient	30°	45°	60°
a	2	1.4	1.15
K	0.9	1.2	1.4

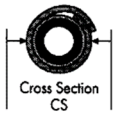

"h" VALUES

Cross Section CS		30° Aluminum Jacket		30° Other Jackets		45° Aluminum Jacket		45° Other Jackets		60° Aluminum Jacket		60° Other Jackets	
in	mm	in	mm	in	mm	in	mm	in	mm	in	mm	in	mm
0.102	2.6	0.130	3.30	0.126	3.20	0.163	4.15	0.157	4.00	0.126	3.20	0.134	3.40
0.126	3.2	0.157	4.00	0.157	4.00	0.199	5.05	0.199	5.05	0.157	4.00	0.165	4.20
0.165	4.2	0.207	5.25	0.207	5.25	0.260	6.60	0.260	6.60	0.213	5.40	0.220	5.60
0.205	5.2	0.260	6.60	0.260	6.60	0.327	8.30	0.327	8.30	0.272	6.90	0.280	7.10
0.252	6.4	0.321	8.15	0.321	8.15	0.402	10.20	0.402	10.20	0.339	8.60	0.346	8.80

Dimensions in inches | Dimensions in mm

TARGET SEALING CRITERIA

The ultimate leak rate of a joint is a function of the seal design, flange design, bolting, surface finish and other factors. Helicoflex seals are designed to provide two levels of service: Helium Sealing or Bubble Sealing.

Helium Sealing: These Helicoflex seals are designed with a target Helium leak rate not to exceed 1×10^{-9} cc/sec.atm under a ΔP of 1 atmosphere. The ultimate leak rate will depend on the factors listed above.

Bubble Sealing: These Helicoflex seals are designed with a target air leak rate not to exceed 1×10^{-4} cc/sec.atm under a ΔP of 1 atmosphere.

Garlock Helicoflex

For Additional Information, Please Consult Our Engineering Staff
1-800-233-1722

7

Code Calculations

CALCULATIONS ACCORDING TO CODES

	D.I.N. 2505 1990	A.S.M.E. Section VIII Division 1	CODAP 1995	Garlock Helicoflex CEFILAC
Operating load	$F_{DV} = \pi.d_D.k_O.K_{DV}$	$W_{m2} = \pi.b.G.y$	$F_A = \pi.Di.J_E.P_A$	$Fi = \pi.Di.Y_2$
Hydrostatic force	$F_P = \pi.\frac{(d_D)^2}{4}.P$	$H = \pi.\frac{G^2}{4}.P$	$F_F = \pi.\frac{(Di)^2}{4}.P$	$F_F = \pi.\frac{(Di)^2}{4}.P$
Minimum service load	$F_{DB} = \pi.d_D.k_B.P$	$H_P = 2.b.\pi.G.m.P$	$Fi = 2.\pi.Di.J_E.m.P$	$Fm = \pi.Di.Ym$ $Ym = Ym_1 = Y_1 \frac{P}{Pue}$ $Ym_2 = Y_2 \frac{P}{Pue}$ Use the greater of the two
Minimum tightening load to apply on bolts	$F_{SO} = \begin{matrix}(1)\ F_{DV} \\ (2)\ F_P + F_{BD}\end{matrix}$ Use the greater of the two (1) or (2)	$W = \begin{matrix}(1)\ W_{m2} \\ (2)\ H + Hp = W_{m1}\end{matrix}$ Use the greater of the two (1) or (2)	$F_S = \begin{matrix}(1)\ F_A \\ (2)\ F_F + Fi\end{matrix}$ Use the greater of the two (1) or (2)	$F_B = \begin{matrix}(1)\ Fi \\ (2)\ F_F + Fj = F_S\end{matrix}$ Use the greater of the two (1) or (2)

EQUIVALENT SYMBOLS

	D.I.N. 2505 1990	A.S.M.E. Section VIII Division 1	CODAP 1995	Garlock Helicoflex CEFILAC
Operating load	$F_{DV} = Fi$ $d_D = Di$ $k_O.K_{DV} = Y_2$ $F_{DV} = \pi.Di.Y_2$	$W_{m2} = Fi$ $b = 1$ $G = Di$ $Y = Y_2$ $W_{m2} = \pi.Di.Y_2$	$F_A = Fi$ $Di = Di$ $J_E = 1$ $P_A = Y_2$ $F_A = \pi.Di.Y_2$	
Hydrostatic force	$F_P = F_F$ $d_D = Di$ $F_P = \pi.\frac{(Di)^2}{4}.P$	$H = F_F$ $G = Di$ $H = \pi.\frac{(Di)^2}{4}.P$	$F_A = F_F$ $Di = Di$ $F_F = \pi.\frac{(Di)^2}{4}.P$	
Minimum service load	$F_{DB} = F_m$ $d_D = Di$ $k_B.P = Y_m$ $F_{DB} = \pi.Di.Y_m$	$Hp = F_m$ $b = 1$ $G = Di$ $2.m.P = Y_m$ $m = \frac{Y_m}{2.P}$ $H_P = \pi.Di.Y_m$	$Fi = F_m$ $Di = Di$ $J_E = 1$ $2.m.P = Y_m$ $m = \frac{Y_m}{2.P}$ $Fi = \pi.Di.Y_m$	
Minimum bolt load	$F_{SO} = FB$ $F_{SO} = \begin{matrix}(1)\ Fj \\ (2)\ F_F + F_m = F_S\end{matrix}$ Use the greater of the two (1) or (2)	$W = F_B$ $W = \begin{matrix}(1)\ Fj \\ (2)\ F_F + F_m = F_S\end{matrix}$ Use the greater of the two (1) or (2)	$F_S = F_B$ $F_S = \begin{matrix}(1)\ Fj \\ (2)\ F_F + F_m = F_S\end{matrix}$ Use the greater of the two (1) or (2)	

Note: Due to its circular cross section, the Helicoflex seal exhibits a "line" load instead of an "area load" typical of traditional gaskets. As a result, "m", "b" and "y" factors are not pertinent when applied to the Helicoflex seal. The above equivalent equations were developed to assist flange designers with their calculations.

For Additional Information, Please Consult Our Engineering Staff
1-800-233-1722

Standard Flanges

ANSI B16.5 RAISED FACE FLANGE

The Helicoflex® HN208a is ideally suited for standard raised face flanges. The resilient nature of the seal allows it to compensate for the extremes of high temperature and pressure where traditional spiral wounds and double jacketed seals fail. The jacket and spring combination can be modified to meet most requirements of temperature and pressure. In addition, a large selection of jacket materials ensures chemical compatibility in corrosive and caustic media.

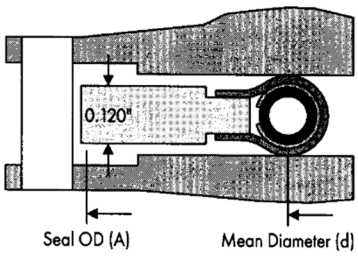

SEAL TYPE: HN208a

Jacket	Availability	Cross Section (inches)	Seating Load (lbs/in)*	Recommended Flange Finish (RMS)
Aluminum	Standard	0.160	1150	63 - 125
Silver	Standard	0.160	1725	63 - 125
Copper	Standard	0.155	2250	63 - 125
Soft Iron	Optional	0.155	2250	32 - 63
Nickel	Standard	0.150	2800	32 - 63
Monel	Optional	0.150	2800	32 - 63
Hastelloy C	Optional	0.150	2800	32 - 63
Stainless Steel	Standard	0.150	3800	32 - 63
Alloy 600	Optional	0.150	3800	32 - 63
Alloy X750	Optional	0.150	4000	32 - 63
Titanium	Optional	0.150	4000	32 - 63

* Note: Seating load only! Does not allow for hydrostatic end force. See page 5 for calculations.

SEAL DIMENSIONS

Nominal Diameter	Mean Diameter (d)	Seal OD (A)						
		150lb	300lb	400lb	600lb	900lb	1500lb	2500lb
1/2	0.827	1.874	2.126	2.126	2.126	2.500	2.500	2.752
3/4	1.102	2.252	2.626	2.626	2.626	2.752	2.752	3.000
1	1.417	2.626	2.874	2.874	2.874	3.122	3.122	3.374
1-1/4	1.890	3.000	3.252	3.252	3.252	3.500	3.500	4.126
1-1/2	2.283	3.374	3.752	3.752	3.752	3.874	3.874	4.626
2	2.913	4.126	4.374	4.374	4.374	5.626	5.626	5.752
2-1/2	3.425	4.874	5.126	5.126	5.126	6.500	6.500	6.626
3	4.173	5.374	5.874	5.874	5.874	6.626	6.874	7.752
3-1/2	4.685	6.374	6.500	6.500	6.374	N/A	N/A	N/A
4	5.256	6.874	7.126	7.000	7.626	8.126	8.252	9.252
5	6.378	7.752	8.500	8.374	9.500	9.752	10.000	11.000
6	7.500	8.752	9.874	9.752	10.500	11.413	11.126	12.500
8	9.567	10.996	12.126	12.000	12.626	14.126	13.874	15.252
10	11.693	13.374	14.252	14.126	15.752	17.126	17.126	18.760
12	13.858	16.126	16.626	16.500	18.000	19.626	20.500	21.626
14	15.098	17.752	19.126	19.000	19.374	20.500	22.752	N/A
16	17.205	20.252	21.252	21.126	22.252	22.626	25.252	N/A
18	19.567	21.626	23.500	23.374	24.126	25.126	27.752	N/A
20	21.575	23.874	25.752	25.500	26.874	27.500	29.752	N/A
24	25.728	28.252	30.500	30.252	31.126	32.996	35.500	N/A

Note: Consult our engineering staff for other available sizes and materials.

Garlock Helicoflex

For Additional Information, Please Consult Our Engineering Staff
1-800-233-1722

9

Calculation Data - U.S. Customary

Jacket Material	Cross Section In	e_2 in	e_C in	HELIUM SEALING Y_2 lbs/inch	HELIUM SEALING Y_1 lbs/inch	HELIUM SEALING Puθ68 °F PSI	HELIUM SEALING Puθ392 °F PSI	BUBBLE SEALING Y_2 lbs/inch	BUBBLE SEALING Y_1 lbs/inch	BUBBLE SEALING Puθ68 °F PSI	BUBBLE SEALING Puθ392 °F PSI	Max Temp °F
Aluminum	0.063	0.024	0.028	857	114	7250	N/A	514	114	5075	N/A	302
	0.075	0.028	0.033	914	114	7540	N/A	571	114	5800	N/A	302
	0.087	0.028	0.035	942	114	7685	N/A	600	114	5800	N/A	356
	0.098	0.028	0.035	999	114	7975	725	657	114	6090	725	428
	0.118	0.031	0.039	1056	143	7975	1450	742	114	6525	1450	482
	0.138	0.031	0.039	1085	143	7975	2030	799	114	6815	2030	482
	0.157	0.035	0.043	1142	143	8700	2465	857	114	7250	2465	536
	0.177	0.035	0.047	1199	143	8700	2900	914	114	7540	2900	536
	0.197	0.035	0.055	1256	171	9135	3190	971	143	7975	3190	572
	0.217	0.035	0.063	1313	171	9425	3480	1028	143	8265	3480	608
	0.236	0.039	0.071	1399	200	9715	3625	1113	171	8700	3625	644
	0.276	0.039	0.087	1542	228	10150	4060	1171	200	9425	4060	644
	0.315	0.039	0.102	1656	286	10440	4640	1285	228	9860	4495	680
						Puθ482 °F					Puθ482 °F	
Silver	0.063	0.020	0.024	1142	171	9425	N/A	857	171	5800	N/A	464
	0.075	0.024	0.028	1256	171	9425	N/A	857	171	5800	N/A	464
	0.087	0.024	0.031	1313	200	10150	N/A	914	171	5800	580	536
	0.098	0.028	0.035	1370	257	10875	1160	971	228	6525	725	536
	0.118	0.031	0.039	1485	286	12325	2030	1028	257	7250	1305	572
	0.138	0.031	0.039	1599	286	13775	3190	1085	257	7975	1885	572
	0.157	0.031	0.043	1713	314	15225	3915	1142	286	8700	2320	662
	0.177	0.031	0.043	1827	343	16675	4495	1256	286	10150	2755	698
	0.197	0.031	0.051	1941	343	18125	5220	1313	286	11600	3190	698
	0.217	0.031	0.055	2056	371	19575	5800	1428	343	13050	3625	752
	0.236	0.035	0.067	2284	400	21750	6815	1542	343	15950	4350	842
	0.276	0.035	0.079	2512	457	23200	7830	1713	371	18125	5220	842
	0.315	0.035	0.094	2798	514	24650	8700	1999	400	20300	6090	932
						Puθ572 °F					Puθ572 °F	
Copper, Soft Iron, Mild Steels	0.063	0.020	0.024	1485	228	7250	1450	1085	171	5075	725	662
	0.075	0.024	0.028	1599	286	7250	1595	1142	228	5075	870	662
	0.087	0.024	0.031	1713	343	7975	1885	1256	286	5075	1160	680
	0.098	0.028	0.035	1827	400	8700	2465	1313	343	5800	1450	716
	0.118	0.028	0.039	1999	457	9425	2900	1428	400	5800	1740	716
	0.138	0.028	0.039	2227	457	10150	3335	1542	400	6525	2175	752
	0.157	0.031	0.043	2455	514	10150	3915	1656	457	6525	2465	788
	0.177	0.031	0.043	2684	571	11600	4350	1827	457	6525	2755	842
	0.197	0.031	0.051	2912	628	12325	4785	1884	514	7250	3045	842
	0.217	0.031	0.055	3141	685	13050	5220	2056	571	7250	3335	896
	0.236	0.035	0.067	3597	799	13775	5800	2284	571	7975	3770	968
	0.276	0.035	0.079	4225	914	14500	6525	2627	628	8700	4205	968
	0.315	0.035	0.094	4911	1085	15950	7105	3026	742	9425	4640	1022
						Puθ662 °F					Puθ662 °F	
Nickel, Monel, Tantalum	0.063	0.016	0.020	1827	457	10150	1595	1142	343	5800	1015	716
	0.075	0.020	0.024	1999	457	10440	2320	1256	343	6090	1305	716
	0.087	0.020	0.028	2227	514	11020	3045	1313	400	6380	1740	788
	0.098	0.024	0.031	2512	571	11890	3915	1542	400	6815	2320	842
	0.118	0.024	0.035	2512	628	12615	4930	1713	457	7250	2900	896
	0.138	0.024	0.035	2798	685	13485	5800	1941	514	7830	3335	932
	0.157	0.028	0.039	3312	799	13920	6525	2170	571	8265	3915	1022
	0.177	0.028	0.039	4111	857	15225	7540	2398	628	8700	4350	1112
	0.197	0.028	0.043	4454	1028	15950	8265	2627	628	9425	4785	1202
	0.217	0.028	0.051	4625	1142	16675	8990	2855	685	9715	5365	1202
	0.236	0.031	0.063	N/A	N/A	N/A	N/A	3198	742	10440	5945	1202
	0.276	0.031	0.071	N/A	N/A	N/A	N/A	3712	857	11310	6525	1202
	0.315	0.031	0.083	N/A	N/A	N/A	N/A	4168	914	12035	7250	1202
						Puθ752 °F					Puθ752 °F	
Stainless Steel, Inconel, Titanium	0.063	0.016	0.020	1999	571	13050	3625	1713	457	6815	870	788
	0.075	0.020	0.024	2284	571	13195	3915	1827	457	7250	1160	788
	0.087	0.020	0.028	2570	628	13340	4205	1999	514	7540	1595	896
	0.098	0.024	0.031	2855	685	14065	4640	2170	571	8265	2175	932
	0.118	0.024	0.035	3283	742	14500	5220	2427	628	8990	2900	932
	0.138	0.024	0.035	3769	857	15080	5655	2684	742	9715	3625	1022
	0.157	0.028	0.039	4283	971	15515	6090	2969	857	10440	4350	1112
	0.177	0.028	0.039	4711	1256	15950	6525	3198	1028	11165	4930	1202
	0.197	0.028	0.043	N/A	N/A	N/A	N/A	3426	1085	11890	5365	1292
	0.217	0.028	0.051	N/A	N/A	N/A	N/A	3712	1142	12615	6090	1292
	0.236	0.031	0.063	N/A	N/A	N/A	N/A	4111	1256	13630	6815	1292
	0.276	0.031	0.071	N/A	N/A	N/A	N/A	4568	1485	14790	7540	1292
	0.315	0.031	0.083	N/A	N/A	N/A	N/A	5139	1656	15660	8410	1292

Calculation Data - Metric

Jacket Material	Cross Section mm	e_2 mm	e_C mm	HELIUM SEALING Y_2 daN/cm	Y_1 daN/cm	Pu20°C daN/cm²	Puθ200°C daN/cm²	BUBBLE SEALING Y_2 daN/cm	Y_1 daN/cm	Pu20°C daN/cm²	Puθ200°C daN/cm²	Max Temp °C
Aluminum	1.6	0.6	0.7	150	20	50	N/A	90	20	35	N/A	150
	1.9	0.7	0.85	160	20	52	N/A	100	20	40	N/A	150
	2.2	0.7	0.9	165	20	53	N/A	105	20	40	N/A	180
	2.5	0.7	0.9	175	20	55	5	115	20	42	5	220
	3.0	0.8	1.0	185	25	55	10	130	20	45	10	250
	3.5	0.8	1.0	190	25	55	14	140	20	47	14	250
	4.0	0.9	1.1	200	25	60	17	150	20	50	17	280
	4.5	0.9	1.2	210	25	60	20	160	20	52	20	280
	5.0	0.9	1.4	220	30	63	22	170	25	55	22	300
	5.5	0.9	1.6	230	30	65	24	180	25	57	24	320
	6.0	1.0	1.8	245	35	67	25	195	30	60	25	340
	7.0	1.0	2.2	270	40	70	28	205	35	65	28	340
	8.0	1.0	2.6	290	50	72	32	225	40	68	31	360
							Puθ250°C				Puθ250°C	
Silver	1.6	0.5	0.6	200	30	65	N/A	150	30	40	N/A	240
	1.9	0.6	0.7	220	30	65	N/A	150	30	40	N/A	240
	2.2	0.6	0.8	230	35	70	6	160	30	40	4	280
	2.5	0.7	0.9	240	45	75	8	170	40	45	5	280
	3.0	0.8	1.0	260	50	85	14	180	45	50	9	300
	3.5	0.8	1.0	280	50	95	22	190	45	55	13	300
	4.0	0.8	1.1	300	55	105	27	200	50	60	16	350
	4.5	0.8	1.1	320	60	115	31	220	50	70	19	370
	5.0	0.8	1.3	340	60	125	36	230	50	80	22	370
	5.5	0.8	1.4	360	65	135	40	250	60	90	25	400
	6.0	0.9	1.7	400	70	150	47	270	60	110	30	450
	7.0	0.9	2.0	440	80	160	54	300	65	125	36	450
	8.0	0.9	2.4	490	90	170	60	350	70	140	42	500
							Puθ300°C				Puθ300°C	
Copper, Soft Iron, Mild Steels	1.6	0.5	0.6	260	40	50	10	190	30	35	5	350
	1.9	0.6	0.7	280	50	50	11	200	40	35	6	350
	2.2	0.6	0.8	300	60	55	13	220	50	35	8	360
	2.5	0.7	0.9	320	70	60	17	230	60	40	10	380
	3.0	0.7	1.0	350	80	65	20	250	70	40	12	380
	3.5	0.7	1.0	390	80	70	23	270	70	45	15	400
	4.0	0.8	1.1	430	90	70	27	290	80	45	17	420
	4.5	0.8	1.1	470	100	80	30	320	80	45	19	450
	5.0	0.8	1.3	510	110	85	33	330	90	50	21	450
	5.5	0.8	1.4	550	120	90	36	360	100	50	23	480
	6.0	0.9	1.7	630	140	95	40	400	100	55	26	520
	7.0	0.9	2.0	740	160	100	45	460	110	60	29	520
	8.0	0.9	2.4	860	190	110	49	530	130	65	32	550
							Puθ350°C				Puθ350°C	
Nickel, Monel, Tantalum	1.6	0.4	0.5	320	80	70	11	200	60	40	7	380
	1.9	0.5	0.6	350	80	72	16	220	60	42	9	380
	2.2	0.5	0.7	390	80	76	21	230	70	44	12	420
	2.5	0.6	0.8	440	100	82	27	270	70	47	16	450
	3.0	0.6	0.9	440	110	87	34	300	80	50	20	480
	3.5	0.6	0.9	490	120	93	40	340	90	54	23	500
	4.0	0.7	1.0	580	140	96	45	380	100	57	27	550
	4.5	0.7	1.0	720	150	105	52	420	110	60	30	600
	5.0	0.7	1.1	780	180	110	57	460	110	65	33	650
	5.5	0.7	1.3	810	200	115	62	500	120	67	37	650
	6.0	0.8	1.6	N/A	N/A	N/A	N/A	560	130	72	41	650
	7.0	0.8	1.8	N/A	N/A	N/A	N/A	650	150	78	45	650
	8.0	0.8	2.1	N/A	N/A	N/A	N/A	730	160	83	50	650
							Puθ400°C				Puθ400°C	
Stainless Steel, Inconel, Titanium	1.6	0.4	0.5	350	100	90	25	300	80	47	6	420
	1.9	0.5	0.6	400	100	91	27	320	80	50	8	420
	2.2	0.5	0.7	450	110	92	29	350	90	52	11	480
	2.5	0.6	0.8	500	120	97	32	380	100	57	15	500
	3.0	0.6	0.9	575	130	100	36	425	110	62	20	500
	3.5	0.6	0.9	660	150	104	39	470	130	67	25	550
	4.0	0.7	1.0	750	170	107	42	520	150	72	30	600
	4.5	0.7	1.0	825	220	110	45	560	180	77	34	650
	5.0	0.7	1.1	N/A	N/A	N/A	N/A	600	190	82	37	700
	5.5	0.7	1.3	N/A	N/A	N/A	N/A	650	200	87	42	700
	6.0	0.8	1.6	N/A	N/A	N/A	N/A	720	220	94	47	700
	7.0	0.8	1.8	N/A	N/A	N/A	N/A	800	260	102	52	700
	8.0	0.8	2.1	N/A	N/A	N/A	N/A	900	290	108	58	700

Garlock Helicoflex

For Additional Information, Please Consult Our Engineering Staff
1-800-233-1722

11

Cavity Design - Axial Pressure

RADIAL COMPRESSION

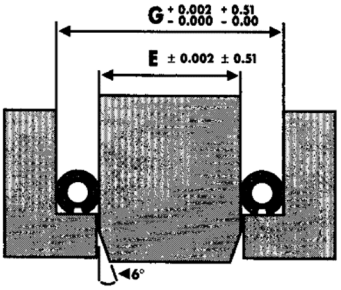

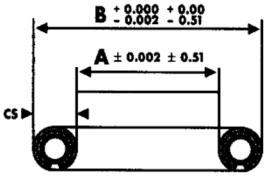

CALCULATIONS	
Cavity OD (G)	= Seal OD (B)
Shaft OD (E)	= Seal ID (A) +2 e_3
Cavity Finish	< 32 RMS (0.8 um)
Axial Load	= Ya

Note: For best results, the cavity should be lubricated with a product that is compatible with the medium to be sealed.

CHARACTERISTIC VALUES

Aluminum Jacket						Silver Jacket						Nickel Jacket					
CS		e_3		Ya		CS		e_3		Ya		CS		e_3		Ya	
in	mm	in	mm	lb/in	daN/cm	in	mm	in	mm	lb/in	daN/cm	in	mm	in	mm	lb/in	daN/cm
0.063	1.60	0.012	0.30	109	19	0.063	1.60	0.010	0.25	170	30	0.063	1.60	0.008	0.20	228	40
0.102	2.60	0.014	0.35	137	24	0.102	2.60	0.012	0.30	195	34	0.102	2.60	0.010	0.25	308	54
0.118	3.00	0.016	0.40	154	27	0.122	3.10	0.014	0.35	206	36	0.126	3.20	0.012	0.30	343	60
0.157	4.00	0.020	0.50	183	32	0.165	4.20	0.018	0.45	228	40	0.165	4.20	0.016	0.40	434	76
0.200	5.10	0.020	0.50	206	36	0.205	5.20	0.018	0.45	263	46	0.205	5.20	0.016	0.40	525	92
0.260	6.60	0.024	0.60	235	41	0.244	6.20	0.020	0.50	308	54	0.252	6.40	0.018	0.45	640	112

Dimensions in inches | Dimensions in mm

ISO 9001

The technical data contained herein is by way of example and should not be relied on for any specific application. Garlock Helicoflex will be pleased to provide specific technical data or specifications with respect to any customer's particular applications. Use of the technical data or specifications contained herein without the express written approval of Garlock Helicoflex is at user's risk and Garlock Helicoflex expressly disclaims responsibility for such use and the situations which may result therefrom.

Garlock Helicoflex makes no warranty, express or implied, that utilization of the technology or products disclosed herein will not infringe any industrial or intellectual property rights of third parties.

Garlock Helicoflex is constantly involved in engineering and development. Accordingly, Garlock Helicoflex reserves the right to modify, at any time, the technology and product specifications contained herein.

All technical data, specifications and other information contained herein is deemed to be the proprietary intellectual property of Garlock Helicoflex. No reproduction, copy or use thereof may be made without the express written consent of Garlock Helicoflex.

BFGoodrich

Garlock Helicoflex
PO Box 9889
2770 The Boulevard
Columbia, SC 29290 USA
Phone: 1-803-783-1880
Toll Free: 1-800-233-1722
Fax: 1-803-783-4279
www.helicoflex.com
www.garlock.net

Cefilac, S.A.
90 rue de la Roche-du-Geai
42029 Saint-Etienne, FRANCE
Phone: 011-33-4-77-43-51-00
Fax: 011-33-4-77-43-51-52

Garlock Sealing Technologies

Palmyra, NY, USA	1-315-597-4811	Fax: 1-315-597-3216
Paragould, AR, USA	1-870-239-4051	Fax: 1-870-239-4054
Houston, TX USA	1-281-459-7200	Fax: 1-281-458-0502
Sydney, Australia	61-2-9793-2511	Fax: 61-2-9793-2544
São Paulo, Brazil	55-11-884-9680	Fax: 55-11-884-9680
Oakville, Canada	1-905-829-3200	Fax: 1-905-829-3333
Berkshire, England	44-1635-38509	Fax: 44-1635-569573
Neuss, Germany	49-2131-3490	Fax: 49-2131-349-222
Seoul, Korea	822-554-6341	Fax: 822-554-6343
Mexico City, Mexico	52-5-567-7011	Fax: 52-5-368-0418
Singapore	65-284-7873	Fax: 65-284-6089

Catalog Reference: HEL 1

4.5.5 Containment Analysis of ANSTO Basket Payloads and ANSTO-DIDO Payloads

Payloads evaluated in the ANSTO basket are spiral fuel assemblies similar in design to the DIDO assemblies discussed in Section 4.5.7, and MOATA plate bundles similar in design to MTR assemblies discussed in Section 4.5.5. The ANSTO basket is a slightly modified version of the DIDO basket, with each basket containing seven fuel tubes designed to hold one fuel assembly or plate bundle in each fuel tube.

Parameter	DIDO Basket	ANSTO Basket
Fuel Assembly Openings	7	7
Fuel Tube OD (inch)	4.25	4.375
Fuel Tube Wall Thickness (inch)	0.120	0.125

The DIDO basket contains aluminum heat transfer components, while the ANSTO basket contains additional support disks. Overall, there are no significant free volume differences between the empty cask assembly configurations.

MOATA plate bundles, while displacing more free volume than DIDO assemblies, are limited to maximum burnups of 30,000 MWd/MTU and a minimum cool time of 10 years, resulting in source terms a small fraction of the DIDO payloads evaluated in Section 4.5.7. MOATA plate bundles, therefore, do not represent a containment-limiting payload configuration.

Spiral fuel assemblies are limited to the cool time curve of the 18-watt MEU DIDO fuel assemblies. As demonstrated in Chapter 5, Section 5.3.15, this produces a significantly lower source for the spiral fuel than the 18-watt DIDO assembly. The lower source for the spiral fuel is attributed to a higher fissile material mass in the DIDO evaluation (190 g ^{235}U versus 160 g ^{235}U for the spiral fuel), at identical cool time and a maximum depletion of 70%, in conjunction with a lower DIDO enrichment (40 % ^{235}U for the MEU DIDO fuel versus 75% ^{235}U enrichment in the spiral fuel calculations). For containment evaluations, the higher heat load, 25-watt DIDO configuration was evaluated, providing additional margin for the spiral fuel assemblies. When compared to the DIDO payload, the spiral assembly payload, therefore, has a significantly lower source of radionuclides at a similar cask free volume. As a result, the DIDO fuel assembly containment evaluation bounds the spiral fuel.

As the DIDO containment evaluations bound ANSTO spiral and MOATA payloads, the DIDO evaluations also bound combined payloads. DFCs in seven out of a maximum 42 tubes do not displace a significant cask-free volume (~2%) and, therefore, do not affect the conclusion that the DIDO evaluation is bounding.

4.5.6 Pressure and Flammability Evaluation of HEUNL Container

During transport operations of the HEUNL, solution gas generation and the resulting pressurization of the container must be considered. Also to be considered is a limitation of hydrogen gas volume fraction.

4.5.6.1 Pressurization

No significant gas generations will occur from the container as a result of galvanic or chemical reactions of the low carbon stainless steel transport container with its contents. A container of stainless steel at less than 0.03 wt% carbon is compatible with the solution and has been used as the solution storage vessel for over 20 years.

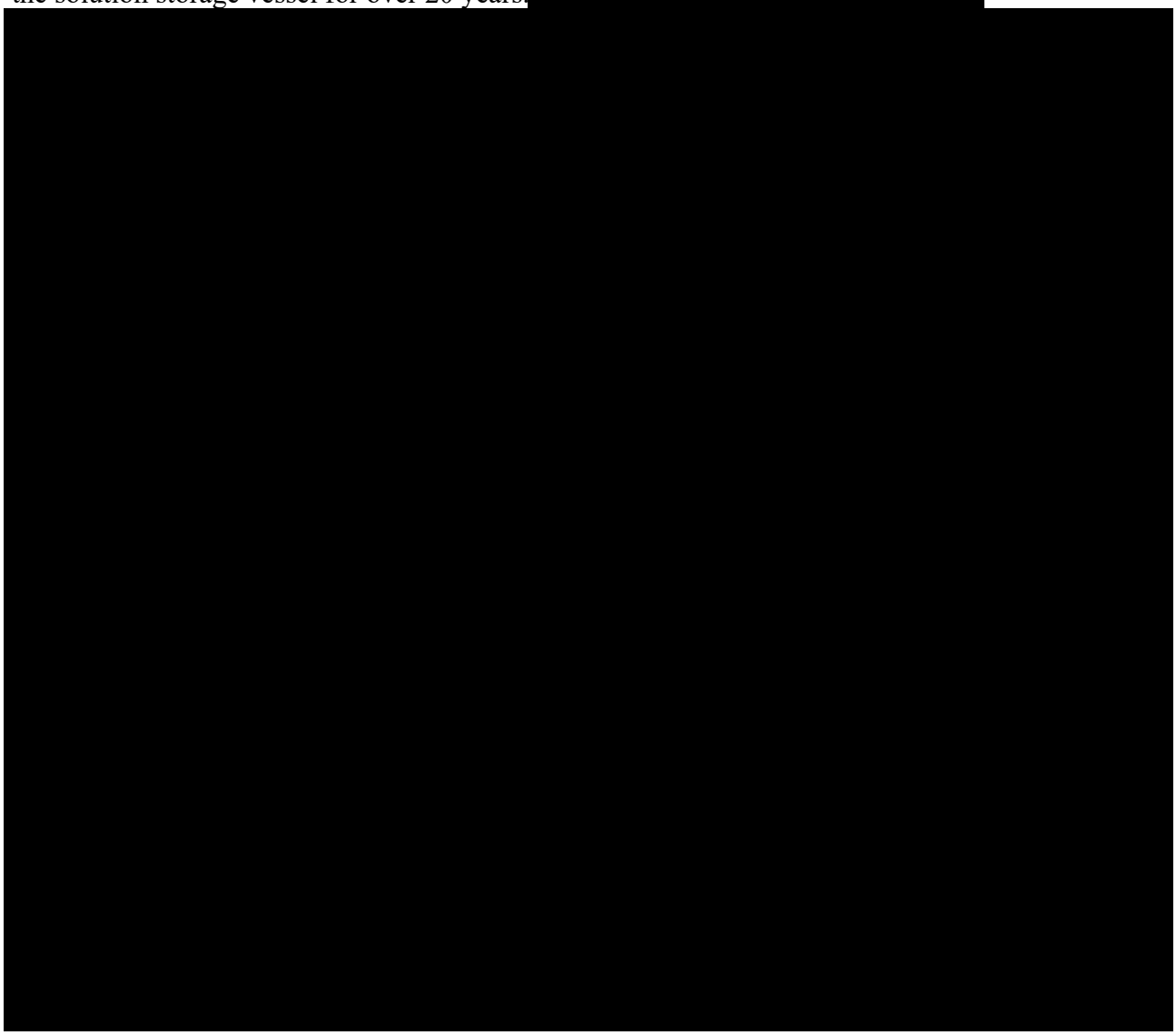

4.5.6.2 Flammability

Hydrogen flammability is addressed both with data available on the solution and in the context of G-value based generation (no credit for test data indicating equilibrium or maximum hydrogen generation).



Table of Contents

5 SHIELDING EVALUATION 5-1

5.1 Discussion and Results 5.1.1-1
5.1.1 NAC-LWT Contents 5.1.1-1

5.2 Gamma and Neutron Sources 5.2.1-1
5.2.1 ORIGEN 2 ..... 5.2.1-1

5.3 Model Specification 5.3.1-1
5.3.1 Description of Radial and Axial Shielding Configuration 5.3.1-1
5.3.2 Shield Regional Densities 5.3.2-1
5.3.3 Metallic Fuel Configuration 5.3.3-1
5.3.4 MTR Fuel Configuration 5.3.4-1
5.3.5 25 PWR Fuel Rods Configuration 5.3.5-1
5.3.6 TRIGA Fuel Element Model Specification and Shielding Evaluation 5.3.6-1
5.3.7 TRIGA Fuel Cluster Rod Model Specification and Shielding Evaluation 5.3.7-1
5.3.8 High Burnup PWR and BWR Rods Shielding Evaluation 5.3.8-1
5.3.9 DIDO Fuel Configuration 5.3.9-1
5.3.10 GA IFM Shielding Evaluation 5.3.10-1
5.3.11 High Burnup PWR and BWR Rods in a Fuel Assembly Lattice 5.3.11-1
5.3.12 Damaged High Burnup PWR and BWR Rods in a Rod Holder 5.3.12-1
5.3.13 TPBAR Shielding Evaluation 5.3.13-1
5.3.14 PULSTAR Fuel Configuration 5.3.14-1
5.3.15 Spiral Fuel Assembly Configuration 5.3.15-1
5.3.16 MOATA Plate Bundle Configuration 5.3.16-1
5.3.17 PWR MOX Rod Fuel Configuration 5.3.17-1
5.3.18 Mixed ANSTO-DIDO Payload Configuration 5.3.18-1
5.3.19 Irradiated Hardware Shielding Evaluation 5.3.19-1
5.3.20 SLOWPOKE Fuel Configuration 5.3.20-1
5.3.21 NRU and NRX Fuel Assemblies 5.3.21-1
5.3.22 HEUNL 5.3.22-1
5.3.23 SLOWPOKE Core Configuration 5.3.23-1
5.3.24 Booster Rods, EFN Rods and Mo-99 Targets 5.3.24-1
5.3.25 BUP-500 Capsules and WESF Capsules 5.3.25-1
5.3.26 High-Burnup Steel/Iron Clad PWR and BWR Rods in a Rod Holder 5.3.26-1
5.3.27 UCS Assemblies with WESF Capsules 5.3.27-1

5.4 Shielding Evaluation 5.4.1-1
5.4.1 Shielding Evaluation Codes 5.4.1-1

List of Figures

Figure 5.3.3-1 Three-Dimensional Radial Model 5.3.3-2
Figure 5.3.3-2 End-Fitting Model with Fuel 5.3.3-3
Figure 5.3.3-3 Lead Slump Accident – PWR Top End-Fitting 5.3.3-4
Figure 5.3.3-4 Lead Slump Accident – PWR Bottom End-Fitting 5.3.3-5
Figure 5.3.3-5 Lead Slump Accident – BWR Bottom End-Fitting 5.3.3-6
Figure 5.3.3-6 One-Dimensional Radial Calculational Model 5.3.3-7
Figure 5.3.4-1 MTR Fuel Evaluated Configurations 5.3.4-8
Figure 5.3.4-2 SAS4 Shielding Model for the MTR Fuel Basket in the NAC-LWT (Upper Half) 5.3.4-9
Figure 5.3.4-3 Dose Rates 2 Meters from Transport Vehicle (30 W Uniform Loading) 5.3.4-10
Figure 5.3.4-4 Dose Rate Profile at Radial Surface of LWT Cask – Normal Conditions – LEU Fuel at 80% Burnup and 40W Uniform Loading 5.3.4-11
Figure 5.3.4-5 Dose Rate Profile at 2m from Conveyance Radial Surface of LWT Cask – Normal Conditions – LEU Fuel at 80% Burnup and 40W Uniform Loading 5.3.4-11
Figure 5.3.4-6 MTR LEU Low Burnup Dose Rate Profile Comparison 5.3.4-12
Figure 5.3.4-7 MTR MEU Low Burnup Dose Rate Profile Comparison 5.3.4-12
Figure 5.3.4-8 MTR HEU Low Burnup Dose Rate Profile Comparison 5.3.4-13
Figure 5.3.4-9 Assembly Total Neutron Source at Various Burnups – 490 grams ^{235}U LEU Fuel with 40 W Heat Load 5.3.4-13
Figure 5.3.4- 10 Assembly Total Gamma Source at Various Burnups – 490 grams ^{235}U LEU Fuel with 40 W Heat Load 5.3.4-14
Figure 5.3.6-1 TRIGA Fuel Element One-Dimensional Bounding Radial Dose Rate – Normal Conditions of Transport – Curves and Data Points 5.3.6-8
Figure 5.3.6-2 TRIGA Fuel Element One-Dimensional Bounding Radial Dose Rate – Accident Condition – Curves and Data Points 5.3.6-10
Figure 5.3.6-3 TRIGA SAS4A Radial Model Geometry 5.3.6-12
Figure 5.3.6-4 TRIGA SAS4A Basket Model Geometry 5.3.6-13
Figure 5.3.6-5 TRIGA SAS4A Upper Half Model Geometry (Normal Condition – Shifted Fuel) 5.3.6-14
Figure 5.3.6-6 TRIGA SAS4A Upper Half Model Geometry (Normal Condition) 5.3.6-15
Figure 5.3.6-7 TRIGA SAS4A Lower Half Model Geometry (Normal and Accident Condition) 5.3.6-16
Figure 5.3.7-1 HEU TRIGA Cluster Fuel Rod SAS2H Sample Input (600 GWd/MTU) 5.3.7-3
Figure 5.3.7-2 LEU TRIGA Cluster Fuel Rod SAS2H Sample Input (140 GWd/MTU) 5.3.7-5
Figure 5.3.8-1 PWR Rod SAS2H Model 5.3.8-6
Figure 5.3.8-2 BWR 7×7 SAS2H Model Shown at 80,000 MWd/MTU 5.3.8-6
Figure 5.3.8-3 BWR 8×8 Rod SAS2H Model 5.3.8-7
Figure 5.3.8-4 PWR Rods Axial Burnup and Source Profiles 5.3.8-7
Figure 5.3.8-5 BWR Rods Axial Burnup and Source Profiles 5.3.8-8

List of Figures (Continued)

Figure 5.3.9-1 SAS2H Input for HEU DIDO Fuel 70% ^{235}U Burnup and 18W Heat Load 5.3.9-5
Figure 5.3.9-2 SAS4 Fuel Gamma Input for HEU DIDO Fuel 70% ^{235}U Burnup and 18W Heat Load – Radial Biasing & Normal Transport Conditions 5.3.9-6
Figure 5.3.9-3 SAS4 Shielding Model for the DIDO Fuel Basket in the NAC-LWT (Upper Half) 5.3.9-13
Figure 5.3.9-4 SAS4 Shielding Model for the DIDO Fuel Basket in the NAC-LWT (Section through Fuel) 5.3.9-14
Figure 5.3.9-5 DIDO LEU Cooling Time vs. Fuel Burnup Basket Module Loading Guidelines for Uniform Loading 5.3.9-15
Figure 5.3.9-6 DIDO MEU Cooling Time vs. Fuel Burnup Basket Module Loading Guidelines for Uniform Loading 5.3.9-15
Figure 5.3.9-7 DIDO HEU Cooling Time vs. Fuel Burnup Basket Module Loading Guidelines for Uniform Loading 5.3.9-16
Figure 5.3.9-8 DIDO LEU Element Cooling Time vs. ^{235}U % Depletion 5.3.9-16
Figure 5.3.9-9 DIDO MEU Element Cooling Time vs. ^{235}U % Depletion 5.3.9-17
Figure 5.3.9-10 DIDO HEU Element Cooling Time vs. ^{235}U % Depletion 5.3.9-17
Figure 5.3.9-11 Comparison of DIDO Element 25W Minimum Cool Time Curves as a Function of ^{235}U % Depletion 5.3.9-18
Figure 5.3.9-12 Bounding DIDO Element Minimum Cool Time vs. % ^{235}U Depletion 5.3.9-18
Figure 5.3.9-13 18W DIDO HEU Fuel Predicted vs. Actual ^{235}U Depletion Loading Curve 5.3.9-19
Figure 5.3.10-1 ORIGEN-S Input for GA RERTR IFM 5.3.10-3
Figure 5.3.10-2 ORIGEN-S Input for GA HTGR IFM 5.3.10-4
Figure 5.3.10-3 SAS1 Input for GA RERTR IFM 5.3.10-5
Figure 5.3.10-4 SAS1 Input for GA HTGR IFM 5.3.10-6
Figure 5.3.10-5 GA IFM One-Dimensional Radial Model of NAC-LWT 5.3.10-7
Figure 5.3.10-6 One-Dimensional Radial Model of GA RERTR and HTGR IFM 5.3.10-8
Figure 5.3.11-1 PWR Lattice Axial Source Profiles 5.3.11-7
Figure 5.3.11-2 BWR Lattice Axial Source Profiles 5.3.11-7
Figure 5.3.11-3 MCBEND Model of NAC-LWT with Fuel Assembly Lattice – Axial Detail 5.3.11-8
Figure 5.3.11-4 MCBEND Model of NAC-LWT with Fuel Assembly Lattice – Radial Detail 5.3.11-9
Figure 5.3.11-5 Normal Condition Radial Surface Dose Rate Profile by Source Type – Fuel Assembly Lattice 5.3.11-10
Figure 5.3.11-6 Normal Condition Radial 2m Dose Rate Profile by Source Type – Fuel Assembly Lattice 5.3.11-10
Figure 5.3.11-7 Accident Condition Radial 1m Dose Rate Profile by Source Type – Fuel Assembly Lattice 5.3.11-11
Figure 5.3.11-8 MCBEND Input – High Burnup Fuel Lattice – Radial Fuel Gamma 5.3.11-12
Figure 5.3.12-1 MCBEND Model of NAC-LWT with Damaged Fuel Rods – Axial Detail 5.3.12-6

List of Figures (Continued)

Figure 5.3.12-2 MCBEND Model of NAC-LWT with Damaged Fuel Rods – Radial Detail 5.3.12-7
Figure 5.3.12-3 Normal Condition Axial Surface Dose Rate Profile by Source Type – Damaged Fuel Rods 5.3.12-8
Figure 5.3.12-4 Normal Condition Radial 2m Dose Rate Profile by Source Type – Damaged Fuel Rods 5.3.12-8
Figure 5.3.12-5 Accident Condition Radial 1m Dose Rate Profile by Source Type – Damaged Fuel Rods 5.3.12-9
Figure 5.3.12-6 Sample Input File for Damaged Fuel Evaluation 5.3.12-10
Figure 5.3.13-1 ORIGEN-S Input for TPBARs at 30 Days Cool Time 5.3.13-4
Figure 5.3.13-2 MCNP Input for 300 TPBARs at 30 Days Cool Time – Normal Conditions & Radial Biasing 5.3.13-5
Figure 5.3.13-3 MCNP Three-Dimensional Model of NAC-LWT with 300 TPBAR Payload – Radial Detail 5.3.13-9
Figure 5.3.13-4 MCNP Three-Dimensional Model of NAC-LWT with 300 TPBAR Payload - Axial Detail 5.3.13-10
Figure 5.3.13-5 Normal Condition Radial Surface Dose Rate Profile for 300 TPBAR Payload 5.3.13-11
Figure 5.3.13-6 Normal Condition Radial 2 Meter Dose Rate Profile for 300 TPBAR Payload 5.3.13-11
Figure 5.3.13-7 Accident Condition Radial 1 Meter Dose Rate Profile for 300 TPBAR Payload 5.3.13-12
Figure 5.3.14-1 PULSTAR Fuel Assembly 5.3.14-6
Figure 5.3.14-2 SAS2H Input for PULSTAR Fuel 5.3.14-7
Figure 5.3.14-3 MCNP Model of NAC-LWT with PULSTAR Fuel – Axial Detail 5.3.14-8
Figure 5.3.14-4 MCNP Model of NAC-LWT with PULSTAR Fuel – Radial Detail 5.3.14-9
Figure 5.3.14-5 Sample MCNP Input File for Minimum Height Canned PULSTAR Fuel 5.3.14-10
Figure 5.3.14-6 Normal Condition Axial Surface Dose Rate Profile by Source Type – Minimum Height Canned PULSTAR Fuel 5.3.14-15
Figure 5.3.14-7 Normal Condition Radial 2m Dose Rate Profile by Source Type – Minimum Height Canned PULSTAR Fuel 5.3.14-15
Figure 5.3.14-8 Accident Condition Radial 1m Dose Rate Profile by Source Type – Minimum Height Canned PULSTAR Fuel 5.3.14-16
Figure 5.3.15-1 SAS2H Input for Spiral Fuel 70% ^{235}U Depletion and 18-Watt Heat Load 5.3.15-3
Figure 5.3.15-2 Spiral Fuel versus MEU DIDO Gamma Spectrum Comparison (18 Watts, 70% Depletion) 5.3.15-4
Figure 5.3.15-3 Minimum Cool Time Curve for 18-Watt Heat Load (Spiral Fuel and MEU DIDO) 5.3.15-5
Figure 5.3.16-1 SAS2H Input for the MOATA Plate Bundle 5.3.16-3
Figure 5.3.17-1 Sample SAS2H Input for PWR MOX Fuel 5.3.17-10
Figure 5.3.17-2 PWR Rods Axial Burnup and Source Profiles 5.3.17-11
Figure 5.3.17-3 MCNP Model of NAC-LWT with PWR MOX Fuel – Axial Detail 5.3.17-12

List of Figures (Continued)

Figure 5.3.17-4 MCNP Model of NAC-LWT with PWR MOX Fuel – Radial Detail.. 5.3.17-13
Figure 5.3.17-5 Sample MCNP Input File for PWR MOX Fuel (Response Method Benchmark Case) 5.3.17-14
Figure 5.3.17-6 Normal Condition Axial Surface Dose Rate Profile by Source Type – Power Grade MOX at 70 GWd/MTHM, 2% Fissile Material, and 90 Days Cool Time 5.3.17-21
Figure 5.3.17-7 Normal Condition Radial 2m Dose Rate Profile by Source Type – Power Grade MOX at 70 GWd/MTHM, 2% Fissile Material, and 90 Days Cool Time 5.3.17-22
Figure 5.3.17-8 Accident Condition Radial 1m Dose Rate Profile by Source Type – Power Grade MOX at 70 GWd/MTHM, 2% Fissile Material, and 90 Days Cool Time 5.3.17-23
Figure 5.3.17-9 Sample MCNP Input File for Mixed PWR MOX/UO_2 Fuel 5.3.17-24
Figure 5.3.17-10 Comparison of Direct Solution and Response Function Results at Cask Surface for Normal Conditions Model for Discrete Rod Mixed Loading of 8 UO_2 Rods and 8 WG Rods 5.3.17-31
Figure 5.3.17-11 Comparison of Direct Solution and Response Function Results at Cask Surface for Normal Conditions Model for Homogenized WG Material 5.3.17-31
Figure 5.3.17-12 Comparison of Direct Solution and Response Function Results at Cask Surface for Normal Conditions Model for Homogenized LEU Material 5.3.17-32
Figure 5.3.19-1 SAS2H Input for Irradiated Hardware (on a per kg basis) 5.3.19-3
Figure 5.3.19-2 Sample SAS1 Input for Irradiated Hardware (Source 1 kg Material) ... 5.3.19-4
Figure 5.3.19-3 Irradiated Hardware One-Dimensional Radial Model of NAC-LWT ... 5.3.19-5
Figure 5.3.19-4 Irradiated Hardware Normal Condition Surface Dose Rate as a Function of Irradiated Hardware Height 5.3.19-6
Figure 5.3.19-5 Irradiated Hardware Normal Condition 2 Meter Dose Rate as a Function of Irradiated Hardware Height 5.3.19-6
Figure 5.3.19-6 Irradiated Hardware Accident Condition 1 Meter Dose Rate as a Function of Irradiated Hardare Height 5.3.19-7
Figure 5.3.20-1 SLOWPOKE Fuel Element 5.3.20-6
Figure 5.3.20-2 SLOWPOKE Core Model 5.3.20-7
Figure 5.3.20-3 TRITON Input for SLOWPOKE Fuel 5.3.20-8
Figure 5.3.20-4 VISED X-Y Slice – SLOWPOKE – Normal Conditions 5.3.20-11
Figure 5.3.20-5 VISED Y-Z Slice – SLOWPOKE – Normal Conditions 5.3.20-12
Figure 5.3.20-6 Sample MCNP Input File – Normal Conditions 5.3.20-13
Figure 5.3.20-7 Normal Condition Radial Surface Dose Rate Profile by Source Type – SLOWPOKE Fuel 5.3.20-21
Figure 5.3.20-8 Normal Condition 2-m Radial Surface Dose Rate Profile by Source Type – SLOWPOKE Fuel 5.3.20-22
Figure 5.3.20-9 Accident Condition Radial 1m Dose Rate Profile by Source Type – SLOWPOKE 5.3.20-23
Figure 5.3.21-1 Sketch of NRU Assembly 5.3.21-4

List of Figures (Continued)

Figure 5.3.21-2 Sketch of NRX Assembly 5.3.21-5
Figure 5.3.21-3 TRITON Input for NRU HEU Single Unit Cell 5.3.21-6
Figure 5.3.21-4 TRITON Input for NRU HEU Supercell Model 5.3.21-8
Figure 5.3.21-5 TRITON Input for NRU LEU Single Unit Cell 5.3.21-11
Figure 5.3.21-6 TRITON Input for NRX Single Unit Cell 5.3.21-13
Figure 5.3.21-7 VISED Sketch of LWT with NRU Fuel Radial Detail 5.3.21-15
Figure 5.3.21-8 VISED Sketch of LWT with NRX Fuel Radial Detail 5.3.21-16
Figure 5.3.21-9 VISED Sketch of LWT Axial Detail 5.3.21-17
Figure 5.3.21-10 VISED Comparison of Collapsed Fuel (Left) and Undamaged Fuel (Right) 5.3.21-18
Figure 5.3.21-11 VISED Sketch of LWT Radial Detail 5.3.21-19
Figure 5.3.21-12 VISED Sketch of LWT Axial Detail 5.3.21-20
Figure 5.3.21-13 Sample MCNP Input for NRU or NRX Fuel 5.3.21-21
Figure 5.3.21-14 Maximum Radial Surface Dose Rate Profile for Normal Conditions – NRU LEU Fuel – Collapsed 5.3.21-29
Figure 5.3.21-15 Maximum Radial 2m Dose Rate Profile for Normal Conditions – NRU LEU Fuel – Collapsed 5.3.21-30
Figure 5.3.21-16 Maximum Radial 1m Dose Rate Profile for Accident Conditions – NRU LEU Fuel – Collapsed 5.3.21-31
Figure 5.3.22-1 ORIGEN-S Input for Determining Undefined Fission Products 5.3.22-5
Figure 5.3.22-2 ORIGEN-S Output Gamma Power for Determining Undefined Fission Products 5.3.22-6
Figure 5.3.22-3 ORIGEN-S Input for Fission Products 5.3.22-7
Figure 5.3.22-4 ORIGEN-S Model for Actinides and Light Elements 5.3.22-8
Figure 5.3.22-5 Axial VISED Slice of LWT with HEUNL Container Detail 5.3.22-9
Figure 5.3.22-6 Axial VISED Slice of LWT with HEUNL Containers 5.3.22-10
Figure 5.3.22-7 Radial VISED Slice of LWT with HEUNL Containers 5.3.22-11
Figure 5.3.22-8 Axial Sketch of LWT with HEUNL Containers 5.3.22-12
Figure 5.3.22-9 Radial Sketch of LWT with HEUNL Containers 5.3.22-13
Figure 5.3.22-10 Sample MCNP Input for HEUNL 5.3.22-14
Figure 5.3.22-11 Radial Surface Dose Rate Profile for Normal Conditions – HEUNL . 5.3.22-19
Figure 5.3.22-12 Radial 1 m Dose Rate Profile for Normal Conditions – HEUNL 5.3.22-20
Figure 5.3.22-13 Radial 1m Dose Rate Profile for Accident Conditions – HEUNL 5.3.22-21
Figure 5.3.23-1 SLOWPOKE Fuel Element 5.3.23-6
Figure 5.3.23-2 SLOWPOKE Core TRITON Model – Reference 5.3.23-7
Figure 5.3.23-3 SLOWPOKE Core TRITON Model – Compact 5.3.23-8
Figure 5.3.23-4 TRITON Input for SLOWPOKE Fuel – Reference 5.3.23-9
Figure 5.3.23-5 VISED X-Y Slice – SLOWPOKE Core – Normal Conditions 5.3.23-14
Figure 5.3.23-6 VISED Y-Z Slice – SLOWPOKE Core – Normal Conditions 5.3.23-15
Figure 5.3.23-7 Sample MCNP Input File – Normal Conditions 5.3.23-16
Figure 5.3.23-8 VISED X-Y Slice – SLOWPOKE Core – Accident Conditions 5.3.23-33
Figure 5.3.23-9 VISED Y-Z Slice – SLOWPOKE – Accident Conditions 5.3.23-34
Figure 5.3.23-10 SLOWPOKE Core Basket Sketch 5.3.23-35
Figure 5.3.23-11 Sample MCNP Input File – Accident Conditions 5.3.23-36

List of Figures (Continued)

Figure 5.3.23-12 Normal Condition Radial Surface Dose Rate Profile by Source Type – SLOWPOKE Core 5.3.23-41
Figure 5.3.23-13 Normal Condition 2-m + Conveyance Radial Surface Dose Rate Profile by Source Type – SLOWPOKE Core 5.3.23-42
Figure 5.3.23-14 Accident Condition Radial 1m Dose Rate Profile by Source Type – SLOWPOKE Core 5.3.23-43
Figure 5.3.23-15 Accident Condition Radial 1m Dose Rate Azimuthal Profile at Fuel Height – SLOWPOKE Core 5.3.23-44
Figure 5.3.24-1 EFN, Moly and Booster Rod Illustrations 5.3.24-5
Figure 5.3.25-1 BUP-500 Capsule Illustration 5.3.25-3
Figure 5.3.25-2 SrF_2 Capsule Illustration 5.3.25-4
Figure 5.3.25-3 VISED Sketch of LWT with BUP-500 Capsule Radial Detail 5.3.25-5
Figure 5.3.25-4 VISED Sketch of LWT with WESF Capsule Radial Detail 5.3.25-6
Figure 5.3.25-5 VISED Sketch of LWT with BUP-500 Capsule Axial Detail 5.3.25-7
Figure 5.3.25-6 VISED Sketch of LWT with WESF Capsule Axial Detail 5.3.25-8
Figure 5.3.25-7 LWT Radial Dimensions – BUP-500 Capsules and WESF Capsules ... 5.3.25-9
Figure 5.3.25-8 LWT Axial Dimensions – BUP-500 Capsules and WESF Capsules .. 5.3.25-10
Figure 5.3.25-9 Maximum Radial Surface Dose Rate Profile for Normal Conditions – WESF Capsules 5.3.25-11
Figure 5.3.25-10 Maximum Radial 2m Dose Rate Profile for Normal Conditions – WESF Capsules 5.3.25-12
Figure 5.3.26-1 Normal Condition Axial Surface Dose Rate Profile by Source Type Damaged Fuel Rods with Steel/Iron Clad 5.3.26-6
Figure 5.3.26-2 Normal Condition Radial 2m Dose Rate Profile by Source Type – Damaged Fuel Rods with Steel/Iron Clad 5.3.26-7
Figure 5.3.26-3 Accident Condition Radial 1m Dose Rate Profile by Source Type – Damaged Fuel Rods with Steel/Iron Clad 5.3.26-8
Figure 5.3.27-1 VISED Sketch of LWT with UCS Radial Detail 5.3.27-3
Figure 5.3.27-2 VISED Sketch of LWT with UCS Axial Detail 5.3.27-4
Figure 5.3.27-3 Maximum Radial Surface Dose Rate Profile for Normal Conditions – UCS Assemblies with WESF Capsules 5.3.27-5
Figure 5.3.27-4 Maximum Radial 2m Dose Rate Profile for Normal Conditions – UCS Assemblies with WESF Capsules 5.3.27-6

List of Tables

Table 5.1.1-1 Type, Form, Quantity and Potential Sources of Design Basis Fuel..... 5.1.1-9
Table 5.1.1-2 Design Basis Fuel for Shielding Evaluation 5.1.1-16
Table 5.1.1-3 Nuclear and Thermal Source Parameters..... 5.1.1-20
Table 5.1.1-4 Combined Dose Rates for Normal Operations Conditions..... 5.1.1-21
Table 5.1.1-5 Hypothetical Accident – Loss of Shielding Materials 5.1.1-22
Table 5.1.1-6 Hypothetical Accident – Lead Slump 5.1.1-23
Table 5.2.1-1 LOR-2 Input Data 5.2.1-3
Table 5.2.1-2 Photon Spectrum for Design Basis Fuel 5.2.1-5
Table 5.2.1-3 Fission Product Gas Inventory..... 5.2.1-6
Table 5.2.1-4 Design Basis Fuel Neutron Spectrum 5.2.1-7
Table 5.3.3-1 Source Material Compositions..... 5.3.3-8
Table 5.3.3-2 Shield Material Densities and Compositions..... 5.3.3-8
Table 5.3.4-1 Design Basis MTR Fuel Assembly Characteristics 5.3.4-15
Table 5.3.4-2 MTR Fuel Element Gamma Source Terms by Thermal Output – 380 grams ^{235}U..... 5.3.4-16
Table 5.3.4-3 MTR Fuel Element Neutron Source Terms by Thermal Output – 380 grams ^{235}U..... 5.3.4-17
Table 5.3.4-4 MTR Fuel Element Gamma Source Terms by Thermal Output – 460 grams ^{235}U 5.3.4-18
Table 5.3.4-5 MTR Fuel Element Neutron Source Terms by Thermal Output – 460 grams ^{235}U..... 5.3.4-19
Table 5.3.4-6 LEU MTR Hardware Source to Fuel Source Comparison 5.3.4-20
Table 5.3.4-7 HEU MTR Hardware Source to Fuel Comparison..... 5.3.4-21
Table 5.3.4-8 Material Densities for MTR Fuel Shielding Analysis 5.3.4-22
Table 5.3.4-9 LWT Cask Surface Total Dose Rates (Normal Conditions of Transport) 5.3.4-23
Table 5.3.4-10 LWT Cask Plan of Conveyance Dose Rates (Normal Conditions of Transport) 5.3.4-23
Table 5.3.4-11 LWT Cask 2 Meter Off The Plane of Conveyance Dose Rates (Normal Conditions of Transport)..... 5.3.4-24
Table 5.3.4-12 LWT Cask 1 Meter From the Cask Surface Dose Rates (Normal Conditions of Transport)..... 5.3.4-24
Table 5.3.4-13 Axial Surface Dose Rates at Cask Lid (Normal Conditions of Transport) 5.3.4-25
Table 5.3.4-14 LWT Cask Dose Rates 5 Meters from the Cask Lid (Back of Tractor Cab) for Normal Conditions of Transport 5.3.4-25
Table 5.3.4-15 LWT Cask Dose Rates – 1 Meter from the Cask Surface (Hypothetical Accident Conditions) 5.3.4-26
Table 5.3.4-16 LEU MTR Fuel Element Gamma Source Term - 40 W - 490g ^{235}U- 80% Burnup..... 5.3.4-26
Table 5.3.4-17 LEU MTR Fuel Element Neutron Source Term - 40 W - 490g ^{235}U- 80% Burnup..... 5.3.4-27

List of Tables (Continued)

Table 5.3.5-1 25 PWR Fuel Rods Design Basis Fuel Source Spectra 5.3.5-2
Table 5.3.5-2 Material Densities for 25 Design Basis PWR Rods Fuel Shielding Analysis 5.3.5-3
Table 5.3.5-3 Cask Radial Dose Rates with 25 Design Basis PWR Fuel Rods (mrem/hr) 5.3.5-4
Table 5.3.6-1 TRIGA Fuel Element Gamma Source Term – Normal Transport (ACPR, 86,100 MWd/MTU, 231 Days Cooling, 50% ^{235}U Depletion) 5.3.6-17
Table 5.3.6-2 TRIGA Fuel Element Neutron Source Term – Normal Transport (ACPR, 86,100 MWd/MTU, 231 Days Cooling, 50% ^{235}U Depletion) 5.3.6-18
Table 5.3.6-3 TRIGA Fuel Element Gamma Source Term – Accident Conditions (FLIP-LEU-II, 151,100 MWd/MTU, 908 Days Cooling, 80% ^{235}U Depletion) 5.3.6-19
Table 5.3.6-4 TRIGA Fuel Element Neutron Source Term – Accident Conditions (FLIP-LEU-II, 151,100 MWd/MTU, 908 Days Cooling, 80% ^{235}U Depletion) 5.3.6-20
Table 5.3.6-5 Material Densities for TRIGA Fuel Element Shielding Analysis 5.3.6-21
Table 5.3.6-6 ACPR TRIGA Element Source Comparison 5.3.6-22
Table 5.3.6-7 ACPR TRIGA Element One-Dimensional Dose Rate Comparison 5.3.6-22
Table 5.3.6-8 FLIP-LEU-II TRIGA Element Source Comparison 5.3.6-22
Table 5.3.6-9 FLIP-LEU-II TRIGA Element One-Dimensional Dose Rate Comparison 5.3.6-22
Table 5.3.7-1 TRIGA Fuel Cluster Rod Parameters 5.3.7-7
Table 5.3.7-2 Incoloy 800 Clad Composition 5.3.7-8
Table 5.3.7-3 Representative HEU TRIGA Fuel Cluster Rod Gamma Spectra at 150 GWd/MTU and 1.342 Year Cool Time 5.3.7-9
Table 5.3.7-4 Representative HEU TRIGA Fuel Cluster Rod Neutron Spectrum at 150 GWd/MTU and 1.342 Year Cool Time 5.3.7-10
Table 5.3.7-5 Representative LEU TRIGA Fuel Cluster Rod Gamma Spectra 5.3.7-11
Table 5.3.7-6 Representative LEU TRIGA Fuel Cluster Rod Neutron Spectrum 5.3.7-12
Table 5.3.7-7 Fuel Basket Region Material Composition Used in Shielding Analysis 5.3.7-13
Table 5.3.7-8 Normal Condition Dose Response to Gammas for HEU TRIGA Fuel Cluster Rods 5.3.7-14
Table 5.3.7-9 Normal Condition Dose Response to Neutrons for HEU TRIGA Fuel Cluster Rods 5.3.7-14
Table 5.3.7-10 Accident Condition Dose Response to Gammas for HEU TRIGA Fuel Cluster Rods 5.3.7-15
Table 5.3.7-11 Accident Condition Dose Response to Neutrons for HEU TRIGA Fuel Cluster Rods 5.3.7-15
Table 5.3.7-12 Normal Condition Dose Response to Gammas for LEU TRIGA Fuel Cluster Rods 5.3.7-16

List of Tables (Continued)

Table 5.3.7-13 Normal Condition Dose Response to Neutrons for LEU TRIGA Fuel Cluster Rods 5.3.7-16
Table 5.3.7-14 Accident Condition Dose Response to Gammas for LEU TRIGA Fuel Cluster Rods 5.3.7-17
Table 5.3.7-15 Accident Condition Dose Response to Neutrons for LEU TRIGA Fuel Cluster Rods 5.3.7-17
Table 5.3.7-16 HEU TRIGA Fuel Cluster Rod Dose Rate Results at Various Fuel Burnups 5.3.7-18
Table 5.3.7-17 LEU TRIGA Fuel Cluster Rod Dose Rate Results at Various Fuel Burnups 5.3.7-19
Table 5.3.8-1 High Burnup Fuel Rod Model Parameters 5.3.8-9
Table 5.3.8-2 High Burnup Fuel Assembly Model Parameters 5.3.8-9
Table 5.3.8-3 SCALE 27N18G Neutron Group Structure and ANSI Dose Factors 5.3.8-10
Table 5.3.8-4 SCALE 27N18G Gamma Group Structure and ANSI Dose Factors 5.3.8-11
Table 5.3.8-5 LWT Cask Total Decay Heat [kW] for 25 Rods at Various Cool Times 5.3.8-11
Table 5.3.8-6 PWR 80,000 MWd/MTU Fuel Model Neutron Source Term [n/sec/assy] 5.3.8-12
Table 5.3.8-7 PWR 80,000 MWd/MTU Fuel Model Gamma Source Term [γ/sec/assy] 5.3.8-12
Table 5.3.8-8 BWR 7×7 60,000 MWd/MTU Fuel Model Neutron Source Term [n/sec/assy] 5.3.8-13
Table 5.3.8-9 BWR 7×7 60,000 MWd/MTU Fuel Model Gamma Source Term [γ/sec/assy] 5.3.8-13
Table 5.3.8-10 BWR 7×7 70,000 MWd/MTU Fuel Model Neutron Source Term [n/sec/assy] 5.3.8-14
Table 5.3.8-11 BWR 7×7 70,000 MWd/MTU Fuel Model Gamma Source Term [γ/sec/assy] 5.3.8-14
Table 5.3.8-12 BWR 7×7 80,000 MWd/MTU Fuel Model Neutron Source Term [n/sec/assy] 5.3.8-15
Table 5.3.8-13 BWR 7×7 80,000 MWd/MTU Fuel Model Gamma Source Term [γ/sec/assy] 5.3.8-15
Table 5.3.8-14 BWR 8×8 80,000 MWd/MTU Fuel Model Neutron Source Term [n/sec/assy] 5.3.8-16
Table 5.3.8-15 BWR 8×8 80,000 MWd/MTU Fuel Model Gamma Source Term [γ/sec/assy] 5.3.8-16
Table 5.3.8-16 Fuel Axial Source Profile Parameters 5.3.8-17
Table 5.3.8-17 PWR Fuel Axial Source Profile 5.3.8-17
Table 5.3.8-18 BWR Fuel Axial Source Profile 5.3.8-18
Table 5.3.8-19 Fuel Region Homogenized Material Description [atom/b-cm] 5.3.8-19
Table 5.3.8-20 Basket and Cask Shielding Material Composition [atom/b-cm] 5.3.8-19
Table 5.3.8-21 Basket Model Parameters 5.3.8-20

List of Tables (Continued)

Table 5.3.8-22	LWT Cask One-Dimensional Model for LWR High Burnup Rod Analysis	5.3.8-20
Table 5.3.8-23	LWT Cask Surface Neutron Dose Response Function	5.3.8-21
Table 5.3.8-24	LWT Cask Surface Gamma Dose Response Function	5.3.8-21
Table 5.3.8-25	LWT Cask 2m Neutron Dose Response Function	5.3.8-22
Table 5.3.8-26	LWT Cask 2m Gamma Dose Response Function	5.3.8-22
Table 5.3.8-27	Surface Dose Responses [mrem/hr] and Cask Decay Heat [kW] for Various Decay Times	5.3.8-23
Table 5.3.8-28	2m Dose Responses [mrem/hr] and Cask Decay Heat [kW] for Various Decay Times	5.3.8-24
Table 5.3.8-29	Loading Table for PWR and BWR High Burnup Rods Showing Minimum Required Cool Time as a Function of Burnup and Enrichment	5.3.8-25
Table 5.3.9-1	Design Basis DIDO Fuel Assembly Characteristics	5.3.9-20
Table 5.3.9-2	DIDO Fuel Assembly Gamma Source Terms by Thermal Output	5.3.9-21
Table 5.3.9-3	DIDO Fuel Assembly Neutron Source Terms by Thermal Output	5.3.9-22
Table 5.3.9-4	Material Densities for DIDO Fuel Shielding Analysis	5.3.9-23
Table 5.3.9-5	LWT Cask Surface Total Dose Rates – DIDO Fuel (Normal Conditions of Transport)	5.3.9-24
Table 5.3.9-6	LWT Cask Plane of Conveyance Dose Rates – DIDO Fuel (Normal Conditions of Transport)	5.3.9-24
Table 5.3.9-7	LWT Cask 2 Meters Off the Plane of Conveyance Dose Rates – DIDO Fuel (Normal Conditions of Transport)	5.3.9-25
Table 5.3.9-8	LWT Cask 1 Meter from the Cask Surface Dose Rates – DIDO Fuel (Normal Conditions of Transport)	5.3.9-25
Table 5.3.9-9	Axial Surface Dose Rates at Cask Lid – DIDO Fuel (Normal Conditions of Transport)	5.3.9-26
Table 5.3.9-10	LWT Cask Dose Rates – 5 Meters from the Cask Lid – DIDO Fuel (Back of Tractor Cab) for Normal Conditions of Transport	5.3.9-27
Table 5.3.9-11	LWT Cask Dose Rates – 1 Meter from the Radial Cask Surface – DIDO Fuel (Hypothetical Accident Conditions)	5.3.9-27
Table 5.3.10-1	GA IFM Activity Inventory as of January 1, 1996	5.3.10-9
Table 5.3.10-2	GA IFM Neutron and Gamma Spectra in SCALE Format	5.3.10-10
Table 5.3.10-3	GA IFM Primary and Secondary Enclosure Dimensions	5.3.10-11
Table 5.3.10-4	Elemental Constituents of GA IFM	5.3.10-12
Table 5.3.10-5	Material Compositions of GA IFM and NAC-LWT	5.3.10-13
Table 5.3.10-6	Combined Payload Radial Dose Rates for GA IFM	5.3.10-14
Table 5.3.11-1	MCBEND Standard 28 Group Neutron Boundaries	5.3.11-24
Table 5.3.11-2	MCBEND Standard 22 Group Gamma Boundaries	5.3.11-25
Table 5.3.11-3	BWR Fuel Assembly Lattice Three-Dimensional Model Parameters	5.3.11-26
Table 5.3.11-4	PWR Fuel Assembly Lattice Three-Dimensional Model Parameters	5.3.11-27
Table 5.3.11-5	Fuel Assembly Lattice SAS2H Burnup Parameters at 80,000 MWd/MTU	5.3.11-28

List of Tables (Continued)

Table 5.3.11-6 B&W 15×15 80,000 MWd/MTU, 150 Day Cool Time Source Terms in MCBEND Format 5.3.11-29
Table 5.3.11-7 B&W 17×17 PWR 80,000 MWd/MTU, 150 Day Cool Time Source Terms in MCBEND Format 5.3.11-30
Table 5.3.11-8 CE 14×14 PWR 80,000 MWd/MTU, 150 Day Cool Time Source Terms in MCBEND Format 5.3.11-31
Table 5.3.11-9 Westinghouse 14×14 PWR 80,000 MWd/MTU, 150 Day Cool Time Source Terms in MCBEND Format 5.3.11-32
Table 5.3.11-10 Westinghouse 15×15 PWR 80,000 MWd/MTU, 150 Day Cool Time Source Terms in MCBEND Format 5.3.11-33
Table 5.3.11-11 Westinghouse 17×17 PWR 80,000 MWd/MTU, 150 Day Cool Time Source Terms in MCBEND Format 5.3.11-34
Table 5.3.11-12 BWR 7×7 80,000 MWd/MTU, 210 Day Cool Time Source Terms in MCBEND Format 5.3.11-35
Table 5.3.11-13 BWR 8×8 80,000 MWd/MTU, 150 Day Cool Time Source Terms in MCBEND Format 5.3.11-36
Table 5.3.11-14 PWR Fuel Lattice Axial Source Profile 5.3.11-37
Table 5.3.11-15 BWR Fuel Lattice Axial Source Profile 5.3.11-38
Table 5.3.11-16 BWR Fuel Assembly Lattice Fuel Region Homogenization 5.3.11-39
Table 5.3.11-17 PWR Fuel Assembly Lattice Fuel Region Homogenization 5.3.11-40
Table 5.3.11-18 Fuel Assembly Lattice Activated Hardware Region Homogenization 5.3.11-42
Table 5.3.11-19 Fuel Lattice Accident Condition Damaged Fuel Material Heights 5.3.11-43
Table 5.3.11-20 BWR Fuel Assembly Lattice Fuel Region Homogenized Material Description 5.3.11-43
Table 5.3.11-21 PWR Fuel Assembly Lattice Fuel Region Homogenized Material Description 5.3.11-44
Table 5.3.11-22 Basket and Cask Shielding Material Composition 5.3.11-44
Table 5.3.11-23 ANSI/ANS 6.1.1-1977 Neutron Flux-to-Dose Conversion Factors 5.3.11-45
Table 5.3.11-24 ANSI/ANS 6.1.1-1977 Gamma Flux-to-Dose Conversion Factors..... 5.3.11-46
Table 5.3.11-25 Maximum Radial Dose Rates for PWR and BWR Fuel Rods in an Irradiated Fuel Assembly Lattice 5.3.11-47
Table 5.3.11-26 Maximum Axial Dose Rates for PWR and BWR Fuel Rods in an Irradiated Fuel Assembly Lattice 5.3.11-47
Table 5.3.12-1 PWR Rods 80,000 MWd/MTU, 150 Day Cool Time Source Terms in MCBEND Format 5.3.12-20
Table 5.3.12-2 BWR 7×7 Rods 80,000 MWd/MTU, 210 Day Cool Time Source Terms in MCBEND Format 5.3.12-21
Table 5.3.12-3 BWR 8×8 Rods 80,000 MWd/MTU, 150 Day Cool Time Source Terms in MCBEND Format 5.3.12-22
Table 5.3.12-4 Fuel Region Homogenization for PWR Fuel Rods 5.3.12-23
Table 5.3.12-5 Fuel Region Homogenization for BWR 7×7 Fuel Rods 5.3.12-23
Table 5.3.12-6 Region Homogenization for BWR 8×8 Fuel Rods 5.3.12-24
Table 5.3.12-7 Intact/Damaged Fuel Mixture Composition Determinations 5.3.12-24

List of Tables (Continued)

Table 5.3.12-8 Fuel Region Homogenized Material Description 5.3.12-25
Table 5.3.12-9 Maximum Radial Dose Rates for Damaged PWR and BWR Fuel Rods 5.3.12-26
Table 5.3.12-10 Maximum Axial Dose Rates for Damaged PWR and BWR Fuel Rods 5.3.12-26
Table 5.3.13-1 Single TPBAR Activity Inventory at 30 Days Cool Time 5.3.13-13
Table 5.3.13-2 TPBAR 30-Day Gamma Source Spectrum..... 5.3.13-14
Table 5.3.13-3 TPBAR Elemental Constituents 5.3.13-15
Table 5.3.13-4 Material Compositions of NAC-LWT for 300 TPBAR Payload..... 5.3.13-16
Table 5.3.13-5 Dose Rate Summary for 300 TPBARs at 30 Days Cool Time 5.3.13-17
Table 5.3.13-6 Reactor Operating Conditions for TPBAR Source Term Generation . 5.3.13-18
Table 5.3.14-1 PULSTAR Fuel Geometry..... 5.3.14-17
Table 5.3.14-2 Source Term Generation Parameters for PULSTAR Fuel..... 5.3.14-17
Table 5.3.14-3 PULSTAR Fuel Assembly Neutron Source Term for 1 Year Cool Time 5.3.14-18
Table 5.3.14-4 PULSTAR Fuel Assembly Gamma Source Term for 1 Year Cool Time 5.3.14-19
Table 5.3.14-5 Intact Assembly Fuel Homogenization for PULSTAR Fuel 5.3.14-20
Table 5.3.14-6 Nominal Height Can Fuel Homogenization for PULSTAR Fuel..... 5.3.14-20
Table 5.3.14-7 Minimum Height Can Fuel Homogenization for PULSTAR Fuel..... 5.3.14-20
Table 5.3.14-8 Fuel Region Homogenized Material Description for PULSTAR Fuel 5.3.14-21
Table 5.3.14-9 Cask/Basket Material Descriptions for PULSTAR Fuel 5.3.14-21
Table 5.3.14-10 Maximum Radial Dose Rates for PULSTAR Fuel..... 5.3.14-22
Table 5.3.14-11 Maximum Axial Dose Rates for PULSTAR Fuel 5.3.14-22
Table 5.3.15-1 Spiral Fuel Assembly Characteristics 5.3.15-6
Table 5.3.15-2 Spiral Fuel Assembly Neutron and Gamma Source (18 Watt Heat Load) 5.3.15-7
Table 5.3.15-3 Spiral Fuel Assembly Source Comparison to DIDO MEU Fuel (70% Depletion and 18 Watts)..... 5.3.15-8
Table 5.3.15-4 Spiral Fuel Assembly Source Comparison to DIDO MEU Fuel (70% Depletion and Fixed 2.23-Year Cool Time)..... 5.3.15-9
Table 5.3.16-1 MOATA Plate Bundle Characteristics..... 5.3.16-4
Table 5.3.16-2 MOATA Plate Bundle Source Comparison..... 5.3.16-5
Table 5.3.17-1 High Burnup Fuel Rod model Parameters 5.3.17-33
Table 5.3.17-2 High Burnup MOX Fuel Assembly Model Parameters..... 5.3.17-33
Table 5.3.17-3 MOX Fuel Material Compositions 5.3.17-34
Table 5.3.17-4 Uranium/Plutonium Fractions in MOX Fuel 5.3.17-34
Table 5.3.17-5 PWR Fuel Axial Source Profile..... 5.3.17-35
Table 5.3.17-6 Fuel Axial Source Profile Parameters..... 5.3.17-35
Table 5.3.17-7 MOX Source Term Magnitudes at 70 GWd/MTHM and 90 Days Cool Time (per Rod Basis) 5.3.17-36
Table 5.3.17-8 MOX Fuel Cool Time to Reach 143.75 W/Rod (Days) 5.3.17-37
Table 5.3.17-9 PWR Power Grade MOX Fuel Assembly Neutron Source Term for 70 GWd/MTHM, 2% Fissile Pu, and 90 Days Cooling (16 Rods)..... 5.3.17-38

List of Tables (Continued)

Table 5.3.17-10 PWR Power Grade MOX Fuel Assembly Gamma Source Term for 70 GWd/MTHM, 2% Fissile Pu, and 90 Days Cooling (16 Rods)..... 5.3.17-39
Table 5.3.17-11 Homogenization for PWR MOX Fuel Rod Regions 5.3.17-40
Table 5.3.17-12 Cask/Basket Material Descriptions for PWR MOX Fuel..... 5.3.17-41
Table 5.3.17-13 Material Composition Effect Study for PWR MOX Fuel 5.3.17-41
Table 5.3.17-14 Mixed Loading/Material Composition Effect Study for PWR MOX Fuel 5.3.17-42
Table 5.3.17-15 MOX/UO_2 Fuel Material Configuration/Homogenization Study..... 5.3.17-42
Table 5.3.17-16 Maximum Radial Dose Rates for PWR MOX Fuel – 90 Days Cool Time, 2% Fissile Pu 5.3.17-43
Table 5.3.17-17 Detailed Dose Rates for Bounding Fuel – Power Grade PWR MOX Fuel, 2% Fissile Pu, 70 GWd/MTHM and 90 Days Cool Time..... 5.3.17-43
Table 5.3.19-1 Irradiated Hardware Gamma Spectra in SCALE Format (1 kg Activated Stainless Steel) 5.3.19-8
Table 5.3.19-2 Material Compositions of the NAC-LWT 5.3.19-9
Table 5.3.20-1 SLOWPOKE Fuel Geometry and Materials..... 5.3.20-24
Table 5.3.20-2 Source Term Generation Parameters for SLOWPOKE Fuel..... 5.3.20-24
Table 5.3.20-3 SLOWPOKE Neutron Source Term (per MTU) 5.3.20-25
Table 5.3.20-4 SLOWPOKE Fuel Gamma Source Term (per MTU)..... 5.3.20-26
Table 5.3.20-5 Fuel Homogenization for SLOWPOKE Fuel 5.3.20-27
Table 5.3.20-6 Canister/Basket/Cask Material Descriptions for SLOWPOKE Fuel... 5.3.20-27
Table 5.3.20-7 Canister Dimensions SLOWPOKE Fuel 5.3.20-28
Table 5.3.20-8 Maximum and Average Dose Rates for SLOWPOKE Fuel..... 5.3.20-29
Table 5.3.20-9 Summarized Maximum Dose Rates for SLOWPOKE Fuel..... 5.3.20-29
Table 5.3.21-1 NRU Fuel Assembly Dimensions..... 5.3.21-32
Table 5.3.21-2 NRX Fuel Assembly Dimensions..... 5.3.21-32
Table 5.3.21-3 NRU and NRX Evaluated Fuel Material Properties 5.3.21-32
Table 5.3.21-4 Fuel Material Compositions..... 5.3.21-32
Table 5.3.21-5 Neutron Source Term Comparison for NRU HEU Fuel Assembly..... 5.3.21-33
Table 5.3.21-6 Gamma Source Term Comparison for NRU HEU Fuel Assembly 5.3.21-34
Table 5.3.21-7 Neutron Source Terms for NRU HEU Fuel Assembly..... 5.3.21-35
Table 5.3.21-8 Gamma Source Terms for NRU HEU Fuel Assembly 5.3.21-36
Table 5.3.21-9 Neutron Source Terms for NRU LEU Fuel Assembly 5.3.21-37
Table 5.3.21-10 Gamma Source Terms for NRU LEU Fuel Assembly..... 5.3.21-38
Table 5.3.21-11 Neutron Source Terms for NRX Fuel Assembly..... 5.3.21-39
Table 5.3.21-12 Gamma Source Terms for NRX Fuel Assembly 5.3.21-40
Table 5.3.21-13 Cask/Basket Material Descriptions for NRU/NRX 5.3.21-40
Table 5.3.21-14 NRU/NRX Basket Dimensions..... 5.3.21-41
Table 5.3.21-15 ANSI/ANS 6.1.1-1977 Neutron Flux-to-Dose Conversion Factors 5.3.21-41
Table 5.3.21-16 ANSI/ANS 6.1.1-1977 Gamma Flux-to-Dose Conversion Factors..... 5.3.21-42
Table 5.3.21-17 Undamaged NRU HEU Fuel Dose Rate Summary 5.3.21-42
Table 5.3.21-18 Collapsed NRU HEU Fuel Dose Rate Summary..... 5.3.21-43
Table 5.3.21-19 Undamaged NRU LEU Fuel Dose Rate Summary..... 5.3.21-43
Table 5.3.21-20 Collapsed NRU LEU Fuel Dose Rate Summary 5.3.21-44

List of Tables (Continued)

Table 5.3.21-21 Undamaged NRX Fuel Dose Rate Summary 5.3.21-44
Table 5.3.21-22 Collapsed NRX Fuel Dose Rate Summary 5.3.21-45
Table 5.3.21-23 Summarized Maximum Dose Rates for Undamaged Fuel 5.3.21-45
Table 5.3.21-24 Summarized Maximum Dose Rates for Collapsed Fuel 5.3.21-45
Table 5.3.22-1 Composition of Solution Inorganic Chemicals 5.3.22-22
Table 5.3.22-2 Actinide Concentrations in the Solution 5.3.22-22
Table 5.3.22-3 Inventory of Gamma-Emitting Radionuclides 5.3.22-23
Table 5.3.22-4 Fission Product Content for Defined Radionuclides 5.3.22-24
Table 5.3.22-5 Fission Product Content for Undefined Radionuclides 5.3.22-24
Table 5.3.22-6 Modeled HEUNL Nitrate Contents 5.3.22-25
Table 5.3.22-7 Isotopic Contents of Actinides and Light Elements for ORIGEN-S Source Term Calculation 5.3.22-26
Table 5.3.22-8 Neutron Source Terms per Liter 5.3.22-27
Table 5.3.22-9 Gamma Source Terms per Liter 5.3.22-28
Table 5.3.22-10 Isotopic Contents of HEUNL Materials for MCNP Shielding Evaluation 5.3.22-29
Table 5.3.22-11 Cask/Container Material Descriptions for HEUNL 5.3.22-30
Table 5.3.22-12 HEUNL Container Dimensions 5.3.22-31
Table 5.3.22-13 ANSI/ANS 6.1.1-1977 Neutron Flux-to-Dose Conversion Factors 5.3.22-32
Table 5.3.22-14 ANSI/ANS 6.1.1-1977 Gamma Flux-to-Dose Conversion Factors 5.3.22-33
Table 5.3.22-15 HEUNL Dose Rate Summary 5.3.22-34
Table 5.3.22-16 Summarized Maximum Dose Rates for HEUNL Transport 5.3.22-34
Table 5.3.23-1 SLOWPOKE Fuel Geometry and Materials 5.3.23-45
Table 5.3.23-2 Source Term Generation Parameters for SLOWPOKE Fuel 5.3.23-45
Table 5.3.23-3 SLOWPOKE Neutron Source Term (per rod) 5.3.23-46
Table 5.3.23-4 SLOWPOKE Fuel Gamma Source Term (per rod) 5.3.23-47
Table 5.3.23-5 Canister/Basket/Cask Material Descriptions for SLOWPOKE Fuel 5.3.23-48
Table 5.3.23-6 Modeled SLOWPOKE Core Basket Dimensions 5.3.23-49
Table 5.3.23-7 Maximum Dose Rates for SLOWPOKE Fuel 5.3.23-50
Table 5.3.23-8 Summarized Maximum Dose Rates for SLOWPOKE Fuel 5.3.23-50
Table 5.3.24-1 Additional Payload Fuel Material and Geometry Properties 5.3.24-6
Table 5.3.24-2 Additional Payload Caddy Content Material Density 5.3.24-7
Table 5.3.25-1 1 Curie Strontium-90 Source 5.3.25-13
Table 5.3.25-2 Material Descriptions for BUP-500 Capsules and WESF Capsules 5.3.25-14
Table 5.3.25-3 BUP-500 Capsule Dimensions 5.3.25-15
Table 5.3.25-4 WESF Capsule Dimensions 5.3.25-15
Table 5.3.25-5 ANSI/ANS 6.1.1-1977 Gamma Flux-to-Dose Conversion Factors 5.3.25-16
Table 5.3.25-6 BUP-500 Capsule Dose Rate Summary 5.3.25-17
Table 5.3.25-7 WESF Capsule Dose Rate Summary 5.3.25-17
Table 5.3.25-8 Summary of Maximum Dose Rates for BUP-500 Capsules and WESF Capsules 5.3.25-18
Table 5.3.26-1 PWR Rods 80,000 MWd/MTU, 240 Day Cool Time Source Terms 5.3.26-9
Table 5.3.26-2 BWR 7×7 Rods 80,000 MWd/MTU, 300 Day Cool Time Source Terms 5.3.26-10

List of Tables (Continued)

Table 5.3.26-3 BWR 8×8 Rods 80,000 MWd/MTU, 240 Day Cool Time Source Terms 5.3.26-11
Table 5.3.26-4 Fuel Region Homogenization for PWR Fuel Rods 5.3.26-12
Table 5.3.26-5 Fuel Region Homogenization for BWR 7×7 Fuel Rods 5.3.26-12
Table 5.3.26-6 Region Homogenization for BWR 8×8 Fuel Rods 5.3.26-13
Table 5.3.26-7 Intact/Damaged Fuel Mixture Composition Determinations 5.3.26-13
Table 5.3.26-8 Fuel Region Homogenized Material Description 5.3.26-14
Table 5.3.26-9 Maximum Radial Dose Rates for Damaged PWR and BWR Fuel Rods 5.3.26-15
Table 5.3.26-10 Maximum Axial Dose Rates for Damaged PWR and BWR Fuel Rods 5.3.26-15
Table 5.3.27-1 UCS and UCS Basket Dimensions 5.3.27-7
Table 5.3.27-2 UCS Assemblies with WESF Capsules Dose Rate Summary 5.3.27-7
Table 5.3.27-3 Summary of Maximum Dose Rates for UCS Assemblies with WESF Capsules 5.3.27-7
Table 5.4.1-1 Discrete Axial Source Distribution 5.4.1-4
Table 5.4.1-2 Flux to Dose Conversion Factors 5.4.1-6

5 SHIELDING EVALUATION

The NAC-LWT cask utilizes a concentric cylindrical arrangement of steel, lead, steel and water to provide gamma shielding for the design basis fuel. The water-glycol solution in the neutron shield tank also provides neutron shielding. The water contains 1 weight per cent (wt %) boron, which absorbs neutrons without producing significant secondary gamma radiation.

The PWR and BWR design basis shielding analysis uses the LOR-2 version of the ORIGEN-2 code to calculate radiation sources. The QAD-CG (Cain) and XSDRNPM (NUREG/CR-0200, Vol, 2, F3) codes are used to calculate the cask dose rates for normal operations and hypothetical accident conditions. The shielding analysis shows that the dose rates are below regulatory limits specified in 10 CFR 71.47 and 71.51 as well as IAEA Transportation Safety Standards (TS-R-1).

The PWR and BWR design basis shielding analyses were performed for a 0.25 inch thick neutron shield tank shell, while the actual fabricated thickness is only 0.24 (6mm). The shell thickness difference of 0.01 inches yields a maximum dose rate increase of only 2.4 percent, which gives lower dose rates than worst case tolerance analysis in this chapter. The analyses of this chapter, therefore, are valid.

The MTR design basis shielding analysis used the SCALE package. This included SAS2H (Herman) for source terms, and SAS4 (Tang) for three-dimensional shielding analysis. This evaluation is presented in Section 5.3.4. This shielding analysis shows that dose rates are below regulatory limits when the NAC-LWT contains up to 42 design basis MTR fuel elements with less than 210 watts of decay heat per basket.

The MTR shielding analysis explicitly calculated dose rates for LEU, MEU and HEU MTR fuel for a range of burnups and cool times to meet decay heat and dose rate limits. HEU fuel source terms were higher and thus the HEU fuel provides the most limiting dose rates for fixed decay heat limits.

The 25 PWR rod design basis shielding analysis used the SCALE package. This included SAS2H for source terms and SAS1 for one-dimensional radial shielding analysis. This analysis is presented in Section 5.3.5. This shielding analysis shows that the dose rates are below regulatory limits when the NAC-LWT contains up to 25 design basis PWR rods. A shielding evaluation of high burnup PWR and BWR fuel rods in a rod holder is presented in Section 5.3.8. Up to 25 PWR and BWR fuel rods are evaluated at burnups up to 80,000 MWd/MTU.

The NAC-LWT is evaluated for the transport of up to 140 TRIGA fuel elements or up to 560 TRIGA fuel cluster rods arranged in five (5) basket modules. This shielding evaluation uses the SCALE package with the SAS2H sequence for source term identification, and SAS4, also from the SCALE package, to perform a three-dimensional shielding analysis. The analysis is

presented in Section 5.3.6. The analysis shows that the dose rates are below the regulatory limits when the cask contains up to 140 TRIGA fuel elements each having a maximum decay heat of 7.5 W, or up to 560 TRIGA fuel cluster rods each having a maximum decay heat of 1.875 W.

There are two TRIGA basket configurations, non-poisoned and poisoned, as described in Section 1.2.3.1.2. Each TRIGA basket module consists of seven cells. The center cell of each non-poisoned basket module is blocked with a stainless steel plate. Consequently, only six (6) cells of each non-poisoned basket module are loaded with fuel. Because the shielding analyses assumes the center cell contains the bounding TRIGA fuel elements or TRIGA fuel cluster rods during the normal and accident conditions of transport; the evaluation of 140 fuel elements or 560 fuel cluster rods bounds the 120 fuel element / 480 fuel cluster rod configurations.

The DIDO design basis shielding analysis used the SCALE package. This included SAS2H (Herman) for source terms, and SAS4 (Tang) for three-dimensional shielding analysis. This evaluation is presented in Section 5.3.9. This shielding analysis shows that dose rates are below regulatory limits when the NAC-LWT contains up to 42 design basis DIDO fuel assemblies with two allowable heat loads per basket module, either 175 watts or 126 watts, dependent on the axial position of the fuel elements in the top basket.

The DIDO shielding analysis explicitly calculated dose rates for LEU, MEU and HEU DIDO fuel for a range of burnups and cool times to meet decay heat and dose rate limits. HEU fuel source terms were higher and thus the HEU fuel provides the most limiting dose rates for fixed decay heat limits.

The analysis of General Atomics (GA) Irradiated Fuel Material (IFM) used the SCALE package. The GA IFM consists of two Fuel Handling Units, one containing RERTR (an Incoloy clad TRIGA type fuel) and the other containing HTGR graphite matrix fuel material. The analysis included ORIGEN-S for source terms and SAS1 for one-dimensional radial shielding analysis. This evaluation is presented in Section 5.3.10. The shielding evaluation shows that dose rates are well below regulatory limits for a combined payload of the two Fuel Handling Units.

Up to 25 high burnup intact PWR or BWR fuel rods loaded into a fuel assembly lattice are analyzed in Section 5.3.11. Source terms were calculated using SAS2H with three-dimensional dose rates calculated using the MCBEND Monte Carlo transport code. Up to 14 high burnup damaged fuel rods may be loaded in a shipment of 25 PWR or BWR fuel rods, as demonstrated in Section 5.3.12. Damaged rods must be loaded in the rod holder. Source terms were calculated using SAS2H with three-dimensional dose rates calculated using the MCBEND Monte Carlo transport code.

Similarly, up to 14 fuel rods with steel/iron cladding, or non-fuel rods sections with the non-zirconium alloy tube material, may be loaded into a shipment of up 25 PWR or BWR fuel rods,

as demonstrated in section 5.3.26. The term steel/iron clad is used in this context to describe non-zirconium alloy clad such as FeCrAl clad (variations of the alloy may be loaded). Presence of non-zirconium based clad produces higher gamma source due to presence of higher cobalt levels. Fuel rods and non-fueled sections are evaluated up to the high burnup levels specified for the zirconium alloy clad based rods. Shipment of mixed zirconium and non-zirconium clad materials are permitted. The non-zirconium alloy rods are considered to fail during transport within the context of the shielding evaluation. These rods must be loaded into the rod holder to be bound by the shielding analysis. Three-dimensional dose rates were calculated using the MCNP Monte Carlo transport code.

A combination of up to 16 high burnup undamaged PWR MOX or UO_2 fuel rods loaded into a 5×5 rod holder is analyzed in Section 5.3.17. Remaining slots in the 5×5 lattice may be occupied by zirconium alloy-based hardware components such as burnable poison rods (BPRs), provided they are not comprised of highly activated materials (e.g., steel or inconel). The rod lattice is located within a canister placed into an insert located within the NAC-LWT PWR basket. Source terms were calculated using SCALE 5.0 SAS2H, with three-dimensional dose rates calculated using the MCNP5 Monte Carlo transport code.

An analysis of the content condition of 300 production Tritium Producing Burnable Absorber Rods (TPBARs) in a consolidation canister used the ORIGEN-S module of the SCALE package for source terms and the MCNP code package to calculate three-dimensional dose rates. This evaluation is presented in Section 5.3.13 and shows that dose rates are well below regulatory limits for normal and accident conditions. The second TPBAR content condition of 55 segmented TPBARs cooled for a minimum of 90 days is evaluated using the source terms determined by the ORIGEN-S module of the SCALE package. This evaluation readily shows compliance with the previously calculated regulatory dose rates for 300 production TPBARs cooled a minimum of 30 days.

A payload of up to 700 PULSTAR fuel elements is analyzed in Section 5.3.14. Source terms were calculated using SAS2H with three-dimensional dose rates calculated using the MCNP code. PULSTAR fuel elements may be loaded as assemblies in a 5×5 rectangular array; intact elements in a 4×4 fuel rod insert; or intact or damaged elements and nonfuel components of fuel assemblies in a can. Four 7-element MTR basket modules are stacked to form a 28 MTR basket in the cask cavity. The maximum cell loading is 25 elements.

A payload of up to 42 spiral fuel assemblies or 42 MOATA plate bundles in the ANSTO basket is analyzed in Section 5.3.15. Six 7-element ANSTO basket modules are stacked to form a 42-assembly payload in the cask cavity. Source terms were calculated using SAS2H. Due to similarities in the basket design to the DIDO basket and bounding source terms in the DIDO shielding evaluation, no shielding evaluations are required to demonstrate regulatory compliance.

A payload of up to 800 SLOWPOKE fuel elements is analyzed in Section 5.3.20. Source terms were calculated using SCALE 6.1 TRITON with three-dimensional dose rates calculated using MCNP5 v1.3. SLOWPOKE fuel elements may be loaded into the canister assembly with either 5x5 or 4x4 canister inserts, with up to four inserts per canister assembly. The canister assemblies may be loaded into the top two 7-element MTR baskets in a 28 MTR basket stack. The SLOWPOKE elements are found to be well within regulatory limits at the minimum cool time of 14 years.

A payload of up to 18 NRU or NRX fuel assemblies is analyzed in Section 5.3.21. Source terms were calculated using TRITON in SCALE 6.1 with three-dimensional dose rates calculated using the MCNP code. NRU HEU and NRX fuel assemblies are found to be within regulatory limits at their respective minimum cool times of 18 and 19 years. NRU LEU fuel assemblies are found to be within regulatory compliance at a minimum cool time of 3 years.

A payload of 4 HEUNL containers is analyzed in Section 5.3.20. Source terms were calculated using an inventory of gamma-emitting radionuclides with the actinide and nitrate contents. The ORIGEN-S control module in SCALE 6.1 is used to calculate source spectra. A maximum payload of 64.3 L (17.0 gal) per container is conservatively applied for the source strength (due to void volume in the container that allows HEUNL thermal expansion, actual container capacity is less). Three-dimensional dose rates are calculated using the MCNP v1.60 code. The HEUNL payload is found to be within regulatory limits.

A payload of a SLOWPOKE core, up to 298 rods with 2.81 g ^{235}U per rod with a minimum enrichment of 90 wt% ^{235}U, is analyzed in Section 5.3.23. Source terms were calculated using TRITON in SCALE 6.1 with three-dimensional dose rates calculated using MCNP5 v1.6. The SLOWPOKE core is found to be within regulatory limits after a minimum cool time of 14 days.

A payload of Booster rods, EFN (Enriched Fast Neutron) rods, or Mo-99 (“Moly”) targets is analyzed in Section 5.3.24. Source terms were generated using TRITON in SCALE 6.1 for each of the payload types in the NRU/NRX basket and compared to those of the previously evaluated NRU-HEU payload. As demonstrated in Section 5.3.24, the sources and source density associated with the additional payloads are less than those previously evaluated. Dose rate results are therefore bounded by the NRU-HEU configuration.

A payload of two BUP-500 capsules or 18 WESF capsules is analyzed in Section 5.3.25. Source terms were generated using ORIGEN in SCALE6.2.4 with three-dimensional dose rates calculated using MCNP6.2. As demonstrated Section 5.3.25, the dose rates associated with the additional payloads are significantly less than those previously evaluated and are demonstrated to meet 10 CFR 71.47 and 10 CFR 71.51 limits. As maximum dose rates on the cask surface are less than 10 mrem/hr the transport index, TI, is less than 10 therefore exclusive use is not required based on shielding requirements.

A payload of 16 transfer tubes loaded with LANL MOX Fuel Rods (which include both MOX, i.e. plutonium as the primary fissile material, and enriched UO_2 based fuel material rods) are permitted for transportation. Shielding evaluations for the LANL MOX material are not required as the source associated with these rods is limited to decay radiation (primarily alpha) of the as-built fuel materials, not the fission product and higher actinides produces by burned/spent fuel material. The decay heat associated with these rods was estimated to be less than 1 watt per rod, with a limit set at 25 watts per cask. Section 5.3.17 demonstrates that a high burnup MOX rod payload with a heat load of 2.3 kW, with its associated fission product and higher actinide inventories, is acceptable for transport in the same basket and similar canister configuration as the LANL MOX Fuel Rods; therefore, the LANL MOX Fuel Rods are acceptable for transport and will meet all regulatory requirements. Cask surface dose rates associated with LANL MOX Fuel Rods are estimated to be less than 1 mrem/hr. This estimate is based on a maximum surface dose rate of 110 mrem/hr reported for high burnup MOX materials in Section 5.3.17, a LANL MOX package maximum heat load of ~1% of the high burnup MOX materials, and most of the LANL MOX heat being associated with alpha decay which will not contribute significantly to cask dose rates.

A payload of three universal capsule sleeve (UCS) assemblies with six WESF capsules per UCS is analyzed in Section 5.3.27. Source terms were generated using ORIGEN in SCALE6.2.4 with three-dimensional dose rates calculated using MCNP6.2. As demonstrated Section 5.3.27, the dose rates associated with the additional payloads are significantly less than those previously evaluated and are demonstrated to meet 10 CFR 71.47 and 10 CFR 71.51 limits. As maximum dose rates on the cask surface are less than 10 mrem/hr the transport index, TI, is less than 10 therefore exclusive use is not required based on shielding requirements.

5.1 Discussion and Results

The NAC-LWT cask is designed for the safe transport of spent nuclear fuel from various commercial nuclear installations and research reactors.

5.1.1 NAC-LWT Contents

The following contents constitute the design basis for transport in the NAC-LWT cask:

- 1 PWR assembly;
- up to 2 BWR assemblies;
- up to 15 sound metallic fuel rods;
- up to 9 failed metallic fuel rods;
- up to 3 severely failed metallic fuel rods in filters;
- up to 42 MTR fuel elements;
- up to 42 DIDO fuel assemblies;
- up to 25 PWR fuel rods (including up to 14 rods classified as damaged);
- up to 25 BWR fuel rods (including up to 14 rods classified as damaged)[1];
- up to 25 PWR or BWR UO_2 fueled high burnup (up to 80,000 MWd/MTU) rods
- up to 16 PWR MOX or UO_2 rods in any combination (up to 62,500 MWd/MTHM)
- up to 140 TRIGA fuel elements;
- up to 560 TRIGA fuel cluster rods;
- 2 GA IFM packages;
- up to 300 TPBARs (of which three can be prefailed) in a consolidation canister;
- up to 25 TPBARs (of which three can be prefailed) in a rod holder;
- up to 55 TPBARs segmented during PIE, including segmentation debris;
- up to 700 PULSTAR fuel elements (intact or damaged);
- up to 42 spiral fuel assemblies;
- up to 42 MOATA plate bundles;
- any combination of individual ANSTO basket modules containing either spiral fuel assemblies or MOATA plate bundles up to a total of 42 assemblies/bundles;
- up to 4,000 lbs of solid, irradiated and contaminated hardware;
- up to 18 NRU (HEU or LEU) or up to 18 NRX fuel assemblies;
- 4 HEUNL containers (empty or filled such that a minimum under filled cavity void of one gallon exists);

[1] PWR and BWR fuel rods may be transported in either a fuel assembly lattice (skeleton) or in a fuel rod insert. The fuel rod insert may contain PWR instrument/guide tubes and BWR water/inert rods in addition to the fuel rods.

- up to 800 SLOWPOKE fuel elements contained in up to 8 SLOWPOKE fuel canisters,
- 1 SLOWPOKE fuel core containing up to 298 SLOWPOKE fuel elements in the SLOWPOKE fuel core basket,
- Up to 20 short Moly targets, 36 double length Moly targets, 36 EFN rods, or 16 Booster rods; or
- Up to two BUP-500 capsules or 18 WESF capsules.
- Up to 16 transfer tubes loaded with LANL MOX Fuel Rods.
- Up to three UCS assemblies with up to six WESF capsules per UCS.

The 25 high burnup PWR and BWR rods may be transported in three configurations: 1) a maximum of 25 intact fuel rods loaded in the rod holder; 2) a maximum of 25 fuel rods with up to 14 damaged fuel rods or rod fragments loaded in the rod holder; and 3) a maximum of 25 intact fuel rods housed in a fuel assembly lattice within the NAC-LWT PWR basket. The fuel assembly lattice may be irradiated up to an equivalent burnup of 80,000 MWd/MTU.

The metallic fuel consists of a single rod of uranium metal clad with aluminum. The intact metallic fuel rods are placed into a transport canister that will hold five intact rods. The cask can hold three transport canisters for a total of 15 intact metallic fuel rods. In the event the metallic fuel has failed or is suspected of having failed, each fuel rod is sealed in its own container. The failed metallic fuel is loaded into either one of the three holes in the metallic fuel basket or into one of the six openings in the failed metallic fuel basket.

MTR research reactor fuel elements are typically 33 to 57 inches long, including lower nozzle and upper handle. The fuel plates typically consist of U-Al, U_3O_8-Al, or USi-Al clad with aluminum. The fuel plates are held in a parallel arrangement with two thick aluminum slotted pieces to form a fuel element. Standard fuel elements have between 10 and 23 fuel plates. The active fuel region is typically 22.75 inches in height, and the fuel meat is typically 0.023-inch thick. The highly enriched uranium (HEU) fuel has been analyzed conservatively with an enrichment of 90 wt % ^{235}U and fuel loading per element up to 380 g ^{235}U, with a separate analysis performed to accommodate up to 460 g ^{235}U. The design basis fuel parameters are provided in Table 5.1.1-1. The fuel characteristics are presented in Table 5.1.1-2. The dose rates produced from the design basis 470 g ^{235}U and 640 g ^{235}U LEU and 380 g ^{235}U MEU MTR fuel are bounded by the HEU MTR design basis fuel. Therefore, a mixed loading of LEU, MEU and HEU MTR fuel elements are also bounded by a full HEU MTR fuel element loading.

The source term characteristics of the design basis PWR fuel assembly, BWR fuel assembly, metallic rods, 25 PWR rods, 16 PWR MOX rods, and MTR fuels are given in Table 5.1.1-3. The design basis PWR and BWR fuels require two years of cooling after discharge to meet the neutron and gamma source, and decay heat limits of the cask. The MOX rods require 90 days of

cooling. The design basis metallic fuel requires one year cooling. The design basis MTR fuel requires a variable number of years cooling, after discharge, to meet the decay heat limits of the cask. Loading configurations must conform to the limits stated in Section 7.1.5.

DIDO research reactor fuel elements typically consist of U-Al, U_3O_8-Al, or U_3Si_2-Al that is aluminum clad. The fuel elements are held in a concentric arrangement inside an outer aluminum cylinder to form a fuel assembly. Fuel assemblies have 4 fuel elements. The active fuel region is typically 23.6 inches in height, and the fuel meat is typically 0.026 inch thick. The highly enriched uranium (HEU) fuel has been analyzed with a minimum enrichment of 90 wt % ^{235}U and fuel loading per assembly up to 190 g ^{235}U. Low enriched (LEU) and medium enriched (MEU) assemblies are evaluated at 190 g ^{235}U with minimum enrichments of 19 and 40 wt % ^{235}U, respectively. The design basis fuel parameters are provided in Table 5.1.1-1. The fuel characteristics are presented in Table 5.1.1-2. As discussed in Section 5, the dose rates produced from the design basis LEU and MEU DIDO fuel are bounded by the HEU DIDO design basis fuel. Therefore, a mixed loading of LEU, MEU and HEU DIDO fuel assemblies is also bounded by a full HEU DIDO fuel assembly loading.

Two GA IFM Fuel Handling Units (packages) are intended for a single shipment in the NAC-LWT. The first package is composed of Reduced-Enrichment Research and Test Reactor (RERTR) type fuel, which is an Incoloy clad TRIGA fuel. The second is composed of High-Temperature Gas-Cooled Reactor (HTGR) type fuel. Each set of IFM is packaged into stainless steel weld-encapsulated primary and secondary enclosures. Design basis fuel parameters are summarized in Table 5.1.1-1, with fuel characteristics presented in Table 5.1.1-2. Design basis source terms are provided in Table 5.1.1-3. NAC-LWT combined dose rates for GA IFM are bounded by the dose rates for PWR fuel shown in Table 5.1.1-4 through Table 5.1.1-6.

An inventory of up to 300 production TPBARs (of which three can be prefailed) is intended for multiple shipments in the NAC-LWT. A separate content condition is for the transport of up to 55 segmented TPBARs and associated segmentation debris from PIE contained in a waste container. Each TPBAR is a Type 316 stainless steel rod with a 0.381-inch outer diameter and a 0.336-inch inner diameter and a post-irradiation length of approximately 154 inches. Tritium is produced by irradiation of ^{6}Li. Design basis fuel parameters are summarized in Table 5.1.1-1 with characteristics presented in Table 5.1.1-2. Design basis source terms are provided in Table 5.1.1-3. NAC-LWT dose rates for the payloads of up to 300 production TPBARs in a consolidation canister, or up to 55 segmented TPBARs in the waste container, are bounded by the dose rates for PWR fuel shown in Table 5.1.1-4 through Table 5.1.1-6.
Source terms for the high burnup PWR and BWR rods are developed using the SCALE SAS2H code package. Cask dose rates are evaluated using the SCALE SAS1 shielding analysis sequence. Results presented in Section 5.3.8 give the required cool time for PWR and BWR

rods as a function of burnup for up to 25 intact fuel rods loaded in the NAC-LWT rod holder. The results presented in Sections 5.3.11 and 5.3.12 demonstrate that dose rate limits are met for the shipment of fuel rods in an irradiated fuel assembly lattice and damaged fuel rods in a rod holder, respectively.

Source terms for the 62,500 MWd/MTHM MOX rods, and the UO_2 rods evaluated in the same section, are developed using the SCALE 5.0 SAS2H code package. Source terms were conservatively calculated for a 70,000 MWd/MTHM burnup. Cask dose rates are evaluated using the MCNP5 Monte Carlo code. Results presented in Section 5.3.17 require the MOX and UO_2 rods to be cooled 90 days prior to shipment (low quality, power grade, MOX fuel requires 120 days to meet heat load limits, but produces dose rates below limits at 90 days).

As can be seen from Table 5.1.1-3, the PWR fuel assembly has the largest source terms and was used as the design basis fuel for shielding analysis of PWR and BWR fuel in the NAC-LWT presented in this section. The metallic fuel shielding analysis is presented in Section 5.3.3. Metallic fuel is shipped with the neutron shield drained and the analysis reflects this. The MTR fuel shielding analysis is presented in Section 5.3.4. The design basis source terms for 25 PWR rods at 60,000 MWd/MTU are well below the design basis PWR fuel assembly. However, the self shielding of 25 PWR rods is less than the 204 rod design basis PWR fuel assembly. Thus, a shielding evaluation of 25 design basis PWR rods is presented in Section 5.3.5. Similarly, the self shielding for either the 25 high burnup PWR or BWR rods at 80,000 MWd/MTU is lower than that of the design basis assemblies. Shielding evaluations for these rods are presented in Sections 5.3.8, 5.3.11 and 5.3.12.

The transport of up to 140 TRIGA fuel elements is evaluated in Section 5.3.6. TRIGA fuel is a solid metal hydride, U-ZrH and may be high enriched (nominal 70 or 93 wt % ^{235}U), or low enriched (nominal 20 wt % ^{235}U). The fuel clad is either aluminum or stainless steel. TRIGA fuel is fabricated in several configurations, as described in Section 1.2.3.1, that vary in weight, active fuel length and overall length. The typical fuel element length and weight is 28.3 inches and 8.82 pounds. The fuel follower control rod element (FFCR) establishes the upper bound weight (13.2 pounds) and length (approximately 45 inches). These elements can only be loaded in the top module of the TRIGA fuel basket. The design basis TRIGA fuel parameters are presented in Table 5.1.1-1 and Table 5.1.1-2. Source term characteristics are presented in Table 5.1.1-3. Cooling time for TRIGA fuel is variable, down to a minimum of 90 days, based on the time required for the decay heat to reach 7.5 watts.

In addition, the transport of TRIGA fuel cluster rods is evaluated in Section 5.3.7. These rods are obtained from the disassembly of the 5×5 (25 rod) arrays comprising the cluster-type TRIGA fuel as shown in Figure 1.2-6. Only the shipment of the fuel cluster rods is analyzed here; no

other activated components of the TRIGA cluster assembly are considered for shipment in this analysis. The TRIGA fuel cluster rod is considered to contain a maximum design-basis fuel mass of 50.5 g of U (evaluated at 92 wt % ^{235}U) for HEU cluster rods and 289.4 g of U (19 wt % ^{235}U) for LEU elements. Both elements are modeled with a nominal H to Zr ratio of 1.6. A manufacturing tolerance produced H to Zr ratio of 1.7 is evaluated in Chapter 6 for criticality. The manufacturing tolerances have no significant effect on the shielding evaluations. The HEU fuel contains 10 wt % uranium in the U-ZrH_x fuel meat, while the LEU material contains 45 wt % uranium. The rods are clad in Incoloy 800 and contain upper and lower stainless steel end plugs with a mass of approximately 60.5 g each. For shipment, each rod is placed inside an aluminum tube (ID 0.625 in, OD 0.750 in), with 16 rods occupying each LWT basket opening for a total of up to 112 rods per basket or 560 rods per cask.

The basis for the dose rate evaluation of the TRIGA fuel cluster rods is a source term and one-dimensional shielding analysis in which the minimum cooling time required for the dose rates produced by the TRIGA fuel cluster rods to fall below the dose rates produced by the design basis TRIGA fuel elements. Cooling time results are determined at a large number of fuel burnup values (at approximately every 2.5% increment in ^{235}U depletion).

PULSTAR fuel elements are zirconium alloy-clad UO_2 pellets with a physical design characteristic as listed in Table 5.1.1-1 and Table 5.1.1-2. PULSTAR fuel assemblies are a 5×5 rectangular array of elements surrounded by a zirconium alloy box, with aluminum upper and lower fittings. The element pitch is nominally 0.524×0.606 inch. PULSTAR fuel elements are analyzed at a loading of 32 grams ^{235}U per element, an initial enrichment of 6 wt % ^{235}U, and 45% ^{235}U burnup. For conservatism, a cool time of one year from discharge is employed in the shielding analysis; a cool time of at least 1.5 years is required to meet the basket cell heat load limit of 30 W. Source term characteristics are presented in Table 5.1.1-3.

Spiral fuel assemblies typically consist of 10 curved plates (also referred to as elements) of metallic U-Al fuel meat that is aluminum clad. The fuel elements are held in a spiral arrangement between an inner and outer aluminum cylinder to form a fuel assembly. The active fuel region is typically 60.325 cm in height, and the fuel meat is typically 0.061 cm thick. The elements are nominally enriched to 80 wt % ^{235}U and were conservatively evaluated at 75 wt % ^{235}U. Maximum fuel loading per assembly is evaluated at 160 g ^{235}U. The design basis fuel parameters are provided in Table 5.1.1-1. The fuel characteristics are presented in Table 5.1.1-2. Applying MEU DIDO fuel assembly minimum cool time curves, which are based on a 40 wt % ^{235}U enriched 190 g ^{235}U fuel assembly, to the spiral fuel elements produces source terms that are bounded by the DIDO MEU fuel. Given similar basket designs, the dose rates produced by the spiral fuel elements are bounded by the MEU DIDO evaluation set.

MOATA fuel bundles consist of a maximum of 14 flat MTR type fuel plates. The fuel plates are composed of a metallic U-Al fuel meat that is aluminum clad. The fuel elements are held in place with aluminum outer plates and pins through the top and bottom of the plate stack in their shipment configuration. The plates are held in a typical MTR plate (12 plates per assembly) with a comb side plate configuration during reactor operations. The active fuel region is typically 58.4 cm in height, and the fuel meat is typically 0.1016-cm thick. The elements are nominally enriched to 90 wt % ^{235}U and were conservatively evaluated at 80 wt % ^{235}U. Maximum fuel loading per plate is evaluated at 25 g ^{235}U (nominal loading is 22 g ^{235}U). The design basis fuel parameters are provided in Table 5.1.1-1. The fuel characteristics are presented in Table 5.1.1-2. The gamma radiation source for the 14 fuel plate bundle is approximately 2% of the DIDO MEU assembly. Since the basket designs are similar, the dose rates produced by the plate bundle are bounded by the MEU DIDO evaluation set.

A payload of up to 18 NRU or up to 18 NRX assemblies is analyzed in Section 5.3.21. NRU fuel assemblies are 12 fuel pins arranged in an annular configuration (9 outer pins, 3 inner). The NRU reactor was operated with HEU fuel (93.2 wt % ^{235}U) until 1992 when it was converted to LEU (19.75 wt % ^{235}U). The NRU fuel consists of either U-Al (HEU) or U_3-Si-Al (LEU) with aluminum clad. The HEU NRU fuel has been analyzed for a loading of 43.7 g ^{235}U per pin at a minimum enrichment of 91.0 wt % ^{235}U. The LEU NRU fuel has been analyzed for a loading of 43.7 g ^{235}U per pin at a minimum enrichment of 19.0 wt % ^{235}U. NRX fuel assemblies are 7 fuel pins arranged in an annular configuration (6 outer pins, 1 central pin). The NRX reactor was operated with HEU fuel (93.1 wt % ^{235}U) until shutdown in 1993. The NRX fuel consists of U-Al alloy with aluminum clad. The NRX fuel has been analyzed for a loading of 79.2 g ^{235}U per pin at a minimum enrichment of 91.0 wt % ^{235}U.

The HEUNL material consists of highly enriched uranyl nitrate, various other nitrates, and water. An inventory of gamma-emitting radionuclides is used with the actinide and nitrate contents to calculate gamma and neutron source terms. A bounding HEUNL volume of 64.3 L (17.0 gal) per container is applied for the source strength (due to void volume in the container that allows HEUNL thermal expansion, actual container capacity is less). The design basis material parameters are provided in Table 5.1.1-1. The material characteristics are presented in Table 5.1.1-2. Source terms are presented in Table 5.1.1-3.

A payload up to 800 SLOWPOKE fuel elements contained in SLOWPOKE fuel canisters is evaluated in Section 5.3.20. Up to 100 fuel elements are placed in a SLOWPOKE fuel canister with up to four canisters placed into an MTR-28 basket module. The top two basket modules may contain SLOWPOKE fuel canisters. SLOWPOKE fuel elements are U-AL alloy and HEU.

A conservative 90 wt% ^{235}U enrichment is evaluated with a maximum U mass of 3.1 gram per rod. Maximum burnup is 30 GWd/MTU or 4.5% ^{235}U depletion.

A payload of 1 SLOWPOKE fuel core is analyzed in Section 5.3.23. The fuel core contains up to 298 SLOWPOKE fuel elements (rods). The core is placed in a SLOWPOKE fuel core basket which is placed on a stack of empty intermediate and bottom MTR-42 basket modules which serve as spacers. A maximum ^{235}U mass of 2.81 g per rod is evaluated. Fuel core ^{235}U content evaluated is 837 gram at a core average depletion of 2.12 % ^{235}U.

A payload of Booster rods, EFN (Enriched Fast Neutron) rods, or Mo-99 ("Moly") targets is analyzed in Section 5.3.24. The rods/targets are placed in the NRU/NRX caddy. Small fragments require the use of a caddy. The rods/targets are U-Al alloy and HEU. A 91 wt % U-235 enrichment is evaluated for each rod/target and each has a unique weight, U-235 depletion percentage, and minimum cool time per rod/target.

A payload of two BUP-500 capsules or 18 WESF capsules is analyzed in Section 5.3.25. Each payload type has a unique basket structure that is loaded within the PWR basket. Each payload type has a maximum strontium-90 activity, which is converted into a gamma energy spectrum for evaluation in MCNP. The design basis material parameters are provided in Table 5.1.1-1. Source terms are presented in Table 5.1.1-3.

A payload of three UCS assemblies with six WESF capsules per UCS is analyzed in Section 5.3.27. The UCS payload has a unique basket structure that is loaded within the PWR basket. The payload has a maximum strontium-90 activity, which is converted into a gamma energy spectrum for evaluation in MCNP. The design basis material parameters are provided in Table 5.1.1-1. Source terms are presented in Table 5.1.1-3.

The shield materials are selected and arranged to minimize cask weight while maintaining overall shield effectiveness. Lead and steel are chosen as effective gamma radiation shields, and a water tank on the outside of the cask is provided to efficiently moderate and absorb the neutron radiation.

The total neutron and gamma dose rates calculated for the normal operations conditions are shown in Table 5.1.1-4. Note that the maximum dose rate is on the cask lid surfaces at the top end of the cask and does not exceed the design limit of 200 mrem/hour for the surface of the cask. The 10 CFR 71 limits of 10 mrem/hour at two meters from the cask surface and the design limit of 200 mrem/hour on the cask surface are met. Table 5.1.1-4 contains the total dose rates for the hypothetical accident conditions. These dose rates are well under the 49 CFR 173 limit of 1000 mrem/hour at one meter from the cask surface. The dose rates for the lead slump accident are shown in Table 5.1.1-5. These dose rates show that even with the lead slumped, the hypothetical accident dose rate limits have not been exceeded and the cask is safe for transport.

The cask surface fuel centerline normal operations and hypothetical accident dose rates calculated include neutrons and gammas originating from the fuel, neutrons and gammas scattered from the ground and secondary gammas resulting from neutron capture in the neutron shield. All of the other dose locations also include the contribution from the ^{60}Co in the end-fittings.

Table 5.1.1-1 Type, Form, Quantity and Potential Sources of Design Basis Fuel

Fuel Type	-	PWR, Assembly
	-	3.7 wt % ^{235}U maximum initial enrichment
	-	35,000 MWd/MTU maximum burnup
	-	2.5 kW per assembly maximum decay heat
	-	2 years (or more) decay time after reactor discharge
Fuel Form	-	Intact assemblies
Quantity	-	1 design basis fuel assembly
Source of Fuel	-	Commercial PWR nuclear power reactors
Transport Index	-	35
Fuel Type	-	BWR, Assembly
	-	4.0 wt % ^{235}U maximum initial enrichment
	-	30,000 MWd/MTU maximum burnup
	-	1.1 kW per assembly maximum decay heat, 2.2 kW per cask for 2 assemblies
	-	2 years (or more) decay time after reactor discharge
Fuel Form	-	Intact assemblies
Quantity	-	2 design basis fuel assemblies
Source of Fuel	-	Commercial BWR nuclear power reactors
Transport Index	-	35
Fuel Type		High Burnup PWR or BWR rods
	-	5.0 wt % maximum ^{235}U initial enrichment
	-	80,000 MWd/MTU maximum average burnup
	-	2.3 kW /cask maximum decay heat
	-	Minimum cool time dependent on burnup (See Table 5.3.8-29. An additional 90 days cool time is required when loading steel/iron clad, e.g. FeCrAl type alloy materials)
Fuel Form	-	Intact rods in a fuel assembly lattice or rod holder and intact rods with up to 14 fuel rods classified as damaged in a rod holder
Quantity	-	Up to 25
Source of Fuel	-	Commercial PWR or BWR nuclear power reactor
Transport Index	-	36 (intact rods) 28 (intact rods in a fuel assembly lattice) 37 (intact rods with 14 rods classified as damaged) 37 (intact rods with 14 steel/iron clad rods considered damaged within the analysis)
Fuel Type	-	Uranium metal fuel rods
	-	Natural wt % ^{235}U
	-	1,600 MWd/MTU maximum burnup
	-	0.0357 kW per sound rod maximum decay heat, 0.54 kW per cask for 15 sound fuel rods
	-	1 year (or more) decay time after reactor discharge
Fuel Form	-	Intact or encapsulated failed fuel rods
Quantity	-	15 design basis fuel rods, or 6 design basis failed fuel rods
Source of Fuel	-	Research reactors
Transport Index	-	25

Table 5.1.1-1 Type, Form, Quantity and Potential Sources of Design Basis Fuel (Continued)

Fuel Type	-	Material Test Reactor (MTR) Fuel Elements
	-	HEU: 90 wt % ^{235}U, Maximum burnup variable up to 660,000 MWd/MTU for 380 g ^{235}U and 577,500 MWd/MTU for 460 g ^{235}U
	-	MEU: 40 wt % ^{235}U, Maximum burnup variable up to 293,300 MWd/MTU for 380 g ^{235}U
	-	LEU: 19 wt % ^{235}U, Maximum burnup variable up to 139,300 MWd/MTU for 470 g ^{235}U, 490 g ^{235}U and 640 g ^{235}U
	-	210 W per basket decay heat
	-	Variable cool time down to 90 days using the procedure in Section 7.1.5
Fuel Form	-	Intact aluminum clad parallel plates
Quantity	-	Up to 42 fuel elements
Source of Fuel	-	Research and Material Test Reactors
Transport Index	-	45
Fuel Type	-	TRIGA Fuel Element
	-	Nominal 20 to 93 wt % ^{235}U
	-	80% ^{235}U depletion (approximately 151 GWd/MTU for LEU fuel, and 460 GWd/MTU for 70 wt % ^{235}U HEU fuel, and 583 GWd/MTU for 93 wt % ^{235}U HEU fuel)
	-	7.5 watts per element decay heat
	-	Variable cool time down to 90 days
Fuel Form	-	Aluminum or stainless steel (304) clad rods, intact, failed or as debris
Quantity	-	Up to 140 fuel elements
Source of Fuel	-	Test, Research and Isotope Reactors
Transport Index	-	25
Fuel Type	-	HEU and LEU TRIGA Fuel Cluster Rods
	-	Minimum 92 wt % ^{235}U (HEU) and minimum 19 wt % ^{235}U (LEU)
	-	80% ^{235}U depletion (approximately 600 GWd/MTU for HEU and approximately 140 GWd/MTU for LEU)
	-	1.875 watts per rod decay heat
	-	Variable cool time down to 90 days
Fuel Form	-	Incoloy 800 clad damaged or undamaged rods
Quantity	-	Up to 560 fuel rods
Source of Fuel	-	Test, Research and Isotope Reactors
Transport Index	-	17.9
Fuel Type	-	DIDO Fuel Assemblies
	-	HEU: 90 wt % ^{235}U, Maximum burnup variable up to 577,460 MWd/MTU or 70% ^{235}U depletion
	-	MEU: 40 wt % ^{235}U, Maximum burnup variable up to 256,650 MWd/MTU or 70% ^{235}U depletion
	-	LEU: 19 wt % ^{235}U, Maximum burnup variable up to 121,910 MWd/MTU or 70% ^{235}U depletion
	-	175 or 126 W per basket decay heat
	-	Variable cool time down to 180 days using the procedure in Section 7.1.4

Table 5.1.1-1 Type, Form, Quantity and Potential Sources of Design Basis Fuel (Continued)

Fuel Form	-	Intact aluminum clad concentric fuel tubes
Quantity	-	Up to 42 fuel assemblies
Source of Fuel	-	Research Reactors
Transport Index	-	40.1
Fuel Type	-	General Atomics (GA) Irradiated Fuel Material (IFM)
	-	RERTR (see activity inventory in Table 5.3.10-1)
	-	HTGR (see activity inventory in Table 5.3.10-1)
	-	<13.05 W
	-	Transport after 1/1/96
Fuel Form	-	RERTR: 13 intact TRIGA elements, 7 sectioned elements
	-	HTGR: Spherical loose fuel particles, cylindrical fuel rods, 2 fuel pebbles
Quantity	-	1 Fuel Handling Unit holding RERTR IFM and 1 Fuel Handling Unit holding HTGR IFM
Source of Fuel	-	Research reactors, commercial LWR reactors
Transport Index	-	<1
Maximum Activity	-	3,403 Ci
Material Type	-	Tritium Producing Burnable Absorber Rods (TPBARs)
	-	3.54 W/TPBARs; 1.063 kW total[1] (max. for 300 TPBARs)
	-	30 days minimum cool time
Material Form	-	Type 316 stainless steel clad TPBARs
Quantity	-	Up to 300 TPBARs (of which three can be prefailed) in consolidation canister
	-	Up to 25 TPBARs (of which three can be prefailed) in rod holder
Source of Material	-	Commercial LWR reactors
Transport Index	-	22
Maximum Activity	-	12,800 Ci/TPBAR; 3,840,000 Ci total[2] (max. for 300 TPBARs)
Material Type	-	Tritium Producing Burnable Poison Rods (TPBARs)
	-	3.54 W/TPBAR, 195 W total
	-	90 days
Material Form	-	Type 316 stainless steel clad TPBARs segmented for PIE
Quantity	-	Up to 55 segmented TPBARs
Source of Material	-	Commercial LWRs
Transport Index	-	22[2]
Maximum Activity	-	12,000 Ci/TPBAR, 665,500 Ci total

[1] Conservatively calculated for 30-day minimum cooling time. Actual minimum cooling period for thermal requirements is 90 days.

[2] Conservatively applied 300 TPBAR shipment transport index.

Table 5.1.1-1 Type, Form, Quantity and Potential Sources of Design Basis Fuel (Continued)

Fuel Form	-	Intact aluminum clad concentric fuel tubes
Quantity	-	Up to 42 fuel assemblies
Source of Fuel	-	Research Reactors
Transport Index	-	40.1
Fuel Type	-	General Atomics (GA) Irradiated Fuel Material (IFM)
	-	RERTR (see activity inventory in Table 5.3.10-1)
	-	HTGR (see activity inventory in Table 5.3.10-1)
	-	<13.05 W
	-	Transport after 1/1/96
Fuel Form	-	RERTR: 13 intact TRIGA elements, 7 sectioned elements
	-	HTGR: Spherical loose fuel particles, cylindrical fuel rods, 2 fuel pebbles
Quantity	-	1 Fuel Handling Unit holding RERTR IFM and 1 Fuel Handling Unit holding HTGR IFM
Source of Fuel	-	Research reactors, commercial LWR reactors
Transport Index	-	<1
Maximum Activity	-	3,403 Ci
Material Type	-	Tritium Producing Burnable Absorber Rods (TPBARs)
	-	3.54 W/TPBARs; 1.063 kW total[1] (max. for 300 TPBARs)
	-	30 days minimum cool time
Material Form	-	Type 316 stainless steel clad TPBARs
Quantity	-	Up to 300 TPBARs (of which three can be prefailed) in consolidation canister
	-	Up to 25 TPBARs (of which three can be prefailed) in rod holder
Source of Material	-	Commercial LWR reactors
Transport Index	-	22
Maximum Activity	-	12,800 Ci/TPBAR; 3,840,000 Ci total[2] (max. for 300 TPBARs)
Material Type	-	Tritium Producing Burnable Poison Rods (TPBARs)
	-	3.54 W/TPBAR, 195 W total
	-	90 days
Material Form	-	Type 316 stainless steel clad TPBARs segmented for PIE
Quantity	-	Up to 55 segmented TPBARs
Source of Material	-	Commercial LWRs
Transport Index	-	22[2]
Maximum Activity	-	12,000 Ci/TPBAR, 665,500 Ci total

[1] Conservatively calculated for 30-day minimum cooling time. Actual minimum cooling period for thermal requirements is 90 days.

[2] Conservatively applied 300 TPBAR shipment transport index.

Table 5.1.1-1 Type, Form, Quantity and Potential Sources of Design Basis Fuel (Continued)

Fuel Type	-	PULSTAR Fuel Elements
	-	6 wt % ^{235}U
	-	32 grams ^{235}U per element
	-	45% ^{235}U depletion (burnup)
	-	210 W per basket decay heat (30 watts per basket cell) × 4 = 840W Minimum cool time from discharge of 1.5 years[3]
Fuel Form	-	Intact assemblies; intact elements in fuel rod insert; canned intact or failed elements
Quantity	-	Up to 700 elements (25 elements per cell)
Sources of Fuel	-	Research reactors
Transport Index	-	25
Fuel Type	-	Spiral Fuel Assemblies
	-	75 wt % ^{235}U, maximum burnup variable up to 70% ^{235}U depletion
	-	18 W per assembly , 126 W per basket (at given cool time and burnup limits, maximum heat load is 15.7 W per assembly or 110 W per basket) Variable cool time down to 270 days using the procedure in Section 7.1.4 for 18 W DIDO MEU fuel
Fuel Form	-	Intact aluminum clad fuel plates within concentric aluminum inner and outer shells
Quantity	-	Up to 42 fuel assemblies
Sources of Fuel	-	Research reactors
Transport Index	-	40.1 (applied bounding MEU DIDO limit)
Fuel Type	-	MOATA Plate Bundles
	-	80 wt % ^{235}U, maximum burnup variable up to a 30,000 MWd/MTU or 4.1% ^{235}U depletion
Fuel Form	-	Intact aluminum-clad fuel plates
Quantity	-	Up to 42 bundles
Sources of Fuel	-	Research reactors
Transport Index	-	40.1 (applied bounding MEU DIDO limit)
Fuel Type	-	PWR MOX or UO_2 rods (including up to 9 BPRAs)
	-	5.0 wt % maximum ^{235}U initial enrichment for UO_2 rods 7.0 wt % fissile Pu for MOX rods
	-	62,500 MWd/MTHM maximum average burnup
	-	2.3 kW/cask maximum decay heat
	-	Minimum cool time 90 days (120 days for Power Grade MOX)
Fuel Form	-	Undamaged rods in a rod holder
Quantity	-	Up to 16 (any combination of UO_2 or MOX) fuel rods plus up to 9 BPRAs
Source of Fuel	-	Commercial PWR nuclear power reactor
Transport Index	-	28

[3] Conservatively evaluated at a one-year cool time and 38 watts per basket cell.

Table 5.1.1-1 Type, Form, Quantity and Potential Sources of Design Basis Fuel (Continued)

Fuel Type	-	NRU HEU Fuel Assemblies
	-	91.0 wt % minimum ^{235}U initial enrichment
	-	364 MWd maximum burnup (approximately 87.4% ^{235}U depletion)
	-	162 W/cask maximum decay heat
	-	Minimum cool time 19 years
Fuel Form	-	Undamaged or collapsed assemblies
Quantity	-	Up to 18 fuel assemblies
Source of Fuel	-	NRU reactor
Transport Index	-	2.3
Fuel Type	-	NRU LEU Fuel Assemblies
	-	19.0 wt % minimum ^{235}U initial enrichment
	-	363 MWd maximum burnup (approximately 83.6% ^{235}U depletion)
	-	641 W/cask maximum decay heat
	-	Minimum cool time 3 years
Fuel Form	-	Undamaged or collapsed assemblies
Quantity	-	Up to 18 fuel assemblies
Source of Fuel	-	NRU reactor
Transport Index	-	30.8
Fuel Type	-	NRX Fuel Assemblies
	-	91.0 wt % minimum ^{235}U initial enrichment
	-	85.1% ^{235}U maximum depletion (at reactor power of 42 MW)
	-	171 W/cask maximum decay heat
	-	Minimum cool time 18 years
Fuel Form	-	Undamaged or collapsed assemblies
Quantity	-	Up to 18 fuel assemblies
Source of Fuel	-	NRX reactor
Transport Index	-	3.0
Type	-	HEUNL
	-	9.0 Ci/L Curie content for gamma-emitting inventory
Form	-	HEUNL material in HEUNL container
Quantity	-	4 HEUNL containers
Source	-	Radioisotope Production
Transport Index	-	1.5
Fuel Type	-	SLOWPOKE Fuel Rods (in Canister)
	-	90.0 wt % minimum ^{235}U initial enrichment
	-	4.5% ^{235}U maximum depletion (30 GWd/MTU)
	-	2.17 W/cask maximum decay heat
	-	Minimum cool time 14 years
Fuel Form	-	Undamaged or damaged, including debris
Quantity	-	Up to 800
Source of Fuel	-	SLOWPOKE reactor
Transport Index	-	1

Table 5.1.1-1 Type, Form, Quantity and Potential Sources of Design Basis Fuel (Continued)

Fuel Type	-	SLOWPOKE Fuel Core (up to 298 fuel rods)
	-	90.0 wt % minimum ^{235}U initial enrichment
	-	2.1% ^{235}U maximum depletion
	-	56.6 W/cask maximum decay heat
	-	Minimum cool time 2 weeks
Fuel Form	-	Undamaged
Quantity	-	1 (One)
Source of Fuel	-	SLOWPOKE reactor
Transport Index	-	15.2
Fuel Type	-	Short Moly Targets
	-	91.0 wt % minimum ^{235}U initial enrichment
	-	94.8% maximum ^{235}U depletion
	-	0.3 W/caddy maximum decay heat
	-	Minimum cool time 38 years
Fuel Form	-	Undamaged or collapsed/damaged
Quantity	-	Up to 20 targets per caddy; up to 18 caddies per Cask
Source of Fuel	-	NRU reactor
Transport Index	-	2.3
Fuel Type	-	Double length Moly targets
	-	91.0 wt % minimum ^{235}U initial enrichment
	-	30.4% maximum ^{235}U depletion
	-	0.8 W/caddy maximum decay heat
	-	Minimum cool time 8 years
Fuel Form	-	Undamaged or collapsed/damaged
Quantity	-	Up to 36 targets per caddy; up to 18 caddies per Cask
Source of Fuel	-	NRU reactor
Transport Index	-	2.3
Fuel Type	-	EFN Rods
	-	91.0 wt % minimum ^{235}U initial enrichment
	-	87.4% maximum ^{235}U depletion
	-	8 W/caddy maximum decay heat
	-	Minimum cool time 23 years
Fuel Form	-	Undamaged or collapsed/damaged
Quantity	-	Up to 36 rods per caddy; up to 18 caddies per Cask
Source of Fuel	-	NRU reactor
Transport Index	-	2.3

Table 5.1.1-1 Type, Form, Quantity and Potential Sources of Design Basis Fuel (Continued)

Fuel Type	-	Booster Rods
	-	91.0 wt % minimum ^{235}U initial enrichment
	-	2.9% maximum ^{235}U depletion
	-	0.2 W/caddy maximum decay heat
	-	Minimum cool time 37 years
Fuel Form	-	Undamaged or collapsed/damaged
Quantity	-	Up to 16 rods per caddy; up to 18 caddies per Cask
Source of Fuel	-	Gentilly-1 reactor
Transport Index	-	2.3



Fuel Type	-	LANL MOX Fuel Rods
	-	Maximum 25W per cask
Fuel Form	-	Rods
Quantity	-	Up to 16 transfer tubes
Transport Index	-	1 (based on estimated cask surface dose rates)
Fuel Type	-	WESF Capsules in UCS assemblies
	-	59,000 Ci of ^{90}Sr per capsule
	-	400 W/capsule maximum decay heat
Fuel Form	-	Undamaged
Quantity	-	Up to 18 capsules per Cask, six per UCS
Source of Fuel	-	Hanford
Transport Index	-	1.5

Table 5.1.1-2 Design Basis Fuel for Shielding Evaluation

Parameter	PWR	BWR	Metallic	MTR (HEU)	MTR (MEU)	MTR (LEU)	DIDO
Assembly Array	15 × 15	7 × 7	N/A	Parallel Plates	Parallel Plates	Parallel Plates	Fuel Tubes
Assembly or Element Weight (lbs)	1650	750	1805 (15 rods)	13.0 (max)	13.0 (max)	13.0 (max)	15.0 (max)
Assembly/Element/Rod Length (in)	162	176	120.5	25.23[5]	26.14[5]	26.14[5]	24.6
Active Fuel Length (in)	144	144	120.0	24.80	25.59	25.59	23.6
No. Rods per Assembly	204	49	N/A	N/A	N/A	N/A	N/A
No. of Plates per Element	N/A	N/A	N/A	23	23	23	4
Fuel Rod Diameter/Plate Thickness (in)	0.422	0.563	1.36	0.050	0.050	0.050	0.059
Clad Material	Zr-4	Zr-4	Al	Al	Al	Al	Al
Clad Thickness (in)	0.0243	0.032	0.080	0.0150	0.0150	0.0150	0.0167
Pellet Diameter/Meat Thickness (in)	0.3659	0.487	1.36	0.020	0.020	0.020	0.026
Fuel Material	UO_2	UO_2	U metal	U_3O_8-Al; U-Al; or U_3Si_2-Al	U_3O_8-Al; U-Al; or U_3Si_2-Al	U_3O_8-Al; U-Al; or U_3Si_2-Al	U_3O_8-Al; U-Al; or U_3Si_2-Al
Percent Theoretical Density	95	95	100	N/A	N/A	N/A	N/A
Enrichment (wt % ^{235}U)	3.7	4.0	Natural	90[8]	40[8]	19[8]	90 (HEU) 400 (MEU) 199 (LEU)
Maximum Average Burnup (MWd/MTU)	35,000	30,000	1,600	Variable up to 660,000[2,9]	Variable up to 293,300[2]	Variable up to 139,300[2]	Variable up to 577,460 (HEU) 256,650 (MEU) 121,910 (LEU)
Minimum Cool Time	2 Years	2 Years	1 Year	Variable down to 90 days[2]	Variable down to 90 days[2]	Variable down to 90 days[2]	Variable down to 180 days[10]
U Weight (kg/assembly)	475	198	N/A	N/A	N/A	N/A	N/A
U Weight (kg/element)	N/A	N/A	54.5	0.422 0.511	0.950	3.3684	0.2111 (HEU) 0.4750 (MEU) 1.0000 (LEU)
UO_2 Weight (kg/assembly)	538.9	224.3	N/A	N/A	N/A	N/A	N/A

Notes:

1. Up to 2 of the PWR rods may have a maximum average burnup of 65,000 MWd/MTU.
2. Variable cool time down to 90 days using the procedure in Section 7.1.4.
3. Design Basis normal condition source term is for ACPR fuel with 86,100 MWd/MTU (50% ^{235}U depletion) and accident condition source term is for FLIP-LEU-II with 151,100 MWd/MTU (80% ^{235}U depletion).
4. Detailed fuel data is presented in Tables 1.2-1 and 6.2.5-1. The values presented here are the physical values for the bounding source terms of the ACPR and FLIP-LEU-II fuel types.
5. For MTR fuel assemblies, which are cut to remove non-fuel bearing hardware prior to transport, a nominal 0.28 inch of nonfuel hardware will remain above and below the active fuel region to allow for fuel handling operations
6. Minimum cool time varies with burnup such that maximum decay heat is 1.875 watts/rod.
7. Varies with burnup – see Table 5.3.8-29.
8. For the shielding evaluation, lower values are conservatively assumed.
9. Maximum burnup of 660,000 MWd/MTU for 380 g ^{235}U and 577,500 MWd/MTU for 460 g ^{235}U.
10. Variable cool time down to 180 days using the procedure in Section 7.1.4.

Table 5.1.1-2 Design Basis Fuel for Shielding Evaluation (Continued)

Parameter	PWR Rods	High B/U PWR Rods	High B/U BWR Rods	PWR MOX/UO_2 Rods	TRIGA[4]	TRIGA Fuel Cluster Rods	TPBARs
Assembly Array	N/A	N/A	N/A	N/A	N/A	N/A	N/A
Assembly or Element Weight (lbs)	N/A	N/A	N/A	N/A	8.82 (nominal) 13.2 (max)		2.655
Assembly/Element/Rod Length (in)	162	162	176.1	162	45	31.0	153.035 (pre-irradiation)
Active Fuel Length (in)	144	150	150	153.5	15	22	N/A
No. Rods per Assembly per Shipment	25	25	25	16	1	1	300 Production or 55 Segmented
No. of Plates per Element	N/A	N/A	N/A	N/A	N/A	N/A	N/A
Fuel Rod Diameter/Plate Thickness (in)	0.422	0.440	0.570 (7×7) 0.4961 (other)	0.440	1.478	0.542	0.381
Clad Material	Zr-4	Zr-4	Zr-2	Zirc Alloy	304SS	Incoloy 800	316 SS
Clad Thickness (in)	0.242	0.026	0.036 (7×7) 0.0343 (other)	0.026	0.02	0.016	0.0225
Pellet Diameter/Meat Thickness (in)	0.3659	0.3805	0.4900 (7×7) 0.4213 (other)	0.3805	1.435 (max)	0.510	N/A
Fuel Material	UO_2	UO_2	UO_2	UO_2 – PuO_2/ UO_2	U-ZrH	U-ZrH	N/A
Percent Theoretical Density	97	95	95	95	95	95	N/A
Enrichment (wt % ^{235}U)	5.0	5.0	5.0	5.0 (UO_2) 7.0 fissile Pu (MOX))	20	92 (HEU) 19 (LEU)	N/A
Maximum Average Burnup (MWd/MTHM)	60,000[1]	80,000	60,000 – 80,000	62,500	ACPR 86,100 (50% ^{235}U)[3] FLIP-LEU-II 151,100 (80% ^{235}U)[3]	Variable up to 600,000 (HEU) Variable up to 140,000 (LEU)	N/A
Minimum Cool Time	150 days	Varies with burnup[7]	Varies with burnup[7]	90 days (Power Grade MOX – 120 days)	ACPR 231 days FLIP-LEU-II 908 days	Varies with burnup[6]	30 days for production TPBAR; 90 days for PIE TPBAR
U Weight (kg/assembly)	58.2	65.6	108.8 (7×7) 91.3 (other)	N/A	N/A	N/A	N/A
HM Weight (kg/element)	N/A	N/A	N/A	2.63[11]	ACPR 0.280 FLIP-LEU-II 0.824	0.0505 (HEU) 0.2894 (LEU)	N/A
UO_2 Weight (kg/assembly)	66.0	66.0	74.5	N/A	N/A	N/A	N/A

Notes:
1. Up to 2 of the PWR rods may have a maximum average burnup of 65,000 MWd/MTU.
2. Variable cool time down to 90 days using the procedure in Section 7.1.4.
3. Design Basis normal condition source term is for ACPR fuel with 86,100 MWd/MTU (50% ^{235}U depletion) and accident condition source term is for FLIP-LEU-II with 151,100 MWd/MTU (80% ^{235}U depletion).
4. Detailed fuel data is presented in Tables 1.2-1 and 6.2.5-1. The values presented here are the physical values for the bounding source terms of the ACPR and FLIP-LEU-II fuel types.
5. For MTR fuel assemblies, which are cut to remove nonfuel-bearing hardware prior to transport, a nominal 0.28 inch of nonfuel hardware will remain above and below the active fuel region to allow for fuel handling operations.
6. Minimum cool time varies with burnup such that maximum decay heat is 1.875 watts/rod.
7. Varies with burnup – see Table 5.3.8-29. An additional 90 days cool time is required for steel/iron clad rods. Non-zirconium alloy based fuel clad are considered damaged within evaluation space.
8. For the shielding evaluation, lower values are conservatively assumed.
9. Maximum burnup of 660,000 MWd/MTU for 380 g ^{235}U and 577,500 MWd/MTU for 460 g ^{235}U.
10. Variable cool time down to 180 days using the procedure in Section 7.1.4.
11. Heavy metal weight per rod.

Table 5.1.1-2 Design Basis Fuel for Shielding Evaluation (Continued)

Parameter	GA IFM RERTR	GA IFM HTGR	PULSTAR Fuel	Spiral Fuel Assembly	MOATA Plate Bundle
Assembly Array	N/A	N/A	5×5	Spiral Plates	Parallel Plates
Assembly or Element Weight (lbs)	23.73	23.52	45 (assembly); 1.3 (element)	7.9	13.6[12]
Assembly/Element/Rod Length (in)	29.92	N/A	38 (assembly) 26.2 (element)	63.5 cm	58.4 cm[13]
Active Fuel Length (in)	22.05	N/A	24.1	60.325 cm	58.4 cm
No. Rods per Assembly	13 intact; 7 sectioned	N/A	25	N/A	N/A
No. of Plates per Element	N/A	N/A	N/A	10	maximum 14
Fuel Rod Diameter/Plate Thickness (in)	0.543	N/A	0.47	0.147 cm	0.203 cm
Clad Material	Incoloy	N/A	Zirconium alloy	Al	Al
Clad Thickness (in)	0.031	N/A	0.0185	0.043 cm	N/A
Pellet Diameter/Meat Thickness (in)	0.512	N/A	0.423	0.061 cm	0.1016 cm
Fuel Material	U-ZrH	UC_2; UCO; UO_2; $(Th,U)C_2$; or $(Th,U)O_2$	UO_2	U-Al	U-Al
Percent Theoretical Density	N/A	N/A	94.9% (nominal); 99.5% (analyzed)	N/A	N/A
Enrichment (wt % ^{235}U)	19.7	93.15 (maximum)	6	75	80
Maximum Average Burnup (MWd/MTU)	N/A	N/A	45	70% ^{235}U depletion	30,000 MWd/MTU 4.1% ^{235}U depletion
Minimum Cool Time	None	None	1.0 Year	see MEU DIDO	10 yr
U Weight (kg/assembly)	8.49	0.45	13.33	0.213[14]	0.4375[15]
U Weight (kg/element)	0.42	N/A	0.53	0.0213[16]	0.03125[17]
UO_2 Weight (kg/assembly)	N/A	N/A	15.13	N/A	N/A

Notes: (cont'd)

12. For 14-fuel plate bundle.
13. Not available for in-core configuration. Analysis input restricted to active fuel length.
14. Based on a 160 g ^{235}U fissile material load and listed enrichment.
15. Based on fuel mass per plate multiplied by 14 plates.
16. Based on 10 plates per assembly.
17. Based on 25 g ^{235}U and listed enrichment.

Table 5.1.1-2 Design Basis Fuel for Shielding Evaluation (Continued)

Parameter	NRU HEU	NRU LEU	NRX HEU	HEUNL
Assembly Array	Annular	Annular	Annular	N/A
Assembly or Element Weight (lbs)	15.43 (assembly) 0.849 (pin)	19.06 (assembly) 1.15 (pin)	11.75 (assembly) 1.04 (pin)	N/A
Assembly/Element/Rod Length (in)	115 (cropped)	115 (cropped)	120 (cropped)	N/A
Active Fuel Length (in)	108	108	108	N/A
No. Rods per Assembly	12	12	7	N/A
No. of Plates per Element	N/A	N/A	N/A	N/A
Fuel Rod Diameter/Plate Thickness (in)	0.376	0.376	0.409	N/A
Clad Material	Al	Al	Al	N/A
Clad Thickness (in)	0.03 (clad) 0.127 (fin)	0.03 (clad) 0.127 (fin)	0.03 (clad) 0.127 (fin)	N/A
Pellet Diameter/Meat Thickness (in)	0.216	0.216	0.25	N/A
Fuel Material	U-Al	U_3-Si-Al	U-Al	$UO_2(NO_3)_2$ in solution
Percent Theoretical Density	N/A	N/A	N/A	N/A
Enrichment (wt % ^{235}U)	91	19	91	N/A
Maximum Average Burnup (MWd/MTU)	633,000	132,000	615,000	N/A
Minimum Cool Time	19	3	18	None
U Weight (kg/assembly)	0.576	2.76	0.609	N/A
U Weight (kg/element)	0.048	0.230	0.087	N/A
UO_2 Weight (kg/assembly)	N/A	N/A	N/A	N/A
Max HEUNL Payload per Container	N/A	N/A	N/A	64.3 L (17.0 gal)
HEUNL Density	N/A	N/A	N/A	1.3 g/cc

Table 5.1.1-2 Design Basis Fuel for Shielding Evaluation (Continued)

Parameter	SLOWPOKE Fuel Rods	SLOWPOKE Fuel Core	Short Moly Target	Double Length Moly Targets	EFN Rods	Booster Rods
Assembly Array	N/A	Hex Pitch	Annular	Annular	Annular	Annular
Active Fuel Length (cm)	22	22	6.67	15.88	81.3	210
No. Rods	Up to 100 Per Canister (800 per Cask)	Up to 298	20	36	36	16
Fuel Rod Diameter (cm)	22	22	0.956[1]	0.956[1]	0.701[1]	0.692[1]
Clad Material	Al	Al	Al	Al	Al	Al
Clad Thickness (in)	0.051	0.051	0.202	0.202	0.076	0.152
Fuel Material	U-Al	U-Al	U-Al	U-Al	U-Al	U-Al
Enrichment (wt % ^{235}U)	90	90	91	91	91	91
Maximum Average Burnup (GWd/MTU)	30	N/A	N/A	N/A	N/A	N/A
Maximum Average Depletion (%^{235}U)	4.5	2.12	94.8	30.4	87.4	2.9
Minimum Cool Time	14 Years	2 weeks	38 years	8 years	23 years	37 years
U Weight (gram)	3.1 / Rod	930	24.2	95.4	514.44	318.24
^{235}U Weight (gram)	2.8 / Rod	837	22	86.76	468	289.6

[1]Fuel element diameter without fins

Table 5.1.1-3 Nuclear and Thermal Source Parameters

Payload	Decay Heat (kW)	Gamma Source (g/sec)	Neutron Source (n/sec)	Top End-Fitting (g/sec)	Bottom End-Fitting (g/sec)
1 PWR Assembly	2.5	1.27E+16	2.21E+08	1.49E+13	1.25E+13
2 BWR Assemblies	2.2	1.04E+16	1.34E+08	1.16E+12	2.78E+12
15 Sound Metallic Fuel Rods[2]	0.532	4.37E+15	1.61E+05	N/A	N/A
6 Failed Metallic Fuel Rods[1]	0.03	1.75E+15	6.44E+04	N/A	N/A
42 HEU MTR Elements[3,9]	1.26	7.42E+15	1.40E+08	N/A[15]	N/A[15]
42 MEU MTR Elements[3,8]	1.26	7.86E+15	2.88E+07	N/A[15]	N/A[15]
42 LEU MTR Elements[3,8,14]	1.26	7.51E+15	3.96E+07	N/A[15]	N/A[15]
42 DIDO Assemblies[10]	1.05	6.07E+15	9.73E+04	N/A	N/A
25 PWR Rods[2]	1.41	8.39E+15	1.40E+08	N/A	N/A
TRIGA (140 Elements) Normal Condition	1.05	6.52E+15[4]	1.57E+06	Note 6	Note 6
TRIGA (140 Elements) Accident Condition	1.05	5.97E+15[5]	1.06E+08	Note 6	Note 6
HEU TRIGA Cluster Rod[7]	1.875E-03	1.12E+13	4.918E+01	N/A	N/A
LEU TRIGA Cluster Rod[7]	1.875E-03	1.11E+13	4.005E+02	N/A	N/A
General Atomics Irradiated Fuel Material	0.013	3.429E+13	1.279E+04	Note 11	Note 11
300 Production TPBARs	1.005	6.681E+15	N/A	N/A	N/A
55 PIE TPBARs	1,005	5.6E+13	N/A	N/A	N/A
PULSTAR Fuel	1.05[12]	6.206E+15	2.115E+07	N/A	N/A
Spiral Fuel Assembly[13]	0.756	1.07E +14	4.54E+03	N/A	N/A
MOATA Plate Bundle	0.042	2.2E +12	< 1E+03	N/A	N/A
16 PWR MOX Rods	2.3	1.14E+16	1.17E+09	N/A	N/A
4 HEUNL Containers	0.0128	1.17E+14	3.29E+2	N/A	N//A
800 SLOWPOKE Rods	2.17E-03	1.181E+13	7.354E+02	N/A	N/A
1 SLOWPOKE Fuel Core	0.056	4.136E+14	1.047E+02	N/A	N/A
20 Short Moly Targets	0.0003	7.27E+10	1.80E+02	N/A	N/A
36 Double Length Moly Targets	0.0008	1.12E+11	1.27E+01	N/A	N/A
36 EFN Rods	0.008	1.14E+12	1.73E+03	N/A	N/A
16 Booster Rods	0.0002	3.77E+10	1.56E+00	N/A	N/A
2 BUP-500 Capsules	2.2	1.2230E+16	N/A	N/A	N/A
18 WESF Capsules (WESF Capsule Container or 6 per UCS in up to 3 UCSs)	7.2	3.6899E+16	N/A	N/A	N/A

Notes:

1. Gamma and neutron source terms conservatively calculated based on design basis sound metallic fuel rods.
2. 23 rods with 60,000 MWd/MTU burnup and two rods with 65,000 MWd/MTU burnup. Source terms as a function of cool time for the 80,000 MWd/MTU burnup PWR and BWR rods are presented in Section 5.3.8.
3. Bounding values of the gamma and neutron source terms presented for 30W uniform loading for 80% burnup.
4. Based on TRIGA ACPR fuel (86,100 MWd/MTU, 231 days cooling, 50% 235U depletion).
5. Based on TRIGA FLIP-LEU-II fuel (151,100 MWd/MTU, 908 days cooling, 80% 235 U depletion).
6. Total hardware gamma is 7.64E+14 gamma/second for ACPR fuel (86,100 MWd/MTU, 231 days cooling, 50% 235U depletion).
7. Source term at TRIGA cluster rods maximum dose rate burnup/cool time combination. For HEU fuel, 150 GWd/MTU, 1.34 years cooled. For LEU fuel, 30 GWd/MTU, 1.5 years cooled. Gamma source includes source from activated inconel clad.
8. Moderator used is light water, H20.
9. Moderator used is heavy water, D20.
10. Bounding values of the gamma and neutron source terms presented for 25W uniform loading for 70% burnup HEU fuel.
11. Hardware activation, including end-fitting sources, for the TRIGA elements included in the total gamma source for GA IFM.
12. Cool time required to meet 30 watt per cell heat load limit is 1.5 years.
13. Based on 18 W per assembly heat load.
14. Fuel source represents maximum magnitude gamma source obtained from the 470 g 235U analysis, and the maximum neutron source obtained from the 640 g 235U analysis.
15. A maximum 100 grams of cadmium may be included as part of the MTR fuel element or plate construction. Activation of the cadmium produces no significant source per Section 5.3.4.

Table 5.1.1-4 Combined Dose Rates for Normal Operations Conditions

(1 PWR assembly, 35,000 MWd/MTU, 2-year cool time)

Location	Detector I.D.	Radiation	Normal Dose Rate (mrem/hr)
Radial at 2 m from personnel barrier, Fuel midplane	1	Neutron	1.25
		Secondary Gamma	0.18
		Primary Gamma	6.71
		TOTAL	8.14
Radial surface, Fuel midplane	2	Neutron	6.53
		Secondary Gamma	1.37
		Primary Gamma	43.44
		TOTAL	51.34
Bottom surface, Axial centerline	3	Neutron	0.33
		Primary Gamma	35.51
		End-fitting Gamma	17.02
		TOTAL	52.86
Bottom at 2 m from impact limiter, Axial centerline	4	Neutron	0.03
		Primary Gamma	2.19
		End-fitting Gamma	0.79
		TOTAL	3.01
Top surface, Axial centerline	5	Neutron	0.12
		Primary Gamma	54.17
		End-fitting Gamma	41.45
		TOTAL	95.74
Top at 2 m from impact limiter, Axial centerline	6	Neutron	0.01
		Primary Gamma	3.82
		End-fitting Gamma	2.17
		TOTAL	6.00
Top at Cab	7	Neutron	0.00135
		Primary Gamma	0.47
		End-fitting Gamma	0.25
		TOTAL	0.72

Table 5.1.1-5 Hypothetical Accident – Loss of Shielding Materials

(1 PWR assembly, 35,000 MWd/MTU, 2-year cool time)

Location	Detector I.D.	Radiation	Normal Dose Rate (mrem/hr)
Radial surface, Fuel midplane, With neutron shield	8	Neutron Secondary Gamma Primary Gamma TOTAL	6.53 1.37 43.44 51.34
Radial surface, Fuel midplane, Without neutron shield	9	Neutron Secondary Gamma Primary Gamma TOTAL	177.13 0.39 75.00 252.52
Radial at 1 m from surface, Fuel midplane, Without neutron shield	10	Neutron Secondary Gamma Primary Gamma TOTAL	50.93 1.52 54.59 107.04

Table 5.1.1-6 Hypothetical Accident – Lead Slump

Location	Detector I.D.	Radiation	Normal Dose Rate (mrem/hr)
Radial at 1 m from surface, PWR top end-fitting	11	End-fitting Gamma	3.60
		TOTAL	3.60
Radial at 1 m from surface, PWR top end-fitting	12	End-fitting Gamma	1.31
		TOTAL	1.31
Radial at 1 m from surface, PWR top end-fitting	13	End-fitting Gamma	0.80
		TOTAL	0.80
Radial at 1 m from surface, PWR bottom end-fitting	14	End-fitting Gamma	0.01
		TOTAL	0.01
Radial at 1 m from surface, PWR bottom end-fitting	15	End-fitting Gamma	0.35
		TOTAL	0.35
Radial at 1 m from surface, PWR bottom end-fitting	16	End-fitting Gamma	1.48
		TOTAL	1.48
Radial at 1 m from surface, BWR bottom end-fitting	17	End-fitting Gamma	0.10
		TOTAL	0.10
Radial at 1 m from surface, BWR bottom end-fitting	18	End-fitting Gamma	0.54
		TOTAL	0.54
Radial at 1 m from surface, BWR bottom end-fitting	19	End-fitting Gamma	0.84
		TOTAL	0.84

5.2 Gamma and Neutron Sources

5.2.1 ORIGEN 2

ORIGEN2 is used to calculate the neutron and gamma source strengths. The LOR-2 version of ORIGEN2 in use at the Babcock and Wilcox (B&W) computing center is used for the PWR and BWR fuel because of the improved LWR nuclear data available for this version. The metallic fuel sources are calculated using ORIGEN2 with the CANDU library from Atomic Energy of Canada Limited in place of the LOR-2 library. ORIGEN2 also calculates the gamma spectrum and the concentration of radiologically important fission products such as ^{3}H, ^{131}Xe, ^{129}I, ^{85}Kr, ^{134}Cs and ^{137}Cs. The LOR-2 data for the design basis PWR assembly is given in Table 5.2.1-1. The gamma spectrum for the PWR assembly is shown in Table 5.2.1-2. Table 5.2.1-3 shows the fission product inventory of the PWR assembly.

Radionuclides other than ^{60}Co present as activation products have short half-lives resulting in rapid decay to negligible concentrations, or they emit soft X-rays or betas that cannot penetrate the cask shielding. The ^{60}Co is present in significant concentrations; it has a relatively long half-life; and it emits two energetic gammas per decay with a mean energy of 1.25 MeV. The ^{60}Co is, therefore, the only activation product considered.

The end-fitting activation is calculated by LOR-2 using a short, hard burnup cycle and a typical burnup cycle from Surry-2. The short cycle yielded the higher values that are used to assure conservatism. The input data for the activation of the end-fittings is also provided in Table 5.2.1-1. The densities used in ORIGEN are obtained by using the weights of inconel for the top and bottom end-fittings that are found in "Physical and Decay Characteristics of Commercial LWR Spent Fuel" (Roddy). Note also that there are 4694 grams of cobalt per metric ton of inconel. It is assumed that all of the cobalt is ^{59}Co. This assumption is conservative because it is the ^{59}Co neutron absorption that results in the formation of the ^{60}Co.

A Watt spectrum for ^{252}Cf is used to simulate the ^{242}Cm and the ^{244}Cm neutron spectra of the fuel. This equation is provided by Westinghouse as a part of the Extended Fuel Burnup Demonstration Program (DOE/ET34014-10).

The spectrum takes the form of:

$$X(E) = (0.37e^{-0.88E})SINH(\sqrt{2.0E})$$

where:

E is the neutron energy in MeV

Table 5.2.1-4 presents the evaluated source neutron spectrum used in the shielding analysis.

The analyses are performed with the limiting design basis fuel - the PWR assembly. However, any intact PWR, BWR or metallic fuel rods that do not exceed the thermal, reactivity and radiological characteristics of the design basis fuels shown in Table 5.1.1-3 are acceptable for transport in the NAC-LWT cask.

Table 5.2.1-1 LOR-2 Input Data

PWR Fuel

Mass (kgU)	475.0
Enrichment (wt % ^{235}U)	3.7
Burnup (MWd) (MWd/MTU)	16,625.0 35,000.0
Burnup Cycle	4 Cycles 405 full power days 60 day outages 10.262 MW at full power
Average Flux (n/cm^2 – sec)	2.19 x 10^{13}

PWR End-Fittings

Masses (kg Inconel)	Top – 6.8 Bottom – 5.7
Concentration (g-^{59}Co/MT Inconel)	4694.0
Assembly Burnup (MWd) (MWd/MTU)	16,625.0 35,000.0
Irradiation Cycle	3 Cycles 383 full power days 50 day outages 13.972 MW at full power
Average Flux (n/cm^2 – sec)	2.95 x 10^{13}

Table 5.2.1-1 LOR-2 Input Data (Continued)

BWR End-Fittings	
Masses (kg Inconel)	Top – 2.0 Bottom – 4.8
Concentration ($g^{-59}Co$/MT Inconel)	4,694.0
Assembly Burnup (MWd) MWd/MTU)	5,580.0 30,000.0
Irradiation Cycle	4 Cycles 227 full power days 61 day outages 6.134 MW at full power
Average Flux (n/cm^2 – sec)	3.28×10^{13}

Table 5.2.1-2 Photon Spectrum for Design Basis Fuel

One PWR assembly with 35,000 MWd/MTU burnup and a 2-year cool time

Mean Energy (MeV)	Energy Source (MeV/Sec) Per Assembly	Total Source Per Assembly (Photons/Sec)
3.500	2.717×10^{10}	7.762×10^{9}
2.750	6.754×10^{11}	2.456×10^{11}
2.250	3.233×10^{13}	1.432×10^{13}
1.830	2.038×10^{13}	1.114×10^{13}
1.495	3.220×10^{14}	2.154×10^{14}
1.160	1.929×10^{14}	1.663×10^{14}
0.900	1.496×10^{14}	1.663×10^{14}
0.700	3.964×10^{15}	5.663×10^{15}
0.500	2.909×10^{15}	5.818×10^{15}
0.350	1.093×10^{14}	3.123×10^{14}
0.250	7.808×10^{13}	3.123×10^{14}
TOTALS	7.712×10^{15}	1.268×10^{16}

Table 5.2.1-3 Fission Product Gas Inventory

One PWR assembly with 35,000 MWd/MTU burnup and a 2-year cool time

Fission Product	Inventory – Curies/Assembly
Gases	
Tritium	203.2
Krypton-85	3,797.0
Xenon-131	Negligible
Iodine-129	Negligible
Total	4,000.2
Particulates	
Cesium-134	96,000
Cesium-137	50,000
Total	146,000

Table 5.2.1-4 Design Basis Fuel Neutron Spectrum

Group	Energy (eV)	n/cm^2 - sec
1	0.20000×10^{8}	1.39971×10^{-2}
2	0.64340×10^{7}	2.61998×10^{-1}
3	0.30000×10^{7}	2.34004×10^{-1}
4	0.18500×10^{7}	1.19993×10^{-1}
5	0.14000×10^{7}	1.49064×10^{-1}
6	0.90000×10^{6}	1.45953×10^{-1}
7	0.40000×10^{6}	6.39921×10^{-2}
8	0.10000×10^{6}	9.00005×10^{-3}
9	0.17000×10^{5}	1.00002×10^{-3}
10	0.30000×10^{4}	1.00002×10^{-3}
11	0.55000×10^{3}	0.00000
12	0.10000×10^{3}	0.00000
13	0.30000×10^{2}	0.00000
14	0.10000×10^{2}	0.00000
15	0.30500×10^{1}	0.00000
16	0.17700×10^{1}	0.00000
17	0.13000×10^{1}	0.00000
18	0.11300×10^{1}	0.00000
19	0.10000×10^{1}	0.00000
20	0.80000	0.00000
21	0.40000	0.00000
22	0.32500	0.00000
23	0.22500	0.00000
24	0.10000	0.00000
25	0.50000×10^{-1}	0.00000
26	0.30000×10^{-1}	0.00000
27	0.10000×10^{-4}	0.00000

Note: Spectrum is normalized to 1 n/cm^2 – sec.

5.3 Model Specification

5.3.1 Description of Radial and Axial Shielding Configuration

The gamma radiation protection provided by the NAC-LWT cask is primarily in the form of solid shielding material, which totally surrounds the fuel. The principal components of gamma shielding in the cask body are the 0.75-inch inner steel shell, 5.75 inches of lead, a 1.20-inch outer steel shell, 5 inches of water, and a 0.24-inch (6mm) thick outside layer of steel surrounding the neutron shield. The bottom of the cask is a steel/lead/steel configuration, having an inner steel layer 4 inches thick, a 3-inch thick layer of lead, and an outside layer of steel 3.5 inches thick. The gamma shielding at the top of the cask consists of the closure lid, which does not contain lead, but is made up of 11.25 inches of stainless steel.

The principal neutron shielding is provided by a 5-inch water shield, which surrounds the fuel. The water contains boron to aid in shielding by suppressing the production of capture gammas in the water.

Dose points for normal operations conditions are chosen and placed in accordance with conditions specified in 10 CFR 71. Thus, dose points are placed at the fuel midplane on the surface of the neutron shield jacket and at 2 meters from the personnel barrier, as illustrated in Table 5.3.3-1. Dose points are also placed at the top and bottom at the centerline of the cask on the surface of the outer steel, at 2 meters from the personnel barrier and 197 inches (5 meters) from the surface at the top of the cask (to obtain dose rates directly behind the vehicle cab). These dose points are shown in Figure 5.3.3-2. The dose points are placed at the surface and at 1 meter from the surface for the hypothetical accident, and at 1 meter from the surface at various points along the outside of the cask for the lead slump accident. Dose points for accident conditions are shown in Figure 5.3.3-1 and Figure 5.3.3-3 through Figure 5.3.3-5.

There is a void due to the contraction of the lead after the initial pour that is not taken into consideration in the shielding model. It is not included because even though the lead contracts, the mass of the lead remains constant. A void also exists between the aluminum of the basket and the cask, which does not significantly affect the shielding results.

The 3-dimensional model for normal transport conditions contains all of the shielding described previously in its proper configuration. (See Figure 5.3.3-1 and Figure 5.3.3-2 for details.) The 1-dimensional model for normal transport conditions contains the same shielding geometry, but uses an equivalent circularized source as shown in Figure 5.3.3-6. Some accident conditions will change the configuration of the model. In the loss of neutron shield accident, it is assumed that the entire neutron shield is lost. This loss is represented by a void in place of the neutron shield;

therefore, the configuration of the model does not change, only the material of the neutron shield.

This case is shown in Figure 5.3.3-1 as detector 9. In the lead slump accident, the cask is dropped on its end allowing the lead to fill the gap left between the steel and the lead from the lead pour. This creates a gap in the lead either on top or bottom, depending on cask orientation. The new gap changes the dimensions of the model as illustrated in Figure 5.3.3-3 through Figure 5.3.3-5.

5.3.2 Shield Regional Densities

Typical Westinghouse 15 x 15 PWR fuel assemblies have a mass of 459 kgU; however, a mass of 475 kgU is chosen for conservatism.

Table 5.3.3-1 contains detailed information on source compositions and densities. The source densities are obtained by multiplying the original fuel (UO_2) density by the volume fraction of fuel in the effective fuel region and the 95 percent theoretical density. The zirconium density is calculated by multiplying the original zirconium density by the volume fraction of zirconium in the effective fuel region. All shield materials and their densities are included in Table 5.3.3-2. The steel, aluminum and iron densities are found in the Book of Standards, the Metals Handbook, Alcoa Aluminum Handbook, and Merritt's Standard Handbook for Civil Engineers. The density of the water in the neutron shield is based on a water temperature of 250°F. This is conservative since the neutron shield never actually reaches this temperature. The water is less dense at higher temperatures; therefore, the calculated dose is higher than the actual dose at the normal operating temperature.

5.3.3 Metallic Fuel Configuration

The NAC-LWT cask is also evaluated for a configuration consisting of 15 metallic fuel rods in the cask with the neutron shield tank liquid drained and with the cask inside an International Shipping Organization container. The gamma and neutron sources for the metallic fuel configuration are 11.3 percent and 0.073 percent of the design basis PWR sources, respectively. The hypothetical accident dose rates for the metallic fuel may be obtained directly from the PWR hypothetical accident dose rates by multiplying the neutron and secondary gamma PWR values by a factor of 7.30×10^{-4} and the primary gamma PWR value by a factor of 0.113, as calculated from Table 5.1.1-3. The normal operations dose rates for the metallic fuel may be obtained from the PWR normal operations dose rates by applying the factors given above, but the lack of neutron shield tank fluid must be accounted for by ratioing the dose rates on the cask surface with and without the neutron shield liquid. These dose rates are given in Table 5.1.1-5. The loss of the neutron shield liquid results in a 27.1-fold increase in the neutron dose rate; however, the secondary gamma dose rate decreases by 71 percent. The primary gamma dose rate increases by 73 percent with the shield liquid removed. The cask radial dose rates at the fuel midplane, which result from this evaluation for the metallic fuel rods, are as follows:

	Normal Operations (2 meters from personnel barrier)	Hypothetical Accident (1 meter from cask surface)
Neutron	0.025 mrem/hr	0.037 mrem/hr
Secondary Gamma	0.000	0.001
Primary Gamma	1.309	6.169
Total	1.334 mrem/hr	6.207 mrem/hr

The metallic fuel rod dose rates for normal operations and hypothetical accident conditions are 17 and 6 percent of the PWR dose rates, respectively. These values are less than the regulatory limits; therefore, the metallic fuel rods are adequately shielded during transportation.

Figure 5.3.3-1 Three-Dimensional Radial Model

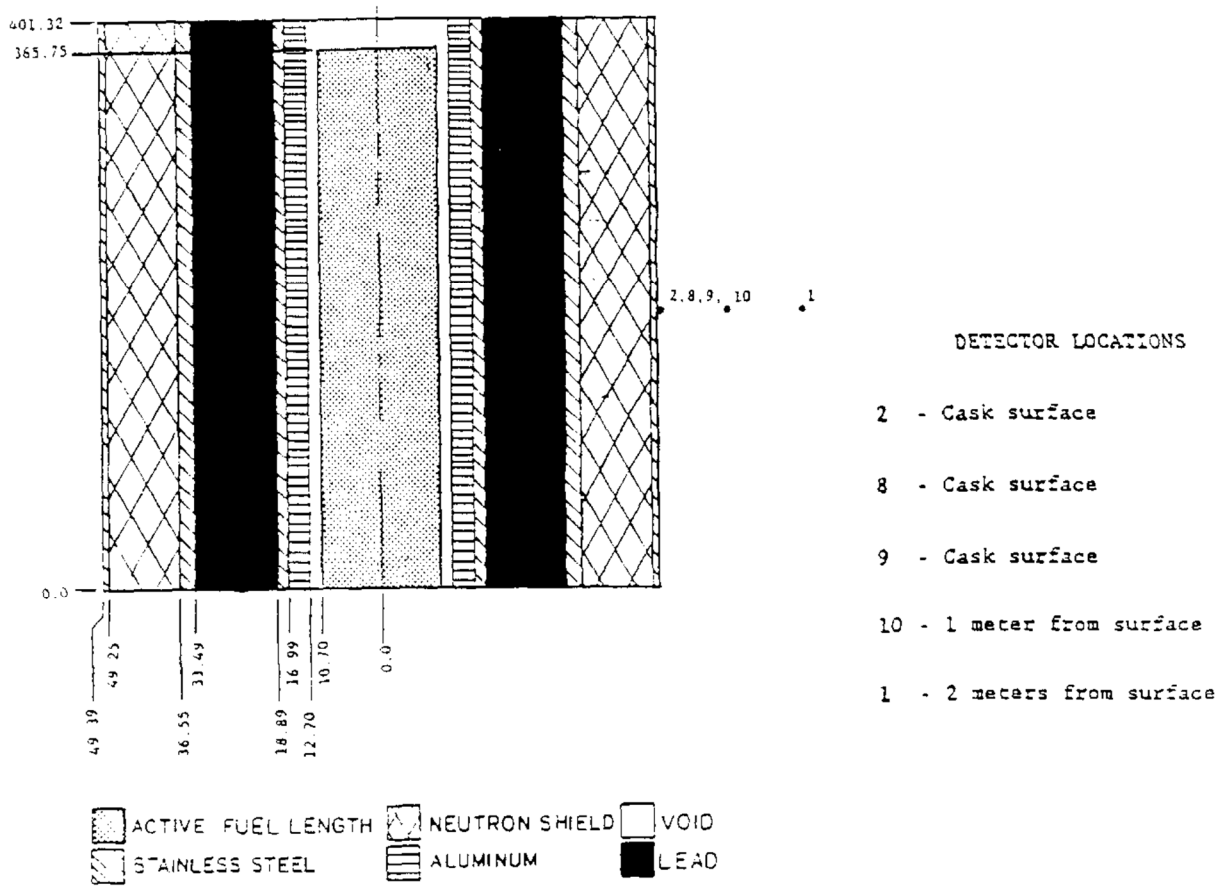

(Dimensions are in cm)

(In hypothetical accident condition, neutron shield is void.)

Figure 5.3.3-2 End-Fitting Model with Fuel

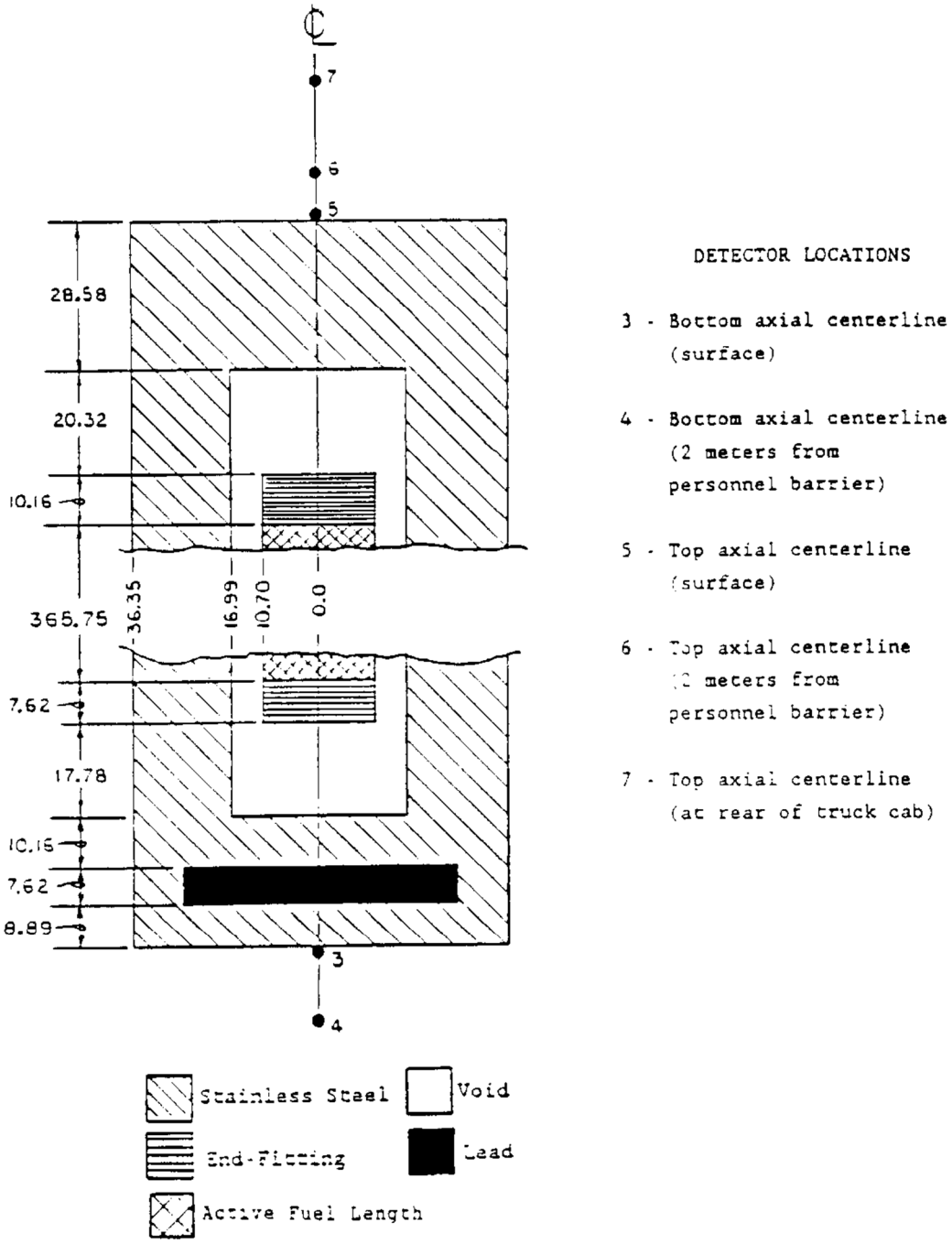

(Dimensions are in cm)

Figure 5.3.3-3 Lead Slump Accident – PWR Top End-Fitting

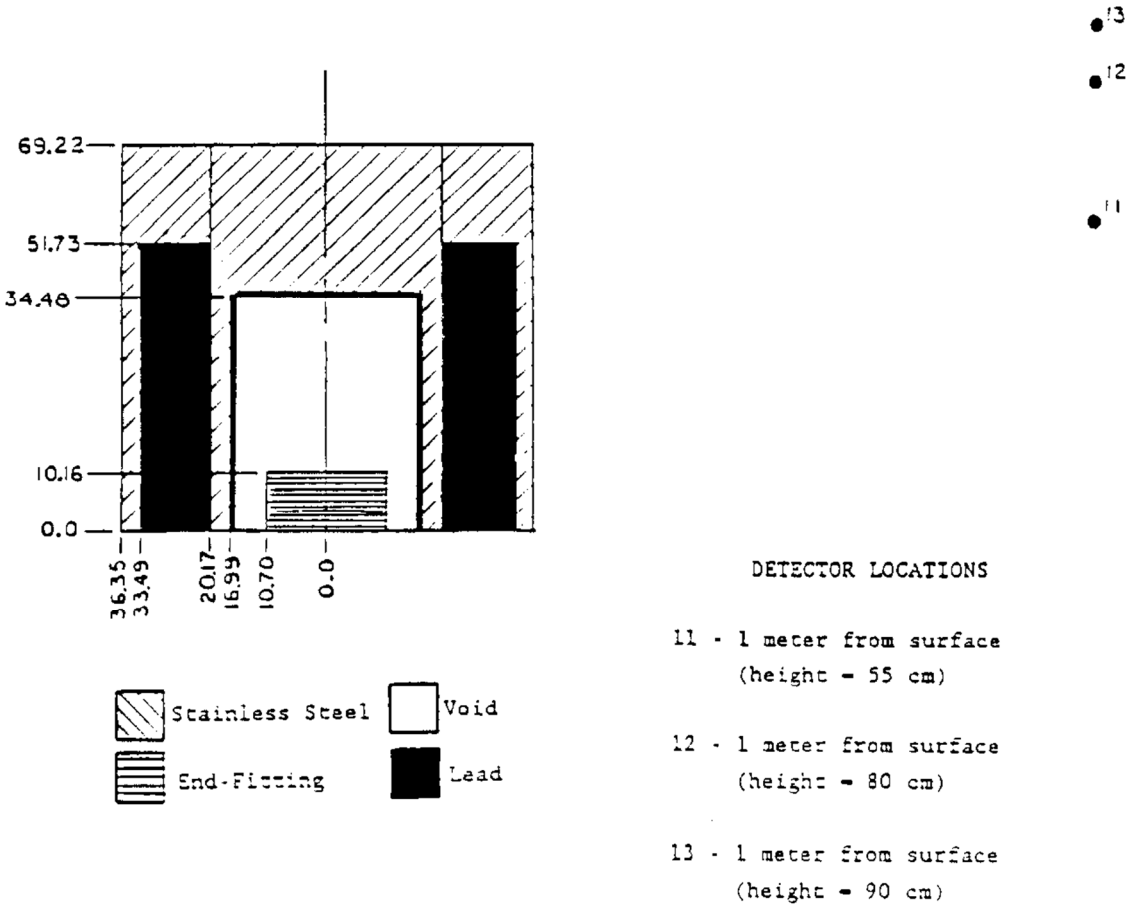

(Dimensions are in cm)

Figure 5.3.3-4 Lead Slump Accident – PWR Bottom End-Fitting

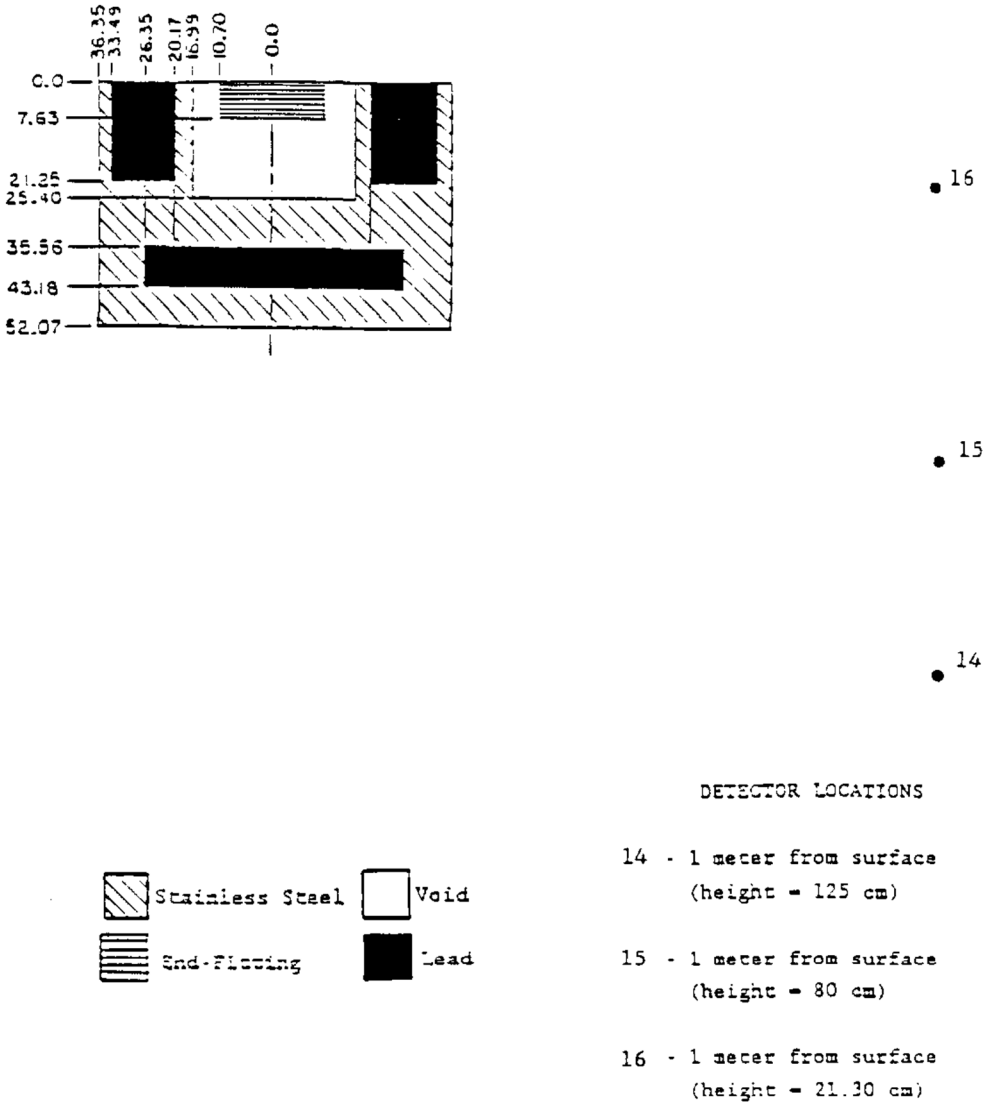

(Dimensions are in cm)

Figure 5.3.3-5 Lead Slump Accident – BWR Bottom End-Fitting

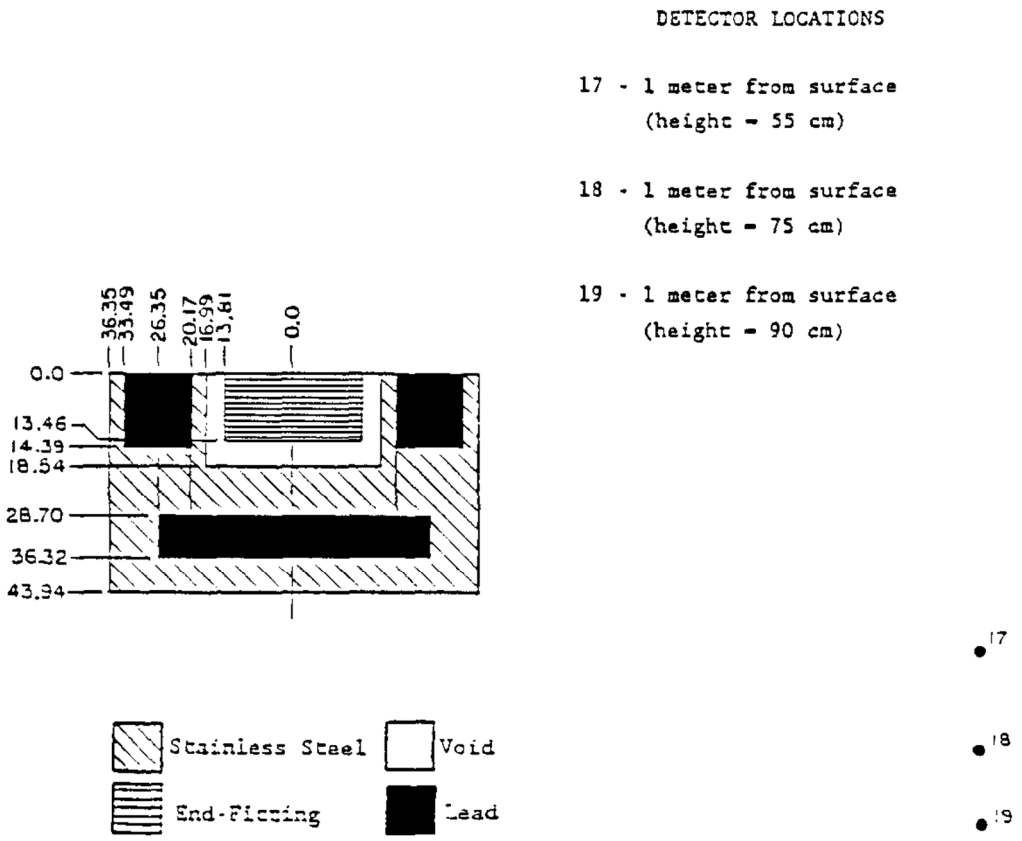

(Dimensions are in cm)

Figure 5.3.3-6 One-Dimensional Radial Calculational Model

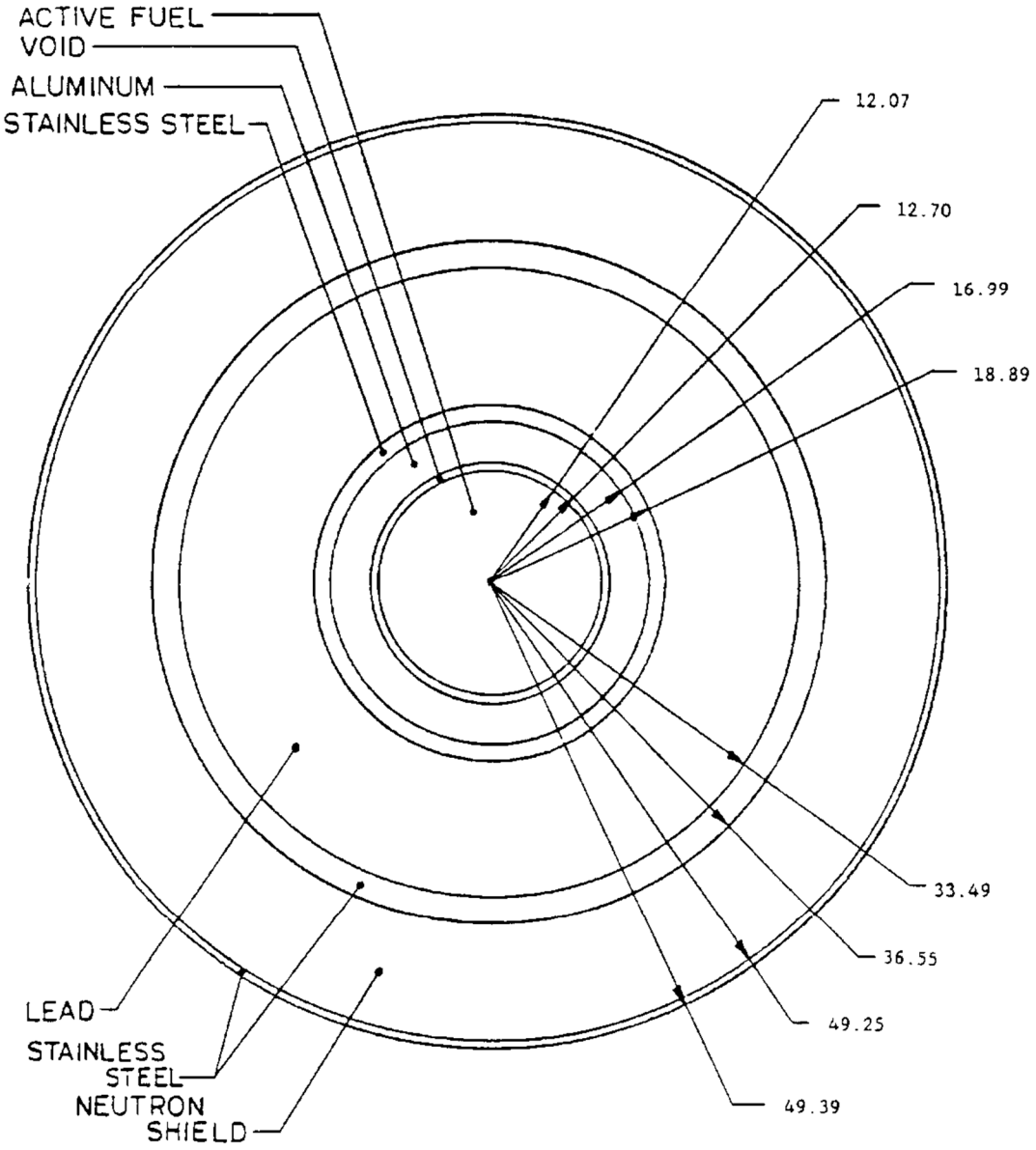

(Dimensions are in cm)

Table 5.3.3-1 Source Material Compositions

QAD-CG

Element	U	O
Density, g/cc	2.759	0.370
Density, atoms/barn-cm	6.98E-3	1.39E-2

XSDRNPM

Isotope	^{235}U	^{238}U	^{16}O	Zr
Density, g/cc	0.1021	2.657	0.370	0.6344
Density, atoms/barn-cm	2.62E-4	6.73E-4	1.39E-2	4.18E-3

Table 5.3.3-2 Shield Material Densities and Compositions

Material	Element	QAD-CG (g/cc)	XSDRNPM (atom/barn-cm)
Aluminum	AL	2.7	6.026E-2
Stainless Steel	Fe	5.618	6.026E-2
	Cr	1.445	1.67E-2
	Ni	0.963	9.88E-3
Lead	Pb	11.35	3.29E-2
Neutron Shield	H	0.1046	5.73E-2
	O	0.8373	3.15E-2
	B	0.00184	1.108E-4

5.3.4 MTR Fuel Configuration

A maximum of 42 MTR fuel assemblies have been analyzed for transport in the LWT cask. This configuration consists of up to seven fuel assemblies placed radially in each of the six axial fuel basket modules. Two alternate configurations of MTR fuel assembly loading provide for loads of 35 assemblies in five basket modules or 28 assemblies in four basket modules.

LEU, MEU and HEU fuels are evaluated for a base configuration that consists of a uniform loading of 30 W per fuel position, resulting in a basket module maximum of 210 W (or 1.26 kW per cask). To allow flexibility in loading either high burnup or short cooled HEU fuel, three possible fuel loading configurations are evaluated. The configurations are based on limiting the total heat load (and corresponding gamma/neutron source) in each basket module to a maximum of 210 W (1.26 kW per cask). Configuration 1 is the loading of three assemblies, having thermal outputs of 120, 70 and 20 watts, in close proximity, with the 120 W assembly occupying the center cell. Configuration 2 is the uniform loading of 7 MTR assemblies, each having a decay heat of 30 W. Configuration 3 has three assemblies in line across the center of the basket, as required by the loading procedure, with a maximum of 70 watts per assembly. These configurations are shown in Figure 5.3.4-1. To allow flexibility in loading shorter cooled LEU fuel, an optional configuration based on 40 W per fuel position is evaluated. Conservatively, 40 W elements are applied to all seven basket positions. This results in a modeled source of 280 W per basket. As described in Section 7.1.5, for cask operations, the basket module maximum of 210 W will be retained for this configuration, therefore, limiting the number of 40 W elements that may be loaded. Evaluations for the 40 W pattern are limited to the maximum 490 gram ^{235}U LEU element.

The shielding analysis evaluated all three MTR fuel types for variable burnup considering uniform basket loading for LEU and MEU fuel and the configurations above for HEU fuel. HEU fuel provides the limiting dose rates and, therefore, only the HEU results are discussed in detail. A comparison of dose rates at 2 meters from the transport vehicle is shown in Figure 5.3.4-3 for various LEU, MEU and HEU payloads. This figure demonstrates that HEU fuel bounds the LEU and MEU payloads. As discussed below, the HEU loading patterns produce significantly higher dose rates than those documented in Figure 5.3.4-3 for the uniform 30 W loading.

In order to present the limiting MTR dose rates, NAC performed a parametric study in which each of these configurations were examined using the SCALE 4.3 (ORNL,1995) SAS4 (Tang, 1995) computer code for shielding analysis and SAS2H (Herman, 1995) for source terms. The SAS4 sequence incorporates a FORTRAN coding modification that permits the determination of dose rate profiles along the axial and radial surfaces. This study established Configuration 1 as

the bounding configuration, with respect to axial and radial dose rates. In the case of the radial evaluation, Configuration 1 is clearly limiting based on the concentrated source term. The axial evaluation concluded that Configurations 1 and 3 are statistically similar and bound Configuration 2. Configuration 1 is selected as the limiting MTR preferential loading configuration and is the load bases for the shielding analysis.

The MTR fuel assembly consists of plates held in a parallel arrangement by thick aluminum slotted side plates. The number of fuel plates range from 17 to 23 per assembly, and the analysis assumed the maximum 23 plate value for each of the three MTR fuel types.

The design basis MTR fuel assemblies were constructed using typical MTR parameters. The physical characteristics of the analyzed LEU, MEU and HEU fuel assemblies are shown in Table 5.3.4-1. The fueled section of the assembly consists of 23 plates of 0.050-inch thickness and two side plates 0.187-inch thick, which do not contain fuel. The fuel core of each fuel plate is a cermet of aluminum and U-Al, which is 0.020-inch thick. The 6061 aluminum cladding has a minimum thickness of 0.015-inch. The HEU fresh fuel load analyzed consists of either 380 grams or 460 grams of ^{235}U per assembly 90% enriched. The initial enrichment is used to encompass other HEU MTR fuel types.

The SAS2H sequence was used to determine the gamma and neutron source terms and decay heat loads for the evaluated MTR fuel assembly loading configurations. The SAS2H sequence includes the ORIGEN-S code and a 1D XSDRNPM model of the fuel assembly. ORIGEN-S performs fuel assembly depletion at specified operating conditions and calculates heat generation, gamma and neutron spectra for a given discharge isotopic composition as a function of out of reactor time (cooling time). The 1D model of the fuel assembly is used to collapse the 27 group neutron cross-section library (27GROUPNDF4) into three broad energy groups for the depletion calculation. The 1D model is based on an equivalent area representation of the fuel/moderator cell and surrounding structural regions. Average power is based on reactor maximum power divided by the number of assemblies in the core.

For the HEU fuel, separate analyses were performed for ^{235}U loadings of 380 grams and 460 grams. For the 380 gram ^{235}U loading, the maximum allowable burnup was 660,000 MWd/MTU. For the 460 gram ^{235}U loading, dose rates exceeding 10 CFR 71 limits were calculated at 660,000 MWd/MTU, so the burnup was limited to 577,500 MWd/MTU. Calculated dose rates are higher for the 380 gram ^{235}U loading at 660,000 MWd/MTU.

For the bounding HEU fuel with 380 grams ^{235}U, a series of 10 cases was run in which burnup was varied from a minimum of 82,500 MWd/MTU to a maximum of 660,000 MWd/MTU. Cooling times were considered from 90 days to 6.0 years. Because the cask is loaded based on the decay heat limits, no single design basis fuel assembly or loading

configuration exists. Design basis photon and neutron source terms for MTR assemblies with decay heats loads of 20, 30, 70 and 120 watts are determined for the 660,000 MWd/MTU burnup case, which was bounding. The SAS2H results from these cases are used for the design basis photon and neutron source terms and are summarized in Table 5.3.4-2 and Table 5.3.4-3 for 380 grams ^{235}U and Table 5.3.4-4 and Table 5.3.4-5 for 460 grams ^{235}U. The material densities used in the analysis are summarized in Table 5.3.4-8. Minimum cool time curves for the various MTR fuel and loading configurations are shown in Section 7.1.5.

The 490-gram ^{235}U and 40 W per element configuration is evaluated identically to that applied to the lower and higher mass LEU element, MEU, and HEU elements. SAS2H cases are run between 1% and 80% with a minimum cool time of 90 days. At maximum depletion the element requires 424 days to decay to a heat load of 40 W per element. Dose rates are determined at the maximum depletion (equivalent burnup of 139,300 MWd/MTU) and a reduced cool time of 402 days for that statepoint (heat load marginally greater than 40 W). Gamma and neutron source terms at this statepoint are shown in Table 5.3.4-16 and Table 5.3.4-17. LEU 40 W radial cask and 2 meters from conveyance dose rates are illustrated in Figure 5.3.4-4 and Figure 5.3.4-5. Dose rates were plotted for the radial cask and 2 meters from conveyance surfaces as they present the limiting locations (i.e., nearest approach to regulatory limits) for NAC-LWT transport of MTR fuel. The limiting location determination was based on the HEU dose rates shown in Table 5.3.4-9 through Table 5.3.4-15. LEU 40 W dose rates are below or statistically equivalent to those of the preferentially loaded HEU fuel shown in Table 5.3.4-9 and Table 5.3.4-11. Note that this evaluation conservatively applies 40 W elements to all seven basket positions.

Minimum allowed cool time for MTR fuels is set to 90 days. Below 90 days the potential exists for high power core operations to produce significant amounts of short lived radionuclides (in particular ^{140}La with a 2-day half-life and a 1.5 MeV gamma peak, parent nuclide is ^{140}Ba, a fission product with 13-day half-life) with significant higher gamma penetration energies then those applied at the maximum depletion/burnup statepoint used in the evaluations discussed in the previous paragraphs. Restricting the minimum cool time to 90 days eliminates this concern. To verify acceptability, the following loading combinations were evaluated:

Fuel Type	^{235}U Mass (g)	Heat per Element (W)	Heat per Basket (W)
LEU	490	40	280
MEU	380	30	210
HEU	460	120	120[1]

Note 1: Only the center element was evaluated to demonstrate that maximum permitted burnup dose rates bound the minimum 90-day cool time dose rates.

Each fuel type was evaluated at 90 days at maximum depletion to reach the desired heat load. Results of a comparison between minimum cool time and maximum depletion dose rates (fixed heat load) are shown in Figures 5.3-4-6 through 5.3.4-8. LEU and HEU data produces maximum dose rates at maximum depletion. MEU, while showing slightly higher dose at the low depletion point, is significantly bounded by the LEU and HEU cases and is, therefore, acceptable.

To provide justification that intermediate statepoints along the equal heat load burnup/cool time curve do not produce bounding dose rates, additional evaluations are presented for the LEU (490 g ^{235}U) element. Sources are generated at a 40 W level for all burnup/cool time combinations. The total neutron and gamma source (in units of MeV/s) are compared in Figure 5.3.4-9 and Figure 5.3.4-10, respectively. The neutron source increases exponentially with increasing burnup. The gamma sources peak at lower burnups where lower heat loads allow reduced cool times. At the reduced cool times shorter lived fission products contribute significantly to the gamma source. The gamma source at 80% burnup is greater than any other burnup greater than 30%. At any burnup less than 30%, the neutron source will result in negligible dose rates. Therefore, at burnups greater than 30%, the maximum burnup will produce maximum dose rates due to maximum gamma and neutron source. At burnups less than 30%, the minimum burnup will produce maximum dose rates due to maximum gamma source and negligible neutron source.

MTR elements may contain a small amount of cadmium (maximum 100 grams Cd) in the form of nonfuel hardware. Table 5.3.4-6 and Table 5.3.4-7 contain comparisons of the cadmium light element gamma source compared to the U-Al fuel material gamma source. The light element source is produced during the SAS2H depletion analysis and applies 100% of the element flux levels. Included for comparison are HEU (460 gram) and LEU (640 gram) fuel types at the maximum allowed burnup (i.e., maximum activation) and cool times required to meet 30 watts (uniform heat load limit per element). Also shown are conservative comparisons of the design basis 30-watt fuel source to a 90-day-cooled Cd source. As shown in the comparison tables, the cadmium source is not significant to NAC-LWT cask shielding evaluations. The hardware gamma source of the cadmium represents less than 0.1% of the fuel gamma source at the required minimum cool time and less than 2% at the conservative 90-day-cooled Cd source. As the majority of the Cd source is at energy lines less than 0.5 MeV and does not penetrate the NAC-LWT cask shields, the actual effect on dose rates is even smaller than that indicated by the difference in total source magnitude.

Based on the MTR source term calculation, the (alpha, n) reactions in ^{27}Al and ^{28}Si are included in the MTR neutron source term. The (alpha, n) reactions in ^{27}Al and ^{28}Si increase the neutron source term by a factor of ~2.9. Consequently, a factor of 2.9 is applied to the MTR neutron source terms.

The SAS4 (Tang) sequence is used to calculate the dose rates at all points of interest. In this sequence, a 1D adjoint XSDRNPM model generates biasing parameters for a 3D MORSE Monte

Carlo model of the NAC-LWT cask with the MTR fuel. SAS4 requires model symmetry about the active fuel midplane (midplane of the six basket modules in this case). A 3D Monte Carlo model is developed for the upper half of the cask. This model bounds the results for a lower half model as the cask has more shielding in the axial direction at the bottom end. The upper half model is shown in Figure 5.3.4-2. The model assumes that the fuel is at the highest point in the basket module, that the fuel is loaded in the same way axially in all of the modules, and it ignores the presence of the impact limiters. The neutron shield material is modeled as a water/glycol mixture and does not contain boron. No lead slump is included in the NAC-LWT MTR shielding model. NAC procedures dictate that the lead is allowed to cool from the lowest point with molten lead from the top filling gaps formed during solidification. Therefore, no gap is expected to occur and further accident analyses detailing potential shifting of the lead gap are not necessary. Detectors are placed at three radial locations of interest. These locations are: 1) cask surface; 2) one meter from the cask surface; and 3) at two meters from the edge of the cask conveyance.

5.3.4.1 Shielding Evaluation for MTR Fuel

This section presents the shielding analyses for normal conditions of transport, illustrates compliance with 10 CFR Part 71. In normal transport, the dose rate limits are:

- The dose rate on the surface of the package is less than 200 mrem/hr. Localized dose rates up to 1000 mrem/hr are allowed if it is shown that the dose rate on the surface of the ISO enclosure (ISO container is 20 ft long by 8 ft wide) is less than 200 mrem/hr.

  The transport cask is centered within the 8 foot width of the ISO by the cask support structure. Conveyance vertical planes are therefore at a radial distance of 121.96 cm from the cask centerline. The transport cask is centered within the ISO length. The cask length with impact limiters is ~232 inches leaving minimal free space.

- At 2 meters from the edge of the transport vehicle the dose rate is limited to 10 mrem/hr. Detectors are placed at radial distances of 321.96 cm, which is one half the ISO width plus 2 meters.
- The truck cab (defined as a point 5 meters from the NAC-LWT lid) dose rate is limited to 2 mrem/hr.

The dose rates for the bounding loading configuration (Configuration 1) are shown in Table 5.3.4-9, Table 5.3.4-10 and Table 5.3.4-11 for the cask surface, plane of conveyance, and at 2 meters from the edge of the conveyance, respectively. These dose rates are well below the regulatory limits. The dose rates at 1 meter from the cask surface are presented in Table 5.3.4-12, where the maximum dose rate defines the Transport Index (TI) for the cask.

The axial surface and the 5 meter (back of tractor cab) dose rates are shown in Table 5.3.4-13 and Table 5.3.4-14. Shielding provided by the impact limiter is conservatively neglected. The

axial dose rates at the bottom of the cask are conservatively assumed to be equal to the dose rates reported at the top.

Dose rates on the external surface of the package are limited to 1000 mrem/hr, as specified by 10 CFR 71.47 (b)(1). MTR fuel transport meets subsection (i), (ii), and (iii) by placing the NAC-LWT into an ISO container with the cask secured to the ISO container by a transport frame. There is no loading and unloading of the contents between beginning and end of transportation. Per Table 5.3.4-9 and Table 5.3.4-13, both radial and axial dose rates are significantly below this limit.

A vehicle outer surface dose rate limit of 2 mSv/h (200 mrem/hr) is stated in 10 CFR 71.47(b)(2). The dose rate limit is applicable to the top and underside of the vehicle.

- Table 5.3.4-10 contains dose rates at a radial distance of 48 inches from the centerline of the cask, which represents the vertical walls of the ISO container. Dose rates calculated are below 50 mrem/hr and demonstrate compliance with the regulation.
- In the cask axial direction (ends of the ISO container), Table 5.3.4-13 demonstrates that maximum dose rates on the cask lid are only slightly above this limit and drop by over an order of magnitude at a distance of 1 meter. The table values were calculated without consideration of either spacing and material of the impact limiter, or spacing and material of the ISO container. The data is considered sufficient to demonstrate that at the outer surface of the vehicle (the outer surface of the ISO container for this requirement), dose rates will be less than 200 mrem/hr.
- The NAC-LWT is located on a transport frame within the ISO container cavity. The transport frame secures the cask slightly below the ISO container centerline. The reference dimension offset is ~43 inches from the lower surface of an 8 foot (reference dimension) ISO container height. Table 5.3.4-10 results demonstrate top side dose rates are below dose rate limits. Thus, the package is acceptable with respect to top side dose rates.
- While the lower surface of the ISO container is ~5 inches (reference dimension) closer to the cask centerline than the detectors applied in the analysis, the cask/ISO container combination is located on a truck bed during typical transport operations. The truck bed will provide additional spacing to vehicle underside locations. The ISO container material and the truck bed provide shielding to the underside of the vehicle. The ISO container and the truck bed material will more than offset the minor dimensional differences in detector location making Table 5.3.4-10 results bounding for the vehicle underside dose rates. Therefore, the dose rate limits are met on the underside of the vehicle.

Dose rates at any point 2 meters (80 in) from the outer lateral surfaces of the vehicle (excluding the top and underside of the vehicle) are limited to 0.1 mSv/h (10 mrem/hr) as specified by 10

CFR 71.47(b)(3). Table 5.3.4-11 demonstrates that this limit is met at 2 meters from the radial surface of the cask/ISO container. Table 5.3.4-13 states the maximum dose rate at 1 meter from the cask lid surface is < 11 mrem/hr. While the calculated dose rate at 1 meter from the lid is slightly in excess of the 10 mrem/hr limit, geometric attenuation would produce dose rates well below 10 mrem/hr at 2 meters from the vehicle (over a factor of 10 drop occurs between surface and 1 meter). Therefore, regulatory limits will be met without crediting either the impact limiter or the ISO container spacing and materials. As described in 10 CFR 71.47(b)(4), the 2 mrem/hr normally occupied position criteria is met per Table 5.3.4-14.

This evaluation shows that the NAC-LWT cask, with up to 42 MTR fuel assemblies, meets the shielding requirements of 10 CFR 71, 49 CFR 173, and IAEA Transportation Safety Standards (TS-R-1).

5.3.4.2 Accident Conditions of Transport

This section presents the accident condition shielding analyses. Under accident conditions, the NRC limits the package dose rate to 1000 mrem/hr at 1 meter off the package surface. The only accident condition examined in this section is the loss of the LWT liquid neutron shield.

This analysis examines Configuration 1 consistent with the limiting configuration analysis for normal conditions of transport presented in Section 5.3.4. The accident condition source terms are identical to the normal condition source terms. The accident condition results are presented in Table 5.3.4-15. Only radial results are presented for the normal condition. Axial surface dose analysis was based on the loss of the impact limiters and produced results at the lid surface significantly below the 1000 mrem/hr accident condition limit at 1 meter.

Figure 5.3.4-1 MTR Fuel Evaluated Configurations

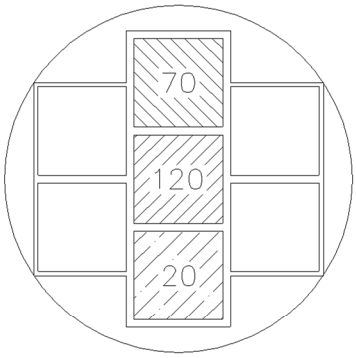

CONFIGURATION 1

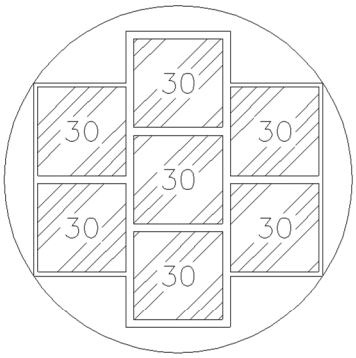

CONFIGURATION 2

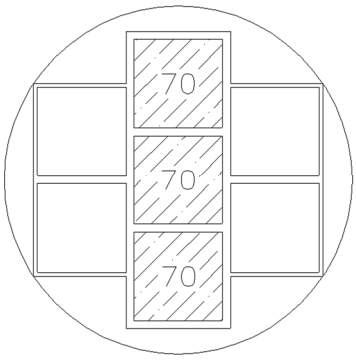

CONFIGURATION 3

Figure 5.3.4-2 SAS4 Shielding Model for the MTR Fuel Basket in the NAC-LWT (Upper Half)

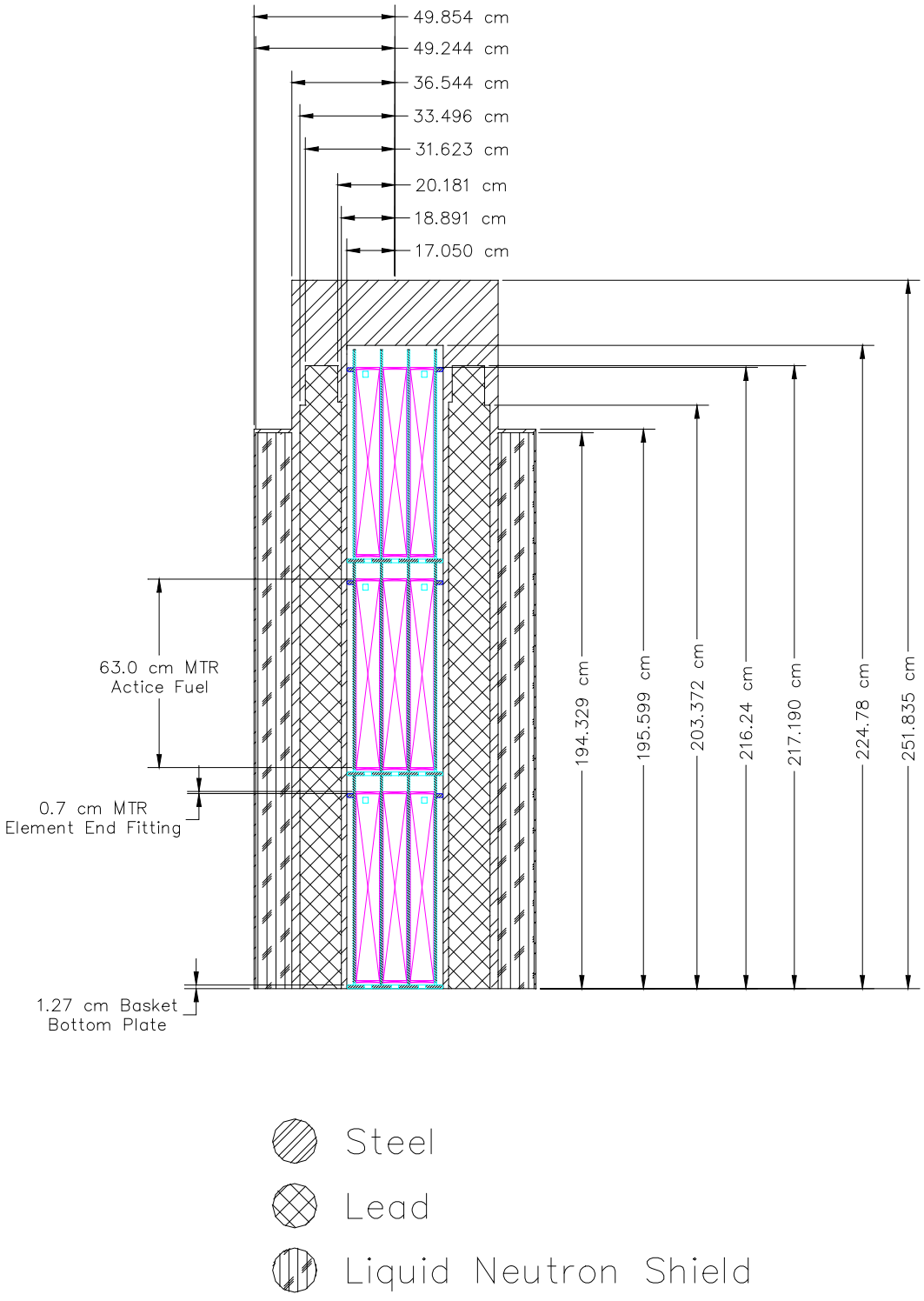

Figure 5.3.4-3 Dose Rates 2 Meters from Transport Vehicle (30 W Uniform Loading)

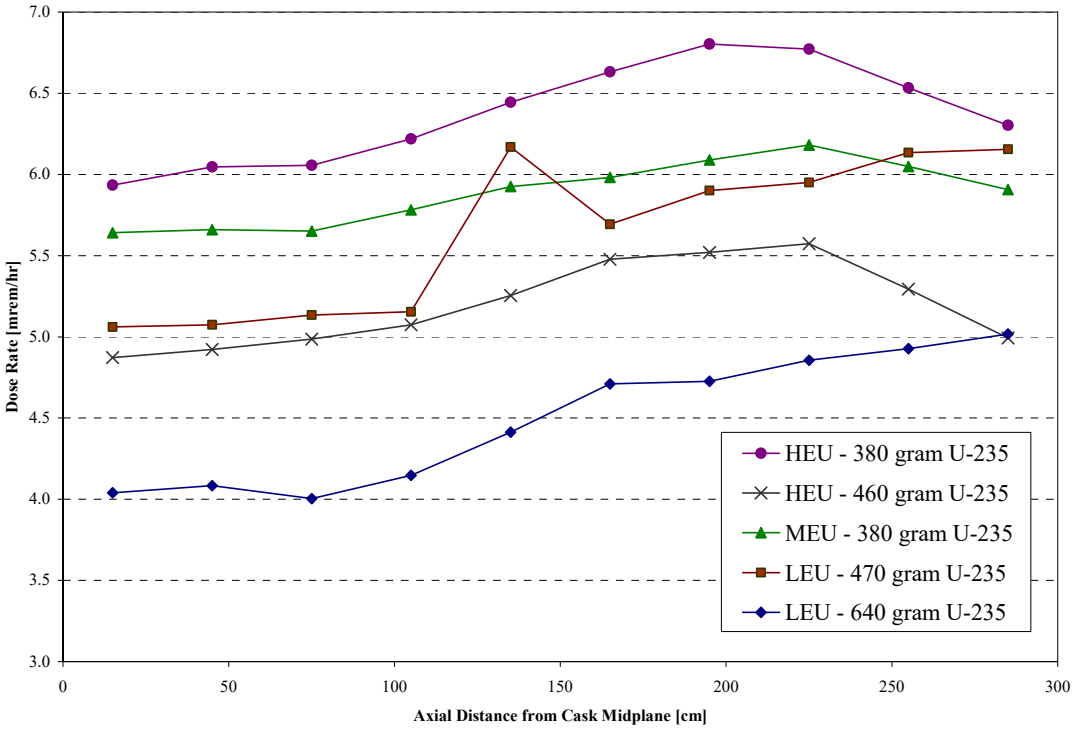

Note: The 40 W per element LEU and preferential loaded HEU patterns are not shown in this figure as the figure is designed to demonstrate fuel material enrichment and mass impact on dose rate at a fixed heat load.

Figure 5.3.4-4 Dose Rate Profile at Radial Surface of LWT Cask – Normal Conditions – LEU Fuel at 80% Burnup and 40W Uniform Loading

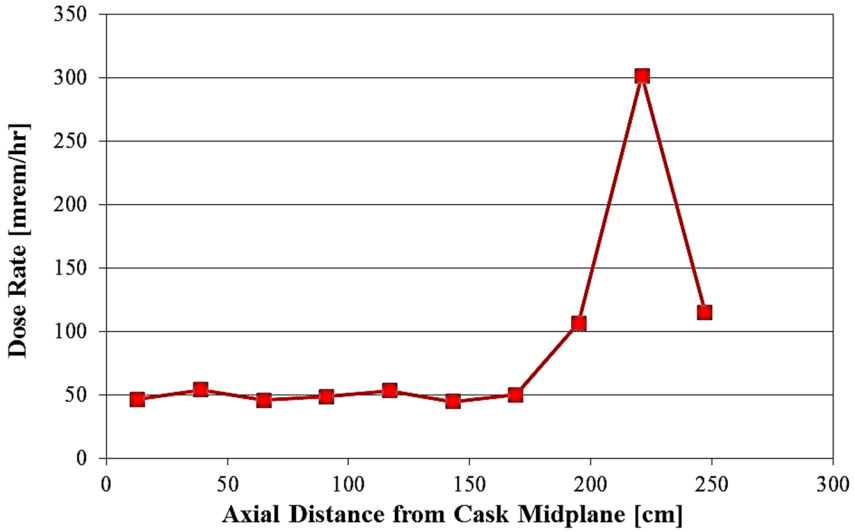

Figure 5.3.4-5 Dose Rate Profile at 2m from Conveyance Radial Surface of LWT Cask – Normal Conditions – LEU Fuel at 80% Burnup and 40W Uniform Loading

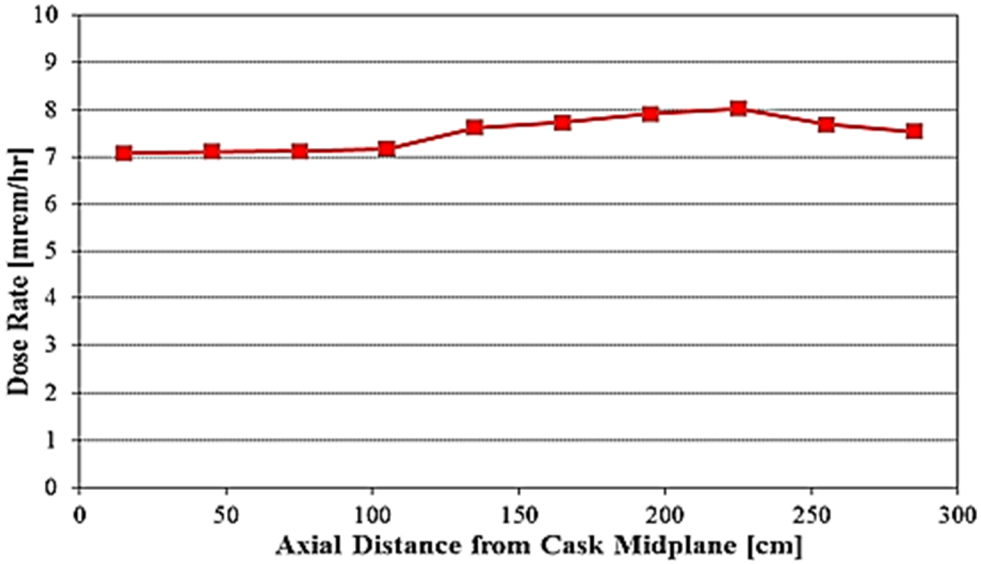

Figure 5.3.4-6 MTR LEU Low Burnup Dose Rate Profile Comparison

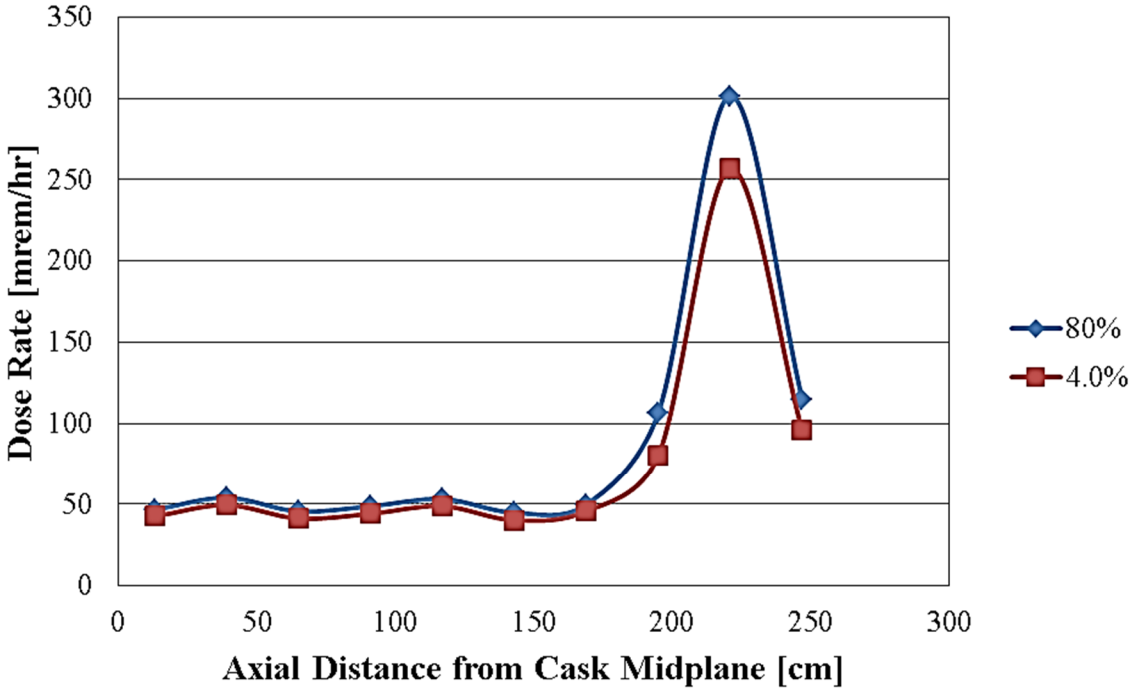

Figure 5.3.4-7 MTR MEU Low Burnup Dose Rate Profile Comparison

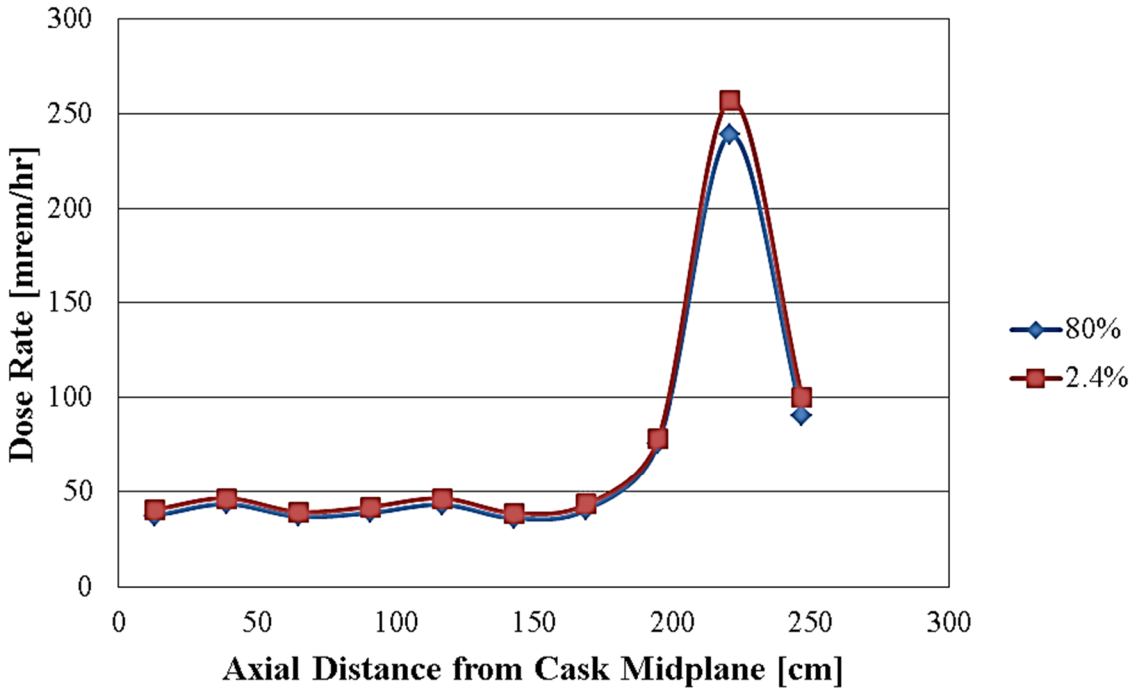

Figure 5.3.4-8 MTR HEU Low Burnup Dose Rate Profile Comparison

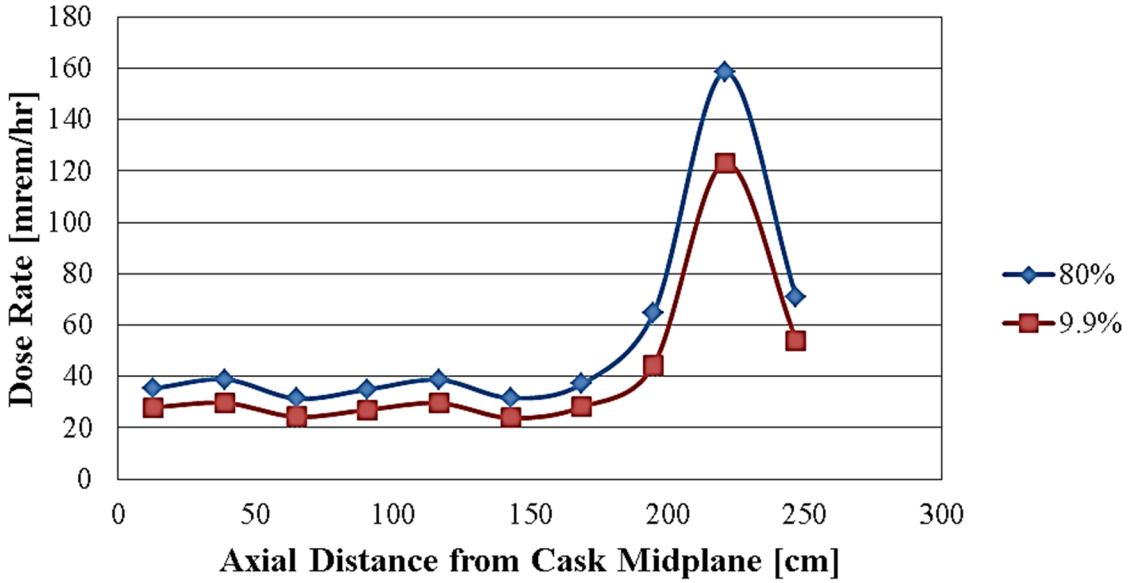

Figure 5.3.4-9 Assembly Total Neutron Source at Various Burnups – 490 grams ^{235}U LEU Fuel with 40 W Heat Load

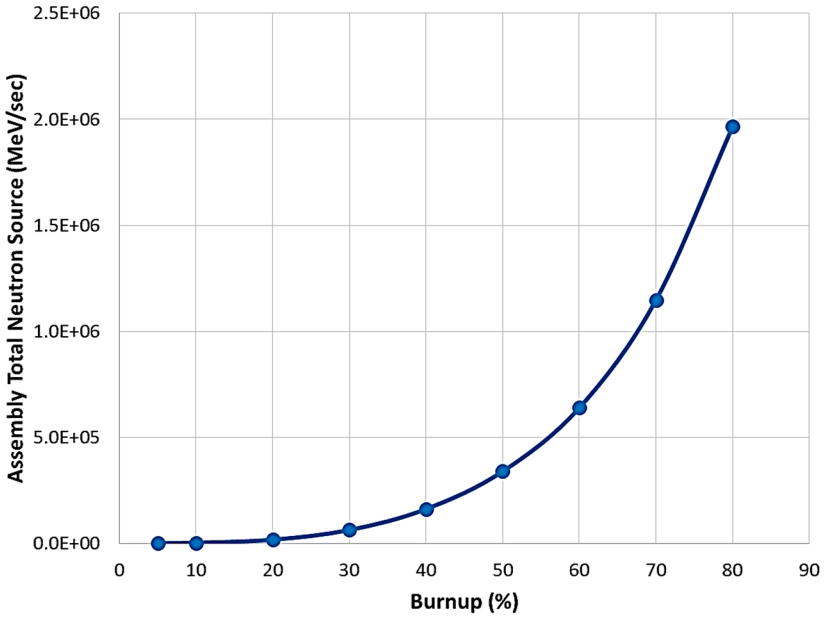

Figure 5.3.4-10 Assembly Total Gamma Source at Various Burnups – 490 grams ^{235}U LEU Fuel with 40 W Heat Load

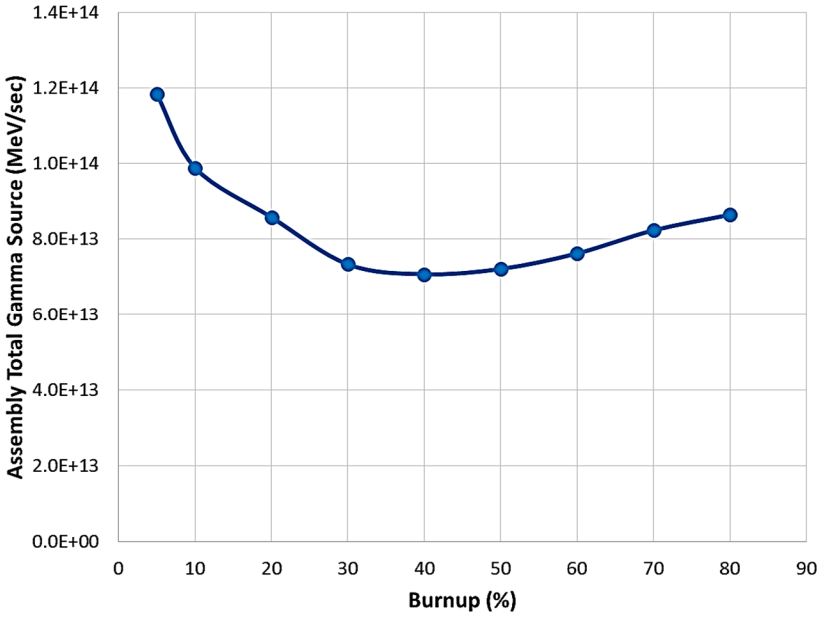

Table 5.3.4-1 Design Basis MTR Fuel Assembly Characteristics

Fuel Parameters	Units	HEU	MEU	LEU
Element Width	[cm]	7.6	7.6	7.6
Element Depth	[cm]	8.0	8.0	8.0
Side Plate Thickness	[cm]	0.475	0.475	0.475
Side Plate Depth	[cm]	7.5	7.5	7.5
Number of Plates		23	23	23
Plate Thickness	[cm]	0.127	0.127	0.127
Active Fuel Length	[cm]	63	65	65
Active Fuel Width	[cm]	6.35	6.35	6.35
Active Fuel Thickness	[cm]	0.051	0.051	0.051
Cut End Length	[cm]	0.7	0.7	0.7
Fuel Composition		U-Al	U-Al	U-Al
Wt % ^{235}U		90	40	19
Maximum ^{235}U per Fuel Assembly	[g]	380[1]	380	470[2]
Wt % U in Fuel Composition		30	50	75

[1] HEU fuel was also analyzed at 460 grams of ^{235}U per fuel element.

[2] LEU fuel was also analyzed at 490 and 640 grams of ^{235}U per fuel element. The 490-gram ^{235}U pattern is evaluated to a higher heat load of 40 W per element.

Table 5.3.4-2 MTR Fuel Element Gamma Source Terms by Thermal Output – 380 grams ^{235}U

Burnup 660,000 MWd/MTU			MTR Assembly Thermal Output			
			20 Watts	30 Watts	70 Watts	120 Watts
Group	E_{hi} (Mev)	E_{low} (Mev)	2162 Days (g/sec)	1413 Days (g/sec)	581 Days (g/sec)	330 Days (g/sec)
1	10.00	8.00	1.63E+03	1.81E+03	2.08E+03	2.21E+03
2	8.00	6.50	7.69E+03	8.52E+03	9.79E+03	1.04E+04
3	6.50	5.00	3.92E+04	4.35E+04	4.99E+04	5.30E+04
4	5.00	4.00	9.77E+04	1.08E+05	1.24E+05	1.32E+05
5	4.00	3.00	3.30E+07	1.32E+08	6.24E+08	9.96E+08
6	3.00	2.50	2.81E+08	1.17E+09	5.84E+09	9.56E+09
7	2.50	2.00	2.45E+10	1.47E+11	1.09E+12	2.00E+12
8	2.00	1.66	6.34E+09	2.33E+10	1.32E+11	2.34E+11
9	1.66	1.33	5.93E+11	1.19E+12	3.01E+12	4.20E+12
10	1.33	1.00	1.87E+12	2.75E+12	5.21E+12	6.81E+12
11	1.00	0.80	8.36E+12	1.61E+13	3.47E+13	4.42E+13
12	0.80	0.60	4.21E+13	6.14E+13	1.14E+14	2.15E+14
13	0.60	0.40	1.70E+13	3.41E+13	7.83E+13	1.04E+14
14	0.40	0.30	9.18E+11	1.71E+12	7.11E+12	1.23E+13
15	0.30	0.20	1.42E+12	2.47E+12	9.38E+12	1.62E+13
16	0.20	0.10	5.22E+12	9.84E+12	4.12E+13	7.19E+13
17	0.10	0.05	6.33E+12	1.09E+13	4.07E+13	7.00E+13
18	0.05	0.01	2.19E+13	3.60E+13	1.26E+14	2.15E+14
Total	--	--	1.06E+14	1.77E+14	4.60E+14	7.61E+14

Table 5.3.4-3 MTR Fuel Element Neutron Source Terms by Thermal Output – 380 grams ^{235}U

Burnup 660,000 MWd/MTU			MTR Assembly Thermal Output			
			20 Watts	30 Watts	70 Watts	120 Watts
Group	E_{hi} (Mev)	E_{low} (Mev)	2162 Days (n/sec)	1413 Days (n/sec)	581 Days (n/sec)	330Days (n/sec)
1	2.00E+01	6.43E+00	5.42E+04	6.06E+04	7.06E+04	7.52E+04
2	6.43E+00	3.00E+00	6.26E+05	6.98E+05	8.12E+05	8.67E+05
3	3.00E+00	1.85E+00	7.11E+05	7.90E+05	9.14E+05	9.74E+05
4	1.85E+00	1.40E+00	3.92E+05	4.37E+05	5.07E+05	5.39E+05
5	1.40E+00	9.00E-01	5.25E+05	5.86E+05	6.81E+05	7.24E+05
6	9.00E-01	4.00E-01	5.69E+05	6.36E+05	7.40E+05	7.87E+05
7	4.00E-01	1.00E-01	1.11E+05	1.24E+05	1.45E+05	1.54E+05
8	1.00E-01	1.70E-02	0.00E+00	0.00E+00	0.00E+00	0.00E+00
9	1.70E-02	3.00E-03	0.00E+00	0.00E+00	0.00E+00	0.00E+00
10	3.00E-03	5.50E-04	0.00E+00	0.00E+00	0.00E+00	0.00E+00
11	5.50E-04	1.00E-04	0.00E+00	0.00E+00	0.00E+00	0.00E+00
12	1.00E-04	3.00E-05	0.00E+00	0.00E+00	0.00E+00	0.00E+00
13	3.00E-05	1.00E-05	0.00E+00	0.00E+00	0.00E+00	0.00E+00
14	1.00E-05	3.05E-06	0.00E+00	0.00E+00	0.00E+00	0.00E+00
15	3.05E-06	1.77E-06	0.00E+00	0.00E+00	0.00E+00	0.00E+00
16	1.77E-06	1.30E-06	0.00E+00	0.00E+00	0.00E+00	0.00E+00
17	1.30E-06	1.13E-06	0.00E+00	0.00E+00	0.00E+00	0.00E+00
18	1.13E-06	1.00E-06	0.00E+00	0.00E+00	0.00E+00	0.00E+00
19	1.00E-06	8.00E-07	0.00E+00	0.00E+00	0.00E+00	0.00E+00
20	8.00E-07	4.00E-07	0.00E+00	0.00E+00	0.00E+00	0.00E+00
21	4.00E-07	3.25E-07	0.00E+00	0.00E+00	0.00E+00	0.00E+00
22	3.25E-07	2.25E-07	0.00E+00	0.00E+00	0.00E+00	0.00E+00
23	2.25E-07	1.00E-07	0.00E+00	0.00E+00	0.00E+00	0.00E+00
24	1.00E-07	5.00E-08	0.00E+00	0.00E+00	0.00E+00	0.00E+00
25	5.00E-08	3.00E-08	0.00E+00	0.00E+00	0.00E+00	0.00E+00
26	3.00E-08	1.00E-08	0.00E+00	0.00E+00	0.00E+00	0.00E+00
27	1.00E-08	0.00E+00	0.00E+00	0.00E+00	0.00E+00	0.00E+00
Total	--	--	2.99E+06	3.33E+06	3.87E+06	4.12E+06

Table 5.3.4-4 MTR Fuel Element Gamma Source Terms by Thermal Output – 460 grams ^{235}U

Burnup 577,500 MWd/MTU			MTR Assembly Thermal Output			
			20 Watts	30 Watts	70 Watts	120 Watts
Group	E_{hi} (Mev)	E_{low} (Mev)	2247 Days (g/sec)	1467 Days (g/sec)	602 Days (g/sec)	341 Days (g/sec)
1	10.00	8.00	1.07E+03	1.16E+03	1.31E+03	1.40E+03
2	8.00	6.50	5.02E+03	5.48E+03	6.18E+03	6.59E+03
3	6.50	5.00	2.56E+04	2.80E+04	3.15E+04	3.36E+04
4	5.00	4.00	6.38E+04	6.97E+04	7.86E+04	8.38E+04
5	4.00	3.00	2.70E+07	1.15E+08	5.77E+08	9.39E+08
6	3.00	2.50	2.33E+08	1.02E+09	5.47E+09	9.13E+09
7	2.50	2.00	2.08E+10	1.34E+11	1.08E+12	2.03E+12
8	2.00	1.66	5.73E+09	2.12E+10	1.27E+11	2.30E+11
9	1.66	1.33	5.49E+11	1.12E+12	2.93E+12	4.14E+12
10	1.33	1.00	1.86E+12	2.73E+12	5.18E+12	6.81E+12
11	1.00	0.80	7.73E+12	1.52E+13	3.37E+13	4.34E+13
12	0.80	0.60	4.20E+13	6.08E+13	1.12E+14	2.09E+14
13	0.60	0.40	1.56E+13	3.21E+13	7.58E+13	1.02E+14
14	0.40	0.30	9.39E+11	1.68E+12	7.05E+12	1.24E+13
15	0.30	0.20	1.46E+12	2.44E+12	9.31E+12	1.63E+13
16	0.20	0.10	5.34E+12	9.69E+12	4.10E+13	7.28E+13
17	0.10	0.05	6.58E+12	1.09E+13	4.07E+13	7.09E+13
18	0.05	0.01	2.26E+13	3.60E+13	1.26E+14	2.17E+14
Total	--	--	1.05E+14	1.73E+14	4.55E+14	7.56E+14

Table 5.3.4-5 MTR Fuel Element Neutron Source Terms by Thermal Output – 460 grams ^{235}U

Burnup 577,500 MWd/MTU			MTR Assembly Thermal Output			
			20 Watts	30 Watts	70 Watts	120 Watts
Group	E_{hi} (Mev)	E_{low} (Mev)	2247 Days (n/sec)	1467 Days (n/sec)	602 Days (n/sec)	341 Days (n/sec)
1	2.00E+01	6.43E+00	3.49E+04	3.83E+04	4.33E+04	4.61E+04
2	6.43E+00	3.00E+00	4.12E+05	4.50E+05	5.09E+05	5.46E+05
3	3.00E+00	1.85E+00	4.83E+05	5.24E+05	5.89E+05	6.29E+05
4	1.85E+00	1.40E+00	2.59E+05	2.83E+05	3.19E+05	3.38E+05
5	1.40E+00	9.00E-01	3.42E+05	3.74E+05	4.22E+05	4.48E+05
6	9.00E-01	4.00E-01	3.68E+05	4.03E+05	4.55E+05	4.84E+05
7	4.00E-01	1.00E-01	7.19E+04	7.87E+04	8.90E+04	9.47E+04
8	1.00E-01	1.70E-02	0.00E+00	0.00E+00	0.00E+00	0.00E+00
9	1.70E-02	3.00E-03	0.00E+00	0.00E+00	0.00E+00	0.00E+00
10	3.00E-03	5.50E-04	0.00E+00	0.00E+00	0.00E+00	0.00E+00
11	5.50E-04	1.00E-04	0.00E+00	0.00E+00	0.00E+00	0.00E+00
12	1.00E-04	3.00E-05	0.00E+00	0.00E+00	0.00E+00	0.00E+00
13	3.00E-05	1.00E-05	0.00E+00	0.00E+00	0.00E+00	0.00E+00
14	1.00E-05	3.05E-06	0.00E+00	0.00E+00	0.00E+00	0.00E+00
15	3.05E-06	1.77E-06	0.00E+00	0.00E+00	0.00E+00	0.00E+00
16	1.77E-06	1.30E-06	0.00E+00	0.00E+00	0.00E+00	0.00E+00
17	1.30E-06	1.13E-06	0.00E+00	0.00E+00	0.00E+00	0.00E+00
18	1.13E-06	1.00E-06	0.00E+00	0.00E+00	0.00E+00	0.00E+00
19	1.00E-06	8.00E-07	0.00E+00	0.00E+00	0.00E+00	0.00E+00
20	8.00E-07	4.00E-07	0.00E+00	0.00E+00	0.00E+00	0.00E+00
21	4.00E-07	3.25E-07	0.00E+00	0.00E+00	0.00E+00	0.00E+00
22	3.25E-07	2.25E-07	0.00E+00	0.00E+00	0.00E+00	0.00E+00
23	2.25E-07	1.00E-07	0.00E+00	0.00E+00	0.00E+00	0.00E+00
24	1.00E-07	5.00E-08	0.00E+00	0.00E+00	0.00E+00	0.00E+00
25	5.00E-08	3.00E-08	0.00E+00	0.00E+00	0.00E+00	0.00E+00
26	3.00E-08	1.00E-08	0.00E+00	0.00E+00	0.00E+00	0.00E+00
27	1.00E-08	0.00E+00	0.00E+00	0.00E+00	0.00E+00	0.00E+00
Total	--	--	1.97E+06	2.15E+06	2.43E+06	2.59E+06

Table 5.3.4-6 LEU MTR Hardware Source to Fuel Source Comparison

Group	E_{hi} (Mev)	E_{low} (Mev)	834 days Fuel (γ/sec)	Cd at 834 days 100 g Cd (γ/sec)	Cd Source % of Fuel Gamma	Cd at 90 days 100 g Cd (γ/sec)	Cd Source % of Fuel Gamma
1	10.00	8.00	6.30E+02	0.00E+00	0.0%	0.00E+00	0.0%
2	8.00	6.50	2.97E+03	0.00E+00	0.0%	0.00E+00	0.0%
3	6.50	5.00	1.51E+04	0.00E+00	0.0%	0.00E+00	0.0%
4	5.00	4.00	3.78E+04	0.00E+00	0.0%	0.00E+00	0.0%
5	4.00	3.00	2.57E+08	4.49E-16	0.0%	1.80E-15	0.0%
6	3.00	2.50	2.16E+09	3.23E+00	0.0%	2.55E+01	0.0%
7	2.50	2.00	1.72E+11	1.19E+03	0.0%	9.38E+03	0.0%
8	2.00	1.66	3.60E+10	5.80E+04	0.0%	5.04E+05	0.0%
9	1.66	1.33	8.12E+11	7.57E+07	0.0%	6.35E+08	0.1%
10	1.33	1.00	2.68E+12	8.65E+05	0.0%	2.07E+09	0.1%
11	1.00	0.80	9.90E+12	2.11E+08	0.0%	5.66E+09	0.1%
12	0.80	0.60	6.14E+13	2.87E+08	0.0%	3.49E+09	0.0%
13	0.60	0.40	2.21E+13	2.13E+07	0.0%	3.12E+09	0.0%
14	0.40	0.30	2.36E+12	2.19E+08	0.0%	3.55E+09	0.2%
15	0.30	0.20	3.34E+12	8.06E+08	0.0%	5.78E+09	0.2%
16	0.20	0.10	1.27E+13	4.57E+09	0.0%	2.32E+10	0.2%
17	0.10	0.05	1.45E+13	1.17E+10	0.1%	3.88E+10	0.3%
18	0.05	0.01	4.76E+13	5.52E+10	0.1%	1.65E+11	0.3%
Total	--	--	1.78E+14	7.31E+10	0.0%	2.51E+11	0.1%

Table 5.3.4-7 HEU MTR Hardware Source to Fuel Comparison

Group	E_{hi} (Mev)	E_{low} (Mev)	1467 days Fuel (γ/sec)	Cd at 1467days 100 g Cd (γ/sec)	Cd Source % of Fuel Gamma	Cd at 90 days 100 g Cd (γ/sec)	Cd Source % of Fuel Gamma
1	10.00	8.00	1.16E+03	0.00E+00	0.0%	0.00E+00	0.0%
2	8.00	6.50	5.48E+03	0.00E+00	0.0%	0.00E+00	0.0%
3	6.50	5.00	2.80E+04	0.00E+00	0.0%	0.00E+00	0.0%
4	5.00	4.00	6.97E+04	0.00E+00	0.0%	0.00E+00	0.0%
5	4.00	3.00	1.15E+08	8.77E-15	0.0%	1.14E-13	0.0%
6	3.00	2.50	1.02E+09	2.69E+00	0.0%	1.23E+02	0.0%
7	2.50	2.00	1.34E+11	9.89E+02	0.0%	4.52E+04	0.0%
8	2.00	1.66	2.12E+10	4.82E+04	0.0%	2.49E+06	0.0%
9	1.66	1.33	1.12E+12	6.30E+07	0.0%	3.66E+09	0.3%
10	1.33	1.00	2.73E+12	7.02E+05	0.0%	4.30E+10	1.6%
11	1.00	0.80	1.52E+13	1.75E+08	0.0%	9.22E+10	0.6%
12	0.80	0.60	6.08E+13	2.38E+08	0.0%	2.76E+10	0.0%
13	0.60	0.40	3.21E+13	4.54E+07	0.0%	5.33E+10	0.2%
14	0.40	0.30	1.68E+12	5.87E+08	0.0%	6.72E+10	4.0%
15	0.30	0.20	2.44E+12	2.16E+09	0.1%	1.01E+11	4.2%
16	0.20	0.10	9.69E+12	1.23E+10	0.1%	3.51E+11	3.6%
17	0.10	0.05	1.09E+13	3.01E+10	0.3%	5.20E+11	4.8%
18	0.05	0.01	3.60E+13	1.33E+11	0.4%	1.75E+12	4.9%
Total	--	--	1.73E+14	1.79E+11	0.1%	3.01E+12	1.7%

Table 5.3.4-8 Material Densities for MTR Fuel Shielding Analysis

Material	Element	Density [atom/barn-cm]
HEU Fuel (380 g ^{235}U)	AL	2.470E-02
	U-235	2.548E-04
	U-238	2.795E-05
HEU Fuel (460 g ^{235}U)	AL	2.590E-02
	U-235	3.075E-04
	U-238	3.373E-05
MEU Fuel	AL	2.432E-02
	U-235	2.460E-04
	U-238	3.643E-04
LEU Fuel	AL	2.361E-02
	U-235	3.051E-04
	U-238	1.284E-03
End Fitting	AL	2.634E-02
H_2O/Glycol	H	5.988E-02
	C	1.070E-02
	O	2.459E-02
Stainless Steel	CR	1.743E-02
	MN	1.736E-03
	FE	5.936E-02
	NI	7.721E-03
Lead	PB	3.297E-02

Note: Fuel plate meat/core material is modeled as Uranium in an Aluminum matrix material. Uranium may also be in an oxide (U_3O_8) or silicide (U_xS_2) form. Neither oxygen nor silicon has a significant neutron absorption cross section or produce activation products significant to the shielding analysis. Oxygen or silicon represents a minor component of the overall fuel matrix composition.

Table 5.3.4-9 LWT Cask Surface Total Dose Rates (Normal Conditions of Transport)

Band [cm]	LWT Cask Surface Radial Dose Rates (mrem/hr)							
	Gamma	FSD (%)	Neutron	FSD (%)	N-Gamma	FSD (%)	Total	FSD (%)
247	98.87	1.1	18.62	0.6	0.19	3.3	117.69	0.9
221	234.17	1.1	59.67	0.3	0.48	1.7	294.31	0.9
195	86.34	0.5	43.38	0.4	1.38	0.7	131.10	0.4
169	54.75	0.4	5.06	0.7	2.58	0.5	62.39	0.4
143	45.55	0.5	4.75	0.7	2.75	0.5	53.04	0.4
117	57.19	0.5	5.31	0.6	2.91	0.4	65.42	0.4
91	52.97	0.5	5.13	0.6	2.90	0.5	61.00	0.4
65	46.75	0.5	4.85	0.6	2.89	0.4	54.48	0.4
39	58.61	0.5	5.40	0.7	3.00	0.4	67.01	0.4
13	53.69	0.5	5.22	0.6	3.03	0.5	61.94	0.4

Maximum dose rate for 460 gram ^{235}U element is 267.1 mrem/hr at the 221 cm band.

Table 5.3.4-10 LWT Cask Plan of Conveyance Dose Rates (Normal Conditions of Transport)

Band [cm]	Conveyance Dose Rates (mrem/hr)							
	Gamma	FSD (%)	Neutron	FSD (%)	N-Gamma	FSD (%)	Total	FSD (%)
266	30.64	1.1	6.20	0.5	0.18	1.0	37.01	0.9
238	39.27	1.0	8.17	0.5	0.25	0.8	47.69	0.8
210	35.26	0.9	8.48	0.4	0.37	0.6	44.11	0.8
182	26.66	0.6	6.29	0.5	0.50	0.5	33.45	0.5
154	22.13	0.5	3.77	0.6	0.62	0.5	26.52	0.4
126	20.53	0.5	2.47	0.7	0.71	0.4	23.70	0.4
98	20.27	0.4	1.96	0.6	0.78	0.4	23.01	0.4
70	19.92	0.4	1.76	0.6	0.82	0.4	22.50	0.3
42	20.05	0.4	1.72	0.7	0.84	0.4	22.61	0.4
14	20.24	0.4	1.69	0.5	0.86	0.4	22.78	0.4

Maximum dose rate for 460 gram ^{235}U element is 43.8 mrem/hr at the 238 cm band.

Table 5.3.4-11 LWT Cask 2 Meter off the Plane of Conveyance Dose Rates (Normal Conditions of Transport)

Band [cm]	2 Meters off the Vertical Plane of Conveyance Dose Rates (mrem/hr)							
	Gamma	FSD (%)	Neutron	FSD (%)	N-Gamma	FSD (%)	Total	FSD (%)
285	7.00	2.0	1.14	2.0	0.10	2.1	8.23	1.7
255	7.55	2.0	1.19	1.9	0.11	2.1	8.86	1.8
225	8.47	2.4	1.19	1.8	0.12	2.0	9.79	2.1
195	8.02	1.6	1.20	1.9	0.14	1.7	9.36	1.4
165	8.60	1.8	1.12	1.8	0.15	1.7	9.87	1.5
135	8.42	1.3	1.11	1.8	0.16	1.7	9.69	1.1
105	8.55	1.2	1.01	1.9	0.17	2.1	9.74	1.1
75	8.59	1.1	0.97	2.1	0.18	1.6	9.73	1.0
45	8.85	1.7	0.94	2.0	0.18	1.6	9.98	1.5
15	8.80	1.2	0.89	2.0	0.19	1.7	9.88	1.1

Maximum dose rate for 460 gram ^{235}U element is 9.36 mrem/hr at the 195 cm band.

Table 5.3.4-12 LWT Cask 1 Meter from the Cask Surface Dose Rates (Normal Conditions of Transport)

Band [cm]	1 Meter off the Cask Dose Rates							
	Gamma	FSD (%)	Neutron	FSD (%)	N-Gamma	FSD (%)	Total	FSD (%)
285	17.95	1.0	3.86	0.6	0.14	0.9	21.96	0.8
255	25.73	1.1	4.98	0.5	0.20	0.8	30.90	0.9
225	25.83	1.0	5.58	0.4	0.27	0.6	31.68	0.8
195	23.06	0.8	5.03	0.5	0.35	0.6	28.45	0.7
165	19.06	0.6	3.69	0.5	0.44	0.5	23.18	0.5
135	17.24	0.5	2.54	0.6	0.51	0.4	20.29	0.4
105	16.68	0.4	1.90	0.6	0.57	0.4	19.16	0.4
75	16.44	0.4	1.60	0.6	0.61	0.4	18.65	0.4
45	16.33	0.4	1.47	0.7	0.63	0.4	18.42	0.4
15	16.38	0.4	1.40	0.5	0.65	0.4	18.43	0.3

Maximum dose rate for 460 gram ^{235}U element is 29.5 mrem/hr at the 225 cm band.

Table 5.3.4-13 Axial Surface Dose Rates at Cask Lid (Normal Conditions of Transport)

Band [cm]	Cask Lid Dose Rates (mrem/hr) Directly Above the MTR Elements					
	Gamma	FSD (%)	Neutron	FSD (%)	Total	FSD (%)
28.5	16.19	0.8	16.82	7.2	33.01	3.7
25.5	25.34	0.9	19.95	7.9	45.53	3.5
22.5	35.61	0.8	24.84	5.8	60.55	2.4
19.5	48.48	0.8	29.90	6.5	78.43	2.5
16.5	63.02	0.8	41.88	24.9	105.20	9.9
13.5	80.35	0.9	38.04	7.9	118.46	2.6
10.5	103.64	0.9	44.71	14.1	148.35	4.3
7.5	126.16	0.9	51.17	10.1	177.41	3.0
4.5	147.50	1.2	41.19	10.5	188.70	2.5
1.5	158.66	2.5	52.57	26.1	211.23	6.8

Notes:

a.) Maximum dose rate for 460 gram ^{235}U element is 174.1 mrem/hr at the 1.5 cm band.

b.) Maximum dose rate for 380 gram ^{235}U element is 10.9 mrem/hr at 1 meter from the cask lid surface.

Table 5.3.4-14 LWT Cask Dose Rates 5 Meters from the Cask Lid (Back of Tractor Cab) for Normal Conditions of Transport

Band [cm]	5 Meter Dose Rates (mrem/hr)					
	Gamma	FSD (%)	Neutron	FSD (%)	Total	FSD (%)
84.38	0.47	1.6	0.12	13.9	0.59	3.1
73.13	0.49	1.6	0.11	12.4	0.61	2.6
61.88	0.49	1.8	0.12	16.3	0.61	3.5
50.63	0.51	2.1	0.13	19.0	0.65	4.2
39.38	0.53	2.4	0.12	18.8	0.65	3.9
28.13	0.54	3.0	0.10	23.1	0.64	4.4
16.88	0.55	3.6	0.07	28.2	0.62	4.6
5.63	0.54	5.8	0.14	51.6	0.68	11.5

Maximum dose rate for 460 gram ^{235}U element is 0.62 mrem/hr at the 28.13 cm band.

Table 5.3.4-15 LWT Cask Dose Rates – 1 Meter from the Cask Surface (Hypothetical Accident Conditions)

Band [cm]	1 Meter Accident Dose Rates (mrem/hr)					
	Gamma	FSD (%)	Neutron	FSD (%)	Total	FSD (%)
285	21.38	5.2	9.78	0.4	31.18	3.5
255	33.72	13.5	13.90	0.3	47.63	9.6
225	31.01	3.0	19.15	0.3	50.19	1.9
195	30.50	2.9	24.55	0.2	55.08	1.6
165	29.36	3.5	29.32	0.2	58.71	1.7
135	29.51	3.0	33.11	0.2	62.66	1.4
105	28.68	3.4	35.67	0.2	64.38	1.5
75	29.52	4.3	37.51	0.2	67.07	1.9
45	28.49	2.2	38.59	0.2	67.12	0.9
15	27.74	1.2	39.24	0.2	67.02	0.5

Maximum dose rate for 460 gram ^{235}U element is 54.5 mrem/hr at the 15 cm band.

Table 5.3.4-16 LEU MTR Fuel Element Gamma Source Term - 40 W - 490g ^{235}U- 80% Burnup

Group	E_{hi} (Mev)	E_{low} (Mev)	402 Days (γ/sec)
1	10.00	8.00	4.666E+02
2	8.00	6.50	2.199E+03
3	6.50	5.00	1.122E+04
4	5.00	4.00	2.797E+04
5	4.00	3.00	5.259E+08
6	3.00	2.50	4.538E+09
7	2.50	2.00	4.817E+11
8	2.00	1.66	7.979E+10
9	1.66	1.33	1.139E+12
10	1.33	1.00	2.862E+12
11	1.00	0.80	1.183E+13
12	0.80	0.60	6.811E+13
13	0.60	0.40	2.915E+13
14	0.40	0.30	4.091E+12
15	0.30	0.20	5.466E+12
16	0.20	0.10	2.217E+13
17	0.10	0.05	2.339E+13
18	0.05	0.01	7.351E+13
Total	--	--	2.423E+14

Table 5.3.4-17 LEU MTR Fuel Element Neutron Source Term - 40 W - 490g ^{235}U- 80% Burnup

Group	E_{hi} (Mev)	E_{low} (Mev)	402 Days (n/sec)
1	2.00 E+01	6.43 E+00	1.462E+04
2	6.43 E+00	3.00 E+00	1.878E+05
3	3.00 E+00	1.85 E+00	2.095E+05
4	1.85 E+00	1.40 E+00	1.067E+05
5	1.40 E+00	9.00 E-01	1.408E+05
6	9.00 E-01	4.00 E-01	1.529E+05
7	4.00 E-01	1.00 E-01	2.999E+04
8	1.00 E-01	1.70 E-02	--
9	1.70 E-02	3.00 E-03	--
10	3.00 E-03	5.50 E-04	--
11	5.50 E-04	1.00 E-04	--
12	1.00 E-04	3.00 E-05	--
13	3.00 E-05	1.00 E-05	--
14	1.00 E-05	3.05 E-06	--
15	3.05 E-06	1.77 E-06	--
16	1.77 E-06	1.30 E-06	--
17	1.30 E-06	1.13 E-06	--
18	1.13 E-06	1.00 E-06	--
19	1.00 E-06	8.00 E-07	--
20	8.00 E-07	4.00 E-07	--
21	4.00 E-07	3.25 E-07	--
22	3.25 E-07	2.25 E-07	--
23	2.25 E-07	1.00 E-07	--
24	1.00 E-07	5.00 E-08	--
25	5.00 E-08	3.00 E-08	--
26	3.00 E-08	1.00 E-08	--
27	1.00 E-08	0.00 E+00	--
Total	--	--	8.423E+05

5.3.5 25 PWR Fuel Rods Configuration

A maximum of 25 design basis PWR fuel rods has been analyzed for transport in the NAC-LWT. The design basis includes 23 fuel rods at 60,000 MWd/MTU burnup, 150 days cooling, and 2 fuel rods at 65,000 MWd/MTU burnup, 150 days cooling. The design basis neutron and gamma spectra are shown in Table 5.3.5-1. These source terms were generated using the SAS2H SCALE sequence on the NAC-LWT design basis PWR fuel assembly. Source terms were generated at 60,000 MWd/MTU, 150 days cooling and 65,000 MWd/MTU 150 days cooling. The PWR fuel assembly source terms were then rated by the number of rods, i.e., 23/204 for the 60,000 MWd/MTU case and 2/204 for the 65,000 MWd/MTU case.

SAS1, one-dimensional radial shielding analysis, was used to calculate surface and 2 meter dose rates from the edge of vehicle under normal and accident conditions of transport. The analyses considered an axial peaking factor of 1.12. The 1D radial shielding model consisted of a source region, 25 homogenized PWR rods, surrounded by a 0.12 inch thick canister followed by the cylindrical shield regions of the cask. The same conservative assumptions used in previous radial shielding analysis were applied, i.e., minimum shield dimensions, lead gap and 0.94 g/cc neutron shield solution density. The material densities used for the 25 PWR rod analyses are provided in Table 5.3.5-2.

As activated hardware will not be included in a shipment of the 25 design basis PWR rods, dose rates at the top and bottom surfaces as well as in the transition regions will be below regulatory limits.

The results of the shielding analysis are presented in Table 5.3.5-3. The calculated dose rates are below the regulatory limits of 200 mrem/hr at the surface and 10 mrem/hr at 2 meters from edge of vehicle under normal conditions, and 1000 mrem/hr at 1 meter from surface under accident conditions.

Table 5.3.5-1 25 PWR Fuel Rods Design Basis Fuel Source Spectra

Energy Group	Energy Range (MeV)		Neutrons/sec	Energy Group	Energy Range (MeV)		Photons/sec
1	6.43	20.00	2.539E+6	1	8.00	10.00	2.110E+15
2	3.00	6.43	3.039E+7	2	6.50	8.00	6.802E+14
3	1.85	3.00	3.318E+7	3	5.00	6.50	7.002E+14
4	1.40	1.85	1.799E+7	4	4.00	5.00	1.688E+14
5	0.90	1.40	2.425E+7	5	3.00	4.00	1.274E+14
6	0.40	0.90	2.653E+7	6	2.50	3.00	1.151E+15
7	0.10	0.40	5.200E+6	7	2.00	2.50	2.964E+15
8-27	0.10	1E-08		8	1.66	2.00	3.389E+14
Total			1.401E+8	9	1.33	1.66	9.132E+13
				10	1.00	1.33	3.848E+13
				11	0.80	1.00	3.719E+12
				12	0.60	0.80	1.443E+13
				13	0.40	0.60	2.832E+11
				14	0.30	0.40	3.052E+10
				15	0.20	0.30	4.684E+06
				15	0.10	0.20	1.879E+06
				17	0.05	0.10	3.686E+05
				18	0.01	0.05	7.824E+04
				Total			8.389E+15

Table 5.3.5-2 Material Densities for 25 Design Basis PWR Rods Fuel Shielding Analysis

Material	25 PWR Rods	H_2O/ Glycol	304 Stainless Steel	Lead
Density, g/cc	0.4422	0.944	7.920	11.350
Nuclide	atm/b-cm			
Uranium 235	5.983E-06			
Uranium 238	8.319E-04			
Zircaloy	4.390E-04			
Oxygen	1.675E-03	2.458E-02		
Hydrogen		5.987E-02		
Carbon		1.070E-02		
Iron			5.936E-02	
Chromium			1.743E-02	
Nickel			7.721E-03	
Manganese			1.736E-03	
Lead				3.299E-02

Table 5.3.5-3 Cask Radial Dose Rates with 25 Design Basis PWR Fuel Rods (mrem/hr)

	Normal Conditions		Accident Conditions
Source Term	Surface	2 Meters from Vehicle Edge	1 Meter from Surface
Neutron	6.05	0.53	33.60
Primary Gamma	77.95	8.68	35.39
Secondary Gamma	3.14	0.19	0.45
Total	87.14	9.40	69.44

5.3.6 TRIGA Fuel Element Model Specification and Shielding Evaluation

A maximum of 140 TRIGA fuel elements are analyzed for transport in the LWT cask. This configuration consists of four (4) fuel elements placed in each of seven (7) cells in each of five (5) modules that form the TRIGA basket assembly. The five modules consist of a top, bottom and three intermediate units. All five of the modules must be installed in the cask cavity prior to transport. The maximum total decay heat load is 1.05 kW per cask, or 7.5 watts per element.

As described in Sections 5 and 5.1, the center cell of each nonpoisoned TRIGA fuel module is blocked prohibiting the loading of the central fuel tube. Consequently, only 120 fuel elements are loaded into the TRIGA fuel basket in the nonpoisoned configuration. Evaluating the NAC-LWT for the transport of 140 elements in the poisoned basket configuration, utilizing all seven of the TRIGA basket module cells, is bounding as a larger gamma and neutron source is evaluated than would occur for only 120 elements.

The TRIGA fuel element is provided in several configurations. The fuel is a Uranium-Zirconium Hydride (U-ZrH) that is enriched to nominal 20 wt % ^{235}U for LEU fuel and 70 wt % ^{235}U or 93 wt % ^{235}U for HEU fuels. The fuel consists of U-ZrH pellets clad in a tube of either aluminum or stainless steel, depending on fuel type. The active fuel length is either 14 inches or 15 inches, depending on the fuel type. The basic parameters of the various fuel configurations are presented in Table 1.2-2.

For the shielding analysis, the fuel region material description is based on the aluminum clad element with an active fuel length of 14 inches. This element is chosen for the shielding evaluation because it provides the least self-shielding among the TRIGA fuel types considered. The contents of a single basket cell are represented by five homogenized axial zones: fuel, upper and lower reflector, and upper and lower end fixture. The material densities of the homogenized zones are given in Table 5.3.6-5.

5.3.6.1 TRIGA Fuel Element Source Terms

Each of the TRIGA fuel element types is evaluated using the SAS2H (Herman) sequence to establish the burnup and cool time that results in a decay heat power limit for each fuel element type of 7.5 watts. TRIGA fuel cluster rods are evaluated in Section 5.3.7. The fuel parameters determined by the 7.5 watts decay heat limit are used in a SCALE SAS1 one-dimensional shielding analysis to calculate the normal transport and accident condition dose rate for each fuel type. As described below, the TRIGA fuel elements that result in the highest dose rates for the transport conditions (ACPR for normal conditions, and FLIP-LEU-II for accident conditions) are selected as the bounding case, and are evaluated using SCALE SAS4 three-dimensional analysis to establish the cask surface, one-meter and two-meter dose rates. These bounding source terms are presented in Table 5.1.1-3.

Figure 5.3.6-1 shows the one-dimensional dose rates at 2 meters from the edge of the conveyance for each fuel element under normal conditions of transport. Figure 5.3.6-2 shows the one-dimensional radial dose rate at 1 meter from the cask surface under hypothetical accident conditions. These figures provide a basis for comparison between fuel configurations, allowing the selection of a bounding fuel configuration. In normal conditions of transport, dose rates are dominated by contributions from gamma sources, and the limiting source term corresponds to that of the ACPR fuel type with 50% ^{235}U depletion (86.1 GWd/MTU). The total source includes a 5% uncertainty factor applied to the standard source value (SFA parameter), to more clearly bound the narrow range of dose rate variation observed among the various fuel configurations. Under accident conditions, in which a loss of the liquid neutron shield is assumed, neutron sources in fuel configurations at the high range of burnup are the chief contributor to dose rate. The accident conditions are analyzed on the basis of a low FLIP-LEU-II fuel element with 80% ^{235}U depletion (151.1 GWd/MTU). A three-dimensional analysis, which more accurately represents the cask shielding geometry, is applied to calculate dose rates at points of interest once the bounding fuel configuration is selected.

Source terms from activated fuel and nonfuel hardware are determined by computing the activation of a unit mass of stainless steel irradiated in the full core flux for the bounding fuel configuration using the SAS2H sequence. The stainless steel composition includes an assumed 1.2 g/kg concentration of ^{60}Co to bound the gamma dose contribution from ^{60}Co. Hardware source rates in each source region are determined by scaling this result by the mass of hardware present, and by a flux activation ratio intended to account for differences in the flux spectrum and intensity in the given source region. Material present in the reflector and end fixture regions is activated at a flux ratio of 0.1. Source rates from activated fuel cladding are computed using a flux ratio of 1.0. The resulting source terms are shown in Table 5.3.6-1 through Table 5.3.6-4. The reported spectra for the normal conditions analysis includes the 5% margin added to the source term. Hardware spectra are reported on a per kg basis.

Following conventional usage, TRIGA fuel element burnup is characterized in terms of the percent of ^{235}U atoms present in the fresh fuel element, which are depleted over the course of the fuel life. Depletion of ^{235}U refers to the net effect of all loss mechanisms, including in particular, parasitic absorption. In this analysis, values are determined by comparing the SAS2H-reported concentration of ^{235}U atoms at the beginning and end of the assumed irradiation period. The relation between ^{235}U depletion and burnup, measured in terms of energy per unit mass (GWd/MTU), depends on the initial enrichment of the fuel. Typically, for LEU (20% ^{235}U enrichment) TRIGA fuel elements, an 80% ^{235}U depletion corresponds to 151.1 GWd/MTU. For HEU fuels, an 80% ^{235}U depletion corresponds to 460 GWd/MTU for the modeled 70% ^{235}U enriched fuel and 583 GWd/MTU for the 93% ^{235}U enriched fuel.

5.3.6.2 TRIGA Fuel Element Model Description

The SCALE SAS4 Monte-Carlo shielding analysis sequence is used to compute dose rates exterior to the cask. The SAS4 sequence incorporates a validated FORTRAN coding modification that permits the determination of dose rate profiles along the axial and radial surfaces of cylindrical detectors surrounding the cask. SAS4 prepares input for and executes the MORSE Monte Carlo shielding analysis code, and automatically generates biasing parameters based on a one-dimensional XSDRNPM calculation. Because SAS4 requires model symmetry, both upper half and lower half three-dimensional models are developed.

The radial model dimensions are shown in Figure 5.3.6-3. Details of the TRIGA fuel basket are shown in Figure 5.3.6-4. The upper model dimensions are shown in Figure 5.3.6-5 and Figure 5.3.6-6, and the lower model dimensions are shown in Figure 5.3.6-7. The SAS4 model plane of symmetry is taken as the horizontal plane, which separates two baskets in the upper model and three baskets in the lower model.

Both normal and accident shielding analyses are performed using the upper and lower models. For the upper model, the fuel is shifted above the neutron shielding for both normal and accident conditions. Modeling the shifted fuel accounts for any potential sliding or shifting of the fuel.

The upper half model for normal conditions is presented in Figure 5.3.6-6. The upper half model with the shifted fuel is presented in Figure 5.3.6-5. For the lead slump accident, the fuel in the lower model is shifted above the neutron shield. For the lower model, under normal and accident conditions, the fuel is positioned as illustrated in Figure 5.3.6-7. Only one lower model is created because the dose rates are bounded by the upper half analysis, where the fuel is shifted above the neutron shielding. Each of these models incorporates the sources from the fuel gamma, fuel neutron, and fuel hardware.

Each of these models incorporates a discrete representation of the TRIGA fuel baskets. The borated steel plates in the poisoned basket configuration are omitted from the model, producing less shielding material in the basket region. The fuel region, basket module and cask material densities are provided in Table 5.3.6-5. To minimize self-shielding in the fuel, the fuel region modeled is based on the TRIGA AL14 aluminum clad fuel element. This element has the least mass of the fuel configurations considered, and its aluminum fixtures and cladding provide the least shielding. The source terms determined above are based on the stainless-steel clad element. This is conservative, since the aluminum end fixtures and cladding, and lower fuel mass provide significantly less self shielding than the actual fuel. A full poisoned basket loading of 140 TRIGA fuel elements is modeled, which bounds the 120 element loading of the nonpoisoned basket.

Models for Normal Conditions of Transport

In normal conditions of transport the neutron shield is assumed intact and the impact limiters installed. For simplicity, the impact limiters are neglected in the SAS4 upper and lower half normal condition models. As previously stated, the upper half shielding models are reflected about the upper two baskets.

One axial model is created representing the upper half of the NAC-LWT cask loaded with design basis TRIGA fuel elements. This model is used to predict upper and lower axial dose rates under both normal and accident conditions. In order to address the worst case geometric configuration, the TRIGA fuel elements are translated to the upper most position, in their respective baskets.

There are two radial upper half shielding models. The first model evaluates the fuel in the neutral position (in contact with the basket bottom plate). The second upper half model examines the fuel elements translated to the upper most basket position to evaluate the point of least shielding. The point of least shielding occurs in the area directly above the lead gamma shield and consists of ~7.66 inches of steel. Only one lower half model is used because fuel element translation does not affect radial dose rates and the lower half axial dose rates are bounded by the upper half axial analysis.

Analysis of the intact fuel elements shipped directly in baskets bounds the transportation of fuel in both the screened and sealed cans. Cans may only be transported in the top or bottom basket modules. In all cases, the top model of the cask with intact fuel or cans placed in the upper most position (directly against the bottom of the lid) is the bounding case. The shipping geometry of fuel in screened cans is essentially identical to fuel shipped directly in baskets, with the added conservatism that the can limits axial placement of fuel in the basket. The shipping geometry for fuel in the failed fuel can is similar to the analyzed case. The differences are that cladding may not be intact and source material may be distributed throughout the can or concentrated at either end. The analysis with standard fuel placed in the upper most position closely approximates the unlikely situation of a sealed fuel can with the source material in the top of the can. The two-rod limit for sealed cans lowers the source term and adds conservatism. For both types of cans, the can wall provides additional shielding material conservatively neglected in the shielding analysis.

Models for Accident Conditions

Under the accident conditions, the liquid neutron shield and the impact limiters are conservatively assumed to be removed from the package. Two radial shielding models, one for the upper half and one for the lower half are used. The accident condition radial models are identical to the normal condition models with the omission of the neutron shielding material. No axial models are required because the normal transport conditions models ignore the impact limiters and there is no neutron shielding in the axial direction. Consequently, there are no differences in the normal transport condition and the accident condition axial dose rates.

5.3.6.3 Shielding Evaluation for TRIGA Fuel Elements in Normal Conditions of Transport

The NAC-LWT is normally transported inside of an ISO container, but may be transported on a trailer with a personnel barrier. The sides of the ISO container are coincident with the edge of the transport trailer, and are the edge of the vehicle. Dose rates for the design basis 140 TRIGA fuel elements are reported at the cask (package) surface, at the edge of the vehicle (plane of conveyance), at one meter from the package, and at two meters from the edge of the vehicle. The one meter dose rate (25 mrem/hr) is the estimated TRIGA fuel configuration Transport Index.

Each of the three radial models (top, top/point of least shielding, bottom) were evaluated with the design basis source term. The maximum radial dose rates for a uniform configuration of design basis ACPR TRIGA fuel elements (86,100 MWd/MTU, 231 days cooled) with a heat load of 7.5 watts per assembly in normal conditions of transport are:

Detector Radial Plane	Dose Rate (mrem/hr)	Regulatory Limit (mrem/hr)
Cask (Package) Surface	258.78	1,000
Edge of Vehicle	38.02	200
1 Meter From Package	25	Transport Index
2 Meters From Edge of Vehicle	6.09	10

These dose rates are taken at positions radially away from the point of least shielding and are well below the regulatory limits. The point of least shielding corresponds to the area directly above the lead gamma shield. This analysis assumes the fuel elements are translated to the top of the cask cavity.

The axial locations of interest are contact with the cask surface, and the dose at two meters from the front edge of the vehicle, and at the rear of the truck cab. Shielding provided by the impact limiter is conservatively neglected. The axial dose rates from the bottom of the cask, which has slightly more shielding than the top of the cask, are conservatively assumed to be equal to the dose rates from the top of the cask. The maximum normal condition axial surface, two meter, and back of truck cab dose rates are:

Detector Axial Plane	Dose Rate (mrem/hr)	Regulatory Limit (mrem/hr)
Cask Surface (Lid)	123.81	1,000
2 Meters From Package	3.18	10
Back of Tractor Cab	0.61	2

The axial dose rates are also below the regulatory limit. Thus, the NAC-LWT with up to 140 TRIGA fuel elements meets the shielding requirements of 10 CFR 71, 49 CFR 173 and IAEA Transportation Safety Standards (TS-R-1) for normal conditions of transport.

5.3.6.4 Shielding Evaluation for TRIGA Fuel Elements in Hypothetical Accident Conditions

The configuration of the TRIGA fuel elements and basket arrangement in the hypothetical accident conditions is the same as that for the normal conditions of transport. The accident conditions assume the loss of the neutron shield, which results in an increase in the neutron dose rates. The accident condition source terms are based upon the FLIP-LEU-II fuel. This fuel has a burnup of 151,100 MWd/MTU and a cool time of 908 days. The accident condition design basis source term differs from the normal condition source due to the significant higher neutron source, which dominates the dose rate when the neutron shield is assumed to be lost.

Two accident scenarios, loss of neutron shield and lead slump, are analyzed. The top/point of least shielding model was used to evaluate accident condition dose rates, since it produces the bounding normal condition doses. The loss of neutron shielding hypothetical accident condition dose rate at 1 meter from the package is 28.07 mrem/hr. The loss of lead (lead slump) hypothetical accident condition dose rate at one meter from the package, is 178.83 mrem/hr, which is well below the regulatory limit of 1,000 mrem/hr. The total dose due to both conditions simultaneously is 207 mrem/hr, which is still well below the regulatory limit. These hypothetical accident dose rates are summarized below. They are based upon the FLIP-LEU-II source terms (80% ^{235}U depleted) at a decay heat of 7.5 watts.

Accident Scenario	Dose Rate (at 1 meter mrem/hr)	Regulatory Limit (mrem/hr)
Loss of Neutron Shielding	28.07	1,000
Lead Slump	178.83	1,000
Total	207	1,000

5.3.6.5 Nominal Enrichment Justification

Source term and shielding evaluations typically use minimum enrichments, which harden the neutron spectrum and thereby generate higher magnitude source terms. However, the approach for TRIGA fuel elements uses nominal enrichments. This section justifies the use of nominal enrichments.

As stated previously, the 2370 gram 20 wt % ^{235}U ACPR fuel element at 50% depletion is bounding for normal conditions, and the 2890 gram 20 wt % ^{235}U FLIP-LEU-II fuel element at

80% depletion is bounding for accident conditions. The bounding SAS2H runs for these fuel types were rerun at 19 wt % ^{235}U (as manufactured, the fuel material is typically greater than 19.9 wt % enriched for a nominal 20 wt % material). Higher enriched material (93 wt % ^{235}U) was similarly evaluated and demonstrated lower increases in source term as the effect of higher actinide production in the HEU materials is small due to the dominant role of ^{235}U absorption at HEU levels.

ACPR source and one-dimensional dose rate comparisons are shown in Table 5.3.6-6 and Table 5.3.6-7, respectively. As shown in these tables, although the neutron source increases by more than 12%, the neutron contribution to the total dose rate is minimal, such that the increase in total dose rate is less than 0.1%. Based on this small dose rate increase and the significant margin to limits (e.g., calculated maximum of 6 mrem/hr at 2 meters), the use of a nominal enrichment for normal conditions is acceptable.

FLIP-LEU-II source and one-dimensional dose rate comparisons are shown in Table 5.3.6-8 and Table 5.3.6-9, respectively. As shown in these tables, the neutron source increases by more than 18%, which yields a total dose rate increase of almost 14%. However, the increase is from 35 to approximately 40 mrem/hr, which remains well below the 1 meter accident condition dose rate limit of 1,000 mrem/hr. Based on the small increase in total dose rate (5 mrem/hr), coupled with the significant margin of 40 mrem/hr with respect to the 1 meter limit of 1,000 mrem/hr, the 1% reduction in initial enrichment from nominal is judged to be acceptable for accident conditions.

Figure 5.3.6-1 TRIGA Fuel Element One-Dimensional Bounding Radial Dose Rate – Normal Conditions of Transport – Curves and Data Points

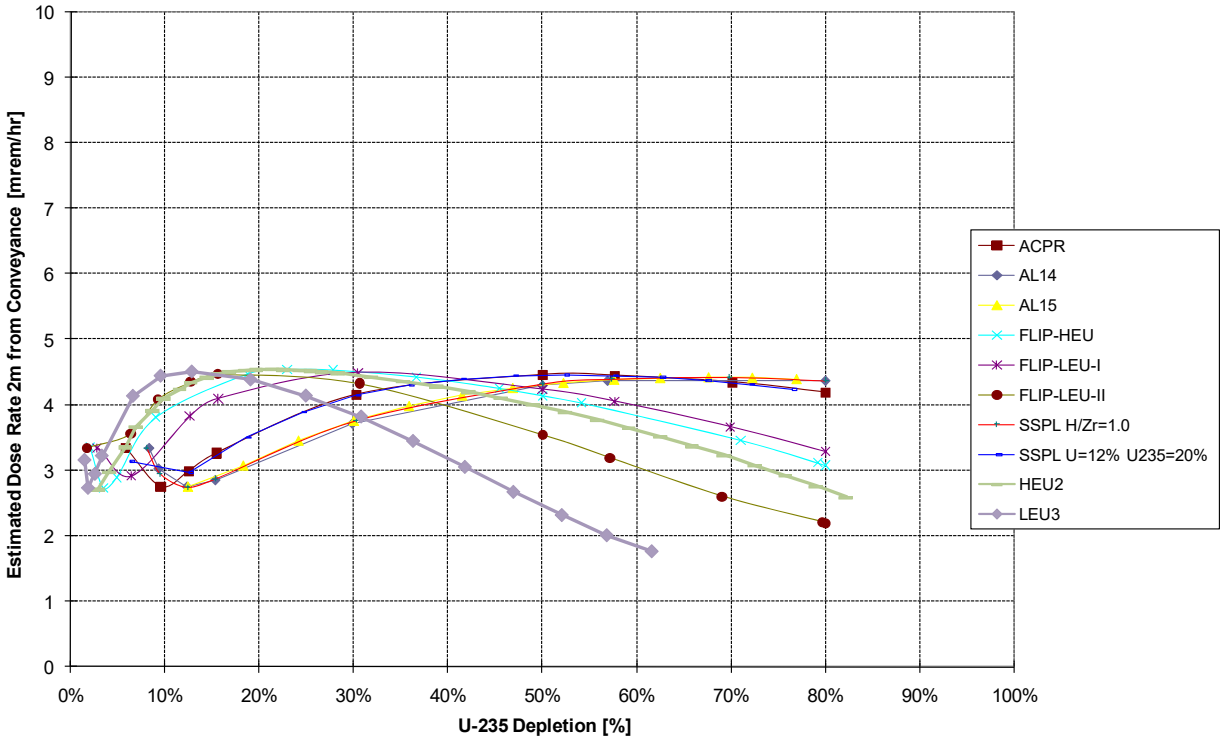

Figure 5.3.6-1 TRIGA Fuel Element One-Dimensional Bounding Radial Dose Rate – Normal Conditions of Transport – Curves and Data Points (Continued)

ACPR - U=12.0% - ^{235}U=20.0% - H/Zr=1.7 - 2370g	Burnup [GWd/MTU]	9	25	50	100	147
	^{235}U Depletion [%]	5.80	15.47	30.23	57.65	80.00
	Cool Time [d]	90.0	147.8	189.9	245.5	310.1
AL14 - U=8.5% - ^{235}U=20.0% - H/Zr=1.0 - 2350g	Burnup [GWd/MTU]	13	25	50	100	149
	^{235}U Depletion [%]	8.27	15.29	29.83	56.89	80.00
	Cool Time [d]	90.0	125.8	165.2	212.0	253.7
AL15 - U=8.5% - ^{235}U=20.0% - H/Zr=1.0 - 2412g	Burnup [GWd/MTU]	20	30	50	100	150
	^{235}U Depletion [%]	12.44	18.29	30.00	57.56	81.24
	Cool Time [d]	115.3	138.2	167.7	215.6	260.4
FLIP-HEU - U=8.5% - ^{235}U=70.0% - H/Zr=1.6 - 2420g	Burnup [GWd/MTU]	12	50	150	300	455
	^{235}U Depletion [%]	2.08	9.03	27.78	54.17	80.00
	Cool Time [d]	90.0	170.9	242.6	335.3	524.6
FLIP-LEU-I - U=20.0% - ^{235}U=20.0% - H/Zr=1.6 - 2650g	Burnup [GWd/MTU]	5	25	50	100	148
	^{235}U Depletion [%]	2.83	15.66	30.47	57.64	80.00
	Cool Time [d]	90.0	186.0	234.0	330.1	497.0
FLIP-LEU-II - U=30.0% - ^{235}U=20.0% - H/Zr=1.6 - 2890g	Burnup [GWd/MTU]	3	15	50	100	151
	^{235}U Depletion [%]	1.73	9.25	30.64	57.17	80.00
	Cool Time [d]	90.0	184.9	280.4	486.7	908.3
SSPL - U=8.5% - ^{235}U 20.0% - H/Zr=1.0 - 2410g	Burnup [GWd/MTU]	13	25	50	100	148
	^{235}U Depletion [%]	8.05	15.37	30.24	57.32	80.00
	Cool Time [d]	90.0	128.2	168.3	217.6	264.7
SSPL - U=12% - ^{235}U 20.0% - H/Zr=1.0 - 2334g	Burnup [GWd/MTU]	10	30	50	100	150
	^{235}U Depletion [%]	6.25	18.57	30.18	57.50	80.71
	Cool Time [d]	93.8	157.4	189.3	247.8	322.6
HEU2 - U=8.5% - ^{235}U=93% - H/Zr=1.6 - 2189g	Burnup [GWd/MTU]	20	150	300	450	600
	^{235}U Depletion [%]	2.9	21.4	42.2	62.5	82.1
	Cool Time [d]	112.5	234.5	307.5	422.8	640.1
LEU3 - U=44% - ^{235}U=20% - H/Zr=1.6 - 3103g	Burnup [GWd/MTU]	2	20	60	80	110
	^{235}U Depletion [%]	1.5	12.8	36.3	46.9	61.5
	Cool Time [d]	93.3	233.5	423.6	596.3	1008

Figure 5.3.6-2 TRIGA Fuel Element One-Dimensional Bounding Radial Dose Rate – Accident Condition – Curves and Data Points

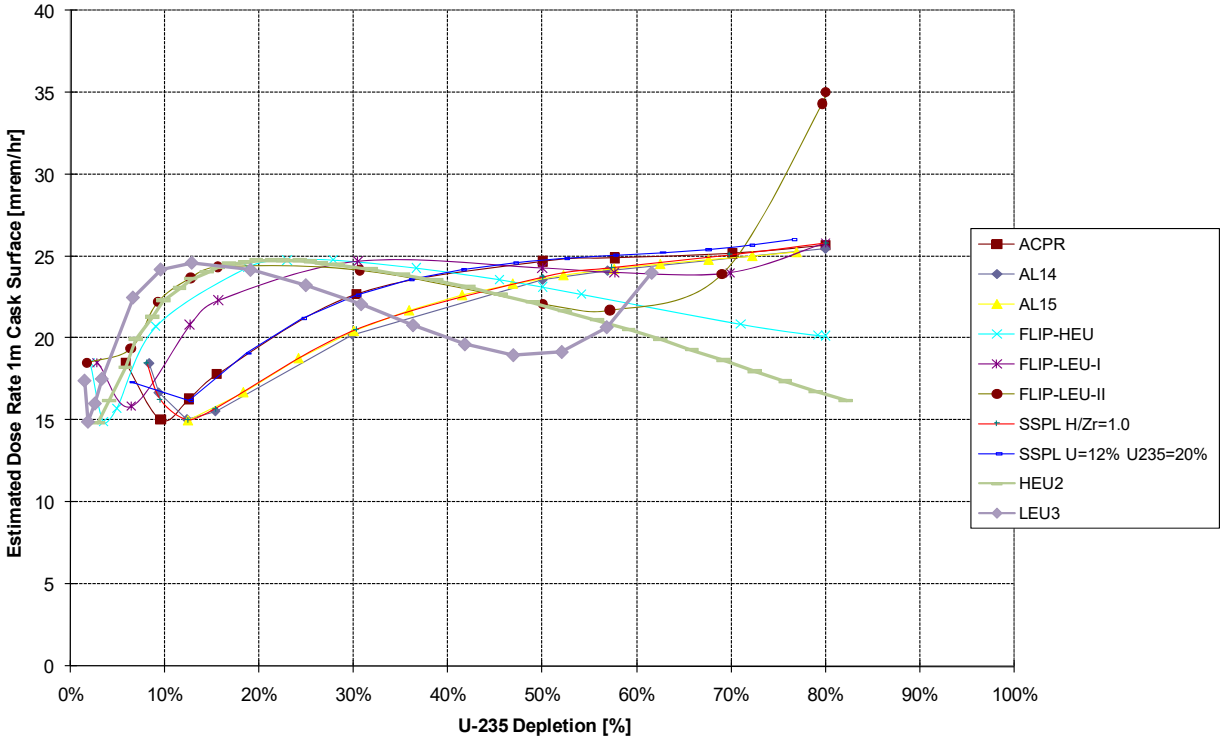

Figure 5.3.6-2 TRIGA Fuel Element One-Dimensional Bounding Radial Dose Rate – Accident Condition – Curves and Data Points (Continued)

ACPR - U=12.0% - ^{235}U=20.0% -	Burnup [GWd/MTU]	9	25	50	100	147
H/Zr=1.7 - 2370g	^{235}U Depletion [%]	5.80	15.47	30.23	57.65	80.00
	Cool Time [d]	90.0	147.8	189.9	245.5	310.1
AL14 - U=8.5% - ^{235}U=20.0% -	Burnup [GWd/MTU]	13	25	50	100	149
H/Zr=1.0 - 2350g	^{235}U Depletion [%]	8.27	15.29	29.83	56.89	80.00
	Cool Time [d]	90.0	125.8	165.2	212.0	253.7
AL15 - U=8.5% - ^{235}U=20.0% -	Burnup [GWd/MTU]	20	30	50	100	150
H/Zr=1.0 - 2412g	^{235}U Depletion [%]	12.44	18.29	30.00	57.56	81.24
	Cool Time [d]	115.3	138.2	167.7	215.6	260.4
FLIP-HEU - U=8.5% - ^{235}U=70.0%	Burnup [GWd/MTU]	12	50	150	300	455
- H/Zr=1.6 - 2420g	^{235}U Depletion [%]	2.08	9.03	27.78	54.17	80.00
	Cool Time [d]	90.0	170.9	242.6	335.3	524.6
FLIP-LEU-I - U=20.0% -	Burnup [GWd/MTU]	5	25	50	100	148
^{235}U=20.0% - H/Zr=1.6 - 2650g	^{235}U Depletion [%]	2.83	15.66	30.47	57.64	80.00
	Cool Time [d]	90.0	186.0	234.0	330.1	497.0
FLIP-LEU-II - U=30.0% -	Burnup [GWd/MTU]	3	15	50	100	151
^{235}U=20.0% - H/Zr=1.6 - 2890g	^{235}U Depletion [%]	1.73	9.25	30.64	57.17	80.00
	Cool Time [d]	90.0	184.9	280.4	486.7	908.3
SSPL - U=8.5% - ^{235}U 20.0% -	Burnup [GWd/MTU]	13	25	50	100	148
H/Zr=1.0 - 2410g	^{235}U Depletion [%]	8.05	15.37	30.24	57.32	80.00
	Cool Time [d]	90.0	128.2	168.3	217.6	264.7
SSPL - U=12% - ^{235}U 20.0% -	Burnup [GWd/MTU]	10	30	50	100	150
H/Zr=1.0 - 2334g	^{235}U Depletion [%]	6.25	18.57	30.18	57.50	80.71
	Cool Time [d]	93.8	157.4	189.3	247.8	322.6
HEU2 - U=8.5% - ^{235}U=93% -	Burnup [GWd/MTU]	20	150	300	450	600
H/Zr=1.6 - 2189g	^{235}U Depletion [%]	2.9	21.4	42.2	62.5	82.1
	Cool Time [d]	112.5	234.5	307.5	422.8	640.1
LEU3 - U=44% - ^{235}U=20% -	Burnup [GWd/MTU]	2	20	60	80	110
H/Zr=1.6 - 3103g	^{235}U Depletion [%]	1.5	12.8	36.3	46.9	61.5
	Cool Time [d]	93.3	233.5	423.6	596.3	1008

Figure 5.3.6-3 TRIGA SAS4A Radial Model Geometry

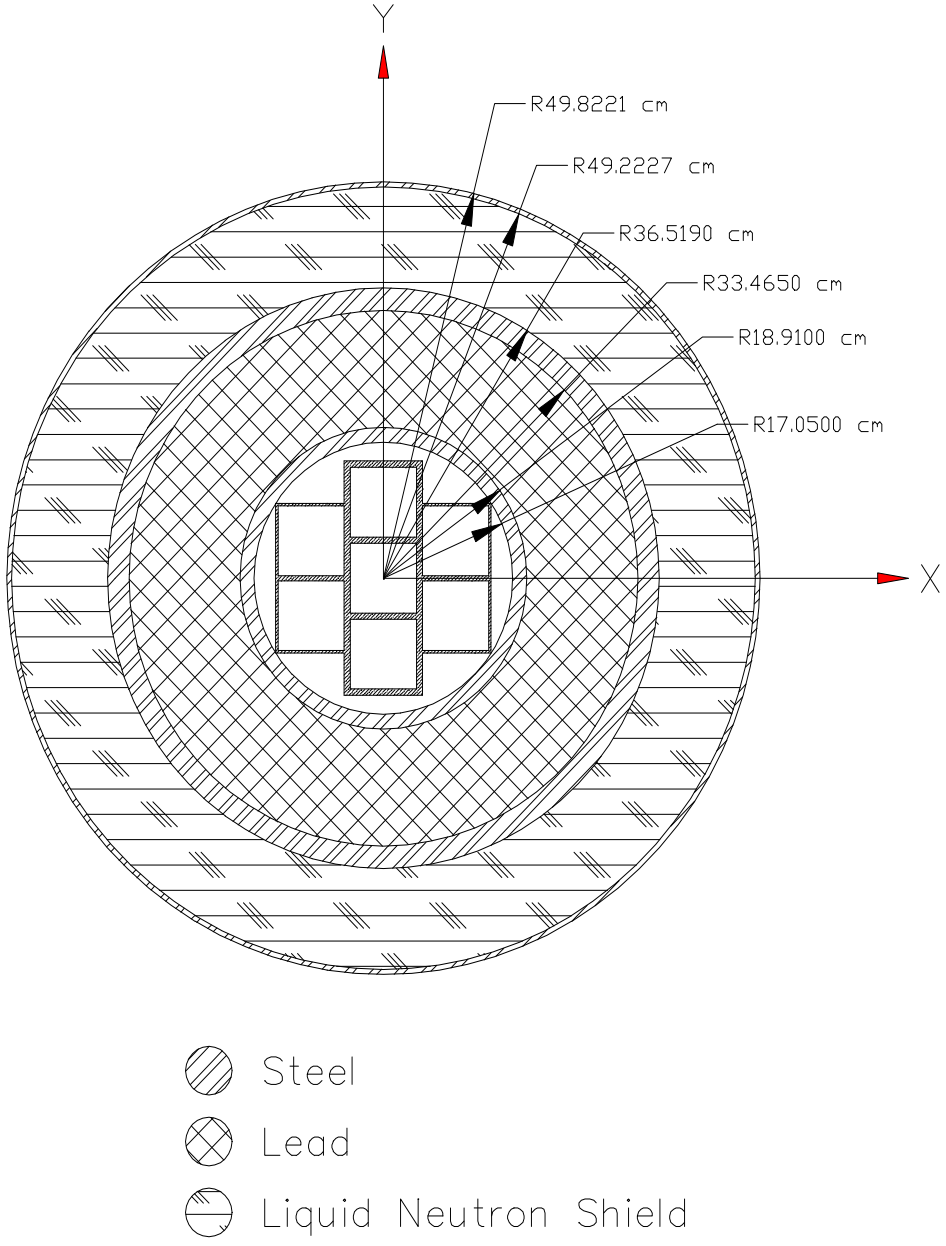

Figure 5.3.6-4 TRIGA SAS4A Basket Model Geometry

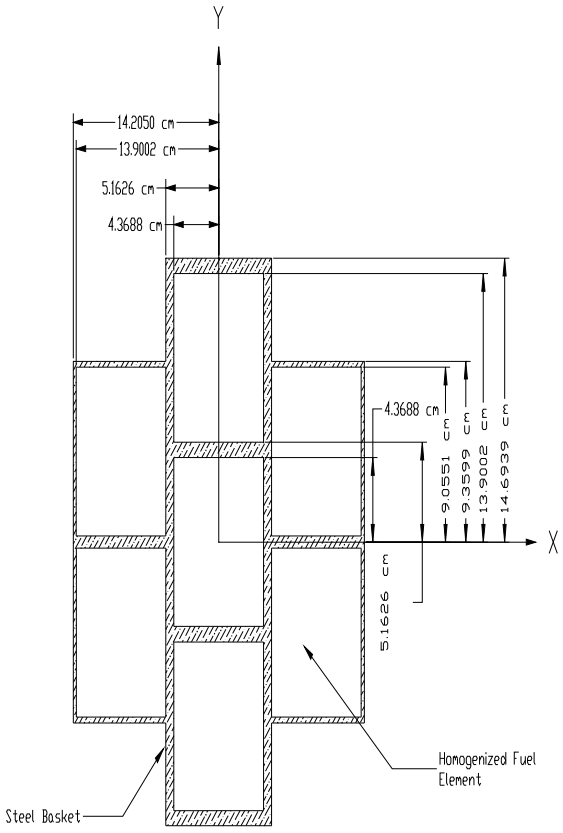

Figure 5.3.6-5 TRIGA SAS4A Upper Half Model Geometry (Normal Condition – Shifted Fuel)

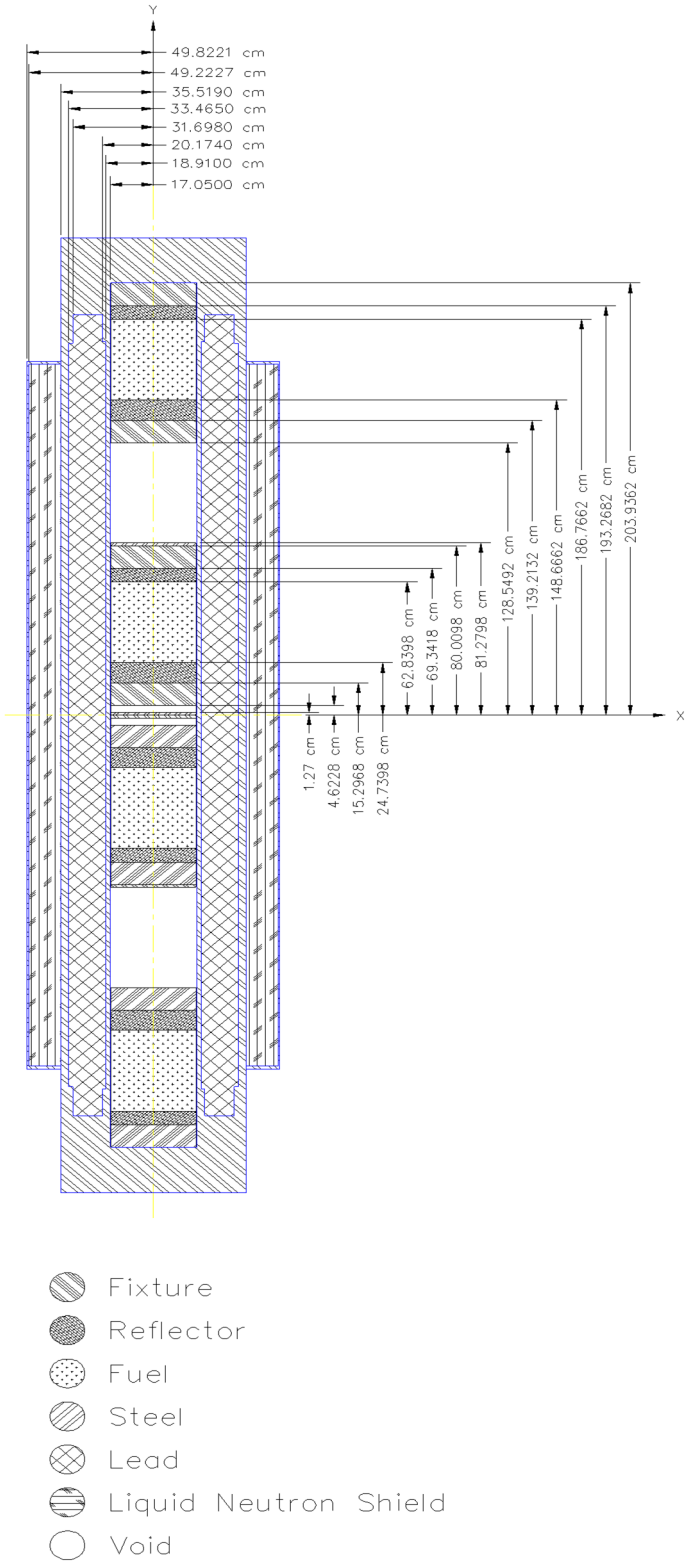

Figure 5.3.6-6 TRIGA SAS4A Upper Half Model Geometry (Normal Condition)

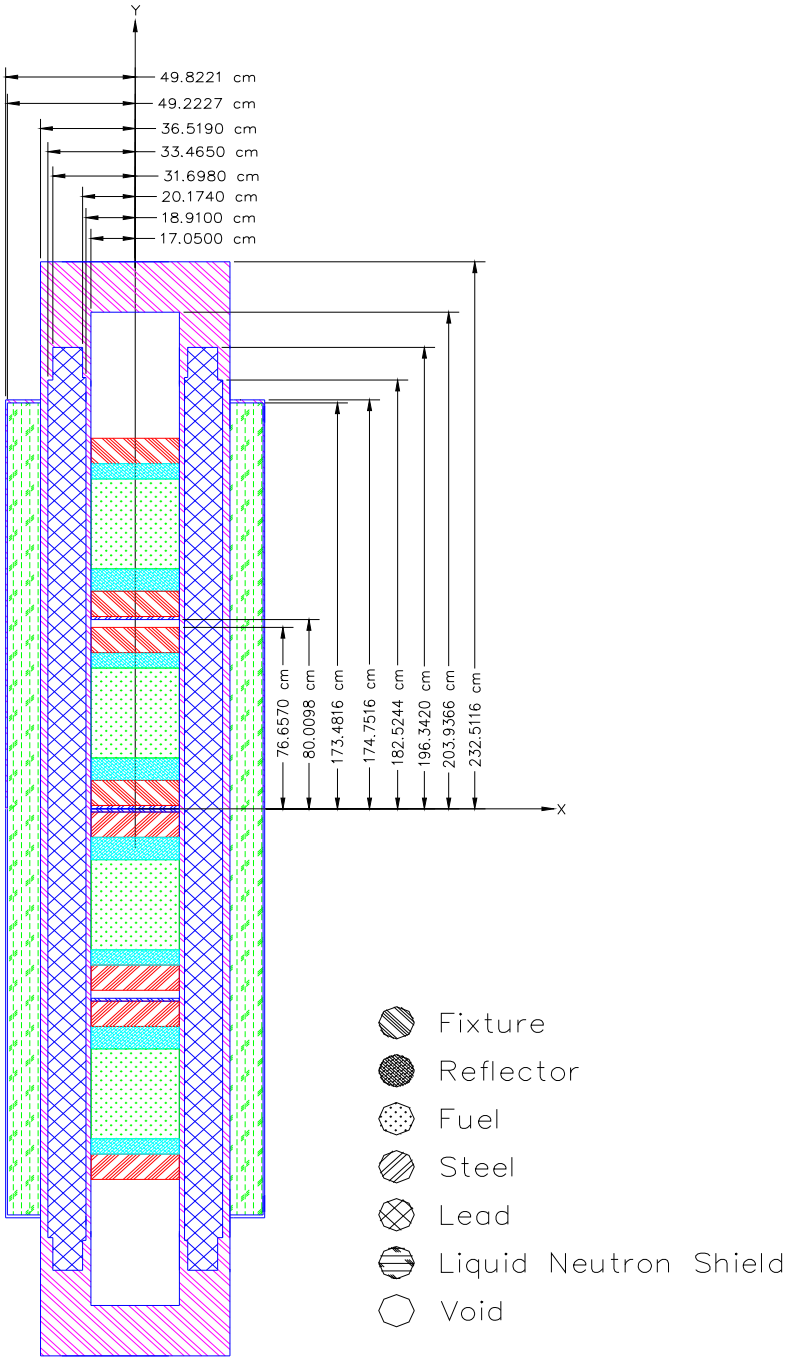

Figure 5.3.6-7 TRIGA SAS4A Lower Half Model Geometry (Normal and Accident Condition)

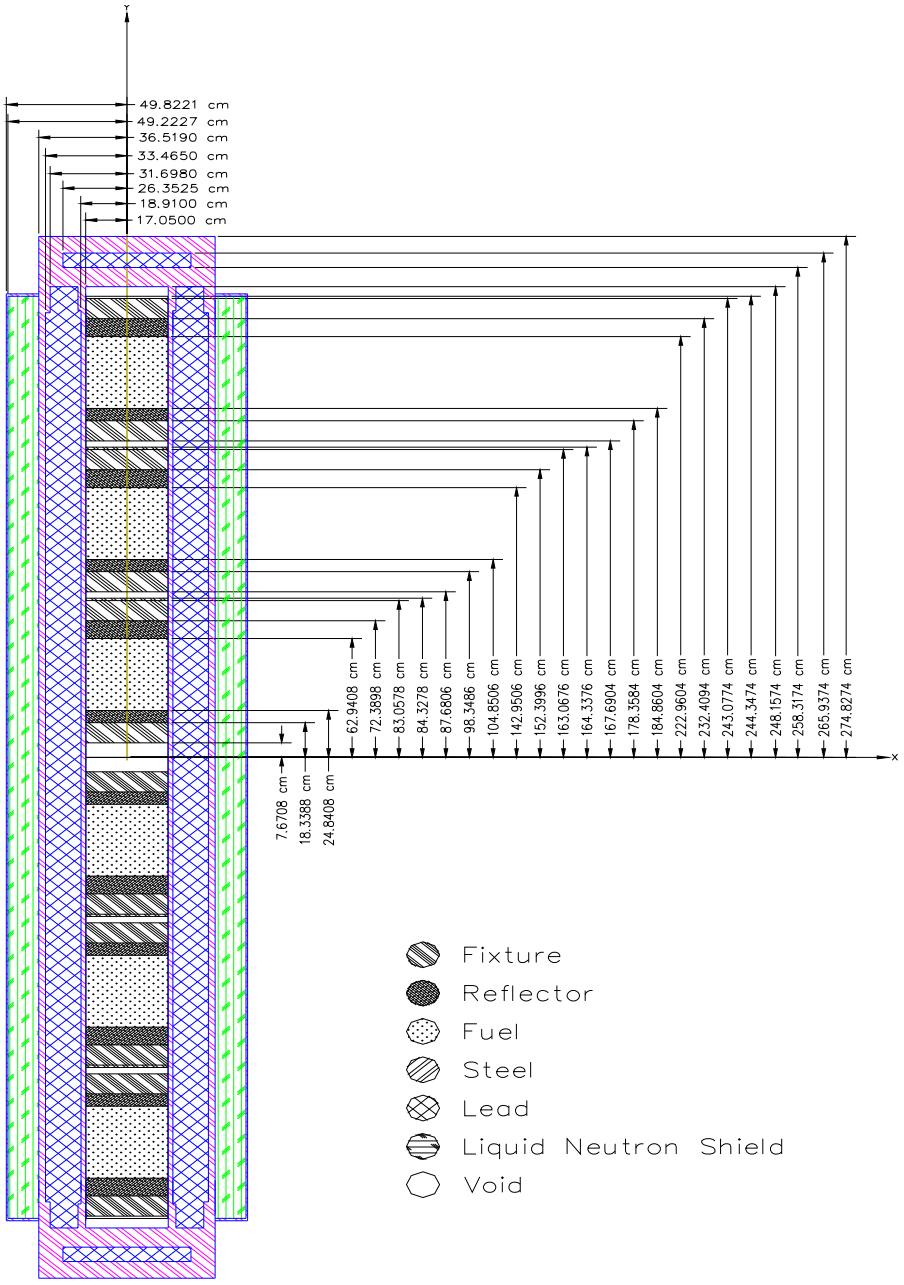

Table 5.3.6-1 TRIGA Fuel Element Gamma Source Term – Normal Transport (ACPR, 86,100 MWd/MTU, 231 Days Cooling, 50% ^{235}U Depletion)

				Fuel Gamma		Hardware	
Group	Emin	Emax	Eav	g/s/assy	MeV/s	g/s/kg	MeV/s
1	8.00E+00	1.00E+01	9.00E+00	6.0391E+00	5.4352E+01	0.0000E+00	0.0000E+00
2	6.50E+00	8.00E+00	7.25E+00	2.8479E+01	2.0647E+02	0.0000E+00	0.0000E+00
3	5.00E+00	6.50E+00	5.75E+00	1.4544E+02	8.3628E+02	0.0000E+00	0.0000E+00
4	4.00E+00	5.00E+00	4.50E+00	3.6314E+02	1.6341E+03	0.0000E+00	0.0000E+00
5	3.00E+00	4.00E+00	3.50E+00	7.5826E+07	2.6539E+08	6.0459E-18	2.1161E-17
6	2.50E+00	3.00E+00	2.75E+00	7.2081E+08	1.9822E+09	3.7457E+04	1.0301E+05
7	2.00E+00	2.50E+00	2.25E+00	1.3883E+11	3.1237E+11	2.4157E+07	5.4353E+07
8	1.66E+00	2.00E+00	1.83E+00	1.6447E+10	3.0098E+10	7.3055E+08	1.3369E+09
9	1.33E+00	1.66E+00	1.50E+00	1.2858E+11	1.9223E+11	1.0179E+12	1.5218E+12
10	1.00E+00	1.33E+00	1.17E+00	2.4333E+11	2.8348E+11	3.6045E+12	4.1992E+12
11	8.00E-01	1.00E+00	9.00E-01	6.9542E+11	6.2588E+11	4.3345E+11	3.9011E+11
12	6.00E-01	8.00E-01	7.00E-01	1.4822E+13	1.0375E+13	5.2897E+07	3.7028E+07
13	4.00E-01	6.00E-01	5.00E-01	2.6894E+12	1.3447E+12	4.7499E+10	2.3750E+10
14	3.00E-01	4.00E-01	3.50E-01	8.9800E+11	3.1430E+11	5.9683E+09	2.0889E+09
15	2.00E-01	3.00E-01	2.50E-01	1.1708E+12	2.9270E+11	5.5248E+08	1.3812E+08
16	1.00E-01	2.00E-01	1.50E-01	5.1716E+12	7.7574E+11	4.2906E+09	6.4359E+08
17	5.00E-02	1.00E-01	7.50E-02	5.0445E+12	3.7834E+11	1.4319E+10	1.0739E+09
18	1.00E-02	5.00E-02	3.00E-02	1.5535E+13	4.6605E+11	6.7886E+10	2.0366E+09
			Total	4.6554E+13	1.5394E+13	5.1972E+12	6.1423E+12

Table 5.3.6-2 TRIGA Fuel Element Neutron Source Term – Normal Transport (ACPR, 86,100 MWd/MTU, 231 Days Cooling, 50% ^{235}U Depletion)

				Spectrum	
Group	Emin	Emax	Eav	n/s/assy	MeV/s
1	6.43E+00	2.00E+01	1.32E+01	1.7680E+02	2.3368E+03
2	3.00E+00	6.43E+00	4.72E+00	2.7350E+03	1.2901E+04
3	1.85E+00	3.00E+00	2.43E+00	3.0300E+03	7.3478E+03
4	1.40E+00	1.85E+00	1.63E+00	1.3370E+03	2.1726E+03
5	9.00E-01	1.40E+00	1.15E+00	1.7010E+03	1.9562E+03
6	4.00E-01	9.00E-01	6.50E-01	1.8430E+03	1.1980E+03
7	1.00E-01	4.00E-01	2.50E-01	3.6320E+02	9.0800E+01
8	1.70E-02	1.00E-01	5.85E-02	0	0
9	3.00E-03	1.70E-02	1.00E-02	0	0
10	5.50E-04	3.00E-03	1.78E-03	0	0
11	1.00E-04	5.50E-04	3.25E-04	0	0
12	3.00E-05	1.00E-04	6.50E-05	0	0
13	1.00E-05	3.00E-05	2.00E-05	0	0
14	3.05E-06	1.00E-05	6.52E-06	0	0
15	1.77E-06	3.05E-06	2.41E-06	0	0
16	1.30E-06	1.77E-06	1.53E-06	0	0
17	1.13E-06	1.30E-06	1.21E-06	0	0
18	1.00E-06	1.13E-06	1.06E-06	0	0
19	8.00E-07	1.00E-06	9.00E-07	0	0
20	4.00E-07	8.00E-07	6.00E-07	0	0
21	3.25E-07	4.00E-07	3.63E-07	0	0
22	2.25E-07	3.25E-07	2.75E-07	0	0
23	1.00E-07	2.25E-07	1.62E-07	0	0
24	5.00E-08	1.00E-07	7.50E-08	0	0
25	3.00E-08	5.00E-08	4.00E-08	0	0
26	1.00E-08	3.00E-08	2.00E-08	0	0
27	1.00E-11	1.00E-08	5.01E-09	0	0
			Total	1.1190E+04	2.8003E+04

Table 5.3.6-3 TRIGA Fuel Element Gamma Source Term – Accident Conditions (FLIP-LEU-II, 151,100 MWd/MTU, 908 Days Cooling, 80% ^{235}U Depletion)

				Fuel Gamma		Hardware	
Group	Emin	Emax	Eav	g/s/assy	MeV/s	g/s/kg	MeV/s
1	8.00E+00	1.00E+01	9.00E+00	4.2483E+02	3.8235E+03	0.0000E+00	0.0000E+00
2	6.50E+00	8.00E+00	7.25E+00	2.0012E+03	1.4509E+04	0.0000E+00	0.0000E+00
3	5.00E+00	6.50E+00	5.75E+00	1.0204E+04	5.8673E+04	0.0000E+00	0.0000E+00
4	4.00E+00	5.00E+00	4.50E+00	2.5433E+04	1.1445E+05	0.0000E+00	0.0000E+00
5	3.00E+00	4.00E+00	3.50E+00	5.4231E+07	1.8981E+08	3.8494E-16	1.3473E-15
6	2.50E+00	3.00E+00	2.75E+00	4.5053E+08	1.2390E+09	4.1493E+04	1.1411E+05
7	2.00E+00	2.50E+00	2.25E+00	2.8353E+10	6.3794E+10	2.6759E+07	6.0208E+07
8	1.66E+00	2.00E+00	1.83E+00	7.1432E+09	1.3072E+10	1.1986E+06	2.1934E+06
9	1.33E+00	1.66E+00	1.50E+00	1.9911E+11	2.9767E+11	1.1276E+12	1.6858E+12
10	1.00E+00	1.33E+00	1.17E+00	7.5382E+11	8.7820E+11	3.9929E+12	4.6517E+12
11	8.00E-01	1.00E+00	9.00E-01	2.5223E+12	2.2701E+12	8.5366E+10	7.6829E+10
12	6.00E-01	8.00E-01	7.00E-01	1.5741E+13	1.1019E+13	4.7974E+06	3.3582E+06
13	4.00E-01	6.00E-01	5.00E-01	5.3998E+12	2.6999E+12	9.1500E+07	4.5750E+07
14	3.00E-01	4.00E-01	3.50E-01	5.0638E+11	1.7723E+11	2.1537E+08	7.5380E+07
15	2.00E-01	3.00E-01	2.50E-01	7.4180E+11	1.8545E+11	1.6448E+08	4.1120E+07
16	1.00E-01	2.00E-01	1.50E-01	2.7773E+12	4.1660E+11	3.3013E+09	4.9520E+08
17	5.00E-02	1.00E-01	7.50E-02	3.2348E+12	2.4261E+11	1.3678E+10	1.0259E+09
18	1.00E-02	5.00E-02	3.00E-02	1.0747E+13	3.2241E+11	6.8944E+10	2.0683E+09
			Total	4.2659E+13	1.8587E+13	5.2923E+12	6.4181E+12

Table 5.3.6-4 TRIGA Fuel Element Neutron Source Term – Accident Conditions (FLIP-LEU-II, 151,100 MWd/MTU, 908 Days Cooling, 80% ^{235}U Depletion)

				Spectrum	
Group	Emin	Emax	Eav	n/s/assy	MeV/s
1	6.43E+00	2.00E+01	1.32E+01	1.3810E+04	1.8253E+05
2	3.00E+00	6.43E+00	4.72E+00	1.6000E+05	7.5472E+05
3	1.85E+00	3.00E+00	2.43E+00	1.7970E+05	4.3577E+05
4	1.40E+00	1.85E+00	1.63E+00	9.9250E+04	1.6128E+05
5	9.00E-01	1.40E+00	1.15E+00	1.3320E+05	1.5318E+05
6	4.00E-01	9.00E-01	6.50E-01	1.4470E+05	9.4055E+04
7	1.00E-01	4.00E-01	2.50E-01	2.8330E+04	7.0825E+03
8	1.70E-02	1.00E-01	5.85E-02	0	0
9	3.00E-03	1.70E-02	1.00E-02	0	0
10	5.50E-04	3.00E-03	1.78E-03	0	0
11	1.00E-04	5.50E-04	3.25E-04	0	0
12	3.00E-05	1.00E-04	6.50E-05	0	0
13	1.00E-05	3.00E-05	2.00E-05	0	0
14	3.05E-06	1.00E-05	6.52E-06	0	0
15	1.77E-06	3.05E-06	2.41E-06	0	0
16	1.30E-06	1.77E-06	1.53E-06	0	0
17	1.13E-06	1.30E-06	1.21E-06	0	0
18	1.00E-06	1.13E-06	1.06E-06	0	0
19	8.00E-07	1.00E-06	9.00E-07	0	0
20	4.00E-07	8.00E-07	6.00E-07	0	0
21	3.25E-07	4.00E-07	3.63E-07	0	0
22	2.25E-07	3.25E-07	2.75E-07	0	0
23	1.00E-07	2.25E-07	1.62E-07	0	0
24	5.00E-08	1.00E-07	7.50E-08	0	0
25	3.00E-08	5.00E-08	4.00E-08	0	0
26	1.00E-08	3.00E-08	2.00E-08	0	0
27	1.00E-11	1.00E-08	5.01E-09	0	0
			Total	7.5900E+05	1.7886E+06

Table 5.3.6-5 Material Densities for TRIGA Fuel Element Shielding Analysis

Material[1]	Mixture ID	SCALE SCL Name	Density [g/cm^3]	SCALE Isotope	Density [a/barn-cm]
Active Fuel Region Homogenized Densities (4 TRIGA Elements)	1	U	0.275	URANIUM-235 URANIUM-238	1.408E-04 5.559E-04
		ZR	2.925	ZIRCONIUM	1.931E-02
		H	0.032	HYDROGEN	1.931E-02
		AL	0.124	ALUMINUM	2.767E-03
Upper Graphite Reflector	2	C	1.310	CARBON-12	6.575E-02
		AL	0.124	ALUMIUNM	2.767E-03
End Fixtures	3	AL	0.344	ALUMINUM	7.673E-03
Lower Graphite Reflector	4	C	1.310	CARBON-12	6.575E-02
		AL	0.124	ALUMINUM	2.767E-03
Stainless Steel 304	5	SS304	7.920	CHROMIUM (SS304) MANGANESE IRON (SS304) NICKEL (SS304)	1.743E-02 1.736E-03 5.936E-02 7.721E-03
Neutron Shield (Ethylene Glycol, Water)	6	-	0.9437	HYDROGEN CARBON-12 OXYGEN-16	5.988E-02 1.070E-02 2.459E-02
Lead Shielding	7	LEAD	11.344	LEAD	3.297E-02

[1] Borated stainless steel plates omitted from poisoned basket models for conservatism.

Table 5.3.6-6 ACPR TRIGA Element Source Comparison

Enrichment (wt % U-235)	Neutron (n/sec)	Gamma (γ/sec)
20	1.119E+04	4.6654E+13
19	1.257E+04	4.6627E+13
Difference	12.3%	-0.1%

Table 5.3.6-7 ACPR TRIGA Element One-Dimensional Dose Rate Comparison

Enrichment (wt % U-235)	Neutron (mrem/hr)	Gamma (mrem/hr)	Total (mrem/hr)	Difference
20	0.006	4.46	4.46	--
19	0.007	4.46	4.46	0.09%

Table 5.3.6-8 FLIP-LEU-II TRIGA Element Source Comparison

Enrichment (wt % U-235)	Neutron (n/sec)	Gamma (γ/sec)
20	7.590E+05	4.2659E+13
19	9.012E+05	4.3350E+13
Difference	18.7%	1.6%

Table 5.3.6-9 FLIP-LEU-II TRIGA Element One-Dimensional Dose Rate Comparison

Enrichment (wt % U-235)	Neutron (mrem/hr)	Gamma (mrem/hr)	Total (mrem/hr)	Difference
20	24.6	10.4	35.0	--
19	29.2	10.6	39.8	13.6%

5.3.7 TRIGA Fuel Cluster Rod Model Specification and Shielding Evaluation

TRIGA fuel cluster rods are shown to comply with regulatory dose rate limits by determining the cool time required for the fuel to fall below the design basis TRIGA element-type dose rates. Source terms for the fuel cluster rods are determined using the SCALE SAS2H (Herman) code at various fuel burnup values. For each burnup considered, the resulting set of cool time and decay heat values is interpolated to find the cool time required for the fuel to meet the maximum allowed heat load (1.875W). A final ORIGEN-S calculation is performed at this cool time in order to compute the source spectra at the required decay time.

For consistency, the one-dimensional SCALE SAS1 dose rates computed for the fuel cluster rods are compared with one-dimensional dose rates for the design basis TRIGA fuel elements. Both normal condition and accident condition dose rates are considered, and the maximum cool time required to meet both limits is reported. Further, since the TRIGA fuel cluster rods have approximately the same end-fitting mass as the element-type fuel, the comparison is made on the basis of fuel radiation sources alone.

The maximum computed one-dimensional dose rate at 2 meters from the conveyance for the normal condition TRIGA fuel element analysis is 4.5 mrem/hr. The more accurate three-dimensional analysis predicts a dose rate at the same location of 3.18 mrem/hr. Hence, the one-dimensional analysis provides a conservative estimate of computed dose rates. Similarly, in the loss of neutron shielding hypothetical accident scenario, the maximum computed one-dimensional dose rate for the design basis fuel is 35 mrem/hr and the three-dimensional result is 28.07 mrem/hr.

Section 5.3.7.1 presents the SAS2H source term model for the TRIGA fuel cluster rods. Section 5.3.7.2 discusses the methodology used to compute one-dimensional dose rates for each burnup and cool time case. The resulting required cool times for the fuel cluster rods are presented in Section 5.3.7.3.

5.3.7.1 TRIGA Fuel Cluster Rod Source Terms

The SAS2H description of the TRIGA fuel cluster rods is based on the material and dimensional parameters given in Table 5.3.7-1. The irradiation parameters are based on a nominal 14 MW TRIGA reactor operating with 29 cluster-type assemblies consisting of 25 rods each. The SAS2H models use a fuel and clad temperature of 517K, and a moderator temperature of 363K (unpressurized nonboiling reactor), at a densityy of 0.981 g/cm^3. For each burnup case, the required exposure time is computed at this fixed power level. This conservatively assumes that all fuel irradiation occurs during the period immediately prior to fuel discharge. Representative gamma and neutron source terms are summarized in Table 5.3.7-3 and Table 5.3.7-4 for HEU

fuel material and Table 5.3.7-5 and Table 5.3.7-6 for LEU fuel material. Source terms are based on a heat load limit of 1.875W per rod. SAS2H input files for the maximum burnup HEU and LEU cases are shown in Figure 5.3.7-1 and Figure 5.3.7-2, respectively.

The Incoloy 800 (density 7.94 g/cm^3) clad material composition is given in Table 5.3.7-2. A cobalt impurity concentration of 1.2 g/kg is assumed. No cobalt is listed in the manufacturer specifications for this material.

5.3.7.2 TRIGA Fuel Cluster Rod One-Dimensional Dose Rate Analysis

The task of computing one-dimensional dose rates for the dozens of source terms developed in this analysis is simplified by the use of a dose response methodology. In this approach, a dose rate response function is computed at various detector locations outside the cask. The response function for a location gives the contribution to the total dose rate from an unit source strength in each energy group. Hence, the computation of a response function involves the solution of a one-dimensional problem for each energy group in the spectrum. Here, 18 gamma responses and 7 neutron responses are computed. Only seven neutron responses are required because the spent fuel neutron spectrum is non-zero only in the first seven groups.

For the one-dimensional response calculations, the LWT basket region is represented as a homogenized smear of the fuel, fuel tube, and basket structural materials. The resulting composition of the smear is shown in Table 5.3.7-7. The basket smear is homogenized on the basis of a cylinder of radius 14.329 cm and height 279.40 cm (5 times the active fuel height).

With these response functions, the dose rate at the corresponding detector location is determined for any given burnup and cool time combination by simply multiplying the fuel source spectrum by the appropriate response function. The SCALE SAS1 sequence is used to develop dose rate response functions. The computed response functions are shown in Table 5.3.7-8 through Table 5.3.7-11 for HEU material and Table 5.3.7-12 though Table 5.3.7-15 for LEU material.

5.3.7.3 TRIGA Fuel Cluster Rod Required Cool Times

The cool time results for the HEU and LEU TRIGA fuel cluster rods are shown in Table 5.3.7-16 and Table 5.3.7-17, respectively. The result tables include the cool time required to meet the 1.875W heat load limit per rod. For each burnup and cool time combination, the normal condition 2-meter and accident condition 1-meter dose rates are given. As the cask surface dose rates are documented for the TRIGA rods to be significantly below the limits (by over a factor of 5), normal condition surface dose rates are not included in the result summary. All dose rates are significantly below licensing limits, with HEU fuel producing bounding dose rates. The maximum 1- meter dose rate under normal conditions is 17.9 mrem/hr for a transport index (TI) of 17.9.

Figure 5.3.7-1 HEU TRIGA Cluster Fuel Rod SAS2H Sample Input (600 GWd/MTU)

```
=SAS2H    PARM=(HALT04,SKIPSHIPDATA)
TRIGA v1.2 - CLST - U=10.0% - U235=92.0% - H/Zr=1.6 - 505g - 600.0 GWD/MTU
27GROUPNDF4 LATTICECELL
U 1 DEN=6.8570E-01 1.0 517 92235 92.0 92238 8.0 END
Zr 1 DEN=6.0641E+00 1.0 517     END
H 1 DEN=1.0720E-01 1.0 517     END
NI 2 DEN=7.94 0.3250 517     END
FE 2 DEN=7.94 0.4182 517     END
CR 2 DEN=7.94 0.2100 517     END
C 2 DEN=7.94 0.0010 517     END
MN 2 DEN=7.94 0.0150 517     END
S 2 DEN=7.94 0.0002 517     END
SI 2 DEN=7.94 0.0100 517     END
CU 2 DEN=7.94 0.0075 517     END
CO 2 DEN=7.94 0.0012 517     END
AL 2 DEN=7.94 0.0060 517     END
TI 2 DEN=7.94 0.0060 517     END
H2O 3 DEN=9.8060E-01 1.0 363     END
C 4 DEN=2.4823E+00 1.0 300     END
Zr 5  1.0 517     END
U 6 DEN=6.8570E-01 1.0 517 92235 92.0 92238 8.0 END
Zr 6 DEN=6.0641E+00 1.0 517     END
H 6 DEN=1.0720E-01 1.0 517     END
END COMP
SQUAREPITCH 1.74752 1.295 1 3 1.377 2   END
MORE DATA  ISN=16 IIM=50 ICM=50    END
NPIN/ASSM=1 FUELNGTH=55.88 NCYCLES=4 NLIB/CYC=1 LIGHTEL=5
PRINTLEVEL=6 INPLEVEL=2
NUMZTOTAL=1 MXREPEATS=1 END
500 1.39432
POWER=1.9310E-02 BURN=392.2838 DOWN=10 END
POWER=1.9310E-02 BURN=392.2838 DOWN=10 END
POWER=1.9310E-02 BURN=392.2838 DOWN=10 END
POWER=1.9310E-02 BURN=392.2838 DOWN=90 END
FE 0.672
CR 0.19
NI 0.115
MN 0.02
CO 0.0012
END
=ORIGENS
0$$  A4 21 A8 26 A10 51 71 E
1$$  1 1T
Decay - fission product gamma rebin
3$$  21 0 1 A33 -86 E
54$$  A8 1 E T
35$$  0 T
56$$  0 1 A13 -2 5 3 E
57**    0.2464 E T
Decay - fission product gamma rebin
SINGLE Rod
60**     3.4759
65$$  A4 1 A7 1 A10 1 A25 1 A28 1 A31 1 A46 1 A49 1 A52 1 E
61**  F1.e-6
81$$  2 51 26 1 E
82$$  F6 T
FISSION PRODUCT GAMMA SPECTRA IN SCALE 18 GROUPS
56$$  F0 T
END
=ORIGENS
0$$  A4 21 A8 26 A10 51 71 E
1$$  1 1T
Decay - actinide gamma rebin
3$$  21 0 1 A33 -86 E
54$$  A8 1 E T
35$$  0 T
56$$  0 1 A13 -2 5 3 E
57**    0.2464 E T
Decay - actinide gamma rebin
```

Figure 5.3.7-1 HEU TRIGA Cluster Fuel Rod SAS2H Sample Input (600 GWd/MTU) (Continued)

```
SINGLE Rod
60**     3.4759
65$$  A4 1 A7 1 A10 1 A25 1 A28 1 A31 1 A46 1 A49 1 A52 1 E
61**  F1.e-6
81$$  2 51 26 1 E
82$$  F5 T
ACTINIDE GAMMA SPECTRA IN SCALE 18 GROUPS
56$$  F0 T
END
=ORIGENS
0$$  A4 21 A8 26 A10 51 71 E
1$$  1 1T
Decay -  light element gamma rebin
3$$  21 0 1 A33 -86 E
54$$  A8 1 E T
35$$  0 T
56$$  0 1 A13 -2 5 3 E
57**    0.2464 E T
Decay - light element gamma rebin
SINGLE Rod
60**     3.4759
65$$  A4 1 A7 1 A10 1 A25 1 A28 1 A31 1 A46 1 A49 1 A52 1 E
61**  F1.e-6
81$$  2 51 26 1 E
82$$  F4 T
LIGHT ELEMENT SCALE GROUP STRUCTURE
56$$  F0 T
END
```

Figure 5.3.7-2 LEU TRIGA Cluster Fuel Rod SAS2H Sample Input (140 GWd/MTU)

```
=SAS2H    PARM=(HALT04,SKIPSHIPDATA)
TRIGA v1.2 - CLST - U=45.0% - U235=19.0% - H/Zr=1.6 - 643g - 140.0 GWD/MTU
27GROUPNDF4 LATTICECELL
U 1 DEN=3.9289E+00 1.0 517 92235 19.0 92238 81.0 END
Zr 1 DEN=4.7186E+00 1.0 517     END
H 1 DEN=8.3417E-02 1.0 517     END
NI 2 DEN=7.94 0.3250 517     END
FE 2 DEN=7.94 0.4182 517     END
CR 2 DEN=7.94 0.2100 517     END
C 2 DEN=7.94 0.0010 517     END
MN 2 DEN=7.94 0.0150 517     END
S 2 DEN=7.94 0.0002 517     END
SI 2 DEN=7.94 0.0100 517     END
CU 2 DEN=7.94 0.0075 517     END
CO 2 DEN=7.94 0.0012 517     END
AL 2 DEN=7.94 0.0060 517     END
TI 2 DEN=7.94 0.0060 517     END
H2O 3 DEN=9.8060E-01 1.0 363     END
C 4 DEN=2.4823E+00 1.0 300     END
Zr 5  1.0 517     END
U 6 DEN=3.9289E+00 1.0 517 92235 19.0 92238 81.0 END
Zr 6 DEN=4.7186E+00 1.0 517     END
H 6 DEN=8.3417E-02 1.0 517     END
END COMP
SQUAREPITCH 1.74752 1.295 1 3 1.377 2   END
MORE DATA  ISN=16 IIM=50 ICM=50    END
NPIN/ASSM=1 FUELNGTH=55.88 NCYCLES=4 NLIB/CYC=1 LIGHTEL=5
PRINTLEVEL=6 INPLEVEL=2
NUMZTOTAL=1 MXREPEATS=1 END
500 1.39432
POWER=1.9310E-02 BURN=524.4562 DOWN=10 END
POWER=1.9310E-02 BURN=524.4562 DOWN=10 END
POWER=1.9310E-02 BURN=524.4562 DOWN=10 END
POWER=1.9310E-02 BURN=524.4562 DOWN=90 END
FE 0.672
CR 0.19
NI 0.115
MN 0.02
CO 0.0012
END
=ORIGENS
0$$  A4 21 A8 26 A10 51 71 E
1$$  1 1T
D Decay - fission product gamma rebin
3$$  21 0 1 A33 -86 E
54$$  A8 1 E T
35$$  0 T
56$$  0 1 A13 -2 5 3 E
57**    0.2464 E T
Decay - fission product gamma rebin
SINGLE Rod
60**     5.2795
65$$  A4 1 A7 1 A10 1 A25 1 A28 1 A31 1 A46 1 A49 1 A52 1 E
61**  F1.e-6
81$$  2 51 26 1 E
82$$  F6 T
FISSION PRODUCT GAMMA SPECTRA IN SCALE 18 GROUPS
56$$  F0 T
END
=ORIGENS
0$$  A4 21 A8 26 A10 51 71 E
1$$  1 1T
Decay - actinide gamma rebin
3$$  21 0 1 A33 -86 E
54$$  A8 1 E T
35$$  0 T
56$$  0 1 A13 -2 5 3 E
57**    0.2464 E T
Decay - actinide gamma rebin
SINGLE Rod
```

Figure 5.3.7-2 LEU TRIGA Cluster Fuel Rod SAS2H Sample Input (140 GWd/MTU) (Continued)

```
60**     5.2795
65$$  A4 1 A7 1 A10 1 A25 1 A28 1 A31 1 A46 1 A49 1 A52 1 E
61**  F1.e-6
81$$  2 51 26 1 E
82$$  F5 T
ACTINIDE GAMMA SPECTRA IN SCALE 18 GROUPS
56$$  F0 T
END
=ORIGENS
0$$  A4 21 A8 26 A10 51 71 E
1$$  1 1T
Decay - light element gamma rebin
3$$  21 0 1 A33 -86 E
54$$  A8 1 E T
35$$  0 T
56$$  0 1 A13 -2 5 3 E
57**    0.2464 E T
Decay - light element gamma rebin
SINGLE Rod
60**     5.2795
65$$  A4 1 A7 1 A10 1 A25 1 A28 1 A31 1 A46 1 A49 1 A52 1 E
61**  F1.e-6
81$$  2 51 26 1 E
82$$  F4 T
LIGHT ELEMENT SCALE GROUP STRUCTURE
56$$  F0 T
END
```

Table 5.3.7-1 TRIGA Fuel Cluster Rod Parameters

Parameter	[in]	[cm]
Overall length	30.130	76.530
Fuel height	22.000	55.880
Fuel diameter	0.510	1.295
U mass fraction	10% (HEU) / 45% (LEU)	-
^{235}U enrichment[1]	92% (HEU) / 19% (LEU)	-
Fuel mass [g]	50.5 (HEU) / 289.4 (LEU)	-
H to Zr ratio	1.6	-
Cladding thickness	0.016	0.041
Clad diameter	0.542	1.377
Clad material	Incoloy 800	-
Tube ID	0.625	1.588
Tube OD	0.750	1.905
Tube material	aluminum	-
Power [MW]	0.0193	-
Number cycles	4	-
Down time between cycles [d]	10	-
Exposure [d]	varies	-

Note: Fuel dimensions represent the nominal configuration values.

[1] Enrichments represent minimum values. Lower limit enrichments produce maximum source terms.

Table 5.3.7-2 Incoloy 800 Clad Composition

ρ=7.94 g/cm^3 Isotope	Mass Fraction	Number Density [atm/b-cm]
NI	0.3250	2.6479E-02
FE	0.4182	3.5803E-02
CR	0.2100	1.9312E-02
C	0.0010	3.9846E-04
MN	0.0150	1.3055E-03
S	0.0002	2.2369E-05
SI	0.0100	1.7025E-03
CU	0.0075	5.5949E-04
CO	0.0012	9.7361E-05
AL	0.0060	1.0633E-03
TI	0.0060	5.9920E-04

Table 5.3.7-3 Representative HEU TRIGA Fuel Cluster Rod Gamma Spectra at 150 GWd/MTU and 1.342 Year Cool Time

Group	Emin	Emax	Eav	Fuel Gamma g/s/assy	Hardware g/s/kg
1	8.00E+00	1.00E+01	9.00E+00	1.3715E-02	0.0000E+00
2	6.50E+00	8.00E+00	7.25E+00	6.5356E-02	0.0000E+00
3	5.00E+00	6.50E+00	5.75E+00	3.3880E-01	0.0000E+00
4	4.00E+00	5.00E+00	4.50E+00	8.5991E-01	0.0000E+00
5	3.00E+00	4.00E+00	3.50E+00	1.3994E+07	2.1078E-18
6	2.50E+00	3.00E+00	2.75E+00	1.5076E+08	1.5024E+04
7	2.00E+00	2.50E+00	2.25E+00	4.6634E+10	9.6891E+06
8	1.66E+00	2.00E+00	1.83E+00	4.5791E+09	1.0911E+08
9	1.33E+00	1.66E+00	1.50E+00	3.4986E+10	4.0828E+11
10	1.00E+00	1.33E+00	1.17E+00	5.4462E+10	1.4458E+12
11	8.00E-01	1.00E+00	9.00E-01	1.3568E+11	2.4795E+11
12	6.00E-01	8.00E-01	7.00E-01	1.7889E+12	8.9675E+06
13	4.00E-01	6.00E-01	5.00E-01	4.9752E+11	7.0972E+09
14	3.00E-01	4.00E-01	3.50E-01	2.7316E+11	1.2509E+08
15	2.00E-01	3.00E-01	2.50E-01	3.5064E+11	1.1931E+08
16	1.00E-01	2.00E-01	1.50E-01	1.5849E+12	1.3870E+09
17	5.00E-02	1.00E-01	7.50E-02	1.5295E+12	5.2359E+09
18	1.00E-02	5.00E-02	3.00E-02	4.6914E+12	2.5711E+10
Total				1.0992E+13	2.1418E+12

Table 5.3.7-4 Representative HEU TRIGA Fuel Cluster Rod Neutron Spectrum at 150 GWd/MTU and 1.342 Year Cool Time

Group	Emin	Emax	Eav	Fuel Neutron n/s/assy
1	6.43E+00	2.00E+01	1.32E+01	3.907E-01
2	3.00E+00	6.43E+00	4.72E+00	1.025E+01
3	1.85E+00	3.00E+00	2.43E+00	2.027E+01
4	1.40E+00	1.85E+00	1.63E+00	6.741E+00
5	9.00E-01	1.40E+00	1.15E+00	5.921E+00
6	4.00E-01	9.00E-01	6.50E-01	4.708E+00
7	1.00E-01	4.00E-01	2.50E-01	9.014E-01
8-27				0
Total				4.918E+01

Table 5.3.7-5 Representative LEU TRIGA Fuel Cluster Rod Gamma Spectra

				30 GWd/MTU – 1.5 Years		140 GWd/MTU – 5.3 Years	
				Fuel Gamma	Hardware	Fuel Gamma	Hardware
Group	E_{min}	E_{max}	E_{av}	g/s/rod	g/s/kg	g/s/rod	g/s/kg
1	8.00E+00	1.00E+01	9.00E+00	1.6759E-01	0.0000E+00	8.3995E+01	0.0000E+00
2	6.50E+00	8.00E+00	7.25E+00	7.9334E-01	0.0000E+00	3.9568E+02	0.0000E+00
3	5.00E+00	6.50E+00	5.75E+00	4.0740E+00	0.0000E+00	2.0176E+03	0.0000E+00
4	4.00E+00	5.00E+00	4.50E+00	1.0234E+01	0.0000E+00	5.0286E+03	0.0000E+00
5	3.00E+00	4.00E+00	3.50E+00	1.9609E+07	3.5241E-18	5.9296E+06	1.0031E-15
6	2.50E+00	3.00E+00	2.75E+00	1.9278E+08	1.5442E+04	4.9029E+07	4.3586E+04
7	2.00E+00	2.50E+00	2.25E+00	4.4530E+10	9.9589E+06	2.4023E+09	2.8109E+07
8	1.66E+00	2.00E+00	1.83E+00	4.8799E+09	7.9346E+07	8.9544E+08	1.1584E+02
9	1.33E+00	1.66E+00	1.50E+00	3.5841E+10	4.1965E+11	3.9671E+10	1.1845E+12
10	1.00E+00	1.33E+00	1.17E+00	6.1250E+10	1.4860E+12	1.8088E+11	4.1943E+12
11	8.00E-01	1.00E+00	9.00E-01	1.5418E+11	2.7182E+11	5.3290E+11	2.3524E+10
12	6.00E-01	8.00E-01	7.00E-01	1.6820E+12	7.0347E+06	4.4478E+12	4.9556E+06
13	4.00E-01	6.00E-01	5.00E-01	4.4530E+10	5.1626E+09	1.0886E+12	1.4277E+07
14	3.00E-01	4.00E-01	3.50E-01	4.8799E+09	1.1079E+08	1.1637E+11	2.2578E+08
15	2.00E-01	3.00E-01	2.50E-01	3.5841E+10	1.0458E+08	1.7638E+11	1.7208E+08
16	1.00E-01	2.00E-01	1.50E-01	6.1250E+10	1.3677E+09	6.2780E+11	3.4656E+09
17	5.00E-02	1.00E-01	7.50E-02	1.5418E+11	5.2957E+09	7.8533E+11	1.4365E+10
18	1.00E-02	5.00E-02	3.00E-02	1.6820E+12	2.6174E+10	2.7120E+12	7.2383E+10
Total				1.0913E+13	2.2158E+12	1.0711E+13	5.4930E+12

Table 5.3.7-6 Representative LEU TRIGA Fuel Cluster Rod Neutron Spectrum

				30 GWd/MTU – 1.5 Years	140 GWd/MTU – 5.3 Years
Group	**E_{min}**	**E_{max}**	**E_{av}**	**n/s/rod**	**n/s/rod**
1	6.43E+00	2.00E+01	1.32E+01	3.907E-01	2.738E+03
2	3.00E+00	6.43E+00	4.72E+00	1.025E+01	3.151E+04
3	1.85E+00	3.00E+00	2.43E+00	2.027E+01	3.559E+04
4	1.40E+00	1.85E+00	1.63E+00	6.741E+00	1.972E+04
5	9.00E-01	1.40E+00	1.15E+00	5.921E+00	2.644E+04
6	4.00E-01	9.00E-01	6.50E-01	4.708E+00	2.870E+04
7	1.00E-01	4.00E-01	2.50E-01	9.014E-01	5.616E+03
8-27				0	0
Total				4.918E+01	1.503E+05

Table 5.3.7-7 Fuel Basket Region Material Composition Used in Shielding Analysis

Isotope	Number Density [a/b-cm]
HYDROGEN	1.4660E-02 (HEU) 1.1407E-02 (LEU)
CARBON-12	1.1803E-05
ALUMINUM	9.1431E-03
SILICON	5.0432E-05
SULFUR	8.8350E-07
TITANIUM	1.7750E-05
CHROMIUM	5.7206E-04
CHROMIUM(SS304)	2.9885E-03
MANGANESE	3.3640E-04
IRON	1.0607E-03
IRON(SS304)	1.0178E-02
COBALT-59	2.8841E-06
NICKEL	7.8439E-04
NICKEL(SS304)	1.3239E-03
COPPER	1.6574E-05
ZIRCONIUM	9.1613E-03 (HEU) 7.1286E-03 (LEU)
URANIUM-235	3.6989E-04 (HEU) 4.3769E-04 (LEU)
URANIUM-238	3.1758E-05 (HEU) 1.8424E-03 (LEU)

Table 5.3.7-8 Normal Condition Dose Response to Gammas for HEU TRIGA Fuel Cluster Rods

Conveyance +2m Response to Gammas [mrem/hr per 10^{10} g/sec/cm^3]

Gamma Group	Neutron	Gamma	Total
1	0.0000E+00	8.7827E+02	8.7827E+02
2	0.0000E+00	1.1271E+03	1.1271E+03
3	0.0000E+00	1.2216E+03	1.2216E+03
4	0.0000E+00	1.1507E+03	1.1507E+03
5	0.0000E+00	9.3368E+02	9.3368E+02
6	0.0000E+00	6.0752E+02	6.0752E+02
7	0.0000E+00	3.3223E+02	3.3223E+02
8	0.0000E+00	1.3049E+02	1.3049E+02
9	0.0000E+00	3.8963E+01	3.8963E+01
10	0.0000E+00	4.8262E+00	4.8262E+00
11	0.0000E+00	1.6823E-01	1.6823E-01
12	0.0000E+00	2.2095E-03	2.2095E-03
13	0.0000E+00	~0	~0
14	0.0000E+00	~0	~0
15	0.0000E+00	~0	~0
16	0.0000E+00	0.0000E+00	0.0000E+00
17	0.0000E+00	0.0000E+00	0.0000E+00
18	0.0000E+00	0.0000E+00	0.0000E+00

Table 5.3.7-9 Normal Condition Dose Response to Neutrons for HEU TRIGA Fuel Cluster Rods

Conveyance +2m Response to Neutrons [mrem/hr per 10^{10} n/sec/cm^3]

Neutron Group	Neutron	N-Gamma	Total
1	1.5108E+07	3.5697E+06	1.8678E+07
2	9.7886E+06	3.4320E+06	1.3221E+07
3	9.3287E+06	3.5005E+06	1.2829E+07
4	8.1394E+06	3.6006E+06	1.1740E+07
5	7.6472E+06	3.6808E+06	1.1328E+07
6	7.6040E+06	3.8733E+06	1.1477E+07
7	8.5034E+06	4.2076E+06	1.2711E+07

Table 5.3.7-10 Accident Condition Dose Response to Gammas for HEU TRIGA Fuel Cluster Rods

Accident 1m Response to Gammas [mrem/hr per 10^{10} g/sec/cm^3]

Gamma Group	Neutron	Gamma	Total
1	0.0000E+00	3.3595E+03	3.3595E+03
2	0.0000E+00	4.3690E+03	4.3690E+03
3	0.0000E+00	4.8553E+03	4.8553E+03
4	0.0000E+00	4.7248E+03	4.7248E+03
5	0.0000E+00	3.9709E+03	3.9709E+03
6	0.0000E+00	2.6934E+03	2.6934E+03
7	0.0000E+00	1.5268E+03	1.5268E+03
8	0.0000E+00	6.2615E+02	6.2615E+02
9	0.0000E+00	1.9495E+02	1.9495E+02
10	0.0000E+00	2.5529E+01	2.5529E+01
11	0.0000E+00	9.5430E-01	9.5430E-01
12	0.0000E+00	1.3397E-02	1.3397E-02
13	0.0000E+00	~0	~0
14	0.0000E+00	~0	~0
15	0.0000E+00	~0	~0
16	0.0000E+00	0.0000E+00	0.0000E+00
17	0.0000E+00	0.0000E+00	0.0000E+00
18	0.0000E+00	0.0000E+00	0.0000E+00

Table 5.3.7-11 Accident Condition Dose Response to Neutrons for HEU TRIGA Fuel Cluster Rods

Accident 1m Response to Neutrons [mrem/hr per 10^{10} n/sec/cm^3]

Neutron Group	Neutron	N-Gamma	Total
1	6.9825E+08	1.8022E+06	7.0005E+08
2	6.4426E+08	1.4226E+06	6.4568E+08
3	6.5723E+08	1.3323E+06	6.5856E+08
4	6.5822E+08	1.3207E+06	6.5954E+08
5	6.5912E+08	1.3375E+06	6.6046E+08
6	6.5766E+08	1.4370E+06	6.5910E+08
7	6.6848E+08	1.7133E+06	6.7019E+08

Table 5.3.7-12 Normal Condition Dose Response to Gammas for LEU TRIGA Fuel Cluster Rods

Conveyance +2m Response to Gammas [mrem/hr per 10^{10} g/sec/cm^3]

Gamma Group	Neutron	Gamma	Total
1	0.0000E+00	7.3425E+02	7.3425E+02
2	0.0000E+00	9.5273E+02	9.5273E+02
3	0.0000E+00	1.0435E+03	1.0435E+03
4	0.0000E+00	9.9317E+02	9.9317E+02
5	0.0000E+00	8.1421E+02	8.1421E+02
6	0.0000E+00	5.3413E+02	5.3413E+02
7	0.0000E+00	2.9313E+02	2.9313E+02
8	0.0000E+00	1.1505E+02	1.1505E+02
9	0.0000E+00	3.4153E+01	3.4153E+01
10	0.0000E+00	4.1479E+00	4.1479E+00
11	0.0000E+00	1.4023E-01	1.4023E-01
12	0.0000E+00	1.7465E-03	1.7465E-03
13	0.0000E+00	~0	~0
14	0.0000E+00	~0	~0
15	0.0000E+00	~0	~0
16	0.0000E+00	0.0000E+00	0.0000E+00
17	0.0000E+00	0.0000E+00	0.0000E+00
18	0.0000E+00	0.0000E+00	0.0000E+00

Table 5.3.7-13 Normal Condition Dose Response to Neutrons for LEU TRIGA Fuel Cluster Rods

Conveyance +2m Response to Neutrons [mrem/hr per 10^{10} n/sec/cm^3]

Neutron Group	Neutron	N-Gamma	Total
1	1.3321E+07	2.8932E+06	1.6214E+07
2	7.7218E+06	2.6000E+06	1.0322E+07
3	7.1589E+06	2.6093E+06	9.7682E+06
4	5.6939E+06	2.6182E+06	8.3120E+06
5	4.9653E+06	2.6149E+06	7.5802E+06
6	4.4947E+06	2.6660E+06	7.1607E+06
7	4.8302E+06	2.7813E+06	7.6116E+06

Table 5.3.7-14 Accident Condition Dose Response to Gammas for LEU TRIGA Fuel Cluster Rods

Accident 1m Response to Gammas [mrem/hr per 10^{10} g/sec/cm^3]

Gamma Group	Neutron	Gamma	Total
1	0.0000E+00	2.8056E+03	2.8056E+03
2	0.0000E+00	3.6896E+03	3.6896E+03
3	0.0000E+00	4.1438E+03	4.1438E+03
4	0.0000E+00	4.0750E+03	4.0750E+03
5	0.0000E+00	3.4606E+03	3.4606E+03
6	0.0000E+00	2.3668E+03	2.3668E+03
7	0.0000E+00	1.3464E+03	1.3464E+03
8	0.0000E+00	5.5180E+02	5.5180E+02
9	0.0000E+00	1.7081E+02	1.7081E+02
10	0.0000E+00	2.1931E+01	2.1931E+01
11	0.0000E+00	7.9507E-01	7.9507E-01
12	0.0000E+00	1.0585E-02	1.0585E-02
13	0.0000E+00	~0	~0
14	0.0000E+00	~0	~0
15	0.0000E+00	~0	~0
16	0.0000E+00	0.0000E+00	0.0000E+00
17	0.0000E+00	0.0000E+00	0.0000E+00
18	0.0000E+00	0.0000E+00	0.0000E+00

Table 5.3.7-15 Accident Condition Dose Response to Neutrons for LEU TRIGA Fuel Cluster Rods

Accident 1m Response to Neutrons [mrem/hr per 10^{10} n/sec/cm^3]

Neutron Group	Neutron	N-Gamma	Total
1	5.8927E+08	1.4562E+06	5.9073E+08
2	5.0824E+08	1.0199E+06	5.0925E+08
3	5.1272E+08	9.0017E+05	5.1362E+08
4	4.9699E+08	8.4472E+05	4.9784E+08
5	4.8366E+08	8.2164E+05	4.8448E+08
6	4.5526E+08	8.4466E+05	4.5610E+08
7	4.1740E+08	1.0303E+06	4.1843E+08

Table 5.3.7-16 HEU TRIGA Fuel Cluster Rod Dose Rate Results at Various Fuel Burnups

Burnup [GWd/MTU]	Depletion [% ^{235}U]	Cool Time (days)	Accident (mrem/hr)	Normal 2-m (mrem/hr)
20	2.8%	170.5	11.4	2.4
30	4.1%	213.4	14.6	3.1
40	5.6%	246.4	17.5	3.7
50	6.9%	273.8	19.9	4.3
60	8.4%	298.7	21.9	4.7
70	9.7%	322.6	23.6	5.1
80	11.2%	344.6	24.9	5.3
90	12.5%	366.9	26.0	5.6
100	14.0%	388.2	26.8	5.7
110	15.3%	410.1	27.4	5.9
120	16.8%	429.5	27.9	6.0
130	18.1%	451.0	28.2	6.0
140	19.6%	471.4	28.4	6.1
150	20.9%	490.1	28.5	6.1
160	22.2%	510.0	28.5	6.1
170	23.7%	527.6	28.5	6.1
180	25.0%	545.3	28.5	6.1
190	26.5%	563.4	28.3	6.0
200	27.8%	580.6	28.2	6.0
225	31.3%	620.7	27.8	5.9
250	34.7%	660.3	27.3	5.8
275	38.1%	697.4	26.8	5.6
300	41.4%	734.5	26.2	5.5
325	44.8%	772.7	25.5	5.3
350	48.3%	806.1	25.1	5.2
375	51.5%	845.3	24.5	5.1
400	55.0%	881.8	24.0	5.0
425	58.2%	922.6	23.4	4.8
450	61.4%	963.2	23.0	4.7
475	64.7%	1005.8	22.6	4.6
500	67.9%	1051.3	22.2	4.4
525	71.1%	1099.4	21.9	4.3
550	74.4%	1150.5	21.7	4.2
575	77.6%	1207.2	21.6	4.2
600	80.6%	1269.6	21.6	4.1

Table 5.3.7-17 LEU TRIGA Fuel Cluster Rod Dose Rate Results at Various Fuel Burnups

Burnup [GWd/MTU]	Depletion [% ^{235}U]	Cool Time (years)	Accident (mrem/hr)	Normal 2-m (mrem/hr)
2	1.3%	0.32	10.3	2.2
3	2.0%	0.42	9.3	2.0
4	2.7%	0.50	10.8	2.3
5	3.3%	0.57	12.4	2.7
10	6.6%	0.80	18.8	4.0
15	9.8%	1.0	22.3	4.8
20	13.1%	1.2	24.1	5.1
30	19.5%	1.5	24.5	5.2
40	25.7%	1.8	23.6	5.0
50	31.7%	2.0	22.3	4.7
60	37.5%	2.2	21.1	4.4
70	43.4%	2.5	20.1	4.0
80	48.8%	2.7	19.5	3.8
90	54.3%	3.0	19.2	3.5
100	59.6%	3.3	19.7	3.2
110	64.5%	3.7	21.1	3.0
120	69.4%	4.1	23.9	2.9
130	74.0%	4.6	28.2	2.8
140	78.5%	5.3	34.6	2.7

5.3.8 High Burnup PWR and BWR Rods Shielding Evaluation

Results of a shielding and decay heat source analysis for up to 25 high burnup PWR or BWR fuel rods are presented in this section. The rods have burnups up to 80,000 MWd/MTU. The results are presented in terms of the cool time required for 25 rods to meet package surface and 2 meter dose rate limits and a cask total decay heat limit of 2.1 kW for BWR rods and 2.3 kW for PWR rods.

Consistent with the analysis performed for the lower burnup PWR rods, the shielding analysis is performed using the one-dimensional SCALE SAS1 shielding analysis sequence. Source terms are generated based on a limiting description of PWR and BWR fuel rods using the SCALE SAS2H code.

The PWR analysis is based on a single limiting description of a PWR fuel rod which bounds rods from all PWR assembly array sizes. Two BWR rod models are employed. The first is based on a limiting description of rods from 7×7 array size assemblies. The results for this case indicate that the highest burnup BWR 7×7 rods require greater than 150 days cool time before shipment. Hence, a second BWR fuel rod model is developed which bounds rods from 8×8 and larger array size fuel assemblies. The results for this model indicate that up to 25 rods from these assemblies can be shipped at the maximum burnup of 80,000 MWd/MTU after 150 days cool time.

Nonfuel-bearing irradiated guide tubes and water rods may be included in the rod holder. These components are part of an assembly lattice (skeleton), and are evaluated and demonstrated to meet requirements for transport, in conjunction with the high burnup fuel rods, in Section 5.3.11.

5.3.8.1 High Burnup PWR and BWR Rods Source Terms

The limiting rod descriptions are determined by developing a hybrid fuel rod model, which contains a conservatively bounding uranium loading. For a given burnup, the bounding uranium mass leads to bounding decay heat and radiation source terms. Fuel rod model parameters are shown in Table 5.3.8-1. In the BWR model, fuel rods from 7×7 array size assemblies are treated as a special case, since their significantly higher mass loadings lead to required extended cool times, which would unnecessarily penalize BWR rods from larger array size assemblies, which have a significantly lower mass per rod and correspondingly lower radiation and decay heat source terms. The BWR 7×7 fuel rod model bounds all rods from 7×7 array size BWR assemblies, and the BWR 8×8 fuel rod model bounds rods from all 8×8 and larger (i.e., 9×9, 10×10) BWR assemblies.

SAS2H models of the three fuel rod models are developed based on the cycle parameters shown in Table 5.3.8-2. The rod exposure is conservatively assumed to occur over a typical number of

reactor operating cycles: three for the PWR rods and four for the BWR rods. In addition, in order to achieve the high fuel burnups, assembly powers are conservatively increased rather than extending cycle lengths. A down time of 60 days between cycles is assumed. Fuel rods are evaluated at an initial enrichment of 4.0 wt % ^{235}U. This enrichment is expected to be a lower bound for fuel burned as high as 80,000 MWd/MTU. The SAS2H models for each rod type are shown in Figure 5.3.8-1 through Figure 5.3.8-3. The SCALE 27N18G library is employed here; the energy group structure of this library is shown in Table 5.3.8-3 and Table 5.3.8-4 along with the ANSI flux-to-dose-rate conversion factors employed in the shielding analysis.

The resulting decay heat source terms for 25 rods of each fuel type are shown in Table 5.3.8-5. The BWR 7×7 rods are analyzed at 60, 70, and 80 GWd/MTU burnup. Neutron and gamma radiation source spectra for the various fuel types are shown in Table 5.3.8-6 through Table 5.3.8-15 at various cool times. Note that the neutron source spectrum is non-zero only in the highest seven energy groups; hence, the remaining energy groups are omitted from the tables.

5.3.8.1.1 Axial Source Profile

The description of the PWR and BWR rods axial source profile is based on bounding axial burnup profiles observed for fuel at much lower burnups. This description is conservative because the higher burned fuel of interest here will have a substantially lower axial peaking factor. The PWR and BWR axial burnup and source profiles are shown in Figure 5.3.8-4 and Figure 5.3.8-5, respectively. Values are tabulated in Table 5.3.8-17 and Table 5.3.8-18.

The computed relation between source rate S and burnup B:

$$S = aB^b$$

implies that, in general, the average source rate is not equal to the source rate at the average burnup. The exponent b is determined based on SAS2H analyses of various fuel assemblies at different burnups. A value of 4.22 is used for neutron source rate variation in both PWR and BWR fuel types. The exponent for photon source rates has been determined to be 1.0.

Two scaling quantities are of interest. First, since SAS2H analyses are conducted at the average assembly burnup, a scale factor is required to relate the assembly average source rate to the source rate at the average burnup:

$$r = \frac{\overline{S}}{S(\overline{B})} = \frac{\frac{a}{H}\int B^b dz}{a\overline{B}^b}$$

where *H* is the height of the fuel region. With the burnup profile normalized to one, this becomes

$$r = \frac{1}{H}\int B^b dz$$

The integral is evaluated numerically using the trapezoid rule, and the resulting scale factors are shown in Table 5.3.8-16. The second scaling parameter is the ratio of the peak to average source rate.

$$s = \frac{S(B_{max})}{\bar{S}}$$

This parameter is also shown in Table 5.3.8-16.

5.3.8.2 High Burnup PWR and BWR Rods Shielding Model

A homogenized description of the LWT cask payload and basket structural materials is developed for use in the one-dimensional shielding model. The fuel region is a homogenized smear of the fuel rods and the stainless steel insert tubes (1.7463 cm OD with 0.0711 cm wall thickness). Resulting homogenized material compositions are provided in Table 5.3.8-19.

Outside the homogenized fuel region, the remaining basket materials are represented as concentric rings of stainless steel, aluminum or void regions. The radii of the rings are chosen to conserve the cross sectional area of the material present in each region.

Table 5.3.8-21 shows the key basket model parameters required to develop the concentric radial model. Material compositions for the basket and cask materials are shown in Table 5.3.8-20. The resulting one-dimensional model of the LWT cask including basket and payload is shown in Table 5.3.8-22.

SAS1 shielding models are developed for each fuel type based on the one-dimensional model shown in Table 5.3.8-22. Neutron and gamma dose rates are evaluated for each fuel type and for each decay time shown in Table 5.3.8-6 through Table 5.3.8-15. Dose rates are evaluated using a dose response methodology.

5.3.8.2.1 Dose Response Methodology

In order to avoid the significant effort required to prepare and execute dozens of one-dimensional cases for all fuel configurations and burnups under consideration, a unique device is employed which permits the ready calculation of dose rates at a given location by use of a dose rate response function. The dose rate response function for a given source type at a given detector location is a collection of values, one for each energy group, each of which gives the contribution to the dose rate at a specific detector location from a unit source strength in that energy group. With this response function, the dose rate, d, at the corresponding detector location is determined for any given fuel type simply by vector multiplying the unnormalized source spectrum, f, by the response function, r.

The dose rate response function is computed by solving a series of one-dimensional cases, one for each energy group, with a unit source strength in each energy group. In practice, the source strength is normalized to some large value (here, 10^{10}/cm^3/sec) in order to avoid numeric underflow in the calculation.

The resulting cask surface and 2m response functions for the various fuel types analyzed here are shown in Table 5.3.8-23 through Table 5.3.8-26.

The results of multiplying the computed dose response functions by the various spectra shown in the tables are dose rates associated with the source at the average assembly burnup. These computed dose rates are then scaled by the ratio of the average source to the source at the average burnup, as tabulated in Table 5.3.8-16. At 2m from the cask, this result is an accurate estimate of the dose rate since the axial source peaking factor does not have a significant effect on dose rates at this distance from the cask. On the surface, however, the computed dose rates are further scaled by the peak-to-average source ratio in order to more accurately capture the peak axial surface dose rate.

5.3.8.3 High Burnup PWR and BWR Rods Shielding Evaluation

Table 5.3.8-27 and Table 5.3.8-28 summarize the computed dose rates as a function of cool time for each fuel type at the surface and 2m from the edge of the cask conveyance. Each table also includes the cask total decay heat.

The surface dose rate results are well below the regulatory limit of 200 mrem/hr for all fuel types at burnups up to 80,000 MWd/MTU and for cool times greater than 150 days. Hence, the normal condition surface dose rates do not impose any restrictions on the suitability of fuel for shipment.

The 2m dose rate results are limited to 10.0 mrem/hr. Hence, the results in Table 5.3.8-28 indicate that all fuels except the BWR 7×7 at 80,000 MWd/MTU lead to 2m dose rates below 9.0 mrem/hr at 150 days cool time. The BWR 7×7 fuel requires 180 days cool time to fall below 9.0 mrem/hr.

Finally, the cask decay heat limit of 2.1 kW/cask (BWR) and 2.3 kW/cask (PWR) further constrains the minimum cool time requirements. Based on the tabulated results, all fuel except the BWR 7×7 can be shipped at 150 days cool time. The BWR 7×7 at 60,000 MWd/MTU requires 210 days cool time, at 70,000 requires 240 days cool time, and at 80,000 MWd/MTU requires 270 days cool time based on decay heat source alone.

Combining the constraints for surface and 2m dose rate and cask total decay heat, the loading table shown in Table 5.3.8-29 is obtained.

Accident dose rates were not explicitly calculated for the 80 GWd/MTU PWR and BWR fuel rods. The accident dose rate for the 60 GWd/MTU PWR rods was reported in Section 5.3.5 as 69.44 mrem/hr at 1 meter from the cask. Conservatively applying a fuel mass ratio of the maximum 80 GWd/MTU payload to the 60 GWd/MTU payload (108.8/65.6), and the neutron dose rate scaling factor ($[80/60]^{4.22}$) results in a maximum dose rate less than 400 mrem/hr. This conservative estimate is significantly lower than the 1000 mrem/hr limit.

Figure 5.3.8-1 PWR Rod SAS2H Model

```
=SAS2H      PARM=(HALT06,SKIPSHIPDATA)
PWR 4.0 W/O U235, 80000 MWD/MTU UP TO 1 YEAR COOLING
27GROUPNDF4 LATTICECELL
UO2         1 0.95 811 92235 4.0 92238 96.0 END
ZIRCALLOY   2 1.0 620 END
H2O         3 DEN=0.725 1.0 570 END
ARBM-BORMOD 0.725 1 1 0 0 5000 100 3 550.0E-6 570 END
END COMP
SQUAREPITCH 1.473 0.9665 1 3 1.118 2 0.986 0 END
NPIN/ASSM=176 FUELENGTH=389.9 NCYCLE=3 NLIB/CYC=2 PRINTLEVEL=6
INPLEVEL=2 NUMZONES=4  END
3 1.3589 2 1.4605 3 1.6623 500 5.2039
POWER=19.36 BURN=636.4 DOWN=60.0 END
POWER=19.36 BURN=636.4 DOWN=60.0 END
POWER=19.36 BURN=636.4 DOWN=0.0 END
END
```

Figure 5.3.8-2 BWR 7×7 SAS2H Model Shown at 80,000 MWd/MTU

```
=SAS2H      PARM=(HALT08,SKIPSHIPDATA)
BWR/4-6 7x7 4.0 W/O U235 80,000 MWD/MTU, 40% VOID,  UP TO 1 YEAR
COOLING
27GROUPNDF4 LATTICECELL
UO2       1 0.95 840 92235 4.0 92238 96.0 END
ZIRCALLOY 2 1.0 620. END
H2O 3 DEN=0.446 1.0 562. END
H2O 4 DEN=0.743 1.0 553. END
ZIRCALLOY 5 1.0 553 END
H2O 6 DEN=0.446 1.0 562. END
END COMP
SQUAREPITCH 1.8745 1.2446 1 3 1.448 2 1.265 0 END
NPIN/ASSM=49 FUELENGTH=389.9 NCYCLES=4 NLIB/CYC=2 PRINTLEVEL=6
INPLEVEL=2 NUMZONES=5 END
 1 0.001 500 7.403 6 7.564 5 7.793 4 8.598
POWER=5.85 BURN=730.0 DOWN=60 END
POWER=5.85 BURN=730.0 DOWN=60 END
POWER=5.85 BURN=730.0 DOWN=60 END
POWER=5.85 BURN=730.0 DOWN=0.0 END
```

Figure 5.3.8-3 BWR 8×8 Rod SAS2H Model

```
=SAS2H       PARM=(HALT08,SKIPSHIPDATA)
BWR/4-6 8x8 4.0 W/O U235 80,000 MWD/MTU, 40% VOID,  UP TO 1 YEAR
COOLING
'LEVEL 2 INPUT FROM 790-4002
27GROUPNDF4 LATTICECELL
UO2        1 0.95 840 92235 4.0 92238 96.0 END
ZIRCALLOY 2 1.0 620. END
H2O 3 DEN=0.446 1.0 562. END
H2O 4 DEN=0.743 1.0 553. END
ZIRCALLOY 5 1.0 553 END
H2O 6 DEN=0.446 1.0 562. END
END COMP
SQUAREPITCH 1.626 1.0701 1 3 1.260 2 1.086 0 END
NPIN/ASSM=63 FUELENGTH=389.9 NCYCLES=4 NLIB/CYC=2 PRINTLEVEL=6
INPLEVEL=2 NUMZONES=7 END
4 0.540 5 0.620 6 0.917 500 7.337 6 7.564 5 7.793 4 8.598
POWER=5.56 BURN=730.0 DOWN=60 END
POWER=5.56 BURN=730.0 DOWN=60 END
POWER=5.56 BURN=730.0 DOWN=60 END
POWER=5.56 BURN=730.0 DOWN=0.0 END
END
```

Figure 5.3.8-4 PWR Rods Axial Burnup and Source Profiles

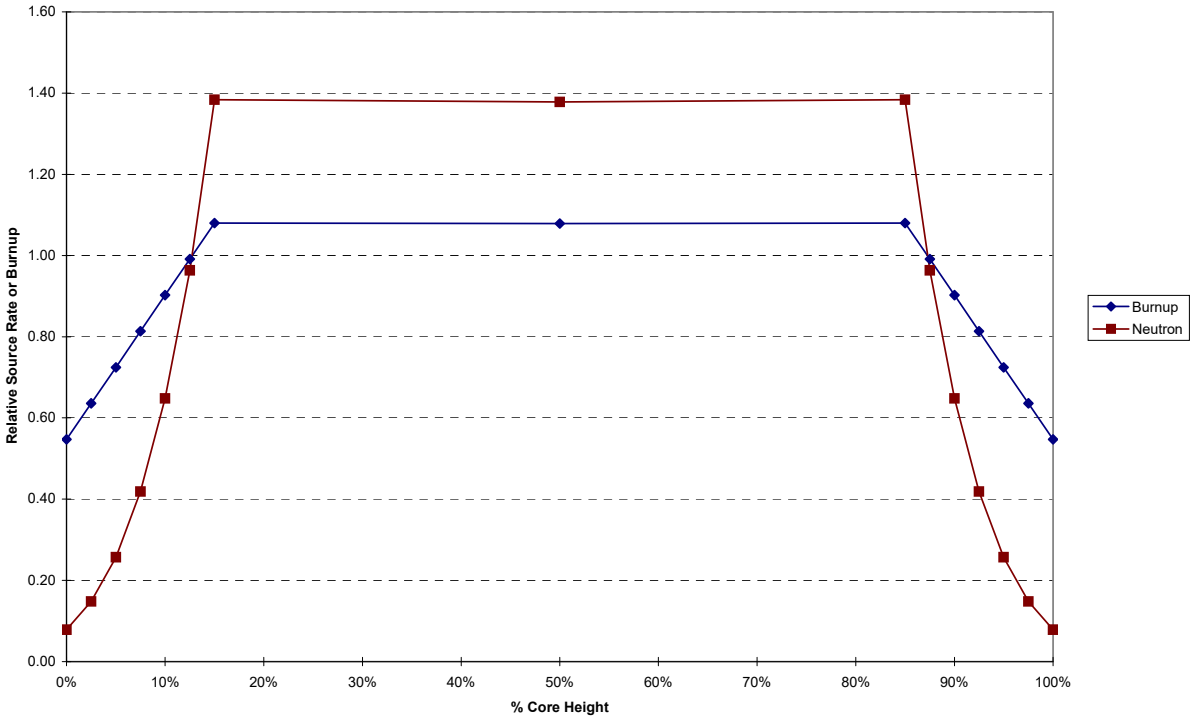

Figure 5.3.8-5 BWR Rods Axial Burnup and Source Profiles

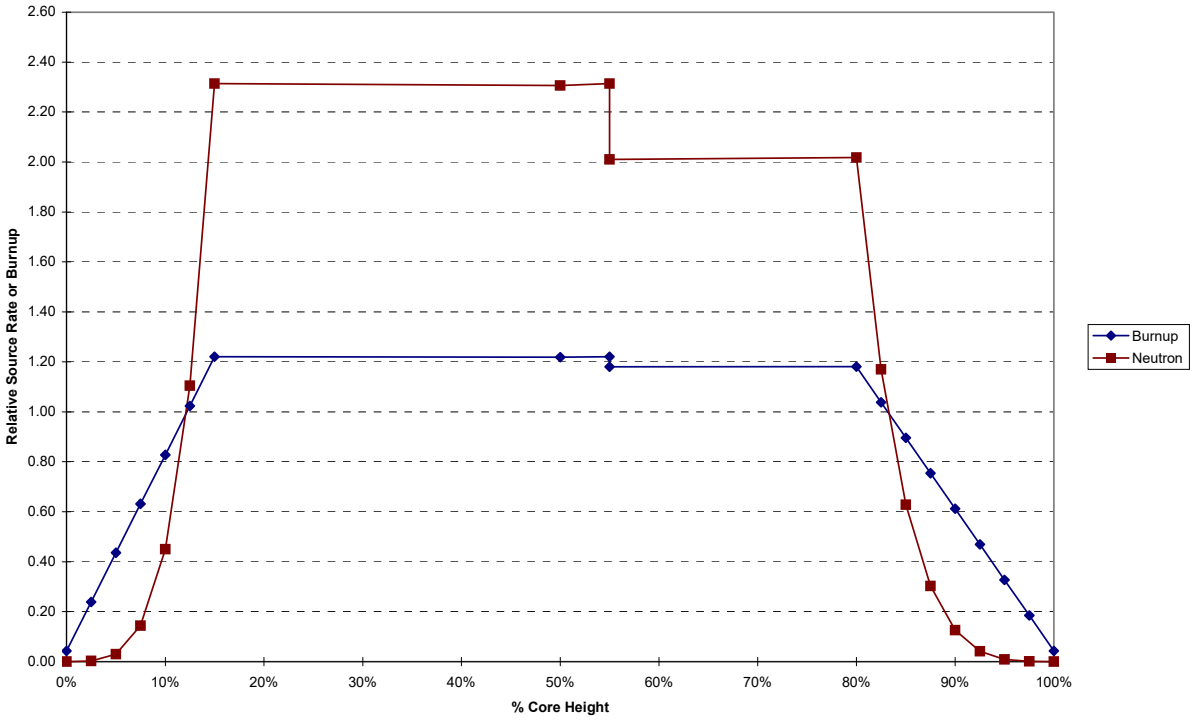

Table 5.3.8-1 High Burnup Fuel Rod Model Parameters

Parameter	Unit	PWR	BWR 7×7	BWR 8×8
Version		Hybrid	Hybrid	Hybrid
% Theoretical Density	[%]	95%	95%	95%
Clad		Zirc-4	Zirc-4	Zirc-2
Max Assy Loading	[MTU]	0.4620	0.2133	0.2028
Fuel Rods		176	49	63
Pitch	[cm]	1.4730	1.8750	1.6260
Rod Diam	[cm]	1.1180	1.4480	1.2600
Clad Inner Diam	[cm]	0.9860	1.2650	1.0860
Pellet Diam	[cm]	0.9665	1.2446	1.0701
Active Length	[cm]	389.9	389.9	389.9
Mass Density	[kg/cm] [g/cm/rod]	1.185 6.733	0.547 11.165	0.520 8.256

Table 5.3.8-2 High Burnup Fuel Assembly Model Parameters

Fuel Type	Burnup [MWd/MTU]	Number Cycles	Assy Power [MW]	Cycle Length [d]
PWR	80,000	3	19.36	636.4
BWR 7×7	60,000	4	5.85	547.0
BWR 7×7	70,000	4	5.85	638.1
BWR 7×7	80,000	4	5.85	730.0
BWR 8×8	80,000	4	5.56	730.0

Table 5.3.8-3 SCALE 27N18G Neutron Group Structure and ANSI Dose Factors

Group	Lower E [MeV]	Upper E [MeV]	Avg E [MeV]	Dose Factor [(rem/hr)/(n/cm²/s)]
1	6.43E+00	2.00E+01	1.32E+01	1.49E-04
2	3.00E+00	6.43E+00	4.72E+00	1.45E-04
3	1.85E+00	3.00E+00	2.43E+00	1.27E-04
4	1.40E+00	1.85E+00	1.63E+00	1.28E-04
5	9.00E-01	1.40E+00	1.15E+00	1.30E-04
6	4.00E-01	9.00E-01	6.50E-01	1.03E-04
7	1.00E-01	4.00E-01	2.50E-01	5.12E-05
8	1.70E-02	1.00E-01	5.85E-02	1.23E-05
9	3.00E-03	1.70E-02	1.00E-02	3.84E-06
10	5.50E-04	3.00E-03	1.78E-03	3.72E-06
11	1.00E-04	5.50E-04	3.25E-04	4.02E-06
12	3.00E-05	1.00E-04	6.50E-05	4.29E-06
13	1.00E-05	3.00E-05	2.00E-05	4.47E-06
14	3.05E-06	1.00E-05	6.52E-06	4.57E-06
15	1.77E-06	3.05E-06	2.41E-06	4.56E-06
16	1.30E-06	1.77E-06	1.53E-06	4.52E-06
17	1.13E-06	1.30E-06	1.21E-06	4.49E-06
18	1.00E-06	1.13E-06	1.06E-06	4.47E-06
19	8.00E-07	1.00E-06	9.00E-07	4.43E-06
20	4.00E-07	8.00E-07	6.00E-07	4.33E-06
21	3.25E-07	4.00E-07	3.63E-07	4.20E-06
22	2.25E-07	3.25E-07	2.75E-07	4.10E-06
23	1.00E-07	2.25E-07	1.62E-07	3.84E-06
24	5.00E-08	1.00E-07	7.50E-08	3.67E-06
25	3.00E-08	5.00E-08	4.00E-08	3.67E-06
26	1.00E-08	3.00E-08	2.00E-08	3.67E-06
27	1.00E-11	1.00E-08	5.01E-09	3.67E-06

Table 5.3.8-4 SCALE 27N18G Gamma Group Structure and ANSI Dose Factors

Group	Lower E [MeV]	Upper E [MeV]	Avg E [MeV]	Dose Factor [(rem/hr)/(γ/cm²/s)]
1	8.00E+00	1.00E+01	9.00E+00	8.77E-06
2	6.50E+00	8.00E+00	7.25E+00	7.48E-06
3	5.00E+00	6.50E+00	5.75E+00	6.37E-06
4	4.00E+00	5.00E+00	4.50E+00	5.41E-06
5	3.00E+00	4.00E+00	3.50E+00	4.62E-06
6	2.50E+00	3.00E+00	2.75E+00	3.96E-06
7	2.00E+00	2.50E+00	2.25E+00	3.47E-06
8	1.66E+00	2.00E+00	1.83E+00	3.02E-06
9	1.33E+00	1.66E+00	1.50E+00	2.63E-06
10	1.00E+00	1.33E+00	1.17E+00	2.21E-06
11	8.00E-01	1.00E+00	9.00E-01	1.83E-06
12	6.00E-01	8.00E-01	7.00E-01	1.52E-06
13	4.00E-01	6.00E-01	5.00E-01	1.17E-06
14	3.00E-01	4.00E-01	3.50E-01	8.76E-07
15	2.00E-01	3.00E-01	2.50E-01	6.31E-07
16	1.00E-01	2.00E-01	1.50E-01	3.83E-07
17	5.00E-02	1.00E-01	7.50E-02	2.67E-07
18	1.00E-02	5.00E-02	3.00E-02	9.35E-07

Table 5.3.8-5 LWT Cask Total Decay Heat [kW] for 25 Rods at Various Cool Times

	Burnup	Decay Time [d]						
Fuel Type	[MWd/MTU]	150	180	210	240	270	300	365
PWR	80,000	2.25	2.05	1.87	1.73	1.62	1.52	1.35
BWR 7×7	60,000	2.40	2.17	1.98	1.83	1.70	1.59	1.39
BWR 7×7	70,000	2.61	2.38	2.18	2.02	1.89	1.78	1.58
BWR 7×7	80,000	2.80	2.57	2.37	2.21	2.07	1.96	1.75
BWR 8×8	80,000	2.06	1.89	1.75	1.63	1.53	1.44	1.29

Table 5.3.8-6 PWR 80,000 MWd/MTU Fuel Model Neutron Source Term [n/sec/assy]

	Decay Time [d]						
Group	150	180	210	240	270	300	365
1	8.1050E+07	8.0010E+07	7.9030E+07	7.8110E+07	7.7240E+07	7.6400E+07	7.4730E+07
2	9.2480E+08	9.1140E+08	8.9880E+08	8.8710E+08	8.7610E+08	8.6570E+08	8.4510E+08
3	1.0070E+09	9.9240E+08	9.7890E+08	9.6620E+08	9.5430E+08	9.4310E+08	9.2080E+08
4	5.6830E+08	5.6090E+08	5.5400E+08	5.4740E+08	5.4130E+08	5.3540E+08	5.2360E+08
5	7.7310E+08	7.6320E+08	7.5400E+08	7.4520E+08	7.3690E+08	7.2900E+08	7.1320E+08
6	8.4670E+08	8.3590E+08	8.2570E+08	8.1610E+08	8.0700E+08	7.9830E+08	7.8090E+08
7	1.6590E+08	1.6370E+08	1.6170E+08	1.5980E+08	1.5800E+08	1.5630E+08	1.5290E+08
Total	4.3670E+09	4.3080E+09	4.2520E+09	4.2000E+09	4.1510E+09	4.1040E+09	4.0110E+09

Table 5.3.8-7 PWR 80,000 MWd/MTU Fuel Model Gamma Source Term [γ/sec/assy]

	Decay Time [d]						
Group	150	180	210	240	270	300	365
1	2.3232E+06	2.2933E+06	2.2655E+06	2.2394E+06	2.2149E+06	2.1918E+06	2.1458E+06
2	1.0942E+07	1.0801E+07	1.0670E+07	1.0547E+07	1.0432E+07	1.0323E+07	1.0106E+07
3	5.5776E+07	5.5059E+07	5.4390E+07	5.3764E+07	5.3175E+07	5.2619E+07	5.1514E+07
4	1.3897E+08	1.3719E+08	1.3552E+08	1.3396E+08	1.3249E+08	1.3110E+08	1.2835E+08
5	4.2790E+11	4.0245E+11	3.8014E+11	3.5939E+11	3.3983E+11	3.2136E+11	2.8470E+11
6	3.8055E+12	3.3306E+12	3.0956E+12	2.9155E+12	2.7535E+12	2.6020E+12	2.3025E+12
7	1.5053E+14	1.3842E+14	1.2854E+14	1.1969E+14	1.1155E+14	1.0400E+14	8.9386E+13
8	5.0113E+13	4.5330E+13	4.1850E+13	3.8948E+13	3.6392E+13	3.4088E+13	2.9742E+13
9	4.9111E+14	4.5948E+14	4.3646E+14	4.1614E+14	3.9727E+14	3.7955E+14	3.4454E+14
10	1.0333E+15	9.8515E+14	9.4552E+14	9.1017E+14	8.7765E+14	8.4736E+14	7.8780E+14
11	4.2618E+15	4.1142E+15	3.9785E+15	3.8505E+15	3.7284E+15	3.6117E+15	3.3748E+15
12	3.1096E+16	2.6322E+16	2.2653E+16	1.9844E+16	1.7692E+16	1.6036E+16	1.3594E+16
13	1.4249E+16	1.2805E+16	1.1793E+16	1.1042E+16	1.0449E+16	9.9572E+15	9.0869E+15
14	1.4614E+15	1.3614E+15	1.2732E+15	1.1934E+15	1.1206E+15	1.0535E+15	9.2448E+14
15	1.9165E+15	1.7798E+15	1.6605E+15	1.5544E+15	1.4588E+15	1.3717E+15	1.2061E+15
16	7.6172E+15	6.8766E+15	6.3117E+15	5.8531E+15	5.4626E+15	5.1189E+15	4.4821E+15
17	7.6978E+15	7.1504E+15	6.6731E+15	6.2484E+15	5.8655E+15	5.5167E+15	4.8539E+15
18	2.3353E+16	2.1519E+16	1.9991E+16	1.8675E+16	1.7514E+16	1.6472E+16	1.4518E+16
Total	9.3381E+16	8.3560E+16	7.5891E+16	6.9749E+16	6.4717E+16	6.0505E+16	5.3295E+16

Table 5.3.8-8 BWR 7×7 60,000 MWd/MTU Fuel Model Neutron Source Term [n/sec/assy]

	Decay Time [d]						
Group	150	180	210	240	270	300	365
1	1.0720E+07	1.0520E+07	1.0340E+07	1.0180E+07	1.0040E+07	9.9050E+06	9.6580E+06
2	1.2660E+08	1.2370E+08	1.2110E+08	1.1880E+08	1.1670E+08	1.1470E+08	1.1120E+08
3	1.3820E+08	1.3500E+08	1.3220E+08	1.2970E+08	1.2750E+08	1.2540E+08	1.2160E+08
4	7.5740E+07	7.4310E+07	7.3020E+07	7.1860E+07	7.0800E+07	6.9850E+07	6.8050E+07
5	1.0230E+08	1.0050E+08	9.8780E+07	9.7260E+07	9.5880E+07	9.4630E+07	9.2290E+07
6	1.1190E+08	1.0990E+08	1.0800E+08	1.0640E+08	1.0490E+08	1.0350E+08	1.0090E+08
7	2.1940E+07	2.1530E+07	2.1170E+07	2.0840E+07	2.0550E+07	2.0280E+07	1.9770E+07
Total	5.8740E+08	5.7550E+08	5.6470E+08	5.5500E+08	5.4630E+08	5.3830E+08	5.2350E+08

Table 5.3.8-9 BWR 7×7 60,000 MWd/MTU Fuel Model Gamma Source Term [γ/sec/assy]

	Decay Time [d]						
Group	150	180	210	240	270	300	365
1	3.2931E+05	3.2274E+05	3.1683E+05	3.1151E+05	3.0671E+05	3.0237E+05	2.9427E+05
2	1.5512E+06	1.5202E+06	1.4924E+06	1.4673E+06	1.4447E+06	1.4242E+06	1.3860E+06
3	7.9088E+06	7.7507E+06	7.6086E+06	7.4806E+06	7.3651E+06	7.2606E+06	7.0658E+06
4	1.9710E+07	1.9315E+07	1.8961E+07	1.8642E+07	1.8353E+07	1.8092E+07	1.7606E+07
5	1.1468E+11	1.0776E+11	1.0177E+11	9.6205E+10	9.0967E+10	8.6019E+10	7.6202E+10
6	1.0391E+12	8.9960E+11	8.3400E+11	7.8498E+11	7.4121E+11	7.0037E+11	6.1963E+11
7	4.5886E+13	4.2337E+13	3.9344E+13	3.6637E+13	3.4138E+13	3.1817E+13	2.7325E+13
8	1.3614E+13	1.2407E+13	1.1497E+13	1.0722E+13	1.0033E+13	9.4069E+12	8.2168E+12
9	1.3126E+14	1.2257E+14	1.1646E+14	1.1113E+14	1.0619E+14	1.0154E+14	9.2359E+13
10	3.0058E+14	2.8714E+14	2.7599E+14	2.6605E+14	2.5694E+14	2.4847E+14	2.3186E+14
11	1.1408E+15	1.1018E+15	1.0661E+15	1.0324E+15	1.0003E+15	9.6961E+14	9.0725E+14
12	9.4684E+15	7.9625E+15	6.8088E+15	5.9289E+15	5.2583E+15	4.7452E+15	3.9979E+15
13	3.8994E+15	3.4870E+15	3.2005E+15	2.9896E+15	2.8249E+15	2.6892E+15	2.4513E+15
14	4.3090E+14	4.0087E+14	3.7459E+14	3.5098E+14	3.2950E+14	3.0980E+14	2.7208E+14
15	5.6889E+14	5.2746E+14	4.9163E+14	4.6001E+14	4.3166E+14	4.0596E+14	3.5735E+14
16	2.3056E+15	2.0775E+15	1.9047E+15	1.7652E+15	1.6471E+15	1.5436E+15	1.3528E+15
17	2.3068E+15	2.1396E+15	1.9949E+15	1.8672E+15	1.7526E+15	1.6488E+15	1.4525E+15
18	7.0478E+15	6.4851E+15	6.0194E+15	5.6207E+15	5.2710E+15	4.9585E+15	4.3763E+15
Total	2.7661E+16	2.4647E+16	2.2305E+16	2.0441E+16	1.8923E+16	1.7662E+16	1.5527E+16

Table 5.3.8-10 BWR 7×7 70,000 MWd/MTU Fuel Model Neutron Source Term [n/sec/assy]

	Decay Time [d]						
Group	150	180	210	240	270	300	365
1	2.0300E+07	2.0020E+07	1.9760E+07	1.9520E+07	1.9290E+07	1.9090E+07	1.8680E+07
2	2.3450E+08	2.3060E+08	2.2700E+08	2.2370E+08	2.2070E+08	2.1800E+08	2.1260E+08
3	2.5560E+08	2.5140E+08	2.4760E+08	2.4400E+08	2.4080E+08	2.3780E+08	2.3210E+08
4	1.4280E+08	1.4070E+08	1.3890E+08	1.3720E+08	1.3560E+08	1.3410E+08	1.3120E+08
5	1.9370E+08	1.9100E+08	1.8860E+08	1.8630E+08	1.8420E+08	1.8220E+08	1.7840E+08
6	2.1200E+08	2.0910E+08	2.0640E+08	2.0390E+08	2.0160E+08	1.9940E+08	1.9520E+08
7	4.1540E+07	4.0960E+07	4.0430E+07	3.9940E+07	3.9490E+07	3.9060E+07	3.8230E+07
Total	1.1000E+09	1.0840E+09	1.0690E+09	1.0550E+09	1.0420E+09	1.0300E+09	1.0060E+09

Table 5.3.8-11 BWR 7×7 70,000 MWd/MTU Fuel Model Gamma Source Term [γ/sec/assy]

	Decay Time [d]						
Group	150	180	210	240	270	300	365
1	6.0324E+05	5.9443E+05	5.8638E+05	5.7897E+05	5.7215E+05	5.6585E+05	5.5368E+05
2	2.8412E+06	2.7998E+06	2.7618E+06	2.7269E+06	2.6948E+06	2.6650E+06	2.6077E+06
3	1.4485E+07	1.4273E+07	1.4079E+07	1.3901E+07	1.3737E+07	1.3586E+07	1.3293E+07
4	3.6093E+07	3.5565E+07	3.5082E+07	3.4638E+07	3.4229E+07	3.3851E+07	3.3121E+07
5	1.2918E+11	1.2149E+11	1.1474E+11	1.0848E+11	1.0258E+11	9.7000E+10	8.5934E+10
6	1.1503E+12	1.0061E+12	9.3500E+11	8.8057E+11	8.3162E+11	7.8586E+11	6.9541E+11
7	4.5889E+13	4.2245E+13	3.9241E+13	3.6544E+13	3.4060E+13	3.1754E+13	2.7290E+13
8	1.5067E+13	1.3671E+13	1.2642E+13	1.1778E+13	1.1013E+13	1.0322E+13	9.0142E+12
9	1.5436E+14	1.4472E+14	1.3769E+14	1.3149E+14	1.2572E+14	1.2029E+14	1.0955E+14
10	3.4479E+14	3.2983E+14	3.1746E+14	3.0640E+14	2.9622E+14	2.8673E+14	2.6805E+14
11	1.3888E+15	1.3419E+15	1.2988E+15	1.2579E+15	1.2190E+15	1.1817E+15	1.1059E+15
12	1.0027E+16	8.5551E+15	7.4228E+15	6.5551E+15	5.8895E+15	5.3763E+15	4.6175E+15
13	4.5056E+15	4.0651E+15	3.7549E+15	3.5230E+15	3.3394E+15	3.1861E+15	2.9133E+15
14	4.5235E+14	4.2171E+14	3.9475E+14	3.7041E+14	3.4818E+14	3.2773E+14	2.8843E+14
15	5.9741E+14	5.5540E+14	5.1883E+14	4.8637E+14	4.5715E+14	4.3055E+14	3.8002E+14
16	2.3773E+15	2.1503E+15	1.9773E+15	1.8369E+15	1.7174E+15	1.6122E+15	1.4174E+15
17	2.4086E+15	2.2405E+15	2.0940E+15	1.9640E+15	1.8467E+15	1.7400E+15	1.5374E+15
18	7.3510E+15	6.7875E+15	6.3182E+15	5.9142E+15	5.5579E+15	5.2383E+15	4.6398E+15
Total	2.9670E+16	2.6649E+16	2.4287E+16	2.2395E+16	2.0843E+16	1.9542E+16	1.7314E+16

Table 5.3.8-12 BWR 7×7 80,000 MWd/MTU Fuel Model Neutron Source Term [n/sec/assy]

	Decay Time [d]						
Group	150	180	210	240	270	300	365
1	3.8790E+07	3.8290E+07	3.7810E+07	3.7350E+07	3.6920E+07	3.6500E+07	3.5660E+07
2	4.4140E+08	4.3500E+08	4.2900E+08	4.2330E+08	4.1790E+08	4.1280E+08	4.0260E+08
3	4.8040E+08	4.7340E+08	4.6690E+08	4.6080E+08	4.5500E+08	4.4950E+08	4.3850E+08
4	2.7180E+08	2.6820E+08	2.6480E+08	2.6160E+08	2.5850E+08	2.5560E+08	2.4970E+08
5	3.6990E+08	3.6510E+08	3.6060E+08	3.5630E+08	3.5220E+08	3.4820E+08	3.4020E+08
6	4.0520E+08	4.0000E+08	3.9500E+08	3.9020E+08	3.8570E+08	3.8140E+08	3.7260E+08
7	7.9380E+07	7.8340E+07	7.7360E+07	7.6430E+07	7.5540E+07	7.4690E+07	7.2970E+07
Total	2.0870E+09	2.0580E+09	2.0310E+09	2.0060E+09	1.9820E+09	1.9590E+09	1.9120E+09

Table 5.3.8-13 BWR 7×7 80,000 MWd/MTU Fuel Model Gamma Source Term [γ/sec/assy]

	Decay Time [d]						
Group	150	180	210	240	270	300	365
1	1.0954E+06	1.0813E+06	1.0680E+06	1.0555E+06	1.0437E+06	1.0325E+06	1.0100E+06
2	5.1590E+06	5.0924E+06	5.0300E+06	4.9710E+06	4.9153E+06	4.8625E+06	4.7566E+06
3	2.6298E+07	2.5959E+07	2.5640E+07	2.5340E+07	2.5056E+07	2.4786E+07	2.4246E+07
4	6.5524E+07	6.4678E+07	6.3884E+07	6.3135E+07	6.2427E+07	6.1755E+07	6.0409E+07
5	1.4025E+11	1.3197E+11	1.2467E+11	1.1787E+11	1.1145E+11	1.0540E+11	9.3384E+10
6	1.2350E+12	1.0871E+12	1.0118E+12	9.5327E+11	9.0040E+11	8.5091E+11	7.5306E+11
7	4.5796E+13	4.2083E+13	3.9076E+13	3.6393E+13	3.3924E+13	3.1634E+13	2.7203E+13
8	1.6213E+13	1.4660E+13	1.3531E+13	1.2592E+13	1.1766E+13	1.1023E+13	9.6211E+12
9	1.7524E+14	1.6472E+14	1.5685E+14	1.4984E+14	1.4331E+14	1.3717E+14	1.2500E+14
10	3.8063E+14	3.6437E+14	3.5095E+14	3.3895E+14	3.2788E+14	3.1755E+14	2.9718E+14
11	1.6124E+15	1.5582E+15	1.5081E+15	1.4608E+15	1.4155E+15	1.3722E+15	1.2842E+15
12	1.0580E+16	9.1279E+15	8.0071E+15	7.1444E+15	6.4791E+15	5.9627E+15	5.1894E+15
13	5.0278E+15	4.5657E+15	4.2366E+15	3.9878E+15	3.7884E+15	3.6203E+15	3.3179E+15
14	4.6875E+14	4.3760E+14	4.1008E+14	3.8518E+14	3.6237E+14	3.4135E+14	3.0088E+14
15	6.1935E+14	5.7682E+14	5.3964E+14	5.0652E+14	4.7661E+14	4.4932E+14	3.9734E+14
16	2.4314E+15	2.2052E+15	2.0320E+15	1.8908E+15	1.7703E+15	1.6639E+15	1.4664E+15
17	2.4876E+15	2.3184E+15	2.1705E+15	2.0386E+15	1.9194E+15	1.8105E+15	1.6032E+15
18	7.5934E+15	7.0287E+15	6.5564E+15	6.1482E+15	5.7870E+15	5.4621E+15	4.8515E+15
Total	3.1441E+16	2.8406E+16	2.6022E+16	2.4101E+16	2.2517E+16	2.1181E+16	1.8871E+16

Table 5.3.8-14 BWR 8×8 80,000 MWd/MTU Fuel Model Neutron Source Term [n/sec/assy]

	Decay Time [d]						
Group	150	180	210	240	270	300	365
1	3.5570E+07	3.5120E+07	3.4700E+07	3.4290E+07	3.3910E+07	3.3540E+07	3.2800E+07
2	4.0480E+08	3.9910E+08	3.9380E+08	3.8870E+08	3.8390E+08	3.7940E+08	3.7040E+08
3	4.4060E+08	4.3450E+08	4.2870E+08	4.2320E+08	4.1810E+08	4.1320E+08	4.0340E+08
4	2.4930E+08	2.4610E+08	2.4310E+08	2.4020E+08	2.3750E+08	2.3490E+08	2.2970E+08
5	3.3930E+08	3.3500E+08	3.3100E+08	3.2710E+08	3.2350E+08	3.2000E+08	3.1300E+08
6	3.7160E+08	3.6690E+08	3.6250E+08	3.5830E+08	3.5430E+08	3.5050E+08	3.4270E+08
7	7.2790E+07	7.1870E+07	7.1000E+07	7.0170E+07	6.9380E+07	6.8630E+07	6.7120E+07
Total	1.9140E+09	1.8890E+09	1.8650E+09	1.8420E+09	1.8210E+09	1.8000E+09	1.7590E+09

Table 5.3.8-15 BWR 8×8 80,000 MWd/MTU Fuel Model Gamma Source Term [γ/sec/assy]

	Decay Time [d]						
Group	150	180	210	240	270	300	365
1	1.0111E+06	9.9843E+05	9.8657E+05	9.7541E+05	9.6486E+05	9.5486E+05	9.3484E+05
2	4.7618E+06	4.7023E+06	4.6464E+06	4.5938E+06	4.5441E+06	4.4971E+06	4.4027E+06
3	2.4273E+07	2.3970E+07	2.3685E+07	2.3417E+07	2.3163E+07	2.2923E+07	2.2442E+07
4	6.0480E+07	5.9723E+07	5.9013E+07	5.8344E+07	5.7712E+07	5.7114E+07	5.5915E+07
5	1.3406E+11	1.2615E+11	1.1916E+11	1.1266E+11	1.0654E+11	1.0075E+11	8.9259E+10
6	1.1796E+12	1.0388E+12	9.6696E+11	9.1101E+11	8.6048E+11	8.1319E+11	7.1969E+11
7	4.3512E+13	3.9982E+13	3.7126E+13	3.4578E+13	3.2233E+13	3.0058E+13	2.5849E+13
8	1.5435E+13	1.3964E+13	1.2896E+13	1.2005E+13	1.1222E+13	1.0515E+13	9.1811E+12
9	1.6587E+14	1.5590E+14	1.4845E+14	1.4181E+14	1.3563E+14	1.2981E+14	1.1830E+14
10	3.6038E+14	3.4497E+14	3.3223E+14	3.2084E+14	3.1033E+14	3.0051E+14	2.8115E+14
11	1.5243E+15	1.4731E+15	1.4258E+15	1.3810E+15	1.3382E+15	1.2973E+15	1.2140E+15
12	1.0033E+16	8.6556E+15	7.5925E+15	6.7743E+15	6.1433E+15	5.6535E+15	4.9201E+15
13	4.7720E+15	4.3323E+15	4.0194E+15	3.7827E+15	3.5932E+15	3.4334E+15	3.1462E+15
14	4.4637E+14	4.1676E+14	3.9060E+14	3.6690E+14	3.4520E+14	3.2519E+14	2.8665E+14
15	5.8943E+14	5.4903E+14	5.1370E+14	4.8221E+14	4.5375E+14	4.2778E+14	3.7831E+14
16	2.3111E+15	2.0962E+15	1.9316E+15	1.7974E+15	1.6829E+15	1.5817E+15	1.3939E+15
17	2.3651E+15	2.2044E+15	2.0638E+15	1.9384E+15	1.8250E+15	1.7215E+15	1.5243E+15
18	7.2203E+15	6.6839E+15	6.2352E+15	5.8471E+15	5.5038E+15	5.1949E+15	4.6141E+15
Total	2.9848E+16	2.6967E+16	2.4704E+16	2.2881E+16	2.1376E+16	2.0107E+16	1.7912E+16

Table 5.3.8-16 Fuel Axial Source Profile Parameters

Type	Burnup Peak to Average	Source	Exponent b	Average Source to Average Burnup	Source Peak to Average
PWR	1.08	Neutron	4.22	1.125	1.230
		Gamma	1.00	1.000	1.080
BWR	1.22	Neutron	4.22	1.582	1.463
		Gamma	1.00	1.000	1.220

Table 5.3.8-17 PWR Fuel Axial Source Profile

% Core Height	Burnup Profile	Photon Source	Neutron Source
0.00%	0.5470	0.5470	7.840E-02
2.50%	0.6358	0.6358	1.479E-01
5.00%	0.7247	0.7247	2.569E-01
7.50%	0.8135	0.8135	4.185E-01
10.00%	0.9023	0.9023	6.481E-01
12.50%	0.9912	0.9912	9.633E-01
15.00%	1.0800	1.0800	1.384E+00
50.00%	1.0790	1.0790	1.378E+00
85.00%	1.0800	1.0800	1.384E+00
87.50%	0.9912	0.9912	9.633E-01
90.00%	0.9023	0.9023	6.481E-01
92.50%	0.8135	0.8135	4.185E-01
95.00%	0.7247	0.7247	2.569E-01
97.50%	0.6358	0.6358	1.479E-01
100.00%	0.5470	0.5470	7.840E-02

Table 5.3.8-18 BWR Fuel Axial Source Profile

% Core Height	Burnup Profile	Photon Source	Neutron Source
0.00%	0.0430	0.0430	1.711E-06
2.50%	0.2392	0.2392	2.388E-03
5.00%	0.4353	0.4353	2.991E-02
7.50%	0.6315	0.6315	1.437E-01
10.00%	0.8277	0.8277	4.501E-01
12.50%	1.0238	1.0238	1.105E+00
15.00%	1.2200	1.2200	2.314E+00
50.00%	1.2190	1.2190	2.306E+00
55.00%	1.2200	1.2200	2.314E+00
55.01%	1.1800	1.1800	2.011E+00
80.00%	1.1810	1.1810	2.018E+00
82.50%	1.0379	1.0379	1.170E+00
85.00%	0.8958	0.8958	6.284E-01
87.50%	0.7536	0.7536	3.031E-01
90.00%	0.6115	0.6115	1.255E-01
92.50%	0.4694	0.4694	4.110E-02
95.00%	0.3272	0.3272	8.970E-03
97.50%	0.1851	0.1851	8.104E-04
100.00%	0.0430	0.0430	1.711E-06

Table 5.3.8-19 Fuel Region Homogenized Material Description [atom/b-cm]

SCALE Isotope	Number Density [atom/b-cm]		
	PWR	BWR 7x7	BWR 8x8
OXYGEN-16	1.04184E-02	1.72764E-02	1.27718E-02
CHROMIUM(SS304)	1.99453E-03	1.99453E-03	1.99453E-03
MANGANESE	1.98706E-04	1.98706E-04	1.98706E-04
IRON(SS304)	6.79292E-03	6.79292E-03	6.79292E-03
NICKEL(SS304)	8.83557E-04	8.83557E-04	8.83557E-04
ZIRCONIUM ALLOY	2.88833E-03	5.16316E-03	4.24529E-03
URANIUM-234	2.86507E-07	4.75102E-07	3.51224E-07
URANIUM-235	3.75064E-05	6.21953E-05	4.59785E-05
URANIUM-238	5.17142E-03	8.57554E-03	6.33956E-03

Table 5.3.8-20 Basket and Cask Shielding Material Composition [atom/b-cm]

Material	SCALE Isotope	Number Density [atom/b-cm]
Aluminum	ALUMINUM	6.03066E-02
Stainless Steel 304	CHROMIUM(SS304)	1.74286E-02
	MANGANESE	1.73633E-03
	IRON(SS304)	5.93579E-02
	NICKEL(SS304)	7.72070E-03
Lead	LEAD	3.29690E-02
Neutron Shield	HYDROGEN	5.99351E-02
	CARBON-12	1.07197E-02
	OXYGEN-16	2.46077E-02

Table 5.3.8-21 Basket Model Parameters

Parameter	Outer Dimension		Thickness	
	[in]	[cm]	[in]	[cm]
Array size	3.5600	9.0424	-	-
Fuel pin insert tube	0.6875	1.7463	0.0280	0.0711
Internal spacer	3.9350	9.9949	0.1875	0.4763
Void	5.0000	12.7000	0.5325	1.3526
Weldment tube	5.5000	13.9700	0.2500	0.6350
Void	5.7500	14.6050	0.1250	0.3175
Insert wall	8.5000	21.5900	1.3750	3.4925
Basket opening	8.8800	22.5552	-	-

Table 5.3.8-22 LWT Cask One-Dimensional Model for LWR High Burnup Rod Analysis

Model Region	Material	Outer Radius[cm]
Rod array	Fuel	5.1016
Spacer	SS304	5.6390
Spacer void	Void	7.1652
Weldment wall	SS304	7.8817
Weldment void	Void	8.2400
Insert wall	Aluminum	12.1809
Insert void	Void	12.7254
Basket	Aluminum	16.9863
Inner shell	SS304	18.8214
Lead Shield	Lead	33.2890
Lead Gap	Void	33.4264
Outer Shell	SS304	36.3728
Neutron Shield	Neutron Shield	49.0728
Shield Shell	SS304	49.1338

Table 5.3.8-23 LWT Cask Surface Neutron Dose Response Function

Surface Neutron Dose Response [(mrem/hr)/(10^{10} n/cm^3/sec)]			
Group	PWR	BWR-7×7	BWR-8x8
1	2.7193E+07	2.6380E+07	2.6835E+07
2	1.6896E+07	1.6513E+07	1.6726E+07
3	1.5997E+07	1.5593E+07	1.5829E+07
4	1.2227E+07	1.1960E+07	1.2127E+07
5	1.0406E+07	1.0101E+07	1.0295E+07
6	8.3940E+06	8.2487E+06	8.3427E+06
7	6.2803E+06	6.1775E+06	6.2441E+06

Table 5.3.8-24 LWT Cask Surface Gamma Dose Response Function

Surface Gamma Dose Response [(mrem/hr)/(10^{10} γ/cm^3/sec)]			
Group	PWR	BWR-7X7	BWR-8X8
1	1.2725E+03	1.0022E+03	1.1584E+03
2	1.6222E+03	1.2839E+03	1.4795E+03
3	1.7521E+03	1.3907E+03	1.5995E+03
4	1.6430E+03	1.3055E+03	1.5002E+03
5	1.3176E+03	1.0457E+03	1.2020E+03
6	8.4261E+02	6.6508E+02	7.6670E+02
7	4.5052E+02	3.5272E+02	4.0845E+02
8	1.7075E+02	1.3183E+02	1.5387E+02
9	4.8503E+01	3.6807E+01	4.3389E+01
10	5.5182E+00	4.0692E+00	4.8783E+00
11	1.6030E-01	1.1350E-01	1.3927E-01
12	1.5868E-03	1.0805E-03	1.3561E-03
13	1.4339E-08	9.2536E-09	1.1975E-08
14	5.4441E-25	3.3976E-25	4.4798E-25
15	0.0000E+00	0.0000E+00	0.0000E+00
16	0.0000E+00	0.0000E+00	0.0000E+00
17	0.0000E+00	0.0000E+00	0.0000E+00
18	0.0000E+00	0.0000E+00	0.0000E+00

Table 5.3.8-25 LWT Cask 2m Neutron Dose Response Function

Group	2m Neutron Dose Response [(mrem/hr)/(10^{10} n/cm^3/sec)] PWR	BWR-7X7	BWR-8X8
1	2.3145E+06	2.2330E+06	2.2792E+06
2	1.3767E+06	1.3396E+06	1.3604E+06
3	1.2981E+06	1.2593E+06	1.2821E+06
4	9.5362E+05	9.2901E+05	9.4445E+05
5	7.8702E+05	7.6091E+05	7.7751E+05
6	6.0300E+05	5.9196E+05	5.9909E+05
7	4.2815E+05	4.2161E+05	4.2585E+05

Table 5.3.8-26 LWT Cask 2m Gamma Dose Response Function

Group	2m Gamma Dose Response [(mrem/hr)/(10^{10} γ/cm^3/sec)] PWR	BWR-7X7	BWR-8X8
1	1.6112E+02	1.2688E+02	1.4667E+02
2	2.0395E+02	1.6141E+02	1.8600E+02
3	2.1743E+02	1.7261E+02	1.9851E+02
4	2.0052E+02	1.5935E+02	1.8310E+02
5	1.5806E+02	1.2547E+02	1.4421E+02
6	9.9064E+01	7.8207E+01	9.0147E+01
7	5.2070E+01	4.0775E+01	4.7212E+01
8	1.9335E+01	1.4930E+01	1.7425E+01
9	5.3870E+00	4.0885E+00	4.8193E+00
10	5.9731E-01	4.4050E-01	5.2806E-01
11	1.6841E-02	1.1924E-02	1.4631E-02
12	1.6212E-04	1.1039E-04	1.3855E-04
13	1.4138E-09	9.1234E-10	1.1807E-09
14	5.2387E-26	3.2694E-26	4.3107E-26
15	0.0000E+00	0.0000E+00	0.0000E+00
16	0.0000E+00	0.0000E+00	0.0000E+00
17	0.0000E+00	0.0000E+00	0.0000E+00
18	0.0000E+00	0.0000E+00	0.0000E+00

Table 5.3.8-27 Surface Dose Responses [mrem/hr] and Cask Decay Heat [kW] for Various Decay Times

Fuel	Burnup [GWd/MTU]	Source	Decay Time [d] 150	180	210	240	270	300	365
PWR	80	Neutron	35.2	34.7	34.3	33.8	33.4	33.0	32.3
		Gamma	53.1	49.0	45.8	43.0	40.4	38.0	33.3
		Total	88.3	83.7	80.1	76.8	73.8	71.1	65.6
		Heat	2.3	2.0	1.9	1.7	1.6	1.5	1.3
BWR 7×7	80	Neutron	98.6	97.2	96.0	94.7	93.6	92.5	90.3
		Gamma	53.6	49.5	46.4	43.6	41.0	38.6	34.0
		Total	152.2	146.8	142.3	138.3	134.6	131.1	124.3
		Heat	2.8	2.6	2.4	2.2	2.1	2.0	1.8
	70	Neutron	52.1	51.3	50.6	49.9	49.3	48.7	47.6
		Gamma	51.4	47.5	44.4	41.7	39.3	36.9	32.4
		Total	103.5	98.8	95.0	91.6	88.5	85.6	80.0
		Heat	2.6	2.4	2.2	2.0	1.9	1.8	1.6
	60	Neutron	27.9	27.3	26.8	26.3	25.9	25.5	24.8
		Gamma	48.8	45.1	42.2	39.5	37.1	34.9	30.6
		Total	76.7	72.4	68.9	65.8	63.0	60.4	55.4
		Heat	2.4	2.2	2.0	1.8	1.7	1.6	1.4
BWR 8×8	80	Neutron	71.4	70.4	69.5	68.6	67.8	67.1	65.5
		Gamma	46.2	42.7	39.9	37.5	35.3	33.3	29.3
		Total	117.5	113.1	109.5	106.2	103.2	100.4	94.9
		Heat	2.1	1.9	1.7	1.6	1.5	1.4	1.3

Table 5.3.8-28 2m Dose Responses [mrem/hr] and Cask Decay Heat [kW] for Various Decay Times

Fuel	Burnup [GWd/MTU]	Source	Decay Time [d] 150	180	210	240	270	300	365
PWR	80	Neutron	2.3	2.2	2.2	2.2	2.1	2.1	2.1
		Gamma	5.6	5.2	4.8	4.5	4.3	4.0	3.5
		Total	7.9	7.4	7.0	6.7	6.4	6.1	5.6
		Heat	2.3	2.0	1.9	1.7	1.6	1.5	1.3
BWR 7×7	80	Neutron	5.3	5.2	5.1	5.1	5.0	5.0	4.8
		Gamma	5.0	4.6	4.3	4.1	3.8	3.6	3.2
		Total	10.3	9.8	9.5	9.2	8.8	8.6	8.0
		Heat	2.8	2.6	2.4	2.2	2.1	2.0	1.8
	70	Neutron	2.8	2.8	2.7	2.7	2.6	2.6	2.6
		Gamma	4.8	4.4	4.2	3.9	3.7	3.4	3.0
		Total	7.6	7.2	6.9	6.6	6.3	6.1	5.6
		Heat	2.6	2.4	2.2	2.0	1.9	1.8	1.6
	60	Neutron	1.5	1.5	1.4	1.4	1.4	1.4	1.3
		Gamma	4.6	4.2	3.9	3.7	3.5	3.3	2.9
		Total	6.1	5.7	5.4	5.1	4.9	4.6	4.2
		Heat	2.4	2.2	2.0	1.8	1.7	1.6	1.4
BWR 8×8	80	Neutron	3.8	3.8	3.7	3.7	3.6	3.6	3.5
		Gamma	4.3	4.0	3.7	3.5	3.3	3.1	2.7
		Total	8.1	7.8	7.5	7.2	6.9	6.7	6.3
		Heat	2.1	1.9	1.7	1.6	1.5	1.4	1.3

Table 5.3.8-29 Loading Table for PWR and BWR High Burnup Rods Showing Minimum Required Cool Time as a Function of Burnup and Enrichment

Fuel Type	Burnup, b [GWd/MTU]	Minimum Cool Time [d]
PWR	$b \leq 80$	150
BWR 7×7	$b \leq 60$	210
	$60 < b \leq 70$	240
	$70 < b \leq 80$	270
BWR 8×8[1]	$b \leq 80$	150

[1] Includes rods from all larger BWR assembly arrays (e.g., 9×9, 10×10).

5.3.9 DIDO Fuel Configuration

A maximum of 42 DIDO fuel assemblies has been analyzed for transport in the LWT cask. The fuel assemblies are configured in 6 basket modules with one fuel assembly loaded in each of the 7 cells in each basket module. The cells in each basket module are arranged with one center cell [tube structure] surrounded by 6 other cells.

LEU, MEU and HEU fuels are evaluated for a uniform loading of 18W and 25W per fuel position. However, if any assemblies greater than 18W are to be loaded into the cask, the active fuel for the assemblies in the top basket must be physically restricted from moving any closer than a minimum of 3.7 inches (9.3 cm) to the cask lid. Thus, basket module maximum heat loads of 175W (1.05 kW per cask – uniform 25W per assembly) or 126W (0.756 kW per cask – uniform 18W per assembly) are permissible. Only uniform loading configurations are considered.

The shielding analysis evaluated all three DIDO fuel types for variable burnup considering uniform basket loading for LEU, MEU, and HEU fuel at heat loads of both 18W and 25W. Fuel assemblies with heat loads between 18W and 25W were analyzed with their axial location restricted to maintain the required offset from the cask lid. There are no height restrictions in the other five baskets in the cask load.

If there is no axial restriction to fuel assembly position in the top basket, the fuel assemblies can have active fuel exposed beyond the radial lead shield. This geometric effect makes the 18W heat load pattern more limiting, with higher dose rates than those calculated for the 25W pattern. At a distance of 2 meters from the conveyance radial surface, the 18W pattern provided a maximum dose rate of 9.72 mrem/hr compared with a maximum dose rate of 8.90 mrem/hr, for the 25W pattern. Thus, the 18W pattern is used as the load basis for the shielding analysis. Furthermore, the HEU fuel provided the highest dose rates 2 meters from the conveyance surface over the enrichment range analyzed.

The DIDO fuel assembly consists of four tubes of varying diameter, each nested within the larger diameter tube, clipped together at each end to form a cylindrical assembly. The design basis fuel assemblies were constructed using typical DIDO parameters. The physical characteristics of the analyzed LEU, MEU and HEU fuel assemblies are shown in Table 5.3.9-1. The active fuel section of the assembly consists of four tubes of 0.150-cm thickness. The fuel core of each fuel tube is a cermet of aluminum and U-Al, which is 0.065-cm thick. The 6061 aluminum cladding has a thickness of 0.0425 cm. All three enrichments are analyzed with a maximum loading of 190 grams of ^{235}U per assembly.

The SAS2H sequence was used to determine the gamma and neutron source terms and decay heat loads for the DIDO fuel assembly loading configurations evaluated. The SAS2H sequence

includes the ORIGEN-S code and a 1-D XSDRNPM model of the fuel assembly. ORIGEN-S performs fuel assembly depletion at specified operating conditions and calculates heat generation, gamma and neutron spectra for a given discharge isotopic composition as a function of out of reactor time (cooling time). The 1-D model of the fuel assembly is used to collapse the 27-group neutron cross section library (27GROUPNDF4) into three broad energy groups for the depletion calculation. The 1-D model is based on an equivalent area representation of the fuel/moderator cell and surrounding structural regions. Average power is based on reactor maximum power divided by the number of assemblies in the core. Assembly burnup is modeled in four cycles of equal length with 30 days of down time between cycles. This burnup description bounds typical research reactor use, where fuel is burned over a period of years or even decades to achieve the optimal discharge burnup. The SAS2H input for the 18W, 70% depleted, HEU cask is shown in Figure 5.3.9-1.

For the bounding HEU fuel, a series of seven cases were run in which burnup was varied from a minimum of 82,490 MWd/MTU to a maximum of 577,460 MWd/MTU. Cooling times were considered from 90 days to 3.5 years. Because the cask is loaded based on the decay heat limits, no single design basis fuel assembly or loading configuration exists. Design basis photon and neutron source terms for DIDO assemblies with decay heat loads of 18 and 25 watts are determined for the 577,460 MWd/MTU burnup case, which was bounding. The SAS2H results from these cases are used for the design basis photon and neutron source terms and are summarized in Table 5.3.9-2 and Table 5.3.9-3. The material densities used in the analysis are summarized in Table 5.3.9-4.

Minimum cool times as a function of burnup in MWd/MTU are shown in Figure 5.3.9-5 through Figure 5.3.9-7 for both 18 and 25 watt loading patterns.

In addition to loading curves in terms of MWd/MTU, loading curves with terms of ^{235}U % depletion as the independent variable are generated. Use of these curves will provide a more meaningful measure of loadability of the cask based on elements having different (but bounded) fuel parameters. While both MWd/MTU and percent depletion curves produce loading times meeting cask dose and heat load limits, each of the curves contains inherent conservatisms that may result in significant variations in minimum cool time required for any specific fuel element. There is no restriction on cask users as to which of the curves to apply at loading.

Loading curves are based on the results of SAS2H runs with a minimum (lower) enrichment limit to maximize source generation. A fuel assembly containing a higher than modeled initial enrichment (wt % ^{235}U), at the same ^{235}U loading (grams), contains less total uranium and, therefore, will yield a higher MWd/MTU value for the same energy production (MWd). Based on MWd/MTU loading curves, the higher MWd/MTU value, in turn, requires an increase in cool

time without a significant change in source. Loading curves based on % ^{235}U depletion circumvent this potential applicability problem for fuel with significantly higher enrichment than the one employed in the source generation.

Loading curves as a function of % ^{235}U depletion are shown for LEU, MEU and HEU DIDO fuel in Figure 5.3.9-8 through Figure 5.3.9-10. As demonstrated in Figure 5.3.9-11 for the 25 W loading pattern, the use of ^{235}U % depletion rather than burnup yields almost overlapping curves for the three modeled enrichments. To reduce the number of curves applicable to DIDO fuels, a bounding loading curve for the 18 and 25 watt loading patterns is generated and shown in Figure 5.3.9-12.

Note that the loading curves shown in this section are based on a fixed energy conversion factor of 0.9166 MWd produced per gram ^{235}U consumed. This factor represents the classical recoverable energy generated by ^{235}U thermal fission. Actual depletion in the SAS2H sequence may differ from the analysis input factor. As demonstrated in Figure 5.3.9-13 for DIDO HEU fuel, the application of a constant conversion factor to determine percent depletion minimum cool time curves results in a conservative (i.e., longer) longer minimum cool time (i.e., the predicted minimum cool time curve, based on a constant conversion factor, is higher than the SAS2H generated, "actual" depletion curve).

The SAS2H DIDO source term calculation does not directly account for the (alpha, n) reactions in ^{27}Al and ^{28}Si. Based on MTR evaluations with a similar fuel meat composition, the (alpha, n) reactions in ^{27}Al and ^{28}Si increase the neutron source term by a factor of ~2.9. Consequently, a factor of 2.9 is applied to the DIDO neutron source terms.

The SAS4 (Tang) sequence is used to calculate the dose rates at all points of interest. In this sequence, a 1-D adjoins XSDRNPM model generates biasing parameters for a 3-D MORSE Monte Carlo model of the NAC-LWT cask with the DIDO fuel. SAS4 requires model symmetry about the active fuel midplane (midplane of the six basket modules in this case). A 3-D Monte Carlo model is developed for the upper half of the cask. This model bounds the results for a lower half model as the cask has more shielding in the axial direction at the bottom end. The upper half model is shown in Figure 5.3.9-3. The model assumes that the fuel is at the highest point permissible in the basket module, that the fuel is loaded in the same way axially in all of the modules, and it ignores the presence of the impact limiters. Detectors are placed at three radial locations of interest. These locations are: 1) cask surface; 2) one meter from the cask surface; and 3) at two meters from the edge of the cask conveyance. A radial SAS4A input for the 18W heat load pattern is shown in Figure 5.3.9-2 and Figure 5.3.9-4. SAS4B is a version of SAS4 developed by NAC to model surface detectors and to improve solution convergence testing. The improved convergence test criteria reduces geometric tracing area and improves computational efficiency.

5.3.9.1 Shielding Evaluation for DIDO Fuel

This section presents the shielding analyses for normal conditions of transport and illustrates compliance with 10 CFR Part 71. In normal transport, the dose rate limits are:

- The dose rate on the surface of the package is less than 200 mrem/hr, except that localized dose rates up to 1000 mrem/hr are allowed if it is shown that the dose rate on the surface of the ISO enclosure is less than 200 mrem/hr.
- At 2 meters from the edge of the transport vehicle the dose rate is limited to 10 mrem/hr.
- The truck cab (defined as a point 5 meters from the NAC-LWT lid) dose rate is limited to 2 mrem/hr.

The dose rates for the 18W heat load are shown in Table 5.3.9-5, **Table 5.3.9-6** and **Table 5.3.9-7** for the cask surface, plane of conveyance, and at 2 meters from the edge of the conveyance, respectively. These dose rates are well below the regulatory limits. The dose rates at 1 meter from the cask surface are presented in Table 5.3.9-8, where the maximum dose rate defines the Transport Index for the cask.

The axial surface and the 5 meter (back of tractor cab) dose rates are shown in Table 5.3.9-9 and Table 5.3.9-10. Shielding provided by the impact limiter is conservatively neglected. The axial dose rates at the bottom of the cask are conservatively assumed to be equal to the dose rates reported at the top.

This evaluation shows that the NAC-LWT cask, with up to 42 DIDO fuel assemblies, meets the shielding requirements of 10 CFR 71, 49 CFR 173, and IAEA Transportation Safety Standards (TS-R-1).

5.3.9.2 Accident Conditions of Transport

This section presents the accident condition shielding analyses. Under accident conditions, the NRC limits the package dose rate to 1000 mrem/hr at 1 meter off the package surface. The only accident condition examined in this section is the loss of the LWT liquid neutron shield.

This analysis examines the 18W heat load consistent with the limiting configuration analysis for normal conditions of transport presented in Section 5.3.4. The accident condition source terms are identical to the normal condition source terms. The accident condition results are presented in Table 5.3.9-11.

Figure 5.3.9-1 SAS2H Input for HEU DIDO Fuel 70% ^{235}U Burnup and 18W Heat Load

```
=SAS2H      PARM=(HALT04,SKIPSHIPDATA)
Heu DIDO FUEL 70% U235 BURNUP - 190g - 18w Heat
Load
27GROUPNDF4 LATTICECELL
URANIUM 1 DEN=0.559 1.0 373 92235 90.00 92238
10.00 END
AL 1 DEN=1.678 1.0 373 END
AL      2 1.0 323 END
D2O     3 DEN=1.0948 1.0 313 END
END COMP
SYMMSLABCELL 0.980 0.065 1 3 0.15 2 END
NPIN=4 FUEL=60 VOLF=377.368 NCYC=4 NLIB=1
PRIN=6 INPL=2 NUMZ=5 NUMH=0
3 2.625 500 5.075 3 5.1 2 5.25 3 8.598
POWER=0.3846 BURN=79.24 DOWN=30 END
POWER=0.3846 BURN=79.24 DOWN=30 END
POWER=0.3846 BURN=79.24 DOWN=30 END
POWER=0.3846 BURN=79.24 DOWN=90 END
END
```

Figure 5.3.9-2 SAS4 Fuel Gamma Input for HEU DIDO Fuel 70% ^{235}U Burnup and 18W Heat Load – Radial Biasing & Normal Transport Conditions

```
=SAS4B        PARM='SIZE=1000000'
NAC - LWT WITH DIDO Heu FUEL, Radial, UPPER HALF, Normal , Config2, 18w, Gamma
27N-18COUPLE INFHOMMEDIUM
'Material Description for LWT Shielding Analysis - DIDO Heu Fuel
URANIUM     1 0.0021 293 92235 90.00 92238 10.00 END
AL          1 0.1401 END
AL          4 1.0 END
ARBMGLYC    0.9437 3 0 1 0 6012 2 1001 6 8016 2 5 0.584 END
H2O         5 0.4160 END
SS304       6 1.0 END
PB          7 1.0 END
END COMP
IDR=0    ITY=2    IZM=7    FRD=14.3    END
15.455    16.986    18.910    33.465    36.519    49.219    49.818    END
1    0    6    7    6    5    6    END
XEND
TIM=10000    NST=2000    NIT=8000    ISO=0    ICS=4    RAN=15270511
'Gamma Spectrum for 70% Burnup - 190g Heu @18w - 42 assemblies
SFA=4.4083E+15    IGO=4 END
SOE 27Z    6.6997E-01    3.1836E+00    1.6438E+01    4.1542E+01    1.2913E+08
1.3269E+09    3.5795E+11    3.7376E+10    4.0544E+11    7.9798E+11    2.9979E+12
1.9642E+13    7.9847E+12    2.3166E+12    3.0158E+12    1.3247E+13    1.3145E+13
4.1016E+13    END
CSF    49.82
    121.92
    149.82
    321.92
    END
CSL    0.0    260
    0.0    280
    0.0    300
    0.0    300
    END
CSD    10    1
    10    1
    10    1
    10    1
    END
SXY 1    -15.46    15.46    -15.46    15.46    0.00    222.01
    17.00    1.0    1.0    1.0    END
GEND
NAC-LWT CASK - 42 DIDO FUEL ELEMENTS - UPPER HALF MODEL
 0 0 1 0
' Fuel Cell 1
'
RCC 1    0.0000    0.0000    -11.9474    2*0.0    23.8948    4.6600
RCC 2    0.0000    0.0000    -13.1974    2*0.0    26.3948    4.6600
RCC 3    0.0000    0.0000    -73.1974    2*0.0    146.3948    4.6600
RCC 4    0.0000    0.0000    -74.4474    2*0.0    148.8948    4.6600
RCC 5    0.0000    0.0000    -86.3948    2*0.0    172.7896    4.6600
RCC 6    0.0000    0.0000    -87.6448    2*0.0    175.2896    4.6600
RCC 7    0.0000    0.0000    -147.6448    2*0.0    295.2896    4.6600
RCC 8    0.0000    0.0000    -148.8948    2*0.0    297.7896    4.6600
RCC 9    0.0000    0.0000    -160.7600    2*0.0    321.5200    4.6600
RCC 10    0.0000    0.0000    -162.0100    2*0.0    324.0200    4.6600
RCC 11    0.0000    0.0000    -222.0100    2*0.0    444.0200    4.6600
RCC 12    0.0000    0.0000    -223.2600    2*0.0    446.5200    4.6600
'
' Fuel Cell 3
'
RCC 13    10.7950    0.0000    -11.9474    2*0.0    23.8948    4.6600
RCC 14    10.7950    0.0000    -13.1974    2*0.0    26.3948    4.6600
RCC 15    10.7950    0.0000    -73.1974    2*0.0    146.3948    4.6600
RCC 16    10.7950    0.0000    -74.4474    2*0.0    148.8948    4.6600
RCC 17    10.7950    0.0000    -86.3948    2*0.0    172.7896    4.6600
RCC 18    10.7950    0.0000    -87.6448    2*0.0    175.2896    4.6600
RCC 19    10.7950    0.0000    -147.6448    2*0.0    295.2896    4.6600
RCC 20    10.7950    0.0000    -148.8948    2*0.0    297.7896    4.6600
RCC 21    10.7950    0.0000    -160.7600    2*0.0    321.5200    4.6600
RCC 22    10.7950    0.0000    -162.0100    2*0.0    324.0200    4.6600
RCC 23    10.7950    0.0000    -222.0100    2*0.0    444.0200    4.6600
RCC 24    10.7950    0.0000    -223.2600    2*0.0    446.5200    4.6600
'
' Fuel cell 6
'
RCC 25    -10.7950    0.0000    -11.9474    2*0.0    23.8948    4.6600
RCC 26    -10.7950    0.0000    -13.1974    2*0.0    26.3948    4.6600
RCC 27    -10.7950    0.0000    -73.1974    2*0.0    146.3948    4.6600
RCC 28    -10.7950    0.0000    -74.4474    2*0.0    148.8948    4.6600
RCC 29    -10.7950    0.0000    -86.3948    2*0.0    172.7896    4.6600
RCC 30    -10.7950    0.0000    -87.6448    2*0.0    175.2896    4.6600
RCC 31    -10.7950    0.0000    -147.6448    2*0.0    295.2896    4.6600
RCC 32    -10.7950    0.0000    -148.8948    2*0.0    297.7896    4.6600
RCC 33    -10.7950    0.0000    -160.7600    2*0.0    321.5200    4.6600
RCC 34    -10.7950    0.0000    -162.0100    2*0.0    324.0200    4.6600
RCC 35    -10.7950    0.0000    -222.0100    2*0.0    444.0200    4.6600
RCC 36    -10.7950    0.0000    -223.2600    2*0.0    446.5200    4.6600
'
' Fuel cell 7
RCC 37    -5.3975    9.3487    -11.9474    2*0.0    23.8948    4.6600
```

Figure 5.3.9-2 SAS4 Fuel Gamma Input for HEU DIDO Fuel 70% ^{235}U Burnup and 18W Heat Load – Radial Biasing & Normal Transport Conditions (Continued)

```
RCC 38    -5.3975    9.3487    -13.1974    2*0.0    26.3948    4.6600
RCC 39    -5.3975    9.3487    -73.1974    2*0.0    146.3948    4.6600
RCC 40    -5.3975    9.3487    -74.4474    2*0.0    148.8948    4.6600
RCC 41    -5.3975    9.3487    -86.3948    2*0.0    172.7896    4.6600
RCC 42    -5.3975    9.3487    -87.6448    2*0.0    175.2896    4.6600
RCC 43    -5.3975    9.3487    -147.6448    2*0.0    295.2896    4.6600
RCC 44    -5.3975    9.3487    -148.8948    2*0.0    297.7896    4.6600

RCC 45    -5.3975    9.3487    -160.7600    2*0.0    321.5200    4.6600
RCC 46    -5.3975    9.3487    -162.0100    2*0.0    324.0200    4.6600
RCC 47    -5.3975    9.3487    -222.0100    2*0.0    444.0200    4.6600
RCC 48    -5.3975    9.3487    -223.2600    2*0.0    446.5200    4.6600
'
Fuel cell 5
RCC 49    -5.3975    -9.3487    -11.9474    2*0.0    23.8948    4.6600
RCC 50    -5.3975    -9.3487    -13.1974    2*0.0    26.3948    4.6600
RCC 51    -5.3975    -9.3487    -73.1974    2*0.0    146.3948    4.6600
RCC 52    -5.3975    -9.3487    -74.4474    2*0.0    148.8948    4.6600
RCC 53    -5.3975    -9.3487    -86.3948    2*0.0    172.7896    4.6600
RCC 54    -5.3975    -9.3487    -87.6448    2*0.0    175.2896    4.6600
RCC 55    -5.3975    -9.3487    -147.6448    2*0.0    295.2896    4.6600
RCC 56    -5.3975    -9.3487    -148.8948    2*0.0    297.7896    4.6600
RCC 57    -5.3975    -9.3487    -160.7600    2*0.0    321.5200    4.6600
RCC 58    -5.3975    -9.3487    -162.0100    2*0.0    324.0200    4.6600
RCC 59    -5.3975    -9.3487    -222.0100    2*0.0    444.0200    4.6600
RCC 60    -5.3975    -9.3487    -223.2600    2*0.0    446.5200    4.6600
'
' Fuel cell 2
RCC 61    5.3975    9.3487    -11.9474    2*0.0    23.8948    4.6600
RCC 62    5.3975    9.3487    -13.1974    2*0.0    26.3948    4.6600
RCC 63    5.3975    9.3487    -73.1974    2*0.0    146.3948    4.6600
RCC 64    5.3975    9.3487    -74.4474    2*0.0    148.8948    4.6600
RCC 65    5.3975    9.3487    -86.3948    2*0.0    172.7896    4.6600
RCC 66    5.3975    9.3487    -87.6448    2*0.0    175.2896    4.6600
RCC 67    5.3975    9.3487    -147.6448    2*0.0    295.2896    4.6600
RCC 68    5.3975    9.3487    -148.8948    2*0.0    297.7896    4.6600
RCC 69    5.3975    9.3487    -160.7600    2*0.0    321.5200    4.6600
RCC 70    5.3975    9.3487    -162.0100    2*0.0    324.0200    4.6600
RCC 71    5.3975    9.3487    -222.0100    2*0.0    444.0200    4.6600
RCC 72    5.3975    9.3487    -223.2600    2*0.0    446.5200    4.6600
'
' Fuel cell 4
RCC 73    5.3975    -9.3487    -11.9474    2*0.0    23.8948    4.6600
RCC 74    5.3975    -9.3487    -13.1974    2*0.0    26.3948    4.6600
RCC 75    5.3975    -9.3487    -73.1974    2*0.0    146.3948    4.6600
RCC 76    5.3975    -9.3487    -74.4474    2*0.0    148.8948    4.6600
RCC 77    5.3975    -9.3487    -86.3948    2*0.0    172.7896    4.6600
RCC 78    5.3975    -9.3487    -87.6448    2*0.0    175.2896    4.6600
RCC 79    5.3975    -9.3487    -147.6448    2*0.0    295.2896    4.6600
RCC 80    5.3975    -9.3487    -148.8948    2*0.0    297.7896    4.6600
RCC 81    5.3975    -9.3487    -160.7600    2*0.0    321.5200    4.6600
RCC 82    5.3975    -9.3487    -162.0100    2*0.0    324.0200    4.6600
RCC 83    5.3975    -9.3487    -222.0100    2*0.0    444.0200    4.6600
RCC 84    5.3975    -9.3487    -223.2600    2*0.0    446.5200    4.6600
' EMPTY CELLS
' Center (Position 1)
RCC 85    0.0000    0.0000    -1.2700    2*0.0    2.5400    5.0927
RCC 86    0.0000    0.0000    -74.4474    2*0.0    148.8948    5.0927
RCC 87    0.0000    0.0000    -75.7174    2*0.0    151.4348    5.0927
RCC 88    0.0000    0.0000    -148.8948    2*0.0    297.7896    5.0927
RCC 89    0.0000    0.0000    -150.1648    2*0.0    300.3296    5.0927
RCC 90    0.0000    0.0000    -224.7800    2*0.0    449.5600    5.0927
' Position 3 (Right)
RCC 91    10.7950    0.0000    -1.2700    2*0.0    2.5400    5.0927
RCC 92    10.7950    0.0000    -74.4474    2*0.0    148.8948    5.0927
RCC 93    10.7950    0.0000    -75.7174    2*0.0    151.4348    5.0927
RCC 94    10.7950    0.0000    -148.8948    2*0.0    297.7896    5.0927
RCC 95    10.7950    0.0000    -150.1648    2*0.0    300.3296    5.0927
RCC 96    10.7950    0.0000    -224.7800    2*0.0    449.5600    5.0927
' Position 6 (Left)
RCC 97    -10.7950    0.0000    -1.2700    2*0.0    2.5400    5.0927
RCC 98    -10.7950    0.0000    -74.4474    2*0.0    148.8948    5.0927
RCC 99    -10.7950    0.0000    -75.7174    2*0.0    151.4348    5.0927
RCC 100    -10.7950    0.0000    -148.8948    2*0.0    297.7896    5.0927
RCC 101    -10.7950    0.0000    -150.1648    2*0.0    300.3296    5.0927
RCC 102    -10.7950    0.0000    -224.7800    2*0.0    449.5600    5.0927
' Position 7 (Upper left)
RCC 103    -5.3975    9.3487    -1.2700    2*0.0    2.5400    5.0927
RCC 104    -5.3975    9.3487    -74.4474    2*0.0    148.8948    5.0927
RCC 105    -5.3975    9.3487    -75.7174    2*0.0    151.4348    5.0927
RCC 106    -5.3975    9.3487    -148.8948    2*0.0    297.7896    5.0927
RCC 107    -5.3975    9.3487    -150.1648    2*0.0    300.3296    5.0927
RCC 108    -5.3975    9.3487    -224.7800    2*0.0    449.5600    5.0927
' Position 5 (Lower left)
RCC 109    -5.3975    -9.3487    -1.2700    2*0.0    2.5400    5.0927
RCC 110    -5.3975    -9.3487    -74.4474    2*0.0    148.8948    5.0927
RCC 111    -5.3975    -9.3487    -75.7174    2*0.0    151.4348    5.0927
RCC 112    -5.3975    -9.3487    -148.8948    2*0.0    297.7896    5.0927
RCC 113    -5.3975    -9.3487    -150.1648    2*0.0    300.3296    5.0927
RCC 114    -5.3975    -9.3487    -224.7800    2*0.0    449.5600    5.0927
```

Figure 5.3.9-2 SAS4 Fuel Gamma Input for HEU DIDO Fuel 70% ^{235}U Burnup and 18W Heat Load – Radial Biasing & Normal Transport Conditions (Continued)

```
' Position 2 (Upper right)
RCC 115    5.3975    9.3487    -1.2700    2*0.0    2.5400    5.0927
RCC 116    5.3975    9.3487    -74.4474    2*0.0    148.8948    5.0927
RCC 117    5.3975    9.3487    -75.7174    2*0.0    151.4348    5.0927
RCC 118    5.3975    9.3487    -148.8948    2*0.0    297.7896    5.0927
RCC 119    5.3975    9.3487    -150.1648    2*0.0    300.3296    5.0927
RCC 120    5.3975    9.3487    -224.7800    2*0.0    449.5600    5.0927
' Position 4 (Lower right)
RCC 121    5.3975    -9.3487    -1.2700    2*0.0    2.5400    5.0927
RCC 122    5.3975    -9.3487    -74.4474    2*0.0    148.8948    5.0927
RCC 123    5.3975    -9.3487    -75.7174    2*0.0    151.4348    5.0927
RCC 124    5.3975    -9.3487    -148.8948    2*0.0    297.7896    5.0927
RCC 125    5.3975    -9.3487    -150.1648    2*0.0    300.3296    5.0927
RCC 126    5.3975    -9.3487    -224.7800    2*0.0    449.5600    5.0927
'
' BOTTOM PLATE HOLES
RCC 127    0.0000    0.0000    -300.0000    2*0.0    600.0000    1.2700
RCC 128    10.7950    0.0000    -300.0000    2*0.0    600.0000    1.2700
RCC 129    -10.7950    0.0000    -300.0000    2*0.0    600.0000    1.2700
RCC 130    -5.3975    9.3487    -300.0000    2*0.0    600.0000    1.2700
RCC 131    -5.3975    -9.3487    -300.0000    2*0.0    600.0000    1.2700
RCC 132    5.3975    9.3487    -300.0000    2*0.0    600.0000    1.2700
RCC 133    5.3975    -9.3487    -300.0000    2*0.0    600.0000    1.2700
'
' OUTER BASKET STEEL
RCC 134    0.0000    0.0000    -223.2600    2*0.0    446.5200    5.3975
RCC 135    10.7950    0.0000    -223.2600    2*0.0    446.5200    5.3975
RCC 136    -10.7950    0.0000    -223.2600    2*0.0    446.5200    5.3975
RCC 137    -5.3975    9.3487    -223.2600    2*0.0    446.5200    5.3975
RCC 138    -5.3975    -9.3487    -223.2600    2*0.0    446.5200    5.3975
RCC 139    5.3975    9.3487    -223.2600    2*0.0    446.5200    5.3975
RCC 140    5.3975    -9.3487    -223.2600    2*0.0    446.5200    5.3975
'
' Interior fuel element regions
'
RCC 141    0.0000    0.0000    -223.2600    2*0.0    446.5200    3.0400
RCC 142    10.7950    0.0000    -223.2600    2*0.0    446.5200    3.0400
RCC 143    -10.7950    0.0000    -223.2600    2*0.0    446.5200    3.0400
RCC 144    -5.3975    9.3487    -223.2600    2*0.0    446.5200    3.0400
RCC 145    -5.3975    -9.3487    -223.2600    2*0.0    446.5200    3.0400
RCC 146    5.3975    9.3487    -223.2600    2*0.0    446.5200    3.0400
RCC 147    5.3975    -9.3487    -223.2600    2*0.0    446.5200    3.0400
'' LWT SHIELDS
'
RCC 148    0.0000    0.0000    -224.7800    0.0000    0.0000    449.5600
    16.9863
RCC 149    0.0000    0.0000    -224.7800    0.0000    0.0000    449.5600
    18.9103
RCC 150    0.0000    0.0000    -203.3720    0.0000    0.0000    406.7440
    33.4645
RCC 151    0.0000    0.0000    -217.1900    0.0000    0.0000    434.3800
    20.1740
RCC 152    0.0000    0.0000    -217.1900    0.0000    0.0000    434.3800
    31.5976
RCC 153    0.0000    0.0000    -253.3590    0.0000    0.0000    506.7180
    36.5189
RCC 154    0.0000    0.0000    -194.3290    0.0000    0.0000    388.6580
    49.2189
RCC 155    0.0000    0.0000    -195.5990    0.0000    0.0000    391.1980
    49.8183
'' DETECTOR PLANES
'
RCC 156    0.0000    0.0000    -352.4680    0.0000    0.0000    704.9360
    49.8183
RCC 157    0.0000    0.0000    -452.4680    0.0000    0.0000    904.9360
    121.9200
RCC 158    0.0000    0.0000    -552.4680    0.0000    0.0000    1104.9360
    149.8183
RCC 159    0.0000    0.0000    -600.0000    0.0000    0.0000    1200.0000
    321.9200
'
' OUTER WORLD
'
RCC 160    0.0000    0.0000    -652.4680    0.0000    0.0000    1304.9360
    449.8540
RCC 161    0.0000    0.0000    -752.4680    0.0000    0.0000    1504.9360
    549.8540
 END
'
' Element in Position 1
BP1    +85    -127
HO1    +85    +127
GP1    +1    -85
EF1    +2    -1    -141
FU1    +3    -2    -141
EF1    +4    -3    -141
'
BP2    +87    -86    -127
HO2    +87    -86    +127
GP2    +5    -87
```

Figure 5.3.9-2 SAS4 Fuel Gamma Input for HEU DIDO Fuel 70% ^{235}U Burnup and 18W Heat Load – Radial Biasing & Normal Transport Conditions (Continued)

```
EF2    +6    -5    -141
FU2    +7    -6    -141
EF2    +8    -7    -141
'
BP3    +89    -88    -127
HO3    +89    -88    +127
GP3    +9    -89
EF3    +10    -9    -141
FU3    +11    -10    -141
EF3    +12    -11    -141
TU1    OR    +86    -85    -4
    OR    +88    -87    -8
    OR    +90    -89    -12
    OR    +2    -1    +141
    OR    +3    -2    +141
    OR    +4    -3    +141
    OR    +6    -5    +141
    OR    +7    -6    +141
    OR    +8    -7    +141
    OR    +10    -9    +141
    OR    +11    -10    +141
    OR    +12    -11    +141
'
' Element in Position 3
BP1    +91    -128
HO1    +91    +128
GP1    +13    -91
EF1    +14    -13    -142
FU1    +15    -14    -142
EF1    +16    -15    -142
'
BP2    +93    -92    -128
HO2    +93    -92    +128
GP2    +17    -93
EF2    +18    -17    -142
FU2    +19    -18    -142
EF2    +20    -19    -142
'
BP3    +95    -94    -128
HO3    +95    -94    +128
GP3    +21    -95
EF3    +22    -21    -142
FU3    +23    -22    -142
EF3    +24    -23    -142
TU1    OR    +92    -91    -16
    OR    +94    -93    -20
    OR    +96    -95    -24
    OR    +14    -13    +142
    OR    +15    -14    +142
    OR    +16    -15    +142
    OR    +18    -17    +142
    OR    +19    -18    +142
    OR    +20    -19    +142
    OR    +22    -21    +142
    OR    +23    -22    +142
    OR    +24    -23    +142
' Element in Position 6
BP1    +97    -129
HO1    +97    +129
GP1    +25    -97
EF1    +26    -25    -143
FU1    +27    -26    -143
EF1    +28    -27    -143
'
BP2    +99    -98    -129
HO2    +99    -98    +129
GP2    +29    -99
EF2    +30    -29    -143
FU2    +31    -30    -143
EF2    +32    -31    -143
'
BP3    +101    -100    -129
HO3    +101    -100    +129
GP3    +33    -101
EF3    +34    -33    -143
FU3    +35    -34    -143
EF3    +36    -35    -143
'
TU1    OR    +98    -97    -28
    OR    +100    -99    -32
    OR    +102    -101    -36
    OR    +26    -25    +143
    OR    +27    -26    +143
    OR    +28    -27    +143
    OR    +30    -29    +143
    OR    +31    -30    +143
    OR    +32    -31    +143
    OR    +34    -33    +143
    OR    +35    -34    +143
    OR    +36    -35    +143
```

Figure 5.3.9-2 SAS4 Fuel Gamma Input for HEU DIDO Fuel 70% ^{235}U Burnup and 18W Heat Load – Radial Biasing & Normal Transport Conditions (Continued)

```
' Element in Position 7
BP1    +103    -130
HO1    +103    +130
GP1    +37    -103
EF1    +38    -37    -144
FU1    +39    -38    -144
EF1    +40    -39    -144
BP2    +105    -104    -130
HO2    +105    -104    +130
GP2    +41    -105
EF2    +42    -41    -144
FU2    +43    -42    -144
EF2    +44    -43    -144
BP3    +107    -106    -130
HO3    +107    -106    +130
GP3    +45    -107
EF3    +46    -45    -144
FU3    +47    -46    -144
EF3    +48    -47    -144
'
TU1    OR    +104    -103    -40
    OR    +106    -105    -44
    OR    +108    -107    -48
    OR    +38    -37    +144
    OR    +39    -38    +144
    OR    +40    -39    +144
    OR    +42    -41    +144
    OR    +43    -42    +144
    OR    +44    -43    +144
    OR    +46    -45    +144
    OR    +47    -46    +144
    OR    +48    -47    +144
' Element in Position 5
BP1    +109    -131
HO1    +109    +131
GP1    +49    -109
EF1    +50    -49    -145
FU1    +51    -50    -145
EF1    +52    -51    -145
'
BP2    +111    -110    -131
HO2    +111    -110    +131
GP2    +53    -111
EF2    +54    -53    -145
FU2    +55    -54    -145
EF2    +56    -55    -145
'
BP3    +113    -112    -131
HO3    +113    -112    +131
GP3    +57    -113
EF3    +58    -57    -145
FU3    +59    -58    -145
EF3    +60    -59    -145
TU1    OR    +110    -109    -52
    OR    +112    -111    -56
    OR    +114    -113    -60
    OR    +50    -49    +145
    OR    +51    -50    +145
    OR    +52    -51    +145
    OR    +54    -53    +145
    OR    +55    -54    +145
    OR    +56    -55    +145
    OR    +58    -57    +145
    OR    +59    -58    +145
    OR    +60    -59    +145
'
' Element in Position 2
BP1    +115    -132
HO1    +115    +132
GP1    +61    -115
EF1    +62    -61    -146
FU1    +63    -62    -146
EF1    +64    -63    -146
'
BP2    +117    -116    -132
HO2    +117    -116    +132
GP2    +65    -117
EF2    +66    -65    -146
FU2    +67    -66    -146
EF2    +68    -67    -146
'
BP3    +119    -118    -132
HO3    +119    -118    +132
GP3    +69    -119
EF3    +70    -69    -146
FU3    +71    -70    -146
EF3    +72    -71    -146
'
TU1    OR    +116    -115    -64
    OR    +118    -117    -68
```

Figure 5.3.9-2 SAS4 Fuel Gamma Input for HEU DIDO Fuel 70% ^{235}U Burnup and 18W Heat Load – Radial Biasing & Normal Transport Conditions (Continued)

```
    OR    +120    -119    -72
    OR    +62    -61    +146
    OR    +63    -62    +146
    OR    +64    -63    +146
    OR    +66    -65    +146
    OR    +67    -66    +146
    OR    +68    -67    +146
    OR    +70    -69    +146
    OR    +71    -70    +146
    OR    +72    -71    +146
' Element in Position 4
BP1    +121    -133
HO1    +121    +133
GP1    +73    -121
EF1    +74    -73    -147
FU1    +75    -74    -147
EF1    +76    -75    -147
BP2    +123    -122    -133
HO2    +123    -122    +133
GP2    +77    -123
EF2    +78    -77    -147
FU2    +79    -78    -147
EF2    +80    -79    -147
'
BP3    +125    -124    -133
HO3    +125    -124    +133
GP3    +81    -125
EF3    +82    -81    -147
FU3    +83    -82    -147
EF3    +84    -83    -147
'
TU1    OR    +122    -121    -76
    OR    +124    -123    -80
    OR    +126    -125    -84
    OR    +74    -73    +147
    OR    +75    -74    +147
    OR    +76    -75    +147
    OR    +78    -77    +147
    OR    +79    -78    +147
    OR    +80    -79    +147
    OR    +82    -81    +147
    OR    +83    -82    +147
    OR    +84    -83    +147
'
' BASKET
'
BSK    OR    +134    -90
    OR    +135    -96
    OR    +136    -102
    OR    +137    -108
    OR    +138    -114
    OR    +139    -120
    OR    +140    -126
'
' LWT SHIELDS
'
CAV    +148
    -134    -135    -136    -137    -138    -139    -140
    -90    -96
    -102    -108    -114    -120    -126    -132
IST    +149    -148
RPB    +150    -149
TPB    +152    -151    -150
OST    OR    +153    -152    -151    -150    -149
    OR    +151    -150    -149
RNS    +154    -153
NNS    +155    -154    -153
'
' DETECTOR PLANES
'
DE1    +156    -155    -153
DE2    +157    -156
DE3    +158    -157
DE4    +159    -158
'
' OUTER WORLD
'
INV    +160    -159
OUV    +161    -160
 END
141R1 2 1 2 1 2 1
147R0
'
' DIDO FUEL ELEMENTS
'
6 1000 1000 4 1 4 6 1000 1000 4 1 4 6 1000 1000 4 1 4 1000
6 1000 1000 4 1 4 6 1000 1000 4 1 4 6 1000 1000 4 1 4 1000
6 1000 1000 4 1 4 6 1000 1000 4 1 4 6 1000 1000 4 1 4 1000
6 1000 1000 4 1 4 6 1000 1000 4 1 4 6 1000 1000 4 1 4 1000
6 1000 1000 4 1 4 6 1000 1000 4 1 4 6 1000 1000 4 1 4 1000
```

Figure 5.3.9-2 SAS4 Fuel Gamma Input for HEU DIDO Fuel 70% ^{235}U Burnup and 18W Heat Load – Radial Biasing & Normal Transport Conditions (Continued)

```
6 1000 1000 4 1 4 6 1000 1000 4 1 4 6 1000 1000 4 1 4 1000
6 1000 1000 4 1 4 6 1000 1000 4 1 4 6 1000 1000 4 1 4 1000
'
' BASKET
'
6
'
' LWT CASK
'
1000    6    7    7    6    5    6
'
'DETECTORS
'
4R1000
'
' WORLDS
'
1000 0
0 0
0
END
```

Figure 5.3.9-3 SAS4 Shielding Model for the DIDO Fuel Basket in the NAC-LWT (Upper Half)

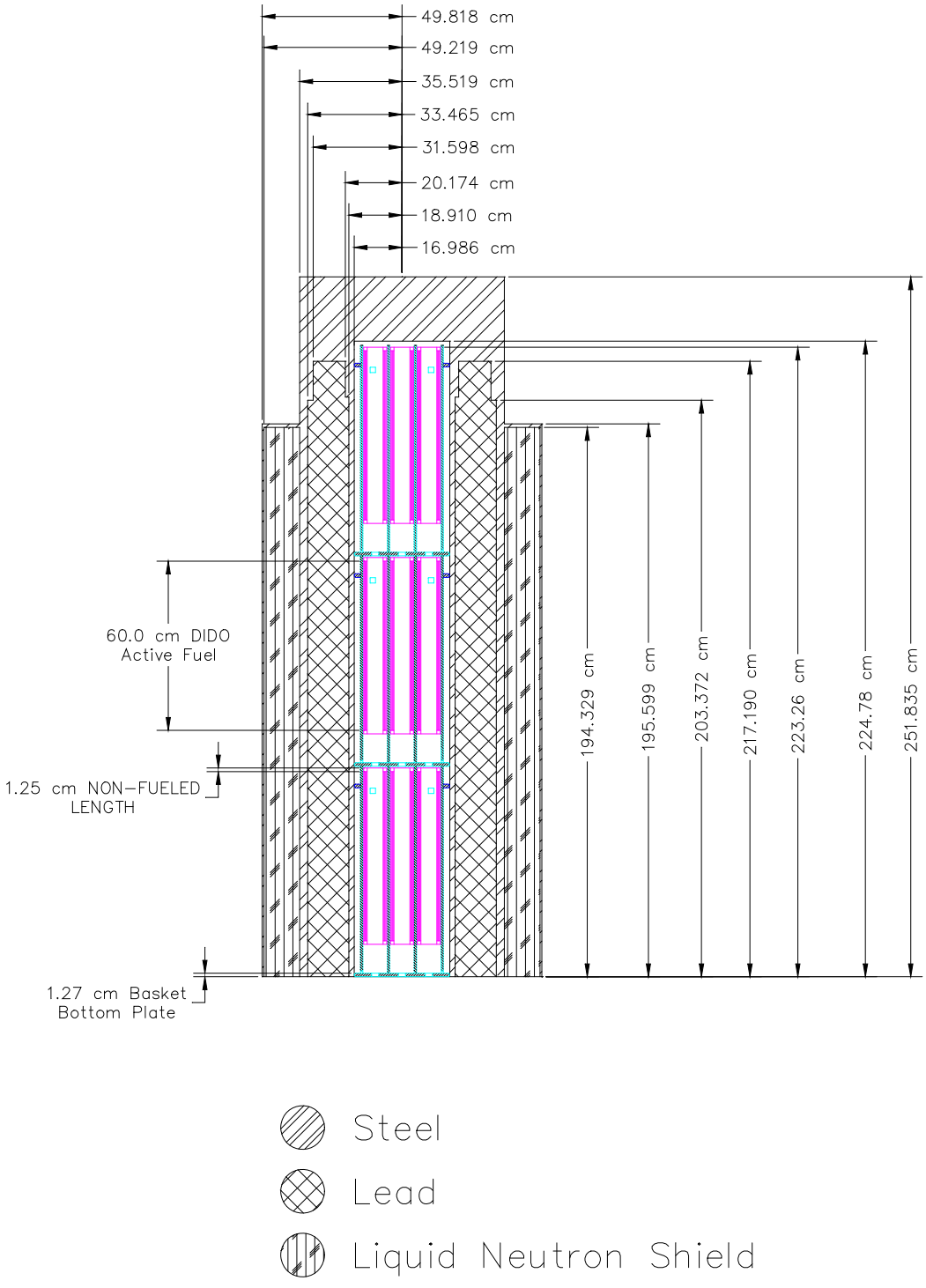

Figure 5.3.9-4 SAS4 Shielding Model for the DIDO Fuel Basket in the NAC-LWT (Section through Fuel)

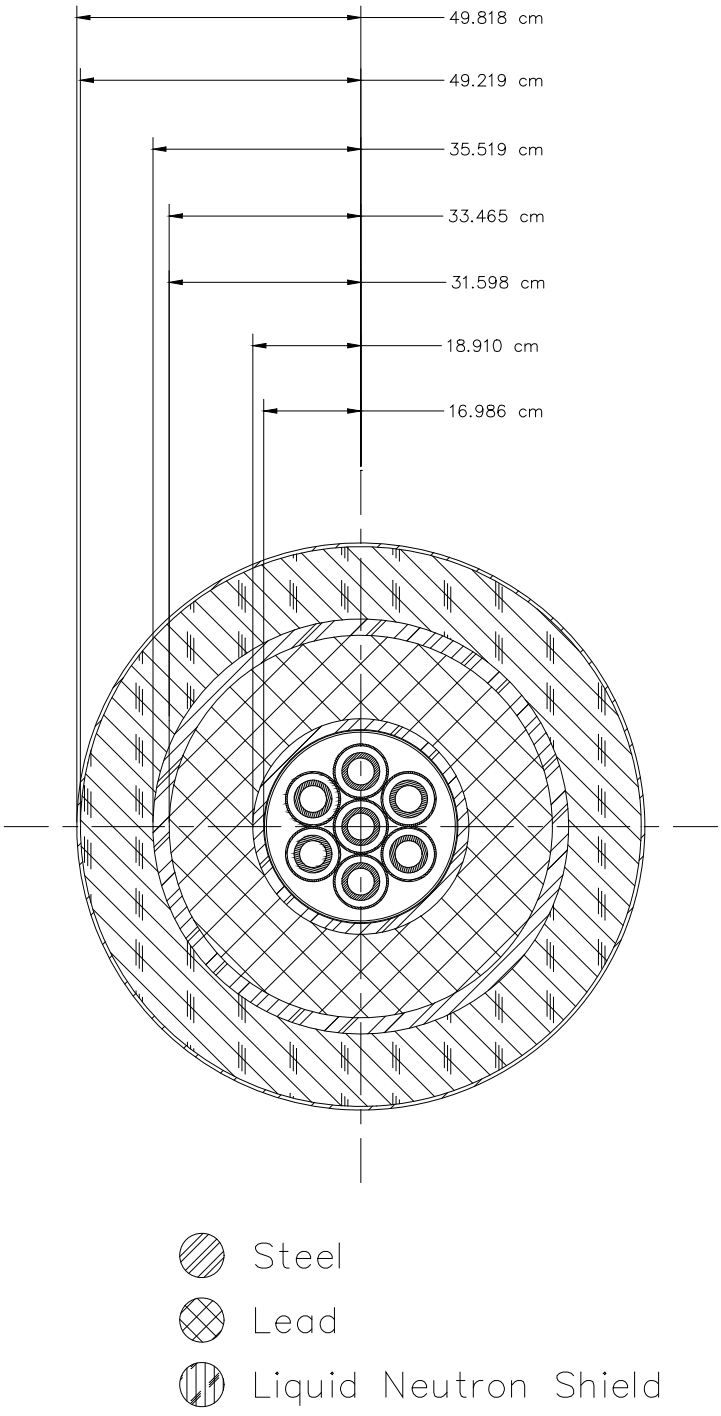

Figure 5.3.9-5 DIDO LEU Cooling Time vs. Fuel Burnup Basket Module Loading Guidelines for Uniform Loading

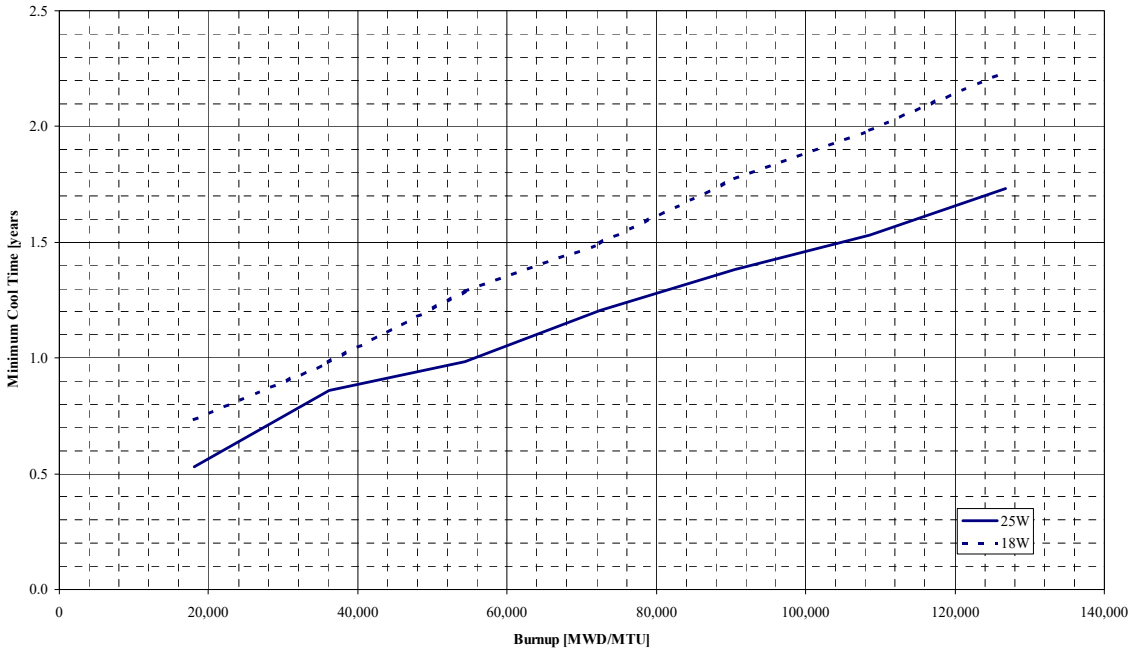

Figure 5.3.9-6 DIDO MEU Cooling Time vs. Fuel Burnup Basket Module Loading Guidelines for Uniform Loading

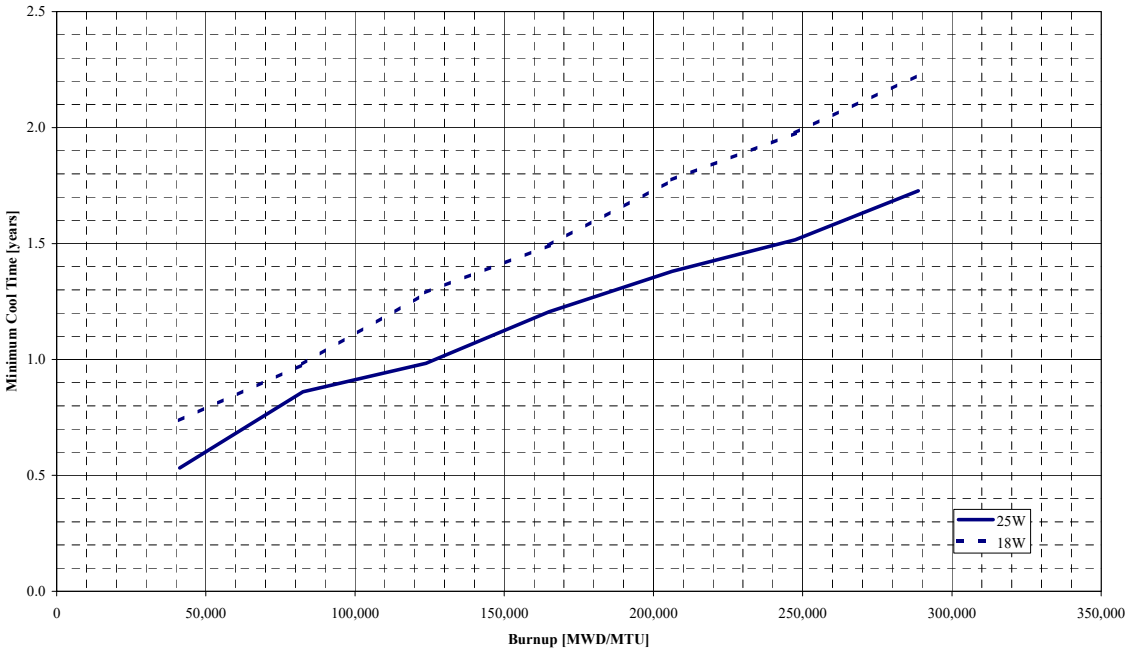

Figure 5.3.9-7 DIDO HEU Cooling Time vs. Fuel Burnup Basket Module Loading Guidelines for Uniform Loading

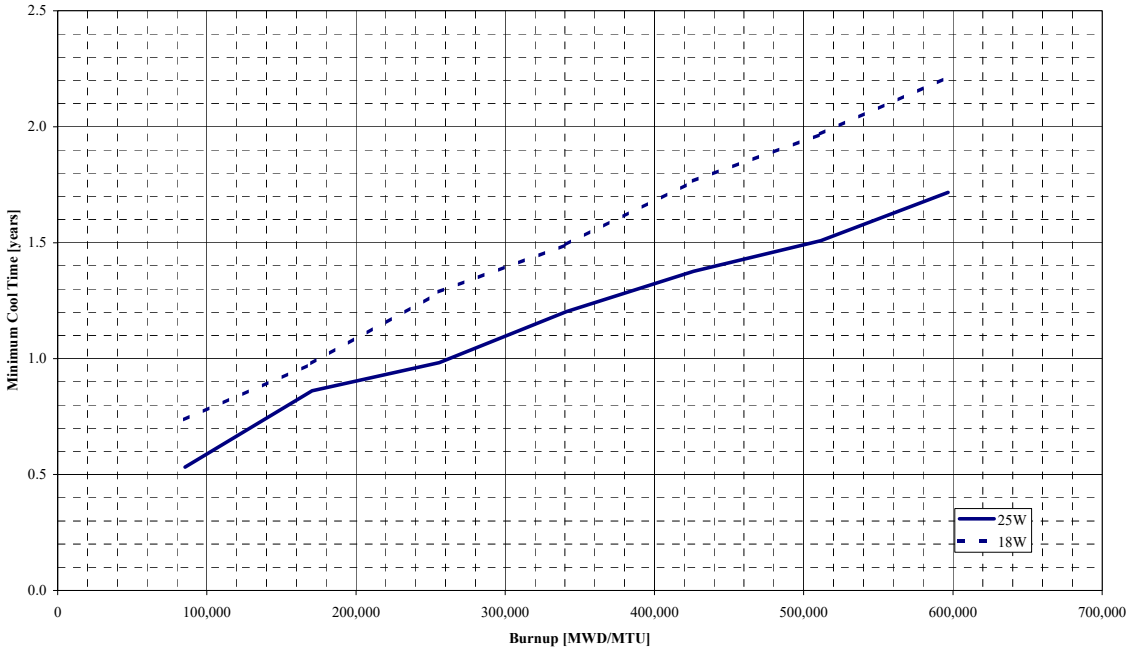

Figure 5.3.9-8 DIDO LEU Element Cooling Time vs. ^{235}U % Depletion

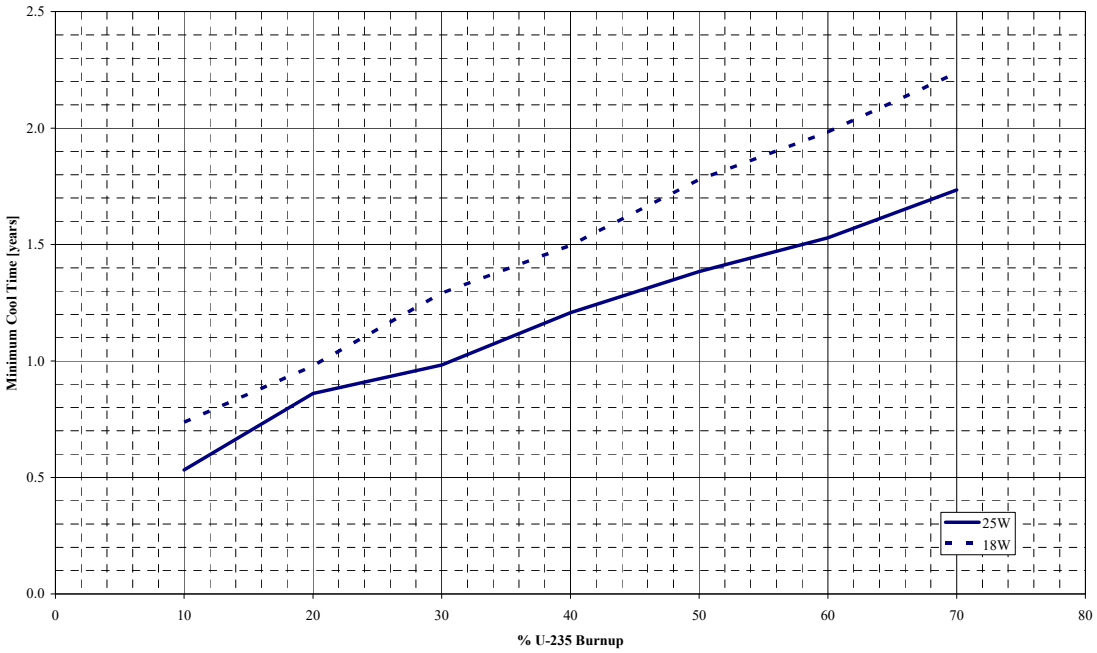

Figure 5.3.9-9 DIDO MEU Element Cooling Time vs. ^{235}U % Depletion

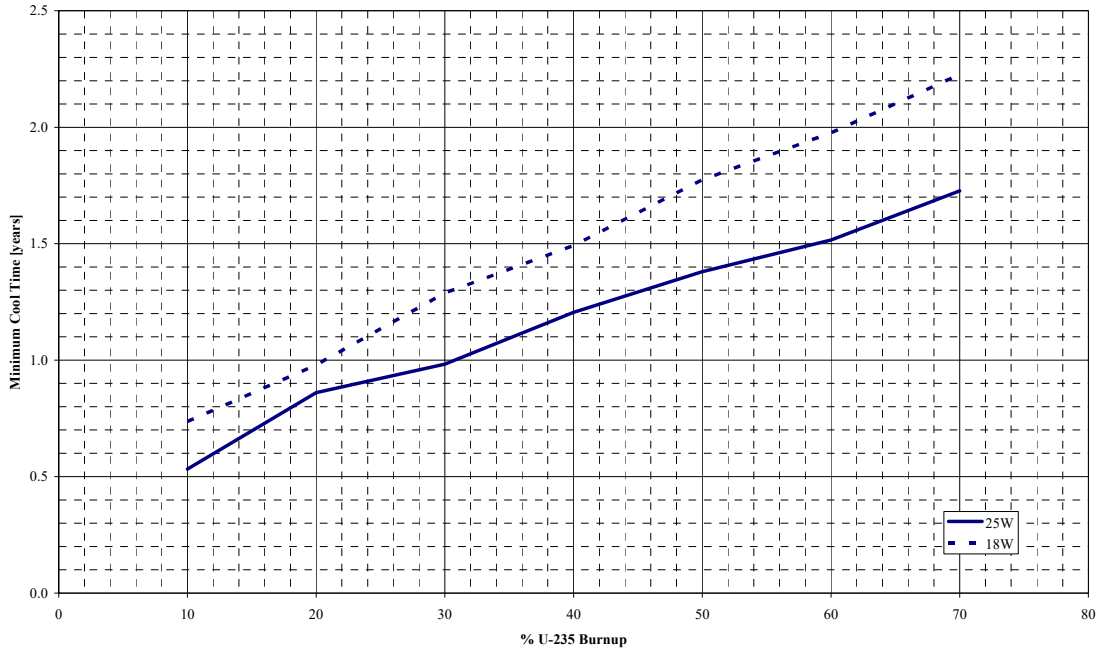

Figure 5.3.9-10 DIDO HEU Element Cooling Time vs. ^{235}U % Depletion

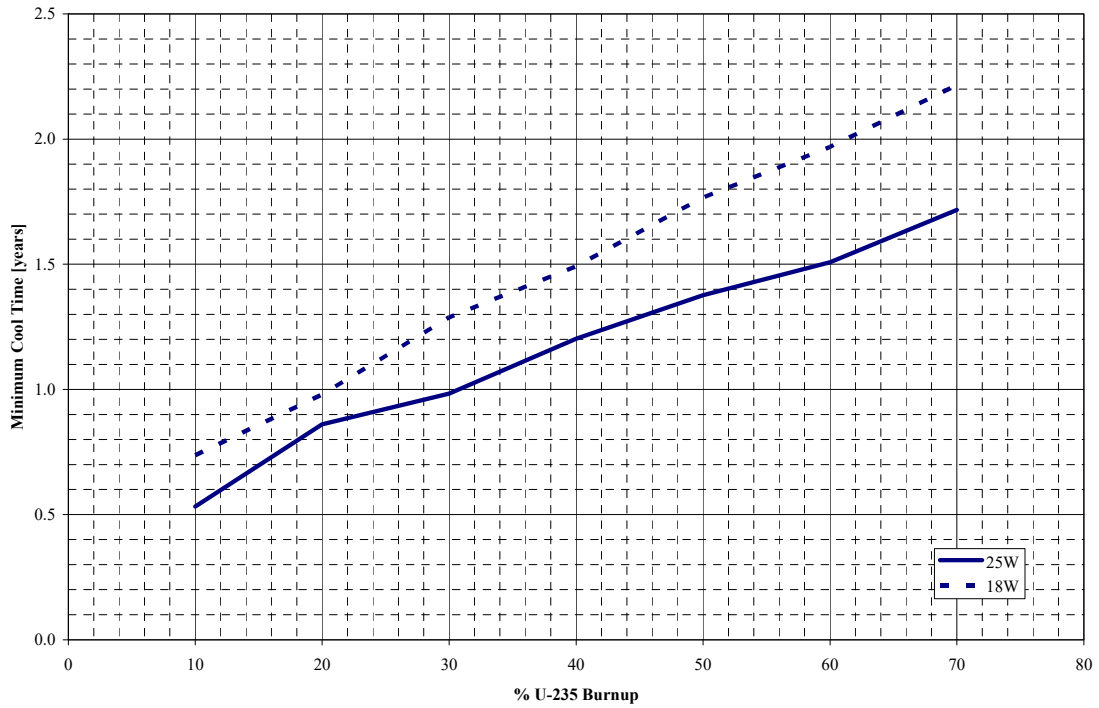

Figure 5.3.9-11 Comparison of DIDO Element 25W Minimum Cool Time Curves as a Function of ^{235}U % Depletion

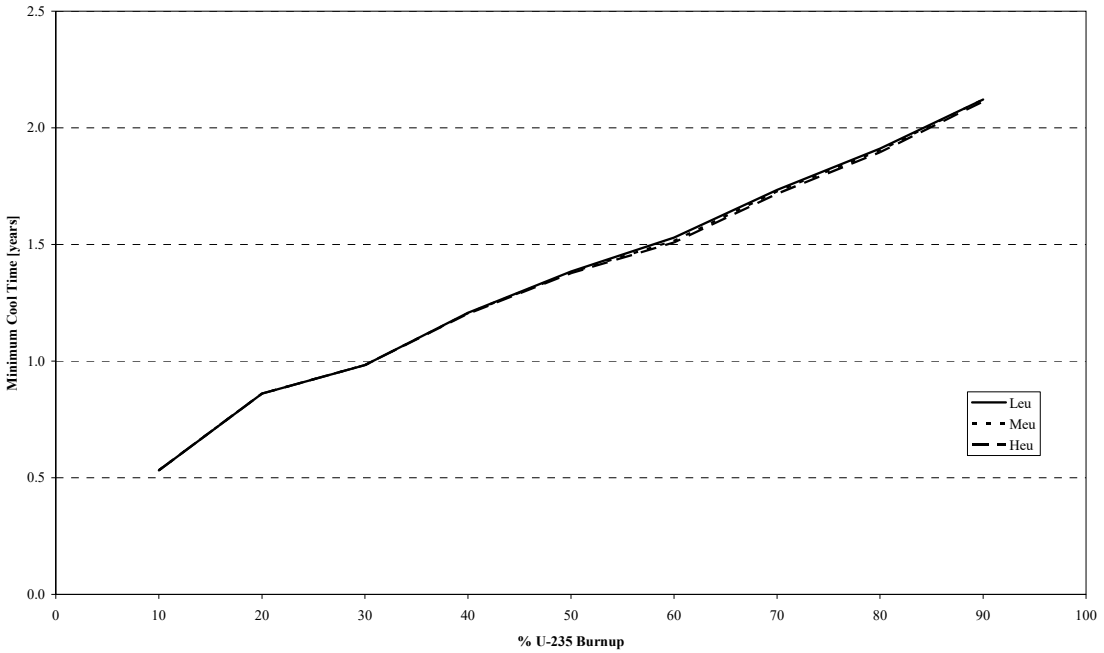

Figure 5.3.9-12 Bounding DIDO Element Minimum Cool Time vs. % ^{235}U Depletion

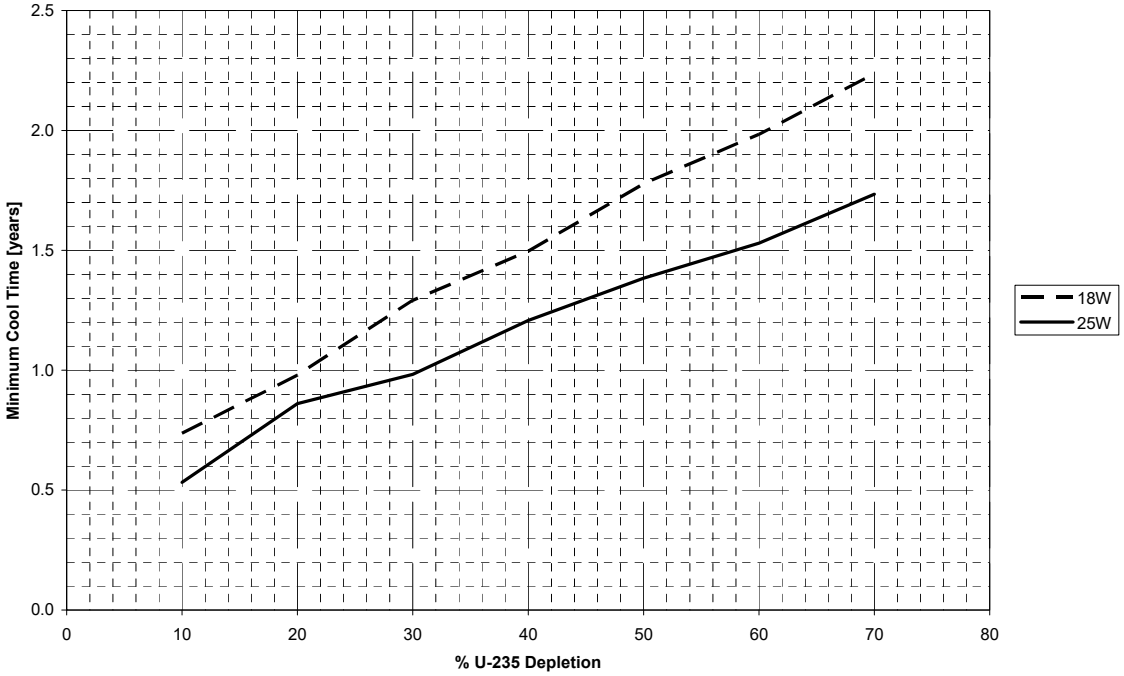

Figure 5.3.9-13 18W DIDO HEU Fuel Predicted vs. Actual ^{235}U Depletion Loading Curve

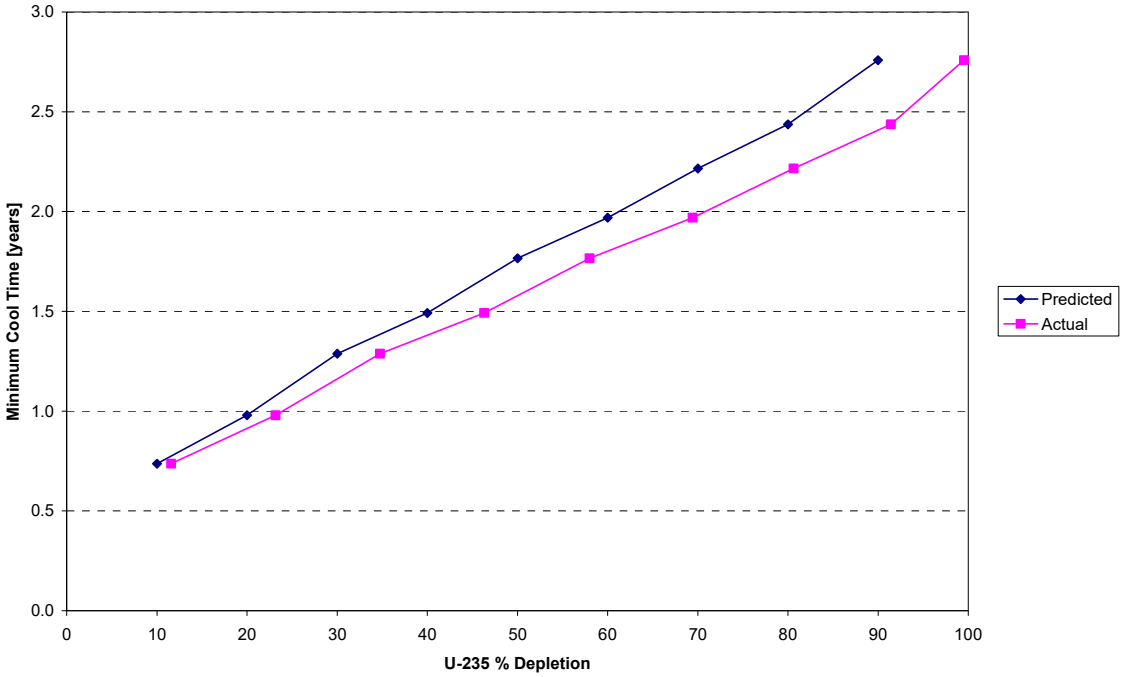

Table 5.3.9-1 Design Basis DIDO Fuel Assembly Characteristics

Fuel Parameters	Units	LEU	MEU	HEU
Tube 1 outer diameter	[cm]	6.38	6.38	6.38
Tube 2 outer diameter	[cm]	7.36	7.36	7.36
Tube 3 outer diameter	[cm]	8.34	8.34	8.34
Tube 4 outer diameter	[cm]	9.32	9.32	9.32
Aluminum plate outer diameter	[cm]	10.5	10.5	10.5
Aluminum outer plate thickness	[cm]	0.15	0.15	0.15
Clad thickness	[cm]	0.0425	0.0425	0.0425
Tube thickness	[cm]	0.15	0.15	0.15
Fuel meat thickness	[cm]	0.065	0.065	0.065
Active fuel length	[cm]	60.0	60.0	60.0
Total assembly length	[cm]	62.5	62.5	62.5
Tube pitch	[cm]	0.98	0.98	0.98
Fuel assembly pitch	[cm]	15.24	15.24	15.24
Fuel composition		U-Al	U-Al	U-Al
Weight percent ^{235}U		19%	40%	90%
Maximum ^{235}U per fuel assembly	[g]	190.0	190.0	190.0
U wt % in fuel composition		65%	40%	25%
Assembly power level	[MW]	0.3846	0.3846	0.3846
Mass of uranium	[g]	1000.0	475.0	211.1

Note: Active fuel in the top basket is restricted to a minimum distance below the cask lid of 3.7 inches (9.3 cm) in the 25 W pattern and to 1.1 inches (2.8 cm) below the lid in the 18 W pattern.

Table 5.3.9-2 DIDO Fuel Assembly Gamma Source Terms by Thermal Output

HEU Burnup 577,460 MWd/MTU			Assembly Thermal Output	
			18 Watts	25 Watts
Group	E_{hi} (Mev)	E_{low} (Mev)	809 Days (g/sec)	627 Days (g/sec)
1	10.00	8.00	6.70E-01	7.45E-01
2	8.00	6.50	3.18E+00	3.54E+00
3	6.50	5.00	1.64E+01	1.82E+01
4	5.00	4.00	4.15E+01	4.60E+01
5	4.00	3.00	1.29E+08	1.81E+08
6	3.00	2.50	1.33E+09	1.91E+09
7	2.50	2.00	3.58E+11	5.56E+11
8	2.00	1.66	3.74E+10	5.60E+10
9	1.66	1.33	4.05E+11	5.58E+11
10	1.33	1.00	7.98E+11	1.01E+12
11	1.00	0.80	3.00E+12	3.64E+12
12	0.80	0.60	1.96E+13	2.39E+13
13	0.60	0.40	7.98E+12	1.01E+13
14	0.40	0.30	2.32E+12	3.37E+12
15	0.30	0.20	3.02E+12	4.36E+12
16	0.20	0.10	1.32E+13	1.95E+13
17	0.10	0.05	1.31E+13	1.89E+13
18	0.05	0.01	4.10E+13	5.85E+13
Total	--	--	1.05E+14	1.45E+14

Table 5.3.9-3 DIDO Fuel Assembly Neutron Source Terms by Thermal Output

	HEU Burnup 577,460 MWd/MTU		Assembly Thermal Output	
			18 Watts	25 Watts
Group	E_{hi} (Mev)	E_{low} (Mev)	809 Days (n/sec)	627 Days (n/sec)
1	2.00E+01	6.43E+00	2.03E+01	2.25E+01
2	6.43E+00	3.00E+00	4.44E+02	4.78E+02
3	3.00E+00	1.85E+00	8.47E+02	8.84E+02
4	1.85E+00	1.40E+00	3.02E+02	3.18E+02
5	1.40E+00	9.00E-01	2.83E+02	3.04E+02
6	9.00E-01	4.00E-01	2.38E+02	2.61E+02
7	4.00E-01	1.00E-01	4.57E+01	5.02E+01
8	1.00E-01	1.70E-02	-	-
9	1.70E-02	3.00E-03	-	-
10	3.00E-03	5.50E-04	-	-
11	5.50E-04	1.00E-04	-	-
12	1.00E-04	3.00E-05	-	-
13	3.00E-05	1.00E-05	-	-
14	1.00E-05	3.05E-06	-	-
15	3.05E-06	1.77E-06	-	-
16	1.77E-06	1.30E-06	-	-
17	1.30E-06	1.13E-06	-	-
18	1.13E-06	1.00E-06	-	-
19	1.00E-06	8.00E-07	-	-
20	8.00E-07	4.00E-07	-	-
21	4.00E-07	3.25E-07	-	-
22	3.25E-07	2.25E-07	-	-
23	2.25E-07	1.00E-07	-	-
24	1.00E-07	5.00E-08	-	-
25	5.00E-08	3.00E-08	-	-
26	3.00E-08	1.00E-08	-	-
27	1.00E-08	0.00E+00	-	-
Total	--	--	2.18E+03	2.32E+03

Table 5.3.9-4 Material Densities for DIDO Fuel Shielding Analysis

Material	Element	Density [atom/barn-cm]
HEU Fuel	AL	8.449E-03
	U-235	9.225E-05
	U-238	1.012E-05
MEU Fuel	AL	8.793E-03
	U-235	9.371E-05
	U-238	1.388E-04
LEU Fuel	AL	8.045E-03
	U-235	9.366E-05
	U-238	3.943E-04
End Fitting	AL	6.031E-02
H_2O/Glycol	H	5.988E-02
	C	1.070E-02
	O	2.459E-02
Stainless Steel	CR	1.743E-02
	MN	1.736E-03
	FE	5.936E-02
	NI	7.721E-03
Lead	PB	3.297E-02

Table 5.3.9-5 LWT Cask Surface Total Dose Rates – DIDO Fuel (Normal Conditions of Transport)

Band	LWT Cask Surface Radial Dose Rates (mrem/hr)							
[cm]	Gamma	FSD (%)	Neutron	FSD (%)	N-Gamma	FSD (%)	Total	FSD (%)
247	141.20	8.8	0.03	1.2	0.00	10.8	141.23	8.8
221	403.40	9.7	0.11	0.7	0.00	4.2	403.51	9.7
195	95.33	3.1	0.07	0.8	0.00	1.1	95.41	3.1
169	41.29	1.6	0.01	1.1	0.00	0.8	41.30	1.6
143	41.22	2.6	0.01	1.2	0.00	0.8	41.23	2.6
117	51.37	1.7	0.01	1.0	0.00	0.7	51.38	1.7
91	40.01	3.1	0.01	1.2	0.00	0.8	40.02	3.1
65	41.88	2.0	0.01	1.1	0.00	0.7	41.89	2.0
39	53.01	5.6	0.01	1.0	0.00	0.7	53.02	5.6
13	30.15	1.8	0.01	1.2	0.00	0.8	30.16	1.8

Table 5.3.9-6 LWT Cask Plane of Conveyance Dose Rates – DIDO Fuel (Normal Conditions of Transport)

Band	Conveyance Dose Rates (mrem/hr)							
[cm]	Gamma	FSD (%)	Neutron	FSD (%)	N-Gamma	FSD (%)	Total	FSD (%)
266	42.13	7.1	0.01	1.0	0.00	1.5	42.14	7.1
238	63.12	8.6	0.01	0.9	0.00	2.8	63.14	8.6
210	53.01	8.3	0.01	0.9	0.00	1.1	53.03	8.3
182	33.35	6.3	0.01	0.9	0.00	0.9	33.36	6.3
154	22.69	4.8	0.01	1.1	0.00	0.8	22.70	4.8
126	19.16	4.1	0.00	1.2	0.00	0.7	19.17	4.1
98	17.32	2.1	0.00	1.3	0.00	0.7	17.32	2.1
70	16.45	3.8	0.00	1.0	0.00	0.7	16.45	3.8
42	15.73	2.1	0.00	0.9	0.00	0.7	15.73	2.1
14	14.39	2.0	0.00	1.0	0.00	0.7	14.39	2.0

Table 5.3.9-7 LWT Cask 2 Meters Off the Plane of Conveyance Dose Rates – DIDO Fuel (Normal Conditions of Transport)

Band	2 Meters off the Vertical Plane of Conveyance Dose Rates (mrem/hr)							
[cm]	Gamma	FSD (%)	Neutron	FSD (%)	N-Gamma	FSD (%)	Total	FSD (%)
285	9.61	10.6	0.00	1.3	0.00	2.5	9.61	10.6
255	9.72	6.2	0.00	1.2	0.00	1.0	9.72	6.2
225	9.05	5.9	0.00	1.3	0.00	1.0	9.05	5.9
195	9.20	6.2	0.00	1.2	0.00	1.0	9.20	6.2
165	8.77	8.8	0.00	1.2	0.00	0.9	8.77	8.8
135	7.74	4.6	0.00	1.2	0.00	1.0	7.74	4.6
105	7.75	6.3	0.00	1.2	0.00	0.9	7.75	6.3
75	6.94	4.6	0.00	1.1	0.00	0.9	6.95	4.6
45	6.67	4.3	0.00	1.2	0.00	0.9	6.67	4.3
15	6.55	3.7	0.00	1.2	0.00	0.8	6.56	3.7

Table 5.3.9-8 LWT Cask 1 Meter from the Cask Surface Dose Rates – DIDO Fuel (Normal Conditions of Transport)

Band	1 Meter off the Cask Dose Rates							
[cm]	Gamma	FSD (%)	Neutron	FSD (%)	N-Gamma	FSD (%)	Total	FSD (%)
285	24.58	6.8	0.01	1.0	0.00	1.4	24.59	6.8
255	37.66	8.5	0.01	0.9	0.00	2.7	37.67	8.5
225	40.09	7.2	0.01	1.0	0.00	1.0	40.10	7.2
195	31.65	8.4	0.01	1.0	0.00	1.0	31.66	8.4
165	21.85	5.5	0.01	1.0	0.00	0.8	21.86	5.5
135	16.74	4.1	0.00	1.1	0.00	0.8	16.75	4.1
105	15.29	4.1	0.00	1.2	0.00	0.7	15.29	4.1
75	13.98	3.6	0.00	1.1	0.00	0.7	13.98	3.6
45	12.97	2.1	0.00	1.1	0.00	0.7	12.97	2.1
15	12.14	1.8	0.00	1.1	0.00	0.6	12.14	1.8

Table 5.3.9-9 Axial Surface Dose Rates at Cask Lid – DIDO Fuel (Normal Conditions of Transport)

Band	Cask Lid Dose Rates (mrem/hr) Directly Above the DIDO Assemblies					
[cm]	Gamma	FSD (%)	Neutron	FSD (%)	Total	FSD (%)
28.5	21.28	1.2	0.03	4.5	21.31	1.2
25.5	34.06	1.2	0.04	4.2	34.10	1.2
22.5	50.79	1.1	0.05	4.5	50.84	1.1
19.5	72.98	1.8	0.06	7.1	73.04	1.8
16.5	88.35	1.1	0.07	5.4	88.42	1.1
13.5	110.20	1.2	0.07	4.4	110.27	1.2
10.5	129.10	1.4	0.08	4.2	129.18	1.4
7.5	145.30	1.5	0.09	7.3	145.39	1.5
4.5	155.70	2.1	0.09	6.0	155.79	2.1
1.5	159.50	2.9	0.09	11.3	159.59	2.9

Table 5.3.9-10 LWT Cask Dose Rates – 5 Meters from the Cask Lid – DIDO Fuel (Back of Tractor Cab) for Normal Conditions of Transport

Band	5 Meter Dose Rates (mrem/hr)					
[cm]	Gamma	FSD (%)	Neutron	FSD (%)	Total	FSD (%)
84.38	0.63	2.4	0.00	9.2	0.63	2.4
73.13	0.68	2.9	0.00	10.2	0.68	2.9
61.88	0.72	3.2	0.00	11.1	0.72	3.2
50.63	0.70	3.2	0.00	12.7	0.70	3.2
39.38	0.79	3.9	0.00	13.6	0.79	3.9
28.13	0.77	4.6	0.00	15.6	0.77	4.6
16.88	0.76	6.9	0.00	21.0	0.76	6.9
5.63	0.90	9.4	0.00	37.9	0.90	9.4

Table 5.3.9-11 LWT Cask Dose Rates – 1 Meter from the Radial Cask Surface – DIDO Fuel (Hypothetical Accident Conditions)

Band	1 Meter Accident Dose Rates (mrem/hr)					
[cm]	Gamma	FSD (%)	Neutron	FSD (%)	Total	FSD (%)
285	24.57	5.4	0.02	0.8	24.59	5.4
255	37.09	5.1	0.02	0.6	37.11	5.1
225	39.60	4.9	0.03	0.5	39.63	4.9
195	32.57	3.2	0.04	0.5	32.61	3.2
165	30.21	9.9	0.04	0.5	30.25	9.9
135	23.86	1.5	0.05	0.4	23.91	1.5
105	22.68	1.5	0.05	0.4	22.73	1.5
75	22.10	2.0	0.05	0.4	22.15	2.0
45	21.16	2.3	0.05	0.4	21.21	2.3
15	21.77	9.0	0.05	0.4	21.82	9.0

5.3.10 GA IFM Shielding Evaluation

Two General Atomics (GA) Irradiated Fuel Material (IFM) Fuel Handling Units (packages) are analyzed for transport in the LWT cask. One IFM package is composed of Reduced-Enrichment Research and Test Reactor (RERTR) type TRIGA fuel. The other is composed of High-Temperature Gas-Cooled Reactor (HTGR) type fuel. Each set of IFM is packaged into stainless steel weld-encapsulated primary and secondary enclosures.

Source terms for each IFM package are calculated using the activity inventories determined by GA as of January 1, 1996. The activity inventory for each package is input into ORIGEN-S, which outputs gamma and neutron spectra in the SCALE 27-group neutron and 18-group gamma structures. A radial one-dimensional shielding analysis is performed using SAS1 for each fuel type independently, with bounding dose rates determined by combining the results for each IFM package.

Table 5.3.10-1 gives the activity inventory for the isotopes in each IFM package. The inventory includes the hardware activation components of the RERTR IFM. Hardware activation for HTGR IFM is not significant. Using the table, ORIGEN-S inputs are created for each fuel type in order to produce gamma and neutron spectra in the SCALE energy group format. ORIGEN-S input is shown in Figure 5.3.10-1 and Figure 5.3.10-2 for RERTR and HTGR IFM, respectively. The resulting spectra are summarized in Table 5.3.10-2.

The geometric description of the fuel is based on the IFM enclosure dimensions and the constituent element masses for each fuel type. Based on the primary enclosure dimensions shown in Table 5.3.10-3, fuel volumes of 7140 and 9555 cm^3 are calculated for RERTR and HTGR IFM, respectively. Using these volumes, a density is calculated for each of the constituent elements as shown in Table 5.3.10-4. Material compositions are given in Table 5.3.10-5. Note that the erbium in the TRIGA fuel matrix is not modeled in SAS1.

SAS1 input for RERTR and HTGR IFM is shown in Figure 5.3.10-3 and Figure 5.3.10-4, respectively. No credit is taken for NAC-LWT basket materials or geometry, and the homogenized fuel is centered in the cask cavity. Source strengths are input on a volumetric basis. The same conservative assumptions used in previous radial shielding analysis were applied—i.e., minimum shield dimensions, lead gap, a 0.94 g/cm^3 neutron shield solution density, and no boron in the neutron shield solution. In the accident analysis, the neutron shield is modeled as void. Dimensional sketches of the modeled geometry are shown in Figure 5.3.10-5 and Figure 5.3.10-6.

Dose rates for a combined payload of RERTR and HTGR IFM are shown in Table 5.3.10-6. Dose rates are well below regulatory limits at the surface and 2 meters from the truck bed. The transport index, based on the normal conditions dose rate at 1 meter from the package, is less than 1.

Due to the minimal radial dose rates calculated for a combined payload of the GA IFM and the significant amount of stainless steel axial shielding in the NAC-LWT, axial dose rates are expected to be minimal and well below regulatory limits.

Figure 5.3.10-1 ORIGEN-S Input for GA RERTR IFM

```
#ORIGENS
0$$  A11 71  E T
DECAY CASE
3$$ 21 1 1 27  A16 4  A33 18  E T
35$$ 0 T
54$$ A8 1  E
56$$ A2 1  A6 1  A10  0  A13 28  A14 5  A15 3 E
57** 0 E T
GA IFM
RERTR FHU NUCLIDE ACTIVITY INVENTORY AS OF 1/1/96
60** 1.E-20
61** F1E-20
65$$
'GRAM-ATOMS   GRAMS    CURIES     WATTS-ALL  WATTS-GAMMA
     3Z     3R1    3R1    3R1        3Z         6Z
     3Z     3R1    3R1    3R1        3Z         6Z
     3Z     3R1    3R1    3R1        3Z         6Z
81$$ 2 0 26 1  E
82$$  2
83**  1.E+7        8.E+6        6.5E+6       5.E+6        4.E+6
      3.E+6        2.5E+6       2.E+6        1.66E+6      1.33E+6
      1.E+6        8.E+5        6.E+5        4.E+5        3.E+5
      2.E+5        1.E+5        5.E+4        1.E+4
84**  2.E+7        6.434E+6     3.E+6        1.85E+6      1.4E+6
 9.E+5        4.E+5        1.E+5        1.7E+4       3.E+3
 5.5E+2       1.E+2        3.E+1        1.E+1        3.04999E+0
 1.77E+0      1.29999E+0   1.12999E+0   1.E+0        8.E-1
 4.E-1        3.25E-1      2.25E-1      9.999985E-2  5.E-2
 3.E-2        9.999998E-3  1.E-5
73$$  250540 260550 270600 280590 280630 430990 922330
      922340 922350 922360 922380 932370 942390 942400
      942410 942420 10030 360850 380900 390900 441060
      511250 551340 551370 611470 621510 631540 631550
74**  1.15E-02 3.06E+01 2.46E+00 3.30E-01 3.96E+01 1.40E-01 1.71E-07
      3.91E-04 7.39E-04 5.61E-03 8.58E-04 2.48E-03 1.30E+00 1.35E+00
      2.84E+02 3.35E-03 2.50E+00 5.86E+01 7.60E+02 7.60E+02 6.67E-01
      4.18E+00 2.29E+01 8.26E+02 9.44E+01 3.35E+00 2.39E+01 6.71E+00
75$$  6R1 10R2 12R3 T
RERTR FHU NUCLIDE ACTIVITY INVENTORY AS OF 1/1/96
56$$ F0 T
END
```

Figure 5.3.10-2 ORIGEN-S Input for GA HTGR IFM

```
#ORIGENS
0$$  A11 71  E T
DECAY CASE
3$$ 21 1 1 27  A16 4  A33 18  E T
35$$ 0 T
54$$ A8 1  E
56$$ A2 1  A6 1  A10  0  A13 22  A14 5  A15 3 E
57** 0 E T
GA IFM
HTGR FHU NUCLIDE ACTIVITY INVENTORY AS OF 1/1/96
60** 1.E-20
61** F1E-20
65$$
'GRAM-ATOMS   GRAMS    CURIES     WATTS-ALL  WATTS-GAMMA
     3Z     3R1    3R1    3R1        3Z         6Z
     3Z     3R1    3R1    3R1        3Z         6Z
     3Z     3R1    3R1    3R1        3Z         6Z
81$$ 2 0 26 1  E
82$$  2
83**  1.E+7        8.E+6        6.5E+6       5.E+6        4.E+6
      3.E+6        2.5E+6       2.E+6        1.66E+6      1.33E+6
      1.E+6        8.E+5        6.E+5        4.E+5        3.E+5
      2.E+5        1.E+5        5.E+4        1.E+4
84**  2.E+7        6.434E+6     3.E+6        1.85E+6      1.4E+6
 9.E+5        4.E+5        1.E+5        1.7E+4       3.E+3
 5.5E+2       1.E+2        3.E+1        1.E+1        3.04999E+0
 1.77E+0      1.29999E+0   1.12999E+0   1.E+0        8.E-1
 4.E-1        3.25E-1      2.25E-1      9.999985E-2  5.E-2
 3.E-2        9.999998E-3  1.E-5
73$$  10030 360850 380900 390900 511250 551340 551370
      611470 621510 631540 631550 902320 922330 922340
      922350 922360 922380 942380 942390 942400 942410
      942420
74**  3.04E-01 9.19E+00 1.52E+02 1.52E+02 1.15E-01 3.62E-01 1.57E+02
      2.59E+00 1.28E+00 1.52E+00 1.49E-01 2.10E-04 2.92E-01 3.13E-02
      2.27E-04 1.04E-03 3.84E-06 2.91E+00 1.71E-02 1.91E-02 3.14E+00
      1.08E-04
75$$  11R3 11R2 T
HTGR FHU NUCLIDE ACTIVITY INVENTORY AS OF 1/1/96
56$$ F0 T
END
```

Figure 5.3.10-3 SAS1 Input for GA RERTR IFM

```
=SAS1
GA FHU - RERTR Source at 1/1/96 - Nrm Model
27N-18COUPLE    INFHOMMEDIUM
ZR 1 DEN=0.9413 1.0 END
U 1 DEN=0.5393 1.0 END
H 1 DEN=0.0162 1.0 END
C 1 DEN=0.0022 1.0 END
FE 1 DEN=0.2387 1.0 END
NI 1 DEN=0.1287 1.0 END
CR 1 DEN=0.1067 1.0 END
MN 1 DEN=0.0043 1.0 END
MO 1 DEN=0.0024 1.0 END
AL      2  1.0 END
SS304   3  1.0 END
PB      4  1.0 END
ARBMGLYC  0.9437 3 0 1 0 6012 2 1001 6 8016 2 5 .585 END
H2O     5 0.4160 END
END COMP
END

RERTR FHU IN THE NAC-LWT - NEUTRON SOURCE
CYLINDRICAL
1  5.0927  30  -1  0  0.0  1.327E+00  0.0
3  5.3975  4 0
0  5.7277  1 0
3  6.0325  4 0
0 16.9863  1 0
3 18.8214  4 0
4 33.2890 60 0
0 33.4264  1 0
3 36.3728 12 0
5 49.0728 30 0
3 49.1338  4 0
END ZONE
1.440E+02 2.064E+03 2.687E+03 1.239E+03 1.498E+03 1.540E+03
3.009E+02
38Z
DY=87.63 NDETEC=5
READ XSDOSE
87.63 49.1338 43.815 149.1338 87.63 249.1338 43.815
321.92 43.815 349.1338 43.815
END
LAST
RERTR FHU IN THE NAC-LWT - GAMMA SOURCE
CYLINDRICAL
1  5.0927  30  -1  0  0.0  0.0  4.093E+09
3  5.3975  4 0
0  5.7277  1 0
3  6.0325  4 0
0 16.9863  1 0
3 18.8214  4 0
4 33.2890 60 0
0 33.4264  1 0
3 36.3728 12 0
5 49.0728 30 0
3 49.1338  4 0
END ZONE
27Z
5.132E+00 2.423E+01 1.239E+02 3.100E+02 9.223E+02 2.523E+03
9.580E+07 1.893E+09 9.706E+10 6.854E+11 7.046E+11 1.311E+12
1.376E+12 7.350E+11 1.081E+12 3.565E+12 4.901E+12 1.477E+13
DY=87.63 NDETEC=5
READ XSDOSE
87.63 49.1338 43.815 149.1338 87.63 249.1338 43.815
321.92 43.815 349.1338 43.815
END
```

Figure 5.3.10-4 SAS1 Input for GA HTGR IFM

```
=SAS1
GA FHU - HTGR Source at 1/1/96 - Nrm Model
27N-18COUPLE    INFHOMMEDIUM
C 1 DEN=0.7405 1.0 END
TH 1 DEN=0.2048 1.0 END
SI 1 DEN=0.1474 1.0 END
U 1 DEN=0.0214 1.0 END
O 1 DEN=0.0023 1.0 END
AL      2  1.0 END
SS304   3  1.0 END
PB      4  1.0 END
ARBMGLYC  0.9437 3 0 1 0 6012 2 1001 6 8016 2 5 .585 END
H2O     5 0.4160 END
END COMP
END

HTGR FHU IN THE NAC-LWT - NEUTRON SOURCE
CYLINDRICAL
1  5.7277  30  -1  0  0.0  3.474E-01  0.0
3  6.0325  4 0
0  6.3627  1 0
3  6.6675  4 0
0 16.9863  1 0
3 18.8214  4 0
4 33.2890 60 0
0 33.4264  1 0
3 36.3728 12 0
5 49.0728 30 0
3 49.1338  4 0
END ZONE
1.130E+01 6.522E+02 1.627E+03 4.790E+02 3.328E+02 1.835E+02
3.334E+01
38Z
DY=92.71 NDETEC=5
READ XSDOSE
92.71 49.1338 46.355 149.1338 92.71 249.1338 46.355
321.92 46.355 349.1338 46.355
END
LAST
HTGR FHU IN THE NAC-LWT - GAMMA SOURCE
CYLINDRICAL
1  5.7277  30  -1  0  0.0  0.0  5.299E+08
3  6.0325  4 0
0  6.3627  1 0
3  6.6675  4 0
0 16.9863  1 0
3 18.8214  4 0
4 33.2890 60 0
0 33.4264  1 0
3 36.3728 12 0
5 49.0728 30 0
3 49.1338  4 0
END ZONE
27Z
4.344E-01 2.119E+00 1.135E+01 2.979E+01 9.356E+01 1.094E+02
1.896E+07 3.731E+08 3.877E+09 4.080E+10 4.055E+10 7.294E+10
1.162E+11 1.454E+11 2.067E+11 6.573E+11 9.500E+11 2.829E+12
DY=92.71 NDETEC=5
READ XSDOSE
92.71 49.1338 46.355 149.1338 92.71 249.1338 46.355
321.92 46.355 349.1338 46.355
END
```

Figure 5.3.10-5 GA IFM One-Dimensional Radial Model of NAC-LWT

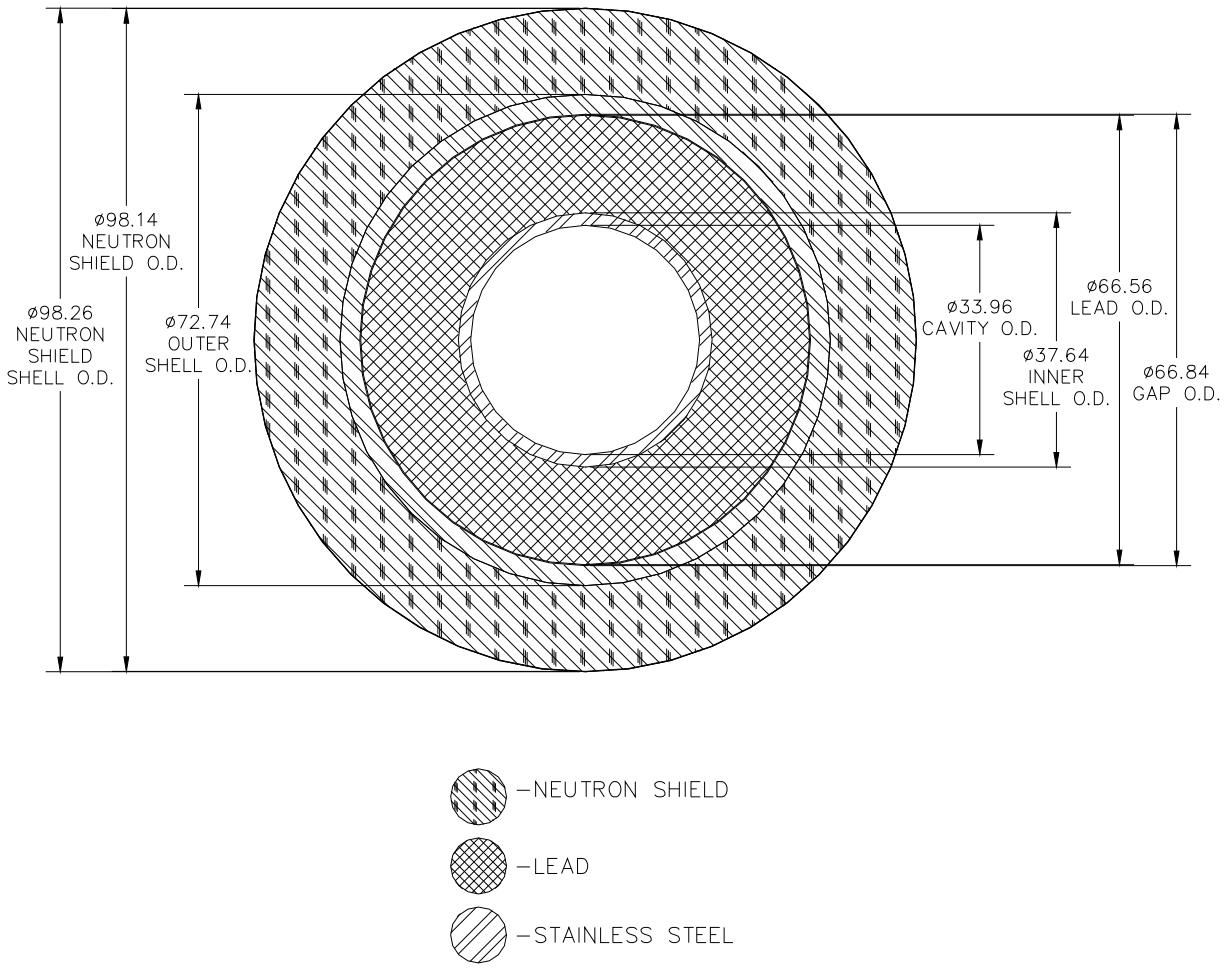

Dimensions in cm.

Figure 5.3.10-6 One-Dimensional Radial Model of GA RERTR and HTGR IFM

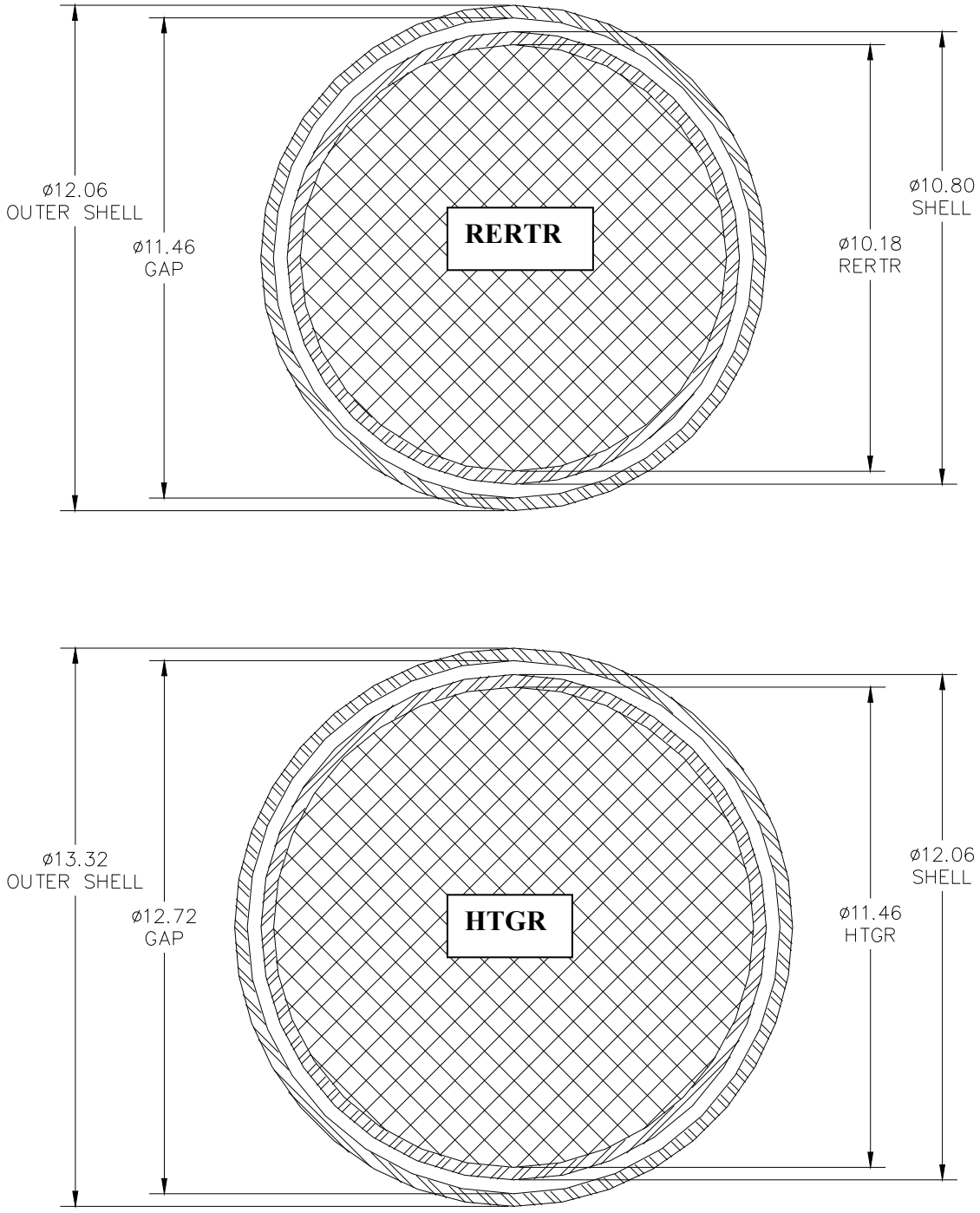

Dimensions in cm.

Table 5.3.10-1 GA IFM Activity Inventory as of January 1, 1996

Isotope	Activity [Ci]	
	RERTR	HTGR
^{3}H	2.50E+00	3.04E-01
^{54}Mn	1.15E-02	---
^{55}Fe	3.06E+01	---
^{60}Co	2.46E+00	---
^{59}Ni	3.30E-01	---
^{63}Ni	3.96E+01	---
^{85}Kr	5.86E+01	9.19E+00
^{90}Sr	7.60E+02	1.52E+02
^{90}Y	7.60E+02	1.52E+02
^{99}Tc	1.40E-01	---
^{106}Ru	6.67E-01	---
^{125}Sb	4.18E+00	1.15E-01
^{134}Cs	2.29E+01	3.62E-01
^{137}Cs	8.26E+02	1.57E+02
^{147}Pm	9.44E+01	2.59E+00
^{151}Sm	3.35E+00	1.28E+00
^{154}Eu	2.39E+01	1.52E+00
^{155}Eu	6.71E+00	1.49E-01
^{232}Th	---	2.10E-04
^{233}U	1.71E-07	2.92E-01
^{234}U	3.91E-04	3.13E-02
^{235}U	7.39E-04	2.27E-04
^{236}U	5.61E-03	1.04E-03
^{238}U	8.58E-04	3.84E-06
^{237}Np	2.48E-03	---
^{238}Pu	---	2.91E+00
^{239}Pu	1.30E+00	1.71E-02
^{240}Pu	1.35E+00	1.91E-02
^{241}Pu	2.84E+02	3.14E+00
^{242}Pu	3.35E-03	1.08E-04
Total	2920	483

Table 5.3.10-2 GA IFM Neutron and Gamma Spectra in SCALE Format

Energy Group	HTGR IFM		RERTR IFM	
	[neutron/sec]	[gamma/sec]	[neutron/sec]	[gamma/sec]
1	1.130E+01	4.344E-01	1.440E+02	5.132E+00
2	6.522E+02	2.119E+00	2.064E+03	2.423E+01
3	1.627E+03	1.135E+01	2.687E+03	1.239E+02
4	4.790E+02	2.979E+01	1.239E+03	3.100E+02
5	3.328E+02	9.356E+01	1.498E+03	9.223E+02
6	1.835E+02	1.094E+02	1.540E+03	2.523E+03
7	3.334E+01	1.896E+07	3.009E+02	9.580E+07
8	0.000E+00	3.731E+08	0.000E+00	1.893E+09
9	0.000E+00	3.877E+09	0.000E+00	9.706E+10
10	0.000E+00	4.080E+10	0.000E+00	6.854E+11
11	0.000E+00	4.055E+10	0.000E+00	7.046E+11
12	0.000E+00	7.294E+10	0.000E+00	1.311E+12
13	0.000E+00	1.162E+11	0.000E+00	1.376E+12
14	0.000E+00	1.454E+11	0.000E+00	7.350E+11
15	0.000E+00	2.067E+11	0.000E+00	1.081E+12
16	0.000E+00	6.573E+11	0.000E+00	3.565E+12
17	0.000E+00	9.500E+11	0.000E+00	4.901E+12
18	0.000E+00	2.829E+12	0.000E+00	1.477E+13
19	0.000E+00		0.000E+00	
20	0.000E+00		0.000E+00	
21	0.000E+00		0.000E+00	
22	0.000E+00		0.000E+00	
23	0.000E+00		0.000E+00	
24	0.000E+00		0.000E+00	
25	0.000E+00		0.000E+00	
26	0.000E+00		0.000E+00	
27	0.000E+00		0.000E+00	
Total	3.319E+03	5.063E+12	9.473E+03	2.922E+13

Table 5.3.10-3 GA IFM Primary and Secondary Enclosure Dimensions

Description	Value [in]
RERTR Primary Enclosure Interior Height	34.50
RERTR Primary Enclosure OD	4.25
RERTR Secondary Enclosure OD	4.75
RERTR Enclosure Wall Thickness	0.12
HTGR Primary Enclosure Interior Height	36.50
HTGR Primary Enclosure OD	4.75
HTGR Secondary Enclosure OD	5.25
HTGR Enclosure Wall Thickness	0.12

Table 5.3.10-4 Elemental Constituents of GA IFM

Fuel Type	Element	Mass [g]	Density [g/cc]
RERTR	ZR	6721.1	0.9413
	U	3850.66	0.5393
	H	116.02	0.0162
	ER	63.32	0.0089
	C	15.44	0.0022
	FE	1704.5	0.2387
	NI	919.1	0.1287
	CR	761.7	0.1067
	MN	30.8	0.0043
	MO	17.3	0.0024
	Total	14199.94	1.9888
HTGR	C	7075.55	0.7405
	TH	1956.87	0.2048
	SI	1408.37	0.1474
	U	204.81	0.0214
	O	22.40	0.0023
	Total	10668.00	1.1165

Table 5.3.10-5 Material Compositions of GA IFM and NAC-LWT

Material	SCALE Isotope/Element	Number Density [atom/b-cm]
RERTR Fuel	HYDROGEN	9.68035E-03
	CARBON-12	1.10406E-04
	CHROMIUM	1.23580E-03
	MANGANESE	4.71352E-05
	IRON	2.57407E-03
	NICKEL	1.32065E-03
	ZIRCONIUM	6.21428E-03
	MOLYBDENUM	1.50647E-05
	URANIUM-234	7.50436E-08
	URANIUM-235	9.82391E-06
	URANIUM-238	1.35453E-03
HTGR Fuel	CARBON-12	3.71616E-02
	OXYGEN-16	8.66191E-05
	SILICON	3.16060E-03
	THORIUM-232	5.31533E-04
	URANIUM-234	2.97781E-09
	URANIUM-235	3.89823E-07
	URANIUM-238	5.37492E-05
Stainless Steel	CHROMIUM (SS304)	1.74286E-02
	MANGANESE	1.73633E-03
	IRON (SS304)	5.93579E-02
	NICKEL (SS304)	7.72070E-03
Lead	LEAD	3.29690E-02
Neutron Shield	HYDROGEN	5.99351E-02
	CARBON-12	1.07197E-02
	OXYGEN-16	2.46077E-02

Table 5.3.10-6 Combined Payload Radial Dose Rates for GA IFM

Condition	Source	Surface [mrem/hr]	1 meter [mrem/hr]	2 meter [mrem/hr]
Normal	Neutron	1.7E-03	1.7E-04	4.3E-05
	Gamma	4.8E-01	6.1E-02	1.9E-02
	Total	4.8E-01	6.1E-02	1.9E-02
Accident	Neutron	2.0E-02	2.4E-03	6.1E-04
	Gamma	7.0E-01	1.0E-01	3.3E-02
	Total	7.2E-01	1.0E-01	3.4E-02

5.3.11 High Burnup PWR and BWR Rods in a Fuel Assembly Lattice

Results of a shielding analysis for up to 25 high burnup PWR or BWR intact fuel rods in a fuel assembly lattice are presented in this section. The rods have burnups up to 80,000 MWd/MTU. The fuel assembly lattice hardware is assumed to have been activated by an 80,000 MWd/MTU average burnup fuel assembly. Based on the minimum cool times developed in Section 5.3.8 for intact fuel in the rod holder, maximum dose rates are calculated to demonstrate that the 10 CFR 71 dose rate limits are not exceeded.

Dose rates are calculated using the MCBEND three-dimensional Monte Carlo transport code. Source terms are calculated using the SAS2H module of the SCALE package, with ORIGEN-S used to rebin the gamma-ray and neutron spectra onto the 22-group and 28-group structures required by MCBEND.

5.3.11.1 High Burnup PWR and BWR Rod and Lattice Source Terms

A total of eight fuel assembly models are employed in the analysis. BWR 7×7 and 8×8 fuel pin parameters are taken from the analysis in Section 5.3.8, with additional lattice parameters taken from a survey of BWR fuel assembly data. The six PWR fuel assembly models are based on the most prevalent designs that fit within the NAC-LWT cavity. Based on the PWR fuel characteristics in Table 1.2-5, B&W 15×15 and 17×17, CE 14×14, and Westinghouse (WE) 14×14, 15×15, and 17×17 bounding fuel assembly models are created based on maximizing uranium loading (MTU). The use of specific assembly types in the analysis allows modeling of the as-loaded axial positioning of the lattice, as determined by the assembly-specific spacer lengths defined in the License drawings.

Three-dimensional fuel assembly parameters are defined in Table 5.3.11-3 and Table 5.3.11-4 for BWR and PWR fuel lattices, respectively. SAS2H models are created based on the parameters in Table 5.3.11-5, and assume 95% theoretical density UO_2. Source terms employed in this analysis are identical to those employed in Section 5.3.8. The SAS2H-generated source spectra are rebinned, using ORIGEN-S, onto the standard 28 group neutron and 22 group gamma scheme used in MCBEND as shown in Table 5.3.11-1 and Table 5.3.11-2, respectively.

Gamma, and neutron, and hardware source terms in MCBEND format are presented in Table 5.3.11-6 through Table 5.3.11-13 for PWR and BWR fuel. PWR and BWR 8×8 fuel types are analyzed at 80,000 MWd/MTU and 150 days cool time. Based on the results in Section 5.3.8, the minimum cool time for BWR 7×7 fuel is 210 days for a maximum burnup of 60,000 MWd/MTU; BWR 7×7 fuel is conservatively analyzed at 80,000 MWd/MTU and 210 days cool time.

Activated fuel assembly hardware source terms are found by multiplying the source strength from 1 kilogram by the kilograms of steel or inconel material in the active fuel, plenum, upper end fitting or lower end fitting regions, and by multiplying by a regional flux ratio. The regional flux ratio accounts for the effects of both magnitude and spectrum variation on hardware activation. These ratios are based on empirical data (Luksic). Within the active fuel region, this ratio is unity. A flux ratio of 0.2 is applied to hardware regions directly adjacent to the active core region (i.e., upper and lower plenum), and a flux ratio of 0.1 is applied to hardware regions once removed from the active core region (i.e., upper and lower end fitting region). For BWR fuel, the recommended lower end fitting flux ratio is 0.15 (Luksic).

The analyzed hardware source terms for BWR fuel are based on the maximum values in each source region determined in a survey of BWR assembly data. Maximum values are shown in Table 5.3.11-3. The BWR 7×7 hardware inventory reflects the maximum for 7×7 assemblies and the BWR 8×8 hardware inventory reflects the maximum for 8×8, 9×9, and 10×10 assemblies. The analyzed hardware source terms for PWR fuel are based on the values specific to each assembly type, shown in Table 5.3.11-4. Based on the modeled source regions discussed in Section 5.3.11.3, the lower nozzle (end-fitting) hardware inventories in Table 5.3.11-4 reflect the combination of lower nozzle and lower plenum (if present) masses.

The effect of subcritical neutron multiplication is not directly computed in the MCBEND analysis, due to difficulties in adequately biasing the calculation. Instead, neutron source rates are scaled by a subcritical multiplication factor based on the system multiplication factor, k_{eff}:

$$\text{Scale Factor} = \frac{1}{1 - k_{eff}}$$

For the dry cask conditions of transport, calculated system k_{eff} is 0.06 for BWR fuel and is 0.05 for PWR fuel, with resulting scale factors of 1.0638 and 1.0526, respectively. These scale factors are included in the source strength input unit in MCBEND.

5.3.11.2 Axial Source Profile

The axial source profiles employed in MCBEND for PWR fuel are identical to those employed in Section 5.3.8.1.1. The 1.22 peaking factor for BWR fuel employed in Section 5.3.8.1.1 represents a bounding shape for fuel assembly burnups up to 35,000 MWd/MTU. A 1.15 peak represents an expected bounding value for burnups greater than 60,000 MWd/MTU and is employed here. Based on the indicated burnup profiles for PWR and BWR fuel, the ratio of average source to average burnup is unity (1) for fuel gamma sources. It is 1.13 and 1.31 for PWR and BWR neutron sources, respectively. Profiles are input by evaluating the source multiplier in each axial bin. By default, no internal normalization of the profile is performed.

Profiles are shown graphically in Figure 5.3.11-1 and Figure 5.3.11-2 and Table 5.3.11-14 and Table 5.3.11-15.

5.3.11.3 High Burnup PWR and BWR Rod and Lattice Shielding Model

MCBEND three-dimensional shielding analysis allows detailed modeling of the fuel, basket, and cask shield configurations. For the fuel rod sources, some fuel rod detail is homogenized in the model to simplify model input and improve computational efficiency. Thus, the three-dimensional models represent the various fuel assembly source regions as homogenized zones within the fuel assembly lattice width, but explicitly model the axial extent of the source regions. The basket and cask body details are explicitly modeled, including the axial extents described by the License Drawings.

The geometric description of a MCBEND model is based on the combinatorial geometry system embedded in the code. In this system, bodies such as cylinders and rectangular parallelepipeds, and their logical intersections and unions, are used to describe the extent of material zones.

MCBEND employs an automated biasing technique for the Monte Carlo calculation based on a three-dimensional adjoint diffusion calculation. Mesh cells for the adjoint solution are selected based on half value thicknesses for each material.

Fuel Assembly Model (Lattice and 25 Fuel Rods)

Based on the fuel parameters provided in Table 5.3.11-3 and Table 5.3.11-4, homogenized treatments of fuel assembly source regions are developed. The homogenized fuel assembly is represented in the model as a stack of boxes with width equal to the fuel assembly width. The height of each box corresponds to the modeled height of the corresponding assembly region.

The active fuel region homogenizations for the analyzed fuel types shown in Table 5.3.11-16 and Table 5.3.11-17 are based on the detailed three-dimensional data in Table 5.3.11-3 and Table 5.3.11-4. Components of the fuel assembly homogenization are subdivided to account for the various area fractions present in the homogenized fuel assembly description. “Interstitial” refers to the space within the fuel assembly array defined by the lattice pitch but outside the fuel rods. “Void” refers to the pellet to clad gap. Combined with the fuel rod clad and fuel material, the void accounts for the total fuel region volume. The clad region is zirconium alloy (density 6.55 g/cm^3) for all fuel types. For PWR fuel, the guide and instrument tube volumes are also considered in the fuel assembly homogenization. The activated steel/inconel in the active fuel region (Table 5.3.11-18) is added to the fuel material description as a final step.

Fuel assembly nonfuel regions are homogenized as shown in Table 5.3.11-18, based on the model parameters in Table 5.3.11-3 and Table 5.3.11-4. The only material included in the homogenized region is stainless steel. Volume fractions of material are based on the modeled

regional volume and the volume of stainless steel as computed from the modeled mass and density (7.92 g/cm^3 for stainless steel).

Damaged Fuel Model

Under hypothetical accident conditions, the high burnup rods in the fuel assembly lattice are assumed to reconfigure towards the upper region of the NAC-LWT cavity. Modeling the source in this location maximizes gamma streaming above the radial lead shield and neutron flux above the liquid neutron shield.

For each fuel type, a conservative compaction fraction is assumed in order to model all of the UO_2 above the upper elevation of the basket in the case of PWR fuel and above the PWR insert in the case of BWR fuel. Compaction fractions of 70% for BWR fuel and 50% for PWR fuel were employed to meet this height restriction. Based on these compaction fractions and the amount of UO_2 in 25 rods for each fuel type, damaged fuel heights are calculated as shown in Table 5.3.11-19.

Basket Model

For a given fuel type, the MCBEND description of the basket elements forms a common sub-model employed in the analysis. The key feature of the model is the detailed representation of the PWR basket. The BWR model adds the PWR insert required for shipment of a BWR fuel assembly in the PWR basket.

MCBEND NAC-LWT Model

The three-dimensional model of the NAC-LWT cask containing design basis fuel assemblies is based on the following features:

Normal conditions:

- Radial neutron shield and shield shell
- Aluminum impact limiters with 0.5 g/cm^3 density (calculated based on the impact limiter weight and dimensions) and diameter equal to the neutron shield shell diameter

Accident conditions:

- Removal of radial neutron shield and shield shell
- Loss of upper and lower impact limiters

Common to both the normal and accident conditions models is a 0.1374 cm gap between the lead outer diameter and the cask outer shell. For BWR fuel, the top of the fuel assembly is modeled flush with the top of the NAC-LWT cask cavity. For PWR fuel, the assembly-specific PWR

assembly spacer length is considered, yielding an offset ranging from 3.92 inches (9.96 cm) to 12.26 inches (31.14 cm) from the fuel assembly top to the top of the NAC-LWT cask cavity.

Detailed model parameters used in creating the three-dimensional model are taken directly from the License Drawings. Elevations associated with the three-dimensional features are established with respect to the center bottom of the NAC-LWT cask cavity for the MCBEND combinatorial model. The three-dimensional NAC-LWT models are shown in Figure 5.3.11-3 and Figure 5.3.11-4 for the modeled B&W 15×15 PWR lattice. A sample MCBEND input file for the PWR lattice evaluation is provided in Figure 5.3.11-8.

Shield Regional Densities

Based on the homogenization, the resulting active fuel regional densities are shown in Table 5.3.11-20 and Table 5.3.11-21. Material compositions for remaining structural and shield materials, as well as the BWR and PWR damaged fuel definitions, are shown in Table 5.3.11-22. Compositions for fuel assembly non-fuel regions are equivalent to the stainless steel composition in Table 5.3.11-22 scaled by the material volume fractions shown in Table 5.3.11-18.

5.3.11.4 High Burnup PWR and BWR Rod and Lattice Shielding Evaluation

The shielding evaluation is performed using MCBEND. As described in Section 5.3.11.2, the evaluation includes the effect of fuel burnup peaking on fuel neutron and gamma source terms.

The MCBEND shielding model described in Section 5.3.11.3 is utilized with the source terms described in Section 5.3.11.1 to estimate the dose rate profiles at various distances from the side, top and bottom of the cask for both normal and accident conditions. The method of solution is continuous energy Monte Carlo with an adjoint diffusion solution for generating importance meshes. Radial biasing is performed within the MCBEND code to estimate dose rates on the side of the cask. Axial biasing is performed to estimates dose rates on the top and bottom of the cask.

The MCBEND code has been validated against various classical shielding problems, including fast and thermal neutron sources penetrating through single material slab geometries of iron, graphite and water. The validation suite also includes fast neutron transmission through alternating slabs of iron and water. Of particular interest is a benchmark of MCBEND to gamma and neutron dose rates outside a metal transport cask, where agreement between measurement and calculation is within 20% for the majority of dose locations.

MCBEND results are calculated using the JEF2.2 neutron cross-section library and the ANSWERS gamma library.

MCBEND Flux-to-Dose Conversion Factors

The ANSI/ANS 6.1.1-1977 flux-to-dose rate conversion factors are employed in the MCBEND analysis. The ANSI/ANS gamma and neutron dose conversion factors are shown in Table 5.3.11-23 and Table 5.3.11-24. The number of energy/conversion factor pairs was increased to 133 neutron and 371 gamma pairs by a log-log interpolation scheme indicated as appropriate in ANSI/ANS 6.1.1-1977.

Three-Dimensional Dose Rates for High Burnup Fuel

Table 5.3.11-25 and Table 5.3.11-26 summarize the computed dose rates for each fuel type at the tabulated distances and transport conditions (normal and accident).

Normal condition radial surface dose rates for PWR and BWR fuel are in excess of 200 mrem/hr, necessitating an exclusive use designation for the NAC-LWT. The maximum dose rate, calculated for BWR 7×7 fuel, is dominated by the upper nozzle (end fitting) component, which comprises approximately 80% of the maximum dose rate. The axial elevation of the maximum dose rate is above the lead gamma shield. The dose rate profile is shown in Figure 5.3.11-5.

The normal condition maximum radial 2-meter dose rate is 9.9 mrem/hr, calculated for B&W 15×15 fuel. At this distance, the fuel gamma component contributes approximately 74% of the maximum. The maximum dose rate occurs near the fuel midplane, as shown Figure 5.3.11-6.

Accident condition radial 1-meter dose rates for all three fuel types are below the 1,000 mrem/hr limit. The maximum dose rate, calculated for BWR 7×7 fuel, is dominated by the damaged fuel neutron and damaged fuel gamma components, which each contribute approximately 47% towards the maximum. The axial elevation of the maximum dose rate is coincident with the top of the NAC-LWT cavity, the location of the damaged fuel material volume. The dose rate profile is shown in Figure 5.3.11-7.

As shown in Table 5.3.11-26, axial surface dose rates are well below limits for PWR and BWR fuel. Significant margin is present for the normal condition 2-meter and accident condition 1-meter dose rate limits.

Figure 5.3.11-1 PWR Lattice Axial Source Profiles

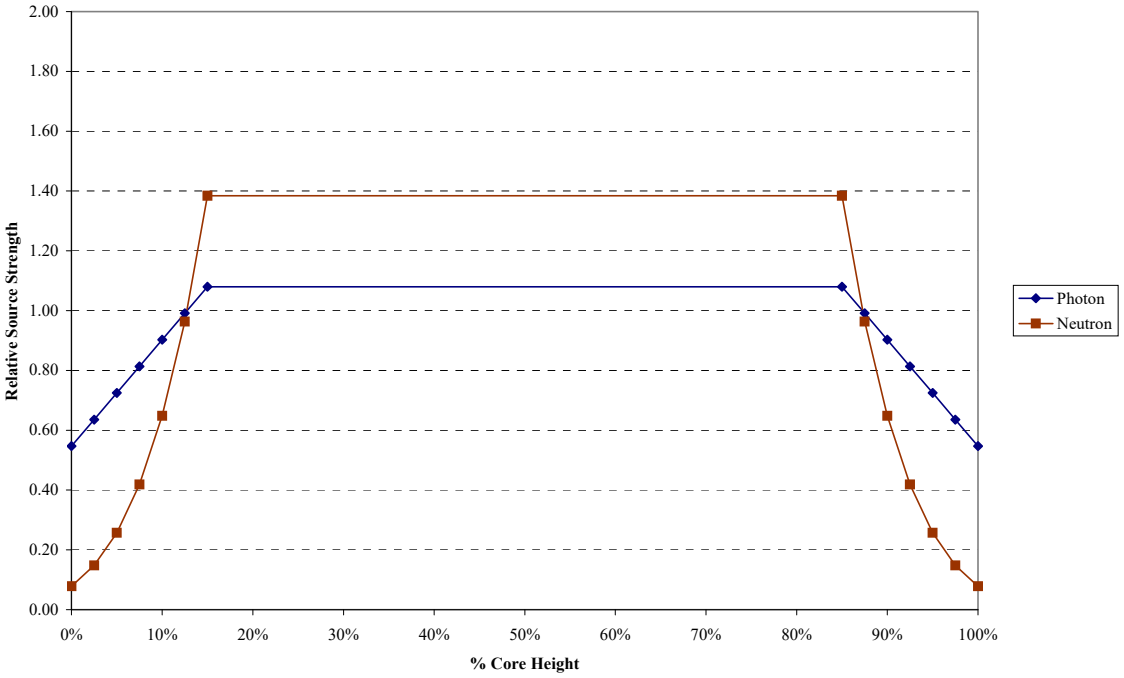

Figure 5.3.11-2 BWR Lattice Axial Source Profiles

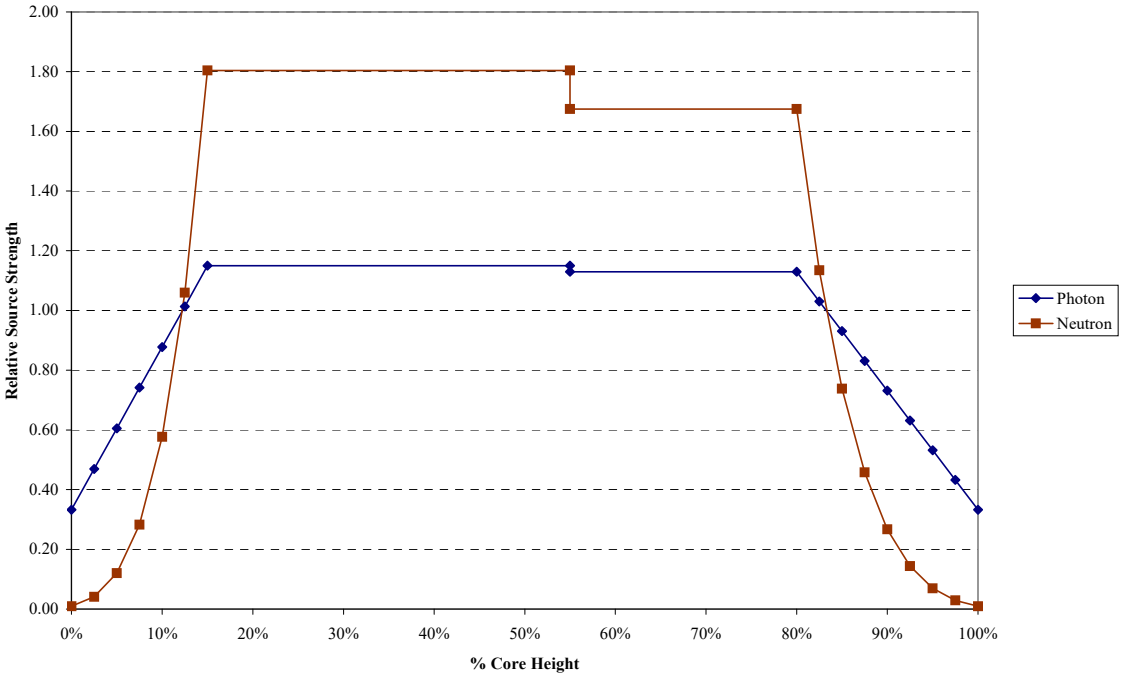

Figure 5.3.11-3 MCBEND Model of NAC-LWT with Fuel Assembly Lattice – Axial Detail

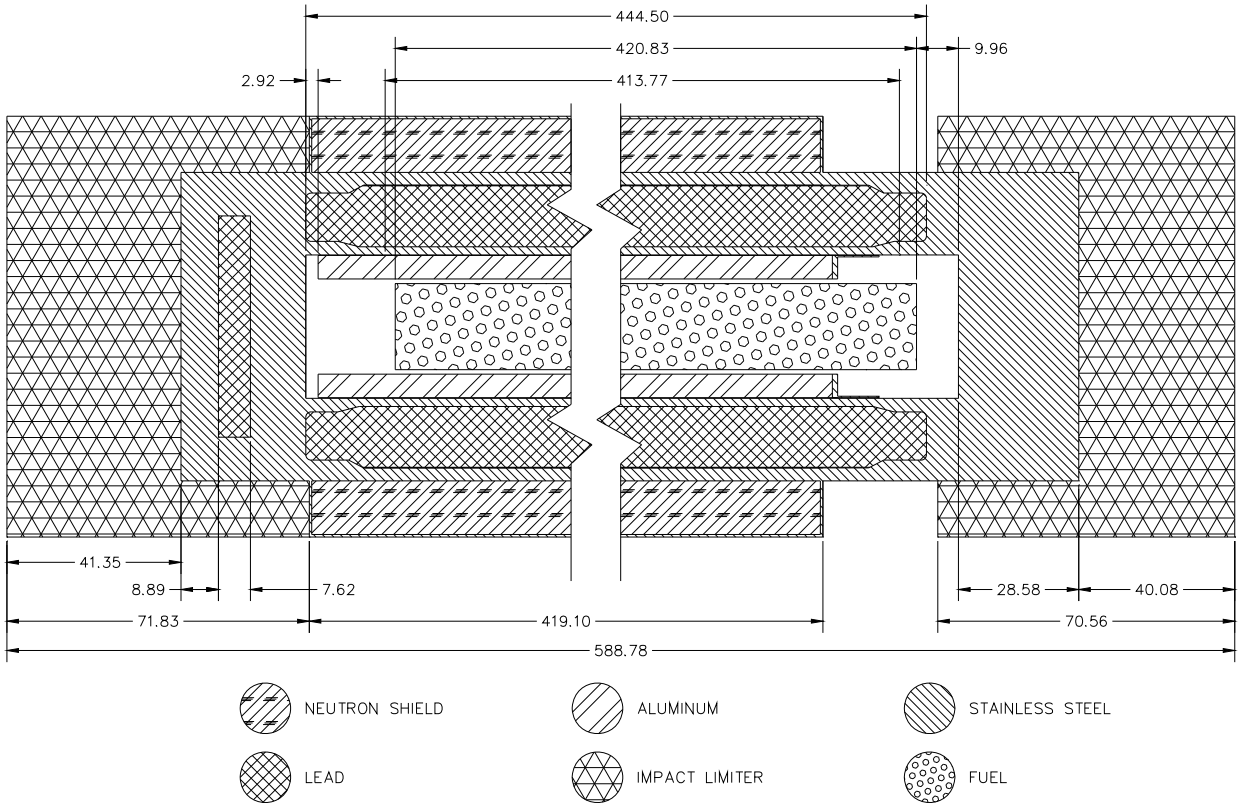

Dimensions in cm.

Figure 5.3.11-4 MCBEND Model of NAC-LWT with Fuel Assembly Lattice – Radial Detail

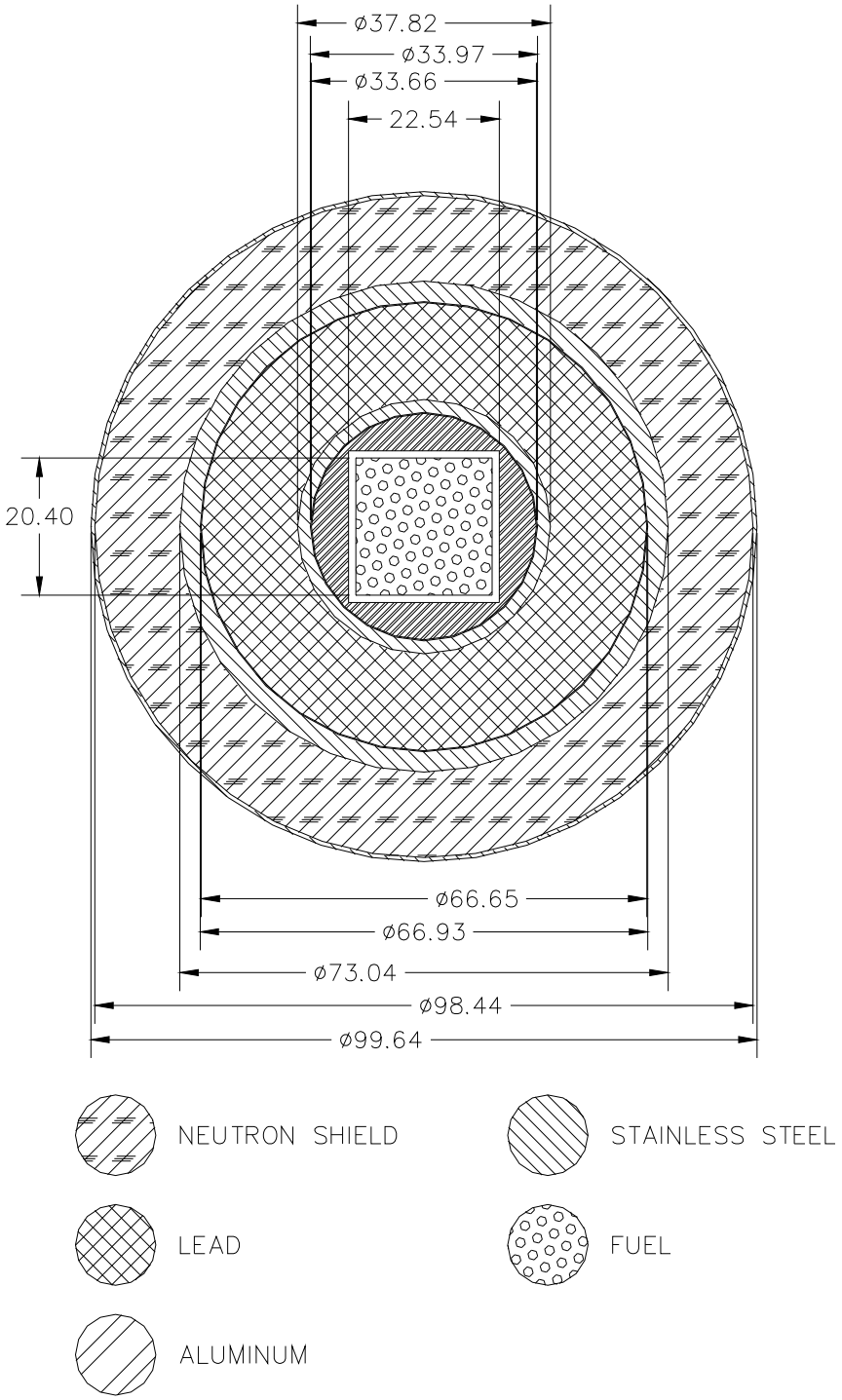

Dimensions in cm.

Figure 5.3.11-5 Normal Condition Radial Surface Dose Rate Profile by Source Type – Fuel Assembly Lattice

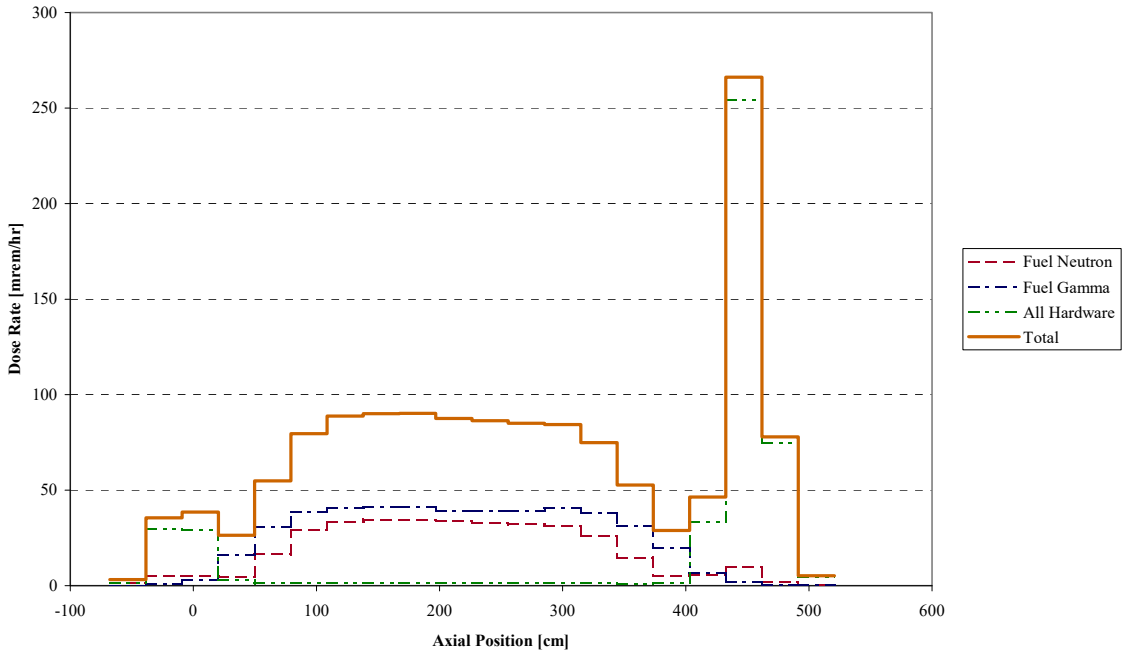

Figure 5.3.11-6 Normal Condition Radial 2m Dose Rate Profile by Source Type – Fuel Assembly Lattice

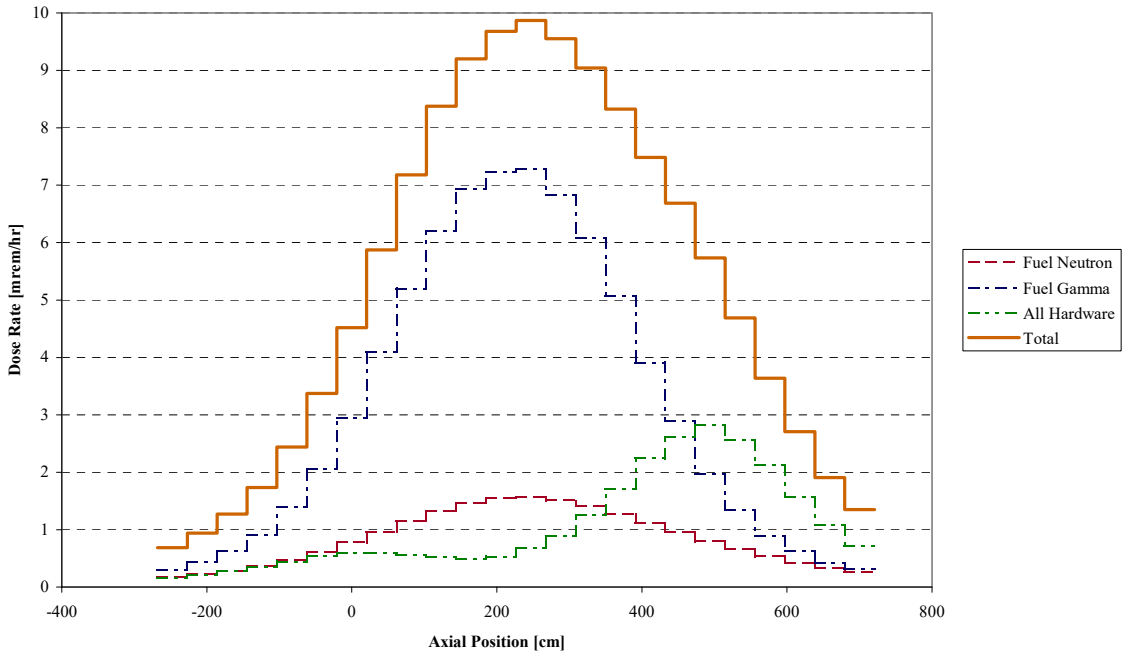

Figure 5.3.11-7 Accident Condition Radial 1m Dose Rate Profile by Source Type – Fuel Assembly Lattice

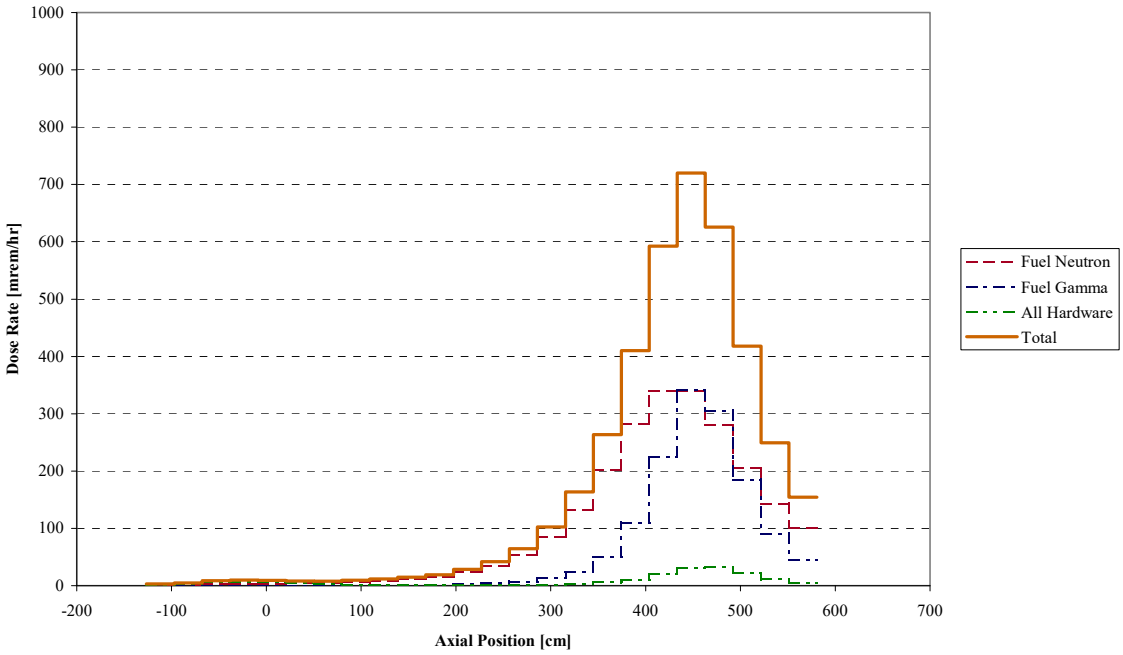

Figure 5.3.11-8 MCBEND Input – High Burnup Fuel Lattice – Radial Fuel Gamma

```
columns 1 200
*
*   LWT Cask - lwtNrmRadFg_bw15b_80b40e150d
*   Normal Transport Conditions
*   Model Revision v1.9.2
*

*
* Parameters
*
@samps =    10000000

*
* Unit 1 Control Data
*
begin control data
    run
    sample limit     @samps
    time limit     1000m
    seeds    76008    97592
    chime every    [@samps/10]    samples
    report interim results
    sbd    30s
    dump intervals    1
end

*
* Unit 3 Output Control
*
*begin output control
*    suppress inflows
*end

*
* Unit 4 Material Geometry
*
begin material geometry
* LWR Fuel Assembly - Class 2 - bw15b - B&W15 (Mark BZ)
PART    1    NEST
BOX    M2         0.0000    0.0000    0.0000    21.6814    21.6814    18.4087    ! lower nozzle
BOX    M1    S    0.0000    0.0000    0.0000    21.6814    21.6814    384.1687    ! fuel
BOX    M4         0.0000    0.0000    0.0000    21.6814    21.6814    395.6050    ! top plenum
BOX    M3         0.0000    0.0000    0.0000    21.6814    21.6814    420.6875    ! upper nozzle
* PWR Fuel Basket v1.9
PART    2
BOX    1    -10.8407    -10.8407    21.4757    21.6814    21.6814    420.6875        ! Fuel assembly
BOX    2    -11.2713    -11.2713    0.0000    22.5425    22.5425    442.1632        ! Fuel assembly void
ZROD    3    0.0000    0.0000    2.9210    16.8275    410.2100            ! Basket
BOX    4    -11.6743    -11.6743    413.1310    23.3487    23.3487    1.2700        ! Flange inner
ZROD    5    0.0000    0.0000    413.1310    16.8351    1.2700            ! Flange outer
ZROD    6    0.0000    0.0000    414.4010    16.5100    9.8552            ! Ring inner
ZROD    7    0.0000    0.0000    414.4010    16.8351    9.8552            ! Ring outer
ZP    8    433.3012                          ! Cut plane
ZROD    9    0.0000    0.0000    0.0000    16.8351    452.1200            ! Container
ZONES
/FuelAssy/    P1    +1
/FuelAssyVoid/    M0    +2    -1    -8
/Basket/    M7    +3    -2
/FlangeVoid/    M0    +4    -2
/Flange/    M9    +5    -4
/RingVoid/    M0    +6    -2
/Ring/    M9    +7    -6
/Void/    M0    +8    +9    -1
/Container/    M0    +9    -2    -3    -5    -7    -8
VOLUMES UNITY
* PWR Fuel Basket in Cask Cavity v1.9
PART    3
ZROD    1    0.0000    0.0000    0.0000    16.8351    452.1200            ! PWR basket
ZROD    2    0.0000    0.0000    0.0000    16.9863    452.1200            ! Cavity
ZONES
/PWRBasket/    P2    +1
/Cavity/    M0    +2    -1
VOLUMES UNITY
* LWT Cask Normal Conditions v1.9
PART    4
ZROD    1    0.0000    0.0000    -26.6700    36.5189    507.3650        ! Lwt
ZROD    2    0.0000    0.0000    -26.6700    36.5189    26.6700        ! Bottom
ZROD    3    0.0000    0.0000    0.0000    16.9863    452.1200        ! Cavity
ZROD    4    0.0000    0.0000    -17.7800    26.3525    7.6200        ! Bottom gamma shield
ZROD    5    0.0000    0.0000    0.0000    20.1740    444.5000        ! Lead id - taper
ZROD    6    0.0000    0.0000    0.0000    31.5976    444.5000        ! Lead od - taper
ZROD    7    0.0000    0.0000    13.8176    18.9103    416.8648        ! Lead id
ZROD    8    0.0000    0.0000    13.8176    33.3271    416.8648        ! Lead od
ZROD    9    0.0000    0.0000    13.8176    33.4645    416.8648        ! Lead gap
ZROD    10    0.0000    0.0000    3.8100    49.8183    419.1000        ! Neutron shield shell
ZROD    11    0.0000    0.0000    5.0800    49.2189    416.5600        ! Neutron shield
ZROD    12    0.0000    0.0000    450.2150    49.8183    70.5612        ! Upper limiter
ZROD    13    0.0000    0.0000    -68.0212    49.8183    71.8312        ! Lower limiter
ZROD    14    0.0000    0.0000    -68.0212    49.8183    588.7974        ! Container
ZONES
/BotPb/    M8    +4
/Cavity/    P3    +3
```

Table 5.3.11-8 CBEND Input – High Burnup Fuel Lattice – Radial Fuel Gamma (Continued)

```
/Bottom/    M9    +2    -4
/OuterShell/    M9    +1    -2    -6    -9    -3
/InnerShellTaper/    M9    +5    -8    -3
/InnerShell/    M9    +7    -3
/Lead/    M8    +8    -7
/LeadTaper/    M8    +6    -5    -8
/LeadGap/    M0    +9    -8
/NeutronShield/    M6    +11    -1
/NSShell/    M9    +10    -1    -11
/UpperLimiter/    M10    +12    -1
/LowerLimiter/    M10    +13    -1
/Exterior/    M0    +14    -1    -10    -12    -13
VOLUMES UNITY
* LWT Cask Detector Description v1.9
PART    5
* Radial Detector DRA (Surface) Bodies
ZROD      1                   0.0000    0.0000    -68.0212  49.8183   588.7974
ZROD      2                   0.0000    0.0000    -68.0212  50.8183   29.4399
ZROD      3                   0.0000    0.0000    -38.5813  50.8183   29.4399
ZROD      4                   0.0000    0.0000    -9.1415   50.8183   29.4399
ZROD      5                   0.0000    0.0000    20.2984   50.8183   29.4399
ZROD      6                   0.0000    0.0000    49.7383   50.8183   29.4399
ZROD      7                   0.0000    0.0000    79.1782   50.8183   29.4399
ZROD      8                   0.0000    0.0000    108.6180  50.8183   29.4399
ZROD      9                   0.0000    0.0000    138.0579  50.8183   29.4399
ZROD      10                  0.0000    0.0000    167.4978  50.8183   29.4399
ZROD      11                  0.0000    0.0000    196.9376  50.8183   29.4399
ZROD      12                  0.0000    0.0000    226.3775  50.8183   29.4399
ZROD      13                  0.0000    0.0000    255.8174  50.8183   29.4399
ZROD      14                  0.0000    0.0000    285.2572  50.8183   29.4399
ZROD      15                  0.0000    0.0000    314.6971  50.8183   29.4399
ZROD      16                  0.0000    0.0000    344.1370  50.8183   29.4399
ZROD      17                  0.0000    0.0000    373.5769  50.8183   29.4399
ZROD      18                  0.0000    0.0000    403.0167  50.8183   29.4399
ZROD      19                  0.0000    0.0000    432.4566  50.8183   29.4399
ZROD      20                  0.0000    0.0000    461.8965  50.8183   29.4399
ZROD      21                  0.0000    0.0000    491.3363  50.8183   29.4399
* Radial Detector DRAA (SurfaceAzi) Bodies
ZROD      22                  0.0000    0.0000    -69.0212  50.8183   590.7974
*   Band 1 Bodies
ZSEC      23                  0.0000    0.0000    444.5000  50.8183   51.8183   36.1950   0.0000    12.0000
ZSEC      24                  0.0000    0.0000    444.5000  50.8183   51.8183   36.1950   12.0000   24.0000
ZSEC      25                  0.0000    0.0000    444.5000  50.8183   51.8183   36.1950   24.0000   36.0000
ZSEC      26                  0.0000    0.0000    444.5000  50.8183   51.8183   36.1950   36.0000   48.0000
ZSEC      27                  0.0000    0.0000    444.5000  50.8183   51.8183   36.1950   48.0000   60.0000
ZSEC      28                  0.0000    0.0000    444.5000  50.8183   51.8183   36.1950   60.0000   72.0000
ZSEC      29                  0.0000    0.0000    444.5000  50.8183   51.8183   36.1950   72.0000   84.0000
ZSEC      30                  0.0000    0.0000    444.5000  50.8183   51.8183   36.1950   84.0000   96.0000
ZSEC      31                  0.0000    0.0000    444.5000  50.8183   51.8183   36.1950   96.0000   108.0000
ZSEC      32                  0.0000    0.0000    444.5000  50.8183   51.8183   36.1950   108.0000  120.0000
ZSEC      33                  0.0000    0.0000    444.5000  50.8183   51.8183   36.1950   120.0000  132.0000
ZSEC      34                  0.0000    0.0000    444.5000  50.8183   51.8183   36.1950   132.0000  144.0000
ZSEC      35                  0.0000    0.0000    444.5000  50.8183   51.8183   36.1950   144.0000  156.0000
ZSEC      36                  0.0000    0.0000    444.5000  50.8183   51.8183   36.1950   156.0000  168.0000
ZSEC      37                  0.0000    0.0000    444.5000  50.8183   51.8183   36.1950   168.0000  180.0000
ZSEC      38                  0.0000    0.0000    444.5000  50.8183   51.8183   36.1950   180.0000  192.0000
ZSEC      39                  0.0000    0.0000    444.5000  50.8183   51.8183   36.1950   192.0000  204.0000
ZSEC      40                  0.0000    0.0000    444.5000  50.8183   51.8183   36.1950   204.0000  216.0000
ZSEC      41                  0.0000    0.0000    444.5000  50.8183   51.8183   36.1950   216.0000  228.0000
ZSEC      42                  0.0000    0.0000    444.5000  50.8183   51.8183   36.1950   228.0000  240.0000
ZSEC      43                  0.0000    0.0000    444.5000  50.8183   51.8183   36.1950   240.0000  252.0000
ZSEC      44                  0.0000    0.0000    444.5000  50.8183   51.8183   36.1950   252.0000  264.0000
ZSEC      45                  0.0000    0.0000    444.5000  50.8183   51.8183   36.1950   264.0000  276.0000
ZSEC      46                  0.0000    0.0000    444.5000  50.8183   51.8183   36.1950   276.0000  288.0000
ZSEC      47                  0.0000    0.0000    444.5000  50.8183   51.8183   36.1950   288.0000  300.0000
ZSEC      48                  0.0000    0.0000    444.5000  50.8183   51.8183   36.1950   300.0000  312.0000
ZSEC      49                  0.0000    0.0000    444.5000  50.8183   51.8183   36.1950   312.0000  324.0000
ZSEC      50                  0.0000    0.0000    444.5000  50.8183   51.8183   36.1950   324.0000  336.0000
ZSEC      51                  0.0000    0.0000    444.5000  50.8183   51.8183   36.1950   336.0000  348.0000
ZSEC      52                  0.0000    0.0000    444.5000  50.8183   51.8183   36.1950   348.0000  360.0000
* Radial Detector DRB (1ft) Bodies
ZROD      53                  0.0000    0.0000    -98.5012  80.2983   649.7574
ZROD      54                  0.0000    0.0000    -98.5012  81.2983   32.4879
ZROD      55                  0.0000    0.0000    -66.0133  81.2983   32.4879
ZROD      56                  0.0000    0.0000    -33.5255  81.2983   32.4879
ZROD      57                  0.0000    0.0000    -1.0376   81.2983   32.4879
ZROD      58                  0.0000    0.0000    31.4503   81.2983   32.4879
ZROD      59                  0.0000    0.0000    63.9382   81.2983   32.4879
ZROD      60                  0.0000    0.0000    96.4260   81.2983   32.4879
ZROD      61                  0.0000    0.0000    128.9139  81.2983   32.4879
ZROD      62                  0.0000    0.0000    161.4018  81.2983   32.4879
ZROD      63                  0.0000    0.0000    193.8896  81.2983   32.4879
ZROD      64                  0.0000    0.0000    226.3775  81.2983   32.4879
ZROD      65                  0.0000    0.0000    258.8654  81.2983   32.4879
ZROD      66                  0.0000    0.0000    291.3532  81.2983   32.4879
ZROD      67                  0.0000    0.0000    323.8411  81.2983   32.4879
ZROD      68                  0.0000    0.0000    356.3290  81.2983   32.4879
ZROD      69                  0.0000    0.0000    388.8169  81.2983   32.4879
ZROD      70                  0.0000    0.0000    421.3047  81.2983   32.4879
ZROD      71                  0.0000    0.0000    453.7926  81.2983   32.4879
ZROD      72                  0.0000    0.0000    486.2805  81.2983   32.4879
ZROD      73                  0.0000    0.0000    518.7683  81.2983   32.4879
* Radial Detector DRC (1m) Bodies
ZROD      74                  0.0000    0.0000    -168.0212 149.8183  788.7974
```

Table 5.3.11-8 CBEND Input – High Burnup Fuel Lattice – Radial Fuel Gamma (Continued)

```
ZROD      75                  0.0000    0.0000    -168.0212 150.8183  32.8666
ZROD      76                  0.0000    0.0000    -135.1546 150.8183  32.8666
ZROD      77                  0.0000    0.0000    -102.2881 150.8183  32.8666
ZROD      78                  0.0000    0.0000    -69.4215  150.8183  32.8666
ZROD      79                  0.0000    0.0000    -36.5550  150.8183  32.8666
ZROD      80                  0.0000    0.0000    -3.6884   150.8183  32.8666
ZROD      81                  0.0000    0.0000    29.1782   150.8183  32.8666
ZROD      82                  0.0000    0.0000    62.0447   150.8183  32.8666
ZROD      83                  0.0000    0.0000    94.9113   150.8183  32.8666
ZROD      84                  0.0000    0.0000    127.7778  150.8183  32.8666
ZROD      85                  0.0000    0.0000    160.6444  150.8183  32.8666
ZROD      86                  0.0000    0.0000    193.5109  150.8183  32.8666
ZROD      87                  0.0000    0.0000    226.3775  150.8183  32.8666
ZROD      88                  0.0000    0.0000    259.2441  150.8183  32.8666
ZROD      89                  0.0000    0.0000    292.1106  150.8183  32.8666
ZROD      90                  0.0000    0.0000    324.9772  150.8183  32.8666
ZROD      91                  0.0000    0.0000    357.8437  150.8183  32.8666
ZROD      92                  0.0000    0.0000    390.7103  150.8183  32.8666
ZROD      93                  0.0000    0.0000    423.5769  150.8183  32.8666
ZROD      94                  0.0000    0.0000    456.4434  150.8183  32.8666
ZROD      95                  0.0000    0.0000    489.3100  150.8183  32.8666
ZROD      96                  0.0000    0.0000    522.1765  150.8183  32.8666
ZROD      97                  0.0000    0.0000    555.0431  150.8183  32.8666
ZROD      98                  0.0000    0.0000    587.9096  150.8183  32.8666
* Radial Detector DRD (2m) Bodies
ZROD      99                  0.0000    0.0000    -268.0212 249.8183  988.7974
ZROD      100                 0.0000    0.0000    -268.0212 250.8183  41.1999
ZROD      101                 0.0000    0.0000    -226.8213 250.8183  41.1999
ZROD      102                 0.0000    0.0000    -185.6214 250.8183  41.1999
ZROD      103                 0.0000    0.0000    -144.4215 250.8183  41.1999
ZROD      104                 0.0000    0.0000    -103.2216 250.8183  41.1999
ZROD      105                 0.0000    0.0000    -62.0217  250.8183  41.1999
ZROD      106                 0.0000    0.0000    -20.8219  250.8183  41.1999
ZROD      107                 0.0000    0.0000    20.3780   250.8183  41.1999
ZROD      108                 0.0000    0.0000    61.5779   250.8183  41.1999
ZROD      109                 0.0000    0.0000    102.7778  250.8183  41.1999
ZROD      110                 0.0000    0.0000    143.9777  250.8183  41.1999
ZROD      111                 0.0000    0.0000    185.1776  250.8183  41.1999
ZROD      112                 0.0000    0.0000    226.3775  250.8183  41.1999
ZROD      113                 0.0000    0.0000    267.5774  250.8183  41.1999
ZROD      114                 0.0000    0.0000    308.7773  250.8183  41.1999
ZROD      115                 0.0000    0.0000    349.9772  250.8183  41.1999
ZROD      116                 0.0000    0.0000    391.1771  250.8183  41.1999
ZROD      117                 0.0000    0.0000    432.3770  250.8183  41.1999
ZROD      118                 0.0000    0.0000    473.5769  250.8183  41.1999
ZROD      119                 0.0000    0.0000    514.7767  250.8183  41.1999
ZROD      120                 0.0000    0.0000    555.9766  250.8183  41.1999
ZROD      121                 0.0000    0.0000    597.1765  250.8183  41.1999
ZROD      122                 0.0000    0.0000    638.3764  250.8183  41.1999
ZROD      123                 0.0000    0.0000    679.5763  250.8183  41.1999
* Radial Detector DRE (2m+Convey) Bodies
ZROD      124                 0.0000    0.0000    -269.0212 321.9200  990.7974
ZROD      125                 0.0000    0.0000    -268.0212 322.9200  41.1999
ZROD      126                 0.0000    0.0000    -226.8213 322.9200  41.1999
ZROD      127                 0.0000    0.0000    -185.6214 322.9200  41.1999
ZROD      128                 0.0000    0.0000    -144.4215 322.9200  41.1999
ZROD      129                 0.0000    0.0000    -103.2216 322.9200  41.1999
ZROD      130                 0.0000    0.0000    -62.0217  322.9200  41.1999
ZROD      131                 0.0000    0.0000    -20.8219  322.9200  41.1999
ZROD      132                 0.0000    0.0000    20.3780   322.9200  41.1999
ZROD      133                 0.0000    0.0000    61.5779   322.9200  41.1999
ZROD      134                 0.0000    0.0000    102.7778  322.9200  41.1999
ZROD      135                 0.0000    0.0000    143.9777  322.9200  41.1999
ZROD      136                 0.0000    0.0000    185.1776  322.9200  41.1999
ZROD      137                 0.0000    0.0000    226.3775  322.9200  41.1999
ZROD      138                 0.0000    0.0000    267.5774  322.9200  41.1999
ZROD      139                 0.0000    0.0000    308.7773  322.9200  41.1999
ZROD      140                 0.0000    0.0000    349.9772  322.9200  41.1999
ZROD      141                 0.0000    0.0000    391.1771  322.9200  41.1999
ZROD      142                 0.0000    0.0000    432.3770  322.9200  41.1999
ZROD      143                 0.0000    0.0000    473.5769  322.9200  41.1999
ZROD      144                 0.0000    0.0000    514.7767  322.9200  41.1999
ZROD      145                 0.0000    0.0000    555.9766  322.9200  41.1999
ZROD      146                 0.0000    0.0000    597.1765  322.9200  41.1999
ZROD      147                 0.0000    0.0000    638.3764  322.9200  41.1999
ZROD      148                 0.0000    0.0000    679.5763  322.9200  41.1999
* Radial Detector DREE (2m+ConveyAzi) Bodies
ZROD      149                 0.0000    0.0000    -270.0212 322.9200  992.7974
*   Band 1 Bodies
ZSEC      150                 0.0000    0.0000    444.5000  322.9200  323.9200  46.1950   0.0000    12.0000
ZSEC      151                 0.0000    0.0000    444.5000  322.9200  323.9200  46.1950   12.0000   24.0000
ZSEC      152                 0.0000    0.0000    444.5000  322.9200  323.9200  46.1950   24.0000   36.0000
ZSEC      153                 0.0000    0.0000    444.5000  322.9200  323.9200  46.1950   36.0000   48.0000
ZSEC      154                 0.0000    0.0000    444.5000  322.9200  323.9200  46.1950   48.0000   60.0000
ZSEC      155                 0.0000    0.0000    444.5000  322.9200  323.9200  46.1950   60.0000   72.0000
ZSEC      156                 0.0000    0.0000    444.5000  322.9200  323.9200  46.1950   72.0000   84.0000
ZSEC      157                 0.0000    0.0000    444.5000  322.9200  323.9200  46.1950   84.0000   96.0000
ZSEC      158                 0.0000    0.0000    444.5000  322.9200  323.9200  46.1950   96.0000   108.0000
ZSEC      159                 0.0000    0.0000    444.5000  322.9200  323.9200  46.1950   108.0000  120.0000
ZSEC      160                 0.0000    0.0000    444.5000  322.9200  323.9200  46.1950   120.0000  132.0000
ZSEC      161                 0.0000    0.0000    444.5000  322.9200  323.9200  46.1950   132.0000  144.0000
ZSEC      162                 0.0000    0.0000    444.5000  322.9200  323.9200  46.1950   144.0000  156.0000
```

Table 5.3.11-8 CBEND Input – High Burnup Fuel Lattice – Radial Fuel Gamma (Continued)

```
ZSEC      163                0.0000    0.0000    444.5000  322.9200  323.9200  46.1950   156.0000  168.0000
ZSEC      164                0.0000    0.0000    444.5000  322.9200  323.9200  46.1950   168.0000  180.0000
ZSEC      165                0.0000    0.0000    444.5000  322.9200  323.9200  46.1950   180.0000  192.0000
ZSEC      166                0.0000    0.0000    444.5000  322.9200  323.9200  46.1950   192.0000  204.0000
ZSEC      167                0.0000    0.0000    444.5000  322.9200  323.9200  46.1950   204.0000  216.0000
ZSEC      168                0.0000    0.0000    444.5000  322.9200  323.9200  46.1950   216.0000  228.0000
ZSEC      169                0.0000    0.0000    444.5000  322.9200  323.9200  46.1950   228.0000  240.0000
ZSEC      170                0.0000    0.0000    444.5000  322.9200  323.9200  46.1950   240.0000  252.0000
ZSEC      171                0.0000    0.0000    444.5000  322.9200  323.9200  46.1950   252.0000  264.0000
ZSEC      172                0.0000    0.0000    444.5000  322.9200  323.9200  46.1950   264.0000  276.0000
ZSEC      173                0.0000    0.0000    444.5000  322.9200  323.9200  46.1950   276.0000  288.0000
ZSEC      174                0.0000    0.0000    444.5000  322.9200  323.9200  46.1950   288.0000  300.0000
ZSEC      175                0.0000    0.0000    444.5000  322.9200  323.9200  46.1950   300.0000  312.0000
ZSEC      176                0.0000    0.0000    444.5000  322.9200  323.9200  46.1950   312.0000  324.0000
ZSEC      177                0.0000    0.0000    444.5000  322.9200  323.9200  46.1950   324.0000  336.0000
ZSEC      178                0.0000    0.0000    444.5000  322.9200  323.9200  46.1950   336.0000  348.0000
ZSEC      179                0.0000    0.0000    444.5000  322.9200  323.9200  46.1950   348.0000  360.0000
* World
ZROD      180                0.0000    0.0000    -320.0212 372.9200  1092.7974
* External Void
ZROD      181                0.0000    0.0000    -370.0212 422.9200  1192.7974

ZONES
/LWTCask/ P4        +1
* Detector DRA (Surface)
/DRA01/   M0        +2        -1
/DRA02/   M0        +3        -1
/DRA03/   M0        +4        -1
/DRA04/   M0        +5        -1
/DRA05/   M0        +6        -1
/DRA06/   M0        +7        -1
/DRA07/   M0        +8        -1
/DRA08/   M0        +9        -1
/DRA09/   M0        +10       -1
/DRA10/   M0        +11       -1
/DRA11/   M0        +12       -1
/DRA12/   M0        +13       -1
/DRA13/   M0        +14       -1
/DRA14/   M0        +15       -1
/DRA15/   M0        +16       -1
/DRA16/   M0        +17       -1
/DRA17/   M0        +18       -1
/DRA18/   M0        +19       -1
/DRA19/   M0        +20       -1
/DRA20/   M0        +21       -1
/Void/    M0        +22       -1
                    -2        -3        -4        -5        -6        -7
                    -8        -9        -10       -11       -12       -13
                    -14       -15       -16       -17       -18       -19
                    -20       -21
* Detector DRAA (SurfaceAzi)
/DRAA0101/          M0        +23
/DRAA0102/          M0        +24
/DRAA0103/          M0        +25
/DRAA0104/          M0        +26
/DRAA0105/          M0        +27
/DRAA0106/          M0        +28
/DRAA0107/          M0        +29
/DRAA0108/          M0        +30
/DRAA0109/          M0        +31
/DRAA0110/          M0        +32
/DRAA0111/          M0        +33
/DRAA0112/          M0        +34
/DRAA0113/          M0        +35
/DRAA0114/          M0        +36
/DRAA0115/          M0        +37
/DRAA0116/          M0        +38
/DRAA0117/          M0        +39
/DRAA0118/          M0        +40
/DRAA0119/          M0        +41
/DRAA0120/          M0        +42
/DRAA0121/          M0        +43
/DRAA0122/          M0        +44
/DRAA0123/          M0        +45
/DRAA0124/          M0        +46
/DRAA0125/          M0        +47
/DRAA0126/          M0        +48
/DRAA0127/          M0        +49
/DRAA0128/          M0        +50
/DRAA0129/          M0        +51
/DRAA0130/          M0        +52
/Void/    M0        +53       -22
                    -23       -24       -25       -26       -27       -28
                    -29       -30       -31       -32       -33       -34
                    -35       -36       -37       -38       -39       -40
                    -41       -42       -43       -44       -45       -46
                    -47       -48       -49       -50       -51       -52
* Detector DRB (1ft)
/DRB01/   M0        +54       -53
/DRB02/   M0        +55       -53
/DRB03/   M0        +56       -53
/DRB04/   M0        +57       -53
/DRB05/   M0        +58       -53
/DRB06/   M0        +59       -53
/DRB07/   M0        +60       -53
/DRB08/   M0        +61       -53
/DRB09/   M0        +62       -53
```

Table 5.3.11-8 CBEND Input – High Burnup Fuel Lattice – Radial Fuel Gamma (Continued)

```
/DRB10/   M0        +63       -53
/DRB11/   M0        +64       -53
/DRB12/   M0        +65       -53
/DRB13/   M0        +66       -53
/DRB14/   M0        +67       -53
/DRB15/   M0        +68       -53
/DRB16/   M0        +69       -53
/DRB17/   M0        +70       -53
/DRB18/   M0        +71       -53
/DRB19/   M0        +72       -53
/DRB20/   M0        +73       -53
/Void/    M0        +74       -53
                    -54       -55       -56       -57       -58       -59
                    -60       -61       -62       -63       -64       -65
                    -66       -67       -68       -69       -70       -71
                    -72       -73
* Detector DRC (1m)
/DRC01/   M0        +75       -74
/DRC02/   M0        +76       -74
/DRC03/   M0        +77       -74
/DRC04/   M0        +78       -74
/DRC05/   M0        +79       -74
/DRC06/   M0        +80       -74
/DRC07/   M0        +81       -74
/DRC08/   M0        +82       -74
/DRC09/   M0        +83       -74
/DRC10/   M0        +84       -74
/DRC11/   M0        +85       -74
/DRC12/   M0        +86       -74
/DRC13/   M0        +87       -74
/DRC14/   M0        +88       -74
/DRC15/   M0        +89       -74
/DRC16/   M0        +90       -74
/DRC17/   M0        +91       -74
/DRC18/   M0        +92       -74
/DRC19/   M0        +93       -74
/DRC20/   M0        +94       -74
/DRC21/   M0        +95       -74
/DRC22/   M0        +96       -74
/DRC23/   M0        +97       -74
/DRC24/   M0        +98       -74
/Void/    M0        +99       -74
                    -75       -76       -77       -78       -79       -80
                    -81       -82       -83       -84       -85       -86
                    -87       -88       -89       -90       -91       -92
                    -93       -94       -95       -96       -97       -98
* Detector DRD (2m)
/DRD01/   M0        +100      -99
/DRD02/   M0        +101      -99
/DRD03/   M0        +102      -99
/DRD04/   M0        +103      -99
/DRD05/   M0        +104      -99
/DRD06/   M0        +105      -99
/DRD07/   M0        +106      -99
/DRD08/   M0        +107      -99
/DRD09/   M0        +108      -99
/DRD10/   M0        +109      -99
/DRD11/   M0        +110      -99
/DRD12/   M0        +111      -99
/DRD13/   M0        +112      -99
/DRD14/   M0        +113      -99
/DRD15/   M0        +114      -99
/DRD16/   M0        +115      -99
/DRD17/   M0        +116      -99
/DRD18/   M0        +117      -99
/DRD19/   M0        +118      -99
/DRD20/   M0        +119      -99
/DRD21/   M0        +120      -99
/DRD22/   M0        +121      -99
/DRD23/   M0        +122      -99
/DRD24/   M0        +123      -99
/Void/    M0        +124      -99
                    -100      -101      -102      -103      -104      -105
                    -106      -107      -108      -109      -110      -111
                    -112      -113      -114      -115      -116      -117
                    -118      -119      -120      -121      -122      -123
* Detector DRE (2m+Convey)
/DRE01/   M0        +125      -124
/DRE02/   M0        +126      -124
/DRE03/   M0        +127      -124
/DRE04/   M0        +128      -124
/DRE05/   M0        +129      -124
/DRE06/   M0        +130      -124
/DRE07/   M0        +131      -124
/DRE08/   M0        +132      -124
/DRE09/   M0        +133      -124
/DRE10/   M0        +134      -124
/DRE11/   M0        +135      -124
/DRE12/   M0        +136      -124
/DRE13/   M0        +137      -124
/DRE14/   M0        +138      -124
/DRE15/   M0        +139      -124
/DRE16/   M0        +140      -124
/DRE17/   M0        +141      -124
/DRE18/   M0        +142      -124
```

Table 5.3.11-8 CBEND Input – High Burnup Fuel Lattice – Radial Fuel Gamma (Continued)

```
/DRE19/   M0        +143      -124
/DRE20/   M0        +144      -124
/DRE21/   M0        +145      -124
/DRE22/   M0        +146      -124
/DRE23/   M0        +147      -124
/DRE24/   M0        +148      -124
/Void/    M0        +149      -124
                    -125      -126      -127      -128      -129      -130
                    -131      -132      -133      -134      -135      -136
                    -137      -138      -139      -140      -141      -142
                    -143      -144      -145      -146      -147      -148
* Detector DREE (2m+ConveyAzi)
/DREE0101/          M0        +150
/DREE0102/          M0        +151
/DREE0103/          M0        +152
/DREE0104/          M0        +153
/DREE0105/          M0        +154
/DREE0106/          M0        +155
/DREE0107/          M0        +156
/DREE0108/          M0        +157
/DREE0109/          M0        +158
/DREE0110/          M0        +159
/DREE0111/          M0        +160
/DREE0112/          M0        +161
/DREE0113/          M0        +162
/DREE0114/          M0        +163
/DREE0115/          M0        +164
/DREE0116/          M0        +165
/DREE0117/          M0        +166
/DREE0118/          M0        +167
/DREE0119/          M0        +168
/DREE0120/          M0        +169
/DREE0121/          M0        +170
/DREE0122/          M0        +171
/DREE0123/          M0        +172
/DREE0124/          M0        +173
/DREE0125/          M0        +174
/DREE0126/          M0        +175
/DREE0127/          M0        +176
/DREE0128/          M0        +177
/DREE0129/          M0        +178
/DREE0130/          M0        +179
/Void/    M0        +180      -149
                    -150      -151      -152      -153      -154      -155
                    -156      -157      -158      -159      -160      -161
                    -162      -163      -164      -165      -166      -167
                    -168      -169      -170      -171      -172      -173
                    -174      -175      -176      -177      -178      -179
/ExtVoid/ M-2000    +181      -180
Volumes
                    1.0       20*9.3077E+03       1.0       30*3.8903E+02       1.0       20*1.6493E+04
                    1.0       24*3.1042E+04       1.0       24*6.4799E+04       1.0       24*8.3464E+04
                    1.0       30*3.1291E+03       1.0       1.0
end

*
* Unit 5 Splitting Geometry for Radial Detectors - Gamma
*
begin splitting geometry
    r    15    fill    0.0000
                 n    4    16.9863
                 n    1    18.9103
                 n    6    33.3271
                 n    1    36.5189
                 n    1    49.2189
                 n    1    49.8183
                 n    1    54.8183

    z    29    fill    -73.0212
                 n    1    -68.0212
                 n    1    -26.6700
                 n    1    -17.7800
                 n    1    -10.1600
                 n    1    0.0000
                 n    1    39.8844
                 n    13    405.6444
                 n    3    417.0807
                 n    4    452.1200
                 n    1    480.6950
                 n    1    520.7762
                 n    1    525.7762
end

*
* Unit 6 - Source Geometry for Fuel Gamma
*
begin source geometry
    x    1    -10.84072    10.84072
    y    1    -10.84072    10.84072
    z    13
        39.8844    49.0284    58.1724    67.3164    76.4604    85.6044
        94.7484    350.7804    359.9244    369.0684    378.2124    387.3564
        396.5004    405.6444
end
```

Table 5.3.11-8 CBEND Input – High Burnup Fuel Lattice – Radial Fuel Gamma (Continued)

```
*
* Unit 7
*
begin energy data
    gamma    dice
    importance    standard    22    groups
    scoring    as    importance
    simple    source    histogram    weighting    automatic
end

*
* Unit 8 Importance Map - Radial
*
begin importance map
    calculate
    targets    20
    part    5
    zones
        2    3    4    5    6
        7    8    9    10    11
        12    13    14    15    16
        17    18    19    20    21
    strengths
        2*100.0    2*100.0    2*50.0    2*50.0    2*10.0
        2*10.0    2*50.0    2*50.0    2*100.0    2*100.0

    defer mixing
    void density    0.10
    track
!    coupled source
!    write gamma importances to 32
!    write unformatted file to 31
!    use method d
end

*
* Unit 9 Scoring Data - Radial
*
begin scoring data
    flux
    part    5
    from    2    to    21    ! DRA
    from    23    to    52    ! DRAA
    from    54    to    73    ! DRB
    from    75    to    98    ! DRC
    from    100    to    123    ! DRD
    from    125    to    148    ! DRE
    from    150    to    179    ! DREE
    responses    sos    ditto
    contributions to responses        ditto
    ! score distribution for response
    ! weight distribution    total
end

*
* Unit 10 Response Data
*
begin response data
* Scaled to mrem/hr
/ansi ans-6.1.1-1977 photon flux-dose conversion factors - mcnp table h.2 - mrem/
          function pairs
          1.5000E+01          1.3300E-02
          1.4787E+01          1.3142E-02
          1.4577E+01          1.2985E-02
          1.4370E+01          1.2831E-02
          1.4166E+01          1.2678E-02
          1.3964E+01          1.2528E-02
          1.3766E+01          1.2379E-02
          1.3570E+01          1.2231E-02
          1.3377E+01          1.2086E-02
          1.3187E+01          1.1942E-02
          1.3000E+01          1.1800E-02
          1.2785E+01          1.1641E-02
          1.2573E+01          1.1483E-02
          1.2365E+01          1.1328E-02
          1.2160E+01          1.1175E-02
          1.1958E+01          1.1025E-02
          1.1760E+01          1.0876E-02
          1.1565E+01          1.0729E-02
          1.1374E+01          1.0584E-02
          1.1185E+01          1.0441E-02
          1.1000E+01          1.0300E-02
          1.0781E+01          1.0136E-02
          1.0567E+01          9.9740E-03
          1.0357E+01          9.8149E-03
          1.0152E+01          9.6583E-03
          9.9499E+00          9.5043E-03
          9.7522E+00          9.3526E-03
          9.5585E+00          9.2035E-03
          9.3686E+00          9.0566E-03
          9.1824E+00          8.9122E-03
          9.0000E+00          8.7700E-03
          8.8374E+00          8.6521E-03
          8.6777E+00          8.5358E-03
```

Table 5.3.11-8 CBEND Input – High Burnup Fuel Lattice – Radial Fuel Gamma (Continued)

```
8.5210E+00          8.4211E-03
          8.3670E+00          8.3079E-03
          8.2158E+00          8.1962E-03
          8.0674E+00          8.0861E-03
          7.9216E+00          7.9774E-03
          7.7785E+00          7.8701E-03
          7.6380E+00          7.7644E-03
          7.5000E+00          7.6600E-03
          7.4214E+00          7.6031E-03
          7.3436E+00          7.5467E-03
          7.2666E+00          7.4907E-03
          7.1905E+00          7.4351E-03
          7.1151E+00          7.3799E-03
          7.0406E+00          7.3251E-03
          6.9668E+00          7.2707E-03
          6.8937E+00          7.2167E-03
          6.8215E+00          7.1632E-03
          6.7500E+00          7.1100E-03
          6.6983E+00          7.0721E-03
          6.6469E+00          7.0344E-03
          6.5959E+00          6.9969E-03
          6.5454E+00          6.9596E-03
          6.4952E+00          6.9225E-03
          6.4454E+00          6.8856E-03
          6.3960E+00          6.8489E-03
          6.3469E+00          6.8124E-03
          6.2983E+00          6.7761E-03
          6.2500E+00          6.7400E-03
          6.1981E+00          6.7021E-03
          6.1466E+00          6.6643E-03
          6.0956E+00          6.6268E-03
          6.0450E+00          6.5895E-03
          5.9948E+00          6.5524E-03
          5.9450E+00          6.5155E-03
          5.8956E+00          6.4788E-03
          5.8467E+00          6.4423E-03
          5.7981E+00          6.4061E-03
          5.7500E+00          6.3700E-03
          5.6979E+00          6.3331E-03
          5.6463E+00          6.2963E-03
          5.5952E+00          6.2598E-03
          5.5445E+00          6.2235E-03
          5.4943E+00          6.1874E-03
          5.4446E+00          6.1515E-03
          5.3953E+00          6.1158E-03
          5.3464E+00          6.0803E-03
          5.2980E+00          6.0451E-03
          5.2500E+00          6.0100E-03
          5.2244E+00          5.9887E-03
          5.1990E+00          5.9674E-03
          5.1737E+00          5.9462E-03
          5.1485E+00          5.9251E-03
          5.1235E+00          5.9041E-03
          5.0985E+00          5.8831E-03
          5.0737E+00          5.8622E-03
          5.0490E+00          5.8414E-03
          5.0245E+00          5.8207E-03
          5.0000E+00          5.8000E-03
          4.9744E+00          5.7797E-03
          4.9490E+00          5.7594E-03
          4.9236E+00          5.7393E-03
          4.8985E+00          5.7192E-03
          4.8734E+00          5.6991E-03
          4.8485E+00          5.6792E-03
          4.8237E+00          5.6593E-03
          4.7990E+00          5.6394E-03
          4.7744E+00          5.6197E-03
          4.7500E+00          5.6000E-03
          4.6975E+00          5.5619E-03
          4.6455E+00          5.5240E-03
          4.5941E+00          5.4863E-03
          4.5433E+00          5.4490E-03
          4.4931E+00          5.4118E-03
          4.4434E+00          5.3750E-03
          4.3942E+00          5.3384E-03
          4.3456E+00          5.3020E-03
          4.2975E+00          5.2659E-03
          4.2500E+00          5.2300E-03
          4.1971E+00          5.1886E-03
          4.1449E+00          5.1474E-03
          4.0934E+00          5.1066E-03
          4.0425E+00          5.0662E-03
          3.9922E+00          5.0260E-03
          3.9425E+00          4.9862E-03
          3.8935E+00          4.9467E-03
          3.8451E+00          4.9075E-03
          3.7972E+00          4.8686E-03
          3.7500E+00          4.8300E-03
          3.6967E+00          4.7863E-03
          3.6442E+00          4.7429E-03
          3.5924E+00          4.7000E-03
          3.5414E+00          4.6574E-03
          3.4911E+00          4.6152E-03
          3.4415E+00          4.5734E-03
```

Table 5.3.11-8 CBEND Input – High Burnup Fuel Lattice – Radial Fuel Gamma (Continued)

3.3926E+00	4.5320E-03
3.3444E+00	4.4910E-03
3.2968E+00	4.4503E-03
3.2500E+00	4.4100E-03
3.2019E+00	4.3683E-03
3.1546E+00	4.3269E-03
3.1079E+00	4.2860E-03
3.0619E+00	4.2454E-03
3.0166E+00	4.2052E-03
2.9720E+00	4.1655E-03
2.9280E+00	4.1260E-03
2.8847E+00	4.0870E-03
2.8420E+00	4.0483E-03
2.8000E+00	4.0100E-03
2.7793E+00	3.9906E-03
2.7588E+00	3.9713E-03
2.7384E+00	3.9520E-03
2.7182E+00	3.9329E-03
2.6981E+00	3.9138E-03
2.6782E+00	3.8949E-03
2.6585E+00	3.8760E-03
2.6388E+00	3.8573E-03
2.6193E+00	3.8386E-03
2.6000E+00	3.8200E-03
2.5569E+00	3.7780E-03
2.5146E+00	3.7364E-03
2.4729E+00	3.6953E-03
2.4319E+00	3.6547E-03
2.3917E+00	3.6145E-03
2.3520E+00	3.5747E-03
2.3131E+00	3.5354E-03
2.2747E+00	3.4965E-03
2.2371E+00	3.4580E-03
2.2000E+00	3.4200E-03
2.1563E+00	3.3744E-03
2.1135E+00	3.3293E-03
2.0715E+00	3.2849E-03
2.0303E+00	3.2410E-03
1.9900E+00	3.1978E-03
1.9504E+00	3.1551E-03
1.9117E+00	3.1130E-03
1.8737E+00	3.0714E-03
1.8365E+00	3.0304E-03
1.8000E+00	2.9900E-03
1.7553E+00	2.9381E-03
1.7118E+00	2.8872E-03
1.6693E+00	2.8371E-03
1.6279E+00	2.7879E-03
1.5875E+00	2.7395E-03
1.5481E+00	2.6920E-03
1.5096E+00	2.6453E-03
1.4722E+00	2.5994E-03
1.4356E+00	2.5543E-03
1.4000E+00	2.5100E-03
1.3537E+00	2.4512E-03
1.3089E+00	2.3937E-03
1.2656E+00	2.3376E-03
1.2237E+00	2.2828E-03
1.1832E+00	2.2293E-03
1.1441E+00	2.1771E-03
1.1062E+00	2.1260E-03
1.0696E+00	2.0762E-03
1.0342E+00	2.0275E-03
1.0000E+00	1.9800E-03
9.7793E-01	1.9477E-03
9.5635E-01	1.9160E-03
9.3525E-01	1.8848E-03
9.1461E-01	1.8541E-03
8.9443E-01	1.8238E-03
8.7469E-01	1.7941E-03
8.5539E-01	1.7649E-03
8.3651E-01	1.7361E-03
8.1805E-01	1.7078E-03
8.0000E-01	1.6800E-03
7.8939E-01	1.6633E-03
7.7892E-01	1.6467E-03
7.6859E-01	1.6303E-03
7.5839E-01	1.6141E-03
7.4833E-01	1.5980E-03
7.3841E-01	1.5821E-03
7.2861E-01	1.5663E-03
7.1895E-01	1.5507E-03
7.0941E-01	1.5353E-03
7.0000E-01	1.5200E-03
6.9483E-01	1.5118E-03
6.8970E-01	1.5037E-03
6.8461E-01	1.4955E-03
6.7955E-01	1.4875E-03
6.7454E-01	1.4795E-03
6.6956E-01	1.4715E-03
6.6461E-01	1.4635E-03
6.5971E-01	1.4557E-03
6.5483E-01	1.4478E-03
6.5000E-01	1.4400E-03

Table 5.3.11-8 CBEND Input – High Burnup Fuel Lattice – Radial Fuel Gamma (Continued)

```
6.4482E-01          1.4318E-03
6.3968E-01          1.4236E-03
6.3458E-01          1.4155E-03
6.2952E-01          1.4075E-03
6.2450E-01          1.3994E-03
6.1952E-01          1.3915E-03
6.1458E-01          1.3835E-03
6.0968E-01          1.3756E-03
6.0482E-01          1.3678E-03
6.0000E-01          1.3600E-03
5.9480E-01          1.3507E-03
5.8965E-01          1.3415E-03
5.8454E-01          1.3324E-03
5.7948E-01          1.3233E-03
5.7446E-01          1.3142E-03
5.6948E-01          1.3053E-03
5.6455E-01          1.2964E-03
5.5966E-01          1.2875E-03
5.5481E-01          1.2787E-03
5.5000E-01          1.2700E-03
5.4478E-01          1.2596E-03
5.3962E-01          1.2493E-03
5.3450E-01          1.2391E-03
5.2943E-01          1.2290E-03
5.2440E-01          1.2190E-03
5.1943E-01          1.2090E-03
5.1450E-01          1.1991E-03
5.0962E-01          1.1893E-03
5.0479E-01          1.1796E-03
5.0000E-01          1.1700E-03
4.9476E-01          1.1607E-03
4.8957E-01          1.1514E-03
4.8444E-01          1.1422E-03
4.7937E-01          1.1331E-03
4.7434E-01          1.1241E-03
4.6937E-01          1.1151E-03
4.6445E-01          1.1062E-03
4.5958E-01          1.0974E-03
4.5477E-01          1.0887E-03
4.5000E-01          1.0800E-03
4.4473E-01          1.0701E-03
4.3952E-01          1.0603E-03
4.3438E-01          1.0506E-03
4.2929E-01          1.0409E-03
4.2426E-01          1.0314E-03
4.1930E-01          1.0220E-03
4.1439E-01          1.0126E-03
4.0953E-01          1.0033E-03
4.0474E-01          9.9411E-04
4.0000E-01          9.8500E-04
3.9469E-01          9.7374E-04
3.8946E-01          9.6260E-04
3.8429E-01          9.5160E-04
3.7920E-01          9.4072E-04
3.7417E-01          9.2996E-04
3.6920E-01          9.1933E-04
3.6431E-01          9.0882E-04
3.5947E-01          8.9843E-04
3.5470E-01          8.8815E-04
3.5000E-01          8.7800E-04
3.4465E-01          8.6531E-04
3.3937E-01          8.5279E-04
3.3418E-01          8.4046E-04
3.2907E-01          8.2831E-04
3.2404E-01          8.1633E-04
3.1908E-01          8.0453E-04
3.1420E-01          7.9290E-04
3.0939E-01          7.8143E-04
3.0466E-01          7.7014E-04
3.0000E-01          7.5900E-04
2.9458E-01          7.4511E-04
2.8926E-01          7.3147E-04
2.8403E-01          7.1809E-04
2.7890E-01          7.0495E-04
2.7386E-01          6.9205E-04
2.6891E-01          6.7938E-04
2.6405E-01          6.6695E-04
2.5928E-01          6.5474E-04
2.5460E-01          6.4276E-04
2.5000E-01          6.3100E-04
2.4448E-01          6.1661E-04
2.3909E-01          6.0255E-04
2.3381E-01          5.8881E-04
2.2865E-01          5.7538E-04
2.2361E-01          5.6226E-04
2.1867E-01          5.4943E-04
2.1385E-01          5.3690E-04
2.0913E-01          5.2466E-04
2.0451E-01          5.1269E-04
2.0000E-01          5.0100E-04
1.9433E-01          4.8721E-04
1.8882E-01          4.7380E-04
1.8346E-01          4.6076E-04
1.7826E-01          4.4808E-04
```

Table 5.3.11-8 CBEND Input – High Burnup Fuel Lattice – Radial Fuel Gamma (Continued)

```
          1.7321E-01          4.3575E-04
          1.6829E-01          4.2376E-04
          1.6352E-01          4.1210E-04
          1.5888E-01          4.0075E-04
          1.5438E-01          3.8973E-04
          1.5000E-01          3.7900E-04
          1.4404E-01          3.6809E-04
          1.3832E-01          3.5749E-04
          1.3282E-01          3.4720E-04
          1.2754E-01          3.3721E-04
          1.2247E-01          3.2750E-04
          1.1761E-01          3.1807E-04
          1.1293E-01          3.0892E-04
          1.0845E-01          3.0002E-04
          1.0414E-01          2.9139E-04
          1.0000E-01          2.8300E-04
          9.6496E-02          2.8039E-04
          9.3115E-02          2.7781E-04
          8.9852E-02          2.7526E-04
          8.6704E-02          2.7272E-04
          8.3666E-02          2.7021E-04
          8.0734E-02          2.6772E-04
          7.7906E-02          2.6526E-04
          7.5176E-02          2.6282E-04
          7.2542E-02          2.6040E-04
          7.0000E-02          2.5800E-04
          6.7684E-02          2.6103E-04
          6.5444E-02          2.6410E-04
          6.3279E-02          2.6721E-04
          6.1185E-02          2.7035E-04
          5.9161E-02          2.7353E-04
          5.7203E-02          2.7675E-04
          5.5311E-02          2.8000E-04
          5.3481E-02          2.8330E-04
          5.1711E-02          2.8663E-04
          5.0000E-02          2.9000E-04
          4.7510E-02          3.1092E-04
          4.5144E-02          3.3335E-04
          4.2896E-02          3.5740E-04
          4.0760E-02          3.8318E-04
          3.8730E-02          4.1083E-04
          3.6801E-02          4.4047E-04
          3.4968E-02          4.7224E-04
          3.3227E-02          5.0631E-04
          3.1572E-02          5.4284E-04
          3.0000E-02          5.8200E-04
          2.6879E-02          7.0502E-04
          2.4082E-02          8.5404E-04
          2.1577E-02          1.0346E-03
          1.9332E-02          1.2532E-03
          1.7321E-02          1.5181E-03
          1.5518E-02          1.8390E-03
          1.3904E-02          2.2277E-03
          1.2457E-02          2.6986E-03
          1.1161E-02          3.2690E-03
          1.0000E-02          3.9600E-03
end

*
* Unit 13 Hole Data
*
*begin hole data
*    < hole
*end

*
* Unit 15 Source Strength - Fuel Gamma
*
* UMS Class 2 - bw15b - B&W15 (Mark BZ) - 80 GWD/MTU - 150 Day - Fuel Gamma - Direct
begin source strength
    component        5.8160E-06    ! 1/volFue (1/1.7194E+05)
    component        1.2019E-01    ! 25 rods / 208 assy rods
    component    x    1.0
    component    y    1.0
    component    z
        5.9142E-01    6.8025E-01    7.6908E-01    8.5792E-01    9.4675E-01    1.0356E+00
        1.0800E+00    1.0356E+00    9.4675E-01    8.5792E-01    7.6908E-01    6.8025E-01
        5.9142E-01
    component    energy
        0.0000E+00    1.2045E+05    2.3297E+06    1.0972E+07    5.5933E+07    1.3937E+08
        3.6008E+11    3.1872E+12    1.2156E+14    4.1653E+13    1.4690E+14    5.5783E+14
        7.0383E+14    3.9476E+15    2.7006E+16    1.2622E+16    1.2169E+15    1.6044E+15
        6.3406E+15    6.4499E+15    1.2726E+16    9.5931E+15
end

*
* Unit 16 Simple Source Weights
*
*begin source weights
*
*end

*
* Unit 31 Tabular Output
```

Table 5.3.11-8 CBEND Input – High Burnup Fuel Lattice – Radial Fuel Gamma (Continued)

```
*
begin tabular output
    /Case lwtNrmRadFg_bw15b_80b40e150d - Det DRA - Surface - Response/
    response    interim
    number    some    1
    region    from    31    to    50
    output to file    also
    /Case lwtNrmRadFg_bw15b_80b40e150d - Det DRB - 1ft - Response/
    response
    number    some    1
    region    from    83    to    102
    output to file    also
    /Case lwtNrmRadFg_bw15b_80b40e150d - Det DRC - 1m - Response/
    response
    number    some    1
    region    from    104    to    127
    output to file    also
    /Case lwtNrmRadFg_bw15b_80b40e150d - Det DRE - 2m+Convey - Response/
    response    interim
    number    some    1
    region    from    154    to    177
    output to file    also
end

*
* Unit 32 Material Specification
*
begin material specification
type    gamma
normalise
nmixtures    2
weight    mixture    1
            u235    3.5260E-02
            u238    8.4624E-01
            o    1.1850E-01
atoms    mixture    2
            h    6.6667E-01
            o    3.3333E-01
*
* Materials List - Common Materials - v1.2
*
nmaterials    11
volume                          ! Homogenized fuel
material    1
    mixture    1    density    10.4120    prop    3.6613E-02    ! UO2 mixture at 4%
    void               prop    1.6877E-03    ! Gap
    zircalloy        density    6.5500    prop    1.7120E-02    ! Tube, clad
    void               prop    9.4458E-01    ! Interstitial, inside tubes
    stainless 304l steel        density    7.9200    prop    0.0000E+00    ! Hardware
volume                          ! Lower Nozzle Material
material    2
    stainless 304l steel        density    7.9200    prop    0.1501
    void               prop    0.8499
volume                          ! Upper Nozzle Material
material    3
    stainless 304l steel        density    7.9200    prop    0.1152
    void               prop    0.8848
volume                          ! Upper Plenum Material
material    4
    stainless 304l steel        density    7.9200    prop    0.0465
    void               prop    0.9535
volume                          ! Water
material    5
    mixture    2    density    0.9982    prop    1.0000    ! mixH2O
atoms                           ! Water/Glycol
material    6        density     0            ! 0 means atom/b-cm
        h            prop    5.9880E-02
        c            prop    1.0701E-02
        o            prop    2.4589E-02
volume                          ! Aluminum
material    7
    aluminium               prop    1.0000
volume                          ! Lead
material    8
    pb        density    11.3440    prop    1.0000
volume                          ! Stainless Steel 304
material    9
    stainless 304l steel        density    7.9200    prop    1.0000
volume                          ! Impact limiter
material    10
    aluminium        density    0.4997    prop    1.0000
volume                          ! Damaged fuel
material    11
    mixture    1    density    10.4120    prop    0.5000    ! UO2 mixture at 4%
    void               prop    0.5000
end
```

Table 5.3.11-1 MCBEND Standard 28 Group Neutron Boundaries

Group	E Lower [MeV]	E Upper [MeV]	E Average [MeV]
1	1.360E+01	1.460E+01	1.410E+01
2	1.250E+01	1.360E+01	1.305E+01
3	1.125E+01	1.250E+01	1.188E+01
4	1.000E+01	1.125E+01	1.063E+01
5	8.250E+00	1.000E+01	9.125E+00
6	7.000E+00	8.250E+00	7.625E+00
7	6.070E+00	7.000E+00	6.535E+00
8	4.720E+00	6.070E+00	5.395E+00
9	3.680E+00	4.720E+00	4.200E+00
10	2.870E+00	3.680E+00	3.275E+00
11	1.740E+00	2.870E+00	2.305E+00
12	6.400E-01	1.740E+00	1.190E+00
13	3.900E-01	6.400E-01	5.150E-01
14	1.100E-01	3.900E-01	2.500E-01
15	6.740E-02	1.100E-01	8.870E-02
16	2.480E-02	6.740E-02	4.610E-02
17	9.120E-03	2.480E-02	1.696E-02
18	2.950E-03	9.120E-03	6.035E-03
19	9.610E-04	2.950E-03	1.956E-03
20	3.540E-04	9.610E-04	6.575E-04
21	1.660E-04	3.540E-04	2.600E-04
22	4.810E-05	1.660E-04	1.071E-04
23	1.600E-05	4.810E-05	3.205E-05
24	4.000E-06	1.600E-05	1.000E-05
25	1.500E-06	4.000E-06	2.750E-06
26	5.500E-07	1.500E-06	1.025E-06
27	7.090E-08	5.500E-07	3.105E-07
28	1.000E-11	7.090E-08	3.546E-08

Table 5.3.11-2 MCBEND Standard 22 Group Gamma Boundaries

Group	E Lower [MeV]	E Upper [MeV]	E Average [MeV]
1	1.200E+01	1.400E+01	1.300E+01
2	1.000E+01	1.200E+01	1.100E+01
3	8.000E+00	1.000E+01	9.000E+00
4	6.500E+00	8.000E+00	7.250E+00
5	5.000E+00	6.500E+00	5.750E+00
6	4.000E+00	5.000E+00	4.500E+00
7	3.000E+00	4.000E+00	3.500E+00
8	2.500E+00	3.000E+00	2.750E+00
9	2.000E+00	2.500E+00	2.250E+00
10	1.660E+00	2.000E+00	1.830E+00
11	1.440E+00	1.660E+00	1.550E+00
12	1.220E+00	1.440E+00	1.330E+00
13	1.000E+00	1.220E+00	1.110E+00
14	8.000E-01	1.000E+00	9.000E-01
15	6.000E-01	8.000E-01	7.000E-01
16	4.000E-01	6.000E-01	5.000E-01
17	3.000E-01	4.000E-01	3.500E-01
18	2.000E-01	3.000E-01	2.500E-01
19	1.000E-01	2.000E-01	1.500E-01
20	5.000E-02	1.000E-01	7.500E-02
21	2.000E-02	5.000E-02	3.500E-02
22	1.000E-02	2.000E-02	1.500E-02

Table 5.3.11-3 BWR Fuel Assembly Lattice Three-Dimensional Model Parameters

Parameter	BWR 7×7	BWR 8×8
Lower Nozzle Height [cm]	18.76	18.76
Active Fuel Region Height [cm]	389.90	389.90
Upper Plenum Height [cm]	19.74	19.74
Upper Nozzle Height [cm]	19.05	19.05
Fuel Rod Diameter [cm]	1.4480	1.2600
Fuel Clad Thickness [cm]	0.0915	0.0870
Fuel Pellet Diameter [cm]	1.2446	1.0701
Array Size	7	8
Fuel Rod Pitch [cm]	1.8750	1.6260
Fuel Assembly Height [cm]	447.45	447.45
Fuel Assembly Width [cm]	14.02	14.02
Number of Fuel Pins	49	63
Lower Nozzle Mass [kg]	4.700	4.700
Incore Hardware Mass [kg]	2.030	0.330
Upper Plenum Mass [kg]	2.830	2.858
Upper Nozzle Mass [kg]	3.520	2.080

Table 5.3.11-4 PWR Fuel Assembly Lattice Three-Dimensional Model Parameters

Parameter	B&W 15×15	B&W 17×17	CE 14×14	West. 14×14	West. 15×15	West. 17×17
Lower Nozzle Height [cm]	18.41	19.12	12.53	8.69	10.76	8.60
Active Fuel Region Height [cm]	365.76	363.22	347.98	368.81	365.76	365.76
Upper Plenum Height [cm]	8.11	8.82	21.66	14.71	16.46	15.90
Upper Nozzle Height [cm]	28.41	29.76	16.60	13.45	12.82	15.63
Fuel Rod Diameter [cm]	1.0922	0.9627	1.1176	1.0719	1.0719	0.9500
Fuel Clad Thickness [cm]	0.0673	0.0597	0.0660	0.0572	0.0615	0.0572
Fuel Pellet Diameter [cm]	0.9362	0.8230	0.9563	0.9332	0.9294	0.8192
Array Size	15	17	14	14	15	17
Fuel Rod Pitch [cm]	1.4427	1.2751	1.4732	1.4122	1.4300	1.2598
Fuel Assembly Height [cm]	420.69	420.93	398.78	405.66	405.80	405.89
Fuel Assembly Width [cm]	21.68	21.68	20.96	19.72	21.40	21.40
Number of Fuel Pins	208	264	176	179	204	264
Number of Guide Tubes	16	24	4	16	20	24
Guide Tube OD [cm]	1.2522	1.0668	2.8321	1.2205	1.2294	1.2243
Guide Tube Thickness [cm]	0.0406	0.0445	0.1016	0.0864	0.0381	0.0381
Number of Instrument Tubes	1	1	1	1	1	1
Instrument Tube OD [cm]	1.2522	1.0668	2.8321	1.2205	1.2294	1.2243
Instrument Tube Thickness [cm]	0.0406	0.0381	0.1016	0.0864	0.0381	0.0381
Lower Nozzle Mass [kg]	10.290	7.130	5.000	7.893	5.440	5.900
Incore Hardware Mass [kg]	0.000	4.270	1.360	0.862	1.030	1.016
Upper Plenum Mass [kg]	1.980	1.560	7.980	5.684	3.680	5.310
Upper Nozzle Mass [kg]	10.760	18.130	6.180	9.890	7.850	7.850

Note: Listed assembly types are representative of the main core configurations employing assembly lattices transportable in the NAC-LWT and are not assembly-vendor specific.

Table 5.3.11-5 Fuel Assembly Lattice SAS2H Burnup Parameters at 80,000 MWd/MTU

Fuel Type	Pellet Diameter [cm]	Active Length [cm]	# Fuel Pins	Calculated MTU [MTU]	Assembly Power [MW]	Number of Cycles	Cycle Length [days]
BWR 7×7	1.2446	389.90	49	0.2133	4.68	5	730.00
BWR 8×8	1.0701	389.90	63	0.2028	4.44	5	730.00
B&W 15×15	0.9362	365.76	208	0.4807	15.66	4	613.93
B&W 17×17	0.8230	363.22	264	0.4681	17.67	4	529.87
CE 14×14	0.9563	347.98	176	0.4037	13.07	4	618.06
WE 14×14	0.9332	368.81	179	0.4144	13.07	4	634.40
WE 15×15	0.9294	365.76	204	0.4646	15.55	4	597.54
WE 17×17	0.8192	365.76	264	0.4671	17.67	4	528.65

Table 5.3.11-6 B&W 15×15 80,000 MWd/MTU, 150 Day Cool Time Source Terms in MCBEND Format

Group	Neutron [n/sec/assy]	Gamma [γ/sec/assy]	Hardware [γ/sec/kg]
1	0.000E+00	0.0000E+00	0.0000E+00
2	2.872E+05	1.2045E+05	0.0000E+00
3	1.197E+06	2.3297E+06	0.0000E+00
4	3.973E+06	1.0972E+07	0.0000E+00
5	1.247E+07	5.5933E+07	0.0000E+00
6	3.350E+07	1.3937E+08	0.0000E+00
7	5.785E+07	3.6008E+11	2.1915E-14
8	1.932E+08	3.1872E+12	1.7869E+05
9	3.321E+08	1.2156E+14	1.1524E+08
10	4.504E+08	4.1653E+13	5.1389E+09
11	1.052E+09	1.4690E+14	1.7618E+03
12	1.640E+09	5.5783E+14	1.0917E+13
13	4.286E+08	7.0383E+14	1.1507E+13
14	1.487E+08	3.9476E+15	3.2449E+12
15	2.157E+03	2.7006E+16	3.6269E+08
16	0.000E+00	1.2622E+16	3.3409E+11
17	0.000E+00	1.2169E+15	1.1626E+11
18	0.000E+00	1.6044E+15	3.5724E+09
19	0.000E+00	6.3406E+15	2.3610E+10
20	0.000E+00	6.4499E+15	7.3282E+10
21	0.000E+00	1.2726E+16	1.9462E+11
22	0.000E+00	9.5931E+15	2.2439E+11
23	0.000E+00		
24	0.000E+00		
25	0.000E+00		
26	0.000E+00		
27	0.000E+00		
28	0.000E+00		
Total	4.354E+09	8.3082E+16	2.6645E+13

Table 5.3.11-7 B&W 17×17 PWR 80,000 MWd/MTU, 150 Day Cool Time Source Terms in MCBEND Format

Group	Neutron [n/sec/assy]	Gamma [γ/sec/assy]	Hardware [γ/sec/kg]
1	0.000E+00	0.0000E+00	0.0000E+00
2	2.759E+05	1.1608E+05	0.0000E+00
3	1.150E+06	2.2451E+06	0.0000E+00
4	3.817E+06	1.0574E+07	0.0000E+00
5	1.198E+07	5.3905E+07	0.0000E+00
6	3.218E+07	1.3431E+08	0.0000E+00
7	5.557E+07	3.9352E+11	2.3952E-14
8	1.856E+08	3.4957E+12	1.8611E+05
9	3.191E+08	1.3560E+14	1.2003E+08
10	4.330E+08	4.5731E+13	5.3749E+09
11	1.011E+09	1.5996E+14	1.8456E+03
12	1.575E+09	5.7162E+14	1.1370E+13
13	4.117E+08	7.4715E+14	1.1985E+13
14	1.428E+08	4.0794E+15	3.5336E+12
15	2.091E+03	2.9120E+16	3.7931E+08
16	0.000E+00	1.3405E+16	3.4944E+11
17	0.000E+00	1.3364E+15	1.3403E+11
18	0.000E+00	1.7573E+15	3.7376E+09
19	0.000E+00	6.9698E+15	2.4666E+10
20	0.000E+00	7.0599E+15	7.6490E+10
21	0.000E+00	1.3906E+16	2.0306E+11
22	0.000E+00	1.0475E+16	2.3406E+11
23	0.000E+00		
24	0.000E+00		
25	0.000E+00		
26	0.000E+00		
27	0.000E+00		
28	0.000E+00		
Total	4.183E+09	8.9773E+16	2.7920E+13

Table 5.3.11-8 CE 14×14 PWR 80,000 MWd/MTU, 150 Day Cool Time Source Terms in MCBEND Format

Group	Neutron [n/sec/assy]	Gamma [γ/sec/assy]	Hardware [γ/sec/kg]
1	0.000E+00	0.0000E+00	0.0000E+00
2	2.371E+05	9.9541E+04	0.0000E+00
3	9.877E+05	1.9252E+06	0.0000E+00
4	3.279E+06	9.0674E+06	0.0000E+00
5	1.029E+07	4.6222E+07	0.0000E+00
6	2.765E+07	1.1517E+08	0.0000E+00
7	4.774E+07	3.0376E+11	2.2126E-14
8	1.595E+08	2.6846E+12	1.8758E+05
9	2.736E+08	1.0140E+14	1.2097E+08
10	3.704E+08	3.4996E+13	4.8198E+09
11	8.669E+08	1.2255E+14	1.6615E+03
12	1.353E+09	4.6029E+14	1.1460E+13
13	3.537E+08	5.8686E+14	1.2079E+13
14	1.227E+08	3.2738E+15	3.0780E+12
15	1.730E+03	2.2459E+16	3.4254E+08
16	0.000E+00	1.0531E+16	3.1336E+11
17	0.000E+00	1.0194E+15	1.3181E+11
18	0.000E+00	1.3424E+15	3.4375E+09
19	0.000E+00	5.2910E+15	2.3798E+10
20	0.000E+00	5.3863E+15	7.5509E+10
21	0.000E+00	1.0630E+16	2.0185E+11
22	0.000E+00	8.0135E+15	2.3335E+11
23	0.000E+00		
24	0.000E+00		
25	0.000E+00		
26	0.000E+00		
27	0.000E+00		
28	0.000E+00		
Total	3.590E+09	6.9255E+16	2.7606E+13

Table 5.3.11-9 Westinghouse 14×14 PWR 80,000 MWd/MTU, 150 Day Cool Time Source Terms in MCBEND Format

Group	Neutron [n/sec/assy]	Gamma [γ/sec/assy]	Hardware [γ/sec/kg]
1	0.000E+00	0.0000E+00	0.0000E+00
2	2.491E+05	1.0438E+05	0.0000E+00
3	1.038E+06	2.0189E+06	0.0000E+00
4	3.446E+06	9.5086E+06	0.0000E+00
5	1.081E+07	4.8472E+07	0.0000E+00
6	2.905E+07	1.2078E+08	0.0000E+00
7	5.017E+07	3.0153E+11	2.1414E-14
8	1.675E+08	2.6680E+12	1.7451E+05
9	2.881E+08	1.0164E+14	1.1254E+08
10	3.910E+08	3.4881E+13	5.1766E+09
11	9.130E+08	1.2353E+14	1.7716E+03
12	1.422E+09	4.7718E+14	1.0662E+13
13	3.717E+08	5.9547E+14	1.1238E+13
14	1.289E+08	3.3649E+15	3.2285E+12
15	1.886E+03	2.2792E+16	3.6470E+08
16	0.000E+00	1.0676E+16	3.3654E+11
17	0.000E+00	1.0201E+15	1.0845E+11
18	0.000E+00	1.3463E+15	3.5740E+09
19	0.000E+00	5.3205E+15	2.3322E+10
20	0.000E+00	5.4166E+15	7.1937E+10
21	0.000E+00	1.0691E+16	1.9069E+11
22	0.000E+00	8.0605E+15	2.1970E+11
23	0.000E+00		
24	0.000E+00		
25	0.000E+00		
26	0.000E+00		
27	0.000E+00		
28	0.000E+00		
Total	3.777E+09	7.0024E+16	2.6088E+13

Table 5.3.11-10 Westinghouse 15×15 PWR 80,000 MWd/MTU, 150 Day Cool Time Source Terms in MCBEND Format

Group	Neutron [n/sec/assy]	Gamma [γ/sec/assy]	Hardware [γ/sec/kg]
1	0.000E+00	0.0000E+00	0.0000E+00
2	2.752E+05	1.1553E+05	0.0000E+00
3	1.147E+06	2.2345E+06	0.0000E+00
4	3.807E+06	1.0524E+07	0.0000E+00
5	1.194E+07	5.3649E+07	0.0000E+00
6	3.209E+07	1.3368E+08	0.0000E+00
7	5.542E+07	3.5682E+11	2.2624E-14
8	1.851E+08	3.1587E+12	1.8341E+05
9	3.180E+08	1.2047E+14	1.1829E+08
10	4.310E+08	4.1248E+13	5.0837E+09
11	1.008E+09	1.4482E+14	1.7466E+03
12	1.571E+09	5.4122E+14	1.1205E+13
13	4.106E+08	6.9042E+14	1.1811E+13
14	1.424E+08	3.8450E+15	3.2481E+12
15	2.048E+03	2.6544E+16	3.5960E+08
16	0.000E+00	1.2387E+16	3.3051E+11
17	0.000E+00	1.2039E+15	1.2551E+11
18	0.000E+00	1.5857E+15	3.5639E+09
19	0.000E+00	6.2649E+15	2.3914E+10
20	0.000E+00	6.3691E+15	7.4770E+10
21	0.000E+00	1.2564E+16	1.9900E+11
22	0.000E+00	9.4694E+15	2.2964E+11
23	0.000E+00		
24	0.000E+00		
25	0.000E+00		
26	0.000E+00		
27	0.000E+00		
28	0.000E+00		
Total	4.170E+09	8.1775E+16	2.7257E+13

Table 5.3.11-11 Westinghouse 17×17 PWR 80,000 MWd/MTU, 150 Day Cool Time Source Terms in MCBEND Format

Group	Neutron [n/sec/assy]	Gamma [γ/sec/assy]	Hardware [γ/sec/kg]
1	0.000E+00	0.0000E+00	0.0000E+00
2	2.760E+05	1.1608E+05	0.0000E+00
3	1.150E+06	2.2451E+06	0.0000E+00
4	3.818E+06	1.0574E+07	0.0000E+00
5	1.198E+07	5.3902E+07	0.0000E+00
6	3.219E+07	1.3431E+08	0.0000E+00
7	5.559E+07	3.9282E+11	2.4111E-14
8	1.856E+08	3.4903E+12	1.8520E+05
9	3.193E+08	1.3558E+14	1.1944E+08
10	4.333E+08	4.5679E+13	5.4313E+09
11	1.012E+09	1.5991E+14	1.8636E+03
12	1.576E+09	5.7191E+14	1.1314E+13
13	4.118E+08	7.4675E+14	1.1926E+13
14	1.429E+08	4.0797E+15	3.5687E+12
15	2.098E+03	2.9120E+16	3.8295E+08
16	0.000E+00	1.3398E+16	3.5311E+11
17	0.000E+00	1.3353E+15	1.3207E+11
18	0.000E+00	1.7560E+15	3.7644E+09
19	0.000E+00	6.9673E+15	2.4688E+10
20	0.000E+00	7.0565E+15	7.6320E+10
21	0.000E+00	1.3899E+16	2.0242E+11
22	0.000E+00	1.0469E+16	2.3323E+11
23	0.000E+00		
24	0.000E+00		
25	0.000E+00		
26	0.000E+00		
27	0.000E+00		
28	0.000E+00		
Total	4.185E+09	8.9745E+16	2.7841E+13

Table 5.3.11-12 BWR 7×7 80,000 MWd/MTU, 210 Day Cool Time Source Terms in MCBEND Format

Group	Neutron [n/sec/assy]	Gamma [γ/sec/assy]	Hardware [γ/sec/kg]
1	0.000E+00	0.0000E+00	0.0000E+00
2	1.289E+05	5.3159E+04	0.0000E+00
3	5.370E+05	1.0281E+06	0.0000E+00
4	1.783E+06	4.8422E+06	0.0000E+00
5	5.594E+06	2.4683E+07	0.0000E+00
6	1.503E+07	6.1499E+07	0.0000E+00
7	2.595E+07	1.0195E+11	1.8206E-14
8	8.671E+07	8.2657E+11	1.6514E+05
9	1.481E+08	3.1183E+13	1.0650E+08
10	1.994E+08	1.1011E+13	2.2830E+09
11	4.690E+08	3.9966E+13	7.9373E+02
12	7.354E+08	1.9668E+14	1.0089E+13
13	1.923E+08	2.1866E+14	1.0635E+13
14	6.669E+07	1.3365E+15	1.8380E+12
15	8.453E+02	6.9578E+15	1.7082E+08
16	0.000E+00	3.6581E+15	1.4845E+11
17	0.000E+00	3.3622E+14	2.2220E+10
18	0.000E+00	4.4552E+14	1.9205E+09
19	0.000E+00	1.6749E+15	1.7265E+10
20	0.000E+00	1.7956E+15	6.0694E+10
21	0.000E+00	3.5384E+15	1.6698E+11
22	0.000E+00	2.6583E+15	1.9530E+11
23	0.000E+00		
24	0.000E+00		
25	0.000E+00		
26	0.000E+00		
27	0.000E+00		
28	0.000E+00		
Total	1.947E+09	2.2900E+16	2.3177E+13

Table 5.3.11-13 BWR 8×8 80,000 MWd/MTU, 150 Day Cool Time Source Terms in MCBEND Format

Group	Neutron [n/sec/assy]	Gamma [γ/sec/assy]	Hardware [γ/sec/kg]
1	0.000E+00	0.0000E+00	0.0000E+00
2	1.204E+05	4.9995E+04	0.0000E+00
3	5.016E+05	9.6694E+05	0.0000E+00
4	1.665E+06	4.5540E+06	0.0000E+00
5	5.225E+06	2.3215E+07	0.0000E+00
6	1.404E+07	5.7842E+07	0.0000E+00
7	2.424E+07	1.0937E+11	1.6861E-14
8	8.098E+07	9.5997E+11	1.7019E+05
9	1.387E+08	3.4649E+13	1.0975E+08
10	1.874E+08	1.2514E+13	3.9517E+09
11	4.394E+08	4.5081E+13	1.3631E+03
12	6.870E+08	1.9612E+14	1.0397E+13
13	1.796E+08	2.2814E+14	1.0959E+13
14	6.230E+07	1.3467E+15	2.2905E+12
15	8.288E+02	8.5500E+15	2.8268E+08
16	0.000E+00	4.0807E+15	2.5692E+11
17	0.000E+00	3.6453E+14	9.8102E+10
18	0.000E+00	4.8432E+14	2.8804E+09
19	0.000E+00	1.8933E+15	2.0793E+10
20	0.000E+00	1.9461E+15	6.7247E+10
21	0.000E+00	3.8683E+15	1.8082E+11
22	0.000E+00	2.9183E+15	2.0962E+11
23	0.000E+00		
24	0.000E+00		
25	0.000E+00		
26	0.000E+00		
27	0.000E+00		
28	0.000E+00		
Total	1.821E+09	2.5969E+16	2.4488E+13

Table 5.3.11-14 PWR Fuel Lattice Axial Source Profile

% Core Height	Burnup Profile	Photon Source	Neutron Source
0.00%	0.5470	0.5470	7.840E-02
2.50%	0.6358	0.6358	1.479E-01
5.00%	0.7247	0.7247	2.569E-01
7.50%	0.8135	0.8135	4.185E-01
10.00%	0.9023	0.9023	6.481E-01
12.50%	0.9912	0.9912	9.633E-01
15.00%	1.0800	1.0800	1.384E+00
85.00%	1.0800	1.0800	1.384E+00
87.50%	0.9912	0.9912	9.633E-01
90.00%	0.9023	0.9023	6.481E-01
92.50%	0.8135	0.8135	4.185E-01
95.00%	0.7247	0.7247	2.569E-01
97.50%	0.6358	0.6358	1.479E-01
100.00%	0.5470	0.5470	7.840E-02

Table 5.3.11-15 BWR Fuel Lattice Axial Source Profile

% Core Height	Burnup Profile	Photon Source	Neutron Source
0.00%	0.3329	0.3329	9.637E-03
2.50%	0.4690	0.4690	4.098E-02
5.00%	0.6052	0.6052	1.202E-01
7.50%	0.7414	0.7414	2.829E-01
10.00%	0.8776	0.8776	5.764E-01
12.50%	1.0138	1.0138	1.060E+00
15.00%	1.1500	1.1500	1.804E+00
55.00%	1.1500	1.1500	1.804E+00
80.00%	1.1300	1.1300	1.675E+00
82.50%	1.0304	1.0304	1.135E+00
85.00%	0.9307	0.9307	7.386E-01
87.50%	0.8311	0.8311	4.580E-01
90.00%	0.7314	0.7314	2.672E-01
92.50%	0.6318	0.6318	1.440E-01
95.00%	0.5321	0.5321	6.980E-02
97.50%	0.4325	0.4325	2.910E-02
100.00%	0.3329	0.3329	9.637E-03

Table 5.3.11-16 BWR Fuel Assembly Lattice Fuel Region Homogenization

Fuel Type	Component	Volume Fraction of Components			
		UO_2	Void	Clad	Interstitial
BWR 7×7	Fuel	1.5483E-01			
	Gap		5.1172E-03		
	Clad			4.9625E-02	
	Interstitial				7.9043E-01
	Total	1.5483E-01	5.1172E-03	4.9625E-02	7.9043E-01
BWR 8×8	Fuel	1.1446E-01			
	Gap		3.4266E-03		
	Clad			4.0802E-02	
	Interstitial				8.4131E-01
	Total	1.1446E-01	3.4266E-03	4.0802E-02	8.4131E-01

Table 5.3.11-17 PWR Fuel Assembly Lattice Fuel Region Homogenization

Fuel Type	Component	Volume Fraction of Components			
		UO_2	Void	Clad	Interstitial
B&W 15×15	Fuel	3.6613E-02			
	Gap		1.6877E-03		
	Clad			1.1526E-02	
	Guide Tube			5.2650E-03	
	Instrument Tube			3.2906E-04	
	Inside Tubes				3.8943E-02
	Interstitial				9.0564E-01
	Total	3.6613E-02	1.6877E-03	1.7120E-02	9.4458E-01
B&W 17×17	Fuel	2.8289E-02			
	Gap		1.4142E-03		
	Clad			9.0051E-03	
	Guide Tube			7.2888E-03	
	Instrument Tube			2.6193E-04	
	Inside Tubes				3.9985E-02
	Interstitial				9.1376E-01
	Total	2.8289E-02	1.4142E-03	1.6556E-02	9.5374E-01
CE 14×14	Fuel	4.0893E-02			
	Gap		2.5363E-03		
	Clad			1.2421E-02	
	Guide Tube			7.9391E-03	
	Instrument Tube			1.9848E-03	
	Inside Tubes				6.1806E-02
	Interstitial				8.7242E-01
	Total	4.0893E-02	2.5363E-03	2.2345E-02	9.3423E-01

Table 5.3.11-17 PWR Fuel Assembly Lattice Fuel Region Homogenization (Continued)

Fuel Type	Component	Volume Fraction of Components			
		UO_2	Void	Clad	Interstitial
West. 14×14	Fuel	4.3979E-02			
	Gap		2.3284E-03		
	Clad			1.1715E-02	
	Guide Tube			1.2662E-02	
	Instrument Tube			7.9139E-04	
	Inside Tubes				3.7699E-02
	Interstitial				8.9083E-01
	Total	4.3979E-02	2.3284E-03	2.5168E-02	9.2852E-01
West. 15×15	Fuel	3.7044E-02			
	Gap		1.5755E-03		
	Clad			1.0655E-02	
	Guide Tube			6.2288E-03	
	Instrument Tube			3.1144E-04	
	Inside Tubes				4.7905E-02
	Interstitial				8.9628E-01
	Total	3.7044E-02	1.5755E-03	1.7195E-02	9.4419E-01
West. 17×17	Fuel	2.8764E-02			
	Gap		1.1712E-03		
	Clad			8.7489E-03	
	Guide Tube			7.4392E-03	
	Instrument Tube			3.0997E-04	
	Inside Tubes				5.6502E-02
	Interstitial				8.9706E-01
	Total	2.8764E-02	1.1712E-03	1.6498E-02	9.5357E-01

Table 5.3.11-18 Fuel Assembly Lattice Activated Hardware Region Homogenization

Fuel Type	Region	Mass SS [kg/assy]	SS Volume [cm³/assy]	Height [cm]	Volume [cm³/assy]	Volume Fraction
B&W 15×15	Lower Nozzle	10.29	1.2992E+03	18.4087	8.6536E+03	1.5014E-01
	Fuel Hardware	0.00	0.0000E+00	365.7600	1.7194E+05	0.0000E+00
	Upper Plenum	1.98	2.5000E+02	11.4364	5.3761E+03	4.6503E-02
	Upper Nozzle	10.76	1.3586E+03	25.0825	1.1791E+04	1.1522E-01
B&W 17×17	Lower Nozzle	7.13	9.0025E+02	19.1230	8.9894E+03	1.0015E-01
	Fuel Hardware	4.27	5.3914E+02	363.2200	1.7074E+05	3.1576E-03
	Upper Plenum	1.56	1.9697E+02	14.6920	6.9065E+03	2.8520E-02
	Upper Nozzle	18.13	2.2891E+03	23.8906	1.1231E+04	2.0383E-01
CE 14×14	Lower Nozzle	5.00	6.3131E+02	12.5349	5.5042E+03	1.1470E-01
	Fuel Hardware	1.36	1.7172E+02	347.9800	1.5280E+05	1.1238E-03
	Upper Plenum	7.98	1.0076E+03	25.7251	1.1296E+04	8.9196E-02
	Upper Nozzle	6.18	7.8030E+02	12.5400	5.5065E+03	1.4171E-01
West. 14×14	Lower Nozzle	7.89	9.9659E+02	8.6944	3.3804E+03	2.9482E-01
	Fuel Hardware	0.86	1.0884E+02	368.8080	1.4339E+05	7.5902E-04
	Upper Plenum	5.68	7.1762E+02	19.2710	7.4926E+03	9.5778E-02
	Upper Nozzle	9.89	1.2487E+03	8.8900	3.4564E+03	3.6128E-01
West. 15×15	Lower Nozzle	5.44	6.8687E+02	10.7607	4.9266E+03	1.3942E-01
	Fuel Hardware	1.03	1.3005E+02	365.7600	1.6746E+05	7.7663E-04
	Upper Plenum	3.68	4.6465E+02	20.2654	9.2781E+03	5.0080E-02
	Upper Nozzle	7.85	9.9116E+02	9.0170	4.1283E+03	2.4009E-01
West. 17×17	Lower Nozzle	5.90	7.4495E+02	8.5979	3.9382E+03	1.8916E-01
	Fuel Hardware	1.02	1.2828E+02	365.7600	1.6754E+05	7.6571E-04
	Upper Plenum	5.31	6.7045E+02	22.2123	1.0174E+04	6.5897E-02
	Upper Nozzle	7.85	9.9116E+02	9.3218	4.2698E+03	2.3213E-01
BWR 7×7	Lower Nozzle	4.70	5.9343E+02	18.7579	3.6848E+03	1.6105E-01
	Fuel Hardware	2.03	2.5631E+02	389.9000	7.6592E+04	3.3465E-03
	Upper Plenum	2.83	3.5738E+02	19.7385	3.8774E+03	9.2169E-02
	Upper Nozzle	3.52	4.4444E+02	19.0500	3.7422E+03	1.1877E-01
BWR 8×8	Lower Nozzle	4.70	5.9343E+02	18.7579	3.6848E+03	1.6105E-01
	Fuel Hardware	0.33	4.1667E+01	389.9000	7.6592E+04	5.4401E-04
	Upper Plenum	2.86	3.6082E+02	19.7385	3.8774E+03	9.3055E-02
	Upper Nozzle	2.08	2.6263E+02	19.0500	3.7422E+03	7.0180E-02

Table 5.3.11-19 Fuel Lattice Accident Condition Damaged Fuel Material Heights

Assembly	Axial Extent [cm]
B&W 15×15	18.82
B&W 17×17	11.85
CE 14×14	14.04
Westinghouse 14×14	14.17
Westinghouse 15×15	13.93
Westinghouse 17×17	10.82
BWR 7×7	24.41
BWR 8×8	18.05

Table 5.3.11-20 BWR Fuel Assembly Lattice Fuel Region Homogenized Material Description

	Number Density [atom/b-cm]	
Element	BWR 7×7	BWR 8×8
U	3.60E-03	2.66E-03
O	7.20E-03	5.33E-03
ZR	2.10E-03	1.73E-03
SN	2.47E-05	2.03E-05
FE	2.19E-04	4.01E-05
CR	5.90E-05	1.21E-05
NI	2.21E-05	3.81E-06
HF	1.10E-07	9.02E-08

Table 5.3.11-21 PWR Fuel Assembly Lattice Fuel Region Homogenized Material Description

Element	Number Density [atom/b-cm]					
	B&W 15×15	B&W 17×17	CE 14×14	WE 14×14	WE 15×15	WE 17×17
U	8.51E-04	6.57E-04	9.50E-04	1.02E-03	8.61E-04	6.68E-04
O	1.70E-03	1.32E-03	1.90E-03	2.05E-03	1.72E-03	1.34E-03
ZR	7.26E-04	7.02E-04	9.48E-04	1.07E-03	7.29E-04	7.00E-04
SN	8.53E-06	8.25E-06	1.11E-05	1.25E-05	8.57E-06	8.22E-06
FE	2.42E-06	2.02E-04	7.42E-05	5.15E-05	5.15E-05	5.07E-05
CR	1.30E-06	5.34E-05	2.03E-05	1.44E-05	1.41E-05	1.39E-05
NI	1.15E-07	2.06E-05	7.46E-06	5.10E-06	5.16E-06	5.09E-06
HF	3.78E-08	3.66E-08	4.94E-08	5.56E-08	3.80E-08	3.65E-08

Table 5.3.11-22 Basket and Cask Shielding Material Composition

Material	Element	Number Density [atom/b-cm]
Aluminum	AL	6.02626E-02
Stainless Steel 304	FE	6.31986E-02
	CR	1.65112E-02
	NI	6.50094E-03
Lead	PB	3.29706E-02
Neutron Shield	H	5.98800E-02
	C	1.07010E-02
	O	2.45890E-02
Impact Limiter	AL	1.11530E-02
BWR Damaged Fuel	U	1.62614E-02
	O	3.25085E-02
PWR Damaged Fuel	U	1.16153E-02
	O	2.32204E-02

Table 5.3.11-23 ANSI/ANS 6.1.1-1977 Neutron Flux-to-Dose Conversion Factors

Energy [MeV]	Response [(rem/hr)/(n/cm^2/sec)]
20.0	2.27E-04
14.0	2.08E-04
10.0	1.47E-04
7.0	1.47E-04
5.0	1.56E-04
2.5	1.25E-04
1.0	1.32E-04
5.0E-01	9.26E-05
1.0E-01	2.17E-05
1.0E-02	3.56E-06
1.0E-03	3.76E-06
1.0E-04	4.18E-06
1.0E-05	4.54E-06
1.0E-06	4.46E-06
1.0E-07	3.67E-06
2.5E-08	3.67E-06

Table 5.3.11-24 ANSI/ANS 6.1.1-1977 Gamma Flux-to-Dose Conversion Factors

Energy, E [MeV]	Response [(rem/hr)/(γ/cm²/sec)]	Energy, E [MeV]	Response [(rem/hr)/(γ/cm²/sec)]
15.0	1.33E-05	1.0	1.98E-06
13.0	1.18E-05	0.8	1.68E-06
11.0	1.03E-05	0.7	1.52E-06
9.0	8.77E-06	0.65	1.44E-06
7.5	7.66E-06	0.6	1.36E-06
6.75	7.11E-06	0.55	1.27E-06
6.25	6.74E-06	0.5	1.17E-06
5.75	6.37E-06	0.45	1.08E-06
5.25	6.01E-06	0.4	9.85E-07
5.0	5.80E-06	0.35	8.78E-07
4.75	5.60E-06	0.3	7.59E-07
4.25	5.23E-06	0.25	6.31E-07
3.75	4.83E-06	0.2	5.01E-07
3.25	4.41E-06	0.15	3.79E-07
2.8	4.01E-06	0.1	2.83E-07
2.6	3.82E-06	0.07	2.58E-07
2.2	3.42E-06	0.05	2.90E-07
1.8	2.99E-06	0.03	5.82E-07
1.4	2.51E-06	0.01	3.96E-06

Table 5.3.11-25 Maximum Radial Dose Rates for PWR and BWR Fuel Rods in an Irradiated Fuel Assembly Lattice

	Dose Rate [mrem/hr]				
Fuel Type	Normal Surface	Normal 1 foot	Normal 1 meter	Normal 2 meter	Accident 1 meter
B&W 15×15	157	54.7	26.2	9.9	683
B&W 17×17	204	69.4	24.8	9.6	670
CE 14×14	98	54.3	27.0	9.6	653
Westinghouse 14×14	105	52.4	26.0	9.7	664
Westinghouse 15×15	100	53.9	26.5	9.8	665
Westinghouse 17×17	82	46.0	23.1	8.5	653
BWR 7×7	267	83.0	27.6	8.9	720
BWR 8×8	200	63.2	21.2	7.5	663

Table 5.3.11-26 Maximum Axial Dose Rates for PWR and BWR Fuel Rods in an Irradiated Fuel Assembly Lattice

	Dose Rate [mrem/hr]			
	Normal – Surface		Accident – 1 meter	
Fuel Type	Top	Bottom	Top	Bottom
B&W 15×15	13.9	7.4	147	2.1
B&W 17×17	13.2	7.0	146	1.9
CE 14×14	9.7	8.3	148	1.5
Westinghouse 14×14	12.6	7.0	152	1.8
Westinghouse 15×15	12.6	8.5	157	2.4
Westinghouse 17×17	12.0	8.5	145	2.6
BWR 7×7	8.0	4.5	166	2.2
BWR 8×8	7.9	4.3	155	2.1

5.3.12 Damaged High Burnup PWR and BWR Rods in a Rod Holder

Results of a shielding analysis for up to 25 high burnup PWR or BWR fuel rods with a maximum of 14 damaged fuel rods are presented in this section. The 14 damaged fuel rods are assumed to fail during transport. The rods have burnups up to 80,000 MWd/MTU. Based on the minimum cool times developed in Section 5.3.8, maximum dose rates are calculated to demonstrate that dose rate limits are not exceeded.

Dose rates are calculated using the MCBEND three-dimensional Monte Carlo transport code. Source terms are calculated using the SAS2H module of the SCALE package, with ORIGEN-S used to rebin the gamma-ray and neutron spectra onto the 22-group and 28-group structures required by MCBEND.

5.3.12.1 Damaged PWR and BWR Rods Source Terms

Source terms employed in this analysis are identical to those employed in Section 5.3.8 above. The SAS2H-generated source spectra are rebinned onto the standard 28-group neutron and 22-group gamma scheme used in MCBEND as shown in Table 5.3.11-1 and Table 5.3.11-2, respectively.

Source terms in MCBEND format are presented in Table 5.3.12-1 through Table 5.3.12-3 for PWR and BWR fuel. PWR and BWR 8×8 fuel types are analyzed at 80,000 MWd/MTU and 150 days cool time. Based on the results in Section 5.3.8, the minimum cool time for BWR 7×7 fuel is 210 days for a maximum burnup of 60,000 MWd/MTU; BWR 7×7 fuel is conservatively analyzed at 80,000 MWd/MTU and 210 days cool time.

The effect of subcritical neutron multiplication is not directly computed in the MCBEND analysis, due to difficulties in adequately biasing the calculation. Instead, neutron source rates are scaled by a subcritical multiplication factor based on the system multiplication factor, k_{eff}:

$$\text{Scale Factor} = \frac{1}{1 - k_{eff}}$$

For the dry cask conditions of transport, calculated k_{eff} is 0.06 for BWR fuel and 0.05 for PWR fuel, with resulting scale factors of 1.0638 and 1.0526, respectively. These scale factors are included in the source strength input unit in MCBEND.

5.3.12.2 Axial Source Profile

The axial source profiles employed in MCBEND for PWR and BWR fuel are identical to those employed in Section 5.3.11.2. Profiles are input by evaluating the fraction of source in each axial bin. By default, no internal normalization of the profile is performed. The discrete axial profile is applied to the intact rods. A uniform source is applied to the damaged fuel

concentrated at the top of the cask. The nonlinear impact of burnup on the total neutron source strength is accounted for in both the damaged and intact fuel regions.

5.3.12.3 High Burnup PWR and BWR Rods Shielding Model

MCBEND three-dimensional shielding analysis allows detailed modeling of the fuel, basket, and cask shield configurations. For the fuel rod sources, some fuel rod detail is homogenized in the model to simplify model input and improve computational efficiency. Thus, the three-dimensional models represent the various fuel assembly source regions as homogenized zones within the rod holder, but explicitly model the axial extent of the source regions. The basket and cask body details are explicitly modeled, including the axial extents described by the License Drawings.

The geometric description of a MCBEND model is based on the combinatorial geometry system embedded in the code. In this system, bodies such as cylinders and rectangular parallelepipeds, and their logical intersections and unions, are used to describe the extent of material zones.

MCBEND employs an automated biasing technique for the Monte Carlo calculation based on a three-dimensional adjoint diffusion calculation. Mesh cells for the adjoint solution are selected based on half value thicknesses for each material.

Fuel Rod Model

Based on the fuel parameters provided in Section 5.3.8, and the rod holder cross-sectional detail provided by the License Drawings, homogenized treatments of fuel rod source regions are developed. The homogenized fuel rods are represented in the model as a stack of boxes with width equal to the rod holder interior width. The height of each box corresponds to the modeled height of the corresponding source region.

The intact fuel region homogenizations are shown in Table 5.3.12-4 through Table 5.3.12-6, based on a homogenization area of 81.765 cm^2. Components of the fuel homogenization are subdivided to account for the various area fractions present in the homogenized fuel description. "Interstitial" refers to the space within the rod holder canister but outside the 5×5 tube array. "Insert void" refers to the space inside the rod holder tubes but outside the fuel rods. "Gap" refers to the pellet to clad gap. All three regions are assigned a void material as part of the shielding evaluation since the cask cavity is dry during all transport conditions. Combined with the fuel rod clad, fuel material, and tube materials, the void accounts for the total fuel region volume. The clad region is zirconium alloy (density 6.55 g/cm^3) for both PWR and BWR fuel.

Failed fuel is considered by filling the void space between the top of the intact fuel and the rod holder can lid (2.70E+03 cm^3) with UO_2 at a 50% volume fraction. For all three fuel types, this volume corresponds to less than 14 fuel rods. Therefore, an additional source region is modeled, which considers a mixture of damaged fuel and intact fuel homogenized over the height required

to yield the appropriate volume difference. The area available for failed fuel in this mixture region is 50% of the void space within the pin holder can excluding the pellet-clad gap. The mixture calculations are summarized in Table 5.3.12-7.

For conservatism, the input description differs in the analysis of the three source regions described above. For the intact fuel mixture, the source region is the entire active fuel height (389.9 cm) with the remaining space above (33.01 cm) filled with damaged fuel. No credit is taken for the self-shielding of intact and damaged fuel spanning at the top of the active fuel region, and no credit is taken for the reduction in active fuel source required for the dispersion of 14 rods. Thus, the total source evaluated is 39 rods.

Basket Model

For a given fuel type, the MCBEND description of the basket elements forms a common sub-model employed in the analysis. The key features of the model are the detailed representation of pin canister, PWR insert, and PWR basket.

MCBEND NAC-LWT Model

The three-dimensional model of the NAC-LWT cask containing design basis fuel assemblies is based on the following features:

Normal conditions:

- Radial neutron shield and shield shell
- Aluminum impact limiters with 0.5 g/cm^3 density (calculated based on the impact limiter weight and dimensions) and diameter equal to the neutron shield shell diameter

Accident conditions:

- Removal of radial neutron shield and shield shell
- Loss of upper and lower impact limiters

Common to both the normal and accident conditions models is a 0.1374 cm gap between the lead outer diameter and the cask outer shell. The elevation of the source regions is controlled such that the offset of the rod holder canister from the bottom of the NAC-LWT cask cavity is not more than 2.05 inches (5.21 cm) based on the cavity, spacer and rod holder dimensions. This conservatively shifts the failed fuel source to the top of the cask cavity where, as shown in Figure 5.3.10-6, the least radial shielding is located.

Detailed model parameters used in creating the three-dimensional model are taken directly from the License Drawings. Elevations associated with the three-dimensional features are established with respect to the center bottom of the NAC-LWT cask cavity for the MCBEND combinatorial model. The three-dimensional NAC-LWT models are shown in Figure 5.3.12-1 and Figure 5.3.12-2. A sample input file for the damaged fuel evaluation is provided in Figure 5.3.12-6.

Shield Regional Densities

Based on the homogenization described for the fuel rod model, the resulting fuel regional densities are shown in Table 5.3.12-8. Material compositions for structural and shield materials are shown in Table 5.3.11-22.

5.3.12.4 Damaged High Burnup PWR and BWR Rods Shielding Evaluation

Calculational Methods

The shielding evaluation is performed using MCBEND. As described in Section 5.3.12.2, the evaluation includes the effect of fuel burnup peaking on fuel neutron and gamma source terms.

The MCBEND shielding model described in Section 5.3.12.3 is utilized with the source terms described in Section 5.3.12.1 to estimate the dose rate profiles at various distances from the side, top and bottom of the cask for both normal and accident conditions. The method of solution is continuous energy Monte Carlo with an adjoint diffusion solution for generating importance meshes. Radial biasing is performed within the MCBEND code to estimate dose rates on the side of the cask. Axial biasing is performed to estimates dose rates on the top and bottom of the cask.

The MCBEND code has been validated against various classical shielding problems, including fast and thermal neutron sources penetrating through single material slab geometries of iron, graphite and water. The validation suite also includes fast neutron transmission through alternating slabs of iron and water. Of particular interest is a benchmark of MCBEND to gamma and neutron dose rates outside a metal transport cask, where agreement between measurement and calculation is within 20% for the majority of dose locations.

MCBEND results are calculated using the JEF2.2 neutron cross-section library and the ANSWERS gamma library.

MCBEND Flux-to-Dose Conversion Factors

The ANSI/ANS 6.1.1-1977 flux-to-dose rate conversion factors are employed in the MCBEND analysis. The ANSI/ANS gamma and neutron dose conversion factors are shown in Table 5.3.11-23 and Table 5.3.11-24. The number of energy/conversion factor pairs was increased to 133 neutron and 371 gamma pairs by a log-log interpolation scheme indicated as appropriate in ANSI/ANS 6.1.1-1977.

Three-Dimensional Dose Rates for High Burnup Fuel

Table 5.3.12-9 and Table 5.3.12-10 summarize the computed dose rates for each fuel type at the tabulated distances and transport conditions (normal and accident). The highest calculated radial dose rates at the surface and 2-meter locations under normal conditions are for BWR 8×8 and

PWR rods, respectively. The highest calculated radial dose rates at 1 meter from the cask under accident conditions are for BWR 7×7 rods.

Normal condition radial surface dose rates for all three fuel types are in excess of 200 mrem/hr, necessitating an exclusive use designation for the NAC-LWT. The maximum dose rate is dominated by the damaged fuel neutron component, which comprises approximately 74% of the maximum dose rate. The axial elevation of the maximum dose rate is above the neutron shield. The dose rate profile is shown in Figure 5.3.12-3.

The normal condition maximum radial 2-meter dose rate is 9.8 mrem/hr. At this distance, the damaged fuel neutron component contributes approximately 34% of the maximum. The dose rate profile is skewed towards the top of cask, as shown Figure 5.3.12-4.

Accident condition radial 1-meter dose rates for all three fuel types are well below the 1,000 mrem/hr limit. The maximum dose rate is dominated by the intact fuel neutron component, which contributes approximately 68% towards the maximum. The dose rate profile is shown in Figure 5.3.12-5.

As shown in Table 5.3.12-10, axial surface dose rates are well below limits for all three fuel types. Significant margin is present for the normal condition 2-meter and accident condition 1-meter dose rate limits.

Figure 5.3.12-1 MCBEND Model of NAC-LWT with Damaged Fuel Rods – Axial Detail

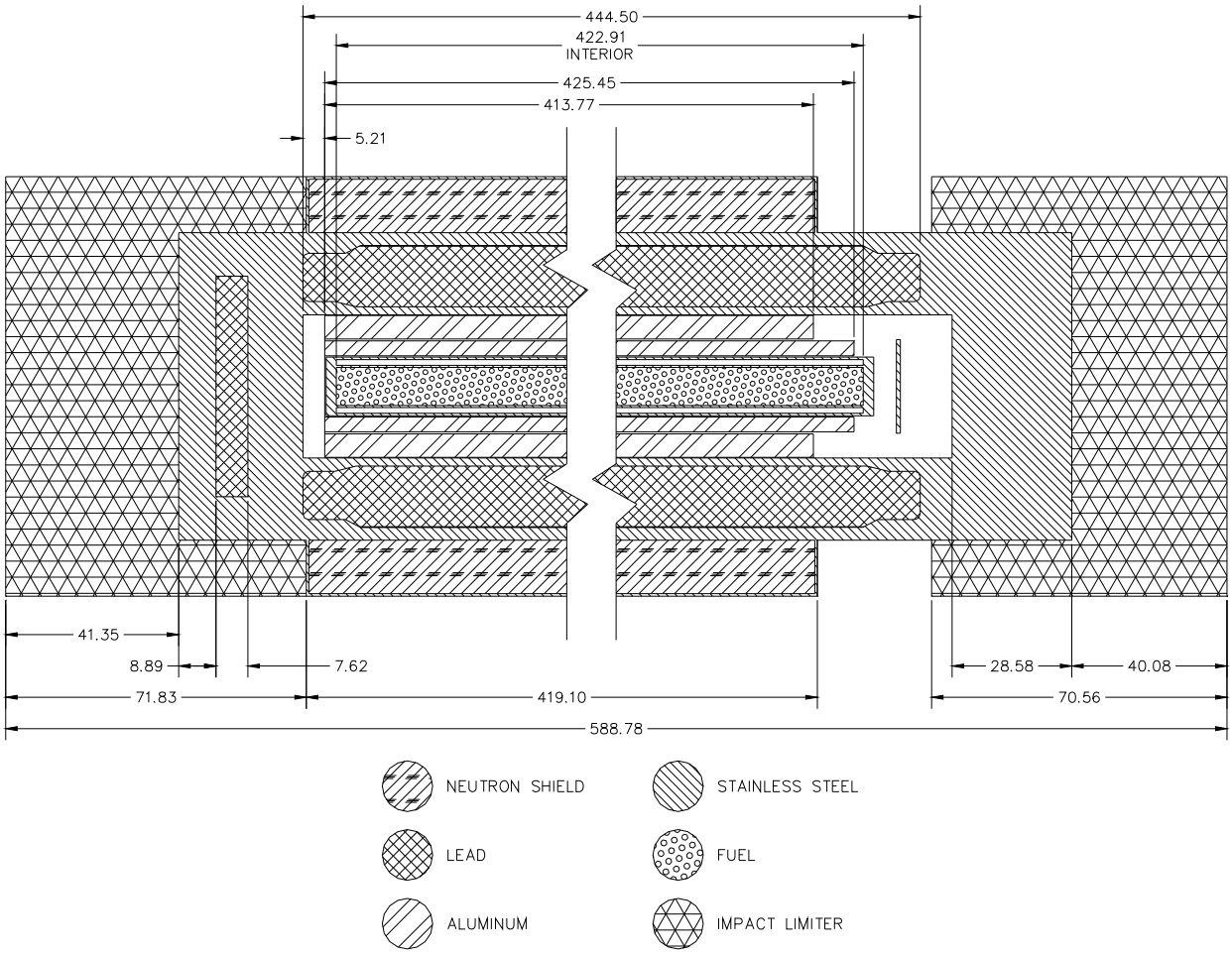

Dimensions in cm.

Note: Spacer, rod holder handle and basket bottom weldment material are not included in the model. The spacing provided by these components is maintained in the model.

Figure 5.3.12-2 MCBEND Model of NAC-LWT with Damaged Fuel Rods – Radial Detail

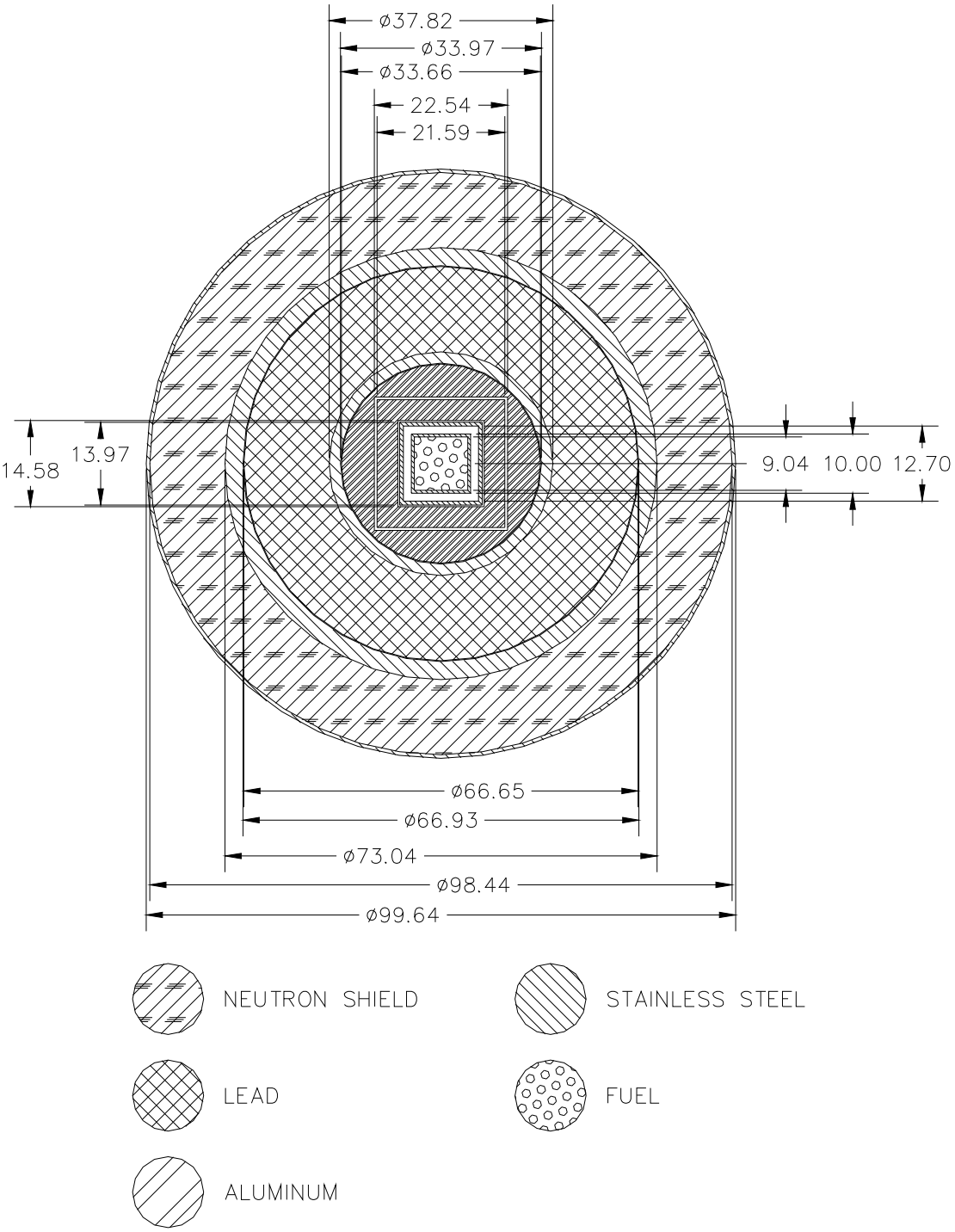

Dimensions in cm.

Figure 5.3.12-3 Normal Condition Axial Surface Dose Rate Profile by Source Type – Damaged Fuel Rods

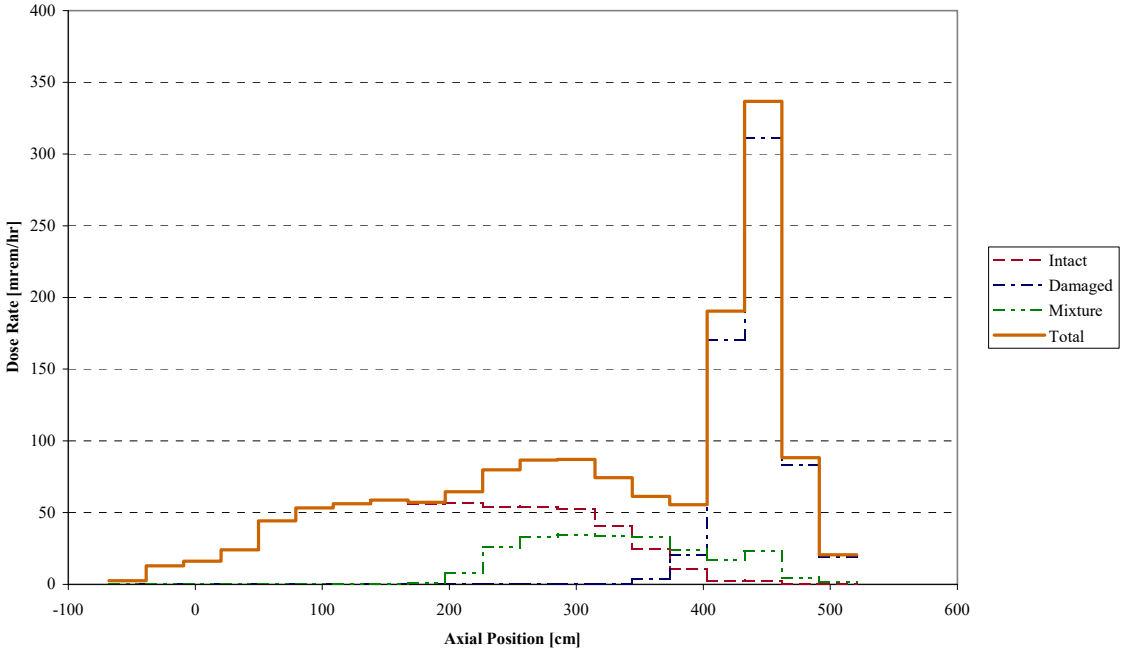

Figure 5.3.12-4 Normal Condition Radial 2m Dose Rate Profile by Source Type – Damaged Fuel Rods

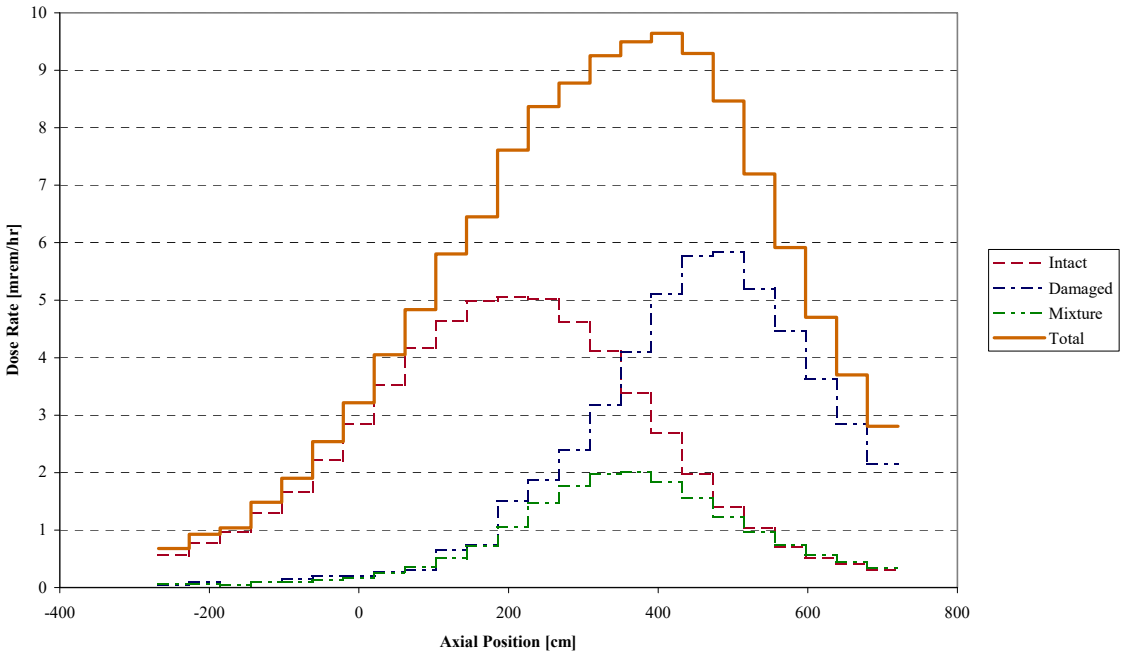

Figure 5.3.12-5 Accident Condition Radial 1m Dose Rate Profile by Source Type – Damaged Fuel Rods

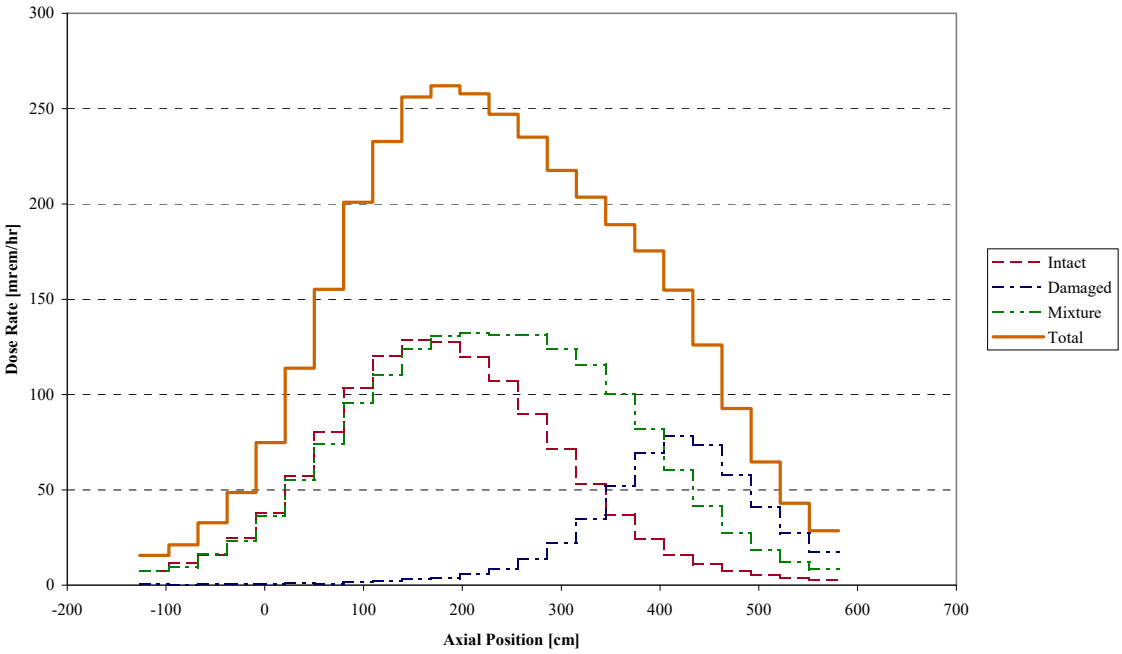

Figure 5.3.12-6 Sample Input File for Damaged Fuel Evaluation

```
columns 1 200
*
*   LWT Cask - b7Dmg_80b40e210d
*   Normal Transport Conditions
*   Damaged Rods Condition Normal(25) Damaged(14)
*   BWR 7x7 Rods 80 GWD/MTU 4.0 wt. % 210 days Cool Time
*   Fuel Neutron Source
*   Radial Detector Positions
*   Model Revision v2.7.2
*
*
* Parameters
*
@samps =    1000000

*
* Unit 1 Control Data
*
begin control data
    run
    sample limit     @samps
    time limit     1000m
    seeds    92356    84336
    chime every    [@samps/10]    samples
    report interim results
    sbd    30s
    dump intervals    1
end

*
* Unit 3 Output Control
*
*begin output control
*    suppress inflows
*end

*
* Unit 4 Material Geometry
*
begin material geometry
* LWT Cask Normal Conditions v2.7
PART    1
ZROD    1    0.0000    0.0000    -26.6700    36.5189    507.3650        ! Lwt
ZROD    2    0.0000    0.0000    -26.6700    36.5189    26.6700        ! Bottom
ZROD    3    0.0000    0.0000    0.0000    16.9863    452.1200        ! Cavity
ZROD    4    0.0000    0.0000    -17.7800    26.3525    7.6200        ! Bottom gamma shield
ZROD    5    0.0000    0.0000    0.0000    20.1740    444.5000        ! Lead id - taper
ZROD    6    0.0000    0.0000    0.0000    31.5976    444.5000        ! Lead od - taper
ZROD    7    0.0000    0.0000    13.8176    18.9103    416.8648        ! Lead id
ZROD    8    0.0000    0.0000    13.8176    33.3271    416.8648        ! Lead od
ZROD    9    0.0000    0.0000    13.8176    33.4645    416.8648        ! Lead gap
ZROD    10    0.0000    0.0000    3.8100    49.8183    419.1000        ! Neutron shield shell
ZROD    11    0.0000    0.0000    5.0800    49.2189    416.5600        ! Neutron shield
ZROD    12    0.0000    0.0000    450.2150    49.8183    70.5612        ! Upper limiter
ZROD    13    0.0000    0.0000    -68.0212    49.8183    71.8312        ! Lower limiter
ZROD    14    0.0000    0.0000    -68.0212    49.8183    588.7974        ! Container
ZONES
/BotPb/    M4    +4
/Cavity/    P2    +3
/Bottom/    M5    +2    -4
/OuterShell/    M5    +1    -2    -6    -9    -3
/InnerShellTaper/    M5    +5    -8    -3
/InnerShell/    M5    +7    -3
/Lead/    M4    +8    -7
/LeadTaper/    M4    +6    -5    -8
/LeadGap/    M0    +9    -8
/NeutronShield/    M2    +11    -1
/NSShell/    M5    +10    -11    -1
/UpperLimiter/    M9    +12    -1
/LowerLimiter/    M9    +13    -1
/Exterior/    M0    +14    -1    -10    -12    -13
VOLUMES UNITY
* Cask Cavity for Rods Model v2.7
PART    2
ZROD    1    0.0000    0.0000    0.0000    16.8275    433.1970            ! PWR basket
ZROD    2    0.0000    0.0000    438.7850    11.1760    0.9525            ! Spacer plate
ZROD    3    0.0000    0.0000    0.0000    16.9863    452.1200            ! Cavity
ZONES
/PWRBasket/    P3    +1
/Spacer/    M5    +2
/Cavity/    M0    +3    -2    -1
VOLUMES UNITY
* PWR Basket for Rods Model v2.7
PART    3
BOX    1    -11.2713    -11.2713    5.2070    22.5425    22.5425    427.9900        ! Internal cavity
ZROD    2    0.0000    0.0000    0.0000    16.8275    5.2070            ! Bottom offset
ZROD    3    0.0000    0.0000    0.0000    16.8275    415.4170            ! Basket walls
ZROD    4    0.0000    0.0000    0.0000    16.8275    433.1970            ! Basket void
ZONES
/PWR Insert/    P4    +1
/Offset/    M0    +2
/Basket/    M3    +3    -2    -1
/Basket/    M0    +4    -3    -2    -1
```

Figure 5.3.12-6 Sample Input File for Damaged Fuel Evaluation (Continued)

```
* PWR Insert for Rods Model v2.7
PART    4
BOX    1    -7.2898    -7.2898    1.2700    14.5796    14.5796    426.7200        ! PWR Insert cavity
BOX    2    -10.7950    -10.7950    0.0000    21.5900    21.5900    425.4500        ! PWR Insert body
BOX    3    -11.2713    -11.2713    0.0000    22.5425    22.5425    427.9900        ! PWR Insert void
ZONES
/Can Weldment/    P5    +1
/PWR Insert Body/    M3    +2    -1
/Container/    M0    +3    -2    -1
VOLUMES UNITY
* Can Weldment for Rods Model v2.7
PART    5
BOX    1    -4.5212    -4.5212    2.5400    9.0424    9.0424    422.9100        ! Internal cavity
BOX    2    -4.9975    -4.9975    2.5400    9.9949    9.9949    419.7350        ! Internal spacer
BOX    3    -6.3500    -6.3500    2.5400    12.7000    12.7000    420.3700        ! Can weldment cavity
BOX    4    -6.9850    -6.9850    0.0000    13.9700    13.9700    2.5400        ! Can weldment base
BOX    5    -6.9850    -6.9850    0.0000    13.9700    13.9700    422.9100        ! Can weldment body
BOX    6    -6.9850    -6.9850    0.0000    13.9700    13.9700    425.4500        ! Can weldment flange
BOX    7    -6.9850    -6.9850    0.0000    13.9700    13.9700    426.7200        ! Can weldment lid
BOX    8    -7.2898    -7.2898    0.0000    14.5796    14.5796    426.7200        ! PWR Insert cavity
ZONES
/Fuel Insert/    P6    +1
/Internal Spacer/    M5    +2    -1
/Can Weldment void/    M0    +3    -2    -1
/Can Weldment base/    M5    +4
/Can Weldment body/    M5    +5    -4    -3    -1
/Can Weldment flange/    M5    +6    -5    -1
/Can Weldment lid/    M5    +7    -6
/Container/    M0    +8    -7
VOLUMES UNITY
* Rods Model Fuel Insert v2.7
PART    6    NEST
BOX    M6        0.0000    0.0000    0.0000    9.0424    9.0424    0.0001    ! Intact fuel
BOX    M6        0.0000    0.0000    0.0000    9.0424    9.0424    389.9000    ! Intact fuel
BOX    M7    S    0.0000    0.0000    0.0000    9.0424    9.0424    422.9100    ! Damaged fuel
* LWT Cask Detector Description v2.7
PART    7
* Radial Detector DRA (Surface) Bodies
ZROD      1                    0.0000    0.0000    -68.0212  49.8183   588.7974
ZROD      2                    0.0000    0.0000    -68.0212  50.8183   29.4399
ZROD      3                    0.0000    0.0000    -38.5813  50.8183   29.4399
ZROD      4                    0.0000    0.0000    -9.1415   50.8183   29.4399
ZROD      5                    0.0000    0.0000    20.2984   50.8183   29.4399
ZROD      6                    0.0000    0.0000    49.7383   50.8183   29.4399
ZROD      7                    0.0000    0.0000    79.1782   50.8183   29.4399
ZROD      8                    0.0000    0.0000    108.6180  50.8183   29.4399
ZROD      9                    0.0000    0.0000    138.0579  50.8183   29.4399
ZROD      10                   0.0000    0.0000    167.4978  50.8183   29.4399
ZROD      11                   0.0000    0.0000    196.9376  50.8183   29.4399
ZROD      12                   0.0000    0.0000    226.3775  50.8183   29.4399
ZROD      13                   0.0000    0.0000    255.8174  50.8183   29.4399
ZROD      14                   0.0000    0.0000    285.2572  50.8183   29.4399
ZROD      15                   0.0000    0.0000    314.6971  50.8183   29.4399
ZROD      16                   0.0000    0.0000    344.1370  50.8183   29.4399
ZROD      17                   0.0000    0.0000    373.5769  50.8183   29.4399
ZROD      18                   0.0000    0.0000    403.0167  50.8183   29.4399
ZROD      19                   0.0000    0.0000    432.4566  50.8183   29.4399
ZROD      20                   0.0000    0.0000    461.8965  50.8183   29.4399
ZROD      21                   0.0000    0.0000    491.3363  50.8183   29.4399
* Radial Detector DRAA (SurfaceAzi) Bodies
ZROD      22                   0.0000    0.0000    -69.0212  50.8183   590.7974
*   Band 1 Bodies
ZSEC      23                   0.0000    0.0000    444.5000  50.8183   51.8183   36.1950   0.0000    12.0000
ZSEC      24                   0.0000    0.0000    444.5000  50.8183   51.8183   36.1950   12.0000   24.0000
ZSEC      25                   0.0000    0.0000    444.5000  50.8183   51.8183   36.1950   24.0000   36.0000
ZSEC      26                   0.0000    0.0000    444.5000  50.8183   51.8183   36.1950   36.0000   48.0000
ZSEC      27                   0.0000    0.0000    444.5000  50.8183   51.8183   36.1950   48.0000   60.0000
ZSEC      28                   0.0000    0.0000    444.5000  50.8183   51.8183   36.1950   60.0000   72.0000
ZSEC      29                   0.0000    0.0000    444.5000  50.8183   51.8183   36.1950   72.0000   84.0000
ZSEC      30                   0.0000    0.0000    444.5000  50.8183   51.8183   36.1950   84.0000   96.0000
ZSEC      31                   0.0000    0.0000    444.5000  50.8183   51.8183   36.1950   96.0000   108.0000
ZSEC      32                   0.0000    0.0000    444.5000  50.8183   51.8183   36.1950   108.0000  120.0000
ZSEC      33                   0.0000    0.0000    444.5000  50.8183   51.8183   36.1950   120.0000  132.0000
ZSEC      34                   0.0000    0.0000    444.5000  50.8183   51.8183   36.1950   132.0000  144.0000
ZSEC      35                   0.0000    0.0000    444.5000  50.8183   51.8183   36.1950   144.0000  156.0000
ZSEC      36                   0.0000    0.0000    444.5000  50.8183   51.8183   36.1950   156.0000  168.0000
ZSEC      37                   0.0000    0.0000    444.5000  50.8183   51.8183   36.1950   168.0000  180.0000
ZSEC      38                   0.0000    0.0000    444.5000  50.8183   51.8183   36.1950   180.0000  192.0000
ZSEC      39                   0.0000    0.0000    444.5000  50.8183   51.8183   36.1950   192.0000  204.0000
ZSEC      40                   0.0000    0.0000    444.5000  50.8183   51.8183   36.1950   204.0000  216.0000
ZSEC      41                   0.0000    0.0000    444.5000  50.8183   51.8183   36.1950   216.0000  228.0000
ZSEC      42                   0.0000    0.0000    444.5000  50.8183   51.8183   36.1950   228.0000  240.0000
ZSEC      43                   0.0000    0.0000    444.5000  50.8183   51.8183   36.1950   240.0000  252.0000
ZSEC      44                   0.0000    0.0000    444.5000  50.8183   51.8183   36.1950   252.0000  264.0000
ZSEC      45                   0.0000    0.0000    444.5000  50.8183   51.8183   36.1950   264.0000  276.0000
ZSEC      46                   0.0000    0.0000    444.5000  50.8183   51.8183   36.1950   276.0000  288.0000
ZSEC      47                   0.0000    0.0000    444.5000  50.8183   51.8183   36.1950   288.0000  300.0000
ZSEC      48                   0.0000    0.0000    444.5000  50.8183   51.8183   36.1950   300.0000  312.0000
ZSEC      49                   0.0000    0.0000    444.5000  50.8183   51.8183   36.1950   312.0000  324.0000
ZSEC      50                   0.0000    0.0000    444.5000  50.8183   51.8183   36.1950   324.0000  336.0000
ZSEC      51                   0.0000    0.0000    444.5000  50.8183   51.8183   36.1950   336.0000  348.0000
ZSEC      52                   0.0000    0.0000    444.5000  50.8183   51.8183   36.1950   348.0000  360.0000
* Radial Detector DRB (1ft) Bodies
```

Figure 5.3.12-6 Sample Input File for Damaged Fuel Evaluation (Continued)

```
ZROD      53                  0.0000    0.0000    -98.5012  80.2983   649.7574
ZROD      54                  0.0000    0.0000    -98.5012  81.2983   32.4879
ZROD      55                  0.0000    0.0000    -66.0133  81.2983   32.4879
ZROD      56                  0.0000    0.0000    -33.5255  81.2983   32.4879
ZROD      57                  0.0000    0.0000    -1.0376   81.2983   32.4879
ZROD      58                  0.0000    0.0000    31.4503   81.2983   32.4879
ZROD      59                  0.0000    0.0000    63.9382   81.2983   32.4879
ZROD      60                  0.0000    0.0000    96.4260   81.2983   32.4879
ZROD      61                  0.0000    0.0000    128.9139  81.2983   32.4879
ZROD      62                  0.0000    0.0000    161.4018  81.2983   32.4879
ZROD      63                  0.0000    0.0000    193.8896  81.2983   32.4879
ZROD      64                  0.0000    0.0000    226.3775  81.2983   32.4879
ZROD      65                  0.0000    0.0000    258.8654  81.2983   32.4879
ZROD      66                  0.0000    0.0000    291.3532  81.2983   32.4879
ZROD      67                  0.0000    0.0000    323.8411  81.2983   32.4879
ZROD      68                  0.0000    0.0000    356.3290  81.2983   32.4879
ZROD      69                  0.0000    0.0000    388.8169  81.2983   32.4879
ZROD      70                  0.0000    0.0000    421.3047  81.2983   32.4879
ZROD      71                  0.0000    0.0000    453.7926  81.2983   32.4879
ZROD      72                  0.0000    0.0000    486.2805  81.2983   32.4879
ZROD      73                  0.0000    0.0000    518.7683  81.2983   32.4879
* Radial Detector DRC (1m) Bodies
ZROD      74                  0.0000    0.0000    -168.0212 149.8183  788.7974
ZROD      75                  0.0000    0.0000    -168.0212 150.8183  32.8666
ZROD      76                  0.0000    0.0000    -135.1546 150.8183  32.8666
ZROD      77                  0.0000    0.0000    -102.2881 150.8183  32.8666
ZROD      78                  0.0000    0.0000    -69.4215  150.8183  32.8666
ZROD      79                  0.0000    0.0000    -36.5550  150.8183  32.8666
ZROD      80                  0.0000    0.0000    -3.6884   150.8183  32.8666
ZROD      81                  0.0000    0.0000    29.1782   150.8183  32.8666
ZROD      82                  0.0000    0.0000    62.0447   150.8183  32.8666
ZROD      83                  0.0000    0.0000    94.9113   150.8183  32.8666
ZROD      84                  0.0000    0.0000    127.7778  150.8183  32.8666
ZROD      85                  0.0000    0.0000    160.6444  150.8183  32.8666
ZROD      86                  0.0000    0.0000    193.5109  150.8183  32.8666
ZROD      87                  0.0000    0.0000    226.3775  150.8183  32.8666
ZROD      88                  0.0000    0.0000    259.2441  150.8183  32.8666
ZROD      89                  0.0000    0.0000    292.1106  150.8183  32.8666
ZROD      90                  0.0000    0.0000    324.9772  150.8183  32.8666
ZROD      91                  0.0000    0.0000    357.8437  150.8183  32.8666
ZROD      92                  0.0000    0.0000    390.7103  150.8183  32.8666
ZROD      93                  0.0000    0.0000    423.5769  150.8183  32.8666
ZROD      94                  0.0000    0.0000    456.4434  150.8183  32.8666
ZROD      95                  0.0000    0.0000    489.3100  150.8183  32.8666
ZROD      96                  0.0000    0.0000    522.1765  150.8183  32.8666
ZROD      97                  0.0000    0.0000    555.0431  150.8183  32.8666
ZROD      98                  0.0000    0.0000    587.9096  150.8183  32.8666
* Radial Detector DRD (2m) Bodies
ZROD      99                  0.0000    0.0000    -268.0212 249.8183  988.7974
ZROD      100                 0.0000    0.0000    -268.0212 250.8183  41.1999
ZROD      101                 0.0000    0.0000    -226.8213 250.8183  41.1999
ZROD      102                 0.0000    0.0000    -185.6214 250.8183  41.1999
ZROD      103                 0.0000    0.0000    -144.4215 250.8183  41.1999
ZROD      104                 0.0000    0.0000    -103.2216 250.8183  41.1999
ZROD      105                 0.0000    0.0000    -62.0217  250.8183  41.1999
ZROD      106                 0.0000    0.0000    -20.8219  250.8183  41.1999
ZROD      107                 0.0000    0.0000    20.3780   250.8183  41.1999
ZROD      108                 0.0000    0.0000    61.5779   250.8183  41.1999
ZROD      109                 0.0000    0.0000    102.7778  250.8183  41.1999
ZROD      110                 0.0000    0.0000    143.9777  250.8183  41.1999
ZROD      111                 0.0000    0.0000    185.1776  250.8183  41.1999
ZROD      112                 0.0000    0.0000    226.3775  250.8183  41.1999
ZROD      113                 0.0000    0.0000    267.5774  250.8183  41.1999
ZROD      114                 0.0000    0.0000    308.7773  250.8183  41.1999
ZROD      115                 0.0000    0.0000    349.9772  250.8183  41.1999
ZROD      116                 0.0000    0.0000    391.1771  250.8183  41.1999
ZROD      117                 0.0000    0.0000    432.3770  250.8183  41.1999
ZROD      118                 0.0000    0.0000    473.5769  250.8183  41.1999
ZROD      119                 0.0000    0.0000    514.7767  250.8183  41.1999
ZROD      120                 0.0000    0.0000    555.9766  250.8183  41.1999
ZROD      121                 0.0000    0.0000    597.1765  250.8183  41.1999
ZROD      122                 0.0000    0.0000    638.3764  250.8183  41.1999
ZROD      123                 0.0000    0.0000    679.5763  250.8183  41.1999
* Radial Detector DRE (2m+Convey) Bodies
ZROD      124                 0.0000    0.0000    -269.0212 321.9200  990.7974
ZROD      125                 0.0000    0.0000    -268.0212 322.9200  41.1999
ZROD      126                 0.0000    0.0000    -226.8213 322.9200  41.1999
ZROD      127                 0.0000    0.0000    -185.6214 322.9200  41.1999
ZROD      128                 0.0000    0.0000    -144.4215 322.9200  41.1999
ZROD      129                 0.0000    0.0000    -103.2216 322.9200  41.1999
ZROD      130                 0.0000    0.0000    -62.0217  322.9200  41.1999
ZROD      131                 0.0000    0.0000    -20.8219  322.9200  41.1999
ZROD      132                 0.0000    0.0000    20.3780   322.9200  41.1999
ZROD      133                 0.0000    0.0000    61.5779   322.9200  41.1999
ZROD      134                 0.0000    0.0000    102.7778  322.9200  41.1999
ZROD      135                 0.0000    0.0000    143.9777  322.9200  41.1999
ZROD      136                 0.0000    0.0000    185.1776  322.9200  41.1999
ZROD      137                 0.0000    0.0000    226.3775  322.9200  41.1999
ZROD      138                 0.0000    0.0000    267.5774  322.9200  41.1999
ZROD      139                 0.0000    0.0000    308.7773  322.9200  41.1999
ZROD      140                 0.0000    0.0000    349.9772  322.9200  41.1999
ZROD      141                 0.0000    0.0000    391.1771  322.9200  41.1999
ZROD      142                 0.0000    0.0000    432.3770  322.9200  41.1999
ZROD      143                 0.0000    0.0000    473.5769  322.9200  41.1999
```

Figure 5.3.12-6 Sample Input File for Damaged Fuel Evaluation (Continued)

```
ZROD      144                 0.0000    0.0000    514.7767  322.9200  41.1999
ZROD      145                 0.0000    0.0000    555.9766  322.9200  41.1999
ZROD      146                 0.0000    0.0000    597.1765  322.9200  41.1999
ZROD      147                 0.0000    0.0000    638.3764  322.9200  41.1999
ZROD      148                 0.0000    0.0000    679.5763  322.9200  41.1999
* Radial Detector DREE (2m+ConveyAzi) Bodies
ZROD      149                 0.0000    0.0000    -270.0212 322.9200  992.7974
*   Band 1 Bodies
ZSEC      150                 0.0000    0.0000    444.5000  322.9200  323.9200  46.1950   0.0000    12.0000
ZSEC      151                 0.0000    0.0000    444.5000  322.9200  323.9200  46.1950   12.0000   24.0000
ZSEC      152                 0.0000    0.0000    444.5000  322.9200  323.9200  46.1950   24.0000   36.0000
ZSEC      153                 0.0000    0.0000    444.5000  322.9200  323.9200  46.1950   36.0000   48.0000
ZSEC      154                 0.0000    0.0000    444.5000  322.9200  323.9200  46.1950   48.0000   60.0000
ZSEC      155                 0.0000    0.0000    444.5000  322.9200  323.9200  46.1950   60.0000   72.0000
ZSEC      156                 0.0000    0.0000    444.5000  322.9200  323.9200  46.1950   72.0000   84.0000
ZSEC      157                 0.0000    0.0000    444.5000  322.9200  323.9200  46.1950   84.0000   96.0000
ZSEC      158                 0.0000    0.0000    444.5000  322.9200  323.9200  46.1950   96.0000   108.0000
ZSEC      159                 0.0000    0.0000    444.5000  322.9200  323.9200  46.1950   108.0000  120.0000
ZSEC      160                 0.0000    0.0000    444.5000  322.9200  323.9200  46.1950   120.0000  132.0000
ZSEC      161                 0.0000    0.0000    444.5000  322.9200  323.9200  46.1950   132.0000  144.0000
ZSEC      162                 0.0000    0.0000    444.5000  322.9200  323.9200  46.1950   144.0000  156.0000
ZSEC      163                 0.0000    0.0000    444.5000  322.9200  323.9200  46.1950   156.0000  168.0000
ZSEC      164                 0.0000    0.0000    444.5000  322.9200  323.9200  46.1950   168.0000  180.0000
ZSEC      165                 0.0000    0.0000    444.5000  322.9200  323.9200  46.1950   180.0000  192.0000
ZSEC      166                 0.0000    0.0000    444.5000  322.9200  323.9200  46.1950   192.0000  204.0000
ZSEC      167                 0.0000    0.0000    444.5000  322.9200  323.9200  46.1950   204.0000  216.0000
ZSEC      168                 0.0000    0.0000    444.5000  322.9200  323.9200  46.1950   216.0000  228.0000
ZSEC      169                 0.0000    0.0000    444.5000  322.9200  323.9200  46.1950   228.0000  240.0000
ZSEC      170                 0.0000    0.0000    444.5000  322.9200  323.9200  46.1950   240.0000  252.0000
ZSEC      171                 0.0000    0.0000    444.5000  322.9200  323.9200  46.1950   252.0000  264.0000
ZSEC      172                 0.0000    0.0000    444.5000  322.9200  323.9200  46.1950   264.0000  276.0000
ZSEC      173                 0.0000    0.0000    444.5000  322.9200  323.9200  46.1950   276.0000  288.0000
ZSEC      174                 0.0000    0.0000    444.5000  322.9200  323.9200  46.1950   288.0000  300.0000
ZSEC      175                 0.0000    0.0000    444.5000  322.9200  323.9200  46.1950   300.0000  312.0000
ZSEC      176                 0.0000    0.0000    444.5000  322.9200  323.9200  46.1950   312.0000  324.0000
ZSEC      177                 0.0000    0.0000    444.5000  322.9200  323.9200  46.1950   324.0000  336.0000
ZSEC      178                 0.0000    0.0000    444.5000  322.9200  323.9200  46.1950   336.0000  348.0000
ZSEC      179                 0.0000    0.0000    444.5000  322.9200  323.9200  46.1950   348.0000  360.0000
* World
ZROD      180                 0.0000    0.0000    -320.0212 372.9200  1092.7974
* External Void
ZROD      181                 0.0000    0.0000    -370.0212 422.9200  1192.7974

ZONES
/LWTCask/ P1        +1
* Detector DRA (Surface)
/DRA01/   M0        +2        -1
/DRA02/   M0        +3        -1
/DRA03/   M0        +4        -1
/DRA04/   M0        +5        -1
/DRA05/   M0        +6        -1
/DRA06/   M0        +7        -1
/DRA07/   M0        +8        -1
/DRA08/   M0        +9        -1
/DRA09/   M0        +10       -1
/DRA10/   M0        +11       -1
/DRA11/   M0        +12       -1
/DRA12/   M0        +13       -1
/DRA13/   M0        +14       -1
/DRA14/   M0        +15       -1
/DRA15/   M0        +16       -1
/DRA16/   M0        +17       -1
/DRA17/   M0        +18       -1
/DRA18/   M0        +19       -1
/DRA19/   M0        +20       -1
/DRA20/   M0        +21       -1
/Void/    M0        +22       -1
                    -2        -3        -4        -5        -6        -7
                    -8        -9        -10       -11       -12       -13
                    -14       -15       -16       -17       -18       -19
                    -20       -21
* Detector DRAA (SurfaceAzi)
/DRAA0101/          M0        +23
/DRAA0102/          M0        +24
/DRAA0103/          M0        +25
/DRAA0104/          M0        +26
/DRAA0105/          M0        +27
/DRAA0106/          M0        +28
/DRAA0107/          M0        +29
/DRAA0108/          M0        +30
/DRAA0109/          M0        +31
/DRAA0110/          M0        +32
/DRAA0111/          M0        +33
/DRAA0112/          M0        +34
/DRAA0113/          M0        +35
/DRAA0114/          M0        +36
/DRAA0115/          M0        +37
/DRAA0116/          M0        +38
/DRAA0117/          M0        +39
/DRAA0118/          M0        +40
/DRAA0119/          M0        +41
/DRAA0120/          M0        +42
/DRAA0121/          M0        +43
/DRAA0122/          M0        +44
```

Figure 5.3.12-6 Sample Input File for Damaged Fuel Evaluation (Continued)

```
/DRAA0123/          M0        +45
/DRAA0124/          M0        +46
/DRAA0125/          M0        +47
/DRAA0126/          M0        +48
/DRAA0127/          M0        +49
/DRAA0128/          M0        +50
/DRAA0129/          M0        +51
/DRAA0130/          M0        +52
/Void/    M0        +53       -22
                    -23       -24       -25       -26       -27       -28
                    -29       -30       -31       -32       -33       -34
                    -35       -36       -37       -38       -39       -40
                    -41       -42       -43       -44       -45       -46
                    -47       -48       -49       -50       -51       -52
* Detector DRB (1ft)
/DRB01/   M0        +54       -53
/DRB02/   M0        +55       -53
/DRB03/   M0        +56       -53
/DRB04/   M0        +57       -53
/DRB05/   M0        +58       -53
/DRB06/   M0        +59       -53
/DRB07/   M0        +60       -53
/DRB08/   M0        +61       -53
/DRB09/   M0        +62       -53
/DRB10/   M0        +63       -53
/DRB11/   M0        +64       -53
/DRB12/   M0        +65       -53
/DRB13/   M0        +66       -53
/DRB14/   M0        +67       -53
/DRB15/   M0        +68       -53
/DRB16/   M0        +69       -53
/DRB17/   M0        +70       -53
/DRB18/   M0        +71       -53
/DRB19/   M0        +72       -53
/DRB20/   M0        +73       -53
/Void/    M0        +74       -53
                    -54       -55       -56       -57       -58       -59
                    -60       -61       -62       -63       -64       -65
                    -66       -67       -68       -69       -70       -71
                    -72       -73
* Detector DRC (1m)
/DRC01/   M0        +75       -74
/DRC02/   M0        +76       -74
/DRC03/   M0        +77       -74
/DRC04/   M0        +78       -74
/DRC05/   M0        +79       -74
/DRC06/   M0        +80       -74
/DRC07/   M0        +81       -74
/DRC08/   M0        +82       -74
/DRC09/   M0        +83       -74
/DRC10/   M0        +84       -74
/DRC11/   M0        +85       -74
/DRC12/   M0        +86       -74
/DRC13/   M0        +87       -74
/DRC14/   M0        +88       -74
/DRC15/   M0        +89       -74
/DRC16/   M0        +90       -74
/DRC17/   M0        +91       -74
/DRC18/   M0        +92       -74
/DRC19/   M0        +93       -74
/DRC20/   M0        +94       -74
/DRC21/   M0        +95       -74
/DRC22/   M0        +96       -74
/DRC23/   M0        +97       -74
/DRC24/   M0        +98       -74
/Void/    M0        +99       -74
                    -75       -76       -77       -78       -79       -80
                    -81       -82       -83       -84       -85       -86
                    -87       -88       -89       -90       -91       -92
                    -93       -94       -95       -96       -97       -98
* Detector DRD (2m)
/DRD01/   M0        +100      -99
/DRD02/   M0        +101      -99
/DRD03/   M0        +102      -99
/DRD04/   M0        +103      -99
/DRD05/   M0        +104      -99
/DRD06/   M0        +105      -99
/DRD07/   M0        +106      -99
/DRD08/   M0        +107      -99
/DRD09/   M0        +108      -99
/DRD10/   M0        +109      -99
/DRD11/   M0        +110      -99
/DRD12/   M0        +111      -99
/DRD13/   M0        +112      -99
/DRD14/   M0        +113      -99
/DRD15/   M0        +114      -99
/DRD16/   M0        +115      -99
/DRD17/   M0        +116      -99
/DRD18/   M0        +117      -99
/DRD19/   M0        +118      -99
/DRD20/   M0        +119      -99
/DRD21/   M0        +120      -99
/DRD22/   M0        +121      -99
/DRD23/   M0        +122      -99
```

Figure 5.3.12-6 Sample Input File for Damaged Fuel Evaluation (Continued)

```
/DRD24/   M0        +123      -99
/Void/    M0        +124      -99
                    -100      -101      -102      -103      -104      -105
                    -106      -107      -108      -109      -110      -111
                    -112      -113      -114      -115      -116      -117
                    -118      -119      -120      -121      -122      -123
* Detector DRE (2m+Convey)
/DRE01/   M0        +125      -124
/DRE02/   M0        +126      -124
/DRE03/   M0        +127      -124
/DRE04/   M0        +128      -124
/DRE05/   M0        +129      -124
/DRE06/   M0        +130      -124
/DRE07/   M0        +131      -124
/DRE08/   M0        +132      -124
/DRE09/   M0        +133      -124
/DRE10/   M0        +134      -124
/DRE11/   M0        +135      -124
/DRE12/   M0        +136      -124
/DRE13/   M0        +137      -124
/DRE14/   M0        +138      -124
/DRE15/   M0        +139      -124
/DRE16/   M0        +140      -124
/DRE17/   M0        +141      -124
/DRE18/   M0        +142      -124
/DRE19/   M0        +143      -124
/DRE20/   M0        +144      -124
/DRE21/   M0        +145      -124
/DRE22/   M0        +146      -124
/DRE23/   M0        +147      -124
/DRE24/   M0        +148      -124
/Void/    M0        +149      -124
                    -125      -126      -127      -128      -129      -130
                    -131      -132      -133      -134      -135      -136
                    -137      -138      -139      -140      -141      -142
                    -143      -144      -145      -146      -147      -148
* Detector DREE (2m+ConveyAzi)
/DREE0101/          M0        +150
/DREE0102/          M0        +151
/DREE0103/          M0        +152
/DREE0104/          M0        +153
/DREE0105/          M0        +154
/DREE0106/          M0        +155
/DREE0107/          M0        +156
/DREE0108/          M0        +157
/DREE0109/          M0        +158
/DREE0110/          M0        +159
/DREE0111/          M0        +160
/DREE0112/          M0        +161
/DREE0113/          M0        +162
/DREE0114/          M0        +163
/DREE0115/          M0        +164
/DREE0116/          M0        +165
/DREE0117/          M0        +166
/DREE0118/          M0        +167
/DREE0119/          M0        +168
/DREE0120/          M0        +169
/DREE0121/          M0        +170
/DREE0122/          M0        +171
/DREE0123/          M0        +172
/DREE0124/          M0        +173
/DREE0125/          M0        +174
/DREE0126/          M0        +175
/DREE0127/          M0        +176
/DREE0128/          M0        +177
/DREE0129/          M0        +178
/DREE0130/          M0        +179
/Void/    M0        +180      -149
                    -150      -151      -152      -153      -154      -155
                    -156      -157      -158      -159      -160      -161
                    -162      -163      -164      -165      -166      -167
                    -168      -169      -170      -171      -172      -173
                    -174      -175      -176      -177      -178      -179
/ExtVoid/ M-2000    +181      -180
Volumes
                    1.0       20*9.3077E+03       1.0       30*3.8903E+02       1.0       20*1.6493E+04
                    1.0       24*3.1042E+04       1.0       24*6.4799E+04       1.0       24*8.3464E+04
                    1.0       30*3.1291E+03       1.0       1.0
end

*
* Unit 5 Splitting Geometry for Radial Detectors - Neutron
*
begin splitting geometry
    r    18    fill    0.0000
                    n    5    6.3939
                    n    1    12.1809
                    n    1    16.9863
                    n    1    18.9103
                    n    2    33.3271
                    n    1    36.5189
                    n    5    49.2189
                    n    1    49.8183
                    n    1    50.8183
```

Figure 5.3.12-6 Sample Input File for Damaged Fuel Evaluation (Continued)

```
    z    36    fill    -73.0212
                  n    1    -68.0212
                  n    2    -26.6700
                  n    2    -17.7800
                  n    2    -10.1600
                  n    2    0.0000
                  n    1    7.1120
                  n    1    10.9220
                  n    16    400.8220
                  n    3    452.1200
                  n    4    480.6950
                  n    1    520.7762
                  n    1    525.7762
end

*
* Unit 6 - Source Geometry - Damaged Rods
*
begin source geometry
    x    1    -4.5212    4.5212
    y    1    -4.5212    4.5212
    z    1    398.9170    431.9270
end

*
* Unit 7
*
begin energy data
    neutron
    thermal treatment none
    importance    standard    28    groups
    scoring    as    importance
    simple    source    histogram    weighting    automatic
end

*
* Unit 8 Importance Map - Radial
*
begin importance map
    calculate
    targets    20
    part    7
    zones
        2    3    4    5    6
        7    8    9    10    11
        12    13    14    15    16
        17    18    19    20    21
    strengths
        1.0E+00    1.0E+00    1.0E+00    1.0E+00    1.0E+00
        1.0E+00    1.0E+00    1.0E+00    1.0E+00    1.0E+00
        1.0E+00    1.0E+00    1.0E+01    1.0E+01    1.0E+02
        1.0E+02    1.0E+02    1.0E+02    1.0E+02    1.0E+02
    defer mixing
    void density    0.10
    track
!    coupled source
!    write gamma importances to 32
!    write unformatted file to 31
!    use method d
end

*
* Unit 9 Scoring Data - Radial
*
begin scoring data
    flux
    part    7
    from    2    to    21    ! DRA
    from    23    to    52    ! DRAA
    from    54    to    73    ! DRB
    from    75    to    98    ! DRC
    from    100    to    123    ! DRD
    from    125    to    148    ! DRE
    from    150    to    179    ! DREE
    responses    sos    ditto
    contributions to responses        ditto
    ! score distribution for response
    ! weight distribution    total
end

*
* Unit 10 Response Data
*
begin response data
* Scale to mrem/hr
/ncrp38 - ansi ans-6.1.1-1977 neutron flux-dose conversion factors - mcnp table h.1 - mrem/
function pairs
          2.0000E+01          2.2700E-01
          1.9299E+01          2.2502E-01
          1.8623E+01          2.2307E-01
          1.7970E+01          2.2112E-01
          1.7341E+01          2.1920E-01
          1.6733E+01          2.1729E-01
          1.6147E+01          2.1540E-01
```

Figure 5.3.12-6 Sample Input File for Damaged Fuel Evaluation (Continued)

```
1.5581E+01          2.1353E-01
1.5035E+01          2.1167E-01
1.4508E+01          2.0983E-01
1.4000E+01          2.0800E-01
1.3537E+01          2.0090E-01
1.3089E+01          1.9405E-01
1.2656E+01          1.8743E-01
1.2237E+01          1.8104E-01
1.1832E+01          1.7486E-01
1.1441E+01          1.6889E-01
1.1062E+01          1.6313E-01
1.0696E+01          1.5757E-01
1.0342E+01          1.5219E-01
1.0000E+01          1.4700E-01
7.0000E+00          1.4700E-01
6.7684E+00          1.4788E-01
6.5444E+00          1.4876E-01
6.3279E+00          1.4964E-01
6.1185E+00          1.5054E-01
5.9161E+00          1.5143E-01
5.7203E+00          1.5234E-01
5.5311E+00          1.5324E-01
5.3481E+00          1.5416E-01
5.1711E+00          1.5508E-01
5.0000E+00          1.5600E-01
4.6652E+00          1.5258E-01
4.3528E+00          1.4924E-01
4.0613E+00          1.4597E-01
3.7893E+00          1.4277E-01
3.5355E+00          1.3964E-01
3.2988E+00          1.3658E-01
3.0779E+00          1.3359E-01
2.8717E+00          1.3066E-01
2.6794E+00          1.2780E-01
2.5000E+00          1.2500E-01
2.2811E+00          1.2568E-01
2.0814E+00          1.2637E-01
1.8991E+00          1.2706E-01
1.7329E+00          1.2775E-01
1.5811E+00          1.2845E-01
1.4427E+00          1.2915E-01
1.3164E+00          1.2986E-01
1.2011E+00          1.3057E-01
1.0960E+00          1.3128E-01
1.0000E+00          1.3200E-01
9.3303E-01          1.2740E-01
8.7055E-01          1.2296E-01
8.1225E-01          1.1868E-01
7.5786E-01          1.1455E-01
7.0711E-01          1.1056E-01
6.5975E-01          1.0671E-01
6.1557E-01          1.0299E-01
5.7435E-01          9.9404E-02
5.3589E-01          9.5942E-02
5.0000E-01          9.2600E-02
4.2567E-01          8.0093E-02
3.6239E-01          6.9276E-02
3.0852E-01          5.9919E-02
2.6265E-01          5.1826E-02
2.2361E-01          4.4827E-02
1.9037E-01          3.8772E-02
1.6207E-01          3.3536E-02
1.3797E-01          2.9006E-02
1.1746E-01          2.5089E-02
1.0000E-01          2.1700E-02
7.9433E-02          1.8112E-02
6.3096E-02          1.5117E-02
5.0119E-02          1.2617E-02
3.9811E-02          1.0531E-02
3.1623E-02          8.7893E-03
2.5119E-02          7.3359E-03
1.9953E-02          6.1228E-03
1.5849E-02          5.1104E-03
1.2589E-02          4.2653E-03
1.0000E-02          3.5600E-03
7.9433E-03          3.5795E-03
6.3096E-03          3.5991E-03
5.0119E-03          3.6189E-03
3.9811E-03          3.6387E-03
3.1623E-03          3.6586E-03
2.5119E-03          3.6787E-03
1.9953E-03          3.6988E-03
1.5849E-03          3.7191E-03
1.2589E-03          3.7395E-03
1.0000E-03          3.7600E-03
7.9433E-04          3.8000E-03
6.3096E-04          3.8405E-03
5.0119E-04          3.8814E-03
3.9811E-04          3.9227E-03
3.1623E-04          3.9644E-03
2.5119E-04          4.0066E-03
1.9953E-04          4.0493E-03
1.5849E-04          4.0924E-03
1.2589E-04          4.1360E-03
```

Figure 5.3.12-6 Sample Input File for Damaged Fuel Evaluation (Continued)

```
          1.0000E-04          4.1800E-03
          7.9433E-05          4.2147E-03
          6.3096E-05          4.2496E-03
          5.0119E-05          4.2849E-03
          3.9811E-05          4.3204E-03
          3.1623E-05          4.3563E-03
          2.5119E-05          4.3924E-03
          1.9953E-05          4.4289E-03
          1.5849E-05          4.4656E-03
          1.2589E-05          4.5026E-03
          1.0000E-05          4.5400E-03
          7.9433E-06          4.5319E-03
          6.3096E-06          4.5239E-03
          5.0119E-06          4.5159E-03
          3.9811E-06          4.5078E-03
          3.1623E-06          4.4998E-03
          2.5119E-06          4.4918E-03
          1.9953E-06          4.4839E-03
          1.5849E-06          4.4759E-03
          1.2589E-06          4.4679E-03
          1.0000E-06          4.4600E-03
          7.9433E-07          4.3739E-03
          6.3096E-07          4.2894E-03
          5.0119E-07          4.2066E-03
          3.9811E-07          4.1254E-03
          3.1623E-07          4.0458E-03
          2.5119E-07          3.9677E-03
          1.9953E-07          3.8910E-03
          1.5849E-07          3.8159E-03
          1.2589E-07          3.7423E-03
          1.0000E-07          3.6700E-03
          2.5000E-08          3.6700E-03
end

*
* Unit 13 Hole Data
*
*begin hole data
*    < hole
*end

*
* Unit 15 Source Strength - Fuel Neutron
*
* UMS BWR 7x7 - 80 GWD/MTU - 210 Day - Fuel Neutron - Direct
begin source strength
    component        1.0638E+00    ! Subcritical multiplication factor
    component        4.3023E-05    ! 1/rodsFuelParmActiveVolume
    component        5.0000E-01    ! volFrac fuel in damaged src region
    component        1.3069E+00    ! (Avg Src Rate)/(Src at Avg BU)
    component    x    1.0
    component    y    1.0
    component    z    1.0
    component    energy
        0.0000E+00    1.3440E+05    5.6010E+05    1.8600E+06    5.8350E+06    1.5680E+07
        2.7070E+07    9.0440E+07    1.5440E+08    2.0770E+08    4.8880E+08    7.6690E+08
        2.0050E+08    6.9560E+07    8.5080E+02    0.0000E+00    0.0000E+00    0.0000E+00
        0.0000E+00    0.0000E+00    0.0000E+00    0.0000E+00    0.0000E+00    0.0000E+00
        0.0000E+00    0.0000E+00    0.0000E+00    0.0000E+00
end

*
* Unit 16 Simple Source Weights
*
*begin source weights
*
*end

*
* Unit 31 Tabular Output
*
begin tabular output
    /Case lwtNrmRadFn_b7Dmg_80b40e210d - Det DRA - Surface - Response/
    response    interim
    number    some    1
    region    from    37    to    56
    output to file    also
    /Case lwtNrmRadFn_b7Dmg_80b40e210d - Det DRB - 1ft - Response/
    response
    number    some    1
    region    from    89    to    108
    output to file    also
    /Case lwtNrmRadFn_b7Dmg_80b40e210d - Det DRC - 1m - Response/
    response
    number    some    1
    region    from    110    to    133
    output to file    also
    /Case lwtNrmRadFn_b7Dmg_80b40e210d - Det DRE - 2m+Convey - Response/
    response    interim
    number    some    1
    region    from    160    to    183
    output to file    also
end
```

Figure 5.3.12-6 Sample Input File for Damaged Fuel Evaluation (Continued)

```
*
* Unit 32 Material Specification
*
begin material specification
type    dice
normalise
nmixtures    2
atoms    mixture    1
           h    6.6667E-01
           o    3.3333E-01
weight    mixture    2
           u235    3.5260E-02
           u238    8.4624E-01
           o    1.1850E-01
*
* Materials List - Common Materials - v1.2
*
nmaterials    10
volume                          ! Water
material    1
    mixture    1    density    0.9982    prop    1.0000    ! mixH2O
atoms                           ! Water/Glycol
material    2        density     0            ! 0 means atom/b-cm
        h            prop    5.9880E-02
        c            prop    1.0701E-02
        o            prop    2.4589E-02
volume                          ! Aluminum
material    3
    aluminium               prop    1.0000
volume                          ! Lead
material    4
    pb        density    11.3440    prop    1.0000
volume                          ! Stainless Steel 304
material    5
    stainless 304l steel        density    7.9200    prop    1.0000
volume                          ! Intact fuel rods
material    6
    mixture    2    density    10.4120    prop    3.7198E-01    ! UO2 mixture at 4%
    zircalloy       density    6.5500    prop    1.1922E-01    ! Tube, clad
    stainless 304l steel        density    7.9200    prop    1.1444E-01    ! Insert tubes
    void                prop    3.9436E-01    ! Interstitial, inside tubes
volume                          ! Damaged fuel rods
material    7
    mixture    2    density    10.4120    prop    5.0000E-01    ! UO2 mixture at 4%
    void                prop    5.0000E-01    ! Void
volume                          ! Intact/damaged mixture
material    8
    mixture    2    density    10.4120    prop    3.7198E-01    ! UO2 mixture at 4%
    zircalloy       density    6.5500    prop    1.1922E-01    ! Tube, clad
    stainless 304l steel        density    7.9200    prop    1.1444E-01    ! Insert tubes
    void                prop    1.2294E-02    ! Pellet/clad gap
    mixture    2    density    10.4120    prop    1.9103E-01    ! UO2 mixture at 4%
    void                prop    1.9103E-01    ! Void
volume                          ! Aluminum
material    9
    aluminium       density    0.4997    prop    1.0000
volume                          ! Upper Plenum (rods model)
material    10
    stainless 304l steel        density    7.9200    prop    4.7048E-02    ! Springs
    zircalloy       density    6.5500    prop    1.1922E-01    ! Tube, clad
    void                prop    8.3373E-01
end
```

Table 5.3.12-1 PWR Rods 80,000 MWd/MTU, 150 Day Cool Time Source Terms in MCBEND Format

Group	Neutron [n/sec/assy]	Gamma [γ/sec/assy]
1	0.000E+00	0.0000E+00
2	2.883E+05	1.2008E+05
3	1.201E+06	2.3224E+06
4	3.989E+06	1.0938E+07
5	1.251E+07	5.5757E+07
6	3.363E+07	1.3893E+08
7	5.807E+07	4.2785E+11
8	1.939E+08	3.8050E+12
9	3.327E+08	1.5052E+14
10	4.501E+08	5.0107E+13
11	1.054E+09	1.7429E+14
12	1.645E+09	5.9067E+14
13	4.302E+08	7.9464E+14
14	1.492E+08	4.2613E+15
15	2.040E+03	3.1093E+16
16	0.000E+00	1.4248E+16
17	0.000E+00	1.4613E+15
18	0.000E+00	1.9163E+15
19	0.000E+00	7.6165E+15
20	0.000E+00	7.6971E+15
21	0.000E+00	1.5136E+16
22	0.000E+00	1.1383E+16
23	0.000E+00	
24	0.000E+00	
25	0.000E+00	
26	0.000E+00	
27	0.000E+00	
28	0.000E+00	
Total	4.365E+09	9.6575E+16

Table 5.3.12-2 BWR 7×7 Rods 80,000 MWd/MTU, 210 Day Cool Time Source Terms in MCBEND Format

Group	Neutron [n/sec/assy]	Gamma [γ/sec/assy]
1	0.000E+00	0.0000E+00
2	1.344E+05	5.5172E+04
3	5.601E+05	1.0671E+06
4	1.860E+06	5.0255E+06
5	5.835E+06	2.5617E+07
6	1.568E+07	6.3827E+07
7	2.707E+07	1.2463E+11
8	9.044E+07	1.0115E+12
9	1.544E+08	3.9067E+13
10	2.077E+08	1.3527E+13
11	4.888E+08	4.8042E+13
12	7.669E+08	2.1590E+14
13	2.005E+08	2.5366E+14
14	6.956E+07	1.5077E+15
15	8.508E+02	8.0050E+15
16	0.000E+00	4.2354E+15
17	0.000E+00	4.0998E+14
18	0.000E+00	5.3950E+14
19	0.000E+00	2.0315E+15
20	0.000E+00	2.1700E+15
21	0.000E+00	4.2503E+15
22	0.000E+00	3.1923E+15
23	0.000E+00	
24	0.000E+00	
25	0.000E+00	
26	0.000E+00	
27	0.000E+00	
28	0.000E+00	
Total	2.029E+09	2.6913E+16

Table 5.3.12-3 BWR 8×8 Rods 80,000 MWd/MTU, 150 Day Cool Time Source Terms in MCBEND Format

Group	Neutron [n/sec/assy]	Gamma [γ/sec/assy]
1	0.000E+00	0.0000E+00
2	1.265E+05	5.2227E+04
3	5.270E+05	1.0101E+06
4	1.750E+06	4.7573E+06
5	5.489E+06	2.4251E+07
6	1.475E+07	6.0423E+07
7	2.547E+07	1.3401E+11
8	8.507E+07	1.1792E+12
9	1.456E+08	4.3500E+13
10	1.965E+08	1.5430E+13
11	4.610E+08	5.4550E+13
12	7.216E+08	2.1638E+14
13	1.887E+08	2.6602E+14
14	6.544E+07	1.5238E+15
15	8.372E+02	1.0031E+16
16	0.000E+00	4.7704E+15
17	0.000E+00	4.4625E+14
18	0.000E+00	5.8927E+14
19	0.000E+00	2.3105E+15
20	0.000E+00	2.3645E+15
21	0.000E+00	4.6764E+15
22	0.000E+00	3.5252E+15
23	0.000E+00	
24	0.000E+00	
25	0.000E+00	
26	0.000E+00	
27	0.000E+00	
28	0.000E+00	
Total	1.912E+09	3.0834E+16

Table 5.3.12-4 Fuel Region Homogenization for PWR Fuel Rods

	Material Area [cm²]			
Region	**UO_2**	**Zirconium Alloy**	**SS304**	**Void**
Fuel	1.8341E+01	--	--	--
Gap	--	--	--	7.4758E-01
Clad	--	5.4532E+00	--	--
Insert Void	--	--		2.5976E+01
Insert Tubes	--	--	9.3569E+00	--
Interstitial	--	--	--	2.1890E+01
Total	1.8341E+01	5.4532E+00	9.3569E+00	4.8614E+01
Vol Frac	2.2432E-01	6.6693E-02	1.1444E-01	5.9455E-01

Table 5.3.12-5 Fuel Region Homogenization for BWR 7×7 Fuel Rods

	Material Area [cm²]			
Region	**UO_2**	**Zirconium Alloy**	**SS304**	**Void**
Fuel	3.0415E+01	--	--	--
Gap	--	--	--	1.0052E+00
Clad	--	9.7483E+00	--	--
Insert Void	--	--	--	9.3491E+00
Insert Tubes	--	--	9.3569E+00	--
Interstitial	--	--	--	2.1890E+01
Total	3.0415E+01	9.7483E+00	9.3569E+00	3.2245E+01
Vol Frac	3.7198E-01	1.1922E-01	1.1444E-01	3.9436E-01

Table 5.3.12-6 Region Homogenization for BWR 8×8 Fuel Rods

	Material Area [cm²]			
Region	**UO_2**	**Zirconium Alloy**	**SS304**	**Void**
Fuel	2.2484E+01	--	--	--
Gap	--	--	--	6.7313E-01
Clad	--	8.0151E+00	--	--
Insert Void	--	--	--	1.9345E+01
Insert Tubes	--	--	9.3569E+00	--
Interstitial	--	--	--	2.1890E+01
Total	2.2484E+01	8.0151E+00	9.3569E+00	4.1909E+01
Vol Frac	2.7499E-01	9.8026E-02	1.1444E-01	5.1255E-01

Table 5.3.12-7 Intact/Damaged Fuel Mixture Composition Determinations

Parameter	PWR	BWR 7×7	BWR 8×8
Damaged Volume [cm³]	1.3495E+03	1.3495E+03	1.3495E+03
14 Rod Volume [cm³]	4.0047E+03	6.6410E+03	4.9093E+03
# Rods in Top	4.7	2.8	3.8
# Rods in Mixture	9.3	11.2	10.2
Mixture Volume [cm³]	2.6552E+03	5.2914E+03	3.5598E+03
Void Area for Mixture [cm²]	4.7866E+01	3.1239E+01	4.1236E+01
Mixture Height [cm]	110.9438	338.7657	172.6549

Table 5.3.12-8 Fuel Region Homogenized Material Description

		Number Density [atom/b-cm]		
Material	**Element**	**PWR**	**BWR 7×7**	**BWR 8×8**
Intact Fuel	U	5.21106E-03	8.64130E-03	6.38813E-03
	O	1.04340E-02	1.73044E-02	1.27948E-02
	ZR	2.82841E-03	5.05606E-03	4.15721E-03
	SN	3.32411E-05	5.94217E-05	4.88579E-05
	FE	7.24185E-03	7.24929E-03	7.24626E-03
	CR	1.89459E-03	1.89858E-03	1.89696E-03
	NI	7.44414E-04	7.44769E-04	7.44623E-04
	HF	1.47386E-07	2.63468E-07	2.16629E-07
Damaged Fuel	U	2.32306E-02	2.32306E-02	2.32306E-02
	O	4.64408E-02	4.64408E-02	4.64408E-02
Intact/Damaged Mixture	U	1.69811E-02	1.61676E-02	1.63750E-02
	O	3.39706E-02	3.23574E-02	3.27679E-02
	ZR	3.99892E-03	6.25005E-03	5.55893E-03
	SN	4.69975E-05	7.34541E-05	6.53316E-05
	FE	1.02388E-02	8.96120E-03	9.68953E-03
	CR	2.67865E-03	2.34693E-03	2.53657E-03
	NI	1.05248E-03	9.20646E-04	9.95692E-04
	HF	2.08380E-07	3.25685E-07	2.89671E-07

Table 5.3.12-9 Maximum Radial Dose Rates for Damaged PWR and BWR Fuel Rods

	Dose Rate [mrem/hr]				
Fuel Type	Normal Surface	Normal 1 foot	Normal 1 meter	Normal 2 meter	Accident 1 meter
PWR	321.2	126.6	36.5	9.8	223.5
BWR 7×7	324.0	123.4	34.3	9.6	394.0
BWR 8×8	336.9	128.4	35.2	9.6	304.2

Table 5.3.12-10 Maximum Axial Dose Rates for Damaged PWR and BWR Fuel Rods

	Dose Rate [mrem/hr]			
	Normal – Surface		Accident – Surface	
Fuel Type	Top	Bottom	Top	Bottom
PWR	27.5	4.9	192.1	34.7
BWR 7×7	28.6	4.7	196.2	32.3
BWR 8×8	29.4	3.6	203.1	24.5

5.3.13 TPBAR Shielding Evaluation

The content condition of up to 300 production TPBARs (of which three can be prefailed) loaded into a consolidation canister and cooled a minimum of 30 days is analyzed for transport in the NAC-LWT cask. Two other NAC-LWT content conditions are evaluated and are shown to be conservatively bounded by the reported results for the 300 TPBARs. The second content condition is for 30-day-cooled transport of up to 25 TPBARs in a rod holder. The third content condition is 55 segmented TPBARs and associated segmentation debris from PIE loaded in a welded waste container and cooled a minimum of 90 days. All TPBAR transport configurations employ the same TPBAR basket, but invoke variations of shipping container/canister within the basket.

A production TPBAR source spectrum is calculated using the activity inventory for a cool time of 30 days from reactor discharge. Source spectra are generated using ORIGEN 2.1 with the PWRU cross-section library. Reactor operating conditions used to generate the activity inventory are summarized in Table 5.3.13-6 (also see Chapter 1, Appendix 1-C). The activity inventory is input into ORIGEN-S, which outputs a gamma spectrum in the 22-group spectrum employed in the analysis.

Table 5.3.13-1 (also see Chapter 1, Appendix 1-C) gives the activity inventory for a single TPBAR at 30 days cool time. Using the table, an ORIGEN-S input is created in order to produce a gamma spectrum in the employed 22-group format. ORIGEN-S input is shown in Figure 5.3.13-1; the resulting spectrum is summarized in Table 5.3.13-2. [redacted] In the MCNP analysis, a uniform peaking factor of 1.15 is applied over the entire TPBAR length to bound the actual discharge irradiation profile. The application of the peaking factor results in a source of 7.683E+15 photons/sec being employed in the analysis.

The geometric description of the TPBARs is based on the consolidation canister cavity width of 8.15 inches, the modeled TPBAR height of 154 inches, and a TPBAR mass of 1.25 kg/rod. Based on these dimensions, a homogenized source region is modeled, with a material density of 2.24 g/cm^3. The material description in MCNP is based on the element masses given in Table 5.3.13-3 (also see Chapter 1, Appendix 1-C), which also summarizes the resultant number densities of each element. Table 5.3.13-3contains trace elements contained in the TPBAR components, such as uranium in the Zircaloy clad. The listed TPBAR mass and activation source represent a bounding source description and is larger than the structural bounding weight of 1.2 kg/rod.

The NAC-LWT cavity model explicitly considers the axial position of the TPBARs and the consolidation canister as determined by the basket upper and lower fittings and the TPBAR spacer. The TPBARs are modeled at their highest position in the cask cavity, which is the difference of the cavity height, TPBAR height, and spacer height. The resultant axial offset positions the rods 11.87 inches from the cavity bottom and 12.13 inches from the cavity top. For conservatism, the cavity model considers only the extents of the upper and lower basket fittings and the basket spacer; these regions are modeled as voids. Radial shielding in the cavity is provided by the 0.135-inch thick consolidation canister and the aluminum basket shell.

MCNP input for the normal conditions model with radial biasing is shown in Figure 5.3.13-2; sketches of key radial and axial dimensions are shown in Figure 5.3.13-3 and Figure 5.3.13-4, respectively. In the accident analysis, the neutron shield and shell are conservatively modeled as void. Material descriptions of the NAC-LWT constituent volumes are summarized in Table 5.3.13-4.

Normal and hypothetical accident condition radial and axial maximum and average dose rates for a payload of 300 production TPBARs at 30 days cool time are shown in Table 5.3.13-5. Dose rates are below regulatory limits at the surface and 2 meters from the truck bed. The transport index, based on the normal conditions dose rate at 1 meter from the package, is 22. Significant margin exists to the 1000 mrem/hr 1 meter hypothetical accident condition dose rate limit.

Dose rates for the 300 TPBAR consolidation canister bound those of 25 TPBARs in the rod holder (located in the PWR/BWR Transport Canister). The source term for the 25 TPBAR rod holder configuration is 1/12 the source of the 300 rod consolidation canister payload. The PWR/BWR canister lid structure provides source offset and shielding to minimize streaming above the lead shield and limits the evaluation to a radial dose comparison. Cask internal radial shielding of the consolidation canister payload is limited to the thin basket and consolidation canister shells. The 25 TPBAR configuration provides significant additional shielding due to the 5×5 rod holder mass, canister internal spacer, canister shell, PWR/BWR basket insert and basket shell. Combining the reduced source with increased shielding will produce lower dose rates for the rod holder configuration than those calculated for the consolidation canister with 300 TPBARs. The transport index of 22 calculated for the 300 TPBARs is conservatively assigned to the 25 TPBAR payload.

The significantly smaller source term of 55 segmented TPBARs cooled for a minimum of 90 days is bounded by the source term of 300 TPBARs cooled 30 days and the associated dose analysis reported herein. The 55 segmented TPBAR dose rates will be significantly below the regulatory limits for normal conditions of transport and hypothetical accident conditions. The transport index applied to this content is 22.

Figure 5.3.13-5 through Figure 5.3.13-7 show radial dose rate profiles under normal and hypothetical accident conditions.

Dose conversion and quality factors used in the analysis are those from ANSI/ANS-6.1.1-1977.

The three-dimensional Monte Carlo code MCNP (version 4C) is employed in the shielding analysis (ORNL). Significant validation literature is available on MCNP and it represents an industry standard tool for spent fuel cask evaluations. Confirmatory calculations against other validated shielding codes (SCALE and MCBEND) on NAC casks have further validated the use of MCNP for shielding evaluations of the NAC-LWT.

Figure 5.3.13-1 ORIGEN-S Input for TPBARs at 30 Days Cool Time

```
#ORIGENS
0$$  A11 71  E T
DECAY CASE
3$$ 21 1 1 28  A16 4  A33 22  E T
35$$ 0 T
54$$ A8 1  E
56$$ A2 1  A6 1  A10  0  A13 84  A14 5  A15 3 E
57** 0 E T
TPBAR Spectrum Generation
Cool Time of 30 Days
60** 1.E-20
61** F1E-20
65$$
'GRAM-ATOMS   GRAMS    CURIES     WATTS-ALL  WATTS-GAMMA
  21R1
  21R1
  21R1
81$$ 2 0 26 1  E
82$$  2
83**  1.40E+7  1.20E+7  1.00E+7  8.00E+6  6.50E+6
      5.00E+6  4.00E+6  3.00E+6  2.50E+6  2.00E+6
      1.66E+6  1.44E+6  1.22E+6  1.00E+6  8.00E+5
      6.00E+5  4.00E+5  3.00E+5  2.00E+5  1.00E+5
      5.00E+4  2.00E+4  1.00E+4
84**  1.460E+7 1.350E+7 1.250E+7 1.125E+7 1.000E+7
      8.500E+6 7.000E+6 6.070E+6 4.720E+6 3.680E+6
      2.870E+6 1.740E+6 6.000E+5 3.900E+5 1.100E+5
      6.740E+4 2.480E+4 9.120E+3 2.950E+3 9.610E+2
      3.540E+2 1.660E+2 4.810E+1 1.600E+1 4.000E+0
      1.500E+0 5.500E-1 7.090E-2 0.000E+0
73$$  10030 60140 110240 150320 160350 180370 180390
      190420 200410 200450 200470 210460 210470 240510
      250540 260550 260590 270580 270600 280590 280630
      280660 290640 290660 300650 330760 340750 350820
      380890 390891 390900 390910 400890 400930 400950
      400970 410920 410931 410940 410950 410951 410960
      410970 410971 420930 420990 430990 441030 481150
      481151 491131 491140 491141 501130 501171 501191
      501210 501211 501230 501250 511220 511240 511250
      511260 521231 521251 551310 561310 561330 561331
      561351 571400 711770 721750 721810 731820 731830
      741810 741850 741870 741880 751860 751880 761910
74**  1.15E+04 1.42E-03  1.65E-13 3.38E-01 1.15E-02 2.40E-01 9.49E-03
      8.34E-12 7.51E-05  2.84E-01 4.66E-06 6.78E-03 1.76E-05 5.44E+02
      3.98E+01 2.12E+02  1.39E+01 2.15E+02 3.57E+01 1.68E-01 2.29E+01
      1.38E-07 1.04E-16  1.38E-07 3.87E-03 4.25E-07 7.77E-01 2.25E-08
      5.48E-02 4.18E-06  1.30E-03 1.46E-01 4.18E-06 1.13E-04 5.12E+01
      1.65E-11 6.34E-02  4.02E-06 4.76E-04 6.50E+01 3.80E-01 9.19E-11
      1.78E-11 1.57E-11  1.04E-03 5.11E-02 4.36E-05 2.14E-03 2.27E-07
      1.28E-04 1.14E+00  9.13E-02 9.54E-02 1.14E+00 2.63E+00 7.89E+00
      4.66E-08 5.53E-04  4.22E-01 4.21E-01 2.99E-04 1.43E-02 1.66E+00
      1.56E-02 2.65E-03  3.40E-01 2.34E-02 9.53E-03 7.40E-04 1.95E-09
      4.49E-10 1.86E-07  1.99E-04 2.59E-02 6.06E-01 9.33E+00 1.12E+00
      5.16E-03 1.69E-01  2.99E-09 1.31E-02 4.66E-04 1.33E-02 1.73E-05
75$$  84R1 T
TPBAR Spectrum Generation - Cool Time of 30 Days
56$$ F0 T
END
```

Figure 5.3.13-2 MCNP Input for 300 TPBARs at 30 Days Cool Time – Normal Conditions & Radial Biasing

```
NAC-LWT Cask - Tpbar_030d - Normal Transport Conditions
C Radial Biasing - Fuel Gamma Source
C Cells - TPBARs in Consolidation Canister & Basket - v1.4
1  1  -2.1515  -1          u=2  $ TPBARS
2  0    -2  +1        u=2  $ Can void
3  6  -7.9200  -3  +2        u=2  $ Consol. Can
4  0    -4  +3  +1      u=2  $ Basket void
5  4  -2.7000  -5  +4  -6      u=2  $ Basket shell
6  0    -6  +5        u=2  $ Void
7  0    +6          u=2  $ Outside
C Cells - LWT Cask Normal Conditions v1.4
8  5  -11.3440  -10          u=1  $ BotPb
9  0    -9  fill=2        u=1  $ Cavity
10  6  -7.9200  -8  +10         u=1  $ Bottom
11  6  -7.9200  -7  +8  +12  +15  +9  u=1  $ OuterShell
12  6  -7.9200  -11  +14  +9      u=1  $ InnerShellTaper
13  6  -7.9200  -13  +9         u=1  $ InnerShell
14  5  -11.3440  -14  +13        u=1  $ Lead
15  5  -11.3440  -12  +11  +14      u=1  $ LeadTaper
16  0    -15  +14        u=1  $ LeadGap
17  3  -0.9669  -17  +7         u=1  $ NeutronShield
18  6  -7.9200  -16  +7  +17      u=1  $ NSShell
19  7  -0.4997  -18  +7         u=1  $ UpperLimiter
20  7  -0.4997  -19  +7         u=1  $ LowerLimiter
21  0    -20  +7  +16  +18  +19  u=1  $ Container
22  0    +20          u=1  $ Outside
C Detector Cells - Radial Biasing
100  0  -100  fill=1  $ Surface
200  0  -200  +100  $ 1ft
300  0  -300  +200  $ 1m
400  0  -400  +300  $ 2m
500  0  -500  +400  $ 2m+Convey
600  0  +500  $ Exterior
C Surfaces - TPBARs in Consolidation Canister & Basket - v1.4
1  RPP  -10.3505  10.3505  -10.3505  10.3505  30.1498  421.3098    $ TPBARS
2  RPP  -10.3505  10.3505  -10.3505  10.3505  17.7800  383.5400    $ Consol. can inner
3  RPP  -10.6934  10.6934  -10.6934  10.6934  17.7800  383.5400    $ Consol. can outer
4  RPP  -11.2713  11.2713  -11.2713  11.2713  17.7800  427.9900    $ Basket void
5  RPP  -12.5413  12.5413  -12.5413  12.5413  17.7800  427.9900    $ Basket shell
6  CZ  16.8275              $ Basket OD
C Surfaces - LWT Cask Normal Conditions v1.4
7  RCC  0.0000  0.0000  -26.6700  0.0000  0.0000  507.3650  36.5189  $ Lwt
8  RCC  0.0000  0.0000  -26.6700  0.0000  0.0000  26.6700  36.5189  $ Bottom
9  RCC  0.0000  0.0000  0.0000  0.0000  0.0000  452.1200  16.9863  $ Cavity
10  RCC  0.0000  0.0000  -17.7800  0.0000  0.0000  7.6200  26.3525  $ Bottom gamma shield
11  RCC  0.0000  0.0000  0.0000  0.0000  0.0000  444.5000  20.1740  $ Lead id - taper
12  RCC  0.0000  0.0000  0.0000  0.0000  0.0000  444.5000  31.5976  $ Lead od - taper
13  RCC  0.0000  0.0000  13.8176  0.0000  0.0000  416.8648  18.9103  $ Lead id
14  RCC  0.0000  0.0000  13.8176  0.0000  0.0000  416.8648  33.3271  $ Lead od
15  RCC  0.0000  0.0000  13.8176  0.0000  0.0000  416.8648  33.4645  $ Lead gap
16  RCC  0.0000  0.0000  3.8100  0.0000  0.0000  419.1000  49.8183  $ Neutron shield shell
17  RCC  0.0000  0.0000  5.0800  0.0000  0.0000  416.5600  49.2189  $ Neutron shield
18  RCC  0.0000  0.0000  450.2150  0.0000  0.0000  70.5612  49.8183  $ Upper limiter
19  RCC  0.0000  0.0000  -68.0212  0.0000  0.0000  71.8312  49.8183  $ Lower limiter
20  RCC  0.0000  0.0000  -68.0212  0.0000  0.0000  588.7974  49.8183  $ Container
C Radial Detector DRA (Surface)
100  RCC  0.0000  0.0000  -68.1212  0.0000  0.0000  588.9974  49.9183
101  PZ  -38.6713
102  PZ  -9.2215
103  PZ  20.2284
104  PZ  49.6783
105  PZ  79.1282
106  PZ  108.5780
107  PZ  138.0279
108  PZ  167.4778
109  PZ  196.9276
110  PZ  226.3775
111  PZ  255.8274
112  PZ  285.2772
113  PZ  314.7271
114  PZ  344.1770
115  PZ  373.6269
116  PZ  403.0767
117  PZ  432.5266
118  PZ  461.9765
119  PZ  491.4263
C Radial Detector DRB (1ft)
200  RCC  0.0000  0.0000  -98.6012  0.0000  0.0000  649.9574  80.2983
201  PZ  -66.1033
202  PZ  -33.6055
203  PZ  -1.1076
204  PZ  31.3903
205  PZ  63.8882
206  PZ  96.3860
207  PZ  128.8839
208  PZ  161.3818
209  PZ  193.8796
210  PZ  226.3775
211  PZ  258.8754
212  PZ  291.3732
213  PZ  323.8711
214  PZ  356.3690
215  PZ  388.8669
216  PZ  421.3647
```

Figure 5.3.13-2 MCNP Input for 300 TPBARs at 30 Days Cool Time – Normal Conditions & Radial Biasing (Continued)

```
217  PZ  453.8626
218  PZ  486.3605
219  PZ  518.8583
C Radial Detector DRC (1m)
300  RCC  0.0000  0.0000  -168.1212  0.0000  0.0000  788.9974  149.8183
301  PZ  -135.2463
302  PZ  -102.3714
303  PZ  -69.4965
304  PZ  -36.6216
305  PZ  -3.7467
306  PZ  29.1282
307  PZ  62.0030
308  PZ  94.8779
309  PZ  127.7528
310  PZ  160.6277
311  PZ  193.5026
312  PZ  226.3775
313  PZ  259.2524
314  PZ  292.1273
315  PZ  325.0022
316  PZ  357.8771
317  PZ  390.7520
318  PZ  423.6269
319  PZ  456.5017
320  PZ  489.3766
321  PZ  522.2515
322  PZ  555.1264
323  PZ  588.0013
C Radial Detector DRD (2m)
400  RCC  0.0000  0.0000  -268.1212  0.0000  0.0000  988.9974  249.8183
401  PZ  -226.9130
402  PZ  -185.7048
403  PZ  -144.4965
404  PZ  -103.2883
405  PZ  -62.0801
406  PZ  -20.8719
407  PZ  20.3364
408  PZ  61.5446
409  PZ  102.7528
410  PZ  143.9611
411  PZ  185.1693
412  PZ  226.3775
413  PZ  267.5857
414  PZ  308.7940
415  PZ  350.0022
416  PZ  391.2104
417  PZ  432.4186
418  PZ  473.6269
419  PZ  514.8351
420  PZ  556.0433
421  PZ  597.2515
422  PZ  638.4598
423  PZ  679.6680
C Radial Detector DRE (2m+Convey)
500  RCC  0.0000  0.0000  -269.1212  0.0000  0.0000  990.9974  321.9200
501  PZ  -227.8296
502  PZ  -186.5381
503  PZ  -145.2465
504  PZ  -103.9550
505  PZ  -62.6634
506  PZ  -21.3719
507  PZ  19.9197
508  PZ  61.2113
509  PZ  102.5028
510  PZ  143.7944
511  PZ  185.0859
512  PZ  226.3775
513  PZ  267.6691
514  PZ  308.9606
515  PZ  350.2522
516  PZ  391.5437
517  PZ  432.8353
518  PZ  474.1269
519  PZ  515.4184
520  PZ  556.7100
521  PZ  598.0015
522  PZ  639.2931
523  PZ  680.5846
C
C Materials List - Common Materials - v1.4
C
C Homogenized TPBARs
m1      3000  -2.138E+01  $ Li
       26000  -3.500E+02  $ Fe
       24000  -1.020E+02  $ Cr
       28000  -3.350E+02  $ Ni
        8000  -1.020E+02  $ O
       13000  -8.660E+01  $ Al
       33000  -2.750E-01  $ As
        5000  -1.140E-02  $ B
       56000  -1.680E-01  $ Ba
        6000  -7.120E-01  $ C
       20000  -8.400E-01  $ Ca
       48000  -1.080E-04  $ Cd
```

Figure 5.3.13-2 MCNP Input for 300 TPBARs at 30 Days Cool Time – Normal Conditions & Radial Biasing (Continued)

```
       27000  -2.870E-01  $ Co
       29000  -2.370E-01  $ Cu
        1000  -5.380E-03  $ H
       72000  -2.150E-02  $ Hf
       19000  -1.050E+00  $ K
       12000  -4.240E-01  $ Mg
       25000  -1.130E+01  $ Mn
       42000  -1.700E+01  $ Mo
        7000  -7.370E-02  $ N
       11000  -1.050E+00  $ Na
       41000  -2.830E-01  $ Nb
       15000  -2.260E-01  $ P
       82000  -8.400E-02  $ Pb
       16000  -5.650E-02  $ S
       34000  -7.350E-02  $ Se
       14000  -6.360E+00  $ Si
       50000  -3.660E+00  $ Sn
       73000  -1.130E-01  $ Ta
       22000  -1.080E-02  $ Ti
       23000  -2.830E-01  $ V
       74000  -2.150E-02  $ W
       40000  -2.100E+02  $ Zr
       92000  -7.530E-04  $ U
C Water
m2      1001  6.6667E-01  $ H
        8016  3.3333E-01  $ O
mt2  lwtr.01
C Water/Glycol
m3      1001  -1.03651E-01
        8016  -6.75619E-01
        6000  -2.20730E-01
C Aluminum
m4     13027  -1.0
C Lead
m5     82000  -1.0
C Stainless Steel 304
m6     26000  -0.695
       24000  -0.190
       28000  -0.095
       25000  -0.020
C Aluminum Honeycomb Impact Limiter
m7  13027  -1.0
nonu  $ No subcritical multiplication
C
C Cell Importances
C
imp:p 1 26r 0
C
C Source Definition - Fuel Gamma - Tpbar_030d
C
sdef  x=d1  y=d2  z=d3  erg=d4
si1  -10.3505  10.3505
sp1  0  1
si2  -10.3505  10.3505
sp2  0  1
si3  30.1498  421.3098
sp3  0  1
si4  1.000E-02  2.000E-02  5.000E-02  1.000E-01  2.000E-01  3.000E-01
     4.000E-01  6.000E-01  8.000E-01  1.000E+00  1.220E+00  1.440E+00
     1.660E+00  2.000E+00  2.500E+00  3.000E+00  4.000E+00  5.000E+00
     6.500E+00  8.000E+00  1.000E+01  1.200E+01  1.400E+01
sp4  0.0000E+00  3.0175E+11  4.7611E+11  4.4009E+11  2.9577E+11  1.0398E+11
     1.8282E+12  2.5002E+12  4.6571E+12  8.5647E+12  1.6438E+12  1.4198E+12
     1.5788E+08  3.8151E+10  2.2794E+08  4.3234E+04  1.8781E+00  4.8373E-08
     0.0000E+00  0.0000E+00  0.0000E+00  0.0000E+00  0.0000E+00
mode p
nps  40000000
C
C ANSI/ANS-6.1.1-1977 - Gamma Flux-to-Dose Conversion Factors
C (mrem/hr)/(photons/cm2-sec)
C
de0  0.01  0.03  0.05  0.07  0.1  0.15  0.2
     0.25  0.3  0.35  0.4  0.45  0.5  0.55
     0.6  0.65  0.7  0.8  1  1.4  1.8
     2.2  2.6  2.8  3.25  3.75  4.25  4.75
     5  5.25  5.75  6.25  6.75  7.5  9
     11  13  15
df0  3.96E-03  5.82E-04  2.90E-04  2.58E-04  2.83E-04  3.79E-04  5.01E-04
     6.31E-04  7.59E-04  8.78E-04  9.85E-04  1.08E-03  1.17E-03  1.27E-03
     1.36E-03  1.44E-03  1.52E-03  1.68E-03  1.98E-03  2.51E-03  2.99E-03
     3.42E-03  3.82E-03  4.01E-03  4.41E-03  4.83E-03  5.23E-03  5.60E-03
     5.80E-03  6.01E-03  6.37E-03  6.74E-03  7.11E-03  7.66E-03  8.77E-03
     1.03E-02  1.18E-02  1.33E-02
C
C Weight Window Generation - Radial
C
wwg  2 0 0 0 0
wwp:p  5 3 5 0 -1 0
mesh  geom=cyl ref=0 0 226 origin=0.1 0.1 -568
      imesh  15.1 17.0 18.9 33.3 36.5 49.2 49.8 549.8
      iints  5 1 1 5 1 1 1 1
      jmesh  500 541 550 558 568 598 989 1020 1049 1089 1589
      jints  1 1 1 1 1 1 1 1 1 1 1
      kmesh  0.5 1
```

Figure 5.3.13-2 MCNP Input for 300 TPBARs at 30 Days Cool Time – Normal Conditions & Radial Biasing (Continued)

```
      kints  1 1
wwge:p  1e-3 1 20
fc2 Radial Surface Tally
f2:p 100.1
fm2 7.6832E+15
fs2  -101  -102  -103  -104  -105  -106
     -107  -108  -109  -110  -111  -112
     -113  -114  -115  -116  -117  -118
     -119  T
tf2
fc12 Radial 1ft Tally
f12:p 200.1
fm12 7.6832E+15
fs12  -201  -202  -203  -204  -205  -206
     -207  -208  -209  -210  -211  -212
     -213  -214  -215  -216  -217  -218
     -219  T
tf12
fc22 Radial 1m Tally
f22:p 300.1
fm22 7.6832E+15
fs22 -301  -302  -303  -304  -305  -306
     -307  -308  -309  -310  -311  -312
     -313  -314  -315  -316  -317  -318
     -319  -320  -321  -322  -323  T
tf22
fc32 Radial 2m Tally
f32:p 400.1
fm32 7.6832E+15
fs32 -401  -402  -403  -404  -405  -406
     -407  -408  -409  -410  -411  -412
     -413  -414  -415  -416  -417  -418
     -419  -420  -421  -422  -423  T
tf32
fc42 Radial 2m+Convey Tally
f42:p 500.1
fm42 7.6832E+15
fs42 -501  -502  -503  -504  -505  -506
     -507  -508  -509  -510  -511  -512
     -513  -514  -515  -516  -517  -518
     -519  -520  -521  -522  -523  T
tf42
C
C
C Print Control
C
prdmp  -30 -60 1 2
print
```

Figure 5.3.13-3 MCNP Three-Dimensional Model of NAC-LWT with 300 TPBAR Payload – Radial Detail

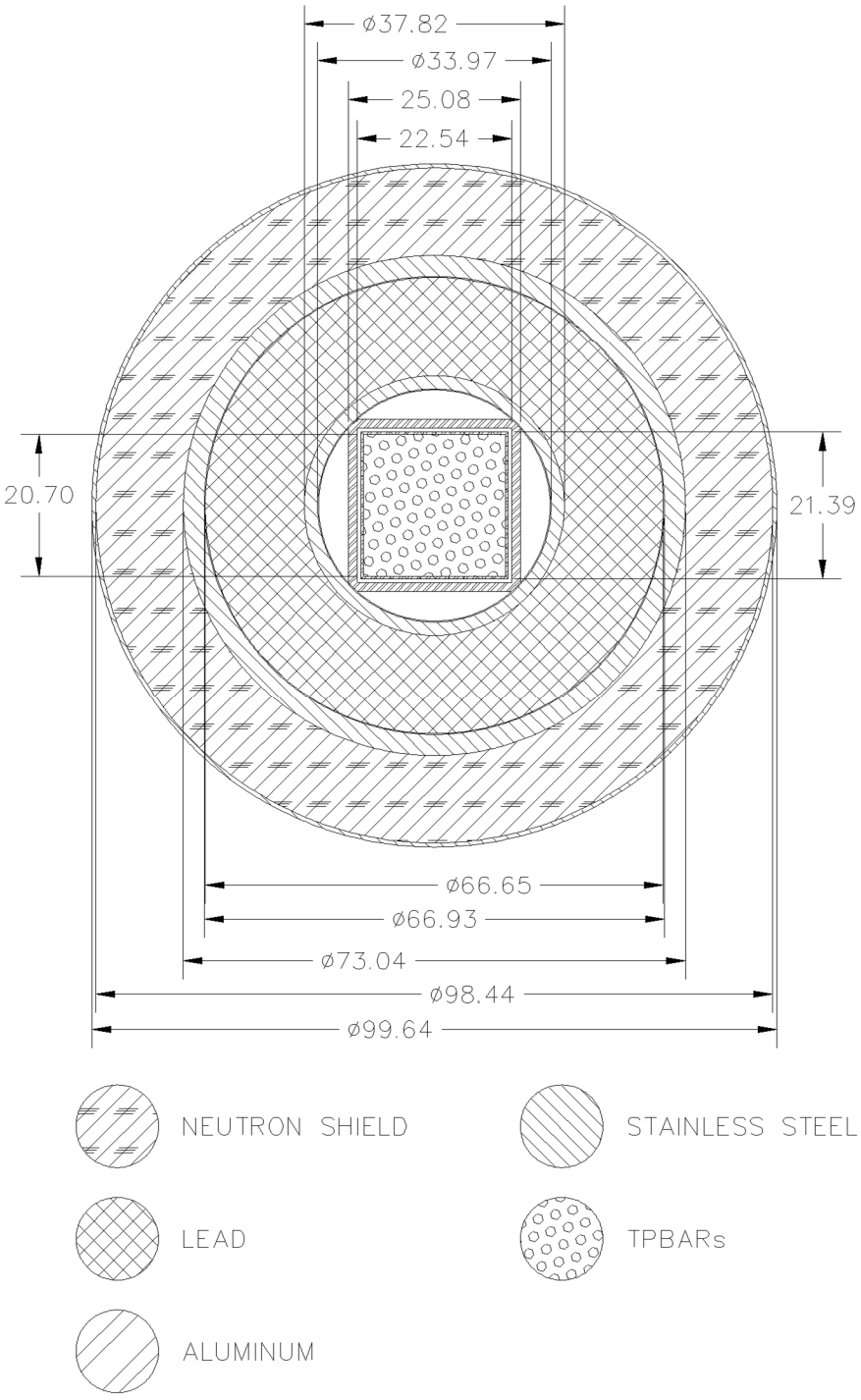

Dimensions in cm.

Figure 5.3.13-4 MCNP Three-Dimensional Model of NAC-LWT with 300 TPBAR Payload - Axial Detail

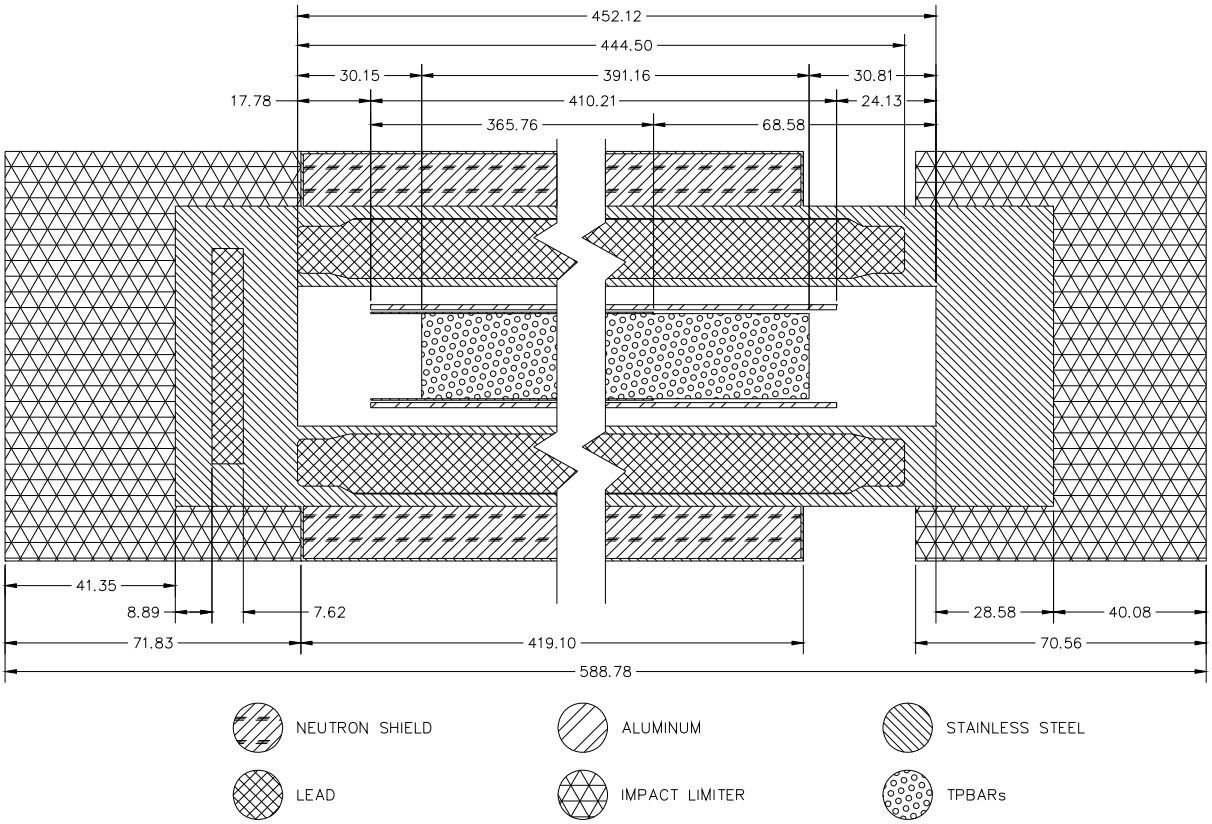

Dimensions in cm.

Figure 5.3.13-5 Normal Condition Radial Surface Dose Rate Profile for 300 TPBAR Payload

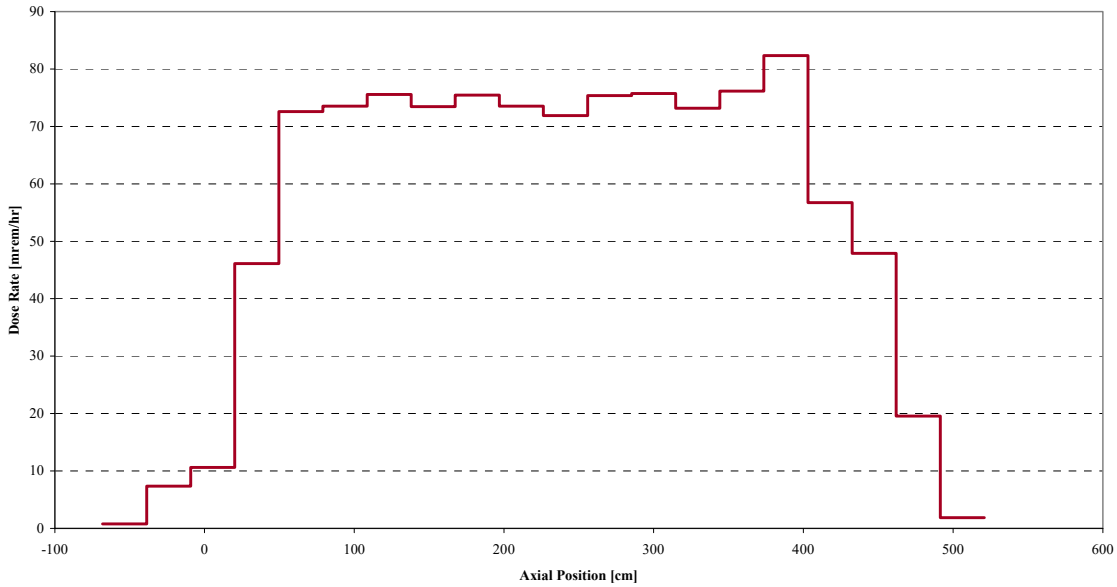

Figure 5.3.13-6 Normal Condition Radial 2 Meter Dose Rate Profile for 300 TPBAR Payload

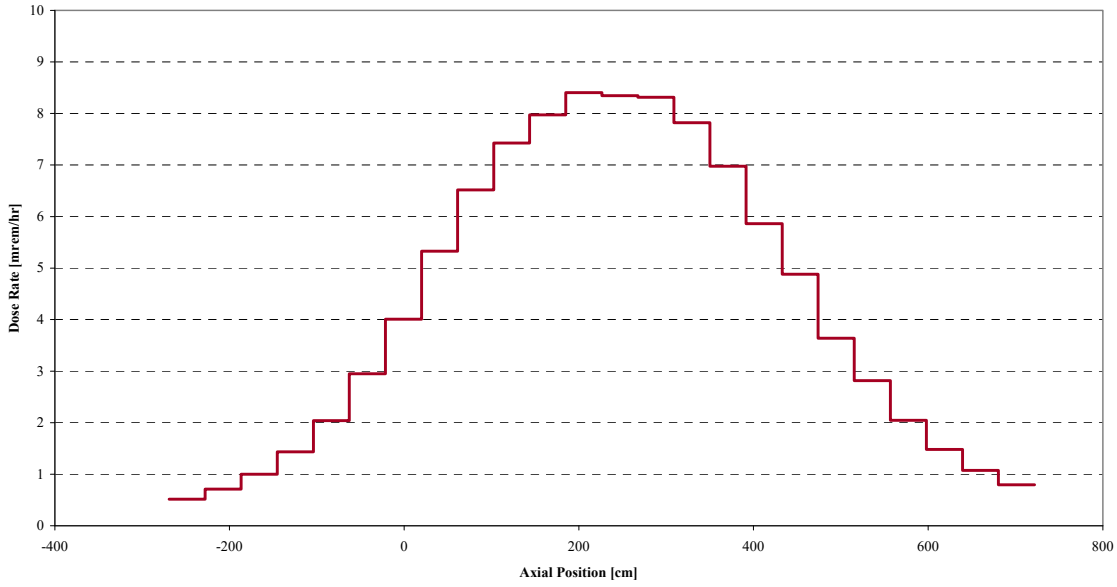

Figure 5.3.13-7 Accident Condition Radial 1 Meter Dose Rate Profile for 300 TPBAR Payload

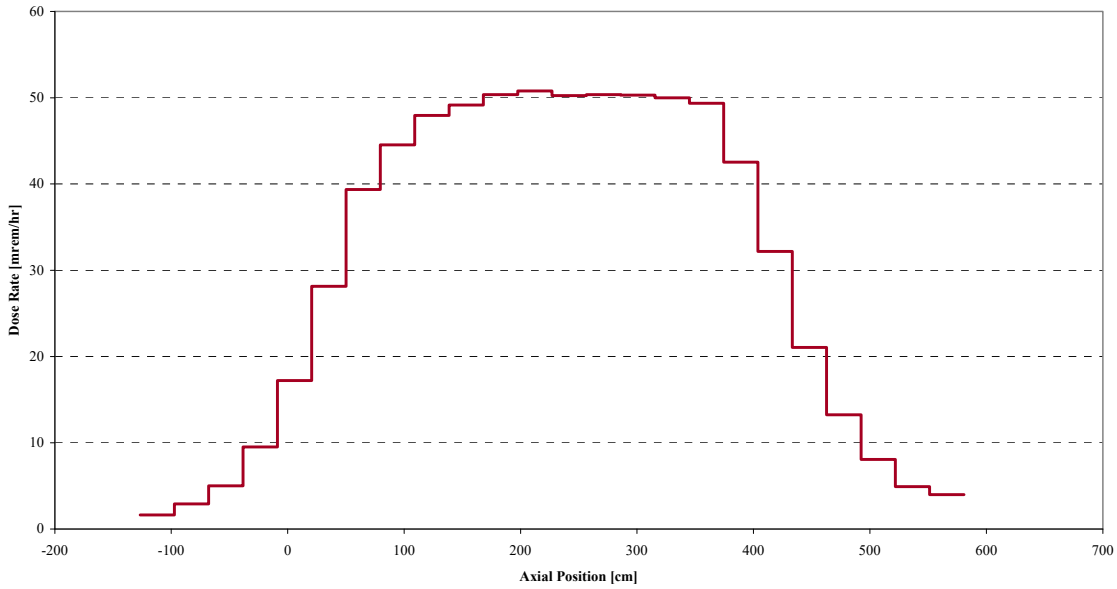

Table 5.3.13-1 Single TPBAR Activity Inventory at 30 Days Cool Time

Isotope	Activity [Ci]	Isotope	Activity [Ci]
^{3}H	1.15E+04	^{97m}Nb	1.57E-11
^{14}C	1.42E-03	^{93}Mo	1.04E-03
^{24}Na	1.65E-13	^{99}Mo	5.11E-02
^{32}P	3.38E-01	^{99}Tc	4.36E-05
^{35}S	1.15E-02	^{103}Ru	2.14E-03
^{37}Ar	2.40E-01	^{115}Cd	2.27E-07
^{39}Ar	9.49E-03	^{115m}Cd	1.28E-04
^{42}K	8.34E-12	^{113m}In	1.14E+00
^{41}Ca	7.51E-05	^{114}In	9.13E-02
^{45}Ca	2.84E-01	^{114m}In	9.54E-02
^{47}Ca	4.66E-06	^{113}Sn	1.14E+00
^{46}Sc	6.78E-03	^{117m}Sn	2.63E+00
^{47}Sc	1.76E-05	^{119m}Sn	7.89E+00
^{51}Cr	5.44E+02	^{121}Sn	4.66E-08
^{54}Mn	3.98E+01	^{121m}Sn	5.53E-04
^{55}Fe	2.12E+02	^{123}Sn	4.22E-01
^{59}Fe	1.39E+01	^{125}Sn	4.21E-01
^{58}Co	2.15E+02	^{122}Sb	2.99E-04
^{60}Co	3.57E+01	^{124}Sb	1.43E-02
^{59}Ni	1.68E-01	^{125}Sb	1.66E+00
^{63}Ni	2.29E+01	^{126}Sb	1.56E-02
^{66}Ni	1.38E-07	^{123m}Te	2.65E-03
^{64}Cu	1.04E-16	^{125m}Te	3.40E-01
^{66}Cu	1.38E-07	^{131}Cs	2.34E-02
^{65}Zn	3.87E-03	^{131}Ba	9.53E-03
^{76}As	4.25E-07	^{133}Ba	7.40E-04
^{75}Se	7.77E-01	^{133m}Ba	1.95E-09
^{82}Br	2.25E-08	^{135m}Ba	4.49E-10
^{89}Sr	5.48E-02	^{140}La	1.86E-07
^{89m}Y	4.18E-06	^{177}Lu	1.99E-04
^{90}Y	1.30E-03	^{175}Hf	2.59E-02
^{91}Y	1.46E-01	^{181}Hf	6.06E-01
^{89}Zr	4.18E-06	^{182}Ta	9.33E+00
^{93}Zr	1.13E-04	^{183}Ta	1.12E+00
^{95}Zr	5.12E+01	^{181}W	5.16E-03
^{97}Zr	1.65E-11	^{185}W	1.69E-01
^{92}Nb	6.34E-02	^{187}W	2.99E-09
^{93m}Nb	4.02E-06	^{188}W	1.31E-02
^{94}Nb	4.76E-04	^{186}Re	4.66E-04
^{95}Nb	6.50E+01	^{188}Re	1.33E-02
^{95m}Nb	3.80E-01	^{191}Os	1.73E-05
^{96}Nb	9.19E-11	Total	1.28E+04
^{97}Nb	1.78E-11		

Table 5.3.13-2 TPBAR 30-Day Gamma Source Spectrum

Energy Group	E_{Lower} [MeV]	E_{Upper} [MeV]	Source [gamma/sec/TPBAR]
1	1.200E+01	1.400E+01	0.000E+00
2	1.000E+01	1.200E+01	0.000E+00
3	8.000E+00	1.000E+01	0.000E+00
4	6.500E+00	8.000E+00	0.000E+00
5	5.000E+00	6.500E+00	0.000E+00
6	4.000E+00	5.000E+00	4.837E-08
7	3.000E+00	4.000E+00	1.878E+00
8	2.500E+00	3.000E+00	4.323E+04
9	2.000E+00	2.500E+00	2.279E+08
10	1.660E+00	2.000E+00	3.815E+10
11	1.440E+00	1.660E+00	1.579E+08
12	1.220E+00	1.440E+00	1.420E+12
13	1.000E+00	1.220E+00	1.644E+12
14	8.000E-01	1.000E+00	8.565E+12
15	6.000E-01	8.000E-01	4.657E+12
16	4.000E-01	6.000E-01	2.500E+12
17	3.000E-01	4.000E-01	1.828E+12
18	2.000E-01	3.000E-01	1.040E+11
19	1.000E-01	2.000E-01	2.958E+11
20	5.000E-02	1.000E-01	4.401E+11
21	2.000E-02	5.000E-02	4.761E+11
22	1.000E-02	2.000E-02	3.018E+11
Total			2.227E+13

Table 5.3.13-3 TPBAR Elemental Constituents

Nuclide	Mass[g]	Number Density [atom/b-cm]
Li	2.14E+01	3.3198E-03
Fe	3.50E+02	6.7548E-03
Cr	1.02E+02	2.1143E-03
Ni	3.10E+02	5.6925E-03
O	1.02E+02	6.8712E-03
Al	8.66E+01	3.4592E-03
As	2.75E-01	3.9560E-06
B	1.14E-02	1.1365E-06
Ba	1.68E-01	1.3185E-06
C	7.05E-01	6.3261E-05
Ca	8.40E-01	2.2589E-05
Cd	1.08E-04	1.0355E-09
Co	2.87E-01	5.2487E-06
Cu	2.37E-01	4.0197E-06
H	5.38E-03	5.7530E-06
Hf	2.15E-02	1.2982E-07
K	1.05E+00	2.8944E-05
Mg	4.24E-01	1.8802E-05
Mn	1.13E+01	2.2168E-04
Mo	1.70E+01	1.9098E-04
N	7.37E-02	5.6709E-06
Na	1.05E+00	4.9224E-05
Nb	2.83E-01	3.2830E-06
P	2.26E-01	7.8639E-06
Pb	8.40E-02	4.3694E-07
S	5.65E-02	1.8991E-06
Se	7.35E-02	1.0032E-06
Si	6.36E+00	2.4406E-04
Sn	3.66E+00	3.3229E-05
Ta	1.13E-01	6.7305E-07
Ti	1.08E-02	2.4317E-07
V	2.83E-01	5.9874E-06
W	2.15E-01	1.2605E-07
Zr	1.86E+02	2.1975E-03
U	7.53E-04	3.4095E-09
Total	1.25E+03	3.2074E-02

Table 5.3.13-4 Material Compositions of NAC-LWT for 300 TPBAR Payload

Material	Density [g/cm^3]	MCNP Isotope/Element	Mass Fraction	Number Density [atom/b-cm]
Neutron Shield	9.6690E-01	Hydrogen	1.0365E-01	5.9884E-02
		Oxygen-16	6.7562E-01	2.4595E-02
		Carbon	2.2073E-01	1.0701E-02
Aluminum	2.7000E+00	Aluminum-27	1.0000E+00	6.0262E-02
Lead	1.1344E+01	Lead	1.0000E+00	3.2970E-02
Stainless Steel	7.9200E+00	Iron	6.9500E-01	5.9357E-02
		Chromium	1.9000E-01	1.7428E-02
		Nickel	9.5000E-02	7.6845E-03
		Manganese	2.0000E-02	1.7363E-03
Impact Limiters	4.9970E-01	Aluminum-27	1.0000E+00	1.1153E-02

Table 5.3.13-5 Dose Rate Summary for 300 TPBARs at 30 Days Cool Time

Transport Condition	Dose Rate Location	Maximum		Average	
		[mrem/hr]	FSD	[mrem/hr]	FSD
Normal	Side Surface of Cask	82.3	1.8%	54.5	2.4%
	Top Surface of Cask	14.2	3.7%	7.5	4.2%
	Bottom Surface of Cask	3.8	3.9%	2.0	4.3%
	Side 1m	21.6	1.2%	12.0	1.5%
	2m from Truck - Radial	8.4	1.0%	4.3	1.3%
	2m from Top	0.6	3.5%	0.3	7.5%
	2m from Bottom	0.2	3.6%	0.1	8.9%
Accident	Side Surface of Cask	253.7	2.1%	178.6	2.6%
	Top Surface of Cask	110.7	3.5%	45.3	4.9%
	Bottom Surface of Cask	29.5	4.7%	11.2	6.7%
	Side 1m	50.8	1.2%	30.1	1.7%
	Top 1m	6.9	2.9%	2.7	6.1%
	Bottom 1m	1.8	3.8%	0.7	5.5%

Table 5.3.13-6 Reactor Operating Conditions for TPBAR Source Term Generation

Parameter	Value
Mass of U [kg/assembly]	462
Number of Assemblies	193
Reactor Power [MW]	3,459
Irradiation Time [days]	510
Maximum Assembly Burnup [MWd/MTU]	29,700
^{235}U enrichment [wt %]	3.000
Mass ^{235}U [g/MTU]	30,000
Mass ^{238}U [g/MTU]	970,000
Assembly Specific Power [MW/MTU]	58.24
Radial Assembly Peaking Factor	1.50

5.3.14 PULSTAR Fuel Configuration

Results of a shielding analysis for up to 700 PULSTAR fuel elements in the LWT cask are presented in this section. Maximum dose rates are calculated to demonstrate that dose rate limits of 10 CFR 71.47 are not exceeded.

Dose rates are calculated using the MCNP three-dimensional transport code. Source terms are calculated using the SAS2H module of the SCALE package, with ORIGEN-S used to rebin the gamma-ray and neutron spectra onto the 22-group and 28-group structures employed in the evaluation.

5.3.14.1 PULSTAR Fuel Source Term

Source terms are calculated to bound the irradiation history of the PULSTAR fuel elements. Fuel element and assembly geometry is summarized in Figure 5.3.14-1 and Table 5.3.14-1. Inputs for irradiation and material parameters required by SAS2H are given in Table 5.3.14-2. Using these parameters, and a fission yield of 0.9166 MWd/g ^{235}U, the single cycle irradiation time is 4583 days (12.5 years). The calculated UO_2 density is 99% of theoretical.

At lower enrichments, a reduced fissile mass must be specified to yield a calculated UO_2 density of 100% or less. Given a fixed cool time and burnup specified as a percentage of ^{235}U rather than a fixed exposure (in MWd/MTU), the evaluated parameters are bounding.

SAS2H input is shown in Figure 5.3.14-2. Neutron and gamma source terms for a cool time of 1 year from discharge are presented in Table 5.3.14-3 and Table 5.3.14-4, respectively. These source terms are very conservative in that the resulting calculated assembly heat load is 37.67 W. A cool time of 1.5 years is required for the assembly heat load to be below the basket cell limit of 30 W.

The effect of subcritical neutron multiplication is not directly computed in the MCNP analysis, due to difficulties in adequately biasing the calculation. Instead, neutron source rates are scaled by a subcritical multiplication factor based on the system multiplication factor, k_{eff}:

$$\text{Scale Factor} = \frac{1}{1 - k_{eff}}$$

For the dry cask conditions of transport, the calculated k_{eff} is significantly less than 0.4. Conservatively applying this k_{eff} yields a scale factor of 1.6667, which is included in the tally cards in MCNP.

5.3.14.2 PULSTAR Fuel Shielding Model

MCNP three-dimensional shielding analysis allows detailed modeling of the fuel, basket, and cask shield configurations. Some fuel rod detail is homogenized in the model to simplify model input and improve computational efficiency. The basket and cask body details are explicitly modeled, including the axial extents described by the License Drawings.

The geometric description of a MCNP model is based on the combinatorial geometry system embedded in the code. In this system, bodies such as cylinders and rectangular parallelepipeds, and their logical intersections and unions, are used to describe the extent of material zones.

Source Models

Based on the possible basket cell loadings of PULSTAR fuel, three source models are employed to bound all hypothetical configurations of the fuel. The first model considers an intact assembly, with the 5×5 array of fuel elements homogenized and surrounded by the assembly zirconium alloy box. The axial extents of the upper and lower assembly fittings are modeled as void to simulate the spacing of assemblies vertically within each basket. The fuel assembly model bounds a model of 16 elements placed within the 4×4 fuel rod insert and loaded into a basket cell due to both a larger source (25 vs. 16 elements) and less shielding (the insert tubes will offer a slight improvement in shielding). The fuel homogenization, shown in Table 5.3.14-5, is based on an area bounded by the assembly zirconium alloy box. The source height is the active fuel height, 24.1 inches.

The second and third source models both consider 25 canned elements. Bounding can cavity dimensions of 3.3-inch width × 30-inch height were chosen to maximize the source volume. The second and third source models are based on modeling 25 elements over either a 30-inch height or a 9.23-inch height. The latter is calculated by fixing the can opening width to 3.3 inches and calculating the minimum height needed to accommodate the volume of 25 elements, 1647 cm^3. In both of the can models, no credit is taken for the can wall, lid, or bottom structure, and the source regions are moved to their highest axial location within each basket. This serves to maximize source at the point of minimum radial shielding in the cask. Source region homogenizations for the canned element models are shown in Table 5.3.14-6 and Table 5.3.14-7.

Basket Model

For a given fuel type, the MCNP description of the basket stack forms a common sub-model employed in the analysis. The key features of the model are the detailed representation of the basket structural members, base plates, and support plates.

MCNP NAC-LWT Model

The three-dimensional model of the NAC-LWT cask is based on the following features.

Normal conditions:

- Radial neutron shield and shield shell
- Aluminum impact limiters with 0.5 g/cm3 density (calculated based on the impact limiter weight and dimensions) and diameter equal to the neutron shield shell diameter

Accident conditions:

- Removal of radial neutron shield and shield shell
- Loss of upper and lower impact limiters

Common to both the normal and accident conditions models is a 0.1374 cm gap between the lead outer diameter and the cask outer shell. As stated previously, the elevation of the source regions is set at its maximum axial extent. This conservatively shifts the failed fuel source to the top of the cask cavity where, as shown in Figure 5.3.14-3, the least radial shielding is located.

Detailed model parameters used in creating the three-dimensional model are taken directly from the License Drawings. Elevations associated with the three-dimensional features are established with respect to the center bottom of the NAC-LWT cask cavity for the MCNP combinatorial model. The three-dimensional NAC-LWT models are shown in Figure 5.3.14-3 and Figure 5.3.14-4. The axial model shows the minimum source height for canned fuel. Similar models are constructed for intact assemblies and the nominal source height for canned fuel. A sample input file is provided in Figure 5.3.14-5.

Shield Regional Densities

Based on the homogenization described for each source model the fuel rod model, the resulting fuel regional densities are shown in Table 5.3.14-8. Material compositions for structural and shield materials are shown in Table 5.3.14-9.

5.3.14.3 PULSTAR Fuel Shielding Evaluation

Calculational Methods

The shielding evaluation is performed using MCNP.

The MCNP shielding model described in Section 5.3.14.2 is utilized with the source terms described in Section 5.3.14.1 to estimate the dose rate profiles at various distances from the side, top and bottom of the cask for both normal and accident conditions. The method of solution is continuous energy Monte Carlo with a Monte Carlo based weight window generator to accelerate code convergence. Weight window and problem convergence is verified by the 10

statistical checks performed by MCNP. Radial or axial biasing is performed depending on the desired dose location.

Significant validation literature is available for MCNP as it is an industry standard tool for spent fuel cask evaluations. Available literature covers a range of shielding penetration problems ranging from slab geometry to spent fuel cask geometries. Confirmatory calculations against other validated shielding codes (SCALE and MCBEND) on NAC casks have further validated the use of MCNP for shielding evaluations.

MCNP Flux-to-Dose Conversion Factors

The ANSI/ANS 6.1.1-1977 flux-to-dose rate conversion factors are employed in the MCNP analysis. The ANSI/ANS gamma and neutron dose conversion factors are shown in Table 5.3.11-23 and Table 5.3.11-24.

Three-Dimensional Dose Rates for PULSTAR Fuel

Table 5.3.14-10 and Table 5.3.14-11 summarize the computed dose rates for each source model at the tabulated distances and transport conditions (normal and accident). The highest calculated radial dose rates for normal conditions are for the minimum source height can model.

Calculated normal condition radial surface dose rates are in excess of 200 mrem/hr, necessitating an exclusive use designation for the NAC-LWT. The maximum dose rate is dominated by the gamma component, which comprises approximately 93% of the maximum dose rate. The axial elevation of the maximum dose rate is above the radial lead shield. The dose rate profile is shown in Figure 5.3.14-6 .

The normal condition maximum radial 2-meter dose rate is 5.2 mrem/hr. The dose rate profile is skewed towards the top of cask, as shown Figure 5.3.14-7.

Accident condition radial 1-meter dose rates for all three source models are well below the 1,000 mrem/hr limit. The maximum dose rate is dominated by the gamma component, which contributes approximately 89% towards the maximum. The dose rate profile is shown in Figure 5.3.14-8.

As shown in Table 5.3.14-11, axial surface dose rates are well below limits for all three source models. Significant margin is present for the normal condition 2-meter and accident condition 1-meter dose rate limits.

Note that a full cask load (28 basket cells) of canned elements is not an allowable payload (refer to Chapter 6). To justify a mixed loading of intact assemblies in the two intermediate baskets and canned elements in the top and bottom baskets, the 2 meter dose rates for the intact fuel source model and minimum source height canned model are summed. The maximum radial dose

rate (at 2 meters) for the summed profiles is 6.5 mrem/hr, well below the 10 mrem/hr regulatory limit. Dose rates for the fuel assembly model peak at the cask midplane, while the can model peaks above the lead shield. The maximum 6.5 mrem/hr dose rate is, therefore, slightly lower than the sum of the individual maximum dose rates reported in Table 5.3.14-10.

Figure 5.3.14-1 PULSTAR Fuel Assembly

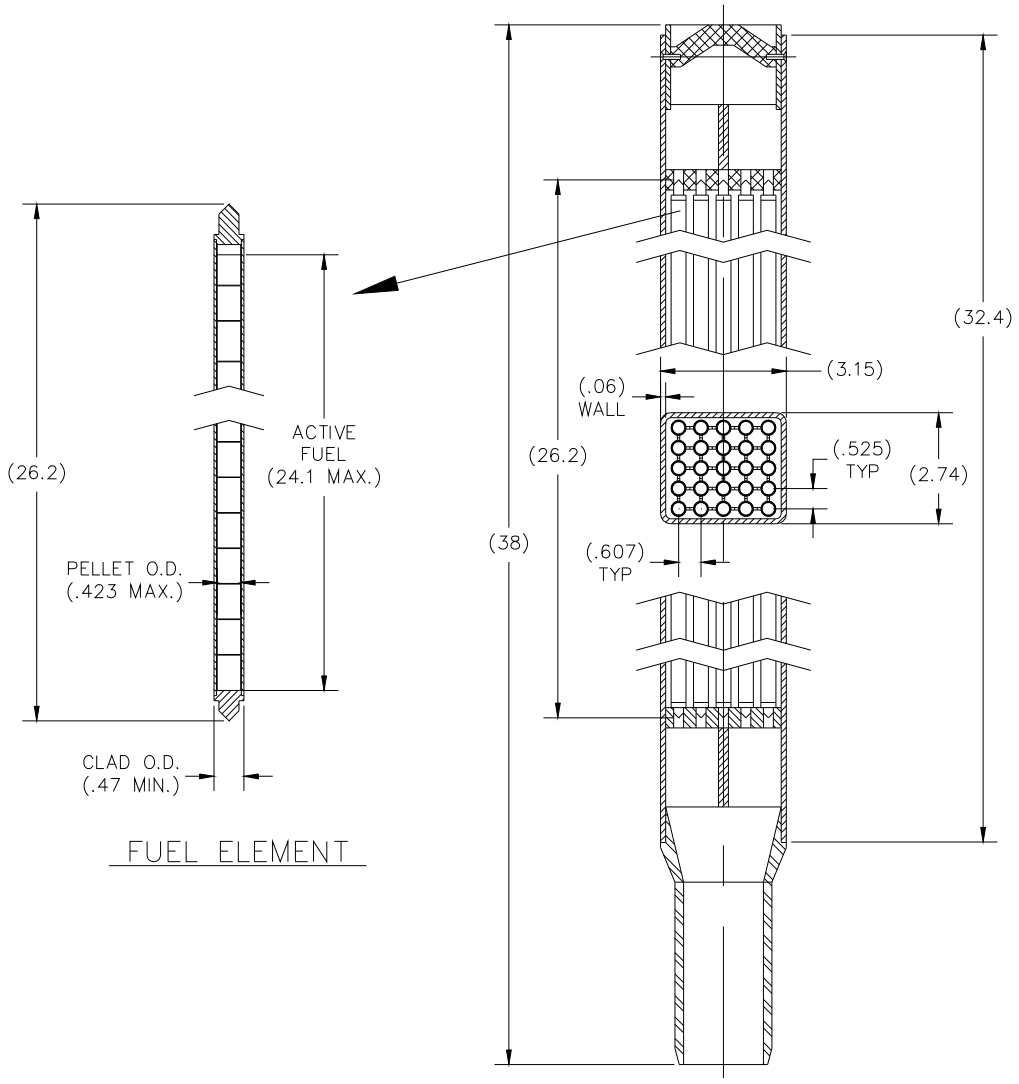

Figure 5.3.14-2 SAS2H Input for PULSTAR Fuel

```
=SAS2H      PARM=(HALT05,SKIPSHIPDATA)
PULSTAR Assembly, 50% burnup, 6 wt % U-235
27GROUPNDF4 LATTICECELL
UO2         1 0.99 633.15 92235 6.0 92238 94.0 END
ZIRCALLOY   2 1.0 433.15 END
H2O         3 1.0 333.15 END
ZIRCALLOY   4 1.0 333.15 END
END COMP
SQUAREPITCH 1.4313 1.0744 1 3 1.1938 2 1.0998 0 END
NPIN=25 FUEL=61.214 NCYC=1 NLIB=5 PRIN=6 LIGH=5
INPL=2 NUMZ=5 END
3 0.0001 500 4.0377 3 4.0378 4 4.2101 3 4.2675
POWER=0.0800 BURN=4583.0000 DOWN=91.3125 END
FE 0.6738 CR 0.1900 NI 0.1150 MN 0.0200 CO 0.0012
END
```

Note: Target burnup for this case is 50% ^{235}U. Cycle length is based on only generating power from thermal fission of ^{235}U. Due to fissile actinide buildup, actual depletion of ^{235}U for this case is 46%.

Figure 5.3.14-3 MCNP Model of NAC-LWT with PULSTAR Fuel – Axial Detail

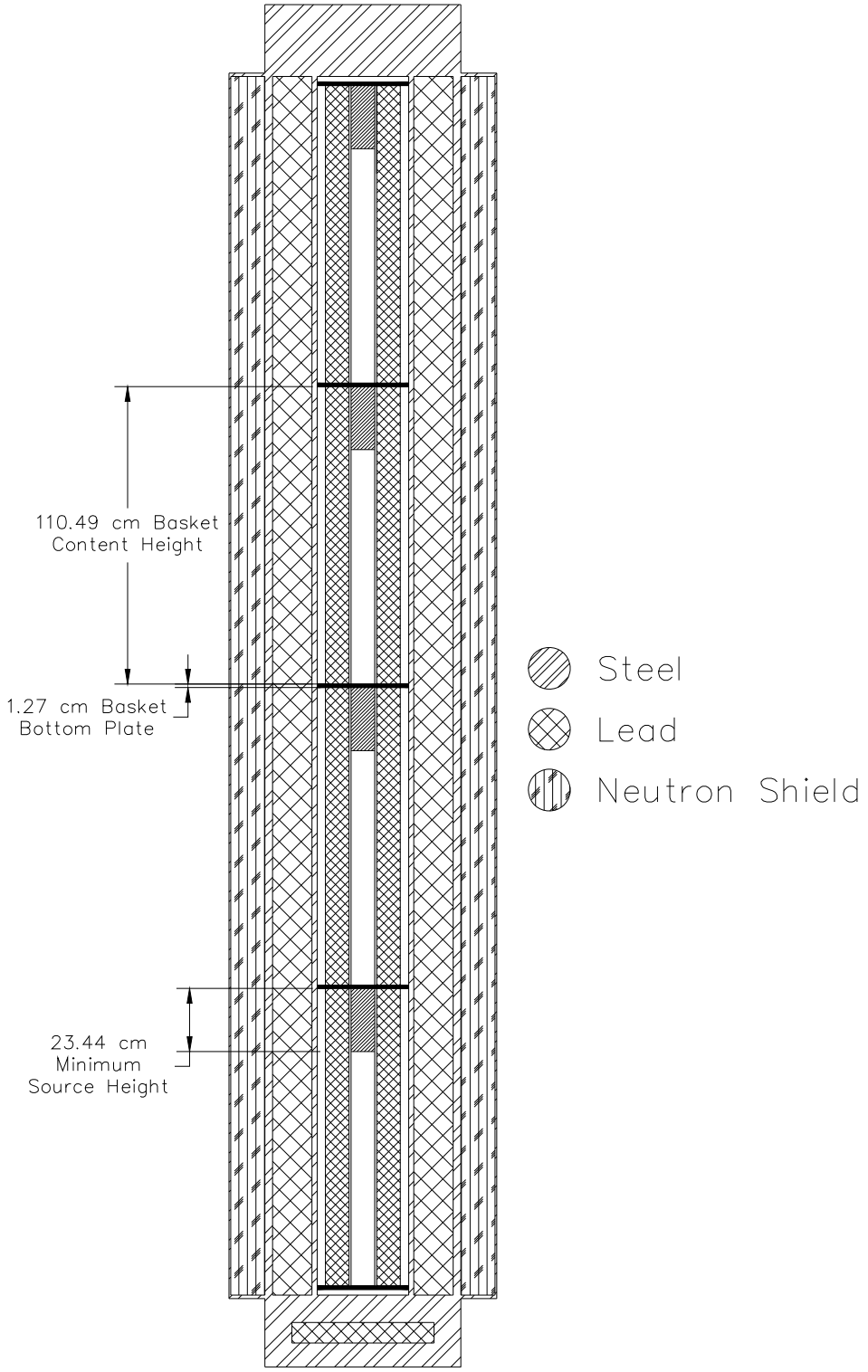

Figure 5.3.14-4 MCNP Model of NAC-LWT with PULSTAR Fuel – Radial Detail

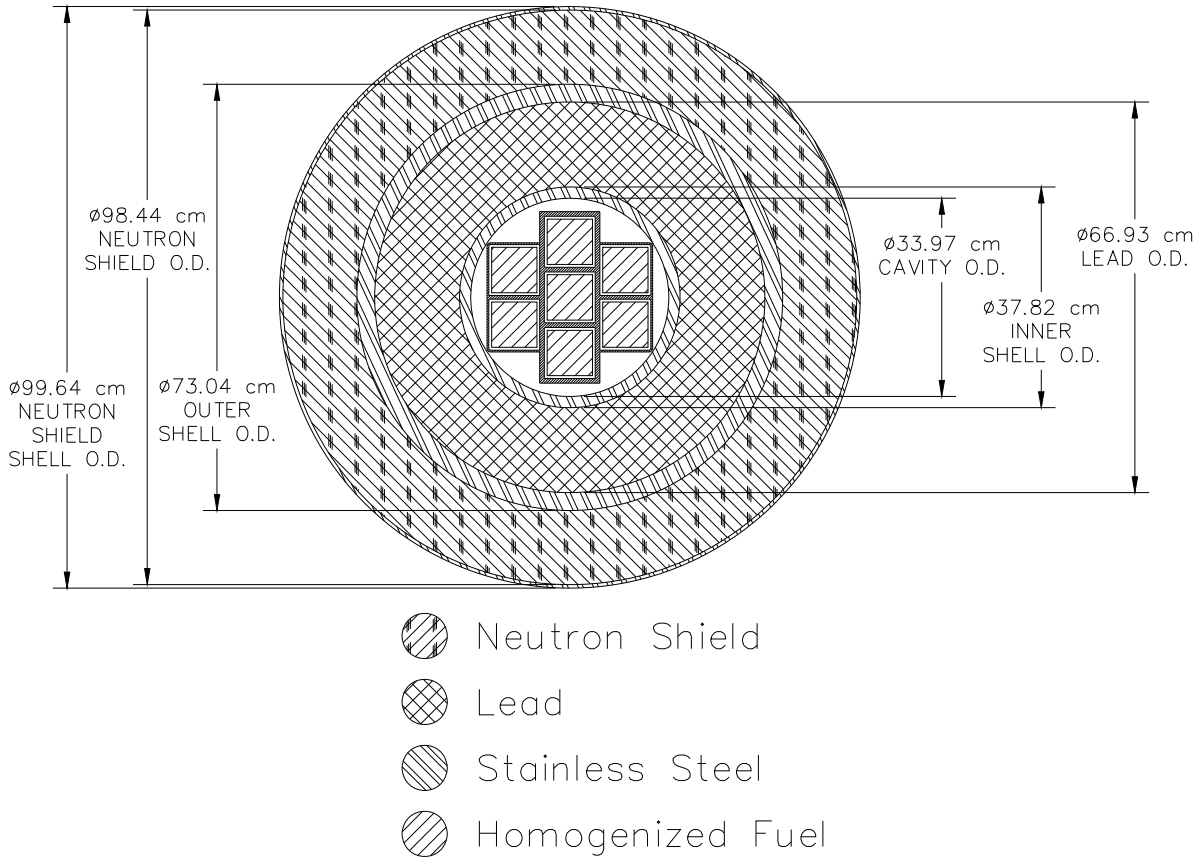

Figure 5.3.14-5 Sample MCNP Input File for Minimum Height Canned PULSTAR Fuel

```
NAC-LWT Cask - Cmin_50b60e01y - Normal Transport Conditions
C Radial Biasing - Fuel Gamma Source
C Canned Homogenized Fuel - Cells
1  1  -10.2184  -1          u=5  $ Can
2  0           +1          u=5  $ Outside
C Cells - MTR 7 Element Basket
7  6  -7.9400  -6  +9 +10 +11 +12 +13 +14 +15        u=4  $ Base plate
8  6  -7.9400  -7  +16 +20        u=4  $ Support plate
9  6  -7.9400  -8  +16 +20        u=4  $ Support plate
10  6  -7.9400  -16  +17  #7 #8 #9       u=4  $ Center column
11  6  -7.9400  -18  #7 #8 #9         u=4  $ Center divider upper
12  6  -7.9400  -19  #7 #8 #9         u=4  $ Center divider lower
13  6  -7.9400  -20  +21  +16  #7 #8 #9     u=4  $ Small side
14  6  -7.9400  -22  #7 #8 #9         u=4  $ Left divider
15  6  -7.9400  -23  #7 #8 #9         u=4  $ Right divider
16  0           #7 #8 #9 #10 #11 #12 #13 #14 #15           u=4  $ Void
C Cells - Basket Cavity
17  0           -1  fill=5  trcl = ( 0.0000 0.0000 88.3239 )      u=3  $ CC
18  like  17  but  fill=5  trcl = ( 0.0000 9.5250 88.3239 )      u=3  $ UC
19  like  17  but  fill=5  trcl = ( 0.0000 -9.5250 88.3239 )      u=3  $ LC
20  like  17  but  fill=5  trcl = ( -9.5250 4.6990 88.3239 )      u=3  $ UL
21  like  17  but  fill=5  trcl = ( -9.5250 -4.6990 88.3239 )      u=3  $ LL
22  like  17  but  fill=5  trcl = ( 9.5250 4.6990 88.3239 )      u=3  $ UR
23  like  17  but  fill=5  trcl = ( 9.5250 -4.6990 88.3239 )      u=3  $ LR
24  0           #17 #18 #19 #20 #21 #22 #23         fill=4  u=3  $ Void
C Cells - LWT Cavity
25  0           -31  fill=3  ( 0.0000 0.0000 3.8100 )      u=2
26  0           -32  fill=3  ( 0.0000 0.0000 115.5700 )      u=2
27  0           -33  fill=3  ( 0.0000 0.0000 227.3300 )      u=2
28  0           -34  fill=3  ( 0.0000 0.0000 339.0900 )      u=2
29  0           #25 #26 #27 #28          u=2
C Cells - LWT Cask Normal Conditions
30  5  -11.344  -38          u=1  $ BotPb
31  0           -37  fill=2        u=1  $ Cavity
32  6  -7.9400  -35  -36  +38      u=1  $ Bottom
33  6  -7.9400  -35  +36  +40  +43  +37  u=1  $ OuterShell
34  6  -7.9400  -39  +42  +37      u=1  $ InnerShellTaper
35  6  -7.9400  -41  +37        u=1  $ InnerShell
36  5  -11.344  -42  +41        u=1  $ Lead
37  5  -11.344  -40  +39  +42      u=1  $ LeadTaper
38  0           -43  +42        u=1  $ LeadGap
39  3  -0.9669  -45  +35        u=1  $ NeutronShield
40  6  -7.9400  -44  +35  +45      u=1  $ NSShell
41  7  -0.4997  -46  +35        u=1  $ UpperLimiter
42  7  -0.4997  -47  +35        u=1  $ LowerLimiter
43  0           -48  +35  +44  +46  +47  u=1  $ Container
44  0           +48          u=1  $ Outside
C Detector Cells - Radial Biasing
100  0  -100  fill=1  $ Surface
200  0  -200  +100  $ 1ft
300  0  -300  +100  +200  $ 1m
400  0  -400  +100  +200  +300  $ 2m
500  0  -500  +100  +200  +300  +400  $ 2m+Convey
600  0  +100  +200  +300  +400  +500  $ Exterior

C Canned Homogenized Fuel - Surfaces
1  RPP  -4.1910  4.1910  -4.1910  4.1910  0.0000  23.4361    $ Can
C Surfaces - MTR 7 Element Basket
6  RCC  0.0000  0.0000  0.0000  0.0000  0.0000  1.2700  16.8466  $ Base plate
7  RCC  0.0000  0.0000  52.0700  0.0000  0.0000  1.2700  16.8466  $ Support plate
8  RCC  0.0000  0.0000  104.1400  0.0000  0.0000  1.2700  16.8466  $ Support plate
9  CZ  1.2700              $ Hole CC
10  C/Z  0.0000  9.5250  1.2700          $ Hole UC
11  C/Z  0.0000  -9.5250  1.2700          $ Hole LC
12  C/Z  -9.5250  4.6990  1.2700          $ Hole UL
13  C/Z  -9.5250  -4.6990  1.2700          $ Hole LL
14  C/Z  9.5250  4.6990  1.2700          $ Hole UR
15  C/Z  9.5250  -4.6990  1.2700          $ Hole LR
16  RPP  -5.1604  5.1604  -14.6939  14.6939  1.2700  111.7600    $ Center column outer
17  RPP  -4.3667  4.3667  -13.9002  13.9002  1.2700  111.7600    $ Center column inner
```

Figure 5.3.14-5 Sample MCNP Input File for Minimum Height Canned PULSTAR Fuel (Continued)

```
18  RPP  -4.3667  4.3667  4.3688  5.1626  1.2700  111.7600    $ Center divider upper
19  RPP  -4.3667  4.3667  -5.1626  -4.3688  1.2700  111.7600    $ Center divider lower
20  RPP  -14.1986  14.1986  -9.3599  9.3599  1.2700  111.7600    $ Small side outer
21  RPP  -13.8938  13.8938  -9.0551  9.0551  1.2700  111.7600    $ Small side inner
22  RPP  -13.8938  -5.1604  -0.3175  0.3175  1.2700  111.7600    $ Left divider
23  RPP  5.1604  13.8938  -0.3175  0.3175  1.2700  111.7600    $ Right divider
C Surfaces - LWT Cavity
31  RCC  0.0000  0.0000  3.8100  0.0000  0.0000  111.7600  16.8467  $ Basket
32  RCC  0.0000  0.0000  115.5700  0.0000  0.0000  111.7600  16.8467  $ Basket
33  RCC  0.0000  0.0000  227.3300  0.0000  0.0000  111.7600  16.8467  $ Basket
34  RCC  0.0000  0.0000  339.0900  0.0000  0.0000  111.7600  16.8467  $ Basket
C Surfaces - LWT Cask Normal Conditions
35  RCC  0.0000  0.0000  -26.6700  0.0000  0.0000  507.3650  36.5189  $ Lwt
36  RCC  0.0000  0.0000  -26.6700  0.0000  0.0000  26.6700  36.5189  $ Bottom
37  RCC  0.0000  0.0000  0.0000  0.0000  0.0000  452.1200  16.9863  $ Cavity
38  RCC  0.0000  0.0000  -17.7800  0.0000  0.0000  7.6200  26.3525  $ Bottom gamma
shield
39  RCC  0.0000  0.0000  0.0000  0.0000  0.0000  444.5000  20.1740  $ Lead id - taper
40  RCC  0.0000  0.0000  0.0000  0.0000  0.0000  444.5000  31.5976  $ Lead od - taper
41  RCC  0.0000  0.0000  13.8176  0.0000  0.0000  416.8648  18.9103  $ Lead id
42  RCC  0.0000  0.0000  13.8176  0.0000  0.0000  416.8648  33.3271  $ Lead od
43  RCC  0.0000  0.0000  13.8176  0.0000  0.0000  416.8648  33.4645  $ Lead gap
44  RCC  0.0000  0.0000  3.8100  0.0000  0.0000  419.1000  49.8183  $ Neutron shield
shell
45  RCC  0.0000  0.0000  5.0800  0.0000  0.0000  416.5600  49.2189  $ Neutron shield
46  RCC  0.0000  0.0000  450.2150  0.0000  0.0000  70.5612  49.8183  $ Upper limiter
47  RCC  0.0000  0.0000  -68.0212  0.0000  0.0000  71.8312  49.8183  $ Lower limiter
48  RCC  0.0000  0.0000  -68.0212  0.0000  0.0000  588.7974  49.8183  $ Container
C Radial Detector DRA (Surface)
100  RCC  0.0000  0.0000  -68.1212  0.0000  0.0000  588.9974  49.9184
101  PZ  -38.6713
102  PZ  -9.2215
103  PZ  20.2284
104  PZ  49.6783
105  PZ  79.1282
106  PZ  108.5780
107  PZ  138.0279
108  PZ  167.4778
109  PZ  196.9276
110  PZ  226.3775
111  PZ  255.8274
112  PZ  285.2772
113  PZ  314.7271
114  PZ  344.1770
115  PZ  373.6269
116  PZ  403.0767
117  PZ  432.5266
118  PZ  461.9765
119  PZ  491.4263
C Radial Detector DRB (1ft)
200  RCC  0.0000  0.0000  -98.6012  0.0000  0.0000  649.9574  80.2984
201  PZ  -66.1033
202  PZ  -33.6055
203  PZ  -1.1076
204  PZ  31.3903
205  PZ  63.8882
206  PZ  96.3860
207  PZ  128.8839
208  PZ  161.3818
209  PZ  193.8796
210  PZ  226.3775
211  PZ  258.8754
212  PZ  291.3732
213  PZ  323.8711
214  PZ  356.3690
215  PZ  388.8669
216  PZ  421.3647
217  PZ  453.8626
218  PZ  486.3605
```

Figure 5.3.14-5 Sample MCNP Input File for Minimum Height Canned PULSTAR Fuel (Continued)

```
219  PZ  518.8583
C Radial Detector DRC (1m)
300  RCC  0.0000  0.0000  -168.1212  0.0000  0.0000  788.9974  149.8184
301  PZ  -135.2463
302  PZ  -102.3714
303  PZ  -69.4965
304  PZ  -36.6216
305  PZ  -3.7467
306  PZ  29.1282
307  PZ  62.0030
308  PZ  94.8779
309  PZ  127.7528
310  PZ  160.6277
311  PZ  193.5026
312  PZ  226.3775
313  PZ  259.2524
314  PZ  292.1273
315  PZ  325.0022
316  PZ  357.8771
317  PZ  390.7520
318  PZ  423.6269
319  PZ  456.5017
320  PZ  489.3766
321  PZ  522.2515
322  PZ  555.1264
323  PZ  588.0013
C Radial Detector DRD (2m)
400  RCC  0.0000  0.0000  -268.1212  0.0000  0.0000  988.9974  249.8184
401  PZ  -226.9130
402  PZ  -185.7048
403  PZ  -144.4965
404  PZ  -103.2883
405  PZ  -62.0801
406  PZ  -20.8719
407  PZ  20.3364
408  PZ  61.5446
409  PZ  102.7528
410  PZ  143.9611
411  PZ  185.1693
412  PZ  226.3775
413  PZ  267.5857
414  PZ  308.7940
415  PZ  350.0022
416  PZ  391.2104
417  PZ  432.4186
418  PZ  473.6269
419  PZ  514.8351
420  PZ  556.0433
421  PZ  597.2515
422  PZ  638.4598
423  PZ  679.6680
C Radial Detector DRE (2m+Convey)
500  RCC  0.0000  0.0000  -269.1212  0.0000  0.0000  990.9974  321.9200
501  PZ  -227.8296
502  PZ  -186.5381
503  PZ  -145.2465
504  PZ  -103.9550
505  PZ  -62.6634
506  PZ  -21.3719
507  PZ  19.9197
508  PZ  61.2113
509  PZ  102.5028
510  PZ  143.7944
511  PZ  185.0859
512  PZ  226.3775
513  PZ  267.6691
514  PZ  308.9606
515  PZ  350.2522
516  PZ  391.5437
```

Figure 5.3.14-5 Sample MCNP Input File for Minimum Height Canned PULSTAR Fuel (Continued)

```
517  PZ  432.8353
518  PZ  474.1269
519  PZ  515.4184
520  PZ  556.7100
521  PZ  598.0015
522  PZ  639.2931
523  PZ  680.5846

C
C Materials List
C
C Homogenized UO2 Fuel
m1     92235  -4.7547E-02  40000  -9.9220E-02  24000  -1.0101E-04
       92238  -7.4491E-01  50000  -1.5152E-03  7014  -5.0507E-05
       8016  -1.0653E-01  26000  -1.2627E-04
C Water
m2     1001  6.6667E-01  8016  3.3333E-01
mt2    lwtr.01
C Water/Glycol
m3     1001  -1.03651E-01  8016  -6.75619E-01  6000  -2.20730E-01
C Aluminum
m4     13027  -1.0
C Lead
m5     82000  -1.0
C Stainless Steel 304
m6     26000  -0.695  24000  -0.190  28000  -0.095
       25055  -0.020
C Aluminum Honeycomb Impact Limiter
m7     13027  -1.0
C Zircaloy
m8     40000  -9.8225E-01  50000  -1.5000E-02  26000  -1.2500E-03
       24000  -1.0000E-03  7014  -5.0000E-04
nonu  $ No subcritical multiplication
C
C Cell Importances
imp:p 1 44r 0
C
C Source Definition - Fuel Gamma
C 50% burnup, 6 wt % U-235, 1-year cool time, 32 g U-235 per rod, 37.67 W/assy
sdef  x=d1  y=d2  z=d3  erg=d4  cell=100:31:d5:d6:1
si1  -4.1910  4.1910
sp1  0  1
si2  -4.1910  4.1910
sp2  0  1
si3  0.0000  23.4361
sp3  0  1
si4  1.000E-02  2.000E-02  5.000E-02  1.000E-01  2.000E-01  3.000E-01
     4.000E-01  6.000E-01  8.000E-01  1.000E+00  1.220E+00  1.440E+00
     1.660E+00  2.000E+00  2.500E+00  3.000E+00  4.000E+00  5.000E+00
     6.500E+00  8.000E+00  1.000E+01  1.200E+01  1.400E+01
sp4  0.0000E+00  3.1584E+13  4.4346E+13  2.1659E+13  2.0132E+13  5.0486E+12
3.7916E+12  2.1998E+13  6.1006E+13  8.1897E+12  1.5636E+12  1.4912E+12
     3.3074E+11  7.9476E+10  4.1847E+11  4.9183E+09  5.8148E+08  2.4473E+04
     9.8056E+03  1.9207E+03  4.0738E+02  2.1050E+01  0.0000E+00
si5 l  25  26  27  28
sp5  1.0  1.0  1.0  1.0
si6 l  17  18  19  20  21  22  23
sp6  1.0  1.0  1.0  1.0  1.0  1.0  1.0
mode p
nps  40000000
C
C ANSI/ANS-6.1.1-1977 - Gamma Flux-to-Dose Conversion Factors
C (mrem/hr)/(photons/cm2-sec)
de0  0.01  0.03  0.05  0.07  0.1  0.15  0.2
     0.25  0.3  0.35  0.4  0.45  0.5  0.55
     0.6  0.65  0.7  0.8  1  1.4  1.8
     2.2  2.6  2.8  3.25  3.75  4.25  4.75
     5  5.25  5.75  6.25  6.75  7.5  9
     11  13  15
df0  3.96E-03  5.82E-04  2.90E-04  2.58E-04  2.83E-04  3.79E-04  5.01E-04
```

Figure 5.3.14-5 Sample MCNP Input File for Minimum Height Canned PULSTAR Fuel (Continued)

```
6.31E-04  7.59E-04  8.78E-04  9.85E-04  1.08E-03  1.17E-03  1.27E-03
     1.36E-03  1.44E-03  1.52E-03  1.68E-03  1.98E-03  2.51E-03  2.99E-03
     3.42E-03  3.82E-03  4.01E-03  4.41E-03  4.83E-03  5.23E-03  5.60E-03
     5.80E-03  6.01E-03  6.37E-03  6.74E-03  7.11E-03  7.66E-03  8.77E-03
     1.03E-02  1.18E-02  1.33E-02
C
C Weight Window Generation - Radial
wwg  2 0 0 0 0
wwp:p  5 3 5 0 -1 0
mesh  geom=cyl ref=0 13 316 origin=0.1 0.1 -568
      imesh  16.8 17.0 18.9 33.3 36.5 49.2 49.8 549.8
      iints  1 1 1 5 1 1 1 1
      jmesh  500 541 550 558 568 659 1019 1020 1049 1089 1589
      jints  1 1 1 1 1 1 1 1 1 1 1
      kmesh  1
      kints  1
wwge:p  1e-3 1 20
fc2 Radial Surface Tally
f2:p +100.1
fm2 6.20620E+15
fs2  -101  -102  -103  -104  -105  -106
     -107  -108  -109  -110  -111  -112
     -113  -114  -115  -116  -117  -118
     -119  T
tf2
fc12 Radial 1ft Tally
f12:p +200.1
fm12 6.20620E+15
fs12  -201  -202  -203  -204  -205  -206
     -207  -208  -209  -210  -211  -212
     -213  -214  -215  -216  -217  -218
     -219  T
tf12
fc22 Radial 1m Tally
f22:p +300.1
fm22 6.20620E+15
fs22  -301  -302  -303  -304  -305  -306
     -307  -308  -309  -310  -311  -312
     -313  -314  -315  -316  -317  -318
     -319  -320  -321  -322  -323  T
tf22
fc32 Radial 2m Tally
f32:p +400.1
fm32 6.20620E+15
fs32  -401  -402  -403  -404  -405  -406
     -407  -408  -409  -410  -411  -412
     -413  -414  -415  -416  -417  -418
     -419  -420  -421  -422  -423  T
tf32
fc42 Radial 2m+Convey Tally
f42:p +500.1
fm42 6.20620E+15
fs42  -501  -502  -503  -504  -505  -506
     -507  -508  -509  -510  -511  -512
     -513  -514  -515  -516  -517  -518
     -519  -520  -521  -522  -523  T
tf42
C
C Print Control
prdmp  -30 -60 1 2
print
C Random Number Generator
rand  gen=2  seed=19073486328125  stride=152917  hist=1
```

Figure 5.3.14-6 Normal Condition Axial Surface Dose Rate Profile by Source Type – Minimum Height Canned PULSTAR Fuel

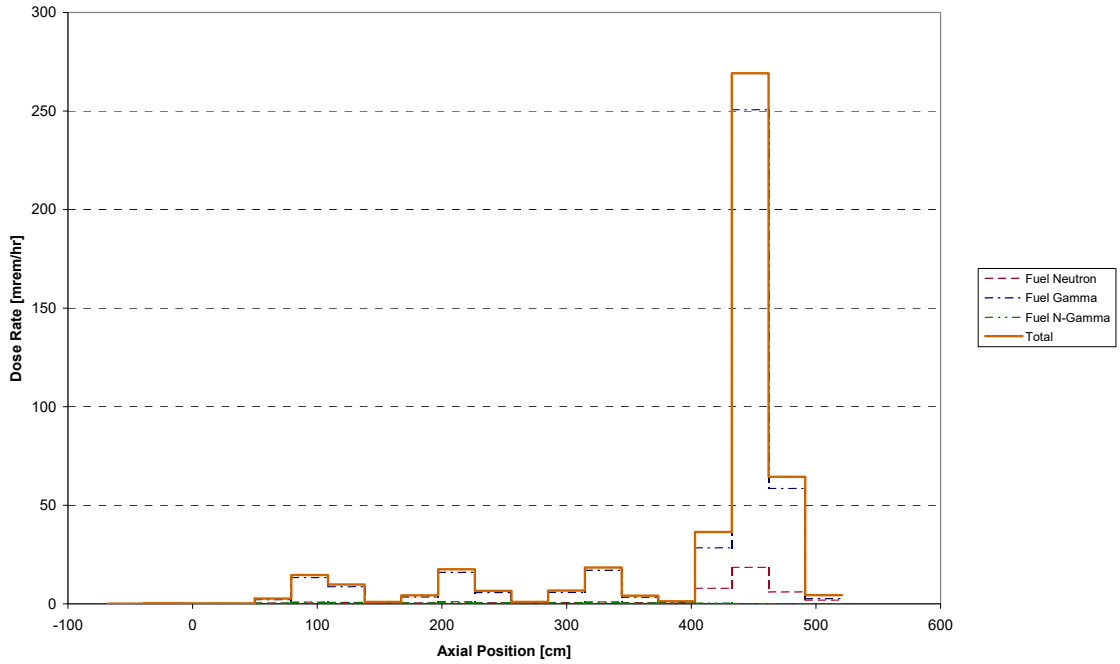

Figure 5.3.14-7 Normal Condition Radial 2m Dose Rate Profile by Source Type – Minimum Height Canned PULSTAR Fuel

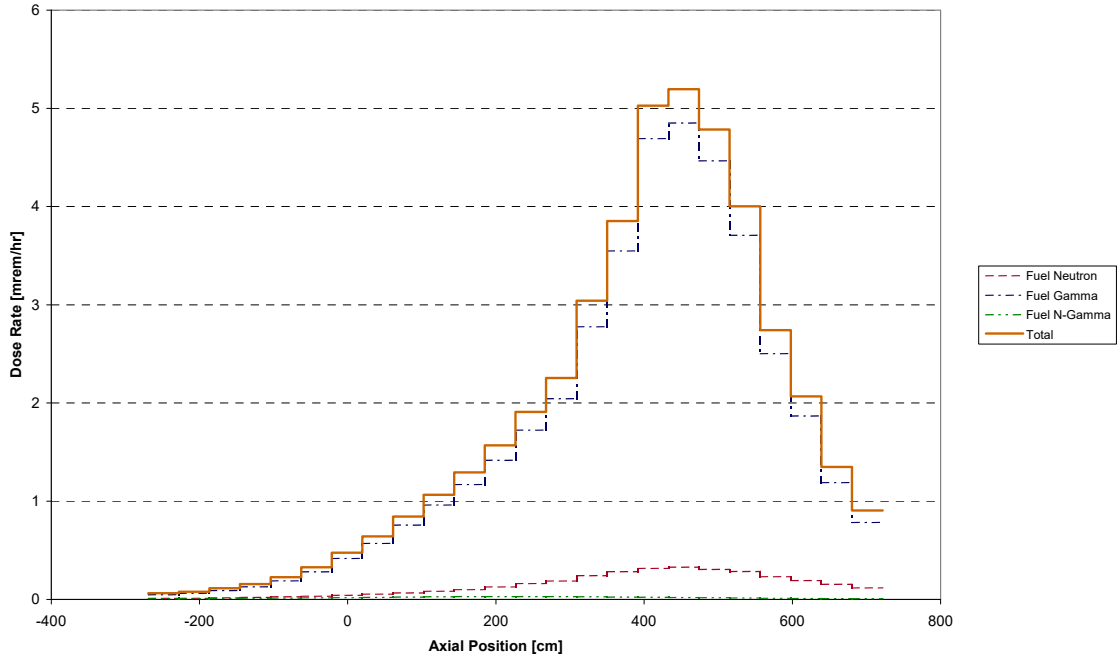

Figure 5.3.14-8 Accident Condition Radial 1m Dose Rate Profile by Source Type – Minimum Height Canned PULSTAR Fuel

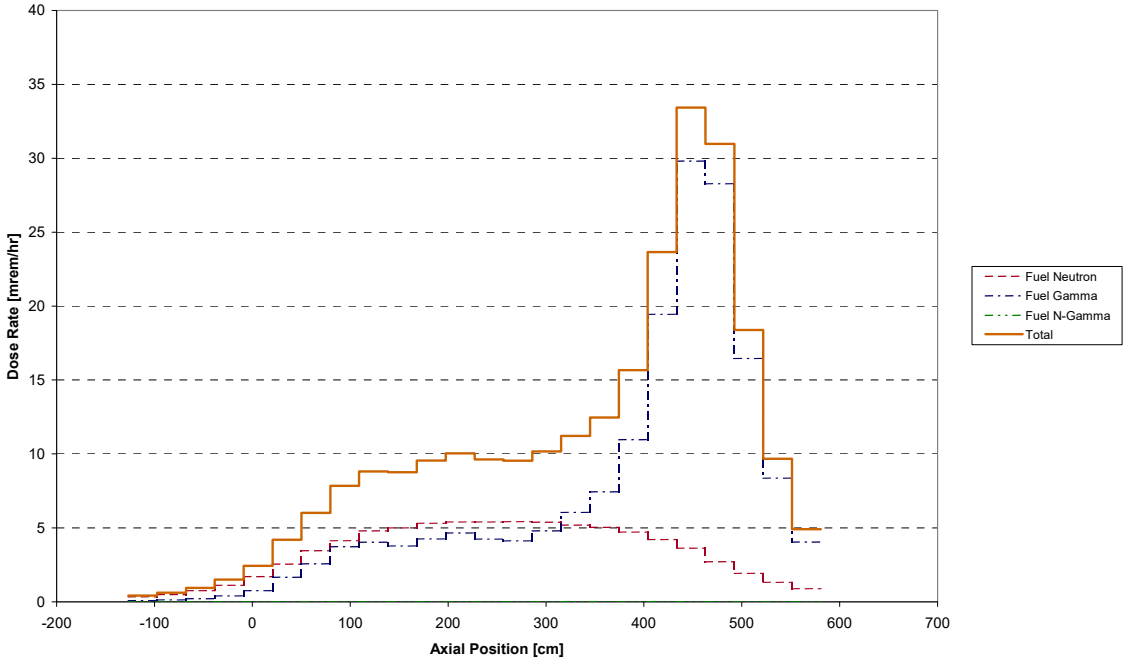

Table 5.3.14-1 PULSTAR Fuel Geometry

Parameter	Value
Pellet Diameter (inch)	0.423
Clad Thickness (inch)	0.0185
Rod Diameter (inch)	0.47
Rod Pitch (inch)	0.606×0.524
Active Fuel Length (inch)	24.1
Assembly Width (inch)	3.15×2.74
Zirconium Alloy Box Thickness (inch)	0.06
Lower Fitting Height (inch)	5.4
Upper Fitting Height (inch)	8.5
Assembly Height (inch)	38

Table 5.3.14-2 Source Term Generation Parameters for PULSTAR Fuel

Parameter	Value
^{235}U Mass Per Rod (grams)	32
Assembly Power (MW/assy)	0.08
Initial Enrichment (wt % ^{235}U)	6.0
Burnup (% ^{235}U)[1]	45
Moderator/Box Temperature (K)	333.15
Clad Temperature (K)	433.15
Fuel Temperature (K)	633.15

[1] Target burnup was 50% depletion. Due to fissile material build-up, actual depletion is 46%. A maximum 45% depletion is conservatively applied in the fuel limits.

Table 5.3.14-3 PULSTAR Fuel Assembly Neutron Source Term for 1 Year Cool Time

Group	E Lower [MeV]	E Upper [MeV]	Source [neutrons/sec]
1	1.360E+01	1.460E+01	0.000E+00
2	1.250E+01	1.360E+01	4.387E+01
3	1.125E+01	1.250E+01	1.828E+02
4	1.000E+01	1.125E+01	6.036E+02
5	8.250E+00	1.000E+01	1.897E+03
6	7.000E+00	8.250E+00	5.130E+03
7	6.070E+00	7.000E+00	8.887E+03
8	4.720E+00	6.070E+00	2.932E+04
9	3.680E+00	4.720E+00	6.083E+04
10	2.870E+00	3.680E+00	1.004E+05
11	1.740E+00	2.870E+00	2.023E+05
12	6.400E-01	1.740E+00	2.571E+05
13	3.900E-01	6.400E-01	6.590E+04
14	1.100E-01	3.900E-01	2.289E+04
15	6.740E-02	1.100E-01	2.636E+00
16	2.480E-02	6.740E-02	0.000E+00
17	9.120E-03	2.480E-02	0.000E+00
18	2.950E-03	9.120E-03	0.000E+00
19	9.610E-04	2.950E-03	0.000E+00
20	3.540E-04	9.610E-04	0.000E+00
21	1.660E-04	3.540E-04	0.000E+00
22	4.810E-05	1.660E-04	0.000E+00
23	1.600E-05	4.810E-05	0.000E+00
24	4.000E-06	1.600E-05	0.000E+00
25	1.500E-06	4.000E-06	0.000E+00
26	5.500E-07	1.500E-06	0.000E+00
27	7.090E-08	5.500E-07	0.000E+00
28	1.000E-11	7.090E-08	0.000E+00
Total			7.555E+05

Table 5.3.14-4 PULSTAR Fuel Assembly Gamma Source Term for 1 Year Cool Time

Group	E Lower [MeV]	E Upper [MeV]	Source [photons/sec]
1	1.20E+01	1.40E+01	0.0000E+00
2	1.00E+01	1.20E+01	2.1050E+01
3	8.00E+00	1.00E+01	4.0738E+02
4	6.50E+00	8.00E+00	1.9207E+03
5	5.00E+00	6.50E+00	9.8056E+03
6	4.00E+00	5.00E+00	2.4473E+04
7	3.00E+00	4.00E+00	5.8148E+08
8	2.50E+00	3.00E+00	4.9183E+09
9	2.00E+00	2.50E+00	4.1847E+11
10	1.66E+00	2.00E+00	7.9476E+10
11	1.44E+00	1.66E+00	3.3074E+11
12	1.22E+00	1.44E+00	1.4912E+12
13	1.00E+00	1.22E+00	1.5636E+12
14	8.00E-01	1.00E+00	8.1897E+12
15	6.00E-01	8.00E-01	6.1006E+13
16	4.00E-01	6.00E-01	2.1998E+13
17	3.00E-01	4.00E-01	3.7916E+12
18	2.00E-01	3.00E-01	5.0486E+12
19	1.00E-01	2.00E-01	2.0132E+13
20	5.00E-02	1.00E-01	2.1659E+13
21	2.00E-02	5.00E-02	4.4346E+13
22	1.00E-02	2.00E-02	3.1584E+13
Total			2.2165E+14

Table 5.3.14-5 Intact Assembly Fuel Homogenization for PULSTAR Fuel

Component	Area [cm²]	Area Fraction	Volume Fraction of Components		
			UO_2	Void	Clad
Fuel	2.2666E+01	4.4255E-01	4.4255E-01		
Gap	1.0844E+00	2.1172E-02		2.1172E-02	
Clad	4.2324E+00	8.2637E-02			8.2637E-02
Void	2.3234E+01	4.5364E-01		4.5364E-01	
Total	5.1217E+01	1.0000E+00	4.4255E-01	4.7481E-01	8.2637E-02

Table 5.3.14-6 Nominal Height Can Fuel Homogenization for PULSTAR Fuel

Component	Volume [cm³]	Volume Fraction	Volume Fraction of Components		
			UO_2	Void	Clad
Fuel	1.3875E+03	2.5917E-01	2.5917E-01		
Clad	2.5908E+02	4.8394E-02			4.8394E-02
Void	3.7071E+03	6.9244E-01		6.9244E-01	
Total	5.3537E+03	1.0000E+00	2.5917E-01	6.9244E-01	4.8394E-02

Table 5.3.14-7 Minimum Height Can Fuel Homogenization for PULSTAR Fuel

Component	Volume [cm³]	Volume Fraction	Volume Fraction of Components		
			UO_2	Void	Clad
Fuel	1.3875E+03	8.4265E-01	8.4265E-01		
Clad	2.5908E+02	1.5735E-01			1.5735E-01
Void	0.0000E+00	0.0000E+00		0.0000E+00	
Total	1.6466E+03	1.0000E+00	8.4265E-01	0.0000E+00	1.5735E-01

Table 5.3.14-8 Fuel Region Homogenized Material Description for PULSTAR Fuel

	Model Number Density [atom/b-cm]		
Element	Assembly (5.37 g/cm^3)	Nominal Height Can (3.14 g/cm^3)	Minimum Height Can (10.22 g/cm^3)
^{235}U	6.5376E-04	3.8286E-04	1.2448E-03
Zr	3.5151E-03	2.0585E-03	6.6930E-03
Cr	6.2782E-06	3.6767E-06	1.1954E-05
^{238}U	1.0113E-02	5.9224E-03	1.9256E-02
Sn	4.1250E-05	2.4157E-05	7.8543E-05
N	1.1657E-05	6.8263E-06	2.2195E-05
O	2.1525E-02	1.2605E-02	4.0984E-02
Fe	7.3071E-06	4.2792E-06	1.3913E-05

Table 5.3.14-9 Cask/Basket Material Descriptions for PULSTAR Fuel

		Density	Number Density
Material	Element	[g/cm^3]	[atom/b-cm]
Stainless Steel 304	Fe	7.94	5.9505E-02
	Cr		1.7472E-02
	Ni		7.7392E-03
	Mn		1.7407E-03
Lead	Pb	11.34	3.2967E-02
Neutron Shield	H	0.97	5.9884E-02
	O		2.4595E-02
	C		1.0701E-02
Impact Limiter	Al	0.50	1.1153E-02
Zirconium alloy	Zr	6.56	4.2537E-02
	Sn		4.9917E-04
	Fe		8.8422E-05
	Cr		7.5976E-05
	N		1.4106E-04

Table 5.3.14-10 Maximum Radial Dose Rates for PULSTAR Fuel

	Dose Rate [mrem/hr]				
Source Model	Normal Surface	Normal 1 meter	Normal 2 meter	Accident Surface	Accident 1 meter
Assembly	24.3	4.5	1.7	108	15.5
Nominal Can	222	21.8	5.1	430	32.0
Minimum Can	269	24.6	5.2	511	33.4

Table 5.3.14-11 Maximum Axial Dose Rates for PULSTAR Fuel

	Dose Rate [mrem/hr]			
	Normal – Surface		Accident – Surface	
Source Model	Top	Bottom	Top	Bottom
Assembly	2.5	0.9	18.4	6.3
Nominal Can	7.8	0.7	73.3	5.0
Minimum Can	11.6	0.1	81.1	1.0

5.3.15 Spiral Fuel Assembly Configuration

A maximum payload of 42 spiral fuel assemblies has been analyzed for transport in the LWT cask. The fuel assemblies are configured in six ANSTO basket modules with one fuel assembly loaded in each of the seven cells in each basket module. The cells in each basket module are arranged with one center cell (fuel tube structure) surrounded by six other cells.

Assemblies are evaluated for a uniform loading of 18W, matching the lower of the DIDO heat load allowables, and at sources matching the MEU DIDO fuel burnup minimum cool time curve. Thus, basket module maximum heat loads of 126W (0.756 kW per cask) are permissible. Only uniform loading configurations are considered.

The spiral fuel assembly consists of curved fuel plates located within an inner and outer concentric aluminum shell. The physical characteristics of the analyzed spiral assembly are shown in Table 5.3.15-1. The active fuel section of the assembly consists of 10 plates. The fuel core of each fuel plate is an alloy of aluminum and uranium. The assembly is evaluated at a bounding maximum fissile material mass of 160 grams ^{235}U per assembly and a minimum enrichment of 75 wt % ^{235}U.

The SAS2H sequence was used to determine the gamma and neutron source terms and decay heat loads for the spiral assembly. The SAS2H sequence includes the ORIGEN-S code and a 1-D XSDRNPM model of the fuel assembly. ORIGEN-S performs fuel assembly depletion at specified operating conditions and calculates heat generation, gamma and neutron spectra for a given discharge isotopic composition as a function of out of reactor time (cooling time). The 1-D model of the fuel assembly is used to collapse the 27-group neutron cross-section library (27GROUPNDF4) into three broad energy groups for the depletion calculation. The 1-D model is based on an equivalent area representation of the fuel/moderator cell and surrounding structural regions. Average power is based on reactor maximum power divided by the number of assemblies in the core. Assembly burnup is modeled in four cycles of equal length with 30 days of down time between cycles. This burnup description bounds typical research reactor use, where fuel is burned over a period of years or even decades to achieve the optimal discharge burnup. The SAS2H input for the 18W, 70% depleted case is shown in Figure 5.3.15-1. The SAS2H input contains relevant operating parameters such as power density and number of days of irradiation, in addition to the material compositions employed.

A series of seven cases were run in which burnup was varied from a depletion of 10% to 70%. Cooling times were considered from 90 days to 3.5 years. Because the cask is loaded based on the decay heat limits at various depletion steps, no single loading configuration exists.

Design basis gamma and neutron source terms for the spiral assembly with decay heat loads of 18 watts are listed in Table 5.3.15-2. A source comparison by energy line, total source, and for the energy lines significant to the shielding evaluations is shown in Table 5.3.15-3. Energy line comparisons are also illustrated in Figure 5.3.15-2. Source comparisons are made at the 70% depletion level, which was shown to be bounding for DIDO type fuel evaluations. Source terms are similar to those of the DIDO assembly with slightly lower sources at the shielding-controlling energy lines.

A cool time curve comparison for the DIDO MEU and spiral fuel assemblies is included in Figure 5.3.15-3. The spiral fuel requires less time to meet the 18-watt heat load level per element than the MEU DIDO element. To illustrate the additional source margin for spiral fuel assemblies when applying the MEU DIDO fuel cool time figure, spectrums are generated at the DIDO limited cool time values. As indicated in Table 5.3.15-4, a significant source margin exists when restricting the spiral assembly to DIDO minimum cool times.

The ANSTO basket is a slightly modified version of the DIDO basket, with each basket containing seven tubes designed to hold one fuel assembly in each tube. ANSTO fuel tubes are slightly larger in diameter and thickness.

Parameter	DIDO Basket	ANSTO Basket
Fuel Assembly Openings	7	7
Fuel Tube OD (inch)	4.25	4.375
Fuel Tube Wall Thickness (inch)	0.120	0.125

The DIDO basket contains aluminum heat transfer components, while the ANSTO basket contains additional support disks. The aluminum heat transfer components were not included in the DIDO shielding evaluations.

Combining a lower spiral fuel assembly source with a similar basket design demonstrates that DIDO shielding evaluations, and the dose rates produced by the evaluations, bound those expected from the spiral fuel shipments.

Figure 5.3.15-1 SAS2H Input for Spiral Fuel 70% ^{235}U Depletion and 18-Watt Heat Load

```
=SAS2H       PARM=(HALT04,SKIPSHIPDATA)
HIFAR Mark III Fuel, 70% U-235 BURNUP, 160g, 18W
27GROUPNDF4 LATTICECELL
URANIUM 1 DEN=0.965 1.0 373 92235 75.00 92238 25.00 END
AL 1 DEN=1.575 1.0 373 END
AL      2 1.0 323 END
D2O     3 DEN=1.0948 1.0 313 END
END COMP
SYMMSLABCELL 0.634 0.0489 1 3 0.1439 2 END
NPIN=3 FUEL=60.325 VOLF=220.957 NCYC=4 NLIB=1
PRIN=6 INPL=2 NUMZ=5 NUMH=0
3 2.91 2 3.0225 500 4.925 2 5.08 3 8.598
POWER=0.4000 BURN=64.16 DOWN=30 END
POWER=0.4000 BURN=64.16 DOWN=30 END
POWER=0.4000 BURN=64.16 DOWN=30 END
POWER=0.4000 BURN=64.16 DOWN=90 END
END
=ORIGENS
0$$  A4 21 A8 26 A10 51 71  E
1$$  1 1T
COOLING TO 729 DAYS AND FISSION PRODUCT GAMMA REBIN
3$$  21 0 1 A33 -86  E
54$$  A8 1 E T
35$$  0 T
56$$  0 1 A13 -2 4 3 E
57**  90 E T
COOLING TO 729 DAYS AND FISSION PRODUCT GAMMA REBIN
SINGLE REACTOR ASSEMBLY
60** 729
65$$  A4 1 A7 1 A10 1 A25 1 A28 1 A31 1 A46 1 A49 1 A52 1 E
61**  F.0001
81$$  2 51 26 1 E
82$$  F6 T
FISSION PRODUCT GAMMA SPECTRA IN SCALE 18 GROUPS
56$$ F0  T
END
=ORIGENS
0$$  A4 21 A8 26 A10 51 71  E
1$$  1 1T
COOLING TO 729 DAYS AND ACTINIDE GAMMA REBIN
3$$  21 0 1 A33 -86  E
54$$  A8 1 E T
35$$  0 T
56$$  0 1 A13 -2 4 3 E
57**  90 E T
COOLING TO 729 DAYS AND ACTINIDE GAMMA REBIN
SINGLE REACTOR ASSEMBLY
60** 729
65$$  A4 1 A7 1 A10 1 A25 1 A28 1 A31 1 A46 1 A49 1 A52 1 E
61**  F.0001
81$$  2 51 26 1 E
82$$  F5 T
ACTINIDE GAMMA SPECTRA IN SCALE 18 GROUPS
56$$ F0  T
END
```

Figure 5.3.15-2 Spiral Fuel versus MEU DIDO Gamma Spectrum Comparison (18 Watts, 70% Depletion)

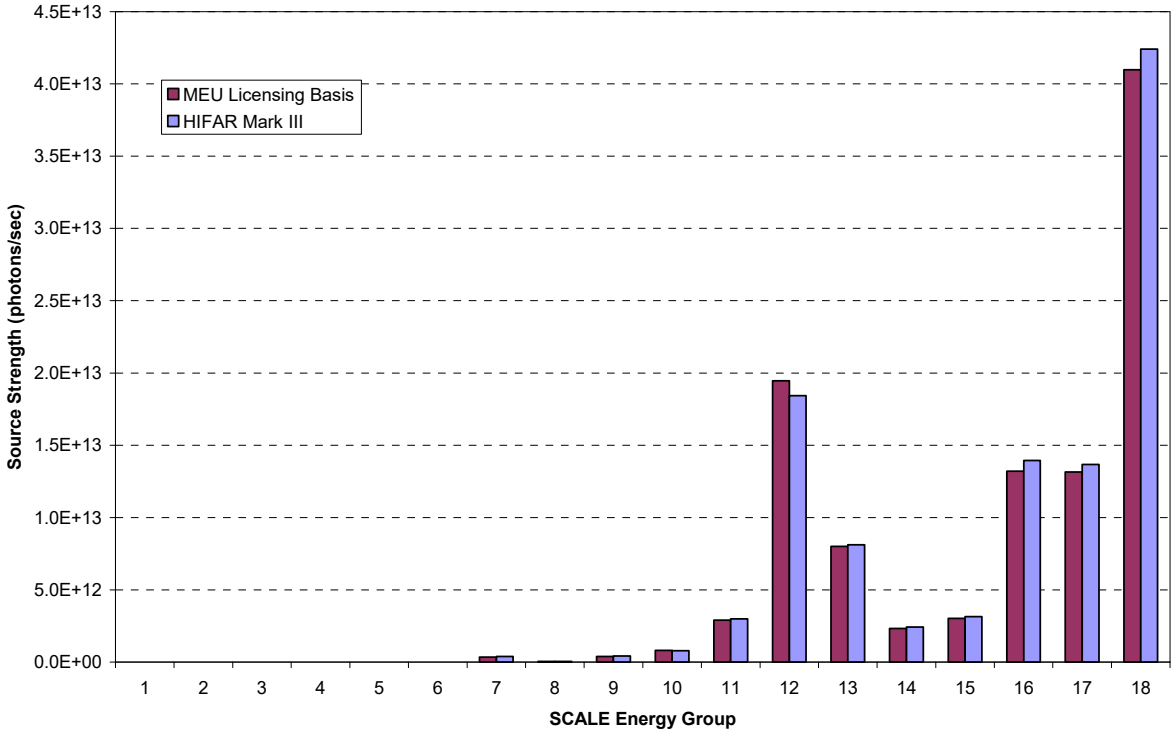

Note: HIFAR Mark III type designation refers to spiral fuel. MEU licensing basis refers to DIDO MEU fuels as discussed in Section 5.3.9.

Figure 5.3.15-3 Minimum Cool Time Curve for 18-Watt Heat Load (Spiral Fuel and MEU DIDO)

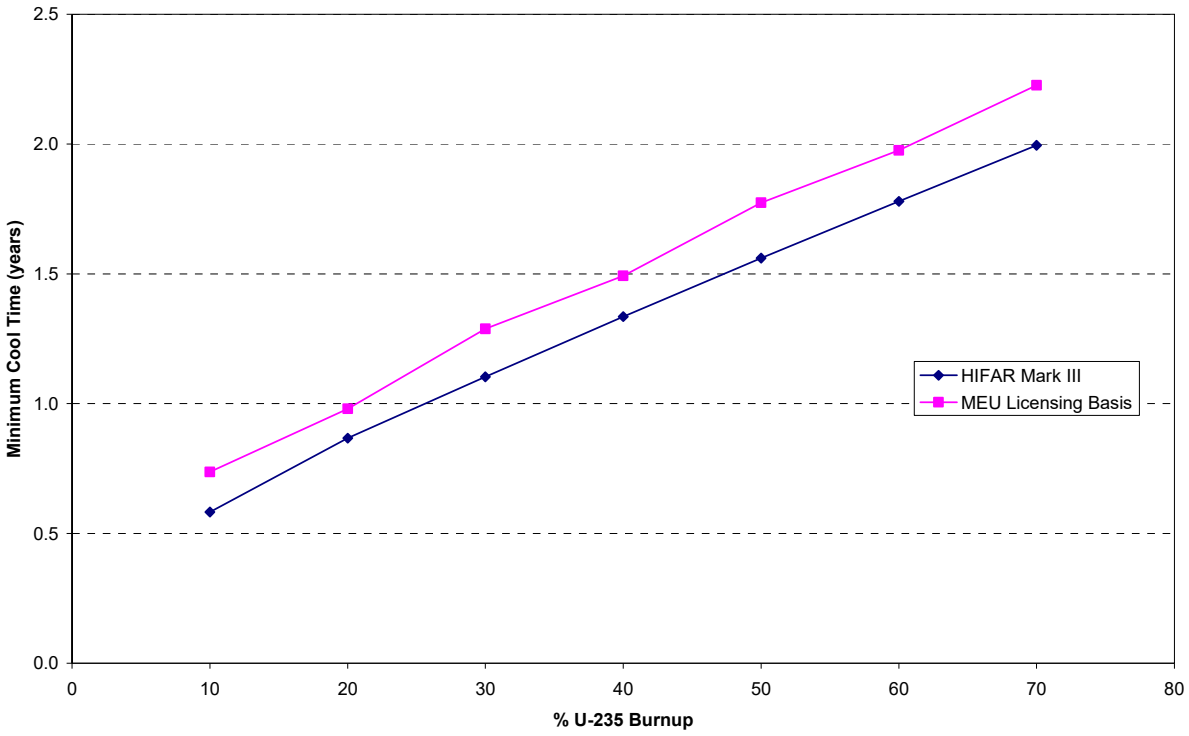

Note: HIFAR Mark III type designation refers to spiral fuel. MEU licensing basis refers to DIDO MEU fuels as discussed in Section 5.3.9.

Table 5.3.15-1 Spiral Fuel Assembly Characteristics

Parameter	Unit	Value
Inner Aluminum Plate ID	[cm]	5.82
Inner Aluminum Plate OD	[cm]	6.045
Outer Aluminum Plate ID	[cm]	9.85
Outer Aluminum Plate OD	[cm]	10.16
Number of Fuel Plates		10
Active Fuel Width[1]	[cm]	6
Active Fuel Thickness[2]	[cm]	0.061
Active Fuel Length	[cm]	60.325
Plate Width[3]	[cm]	7.33
Plate Thickness[4]	[cm]	0.147
Total Element Length	[cm]	63.5
Plate Pitch[5]	[cm]	0.6342
Minimum Enrichment (wt % ^{235}U)		75%
Maximum ^{235}U per Fuel Assembly	[g]	160
Modeled Assembly Power Level	[MW]	0.4000
U wt % in Fuel Composition		38%
Mass of Uranium	[g]	213.3
Fuel Composition		U-Al

[1] In conjunction with fuel meat thickness used to calculate total fuel meat volume. Fuel meat thickness adjusted to conserve fuel meat volume.

[2] Adjusted to 0.0489 cm to conserve volume (mass).

[3] In conjunction with plate thickness used to calculate total plate volume. Fuel plate thickness is then adjusted to conserve plate volume (H/U ratio).

[4] Adjusted to 0.1439 cm to conserve volume (mass) and H/U ratio.

[5] Modeled pitch represents a set of three concentric cylinders. Uniform set of three fuel cylinders preserves H/U ratio within 2%.

Table 5.3.15-2 Spiral Fuel Assembly Neutron and Gamma Source (18 Watt Heat Load)

Spiral Fuel Neutron Spectra @ 18W – [n/sec/assembly]

	Percent Burnup						
Group[1]	10	20	30	40	50	60	70
1	2.01E-01	8.64E-01	2.29E+00	5.08E+00	1.09E+01	2.48E+01	6.22E+01
2	4.74E+00	1.82E+01	4.79E+01	1.05E+02	2.13E+02	4.33E+02	9.49E+02
3	9.08E+00	3.24E+01	8.42E+01	1.83E+02	3.64E+02	7.04E+02	1.42E+03
4	3.11E+00	1.16E+01	3.02E+01	6.63E+01	1.36E+02	2.77E+02	6.07E+02
5	2.84E+00	1.12E+01	2.95E+01	6.51E+01	1.36E+02	2.93E+02	6.88E+02
6	2.36E+00	9.86E+00	2.61E+01	5.78E+01	1.23E+02	2.75E+02	6.77E+02
7	4.54E-01	1.91E+00	5.05E+00	1.12E+01	2.39E+01	5.33E+01	1.32E+02
Total	2.28E+01	8.60E+01	2.25E+02	4.94E+02	1.01E+03	2.06E+03	4.54E+03

Spiral Fuel Gamma Spectra @ 18W – [g/sec/assembly]

	Percent Burnup						
Group	10	20	30	40	50	60	70
1	7.09E-03	3.01E-02	7.96E-02	1.75E-01	3.69E-01	8.12E-01	1.99E+00
2	3.38E-02	1.43E-01	3.78E-01	8.29E-01	1.75E+00	3.84E+00	9.38E+00
3	1.75E-01	7.37E-01	1.95E+00	4.27E+00	8.99E+00	1.97E+01	4.81E+01
4	4.44E-01	1.86E+00	4.91E+00	1.08E+01	2.26E+01	4.96E+01	1.20E+02
5	5.99E+07	9.49E+07	1.19E+08	1.33E+08	1.40E+08	1.42E+08	1.42E+08
6	8.09E+08	1.07E+09	1.31E+09	1.44E+09	1.49E+09	1.49E+09	1.45E+09
7	2.49E+11	3.71E+11	4.33E+11	4.51E+11	4.43E+11	4.21E+11	3.89E+11
8	2.30E+10	3.49E+10	4.15E+10	4.40E+10	4.41E+10	4.28E+10	4.05E+10
9	1.60E+11	2.43E+11	3.00E+11	3.38E+11	3.65E+11	3.91E+11	4.22E+11
10	2.69E+11	3.75E+11	4.60E+11	5.32E+11	6.03E+11	6.85E+11	7.89E+11
11	3.24E+11	5.99E+11	9.21E+11	1.31E+12	1.75E+12	2.29E+12	2.99E+12
12	6.20E+13	4.01E+13	2.59E+13	1.87E+13	1.63E+13	1.66E+13	1.84E+13
13	4.05E+12	3.41E+12	3.94E+12	4.76E+12	5.69E+12	6.77E+12	8.11E+12
14	1.60E+12	2.16E+12	2.48E+12	2.60E+12	2.61E+12	2.54E+12	2.43E+12
15	2.16E+12	2.81E+12	3.20E+12	3.34E+12	3.36E+12	3.28E+12	3.15E+12
16	1.04E+13	1.28E+13	1.45E+13	1.52E+13	1.51E+13	1.47E+13	1.40E+13
17	9.47E+12	1.23E+13	1.39E+13	1.45E+13	1.46E+13	1.43E+13	1.37E+13
18	2.97E+13	3.76E+13	4.25E+13	4.45E+13	4.48E+13	4.40E+13	4.24E+13
Total	1.20E+14	1.13E+14	1.09E+14	1.06E+14	1.06E+14	1.06E+14	1.07E+14

1 SCALE 4.3 27N-18G energy structure

Table 5.3.15-3 Spiral Fuel Assembly Source Comparison to DIDO MEU Fuel (70% Depletion and 18 Watts)

	g/sec/assy			Group Energy	MeV/sec/assy		
Group[1]	Spiral Fuel	DIDO MEU	% Diff	Avg. (MeV)	Spiral Fuel	DIDO MEU	% Diff
1	1.9854E+00	3.6156E+00	82%	9.000E+06	1.7869E+07	3.2540E+07	82%
2	9.3816E+00	1.7064E+01	82%	7.250E+06	6.8017E+07	1.2371E+08	82%
3	4.8053E+01	8.7244E+01	82%	5.750E+06	2.7630E+08	5.0165E+08	82%
4	1.2037E+02	2.1810E+02	81%	4.500E+06	5.4167E+08	9.8145E+08	81%
5	1.4171E+08	1.5823E+08	12%	3.500E+06	4.9599E+14	5.5381E+14	12%
6	1.4525E+09	1.5502E+09	7%	2.750E+06	3.9944E+15	4.2631E+15	7%
7	3.8868E+11	3.5325E+11	-9%	2.250E+06	8.7453E+17	7.9481E+17	-9%
8	4.0475E+10	3.9342E+10	-3%	1.830E+06	7.4069E+16	7.1996E+16	-3%
9	4.2164E+11	3.9960E+11	-5%	1.495E+06	6.3035E+17	5.9740E+17	-5%
10	7.8942E+11	8.0635E+11	2%	1.165E+06	9.1967E+17	9.3940E+17	2%
11	2.9876E+12	2.8948E+12	-3%	9.000E+05	2.6888E+18	2.6053E+18	-3%
12	1.8425E+13	1.9469E+13	6%	7.000E+05	1.2898E+19	1.3628E+19	6%
13	8.1110E+12	7.9993E+12	-1%	5.000E+05	4.0555E+18	3.9997E+18	-1%
14	2.4273E+12	2.3302E+12	-4%	3.500E+05	8.4956E+17	8.1557E+17	-4%
15	3.1458E+12	3.0292E+12	-4%	2.500E+05	7.8645E+17	7.5730E+17	-4%
16	1.3951E+13	1.3197E+13	-5%	1.500E+05	2.0927E+18	1.9796E+18	-5%
17	1.3677E+13	1.3157E+13	-4%	7.500E+04	1.0258E+18	9.8678E+17	-4%
18	4.2400E+13	4.0972E+13	-3%	3.000E+04	1.2720E+18	1.2292E+18	-3%
Total	1.0676E+14	1.0464E+14	-2%	--	2.8171E+19	2.8410E+19	1%
>= .7 MeV	2.3054E+13	2.3964E+13	4%	--	1.8089E+19	1.8642E+19	3%
>= .5 MeV	3.1165E+13	3.1963E+13	3%	--	2.2145E+19	2.2642E+19	2%
Group 11-13	2.9524E+13	3.0363E+13	3%	--	1.9642E+19	2.0233E+19	3%

[1] SCALE 4.3 27N-18G energy structure

Table 5.3.15-4 Spiral Fuel Assembly Source Comparison to DIDO MEU Fuel (70% Depletion and Fixed 2.23-Year Cool Time)

Group[1]	DIDO MEU g/sec/assy	Spiral Fuel g/sec/assy
1	3.62E+00	1.91E+00
2	1.71E+01	9.03E+00
3	8.72E+01	4.63E+01
4	2.18E+02	1.16E+02
5	1.58E+08	1.21E+08
6	1.55E+09	1.23E+09
7	3.53E+11	3.17E+11
8	3.93E+10	3.36E+10
9	4.00E+11	3.65E+11
10	8.06E+11	7.10E+11
11	2.89E+12	2.73E+12
12	1.95E+13	1.71E+13
13	8.00E+12	7.29E+12
14	2.33E+12	2.05E+12
15	3.03E+12	2.66E+12
16	1.32E+13	1.17E+13
17	1.32E+13	1.16E+13
18	4.10E+13	3.61E+13
Total	1.05E+14	9.26E+13
% difference		15%

[1] SCALE 4.3 27N-18G energy structure

5.3.16 MOATA Plate Bundle Configuration

A maximum payload of 42 MOATA plate bundles has been analyzed for transport in the NAC-LWT cask. The fuel assemblies are configured in six ANSTO basket modules with one plate bundle loaded in each of the seven cells in each basket module. The cells in each basket module are arranged with one center cell (fuel tube structure) surrounded by six other cells.

Plate bundles are evaluated at a maximum depletion of 4.1 wt % ^{235}U (equivalent to 30,000 MWd/MTU for the modeled bundle) at a minimum cool time of 10 years (reactor shutdown in 1995). This produces a heat load less than 1 watt per bundle. Thus, basket module maximum heat loads of 7 W (42 W per cask) are permissible from a shielding perspective. Maximum heat load is evaluated as 3 W in the thermal evaluation sections. Given the low source terms discussed later in this section, increased source terms associated with a 3 W heat load level would not approach licensing limits for sources within the NAC-LWT cask.

The plate bundles consist of flat fuel plates sandwiched between two thick nonfuel aluminum plates. The physical characteristics of the analyzed plate bundle are shown in Table 5.3.16-1. The active fuel section of the assembly consists of a maximum of 14 plates. The fuel core of each fuel plate is an alloy of aluminum and uranium. The assembly is evaluated at a bounding maximum fissile material mass of 25 grams ^{235}U per plate and a minimum enrichment of 80 wt % ^{235}U.

The SAS2H sequence was used to determine the gamma and neutron source terms and decay heat loads for the spiral assembly (see Figure 5.3.16-1). The SAS2H sequence includes the ORIGEN-S code and a 1-D XSDRNPM model of the fuel assembly. ORIGEN-S performs fuel assembly depletion at specified operating conditions and calculates heat generation, gamma and neutron spectra for a given discharge isotopic composition as a function of out of reactor time (cooling time). The 1-D model of the fuel assembly is used to collapse the 27-group neutron cross-section library (27GROUPNDF4) into three broad energy groups for the depletion calculation. The 1-D model is based on an equivalent area representation of the fuel/moderator cell and surrounding structural regions. Average power is based on reactor maximum power divided by the number of assemblies in the core. Assembly burnup is modeled in four cycles of equal length with 30 days of down time between cycles. This burnup description bounds typical research reactor use, where fuel is burned over a period of years or even decades to achieve the optimal discharge burnup. The SAS2H input for the plate bundle is shown in Figure 5.3.16-1. During in-core operations, the MOATA fuel assembly falls under the MTR headings, as discussed in Section 5.3.4, and is typically configured with 12 fuel plates and comb aluminum side plates. Standard MTR characteristics are assigned to the assembly for in-core use, with source terms adjusted to represent a 14-plate fuel bundle. The SAS2H input contains relevant

operating parameters such as power density and number of days of irradiation, in addition to the material compositions employed.

The design basis photon (gamma) source term for the plate bundle is listed in Table 5.3.16-2 with a source comparison by energy line and total source to the MEU DIDO results. Gamma source terms are approximately 2% of those calculated for the MEU DIDO assembly. There is no significant neutron source associated with the low burnup plate bundle material.

The ANSTO basket is a slightly modified version of the DIDO basket, with each basket containing seven tubes designed to hold one fuel assembly (element) in each tube. ANSTO fuel tubes are slightly larger in diameter and thickness.

Parameter	DIDO Basket	ANSTO Basket
Fuel Assembly Openings	7	7
Fuel Tube OD (inch)	4.25	4.375
Fuel Tube Wall Thickness (inch)	0.120	0.125

The DIDO basket contains aluminum heat transfer components, while the ANSTO basket contains additional support disks. The aluminum heat transfer components were not included in the DIDO shielding evaluations.

Combining a significantly lower plate bundle source with a similar basket design demonstrates that DIDO shielding evaluations, and the dose rates produced by the evaluations, bound those expected from the plate bundle.

Figure 5.3.16-1 SAS2H Input for the MOATA Plate Bundle

```
=SAS2H      PARM=(HALT04,SKIPSHIPDATA)
MOATA MARK II ASSEMBLY, 300 g U-235
27GROUPNDF4 LATTICECELL
URANIUM 1 DEN=0.753 1.0 373 92235 80.00 92238 20.00 END
AL      1 DEN=2.702 1.0 373 END
AL      2 1.0 323 END
H2O     3 1.0 313 END
AL      4 0.7258 313 END
H2O     4 0.2742 313 END
END COMP
SYMMSLABCELL 0.667 0.1016 1 3 0.203 2 END
NPIN=12 FUEL=58.4 VOLF=497.697 NCYC=1 NLIB=4
PRIN=6 INPL=2 NUMZ=3 NUMH=0
3 0.01 500 4.2190 4 4.3992
POWER=0.0083 BURN=1350.00 DOWN=1461 END
END
=ORIGENS
0$$  A4 21 A8 26 A10 51 71  E
1$$  1 1T
COOLING TO 10 YEARS AND FISSION PRODUCT GAMMA REBIN
3$$  21 0 1 A33 -86  E
54$$  A8 1 E T
35$$  0 T
56$$  0 1 A13 -2 5 3 E
57**  4.0 E T
COOLING TO 10 YEARS AND FISSION PRODUCT GAMMA REBIN
SINGLE REACTOR ASSEMBLY
60**  10
65$$  A4 1 A7 1 A10 1 A25 1 A28 1 A31 1 A46 1 A49 1 A52 1 E
61**  F.01
81$$  2 51 26 1 E
82$$  F6 T
FISSION PRODUCT GAMMA SPECTRA IN SCALE 18 GROUPS
56$$ F0  T
END
=ORIGENS
0$$  A4 21 A8 26 A10 51 71  E
1$$  1 1T
COOLING TO 10 YEARS AND ACTINIDE GAMMA REBIN
3$$  21 0 1 A33 -86  E
54$$  A8 1 E T
35$$  0 T
56$$  0 1 A13 -2 5 3 E
57**  4.0 E T
COOLING TO 10 YEARS AND ACTINIDE GAMMA REBIN
SINGLE REACTOR ASSEMBLY
60**  10
65$$  A4 1 A7 1 A10 1 A25 1 A28 1 A31 1 A46 1 A49 1 A52 1 E
61**  F.01
81$$  2 51 26 1 E
82$$  F5 T
ACTINIDE GAMMA SPECTRA IN SCALE 18 GROUPS
56$$ F0  T
END
```

Table 5.3.16-1 MOATA Plate Bundle Characteristics

Parameter	Unit	Value
Element Width [1]	[cm]	7.6
Element Depth [1]	[cm]	8
Side Plate Thickness [2]	[cm]	0.203
Side Plate Depth [1]	[cm]	7.5
Number of Plates (in-core operation)		12
Plate Thickness	[cm]	0.203
Active Fuel Length	[cm]	58.4
Active Fuel Width	[cm]	6.99
Active Fuel Thickness	[cm]	0.1016
Plate Pitch [3]	[cm]	0.667
Fuel Composition		U-Al-Alloy
Weight Percent ^{235}U		80
Maximum ^{235}U per Plate	[g]	25
U wt % in Fuel Composition		18%
Modeled Element Power Level	[MW]	0.00833
Mass of Uranium (per Assembly/12 Plates)	[kg]	0.375

[1] Used in SAS2H input for in-core operations. Based on typical MTR dimensions for similar fuel.

[2] Applied fuel plate dimension.

[3] Calculated based on 12 fuel plates and the assembly dimensions obtained from the MTR evaluations.

Table 5.3.16-2 MOATA Plate Bundle Source Comparison

Group[1]	MOATA Plate Bundle γ/sec/assy	DIDO MEU γ/sec/assy	Factor
1	4.0723E-03	3.6156E+00	9E+02
2	1.9549E-02	1.7064E+01	9E+02
3	1.0240E-01	8.7244E+01	9E+02
4	2.6282E-01	2.1810E+02	8E+02
5	3.5099E+04	1.5823E+08	5E+03
6	2.9504E+05	1.5502E+09	5E+03
7	2.3606E+07	3.5325E+11	1E+04
8	8.5904E+07	3.9342E+10	5E+02
9	5.9393E+08	3.9960E+11	7E+02
10	3.2031E+09	8.0635E+11	3E+02
11	5.3494E+09	2.8948E+12	5E+02
12	1.0244E+12	1.9469E+13	2E+01
13	2.5891E+10	7.9993E+12	3E+02
14	3.2239E+10	2.3302E+12	7E+01
15	4.4973E+10	3.0292E+12	7E+01
16	1.4315E+11	1.3197E+13	9E+01
17	2.1309E+11	1.3157E+13	6E+01
18	7.2597E+11	4.0972E+13	6E+01
Total	2.2190E+12	1.0464E+14	5E+01

[1] SCALE 4.3 27N-18G energy structure

5.3.17 PWR MOX Rod Fuel Configuration

Results of a shielding and decay heat analysis for up to 16 high burnup PWR MOX fuel rods are presented in this section. The rods are conservatively evaluated with burnups up to 70 GWd/MTHM. MOX rods are limited in this licensing application to a burnup of 62.5 GWd/MTHM. The results are presented in terms of the cool time required for 16 rods to meet the cask total payload heat load limit of 2.3 kW established for PWR rods (including MOX rods). At this cool time, the package surface and 2-meter dose rate are calculated and shown to be below limits.

The shielding analysis is performed using the three-dimensional MCNP transport code. Source terms are generated based on a limiting description of PWR rods using the SCALE 5.0 SAS2H code. The limiting description of a PWR MOX fuel rod bounds MOX rods from all PWR assembly array sizes. Analyses compare various MOX plutonium compositions and the inclusion of UO_2 fuel rods (up to 80 GWd/MTHM burnup) to demonstrate licensing compliance for up to 16 MOX rods or UO_2 rods in any combination.

5.3.17.1 PWR MOX Rod Fuel Source Term

Source Term

Source terms are generated in a manner similar to those of the PWR rods described in Section 5.3.8. The limiting rod description is determined by developing a hybrid fuel rod model, which contains a conservatively bounding heavy metal loading. For a given burnup, the bounding heavy metal mass leads to bounding decay heat and radiation source terms. Fuel rod model parameters are shown in Table 5.3.17-1 in the "SAS2H" column. SAS2H models for the various MOX and UO_2 compositions are then developed based on the cycle parameters shown in Table 5.3.17-2. The rod exposure is conservatively assumed to occur over a typical number of reactor operating cycles: three for the PWR MOX rods. A down time of 60 days between cycles is assumed. Fuel rods are evaluated at an initial enrichment between 2 and 7 wt % ^{235}U for the UO_2 rods and between 2 and 7 wt % fissile plutonium for the four MOX fuel compositions shown in Table 5.3.17-3. Based on these compositions and the range of fissile plutonium contents analyzed, the resulting fractions of uranium and plutonium in the SAS2H fuel mixture are shown in Table 5.3.17-4. A sample SAS2H model for the MOX Services plutonium composition is shown in Table 5.3.17-1. The SAS2H model adjusts the weight fractions in Table 5.3.17-4 by the modeled theoretical density factor shown in Table 5.3.17-1.

The SCALE 44-group library is employed in the source generation. For use in the MCNP shielding analysis, the gamma and neutron sources are rebinned within ORIGEN-S into the

group structure of the ANSWERS MCBEND code package. Gamma energy lines in this structure better reflect the gamma source lines around 1 MeV than the default energy lines generated by ORIGEN-S.

The amount of validation information on MOX fuel material depletion is limited, with public information restricted to SCALE benchmarks of San Onofre fuel [ORNL/TM-1999/326] with burnups up to 20 GWd/MTHM. To address this concern, calculations generated sources based on a conservative maximum burnup of 70 GWd/MTHM, while requesting a maximum burnup of 62.5 GWd/MTHM. Based on SAS2H results, this conservatism produces approximately 5% increases in heat load and gamma source (for gammas capable of penetrating the cask shields), and an increase of 20-25% in neutron source. As neutron source is most likely to be affected by uncertainties in the code libraries for MOX fuel at high burnups, a significant margin is built into the analysis. Further, the fuel rod evaluated in the NAC-LWT cask shielding calculations is based on a hybrid that contains approximately 2.6 kg of HM, while PWR fuel rods range up to 2.4 kg HM. The increased mass is the result of applying a 150-inch fuel height to a CE14×14 fuel rod type that is actually less than 140 inches in active height. The CE14×14 rod radius was chosen as the licensing basis because it is the largest diameter fuel pellet, which, in turn, produces maximum fuel mass per unit length. The increased fuel mass results in an 8% overestimation of total source when compared to the highest mass fuel rod for commercial PWRs (exempting South Texas rods). These conservatisms, in combination with the limited MOX validation information, and information available on benchmarking on SCALE SAS2H for standard and high burnup PWR rods [see ORNL references in Chapter 9], where the primary fissile isotopes in high burnup rods are plutonium (MOX) near end of life, justifies the acceptability of SCALE to generate the required MOX source terms.

Neutron and gamma sources and heat loads are summarized for the various compositions in Table 5.3.17-7. As the fissile plutonium content increases, heat loads increase and neutron source decreases. Minimum cool times required for the fuel rods to reach the maximum allowed heat load of 143.75 W/rod (2.3 kW/16 rods) are included in Table 5.3.17-8. The minimum cool time evaluated in the source term generation was 90 days. Therefore, any results indicating a less than 90-day cool time is permissible are listed as "< 90." The only evaluated material exceeding 90 days as the required cool time is Power Grade (low grade plutonium with a significant quantity of ^{240}Pu and ^{242}Pu). A minimum 120-day cool time for the Power Grade material ensures that heat load limits are met. For conservatism, shielding evaluations include the Power Grade material at 90 days' cool time source terms. Neutron and gamma source term spectra for a Power Grade MOX composition at the maximum burnup (70 GWd/MTHM), a 2% fissile plutonium content, and a cool time of 90 days are presented in Table 5.3.17-9 and Table 5.3.17-10, respectively.

The effect of subcritical neutron multiplication is directly computed in the MCNP analysis. As the k_{eff} of a dry transport configuration is extremely low ($k_{eff} < 0.1$), there is no significant subcritical multiplication in the system regardless of material composition. Comparison of k_{eff} as a function of fuel composition is included in Section 5.3.17.3. To simplify the analysis, all shielding results, with the exception of the subcritical multiplication studies, are based on using a standard uranium oxide fuel composition.

Axial Source Profile

The description of the axial source profile for PWR rods is based on bounding axial burnup profiles observed for fuel at much lower burnups. This description is conservative because the higher burned fuel of interest here will have a substantially lower axial peaking factor. The PWR axial source profiles are shown in Figure 5.3.17-2. Values are tabulated in Table 5.3.17-5.

The computed relation between source rate S and burnup B:

$$S = aB^b$$

implies that, in general, the average source rate is not equal to the source rate at the average burnup. The exponent b is determined based on SAS2H analyses of various fuel assemblies at different burnups. A design basis value of 4.22 is used for neutron source rate variation. The design basis exponent for photon source rates is 1.0.

Since SAS2H analyses are conducted at the average assembly burnup, a scale factor is required to relate the assembly average source rate to the source rate at the average burnup:

$$r = \frac{\overline{S}}{S(\overline{B})} = \frac{\int B^b dz}{a\overline{B}^b}$$

With the burnup profile normalized to one, this becomes

$$r = \frac{1}{H}\int B^b dz$$

where H is the height of the fuel region.

The integral is evaluated numerically using the trapezoid rule, and the resulting scale factors are shown in Table 5.3.17-6. Because MCNP normalizes the axial source profile by default, the scale factors are included in the MCNP runs in the tally multiplier cards.

The design basis scale factors were derived from UO_2 SAS2H calculations of source term versus burnup. To validate that the design basis factors are conservative, corresponding MOX factors are generated using SAS2H results. The revised factors are then used to calculate updated "average source to source at average burnup" values. The results are shown in Table 5.3.17-6

and document that the factors used in the analysis produce conservative dose rates (i.e., the multiplication factor is higher based on the UO_2 derived values). For MOX material, both short (90 days) and long (2 years) cool times were evaluated to demonstrate that while factors increase with cool time, the 1.0 gamma and 4.22 factors for neutron are conservative. Note that for extended cool time, the source magnitude decreases significantly, and the licensing basis for the MOX material is 90 days.

5.3.17.2 MOX Fuel Shielding Model

MCNP three-dimensional shielding analysis allows detailed modeling of the fuel, canister, basket, and cask shield configurations. The fuel rod lattice (5×5 array of tubes containing up to 16 fuel rods) detail is conservatively omitted in the model. The remaining principal canister components and all shielding-related basket and cask body details are explicitly modeled, including the axial extents described by the applicable License Drawings.

The geometric description of a MCNP model is based on the combinatorial geometry system embedded in the code. In this system, bodies such as cylinders and rectangular parallelepipeds, and their logical intersections and unions, are used to describe the extent of material zones.

Source Models

The combination of 16 fuel rods, either UO_2 or MOX fissile material based, are loaded into a 5×5 tube array insert constructed from stainless steel. The insert in turn is located within a canister, placed into the LWT PWR basket insert. The 16 fuel rods are homogenized within the cross sectional area of the canister internal spacer. No credit is taken for the stainless steel tubes in the fuel rod homogenization. While the array may contain additional material in the form of burnable poison rods (or other non-steel/inconel-based materials), these materials are not included in the homogenization and are not included as a source region as they are considered to have negligible activation when compared to the short cool time fuel source. Axial regions (elevations) are retained for the active fuel region, plenum region, and rod end-caps. The plenum region is modeled as a void for shielding purposes.

To minimize self-shielding, the MCNP fuel rod model has significantly less mass than the fuel rod model used to generate MOX source terms. Fuel rod parameters for this model are shown in Table 5.3.17-1 in the "MCNP" column. This column includes the axial extents of the active fuel, plenum and end-cap regions included in the three-dimensional model.

Also included in the evaluation set is a discrete fuel rod confirmatory model. The discrete fuel rod model validates the adequacy of the homogenized fuel region to provide accurate dose estimates. The discrete rod model is identical to the homogenized fuel model with the exception of replacing the homogenized fuel region by an array that contains an exterior (outer layer)

placement of 16 fuel rods rods in the 25 capacity rod holder. The remaining nine locations (interior nine cells of the 5×5 array) are modeled as void.

Canister and Basket Model

The canister model includes the steel internal spacer (represented as a steel box), steel can weldment (including can base, body and lid), the aluminum basket insert, and the aluminum PWR basket body. No credit is taken for canister internal aluminum shunts.

MCNP NAC-LWT Model

The three-dimensional model of the NAC-LWT cask is based on the following features.

Normal conditions:

- Radial neutron shield and shield shell
- Aluminum impact limiters with 0.5 g/cm^3 density (calculated based on the impact limiter weight and dimensions) and diameter equal to the neutron shield shell diameter

Accident conditions:

- Removal of radial neutron shield and shield shell
- Loss of upper and lower impact limiters

Common to both the normal and accident conditions models is a 0.1374 cm gap between the lead outer diameter and the cask outer shell. During normal conditions, the gap volume is represented as a radial uniform gap between the lead outer radius and the cask outer shell. During accident calculations, the lead is assumed to slump to form radial, top and bottom gaps. All three slump configurations are conservatively included in a single model. The use of an axial spacer prevents the fuel region source from approaching the top of the radial lead shield. Only the axial separation by the spacer is accounted for in the analysis. No credit is taken for spacer material.

Detailed model parameters used in creating the three-dimensional model are taken directly from the License Drawings. Elevations associated with the three-dimensional features are established with respect to the center bottom of the NAC-LWT cask cavity for the MCNP combinatorial model. The three-dimensional NAC-LWT models are shown in Figure 5.3.17-3 and Figure 5.3.17-4. A sample input file is provided in Figure 5.3.17-5. The sample input provides a complete source description used in the response function benchmark analysis.

Shield Regional Densities

Based on the homogenization described previously, fuel region material densities are shown in Table 5.3.17-11. The fuel region densities were conservatively calculated based on a minimum

material mass fuel rod (1.62 kg HM, see Table 5.3.17-1) versus the maximum mass rod used in the source generation. Material compositions for the basket and cask materials are shown in Table 5.3.17-12.

5.3.17.3 MOX Fuel Shielding Evaluation

Calculational Methods

The shielding evaluation is performed using MCNP.

The MCNP shielding model described in Section 5.3.17.2 is utilized with the source terms described in Section 5.3.17.1 to estimate the dose rate profiles at various distances from the side, top and bottom of the cask for both normal and accident conditions. The method of solution is continuous energy Monte Carlo with a Monte Carlo based weight window generator to accelerate code convergence. Weight window and problem convergence is verified by the 10 statistical checks performed by MCNP. Radial or axial biasing is performed depending on the desired dose location.

Significant validation literature is available for MCNP as it is an industry standard tool for spent fuel cask evaluations. Available literature covers a range of shielding penetration problems ranging from slab geometry to spent fuel cask geometries. Confirmatory calculations against other validated shielding codes (SCALE and MCBEND) on NAC casks have further validated the use of MCNP for shielding evaluations.

MCNP Flux-to-Dose Conversion Factors

The ANSI/ANS 6.1.1-1977 flux-to-dose rate conversion factors are employed in the MCNP analysis. The ANSI/ANS neutron and gamma dose conversion factors are shown in Table 5.3.11-23 and Table 5.3.11-24.

Dose Response Method

In order to avoid the significant effort required to prepare and execute shielding runs for each material composition, a unique device is employed that permits the ready calculation of dose rates at a given location by use of a dose rate response function.

In general, the response method for dose rates is based on the decomposition of the respective quantity into a weighted sum over energy. A dose rate response function, $R_{tpg}(\vec{r})$, gives the response at a point $\vec{r}$ to source particles arising from energy group g from a fuel assembly placed in basket position p. In practice, the spatial parameter, $\vec{r}$, is represented as discrete subsurface detectors on the cask surface. In addition, responses for detector average and

maximum values may also be represented using this notation. In the case of a dose rate response, the response $R_{tpg}(\vec{r})$ is a scalar quantity.

For a given cask loading, the total response to radiation of type t with source spectrum f_{tp} is given by:

$$C_t(\vec{r}) = \sum_p \sum_{g'} R_{tpg'}(\vec{r}) f_{tpg'} w_{tp}$$

where:

$C_t(\vec{r})$ is the dose rate response to radiation of type t at location $\vec{r}$.

$R_{tpg'}(\vec{r})$ is the response to radiation of type t with energy g' emanating from position p at location $\vec{r}$.

$f_{tpg'}$ is the source strength for radiation of type t in group g' emanating from position p.

w_{tp} is a weight factor applied to radiation of type t in position p and is used to scale hardware source spectra that are provided on a per unit mass basis by the effective mass of activated material present in the source region.

The source type t refers to fuel gamma (Fg), fuel neutron (Fn), fuel n-gamma (Ng) and fuel hardware (Hw) source regions.

Response functions for the cask (generated using MCNP) solve the particle transport equations at each relevant spectrum line using Monte Carlo techniques. The results of the individual spectrum lines are then statistically summed. For the homogenized source region, a single source region exists for each source type, essentially eliminating the position portion of the summation. Response functions for a mixed load require two sets of runs (one for MOX, the other for UO_2 sources).

The response function method was used to calculate all relevant licensing dose rates, including normal condition cask surface, 1 meter, 2 meter, and accident condition 1 meter dose rates. The licensing dose rates were based on a 198 response function set for radial and axial normal and accident condition models. No interpolation was done on a precalculated data set. Further response functions were generated as part of the auxiliary calculations set (such as mixed payload analysis). Response functions rely on a fixed dose per unit source calculation, irrespective of fuel material compositions. Material substitution studies for the MOX/UO_2 materials have demonstatrated that there is no significant effect of fuel material choice on dose rates. This was expected as deep penetration NAC-LWT cask shielding problems are driven by material interaction within the shields and not within the small diameter payload volume. While MOX materials certainly contain significant differences in isotope cross-sections, within the confines of the NAC-LWT cask evaluations, the small fissile material mass, the absence of moderator to reduce neutron energy to thermal or epithermal levels for increased material

interaction, and the high neutron leakage (large height to diameter ratio) all contribute to the negligible effect of material properties.

To further document the acceptability of the response function approach, additional evaluations are performed comparing the result of the response approach (i.e., multiplication of source spectra by dose response at a given energy line) with a direct solution approach containing the full energy spectrum. The additional comparisons are based on both homogenized source region and the discrete fuel rod models. Discrete rod models allow mixed fuel to be explicitly accounted for. Results of the comparisons are shown in Figure 5.3.17-10 through Figure 5.3.17-12 and demonstrate that the results of the response and direct solutions are equivalent, independent of the source modeling employed (i.e., discrete fuel rods or homogenized). Differences between response method and direct calculation results are associated with significantly higher statistical uncertainties produced by the direct solution approach.

Fuel Material Effects

MCNP results documented in the dose rate section include subcritical neutron multiplication and isotope cross-section effects based on a 4 wt % enriched UO_2 (LEU) fuel description. To investigate potential dose increases due to a higher multiplication factor and isotope cross-sections associated with MOX material, dose rates are compared for a consistent source term of 4 wt % (4 wt % ^{235}U for UO_2 and 4 wt % fissile plutonium for MOX) at 80 GWd/MTHM (note that the burnup compared is above the 70 GWd/MTHM limit for MOX fuel and produces dose rates higher than 10 mrem/hr at 2 meters). Normal condition radial surface average neutron results are compared. As shown in Table 5.3.17-13, the difference between response function runs with UO_2 and direct solution runs with MOX is negligible. Therefore, use of UO_2 material composition runs is appropriate for computing MOX fuel dose rates.

To provide further evidence of the adequacy of the UO_2 material composition model to apply to mixed loading of UO_2 and MOX fuel, a mixed discrete fuel rod model is evaluated. The mixed fuel rod model contains a discrete set of eight UO_2 and eight MOX rods, each with its appropriate source and material definition. The result of the mixed rod analysis (see sample input file in Figure 5.3.17-9) is compared to the average dose result obtained from 16 UO_2 and 16 MOX rod evaluations and to a run containing the source of a mixed payload, but all fuel material defined is UO_2. As shown in Table 5.3.17-14, there is no significant difference between the results of a mixed payload description and that of a UO_2 fuel material. The results also illustrate that the code performs accurately for a mixed payload.

Discrete Fuel Rod Model Comparisons

To validate adequacy of the homogenized fuel model, when fuels rods are discrete volumes placed in a rod array, a comparison analysis is performed between homogenized and discrete rods. The discrete rods are placed into the exterior (outer layer) of the 25-rod array. As shown in Table 5.3.17-15 for a sample 80 GWd/MTHM, 90-day cooled source, the discrete model produces lower dose rates than the homogenized source model. Reduced dose rates are the result of the high-density fuel rod providing more shielding for the now compacted source region than the homogenized source.

Three-Dimensional Dose Rates for MOX Fuel

Dose rates are generated at the bounding 90-day minimum cool time for the various MOX plutonium compositions (and UO_2 fuel) at 2 percent fissile fuel material. Dose summaries for key conditions are listed in Table 5.3.17-16. As indicated by the source term magnitude and bounding heat load, the Power Grade MOX fuel produces bounding dose rates.

A summary of the maximum and average dose rates for the bounding power grade MOX fuel is shown in Table 5.3.17-17. All dose rates are below 10 CFR 71 limits. High uncertainties in the axial results are associated with the difficulty in axial biasing for a cask with a large ratio of length to diameter. Because dose rates in the axial locations are significantly below limits, no attempt is made to reduce the uncertainty in the results.

The axial elevation of the maximum cask surface and 2 meter dose rates are at the active fuel region midplane elevation. The cask surface dose rate profile is shown in Figure 5.3.17-6, with the 2 meter profile plotted in Figure 5.3.17-7. The normal condition maximum radial 2 meter dose rate is 9.2 mrem/hr. Accident condition radial 1 meter dose rates are well below the 1000 mrem/hr limit, with the radial 1 meter dose profile shown in Figure 5.3.17-8. The transport index (TI) for the MOX rod shipments is 28 based on the 1 meter normal condition dose rate.

Table 5.3.17-16 demonstrates that dose rate results for UO_2 (LEU) fuel at 80 GWd/MTHM are bounded by the results for the bounding Power Grade MOX fuel at 70 GWd/MTHM. Therefore, a mixed loading of UO_2 and MOX fuel rods is an acceptable payload for the NAC-LWT cask.

Figure 5.3.17-1 Sample SAS2H Input for PWR MOX Fuel

```
=SAS2H      PARM=(HALT06,SKIPSHIPDATA)
Power Grade, 2% Fissile, 70 GWd/MTHM, 90-150 days cooled
44GROUPNDF5 LATTICECELL
UO2         1 0.9254 811 92235 0.2 92238 99.8 END
PuO2        1 0.0246 811 94238 1 94239 62 94240 22 94241 12 94242 3 END
ZR          2 1.0 620 END
H2O         3 DEN=0.725 1.0 570 END
ARBM-BORMOD 0.725 1 1 0 0 5000 100 3 550.0E-6 570 END
END COMP
SQUAREPITCH 1.473 0.9665 1 3 1.118 2 0.986 0 END
NPIN/ASSM=176 FUELENGTH=389.9 NCYCLE=3 NLIB/CYC=2 PRINTLEVEL=6
LIGH=5 INPLEVEL=2 NUMZONES=4 END
3 1.3589 2 1.4605 3 1.6623 500 5.2039
POWER=19.36 BURN=556.8 DOWN=60 END
POWER=19.36 BURN=556.8 DOWN=60 END
POWER=19.36 BURN=556.8 DOWN=0 END
FE 0.6738 CR 0.1900 NI 0.1150 MN 0.0200 CO 0.0012
END
=ORIGENS
0$$  A4 21 A8 26 A10 51 71  E
1$$  1 1T
COOLING 90 TO 150 DAYS AND FISSION PRODUCT GAMMA REBIN
3$$  21 0 1 28 A33 22 E
54$$  A8 1 E T
35$$  0 T
56$$  0 7 A13 -2 4 3 E
57**  0.0 E T
COOLING 90 TO 150 DAYS AND FISSION PRODUCT GAMMA REBIN
SINGLE REACTOR ASSEMBLY
60** 90 100 110 120 130 140 150
65$$  A4 1 A7 1 A10 1 A25 1 A28 1 A31 1 A46 1 A49 1 A52 1 E
61**  F.00000001
81$$  2 51 26 1 E
82$$  F6
83**  1.40e+7  1.20e+7  1.00e+7  8.00e+6   6.50e+6  5.00e+6
      4.00e+6  3.00e+6  2.50e+6  2.00e+6   1.66e+6  1.44e+6
      1.22e+6  1.00e+6  0.80e+6  0.60e+6   0.40e+6  0.30e+6
      0.20e+6  0.10e+6  0.05e+6  0.02e+6   0.01e+6
84**  1.46e+7  1.36e+7  1.25e+7  1.125e+7  1.00e+7
      8.25e+6  7.00e+6  6.07e+6  4.72e+6   3.68e+6
      2.87e+6  1.74e+6  0.64e+6  0.39e+6   0.11e+6
      6.74e+4  2.48e+4  9.12e+3  2.95e+3   9.61e+2
      3.54e+2  1.66e+2  4.81e+1  1.60e+1   4.00e+0
      1.50e+0  5.50e-1  7.09e-2  1.00e-5   T
56$$ F0  T
END
```

Note: Only the fission product rebin section of the input file is shown. Identical rebins are performed for the actinide and light element sources.

Figure 5.3.17-2 PWR Rods Axial Burnup and Source Profiles

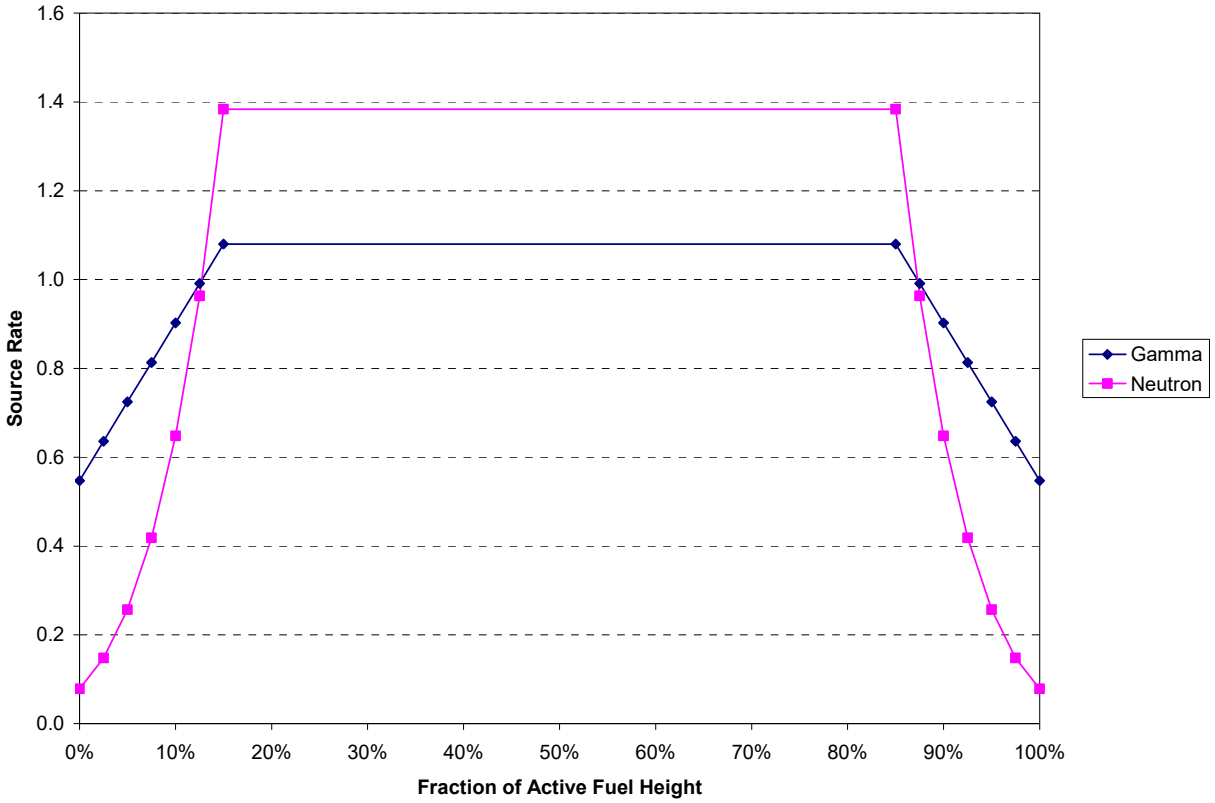

Figure 5.3.17-3 MCNP Model of NAC-LWT with PWR MOX Fuel – Axial Detail

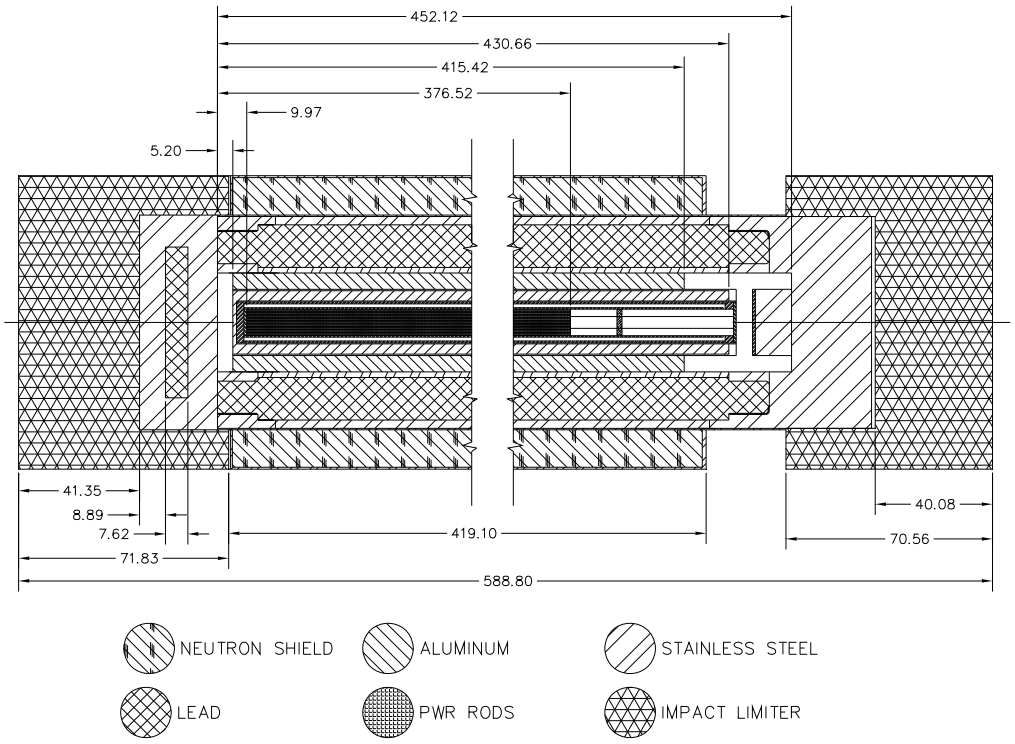

Note: Dimensions in cm

Figure 5.3.17-4 MCNP Model of NAC-LWT with PWR MOX Fuel – Radial Detail

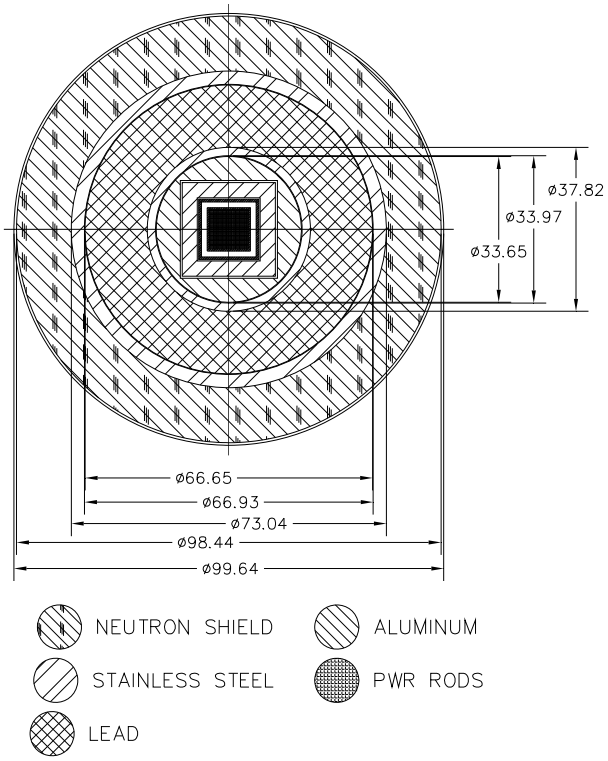

Cask Cavity Detail:

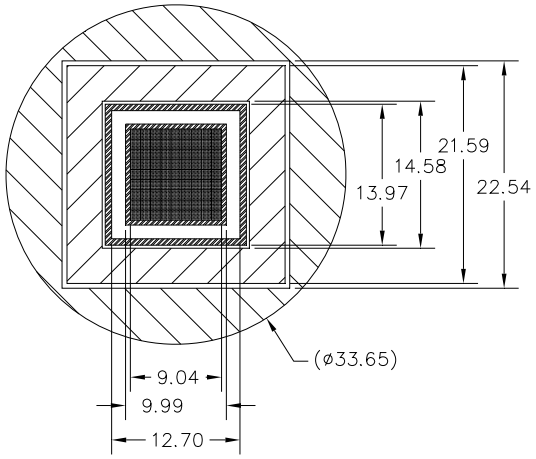

Note: Dimensions in cm.

Figure 5.3.17-5 Sample MCNP Input File for PWR MOX Fuel (Response Method Benchmark Case)

```
NAC-LWT Cask - we17_leu_80b40e150d - Normal Transport Conditions
C Radial Biasing - Fuel Gamma Source
C 16 Rod Source & WE17x17 Fuel Homogenization
C Homogenized Rod Cells
1 2 -0.8430 -1  u=6 $ Bottom end cap
2 1 -1.2338 -2 +1 u=6 $ Fuel
3 0         -3 +2 u=6 $ Plenum
4 2 -0.8430 -4 +3 u=6 $ Top end cap
5 0         +4  u=6 $ Void
C Can Weldment Cells
10 0         -10 fill=6 ( 0.0000 0.0000 2.5400 )   u=5 $ Fuel Insert
11 5 -7.9400 -11 +10    u=5 $ Internal Spacer
12 0         -12 +11 +10   u=5 $ Can Weldment void
13 5 -7.9400 -13     u=5 $ Can Weldment base
14 5 -7.9400 -14 +13 +12 +10  u=5 $ Can Weldment body
15 5 -7.9400 -15 +14 +10   u=5 $ Can Weldment flange
16 5 -7.9400 -16 +15    u=5 $ Can Weldment lid
17 0         +16     u=5 $ Outside
C PWR Insert Cells
20 0         -20 fill=5 ( 0.0000 0.0000 1.2700 )   u=4 $ Can Weldment
21 7 -2.7020 -21 +20    u=4 $ PWR Insert Body
22 0         +21 +20    u=4 $ Outside
C PWR Basket Cells
30 0         -30 fill=4 ( 0.0000 0.0000 5.2070 )   u=3 $ PWR Insert
31 0  -32 -31    u=3 $ Offset
32 7 -2.7020 -32 +31 +30   u=3 $ Basket
33 0  +32 +30    u=3 $ Outside
C Cask Cavity Cells
40 0         -40 +41 fill=3   u=2 $ Cavity
41 5 -7.9400 -41     u=2 $ Spacer plate
42 0         +40 +41    u=2 $ Outside
C Cells - LWT Cask Normal Conditions
50 4 -11.344 -53     u=1 $ BotPb
51 0         -52 fill=2    u=1 $ Cavity
52 5 -7.9400 -50 -51 +53   u=1 $ Bottom
53 5 -7.9400 -50 +51 +55 +58 +52 u=1 $ OuterShell
54 5 -7.9400 -54 +57 +52   u=1 $ InnerShellTaper
55 5 -7.9400 -56 +52    u=1 $ InnerShell
56 4 -11.344 -57 +56    u=1 $ Lead
57 4 -11.344 -55 +54 +57   u=1 $ LeadTaper
58 0         -58 +57    u=1 $ LeadGap
59 3 -0.9669 -60 +50    u=1 $ NeutronShield
60 5 -7.9400 -59 +50 +60   u=1 $ NSShell
61 6 -0.4997 -61 +50    u=1 $ UpperLimiter
62 6 -0.4997 -62 +50    u=1 $ LowerLimiter
63 0         -63 +50 +59 +61 +62 u=1 $ Container
64 0         +63     u=1 $ Outside
C Detector Cells - Radial Biasing
100  0  -100  fill=1  $ Surface
150  0  -150  +100  $ SurfaceAzi
200  0  -200  +100  +150  $ 1ft
300  0  -300  +100  +150  +200  $ 1m
400  0  -400  +100  +150  +200  +300  $ 2m
500  0  -500  +100  +150  +200  +300  +400  $ 2m+Convey
600  0  +100  +150  +200  +300  +400  +500  $ Exterior

C Homogenized Rod Surfaces
1 PZ 1.7399    $ Bottom end cap
2 PZ 367.4999    $ Fuel
3 PZ 383.4003    $ Plenum
4 PZ 385.1402    $ Top end cap
C Can Weldment Surfaces
10 RPP -4.5212 4.5212 -4.5212 4.5212 2.5400 425.4500  $ Internal cavity
11 RPP -4.9975 4.9975 -4.9975 4.9975 2.5400 422.2750  $ Internal spacer
12 RPP -6.3500 6.3500 -6.3500 6.3500 2.5400 422.9100  $ Can weldment cavity
13 RPP -6.9850 6.9850 -6.9850 6.9850 0.0000 2.5400  $ Can weldment base
14 RPP -6.9850 6.9850 -6.9850 6.9850 0.0000 422.9100  $ Can weldment body
```

Figure 5.3.17-5 Sample MCNP Input File for PWR MOX Fuel (Response Method Benchmark Case) (Continued)

```
15 RPP -6.9850 6.9850 -6.9850 6.9850 0.0000 425.4500  $ Can weldment flange
16 RPP -6.9850 6.9850 -6.9850 6.9850 0.0000 426.7200  $ Can weldment lid
C PWR Insert Surfaces
20 RPP -7.2898 7.2898 -7.2898 7.2898 1.2700 427.9900  $ PWR Insert cavity
21 RPP -10.7950 10.7950 -10.7950 10.7950 0.0000 425.4500  $ PWR Insert body
C PWR Basket Surfaces
30 RPP -11.2713 11.2713 -11.2713 11.2713 5.2070 433.1970  $ Internal cavity
31 PZ 5.2070       $ Bottom offset
32 RCC 0.0000 0.0000 0.0000 0.0000 0.0000 415.4170 16.8273 $ Basket walls
C Cask Cavity Surfaces
40 RCC 0.0000 0.0000 0.0000 0.0000 0.0000 452.1199 16.9862 $ Cavity
41 RCC 0.0000 0.0000 438.7850 0.0000 0.0000 0.9525 11.1760 $ Spacer plate
C Surfaces - LWT Cask Normal Conditions
50 RCC 0.0000 0.0000 -26.6700 0.0000 0.0000 507.3650 36.5189 $ Lwt
51 RCC 0.0000 0.0000 -26.6700 0.0000 0.0000 26.6700 36.5189 $ Bottom
52 RCC 0.0000 0.0000 0.0000 0.0000 0.0000 452.1200 16.9863 $ Cavity
53 RCC 0.0000 0.0000 -17.7800 0.0000 0.0000 7.6200 26.3525 $ Bottom gamma shield
54 RCC 0.0000 0.0000 0.0000 0.0000 0.0000 444.5000 20.1740 $ Lead id - taper
55 RCC 0.0000 0.0000 0.0000 0.0000 0.0000 444.5000 31.5976 $ Lead od - taper
56 RCC 0.0000 0.0000 13.8176 0.0000 0.0000 416.8648 18.9103 $ Lead id
57 RCC 0.0000 0.0000 13.8176 0.0000 0.0000 416.8648 33.3271 $ Lead od
58 RCC 0.0000 0.0000 13.8176 0.0000 0.0000 416.8648 33.4645 $ Lead gap

59 RCC 0.0000 0.0000 3.8100 0.0000 0.0000 419.1000 49.8183 $ Neutron shield shell
60 RCC 0.0000 0.0000 5.0800 0.0000 0.0000 416.5600 49.2189 $ Neutron shield
61 RCC 0.0000 0.0000 450.2150 0.0000 0.0000 70.5612 49.8183 $ Upper limiter
62 RCC 0.0000 0.0000 -68.0212 0.0000 0.0000 71.8312 49.8183 $ Lower limiter
63 RCC 0.0000 0.0000 -68.0212 0.0000 0.0000 588.7974 49.8183 $ Container
C Radial Detector DRA (Surface)
100  RCC  0.0000  0.0000  -68.1212  0.0000  0.0000  588.9974  49.9184
101  PZ  -38.6713
102  PZ  -9.2215
103  PZ  20.2284
104  PZ  49.6783
105  PZ  79.1282
106  PZ  108.5780
107  PZ  138.0279
108  PZ  167.4778
109  PZ  196.9276
110  PZ  226.3775
111  PZ  255.8274
112  PZ  285.2772
113  PZ  314.7271
114  PZ  344.1770
115  PZ  373.6269
116  PZ  403.0767
117  PZ  432.5266
118  PZ  461.9765
119  PZ  491.4263
C Radial Detector DRAA (SurfaceAzi)
150  RCC  0.0000  0.0000  211.3775  0.0000  0.0000  30.0000  50.0184
151     PX  0.0000
152  1  PX  0.0000
153  2  PX  0.0000
154  3  PX  0.0000
155  4  PX  0.0000
156  5  PX  0.0000
157  6  PX  0.0000
158  7  PX  0.0000
159  8  PX  0.0000
160     PY  0.0000
161  9  PX  0.0000
162  10  PX  0.0000
163  11  PX  0.0000
164  12  PX  0.0000
165  13  PX  0.0000
166  14  PX  0.0000
167  15  PX  0.0000
```

Figure 5.3.17-5 Sample MCNP Input File for PWR MOX Fuel (Response Method Benchmark Case) (Continued)

```
168  16  PX  0.0000
C Radial Detector DRB (1ft)
200  RCC  0.0000  0.0000  -98.6012  0.0000  0.0000  649.9574  80.2984
201  PZ  -66.1033
202  PZ  -33.6055
203  PZ  -1.1076
204  PZ  31.3903
205  PZ  63.8882
206  PZ  96.3860
207  PZ  128.8839
208  PZ  161.3818
209  PZ  193.8796
210  PZ  226.3775
211  PZ  258.8754
212  PZ  291.3732
213  PZ  323.8711
214  PZ  356.3690
215  PZ  388.8669
216  PZ  421.3647
217  PZ  453.8626
218  PZ  486.3605
219  PZ  518.8583
C Radial Detector DRC (1m)
300  RCC  0.0000  0.0000  -168.1212  0.0000  0.0000  788.9974  149.8184
301  PZ  -135.2463
302  PZ  -102.3714
303  PZ  -69.4965
304  PZ  -36.6216
305  PZ  -3.7467
306  PZ  29.1282
307  PZ  62.0030
308  PZ  94.8779
309  PZ  127.7528
310  PZ  160.6277
311  PZ  193.5026
312  PZ  226.3775
313  PZ  259.2524
314  PZ  292.1273
315  PZ  325.0022
316  PZ  357.8771
317  PZ  390.7520
318  PZ  423.6269
319  PZ  456.5017
320  PZ  489.3766
321  PZ  522.2515
322  PZ  555.1264
323  PZ  588.0013
C Radial Detector DRD (2m)
400  RCC  0.0000  0.0000  -268.1212  0.0000  0.0000  988.9974  249.8184
401  PZ  -226.9130
402  PZ  -185.7048
403  PZ  -144.4965
404  PZ  -103.2883
405  PZ  -62.0801
406  PZ  -20.8719
407  PZ  20.3364
408  PZ  61.5446
409  PZ  102.7528
410  PZ  143.9611
411  PZ  185.1693
412  PZ  226.3775
413  PZ  267.5857
414  PZ  308.7940
415  PZ  350.0022
416  PZ  391.2104
417  PZ  432.4186
418  PZ  473.6269
419  PZ  514.8351
420  PZ  556.0433
421  PZ  597.2515
```

Figure 5.3.17-5 Sample MCNP Input File for PWR MOX Fuel (Response Method Benchmark Case) (Continued)

```
422  PZ  638.4598
423  PZ  679.6680
C Radial Detector DRE (2m+Convey)
500  RCC  0.0000  0.0000  -269.1212  0.0000  0.0000  990.9974  321.9200
501  PZ  -227.8296
502  PZ  -186.5381
503  PZ  -145.2465
504  PZ  -103.9550
505  PZ  -62.6634
506  PZ  -21.3719
507  PZ  19.9197
508  PZ  61.2113
509  PZ  102.5028
510  PZ  143.7944
511  PZ  185.0859
512  PZ  226.3775
513  PZ  267.6691
514  PZ  308.9606
515  PZ  350.2522
516  PZ  391.5437
517  PZ  432.8353
518  PZ  474.1269
519  PZ  515.4184
520  PZ  556.7100
521  PZ  598.0015
522  PZ  639.2931
523  PZ  680.5846

C
C Materials List
C
C Homogenized UO2 Fuel
m1    92235 -2.6740E-02
      92238 -6.4177E-01
       8016 -8.9904E-02
      40000 -2.3730E-01
      50000 -3.6238E-03
      26000 -3.0198E-04
      24000 -2.4158E-04
       7014 -1.2079E-04
C Fuel Rod End Cap (Zircaloy)
m2    40000 -9.8225E-01
      50000 -1.5000E-02
      26000 -1.2500E-03
      24000 -1.0000E-03
       7014 -5.0000E-04
C Water/Glycol
m3    1001 -1.03651E-01
      8016 -6.75619E-01
      6000 -2.20730E-01
mt3  lwtr.01
C Lead
m4    82000 -1.0
C Stainless Steel 304
m5    24000 -0.190
      25055 -0.020
      26000 -0.695
      28000 -0.095
C Aluminum (Impact Limiter)
m6    13027 -1.0
C Aluminum (Insert/Basket)
m7    13027 -1.0
phys:p 100 0 0 0 1
C
C Cell Importances
imp:p 1 43r 0
C
C Source Definition - Fuel Gamma
C LEU Basis - 80 GWd/MTHM, 4 wt % Fissile, 150 days cooled
```

Figure 5.3.17-5 Sample MCNP Input File for PWR MOX Fuel (Response Method Benchmark Case) (Continued)

```
sdef x=d1 y=d2 z=d3 erg=d4 cell=100:51:40:30:20:10:2
si1   -4.5212 4.5212
sp1   0 1
si2   -4.5212 4.5212
sp2   0 1
si3 a 1.7399 10.8839 20.0279 29.1719 38.3159 47.4599 56.6039
      312.6359 321.7799 330.9239 340.0679 349.2119 358.3559 367.4999
sp3 d 0.5470 0.6358 0.7247 0.8135 0.9023 0.9912 1.0800
      1.0800 0.9912 0.9023 0.8135 0.7247 0.6358 0.5470
si4   1.000E-02 2.000E-02 5.000E-02 1.000E-01 2.000E-01 3.000E-01
      4.000E-01 6.000E-01 8.000E-01 1.000E+00 1.220E+00 1.440E+00
      1.660E+00 2.000E+00 2.500E+00 3.000E+00 4.000E+00 5.000E+00
      6.500E+00 8.000E+00 1.000E+01 1.200E+01 1.400E+01
sp4   0.0000E+00 6.5335E+13 8.3523E+13 4.2132E+13 4.2987E+13 1.0861E+13
      8.3438E+12 8.0750E+13 1.7401E+14 2.3085E+13 4.4177E+12 2.6664E+12
      8.9233E+11 3.0024E+11 7.9369E+11 2.1689E+10 1.8203E+09 7.5273E+05
      3.0209E+05 5.9261E+04 1.2582E+04 6.5057E+02 0.0000E+00
mode p
nps 40000000
C
C ANSI/ANS-6.1.1-1977 - Gamma Flux-to-Dose Conversion Factors
C (mrem/hr)/(photons/cm2-sec)
de0   0.01 0.03 0.05 0.07 0.1 0.15 0.2
      0.25 0.3 0.35 0.4 0.45 0.5 0.55
      0.6 0.65 0.7 0.8 1 1.4 1.8
      2.2 2.6 2.8 3.25 3.75 4.25 4.75
      5 5.25 5.75 6.25 6.75 7.5 9
      11 13 15
df0   3.96E-03 5.82E-04 2.90E-04 2.58E-04 2.83E-04 3.79E-04 5.01E-04
      6.31E-04 7.59E-04 8.78E-04 9.85E-04 1.08E-03 1.17E-03 1.27E-03
      1.36E-03 1.44E-03 1.52E-03 1.68E-03 1.98E-03 2.51E-03 2.99E-03
      3.42E-03 3.82E-03 4.01E-03 4.41E-03 4.83E-03 5.23E-03 5.60E-03
      5.80E-03 6.01E-03 6.37E-03 6.74E-03 7.11E-03 7.66E-03 8.77E-03
      1.03E-02 1.18E-02 1.33E-02
C
C Weight Window Generation - Radial
wwg 2 0 0 0 0
wwp:p 5 3 5 0 -1 0
mesh geom=cyl ref=0.0 6.3 193 origin=0.1 0.1 -568
     imesh 6.4 12.2 17.0 18.9 33.3 36.5 49.2 49.8 549.8
     iints 3 1 1 1 5 1 1 1 1
     jmesh 500 541 550 558 568 575 579 964 1020 1049 1089 1589
     jints 1 1 1 1 1 1 1 1 1 1 1 1
     kmesh 1
     kints 1
wwge:p  1e-3 1 20
fc2 Radial Surface Tally
f2:p +100.1
fm2 8.64200E+15
fs2  -101  -102  -103  -104  -105  -106
     -107  -108  -109  -110  -111  -112
     -113  -114  -115  -116  -117  -118
     -119  T
tf2
fc12 Radial SurfaceAzi Tally Q1 (+x+y)
f12:p +150.1
fm12 8.64200E+15
fs12 -151  -160
     +159  +158  +157  +156  +155  +154
     +153  +152  T
sd12 4.7141E+03  2.3571E+03  2.6190E+02  8r  9.4282E+03
tf12
fc22 Radial SurfaceAzi Tally Q2 (-x+y)
f22:p +150.1
fm22 8.64200E+15
fs22 +151  -160
     -168  -167  -166  -165  -164  -163
     -162  -161  T
sd22 4.7141E+03  2.3571E+03  2.6190E+02  8r  9.4282E+03
```

Figure 5.3.17-5 Sample MCNP Input File for PWR MOX Fuel (Response Method Benchmark Case) (Continued)

```
tf22
fc32 Radial SurfaceAzi Tally Q3 (-x-y)
f32:p +150.1
fm32 8.64200E+15
fs32 +151  +160
     -159  -158  -157  -156  -155  -154
     -153  -152  T
sd32 4.7141E+03  2.3571E+03  2.6190E+02  8r  9.4282E+03
tf32
fc42 Radial SurfaceAzi Tally Q4 (+x-y)
f42:p +150.1
fm42 8.64200E+15
fs42 -151  +160
     +168  +167  +166  +165  +164  +163
     +162  +161  T
sd42 4.7141E+03  2.3571E+03  2.6190E+02  8r  9.4282E+03
tf42
fc52 Radial 1ft Tally
f52:p +200.1
fm52 8.64200E+15
fs52  -201  -202  -203  -204  -205  -206
     -207  -208  -209  -210  -211  -212
     -213  -214  -215  -216  -217  -218
     -219  T
tf52
fc62 Radial 1m Tally
f62:p +300.1
fm62 8.64200E+15
fs62  -301  -302  -303  -304  -305  -306
     -307  -308  -309  -310  -311  -312
     -313  -314  -315  -316  -317  -318
     -319  -320  -321  -322  -323  T
tf62
fc72 Radial 2m Tally
f72:p +400.1
fm72 8.64200E+15
fs72  -401  -402  -403  -404  -405  -406
     -407  -408  -409  -410  -411  -412
     -413  -414  -415  -416  -417  -418
     -419  -420  -421  -422  -423  T
tf72
fc82 Radial 2m+Convey Tally
f82:p +500.1
fm82 8.64200E+15
fs82  -501  -502  -503  -504  -505  -506
     -507  -508  -509  -510  -511  -512
     -513  -514  -515  -516  -517  -518
     -519  -520  -521  -522  -523  T
tf82
C
C Print Control
prdmp -15 -30 1 2
print
C Random Number Generator
rand gen=2 seed=19073486328125 stride=152917 hist=1
C
C Rotation Matrix
C
*TR1 0.0 0.0 0.0 10 100 90 -80 10 90 90 90 0
*TR2 0.0 0.0 0.0 20 110 90 -70 20 90 90 90 0
*TR3 0.0 0.0 0.0 30 120 90 -60 30 90 90 90 0
*TR4 0.0 0.0 0.0 40 130 90 -50 40 90 90 90 0
*TR5 0.0 0.0 0.0 50 140 90 -40 50 90 90 90 0
*TR6 0.0 0.0 0.0 60 150 90 -30 60 90 90 90 0
*TR7 0.0 0.0 0.0 70 160 90 -20 70 90 90 90 0
*TR8 0.0 0.0 0.0 80 170 90 -10 80 90 90 90 0
*TR9 0.0 0.0 0.0 100 190 90 10 100 90 90 90 0
*TR10 0.0 0.0 0.0 110 200 90 20 110 90 90 90 0
```

Figure 5.3.17-5 Sample MCNP Input File for PWR MOX Fuel (Response Method Benchmark Case) (Continued)

```
*TR11 0.0 0.0 0.0 120 210 90 30 120 90 90 90 0
*TR12 0.0 0.0 0.0 130 220 90 40 130 90 90 90 0
*TR13 0.0 0.0 0.0 140 230 90 50 140 90 90 90 0
*TR14 0.0 0.0 0.0 150 240 90 60 150 90 90 90 0
*TR15 0.0 0.0 0.0 160 250 90 70 160 90 90 90 0
*TR16 0.0 0.0 0.0 170 260 90 80 170 90 90 90 0
```

Figure 5.3.17-6 Normal Condition Axial Surface Dose Rate Profile by Source Type – Power Grade MOX at 70 GWd/MTHM, 2% Fissile Material, and 90 Days Cool Time

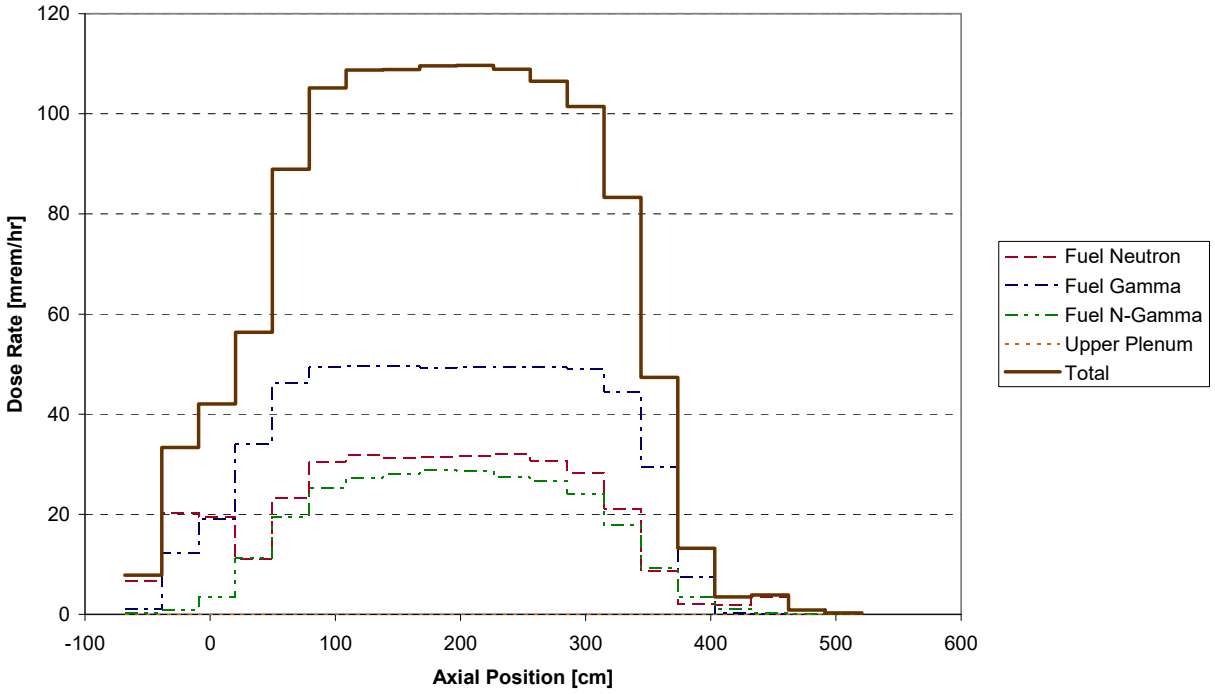

Figure 5.3.17-7 Normal Condition Radial 2m Dose Rate Profile by Source Type – Power Grade MOX at 70 GWd/MTHM, 2% Fissile Material, and 90 Days Cool Time

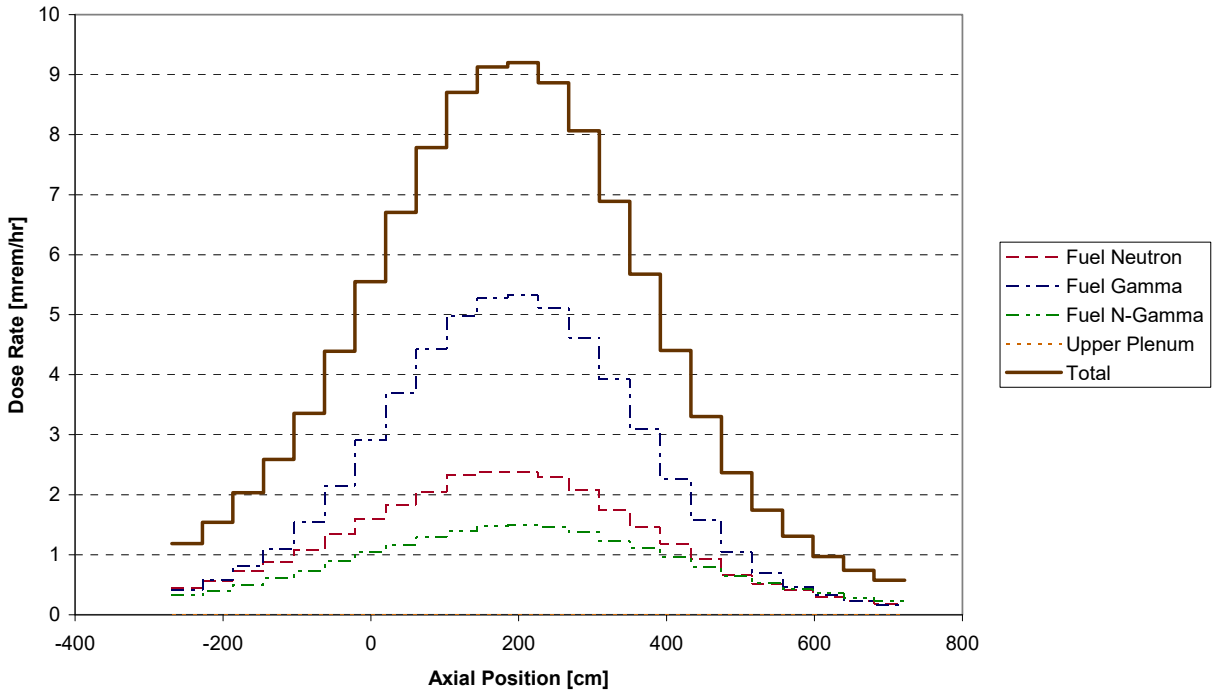

Figure 5.3.17-8 Accident Condition Radial 1m Dose Rate Profile by Source Type – Power Grade MOX at 70 GWd/MTHM, 2% Fissile Material, and 90 Days Cool Time

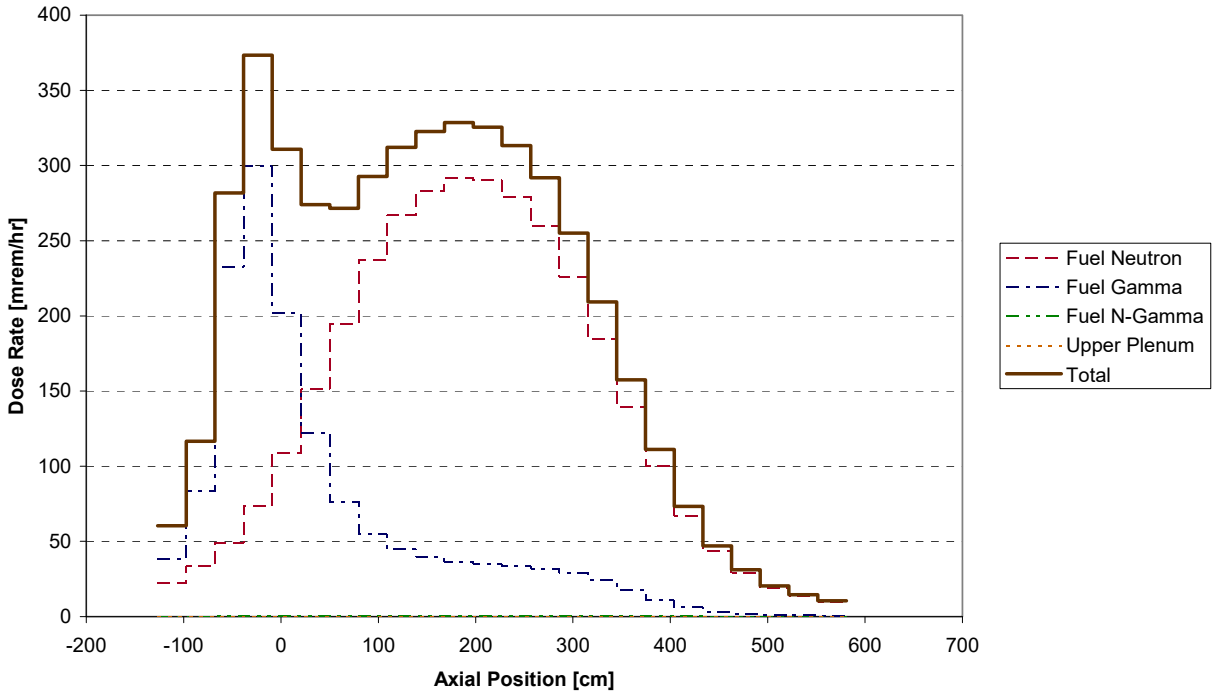

Figure 5.3.17-9 Sample MCNP Input File for Mixed PWR MOX/UO_2 Fuel

```
NAC-LWT Cask - we17pin_lw_80b40e090d - Normal Transport Conditions
C Radial Biasing - Fuel Gamma Source
C 16 Rod Source & WE17x17 Fuel
C Fuel Rod Cells
1 2 -6.5600 -1 -2    u=8 $ Bottom end cap
2 1 -10.960 -1 +2 -3 -5  u=8 $ Fuel
3 0         -1 +3 -4 -6  u=8 $ Plenum
4 2 -6.5600 -1 +4    u=8 $ Top end cap
5 0         -1 +2 -3 +5 -6 u=8 $ Annulus
6 2 -6.5600 -1 +2 -4 +6  u=8 $ Clad
7 0         +1     u=8 $ Outside fuel rod
C Fuel Rod Cells - Mixed Loading
8 2 -6.5600 -1 -2    u=7 $ Bottom end cap
9 8 -10.960 -1 +2 -3 -5  u=7 $ Fuel
10 0         -1 +3 -4 -6  u=7 $ Plenum
11 2 -6.5600 -1 +4    u=7 $ Top end cap
12 0         -1 +2 -3 +5 -6 u=7 $ Annulus
13 2 -6.5600 -1 +2 -4 +6  u=7 $ Clad
14 0         +1     u=7 $ Outside fuel rod
C Fuel Array Cells
15 0         -7 8 -9 10
       lat=1 u=6 fill=-3:3 -3:3 0:0
       6 6 6 6 6 6 6
       6 8 7 8 7 8 6
       6 7 6 6 6 7 6
       6 8 6 6 6 8 6
       6 7 6 6 6 7 6
       6 8 7 8 7 8 6
       6 6 6 6 6 6 6
C Can Weldment Cells
16 0         -11 fill=6 ( 0.0000 0.0000 2.5400 )   u=5 $ Fuel Insert
17 5 -7.9400 -12 +11    u=5 $ Internal Spacer
18 0         -13 +12 +11   u=5 $ Can Weldment void
19 5 -7.9400 -14     u=5 $ Can Weldment base
20 5 -7.9400 -15 +14 +13 +11  u=5 $ Can Weldment body
21 5 -7.9400 -16 +15 +11   u=5 $ Can Weldment flange
22 5 -7.9400 -17 +16    u=5 $ Can Weldment lid
23 0         +17     u=5 $ Outside
C PWR Insert Cells
24 0         -20 fill=5 ( 0.0000 0.0000 1.2700 )   u=4 $ Can Weldment
25 7 -2.7020 -21 +20    u=4 $ PWR Insert Body
26 0         +21 +20    u=4 $ Outside
C PWR Basket Cells
30 0         -30 fill=4 ( 0.0000 0.0000 5.2070 )   u=3 $ PWR Insert
31 0  -32 -31    u=3 $ Offset
32 7 -2.7020 -32 +31 +30   u=3 $ Basket
33 0  +32 +30    u=3 $ Outside
C Cask Cavity Cells
40 0         -40 +41 fill=3   u=2 $ Cavity
41 5 -7.9400 -41     u=2 $ Spacer plate
42 0         +40 +41    u=2 $ Outside
C Cells - LWT Cask Normal Conditions
50 4 -11.344 -53     u=1 $ BotPb
51 0         -52 fill=2    u=1 $ Cavity
52 5 -7.9400 -50 -51 +53   u=1 $ Bottom
53 5 -7.9400 -50 +51 +55 +58 +52 u=1 $ OuterShell
54 5 -7.9400 -54 +57 +52   u=1 $ InnerShellTaper
55 5 -7.9400 -56 +52    u=1 $ InnerShell
56 4 -11.344 -57 +56    u=1 $ Lead
57 4 -11.344 -55 +54 +57   u=1 $ LeadTaper
58 0         -58 +57    u=1 $ LeadGap
59 3 -0.9669 -60 +50    u=1 $ NeutronShield
60 5 -7.9400 -59 +50 +60   u=1 $ NSShell
61 6 -0.4997 -61 +50    u=1 $ UpperLimiter
62 6 -0.4997 -62 +50    u=1 $ LowerLimiter
63 0         -63 +50 +59 +61 +62 u=1 $ Container
64 0         +63     u=1 $ Outside
C Detector Cells - Radial Biasing
100  0  -100  fill=1  $ Surface
150  0  -150  +100  $ SurfaceAzi
200  0  -200  +100  +150  $ 1ft
```

Figure 5.3.17-9 Sample MCNP Input File for Mixed PWR MOX/UO_2 Fuel (Continued)

```
300  0  -300  +100  +150  +200  $ 1m
400  0  -400  +100  +150  +200  +300  $ 2m
500  0  -500  +100  +150  +200  +300  +400  $ 2m+Convey
600  0  +100  +150  +200  +300  +400  +500  $ Exterior

C Fuel Rod Surfaces
1 RCC 0.0000 0.0000 0.0000 0.0000 0.0000 385.1402 0.4572 $ Fuel rod
2 PZ 1.7399
3 PZ 367.4999
4 PZ 383.4003
5 CZ 0.3922
6 CZ 0.4001
C Fuel Array Surfaces
7 PX 0.8731
8 PX -0.8731
9 PY 0.8731
10 PY -0.8731
C Can Weldment Surfaces
11 RPP -4.5212 4.5212 -4.5212 4.5212 2.5400 425.4500  $ Internal cavity
12 RPP -4.9975 4.9975 -4.9975 4.9975 2.5400 422.2750  $ Internal spacer
13 RPP -6.3500 6.3500 -6.3500 6.3500 2.5400 422.9100  $ Can weldment cavity
14 RPP -6.9850 6.9850 -6.9850 6.9850 0.0000 2.5400  $ Can weldment base
15 RPP -6.9850 6.9850 -6.9850 6.9850 0.0000 422.9100  $ Can weldment body
16 RPP -6.9850 6.9850 -6.9850 6.9850 0.0000 425.4500  $ Can weldment flange
17 RPP -6.9850 6.9850 -6.9850 6.9850 0.0000 426.7200  $ Can weldment lid
C PWR Insert Surfaces
20 RPP -7.2898 7.2898 -7.2898 7.2898 1.2700 427.9900  $ PWR Insert cavity
21 RPP -10.7950 10.7950 -10.7950 10.7950 0.0000 425.4500  $ PWR Insert body
C PWR Basket Surfaces
30 RPP -11.2713 11.2713 -11.2713 11.2713 5.2070 433.1970  $ Internal cavity
31 PZ 5.2070       $ Bottom offset
32 RCC 0.0000 0.0000 0.0000 0.0000 0.0000 415.4170 16.8273 $ Basket walls
C Cask Cavity Surfaces
40 RCC 0.0000 0.0000 0.0000 0.0000 0.0000 452.1199 16.9862 $ Cavity
41 RCC 0.0000 0.0000 438.7850 0.0000 0.0000 0.9525 11.1760 $ Spacer plate
C Surfaces - LWT Cask Normal Conditions
50 RCC 0.0000 0.0000 -26.6700 0.0000 0.0000 507.3650 36.5189 $ Lwt
51 RCC 0.0000 0.0000 -26.6700 0.0000 0.0000 26.6700 36.5189 $ Bottom
52 RCC 0.0000 0.0000 0.0000 0.0000 0.0000 452.1200 16.9863 $ Cavity
53 RCC 0.0000 0.0000 -17.7800 0.0000 0.0000 7.6200 26.3525 $ Bottom gamma shield
54 RCC 0.0000 0.0000 0.0000 0.0000 0.0000 444.5000 20.1740 $ Lead id - taper
55 RCC 0.0000 0.0000 0.0000 0.0000 0.0000 444.5000 31.5976 $ Lead od - taper
56 RCC 0.0000 0.0000 13.8176 0.0000 0.0000 416.8648 18.9103 $ Lead id
57 RCC 0.0000 0.0000 13.8176 0.0000 0.0000 416.8648 33.3271 $ Lead od
58 RCC 0.0000 0.0000 13.8176 0.0000 0.0000 416.8648 33.4645 $ Lead gap
59 RCC 0.0000 0.0000 3.8100 0.0000 0.0000 419.1000 49.8183 $ Neutron shield shell
60 RCC 0.0000 0.0000 5.0800 0.0000 0.0000 416.5600 49.2189 $ Neutron shield
61 RCC 0.0000 0.0000 450.2150 0.0000 0.0000 70.5612 49.8183 $ Upper limiter
62 RCC 0.0000 0.0000 -68.0212 0.0000 0.0000 71.8312 49.8183 $ Lower limiter
63 RCC 0.0000 0.0000 -68.0212 0.0000 0.0000 588.7974 49.8183 $ Container
C Radial Detector DRA (Surface)
100  RCC  0.0000  0.0000  -68.1212  0.0000  0.0000  588.9974  49.9184
101  PZ  -38.6713
102  PZ  -9.2215
103  PZ  20.2284
104  PZ  49.6783
105  PZ  79.1282
106  PZ  108.5780
107  PZ  138.0279
108  PZ  167.4778
109  PZ  196.9276
110  PZ  226.3775
111  PZ  255.8274
112  PZ  285.2772
113  PZ  314.7271
114  PZ  344.1770
115  PZ  373.6269
116  PZ  403.0767
117  PZ  432.5266
118  PZ  461.9765
119  PZ  491.4263
```

Figure 5.3.17-9 Sample MCNP Input File for Mixed PWR MOX/UO_2 Fuel (Continued)

```
C Radial Detector DRAA (SurfaceAzi)
150  RCC  0.0000  0.0000  211.3775  0.0000  0.0000  30.0000  50.0184
151     PX  0.0000
152  1  PX  0.0000
153  2  PX  0.0000
154  3  PX  0.0000
155  4  PX  0.0000
156  5  PX  0.0000
157  6  PX  0.0000
158  7  PX  0.0000
159  8  PX  0.0000
160     PY  0.0000
161  9  PX  0.0000
162  10  PX  0.0000
163  11  PX  0.0000
164  12  PX  0.0000
165  13  PX  0.0000
166  14  PX  0.0000
167  15  PX  0.0000
168  16  PX  0.0000
C Radial Detector DRB (1ft)
200  RCC  0.0000  0.0000  -98.6012  0.0000  0.0000  649.9574  80.2984
201  PZ  -66.1033
202  PZ  -33.6055
203  PZ  -1.1076
204  PZ  31.3903
205  PZ  63.8882
206  PZ  96.3860
207  PZ  128.8839
208  PZ  161.3818
209  PZ  193.8796
210  PZ  226.3775
211  PZ  258.8754
212  PZ  291.3732
213  PZ  323.8711
214  PZ  356.3690
215  PZ  388.8669
216  PZ  421.3647
217  PZ  453.8626
218  PZ  486.3605
219  PZ  518.8583
C Radial Detector DRC (1m)
300  RCC  0.0000  0.0000  -168.1212  0.0000  0.0000  788.9974  149.8184
301  PZ  -135.2463
302  PZ  -102.3714
303  PZ  -69.4965
304  PZ  -36.6216
305  PZ  -3.7467
306  PZ  29.1282
307  PZ  62.0030
308  PZ  94.8779
309  PZ  127.7528
310  PZ  160.6277
311  PZ  193.5026
312  PZ  226.3775
313  PZ  259.2524
314  PZ  292.1273
315  PZ  325.0022
316  PZ  357.8771
317  PZ  390.7520
318  PZ  423.6269
319  PZ  456.5017
320  PZ  489.3766
321  PZ  522.2515
322  PZ  555.1264
323  PZ  588.0013
C Radial Detector DRD (2m)
400  RCC  0.0000  0.0000  -268.1212  0.0000  0.0000  988.9974  249.8184
401  PZ  -226.9130
402  PZ  -185.7048
403  PZ  -144.4965
404  PZ  -103.2883
405  PZ  -62.0801
```

Figure 5.3.17-9 Sample MCNP Input File for Mixed PWR MOX/UO_2 Fuel (Continued)

```
406  PZ  -20.8719
407  PZ  20.3364
408  PZ  61.5446
409  PZ  102.7528
410  PZ  143.9611
411  PZ  185.1693
412  PZ  226.3775
413  PZ  267.5857
414  PZ  308.7940
415  PZ  350.0022
416  PZ  391.2104
417  PZ  432.4186
418  PZ  473.6269
419  PZ  514.8351
420  PZ  556.0433
421  PZ  597.2515
422  PZ  638.4598
423  PZ  679.6680
C Radial Detector DRE (2m+Convey)
500  RCC  0.0000  0.0000  -269.1212  0.0000  0.0000  990.9974  321.9200
501  PZ  -227.8296
502  PZ  -186.5381
503  PZ  -145.2465
504  PZ  -103.9550
505  PZ  -62.6634
506  PZ  -21.3719
507  PZ  19.9197
508  PZ  61.2113
509  PZ  102.5028
510  PZ  143.7944
511  PZ  185.0859
512  PZ  226.3775
513  PZ  267.6691
514  PZ  308.9606
515  PZ  350.2522
516  PZ  391.5437
517  PZ  432.8353
518  PZ  474.1269
519  PZ  515.4184
520  PZ  556.7100
521  PZ  598.0015
522  PZ  639.2931
523  PZ  680.5846

C
C Materials List
C
C UO2 Fuel
m1    92235 -2.6740E-02
      92238 -6.4177E-01
       8016 -8.9904E-02
C Fuel Rod End Cap (Zircaloy)
m2    40000 -9.8225E-01
      50000 -1.5000E-02
      26000 -1.2500E-03
      24000 -1.0000E-03
       7014 -5.0000E-04
C Water/Glycol
m3    1001 -1.03651E-01
      8016 -6.75619E-01
      6000 -2.20730E-01
mt3  lwtr.01
C Lead
m4    82000 -1.0
C Stainless Steel 304
m5    24000 -0.190
      25055 -0.020
      26000 -0.695
      28000 -0.095
C Aluminum (Impact Limiter)
m6    13027 -1.0
C Aluminum (Insert/Basket)
m7    13027 -1.0
```

Figure 5.3.17-9 Sample MCNP Input File for Mixed PWR MOX/UO_2 Fuel (Continued)

```
C MOX Fuel
m8    92235 -1.2824E-03
      92238 -6.3994E-01
      94238 -1.3643E-05
      94239 -2.5513E-02
      94240 -1.6372E-03
      94241 -1.0914E-04
      94242 -1.3643E-05
       8016 -8.9904E-02
phys:p 100 0 0 0 1
C Cell Importances
imp:p 1 53r 0
C
C Source Definition - Fuel Gamma
C LEU/WG - 80 GWD/MTHM, 4 wt % Fissile, 90 days cooled
sdef cell=100:51:40:30:24:16:15:d4
     erg=d1
     pos= 0 0 1.7399
     rad=d2
     axs=0 0 1
     ext=d3
si1   1.000E-02 2.000E-02 5.000E-02 1.000E-01 2.000E-01 3.000E-01
      4.000E-01 6.000E-01 8.000E-01 1.000E+00 1.220E+00 1.440E+00
      1.660E+00 2.000E+00 2.500E+00 3.000E+00 4.000E+00 5.000E+00
      6.500E+00 8.000E+00 1.000E+01 1.200E+01 1.400E+01
sp1   0.0000E+00 8.0114E+13 1.0380E+14 5.0397E+13 5.8267E+13 1.2977E+13
      1.0169E+13 1.1443E+14 2.5269E+14 2.5656E+13 5.4103E+12 3.1422E+12
      2.4632E+12 4.7501E+11 1.1277E+12 7.2847E+10 2.4300E+09 7.7170E+05
      3.0970E+05 6.0750E+04 1.2899E+04 6.6693E+02 0.0000E+00
si2   0 0.3922
sp2   -21 1
si3 a 0.000 9.144 18.288 27.432 36.576 45.720 54.864
      310.896 320.040 329.184 338.328 347.472 356.616 365.760
sp3 d 0.5470 0.6358 0.7247 0.8135 0.9023 0.9912 1.0800
      1.0800 0.9912 0.9023 0.8135 0.7247 0.6358 0.5470
si4 l 2 9
sp4   1.0000 1.0258
mode p
nps 40000000
C
C ANSI/ANS-6.1.1-1977 - Gamma Flux-to-Dose Conversion Factors
C (mrem/hr)/(photons/cm2-sec)
de0   0.01 0.03 0.05 0.07 0.1 0.15 0.2
      0.25 0.3 0.35 0.4 0.45 0.5 0.55
      0.6 0.65 0.7 0.8 1 1.4 1.8
      2.2 2.6 2.8 3.25 3.75 4.25 4.75
      5 5.25 5.75 6.25 6.75 7.5 9
      11 13 15
df0   3.96E-03 5.82E-04 2.90E-04 2.58E-04 2.83E-04 3.79E-04 5.01E-04
      6.31E-04 7.59E-04 8.78E-04 9.85E-04 1.08E-03 1.17E-03 1.27E-03
      1.36E-03 1.44E-03 1.52E-03 1.68E-03 1.98E-03 2.51E-03 2.99E-03
      3.42E-03 3.82E-03 4.01E-03 4.41E-03 4.83E-03 5.23E-03 5.60E-03
      5.80E-03 6.01E-03 6.37E-03 6.74E-03 7.11E-03 7.66E-03 8.77E-03
      1.03E-02 1.18E-02 1.33E-02
C
C Weight Window Generation - Radial
wwg 2 0 0 0 0
wwp:p 5 3 5 0 -1 0
mesh geom=cyl ref=0.0 6.3 193 origin=0.1 0.1 -568
     imesh 6.4 12.2 17.0 18.9 33.3 36.5 49.2 49.8 549.8
     iints 3 1 1 1 5 1 1 1 1
     jmesh 500 541 550 558 568 575 579 964 1020 1049 1089 1589
     jints 1 1 1 1 1 1 1 1 1 1 1 1
     kmesh 1
     kints 1
wwge:p  1e-3 1 20
fc2 Radial Surface Tally
f2:p +100.1
fm2 1.16877E+16
fs2  -101  -102  -103  -104  -105  -106
     -107  -108  -109  -110  -111  -112
     -113  -114  -115  -116  -117  -118
     -119  T
```

Figure 5.3.17-9 Sample MCNP Input File for Mixed PWR MOX/UO_2 Fuel (Continued)

```
tf2
fc12 Radial SurfaceAzi Tally Q1 (+x+y)
f12:p +150.1
fm12 1.16877E+16
fs12 -151  -160
     +159  +158  +157  +156  +155  +154
     +153  +152  T
sd12 4.7141E+03  2.3571E+03  2.6190E+02  8r  9.4282E+03
tf12
fc22 Radial SurfaceAzi Tally Q2 (-x+y)
f22:p +150.1
fm22 1.16877E+16
fs22 +151  -160
     -168  -167  -166  -165  -164  -163
     -162  -161  T
sd22 4.7141E+03  2.3571E+03  2.6190E+02  8r  9.4282E+03
tf22
fc32 Radial SurfaceAzi Tally Q3 (-x-y)
f32:p +150.1
fm32 1.16877E+16
fs32 +151  +160
     -159  -158  -157  -156  -155  -154
     -153  -152  T
sd32 4.7141E+03  2.3571E+03  2.6190E+02  8r  9.4282E+03
tf32
fc42 Radial SurfaceAzi Tally Q4 (+x-y)
f42:p +150.1
fm42 1.16877E+16
fs42 -151  +160
     +168  +167  +166  +165  +164  +163
     +162  +161  T
sd42 4.7141E+03  2.3571E+03  2.6190E+02  8r  9.4282E+03
tf42
fc52 Radial 1ft Tally
f52:p +200.1
fm52 1.16877E+16
fs52  -201  -202  -203  -204  -205  -206
     -207  -208  -209  -210  -211  -212
     -213  -214  -215  -216  -217  -218
     -219  T
tf52
fc62 Radial 1m Tally
f62:p +300.1
fm62 1.16877E+16
fs62  -301  -302  -303  -304  -305  -306
     -307  -308  -309  -310  -311  -312
     -313  -314  -315  -316  -317  -318
     -319  -320  -321  -322  -323  T
tf62
fc72 Radial 2m Tally
f72:p +400.1
fm72 1.16877E+16
fs72  -401  -402  -403  -404  -405  -406
     -407  -408  -409  -410  -411  -412
     -413  -414  -415  -416  -417  -418
     -419  -420  -421  -422  -423  T
tf72
fc82 Radial 2m+Convey Tally
f82:p +500.1
fm82 1.16877E+16
fs82  -501  -502  -503  -504  -505  -506
     -507  -508  -509  -510  -511  -512
     -513  -514  -515  -516  -517  -518
     -519  -520  -521  -522  -523  T
tf82
C
C Print Control
prdmp -15 -30 1 2
print
C Random Number Generator
rand gen=2 seed=19073486328125 stride=152917 hist=1
C
C Rotation Matrix
```

Figure 5.3.17-9 Sample MCNP Input File for Mixed PWR MOX/UO_2 Fuel (Continued)

```
*TR1 0.0 0.0 0.0 10 100 90 -80 10 90 90 90 0
*TR2 0.0 0.0 0.0 20 110 90 -70 20 90 90 90 0
*TR3 0.0 0.0 0.0 30 120 90 -60 30 90 90 90 0
*TR4 0.0 0.0 0.0 40 130 90 -50 40 90 90 90 0
*TR5 0.0 0.0 0.0 50 140 90 -40 50 90 90 90 0
*TR6 0.0 0.0 0.0 60 150 90 -30 60 90 90 90 0
*TR7 0.0 0.0 0.0 70 160 90 -20 70 90 90 90 0
*TR8 0.0 0.0 0.0 80 170 90 -10 80 90 90 90 0
*TR9 0.0 0.0 0.0 100 190 90 10 100 90 90 90 0
*TR10 0.0 0.0 0.0 110 200 90 20 110 90 90 90 0
*TR11 0.0 0.0 0.0 120 210 90 30 120 90 90 90 0
*TR12 0.0 0.0 0.0 130 220 90 40 130 90 90 90 0
*TR13 0.0 0.0 0.0 140 230 90 50 140 90 90 90 0
*TR14 0.0 0.0 0.0 150 240 90 60 150 90 90 90 0
*TR15 0.0 0.0 0.0 160 250 90 70 160 90 90 90 0
*TR16 0.0 0.0 0.0 170 260 90 80 170 90 90 90 0
```

Figure 5.3.17-10 Comparison of Direct Solution and Response Function Results at Cask Surface for Normal Conditions Model for Discrete Rod Mixed Loading of 8 UO_2 Rods and 8 WG Rods

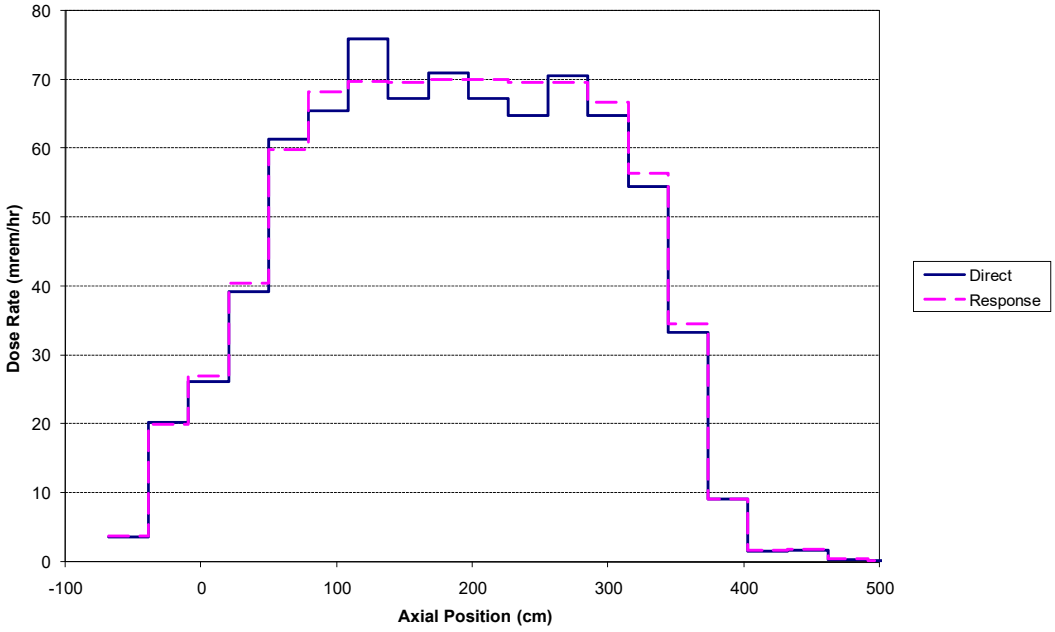

Figure 5.3.17-11 Comparison of Direct Solution and Response Function Results at Cask Surface for Normal Conditions Model for Homogenized WG Material

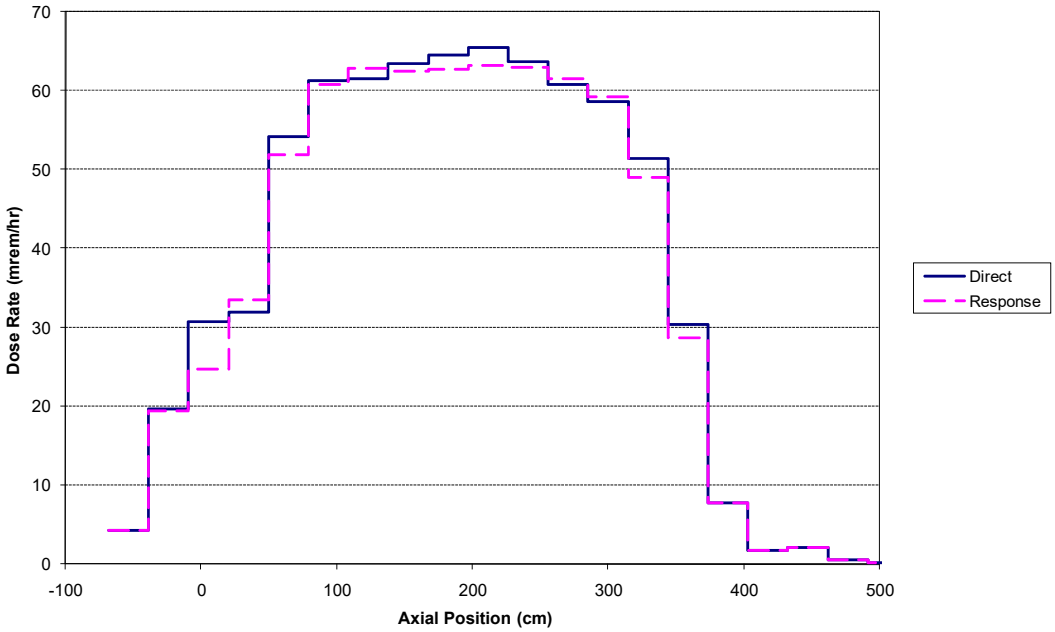

Figure 5.3.17-12 Comparison of Direct Solution and Response Function Results at Cask Surface for Normal Conditions Model for Homogenized LEU Material

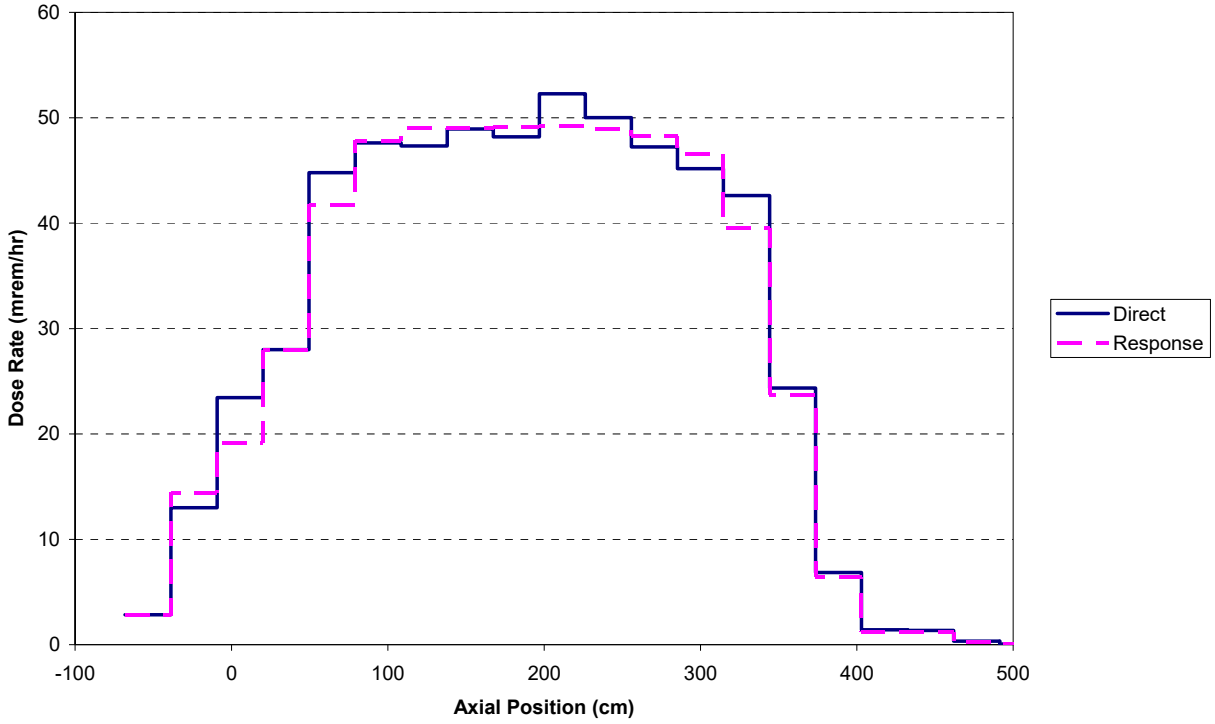

Table 5.3.17-1 High Burnup Fuel Rod model Parameters

Parameter	Unit	SAS2H	MCNP
% Theoretical Density		95%	100%
Clad		Zirconium Alloy	Zirconium Alloy
Rod Diameter	[cm]	1.1180	0.9144
Clad Inner Diameter	[cm]	0.9860	0.8001
Pellet Diameter	[cm]	0.9665	0.7844
Active Length	[cm]	389.9	365.76
Heavy Metal Mass / Rod	[kg]	2.63[1]	1.62
Fuel Rods[2]		176	--
Pitch[2]	[cm]	1.4730	--
Plenum Height	[cm]	--	15.9004
End Cap Height	[cm]	--	1.7399
Number of Guide Tubes[3]		5	--
Guide Tube IR	[cm]	1.36	--
Guide Tube OR	[cm]	1.46	--

Table 5.3.17-2 High Burnup MOX Fuel Assembly Model Parameters[4]

Burnup [MWd/MTHM]	Number Cycles	Assembly Power [MW]	Cycle Length [d]
70,000	3	19.36	556.8

[1] Slight variations exist between various fuel material compositions due to density changes associated with Pu content.
[2] Only used for source generation to generate full assembly.
[3] Guide tube dimensions are required to construct the SAS2 Path B fuel model.
[4] UO_2 fuel evaluation employed same power density with increased cycle length (636.4 days) to achieve 80 GWd/MTHM burnup.

Table 5.3.17-3 MOX Fuel Material Compositions

Isotope	Isotopic Weight Fraction of U/Pu			
	Weapon Grade (WG)	Fuel Grade (FG)	Power Grade (PG)	MOX Services (MS)
^{235}U	0.2	0.2	0.2	0.2
^{238}U	99.8	99.8	99.8	99.8
^{238}Pu	0.05	0.1	1	0.05
^{239}Pu	93.5	86.1	62	89.85
^{240}Pu	6	12	22	9
^{241}Pu	0.4	1.6	12	1
^{242}Pu	0.05	0.2	3	0.1

Table 5.3.17-4 Uranium/Plutonium Fractions in MOX Fuel

Fissile Plutonium	Element	Element Weight Fraction in Fuel Composition			
		Weapon Grade (WG)	Fuel Grade (FG)	Power Grade (PG)	MOX Services (MS)
2%	U	97.96	97.82	97.41	97.89
	Pu	2.04	2.18	2.59	2.11
3%	U	96.94	96.72	96.12	96.84
	Pu	3.06	3.28	3.88	3.16
4%	U	95.92	95.63	94.82	95.77
	Pu	4.08	4.37	5.18	4.23
5%	U	94.90	94.53	93.52	94.72
	Pu	5.10	5.47	6.48	5.28
6%	U	93.87	93.44	92.22	93.67
	Pu	6.13	6.56	7.78	6.33
7%	U	92.85	92.34	90.92	92.61
	Pu	7.15	7.66	9.08	7.39

Table 5.3.17-5 PWR Fuel Axial Source Profile

% Active Fuel Height	Burnup Profile	Photon Source	Neutron Source
0.00%	0.5470	0.5470	7.840E-02
2.50%	0.6358	0.6358	1.479E-01
5.00%	0.7247	0.7247	2.569E-01
7.50%	0.8135	0.8135	4.185E-01
10.00%	0.9023	0.9023	6.481E-01
12.50%	0.9912	0.9912	9.633E-01
15.00%	1.0800	1.0800	1.384E+00
85.00%	1.0800	1.0800	1.384E+00
87.50%	0.9912	0.9912	9.633E-01
90.00%	0.9023	0.9023	6.481E-01
92.50%	0.8135	0.8135	4.185E-01
95.00%	0.7247	0.7247	2.569E-01
97.50%	0.6358	0.6358	1.479E-01
100.00%	0.5470	0.5470	7.840E-02

Table 5.3.17-6 Fuel Axial Source Profile Parameters

Description	Source	Exponent b	Average Source to Average Burnup
Design Basis (1.08 Peak)	Neutron	4.22	1.1269
	Gamma	1.00	1.000
MOX WG (1.08 Peak)	Neutron	2.702	1.0485
90 days cool time	Gamma	0.333	0.997
MOX WG (1.08 Peak)	Neutron	3.284	1.0752
2 years cool time	Gamma	0.766	0.998
MOX PG (1.08 Peak)	Neutron	1.708	1.0140
90 days cool time	Gamma	0.325	0.997
MOX PG (1.08 Peak)	Neutron	1.960	1.0213
2 years cool time	Gamma	0.735	0.998

Table 5.3.17-7 MOX Source Term Magnitudes at 70 GWd/MTHM and 90 Days Cool Time (per Rod Basis)

	Heat [watts/rod]				
Type	LEU	WG	FG	PG	MS
2% Fissile	111.4	118.1	119.5	125.2	118.8
3% Fissile	109.6	122.4	124.8	134.5	123.5
4% Fissile	108.0	126.7	130.1	144.2	128.3
5% Fissile	106.6	129.0	133.2	151.9	131.0
6% Fissile	105.2	129.3	134.3	157.5	131.7
7% Fissile	104.0	128.6	134.3	161.6	131.3
	Neutron [n/sec/rod]				
Type	LEU	WG	FG	PG	MS
2% Fissile	3.02E+07	4.34E+07	4.68E+07	7.33E+07	4.50E+07
3% Fissile	2.05E+07	3.28E+07	3.59E+07	5.99E+07	3.43E+07
4% Fissile	1.42E+07	2.59E+07	2.92E+07	5.29E+07	2.74E+07
5% Fissile	1.01E+07	2.14E+07	2.50E+07	4.94E+07	2.31E+07
6% Fissile	7.37E+06	1.83E+07	2.21E+07	4.73E+07	2.01E+07
7% Fissile	5.56E+06	1.60E+07	2.00E+07	4.58E+07	1.78E+07
	Gamma [γ/sec/rod]				
Type	LEU	WG	FG	PG	MS
2% Fissile	7.02E+14	7.11E+14	7.12E+14	7.12E+14	7.12E+14
3% Fissile	6.96E+14	7.12E+14	7.12E+14	7.13E+14	7.12E+14
4% Fissile	6.90E+14	7.09E+14	7.09E+14	7.11E+14	7.09E+14
5% Fissile	6.84E+14	7.06E+14	7.06E+14	7.09E+14	7.06E+14
6% Fissile	6.79E+14	7.03E+14	7.04E+14	7.08E+14	7.03E+14
7% Fissile	6.76E+14	7.00E+14	7.01E+14	7.06E+14	7.01E+14

Table 5.3.17-8 MOX Fuel Cool Time to Reach 143.75 W/Rod (Days)

Burnup (GWd/MTHM)	80	70	70	70	70
Fissile Material Type	**LEU**	**WG**	**FG**	**PG**	**MS**
7% Fissile Content	<90	<90	<90	120	<90
6% Fissile Content	<90	<90	<90	120	<90
5% Fissile Content	<90	<90	<90	110	<90
4% Fissile Content	<90	<90	<90	100	<90
3% Fissile Content	<90	<90	<90	<90	<90
2% Fissile Content	<90	<90	<90	<90	<90

Table 5.3.17-9 PWR Power Grade MOX Fuel Assembly Neutron Source Term for 70 GWd/MTHM, 2% Fissile Pu, and 90 Days Cooling (16 Rods)

Group	E Lower [MeV]	E Upper [MeV]	Source [neutrons/sec]
1	1.360E+01	1.460E+01	5.558E+04
2	1.250E+01	1.360E+01	1.419E+05
3	1.125E+01	1.250E+01	4.110E+05
4	1.000E+01	1.125E+01	1.086E+06
5	8.250E+00	1.000E+01	4.941E+06
6	7.000E+00	8.250E+00	1.036E+07
7	6.070E+00	7.000E+00	1.661E+07
8	4.720E+00	6.070E+00	5.380E+07
9	3.680E+00	4.720E+00	9.000E+07
10	2.870E+00	3.680E+00	1.220E+08
11	1.740E+00	2.870E+00	2.806E+08
12	6.400E-01	1.740E+00	4.000E+08
13	3.900E-01	6.400E-01	9.264E+07
14	1.100E-01	3.900E-01	8.346E+07
15	6.740E-02	1.100E-01	8.475E+06
16	2.480E-02	6.740E-02	6.216E+06
17	9.120E-03	2.480E-02	1.412E+06
18	2.950E-03	9.120E-03	3.328E+05
19	9.610E-04	2.950E-03	6.121E+04
20	3.540E-04	9.610E-04	1.086E+04
21	1.660E-04	3.540E-04	2.125E+03
22	4.810E-05	1.660E-04	8.485E+02
23	1.600E-05	4.810E-05	1.268E+02
24	4.000E-06	1.600E-05	2.625E+01
25	1.500E-06	4.000E-06	2.891E+00
26	5.500E-07	1.500E-06	6.710E-01
27	7.090E-08	5.500E-07	1.829E-01
28	1.000E-11	7.090E-08	9.100E-03
Total			1.173E+09

Table 5.3.17-10 PWR Power Grade MOX Fuel Assembly Gamma Source Term for 70 GWd/MTHM, 2% Fissile Pu, and 90 Days Cooling (16 Rods)

Group	E Lower [MeV]	E Upper [MeV]	Fuel Gamma [photons/sec]	Hardware Gamma[1] [photons/sec]
1	1.20E+01	1.40E+01	0.0000E+00	0.0000E+00
2	1.00E+01	1.20E+01	3.1246E+04	0.0000E+00
3	8.00E+00	1.00E+01	6.0432E+05	0.0000E+00
4	6.50E+00	8.00E+00	2.8462E+06	0.0000E+00
5	5.00E+00	6.50E+00	1.4508E+07	0.0000E+00
6	4.00E+00	5.00E+00	3.6147E+07	0.0000E+00
7	3.00E+00	4.00E+00	4.4686E+10	1.3138E-13
8	2.50E+00	3.00E+00	1.2211E+12	1.9460E+02
9	2.00E+00	2.50E+00	1.7739E+13	2.2777E+05
10	1.66E+00	2.00E+00	8.2987E+12	1.0318E+07
11	1.44E+00	1.66E+00	4.1253E+13	4.4657E+05
12	1.22E+00	1.44E+00	5.0438E+13	2.1733E+10
13	1.00E+00	1.22E+00	9.1018E+13	2.3000E+10
14	8.00E-01	1.00E+00	3.8442E+14	8.1955E+09
15	6.00E-01	8.00E-01	3.8492E+15	7.3117E+05
16	4.00E-01	6.00E-01	1.8316E+15	6.7064E+08
17	3.00E-01	4.00E-01	1.6843E+14	1.2419E+09
18	2.00E-01	3.00E-01	2.1407E+14	7.3205E+06
19	1.00E-01	2.00E-01	9.3336E+14	8.7699E+07
20	5.00E-02	1.00E-01	8.1935E+14	1.4913E+08
21	2.00E-02	5.00E-02	1.6657E+15	3.9420E+08
22	1.00E-02	2.00E-02	1.3199E+15	4.5530E+08
Total			1.1396E+16	5.5947E+10

[1] Reflects a 25 gram activated plenum spring. As indicated by the relative source magnitude differences between fuel and hardware gamma in any energy bin, there is no significant hardware source.

Table 5.3.17-11 Homogenization for PWR MOX Fuel Rod Regions

Material	Density [g/cm³]	Element	Number Density [atom/b-cm]
Homogenized Fuel Region (UO_2/MOX plus Clad)	1.23	Uranium-235	8.4528E-05
		Uranium-238	2.0031E-03
		Oxygen-16	4.1762E-03
		Zirconium	1.9328E-03
		Tin	2.2681E-05
		Iron	4.0176E-06
		Chromium	3.4521E-06
		Nitrogen-14	6.4091E-06
Fuel Rod End-Cap	0.84	Zirconium	5.4662E-03
		Tin	6.4146E-05
		Iron	1.1363E-05
		Chromium	9.7634E-06
		Nitrogen-14	1.8127E-05
Plenum Region[1]	0.0	N/A	0.0

[1] Plenum region modeled as void in the shielding evaluation.

Table 5.3.17-12 Cask/Basket Material Descriptions for PWR MOX Fuel

Material	Element	Density [g/cm³]	Number Density [atom/b-cm]
Stainless Steel 304	Fe	7.94	5.9505E-02
	Cr		1.7472E-02
	Ni		7.7392E-03
	Mn		1.7407E-03
Lead	Pb	11.34	3.2967E-02
Neutron Shield	H	0.97	5.9884E-02
	O		2.4595E-02
	C		1.0701E-02
Impact Limiter	Al	0.50	1.1153E-02
Aluminum	Al	2.70	6.0306E-02

Table 5.3.17-13 Material Composition Effect Study for PWR MOX Fuel

Fuel	Cool Time	Response (mrem/hr) Using UO_2 Composition	Direct (mrem/hr) Using Actual Composition	Diff
LEU	150 days	5.74	5.83	1.6%[1]
FG	90 days	10.72	10.86	1.3%
MS	90 days	10.16	10.29	1.3%
PG	90 days	18.44	18.70	1.4%
WG	90 days	9.72	9.86	1.4%

[1] Difference due to direct solution using the full spectrum of source in a single run versus response solution derived at by multiplication of the source spectrum by per energy line run results.

Table 5.3.17-14 Mixed Loading/Material Composition Effect Study for PWR MOX Fuel

Fuel Model	Fuel Material	Source	Dose Rate [mrem/hr]	FSD
LEU 16 Rods (MCNP Run)	UO_2	UO_2	36.3	1.2%
WG 16 Rods (MCNP Run)	WG	WG	44.0	1.0%
Numerical Avg. of LEU/WG 16 Rods	--	--	40.0	0.8%
Mixed Loading (MCNP Run)	UO_2/WG	UO_2/WG	40.0	1.1%
Mixed Loading (MCNP Run)	UO_2	UO_2/WG	39.7	1.1%

Table 5.3.17-15 MOX/UO_2 Fuel Material Configuration/Homogenization Study

Fuel	Surface Average (mrem/hr)			2m Average (mrem/hr)		
	Discrete	Homogenized	Difference	Discrete	Homogenized	Difference
LEU	36.3	39.8	9.7%	2.76	3.03	10.0%
FG	45.8	49.8	8.7%	3.38	3.71	9.8%
MS	44.7	48.9	9.4%	3.30	3.64	10.2%
PG	59.2	64.0	8.2%	4.23	4.61	8.8%
WG	44.0	48.2	9.6%	3.26	3.59	10.1%

Note: "Discrete" represents a model containing discrete 16 fuel rods placed in the outer cells of the 5×5 rod array, with void in the center 9 cells. "Homogenized" represents a smear or homogenized, material model.

Table 5.3.17-16 Maximum Radial Dose Rates for PWR MOX Fuel – 90 Days Cool Time, 2% Fissile Pu

Burnup (GWd/MTHM)	80	70	70	70	70
Fuel Material	LEU	WG	FG	PG	MS
Normal Surface	91.6	85.0	87.8	109.6	86.3
Normal 1 meter	23.6	22.1	22.7	27.5	22.4
Normal 2 meter	8.1	7.6	7.8	9.2	7.7
Accident 1 meter	362	344	347	373	345

Table 5.3.17-17 Detailed Dose Rates for Bounding Fuel – Power Grade PWR MOX Fuel, 2% Fissile Pu, 70 GWd/MTHM and 90 Days Cool Time

Transport Condition	Dose Rate Location	Maximum		Average	
		[mrem/hr]	FSD	[mrem/hr]	FSD
Normal	Side Surface of Cask	1.1E+02	0.5%	6.2E+01	0.2%
	Top Surface of Cask	8.6E-01	6.4%	4.3E-01	7.1%
	Bottom Surface of Cask	1.2E+01	8.2%	7.9E+00	6.3%
	Side 1m (Transport Index)	2.8E+01	0.4%	1.3E+01	0.1%
	2m from Truck - Radial	9.2E+00	0.3%	4.5E+00	0.1%
	2m from Top	3.3E-01	12.5%	2.1E-01	8.5%
	2m from Bottom	7.6E-01	8.5%	6.6E-01	5.9%
	Edge of Truck - Top	6.6E-02	30.6%	3.0E-02	13.7%
	Edge of Truck - Bottom	6.2E-01	21.2%	5.0E-01	7.0%
	Dose at Cab of Truck	2.3E-02	11.4%	1.6E-02	6.4%
Accident	Side Surface of Cask	4.1E+03	0.4%	1.4E+03	0.1%
	Top Surface of Cask	6.6E+00	16.7%	2.5E+00	11.9%
	Bottom Surface of Cask	6.5E+01	6.5%	3.8E+01	7.5%
	Side 1m	3.7E+02	0.3%	2.0E+02	0.1%
	Top 1m	1.3E+01	56.3%	5.5E+00	27.2%
	Bottom 1m	7.4E+01	29.5%	3.3E+01	17.6%

5.3.18 Mixed ANSTO-DIDO Payload Configuration

Previous sections have demonstrated the acceptability of transporting DIDO (annular ring), MOATA (MTR plate) and spiral assemblies. MOATA plate element and spiral assemblies have been defined to be ANSTO basket module payloads.

This section evaluates the placement of an ANSTO basket top module onto a DIDO basket stack. The DIDO baskets are loaded with DIDO fuel elements, while the ANSTO basket module may contain DIDO, MOATA or spiral fuel elements. The mixed payload ANSTO top module may also be located in the ANSTO basket assembly. Fuel elements may be disassembled and/or segmented and placed into an aluminum damaged fuel can (DFC) prior to placement within the ANSTO top basket module.

All three payloads are limited to their respective source (i.e., burnup and cool time limits) defined in their analysis sections. The DIDO elements placed within the ANSTO basket top module are limited to the 10 W payload limit, which is lower than the 18 W heat load defined in Section 5.3.9, to not require a top spacer.

Shielding discussions are divided into a basket comparison documenting acceptability of loading DIDO fuel into an ANSTO basket, a mixed payload discussion, and a canistered fuel discussion.

5.3.18.1 Basket Comparison

Based on the tube dimensions listed in the following table, the modeled basket for the DIDO payload evaluation bounds the ANSTO tube configuration. The ANSTO basket contains slightly larger and thicker tubes than the DIDO basket, providing a small increase in shield material. The aluminum components of the DIDO basket were not included in the DIDO shielding evaluations.

Parameter	DIDO Basket	ANSTO Basket
Fuel Assembly Openings	7	7
Fuel Tube OD (inch)	4.25	4.375
Fuel Tube Wall Thickness (inch)	0.120	0.125

5.3.18.2 Mixed Payload Discussion

All fuel types are comprised of uranium metal within an aluminum matrix, with ^{235}U being the fissile isotope. The neutron source as the result of (alpha, n) production is accounted for in each fuel type source definition. The cask is transported in a dry configuration, with a corresponding high neutron energy spectrum in the cavity, minimizing the effect of secondary particle

production. Loading mixed payloads, therefore, does not result in adverse effects on system dose rates.

5.3.18.3 Canistered Fuel Element Discussion

Shielding evaluations of the bounding MEU DIDO payload, specified as bounding for the ANSTO spiral and plate fuels, applied the homogenized source region within an inch of the cask cavity lid (for a heat load of 18 W per basket module opening) and placed the source into a cylindrical shell near the tube surface. In addition, the homogenized density applied for self-shielding was significantly reduced in the DIDO models (volume fractions were calculated for a solid cylinder, while the material smear was then applied to a cylindrical shell extending from the inner to outer plate). As the aluminum DFC restrains fuel within a 9.84 cm envelope (5 mm larger than the modeled fuel region) and provides an offset from the lid of 3.8 cm, no adverse effects on dose rates occur due to loading of the material within the aluminum DFC.

Canned DIDO and ANSTO spiral fuel elements are further limited to a maximum heat load of 10 W per canister (MOATA elements are limited to less than 1 W per Section 5.3.16). This heat load reduction from the uncanistered configuration provides significant additional margin to the shielding evaluations.

5.3.18.4 Conclusions

Neither stacking ANSTO and DIDO baskets within the same basket assembly, nor including a mixed payload, nor the use of DFCs for compromised clad fuel results in increased dose rates. Conservatively, the DIDO MEU Transport Index (TI) may be assigned to the mixed and/or canned payloads.

5.3.19 Irradiated Hardware Shielding Evaluation

Irradiated hardware is evaluated for transport in the LWT cask. The irradiated hardware represents a potentially significant gamma source when compared to fuel material payloads due to the high energy spectrum feasible from activated materials. Typical irradiated hardware is irradiated steel where cobalt activation, and subsequent ^{60}Co decay, produces two gamma rays, each over 1 MeV in energy.

A source term for typical irradiated hardware is established by activating one kilogram of stainless steel with a 1.2 g/kg cobalt impurity in a PWR in-core neutron spectrum (PWR fuel assembly burnup to 45, 000 MWd/MTU at a 3.5 wt % ^{235}U initial enrichment, followed by a 90-day cool time). This material will represent a baseline to establish source limits in terms of gammas per second and energy per second (γ/s and MeV/s). The gamma source activity is determined in the SCALE 27-group neutron and 18-group gamma structures using the SAS2H sequence of SCALE 4.3. The activated hardware may contain surface contamination (including actinides), but this component has no significant effect on cask surface dose rates compared to the activated material itself and is, therefore, neglected from the analysis. The SAS2H input for the gamma source generation is listed in Figure. The resulting gamma spectrum is summarized in Figure 5.3.19-1.

A radial one-dimensional shielding analysis is performed using SAS1 with a void source region. A void source region is by default conservative since it neglects the substantial self-shielding of the activated hardware. A sample radial SAS1 input for irradiated hardware evaluations is shown in Figure 5.3.19-2 with material compositions for the cask given in Table 5.3.19-2. Note that various irradiated hardware heights (and two radial configurations) are evaluated using SAS1. The buckling height in each case is set to the source region height of the particular analysis. The same conservative assumptions used in previous radial shielding analysis were applied, i.e., minimum shield dimensions, lead gap, a 0.94 g/cm^3 neutron shield solution density, and no boron in the neutron shield solution. In the accident analysis, the neutron shield is modeled as void. A one-dimensional sketch of the modeled cask geometry is shown in Figure 5.3.19-3. As demonstrated in the shielding evaluations for various other payloads (e.g.., fuel skeleton with activated hardware), the axial dose of the NAC-LWT cask is not limiting. Therefore, only radial dose rates are evaluated in this section.

SAS1 dose rates are calculated using the SAS2H-generated gamma source (1 kg activated hardware). Dose rates are then scaled up to represent an increased source with a magnitude of 2×10^{14} γ/sec or 2.2×10^{14} MeV/sec (equivalent of 10 kg of the SAS2H activated stainless).

This source represents a radionuclide content of approximately 8.9×10^3 Ci, with a ^{60}Co portion of 2×10^3 Ci. Normal condition transport cask surface and 2 meter dose rates, as well as accident condition 1 meter dose rates, are plotted in Figure 5.3.19-4 through Figure 5.3.19-6 for the increased source. Dose rates are well below regulatory limits at the surface (300 mrem/hr) and 2 meters from the truck bed (7.6 mrem/hr). The transport index, based on the normal condition of transport dose rate at 1 meter from the package, is less than 35.

Figure 5.3.19-1 SAS2H Input for Irradiated Hardware (on a per kg basis)

```
=SAS2H      PARM=(HALT03,SKIPSHIPDATA)
WEST 15X15 3.5 WT % U235, 45000 MWd/MTU 5.0-10.0 YEAR COOLING
27GROUPNDF4 LATTICECELL
UO2        1 0.95 900 92235 3.5 92238 96.5 END
ZIRCALLOY  2 1.0 620 END
H2O        3 DEN=0.725 1.0 580 END
ARBM-BORMOD 0.725 1 1 0 0 5000 100 3 550.0E-6 580 END
END COMP
SQUAREPITCH 1.43 0.9294 1 3 1.0719 2 0.9489 0 END
NPIN=204 FUEL=365.76 NCYC=3 NLIB=1 PRIN=6 LIGH=5
INPL=1 NUMH=20 NUMI=1 ORTU=0.6922 SRTU=0.6541 END
POWER=16.28 BURN=428.0692 DOWN=60.0 END
POWER=16.28 BURN=428.0692 DOWN=60.0 END
POWER=16.28 BURN=428.0692 DOWN=0.0 END
FE 0.672 CR 0.190 NI 0.115 MN 0.020 CO 0.0012
END
=ORIGENS
0$$  A4 21 A8 26 A10 51 71  E
1$$  1 1T
COOLING 0.25-4 YEARS AND LIGHT ELEMENT GAMMA REBIN
3$$  21 0 1 A33 -86  E
54$$  A8 1 E T
35$$  0 T
56$$  0 6 A13 -2 5 3 E
57**  0.0 E T
COOLING 0.25-4 YEARS AND LIGHT ELEMENT GAMMA REBIN
SINGLE REACTOR ASSEMBLY
60**  0.25 0.5 0.75 1.0 1.5 2.0
65$$  A4 1 A7 1 A10 1 A25 1 A28 1 A31 1 A46 1 A49 1 A52 1 E
61**  F.01
81$$  2 51 26 1 E
82$$  F4 T
LIGHT ELEMENT SCALE GROUP STRUCTURE
LIGHT ELEMENT SCALE GROUP STRUCTURE
LIGHT ELEMENT SCALE GROUP STRUCTURE
LIGHT ELEMENT SCALE GROUP STRUCTURE
LIGHT ELEMENT SCALE GROUP STRUCTURE
LIGHT ELEMENT SCALE GROUP STRUCTURE
56$$ F0  T
END
```

Figure 5.3.19-2 Sample SAS1 Input for Irradiated Hardware (Source 1 kg Material)

```
SAS1
Irradiated Hardware - Nrm Model - 16 cm Radius Source - 150cm Height Source
27N-18COUPLE    INFHOMMEDIUM
AL      2  1.0 END
SS304   3  1.0 END
PB      4  1.0 END
ARBMGLYC  0.9437 3 0 1 0 6012 2 1001 6 8016 2 5 .585 END
H2O     5 0.4160 END
END COMP
END
LAST
Irradiated Hardware in the NAC-LWT - GAMMA SOURCE
CYLINDRICAL
0  8  30  -1  0  0.0  0.0  6.678E+08
0 16.9863  1 0
3 18.8214  4 0
4 33.2890 60 0
0 33.4264  1 0
3 36.3728 12 0
5 49.0728 30 0
3 49.1338  4 0
END ZONE
27Z
0.000E+00 0.000E+00 0.000E+00 0.000E+00 2.631E-15 1.195E+05
7.709E+07 9.199E+09 3.249E+12 1.150E+13 3.950E+12 6.266E+08
5.980E+11 4.581E+11 5.615E+09 2.643E+10 6.543E+10 2.763E+11
DY=150 NDETEC=5
READ XSDOSE
150 49.1338 75 149.1338 75 249.1338 75
321.92 75 349.1338 75
END
```

Figure 5.3.19-3 Irradiated Hardware One-Dimensional Radial Model of NAC-LWT

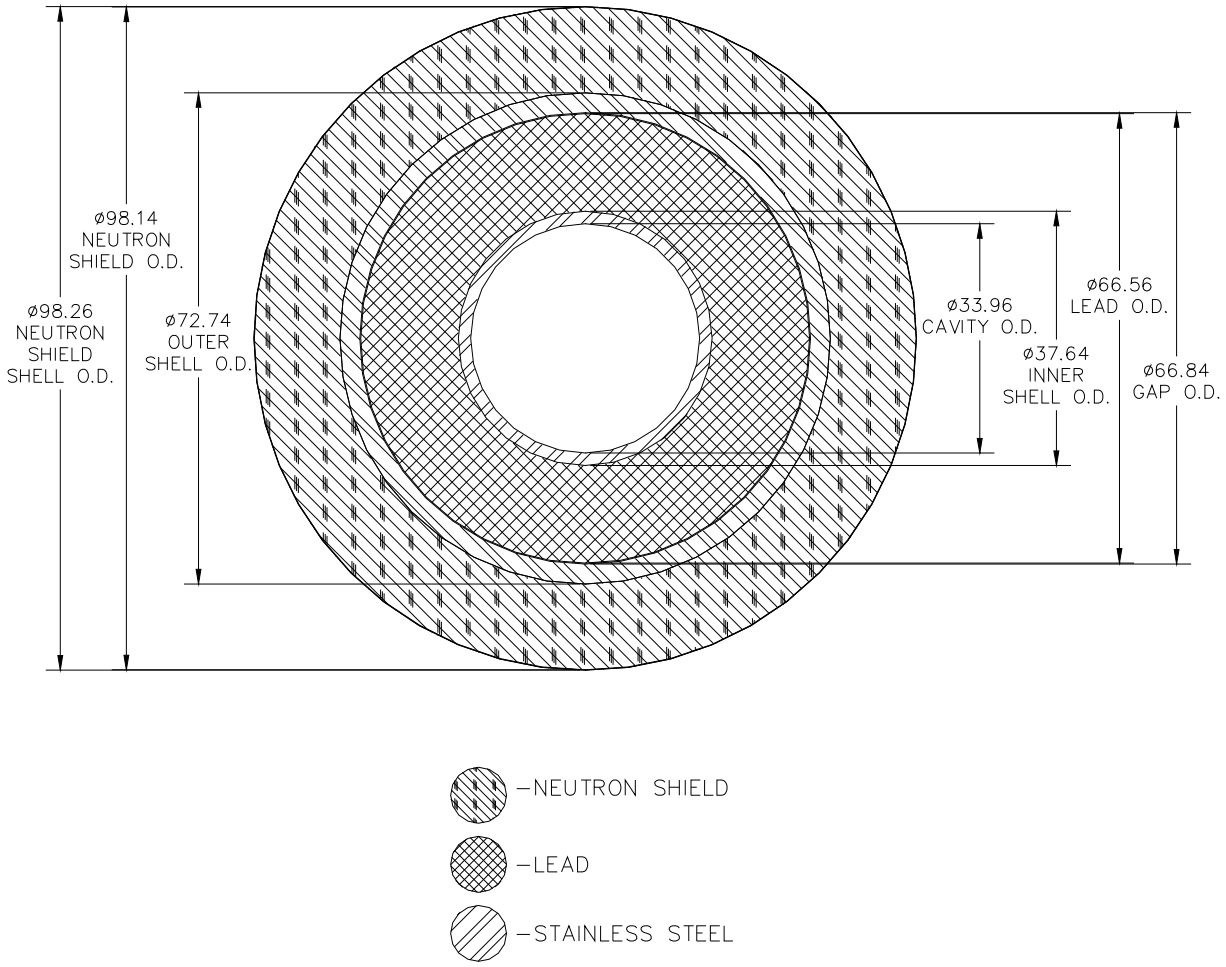

Dimensions in cm.

Figure 5.3.19-4 Irradiated Hardware Normal Condition Surface Dose Rate as a Function of Irradiated Hardware Height

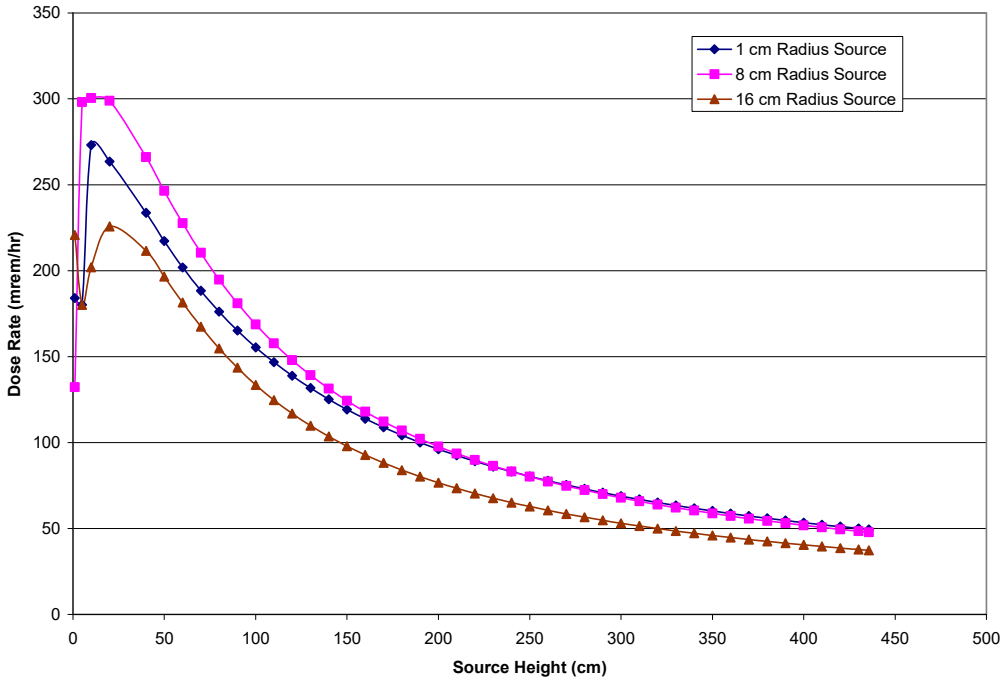

Figure 5.3.19-5 Irradiated Hardware Normal Condition 2 Meter Dose Rate as a Function of Irradiated Hardware Height

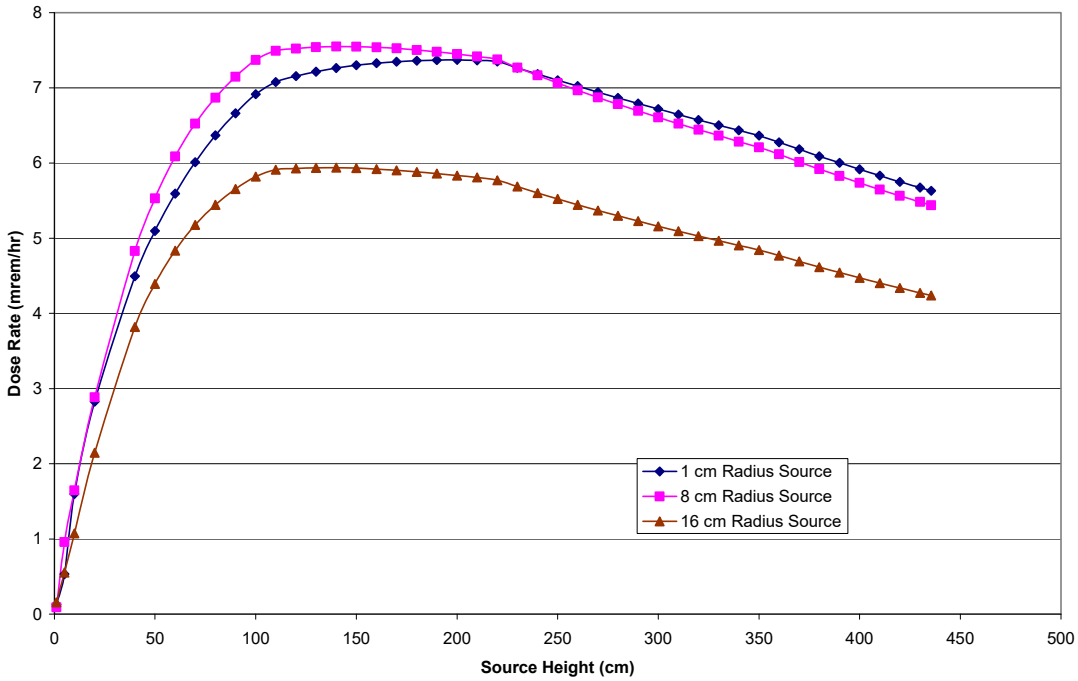

Figure 5.3.19-6 Irradiated Hardware Accident Condition 1 Meter Dose Rate as a Function of Irradiated Hardare Height

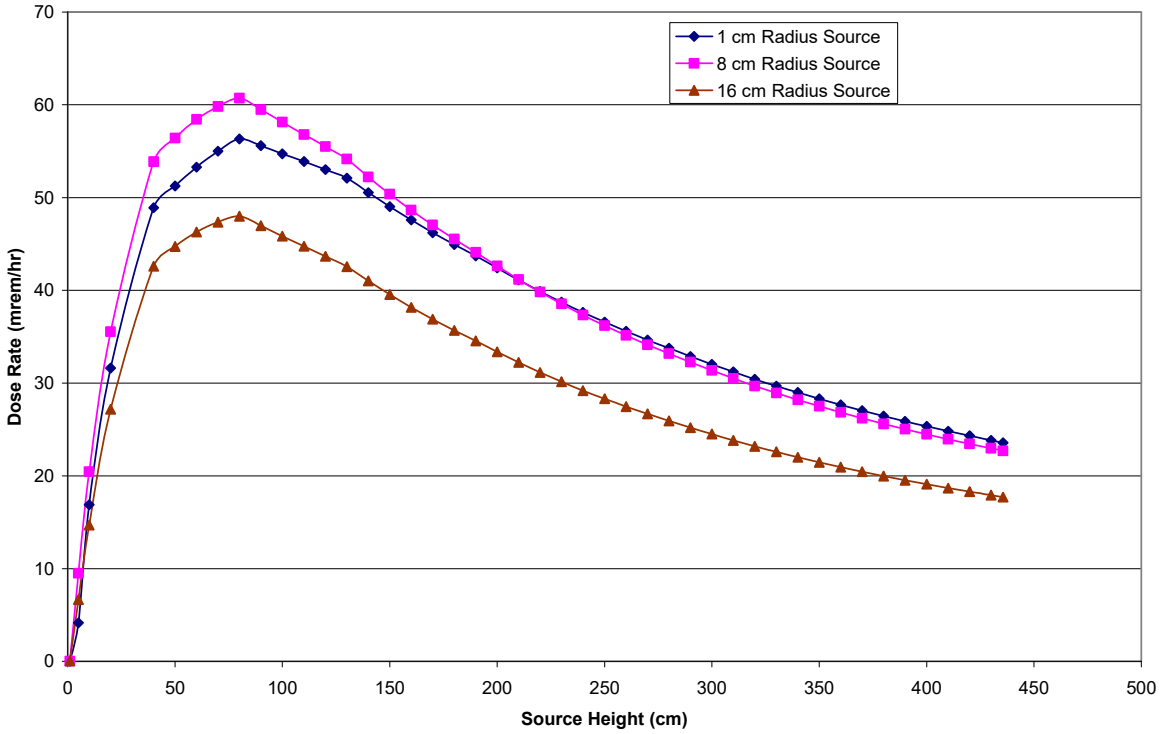

Table 5.3.19-1 Irradiated Hardware Gamma Spectra in SCALE Format (1 kg Activated Stainless Steel)

Energy Group	Source	
	[gamma/sec]	[MeV/sec]
1	0.000E+00	0.000E+00
2	0.000E+00	0.000E+00
3	0.000E+00	0.000E+00
4	0.000E+00	0.000E+00
5	2.631E-15	9.209E-15
6	1.195E+05	3.287E+05
7	7.709E+07	1.735E+08
8	9.199E+09	1.683E+10
9	3.249E+12	4.857E+12
10	1.150E+13	1.340E+13
11	3.950E+12	3.555E+12
12	6.266E+08	4.386E+08
13	5.980E+11	2.990E+11
14	4.581E+11	1.603E+11
15	5.615E+09	1.404E+09
16	2.643E+10	3.964E+09
17	6.543E+10	4.907E+09
18	2.763E+11	8.290E+09
Total	2.014E+13	2.231E+13

Table 5.3.19-2 Material Compositions of the NAC-LWT

Material	SCALE Isotope/Element	Number Density [atom/b-cm]
Stainless Steel	CHROMIUM (SS304)	1.74286E-02
	MANGANESE	1.73633E-03
	IRON (SS304)	5.93579E-02
	NICKEL (SS304)	7.72070E-03
Lead	LEAD	3.29690E-02
Neutron Shield	HYDROGEN	5.99351E-02
	CARBON-12	1.07197E-02
	OXYGEN-16	2.46077E-02

5.3.20 SLOWPOKE Fuel Configuration

Results of a shielding analysis for up to 800 fuel rods in the LWT cask are presented in this section. Maximum dose rates are calculated to demonstrate that dose rate limits of 10 CFR 71.47 are not exceeded.

Dose rates are calculated using the MCNP (MCNP5, Version 1.30) three-dimensional transport code. Source terms are calculated using the TRITON/NEWT module of the SCALE package (SCALE 6.1). Cross section tables used in the MCNP analysis are the default provided in the MCNP5 1.30 distribution and draw on mcplib04 for gamma analysis and isotope dependent data from actia, rmccs, or t16_2003 data for neutron evaluations.

5.3.20.1 SLOWPOKE Fuel Source Term

Source terms are calculated to bound the irradiation history of the SLOWPOKE fuel rods. Fuel rod characteristics are summarized in Table 5.3.20-1. Inputs for irradiation and material parameters required by TRITON are given in Table 5.3.20-2. Key parameters differing between the input and analysis are reduced enrichment, increased fuel mass, and increased irradiation time. All parameters revised to produce bounding source terms. Each of the modified parameters is described below as to its effect on source:

- Increased fuel mass at a fixed depletion value (% ^{235}U depletion) increases source as the total amount of ^{235}U depleted increases, thereby increasing fission product sources.
- Reduced enrichment has opposing effects on source due to its relative effects on fission product versus higher actinide sources. For a fixed depletion percentage, a reduction in ^{235}U percentage will reduce the amount of material depleted, thereby reducing fission product sources, but increasing source as higher actinides are formed by parasitic absorption at a higher rate increasing both neutron and gamma sources. Overall, the source effect from enrichment variations is minor as the enrichment is decreased by only 3% for a high >90% enriched fuel source. This effect is significantly more pronounced for low enrichment fuels.
- Increased irradiation time, in conjunction with a continuous burn at full core power, increases source as it raises the depletion percentage with corresponding increases in both fission products and higher actinides generated. Overall, the conservative irradiation time and fuel core power depletion resulted in a core average ^{235}U depletion of 4.5% versus ~2% average reported for the cores to be transported.

TRITON input is shown in Figure 5.3.20-3, with the resulting TRITON material model shown in Figure 5.3.20-2. Neutron and gamma source terms for a cool time of 14 years from discharge are

presented in Table 5.3.20-3 and Table 5.3.20-4, respectively. The calculated heat load at this cool time is 0.0027 W/rod or 2.17 W/cask (800 rods).

The SLOWPOKE core is designed to be critical using fixed beryllium reflectors surrounding the radial extent of the core and the core bottom. The beryllium reflector top, also referred to as beryllium shim, is adjusted to maintain a critical configuration. Top and bottom reflectors are not included within the scope of the 2-D Triton evaluation. A critical core was modeled by adjusting fuel rod pitch (actual pitch not available; core average source changes by less than 1% over evaluated range of pitch). By setting the system to critical (k_{eff} =1) at beginning of life assures that the neutron spectrum is representative of that in the actual core. k_{eff} decreased during the modeled burnup from 1.0 to 0.99. This minor decrease is not expected to significantly effect neutron spectrum or source produced by the calculation. As a full core was modeled, fuel source was extracted at three radial locations (inner, middle, outer ring) to determine which location produces maximum source. The maximum gamma source (controlling for shielding) was obtained from the middle ring location. The middle ring source was then applied to all fuel rods. While the 2-D analysis cannot capture axial distribution of source in a rod, loading of rods in 5x5 arrays four high will assure that the source is relatively uniformly spread through the axial extent of the cask. Any postulated localized peaking in source will be further reduced after penetrating through the radial shield of the NAC-LWT cask. No dose peaking is expected on the cask surface as a result of axial burnup profile of the individual SLOWPOKE rods.

The effect of subcritical neutron multiplication is directly computed in the MCNP analysis.

5.3.20.2 SLOWPOKE Fuel Shielding Model

MCNP three-dimensional shielding analysis allows detailed modeling of the fuel, basket, and cask shield configurations. Some fuel rod detail is homogenized in the model to simplify model input and improve computational efficiency. The basket and cask body details are explicitly modeled, including the axial extents described by the License Drawings.

The geometric description of a MCNP model is based on the combinatorial geometry system embedded in the code. In this system, bodies such as cylinders and rectangular parallelepipeds, and their logical intersections and unions, are used to describe the extent of material zones.

Source and Canister Models

Options for loading include fuel rod arrays of 4x4 and 5x5 rods. Only the 5x5 array is modeled as it contains maximum fuel/source inventory. These arrays are stacked four high within a canister that also contains a handle. The canister is made of aluminum. Dimensions for the tube array and canister are shown in Table 5.3.20-7. The source region is modeled as a smear within

the canister tubes. The fuel homogenization, shown in Table 5.3.20-5, is based on an area bounded by the aluminum tube. The source height is the active fuel height, 22 cm.

While the fuel rods may be damaged, the results of this model will bound both normal and accident conditions. Aluminum metallic fuel, even when damaged, will not disperse through the canister. The material is also placed into individual tubes which will retain larger fuel sections. Shifts in the material within the canister will also be well bounded by having shifted the canister and payload.

Cross section of the VISED model of the source region are shown in Figure 5.3.20-4 and Figure 5.3.20-5. As shown, the model is moved to its maximum axial elevation which brings it closest to the reduced shielding area of the NAC-LWT. The lowest shielding region is the tapered area of the lead gamma neutron shield, the area below the cask cavity top with no lead shielding.

Basket Model

For a given fuel type, the MCNP description of the basket stack forms a common sub-model employed in the analysis. The key features of the model are the detailed representation of the basket structural members, base plates, and support plates. Basket models are identical to those described in Section 5.3.14. Only four of the basket openings are loaded with SLOWPOKE fuel and only the top two baskets are loaded. The lower two baskets are modeled as void, conservatively removing shielding material and increasing dose rates. Maximum of eight canisters per cask.

MCNP NAC-LWT Model

The three-dimensional model of the NAC-LWT cask is based on the following features.

Normal conditions:

- Radial neutron shield and shield shell
- Aluminum impact limiters with 0.5 g/cm^3 density (calculated based on the impact limiter weight and dimensions) and a diameter equal to the neutron shield shell diameter

Accident conditions:

- Removal of radial neutron shield and shield shell
- Loss of upper and lower impact limiters

Common to both the normal and accident conditions models is a 0.1374 cm gap between the lead outer diameter and the cask outer shell. As stated previously, the elevation of the source regions is set at its maximum axial extent. Detailed model parameters used in creating the three-dimensional model are taken directly from the License Drawings. Elevations associated with the three-dimensional features are established with respect to the center bottom of the NAC-LWT

cask cavity for the MCNP combinatorial model. The cask model is identical to that described in Section 5.3.14. A sample input file is provided in Figure 5.3.14-5.

Shield Regional Densities

Based on the homogenization described for the source, the resulting fuel regional densities are shown in Table 5.3.20-5. Material compositions for structural and shield materials are shown in Table 5.3.20-6.

5.3.20.3 SLOWPOKE Fuel Shielding Evaluation

Calculational Methods

The shielding evaluation is performed using MCNP.

The MCNP shielding model described in Section 5.3.20.2 is utilized with the source terms described in Section 5.3.20.1 to estimate the dose rate profiles at various distances from the side, top and bottom of the cask for both normal and accident conditions. The method of solution is continuous energy Monte Carlo with a Monte Carlo based weight window generator to accelerate code convergence. Weight window and problem convergence is verified by the 10 statistical checks performed by MCNP. Radial or axial biasing is performed depending on the desired dose location.

Significant validation literature is available for MCNP as it is an industry standard tool for spent fuel cask evaluations. Available literature covers a range of shielding penetration problems ranging from slab geometry to spent fuel cask geometries. Confirmatory calculations against other validated shielding codes (SCALE and MCBEND) on NAC casks have further validated the use of MCNP for shielding evaluations.

MCNP Flux-to-Dose Conversion Factors

The ANSI/ANS 6.1.1-1977 flux-to-dose rate conversion factors are employed in the MCNP analysis.

Three-Dimensional Dose Rates for SLOWPOKE Fuel

Table 5.3.20-8 provides maximum and average dose rates for the tabulated distances and transport conditions (normal and accident). Table 5.3.20-9 contains key results.

Calculated normal condition radial surface dose rates are below 200 mrem/hr, therefore do not require an exclusive use designation for the NAC-LWT. The maximum dose rate is dominated by the gamma component. The radial surface dose rate profile is shown in Figure 5.3.20-7. The normal condition maximum radial 2-meter dose rate is 0.002 mrem/hr. The dose rate profile is skewed towards the top of the cask, as shown Figure 5.3.20-8.

Accident condition radial 1-meter dose rates are well below the 1,000 mrem/hr limit. The dose rate profile is shown in Figure 5.3.20-9.

As shown in the dose summary table (Table 5.3.20-9), axial surface dose rates are well below limits for all three source models. Significant margin is present for the normal condition 2-meter and accident condition 1-meter dose rate limits.

Figure 5.3.20-1 SLOWPOKE Fuel Element

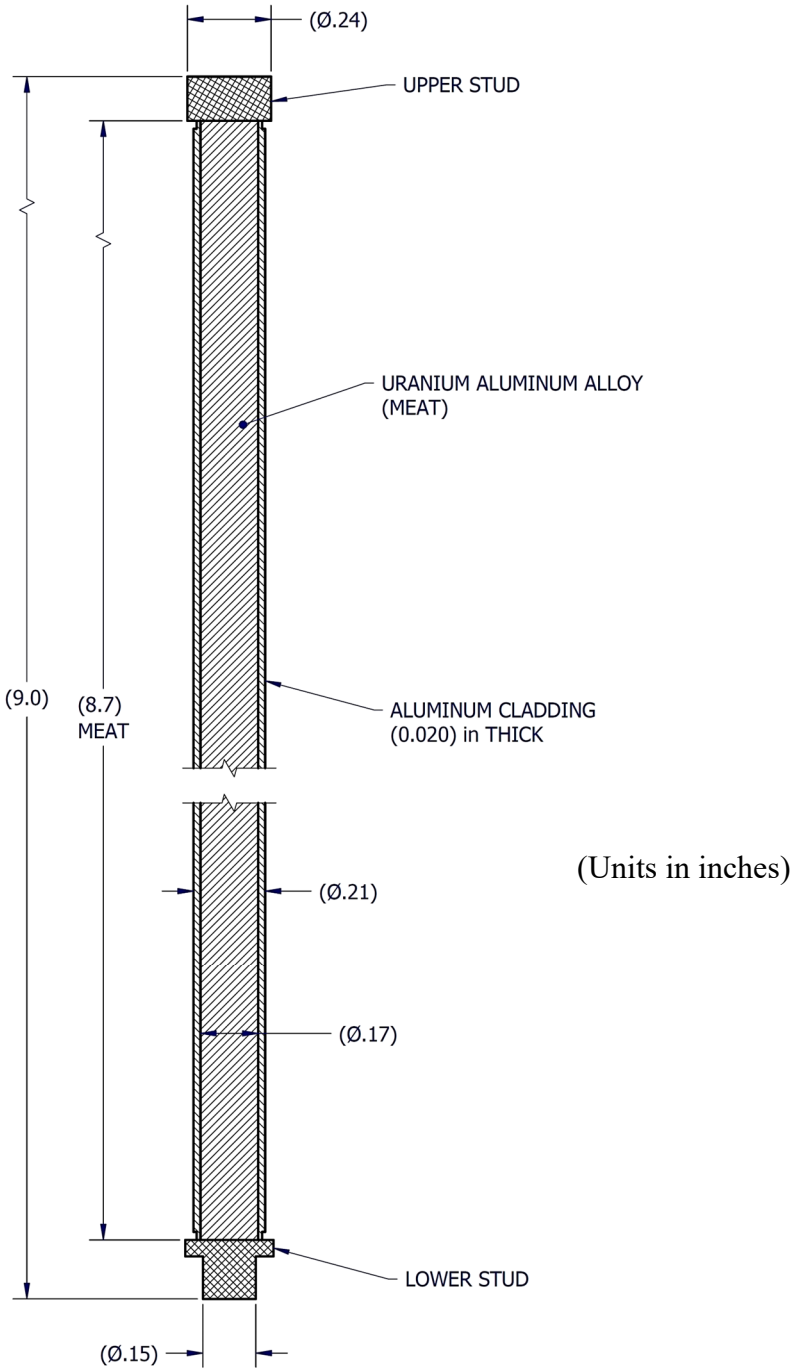

Figure 5.3.20-2 SLOWPOKE Core Model

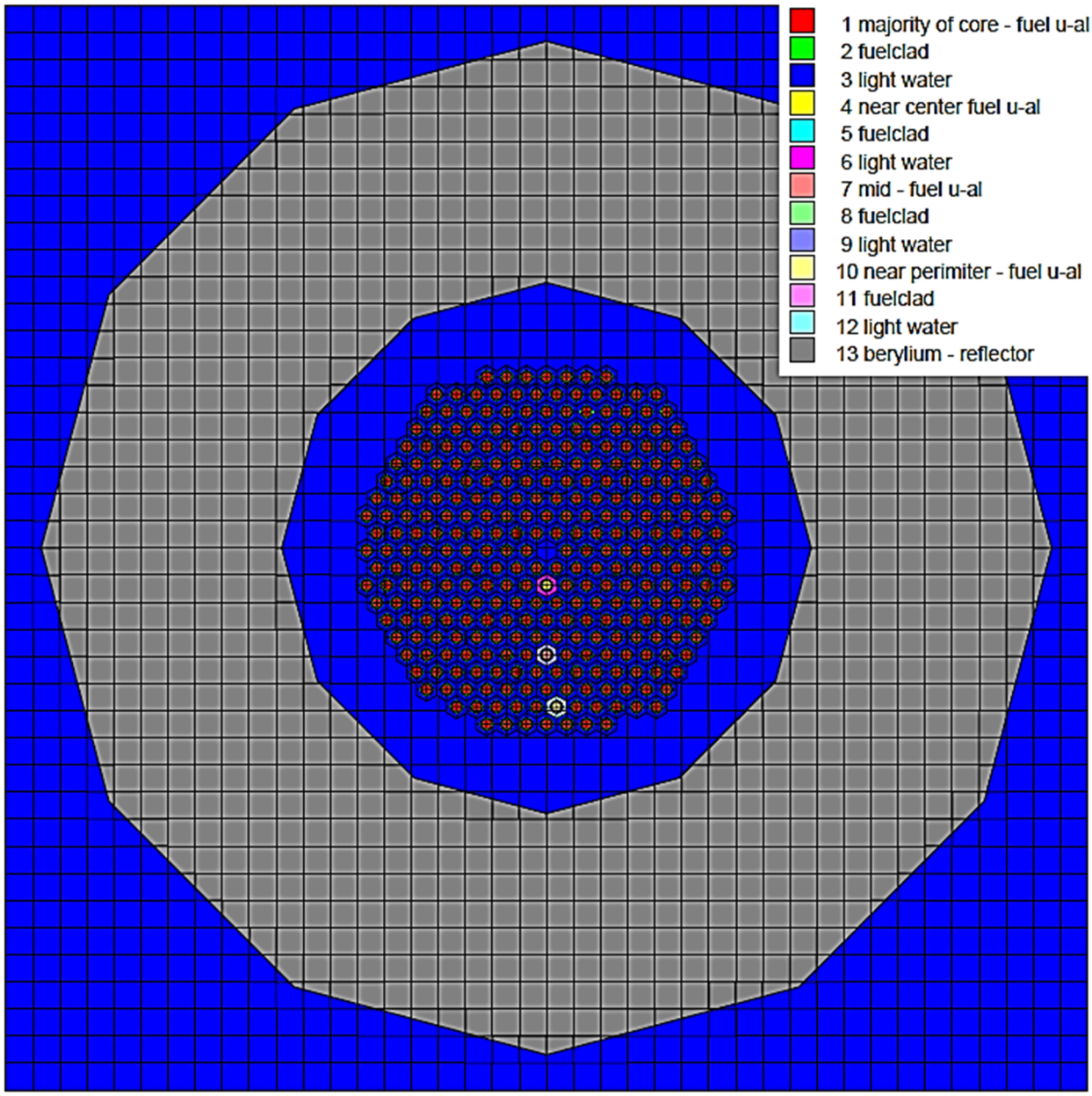

Figure 5.3.20-3 TRITON Input for SLOWPOKE Fuel

```
=t-depl
SLOWPOKE CORE NEWT / CENTRM Depletion - 0.85 cm Rod Pitch - 30 GWD/MTU
V7-238
read comp
U    1 DEN=3.51 0.288 373.0  92235 90.0  92238  10.0  END
AL   1 DEN=3.51 0.712 373.0  END
AL   2  1.0  363.0  END
H2O  3  1.0  313.0  END
U    4 DEN=3.51 0.288 373.0  92235 90.0  92238  10.0  END
AL   4 DEN=3.51 0.712 373.0  END
AL   5  1.0  363.0  END
H2O  6  1.0  313.0  END
U    7 DEN=3.51 0.288 373.0  92235 90.0  92238  10.0  END
AL   7 DEN=3.51 0.712 373.0  END
AL   8  1.0  363.0  END
H2O  9  1.0  313.0  END
U   10 DEN=3.51 0.288 373.0  92235 90.0  92238  10.0  END
AL  10 DEN=3.51 0.712 373.0  END
AL  11  1.0  363.0  END
H2O 12  1.0  313.0  END
BE   13  1.0  313.0  END
end comp
read celldata
latticecell triangpitch pitch=0.85 3 fueld=0.422 1 cladd=0.524 2 end
latticecell triangpitch pitch=0.85 6 fueld=0.422 4 cladd=0.524 5 end
latticecell triangpitch pitch=0.85 9 fueld=0.422 7 cladd=0.524 8 end
latticecell triangpitch pitch=0.85 12 fueld=0.422 10 cladd=0.524 11 end
end celldata
read depletion 1 4 7 10 end depletion
read opus
matl= 1 4 7 10 0 end units=grams
new case
units=watts
new case
typarams=gspectrum
units=part
new case
typarams=nspectrum
units=parts
end opus
read burndata
' 980 gram fuel - 20kW/Core  - Core Diameter 22 cm  - 7.8 l Water in Core
power=20 burn=1470 down=5100 end
end burndata
read model
SLOWPOKE 315 Rod Assembly - Berylium Reflector - Collapse 44-group
read parm
  prtflux=no  drawit=yes   collapse=yes
  xnlib=4 run=yes prtmxsec=no prtbroad=no
  prtmxtab=yes cmfd=no echo=yes
end parm
read materials
  1 1 !majority of core - fuel u-al! end
  2 1 !fuelclad! end
```

Figure 5.3.20-3 TRITON Input for SLOWPOKE Fuel (Continued)

```
  3 2 !light water! end
  4 1 !near center fuel u-al! end
  5 1 !fuelclad! end
  6 2 !light water! end
  7 1 !mid - fuel u-al! end
  8 1 !fuelclad! end
  9 2 !light water! end
  10 1 !near perimiter - fuel u-al! end
  11 1 !fuelclad! end
  12 2 !light water! end
  13 2 !berylium - reflector! end
end materials
read collapse
7r1 2 3 2r4 5 6 7 8 8 8r9 14r10 6r11 10r12 13 7r14 11r15 12r16 30r17 16r18 2r19
6r20 3r21 6r22 14r23 3r24 5r25 4r26 5r27 5r28 5r29 10r30 5r31 32 33 34 2r35
36 37 38 2r39 2r40 3r41 2r42 43 44 45 46 47 3r48 9r49 end collapse
read geom
' Balance Core
unit 1
cylinder 10 0.2011
cylinder 20 0.262
hexprism 30 0.425
media 1 1 10
media 2 1 20 -10
media 3 1 30 -20
boundary 30 2 2
' Near Center
unit 2
cylinder 10 0.2011
cylinder 20 0.262
hexprism 30 0.425
media 4 1 10
media 5 1 20 -10
media 6 1 30 -20
boundary 30 2 2
' Mid Range
unit 3
cylinder 10 0.2011
cylinder 20 0.262
hexprism 30 0.425
media 7 1 10
media 8 1 20 -10
media 9 1 30 -20
boundary 30 2 2
' Near Perimeter
unit 4
cylinder 10 0.2011
cylinder 20 0.262
hexprism 30 0.425
media 10 1 10
media 11 1 20 -10
media 12 1 30 -20
boundary 30 2 2
global unit 10
cylinder 110 11.0
```

Figure 5.3.20-3 TRITON Input for SLOWPOKE Fuel (Continued)

```
cylinder 120 21.0
cuboid 130 23.0 -23.0 23.0 -23.0
array 1 110 place 10 10 -0.425 -0.850
media 3 1 110
media 13 1 120 -110
media 3 1 130 -120
boundary 130 40 40
'
end geom
read array
ara=1 typ=shexagonal nux=21 nuy=21
fill
0 0 0 0 0 0 0 1 1 1 1 1 1 1 0 0 0 0 0 0 0
0 0 0 0 0 0 1 1 1 1 1 4 1 1 1 1 1 1 0 0 0 0 0
0 0 0 0 0 1 1 1 1 1 1 1 1 1 1 1 1 1 1 0 0 0 0
0 0 0 0 1 1 1 1 1 1 1 1 1 1 1 1 1 1 1 0 0 0 0
0 0 0 1 1 1 1 1 1 1 1 1 1 1 1 1 1 1 1 0 0 0 0
0 0 0 1 1 1 1 1 1 1 3 1 1 1 1 1 1 1 1 0 0 0 0
0 0 1 1 1 1 1 1 1 1 1 1 1 1 1 1 1 1 1 0 0 0 0
0 0 1 1 1 1 1 1 1 1 1 1 1 1 1 1 1 1 1 1 0 0 0
0 1 1 1 1 1 1 1 1 1 1 1 1 1 1 1 1 1 1 1 0 0 0
0 1 1 1 1 1 1 1 1 1 1 2 1 1 1 1 1 1 1 1 1 0 0
0 1 1 1 1 1 1 1 1 1 1 1 1 1 1 1 1 1 1 1 0 0 0
0 1 1 1 1 1 1 1 1 1 1 0 1 1 1 1 1 1 1 1 1 0 0
0 1 1 1 1 1 1 1 1 1 1 1 1 1 1 1 1 1 1 1 0 0 0
0 1 1 1 1 1 1 1 1 1 1 1 1 1 1 1 1 1 1 1 1 0 0
0 1 1 1 1 1 1 1 1 1 1 1 1 1 1 1 1 1 1 1 0 0 0
0 0 1 1 1 1 1 1 1 1 1 1 1 1 1 1 1 1 1 1 0 0 0
0 0 1 1 1 1 1 1 1 1 1 1 1 1 1 1 1 1 1 0 0 0 0
0 0 0 1 1 1 1 1 1 1 1 1 1 1 1 1 1 1 1 0 0 0 0
0 0 0 1 1 1 1 1 1 1 1 1 1 1 1 1 1 1 1 0 0 0 0
0 0 0 0 1 1 1 1 1 1 1 1 1 1 1 1 1 1 1 0 0 0 0
0 0 0 0 1 1 1 1 1 1 1 1 1 1 1 1 1 1 1 0 0 0 0
0 0 0 0 0 0 0 1 1 1 1 1 1 1 1 0 0 0 0 0 0 0 0
end fill
end array
read bounds all=vacuum end bounds
end model
end
```

Figure 5.3.20-4 VISED X-Y Slice – SLOWPOKE – Normal Conditions

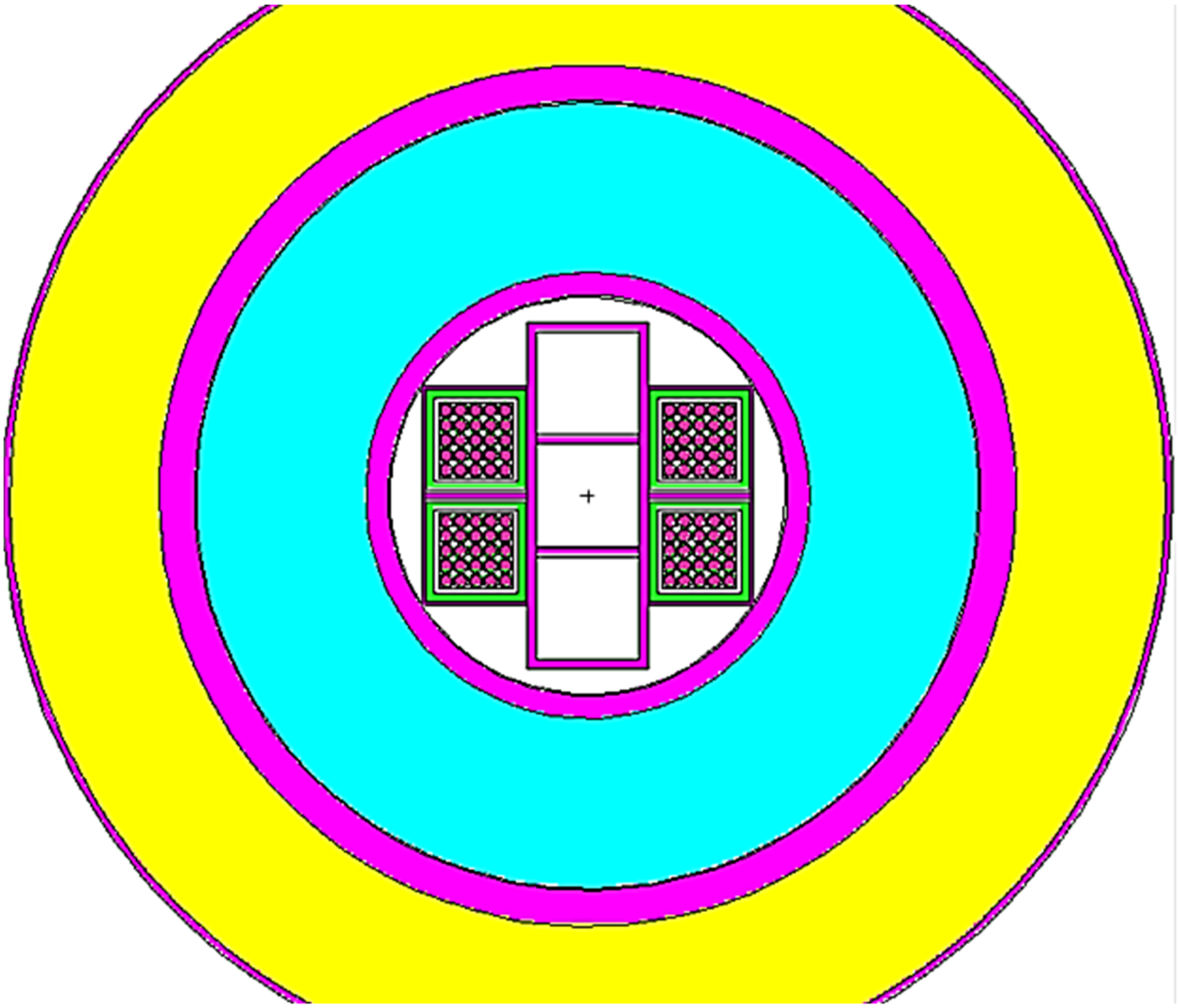

Figure 5.3.20-5 VISED Y-Z Slice – SLOWPOKE – Normal Conditions

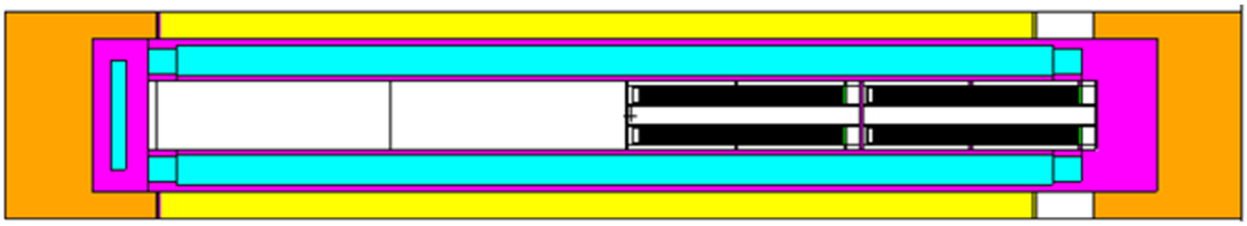

Note: Conservatively moved material to cask cavity top.

Figure 5.3.20-6 Sample MCNP Input File – Normal Conditions

```
NAC-LWT Cask - Assy_30b90e14y - Normal Transport Conditions
C Radial Biasing - Fuel Gamma Source
C Fuel Assembly Cells
1  1  -0.8543  -1  +3       u=7  $ Homogenized Fuel Meat + Clad
2  0         -1  -3       u=7  $ Void
3  4  -2.7000  -2  +1       u=7  $ Tube OD
4  0         +2        u=7  $ Outside Tube
5  4  -2.7000  -5        u=6  $ Tube Base Plate
6  0         -4  fill=7  trcl = ( -2.5400 2.5400 0.6351 )     u=6  $ Tube 1
7  like  6  but  fill=7  trcl = ( -1.2700 2.5400 0.6351 )     u=6  $ Tube 2
8  like  6  but  fill=7  trcl = ( 0.0000 2.5400 0.6351 )     u=6  $ Tube 3
9  like  6  but  fill=7  trcl = ( 1.2700 2.5400 0.6351 )     u=6  $ Tube 4
10  like  6  but  fill=7  trcl = ( 2.5400 2.5400 0.6351 )     u=6  $ Tube 5
11  like  6  but  fill=7  trcl = ( -2.5400 1.2700 0.6351 )     u=6  $ Tube 6
12  like  6  but  fill=7  trcl = ( -1.2700 1.2700 0.6351 )     u=6  $ Tube 7
13  like  6  but  fill=7  trcl = ( 0.0000 1.2700 0.6351 )     u=6  $ Tube 8
14  like  6  but  fill=7  trcl = ( 1.2700 1.2700 0.6351 )     u=6  $ Tube 9
15  like  6  but  fill=7  trcl = ( 2.5400 1.2700 0.6351 )     u=6  $ Tube 10
16  like  6  but  fill=7  trcl = ( -2.5400 0.0000 0.6351 )     u=6  $ Tube 11
17  like  6  but  fill=7  trcl = ( -1.2700 0.0000 0.6351 )     u=6  $ Tube 12
18  like  6  but  fill=7  trcl = ( 0.0000 0.0000 0.6351 )     u=6  $ Tube 13
19  like  6  but  fill=7  trcl = ( 1.2700 0.0000 0.6351 )     u=6  $ Tube 14
20  like  6  but  fill=7  trcl = ( 2.5400 0.0000 0.6351 )     u=6  $ Tube 15
21  like  6  but  fill=7  trcl = ( -2.5400 -1.2700 0.6351 )     u=6  $ Tube 16
22  like  6  but  fill=7  trcl = ( -1.2700 -1.2700 0.6351 )     u=6  $ Tube 17
23  like  6  but  fill=7  trcl = ( 0.0000 -1.2700 0.6351 )     u=6  $ Tube 18
24  like  6  but  fill=7  trcl = ( 1.2700 -1.2700 0.6351 )     u=6  $ Tube 19
25  like  6  but  fill=7  trcl = ( 2.5400 -1.2700 0.6351 )     u=6  $ Tube 20
26  like  6  but  fill=7  trcl = ( -2.5400 -2.5400 0.6351 )     u=6  $ Tube 21
27  like  6  but  fill=7  trcl = ( -1.2700 -2.5400 0.6351 )     u=6  $ Tube 22
28  like  6  but  fill=7  trcl = ( 0.0000 -2.5400 0.6351 )     u=6  $ Tube 23
29  like  6  but  fill=7  trcl = ( 1.2700 -2.5400 0.6351 )     u=6  $ Tube 24
30  like  6  but  fill=7  trcl = ( 2.5400 -2.5400 0.6351 )     u=6  $ Tube 25
31  0         #5 #6 #7 #8 #9 #10 #11 #12 #13 #14 #15 #16 #17 #18
          #19 #20 #21 #22 #23 #24 #25 #26 #27 #28 #29 #30
               u=6  $ Void
32  4  -2.7000  -7        u=5  $ Can Base Plate
33  4  -2.7000  -9  +8  +7     u=5  $ Can
34  0         -6  fill=6  trcl = ( 0.0000 0.0000 3.0924 )     u=5  $ Tube Assy 1
35  like  34  but  fill=6  trcl = ( 0.0000 0.0000 27.2225 )     u=5  $ Tube Assy 2
36  like  34  but  fill=6  trcl = ( 0.0000 0.0000 51.3526 )     u=5  $ Tube Assy 3
37  like  34  but  fill=6  trcl = ( 0.0000 0.0000 75.4827 )     u=5  $ Tube Assy 4
38  4  -2.7000  -10        u=5  $ Can Lid Bottom Plate
39  4  -2.7000  -11        u=5  $ Can Lid Top Plate
40  0         #32 #33 #34 #35 #36 #37 #38 #39         u=5  $ Void
C Cells - MTR 7 Element Basket
41  6  -7.9400  -13  +16 +17 +18 +19 +20 +21 +22       u=4  $ Base plate
42  6  -7.9400  -14  +23 +27       u=4  $ Support plate
43  6  -7.9400  -15  +23 +27       u=4  $ Support plate
44  6  -7.9400  -23  +24  #41 #42 #43      u=4  $ Center column
```

Figure 5.3.20-6 Sample MCNP Input File – Normal Conditions (Continued)

```
45  6  -7.9400  -25  #41 #42 #43       u=4  $ Center divider upper
46  6  -7.9400  -26  #41 #42 #43       u=4  $ Center divider lower
47  6  -7.9400  -27  +28  +23  #41 #42 #43    u=4  $ Small side
48  6  -7.9400  -29  #41 #42 #43       u=4  $ Left divider
49  6  -7.9400  -30  #41 #42 #43       u=4  $ Right divider
50  0        #41 #42 #43 #44 #45 #46 #47 #48 #49         u=4  $ Void
C Cells - Basket Cavity
51  0        -12  fill=5  trcl = ( -9.5250 4.6990 3.1877 )     u=3  $ UL
52  like  51  but  fill=5  trcl = ( -9.5250 -4.6990 3.1877 )     u=3  $ LL
53  like  51  but  fill=5  trcl = ( 9.5250 4.6990 3.1877 )     u=3  $ UR
54  like  51  but  fill=5  trcl = ( 9.5250 -4.6990 3.1877 )     u=3  $ LR
55  0        #51 #52 #53 #54       fill=4  u=3  $ Void
C Cells - LWT Cavity
56  0        -38       u=2
57  0        -39       u=2
58  0        -40  fill=3  ( 0.0000 0.0000 227.3300 )     u=2
59  0        -41  fill=3  ( 0.0000 0.0000 339.0900 )     u=2
60  0        #56 #57 #58 #59         u=2
C Cells - LWT Cask Normal Conditions
61  5  -11.344  -45        u=1  $ BotPb
62  0        -44  fill=2       u=1  $ Cavity
63  6  -7.9400  -42  -43  +45     u=1  $ Bottom
64  6  -7.9400  -42  +43  +47  +50  +44  u=1  $ OuterShell
65  6  -7.9400  -46  +49  +44     u=1  $ InnerShellTaper
66  6  -7.9400  -48  +44       u=1  $ InnerShell
67  5  -11.344  -49  +48       u=1  $ Lead
68  5  -11.344  -47  +46  +49     u=1  $ LeadTaper
69  0        -50  +49       u=1  $ LeadGap
70  3  -0.9669  -52  +42       u=1  $ NeutronShield
71  6  -7.9400  -51  +42  +52     u=1  $ NSShell
72  7  -0.4997  -53  +42       u=1  $ UpperLimiter
73  7  -0.4997  -54  +42       u=1  $ LowerLimiter
74  0        -55  +42  +51  +53  +54  u=1  $ Container
75  0        +55       u=1  $ Outside
C Detector Cells - Radial Biasing
100  0  -100  fill=1  $ Surface
200  0  -200  +100  $ 1ft
300  0  -300  +100  +200  $ 1m
400  0  -400  +100  +200  +300  $ 2m
500  0  -500  +100  +200  +300  +400  $ 2m+Convey
600  0  +100  +200  +300  +400  +500  $ Exterior

C Fuel Assembly Surfaces
1  RCC  0.0000  0.0000  0.0000  0.0000  0.0000  23.4950  0.5080  $ Tube ID
2  RCC  0.0000  0.0000  0.0000  0.0000  0.0000  23.4950  0.6349  $ Tube OD
3  PZ  1.4950           $ Fuel Cut Plain
4  RCC  0.0000  0.0000  0.0000  0.0000  0.0000  23.4951  0.6350  $ Tube
5  RPP  -3.1750  3.1750  -3.1750  3.1750  0.0000  0.6350   $ Tube Base Plate
6  RPP  -3.1751  3.1751  -3.1751  3.1751  0.0000  24.1301   $ Tube Container
7  RPP  -4.1910  4.1910  -4.1910  4.1910  0.0000  0.4699   $ Can Base Plate
8  RPP  -3.5560  3.5560  -3.5560  3.5560  0.0000  100.6475   $ Can ID
```

Figure 5.3.20-6 Sample MCNP Input File – Normal Conditions (Continued)

```
9  RPP  -4.1910  4.1910  -4.1910  4.1910  0.0000  100.6475   $ Can OD
10  RPP  -3.4925  3.4925  -3.4925  3.4925  99.6823  100.6475   $ Can Lid Lower Plate
11  RPP  -4.1910  4.1910  -4.1910  4.1910  100.6475  102.2223   $ Can Lid Upper Plate
12  RPP  -4.1911  4.1911  -4.1911  4.1911  0.0000  102.2223   $ Container
C Surfaces - MTR 7 Element Basket
13  RCC  0.0000  0.0000  0.0000  0.0000  0.0000  1.2700  16.8466  $ Base plate
14  RCC  0.0000  0.0000  52.0700  0.0000  0.0000  1.2700  16.8466  $ Support plate
15  RCC  0.0000  0.0000  104.1400  0.0000  0.0000  1.2700  16.8466  $ Support plate
16  CZ  1.2700          $ Hole CC
17  C/Z  0.0000  9.5250  1.2700        $ Hole UC
18  C/Z  0.0000  -9.5250  1.2700        $ Hole LC
19  C/Z  -9.5250  4.6990  1.2700        $ Hole UL
20  C/Z  -9.5250  -4.6990  1.2700        $ Hole LL
21  C/Z  9.5250  4.6990  1.2700        $ Hole UR
22  C/Z  9.5250  -4.6990  1.2700        $ Hole LR
23  RPP  -5.1604  5.1604  -14.6939  14.6939  1.2700  111.7600   $ Center column outer
24  RPP  -4.3667  4.3667  -13.9002  13.9002  1.2700  111.7600   $ Center column inner
25  RPP  -4.3667  4.3667  4.3688  5.1626  1.2700  111.7600   $ Center divider upper
26  RPP  -4.3667  4.3667  -5.1626  -4.3688  1.2700  111.7600   $ Center divider lower
27  RPP  -14.1986  14.1986  -9.3599  9.3599  1.2700  111.7600   $ Small side outer
28  RPP  -13.8938  13.8938  -9.0551  9.0551  1.2700  111.7600   $ Small side inner
29  RPP  -13.8938  -5.1604  -0.3175  0.3175  1.2700  111.7600   $ Left divider
30  RPP  5.1604  13.8938  -0.3175  0.3175  1.2700  111.7600   $ Right divider
C Surfaces - Basket Cavity
31  RPP  -4.3667  4.3667  -4.3688  4.3688  1.2700  111.7600   $ CC
32  RPP  -4.3667  4.3667  5.1626  13.9002  1.2700  111.7600   $ UC
33  RPP  -4.3667  4.3667  -13.9002  -5.1626  1.2700  111.7600   $ LC
34  RPP  -13.8938  -5.1604  0.6350  9.3726  1.2700  111.7600   $ UL
35  RPP  -13.8938  -5.1604  -9.3726  -0.6350  1.2700  111.7600   $ LL
36  RPP  5.1604  13.8938  0.6350  9.3726  1.2700  111.7600   $ UR
37  RPP  5.1604  13.8938  -9.3726  -0.6350  1.2700  111.7600   $ LR
C Surfaces - LWT Cavity
38  RCC  0.0000  0.0000  3.8100  0.0000  0.0000  111.7600  16.8467  $ Basket
39  RCC  0.0000  0.0000  115.5700  0.0000  0.0000  111.7600  16.8467  $ Basket
40  RCC  0.0000  0.0000  227.3300  0.0000  0.0000  111.7600  16.8467  $ Basket
41  RCC  0.0000  0.0000  339.0900  0.0000  0.0000  111.7600  16.8467  $ Basket
C Surfaces - LWT Cask Normal Conditions
42  RCC  0.0000  0.0000  -26.6700  0.0000  0.0000  507.3650  36.5189  $ Lwt
43  RCC  0.0000  0.0000  -26.6700  0.0000  0.0000  26.6700  36.5189  $ Bottom
44  RCC  0.0000  0.0000  0.0000  0.0000  0.0000  452.1200  16.9863  $ Cavity
45  RCC  0.0000  0.0000  -17.7800  0.0000  0.0000  7.6200  26.3525  $ Bottom gamma shield
46  RCC  0.0000  0.0000  0.0000  0.0000  0.0000  444.5000  20.1740  $ Lead id - taper
47  RCC  0.0000  0.0000  0.0000  0.0000  0.0000  444.5000  31.5976  $ Lead od - taper
48  RCC  0.0000  0.0000  13.8176  0.0000  0.0000  416.8648  18.9103  $ Lead id
49  RCC  0.0000  0.0000  13.8176  0.0000  0.0000  416.8648  33.3271  $ Lead od
50  RCC  0.0000  0.0000  13.8176  0.0000  0.0000  416.8648  33.4645  $ Lead gap
51  RCC  0.0000  0.0000  3.8100  0.0000  0.0000  419.1000  49.8183  $ Neutron shield shell
52  RCC  0.0000  0.0000  5.0800  0.0000  0.0000  416.5600  49.2189  $ Neutron shield
53  RCC  0.0000  0.0000  450.2150  0.0000  0.0000  70.5612  49.8183  $ Upper limiter
54  RCC  0.0000  0.0000  -68.0212  0.0000  0.0000  71.8312  49.8183  $ Lower limiter
55  RCC  0.0000  0.0000  -68.0212  0.0000  0.0000  588.7974  49.8183  $ Container
```

Figure 5.3.20-6 Sample MCNP Input File – Normal Conditions (Continued)

```
C Radial Detector DRA (Surface)
100 RCC 0.0000 0.0000 -68.1212 0.0000 0.0000 588.9974 49.9184
101 PZ -38.6713
102 PZ -9.2215
103 PZ 20.2284
104 PZ 49.6783
105 PZ 79.1282
106 PZ 108.5780
107 PZ 138.0279
108 PZ 167.4778
109 PZ 196.9276
110 PZ 226.3775
111 PZ 255.8274
112 PZ 285.2772
113 PZ 314.7271
114 PZ 344.1770
115 PZ 373.6269
116 PZ 403.0767
117 PZ 432.5266
118 PZ 461.9765
119 PZ 491.4263
C Radial Detector DRB (1ft)
200 RCC 0.0000 0.0000 -98.6012 0.0000 0.0000 649.9574 80.2984
201 PZ -66.1033
202 PZ -33.6055
203 PZ -1.1076
204 PZ 31.3903
205 PZ 63.8882
206 PZ 96.3860
207 PZ 128.8839
208 PZ 161.3818
209 PZ 193.8796
210 PZ 226.3775
211 PZ 258.8754
212 PZ 291.3732
213 PZ 323.8711
214 PZ 356.3690
215 PZ 388.8669
216 PZ 421.3647
217 PZ 453.8626
218 PZ 486.3605
219 PZ 518.8583
C Radial Detector DRC (1m)
300 RCC 0.0000 0.0000 -168.1212 0.0000 0.0000 788.9974 149.8184
301 PZ -135.2463
302 PZ -102.3714
303 PZ -69.4965
304 PZ -36.6216
305 PZ -3.7467
306 PZ 29.1282
307 PZ 62.0030
```

Figure 5.3.20-6 Sample MCNP Input File – Normal Conditions (Continued)

```
308 PZ 94.8779
309 PZ 127.7528
310 PZ 160.6277
311 PZ 193.5026
312 PZ 226.3775
313 PZ 259.2524
314 PZ 292.1273
315 PZ 325.0022
316 PZ 357.8771
317 PZ 390.7520
318 PZ 423.6269
319 PZ 456.5017
320 PZ 489.3766
321 PZ 522.2515
322 PZ 555.1264
323 PZ 588.0013
C Radial Detector DRD (2m)
400 RCC 0.0000 0.0000 -268.1212 0.0000 0.0000 988.9974 249.8184
401 PZ -226.9130
402 PZ -185.7048
403 PZ -144.4965
404 PZ -103.2883
405 PZ -62.0801
406 PZ -20.8719
407 PZ 20.3364
408 PZ 61.5446
409 PZ 102.7528
410 PZ 143.9611
411 PZ 185.1693
412 PZ 226.3775
413 PZ 267.5857
414 PZ 308.7940
415 PZ 350.0022
416 PZ 391.2104
417 PZ 432.4186
418 PZ 473.6269
419 PZ 514.8351
420 PZ 556.0433
421 PZ 597.2515
422 PZ 638.4598
423 PZ 679.6680
C Radial Detector DRE (2m+Convey)
500 RCC 0.0000 0.0000 -269.1212 0.0000 0.0000 990.9974 321.9200
501 PZ -227.8296
502 PZ -186.5381
503 PZ -145.2465
504 PZ -103.9550
505 PZ -62.6634
506 PZ -21.3719
507 PZ 19.9197
508 PZ 61.2113
```

Figure 5.3.20-6 Sample MCNP Input File – Normal Conditions (Continued)

```
509  PZ  102.5028
510  PZ  143.7944
511  PZ  185.0859
512  PZ  226.3775
513  PZ  267.6691
514  PZ  308.9606
515  PZ  350.2522
516  PZ  391.5437
517  PZ  432.8353
518  PZ  474.1269
519  PZ  515.4184
520  PZ  556.7100
521  PZ  598.0015
522  PZ  639.2931
523  PZ  680.5846

C
C Materials List
C
C Homogenized U-Al Fuel
m1    92235  -1.7661E-01  92238  -1.9624E-02  13027  -8.0376E-01
C Water
m2    1001  6.6667E-01  8016  3.3333E-01
mt2   lwtr.01
C Water/Glycol
m3    1001  -1.03651E-01  8016  -6.75619E-01  6000  -2.20730E-01
C Aluminum
m4    13027  -1.0
C Lead
m5    82000  -1.0
C Stainless Steel 304
m6    26000  -0.695  24000  -0.190  28000  -0.095
      25055  -0.020
C Aluminum Honeycomb Impact Limiter
m7    13027  -1.0
C
C Cell Importances
imp:p 1 79r 0
C
C Source Definition - Fuel Gamma
C 30% burnup,  wt % U-235, 14-year cool time, 2.786 g U-235 per rod, 0.003 W/rod
sdef  RAD=d1  EXT=d2  ERG=d3  cell=100:62:d4:d5:d6:d7:1
     POS=  0.0000  0.0000  1.4950
     AXS=  0.0000  0.0000  1.0000
si1  0  0.5080
sp1  -21  1
si2  0  22.0000
sp2  -21  1
si3  1.000E-02  4.500E-02  1.000E-01  2.000E-01  3.000E-01  4.000E-01
    6.000E-01  8.000E-01  1.000E+00  1.330E+00  1.660E+00  2.000E+00
    2.500E+00  3.000E+00  4.000E+00  5.000E+00  6.500E+00  8.000E+00
```

Figure 5.3.20-6 Sample MCNP Input File – Normal Conditions (Continued)

```
   1.000E+01
sp3  0.0000E+00  4.6619E+09  1.6170E+09  9.2992E+08  2.9371E+08  2.1001E+08
   1.5357E+08  6.8443E+09  3.0713E+07  1.9365E+07  3.4947E+06  5.3655E+05
   3.1683E+04  1.8502E+02  1.2818E+01  1.1290E-03  4.3894E-04  8.3643E-05
   1.7944E-05
si4 l  58  59
sp4  1.0  1.0
si5 l  51  52  53  54
sp5  1.0  1.0  1.0  1.0
si6 l  34  35  36  37
sp6  1.0  1.0  1.0  1.0
si7 l  6  7  8  9  10  11
     12  13  14  15  16  17
     18  19  20  21  22  23
     24  25  26  27  28  29
     30
sp7  1.0  1.0  1.0  1.0  1.0  1.0
   1.0  1.0  1.0  1.0  1.0  1.0
   1.0  1.0  1.0  1.0  1.0  1.0
   1.0  1.0  1.0  1.0  1.0  1.0
   1.0
mode p
nps  160000000
C
C ANSI/ANS-6.1.1-1977 - Gamma Flux-to-Dose Conversion Factors
C (mrem/hr)/(photons/cm2-sec)
de0  0.01  0.03  0.05  0.07  0.1  0.15  0.2
   0.25  0.3  0.35  0.4  0.45  0.5  0.55
   0.6  0.65  0.7  0.8  1  1.4  1.8
   2.2  2.6  2.8  3.25  3.75  4.25  4.75
   5  5.25  5.75  6.25  6.75  7.5  9
   11  13  15
df0  3.96E-03  5.82E-04  2.90E-04  2.58E-04  2.83E-04  3.79E-04  5.01E-04
   6.31E-04  7.59E-04  8.78E-04  9.85E-04  1.08E-03  1.17E-03  1.27E-03
   1.36E-03  1.44E-03  1.52E-03  1.68E-03  1.98E-03  2.51E-03  2.99E-03
   3.42E-03  3.82E-03  4.01E-03  4.41E-03  4.83E-03  5.23E-03  5.60E-03
   5.80E-03  6.01E-03  6.37E-03  6.74E-03  7.11E-03  7.66E-03  8.77E-03
   1.03E-02  1.18E-02  1.33E-02
C
C Weight Window Generation - Radial
wwg  2 0 0 0 0
wwp:p  5 3 5 0 -1 0
mesh  geom=cyl ref=0 13 243 origin=0.1 0.1 -568
     imesh  16.8 17.0 18.9 33.3 36.5 49.2 49.8 549.8
     iints  1 1 1 5 1 1 1 1
     jmesh  500 541 550 558 568 577 1019 1020 1049 1089 1589
     jints  1 1 1 1 1 1 1 1 1 1 1
     kmesh  1
     kints  1
wwge:p  1e-3 1 20
fc2 Radial Surface Tally
```

Figure 5.3.20-6 Sample MCNP Input File – Normal Conditions (Continued)

```
f2:p +100.1
fm2 1.18116E+13
fs2  -101  -102  -103  -104  -105  -106
   -107  -108  -109  -110  -111  -112
   -113  -114  -115  -116  -117  -118
   -119  T
tf2
fc12 Radial 1ft Tally
f12:p +200.1
fm12 1.18116E+13
fs12  -201  -202  -203  -204  -205  -206
   -207  -208  -209  -210  -211  -212
   -213  -214  -215  -216  -217  -218
   -219  T
tf12
fc22 Radial 1m Tally
f22:p +300.1
fm22 1.18116E+13
fs22  -301  -302  -303  -304  -305  -306
   -307  -308  -309  -310  -311  -312
   -313  -314  -315  -316  -317  -318
   -319  -320  -321  -322  -323  T
tf22
fc32 Radial 2m Tally
f32:p +400.1
fm32 1.18116E+13
fs32  -401  -402  -403  -404  -405  -406
   -407  -408  -409  -410  -411  -412
   -413  -414  -415  -416  -417  -418
   -419  -420  -421  -422  -423  T
tf32
fc42 Radial 2m+Convey Tally
f42:p +500.1
fm42 1.18116E+13
fs42  -501  -502  -503  -504  -505  -506
   -507  -508  -509  -510  -511  -512
   -513  -514  -515  -516  -517  -518
   -519  -520  -521  -522  -523  T
tf42
C
C Print Control
prdmp  -30 -60 1 2
print
C Random Number Generator
rand  gen=2  seed=15617098509349  stride=152917  hist=1
```

Figure 5.3.20-7 Normal Condition Radial Surface Dose Rate Profile by Source Type – SLOWPOKE Fuel

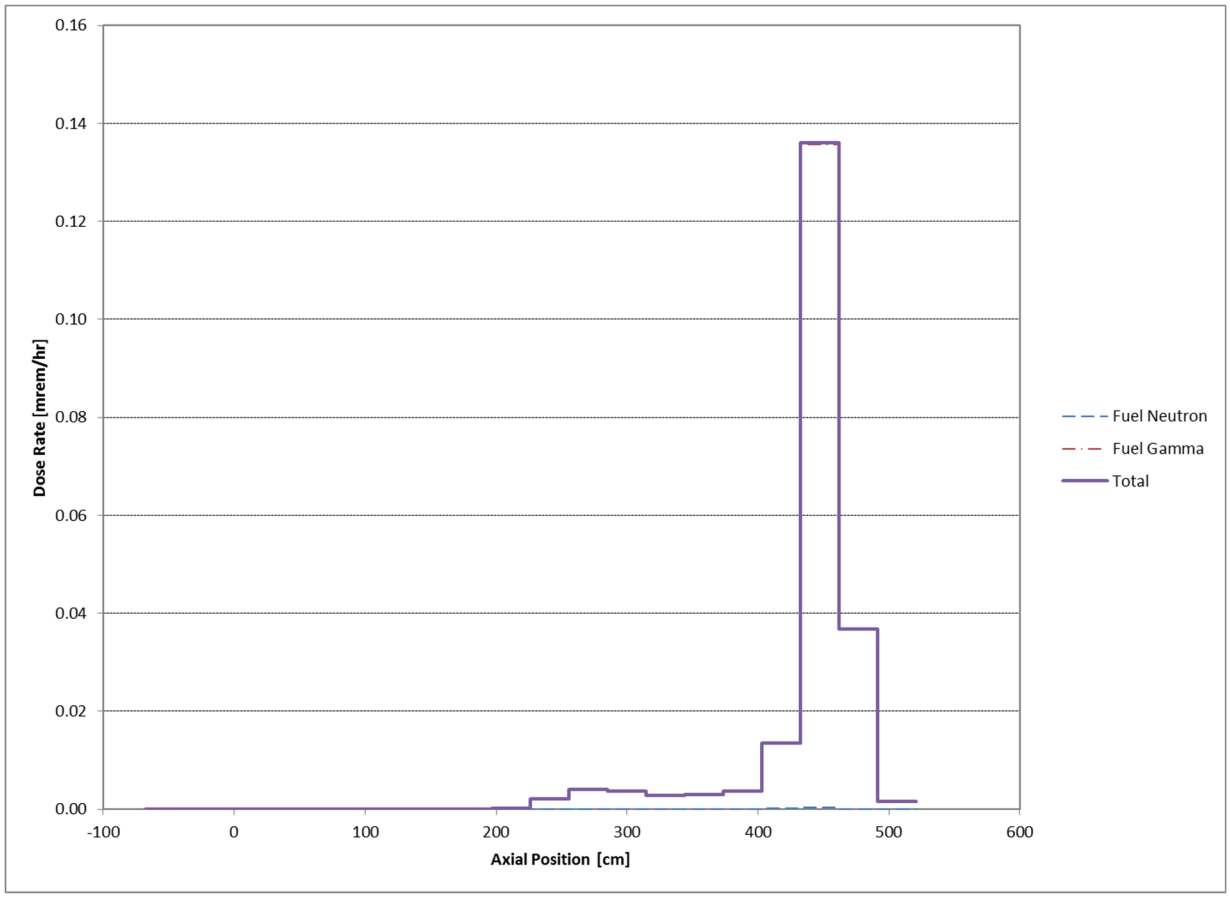

Figure 5.3.20-8 Normal Condition 2-m Radial Surface Dose Rate Profile by Source Type – SLOWPOKE Fuel

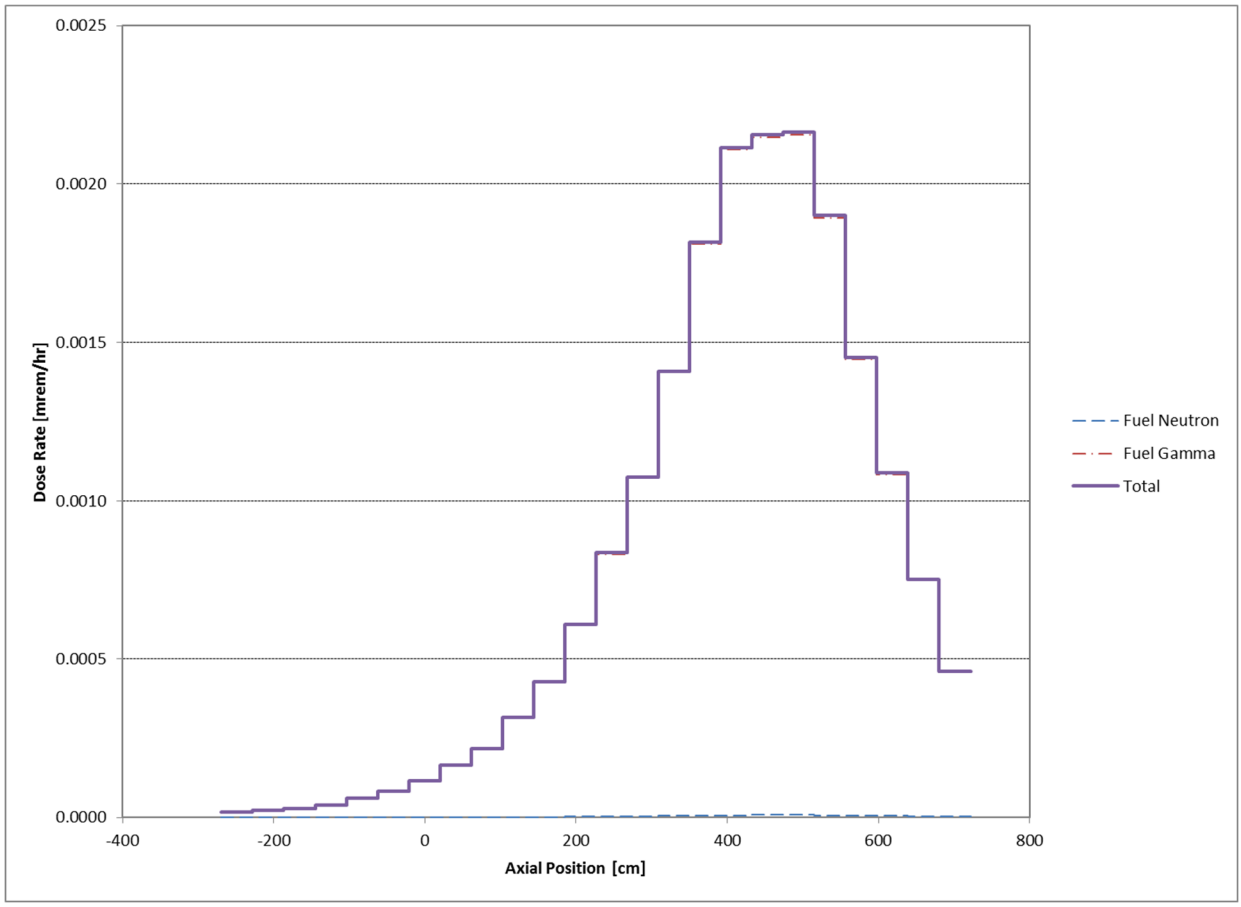

Figure 5.3.20-9 Accident Condition Radial 1m Dose Rate Profile by Source Type – SLOWPOKE

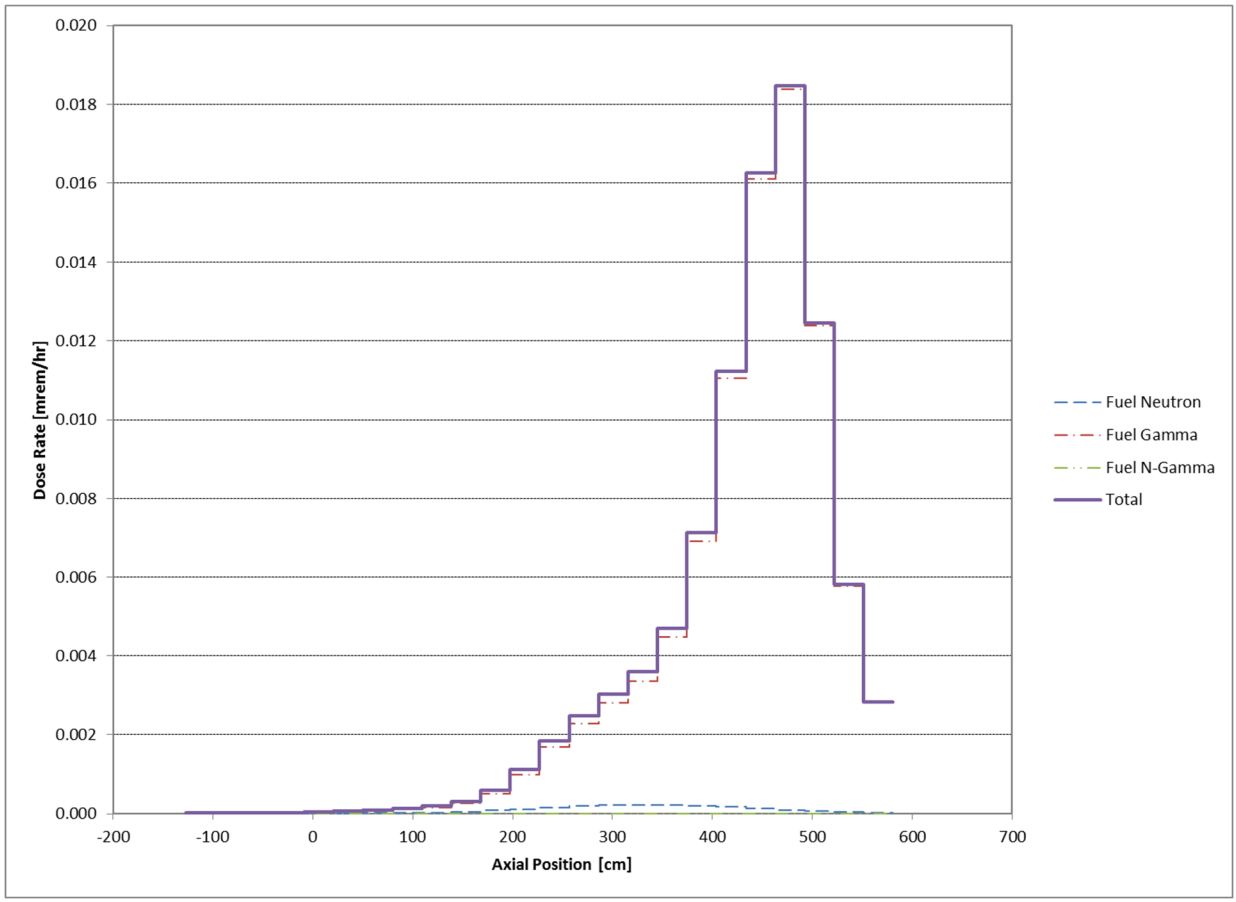

Table 5.3.20-1 SLOWPOKE Fuel Geometry and Materials

Fuel Element Type		Rod
Chemical Form		U-Al Alloy
Active Fuel Length	cm	22
Active Fuel Diameter	cm	0.422
Weight of U-235	g	2.786
Weight of total U	g	2.990
Alloy or compound material weight	g	7.688
Total weight of fuel meat	g	10.678
Clad Thickness	cm	0.051
Clad Weight (including caps)	g	4.981
Clad Material		Aluminum
Element Length	cm	22.83
Diameter (endcaps)	cm	0.61
Diameter (clad)	cm	0.53
Total weight of fuel element	g	15.659
Enrichment %	%	93
Burn Time	hrs	32000
Core Maximum Power	kW	20
Maximum Burnup (^{235}U depletion)	%	2

Table 5.3.20-2 Source Term Generation Parameters for SLOWPOKE Fuel

Parameter	Value
U Mass Per Rod (grams)	3.1
Core Power (kW)	20
Number of Hours Burned	35280
Number of Years Cooled	14
Number of Rods / Core	315
Initial Enrichment (wt % ^{235}U)	90
Burnup (% ^{235}U)	4.5
Burnup (GWd/MTU)	30
Moderator/Box Temperature (C)	40
Clad Temperature (C)	90
Fuel Temperature (C)	100

Table 5.3.20-3 SLOWPOKE Neutron Source Term (per MTU)

Group	E Lower [MeV]	E Upper [MeV]	Source [neutrons/sec]
1	6.380E+00	2.000E+01	8.392E+01
2	3.010E+00	6.380E+00	1.239E+03
3	1.830E+00	3.010E+00	2.221E+04
4	1.420E+00	1.830E+00	5.368E+04
5	9.070E-01	1.420E+00	9.340E+04
6	4.080E-01	9.070E-01	8.055E+04
7	1.110E-01	4.080E-01	3.950E+04
8	1.500E-02	1.110E-01	4.675E+03
9	3.040E-03	1.500E-02	1.404E+02
10	5.830E-04	3.040E-03	1.121E+01
11	1.010E-04	5.830E-04	1.063E+00
12	2.900E-05	1.010E-04	2.284E-02
13	1.070E-05	2.900E-05	3.852E-03
14	3.060E-06	1.070E-05	1.625E-04
15	1.860E-06	3.060E-06	1.011E-05
16	1.300E-06	1.860E-06	3.875E-06
17	1.130E-06	1.300E-06	1.030E-06
18	1.000E-06	1.130E-06	6.480E-07
19	8.000E-07	1.000E-06	1.132E-06
20	4.140E-07	8.000E-07	1.586E-06
21	3.250E-07	4.140E-07	2.069E-07
22	2.250E-07	3.250E-07	3.119E-07
23	1.000E-07	2.250E-07	2.064E-07
24	5.000E-08	1.000E-07	6.687E-08
25	3.000E-08	5.000E-08	3.531E-08
26	1.000E-08	3.000E-08	9.255E-11
27	1.000E-11	1.000E-08	5.251E-11
Total			2.955E+05

Table 5.3.20-4 SLOWPOKE Fuel Gamma Source Term (per MTU)

Group	E Lower [MeV]	E Upper [MeV]	Source [photons/sec]
1	8.00E+00	1.00E+01	5.7677E+00
2	6.50E+00	8.00E+00	2.6885E+01
3	5.00E+00	6.50E+00	1.4109E+02
4	4.00E+00	5.00E+00	3.6288E+02
5	3.00E+00	4.00E+00	4.1202E+06
6	2.50E+00	3.00E+00	5.9472E+07
7	2.00E+00	2.50E+00	1.0184E+10
8	1.66E+00	2.00E+00	1.7246E+11
9	1.33E+00	1.66E+00	1.1233E+12
10	1.00E+00	1.33E+00	6.2244E+12
11	8.00E-01	1.00E+00	9.8721E+12
12	6.00E-01	8.00E-01	2.2000E+15
13	4.00E-01	6.00E-01	4.9361E+13
14	3.00E-01	4.00E-01	6.7505E+13
15	2.00E-01	3.00E-01	9.4406E+13
16	1.00E-01	2.00E-01	2.9890E+14
17	4.50E-02	1.00E-01	5.1975E+14
18	1.00E-02	4.50E-02	1.4985E+15
Total			4.7457E+15

Table 5.3.20-5 Fuel Homogenization for SLOWPOKE Fuel

Component	Area [cm^2]	Area Fraction
Fuel	1.3987E-01	1.7252E-01
Gap	4.0055E-03	4.9406E-03
Clad	7.6746E-02	9.4663E-02
Void	5.9011E-01	7.2788E-01
Total	8.1073E-01	1.0000E+00

Note: Homogenization limited to smear of fuel rod within aluminum canister tube.

Table 5.3.20-6 Canister/Basket/Cask Material Descriptions for SLOWPOKE Fuel

Material	Element	Density [g/cm^3]	Number Density [atom/b-cm]
Aluminum	Al	2.67	7.278E-02
Stainless Steel 304	Fe	7.94	5.9505E-02
	Cr		1.7472E-02
	Ni		7.7392E-03
	Mn		1.7407E-03
Lead	Pb	11.34	3.2967E-02
Neutron Shield	H	0.97	5.9884E-02
	O		2.4595E-02
	C		1.0701E-02
Impact Limiter	Al	0.50	1.1153E-02

Table 5.3.20-7 Canister Dimensions SLOWPOKE Fuel

Description	Dimension [in]
CANISTER:	
Bottom Plate Thickness	0.375
Lid Thickness	1.00
OD	3.30
ID	2.80
Side Wall Height	39.44
Bottom Plate Inset 1	0.130
Bottom Plate Inset 2	0.060
Lid Lower Bottom Thickness	0.38
Lid Top Width	3.30
Lid Bottom Width	2.75
Lid Handle Height	2.500
CANISTER INSERT:	
Tube Length	9.25
Tube OD	0.50
Tube ID	0.40
Base Plate Thickness	0.25
Base Plate Width	2.50

Table 5.3.20-8 Maximum and Average Dose Rates for SLOWPOKE Fuel

Transport Condition	Dose Rate Location	Maximum		Average	
		[mrem/hr]	FSD	[mrem/hr]	FSD
Normal	Side Surface of Cask	0.14	7.6%	0.01	23.0%
	Top Surface of Cask	0.004	8.4%	0.002	14.9%
	Bottom Surface of Cask	< 0.00001	--	< 0.00001	--
	Side 1m (Transport Index)	0.01	7.1%	0.002	12.6%
	2m from Truck - Radial	0.002	7.6%	0.001	9.8%
	2m from Top	0.0004	58.3%	0.0004	47.7%
	2m from Bottom	< 0.00001	--	< 0.00001	--
	Edge of Truck - Top	0.0001	30.1%	0.00004	36.2%
	Edge of Truck - Bottom	< 0.00001	--	< 0.00001	--
	Dose at Cab of Truck	0.00005	37.2%	0.00003	46.0%
Accident	Side Surface of Cask	0.29	8.8%	0.02	24.5%
	Top Surface of Cask	0.03	8.6%	0.01	12.6%
	Bottom Surface of Cask	< 0.00001	--	< 0.00001	--
	Side 1m	0.02	7.9%	0.004	12.5%
	Top 1m	0.002	7.4%	0.001	9.7%
	Bottom 1m	< 0.00001	--	< 0.00001	--

Table 5.3.20-9 Summarized Maximum Dose Rates for SLOWPOKE Fuel

Transport Condition	Dose Rate Location	Maximum [mrem/hr]	Limit [mrem/hr]
Normal	Side Surface of Cask	0.14	200
	Side 1m (Transport Index)	0.01	10
	2m from Truck - Radial	0.002	N/A
Accident	Side 1m	0.02	1000

5.3.21 NRU and NRX Fuel Assemblies

Results of the shielding evaluation for up to 18 NRU (HEU or LEU) or up to 18 NRX fuel assemblies in the LWT cask are presented in this section. Fuel in undamaged and damaged configuration was considered for the shielding evaluation. The undamaged fuel configuration considers structurally sound rod or assemblies (i.e., any fuel not composed of rod section / broken rods). The NRU/NRX fuel is composed of a metal alloy and is not expected to fail during transport and will not produce rubble. Also included is a damaged fuel configuration that analyzes the fuel collapsed at the top of the basket tubes to bound any fuel reconfiguration. Both undamaged and damaged configuration are analyzed under normal and accident operating conditions to demonstrate compliance with 10 CFR 71.47 and 10 CFR 71.51.

NRU HEU, NRU LEU, and NRX HEU Source Terms

Source terms are calculated to bound the NRU and NRX assemblies using TRITON in SCALE 6.1. The TRITON models use the 238 group ENDF/B-VII library. Single unit cells were used for the TRITON source term calculation. The single unit cell (assembly reflected) was compared against a model using supercells (assembly plus surrounding incore material) to define surrounding fuel assemblies. The single unit cell was determined to be more conservative for neutron source terms and is not significantly different for gamma source terms which dominate dose rate contributions for the material. Unit cells were modeled using dimensions specified in AECL provided drawings. The assemblies are shown in Figure 5.3.21-1 and Figure 5.3.21-2 for the NRU and NRX assemblies, respectively. Key assembly dimensions are provided in Table 5.3.21-1 and Table 5.3.21-2 for the NRU and NRX assembly respectively.

NRU source terms are calculated using detailed operating histories for HEU and LEU fuel provided by AECL. NRX source terms are calculated using the maximum reactor power and ^{235}U Core Loading. The evaluated fuel material properties are provided in Table 5.3.21-3. The fuel material composition for the bounding properties is shown in Table 5.3.21-4. All sources are calculated for a ^{235}U depletion of greater than 80%. NRU LEU is composed of U_3-Si-Al. All Si is modeled as Al as aluminum will produce bounding neutron source terms due to (alpha,n) neutron production.

The TRITON inputs for all source term calculations are provided in Figure 5.3.21-3 through Figure 5.3.21-6. The comparison of neutron and gamma source terms for the single cell and supercell TRITON models are provided in Table 5.3.21-5 and Table 5.3.21-6, respectively. All source spectra are provided for each fuel type in Table 5.3.21-7 through Table 5.3.21-12.

For NAC thermal evaluations an alternative heat load for NRU LEU fuel is calculated that models a burnup of 347 MWd as oppose to the 363 MWd burnup for shielding evaluations. The burnup of 347 MWd still bounds the actual NRU LEU burnup of 327 MWd. The final burnup calculated in TRITON for the thermal evaluation heat load is 80.4%. The calculated heat load for thermal evaluations is 34 W/assembly (612 W for the loaded LWT). All shielding evaluations use the more conservative higher burnup source terms.

NRU and NRX Shielding Models

MCNP three dimensional shielding analysis allows detailed modeling of the source material, basket assembly, and cask shield configurations. The basket and cask are modeled as described in the license drawings. The basket spacer and lid collar have been conservatively omitted, but all axial extents are included to retain source position.

The geometric description of a MCNP model is based on the combinatorial geometry system embedded in the code. In this system, bodies such as cylinders and rectangular parallelepipes and their logical intersections and unions are used to describe the extent of material zones.

Both undamaged and damaged fuel configurations are analyzed under normal and accident operating conditions. The undamaged fuel configuration includes NRU and NRX pins modeled as cropped for loading in the LWT. The damaged fuel configuration collapses the fuel in the basket tubes fully. Collapsed fuel is modeled at the nominal fuel density. The fuel meat alloy will not compact as a result of any transport condition. Collapsed models do not include clad or end plug material. The fuel and basket have been shifted towards the top of the LWT cavity. The radial lead gamma shield extends from the bottom of the NAC-LWT cavity to approximately 3 inches (7.62 cm) below the top of the cavity. Positioning the fissile material closest to the point of minimum gamma shielding is conservative.

The accident conditions of transport include the loss of neutron shielding material. The neutron shielding shell and the impact limiters are also removed while modeling accident conditions.

While normal conditions include a gap between the lead and outer shell, lead slump is not evaluated for accident conditions as NAC procedures dictate that the lead is allowed to cool from the lowest point with molten lead from the top filling gaps formed during solidification. Therefore no gap is expected to occur and further accident analyses detailing potential shifting of the lead gap are not necessary.

Detailed model parameters used in creating the three-dimensional model are taken directly from the License Drawings. Elevations associated with the three-dimensional features are established with respect to the center bottom of the NAC-LWT cask cavity for the MCNP combinatorial model. Material compositions for structural and shield materials are shown in Table 5.3.21-13.

The three-dimensional NAC-LWT MCNP models are shown in Figure 5.3.21-7 through Figure 5.3.21-9 while sketches are shown in Figure 5.3.21-11 and Figure 5.3.21-12. Figure 5.3.21-10 shows a VISED comparison of the fuel detail for the undamaged and collapsed fuel models. Selected basket dimensions critical to model and dose results are listed in Table 5.3.21-14. A sample MCNP input file is provided in Figure 5.3.21-13.

NRU and NRX Fuel Shielding Evaluation

The shielding evaluation is performed using MCNP5 v1.60. The MCNP shielding model is utilized with the source terms to estimate the dose rate profiles at various distances from the side, top and bottom of the cask for both normal and accident conditions. The method of solution is continuous energy Monte Carlo with a Monte Carlo based weight window generator to accelerate code convergence. Weight window and problem convergence is verified by the 10 statistical checks performed by MCNP. Radial or axial biasing is performed depending on the desired dose location.

The ANSI/ANS 6.1.1-1977 flux-to-dose rate conversion factors are employed in the MCNP analysis. The ANSI/ANS neutron and gamma dose conversion factors are shown in Table 5.3.21-15 and Table 5.3.21-16, respectively.

NRU and NRX Dose Rates

Dose rates were computed for the three fuel sources (NRU HEU, NRU LEU, and NRX HEU) for both undamaged and collapsed configurations. NRU HEU dose rates (normal and accident) for both the undamaged and collapsed fuel configurations are summarized in Table 5.3.21-17 and Table 5.3.21-18, respectively. NRU LEU dose rates (normal and accident) for both the undamaged and collapsed fuel configurations are summarized in Table 5.3.21-19 and Table 5.3.21-20, respectively. NRX dose rates (normal and accident) for both the undamaged and collapsed fuel configurations are summarized in Table 5.3.21-21 and Table 5.3.21-22, respectively.

Results are summarized and compared to dose rate limits in Table 5.3.21-23 and Table 5.3.21-24 for undamaged and collapsed fuel, respectively. NRU LEU fuel provides the maximum dose rates for all dose rate limits. A payload of 18 assemblies for NRU or NRX fuel is found to be in compliance of 10 CFR 71.47 and 10 CFR 71.51 for an exclusive use shipment. Dose rate profiles for the maximum dose rate cases are provided Figure 5.3.21-14 through Figure 5.3.21-16.

Figure 5.3.21-1 Sketch of NRU Assembly

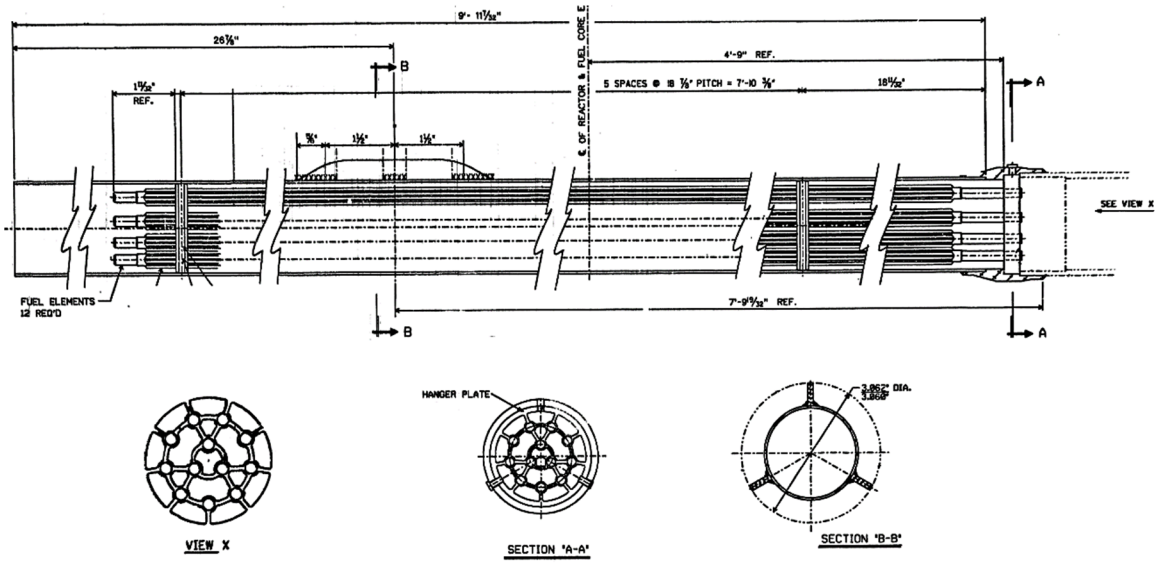

Figure 5.3.21-2 Sketch of NRX Assembly

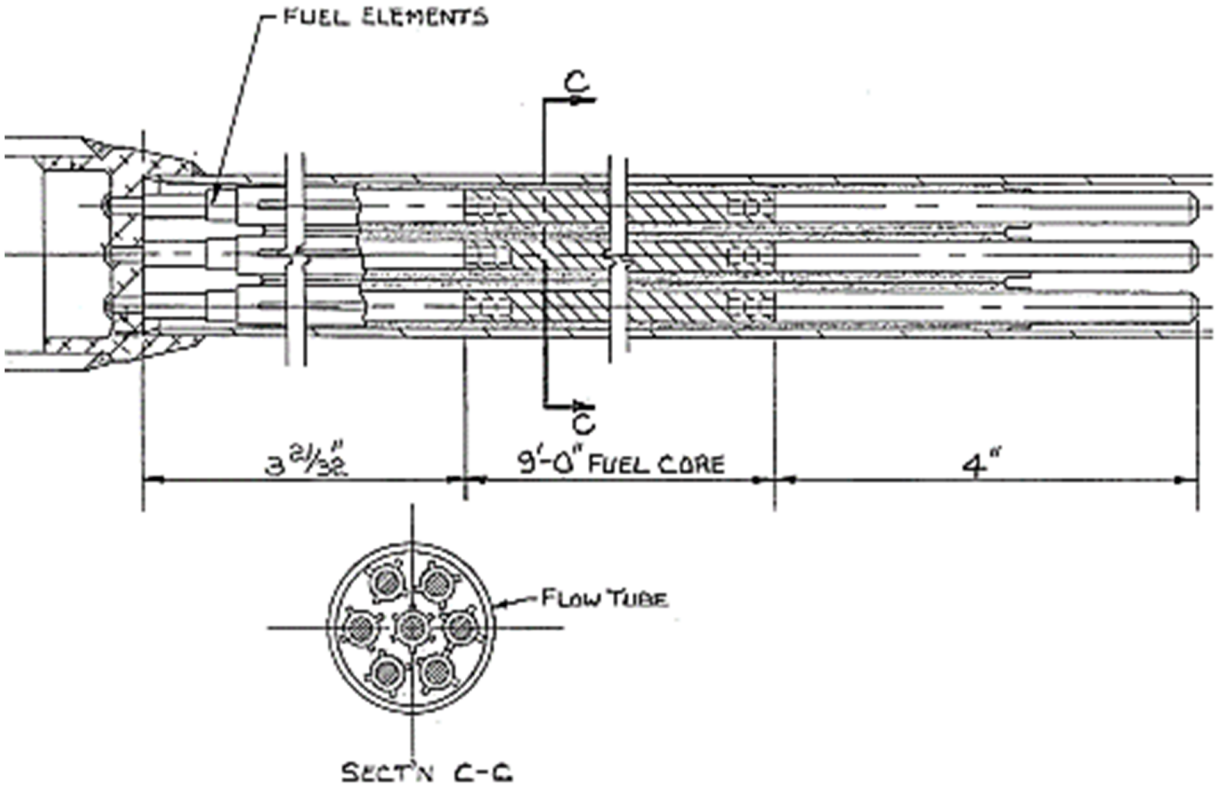

Figure 5.3.21-3 TRITON Input for NRU HEU Single Unit Cell

```
=t-depl
NRU CORE NEWT / CENTRM Depletion
V7-238
read comp
WTPTUAl  1  3.288  3  13000 77.570 92235 20.411  92238  2.019  1.0  373.0 END
AL   2  1.0  363.0  END
H2O  3  DEN=1.1  0.0015  311  END
D2O  3  DEN=1.1  0.9985  311  END
AL   4  1.0  309  END
H2O  5  DEN=1.1  0.00150  307  END
D2O  5  DEN=1.1  0.9984  307  END
b    5  DEN=1.1  0.0001 307  END
end comp
read celldata
latticecell triangpitch pitch=1.133 3 fueld=0.5486 1 cladd=0.7101 2 end
end celldata
read depletion -1 end depletion
read opus
matl= 1 end units=grams
new case
units=watts
new case
typarams=gspectrum
units=part
new case
typarams=nspectrum
units=part
end opus
read burndata
' power history
Power=2.321E+03  Burn=45  Down=0  nlib=5 end
Power=2.708E+03  Burn=135  Down=0  nlib=5 end
Power=1.355E+03  Burn=120  Down=6935  nlib=5 end
end burndata
read timetable
density 5 1 5010
0.0  1.08
22.50 0.96
92.50 0.75
150.50  0.50
250.5  0.25
280.0  0.13
320.0  0.05 end
end timetable
read model
NRU Core
read parm
  prtflux=no  drawit=yes   collapse=yes
  xnlib=4 run=yes prtmxsec=no prtbroad=no
  prtmxtab=yes cmfd=no echo=yes
end parm
read materials
  1 1 !fuel u-al! end
  2 1 !fuel clad! end
  3 2 !heavy water! end
  4 1 !flow tube! end
  5 2 !heavy water! end
end materials
read geom
' Fuel Pin
unit 1
cylinder 1 0.2745
cylinder 2 0.3761
media 1 1 1
media 2 1 2 -1
boundary 2 4 4
' Global unit
```

Figure 5.3.21-3 TRITON Input for NRU HEU Single Unit Cell (Continued)

```
global unit 10
cylinder 10 2.4994
cylinder 20 2.6327
hexprism 50 9.85
hole 1 origin x=0.6502
hole 1 origin x=-0.3251 y=0.5631
hole 1 origin x=-0.3251 y=-0.5631
hole 1 origin x=1.6183 y=0.5890
hole 1 origin x=0.8611 y=1.4914
hole 1 origin x=-0.2990 y=1.6960
hole 1 origin x=-1.3192 y=1.1070
hole 1 origin x=-1.7221
hole 1 origin x=-1.3192 y=-1.1070
hole 1 origin x=-0.2990 y=-1.6960
hole 1 origin x=0.8611 y=-1.4914
hole 1 origin x=1.6183 y=-0.5890
media 3 1 10
media 4 1 20 -10
media 5 1 50 -20
boundary 50 50 50
end geom
read bounds all=white end bounds
end model
end
```

Figure 5.3.21-4 TRITON Input for NRU HEU Supercell Model

```
=t-depl
NRU CORE NEWT / CENTRM Depletion
V7-238
read composition
WTPTUAl  1  3.288  3  13000 77.570 92235 20.411  92238  2.019  1.0  373.0 END
AL   4  1.0  363.0  END
H2O  7  DEN=1.1  0.0015  311  END
D2O  7  DEN=1.1  0.9985  311  END
AL   10  1.0  309  END
H2O  11  DEN=1.1  0.0015  307  END
D2O  11 DEN=1.1  0.9985  307  END
WTPTsc1  2  1.1  4  1002 19.62  1001 0.01  8016 78.61  92235 1.76 1.0 307 END
AL   5  1.0  363.0  END
H2O  8  DEN=1.1  0.0015  311  END
D2O  8  DEN=1.1  0.9985  311  END
WTPTsc2  3  1.1  4  1002 19.65  1001 0.02  8016 78.74  92235 1.59 1.0 307 END
AL   6  1.0  363.0  END
H2O  9  DEN=1.1  0.0015  311  END
D2O  9  DEN=1.1  0.9985  311  END
WTPTb1  13  1.1  4  1002 19.97  1001 0.02  8016 80.00  5010 0.01 1.0 307 END
end composition
read celldata
latticecell triangpitch pitch=1.133 7 fueld=0.5486 1 cladd=0.7101 4 end
latticecell triangpitch pitch=1.133 8 fueld=0.5486 2 cladd=0.7101 5 end
latticecell triangpitch pitch=1.133 9 fueld=0.5486 3 cladd=0.7101 6 end
end celldata
read depletion -1 2 3 end depletion
read opus
matl= 1 end units=grams
new case
units=watts
new case
typarams=gspectrum
units=part
new case
typarams=nspectrum
units=part
end opus
read burndata
' power history
Power=2.321E+03  Burn=45  Down=0  nlib=10 end
Power=2.708E+03  Burn=135  Down=0  nlib=10 end
Power=1.355E+03  Burn=120  Down=6935  nlib=10 end
end burndata
read timetable
density 13 1 5010
0.0 1.26
22.50 0.94
92.50 0.67
150.50  0.25
200.0  0.15
250.5  0.10
290.0  0.00 end
end timetable
read model
NRU Core
read parm
```

Figure 5.3.21-4 TRITON Input for NRU HEU Supercell Model (Continued)

```
  prtflux=no  drawit=yes   collapse=yes
  xnlib=4 run=yes prtmxsec=no prtbroad=no
  prtmxtab=yes cmfd=no echo=yes   outers=500
end parm
read materials
  1 1 !fuel u-al! end
  4 1 !fuel clad! end
  7 2 !heavy water! end
  10 1 !flow tube! end
  11 2 !heavy water! end
  2 1 !supercell 1! end
  3 1 !supercell 2! end
  13 2 !boron ring! end
end materials
read geom
' Fuel Pin
unit 1
cylinder 1 0.2745
cylinder 2 0.3761
media 1 1 1
media 4 1 2 -1
boundary 2 4 4
' Fuel Assembly
unit 2
' Flow Tube
cylinder 10 2.4994
cylinder 20 2.6327
hole 1 origin x=0.6502
hole 1 origin x=-0.3251 y=0.5631
hole 1 origin x=-0.3251 y=-0.5631
hole 1 origin x=1.6183 y=0.5890
hole 1 origin x=0.8611 y=1.4914
hole 1 origin x=-0.2990 y=1.6960
hole 1 origin x=-1.3192 y=1.1070
hole 1 origin x=-1.7221
hole 1 origin x=-1.3192 y=-1.1070
hole 1 origin x=-0.2990 y=-1.6960
hole 1 origin x=0.8611 y=-1.4914
hole 1 origin x=1.6183 y=-0.5890
media 7 1 10
media 10 1 20 -10
boundary 20 50 50
' Global unit
global unit 10
' Unit Cell
hexprism 50 9.85
' Supercell 1 - 2.394g U235/cm
cylinder 60 19.2
cylinder 70 20.2
' Supercell 2 - 4.341g U235/cm
cylinder 80 38.9
cylinder 90 39.9
' Boron ring to adjust k-eff
cylinder 100 60.0
cylinder 110 61.0
hexprism 120 70.0
hole 2
```

Figure 5.3.21-4 TRITON Input for NRU HEU Supercell Model (Continued)

```
media 11 1 50
media 11 1 60 -50
media 2 1 70 -60
media 11 1 80 -70
media 3 1 90 -80
media 11 1 100 -90
media 13 1 110 -100
media 11 120 -110
boundary 120 10 10
end geom
read bounds all=white end bounds
end model
end
```

Figure 5.3.21-5 TRITON Input for NRU LEU Single Unit Cell

```
=t-depl
NRU CORE NEWT / CENTRM Depletion
v7-238
read comp
WTPTUAl  1  3.288  3  13000 37.838 92235 11.811  92238  50.351  1.0  373.0 END
AL   2  1.0  363.0  END
H2O  3  DEN=1.1  0.0015  311  END
D2O  3  DEN=1.1  0.9985  311  END
AL   4  1.0  309  END
H2O  5  DEN=1.1  0.00150  307  END
D2O  5  DEN=1.1  0.9984  307  END
b    5  DEN=1.1  0.0001 307  END
end comp
read celldata
latticecell triangpitch pitch=1.133 3 fueld=0.5486 1 cladd=0.7101 2 end
end celldata
read depletion -1 end depletion
read opus
matl= 1 end units=grams
new case
units=watts
new case
typarams=gspectrum
units=part
new case
typarams=nspectrum
units=part
end opus
read burndata
' power history
Power=4.844E+02  Burn=45  Down=0  nlib=2  end
Power=5.667E+02  Burn=135  Down=0  nlib=2  end
Power=2.783E+02  Burn=120  Down=1095  nlib=2  end
end burndata
read timetable
density 5 1 5010
0.0  0.75
22.50 0.65
92.50 0.52
150.50  0.30
250.5  0.18
280.0  0.09 end
end timetable
read model
NRU Core
read parm
  prtflux=no  drawit=yes   collapse=yes
  xnlib=4 run=yes prtmxsec=no prtbroad=no
  prtmxtab=yes cmfd=no echo=yes
end parm
read materials
  1 1 !fuel u-al! end
  2 1 !fuel clad! end
  3 2 !heavy water! end
  4 1 !flow tube! end
  5 2 !heavy water! end
end materials
```

Figure 5.3.21-5 TRITON Input for NRU LEU Single Unit Cell (Continued)

```
read geom
' Fuel Pin
unit 1
cylinder 1 0.2745
cylinder 2 0.3761
media 1 1 1
media 2 1 2 -1
boundary 2 4 4
' Global unit
global unit 10
cylinder 10 2.4994
cylinder 20 2.6327
hexprism 50 9.85
hole 1 origin x=0.6502
hole 1 origin x=-0.3251 y=0.5631
hole 1 origin x=-0.3251 y=-0.5631
hole 1 origin x=1.6183 y=0.5890
hole 1 origin x=0.8611 y=1.4914
hole 1 origin x=-0.2990 y=1.6960
hole 1 origin x=-1.3192 y=1.1070
hole 1 origin x=-1.7221
hole 1 origin x=-1.3192 y=-1.1070
hole 1 origin x=-0.2990 y=-1.6960
hole 1 origin x=0.8611 y=-1.4914
hole 1 origin x=1.6183 y=-0.5890
media 3 1 10
media 4 1 20 -10
media 5 1 50 -20
boundary 50 50 50
end geom
read bounds all=white end bounds
end model
end
```

Figure 5.3.21-6 TRITON Input for NRX Single Unit Cell

```
=t-depl
NRX CORE NEWT / CENTRM Depletion
V7-238
read comp
WTPTUAl  1  3.2088  3  13000 68.929 92235 28.275  92238  2.796  1.0  373.0 END
AL   2  1.0  363.0  END
H2O  3  DEN=1.1  0.0015  311  END
D2O  3  DEN=1.1  0.9985  311  END
AL   4  1.0  309  END
H2O  5  DEN=1.1  0.00150  307  END
D2O  5  DEN=1.1  0.9984  307  END
b    5  DEN=1.1  0.0001 307  END
AL   6 1.0 307 END
end comp
read celldata
latticecell triangpitch pitch=1.054 3 fueld=0.635 1 cladd=0.8181 2 end
end celldata
read depletion -1 end depletion
read opus
matl= 1 end units=grams
new case
units=watts
new case
typarams=gspectrum
units=part
new case
typarams=nspectrum
units=part
end opus
read burndata
' power history
 Power= 1.685E+03  Burn=365  Down=6570  nlib=10 end
end burndata
read timetable
density 5 1 5010
0.0  1.22
22.50 1.06
92.50 0.93
150.50  0.82
250.5  0.55
280.0  0.42
320.0  0.32
365.0  0.15 end
end timetable
read model
NRX Core
read parm
  prtflux=no  drawit=yes   collapse=yes
  xnlib=4 run=yes prtmxsec=no prtbroad=no
  prtmxtab=yes cmfd=no echo=yes outers=500
end parm
read materials
  1 1 !fuel u-al! end
  2 1 !fuel clad! end
  3 2 !heavy water! end
  4 1 !flow tube! end
  5 2 !heavy water! end
```

Figure 5.3.21-6 TRITON Input for NRX Single Unit Cell (Continued)

```
  6 1 !guide tube! end
end materials
read geom
' Fuel Pin
unit 1
cylinder 1 0.3175
cylinder 2 0.4090
media 1 1 1
media 2 1 2 -1
boundary 2 4 4
' Global unit
global unit 10
cylinder 10 1.5761
cylinder 20 1.7539
cylinder 30 2.8573
cylinder 40 3.0163
hexprism 50 8.6519
hole 1
hole 1 origin x=1.0541
hole 1 origin x=0.5271 y=0.913
hole 1 origin x=-0.5271 y=0.913
hole 1 origin x=-1.0541 y=0.000
hole 1 origin x=-0.5271 y=-0.913
hole 1 origin x=0.5271 y=-0.913
media 3 1 10
media 4 1 20 -10
media 5 1 30 -20
media 6 1 40 -30
media 5 1 50 -40
boundary 50 50 50
end geom
read bounds all=white end bounds
end model
end
```

Figure 5.3.21-7 VISED Sketch of LWT with NRU Fuel Radial Detail

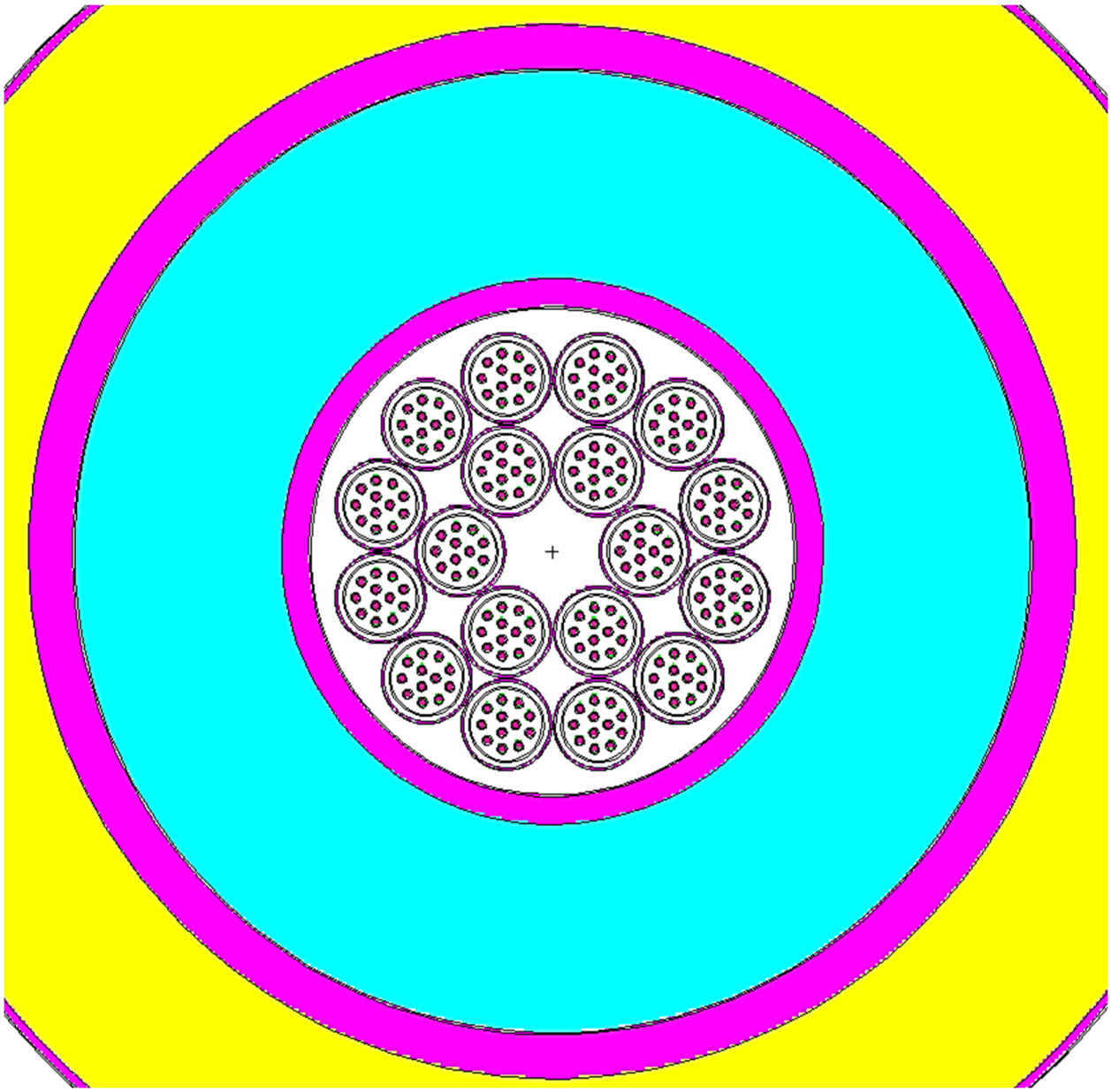

Figure 5.3.21-8 VISED Sketch of LWT with NRX Fuel Radial Detail

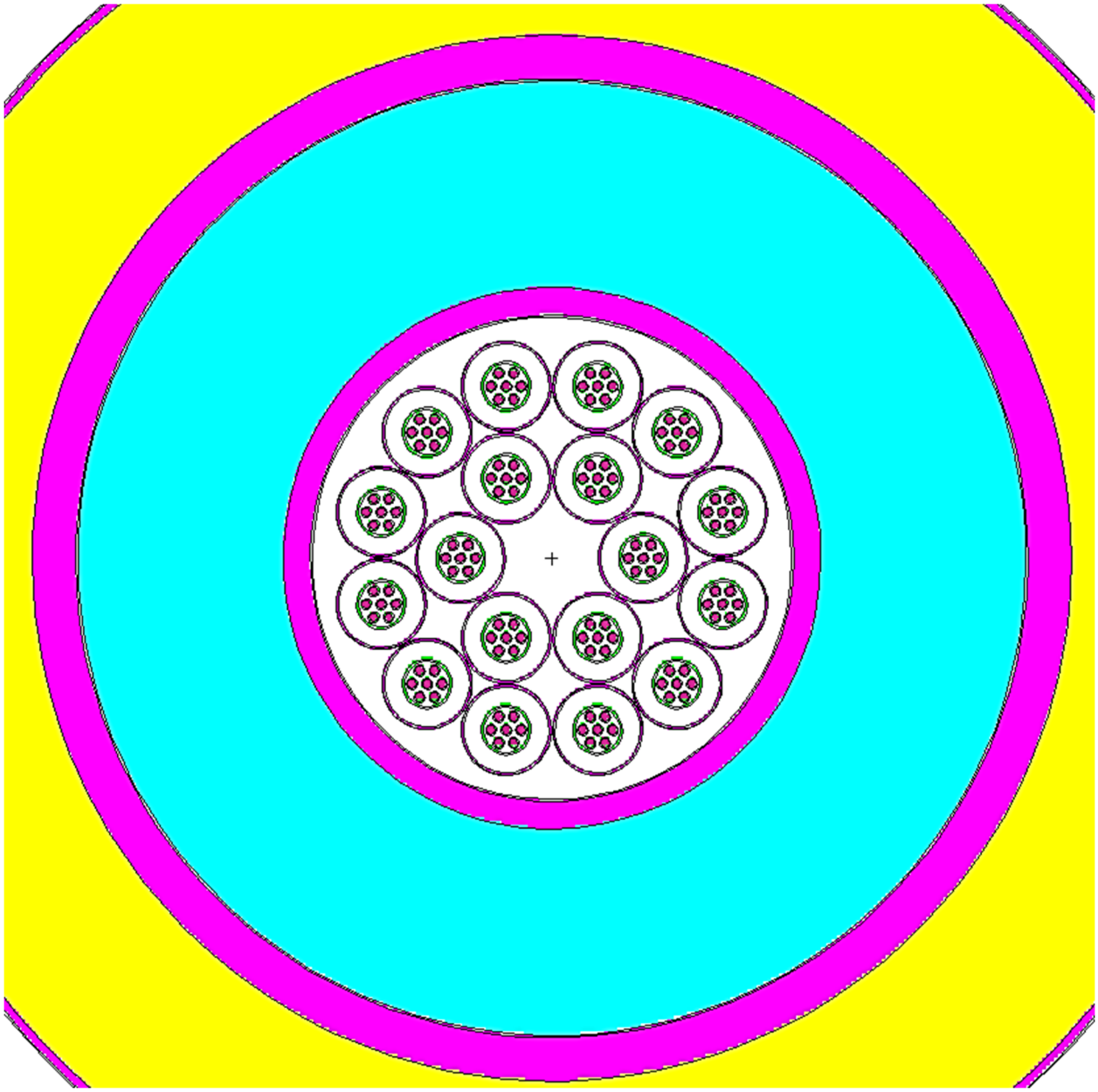

Figure 5.3.21-9 VISED Sketch of LWT Axial Detail

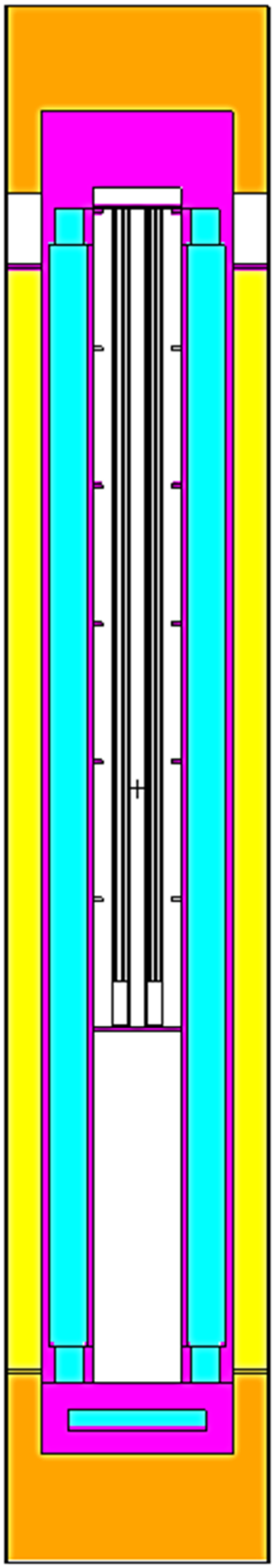

Figure 5.3.21-10 VISED Comparison of Collapsed Fuel (Left) and Undamaged Fuel (Right)

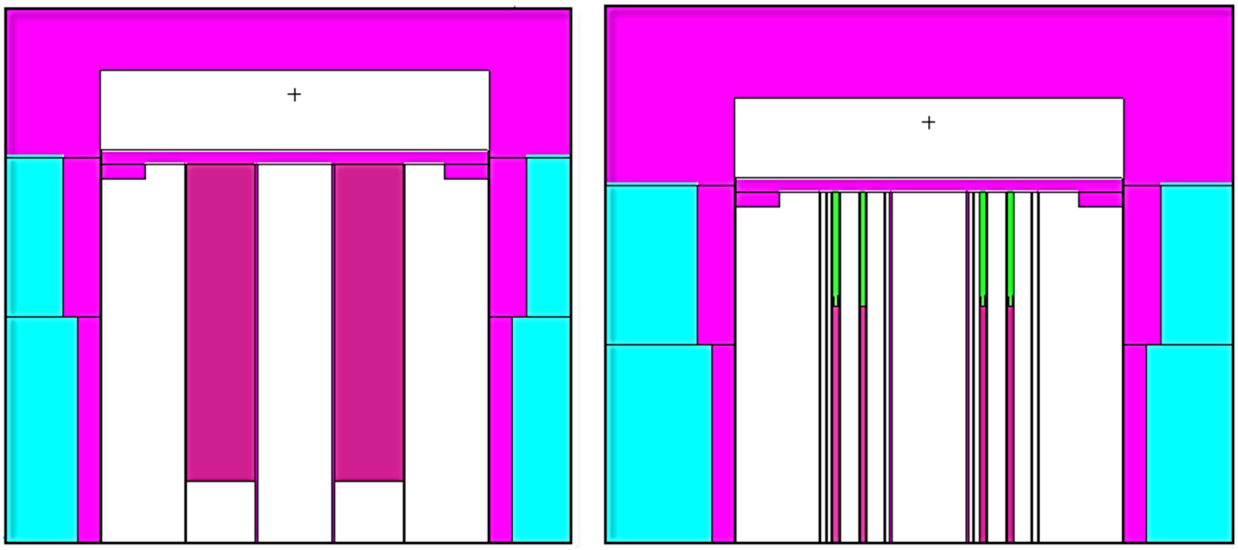

Figure 5.3.21-11 VISED Sketch of LWT Radial Detail

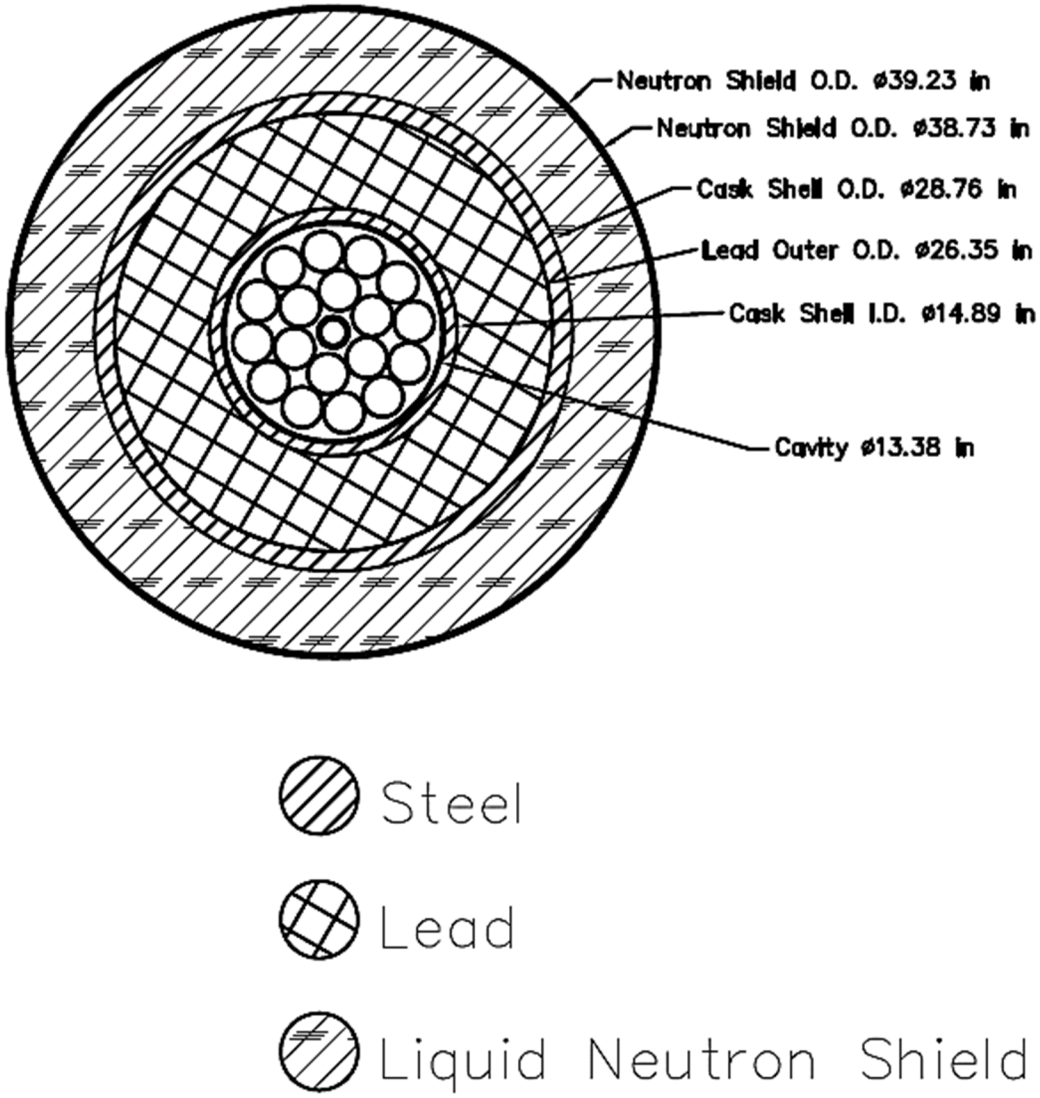

Figure 5.3.21-12 VISED Sketch of LWT Axial Detail

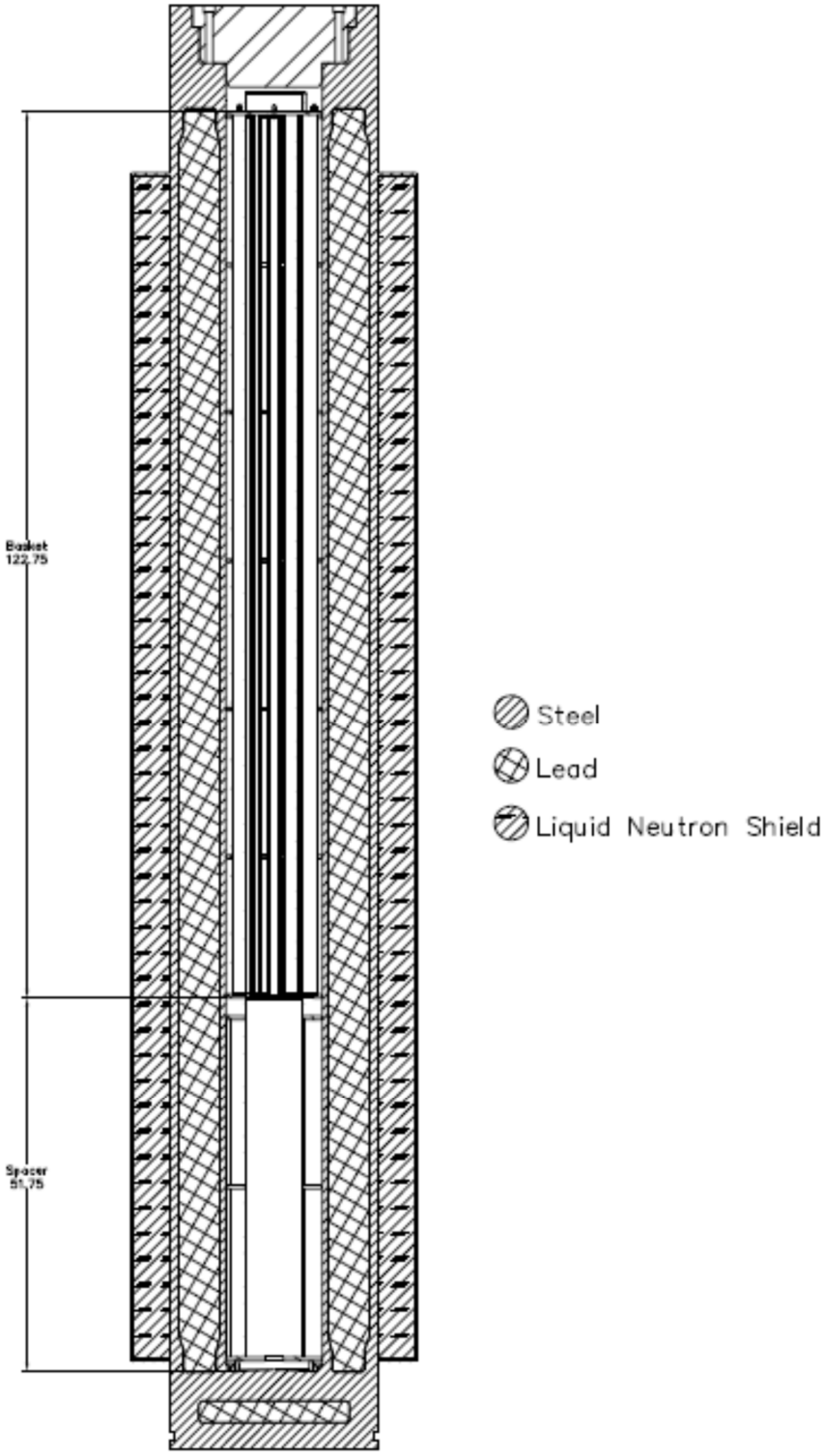

Figure 5.3.21-13 Sample MCNP Input for NRU or NRX Fuel

```
NAC-LWT Cask - NRU  - Normal Transport Conditions
C Radial Biasing - Gamma Source
C Fuel Rod Cells
1  4  -2.7000  -1  :  -2  :  -3  u=5    $ Bottom Plug
2  1  -3.2880  -4  +3  +5      u=5    $ Fuel Meat
3  4  -2.7000  -5  :  -6      u=5    $ Top Plug
4  4  -2.7000  -11  +4  +2  +6  +9  -10  u=5  $ Clad
5  0           +7  -9  #1   -11    u=5    $ Outside Lower Plug
6  0           +10  -8  +6  -11    u=5    $ Outside Top Plug
7  0           +11  :  -7  :  +8  u=5    $ Outside Fuel Rod
C Fuel Assembly Cells
14  0           -14  +15        u=4    $ Assembly Tube
15  0           -16  fill=5  trcl = ( 0.6502 0.0000 0.0000 )      u=4    $ Fuel Rod - Inner
16  like  15  but    trcl = ( -0.3251 0.5631 0.0000 )      u=4    $ Fuel Rod - Inner
17  like  15  but    trcl = ( -0.3251 -0.5631 0.0000 )      u=4    $ Fuel Rod - Inner
18  like  15  but    trcl = ( 1.6183 0.5890 0.0000 )      u=4    $ Fuel Rod - Outer
19  like  15  but    trcl = ( 0.8611 1.4914 0.0000 )      u=4    $ Fuel Rod - Outer
20  like  15  but    trcl = ( -0.2990 1.6960 0.0000 )      u=4    $ Fuel Rod - Outer
21  like  15  but    trcl = ( -1.3192 1.1070 0.0000 )      u=4    $ Fuel Rod - Outer
22  like  15  but    trcl = ( -1.7221 0.0000 0.0000 )      u=4    $ Fuel Rod - Outer
23  like  15  but    trcl = ( -1.3192 -1.1070 0.0000 )      u=4    $ Fuel Rod - Outer
24  like  15  but    trcl = ( -0.2990 -1.6960 0.0000 )      u=4    $ Fuel Rod - Outer
25  like  15  but    trcl = ( 0.8611 -1.4914 0.0000 )      u=4    $ Fuel Rod - Outer
26  like  15  but    trcl = ( 1.6183 -0.5890 0.0000 )      u=4    $ Fuel Rod - Outer
27  0  -15  #15 #16 #17 #18 #19 #20 #21 #22 #23 #24 #25 #26        u=4      $ Inside Tube
Assembly
28  0           +14          u=4    $ Outside Tube Assembly
C Basket Tube Cells
31  6  -7.9400  -33  +32        u=3    $ Basket Tube
32  0           -31  fill=4  trcl = ( 0.0000 0.0000 16.5100 )      u=3    $ Basket Tube Cavity
33  0           -32  #32         u=3    $ Inside Tube Cavity
34  0           +33          u=3    $ Outside Basket Tube
C Basket Assembly Cells
41  0           -69  fill=3  trcl = ( 6.4262 0.0000 1.9050 )      u=2    $ Assembly Inner Tube
42  like  41  but    trcl = ( 3.2131 5.5653 1.9050 )      u=2    $ Assembly Inner Tube
43  like  41  but    trcl = ( -3.2131 5.5653 1.9050 )      u=2    $ Assembly Inner Tube
44  like  41  but    trcl = ( -6.4262 0.0000 1.9050 )      u=2    $ Assembly Inner Tube
45  like  41  but    trcl = ( -3.2131 -5.5653 1.9050 )      u=2    $ Assembly Inner Tube
46  like  41  but    trcl = ( 3.2131 -5.5653 1.9050 )      u=2    $ Assembly Inner Tube
47  like  41  but    trcl = ( 11.9974 3.2147 1.9050 )      u=2    $ Assembly Outer Tube
48  like  41  but    trcl = ( 8.7827 8.7827 1.9050 )      u=2    $ Assembly Outer Tube
49  like  41  but    trcl = ( 3.2147 11.9974 1.9050 )      u=2    $ Assembly Outer Tube
50  like  41  but    trcl = ( -3.2147 11.9974 1.9050 )      u=2    $ Assembly Outer Tube
51  like  41  but    trcl = ( -8.7827 8.7827 1.9050 )      u=2    $ Assembly Outer Tube
52  like  41  but    trcl = ( -11.9974 3.2147 1.9050 )      u=2    $ Assembly Outer Tube
53  like  41  but    trcl = ( -11.9974 -3.2147 1.9050 )      u=2    $ Assembly Outer Tube
54  like  41  but    trcl = ( -8.7827 -8.7827 1.9050 )      u=2    $ Assembly Outer Tube
55  like  41  but    trcl = ( -3.2147 -11.9974 1.9050 )      u=2    $ Assembly Outer Tube
56  like  41  but    trcl = ( 3.2147 -11.9974 1.9050 )      u=2    $ Assembly Outer Tube
57  like  41  but    trcl = ( 8.7827 -8.7827 1.9050 )      u=2    $ Assembly Outer Tube
58  like  41  but    trcl = ( 11.9974 -3.2147 1.9050 )      u=2    $ Assembly Outer Tube
59  0           -50  #41         u=2    $ Assembly Inner Tube
60  0           -51  #42         u=2    $ Assembly Inner Tube
61  0           -52  #43         u=2    $ Assembly Inner Tube
62  0           -53  #44         u=2    $ Assembly Inner Tube
63  0           -54  #45         u=2    $ Assembly Inner Tube
64  0           -55  #46         u=2    $ Assembly Inner Tube
65  0           -56  #47         u=2    $ Assembly Outer Tube
66  0           -57  #48         u=2    $ Assembly Outer Tube
67  0           -58  #49         u=2    $ Assembly Outer Tube
68  0           -59  #50         u=2    $ Assembly Outer Tube
69  0           -60  #51         u=2    $ Assembly Outer Tube
70  0           -61  #52         u=2    $ Assembly Outer Tube
71  0           -62  #53         u=2    $ Assembly Outer Tube
72  0           -63  #54         u=2    $ Assembly Outer Tube
73  0           -64  #55         u=2    $ Assembly Outer Tube
74  0           -65  #56         u=2    $ Assembly Outer Tube
75  0           -66  #57         u=2    $ Assembly Outer Tube
76  0           -67  #58         u=2    $ Assembly Outer Tube
```

Figure 5.3.21-13 Sample MCNP Input for NRU or NRX Fuel (Continued)

```
77  6  -7.9400  -41          u=2    $ Bottom Disk
78  6  -7.9400  -43  +50  +51  +52  +53  +54  +55
              +56  +57  +58  +59  +60  +61  +62  +63
              +64  +65  +66  +67  +42    u=2    $ Intermediate Disk 1
79  6  -7.9400  -44  +50  +51  +52  +53  +54  +55
              +56  +57  +58  +59  +60  +61  +62  +63
              +64  +65  +66  +67  +42    u=2    $ Intermediate Disk 2
80  6  -7.9400  -45  +50  +51  +52  +53  +54  +55
              +56  +57  +58  +59  +60  +61  +62  +63
              +64  +65  +66  +67  +42    u=2    $ Intermediate Disk 3
81  6  -7.9400  -46  +50  +51  +52  +53  +54  +55
              +56  +57  +58  +59  +60  +61  +62  +63
              +64  +65  +66  +67  +42    u=2    $ Intermediate Disk 4
82  6  -7.9400  -47  +50  +51  +52  +53  +54  +55
              +56  +57  +58  +59  +60  +61  +62  +63
              +64  +65  +66  +67  +42    u=2    $ Intermediate Disk 5
83  6  -7.9400  -49  +50  +51  +52  +53  +54  +55
              +56  +57  +58  +59  +60  +61  +62  +63
              +64  +65  +66  +67  +48    u=2    $ Top Disk
84  0           -68  +50  +51  +52  +53  +54  +55
              +56  +57  +58  +59  +60  +61  +62  +63
              +64  +65  +66  +67  #77   #78
              #79   #80   #81   #82   #83   #86   u=2    $ Inside Basket
85  0           +68          u=2    $ Outside Basket
86  6  -7.9400  -70          u=2    $ Basket Lid
C Cells - LWT Cask Normal Conditions
91  5  -11.344  -94           u=1  $ BotPb
92  0           -93  fill=2  ( 0 0 133.35 )        u=1  $ Cavity
93  6  -7.9400  -91  -92  +94        u=1  $ Bottom
94  6  -7.9400  -91  +92  +96  +99  +93    u=1  $ OuterShell
95  6  -7.9400  -95  +98  +93        u=1  $ InnerShellTaper
96  6  -7.9400  -97  +93          u=1  $ InnerShell
97  5  -11.344  -98  +97          u=1  $ Lead
98  5  -11.344  -96  +95  +98        u=1  $ LeadTaper
99  0           -99  +98          u=1  $ LeadGap
100  3  -0.9669  -101  +91          u=1  $ NeutronShield
101  6  -7.9400  -100  +91  +101        u=1  $ NSShell
102  7  -0.4997  -102  +91          u=1  $ UpperLimiter
103  7  -0.4997  -103  +91          u=1  $ LowerLimiter
104  0           -104  +91  +100  +102  +103    u=1  $ Container
105  0           +104            u=1  $ Outside
C Detector Cells - Radial Biasing
250  0  -250  fill=1  $ Surface
275  0  -275  +250  $ PbSlumpAzi
350  0  -350  +250  +275  $ 1ft
450  0  -450  +250  +275  +350  $ 1m
550  0  -550  +250  +275  +350  +450  $ 2m
650  0  -650  +250  +275  +350  +450  +550  $ 2m+Convey
750  0  +250  +275  +350  +450  +550  +650  $ Exterior

C Fuel Rod Surfaces
1  RCC  0.0  0.0  0.0000  0.0  0.0  1.1100  0.2350    $ Bottom Plug - Lower Section
2  RCC  0.0  0.0  1.1100  0.0  0.0  7.7800  0.2743    $ Bottom Plug - Mid Section
3  RCC  0.0  0.0  8.8900  0.0  0.0  0.9525  0.1905    $ Bottom Plug - Tip
4  RCC  0.0  0.0  8.8900  0.0  0.0  274.3200  0.2743    $ Fuel Meat
5  RCC  0.0  0.0  283.2100  0.0  0.0  -0.9525  0.1905    $ Top Plug - Tip
6  RCC  0.0  0.0  283.2100  0.0  0.0  8.8900  0.2743    $ Top Plug - Mid Section
7  PZ  0.0000               $ Bottom of Pin
8  PZ  292.1000               $ Top of Pin
9  PZ  2.3019               $ Bottom of Clad
10  PZ  290.8300               $ Top of Clad
11  CZ  0.3505               $ Clad
C Fuel Assembly Surfaces
14  RCC  0.0  0.0  0.0  0.0  0.0  292.1000  2.6264    $ Assembly Tube OD
15  RCC  0.0  0.0  0.0  0.0  0.0  292.1000  2.4994    $ Assembly ID
16  RCC  0.0  0.0  0.0000  0.0  0.0  292.1000  0.3510    $ Rod Outline
C Basket Tube Surfaces
31  RCC  0.0  0.0  0.0000  0.0  0.0  308.6100  3.0094    $ Assembly Outline
```

Figure 5.3.21-13 Sample MCNP Input for NRU or NRX Fuel (Continued)

```
32  RCC  0.0  0.0  0.0000  0.0  0.0  308.6100  3.0099    $ Tube Inner Diameter
33  RCC  0.0  0.0  -0.6350  0.0  0.0  309.2450  3.1750    $ Tube Outer Diameter
C Basket Assembly Surfaces
41  RCC  0.0  0.0  0.0000  0.0  0.0  1.2700  16.8529    $ Bottom Disk
42  RCC  0.0  0.0  48.8950  0.0  0.0  209.5500  13.3350    $ Intermediate Disks ID
43  RCC  0.0  0.0  50.1650  0.0  0.0  -1.2700  16.8529    $ Intermediate Disk 1
44  RCC  0.0  0.0  102.2350  0.0  0.0  -1.2700  16.8529    $ Intermediate Disk 2
45  RCC  0.0  0.0  154.3050  0.0  0.0  -1.2700  16.8529    $ Intermediate Disk 3
46  RCC  0.0  0.0  206.3750  0.0  0.0  -1.2700  16.8529    $ Intermediate Disk 4
47  RCC  0.0  0.0  258.4450  0.0  0.0  -1.2700  16.8529    $ Intermediate Disk 5
48  RCC  0.0  0.0  310.5150  0.0  0.0  -1.2700  13.0810    $ Top Disk ID
49  RCC  0.0  0.0  310.5150  0.0  0.0  -1.2700  16.8529    $ Top Disk OD
50  RCC  6.4262  0.0000  1.2700  0.0  0.0  309.2450  3.1760    $ Assembly Inner Tube
51  RCC  3.2131  5.5653  1.2700  0.0  0.0  309.2450  3.1760    $ Assembly Inner Tube
52  RCC  -3.2131  5.5653  1.2700  0.0  0.0  309.2450  3.1760    $ Assembly Inner Tube
53  RCC  -6.4262  0.0000  1.2700  0.0  0.0  309.2450  3.1760    $ Assembly Inner Tube
54  RCC  -3.2131  -5.5653  1.2700  0.0  0.0  309.2450  3.1760    $ Assembly Inner Tube
55  RCC  3.2131  -5.5653  1.2700  0.0  0.0  309.2450  3.1760    $ Assembly Inner Tube
56  RCC  11.9974  3.2147  1.2700  0.0  0.0  309.2450  3.1760    $ Assembly Outer Tube
57  RCC  8.7827  8.7827  1.2700  0.0  0.0  309.2450  3.1760    $ Assembly Outer Tube
58  RCC  3.2147  11.9974  1.2700  0.0  0.0  309.2450  3.1760    $ Assembly Outer Tube
59  RCC  -3.2147  11.9974  1.2700  0.0  0.0  309.2450  3.1760    $ Assembly Outer Tube
60  RCC  -8.7827  8.7827  1.2700  0.0  0.0  309.2450  3.1760    $ Assembly Outer Tube
61  RCC  -11.9974  3.2147  1.2700  0.0  0.0  309.2450  3.1760    $ Assembly Outer Tube
62  RCC  -11.9974  -3.2147  1.2700  0.0  0.0  309.2450  3.1760    $ Assembly Outer Tube
63  RCC  -8.7827  -8.7827  1.2700  0.0  0.0  309.2450  3.1760    $ Assembly Outer Tube
64  RCC  -3.2147  -11.9974  1.2700  0.0  0.0  309.2450  3.1760    $ Assembly Outer Tube
65  RCC  3.2147  -11.9974  1.2700  0.0  0.0  309.2450  3.1760    $ Assembly Outer Tube
66  RCC  8.7827  -8.7827  1.2700  0.0  0.0  309.2450  3.1760    $ Assembly Outer Tube
67  RCC  11.9974  -3.2147  1.2700  0.0  0.0  309.2450  3.1760    $ Assembly Outer Tube
68  RCC  0.0  0.0  0.0000  0.0  0.0  311.7850  16.8534    $ Basket Outline
69  RCC  0.0  0.0  -0.6350  0.0  0.0  309.2450  3.1755    $ Tube Outline
70  RCC  0.0  0.0  310.5150  0.0  0.0  1.2700  16.8529    $ Basket Lid
C Surfaces - LWT Cask Normal Conditions
91  RCC  0.0000  0.0000  -26.6700  0.0000  0.0000  507.3650    36.5189  $ Lwt
92  RCC  0.0000  0.0000  -26.6700  0.0000  0.0000  26.6700    36.5189  $ Bottom
93  RCC  0.0000  0.0000  0.0000  0.0000  0.0000  452.1200    16.9863  $ Cavity
94  RCC  0.0000  0.0000  -17.7800  0.0000  0.0000  7.6200    26.3525  $ Bottom gamma shield
95  RCC  0.0000  0.0000  0.0000  0.0000  0.0000  444.5000    20.1740  $ Lead id - taper
96  RCC  0.0000  0.0000  0.0000  0.0000  0.0000  444.5000    31.5976  $ Lead od - taper
97  RCC  0.0000  0.0000  13.8176  0.0000  0.0000  416.8648    18.9103  $ Lead id
98  RCC  0.0000  0.0000  13.8176  0.0000  0.0000  416.8648    33.3271  $ Lead od
99  RCC  0.0000  0.0000  13.8176  0.0000  0.0000  416.8648    33.4645  $ Lead gap
100  RCC  0.0000  0.0000  3.8100  0.0000  0.0000  419.1000    49.8183  $ Neutron shield shell
101  RCC  0.0000  0.0000  5.0800  0.0000  0.0000  416.5600    49.2189  $ Neutron shield
102  RCC  0.0000  0.0000  450.2150  0.0000  0.0000  70.5612    49.8183  $ Upper limiter
103  RCC  0.0000  0.0000  -68.0212  0.0000  0.0000  71.8312    49.8183  $ Lower limiter
104  RCC  0.0000  0.0000  -68.0212  0.0000  0.0000  588.7974    49.8183  $ Container
C Radial Detector DRA (Surface)
250  RCC  0.0000  0.0000  -68.1212  0.0000  0.0000  588.9974  49.9184
251  PZ  -38.6713
252  PZ  -9.2215
253  PZ  20.2284
254  PZ  49.6783
255  PZ  79.1282
256  PZ  108.5780
257  PZ  138.0279
258  PZ  167.4778
259  PZ  196.9276
260  PZ  226.3775
261  PZ  255.8274
262  PZ  285.2772
263  PZ  314.7271
264  PZ  344.1770
265  PZ  373.6269
266  PZ  403.0767
267  PZ  432.5266
268  PZ  461.9765
```

Figure 5.3.21-13 Sample MCNP Input for NRU or NRX Fuel (Continued)

```
269  PZ  491.4263
C Radial Detector DRAA (PbSlumpAzi)
275  RCC  0.0000  0.0000  275.4825  0.0000  0.0000  30.4800  49.9284
276     PX  0.0000
277  1  PX  0.0000
278  3  PX  0.0000
279  5  PX  0.0000
280  6  PX  0.0000
281  9  PX  0.0000
282  10  PX  0.0000
283  11  PX  0.0000
284  14  PX  0.0000
285     PY  0.0000
286  16  PX  0.0000
287  18  PX  0.0000
288  19  PX  0.0000
289  20  PX  0.0000
290  21  PX  0.0000
291  23  PX  0.0000
292  25  PX  0.0000
293  27  PX  0.0000
C Radial Detector DRB (1ft)
350  RCC  0.0000  0.0000  -98.6012  0.0000  0.0000  649.9574  80.2984
351  PZ  -66.1033
352  PZ  -33.6055
353  PZ  -1.1076
354  PZ  31.3903
355  PZ  63.8882
356  PZ  96.3860
357  PZ  128.8839
358  PZ  161.3818
359  PZ  193.8796
360  PZ  226.3775
361  PZ  258.8754
362  PZ  291.3732
363  PZ  323.8711
364  PZ  356.3690
365  PZ  388.8669
366  PZ  421.3647
367  PZ  453.8626
368  PZ  486.3605
369  PZ  518.8583
C Radial Detector DRC (1m)
450  RCC  0.0000  0.0000  -168.1212  0.0000  0.0000  788.9974  149.8184
451  PZ  -135.2463
452  PZ  -102.3714
453  PZ  -69.4965
454  PZ  -36.6216
455  PZ  -3.7467
456  PZ  29.1282
457  PZ  62.0030
458  PZ  94.8779
459  PZ  127.7528
460  PZ  160.6277
461  PZ  193.5026
462  PZ  226.3775
463  PZ  259.2524
464  PZ  292.1273
465  PZ  325.0022
466  PZ  357.8771
467  PZ  390.7520
468  PZ  423.6269
469  PZ  456.5017
470  PZ  489.3766
471  PZ  522.2515
472  PZ  555.1264
473  PZ  588.0013
C Radial Detector DRD (2m)
```

Figure 5.3.21-13 Sample MCNP Input for NRU or NRX Fuel (Continued)

```
550  RCC  0.0000  0.0000  -268.1212  0.0000  0.0000  988.9974  249.8184
551  PZ  -226.9130
552  PZ  -185.7048
553  PZ  -144.4965
554  PZ  -103.2883
555  PZ  -62.0801
556  PZ  -20.8719
557  PZ  20.3364
558  PZ  61.5446
559  PZ  102.7528
560  PZ  143.9611
561  PZ  185.1693
562  PZ  226.3775
563  PZ  267.5857
564  PZ  308.7940
565  PZ  350.0022
566  PZ  391.2104
567  PZ  432.4186
568  PZ  473.6269
569  PZ  514.8351
570  PZ  556.0433
571  PZ  597.2515
572  PZ  638.4598
573  PZ  679.6680
C Radial Detector DRE (2m+Convey)
650  RCC  0.0000  0.0000  -269.1212  0.0000  0.0000  990.9974  321.9200
651  PZ  -227.8296
652  PZ  -186.5381
653  PZ  -145.2465
654  PZ  -103.9550
655  PZ  -62.6634
656  PZ  -21.3719
657  PZ  19.9197
658  PZ  61.2113
659  PZ  102.5028
660  PZ  143.7944
661  PZ  185.0859
662  PZ  226.3775
663  PZ  267.6691
664  PZ  308.9606
665  PZ  350.2522
666  PZ  391.5437
667  PZ  432.8353
668  PZ  474.1269
669  PZ  515.4184
670  PZ  556.7100
671  PZ  598.0015
672  PZ  639.2931
673  PZ  680.5846

C
C Materials List
C
C U-Al
m1     92235  -2.0411E-01
       92238  -2.0187E-02
       13027  -7.7570E-01
C Water
m2     1001  6.6667E-01  8016  3.3333E-01
mt2    lwtr.01
C Water/Glycol
m3     1001  -1.03651E-01  8016  -6.75619E-01  6000  -2.20730E-01
C Aluminum
m4     13027  -1.0
C Lead
m5     82000  -1.0
C Stainless Steel 304
m6     26000  -0.695  24000  -0.190  28000  -0.095
```

Figure 5.3.21-13 Sample MCNP Input for NRU or NRX Fuel (Continued)

```
       25055  -0.020
C Aluminum Honeycomb Impact Limiter
m7     13027  -1.0
C
C Cell Importances
imp:p 1 92r 0
C
C Source Definition - Gamma
C
sdef  RAD=d1  EXT=d2  ERG=d3  cell=250:92:d4:32:d5:2
      POS=  0.0000  0.0000  0.0000
      AXS=  0.0000  0.0000  1.0000
si1  0  0.5486
sp1  0  1
si2  8.89  283.2100
sp2  0  1
si3  1.000E-02  4.500E-02  1.000E-01  2.000E-01  3.000E-01  4.000E-01
     6.000E-01  8.000E-01  1.000E+00  1.330E+00  1.660E+00  2.000E+00
     2.500E+00  3.000E+00  4.000E+00  5.000E+00  6.500E+00  8.000E+00
     1.000E+01
sp3  0.0000E+00  2.7550E+16  9.5130E+15  5.6100E+15  1.7620E+15  1.2380E+15
     1.0040E+15  4.0800E+16  3.5190E+14  3.3890E+14  3.3730E+13  3.1660E+12
     1.6300E+11  4.1940E+08  6.5250E+06  1.4530E+05  5.7290E+04  1.1060E+04
     2.3940E+03
si4 l  41 42 43 44 45 46 47 48 49 50 51 52 53 54 55 56 57 58
sp4  1 1 1 1 1 1 1 1 1 1 1 1 1 1 1 1 1 1
si5 l  15 16 17 18 19 20 21 22 23 24 25 26
sp5  1 1 1 1 1 1 1 1 1 1 1 1
mode p
nps  1000000000
C
C ANSI/ANS-6.1.1-1977 - Gamma Flux-to-Dose Conversion Factors
C (mrem/hr)/(photons/cm2-sec)
de0  0.01  0.03  0.05  0.07  0.1  0.15  0.2
     0.25  0.3  0.35  0.4  0.45  0.5  0.55
     0.6  0.65  0.7  0.8  1  1.4  1.8
     2.2  2.6  2.8  3.25  3.75  4.25  4.75
     5  5.25  5.75  6.25  6.75  7.5  9
     11  13  15
df0  3.96E-03  5.82E-04  2.90E-04  2.58E-04  2.83E-04  3.79E-04  5.01E-04
     6.31E-04  7.59E-04  8.78E-04  9.85E-04  1.08E-03  1.17E-03  1.27E-03
     1.36E-03  1.44E-03  1.52E-03  1.68E-03  1.98E-03  2.51E-03  2.99E-03
     3.42E-03  3.82E-03  4.01E-03  4.41E-03  4.83E-03  5.23E-03  5.60E-03
     5.80E-03  6.01E-03  6.37E-03  6.74E-03  7.11E-03  7.66E-03  8.77E-03
     1.03E-02  1.18E-02  1.33E-02
C
C Weight Window Generation - Radial
wwg  2 0 0 0 0
wwp:p  5 3 5 0 -1 0
mesh  geom=cyl ref=0 14 292 origin=0.1 0.1 -668
      imesh  16.9 17.0 18.9 33.3 36.5 49.2 49.8 549.8
      iints  6 1 1 5 1 1 1 1
      jmesh  600 641 650 658 668 799 1110 1120 1149 1189 1989
      jints  1 1 1 1 1 1 1 1 1 1 1
      kmesh  1
      kints  1
wwge:p  1e-3 1 20
fc2 Radial Surface Tally
f2:p +250.1
fm2 9.14508E+14
fs2  -251  -252  -253  -254  -255  -256
     -257  -258  -259  -260  -261  -262
     -263  -264  -265  -266  -267  -268
     -269  T
tf2
fc12 Radial PbSlumpAzi Tally Q1 (+x+y)
f12:p +275.1
fm12 9.14508E+14
```

Figure 5.3.21-13 Sample MCNP Input for NRU or NRX Fuel (Continued)

```
fs12 -276  -285
     -277  -278  -279  -280  -281  -282
     -283  -284  T
sd12 4.7809E+03  2.3905E+03  2.6561E+02  8r  9.5619E+03
tf12
fc22 Radial PbSlumpAzi Tally Q2 (-x+y)
f22:p +275.1
fm22 9.14508E+14
fs22 +276  -285
     +286  +287  +288  +289  +290  +291
     +292  +293  T
sd22 4.7809E+03  2.3905E+03  2.6561E+02  8r  9.5619E+03
tf22
fc32 Radial PbSlumpAzi Tally Q3 (-x-y)
f32:p +275.1
fm32 9.14508E+14
fs32 +276  +285
     +277  +278  +279  +280  +281  +282
     +283  +284  T
sd32 4.7809E+03  2.3905E+03  2.6561E+02  8r  9.5619E+03
tf32
fc42 Radial PbSlumpAzi Tally Q4 (+x-y)
f42:p +275.1
fm42 9.14508E+14
fs42 -276  +285
     -286  -287  -288  -289  -290  -291
     -292  -293  T
sd42 4.7809E+03  2.3905E+03  2.6561E+02  8r  9.5619E+03
tf42
fc52 Radial 1ft Tally
f52:p +350.1
fm52 9.14508E+14
fs52  -351  -352  -353  -354  -355  -356
     -357  -358  -359  -360  -361  -362
     -363  -364  -365  -366  -367  -368
     -369  T
tf52
fc62 Radial 1m Tally
f62:p +450.1
fm62 9.14508E+14
fs62  -451  -452  -453  -454  -455  -456
     -457  -458  -459  -460  -461  -462
     -463  -464  -465  -466  -467  -468
     -469  -470  -471  -472  -473  T
tf62
fc72 Radial 2m Tally
f72:p +550.1
fm72 9.14508E+14
fs72  -551  -552  -553  -554  -555  -556
     -557  -558  -559  -560  -561  -562
     -563  -564  -565  -566  -567  -568
     -569  -570  -571  -572  -573  T
tf72
fc82 Radial 2m+Convey Tally
f82:p +650.1
fm82 9.14508E+14
fs82  -651  -652  -653  -654  -655  -656
     -657  -658  -659  -660  -661  -662
     -663  -664  -665  -666  -667  -668
     -669  -670  -671  -672  -673  T
tf82
C
C Print Control
prdmp  -30 -60 1 2
print
C Random Number Generator
rand  gen=2  seed=33613157428409  stride=152917  hist=1
C
```

Figure 5.3.21-13 Sample MCNP Input for NRU or NRX Fuel (Continued)

```
C Rotation Matrix
C
*TR1  0.0  0.0  0.0  10 100 90 -80 10 90 90 90 0
*TR2  0.0  0.0  0.0  12 102 90 -78 12 90 90 90 0
*TR3  0.0  0.0  0.0  20 110 90 -70 20 90 90 90 0
*TR4  0.0  0.0  0.0  24 114 90 -66 24 90 90 90 0
*TR5  0.0  0.0  0.0  30 120 90 -60 30 90 90 90 0
*TR6  0.0  0.0  0.0  40 130 90 -50 40 90 90 90 0
*TR7  0.0  0.0  0.0  45 135 90 -45 45 90 90 90 0
*TR8  0.0  0.0  0.0  48 138 90 -42 48 90 90 90 0
*TR9  0.0  0.0  0.0  50 140 90 -40 50 90 90 90 0
*TR10  0.0  0.0  0.0  60 150 90 -30 60 90 90 90 0
*TR11  0.0  0.0  0.0  70 160 90 -20 70 90 90 90 0
*TR12  0.0  0.0  0.0  72 162 90 -18 72 90 90 90 0
*TR13  0.0  0.0  0.0  78 168 90 -12 78 90 90 90 0
*TR14  0.0  0.0  0.0  80 170 90 -10 80 90 90 90 0
*TR15  0.0  0.0  0.0  96 186 90 6 96 90 90 90 0
*TR16  0.0  0.0  0.0  100 190 90 10 100 90 90 90 0
*TR17  0.0  0.0  0.0  102 192 90 12 102 90 90 90 0
*TR18  0.0  0.0  0.0  110 200 90 20 110 90 90 90 0
*TR19  0.0  0.0  0.0  120 210 90 30 120 90 90 90 0
*TR20  0.0  0.0  0.0  130 220 90 40 130 90 90 90 0
*TR21  0.0  0.0  0.0  140 230 90 50 140 90 90 90 0
*TR22  0.0  0.0  0.0  144 234 90 54 144 90 90 90 0
*TR23  0.0  0.0  0.0  150 240 90 60 150 90 90 90 0
*TR24  0.0  0.0  0.0  156 246 90 66 156 90 90 90 0
*TR25  0.0  0.0  0.0  160 250 90 70 160 90 90 90 0
*TR26  0.0  0.0  0.0  168 258 90 78 168 90 90 90 0
*TR27  0.0  0.0  0.0  170 260 90 80 170 90 90 90 0
*TR28  0.0  0.0  0.0  192 282 90 102 192 90 90 90 0
*TR29  0.0  0.0  0.0  216 306 90 126 216 90 90 90 0
*TR30  0.0  0.0  0.0  240 330 90 150 240 90 90 90 0
*TR31  0.0  0.0  0.0  264 354 90 174 264 90 90 90 0
*TR32  0.0  0.0  0.0  288 378 90 198 288 90 90 90 0
*TR33  0.0  0.0  0.0  312 402 90 222 312 90 90 90 0
*TR34  0.0  0.0  0.0  330 420 90 240 330 90 90 90 0
*TR35  0.0  0.0  0.0  336 426 90 246 336 90 90 90 0
*TR36  0.0  0.0  0.0  348 438 90 258 348 90 90 90 0
*TR37  0.0  0.0  0.0  350 440 90 260 350 90 90 90 0
```

Figure 5.3.21-14 Maximum Radial Surface Dose Rate Profile for Normal Conditions – NRU LEU Fuel – Collapsed

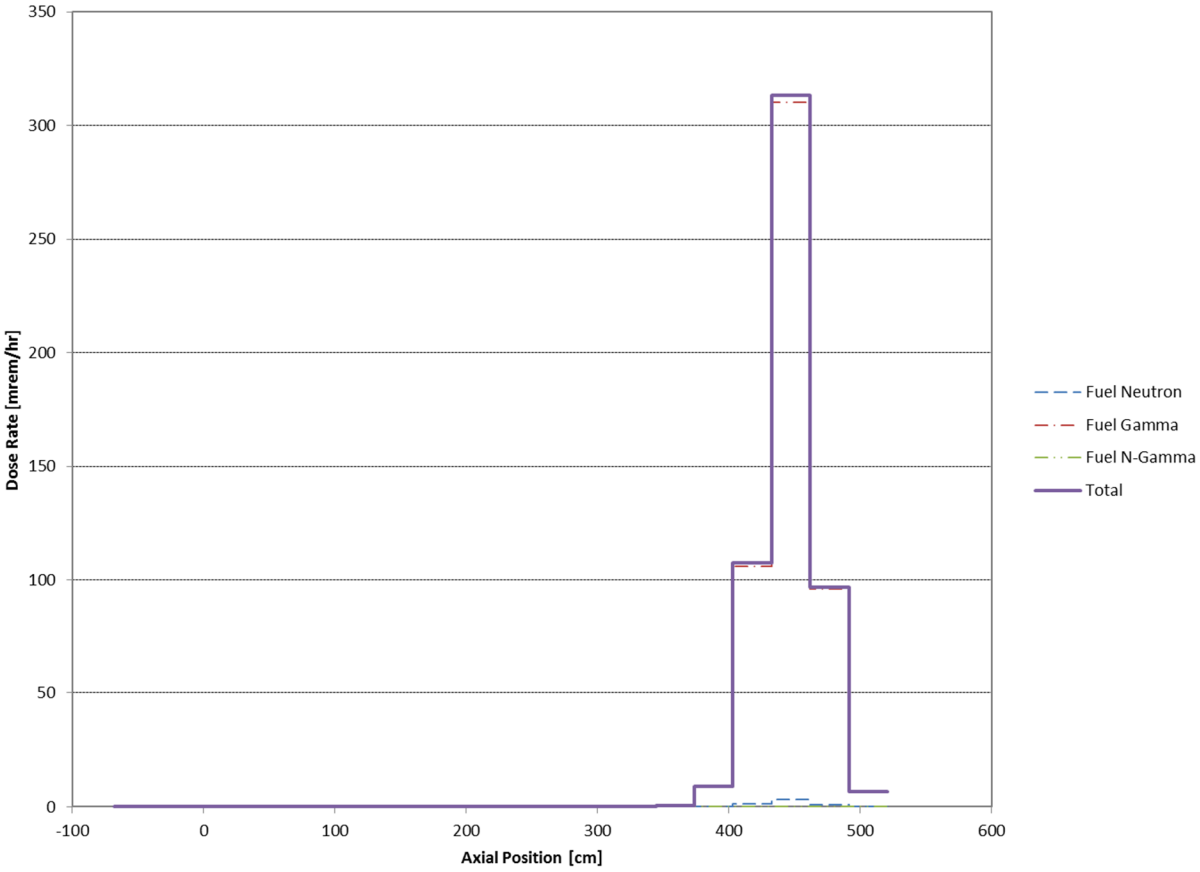

Figure 5.3.21-15 Maximum Radial 2m Dose Rate Profile for Normal Conditions – NRU LEU Fuel – Collapsed

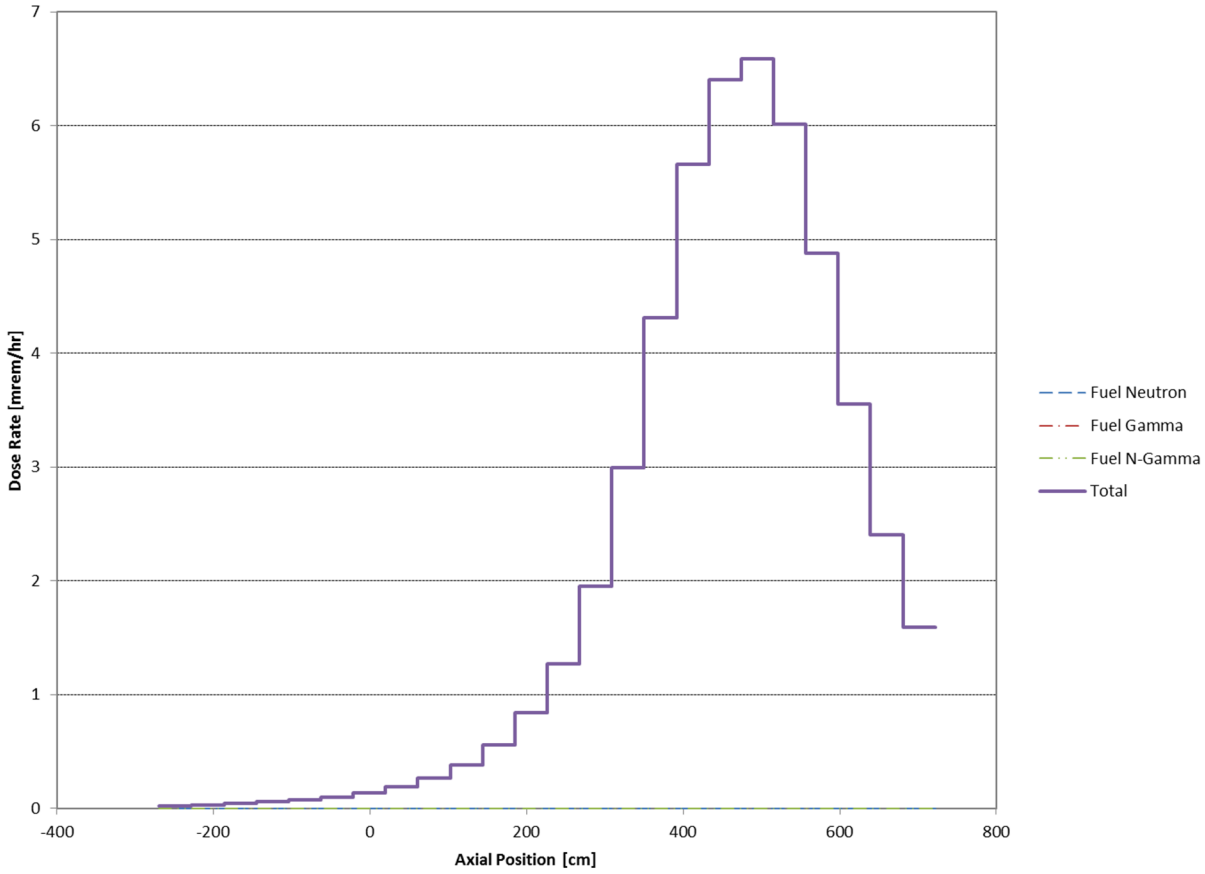

Figure 5.3.21-16 Maximum Radial 1m Dose Rate Profile for Accident Conditions – NRU LEU Fuel – Collapsed

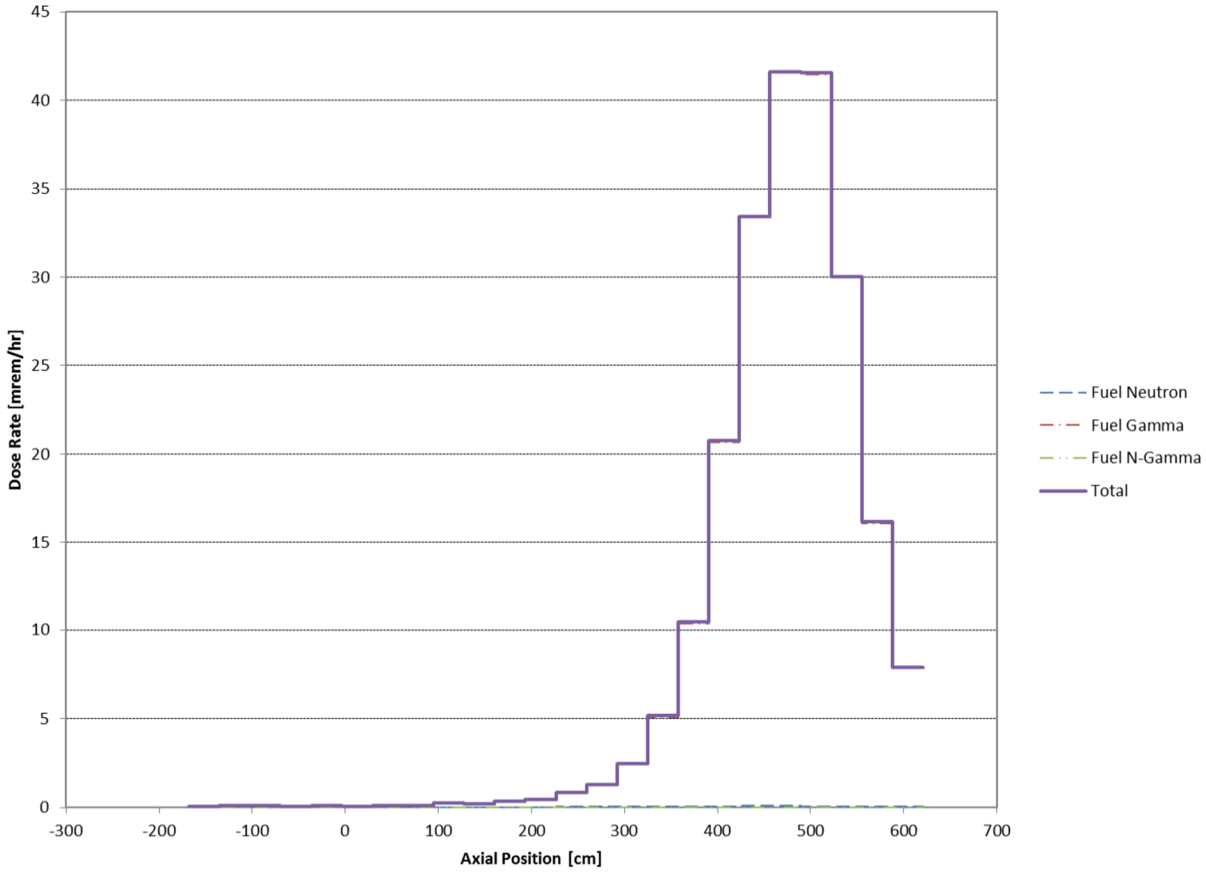

Table 5.3.21-1 NRU Fuel Assembly Dimensions

Description	Value [in]	Value [cm]
Fuel Meat Length	108	274.32
Fuel Rod Diameter	0.216	0.5486
Clad Thickness	0.03	0.0762
Top End Plug Length	3.5	8.89
Bottom End Plug Length	3.5	8.89
Assembly Tube Wall Thickness	0.050	0.127
Assembly Tube ID	1.9680	4.9987

Table 5.3.21-2 NRX Fuel Assembly Dimensions

Description	Value [in]	Value [cm]
Fuel Meat Length	108	274.32
Fuel Rod Diameter	0.25	0.6350
Clad Thickness	0.03	0.0762
Top End Plug Length	4.00	10.16
Bottom End Plug Length	4.00	10.16
Assembly Tube OD	1.3810	3.5077
Assembly Tube ID	1.2410	3.1521

Table 5.3.21-3 NRU and NRX Evaluated Fuel Material Properties

PARAMETER	NRU HEU	NRU LEU	NRX
Weight of ^{235}U (g per pin)	43.7	43.7	79.2
Weight of Total U (g per pin)	48.0	230	87.0
Enrichment (%)	91.0	19.0	91.0
Burnup (MWd)	364	363	375
^{235}U Depletion (%)	87.4	83.6	85.1
Minimum Cool Time (years)	19	3	18
Max Decay Heat (W/cask)	162	641	171

Table 5.3.21-4 Fuel Material Compositions

Element	NRU HEU Wt %	NRU LEU Wt %	NRX Wt %
^{235}U	20.411	11.811	28.275
^{238}U	2.019	50.351	2.796
Al	77.570	37.838	68.929

Table 5.3.21-5 Neutron Source Term Comparison for NRU HEU Fuel Assembly

Group	E Lower [MeV]	E Upper [MeV]	Single Cell Source [n/sec-MTU]	Supercell Source [n/sec-MTU]	Percent Difference
1	6.38E+00	2.00E+01	3.9105E+01	9.1798E+00	-76.5%
2	3.01E+00	6.38E+00	4.1109E+02	1.0543E+02	-74.4%
3	1.83E+00	3.01E+00	9.1987E+03	4.6275E+03	-49.7%
4	1.42E+00	1.83E+00	1.3219E+04	6.7836E+03	-48.7%
5	9.07E-01	1.42E+00	1.9198E+04	9.8613E+03	-48.6%
6	4.08E-01	9.07E-01	1.9509E+04	1.0014E+04	-48.7%
7	1.11E-01	4.08E-01	8.5190E+03	4.3704E+03	-48.7%
8	1.50E-02	1.11E-01	1.3876E+03	7.1183E+02	-48.7%
9	3.04E-03	1.50E-02	4.3073E+01	2.1978E+01	-49.0%
10	5.83E-04	3.04E-03	3.5136E+00	1.7896E+00	-49.1%
11	1.01E-04	5.83E-04	2.8702E-01	1.4610E-01	-49.1%
12	2.90E-05	1.01E-04	2.4486E-02	1.2558E-02	-48.7%
13	1.07E-05	2.90E-05	3.8771E-03	1.9841E-03	-48.8%
14	3.06E-06	1.07E-05	3.7135E-05	1.2127E-05	-67.3%
15	1.86E-06	3.06E-06	2.1928E-06	6.0681E-07	-72.3%
16	1.30E-06	1.86E-06	8.2886E-07	2.2720E-07	-72.6%
17	1.13E-06	1.30E-06	2.2810E-07	6.2452E-08	-72.6%
18	1.00E-06	1.13E-06	1.7407E-07	4.4165E-08	-74.6%
19	8.00E-07	1.00E-06	2.1421E-07	6.4780E-08	-69.8%
20	4.14E-07	8.00E-07	3.6300E-07	9.5193E-08	-73.8%
21	3.25E-07	4.14E-07	5.3205E-08	1.7026E-08	-68.0%
22	2.25E-07	3.25E-07	6.0826E-08	1.6177E-08	-73.4%
23	1.00E-07	2.25E-07	6.6240E-08	1.6427E-08	-75.2%
24	5.00E-08	1.00E-07	1.0858E-08	4.0357E-09	-62.8%
25	3.00E-08	5.00E-08	1.0944E-08	2.8958E-09	-73.5%
26	1.00E-08	3.00E-08	9.1411E-11	2.5999E-11	-71.6%
27	1.00E-11	1.00E-08	2.5569E-10	8.0739E-11	-68.4%
Total			7.1529E+04	3.6507E+04	-49.0%

Table 5.3.21-6 Gamma Source Term Comparison for NRU HEU Fuel Assembly

Group	E Lower [MeV]	E Upper [MeV]	Single Cell Source [g/sec-MTU]	Supercell Source [g/sec-MTU]	Percent Difference
1	8.00E+00	1.00E+01	2.3940E+03	7.0612E+02	-70.5%
2	6.50E+00	8.00E+00	1.1060E+04	3.2906E+03	-70.2%
3	5.00E+00	6.50E+00	5.7290E+04	1.7259E+04	-69.9%
4	4.00E+00	5.00E+00	1.4530E+05	4.4338E+04	-69.5%
5	3.00E+00	4.00E+00	6.5250E+06	6.1054E+06	-6.4%
6	2.50E+00	3.00E+00	4.1940E+08	2.9798E+08	-28.9%
7	2.00E+00	2.50E+00	1.6300E+11	1.6329E+11	0.2%
8	1.66E+00	2.00E+00	3.1660E+12	3.1706E+12	0.1%
9	1.33E+00	1.66E+00	3.3730E+13	3.1693E+13	-6.0%
10	1.00E+00	1.33E+00	3.3890E+14	3.1146E+14	-8.1%
11	8.00E-01	1.00E+00	3.5190E+14	3.2636E+14	-7.3%
12	6.00E-01	8.00E-01	4.0800E+16	4.0797E+16	0.0%
13	4.00E-01	6.00E-01	1.0040E+15	9.7981E+14	-2.4%
14	3.00E-01	4.00E-01	1.2380E+15	1.2400E+15	0.2%
15	2.00E-01	3.00E-01	1.7620E+15	1.7613E+15	0.0%
16	1.00E-01	2.00E-01	5.6100E+15	5.6001E+15	-0.2%
17	4.50E-02	1.00E-01	9.5130E+15	9.5202E+15	0.1%
18	1.00E-02	4.50E-02	2.7550E+16	2.7567E+16	0.1%
Total			8.8205E+16	8.8138E+16	-0.1%

Table 5.3.21-7 Neutron Source Terms for NRU HEU Fuel Assembly

Group	E Lower [MeV]	E Upper [MeV]	Source [neutrons/sec-MTU]
1	6.38E+00	2.00E+01	6.7890E+04
2	3.01E+00	6.38E+00	7.1370E+05
3	1.83E+00	3.01E+00	1.5970E+07
4	1.42E+00	1.83E+00	2.2950E+07
5	9.07E-01	1.42E+00	3.3330E+07
6	4.08E-01	9.07E-01	3.3870E+07
7	1.11E-01	4.08E-01	1.4790E+07
8	1.50E-02	1.11E-01	2.4090E+06
9	3.04E-03	1.50E-02	7.4780E+04
10	5.83E-04	3.04E-03	6.1000E+03
11	1.01E-04	5.83E-04	4.9830E+02
12	2.90E-05	1.01E-04	4.2510E+01
13	1.07E-05	2.90E-05	6.7310E+00
14	3.06E-06	1.07E-05	6.4470E-02
15	1.86E-06	3.06E-06	3.8070E-03
16	1.30E-06	1.86E-06	1.4390E-03
17	1.13E-06	1.30E-06	3.9600E-04
18	1.00E-06	1.13E-06	3.0220E-04
19	8.00E-07	1.00E-06	3.7190E-04
20	4.14E-07	8.00E-07	6.3020E-04
21	3.25E-07	4.14E-07	9.2370E-05
22	2.25E-07	3.25E-07	1.0560E-04
23	1.00E-07	2.25E-07	1.1500E-04
24	5.00E-08	1.00E-07	1.8850E-05
25	3.00E-08	5.00E-08	1.9000E-05
26	1.00E-08	3.00E-08	1.5870E-07
27	1.00E-11	1.00E-08	4.4390E-07
Total			1.2418E+08

Table 5.3.21-8 Gamma Source Terms for NRU HEU Fuel Assembly

Group	E Lower [MeV]	E Upper [MeV]	Source [photons/sec-MTU]
1	8.00E+00	1.00E+01	2.3940E+03
2	6.50E+00	8.00E+00	1.1060E+04
3	5.00E+00	6.50E+00	5.7290E+04
4	4.00E+00	5.00E+00	1.4530E+05
5	3.00E+00	4.00E+00	6.5250E+06
6	2.50E+00	3.00E+00	4.1940E+08
7	2.00E+00	2.50E+00	1.6300E+11
8	1.66E+00	2.00E+00	3.1660E+12
9	1.33E+00	1.66E+00	3.3730E+13
10	1.00E+00	1.33E+00	3.3890E+14
11	8.00E-01	1.00E+00	3.5190E+14
12	6.00E-01	8.00E-01	4.0800E+16
13	4.00E-01	6.00E-01	1.0040E+15
14	3.00E-01	4.00E-01	1.2380E+15
15	2.00E-01	3.00E-01	1.7620E+15
16	1.00E-01	2.00E-01	5.6100E+15
17	4.50E-02	1.00E-01	9.5130E+15
18	1.00E-02	4.50E-02	2.7550E+16
Total			8.8205E+16

Table 5.3.21-9 Neutron Source Terms for NRU LEU Fuel Assembly

Group	E Lower [MeV]	E Upper [MeV]	Source [neutrons/sec-MTU]
1	6.38E+00	2.00E+01	9.4220E+04
2	3.01E+00	6.38E+00	1.0060E+06
3	1.83E+00	3.01E+00	3.6630E+06
4	1.42E+00	1.83E+00	4.3320E+06
5	9.07E-01	1.42E+00	6.5140E+06
6	4.08E-01	9.07E-01	6.4600E+06
7	1.11E-01	4.08E-01	2.9010E+06
8	1.50E-02	1.11E-01	4.3960E+05
9	3.04E-03	1.50E-02	1.4680E+04
10	5.83E-04	3.04E-03	1.2240E+03
11	1.01E-04	5.83E-04	1.0320E+02
12	2.90E-05	1.01E-04	7.1260E+00
13	1.07E-05	2.90E-05	1.1320E+00
14	3.06E-06	1.07E-05	8.9590E-02
15	1.86E-06	3.06E-06	8.8510E-03
16	1.30E-06	1.86E-06	3.3040E-03
17	1.13E-06	1.30E-06	5.6500E-04
18	1.00E-06	1.13E-06	4.3130E-04
19	8.00E-07	1.00E-06	5.2580E-04
20	4.14E-07	8.00E-07	9.0870E-04
21	3.25E-07	4.14E-07	1.1730E-04
22	2.25E-07	3.25E-07	1.6490E-04
23	1.00E-07	2.25E-07	1.5810E-04
24	5.00E-08	1.00E-07	2.7700E-05
25	3.00E-08	5.00E-08	2.6320E-05
26	1.00E-08	3.00E-08	2.3080E-07
27	1.00E-11	1.00E-08	7.2050E-07
Total			2.5426E+07

Table 5.3.21-10 Gamma Source Terms for NRU LEU Fuel Assembly

Group	E Lower [MeV]	E Upper [MeV]	Source [photons/sec-MTU]
1	8.00E+00	1.00E+01	3.3110E+03
2	6.50E+00	8.00E+00	1.5150E+04
3	5.00E+00	6.50E+00	7.7470E+04
4	4.00E+00	5.00E+00	1.9370E+05
5	3.00E+00	4.00E+00	8.7460E+10
6	2.50E+00	3.00E+00	1.0900E+12
7	2.00E+00	2.50E+00	1.8520E+14
8	1.66E+00	2.00E+00	2.6290E+13
9	1.33E+00	1.66E+00	2.6780E+14
10	1.00E+00	1.33E+00	5.5510E+14
11	8.00E-01	1.00E+00	2.2570E+15
12	6.00E-01	8.00E-01	1.7910E+16
13	4.00E-01	6.00E-01	6.1870E+15
14	3.00E-01	4.00E-01	1.5540E+15
15	2.00E-01	3.00E-01	2.0350E+15
16	1.00E-01	2.00E-01	8.5930E+15
17	4.50E-02	1.00E-01	9.9880E+15
18	1.00E-02	4.50E-02	2.7200E+16
Total			7.6760E+16

Table 5.3.21-11 Neutron Source Terms for NRX Fuel Assembly

Group	E Lower [MeV]	E Upper [MeV]	Source [neutrons/sec-MTU]
1	6.380E+00	2.000E+01	8.7730E+04
2	3.010E+00	6.380E+00	9.0610E+05
3	1.830E+00	3.010E+00	1.5140E+07
4	1.420E+00	1.830E+00	2.1460E+07
5	9.070E-01	1.420E+00	3.1170E+07
6	4.080E-01	9.070E-01	3.1670E+07
7	1.110E-01	4.080E-01	1.3840E+07
8	1.500E-02	1.110E-01	2.2530E+06
9	3.040E-03	1.500E-02	7.0200E+04
10	5.830E-04	3.040E-03	5.7350E+03
11	1.010E-04	5.830E-04	4.6860E+02
12	2.900E-05	1.010E-04	3.9750E+01
13	1.070E-05	2.900E-05	6.2990E+00
14	3.060E-06	1.070E-05	7.5330E-02
15	1.860E-06	3.060E-06	4.7510E-03
16	1.300E-06	1.860E-06	1.7990E-03
17	1.130E-06	1.300E-06	4.9550E-04
18	1.000E-06	1.130E-06	3.8450E-04
19	8.000E-07	1.000E-06	4.5430E-04
20	4.140E-07	8.000E-07	7.9620E-04
21	3.250E-07	4.140E-07	1.1080E-04
22	2.250E-07	3.250E-07	1.3320E-04
23	1.000E-07	2.250E-07	1.4690E-04
24	5.000E-08	1.000E-07	2.1630E-05
25	3.000E-08	5.000E-08	2.4010E-05
26	1.000E-08	3.000E-08	1.7980E-07
27	1.000E-11	1.000E-08	4.7410E-07
Total			1.1660E+08

Table 5.3.21-12 Gamma Source Terms for NRX Fuel Assembly

Group	E Lower [MeV]	E Upper [MeV]	Source [photons/sec-MTU]
1	8.00E+00	1.00E+01	2.9410E+03
2	6.50E+00	8.00E+00	1.3550E+04
3	5.00E+00	6.50E+00	7.0020E+04
4	4.00E+00	5.00E+00	1.7700E+05
5	3.00E+00	4.00E+00	1.2010E+07
6	2.50E+00	3.00E+00	6.6300E+08
7	2.00E+00	2.50E+00	1.6340E+11
8	1.66E+00	2.00E+00	3.1520E+12
9	1.33E+00	1.66E+00	3.5670E+13
10	1.00E+00	1.33E+00	3.5100E+14
11	8.00E-01	1.00E+00	3.7940E+14
12	6.00E-01	8.00E-01	4.0630E+16
13	4.00E-01	6.00E-01	1.0520E+15
14	3.00E-01	4.00E-01	1.2330E+15
15	2.00E-01	3.00E-01	1.7560E+15
16	1.00E-01	2.00E-01	5.5950E+15
17	4.50E-02	1.00E-01	9.4790E+15
18	1.00E-02	4.50E-02	2.7460E+16
Total			8.7974E+16

Table 5.3.21-13 Cask/Basket Material Descriptions for NRU/NRX

Material	Element	Density [g/cm^3]	Number Density [atom/b-cm]
Aluminum	Al	2.70	6.0265E-02
Stainless Steel 304	Fe	7.94	5.9505E-02
	Cr		1.7472E-02
	Ni		7.7392E-03
	Mn		1.7407E-03
Lead	Pb	11.34	3.2967E-02
Neutron Shield	H	0.97	5.9884E-02
	O		2.4595E-02
	C		1.0701E-02
Impact Limiter	Al	0.50	1.1153E-02

Table 5.3.21-14 NRU/NRX Basket Dimensions

Description	Value [in]	Value [cm]
Bottom Spacer Length	51.75	131.445
Basket Length	122.25	310.515
Tube Wall Thickness	0.065	0.1651
Tube OD	2.50	6.35
Tube Length	121.50	308.61
Tube Inner PCD	5.06	12.8524
Tube Outer PCD	9.78	24.8412
Lid Collar Height	2.50	6.985
Lid Plate Thickness	0.50	1.27

Table 5.3.21-15 ANSI/ANS 6.1.1-1977 Neutron Flux-to-Dose Conversion Factors

Energy [MeV]	Response [(rem/hr)/(n/cm^2/sec)]
20.0	2.27E-04
14.0	2.08E-04
10.0	1.47E-04
7.0	1.47E-04
5.0	1.56E-04
2.5	1.25E-04
1.0	1.32E-04
5.0E-01	9.26E-05
1.0E-01	2.17E-05
1.0E-02	3.56E-06
1.0E-03	3.76E-06
1.0E-04	4.18E-06
1.0E-05	4.54E-06
1.0E-06	4.46E-06
1.0E-07	3.67E-06
2.5E-08	3.67E-06

Table 5.3.21-16 ANSI/ANS 6.1.1-1977 Gamma Flux-to-Dose Conversion Factors

Energy, E [MeV]	Response [(rem/hr)/(γ/cm²/sec)]	Energy, E [MeV]	Response [(rem/hr)/(γ/cm²/sec)]
15.0	1.33E-05	1.0	1.98E-06
13.0	1.18E-05	0.8	1.68E-06
11.0	1.03E-05	0.7	1.52E-06
9.0	8.77E-06	0.65	1.44E-06
7.5	7.66E-06	0.6	1.36E-06
6.75	7.11E-06	0.55	1.27E-06
6.25	6.74E-06	0.5	1.17E-06
5.75	6.37E-06	0.45	1.08E-06
5.25	6.01E-06	0.4	9.85E-07
5.0	5.80E-06	0.35	8.78E-07
4.75	5.60E-06	0.3	7.59E-07
4.25	5.23E-06	0.25	6.31E-07
3.75	4.83E-06	0.2	5.01E-07
3.25	4.41E-06	0.15	3.79E-07
2.8	4.01E-06	0.1	2.83E-07
2.6	3.82E-06	0.07	2.58E-07
2.2	3.42E-06	0.05	2.90E-07
1.8	2.99E-06	0.03	5.82E-07
1.4	2.51E-06	0.01	3.96E-06

Table 5.3.21-17 Undamaged NRU HEU Fuel Dose Rate Summary

Transport Condition	Dose Rate Location	Maximum		Average	
		[mrem/hr]	FSD	[mrem/hr]	FSD
Normal	Side Surface of Cask	2.28	2.5%	0.444	3.9%
	Top Surface of Cask	0.191	17.0%	0.079	13.8%
	Bottom Surface of Cask	0.003	17.0%	0.001	15.7%
	Side 1m (Transport Index)	0.219	2.1%	0.089	2.5%
	2m from ISO - Radial	0.064	1.5%	0.030	2.1%
	Dose at Cab of Truck	0.001	26.4%	0.001	20.9%
Accident	Side Surface of Cask	4.52	3.0%	2.36	2.1%
	Top Surface of Cask	1.99	21.3%	0.530	22.0%
	Bottom Surface of Cask	0.036	25.2%	0.013	37.2%
	Side 1m	0.463	1.2%	0.236	1.9%
	Top 1m	0.095	11.1%	0.045	10.5%
	Bottom 1m	0.020	73.0%	0.006	103.5%

Table 5.3.21-18 Collapsed NRU HEU Fuel Dose Rate Summary

Transport Condition	Dose Rate Location	Maximum		Average	
		[mrem/hr]	FSD	[mrem/hr]	FSD
Normal	Side Surface of Cask	30.3	0.4%	2.26	1.5%
	Top Surface of Cask	1.48	4.4%	0.710	4.0%
	Bottom Surface of Cask	< 0.001	27.7%	< 0.001	28.1%
	Side 1m (Transport Index)	2.23	0.5%	0.453	1.0%
	2m from ISO - Radial	0.450	0.6%	0.152	0.9%
	Dose at Cab of Truck	0.010	26.1%	0.007	11.3%
Accident	Side Surface of Cask	61.3	1.2%	5.25	5.8%
	Top Surface of Cask	13.7	5.5%	4.02	5.7%
	Bottom Surface of Cask	0.001	19.4%	0.001	23.9%
	Side 1m	3.75	2.4%	0.700	4.7%
	Top 1m	0.903	39.1%	0.478	22.2%
	Bottom 1m	0.002	2.8%	0.001	4.0%

Table 5.3.21-19 Undamaged NRU LEU Fuel Dose Rate Summary

Transport Condition	Dose Rate Location	Maximum		Average	
		[mrem/hr]	FSD	[mrem/hr]	FSD
Normal	Side Surface of Cask	41.5	0.8%	21.5	1.3%
	Top Surface of Cask	4.65	8.4%	2.00	7.9%
	Bottom Surface of Cask	0.088	24.7%	0.036	30.6%
	Side 1m (Transport Index)	11.69	0.5%	4.81	0.8%
	2m from ISO - Radial	4.02	0.4%	1.72	0.7%
	Dose at Cab of Truck	0.057	64.4%	0.025	33.9%
Accident	Side Surface of Cask	113.4	1.2%	64.0	1.6%
	Top Surface of Cask	34.7	11.6%	10.6	13.3%
	Bottom Surface of Cask	0.594	28.7%	0.175	46.5%
	Side 1m	25.1	0.7%	10.7	1.1%
	Top 1m	2.48	7.4%	0.898	32.7%
	Bottom 1m	0.035	27.1%	0.013	33.3%

Table 5.3.21-20 Collapsed NRU LEU Fuel Dose Rate Summary

Transport Condition	Dose Rate Location	Maximum		Average	
		[mrem/hr]	FSD	[mrem/hr]	FSD
Normal	Side Surface of Cask	313.3	0.4%	26.7	1.1%
	Top Surface of Cask	24.2	2.8%	11.6	2.8%
	Bottom Surface of Cask	0.002	52.3%	0.001	66.7%
	Side 1m (Transport Index)	30.74	0.4%	5.99	0.8%
	2m from ISO - Radial	6.59	0.4%	2.10	0.7%
	Dose at Cab of Truck	0.153	3.9%	0.132	4.0%
Accident	Side Surface of Cask	626.5	0.7%	54.9	3.3%
	Top Surface of Cask	164.1	3.4%	56.4	4.8%
	Bottom Surface of Cask	0.027	74.2%	0.006	148.2%
	Side 1m	41.6	1.0%	8.90	2.7%
	Top 1m	11.8	2.4%	5.47	8.2%
	Bottom 1m	0.108	98.2%	0.023	210.2%

Table 5.3.21-21 Undamaged NRX Fuel Dose Rate Summary

Transport Condition	Dose Rate Location	Maximum		Average	
		[mrem/hr]	FSD	[mrem/hr]	FSD
Normal	Side Surface of Cask	1.98	2.5%	0.437	3.6%
	Top Surface of Cask	0.148	11.1%	0.075	13.0%
	Bottom Surface of Cask	0.002	3.5%	0.001	3.7%
	Side 1m (Transport Index)	0.206	2.1%	0.087	2.3%
	2m from ISO - Radial	0.065	1.3%	0.030	1.9%
	Dose at Cab of Truck	0.001	37.7%	0.001	22.2%
Accident	Side Surface of Cask	4.15	1.5%	2.38	2.1%
	Top Surface of Cask	1.55	15.9%	0.439	21.1%
	Bottom Surface of Cask	0.020	23.5%	0.008	27.8%
	Side 1m	0.481	1.4%	0.240	1.9%
	Top 1m	0.152	79.6%	0.045	48.7%
	Bottom 1m	0.009	36.0%	0.004	35.8%

Table 5.3.21-22 Collapsed NRX Fuel Dose Rate Summary

Transport Condition	Dose Rate Location	Maximum		Average	
		[mrem/hr]	FSD	[mrem/hr]	FSD
Normal	Side Surface of Cask	39.9	0.4%	2.93	1.5%
	Top Surface of Cask	1.79	3.4%	0.901	3.6%
	Bottom Surface of Cask	< 0.001	7.4%	< 0.001	7.8%
	Side 1m (Transport Index)	2.98	0.5%	0.597	1.0%
	2m from ISO - Radial	0.595	0.6%	0.202	0.9%
	Dose at Cab of Truck	0.011	20.6%	0.009	11.5%
Accident	Side Surface of Cask	78.3	1.3%	6.43	6.1%
	Top Surface of Cask	17.2	5.1%	5.21	5.4%
	Bottom Surface of Cask	0.006	72.9%	0.002	117.0%
	Side 1m	4.68	2.4%	0.885	4.9%
	Top 1m	1.25	51.1%	0.608	25.4%
	Bottom 1m	0.077	97.3%	0.016	206.8%

Table 5.3.21-23 Summarized Maximum Dose Rates for Undamaged Fuel

Transport Condition	Dose Rate Location	NRU HEU	NRU LEU	NRX HEU	Limit [mrem/hr]
Normal	Side Surface of Cask	2.28	41.5	1.98	1000
	2m from Truck - Radial	0.064	4.02	0.065	10
	Dose at Cab of Truck	0.001	0.057	0.001	2
Accident	Side 1m	0.463	25.1	0.481	1000

Table 5.3.21-24 Summarized Maximum Dose Rates for Collapsed Fuel

Transport Condition	Dose Rate Location	NRU HEU	NRU LEU	NRX HEU	Limit [mrem/hr]
Normal	Side Surface of Cask	30.3	313.3	39.9	1000
	2m from Truck - Radial	0.450	6.59	0.595	10
	Dose at Cab of Truck	0.010	0.153	0.011	2
Accident	Side 1m	3.75	41.6	4.68	1000

5.3.22 HEUNL

Results of the shielding evaluation for four HEUNL containers in the LWT cask are presented in this section. An inventory of gamma-emitting radionuclides is used with the actinide and nitrate contents to calculate gamma and neutron source terms. HEUNL containers are analyzed under normal and accident operating conditions to demonstrate compliance with 10 CFR 71.47 and 10 CFR 71.51.

HEUNL Source Terms

HEUNL source terms are calculated using an inventory of gamma-emitting radionuclides, actinide contents, and nitrate contents. The ORIGEN-S control module in SCALE 6.1 is used to calculate neutron and gamma source spectra.

Analysis reference composition of the HEUNL material is provided in Table 5.3.22-1. Analysis reference actinide concentrations (2003) are provided in Table 5.3.22-2. The reference inventory of gamma-emitting radionuclides (2012) is provided in Table 5.3.22-3 and consists of all fission products. There have been no additions of radioactive liquid containing fission products or fissile material since 2003.

Data provided in Tables 5.3.22-1, Table 5.3.22-2, and Table 5.3.22-3 are representative values applied as a starting point for the analysis presented in this chapter. Variations in the listed values do not impact the conclusion drawn from this evaluation to any significant extent provided the maximum curie per liter gamma emitter content specified later in this section is maintained. Material composition not producing gamma sources (e.g., inorganic content breakdown specified in Table 4.3.22-1) has no impact on the analysis. As this type of solution has no significant neutron emitter content, the actinide content used as reference data has a negligible effect on the conclusions of the chapter.

Actinides listed in Table 5.3.22-2 are the only neutron source producers of the HEUNL material and minor gamma source contributors. The primary gamma source contributors are fission products listed in the gamma-emitting radionuclide inventory in Table 5.3.22-3. There is no significant light element gamma source in the material. Actinide source calculations require the inclusion of the light element materials to accurately calculate the (alpha, n) component of the neutron source. Therefore, two ORIGEN-S calculations are used for the source term calculation, one for fission products and another for actinides and light elements. All results are provided on a “per liter” basis.

The fission product inventory credits some short-lived or metastable radionuclides to their parent radionuclide. In order to calculate source spectra, all gamma-emitting radionuclides must be accounted for in ORIGEN-S. Using a decay period in ORIGEN-S to achieve equilibrium

between parent and daughter radionuclide is not desirable as some short-lived gamma producers (e.g. ^{140}La) who lack their long-lived parent radionuclides will be non-conservatively removed. Therefore, all undefined radionuclides are identified using an ORIGEN-S test case and are evaluated at 100% of the parent radionuclide activity. Undefined radionuclides are identified using the nuclide gamma power in the output.

Defined and undefined fission product Curie contents are provided in Table 5.3.22-4 and Table 5.3.22-5, respectively. Conversion from Bq/g to Ci/L is performed using the HEUNL density of 1.30 g/cc. A 50% increase in Curie content is applied to the uncertainty adjusted reference values as additional conservatism for the source term calculation. The reference concentration and uncertainty input values listed in Table 5.3.22-4 and Table 5.3.22-5 have no significant safety importance provided the Ci/liter limit, based on the evaluated column in Table 5.3.22-4, is met. The Curie limit for the source term evaluation is 9.0 Ci/L and determined using the defined fission product evaluated activity. The ORIGEN-S input used for determining undefined gamma emitters is shown in Figure 5.3.22-1. The ORIGEN-S output gamma power by radionuclide used for determining undefined gamma emitters is shown in Figure 5.3.22-2. The ORIGEN-S input for fission products is shown in Figure 5.3.22-3.

Calculation of the (alpha, n) neutron source in ORIGEN-S requires the light element nuclide concentrations of the nitrate solutions and actinide concentrations. The shielding model HEUNL material content evaluated is shown in Table 5.3.22-6. The isotopic content of actinides and light elements for insertion into ORIGEN-S is provided in Table 5.3.22-7. Decay time has negligible effects for the actinide contributions. A decay time of one year is applied to the calculation to allow for minor actinides not defined to be accounted for in the ORIGEN-S gamma spectra. Actinide gamma source is negligible in the results. The ORIGEN-S input for actinides and light elements is shown in Figure 5.3.22-4.

The neutron and gamma source terms per liter of HEUNL material are provided in Table 5.3.22-8 and Table 5.3.22-9, respectively. Neutron source terms are minor and primarily from (alpha, n) contributions from the actinide alpha interaction with light elements in the material. Gamma source terms are primarily from fission products. The source is applied in the shielding model for a container volume of 64.3 L.

HEUNL Shielding Models

MCNP three dimensional shielding analysis allows detailed modeling of the HEUNL containers and cask. The containers and cask are modeled as described in the license drawings. Tube quick disconnect fittings, the bottom portion of the container outer shell that rests on the shoulder and axially overlaps the container and neck, and base plate are conservatively omitted from the shielding model. Containers are shifted towards the top of the cask cavity. The radial lead

gamma shield extends from the bottom of the NAC-LWT cavity to approximately 3 inches (7.62 cm) below the top of the cavity. Positioning the HEUNL material closest to the point of minimum gamma shielding is conservative.

[redacted]

The geometric description of an MCNP model is based on the combinatorial geometry system embedded in the code. In this system, bodies such as cylinders and rectangular parallelepipeds and their logical intersections and unions are used to describe the extent of material zones. The shielding evaluation considers both normal and accident conditions. The accident conditions of transport include the loss of neutron shielding material and lead slump. The neutron shielding shell and the impact limiters are also removed while modeling accident conditions.

While normal conditions include a gap between the lead and outer shell, lead slump is not evaluated for accident conditions as NAC procedures dictate that the lead is allowed to cool from the lowest point with molten lead from the top filling gaps formed during solidification. Therefore, no gap is expected to occur and further accident analyses detailing potential shifting of the lead gap are not necessary.

Detailed model parameters used in creating the three-dimensional model are derived from the license drawings. Elevations associated with the three-dimensional features are established with respect to the center bottom of the NAC-LWT cask cavity for the MCNP combinatorial model.

Material representation of the HEUNL material is modeled using the material content listed in Table 5.3.22-6. The isotopic content of the HEUNL material used as input into MCNP is provided in Table 5.3.22-10. ^{237}Np, ^{239}Pu, and ^{240}Pu are not included in the shielding model as they are minor constituents. Water content of the solution is calculated using the difference of the solution density and mass concentrations of all nitrates.

Material compositions for structural and shield materials are shown in Table 5.3.22-11. The three-dimensional NAC-LWT MCNP models are shown in Figure 5.3.22-5 through Figure 5.3.22-7, while sketches are shown in Figure 5.3.22-8 and Figure 5.3.22-9. Selected basket dimensions critical to model and dose results are listed in Table 5.3.22-12. A sample MCNP input file is provided in Figure 5.3.22-10.

HEUNL Shielding Evaluation

The shielding evaluation is performed using MCNP5 v1.60. The MCNP shielding model is utilized with the source terms to estimate the dose rate profiles at various distances from the side, top and bottom of the cask for both normal and accident conditions. The method of solution is

continuous energy Monte Carlo with a Monte Carlo based weight window generator to accelerate code convergence. Weight window and problem convergence is verified by the 10 statistical checks performed by MCNP. Radial or axial biasing is performed depending on the desired dose location.

The ANSI/ANS 6.1.1-1977 flux-to-dose rate conversion factors are employed in the MCNP analysis. The ANSI/ANS neutron and gamma dose conversion factors are shown in Table 5.3.22-13 and Table 5.3.22-14, respectively.

HEUNL Dose Rates

Dose rates were computed for the HEUNL containers for both normal and accident conditions. HEUNL dose rates (normal and accident) are summarized in Table 5.3.22-15. The Transportation Index (TI) for the package is 1.5.

Results are summarized and compared to dose rate limits in Table 5.3.22-16. Gamma dose primarily from fission product sources is the dominant contributor to dose rates. A payload of 4 HEUNL containers is found to be in compliance of 10 CFR 71.47 and 10 CFR 71.51. Dose rate profiles for the maximum dose rate cases are provided in Figure 5.3.22-11 through Figure 5.3.22-13.

Figure 5.3.22-1 ORIGEN-S Input for Determining Undefined Fission Products

```
=ORIGENS
' 71 is FT71 temporary files for storing concentration
0$$  A11 71  E T
DECAY CASE
' Item 1: 21  - Library Unit number
' Item 2: 1 - Not used
' Item 3: 1 - Binary library position - no multiple libraries
' Item 4: -82 - xn27g19v7 energy group structure
' Item 11: 0  - print suppressed for for nuclear data library calculation
' Item 16: 4 - material input in Curies
' Item 33: -82 - xn27g19v7 energy group structure
3$$ 21 1 1 -82 A11 0 A16 4  A33 -82  E T
' Block not used - left for backward compatibility
35$$ 0 T
' Item 8: 1  - specify cut as percent of total
' Item 11: 0 - problem dependent material for alpha,n (0 would be UO2, 2 for problem dependent)
54$$ A8 1 A11 2  E
' Item 2: 6 - number of time intervals
' Item 6: 1 - continuation problem control (block 5 used)- not applicable here
' Item 10: 0 - new concentration input
' Item 13: 14 - number of nuclides input into 73,74,75 arrays
' Item 14: 2 - decay time unit control (Min)
' Item 15: 3 - input cards both title and basis entered
56$$ A2 6  A6 1  A10  0  A13 14  A14 2  A15 3 E
' Item 1: 0 - Time subtracted from 60* Array values
' Item 2: 1.30 - Density of material - Should not be needed in this case
' Item 3: 1e-05  alpha-n control for cut-off for determining important nuclides
57** 0 1.3 1E-05 E T
HEUNL MATERIAL
Curies PER Liter
' Decay time
60** 0.5 15 60 1440 43200 525600
' Cut-off for output table significance (fill array)
61** F1E-08
' Print all available data gram-atoms, grams, curies, watts but no m3
' GRAM-ATOMS   GRAMS    CURIES     WATTS-ALL  WATTS-GAMMA
65$$
 15R1 6R0
 15R1 6R0
 15R1 6R0
' Item 1: 2 - Apply line energy yield from master photon library
' Item 2: 0 - No longer used
' Item 3: 26 - Master photon library (default value is 26)
' Item 4: 1 - library is in binary format (2 for ascii)
81$$ 2 0 26 1  E
' Gamma source print-out trigger - 2 for total source per second (4/LE, 5/ACT, 6/FP)
82$$ 2 2 2 2 2 2
' Nuclide ids for input concentration - FP
73$$ 410950 400950 441030 441060 531310 521320 551370 561400
 571400 581410 581440 601470 631540 631550
' Material quantities of each nuclide - FP
74** 1.792E-01 6.851E-01 4.901E-01 1.476E-02 5.270E-01 2.793E-01
 1.897E+00 1.581E+00 1.528E+00 1.159E+00 2.214E-01 4.269E-01
 2.266E-03 5.270E-03' Determines library of each nuclide (1 for LE, 2 for Act, 3 for FP)
75$$ 3 3 3 3 3 3 3 3 3 3 3 3 3 T
56$$ F0 T
END
```

Figure 5.3.22-2 ORIGEN-S Output Gamma Power for Determining Undefined Fission Products

```
     HEUNL MATERIAL
fission products         page   57
0                                          nuclide gamma power, watts
                                           basis =Curies PER Liter
              initial        0 m      15 m      60 m    1440 m   43200 m  525600 m
     zr 95   2.973E-03 2.973E-03 2.973E-03 2.972E-03 2.941E-03 2.149E-03 5.719E-05
     nb 95   8.121E-04 8.121E-04 8.125E-04 8.139E-04 8.561E-04 1.615E-03 1.272E-04
     nb 95m  0.000E+00 7.140E-10 2.140E-08 8.532E-08 1.861E-06 8.167E-06 2.183E-07
     ru103   1.441E-03 1.441E-03 1.441E-03 1.440E-03 1.416E-03 8.487E-04 2.291E-06
     rh103m  0.000E+00 7.028E-07 1.930E-05 5.973E-05 1.123E-04 6.728E-05 1.816E-07
     rh106   0.000E+00 9.057E-06 1.803E-05 1.803E-05 1.800E-05 1.705E-05 9.159E-06
      i131   1.195E-03 1.195E-03 1.194E-03 1.190E-03 1.096E-03 8.940E-05 2.388E-17
     xe131m  0.000E+00 1.484E-11 4.450E-10 1.776E-09 3.976E-08 1.501E-07 8.046E-16
     te132   3.863E-04 3.863E-04 3.854E-04 3.828E-04 3.111E-04 5.865E-07 0.000E+00
      i132   0.000E+00 9.415E-06 2.721E-04 9.718E-04 3.107E-03 5.862E-06 0.000E+00
     cs137   1.849E-08 1.849E-08 1.849E-08 1.849E-08 1.849E-08 1.845E-08 1.807E-08
     ba137m  0.000E+00 8.069E-04 6.247E-03 6.355E-03 6.354E-03 6.343E-03 6.210E-03
     ba140   1.706E-03 1.706E-03 1.705E-03 1.703E-03 1.616E-03 3.341E-04 4.127E-12
     la140   2.091E-02 2.091E-02 2.091E-02 2.092E-02 2.094E-02 4.878E-03 6.025E-11
     ce141   5.252E-04 5.252E-04 5.251E-04 5.247E-04 5.141E-04 2.770E-04 2.189E-07
     ce144   2.521E-05 2.521E-05 2.521E-05 2.521E-05 2.515E-05 2.344E-05 1.038E-05
     pr144   0.000E+00 7.451E-07 1.704E-05 3.444E-05 3.778E-05 3.521E-05 1.559E-05
     pr144m  0.000E+00 3.504E-08 5.697E-07 7.433E-07 7.439E-07 6.932E-07 3.068E-07
     nd147   3.532E-04 3.531E-04 3.529E-04 3.522E-04 3.315E-04 5.315E-05 3.475E-14
     eu154   1.675E-05 1.675E-05 1.675E-05 1.675E-05 1.675E-05 1.664E-05 1.545E-05
     eu155   1.902E-06 1.902E-06 1.902E-06 1.902E-06 1.901E-06 1.879E-06 1.644E-06
   total     3.034E-02 3.117E-02 3.692E-02 3.778E-02 3.970E-02 1.676E-02 6.450E-03

1
```

Figure 5.3.22-3 ORIGEN-S Input for Fission Products

```
=ORIGENS
' 71 is FT71 temporary files for storing concentration
0$$  A11 71  E T
DECAY CASE
' Item 1: 21  - Library Unit number
' Item 2: 1 - Not used
' Item 3: 1 - Binary library postiion - no multiple libraries
' Item 4: -82 - xn27g19v7 energy group structure
' Item 11: 0  - print suppressed for for nuclear data library calcualtion
' Item 16: 4 - material input in Curies
' Item 33: -82 - xn27g19v7 energy group structure
3$$ 21 1 1 -82 A11 0 A16 4  A33 -82  E T
' Block not used - left for backward compatibility
35$$ 0 T
' Item 8: 1  - specify cut as percent of total
' Item 11: 0 - problem dependent material for alpha,n (0 would be UO2, 2 for problem dependent)
54$$ A8 1 A11 2  E
' Item 2: 6 - number of time intervals
' Item 6: 1 - continuation problem control (block 5 used)- not applicable here
' Item 10: 0 - new concentration input
' Item 13: 21 - number of nuclides input into 73,74,75 arrasy
' Item 14: 1 - decay time unit control (sec)
' Item 15: 3 - input cardsboth title and basis entered
56$$ A2 6  A6 1  A10  0  A13 21  A14 1  A15 3 E
' Item 1: 0 - Time subtracted from 60* Array values
' Item 2: 1.30 - Density of material - Should not be needed in this case
' Item 3: 1e-05  alpha-n control for cut-off for determining important nuclides
57** 0 1.3 1E-05 E T
HEUNL MATERIAL
Curies PER Liter
' Decay time
60** 0 1 60 1E3 1E4 1E5
' Cut-off for output table significance (fill array)
61** F1E-08
' Print all available data gram-atoms, grams, curies, watts but no m3
' GRAM-ATOMS   GRAMS    CURIES     WATTS-ALL  WATTS-GAMMA
65$$
 15R1 6R0
 15R1 6R0
 15R1 6R0
' Item 1: 2 - Apply line energy yield from master photon library
' Item 2: 0 - No longer used
' Item 3: 26 - Master photon library (default value is 26)
' Item 4: 1 - library is in binary format (2 for ascii)
81$$ 2 0 26 1  E
' Gamma source print-out trigger - 2 for total source per second (4/LE, 5/ACT, 6/FP)
82$$ 2 2 2 2 2 2
' Nuclide ids for input concentration - FP
73$$ 410950 410951 400950 441030 441060 451060 451031
531310 541311 521320 551370 561371 561400 571400 581410
581440 591440 591441 601470 631540 631550
' Material quanties of each nuclide - FP
74** 1.792E-01 6.851E-01 6.851E-01 4.901E-01 1.476E-02 1.476E-02 4.901E-01
5.270E-01 5.270E-01 2.793E-01 1.897E+00 1.897E+00 1.581E+00 1.528E+00
 1.159E+00 2.214E-01 2.214E-01 2.214E-01 4.269E-01 2.266E-03 5.270E-03
' Determines library of each nuclide (1 for LE, 2 for Act, 3 for FP)
75$$ 3 3 3 3 3 3 3 3 3 3 3 3 3 3
 3 3 3 3 3 3 3 T
56$$ F0 T
END
```

Figure 5.3.22-4 ORIGEN-S Model for Actinides and Light Elements

```
=ORIGENS
' 71 is FT71 temporary files for storing concentration
0$$  A11 71  E T
DECAY CASE
' Item 1: 21  - Library Unit number
' Item 2: 1 - Not used
' Item 3: 1 - Binary library postiion - no multiple libraries
' Item 4: -82 - xn27g19v7 energy group structure
' Item 11: 0  - print suppressed for for nuclear data library calcualtion
' Item 16: 2 - material input in Grams
' Item 33: -82 - xn27g19v7 energy group structure
3$$ 21 1 1 -82 A11 0 A16 2  A33 -82  E T
' Block not used - left for backward compatibility
35$$ 0 T
' Item 8: 1  - specify cut as percent of total
' Item 11: 0 - problem dependent material for alpha,n (0 would be UO2, 2 for problem dependent)
54$$ A8 1 A11 2  E
' Item 2: 4 - number of time intervals
' Item 6: 1 - continuation problem control (block 5 used)- not applicable here
' Item 10: 0 - new concentration input
' Item 13: 35 - number of nuclides input into 73,74,75 arrasy
' Item 14: 4 - decay time unit control (Days)
' Item 15: 3 - input cardsboth title and basis entered
56$$ A2 4  A6 1  A10  0  A13 35  A14 4  A15 3 E
' Item 1: 0 - Time subtracted from 60* Array values
' Item 2: 1.30 - Density of material - Should not be needed in this case
' Item 3: 1e-05  alpha-n control for cut-off for determining important nuclides
57** 0 1.3 1E-05 E T
HEUNL MATERIAL
MASS PER LR
' Decay time
60** 1 365 3288 3653
' Cut-off for output table significance (fill array)
61** F1E-08
' Print all available data gram-atoms, grams, curies, watts but no m3
' GRAM-ATOMS GRAMS  CURIES WATTS-ALL  WATTS-GAMMA
65$$
 15R1 6R0
 15R1 6R0
 15R1 6R0
' Item 1: 2 - Apply line energy yield from master photon library
' Item 2: 0 - No longer used
' Item 3: 26 - Master photon library (default value is 26)
' Item 4: 1 - library is in binary format (2 for ascii)
81$$ 2 0 26 1  E
' Gamma source print-out trigger - 2 for total source per second (4/LE, 5/ACT, 6/FP)
82$$ 2 2 2 2
' Nuclide ids for input concentration
73$$ 10010 10020 130270 801960 801980 801990 802000 802010
802020 802040 260540 260560 260570 260580 240500 240520
240530 240540 280580 280600 280610 280620 280640 70140
70150 80160 80170 80180 922340 922350 922360 922380
932370 942390 942400
' Material quanties of each nuclide - LE and Actinides
74** 9.675E-01 1.451E-04 4.047E+01 1.595E-02 1.060E+00
 1.793E+00 2.456E+00 1.401E+00 3.174E+00 7.304E-01
 6.154E-02 9.732E-01 2.334E-02 2.971E-03 1.130E-02
 2.178E-01 2.470E-02 6.149E-03 1.199E-01 4.617E-02
 2.007E-03 6.399E-03 1.631E-03 7.968E+01 2.927E-01
 2.744E+02 1.073E-01 5.530E-01 1.230E-01 7.000E+00
 1.530E-01 4.490E-01 1.720E-04 5.630E-04 1.070E-05
' Determines library of each nuclide (1 for LE, 2 for Act, 3 for FP)
75$$  1 1 1 1 1 1 1 1 1 1 1 1 1 1 1 1 1 1 1 1 1 1 1 1 1 1 1 1 1 1 1
 2 2 2 2 2 2 2 T
56$$ F0 T
END
```

Figure 5.3.22-5 Axial VISED Slice of LWT with HEUNL Container Detail

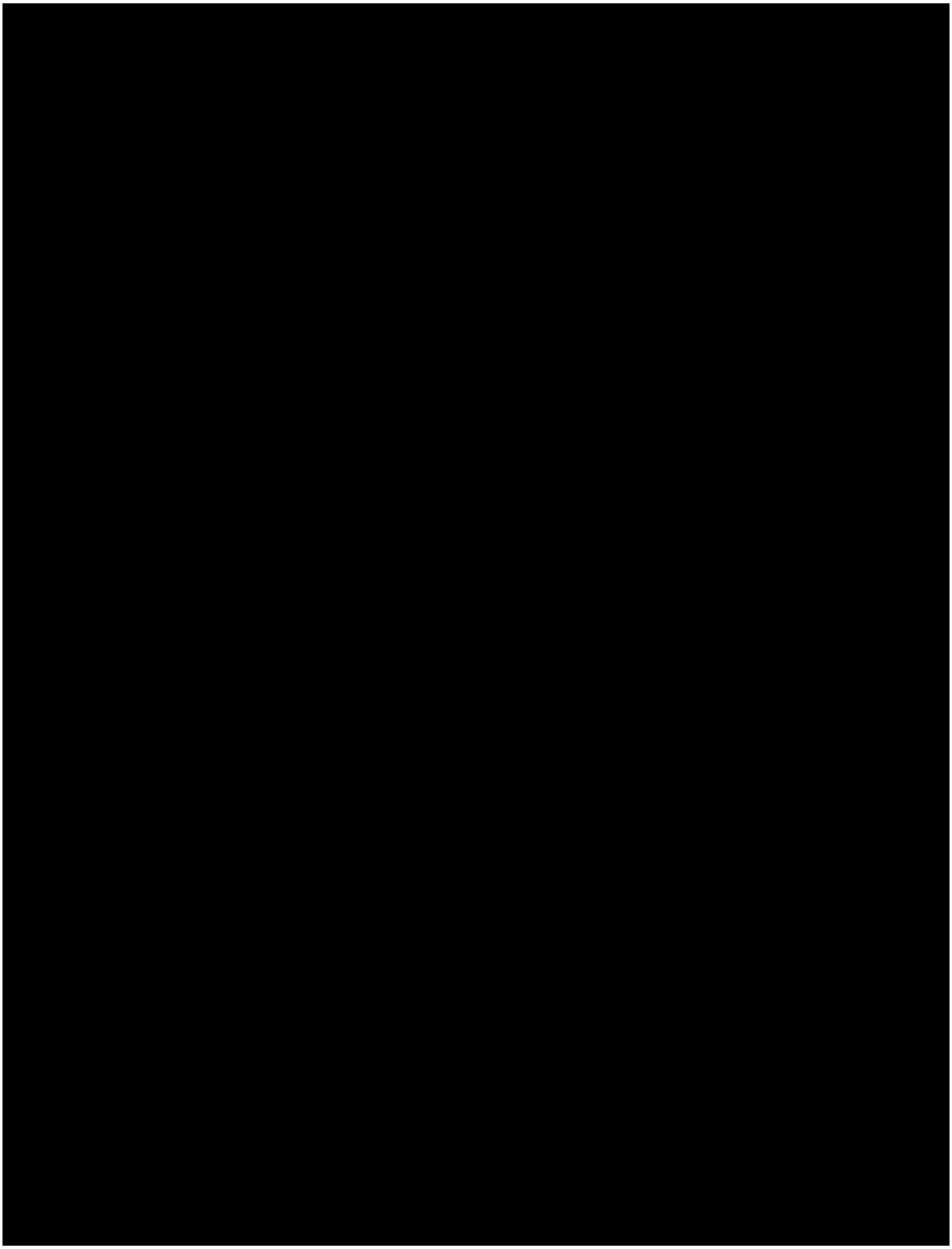

Figure 5.3.22-6 Axial VISED Slice of LWT with HEUNL Containers

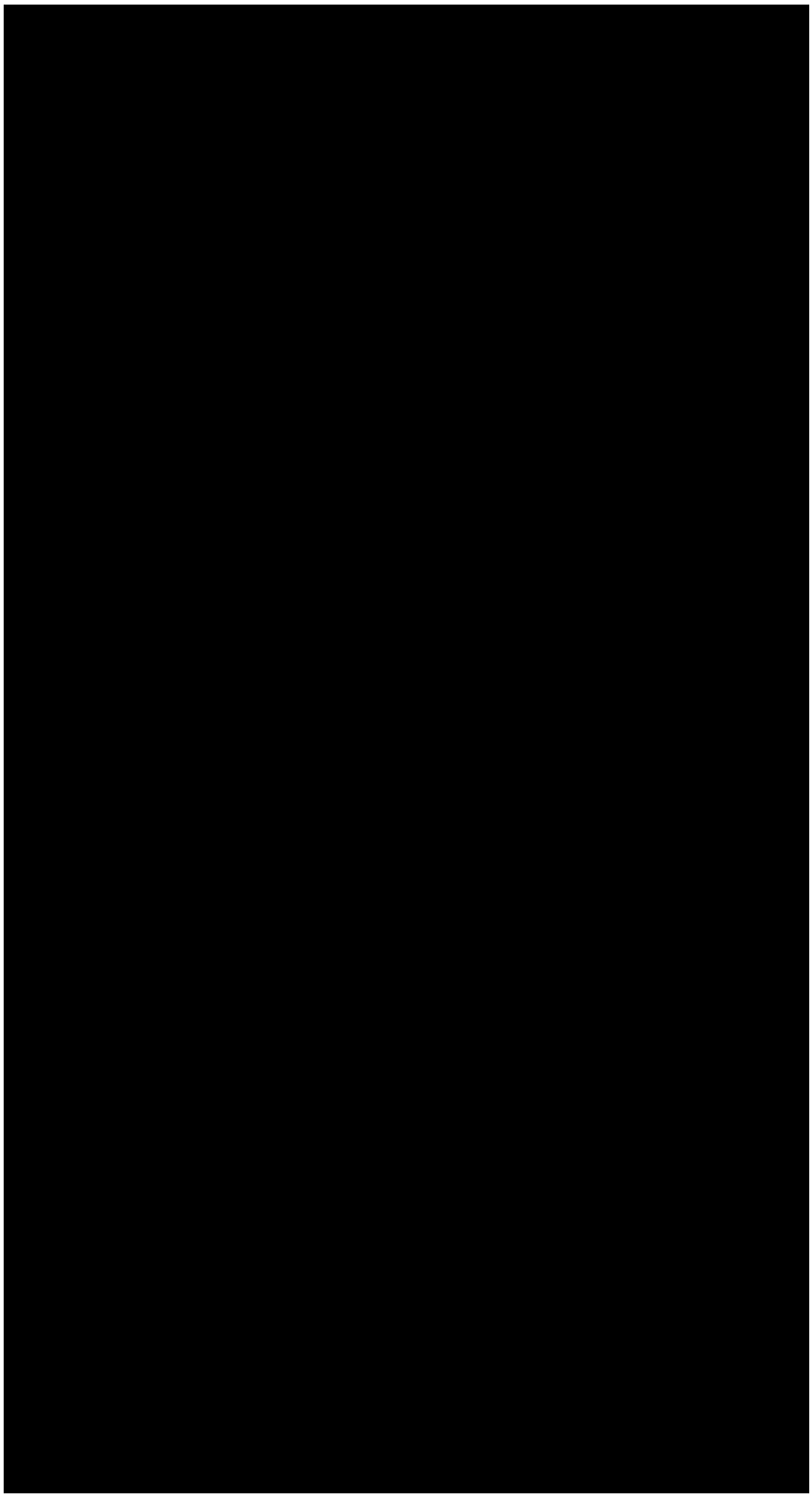

Figure 5.3.22-7 Radial VISED Slice of LWT with HEUNL Containers

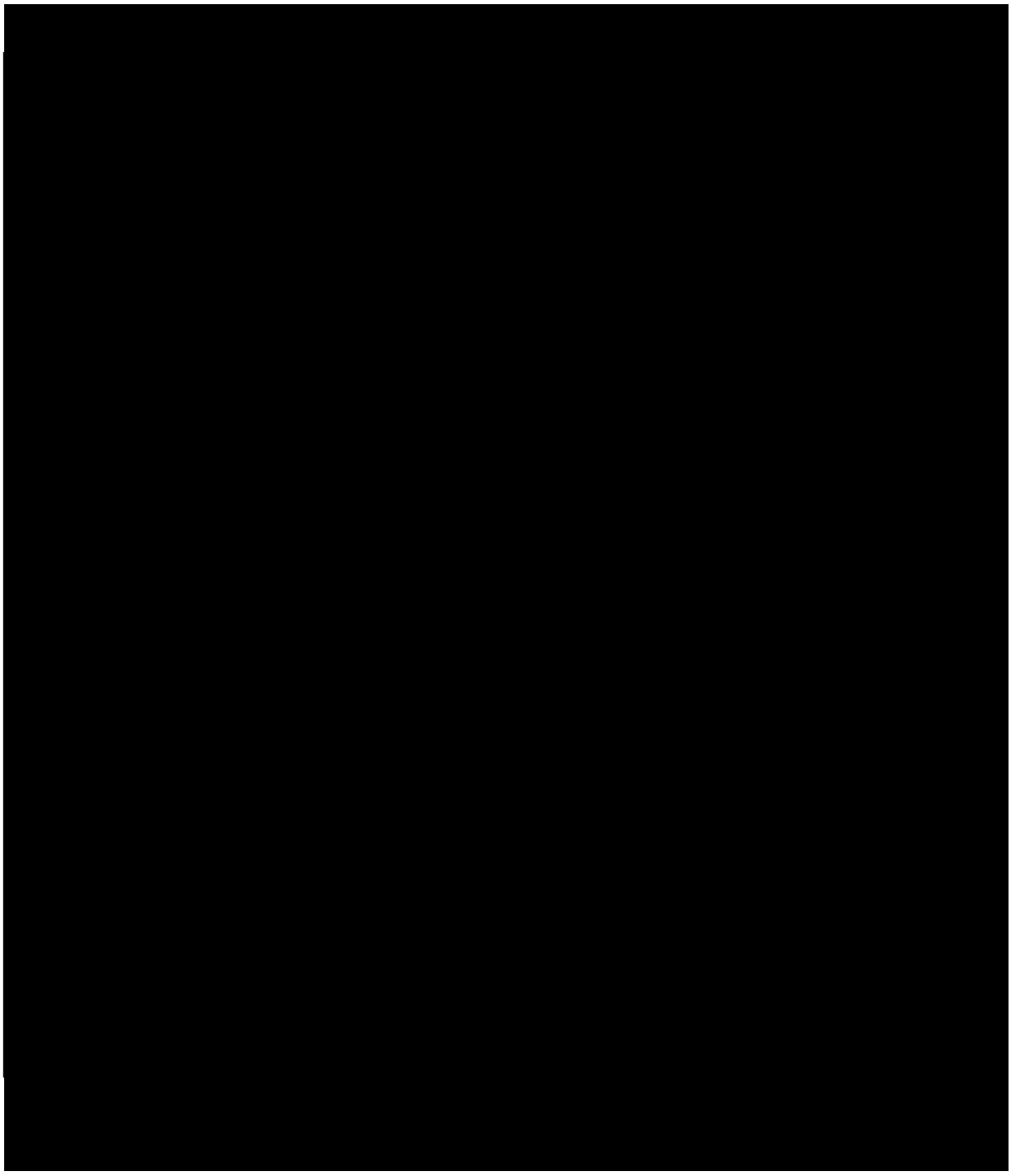

Figure 5.3.22-8 Axial Sketch of LWT with HEUNL Containers

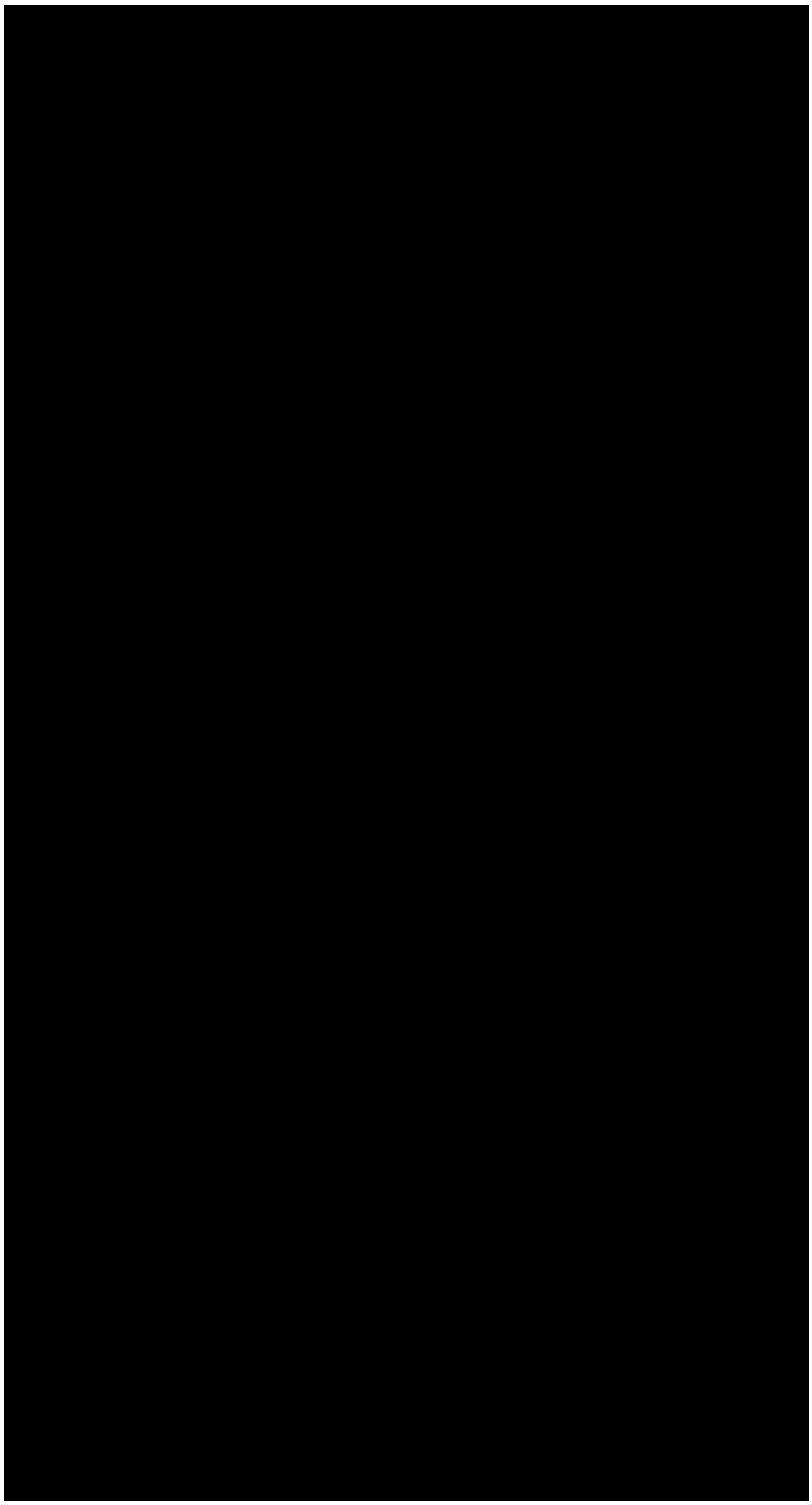

Figure 5.3.22-9 Radial Sketch of LWT with HEUNL Containers

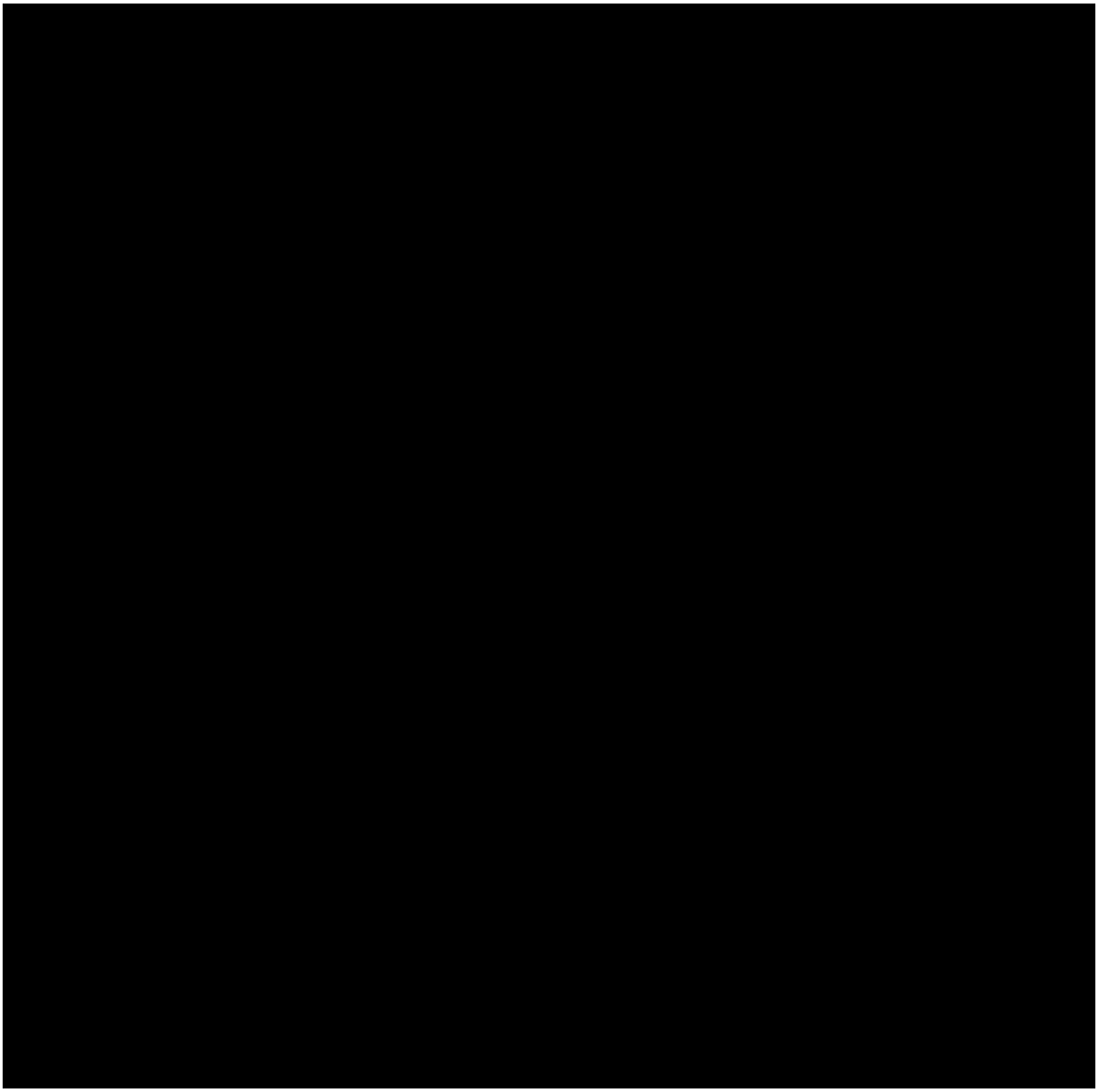

Figure 5.3.22-10 Sample MCNP Input for HEUNL

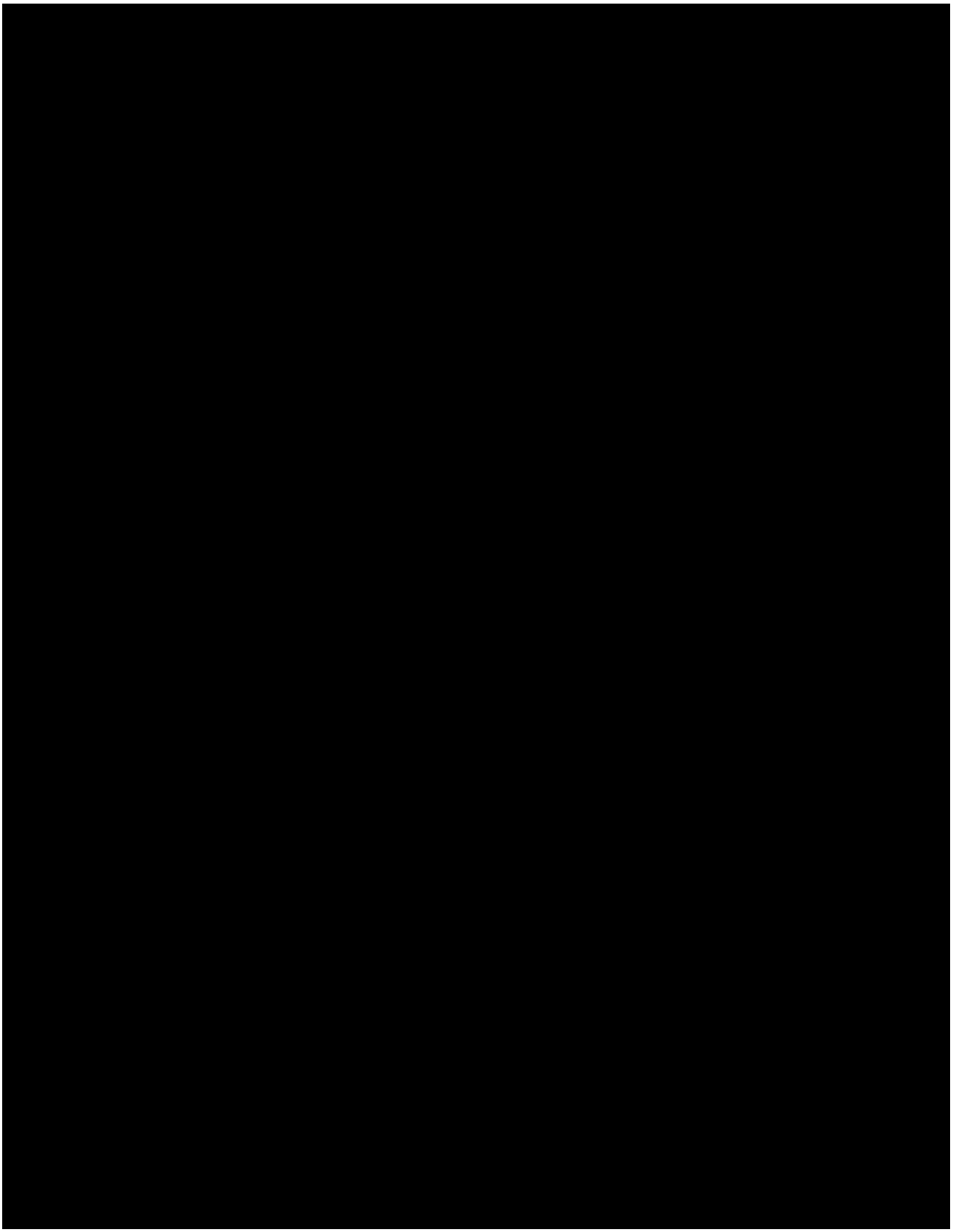

Figure 5.3.22-10 Sample MCNP Input for HEUNL (Continued)

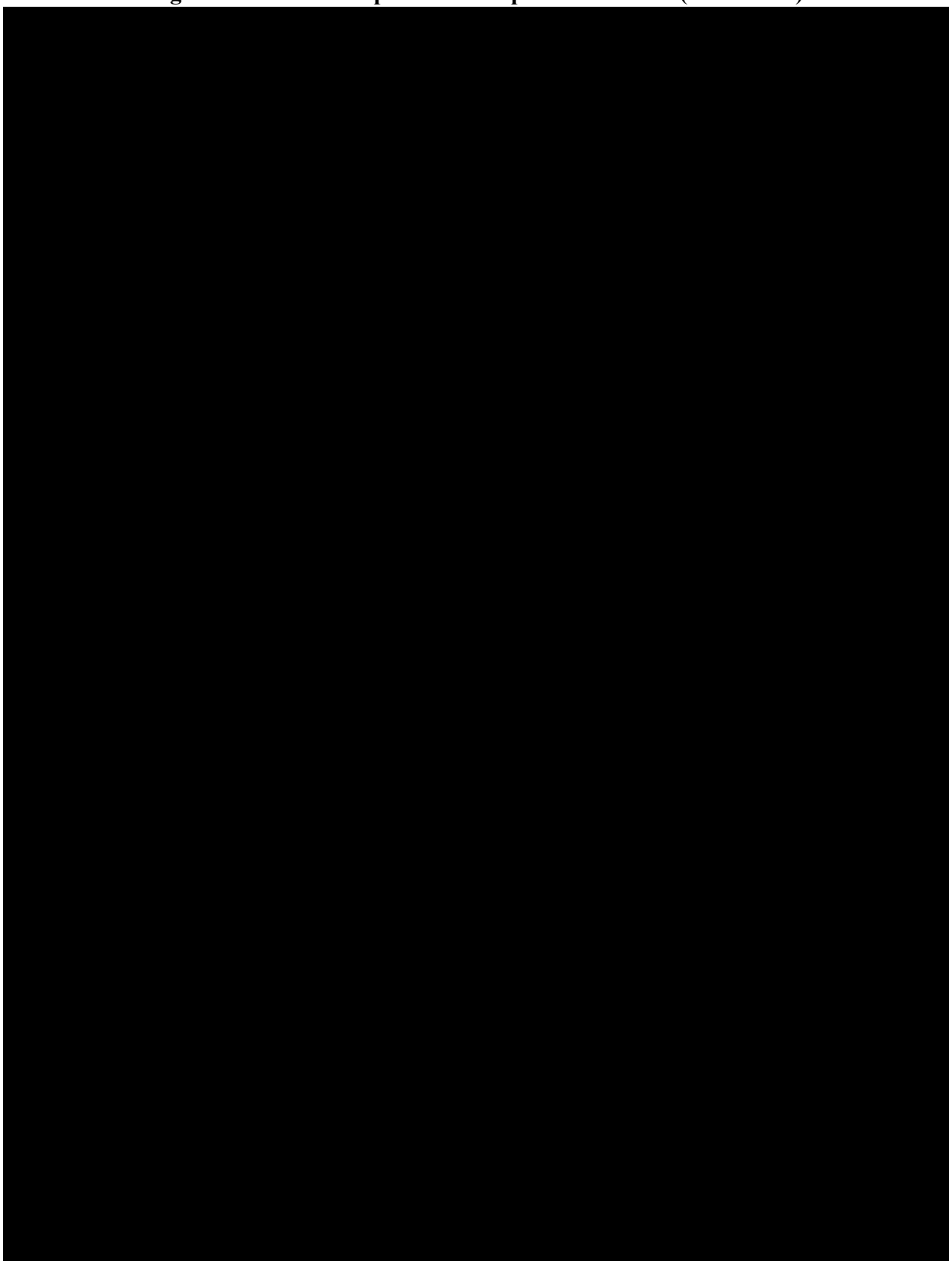

Figure 5.3.22-10 Sample MCNP Input for HEUNL (Continued)

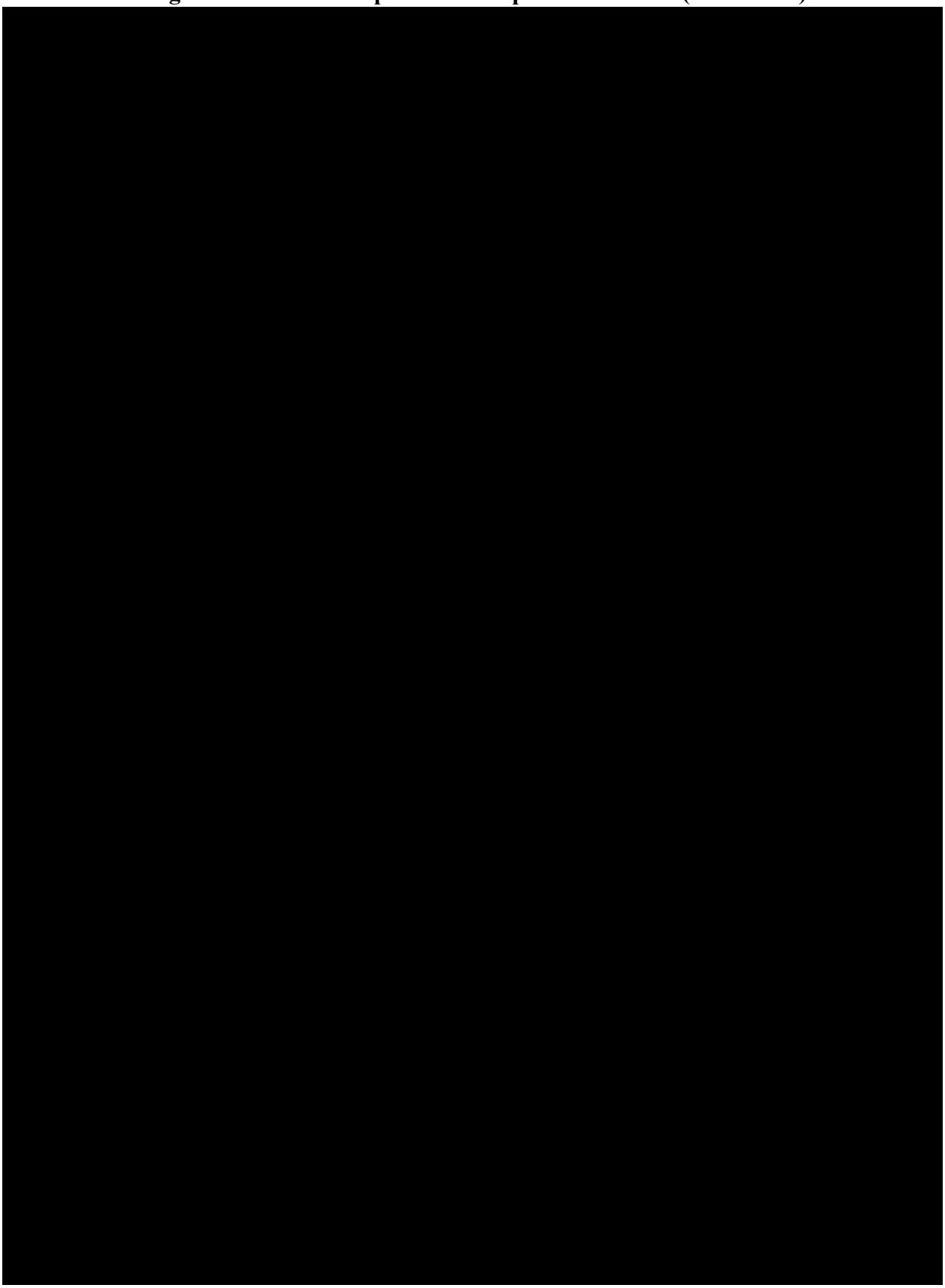

Figure 5.3.22-10 Sample MCNP Input for HEUNL (Continued)

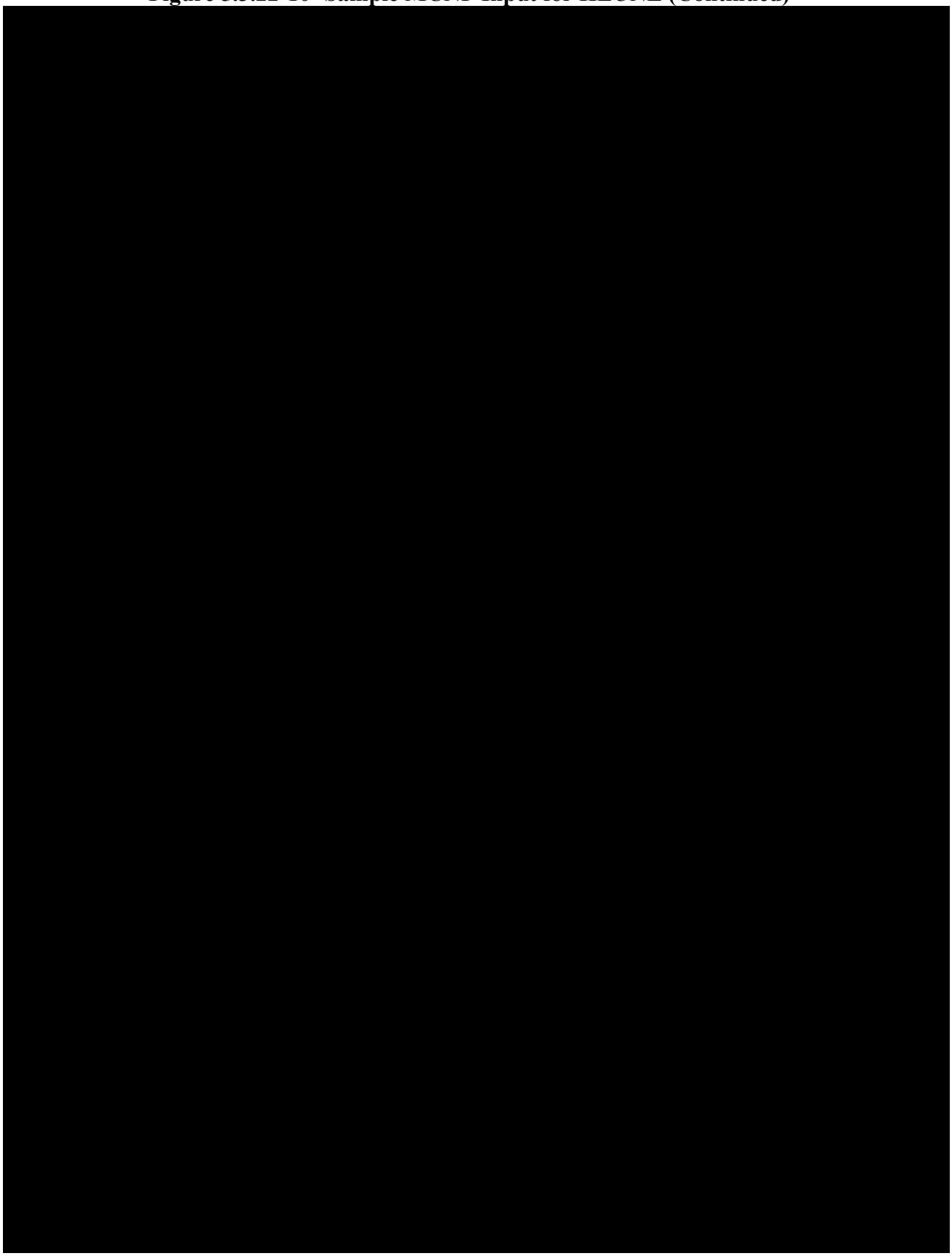

Figure 5.3.22-10 Sample MCNP Input for HEUNL (Continued)

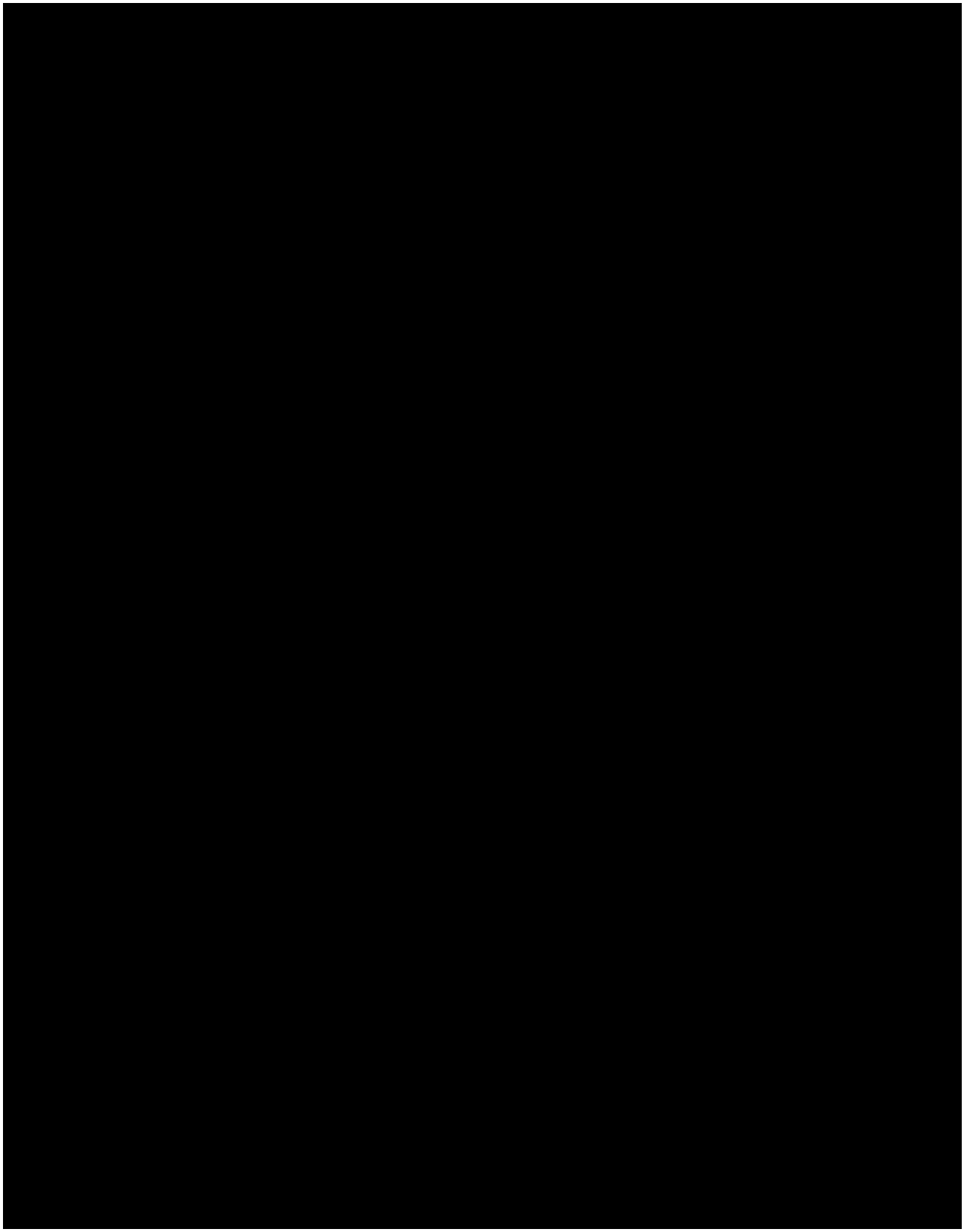

Figure 5.3.22-11 Radial Surface Dose Rate Profile for Normal Conditions – HEUNL

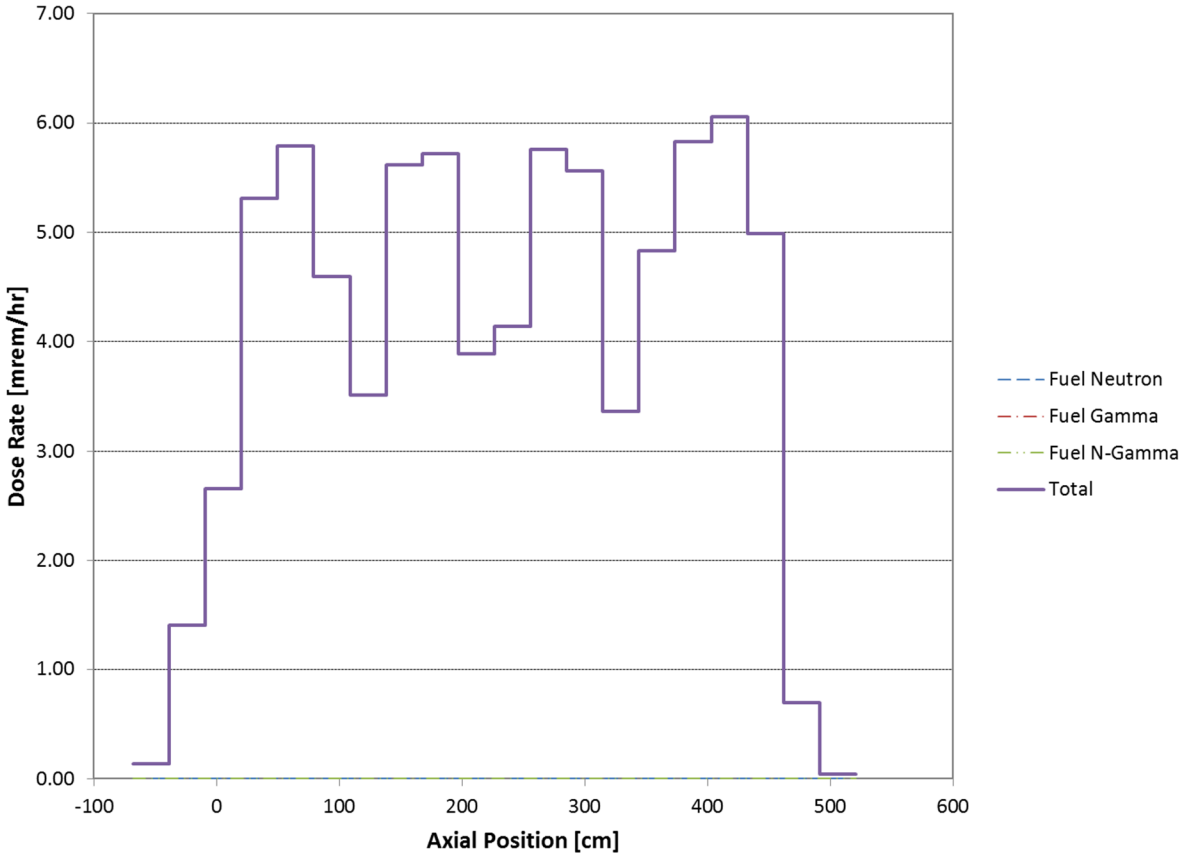

Figure 5.3.22-12 Radial 1 m Dose Rate Profile for Normal Conditions – HEUNL

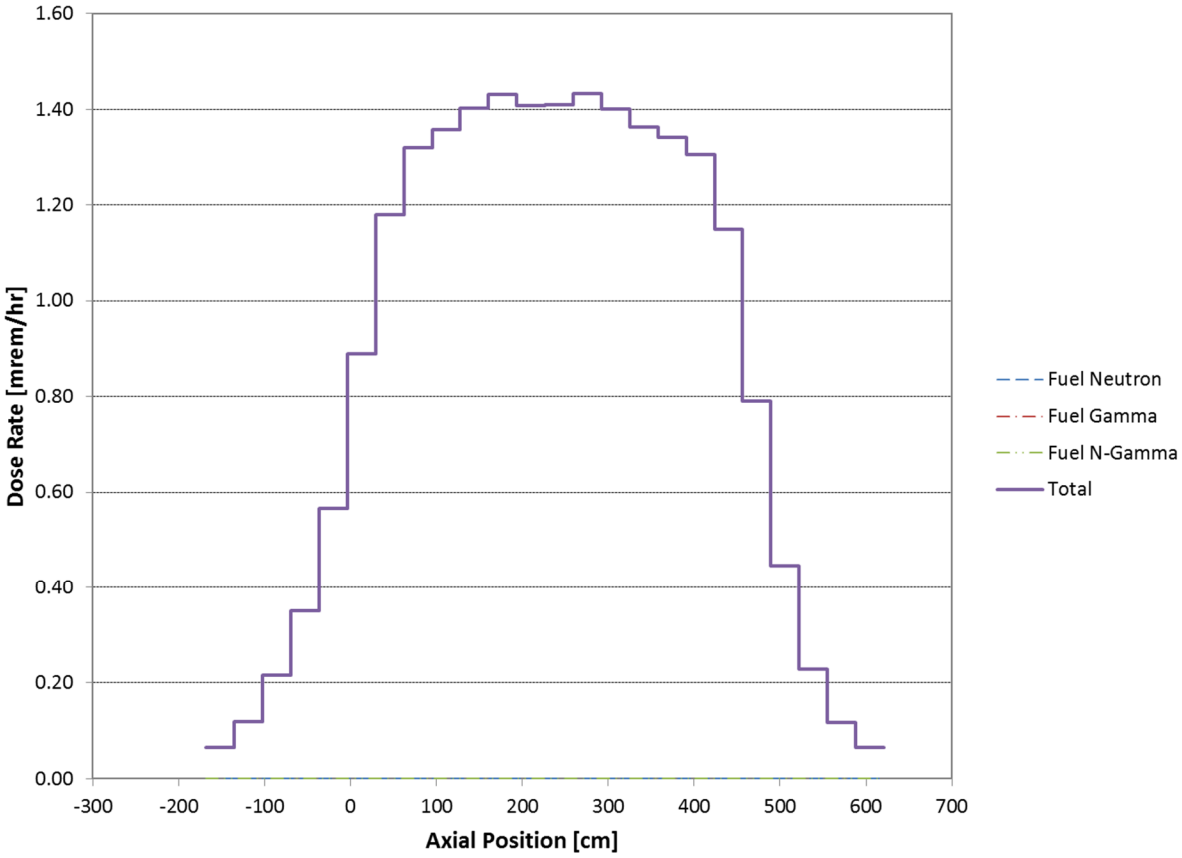

Figure 5.3.22-13 Radial 1m Dose Rate Profile for Accident Conditions – HEUNL

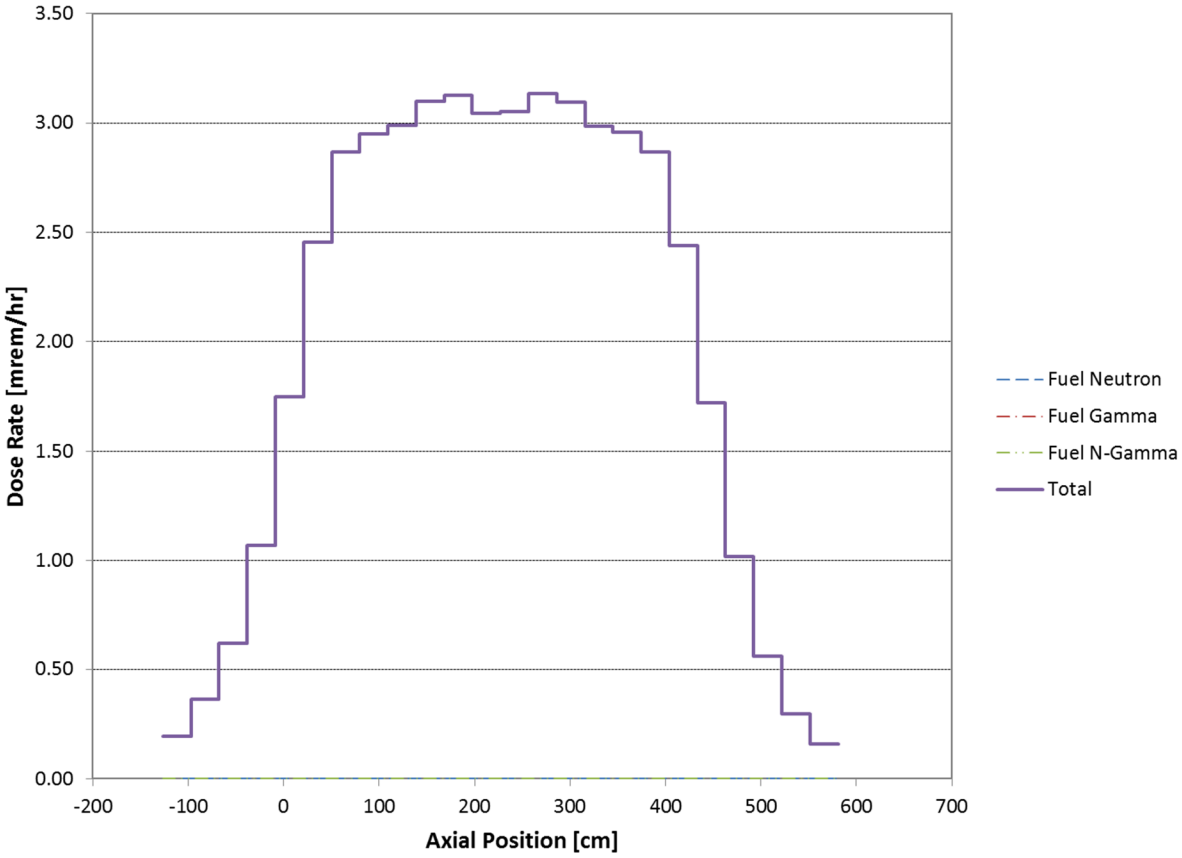

Table 5.3.22-1 Composition of Solution Inorganic Chemicals

Chemical Compound	Concentration (mol/L)	Concentration of Metal Ion (g/L)
HNO_3	0.96	N/A
$Al(NO_3)_3$	1.5	40.5
$Hg(NO_3)_2$	0.053	10.6
$Fe(NO_3)_3$	0.019	1.06
$Cr(NO_3)_3$	0.005	0.26
$Ni(NO_3)_2$	0.003	0.18

Table 5.3.22-2 Actinide Concentrations in the Solution

Nuclide	Initial Concentration	
	Bq/mL	g/L
^{234}U	2.84E+04	1.23E-01
^{235}U	5.59E+02	7.00E+00
^{236}U	3.66E+02	1.53E-01
^{238}U	5.59E+00	4.49E-01
^{237}Np	4.51E+00	1.72E-04
^{239}Pu	1.30E+03	5.63E-04
^{240}Pu	8.99E+01	1.07E-05

Table 5.3.22-3 Inventory of Gamma-Emitting Radionuclides

Radionuclide	Conc. (Bq/g)	σ[1] (Bq/g)
^{95}Nb	3.2E+06	1.0E+05
^{95}Zr	1.1E+07	1.0E+06
^{103}Ru	8.7E+06	3.0E+05
^{106}Ru	1.8E+05	5.0E+04
^{131}I	9.2E+06	4.0E+05
^{132}Te	4.3E+06	5.0E+05
^{137}Cs	3.4E+07	1.0E+06
^{140}Ba	2.8E+07	1.0E+06
^{140}La	2.7E+07	1.0E+06
^{141}Ce	2.0E+07	1.0E+06
^{144}Ce	3.8E+06	2.0E+05
^{147}Nd	7.3E+06	4.0E+05
^{154}Eu	2.7E+04	8.0E+03
^{155}Eu	8.0E+04	1.0E+04

[1] Uncertainty of measured content

Table 5.3.22-4 Fission Product Content for Defined Radionuclides

Isotope	Total (Bq/g)	σ (Bq/g)	Conc. + 2σ (Bq/g)	Eval. Conc. (Bq/g)	Eval. Conc. (Ci/L)
^{95}Nb	3.2E+06	1.0E+05	3.4E+06	5.1E+06	1.792E-01
^{95}Zr	1.1E+07	1.0E+06	1.3E+07	2.0E+07	6.851E-01
^{103}Ru	8.7E+06	3.0E+05	9.3E+06	1.4E+07	4.901E-01
^{106}Ru	1.8E+05	5.0E+04	2.8E+05	4.2E+05	1.476E-02
^{131}I	9.2E+06	4.0E+05	1.0E+07	1.5E+07	5.270E-01
^{132}Te	4.3E+06	5.0E+05	5.3E+06	8.0E+06	2.793E-01
^{137}Cs	3.4E+07	1.0E+06	3.6E+07	5.4E+07	1.897E+00
^{140}Ba	2.8E+07	1.0E+06	3.0E+07	4.5E+07	1.581E+00
^{140}La	2.7E+07	1.0E+06	2.9E+07	4.4E+07	1.528E+00
^{141}Ce	2.0E+07	1.0E+06	2.2E+07	3.3E+07	1.159E+00
^{144}Ce	3.8E+06	2.0E+05	4.2E+06	6.3E+06	2.214E-01
^{147}Nd	7.3E+06	4.0E+05	8.1E+06	1.2E+07	4.269E-01
^{154}Eu	2.7E+04	8.0E+03	4.3E+04	6.5E+04	2.266E-03
^{155}Eu	8.0E+04	1.0E+04	1.0E+05	1.5E+05	5.270E-03
Total	1.6E+08		1.7E+08	2.6E+08	8.998E+00

Table 5.3.22-5 Fission Product Content for Undefined Radionuclides

Isotope	Parent Isotope	Total (Bq/g)	σ (Bq/g)	Conc. + 2σ (Bq/g)	Eval. Conc. (Bq/g)	Eval. Conc. (Ci/L)
^{95m}Nb	^{95}Zr	1.1E+07	1.0E+06	1.3E+07	2.0E+07	6.851E-01
^{106}Rh	^{106}Ru	1.8E+05	5.0E+04	2.8E+05	4.2E+05	1.476E-02
^{103m}Rh	^{103}Ru	8.7E+06	3.0E+05	9.3E+06	1.4E+07	4.901E-01
^{131m}Xe	^{131}I	9.2E+06	4.0E+05	1.0E+07	1.5E+07	5.270E-01
^{137m}Ba	^{137}Cs	3.4E+07	1.0E+06	3.6E+07	5.4E+07	1.897E+00
^{144}Pr	^{144}Ce	3.8E+06	2.0E+05	4.2E+06	6.3E+06	2.214E-01
^{144m}Pr	^{144}Ce	3.8E+06	2.0E+05	4.2E+06	6.3E+06	2.214E-01
Total		7.1E+07		7.7E+07	1.2E+08	4.057E+00

Table 5.3.22-6 Modeled HEUNL Nitrate Contents

				Concentration (g/L)			
Solution	**Metal Ion**	**mol/L**	**A_r (metal)**	**Ion**	**N**	**O**	**Total**
HNO_3	H	0.96	1.00794	0.97	13.45	46.08	60.49
$Al(NO_3)_3$	Al	1.5	26.982	40.5	63.03	215.99	319.50
$Hg(NO_3)_2$	Hg	0.053	200.59	10.6	1.48	5.09	17.20
$Fe(NO_3)_3$	Fe	0.019	55.845	1.06	0.80	2.74	4.60
$Cr(NO_3)_3$	Cr	0.005	51.9961	0.26	0.21	0.72	1.19
$Ni(NO_3)_2$	Ni	0.003	58.6934	0.18	0.08	0.29	0.55
$UO_2(NO_3)_2$	U	0.0328	235.1783	7.73	0.92	4.20	12.85
				Total:	79.97	275.11	416.37

Table 5.3.22-7 Isotopic Contents of Actinides and Light Elements for ORIGEN-S Source Term Calculation

Element	Isotope	NA (%)	Conc. (g/L)
H	1	99.985	9.675E-01
	2	0.015	1.451E-04
Al	27	100	4.047E+01
Hg	196	0.15	1.595E-02
	198	9.97	1.060E+00
	199	16.87	1.793E+00
	200	23.1	2.456E+00
	201	13.18	1.401E+00
	202	29.86	3.174E+00
	204	6.87	7.304E-01
Fe	54	5.8	6.154E-02
	56	91.72	9.732E-01
	57	2.2	2.334E-02
	58	0.28	2.971E-03
Cr	50	4.345	1.130E-02
	52	83.789	2.178E-01
	53	9.501	2.470E-02
	54	2.365	6.149E-03
Ni	58	68.077	1.199E-01
	60	26.223	4.617E-02
	61	1.14	2.007E-03
	62	3.634	6.399E-03
	64	0.926	1.631E-03
N	14	99.634	7.968E+01
	15	0.366	2.927E-01
O	16	99.76	2.744E+02
	17	0.039	1.073E-01
	18	0.201	5.530E-01
U	234		1.230E-01
	235		7.000E+00
	236		1.530E-01
	238		4.490E-01
Np	237		1.720E-04
Pu	239		5.630E-04
	240		1.070E-05

Table 5.3.22-8 Neutron Source Terms per Liter

Group	E Lower [MeV]	E Upper [MeV]	Source [neutrons/sec/L]
1	6.380E+00	2.000E+01	1.9390E-04
2	3.010E+00	6.380E+00	1.0150E-01
3	1.830E+00	3.010E+00	5.0590E-01
4	1.420E+00	1.830E+00	1.6400E-01
5	9.070E-01	1.420E+00	2.3570E-01
6	4.080E-01	9.070E-01	1.9990E-01
7	1.110E-01	4.080E-01	6.2580E-02
8	1.500E-02	1.110E-01	1.0690E-02
9	3.040E-03	1.500E-02	6.0760E-04
10	5.830E-04	3.040E-03	5.1430E-05
11	1.010E-04	5.830E-04	4.2930E-06
12	2.900E-05	1.010E-04	3.2370E-07
13	1.070E-05	2.900E-05	1.0470E-08
14	3.060E-06	1.070E-05	2.5070E-09
15	1.860E-06	3.060E-06	3.7860E-10
16	1.300E-06	1.860E-06	1.7290E-10
17	1.130E-06	1.300E-06	5.4000E-11
18	1.000E-06	1.130E-06	3.8430E-11
19	8.000E-07	1.000E-06	6.1730E-11
20	4.140E-07	8.000E-07	1.1760E-10
21	3.250E-07	4.140E-07	2.6730E-11
22	2.250E-07	3.250E-07	3.0320E-11
23	1.000E-07	2.250E-07	3.1420E-11
24	5.000E-08	1.000E-07	9.3470E-12
25	3.000E-08	5.000E-08	3.7480E-12
26	1.000E-08	3.000E-08	2.8070E-12
27	1.000E-11	1.000E-08	6.3210E-16
Total			1.2811E+00

Table 5.3.22-9 Gamma Source Terms per Liter

Group	E Lower [MeV]	E Upper [MeV]	Source [photons/sec/L]
1	1.00E+01	2.00E+01	3.5920E-07
2	8.00E+00	1.00E+01	2.2040E-05
3	6.50E+00	8.00E+00	1.1990E-04
4	5.00E+00	6.50E+00	7.5230E-04
5	4.00E+00	5.00E+00	2.2670E-03
6	3.00E+00	4.00E+00	1.4540E+07
7	2.50E+00	3.00E+00	1.8860E+09
8	2.00E+00	2.50E+00	5.7190E+08
9	1.66E+00	2.00E+00	3.8810E+07
10	1.33E+00	1.66E+00	5.7640E+10
11	1.00E+00	1.33E+00	1.5950E+08
12	8.00E-01	1.00E+00	2.0900E+10
13	6.00E-01	8.00E-01	9.9190E+10
14	4.00E-01	6.00E-01	6.4380E+10
15	3.00E-01	4.00E-01	3.1060E+10
16	2.00E-01	3.00E-01	1.8480E+10
17	1.00E-01	2.00E-01	3.2181E+10
18	4.50E-02	1.00E-01	1.9170E+10
19	1.00E-02	4.50E-02	1.1040E+11
Total			4.5607E+11

Table 5.3.22-10 Isotopic Contents of HEUNL Materials for MCNP Shielding Evaluation

Element	Z	A	Conc. (g/L)	wt.%
H	1	1	9.676E-01	0.074%
Al	13	27	4.047E+01	3.113%
Hg	80	NA[1]	1.063E+01	0.818%
Fe	26	NA	1.061E+00	0.082%
Cr	24	NA	2.600E-01	0.020%
Ni	28	NA	1.761E-01	0.014%
N	7	14	7.997E+01	6.152%
O	8	16	2.751E+02	21.162%
U	92	234	1.230E-01	0.009%
	92	235	7.000E+00	0.538%
	92	236	1.530E-01	0.012%
	92	238	4.490E-01	0.035%
Np	93	237	1.720E-04	0.000%
Pu	94	239	5.630E-04	0.000%
	94	240	1.070E-05	0.000%
Total - Nitrates			4.164E+02	32.029%
Water Content				
H	1	1	9.818E+01	7.552%
O	8	16	7.854E+02	60.419%
Total - Water			8.836E+02	67.971%
Total - HEUNL			1.300E+03	

[1] Natural abundance

Table 5.3.22-11 Cask/Container Material Descriptions for HEUNL

Material	Element	Density [g/cm^3]	Number Density [atom/b-cm]
Aluminum	Al	2.70	6.0265E-02
Stainless Steel 304	Fe	7.94	5.9505E-02
	Cr		1.7472E-02
	Ni		7.7392E-03
	Mn		1.7407E-03
Lead	Pb	11.34	3.2967E-02
Neutron Shield	H	0.97	5.9884E-02
	O		2.4595E-02
	C		1.0701E-02
Impact Limiter	Al	0.50	1.1153E-02

Table 5.3.22-12 HEUNL Container Dimensions



Table 5.3.22-13 ANSI/ANS 6.1.1-1977 Neutron Flux-to-Dose Conversion Factors

Energy [MeV]	Response [(rem/hr)/(n/cm^2/sec)]
20.0	2.27E-04
14.0	2.08E-04
10.0	1.47E-04
7.0	1.47E-04
5.0	1.56E-04
2.5	1.25E-04
1.0	1.32E-04
5.0E-01	9.26E-05
1.0E-01	2.17E-05
1.0E-02	3.56E-06
1.0E-03	3.76E-06
1.0E-04	4.18E-06
1.0E-05	4.54E-06
1.0E-06	4.46E-06
1.0E-07	3.67E-06
2.5E-08	3.67E-06

Table 5.3.22-14 ANSI/ANS 6.1.1-1977 Gamma Flux-to-Dose Conversion Factors

Energy, E [MeV]	Response [(rem/hr)/(γ/cm²/sec)]	Energy, E [MeV]	Response [(rem/hr)/(γ/cm²/sec)]
15.0	1.33E-05	1.0	1.98E-06
13.0	1.18E-05	0.8	1.68E-06
11.0	1.03E-05	0.7	1.52E-06
9.0	8.77E-06	0.65	1.44E-06
7.5	7.66E-06	0.6	1.36E-06
6.75	7.11E-06	0.55	1.27E-06
6.25	6.74E-06	0.5	1.17E-06
5.75	6.37E-06	0.45	1.08E-06
5.25	6.01E-06	0.4	9.85E-07
5.0	5.80E-06	0.35	8.78E-07
4.75	5.60E-06	0.3	7.59E-07
4.25	5.23E-06	0.25	6.31E-07
3.75	4.83E-06	0.2	5.01E-07
3.25	4.41E-06	0.15	3.79E-07
2.8	4.01E-06	0.1	2.83E-07
2.6	3.82E-06	0.07	2.58E-07
2.2	3.42E-06	0.05	2.90E-07
1.8	2.99E-06	0.03	5.82E-07
1.4	2.51E-06	0.01	3.96E-06

Table 5.3.22-15 HEUNL Dose Rate Summary

Transport Condition	Dose Rate Location	Maximum		Average	
		[mrem/hr]	FSD	[mrem/hr]	FSD
Normal	Side Surface of Cask	6.05E+00	0.2%	3.99E+00	0.2%
	Top Surface of Cask	5.37E-02	2.8%	3.25E-02	3.3%
	Bottom Surface of Cask	3.66E-01	1.9%	2.05E-01	2.1%
	Side 1m (Transport Index)	1.43E+00	0.1%	8.90E-01	0.2%
Accident	Side Surface of Cask	1.59E+01	0.2%	1.20E+01	0.2%
	Top Surface of Cask	4.08E-01	5.2%	1.30E-01	5.2%
	Bottom Surface of Cask	2.54E+00	2.2%	1.01E+00	3.0%
	Side 1m	3.13E+00	0.1%	2.03E+00	0.2%

Table 5.3.22-16 Summarized Maximum Dose Rates for HEUNL Transport

Transport Condition	Dose Rate Location	Maximum [mrem/hr]	Limit [mrem/hr]
Normal	Surface of Cask	6.05	200
	1m (Transport Index)	1.5	10
Accident	1m	3.13	1000

5.3.23 SLOWPOKE Core Configuration

Results of a shielding analysis for one SLOWPOKE core (up to 298 fuel rods and 930 g U) in the LWT cask are presented in this section. Maximum dose rates are calculated to demonstrate that dose rate limits of 10 CFR 71.47 and 10 CFR 71.51 are not exceeded.

Dose rates are calculated using the MCNP (MCNP5, Version 1.60) three-dimensional transport code. Source terms are calculated using the TRITON module of the SCALE package (SCALE 6.1).

5.3.23.1 SLOWPOKE Core Source Term

Source terms are calculated to bound the irradiation history of the SLOWPOKE core. A sketch of the fuel rod is shown in Figure 5.3.23-1. Reference fuel design characteristics, i.e., those documented in available references, are summarized in Table 5.3.23-1. Depletion and shielding evaluation code input characteristics, i.e., input data applied in TRITON depletion/irradiation and MCNP shielding model parameters, are given in Table 5.3.23-2. Key parameters differing between the reference information code and input are reduced enrichment, increased fuel mass, and increased irradiation time. All parameters are revised to produce bounding source terms. Each of the modified parameters is described below as to its effect on source:

- Increased fuel mass at a fixed depletion value (% ^{235}U depletion) increases source as the total amount of ^{235}U depleted increases, thereby increasing fission product sources.
- Reduced enrichment has opposing effects on source due to its relative effects on fission product versus higher actinide sources. For a fixed depletion percentage, a reduction in ^{235}U percentage will reduce the amount of material depleted, thereby reducing fission product sources, but increasing source as higher actinides are formed by parasitic absorption at a higher rate, increasing both neutron and gamma sources. Overall, the source effect from enrichment variations is minor, as the enrichment is decreased by only 3% for a high >90% enriched fuel source. This effect is significantly more pronounced for low enrichment fuels.
- Increased irradiation time, in conjunction with a continuous burn at full core power, increases source as it raises the depletion percentage with corresponding increases in both fission products and higher actinides generated.

As the exact configuration of the rods in the core is unknown, two configurations were evaluated; a reference core and a compact core. The configuration shown in Figure 5.3.23-2 is referred to as the reference configuration in which the rods are symmetrically distributed through the core. Figure 5.3.23-3 displays the compact core in which the rods are all shifted towards the center of the core. As the reference core configuration produces maximum gamma source spectra, it is used for the dose rate evaluation.

The SLOWPOKE core is designed to be critical, using fixed beryllium reflectors surrounding the radial extent of the core and the core bottom. The beryllium reflector top, also referred to as beryllium shim, is adjusted to maintain a critical configuration. Top and bottom reflectors are not included within the scope of the 2-D TRITON evaluation.

As a full core was modeled, fuel source was extracted at each ring of the core to determine which location produces maximum source spectra. The maximum gamma source (controlling for shielding) was obtained from the inner ring location (ring 1). This source was then applied to all fuel rods for the dose rate analysis. Gamma source from ring 1 (adjust on a per rod basis) is 24 percent higher for the reference core than the compact core model. The ring 1 per rod source of the reference model is 44 percent higher than the core average per rod source of the reference model.

No axial burnup profile for the SLOWPOKE core is available in open literature. Burnup profile impacts gamma and neutron source shape. The primary impact of a burnup profile is neutron source shape because burnup impacts fuel neutron source significantly faster than gamma source. SLOWPOKE HEU cores do not produce a significant neutron source. SLOWPOKE cores apply beryllium reflectors which will reduce axial shape effects. Radial core burnup studies demonstrate a slightly higher power in the periphery rather than a typical drop off. This type of effect from the axial reflectors would produce a slight flattening of the axial dose profile. Furthermore, as the core is ~22 cm in diameter versus a ~100 cm diameter, cask surface geometry effects/dispersion will assure that any minor axial profile on the core will not result in any significant cask surface dose changes.

TRITON input is shown in Figure 5.3.23-4, with the resulting TRITON material model shown in Figure 5.3.23-2. Neutron and gamma source terms for a cool time of 14 days from discharge are presented in Table 5.3.23-3 and Table 5.3.23-4, respectively. The modeled heat load in the dose rate analysis is 56.6 W. The calculated core average heat load at this cool time is 39.3 W or 42.2 kW/MTU.

The effect of subcritical neutron multiplication is directly computed in the MCNP analysis.

5.3.23.2 SLOWPOKE Core Shielding Model

MCNP three-dimensional shielding analysis allows detailed modeling of the fuel, basket, and cask shield configurations. The geometric description of a MCNP model is based on the combinatorial geometry system embedded in the code. In this system, bodies such as cylinders and rectangular parallelepipeds, and their logical intersections and unions, are used to describe the extent of material zones.

Fuel Models

The SLOWPOKE core is modeled in MCNP in the same configuration which produced the bounding source spectra. The fuel rods are explicitly modeled.

Cross-section of the VISED model of the source region are shown in Figure 5.3.23-5 and Figure 5.3.23-6 under normal conditions and Figure 5.3.23-8 and Figure 5.3.23-9 under accident conditions. As shown, the model is moved to its maximum axial elevation which brings it closest to the reduced shielding area of the NAC-LWT. The lowest shielding region is the tapered area of the lead gamma neutron shield, the area below the cask cavity top with no lead shielding.

Basket Model

For a given fuel type, the MCNP description of the basket stack forms a common sub-model employed in the analysis. For the SLOWPOKE core analysis, only the top basket containing the SLOWPOKE fuel is modeled. The remaining baskets are modeled as void, conservatively removing material from the shielding model. Similarly, the basket handle structure is modeled as void.

The characteristics of the analyzed SLOWPOKE core basket are summarized in Table 5.3.23-6. The analyzed design for the basket contains a 3-inch steel shield plug attached to the bottom (inside) of the basket lid and a separate spacer to push the fuel down in the basket. The design was updated to incorporate the shield plug and spacer into a single piece. The resulting spacer has a 2.5-inch top plate and a 1.5-inch bottom plate and maintains the 15.75-inch total spacing from the bottom of the lid to the top of the SLOWPOKE core. The modeled basket is conservative as the updated spacer contains an additional inch of shielding material as well as placing shielding directly above the core.

The as modeled basket can be seen in Figure 5.3.23-9, while a sketch of the updated lid design is shown in Figure 5.3.23-10.

MCNP NAC-LWT Model

The three-dimensional model of the NAC-LWT cask is based on the following features:

Normal conditions:

- Radial neutron shield and shield shell
- Aluminum impact limiters with 0.5 g/cm^3 density (calculated based on the impact limiter weight and dimensions) and a diameter equal to the neutron shield shell diameter

Accident conditions:

- Removal of radial neutron shield and shield shell

- Loss of upper and lower impact limiters
- Lead slump – Radial and Axial modeled simultaneously

A 0.1374 cm gap between the lead outer diameter and the cask outer shell is applied under normal conditions of operations. A lead gap slump, based on the normal condition gap, is evaluated under hypothetical accident conditions. The lead gap volume is applied to both the axial slump and radial slump simultaneously. No lead slump is expected as the cask lead shield is poured in stages, with heaters controlling lead conditions, assuring minimal contraction gaps. The modeled top end drop gap is 2.71 inches which is conservative versus the gap calculated in Chapter 2. The radial gap modeled is 0.788 inch. The modeled radial and axial lead slump can be seen in Figure 5.3.23-8 and Figure 5.3.23-9, respectively. As stated previously, the elevation of the source regions is set at its maximum axial extent. Elevations associated with the three-dimensional features are established with respect to the center bottom of the NAC-LWT cask cavity for the MCNP combinatorial model. Sample input files are provided in Figure 5.3.23-7 and Figure 5.3.23-11 for normal and accident conditions, respectively.

Tally/Detector Description

MCNP surface (F2) tallies are applied in the calculation of system dose rates. As the normal condition cask model is symmetric around the z-axis, dose rates are calculated as averages around the circumference of the cask. The dose rate profile as a function of z-elevation is generated at the radius of the neutron shield shell for normal conditions. An additional tally is placed in the gap between impact limiter and neutron shield shell on the cask outer shell. Hypothetical accident condition dose rates remove both impact limiter and neutron shield and shield shell. Axial and radial lead slumps are included. As a radial lead slump is evaluated, the tally results are not symmetric around the cask periphery (peaking at the radial slump location). Azimuthal tally divisions are applied to capture peaks around the circumference of the cask. While the plot of dose versus z-elevation for the accident condition displays circumferential average dose rates, the maximum accident condition dose rates reported in the summary table are based on the azimuthal tally results.

Shield Regional Densities

Material compositions for structural and shield materials are shown in Table 5.3.23-5.

5.3.23.3 SLOWPOKE Core Shielding Evaluation

Calculational Methods

The shielding evaluation is performed using MCNP5 v1.6.

The MCNP shielding model described in Section 5.3.23.2 is utilized with the source terms described in Section 5.3.23.1 to estimate the dose rate profiles at various distances from the side,

top and bottom of the cask for both normal and accident conditions. The method of solution is continuous energy Monte Carlo with a Monte Carlo based weight window generator to accelerate code convergence. Weight window and problem convergence is verified by the 10 statistical checks performed by MCNP. Radial or axial biasing is performed depending on the desired dose location.

Significant validation literature is available for MCNP as it is an industry standard tool for spent fuel cask evaluations. Available literature covers a range of shielding penetration problems ranging from slab geometry to spent fuel cask geometries. Confirmatory calculations against other validated shielding codes (SCALE and MCBEND) on NAC casks have further validated the use of MCNP for shielding evaluations.

MCNP Flux-to-Dose Conversion Factors

The ANSI/ANS 6.1.1-1977 flux-to-dose rate conversion factors are employed in the MCNP analysis.

Three-Dimensional Dose Rates for SLOWPOKE Fuel

Table 5.3.23-7 provides maximum dose rates for the tabulated distances and transport conditions (normal and accident). Table 5.3.23-8 contains key results. Significant margin is present for all dose rate limits.

Calculated normal condition radial surface dose rates are below 200 mrem/hr. The Transportation Index (TI) is 15.2 (dose at 1 meter). As the transport index is over 10, an exclusive use designation for the NAC-LWT is used.

The maximum dose rate is dominated by the gamma component. The radial surface dose rate profile is shown in Figure 5.3.23-12. The normal condition maximum radial 2-meter dose rate is 3.1 mrem/hr. As expected, the dose rate profile is skewed towards the top of the cask, as shown Figure 5.3.23-13.

The maximum dose rate at the exposed cask surface above the neutron shield is 42.3 mrem/hr, significantly below the maximum radial dose rate taken from the surface of the neutron shield shell.

Accident condition radial 1-meter dose rates are well below the 1,000 mrem/hr limit. The radial dose rate profile is shown in Figure 5.3.23-14, with the bounding dose rate taken from the azimuthal profile shown in Figure 5.3.23-15.

Figure 5.3.23-1 SLOWPOKE Fuel Element

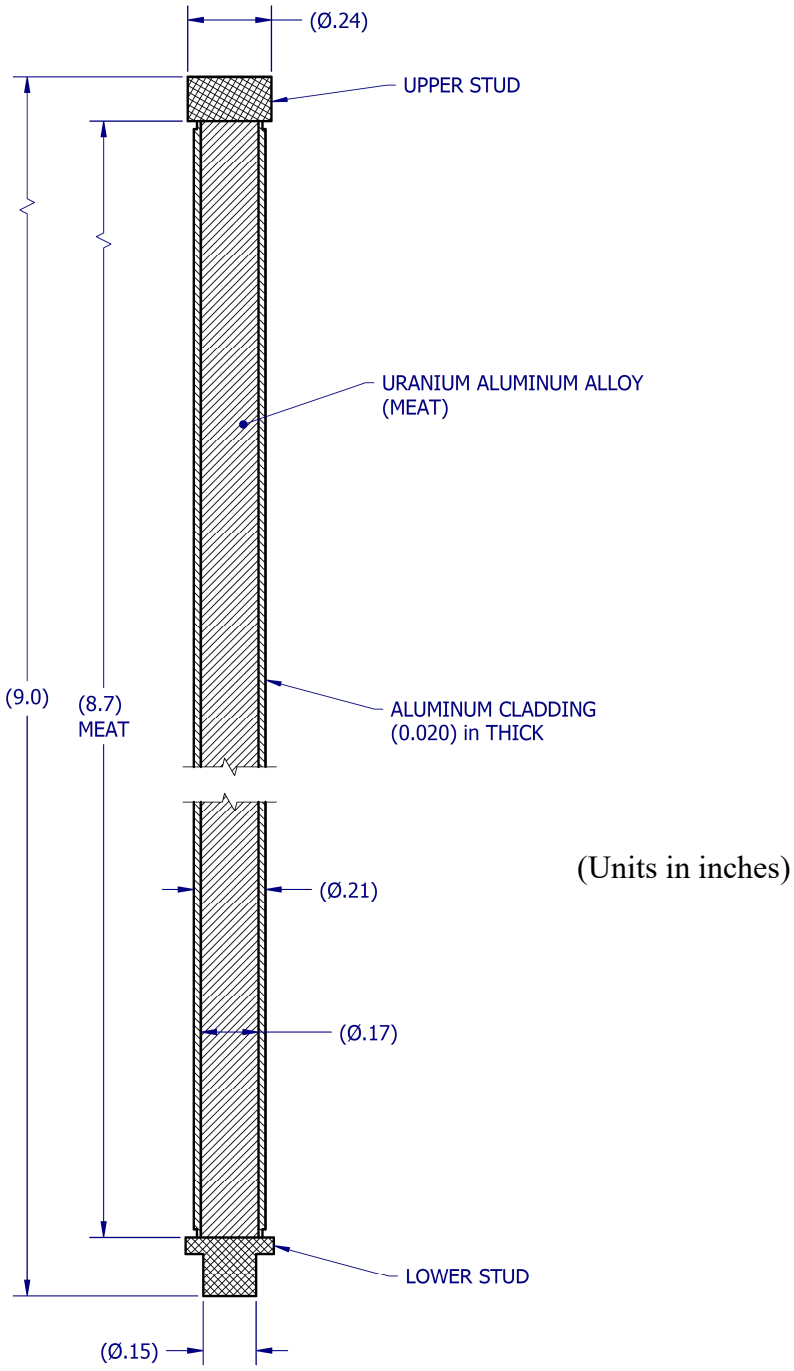

Figure 5.3.23-2 SLOWPOKE Core TRITON Model - Reference

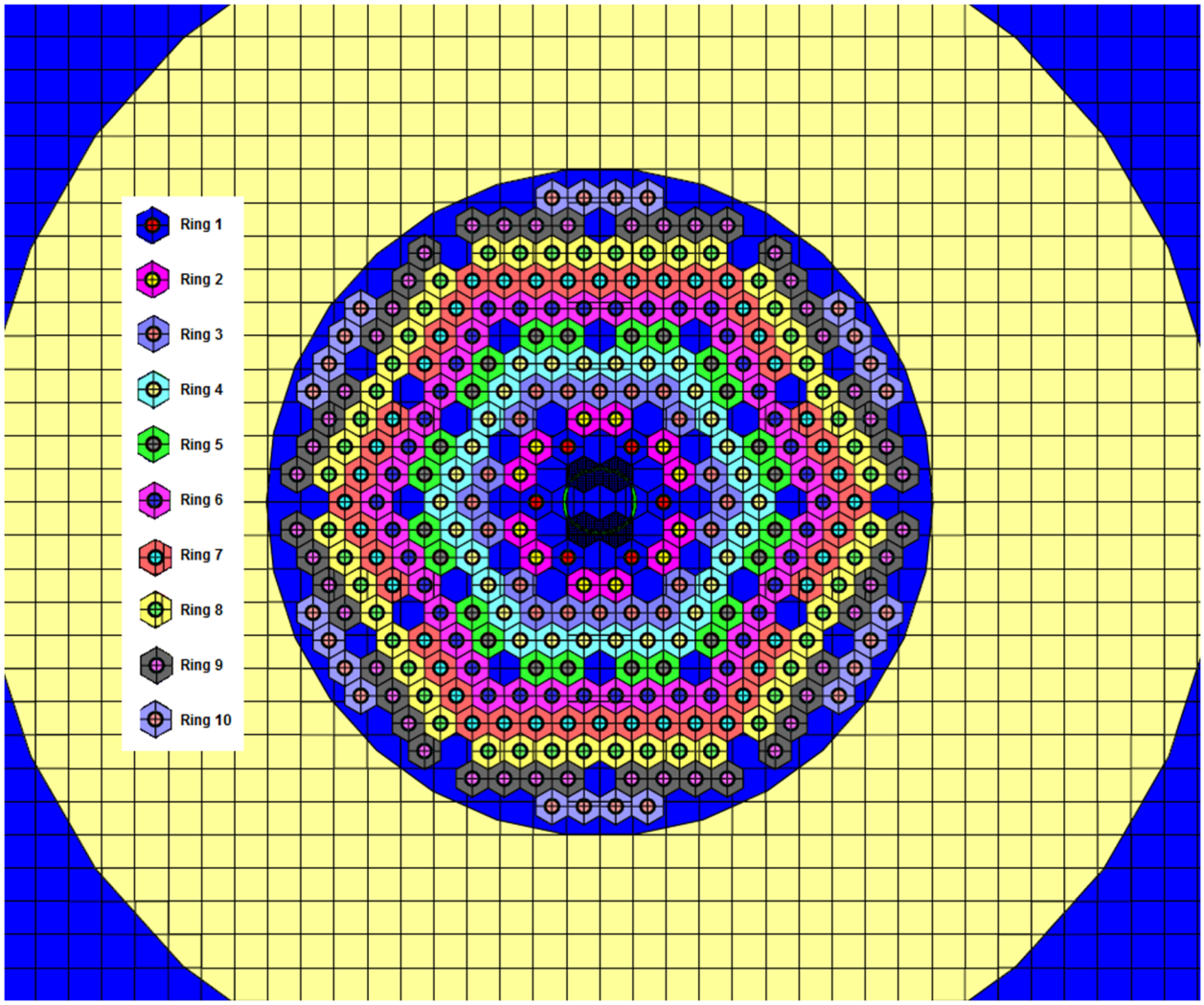

Figure 5.3.23-3 SLOWPOKE Core TRITON Model - Compact

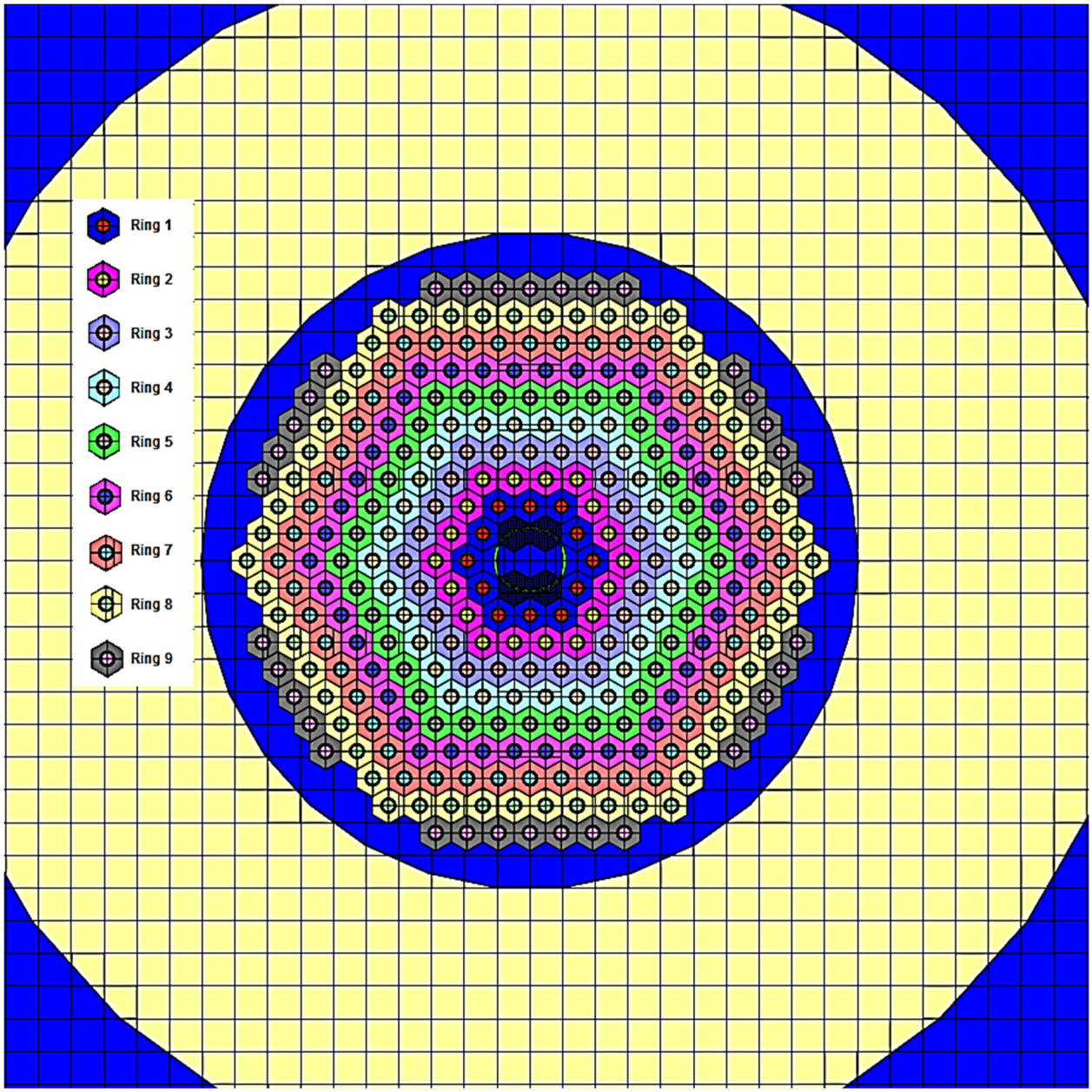

Figure 5.3.23-4 TRITON Input for SLOWPOKE Fuel - Reference

```
=t-depl       (parm=centrm)
SLOWPOKE CORE NEWT / CENTRM Depletion - 1.104 cm Rod Pitch - 15 GWD/MTU
V7-238
read comp
U     1 DEN=3.51 0.288 373.0  92235 90.0  92238  10.0  END
AL    1 DEN=3.51 0.712 373.0  END
AL   11  1.0  363.0  END
H2O  21  1.0  313.0  END
U     2 DEN=3.51 0.288 373.0  92235 90.0  92238  10.0  END
AL    2 DEN=3.51 0.712 373.0  END
AL   12  1.0  363.0  END
H2O  22  1.0  313.0  END
U     3 DEN=3.51 0.288 373.0  92235 90.0  92238  10.0  END
AL    3 DEN=3.51 0.712 373.0  END
AL   13  1.0  363.0  END
H2O  23  1.0  313.0  END
U     4 DEN=3.51 0.288 373.0  92235 90.0  92238  10.0  END
AL    4 DEN=3.51 0.712 373.0  END
AL   14  1.0  363.0  END
H2O  24  1.0  313.0  END
U     5 DEN=3.51 0.288 373.0  92235 90.0  92238  10.0  END
AL    5 DEN=3.51 0.712 373.0  END
AL   15  1.0  363.0  END
H2O  25  1.0  313.0  END
U     6 DEN=3.51 0.288 373.0  92235 90.0  92238  10.0  END
AL    6 DEN=3.51 0.712 373.0  END
AL   16  1.0  363.0  END
H2O  26  1.0  313.0  END
U     7 DEN=3.51 0.288 373.0  92235 90.0  92238  10.0  END
AL    7 DEN=3.51 0.712 373.0  END
AL   17  1.0  363.0  END
H2O  27  1.0  313.0  END
U     8 DEN=3.51 0.288 373.0  92235 90.0  92238  10.0  END
AL    8 DEN=3.51 0.712 373.0  END
AL   18  1.0  363.0  END
H2O  28  1.0  313.0  END
U     9 DEN=3.51 0.288 373.0  92235 90.0  92238  10.0  END
AL    9 DEN=3.51 0.712 373.0  END
AL   19  1.0  363.0  END
H2O  29  1.0  313.0  END
U    10 DEN=3.51 0.288 373.0  92235 90.0  92238  10.0  END
AL   10 DEN=3.51 0.712 373.0  END
AL   20  1.0  363.0  END
H2O  30  1.0  313.0  END
BE   33  1.0  313.0  END
end comp
read celldata
latticecell triangpitch pitch=1.104  21 fueld=0.422 1 cladd=0.524 11 end
latticecell triangpitch pitch=1.104  22 fueld=0.422 2 cladd=0.524 12 end
latticecell triangpitch pitch=1.104  23 fueld=0.422 3 cladd=0.524 13 end
latticecell triangpitch pitch=1.104  24 fueld=0.422 4 cladd=0.524 14 end
latticecell triangpitch pitch=1.104  25 fueld=0.422 5 cladd=0.524 15 end
latticecell triangpitch pitch=1.104  26 fueld=0.422 6 cladd=0.524 16 end
latticecell triangpitch pitch=1.104  27 fueld=0.422 7 cladd=0.524 17 end
latticecell triangpitch pitch=1.104  28 fueld=0.422 8 cladd=0.524 18 end
latticecell triangpitch pitch=1.104  29 fueld=0.422 9 cladd=0.524 19 end
latticecell triangpitch pitch=1.104  30 fueld=0.422 10 cladd=0.524 20 end
end celldata
read depletion 1 2 3 4 5 6 7 8 9 10 end depletion
read opus
matl= 1 2 3 4 5 6 7 8 9 10 0 end units=grams
new case
units=watts
new case
typarams=gspectrum
units=part
new case
```

Figure 5.3.23-4 TRITON Input for SLOWPOKE Fuel – Reference (Continued)

```
typarams=nspectrum
units=parts
end opus
read burndata
' 298rods-927 gram fuel - 20kW/Core  (21.50MW/MTU)
power=21.50 burn=100 down=0 end
power=21.50 burn=200 down=0 end
power=21.50 burn=200 down=0 end
power=21.50 burn=198 down=14 end
end burndata
read model
SLOWPOKE 298 Rod Assembly - Berylium Reflector - Collapse 44-group
read parm
  prtflux=no  drawit=yes
  xnlib=4 run=yes prtmxsec=no prtbroad=no
  prtmxtab=yes cmfd=no echo=yes
end parm
read materials
  mix=1  pn=1 end
  mix=11 pn=1  end
  mix=21  pn=2  end
  mix=2  pn=1 end
  mix=12 pn=1  end
  mix=22  pn=2  end
  mix=3  pn=1  end
  mix=13 pn=1  end
  mix=23  pn=2  end
  mix=4  pn=1  end
  mix=14 pn=1  end
  mix=24  pn=2  end
  mix=5  pn=1  end
  mix=15 pn=1  end
  mix=25  pn=2  end
  mix=6  pn=1  end
  mix=16 pn=1  end
  mix=26  pn=2  end
  mix=7  pn=1  end
  mix=17 pn=1  end
  mix=27  pn=2  end
  mix=8  pn=1  end
  mix=18 pn=1  end
  mix=28  pn=2  end
  mix=9  pn=1  end
  mix=19 pn=1  end
  mix=29  pn=2  end
  mix=10 pn=1  end
  mix=20 pn=1  end
  mix=30  pn=2  end
  mix=33 pn=2 end
end materials
read geom
' Ring 1
unit 1
cylinder 10 0.211
cylinder 20 0.262
hexprism 30 0.552
media  1 1 10
media 11 1 20 -10
media 21 1 30 -20
boundary 30 2 2
' Ring 2
unit 2
cylinder 10 0.211
cylinder 20 0.262
hexprism 30 0.552
media  2 1 10
media 12 1 20 -10
media 22 1 30 -20
boundary 30 2 2
```

Figure 5.3.23-4 TRITON Input for SLOWPOKE Fuel – Reference (Continued)

```
' Ring 3
unit 3
cylinder 10 0.211
cylinder 20 0.262
hexprism 30 0.552
media  3 1 10
media 13 1 20 -10
media 23 1 30 -20
boundary 30 2 2
' Ring 4
unit 4
cylinder 10 0.211
cylinder 20 0.262
hexprism 30 0.552
media  4 1 10
media 14 1 20 -10
media 24 1 30 -20
boundary 30 2 2
' Ring 5
unit 5
cylinder 10 0.211
cylinder 20 0.262
hexprism 30 0.552
media  5 1 10
media 15 1 20 -10
media 25 1 30 -20
boundary 30 2 2
' Ring 6
unit 6
cylinder 10 0.211
cylinder 20 0.262
hexprism 30 0.552
media  6 1 10
media 16 1 20 -10
media 26 1 30 -20
boundary 30 2 2
' Ring 7
unit 7
cylinder 10 0.211
cylinder 20 0.262
hexprism 30 0.552
media  7 1 10
media 17 1 20 -10
media 27 1 30 -20
boundary 30 2 2
' Ring 8
unit 8
cylinder 10 0.211
cylinder 20 0.262
hexprism 30 0.552
media  8 1 10
media 18 1 20 -10
media 28 1 30 -20
boundary 30 2 2
' Ring 9
unit 9
cylinder 10 0.211
cylinder 20 0.262
hexprism 30 0.552
media  9 1 10
media 19 1 20 -10
media 29 1 30 -20
boundary 30 2 2
' Ring 10
unit 10
cylinder 10 0.211
cylinder 20 0.262
hexprism 30 0.552
media 10 1 10
```

Figure 5.3.23-4 TRITON Input for SLOWPOKE Fuel – Reference (Continued)

```
media 20 1 20 -10
media 30 1 30 -20
boundary 30 2 2
' Center Empty
unit 11
hexprism 30 0.552
media 21 1 30
boundary 30 2 2
' Around Center Empty
unit 12
hexprism 30 0.552
media 21 1 30
boundary 30 2 2
' Right Side Test Unit
unit 14
cylinder 20 1.1684 sides=36 origin x=-1.102
                   chord +x=-0.20 chord +y=-0.55
                   chord -y=+0.55
cylinder 25 1.27   sides=36 origin x=-1.102
                   chord +x=-0.20 chord +y=-0.55
                   chord -y=+0.55
hexprism 30 0.552
media 21 1 20 30
media 11 1 25 30 -20
media 21 1 30 -25 -20
boundary 30 2 2
' Bottom Right Side Test Unit
unit 15
cuboid 20  0.5  0.0  0.2  0.1   rotate a1=35
cuboid 25  -0.0  -0.5  -0.00  -0.10   rotate a1=12
hexprism 30 0.552
media 11 1 20
media 11 1 25
media 21 1 30 -20 -25
boundary 30 15 15
' Bottom Left Side Test Unit
unit 16
cuboid 20   0.5   0.0  -0.0  -0.10   rotate a1=-12
cuboid 25  -0.0  -0.5   0.2   0.1   rotate a1=-35
hexprism 30 0.552
media 11 1 20
media 11 1 25
media 21 1 30 -20 -25
boundary 30 15 15
' Left Side Test Unit
unit 17
cylinder 20 1.1684 sides=36 origin x=1.102
                   chord -x=0.20 chord +y=-0.55
                   chord -y=+0.55
cylinder 25 1.27   sides=36 origin x=1.102
                   chord -x=0.20 chord +y=-0.55
                   chord -y=+0.55
hexprism 30 0.552
media 21 1 20 30
media 11 1 25 30 -20
media 21 1 30 -25 -20
boundary 30 2 2
' Top Right Side Test Unit
unit 18
cuboid 20   0.5   0.0  -0.00  -0.10  rotate a1=-35
cuboid 25  -0.0  -0.5   0.2    0.1   rotate a1=-12
hexprism 30 0.552
media 11 1 20
media 11 1 25
media 21 1 30 -20 -25
boundary 30 15 15
' Top Left Side Test Unit
unit 19
cuboid 20   0.5   0.0   0.2   0.1   rotate a1=12
```

Figure 5.3.23-4 TRITON Input for SLOWPOKE Fuel – Reference (Continued)

```
cuboid 25  -0.0  -0.5  -0.0  -0.10   rotate a1=35
hexprism 30 0.552
media 11 1 20
media 11 1 25
media 21 1 30 -20 -25
boundary 30 15 15
'
global unit 40
' Disk 8.66 inch - 11 cm radius - use 11.5 cm for clearance
cylinder 110 11.5 sides=30
' 10 cm Be reflector
cylinder 120 21.5 sides=30
cuboid 130 23.0 -23.0 23.0 -23.0
array 1 110 place 12 11 -0.552 -0.9558
media 21 1 110
media 33 1 120 -110
media 21 1 130 -120
boundary 130 40 40
'
end geom
read array
ara=1 typ=shexagonal nux=23 nuy=23
fill
0 0 0 0 0 0 0  0 0 0 10 10 10 10 0 0 0  0 0 0 0 0 0
 0 0 0 0 0 0 0  0 9 9 9  9  0  9  9 9 9 0  0 0 0 0 0 0
0 0 0 0 0 0 0  9 0 8 8 8  8  8  8  8 8 0 9  0 0 0 0 0
 0 0 0 0 0 0  9 8 7 7 7  7  7  7 7  7 7 8 9  0 0 0 0 0
0 0 0 0 10 9 8 7 6 6 6  6  6  6 6  6 7 8 9 10 0 0 0
 0 0 0 10 9 8 7 6 0 5  5  0  5 5 0  6 7 8 9 10 0 0 0
0 0 0 10 0 8 7 6 5 4 4  4  4  4 4 5  6 7 8 0 10 0 0
 0 0 10 9 8 0 6 5 4 3  3  3  3 3 4 5  6 0 8 9 10 0 0
0 0 0  9 8 7 6 0 4 3 0  2  2  0 3 4 0  6 7 8 9  0 0
 0 0  9 8 7 6 5 4 0 2 1  0  1  2 0 4 5  6 7 8 9  0 0
0 0  9 8 7 6 5 4 3 2 0 16 15  0 2 3 4 5  6 7 8 9  0
 0  0 0 7 6 0 4 3 0 1 17 11 14 1 0 3 4 0  6 7 0 0  0
0 0  9 8 7 6 5 4 3 2 0 19 18  0 2 3 4 5  6 7 8 9  0
 0 0  9 8 7 6 5 4 0 2 1  0  1  2 0 4 5  6 7 8 9  0 0
0 0 0  9 8 7 6 0 4 3 0  2  2  0 3 4 0  6 7 8 9  0 0
 0 0 10 9 8 0 6 5 4 3  3  3  3 3 4 5  6 0 8 9 10 0 0
0 0 0 10 0 8 7 6 5 4 4  4  4  4 4 5  6 7 8 0 10 0 0
 0 0 0 10 9 8 7 6 0 5  5  0  5 5 0  6 7 8 9 10 0 0 0
0 0 0 0 10 9 8 7 6 6 6  6  6  6 6  6 7 8 9 10 0 0 0
 0 0 0 0 0  9 8 7 7 7  7  7  7 7  7 7 8 9  0 0 0 0 0
0 0 0 0 0 0  9 0 8 8 8  8  8  8  8 8 0 9  0 0 0 0 0
 0 0 0 0 0 0  0 9 9 9  9  0  9  9 9 9 0  0 0 0 0 0 0
0 0 0 0 0 0 0  0 0 0 10 10 10 10 0 0 0  0 0 0 0 0 0
end fill
end array
read bounds all=vacuum end bounds
end model
end
```

Figure 5.3.23-5 VISED X-Y Slice – SLOWPOKE Core – Normal Conditions

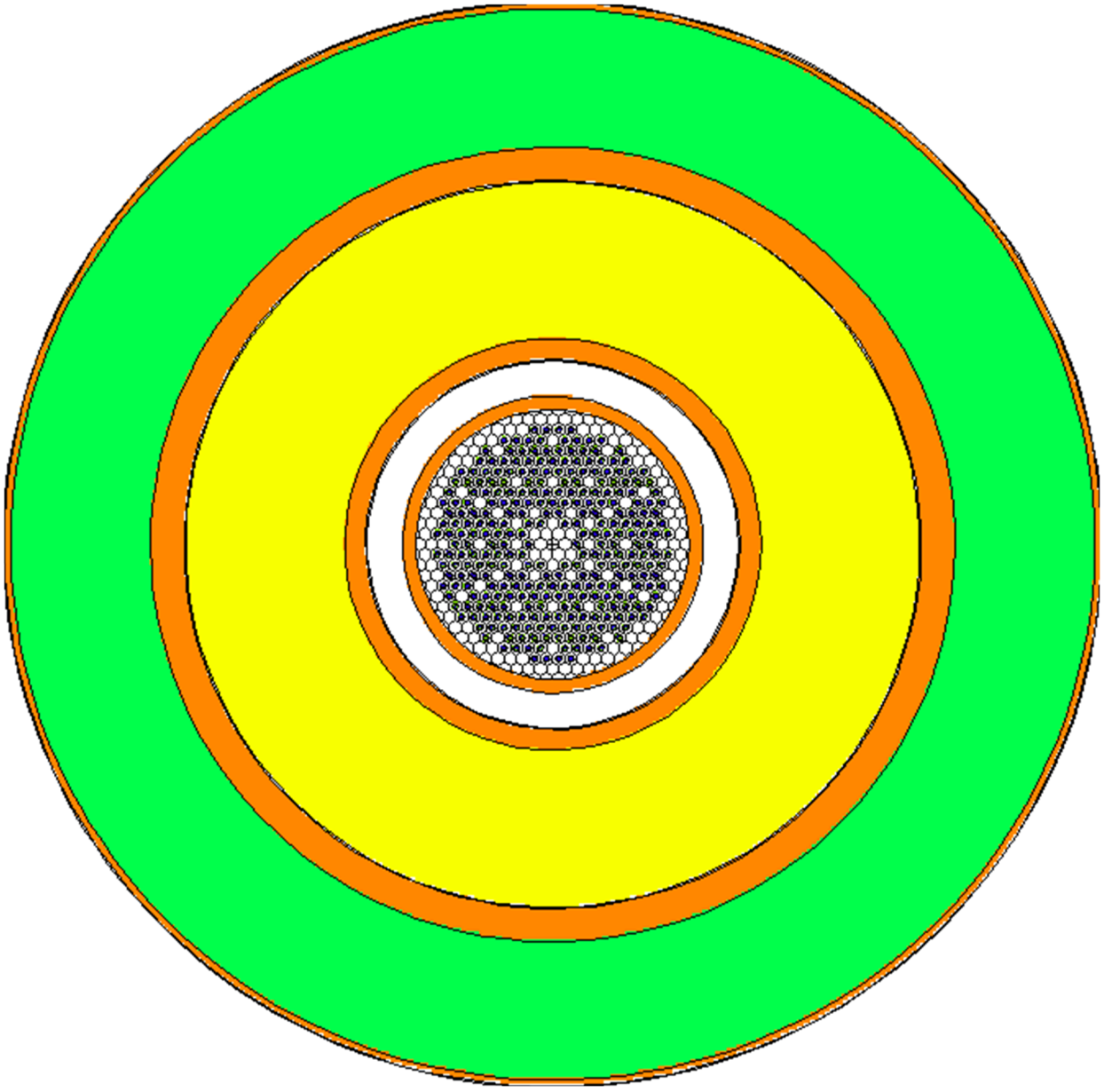

Figure 5.3.23-6 VISED Y-Z Slice – SLOWPOKE Core – Normal Conditions

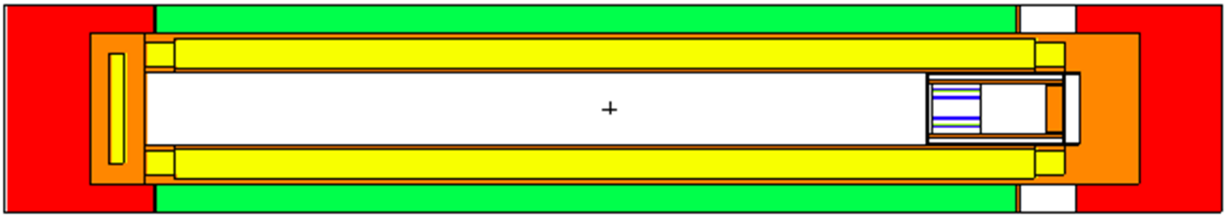

Note: SLOWPOKE fuel core basket is shifted to the NAC-LWT lid. Void space indicated by model is the space occupied by the basket lid collar whose material, but not spacing, is conservatively removed from the model. Location of the fuel core near the bottom of the basket cavity is maintained by a spacer structurally evaluated to survive both normal and accident conditions of transport.

Figure 5.3.23-7 Sample MCNP Input File – Normal Conditions

```
NAC-LWT Cask - 15b90e14d - Normal Transport Conditions
C Radial Biasing - Fuel Gamma Source
C Fuel Rod Cells
1 1 -3.4819 -1 +3 -4   u=5 $ Fuel Meat
2 4 -2.7000 -2 +1 3 -4  u=5 $ Clad
3 4 -2.7000 -5 : -6     u=5 $ Top Cap
4 4 -2.7000 -7     u=5 $ Bottom Cap
5 0         #1 #2 #3 #4      u=5 $ Outside Rod
C Fuel Core Array Cell
6 0         -8 u=4 lat=2 fill=-15:15 -15:15 0:0  $ Core Array
     4 4 4 4 4 4 4 4 4 4 4 4 4 4 4 4 4 4 4 4 4 4 4 4 4 4 4 4 4 4 4
     4 4 4 4 4 4 4 4 4 4 4 4 4 4 4 4 4 4 4 4 4 4 4 4 4 4 4 4 4 4 4
     4 4 4 4 4 4 4 4 4 4 4 4 4 4 4 4 4 4 4 4 4 4 4 4 4 4 4 4 4 4 4
     4 4 4 4 4 4 4 4 4 4 4 4 4 4 4 4 4 4 4 4 4 4 4 4 4 4 4 4 4 4 4
     4 4 4 4 4 4 4 4 4 4 4 4 4 4 4 4 4 4 4 5 5 5 5 4 4 4 4 4 4 4 4
     4 4 4 4 4 4 4 4 4 4 4 4 4 4 4 4 4 4 5 5 5 5 4 5 5 5 5 4 4 4 4
     4 4 4 4 4 4 4 4 4 4 4 4 4 4 4 4 4 5 4 5 5 5 5 5 5 5 5 4 4 4 4
     4 4 4 4 4 4 4 4 4 4 4 4 4 4 4 5 5 5 5 5 5 5 5 5 5 5 5 5 4 4 4
     4 4 4 4 4 4 4 4 4 4 4 4 5 5 5 5 5 5 5 5 5 5 5 5 5 5 5 5 5 4 4
     4 4 4 4 4 4 4 4 4 4 4 5 5 5 5 5 4 5 5 4 5 5 4 5 5 5 5 5 5 4 4
     4 4 4 4 4 4 4 4 4 5 4 5 5 5 5 5 5 5 5 5 5 5 5 5 5 5 4 5 4 4 4
     4 4 4 4 4 4 4 4 5 5 5 4 5 5 5 5 5 5 5 5 5 5 5 5 4 5 5 5 4 4 4
     4 4 4 4 4 4 4 4 5 5 5 5 4 5 5 4 5 5 4 5 5 4 5 5 5 5 5 4 4 4 4
     4 4 4 4 4 4 4 4 5 5 5 5 5 4 5 5 4 5 5 4 5 5 5 5 5 5 5 4 4 4 4
     4 4 4 4 4 4 4 5 5 5 5 5 5 5 5 4 4 4 4 5 5 5 5 5 5 5 5 4 4 4 4
     4 4 4 4 4 4 4 5 5 4 5 5 4 5 4 4 4 5 4 5 5 4 5 5 4 4 4 4 4 4 4
     4 4 4 4 4 4 5 5 5 5 5 5 5 5 4 4 4 4 5 5 5 5 5 5 5 4 4 4 4 4 4
     4 4 4 4 4 4 5 5 5 5 5 5 5 4 5 5 4 5 5 4 5 5 5 5 5 5 4 4 4 4 4
     4 4 4 4 4 5 5 5 4 5 5 5 5 5 5 5 5 5 5 5 4 5 5 5 4 4 4 4 4 4 4
     4 4 4 4 5 4 5 5 5 5 5 5 5 5 5 5 5 5 5 5 4 5 4 4 4 4 4 4 4 4 4
     4 4 4 4 5 5 5 5 5 4 5 5 4 5 5 4 5 5 5 5 5 4 4 4 4 4 4 4 4 4 4
     4 4 4 4 5 5 5 5 5 5 5 5 5 5 5 5 5 5 5 5 4 4 4 4 4 4 4 4 4 4 4
     4 4 4 4 4 5 5 5 5 5 5 5 5 5 5 5 5 5 5 4 4 4 4 4 4 4 4 4 4 4 4
     4 4 4 4 4 5 4 5 5 5 5 5 5 5 5 4 5 4 4 4 4 4 4 4 4 4 4 4 4 4 4
     4 4 4 4 4 4 5 5 5 5 4 5 5 5 5 4 4 4 4 4 4 4 4 4 4 4 4 4 4 4 4
     4 4 4 4 4 4 4 4 5 5 5 5 4 4 4 4 4 4 4 4 4 4 4 4 4 4 4 4 4 4 4
     4 4 4 4 4 4 4 4 4 4 4 4 4 4 4 4 4 4 4 4 4 4 4 4 4 4 4 4 4 4 4
     4 4 4 4 4 4 4 4 4 4 4 4 4 4 4 4 4 4 4 4 4 4 4 4 4 4 4 4 4 4 4
     4 4 4 4 4 4 4 4 4 4 4 4 4 4 4 4 4 4 4 4 4 4 4 4 4 4 4 4 4 4 4
     4 4 4 4 4 4 4 4 4 4 4 4 4 4 4 4 4 4 4 4 4 4 4 4 4 4 4 4 4 4 4
C Cells - SLOWPOKE Core Basket
7 0         -9 fill=4 ( 0.0000 0.0000 3.3274 )   u=3 $ SLOWPOKE Core
8 6 -7.9400 -10     u=3 $ Base Plate
9 6 -7.9400 -11 +12    u=3 $ Basket Tube
10 6 -7.9400 -13     u=3 $ Shield Plug
11 6 -7.9400 -14     u=3 $ Lid Plate
12 0         -15     u=3 $ Lid Spacer
13 0         #7 #8 #9 #10 #11 #12      u=3 $ Void
C Cells - LWT Cavity
14 0         -16 fill=3 ( 0.0000 0.0000 377.6980 )   u=2
15 0         #14      u=2
C Cells - LWT Cask Normal Conditions
16 5 -11.344 -20     u=1 $ BotPb
17 0         -19 fill=2    u=1 $ Cavity
18 6 -7.9400 -17 -18 +20   u=1 $ Bottom
19 6 -7.9400 -17 +18 +22 +25 +19 u=1 $ OuterShell
20 6 -7.9400 -21 +24 +19   u=1 $ InnerShellTaper
21 6 -7.9400 -23 +19    u=1 $ InnerShell
22 5 -11.344 -24 +23    u=1 $ Lead
23 5 -11.344 -22 +21 +24   u=1 $ LeadTaper
24 0         -25 +24    u=1 $ LeadGap
25 3 -0.9400 -27 +17    u=1 $ NeutronShield
26 6 -7.9400 -26 +17 +27   u=1 $ NSShell
27 7 -0.4997 -28 +17    u=1 $ UpperLimiter
28 7 -0.4997 -29 +17    u=1 $ LowerLimiter
29 0         -30 +17 +26 +28 +29 u=1 $ Container
30 0         +30     u=1 $ Outside
C Detector Cells - Radial Biasing
```

Figure 5.3.23-7 Sample MCNP Input File – Normal Conditions (Continued)

```
100 0 -100 fill=1 $ AziTrun
110 0 -110 +100 fill=1 $ Surface
310 0 -310 +110 $ AziSurFuel
329 0 -329 +110 +310 $ 1ft
429 0 -429 +110 +310 +329 $ 1m
529 0 -529 +110 +310 +329 +429 $ Azi1m
548 0 -548 +110 +310 +329 +429 +529 $ 2m
648 0 -648 +110 +310 +329 +429 +529 +548 $ 2m+Convey
748 0 -748 +110 +310 +329 +429 +529 +548 +648 $ Azi2m+Con
848 0 +110 +310 +329 +429 +529 +548 +648 +748 $ Exterior

C Fuel Rod Surfaces
1 CZ 0.2108       $ Fuel Meat OD
2 CZ 0.2616       $ Clad OD
3 PZ 0.4572       $ Lower Fuel Cut Plain
4 PZ 22.4536       $ Upper Fuel Cut Plain
5 RCC 0.0000 0.0000 0.3302 0.0000 0.0000 0.1270 0.3048 $ Lower Stud Rim
6 RCC 0.0000 0.0000 0.0000 0.0000 0.0000 0.3302 0.1930 $ Lower Stud Cap
7 RCC 0.0000 0.0000 22.4536 0.0000 0.0000 0.3810 0.3048 $ Upper Stud
C Fuel Core Lattice Surface
8 RHP 0.0 0.0 0.0 0.0 0.0 22.8346
         0.5518 0.0 0.0    $ Lattice Cell
C Surfaces - SLOWPOKE Core Basket
9 RCC 0.0000 0.0000 3.3274 0.0000 0.0000 22.8346 12.3824 $ Core
10 RCC 0.0000 0.0000 0.0000 0.0000 0.0000 1.2700 16.8466 $ Base Plate
11 RCC 0.0000 0.0000 1.2700 0.0000 0.0000 64.8970 13.6525 $ Tube OD
12 RCC 0.0000 0.0000 1.2700 0.0000 0.0000 64.8970 12.3825 $ Tube ID
13 RCC 0.0000 0.0000 58.5470 0.0000 0.0000 7.6200 10.9982 $ Shield Plug
14 RCC 0.0000 0.0000 66.1670 0.0000 0.0000 1.2700 16.8466 $ Lid Plate
15 RCC 0.0000 0.0000 67.4370 0.0000 0.0000 6.9850 16.84655 $ Lid Spacer
C Surfaces - LWT Cavity
16 RCC 0.0000 0.0000 377.6980 0.0000 0.0000 74.4220 16.8467 $ Basket
C Surfaces - LWT Cask Normal Conditions
17 RCC 0.0000 0.0000 -26.6700 0.0000 0.0000 507.3650 36.5189 $ Lwt
18 RCC 0.0000 0.0000 -26.6700 0.0000 0.0000 26.6700 36.5189 $ Bottom
19 RCC 0.0000 0.0000 0.0000 0.0000 0.0000 452.1200 16.9863 $ Cavity
20 RCC 0.0000 0.0000 -17.7800 0.0000 0.0000 7.6200 26.3525 $ Bottom gamma shield
21 RCC 0.0000 0.0000 0.0000 0.0000 0.0000 444.5000 20.1740 $ Lead id - taper
22 RCC 0.0000 0.0000 0.0000 0.0000 0.0000 444.5000 31.5976 $ Lead od - taper
23 RCC 0.0000 0.0000 13.8176 0.0000 0.0000 416.8648 18.9103 $ Lead id
24 RCC 0.0000 0.0000 13.8176 0.0000 0.0000 416.8648 33.3271 $ Lead od
25 RCC 0.0000 0.0000 13.8176 0.0000 0.0000 416.8648 33.4645 $ Lead gap
26 RCC 0.0000 0.0000 3.8100 0.0000 0.0000 419.1000 49.8183 $ Neutron shield shell
27 RCC 0.0000 0.0000 5.0800 0.0000 0.0000 416.5600 49.2189 $ Neutron shield
28 RCC 0.0000 0.0000 450.2150 0.0000 0.0000 70.5612 49.8183 $ Upper limiter
29 RCC 0.0000 0.0000 -68.0212 0.0000 0.0000 71.8312 49.8183 $ Lower limiter
30 RCC 0.0000 0.0000 -68.0212 0.0000 0.0000 588.7974 49.8183 $ Container
C Radial Detector DRA (AziTrun)
100  RCC  0.0000  0.0000  422.9200  0.0000  0.0000  27.2850  36.6189
101  PZ  425.6485
102  PZ  428.3770
103  PZ  431.1055
104  PZ  433.8340
105  PZ  436.5625
106  PZ  439.2910
107  PZ  442.0195
108  PZ  444.7480
109  PZ  447.4765
C Radial Detector DRB (Surface)
110  RCC  0.0000  0.0000  -68.1212  0.0000  0.0000  588.9974  49.9184
111  PZ  -65.1762
112  PZ  -62.2312
113  PZ  -59.2862
114  PZ  -56.3413
115  PZ  -53.3963
116  PZ  -50.4513
117  PZ  -47.5063
118  PZ  -44.5613
119  PZ  -41.6163
```

Figure 5.3.23-7 Sample MCNP Input File – Normal Conditions (Continued)

```
120  PZ  -38.6713
121  PZ  -35.7263
122  PZ  -32.7814
123  PZ  -29.8364
124  PZ  -26.8914
125  PZ  -23.9464
126  PZ  -21.0014
127  PZ  -18.0564
128  PZ  -15.1114
129  PZ  -12.1664
130  PZ  -9.2215
131  PZ  -6.2765
132  PZ  -3.3315
133  PZ  -0.3865
134  PZ  2.5585
135  PZ  5.5035
136  PZ  8.4485
137  PZ  11.3934
138  PZ  14.3384
139  PZ  17.2834
140  PZ  20.2284
141  PZ  23.1734
142  PZ  26.1184
143  PZ  29.0634
144  PZ  32.0084
145  PZ  34.9533
146  PZ  37.8983
147  PZ  40.8433
148  PZ  43.7883
149  PZ  46.7333
150  PZ  49.6783
151  PZ  52.6233
152  PZ  55.5683
153  PZ  58.5132
154  PZ  61.4582
155  PZ  64.4032
156  PZ  67.3482
157  PZ  70.2932
158  PZ  73.2382
159  PZ  76.1832
160  PZ  79.1282
161  PZ  82.0731
162  PZ  85.0181
163  PZ  87.9631
164  PZ  90.9081
165  PZ  93.8531
166  PZ  96.7981
167  PZ  99.7431
168  PZ  102.6880
169  PZ  105.6330
170  PZ  108.5780
171  PZ  111.5230
172  PZ  114.4680
173  PZ  117.4130
174  PZ  120.3580
175  PZ  123.3030
176  PZ  126.2479
177  PZ  129.1929
178  PZ  132.1379
179  PZ  135.0829
180  PZ  138.0279
181  PZ  140.9729
182  PZ  143.9179
183  PZ  146.8629
184  PZ  149.8078
185  PZ  152.7528
186  PZ  155.6978
187  PZ  158.6428
188  PZ  161.5878
```

Figure 5.3.23-7 Sample MCNP Input File – Normal Conditions (Continued)

```
189  PZ  164.5328
190  PZ  167.4778
191  PZ  170.4227
192  PZ  173.3677
193  PZ  176.3127
194  PZ  179.2577
195  PZ  182.2027
196  PZ  185.1477
197  PZ  188.0927
198  PZ  191.0377
199  PZ  193.9826
200  PZ  196.9276
201  PZ  199.8726
202  PZ  202.8176
203  PZ  205.7626
204  PZ  208.7076
205  PZ  211.6526
206  PZ  214.5976
207  PZ  217.5425
208  PZ  220.4875
209  PZ  223.4325
210  PZ  226.3775
211  PZ  229.3225
212  PZ  232.2675
213  PZ  235.2125
214  PZ  238.1574
215  PZ  241.1024
216  PZ  244.0474
217  PZ  246.9924
218  PZ  249.9374
219  PZ  252.8824
220  PZ  255.8274
221  PZ  258.7724
222  PZ  261.7173
223  PZ  264.6623
224  PZ  267.6073
225  PZ  270.5523
226  PZ  273.4973
227  PZ  276.4423
228  PZ  279.3873
229  PZ  282.3323
230  PZ  285.2772
231  PZ  288.2222
232  PZ  291.1672
233  PZ  294.1122
234  PZ  297.0572
235  PZ  300.0022
236  PZ  302.9472
237  PZ  305.8921
238  PZ  308.8371
239  PZ  311.7821
240  PZ  314.7271
241  PZ  317.6721
242  PZ  320.6171
243  PZ  323.5621
244  PZ  326.5071
245  PZ  329.4520
246  PZ  332.3970
247  PZ  335.3420
248  PZ  338.2870
249  PZ  341.2320
250  PZ  344.1770
251  PZ  347.1220
252  PZ  350.0670
253  PZ  353.0119
254  PZ  355.9569
255  PZ  358.9019
256  PZ  361.8469
257  PZ  364.7919
```

Figure 5.3.23-7 Sample MCNP Input File – Normal Conditions (Continued)

```
258  PZ  367.7369
259  PZ  370.6819
260  PZ  373.6269
261  PZ  376.5718
262  PZ  379.5168
263  PZ  382.4618
264  PZ  385.4068
265  PZ  388.3518
266  PZ  391.2968
267  PZ  394.2418
268  PZ  397.1867
269  PZ  400.1317
270  PZ  403.0767
271  PZ  406.0217
272  PZ  408.9667
273  PZ  411.9117
274  PZ  414.8567
275  PZ  417.8017
276  PZ  420.7466
277  PZ  423.6916
278  PZ  426.6366
279  PZ  429.5816
280  PZ  432.5266
281  PZ  435.4716
282  PZ  438.4166
283  PZ  441.3616
284  PZ  444.3065
285  PZ  447.2515
286  PZ  450.1965
287  PZ  453.1415
288  PZ  456.0865
289  PZ  459.0315
290  PZ  461.9765
291  PZ  464.9214
292  PZ  467.8664
293  PZ  470.8114
294  PZ  473.7564
295  PZ  476.7014
296  PZ  479.6464
297  PZ  482.5914
298  PZ  485.5364
299  PZ  488.4813
300  PZ  491.4263
301  PZ  494.3713
302  PZ  497.3163
303  PZ  500.2613
304  PZ  503.2063
305  PZ  506.1513
306  PZ  509.0963
307  PZ  512.0412
308  PZ  514.9862
309  PZ  517.9312
C Radial Detector DRBA (AziSurFuel)
310  RCC  0.0000  0.0000  385.0000  0.0000  0.0000  10.0000  49.9185
311     PX  0.0000
312  1  PX  0.0000
313  2  PX  0.0000
314  3  PX  0.0000
315  4  PX  0.0000
316  5  PX  0.0000
317  6  PX  0.0000
318  7  PX  0.0000
319  8  PX  0.0000
320     PY  0.0000
321  10  PX  0.0000
322  11  PX  0.0000
323  12  PX  0.0000
324  13  PX  0.0000
325  14  PX  0.0000
```

Figure 5.3.23-7 Sample MCNP Input File – Normal Conditions (Continued)

```
326  15  PX  0.0000
327  16  PX  0.0000
328  17  PX  0.0000
C Radial Detector DRC (1ft)
329  RCC  0.0000  0.0000  -98.6012  0.0000  0.0000  649.9574  80.2984
330  PZ  -92.1016
331  PZ  -85.6021
332  PZ  -79.1025
333  PZ  -72.6029
334  PZ  -66.1033
335  PZ  -59.6038
336  PZ  -53.1042
337  PZ  -46.6046
338  PZ  -40.1050
339  PZ  -33.6055
340  PZ  -27.1059
341  PZ  -20.6063
342  PZ  -14.1067
343  PZ  -7.6072
344  PZ  -1.1076
345  PZ  5.3920
346  PZ  11.8916
347  PZ  18.3911
348  PZ  24.8907
349  PZ  31.3903
350  PZ  37.8899
351  PZ  44.3894
352  PZ  50.8890
353  PZ  57.3886
354  PZ  63.8882
355  PZ  70.3877
356  PZ  76.8873
357  PZ  83.3869
358  PZ  89.8864
359  PZ  96.3860
360  PZ  102.8856
361  PZ  109.3852
362  PZ  115.8847
363  PZ  122.3843
364  PZ  128.8839
365  PZ  135.3835
366  PZ  141.8830
367  PZ  148.3826
368  PZ  154.8822
369  PZ  161.3818
370  PZ  167.8813
371  PZ  174.3809
372  PZ  180.8805
373  PZ  187.3801
374  PZ  193.8796
375  PZ  200.3792
376  PZ  206.8788
377  PZ  213.3784
378  PZ  219.8779
379  PZ  226.3775
380  PZ  232.8771
381  PZ  239.3766
382  PZ  245.8762
383  PZ  252.3758
384  PZ  258.8754
385  PZ  265.3749
386  PZ  271.8745
387  PZ  278.3741
388  PZ  284.8737
389  PZ  291.3732
390  PZ  297.8728
391  PZ  304.3724
392  PZ  310.8720
393  PZ  317.3715
```

Figure 5.3.23-7 Sample MCNP Input File – Normal Conditions (Continued)

```
394  PZ  323.8711
395  PZ  330.3707
396  PZ  336.8703
397  PZ  343.3698
398  PZ  349.8694
399  PZ  356.3690
400  PZ  362.8686
401  PZ  369.3681
402  PZ  375.8677
403  PZ  382.3673
404  PZ  388.8669
405  PZ  395.3664
406  PZ  401.8660
407  PZ  408.3656
408  PZ  414.8651
409  PZ  421.3647
410  PZ  427.8643
411  PZ  434.3639
412  PZ  440.8634
413  PZ  447.3630
414  PZ  453.8626
415  PZ  460.3622
416  PZ  466.8617
417  PZ  473.3613
418  PZ  479.8609
419  PZ  486.3605
420  PZ  492.8600
421  PZ  499.3596
422  PZ  505.8592
423  PZ  512.3588
424  PZ  518.8583
425  PZ  525.3579
426  PZ  531.8575
427  PZ  538.3571
428  PZ  544.8566
C Radial Detector DRD (1m)
429  RCC  0.0000  0.0000  -168.1212  0.0000  0.0000  788.9974  149.8184
430  PZ  -160.2312
431  PZ  -152.3413
432  PZ  -144.4513
433  PZ  -136.5613
434  PZ  -128.6713
435  PZ  -120.7814
436  PZ  -112.8914
437  PZ  -105.0014
438  PZ  -97.1114
439  PZ  -89.2215
440  PZ  -81.3315
441  PZ  -73.4415
442  PZ  -65.5515
443  PZ  -57.6616
444  PZ  -49.7716
445  PZ  -41.8816
446  PZ  -33.9916
447  PZ  -26.1017
448  PZ  -18.2117
449  PZ  -10.3217
450  PZ  -2.4317
451  PZ  5.4582
452  PZ  13.3482
453  PZ  21.2382
454  PZ  29.1282
455  PZ  37.0181
456  PZ  44.9081
457  PZ  52.7981
458  PZ  60.6880
459  PZ  68.5780
460  PZ  76.4680
461  PZ  84.3580
```

Figure 5.3.23-7 Sample MCNP Input File – Normal Conditions (Continued)

```
462  PZ  92.2479
463  PZ  100.1379
464  PZ  108.0279
465  PZ  115.9179
466  PZ  123.8078
467  PZ  131.6978
468  PZ  139.5878
469  PZ  147.4778
470  PZ  155.3677
471  PZ  163.2577
472  PZ  171.1477
473  PZ  179.0377
474  PZ  186.9276
475  PZ  194.8176
476  PZ  202.7076
477  PZ  210.5976
478  PZ  218.4875
479  PZ  226.3775
480  PZ  234.2675
481  PZ  242.1574
482  PZ  250.0474
483  PZ  257.9374
484  PZ  265.8274
485  PZ  273.7173
486  PZ  281.6073
487  PZ  289.4973
488  PZ  297.3873
489  PZ  305.2772
490  PZ  313.1672
491  PZ  321.0572
492  PZ  328.9472
493  PZ  336.8371
494  PZ  344.7271
495  PZ  352.6171
496  PZ  360.5071
497  PZ  368.3970
498  PZ  376.2870
499  PZ  384.1770
500  PZ  392.0670
501  PZ  399.9569
502  PZ  407.8469
503  PZ  415.7369
504  PZ  423.6269
505  PZ  431.5168
506  PZ  439.4068
507  PZ  447.2968
508  PZ  455.1867
509  PZ  463.0767
510  PZ  470.9667
511  PZ  478.8567
512  PZ  486.7466
513  PZ  494.6366
514  PZ  502.5266
515  PZ  510.4166
516  PZ  518.3065
517  PZ  526.1965
518  PZ  534.0865
519  PZ  541.9765
520  PZ  549.8664
521  PZ  557.7564
522  PZ  565.6464
523  PZ  573.5364
524  PZ  581.4263
525  PZ  589.3163
526  PZ  597.2063
527  PZ  605.0963
528  PZ  612.9862
C Radial Detector DRDA (Azi1m)
529  RCC  0.0000  0.0000  385.0000  0.0000  0.0000  15.0000  149.8185
```

Figure 5.3.23-7 Sample MCNP Input File – Normal Conditions (Continued)

```
530      PX  0.0000
531  1   PX  0.0000
532  2   PX  0.0000
533  3   PX  0.0000
534  4   PX  0.0000
535  5   PX  0.0000
536  6   PX  0.0000
537  7   PX  0.0000
538  8   PX  0.0000
539      PY  0.0000
540  10   PX  0.0000
541  11   PX  0.0000
542  12   PX  0.0000
543  13   PX  0.0000
544  14   PX  0.0000
545  15   PX  0.0000
546  16   PX  0.0000
547  17   PX  0.0000
C Radial Detector DRE (2m)
548  RCC  0.0000  0.0000  -268.1212  0.0000  0.0000  988.9974  249.8184
549  PZ  -258.2312
550  PZ  -248.3413
551  PZ  -238.4513
552  PZ  -228.5613
553  PZ  -218.6713
554  PZ  -208.7814
555  PZ  -198.8914
556  PZ  -189.0014
557  PZ  -179.1114
558  PZ  -169.2215
559  PZ  -159.3315
560  PZ  -149.4415
561  PZ  -139.5515
562  PZ  -129.6616
563  PZ  -119.7716
564  PZ  -109.8816
565  PZ  -99.9916
566  PZ  -90.1017
567  PZ  -80.2117
568  PZ  -70.3217
569  PZ  -60.4317
570  PZ  -50.5418
571  PZ  -40.6518
572  PZ  -30.7618
573  PZ  -20.8719
574  PZ  -10.9819
575  PZ  -1.0919
576  PZ  8.7981
577  PZ  18.6880
578  PZ  28.5780
579  PZ  38.4680
580  PZ  48.3580
581  PZ  58.2479
582  PZ  68.1379
583  PZ  78.0279
584  PZ  87.9179
585  PZ  97.8078
586  PZ  107.6978
587  PZ  117.5878
588  PZ  127.4778
589  PZ  137.3677
590  PZ  147.2577
591  PZ  157.1477
592  PZ  167.0377
593  PZ  176.9276
594  PZ  186.8176
595  PZ  196.7076
596  PZ  206.5976
597  PZ  216.4875
```

Figure 5.3.23-7 Sample MCNP Input File – Normal Conditions (Continued)

```
598  PZ  226.3775
599  PZ  236.2675
600  PZ  246.1574
601  PZ  256.0474
602  PZ  265.9374
603  PZ  275.8274
604  PZ  285.7173
605  PZ  295.6073
606  PZ  305.4973
607  PZ  315.3873
608  PZ  325.2772
609  PZ  335.1672
610  PZ  345.0572
611  PZ  354.9472
612  PZ  364.8371
613  PZ  374.7271
614  PZ  384.6171
615  PZ  394.5071
616  PZ  404.3970
617  PZ  414.2870
618  PZ  424.1770
619  PZ  434.0670
620  PZ  443.9569
621  PZ  453.8469
622  PZ  463.7369
623  PZ  473.6269
624  PZ  483.5168
625  PZ  493.4068
626  PZ  503.2968
627  PZ  513.1867
628  PZ  523.0767
629  PZ  532.9667
630  PZ  542.8567
631  PZ  552.7466
632  PZ  562.6366
633  PZ  572.5266
634  PZ  582.4166
635  PZ  592.3065
636  PZ  602.1965
637  PZ  612.0865
638  PZ  621.9765
639  PZ  631.8664
640  PZ  641.7564
641  PZ  651.6464
642  PZ  661.5364
643  PZ  671.4263
644  PZ  681.3163
645  PZ  691.2063
646  PZ  701.0963
647  PZ  710.9862
C Radial Detector DRF (2m+Convey)
648  RCC  0.0000  0.0000  -269.1212  0.0000  0.0000  990.9974  321.9200
649  PZ  -259.2112
650  PZ  -249.3013
651  PZ  -239.3913
652  PZ  -229.4813
653  PZ  -219.5713
654  PZ  -209.6614
655  PZ  -199.7514
656  PZ  -189.8414
657  PZ  -179.9314
658  PZ  -170.0215
659  PZ  -160.1115
660  PZ  -150.2015
661  PZ  -140.2915
662  PZ  -130.3816
663  PZ  -120.4716
664  PZ  -110.5616
665  PZ  -100.6516
```

Figure 5.3.23-7 Sample MCNP Input File – Normal Conditions (Continued)

```
666  PZ  -90.7417
667  PZ  -80.8317
668  PZ  -70.9217
669  PZ  -61.0117
670  PZ  -51.1018
671  PZ  -41.1918
672  PZ  -31.2818
673  PZ  -21.3719
674  PZ  -11.4619
675  PZ  -1.5519
676  PZ  8.3581
677  PZ  18.2680
678  PZ  28.1780
679  PZ  38.0880
680  PZ  47.9980
681  PZ  57.9079
682  PZ  67.8179
683  PZ  77.7279
684  PZ  87.6379
685  PZ  97.5478
686  PZ  107.4578
687  PZ  117.3678
688  PZ  127.2778
689  PZ  137.1877
690  PZ  147.0977
691  PZ  157.0077
692  PZ  166.9177
693  PZ  176.8276
694  PZ  186.7376
695  PZ  196.6476
696  PZ  206.5576
697  PZ  216.4675
698  PZ  226.3775
699  PZ  236.2875
700  PZ  246.1974
701  PZ  256.1074
702  PZ  266.0174
703  PZ  275.9274
704  PZ  285.8373
705  PZ  295.7473
706  PZ  305.6573
707  PZ  315.5673
708  PZ  325.4772
709  PZ  335.3872
710  PZ  345.2972
711  PZ  355.2072
712  PZ  365.1171
713  PZ  375.0271
714  PZ  384.9371
715  PZ  394.8471
716  PZ  404.7570
717  PZ  414.6670
718  PZ  424.5770
719  PZ  434.4870
720  PZ  444.3969
721  PZ  454.3069
722  PZ  464.2169
723  PZ  474.1269
724  PZ  484.0368
725  PZ  493.9468
726  PZ  503.8568
727  PZ  513.7667
728  PZ  523.6767
729  PZ  533.5867
730  PZ  543.4967
731  PZ  553.4066
732  PZ  563.3166
733  PZ  573.2266
734  PZ  583.1366
```

Figure 5.3.23-7 Sample MCNP Input File – Normal Conditions (Continued)

```
735  PZ  593.0465
736  PZ  602.9565
737  PZ  612.8665
738  PZ  622.7765
739  PZ  632.6864
740  PZ  642.5964
741  PZ  652.5064
742  PZ  662.4164
743  PZ  672.3263
744  PZ  682.2363
745  PZ  692.1463
746  PZ  702.0563
747  PZ  711.9662
C Radial Detector DRFA (Azi2m+Con)
748  RCC  0.0000  0.0000  390.0000  0.0000  0.0000  20.0000  321.9201
749     PX  0.0000
750  1  PX  0.0000
751  2  PX  0.0000
752  3  PX  0.0000
753  4  PX  0.0000
754  5  PX  0.0000
755  6  PX  0.0000
756  7  PX  0.0000
757  8  PX  0.0000
758     PY  0.0000
759  10  PX  0.0000
760  11  PX  0.0000
761  12  PX  0.0000
762  13  PX  0.0000
763  14  PX  0.0000
764  15  PX  0.0000
765  16  PX  0.0000
766  17  PX  0.0000

C
C Materials List
C
C U-Al Fuel
m1    92235 -2.5201E-01 92238 -2.8001E-02 13027 -7.1999E-01
C Water
m2    1001 6.6667E-01 8016 3.3333E-01
mt2   lwtr.01
C Water/Glycol
m3    1001 -1.03200E-01 8016 -6.82400E-01 6000 -2.14400E-01
C Aluminum
m4    13027 -1.0
C Lead
m5    82000 -1.0
C Stainless Steel 304
m6    26000 -0.695 24000 -0.190 28000 -0.095
      25055 -0.020
C Aluminum Honeycomb Impact Limiter
m7    13027 -1.0
C
C Cell Importances
imp:p 1 38r 0
C
C Source Definition - Fuel Gamma
C 15 GWd/MTU burnup, 90 wt% U-235, 14-day cool time, 2.786 g U-235 per rod, 39 W/core
sdef RAD=d1 EXT=d2 ERG=d3 cell=d4
     POS= 0.0000 0.0000 0.4572
     AXS= 0.0000 0.0000 1.0000
si1 0 0.2108
sp1 -21 1
si2 0 21.9964
sp2 0 1
si3 1.000E-02 4.500E-02 1.000E-01 2.000E-01 3.000E-01 4.000E-01
     6.000E-01 8.000E-01 1.000E+00 1.330E+00 1.660E+00 2.000E+00
     2.500E+00 3.000E+00 4.000E+00 5.000E+00 6.500E+00 8.000E+00
```

Figure 5.3.23-7 Sample MCNP Input File – Normal Conditions (Continued)

```
     1.000E+01
sp3 0.0000E+00 3.1684E+11 1.0982E+11 1.3380E+11 2.3964E+10 5.7276E+10
     1.5811E+11 4.3248E+11 4.1310E+10 2.5592E+09 1.0587E+11 3.5978E+08
     2.0105E+09 3.4304E+09 2.6553E+07 7.9396E-04 1.8338E-04 3.4862E-05
     7.4653E-06
# SI4  SP4
     L  D
     110:17:14:7:6:-1  1.0000
mode p
nps 6.40E+07
C
C ANSI/ANS-6.1.1-1977 - Gamma Flux-to-Dose Conversion Factors
C (mrem/hr)/(photons/cm2-sec)
de0 0.01 0.03 0.05 0.07 0.1 0.15 0.2
     0.25 0.3 0.35 0.4 0.45 0.5 0.55
     0.6 0.65 0.7 0.8 1 1.4 1.8
     2.2 2.6 2.8 3.25 3.75 4.25 4.75
     5 5.25 5.75 6.25 6.75 7.5 9
     11 13 15
df0 3.96E-03 5.82E-04 2.90E-04 2.58E-04 2.83E-04 3.79E-04 5.01E-04
     6.31E-04 7.59E-04 8.78E-04 9.85E-04 1.08E-03 1.17E-03 1.27E-03
     1.36E-03 1.44E-03 1.52E-03 1.68E-03 1.98E-03 2.51E-03 2.99E-03
     3.42E-03 3.82E-03 4.01E-03 4.41E-03 4.83E-03 5.23E-03 5.60E-03
     5.80E-03 6.01E-03 6.37E-03 6.74E-03 7.11E-03 7.66E-03 8.77E-03
     1.03E-02 1.18E-02 1.33E-02
C
C Weight Window Generation - Radial
wwg 2 0 0 0 0
wwp:p 5 3 5 0 -1 0
mesh geom=cyl ref=0 13 402 origin=0.1 0.1 -568
     imesh 16.8 17.0 18.9 33.3 36.5 49.2 49.8 549.8
     iints 1 1 1 5 1 1 1 1
     jmesh 500 541 550 558 568 947 969 1020 1049 1089 1589
     jints 1 1 1 1 1 1 1 1 1 1
     kmesh 1
     kints 1
wwge:p  1e-3 1 20
fc2 Radial AziTrun Tally
f2:p +100.1
fm2 4.13583E+14
fs2  -101  -102  -103  -104  -105  -106
     -107  -108  -109  T
tf2
fc12 Radial Surface Tally
f12:p +110.1
fm12 4.13583E+14
fs12  -111  -112  -113  -114  -115  -116
     -117  -118  -119  -120  -121  -122
     -123  -124  -125  -126  -127  -128
     -129  -130  -131  -132  -133  -134
     -135  -136  -137  -138  -139  -140
     -141  -142  -143  -144  -145  -146
     -147  -148  -149  -150  -151  -152
     -153  -154  -155  -156  -157  -158
     -159  -160  -161  -162  -163  -164
     -165  -166  -167  -168  -169  -170
     -171  -172  -173  -174  -175  -176
     -177  -178  -179  -180  -181  -182
     -183  -184  -185  -186  -187  -188
     -189  -190  -191  -192  -193  -194
     -195  -196  -197  -198  -199  -200
     -201  -202  -203  -204  -205  -206
     -207  -208  -209  -210  -211  -212
     -213  -214  -215  -216  -217  -218
     -219  -220  -221  -222  -223  -224
     -225  -226  -227  -228  -229  -230
     -231  -232  -233  -234  -235  -236
     -237  -238  -239  -240  -241  -242
     -243  -244  -245  -246  -247  -248
```

Figure 5.3.23-7 Sample MCNP Input File – Normal Conditions (Continued)

```
     -249  -250  -251  -252  -253  -254
     -255  -256  -257  -258  -259  -260
     -261  -262  -263  -264  -265  -266
     -267  -268  -269  -270  -271  -272
     -273  -274  -275  -276  -277  -278
     -279  -280  -281  -282  -283  -284
     -285  -286  -287  -288  -289  -290
     -291  -292  -293  -294  -295  -296
     -297  -298  -299  -300  -301  -302
     -303  -304  -305  -306  -307  -308
     -309  T
tf12
fc22 Radial AziSurFuel Tally Q1 (+x+y)
f22:p +310.1
fm22 4.13583E+14
fs22 -311  -320
     -312  -313  -314  -315  -316  -317
     -318  -319  T
sd22 1.5682E+03  7.8412E+02  8.7124E+01  8r  3.1365E+03
tf22
fc32 Radial AziSurFuel Tally Q2 (-x+y)
f32:p +310.1
fm32 4.13583E+14
fs32 +311  -320
     +321  +322  +323  +324  +325  +326
     +327  +328  T
sd32 1.5682E+03  7.8412E+02  8.7124E+01  8r  3.1365E+03
tf32
fc42 Radial AziSurFuel Tally Q3 (-x-y)
f42:p +310.1
fm42 4.13583E+14
fs42 +311  +320
     +312  +313  +314  +315  +316  +317
     +318  +319  T
sd42 1.5682E+03  7.8412E+02  8.7124E+01  8r  3.1365E+03
tf42
fc52 Radial AziSurFuel Tally Q4 (+x-y)
f52:p +310.1
fm52 4.13583E+14
fs52 -311  +320
     -321  -322  -323  -324  -325  -326
     -327  -328  T
sd52 1.5682E+03  7.8412E+02  8.7124E+01  8r  3.1365E+03
tf52
fc62 Radial 1ft Tally
f62:p +329.1
fm62 4.13583E+14
fs62  -330  -331  -332  -333  -334  -335
     -336  -337  -338  -339  -340  -341
     -342  -343  -344  -345  -346  -347
     -348  -349  -350  -351  -352  -353
     -354  -355  -356  -357  -358  -359
     -360  -361  -362  -363  -364  -365
     -366  -367  -368  -369  -370  -371
     -372  -373  -374  -375  -376  -377
     -378  -379  -380  -381  -382  -383
     -384  -385  -386  -387  -388  -389
     -390  -391  -392  -393  -394  -395
     -396  -397  -398  -399  -400  -401
     -402  -403  -404  -405  -406  -407
     -408  -409  -410  -411  -412  -413
     -414  -415  -416  -417  -418  -419
     -420  -421  -422  -423  -424  -425
     -426  -427  -428  T
tf62
fc72 Radial 1m Tally
f72:p +429.1
fm72 4.13583E+14
fs72  -430  -431  -432  -433  -434  -435
```

Figure 5.3.23-7 Sample MCNP Input File – Normal Conditions (Continued)

```
     -436  -437  -438  -439  -440  -441
     -442  -443  -444  -445  -446  -447
     -448  -449  -450  -451  -452  -453
     -454  -455  -456  -457  -458  -459
     -460  -461  -462  -463  -464  -465
     -466  -467  -468  -469  -470  -471
     -472  -473  -474  -475  -476  -477
     -478  -479  -480  -481  -482  -483
     -484  -485  -486  -487  -488  -489
     -490  -491  -492  -493  -494  -495
     -496  -497  -498  -499  -500  -501
     -502  -503  -504  -505  -506  -507
     -508  -509  -510  -511  -512  -513
     -514  -515  -516  -517  -518  -519
     -520  -521  -522  -523  -524  -525
     -526  -527  -528  T
tf72
fc82 Radial Azi1m Tally Q1 (+x+y)
f82:p +529.1
fm82 4.13583E+14
fs82 -530  -539
     -531  -532  -533  -534  -535  -536
     -537  -538  T
sd82 7.0600E+03  3.5300E+03  3.9222E+02  8r  1.4120E+04
tf82
fc92 Radial Azi1m Tally Q2 (-x+y)
f92:p +529.1
fm92 4.13583E+14
fs92 +530  -539
     +540  +541  +542  +543  +544  +545
     +546  +547  T
sd92 7.0600E+03  3.5300E+03  3.9222E+02  8r  1.4120E+04
tf92
fc102 Radial Azi1m Tally Q3 (-x-y)
f102:p +529.1
fm102 4.13583E+14
fs102 +530  +539
     +531  +532  +533  +534  +535  +536
     +537  +538  T
sd102 7.0600E+03  3.5300E+03  3.9222E+02  8r  1.4120E+04
tf102
fc112 Radial Azi1m Tally Q4 (+x-y)
f112:p +529.1
fm112 4.13583E+14
fs112 -530  +539
     -540  -541  -542  -543  -544  -545
     -546  -547  T
sd112 7.0600E+03  3.5300E+03  3.9222E+02  8r  1.4120E+04
tf112
fc122 Radial 2m Tally
f122:p +548.1
fm122 4.13583E+14
fs122  -549  -550  -551  -552  -553  -554
     -555  -556  -557  -558  -559  -560
     -561  -562  -563  -564  -565  -566
     -567  -568  -569  -570  -571  -572
     -573  -574  -575  -576  -577  -578
     -579  -580  -581  -582  -583  -584
     -585  -586  -587  -588  -589  -590
     -591  -592  -593  -594  -595  -596
     -597  -598  -599  -600  -601  -602
     -603  -604  -605  -606  -607  -608
     -609  -610  -611  -612  -613  -614
     -615  -616  -617  -618  -619  -620
     -621  -622  -623  -624  -625  -626
     -627  -628  -629  -630  -631  -632
     -633  -634  -635  -636  -637  -638
     -639  -640  -641  -642  -643  -644
     -645  -646  -647  T
```

Figure 5.3.23-7 Sample MCNP Input File – Normal Conditions (Continued)

```
tf122
fc132 Radial 2m+Convey Tally
f132:p +648.1
fm132 4.13583E+14
fs132  -649  -650  -651  -652  -653  -654
     -655  -656  -657  -658  -659  -660
     -661  -662  -663  -664  -665  -666
     -667  -668  -669  -670  -671  -672
     -673  -674  -675  -676  -677  -678
     -679  -680  -681  -682  -683  -684
     -685  -686  -687  -688  -689  -690
     -691  -692  -693  -694  -695  -696
     -697  -698  -699  -700  -701  -702
     -703  -704  -705  -706  -707  -708
     -709  -710  -711  -712  -713  -714
     -715  -716  -717  -718  -719  -720
     -721  -722  -723  -724  -725  -726
     -727  -728  -729  -730  -731  -732
     -733  -734  -735  -736  -737  -738
     -739  -740  -741  -742  -743  -744
     -745  -746  -747  T
tf132
fc142 Radial Azi2m+Con Tally Q1 (+x+y)
f142:p +748.1
fm142 4.13583E+14
fs142 -749  -758
     -750  -751  -752  -753  -754  -755
     -756  -757  T
sd142 2.0227E+04  1.0113E+04  1.1237E+03  8r  4.0454E+04
tf142
fc152 Radial Azi2m+Con Tally Q2 (-x+y)
f152:p +748.1
fm152 4.13583E+14
fs152 +749  -758
     +759  +760  +761  +762  +763  +764
     +765  +766  T
sd152 2.0227E+04  1.0113E+04  1.1237E+03  8r  4.0454E+04
tf152
fc162 Radial Azi2m+Con Tally Q3 (-x-y)
f162:p +748.1
fm162 4.13583E+14
fs162 +749  +758
     +750  +751  +752  +753  +754  +755
     +756  +757  T
sd162 2.0227E+04  1.0113E+04  1.1237E+03  8r  4.0454E+04
tf162
fc172 Radial Azi2m+Con Tally Q4 (+x-y)
f172:p +748.1
fm172 4.13583E+14
fs172 -749  +758
     -759  -760  -761  -762  -763  -764
     -765  -766  T
sd172 2.0227E+04  1.0113E+04  1.1237E+03  8r  4.0454E+04
tf172
C
C Print Control
prdmp -30 -60 1 2
print
C Random Number Generator
rand gen=2 seed=33982735979567 stride=152917 hist=1
C
C Rotation Matrix
C
*TR1 0.0 0.0 0.0 10 100 90 -80 10 90 90 90 0
*TR2 0.0 0.0 0.0 20 110 90 -70 20 90 90 90 0
*TR3 0.0 0.0 0.0 30 120 90 -60 30 90 90 90 0
*TR4 0.0 0.0 0.0 40 130 90 -50 40 90 90 90 0
*TR5 0.0 0.0 0.0 50 140 90 -40 50 90 90 90 0
*TR6 0.0 0.0 0.0 60 150 90 -30 60 90 90 90 0
```

Figure 5.3.23-7 Sample MCNP Input File – Normal Conditions (Continued)

```
*TR7 0.0 0.0 0.0 70 160 90 -20 70 90 90 90 0
*TR8 0.0 0.0 0.0 80 170 90 -10 80 90 90 90 0
*TR9 0.0 0.0 0.0 90 180 90 0 90 90 90 90 0
*TR10 0.0 0.0 0.0 100 190 90 10 100 90 90 90 0
*TR11 0.0 0.0 0.0 110 200 90 20 110 90 90 90 0
*TR12 0.0 0.0 0.0 120 210 90 30 120 90 90 90 0
*TR13 0.0 0.0 0.0 130 220 90 40 130 90 90 90 0
*TR14 0.0 0.0 0.0 140 230 90 50 140 90 90 90 0
*TR15 0.0 0.0 0.0 150 240 90 60 150 90 90 90 0
*TR16 0.0 0.0 0.0 160 250 90 70 160 90 90 90 0
*TR17 0.0 0.0 0.0 170 260 90 80 170 90 90 90 0
*TR18 0.0 0.0 0.0 180 270 90 90 180 90 90 90 0
*TR19 0.0 0.0 0.0 190 280 90 100 190 90 90 90 0
*TR20 0.0 0.0 0.0 200 290 90 110 200 90 90 90 0
*TR21 0.0 0.0 0.0 210 300 90 120 210 90 90 90 0
*TR22 0.0 0.0 0.0 220 310 90 130 220 90 90 90 0
*TR23 0.0 0.0 0.0 230 320 90 140 230 90 90 90 0
*TR24 0.0 0.0 0.0 240 330 90 150 240 90 90 90 0
*TR25 0.0 0.0 0.0 250 340 90 160 250 90 90 90 0
*TR26 0.0 0.0 0.0 260 350 90 170 260 90 90 90 0
*TR27 0.0 0.0 0.0 270 360 90 180 270 90 90 90 0
*TR28 0.0 0.0 0.0 280 370 90 190 280 90 90 90 0
*TR29 0.0 0.0 0.0 290 380 90 200 290 90 90 90 0
*TR30 0.0 0.0 0.0 300 390 90 210 300 90 90 90 0
*TR31 0.0 0.0 0.0 310 400 90 220 310 90 90 90 0
*TR32 0.0 0.0 0.0 320 410 90 230 320 90 90 90 0
*TR33 0.0 0.0 0.0 330 420 90 240 330 90 90 90 0
*TR34 0.0 0.0 0.0 340 430 90 250 340 90 90 90 0
*TR35 0.0 0.0 0.0 350 440 90 260 350 90 90 90 0
*TR36 0.0 0.0 0.0 360 450 90 270 360 90 90 90 0
```

Figure 5.3.23-8 VISED X-Y Slice – SLOWPOKE Core – Accident Conditions

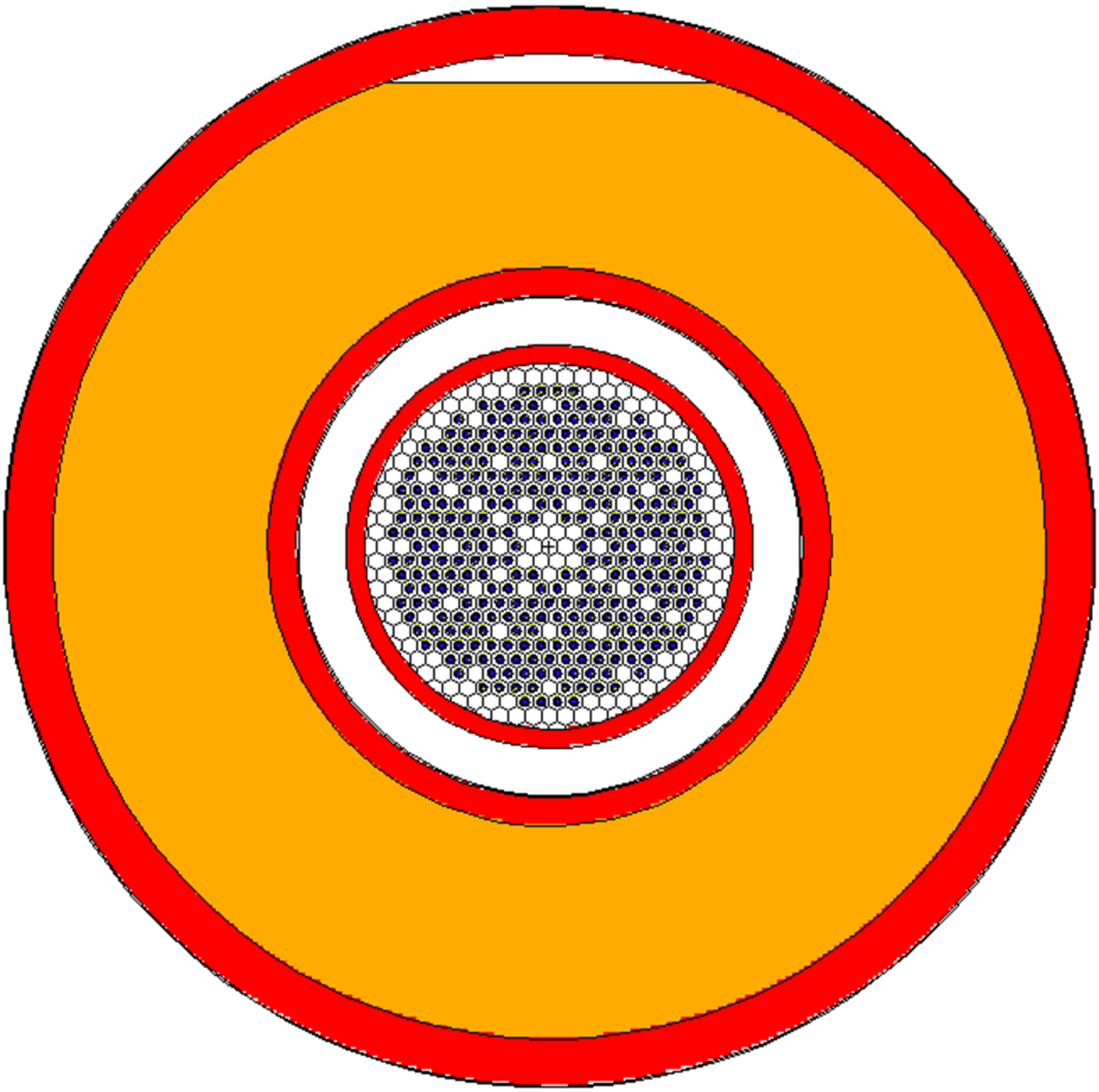

Figure 5.3.23-9 VISED Y-Z Slice – SLOWPOKE – Accident Conditions

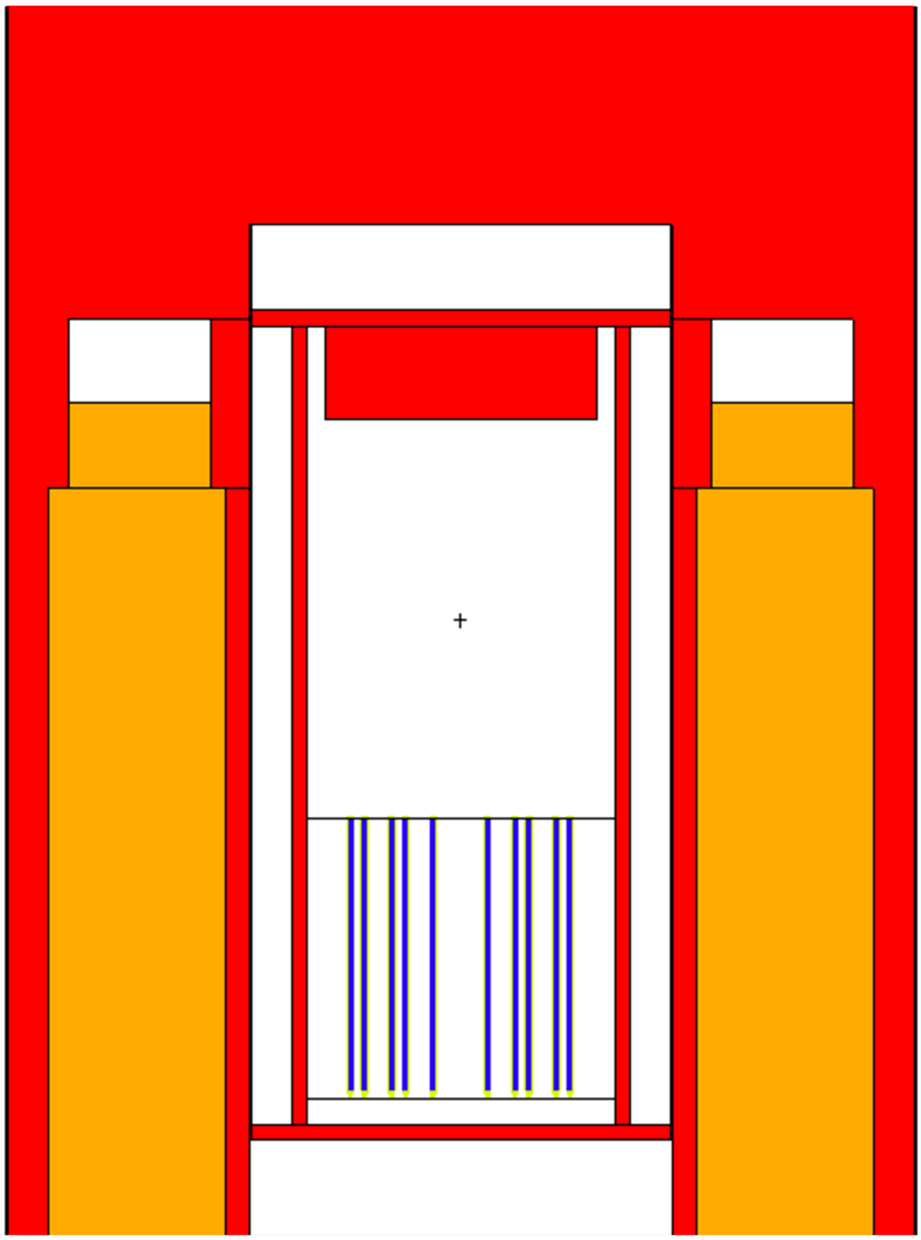

Note: SLOWPOKE fuel core basket is shifted to the NAC-LWT lid. Void space indicated by the model is the space occupied by the basket lid collar whose material, but not spacing, is conservatively removed from the model. Location of the fuel core near the bottom of the basket cavity is maintained by a spacer structurally evaluated to survive both normal and accident conditions of transport.

Figure 5.3.23-10 SLOWPOKE Core Basket Sketch

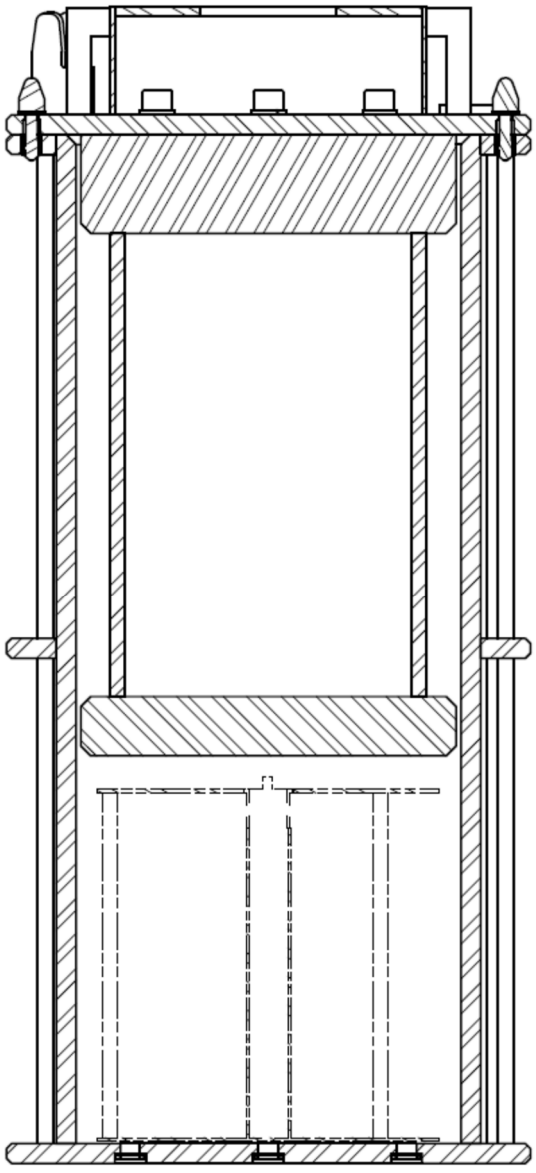

Figure 5.3.23-11 Sample MCNP Input File – Accident Conditions

```
NAC-LWT Cask - 15b90e14d - Accident Transport Conditions
C Top Axial Biasing - Fuel Neutron Source
C Fuel Rod Cells
1 1 -3.4819 -1 +3 -4   u=5 $ Fuel Meat
2 4 -2.7000 -2 +1 3 -4  u=5 $ Clad
3 4 -2.7000 -5 : -6     u=5 $ Top Cap
4 4 -2.7000 -7     u=5 $ Bottom Cap
5 0         #1 #2 #3 #4      u=5 $ Outside Rod
C Fuel Core Array Cell
6 0         -8 u=4 lat=2 fill=-15:15 -15:15 0:0  $ Core Array
     4 4 4 4 4 4 4 4 4 4 4 4 4 4 4 4 4 4 4 4 4 4 4 4 4 4 4 4 4 4 4
     4 4 4 4 4 4 4 4 4 4 4 4 4 4 4 4 4 4 4 4 4 4 4 4 4 4 4 4 4 4 4
     4 4 4 4 4 4 4 4 4 4 4 4 4 4 4 4 4 4 4 4 4 4 4 4 4 4 4 4 4 4 4
     4 4 4 4 4 4 4 4 4 4 4 4 4 4 4 4 4 4 4 4 4 4 4 4 4 4 4 4 4 4 4
     4 4 4 4 4 4 4 4 4 4 4 4 4 4 4 4 4 4 4 4 5 5 5 5 4 4 4 4 4 4 4
     4 4 4 4 4 4 4 4 4 4 4 4 4 4 4 4 4 5 5 5 5 4 5 5 5 5 4 4 4 4 4
     4 4 4 4 4 4 4 4 4 4 4 4 4 4 4 5 4 5 5 5 5 5 5 5 5 4 5 4 4 4 4
     4 4 4 4 4 4 4 4 4 4 4 4 4 4 5 5 5 5 5 5 5 5 5 5 5 5 5 4 4 4 4
     4 4 4 4 4 4 4 4 4 4 4 4 4 5 5 5 5 5 5 5 5 5 5 5 5 5 5 4 4 4 4
     4 4 4 4 4 4 4 4 4 4 4 5 5 5 5 5 4 5 5 4 5 5 4 5 5 5 5 5 5 4 4
     4 4 4 4 4 4 4 4 4 4 5 4 5 5 5 5 5 5 5 5 5 5 5 5 5 5 5 4 5 4 4
     4 4 4 4 4 4 4 4 4 5 5 5 5 4 5 5 5 5 5 5 5 5 5 5 5 5 4 5 5 5 4
     4 4 4 4 4 4 4 4 4 5 5 5 5 5 4 5 5 4 5 5 4 5 5 4 5 5 5 5 5 4 4
     4 4 4 4 4 4 4 4 5 5 5 5 5 5 5 4 5 5 4 5 5 4 5 5 5 5 5 5 5 4 4
     4 4 4 4 4 4 4 5 5 5 5 5 5 5 5 4 4 4 4 5 5 5 5 5 5 5 5 5 4 4 4
     4 4 4 4 4 4 4 5 5 4 5 5 5 5 5 4 5 5 4 5 5 4 5 5 5 5 5 5 4 4 4
     4 4 4 4 4 4 5 5 5 5 4 5 5 5 4 5 5 4 5 5 4 5 5 5 5 5 5 4 4 4 4
     4 4 4 4 4 4 5 5 5 5 4 5 5 4 5 5 4 5 5 4 5 5 5 5 5 5 4 4 4 4 4
     4 4 4 4 4 5 5 5 4 5 5 5 5 5 5 5 5 5 5 5 4 5 5 5 4 4 4 4 4 4 4
     4 4 4 4 5 4 5 5 5 5 5 5 5 5 5 5 5 5 5 5 4 5 4 4 4 4 4 4 4 4 4
     4 4 4 4 5 5 5 5 5 4 5 5 4 5 5 4 5 5 5 5 5 4 4 4 4 4 4 4 4 4 4
     4 4 4 4 5 5 5 5 5 5 5 5 5 5 5 5 5 5 5 5 5 4 4 4 4 4 4 4 4 4 4
     4 4 4 4 5 5 5 5 5 5 5 5 5 5 5 5 5 5 5 5 4 4 4 4 4 4 4 4 4 4 4
     4 4 4 4 4 5 4 5 5 5 5 5 5 5 5 5 4 5 4 4 4 4 4 4 4 4 4 4 4 4 4
     4 4 4 4 4 4 5 5 5 5 4 5 5 5 5 4 4 4 4 4 4 4 4 4 4 4 4 4 4 4 4
     4 4 4 4 4 4 4 4 5 5 5 5 4 4 4 4 4 4 4 4 4 4 4 4 4 4 4 4 4 4 4
     4 4 4 4 4 4 4 4 4 4 4 4 4 4 4 4 4 4 4 4 4 4 4 4 4 4 4 4 4 4 4
     4 4 4 4 4 4 4 4 4 4 4 4 4 4 4 4 4 4 4 4 4 4 4 4 4 4 4 4 4 4 4
     4 4 4 4 4 4 4 4 4 4 4 4 4 4 4 4 4 4 4 4 4 4 4 4 4 4 4 4 4 4 4
C Cells - SLOWPOKE Core Basket
7 0         -9 fill=4 ( 0.0000 0.0000 3.3274 )   u=3 $ SLOWPOKE Core
8 6 -7.9400 -10     u=3 $ Base Plate
9 6 -7.9400 -11 +12    u=3 $ Basket Tube
10 6 -7.9400 -13     u=3 $ Shield Plug
11 6 -7.9400 -14     u=3 $ Lid Plate
12 0         -15     u=3 $ Lid Spacer
13 0         #7 #8 #9 #10 #11 #12      u=3 $ Void
C Cells - LWT Cavity
14 0         -16 fill=3 ( 0.0000 0.0000 377.6980 )   u=2
15 0         #14      u=2
C Cells - LWT Cask Accident Conditions
16 5 -11.344 -20     u=1 $ BotPb
17 0         -19 fill=2    u=1 $ Cavity
18 6 -7.9400 -18 +20    u=1 $ Bottom
19 6 -7.9400 -17 +18 +22 +24 +19 u=1 $ Outer Shell
20 6 -7.9400 -21 +24 +19   u=1 $ Inner Shell Taper
21 6 -7.9400 -23 +19    u=1 $ Inner Shell
22 5 -11.344 -24 +23 -25   u=1 $ Lead
23 5 -11.344 -22 +21 +24 -27 -26 u=1 $ Lead Taper
24 0         -22 +21 +24 +27  u=1 $ Axial Lead Slump
25 0         -24 +25    u=1 $ Radial Lead Slump - Main
26 0         -22 +24 -27 +26  u=1 $ Radial Lead Slump - Taper
27 0         +17     u=1 $ Outside
C Detector Cells - Axial Biasing
100  0  -100  fill=1  $ Surface
200  0  -200  +100  $ 1m
```

Figure 5.3.23-11 Sample MCNP Input File – Accident Conditions (Continued)

```
300  0  -300  +100  +200  $ 2m
400  0  -400  +100  +200  +300  $ 5m
500  0  -500  +100  +200  +300  +400  $ Edge
600  0  -600  +100  +200  +300  +400  +500  $ Driver
700  0  +100  +200  +300  +400  +500  +600  $ Exterior

C Fuel Rod Surfaces
1 CZ 0.2108       $ Fuel Meat OD
2 CZ 0.2616       $ Clad OD
3 PZ 0.4572       $ Lower Fuel Cut Plain
4 PZ 22.4536       $ Upper Fuel Cut Plain
5 RCC 0.0000 0.0000 0.3302 0.0000 0.0000 0.1270 0.3048 $ Lower Stud Rim
6 RCC 0.0000 0.0000 0.0000 0.0000 0.0000 0.3302 0.1930 $ Lower Stud Cap
7 RCC 0.0000 0.0000 22.4536 0.0000 0.0000 0.3810 0.3048 $ Upper Stud
C Fuel Core Lattice Surface
8 RHP 0.0 0.0 0.0 0.0 0.0 22.8346
         0.5518 0.0 0.0    $ Lattice Cell
C Surfaces - SLOWPOKE Core Basket
9 RCC 0.0000 0.0000 3.3274 0.0000 0.0000 22.8346 12.3824 $ Core
10 RCC 0.0000 0.0000 0.0000 0.0000 0.0000 1.2700 16.8466 $ Base Plate
11 RCC 0.0000 0.0000 1.2700 0.0000 0.0000 64.8970 13.6525 $ Tube OD
12 RCC 0.0000 0.0000 1.2700 0.0000 0.0000 64.8970 12.3825 $ Tube ID
13 RCC 0.0000 0.0000 58.5470 0.0000 0.0000 7.6200 10.9982 $ Shield Plug
14 RCC 0.0000 0.0000 66.1670 0.0000 0.0000 1.2700 16.8466 $ Lid Plate
15 RCC 0.0000 0.0000 67.4370 0.0000 0.0000 6.9850 16.84655 $ Lid Spacer
C Surfaces - LWT Cavity
16 RCC 0.0000 0.0000 377.6980 0.0000 0.0000 74.4220 16.8467 $ Basket
C Surfaces - LWT Cask Accident Conditions
17 RCC 0.0000 0.0000 -26.6700 0.0000 0.0000 507.3650 36.5189 $ Lwt
18 RCC 0.0000 0.0000 -26.6700 0.0000 0.0000 26.6700 36.5189 $ Bottom
19 RCC 0.0000 0.0000 0.0000 0.0000 0.0000 452.1200 16.9863 $ Cavity
20 RCC 0.0000 0.0000 -17.7800 0.0000 0.0000 7.6200 26.3525 $ Bottom Gamma Shield
21 RCC 0.0000 0.0000 0.0000 0.0000 0.0000 444.5000 20.1740 $ Lead ID - Taper
22 RCC 0.0000 0.0000 0.0000 0.0000 0.0000 444.5000 31.5976 $ Lead OD - Taper
23 RCC 0.0000 0.0000 13.8176 0.0000 0.0000 416.8648 18.9103 $ Lead ID
24 RCC 0.0000 0.0000 13.8176 0.0000 0.0000 416.8648 33.3271 $ Lead OD
25 PY 31.4618       $ Radial Slump - Main
26 PY 31.4618       $ Radial Slump - Taper
27 PZ 437.6266       $ Top Lead Slump
C Axial Detector DTA (Surface)
100  RCC  0.0000  0.0000  -26.7700  0.0000  0.0000  507.5650  36.5190
101  CZ  7.3038
102  CZ  14.6076
103  CZ  21.9114
104  CZ  29.2152
C Axial Detector DTB (1m)
200  RCC  0.0000  0.0000  -26.7700  0.0000  0.0000  607.5650  136.5190
201  CZ  27.3038
202  CZ  54.6076
203  CZ  81.9114
204  CZ  109.2152
C Axial Detector DTC (2m)
300  RCC  0.0000  0.0000  -26.7700  0.0000  0.0000  707.5650  236.5190
301  CZ  47.3038
302  CZ  94.6076
303  CZ  141.9114
304  CZ  189.2152
C Axial Detector DTD (5m)
400  RCC  0.0000  0.0000  -26.7700  0.0000  0.0000  1007.5650  236.6190
401  CZ  47.3238
402  CZ  94.6476
403  CZ  141.9714
404  CZ  189.2952
C Axial Detector DTE (Edge)
500  RCC  0.0000  0.0000  -26.7700  0.0000  0.0000  1091.6650  236.7190
501  CZ  47.3438
502  CZ  94.6876
503  CZ  142.0314
504  CZ  189.3752
```

Figure 5.3.23-11 Sample MCNP Input File – Accident Conditions (Continued)

```
C Axial Detector DTF (Driver)
600  RCC  0.0000  0.0000  -26.7700  0.0000  0.0000  1244.0650  236.8190
601  CZ  47.3638
602  CZ  94.7276
603  CZ  142.0914
604  CZ  189.4552

C
C Materials List
C
C U-Al Fuel
m1    92235 -2.5201E-01 92238 -2.8001E-02 13027 -7.1999E-01
C Water
m2    1001 6.6667E-01 8016 3.3333E-01
mt2   lwtr.01
C Water/Glycol
m3    1001 -1.03200E-01 8016 -6.82400E-01 6000 -2.14400E-01
C Aluminum
m4    13027 -1.0
C Lead
m5    82000 -1.0
C Stainless Steel 304
m6    26000 -0.695 24000 -0.190 28000 -0.095
      25055 -0.020
C Aluminum Honeycomb Impact Limiter
m7    13027 -1.0
C
C Cell Importances
imp:n 1 32r 0
C
C Source Definition - Fuel Neutron
C 15 GWd/MTU burnup, 90 wt% U-235, 14-day cool time, 2.786 g U-235 per rod, 39 W/core
sdef RAD=d1 EXT=d2 ERG=d3 cell=d4
     POS= 0.0000 0.0000 0.4572
     AXS= 0.0000 0.0000 1.0000
si1 0 0.2108
sp1 -21 1
si2 0 21.9964
sp2 0 1
si3   1.000E-11 1.000E-08 3.000E-08 5.000E-08 1.000E-07 2.250E-07
     3.250E-07 4.140E-07 8.000E-07 1.000E-06 1.130E-06 1.300E-06
     1.860E-06 3.060E-06 1.070E-05 2.900E-05 1.010E-04 5.830E-04
     3.040E-03 1.500E-02 1.110E-01 4.080E-01 9.070E-01 1.420E+00
     1.830E+00 3.010E+00 6.380E+00 2.000E+01
sp3 0.0000E+00 7.7644E-17 1.7532E-16 3.4335E-14 7.9442E-14 2.6321E-13
     4.0690E-13 2.2042E-13 2.1252E-12 1.5718E-12 8.2450E-13 1.3824E-12
     6.4949E-12 1.6664E-11 1.8663E-10 2.4523E-09 1.5003E-08 1.2291E-06
     1.2619E-05 1.5888E-04 5.3354E-03 4.7898E-02 9.6974E-02 1.1373E-01
     6.2345E-02 2.3453E-02 1.4419E-03 8.5813E-05
# SI4  SP4
     L  D
     100:17:14:7:6:-1  1.0000
mode n
nps 6.40E+06
C
C ANSI/ANS-6.1.1-1977 - Neutron Flux-to-Dose Conversion Factors
C (mrem/hr)/(neutrons/cm2-sec)
de0 2.5E-08 1E-07 1E-06 0.00001 0.0001 0.001 0.01
     0.1 0.5 1 2.5 5 7 10
     14 20
df0 3.67E-03 3.67E-03 4.46E-03 4.54E-03 4.18E-03 3.76E-03 3.56E-03
     2.17E-02 9.26E-02 1.32E-01 1.25E-01 1.56E-01 1.47E-01 1.47E-01
     2.08E-01 2.27E-01
C
C Weight Window Generation - Top Axial
wwg 2 0 0 0 0
wwp:n 5 3 5 0 -1 0
mesh geom=cyl ref=0 0 400 origin=0.1 0.1 -527
     imesh 16.8 17.0 18.9 33.3 36.5 536.5
```

Figure 5.3.23-11 Sample MCNP Input File – Accident Conditions (Continued)

```
     iints 1 1 1 1 1 1
     jmesh 500 509 517 527 906 928 979 1007 1507
     jints 1 1 1 1 1 12 1 1 1
     kmesh 1
     kints 1
wwge:n  1e-5 1e-3 1 20
fc2 Axial Surface Tally
f2:n +100.2
fm2 1.04728E+02
fs2  -101  -102  -103  -104  T
tf2
fc12 Axial 1m Tally
f12:n +200.2
fm12 1.04728E+02
fs12  -201  -202  -203  -204  T
tf12
fc22 Axial 2m Tally
f22:n +300.2
fm22 1.04728E+02
fs22  -301  -302  -303  -304  T
tf22
fc32 Axial 5m Tally
f32:n +400.2
fm32 1.04728E+02
fs32  -401  -402  -403  -404  T
tf32
fc42 Axial Edge Tally
f42:n +500.2
fm42 1.04728E+02
fs42  -501  -502  -503  -504  T
tf42
fc52 Axial Driver Tally
f52:n +600.2
fm52 1.04728E+02
fs52  -601  -602  -603  -604  T
tf52
C
C Print Control
prdmp -30 -60 1 2
print
C Random Number Generator
rand gen=2 seed=46929924663793 stride=152917 hist=1
C
C Rotation Matrix
C
*TR1 0.0 0.0 0.0 10 100 90 -80 10 90 90 90 0
*TR2 0.0 0.0 0.0 20 110 90 -70 20 90 90 90 0
*TR3 0.0 0.0 0.0 30 120 90 -60 30 90 90 90 0
*TR4 0.0 0.0 0.0 40 130 90 -50 40 90 90 90 0
*TR5 0.0 0.0 0.0 50 140 90 -40 50 90 90 90 0
*TR6 0.0 0.0 0.0 60 150 90 -30 60 90 90 90 0
*TR7 0.0 0.0 0.0 70 160 90 -20 70 90 90 90 0
*TR8 0.0 0.0 0.0 80 170 90 -10 80 90 90 90 0
*TR9 0.0 0.0 0.0 90 180 90 0 90 90 90 90 0
*TR10 0.0 0.0 0.0 100 190 90 10 100 90 90 90 0
*TR11 0.0 0.0 0.0 110 200 90 20 110 90 90 90 0
*TR12 0.0 0.0 0.0 120 210 90 30 120 90 90 90 0
*TR13 0.0 0.0 0.0 130 220 90 40 130 90 90 90 0
*TR14 0.0 0.0 0.0 140 230 90 50 140 90 90 90 0
*TR15 0.0 0.0 0.0 150 240 90 60 150 90 90 90 0
*TR16 0.0 0.0 0.0 160 250 90 70 160 90 90 90 0
*TR17 0.0 0.0 0.0 170 260 90 80 170 90 90 90 0
*TR18 0.0 0.0 0.0 180 270 90 90 180 90 90 90 0
*TR19 0.0 0.0 0.0 190 280 90 100 190 90 90 90 0
*TR20 0.0 0.0 0.0 200 290 90 110 200 90 90 90 0
*TR21 0.0 0.0 0.0 210 300 90 120 210 90 90 90 0
*TR22 0.0 0.0 0.0 220 310 90 130 220 90 90 90 0
*TR23 0.0 0.0 0.0 230 320 90 140 230 90 90 90 0
*TR24 0.0 0.0 0.0 240 330 90 150 240 90 90 90 0
```

Figure 5.3.23-11 Sample MCNP Input File – Accident Conditions (Continued)

```
*TR25 0.0 0.0 0.0 250 340 90 160 250 90 90 90 0
*TR26 0.0 0.0 0.0 260 350 90 170 260 90 90 90 0
*TR27 0.0 0.0 0.0 270 360 90 180 270 90 90 90 0
*TR28 0.0 0.0 0.0 280 370 90 190 280 90 90 90 0
*TR29 0.0 0.0 0.0 290 380 90 200 290 90 90 90 0
*TR30 0.0 0.0 0.0 300 390 90 210 300 90 90 90 0
*TR31 0.0 0.0 0.0 310 400 90 220 310 90 90 90 0
*TR32 0.0 0.0 0.0 320 410 90 230 320 90 90 90 0
*TR33 0.0 0.0 0.0 330 420 90 240 330 90 90 90 0
*TR34 0.0 0.0 0.0 340 430 90 250 340 90 90 90 0
*TR35 0.0 0.0 0.0 350 440 90 260 350 90 90 90 0
*TR36 0.0 0.0 0.0 360 450 90 270 360 90 90 90 0
```

Figure 5.3.23-12 Normal Condition Radial Surface Dose Rate Profile by Source Type – SLOWPOKE Core

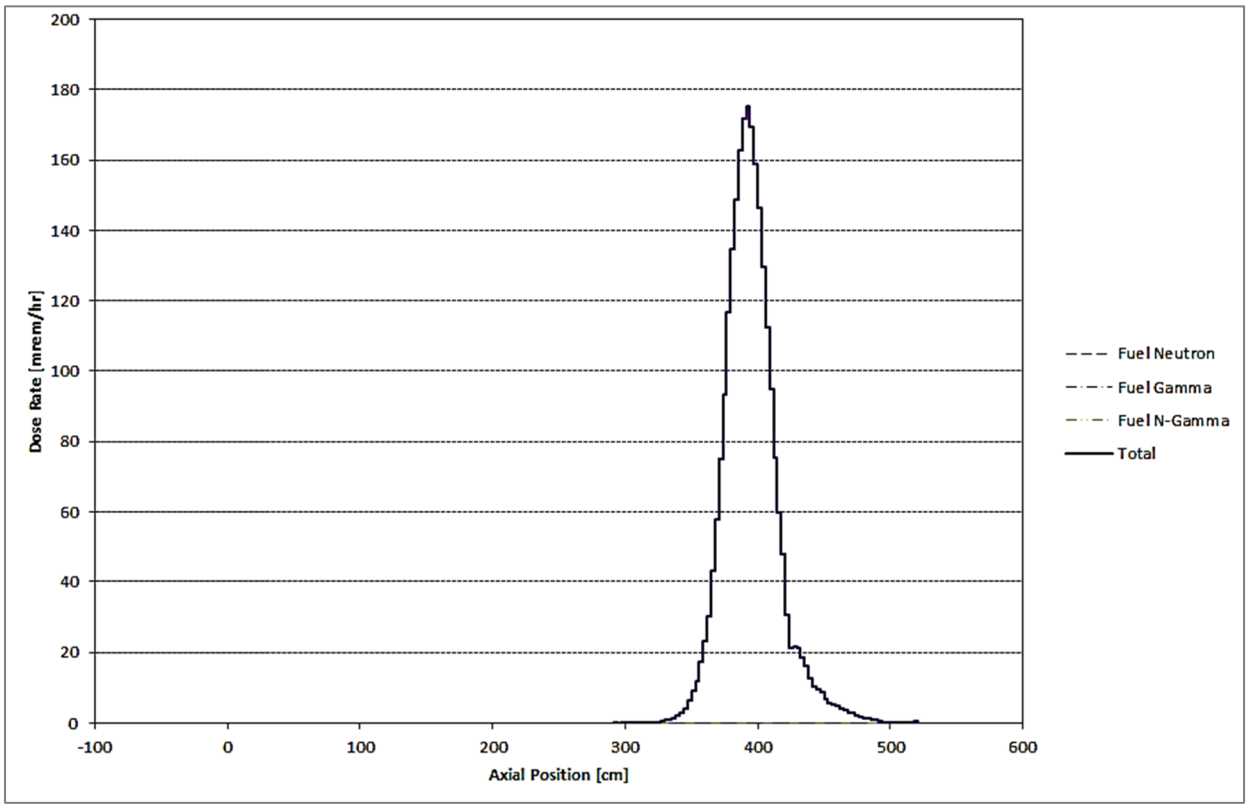

Note: Results based on tally located at the radius of the cask neutron shield shell. Peak dose rates occur at the SLOWPOKE core centerline elevation. Dose rates at the cask surface between impact limiter and neutron shield shell are lower than at the fuel core midplane.

Figure 5.3.23-13 Normal Condition 2-m + Conveyance Radial Surface Dose Rate Profile by Source Type – SLOWPOKE Core

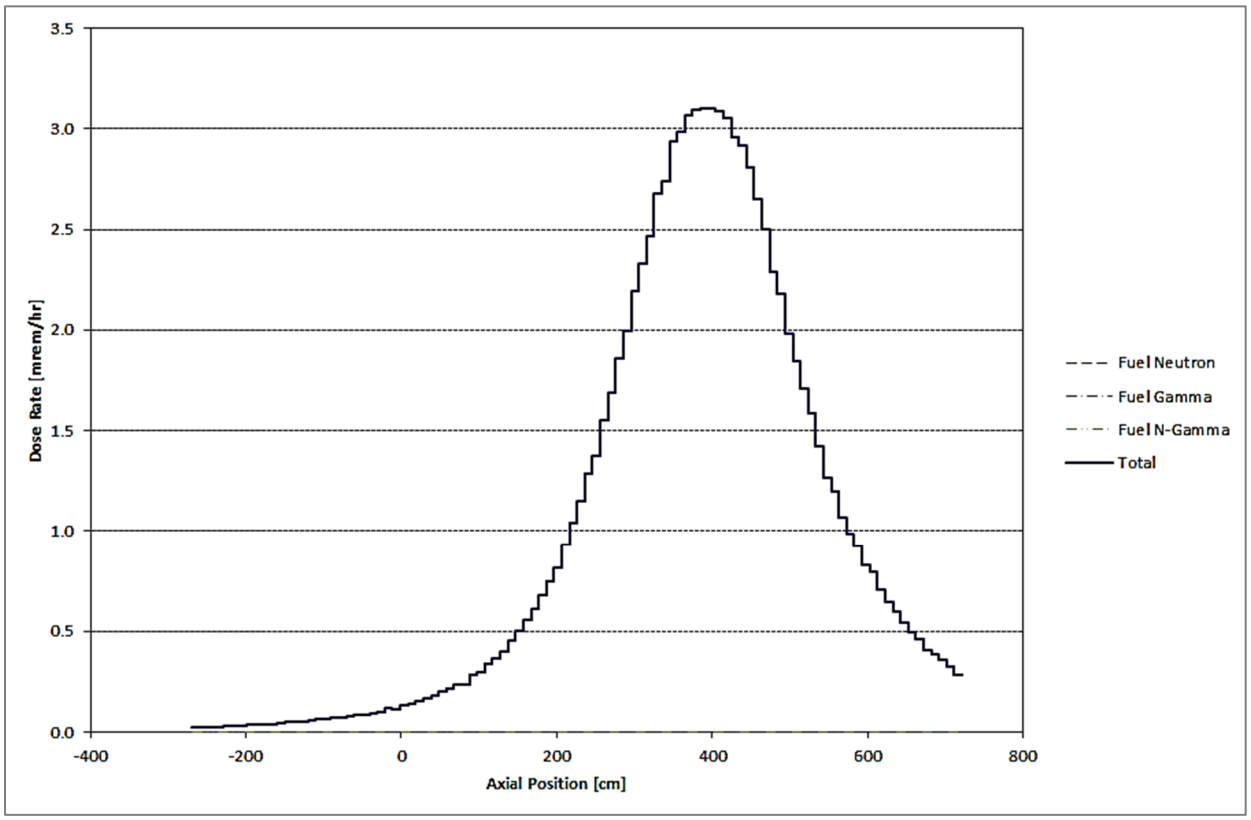

Figure 5.3.23-14 Accident Condition Radial 1m Dose Rate Profile by Source Type – SLOWPOKE Core

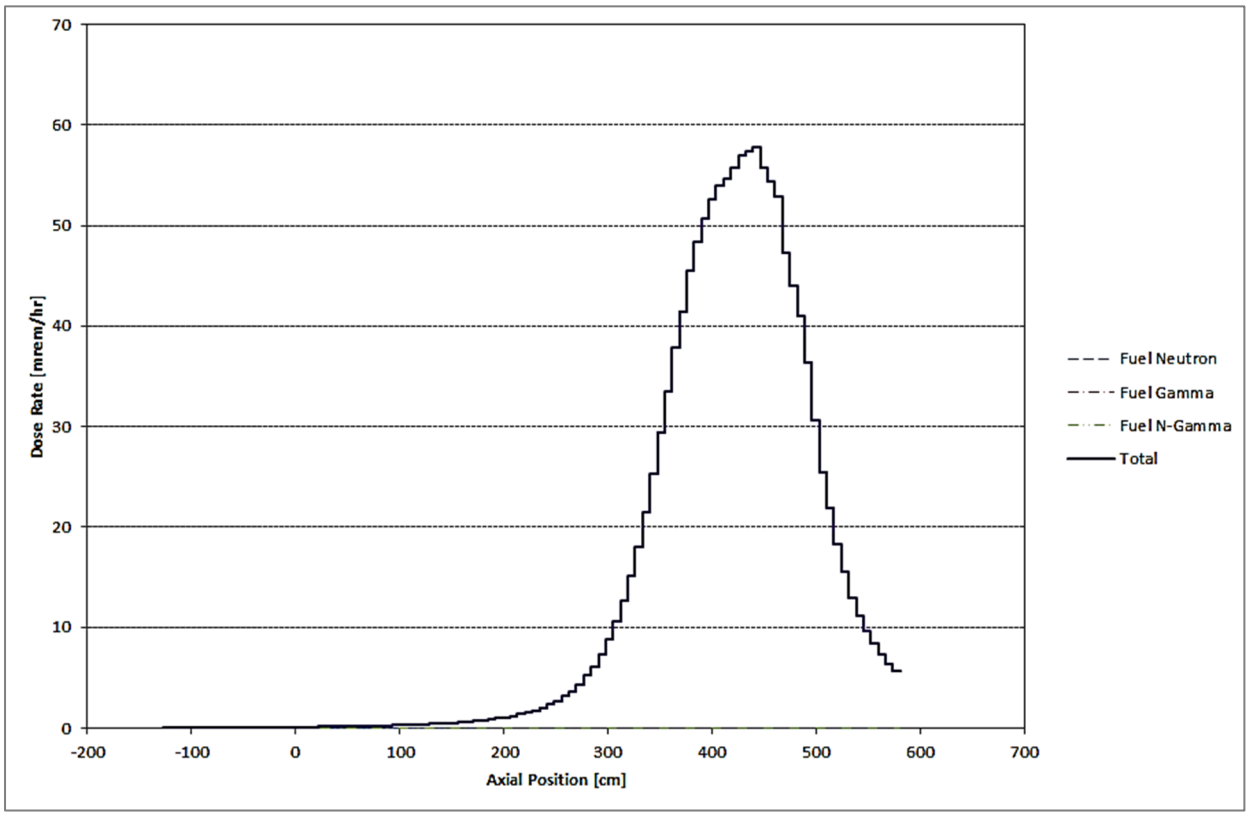

Note: Dose rates are circumferential average. Maximum dose rate of 80.7 mrem/hr was calculated using an azimuthal tally at the location of the lead slump.

Figure 5.3.23-15 Accident Condition Radial 1m Dose Rate Azimuthal Profile at Fuel Height – SLOWPOKE Core

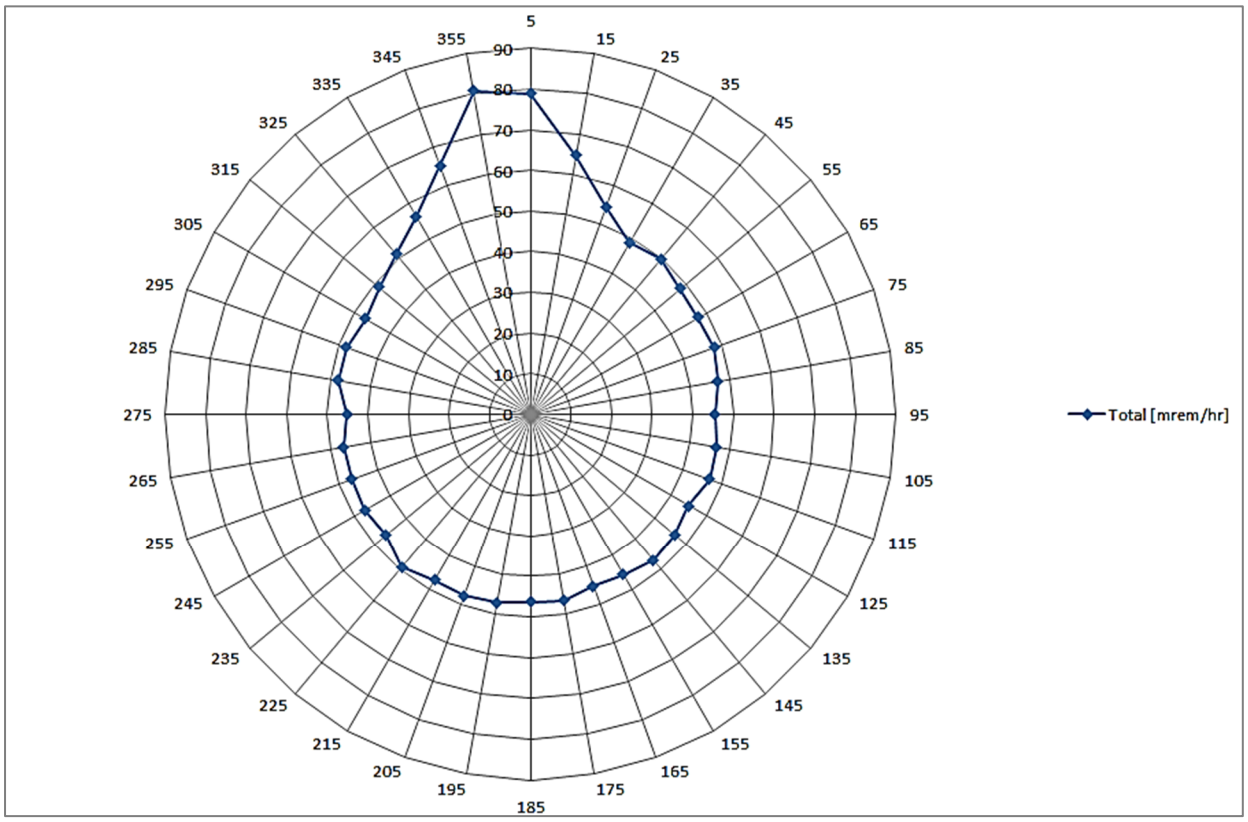

Table 5.3.23-1 SLOWPOKE Fuel Geometry and Materials

Fuel Element Type		Rod
Chemical Form		U-Al Alloy
Active Fuel Length	cm	22
Active Fuel Diameter	cm	0.422
Weight of U-235	g	2.795
Weight of total U	g	3.0
Alloy or compound material weight	g	7.714
Total weight of fuel meat	g	10.714
Clad Thickness	cm	0.051
Clad Weight (including caps)	g	4.981
Clad Material		Aluminum
Element Length	cm	22.83
Diameter (endcaps)	cm	0.61
Diameter (clad)	cm	0.52
Total weight of fuel element	g	15.695
Enrichment %	%	93
Core Maximum Power	kW	20
Maximum Burnup (^{235}U depletion)	%	0.65

Table 5.3.23-2 Source Term Generation Parameters for SLOWPOKE Fuel

Parameter	Value
U Mass Per Rod (grams)	3.121
^{235}U per Core (grams)	837.1
Core Power (kW)	20
Number of Hours Burned	16752
Number of Days Cooled	14
Number of Rods / Core	298
Initial Enrichment (wt % ^{235}U)	90
Burnup (% ^{235}U)	2.12
Burnup (GWd/MTU)	15
Moderator/Box Temperature (C)	40
Clad Temperature (C)	90
Fuel Temperature (C)	100

Table 5.3.23-3 SLOWPOKE Neutron Source Term (per rod)

Group	E Lower [MeV]	E Upper [MeV]	Source [neutrons/sec]
1	6.380E+00	2.000E+01	8.581E-05
2	3.010E+00	6.380E+00	1.442E-03
3	1.830E+00	3.010E+00	2.345E-02
4	1.420E+00	1.830E+00	6.234E-02
5	9.070E-01	1.420E+00	1.137E-01
6	4.080E-01	9.070E-01	9.697E-02
7	1.110E-01	4.080E-01	4.790E-02
8	1.500E-02	1.110E-01	5.335E-03
9	3.040E-03	1.500E-02	1.589E-04
10	5.830E-04	3.040E-03	1.262E-05
11	1.010E-04	5.830E-04	1.229E-06
12	2.900E-05	1.010E-04	1.500E-08
13	1.070E-05	2.900E-05	2.452E-09
14	3.060E-06	1.070E-05	1.866E-10
15	1.860E-06	3.060E-06	1.666E-11
16	1.300E-06	1.860E-06	6.495E-12
17	1.130E-06	1.300E-06	1.382E-12
18	1.000E-06	1.130E-06	8.245E-13
19	8.000E-07	1.000E-06	1.572E-12
20	4.140E-07	8.000E-07	2.125E-12
21	3.250E-07	4.140E-07	2.204E-13
22	2.250E-07	3.250E-07	4.069E-13
23	1.000E-07	2.250E-07	2.632E-13
24	5.000E-08	1.000E-07	7.944E-14
25	3.000E-08	5.000E-08	3.433E-14
26	1.000E-08	3.000E-08	1.753E-16
27	1.000E-11	1.000E-08	7.764E-17
Total			3.514E-01

Table 5.3.23-4 SLOWPOKE Fuel Gamma Source Term (per rod)

Group	E Lower [MeV]	E Upper [MeV]	Source [photons/sec]
1	8.00E+00	1.00E+01	7.4653E-06
2	6.50E+00	8.00E+00	3.4862E-05
3	5.00E+00	6.50E+00	1.8338E-04
4	4.00E+00	5.00E+00	7.9396E-04
5	3.00E+00	4.00E+00	2.6553E+07
6	2.50E+00	3.00E+00	3.4304E+09
7	2.00E+00	2.50E+00	2.0105E+09
8	1.66E+00	2.00E+00	3.5978E+08
9	1.33E+00	1.66E+00	1.0587E+11
10	1.00E+00	1.33E+00	2.5592E+09
11	8.00E-01	1.00E+00	4.1310E+10
12	6.00E-01	8.00E-01	4.3248E+11
13	4.00E-01	6.00E-01	1.5811E+11
14	3.00E-01	4.00E-01	5.7276E+10
15	2.00E-01	3.00E-01	2.3964E+10
16	1.00E-01	2.00E-01	1.3380E+11
17	4.50E-02	1.00E-01	1.0982E+11
18	1.00E-02	4.50E-02	3.1684E+11
Total			1.3879E+12

Table 5.3.23-5 Canister/Basket/Cask Material Descriptions for SLOWPOKE Fuel

Material	Element	Density [g/cm^3]	Number Density [atom/b-cm]
Aluminum	Al	2.67	7.278E-02
Stainless Steel 304	Fe	7.94	5.9505E-02
	Cr		1.7472E-02
	Ni		7.7392E-03
	Mn		1.7407E-03
Lead	Pb	11.34	3.2967E-02
Neutron Shield	H	0.94	5.7965E-02
	O		2.4151E-02
	C		1.0105E-02
Impact Limiter	Al	0.50	1.1153E-02

Table 5.3.23-6 Modeled SLOWPOKE Core Basket Dimensions

Description	Dimension [in]
Core Basket Base Plate Thickness	0.500
Core Basket Base Plate OD	13.265
Core Basket Spacer Height	12.750
Core Basket Lid Height	3.250
Core Basket Lid Plate Thickness	0.500
Core Basket Lid OD	13.265
Core Basket Shield Thickness	3.000
Core Basket Shield OD	8.660
Core Basket Tube Height	25.550
Core Basket Tube OD	10.750
Core Basket Tube Thickness	0.500

Table 5.3.23-7 Maximum Dose Rates for SLOWPOKE Fuel

Transport Condition	Dose Rate Location	Maximum	
		[mrem/hr]	FSD
Normal	Side Surface of Cask	175.1	0.9%
	Top Surface of Cask	3.1	1.2%
	Bottom Surface of Cask	0.29	8.2%
	Side 1ft	57.2	0.8%
	Side 1m (Transport Index)	15.2	1.0%
	2m from Truck - Radial	3.1	1.1%
	2m from Top	0.24	1.2%
	Edge of Truck - Top	0.045	2.5%
	Edge of Truck - Bottom	0.018	8.4%
	Dose at Cab of Truck	0.031	3.3%
Accident	Side Surface of Cask	2127	1.7%
	Top Surface of Cask	16.3	0.8%
	Bottom Surface of Cask	1.2	9.8%
	Side 1m	80.7	2.1%
	Top 1m	2.0	26.6%
	Bottom 1m	0.15	9.9%

Note: The bounding accident side 1 meter dose rate is taken from the azimuthal tally at the fuel height.

Table 5.3.23-8 Summarized Maximum Dose Rates for SLOWPOKE Fuel

Transport Condition	Dose Rate Location	Maximum [mrem/hr]	Limit [mrem/hr]
Normal	Side Surface of Cask	175.1	1000
	Side 1ft	57.2	200
	Side 1m (Transport Index)	15.2	N/A
	2m from Truck - Radial	3.1	10
Accident	Side 1m	80.7	1000

Note: The side 1 ft detector is closer to the cask than the edge of the conveyance where the 200 mrem/hr limit occurs.

5.3.24 Booster Rods, EFN Rods, and Mo-99 Targets

Results of the shielding evaluation for up to 20 short Moly targets, 36 double length Moly targets, 36 EFN (enriched fast neutron) rods, and 16 Booster rods (noted as "additional payloads" in this section) in the LWT cask are presented in this section. Fuel in undamaged and damaged configurations was considered under normal and accident conditions to demonstrate compliance with 10 CFR 71.47 and 10 CFR 71.51.

Fuel compositions and potential source density at the same depletion/cool time levels were compared to those obtained for NRU-HEU fuel to confirm that the NRU-HEU results are bounding. TRITON source terms were calculated based on maximum depletion (wt% ^{235}U depleted) for the additional payloads in the NRU-HEU geometry. This data, in conjunction with initial ^{235}U density, determines what NRU-HEU dose configuration bounds those of the additional payloads.

Source Terms

Source terms are calculated for the additional payloads using TRITON in SCALE 6.1. The TRITON models use the 238 group ENDF/B-VII library. Single unit cells were used for the TRITON source term calculation. Source terms are estimated by adjusting NRU model burnup by power and burn time adjustments without geometry changes. The rods are shown in Figure 5.3.24-1. Key assembly dimensions are provided in Table 5.3.24-1. Based on these dimensions, fuel volumes can be calculated along with compacted fuel length and potential source density (expressed on a gram ^{235}U prior to depletion basis per either unit volume or unit length along the caddy/fuel tube), shown in Table 5.3.24-2.

Booster Rod Comparison

In an undamaged configuration, the ^{235}U density in gram/cm for the sum of 16 Booster rods is significantly lower than that of the 12 NRU-HEU fuel rods. At a fixed source density this will result in undamaged NRU-HEU analysis being bounding. Crediting the significantly lower depletion percentage, longer cool time, and lower overall fuel mass of the Booster rods provides further assurance that NRU-HEU calculated dose rates are bounding for the Booster rods.

In compacted form, the Booster rods have a slightly, approximately 10%, higher linear density (i.e., potentially more source over a unit tube length) as a result of slightly higher, 10% uranium loading in the fuel meat. At a fixed source rate and source height this would result in the Booster rods not being bounded by NRU-HEU evaluations. As the Booster rod source generation rate, in terms of gammas per initial g ^{235}U, is only 2.1% that of NRU-HEU material, the NRU-HEU analysis is clearly bounding. Conservatively not credited in this evaluation is the lower total fuel

mass of the Booster and therefore smaller compacted fuel height and lower overall source associated with the lower mass.

Variable	Limit
Maximum # Rods per Caddy (2)	16
Maximum ^{235}U mass per Rod (gram)	18.1
Maximum U mass per Rod (gram)	19.89
Maximum Assembly Depletion (1) (% ^{235}U)	2.9
Min Cool Time (years)	37
Maximum Heat Load per Caddy (W)	<0.2
NRU-HEU Dose Rates Applicable	Undamaged Booster – Undamaged NRU-HEU Damaged Booster – Damaged NRU-HEU

Notes:
(1) Depletion percentage is generated on a per assembly basis. Assemblies are disassembled into fuel rods/rods segments prior to loading into caddy.
(2) Undamaged rods or an equivalent quantity of damaged rods or rod fragments.

Short Moly Targets Comparison

In an undamaged configuration the ^{235}U density in gram/cm for the sum of 12 short Moly targets is slightly higher than that of the 12 NRU-HEU fuel rods (1.98 versus 1.91 g/cm). The source density for the short Moly targets is only 68% that of the NRU-HEU while initial ^{235}U linear density is only 4% higher. That the short Moly target ^{235}U content in the caddy is only 4% of the permitted NRU-HEU value clearly demonstrates that the NRU-HEU analysis is bounding.

In compacted form the Moly targets also have slightly higher, approximately 3%, linear density (i.e., potentially more source over a unit tube length) as a result of slightly higher, 3% uranium loading in the fuel meat. At a fixed source rate and source height this would result in the short Moly targets not being bounded by NRU-HEU evaluations. As the short Moly target source generation rate, in terms of gammas per initial g ^{235}U, is only 68% that of NRU-HEU material, the NRU-HEU analysis is clearly bounding. Considering that source region height for the Moly targets in this configuration would only be 1.1 cm in height versus 27.35 cm for the NRU-HEU region further demonstrates that the NRU-HEU evaluations are bounding.

Variable	Limit
Maximum # Rods per Caddy (2)	20
Maximum ^{235}U mass per Rod (gram)	1.1
Maximum U mass per Rod (gram)	1.21
Maximum Assembly Depletion (1) (% ^{235}U)	94.8
Min Cool Time (years)	38
Maximum Heat Load per Caddy (W)	<0.3
NRU-HEU Dose Rates Applicable	Undamaged Moly Targets – Undamaged NRU-HEU Damaged Moly Targets – Damaged NRU-HEU

Notes:
(1) Depletion percentage is generated on a per rod basis. Rods may be disassembled into targets/target segments prior to loading into caddy.
(2) Undamaged targets or an equivalent quantity of damaged target or target fragments.

Double Length Moly Targets Comparison

In an undamaged configuration, the ^{235}U density in gram/cm for the sum of 12 double length Moly targets is slightly lower than that of the 12 NRU-HEU fuel rods. At a fixed source density this will result in undamaged NRU-HEU analysis being bounding. Crediting the significantly lower fuel mass (17%), with a lower source density (48%), that resulted from the significantly lower depletion percentage at reduced cool time, provides further assurance that NRU-HEU calculated dose rates are bounding for the double length Moly targets.

In compacted form, the Moly targets have a lower linear ^{235}U density (i.e., less source over a unit tube length at a fixed depletion/cool time) with a significantly smaller height (as result of the lower fuel mass) and less source per unit density. The NRU-HEU compacted evaluation is therefore clearly bounding for the double length Moly targets.

Variable	Limit
Maximum # Rods per Caddy (2)	36
Maximum ^{235}U mass per Rod (gram)	2.41
Maximum U mass per Rod (gram)	2.65
Maximum Assembly Depletion (1) (% ^{235}U)	30.4
Min Cool Time (years)	8
Maximum Heat Load per Caddy (W)	<0.8
NRU-HEU Dose Rates Applicable	Undamaged Moly Targets – Undamaged NRU-HEU Damaged Moly Targets – Damaged NRU-HEU

Notes:
(1) Depletion percentage is generated on a per rod basis. Rods are disassembled into targets/target segments prior to loading into caddy.
(2) Undamaged targets or an equivalent quantity of damaged target or target fragments.

EFN Rods Comparison

Undamaged

The EFN rods are similar in cross section to NRU-HEU rods and are evaluated at the same depletion percentage as the NRU-HEU rods with only a slight increase in cool time resulting in a slightly lower source density (γ/g Initial ^{235}U). The EFN rods source is approximately 90% that of the NRU-HEU rods. EFN rods are limited to 36 per caddy, with 21 potentially being in a given caddy elevation, versus the 12 NRU-HEU rods in a fuel tube. The higher number or rods increases the potential source density (based on initial ^{235}U density) by a ratio of 3.37/1.91, or 76%. The EFN rod evaluation can therefore not be stated to be bounded by the NRU-HEU analysis. Conservatively a factor of two increase in dose rates can be estimated, neglecting the overall reduced source and reduced source strength per unit volume. Rather than using undamaged estimates, the damaged/compacted dose rates from the NRU-HEU analysis may be considered bounding (compacted dose rates are an order of magnitude higher than the undamaged values for NRU-HEU fuel).

Damaged

When compacting fuel, the ^{235}U linear density (g ^{235}U /cm) is almost identical to that of the NRU-HEU rod (delta <1%). Given the lower source density per initial gram ^{235}U (90%) and smaller compacted height for the EFN rods, the NRU-HEU compacted analysis dose rate results are bounding for the damaged/compacted EFN rods.

Variable	Limit
Maximum # Rods per Caddy (2)	36
Maximum ^{235}U mass per Rod (gram)	13
Maximum U mass per Rod (gram)	14.29
Maximum Assembly Depletion (1) (% ^{235}U)	87.4
Min Cool Time (years)	23
Maximum Heat Load per Caddy (W)	<8
NRU-HEU Dose Rates Applicable	Undamaged or Damaged EFN Rods – Damaged NRU-HEU

Notes:
(1) Depletion percentage is generated on a per assembly basis. Assemblies are disassembled into rods prior to loading into caddy.
(2) Undamaged rods or an equivalent quantity of damaged rods or rod fragments.

Figure 5.3.24-1 EFN, Moly and Booster Rod Illustrations

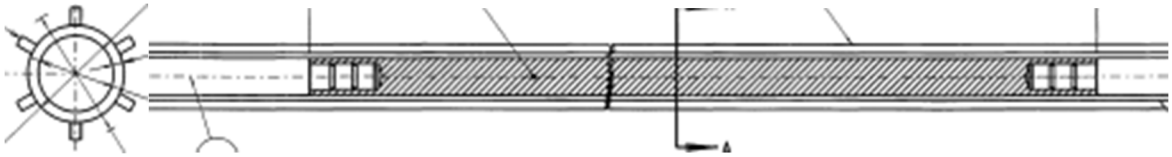

EFN Rod

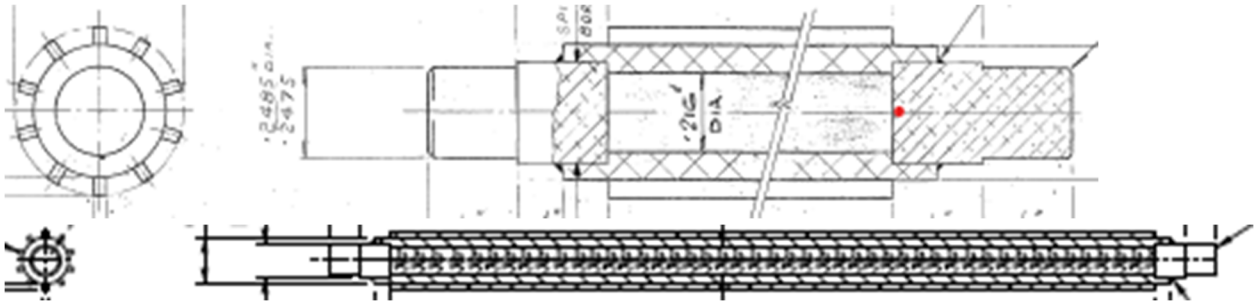

Moly Target(s)



Booster Rod

Table 5.3.24-1 Additional Payload Fuel Material and Geometry Properties

Fuel Rod/Target Data	Short Moly	Double Length Moly	EFN	Boosters
Fuel Form	U-Al	U-Al	U-Al	U-Al
Fuel Meat Length (cm)	6.67	15.88	81.3	210
Fuel Meat Diameter (cm)	0.549	0.549	0.549	0.386
Weight of 235U (g)	1.0 ± 0.002	2.4 ± 0.005	12.4 ± 0.6	17.2 ± 0.9
Weight of Total U (g)	1.1 ± 0.002	2.58 ± 0.005	13.3 ± 0.7	18.5 ± 0.9
Fuel Aluminum Weight (g)	4	9.7	49.9	63.7
Total Weight of Fuel Meat (g)	5.1	12.3	63.1	82.2
Clad Material	Al	Al	Al	Al
Clad Thickness (cm)	0.202	0.202	0.076	0.152
Clad Weight (g)	9.4	21.2	38	149
Fuel Element Height (cm)	9.21	18.3	99.1	215
Fuel Element Diameter (cm) [Inc. Fin]	1.21	1.21	0.955	0.986
Fuel Element Diameter (cm) [No Fin]	0.956	0.956	0.701	0.692
Total Fuel Element Weight (g)	18.4	40	127	288
Fins				
# of Fins per Element	10	10	6	6 (Spiral)
Width (cm)	0.076	0.076	0.076	0.102
Length (cm)	0.127	0.127	0.127	0.147

Table 5.3.24-2 Additional Payload Caddy Content Material Density

	NRU-HEU	Short Moly	Double Length Moly	EFN	Boosters
Max ^{235}U per Rod (g)	43.7	1.1	2.41	13	18.1
Max Number Rods or Targets in Tube	12	20	36	36	16
U percent of Fuel Meat	79.0%	78.4%	78.9%	79.1%	77.5%
Total ^{235}U per Tube (g)	524.4	22	86.76	468	289.6
Number in Assy or Level	12	12	12	21	16
Max Fuel Mass per Tube/Caddy (g U Max/Design Basis)	576	24.2	95.3	514.3	318.2
Fuel Meat/Core Volume per Tube/Caddy (cm^3)	778.33	31.58	135.33	692.83	393.19
Undamaged Data					
Fuel Density per Unit Along Tube Length (g ^{235}U/cm) –Max(1)	1.91	1.98	1.82	3.36	1.38
Fuel Density(2) (g $^{235}U/cm^3$)	0.67	0.70	0.64	0.68	0.74
Damaged/Compacted Data					
Compacted Fuel Height in Tube (cm, No Caddy)	27.35	1.11	4.75	24.34	13.81
Compacted Fuel Linear Density (g ^{235}U/cm)	19.18	19.83	18.25	19.23	20.96

Notes:

(1) Represents the fissile material mass per centimeter active fuel length in an undamaged fuel assembly multiplied by the maximum number of rods/targets at an elevation.

(2) Applied ^{235}U weight divided by calculated fuel meat/core volume.

5.3.25 BUP-500 Capsules and WESF Capsules

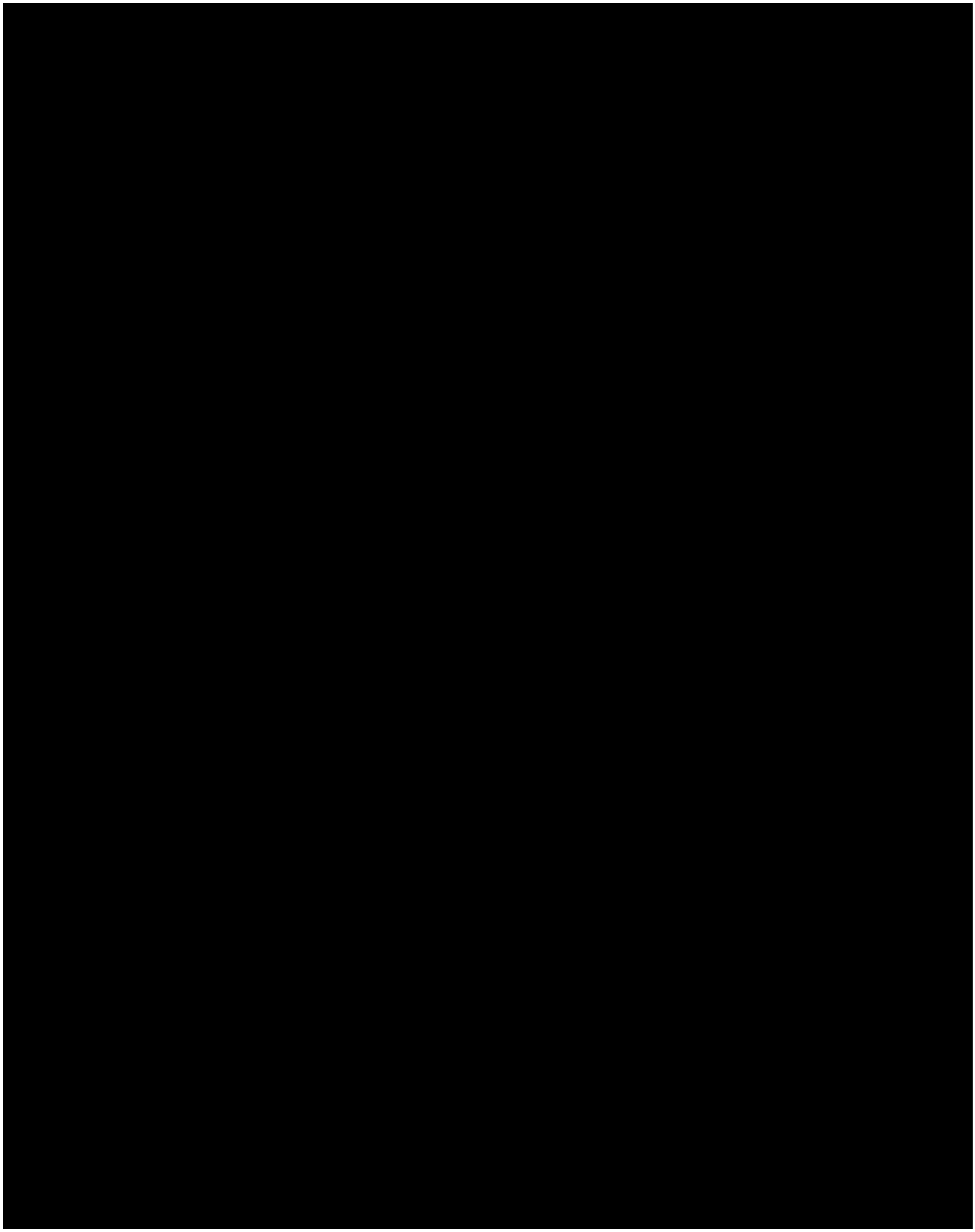

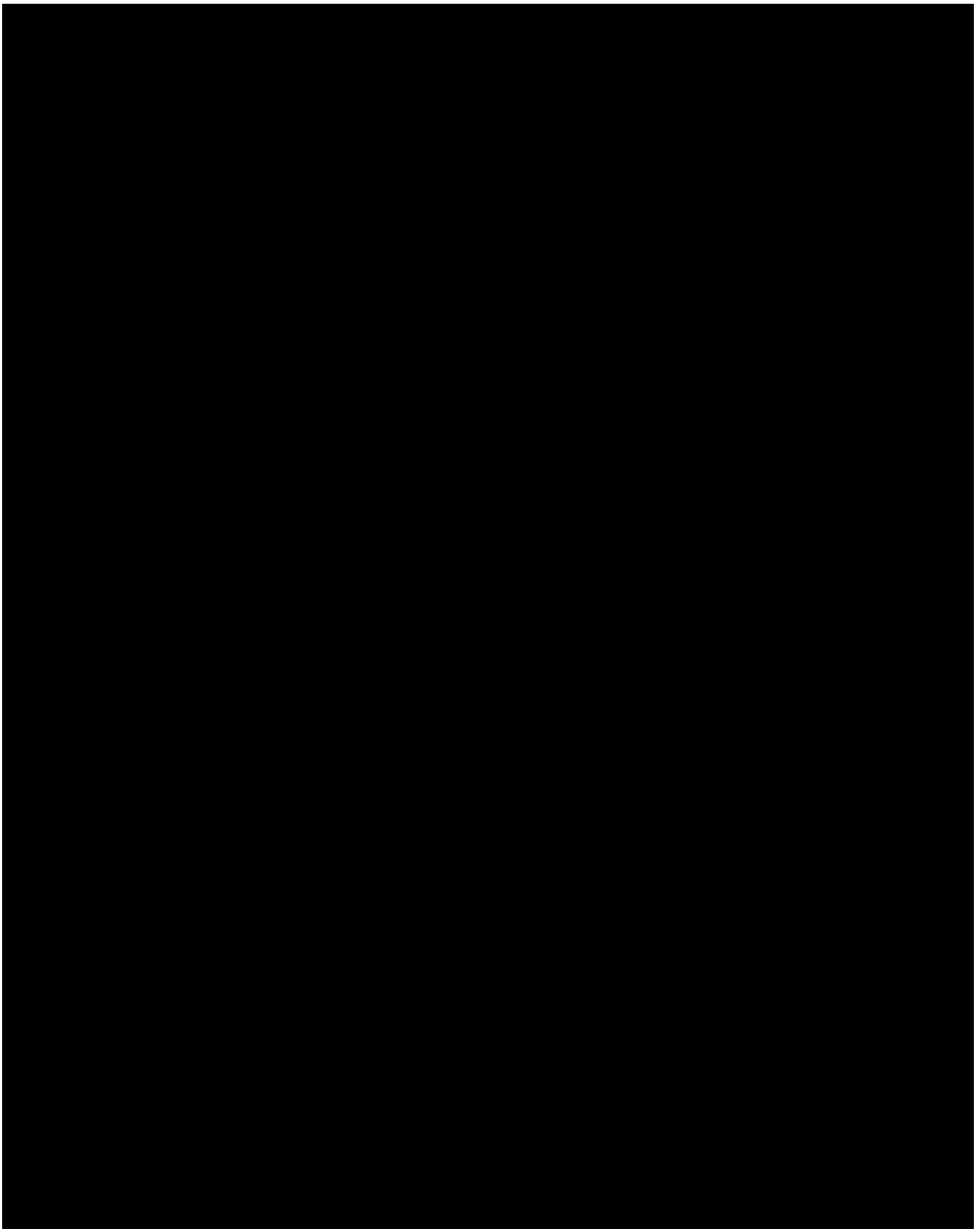

Figure 5.3.25-1 BUP-500 Capsule Illustration

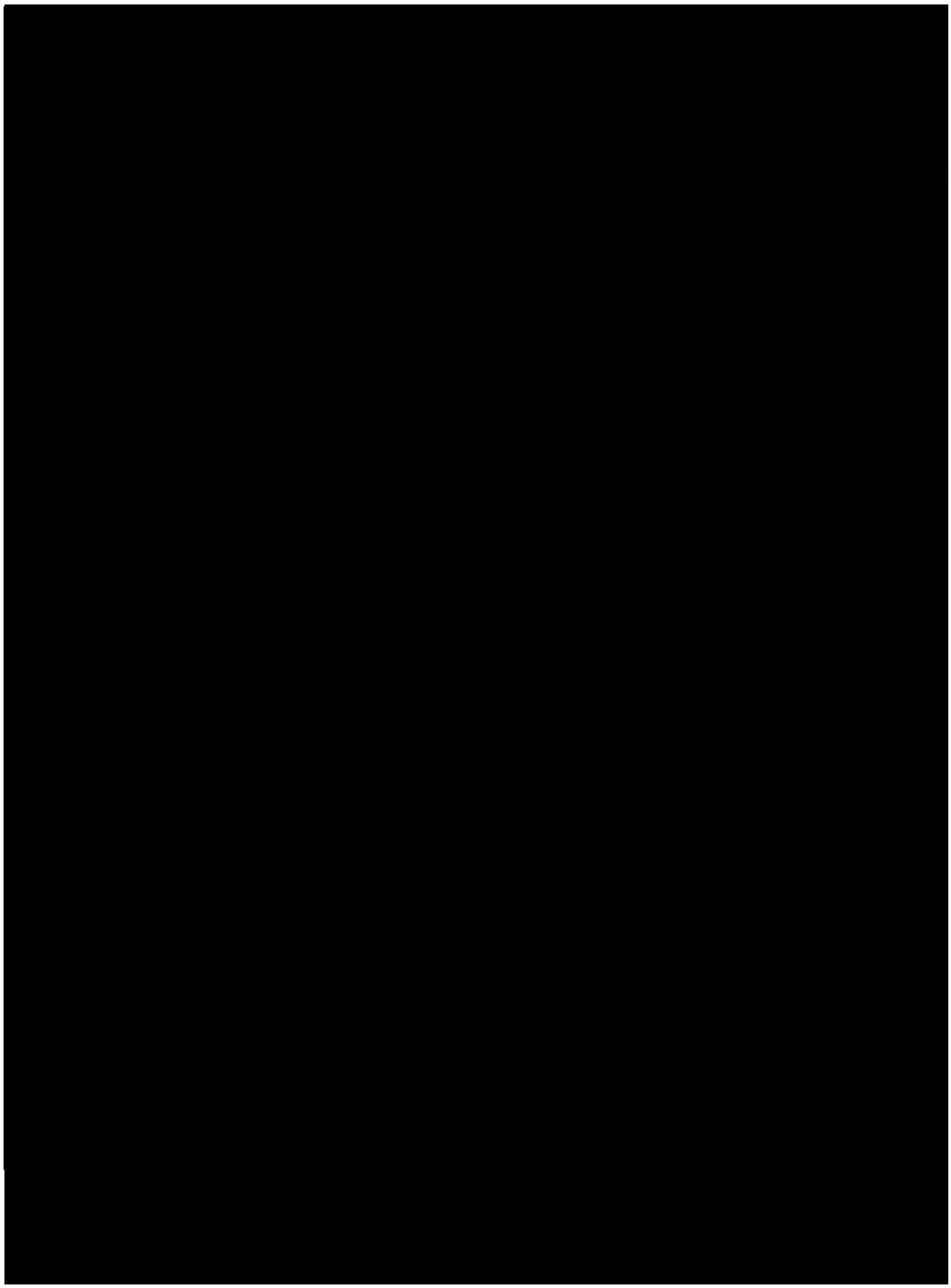

Figure 5.3.25-2 SrF_2 Capsule Illustration



Figure 5.3.25-3 VISED Sketch of LWT with BUP-500 Capsule Radial Detail

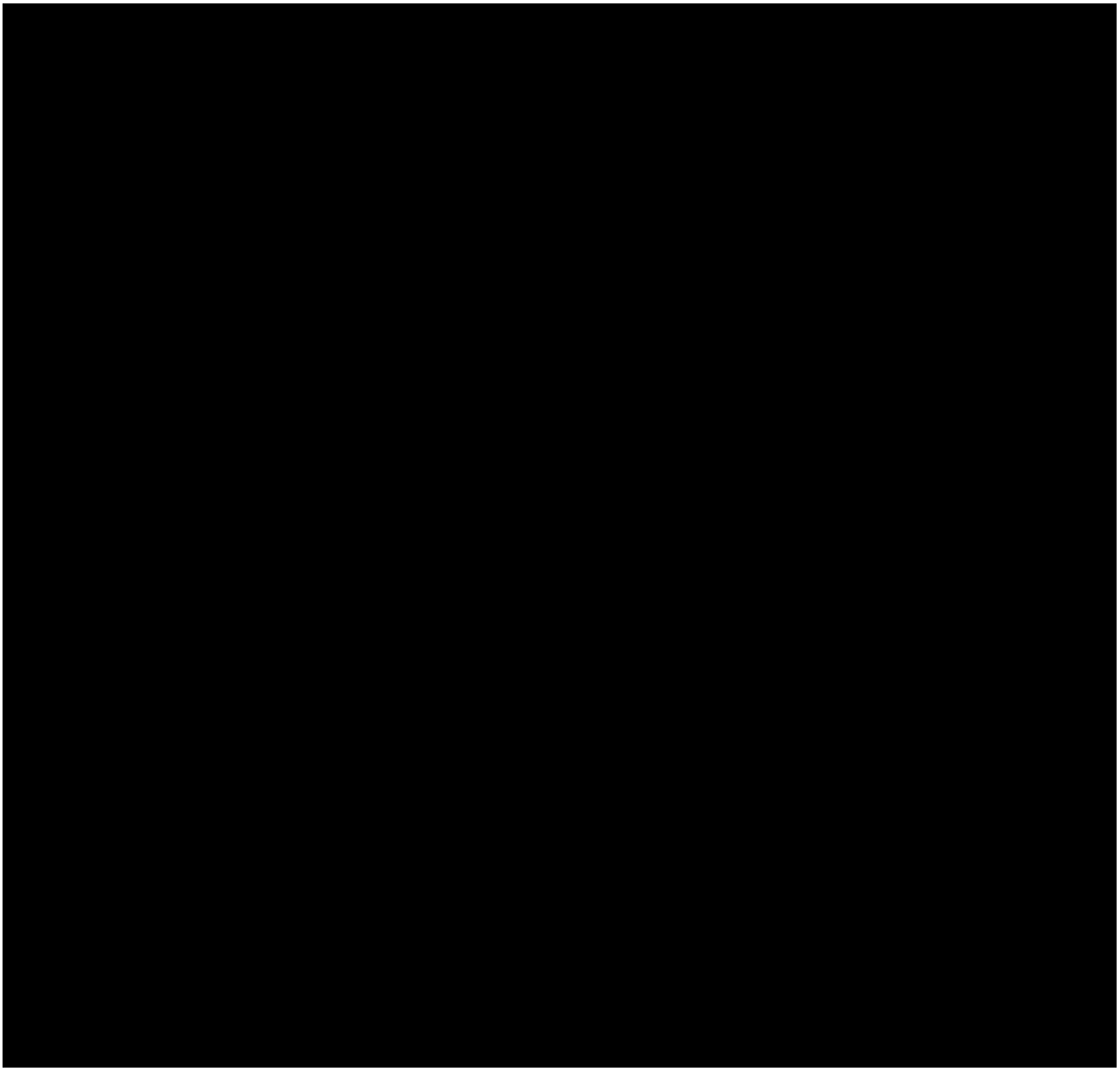

Figure 5.3.25-4 VISED Sketch of LWT with WESF Capsule Radial Detail

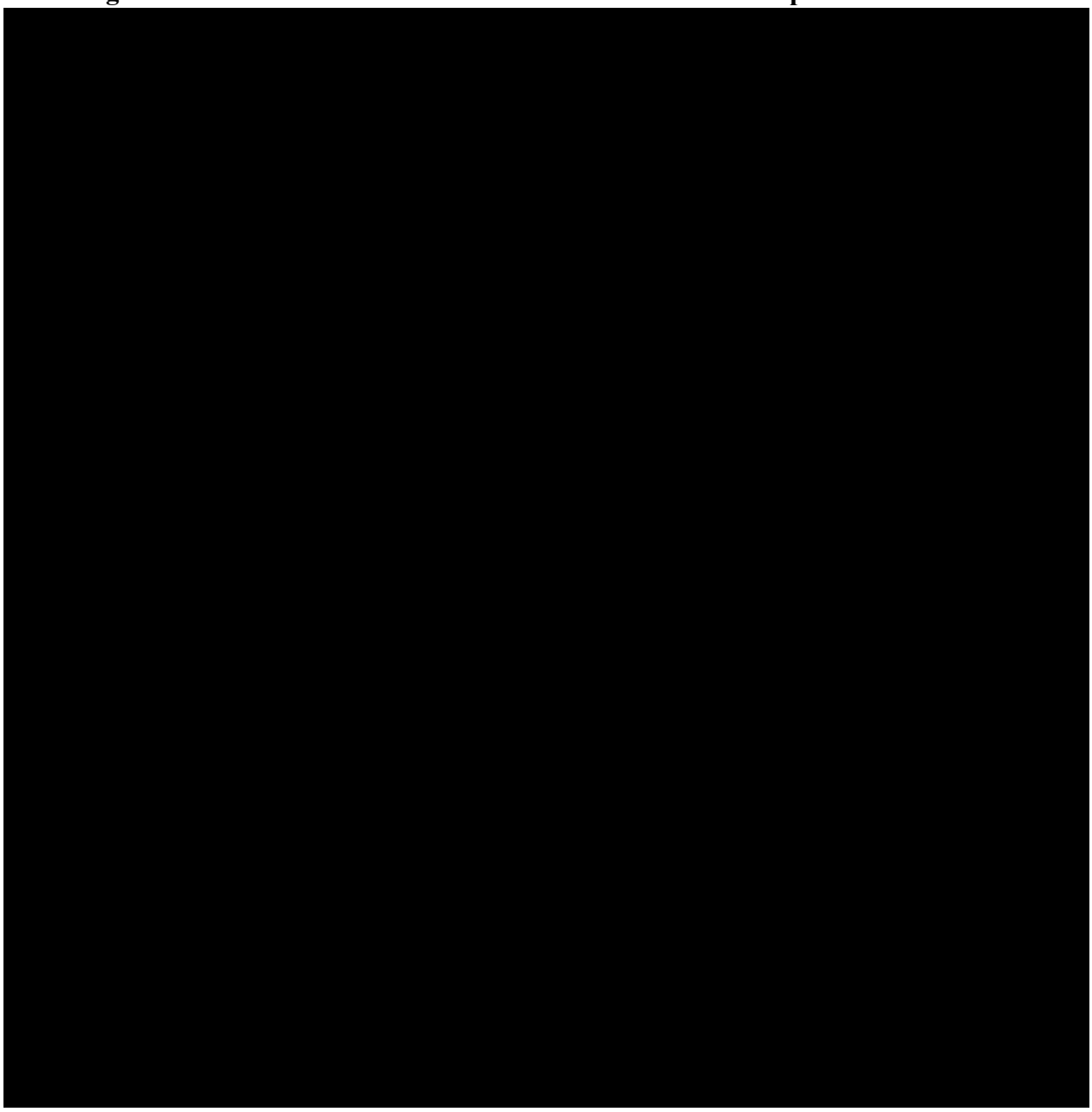

Figure 5.3.25-5 VISED Sketch of LWT with BUP-500 Capsule Axial Detail

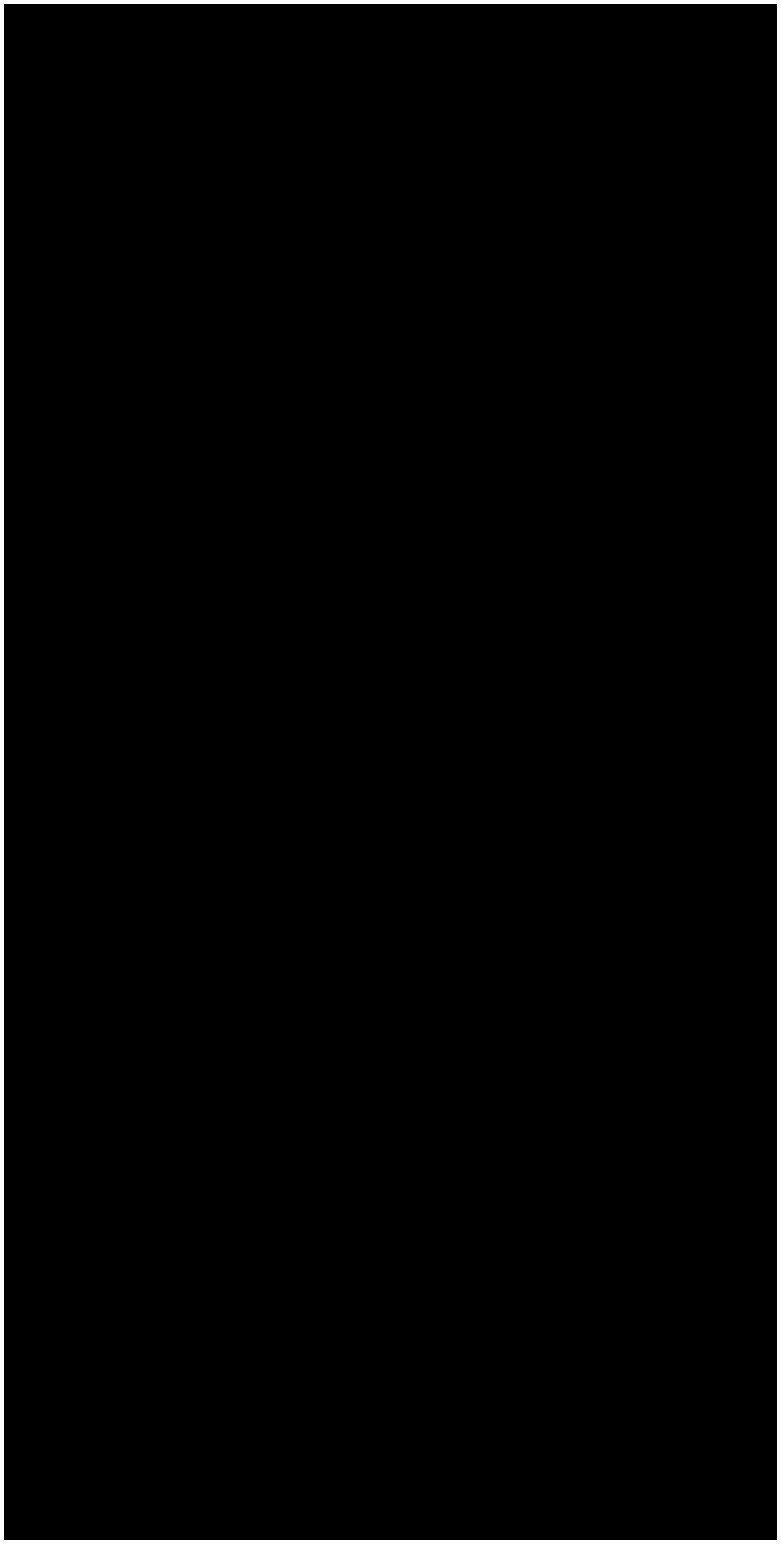

Figure 5.3.25-6 VISED Sketch of LWT with WESF Capsule Axial Detail

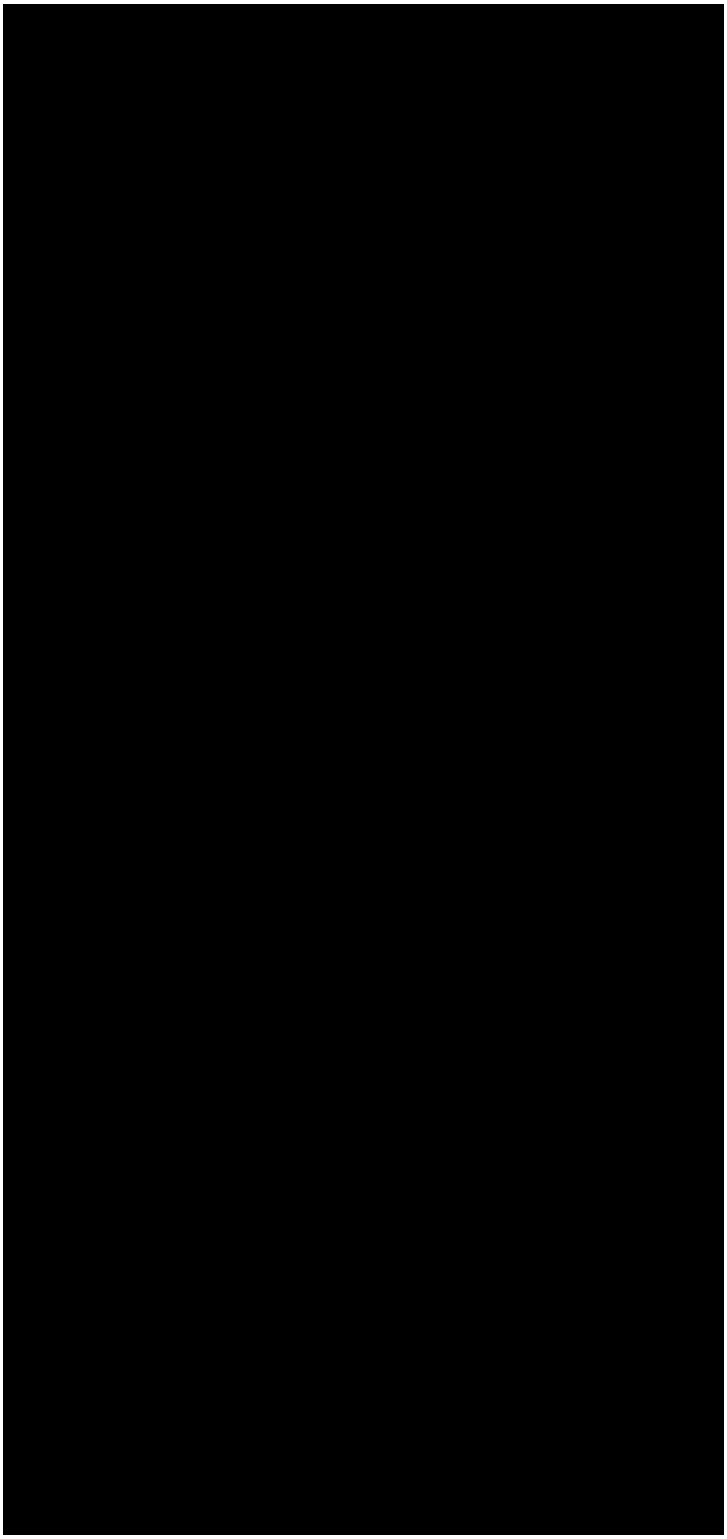

Figure 5.3.25-7 LWT Radial Dimensions – BUP-500 Capsules and WESF Capsules

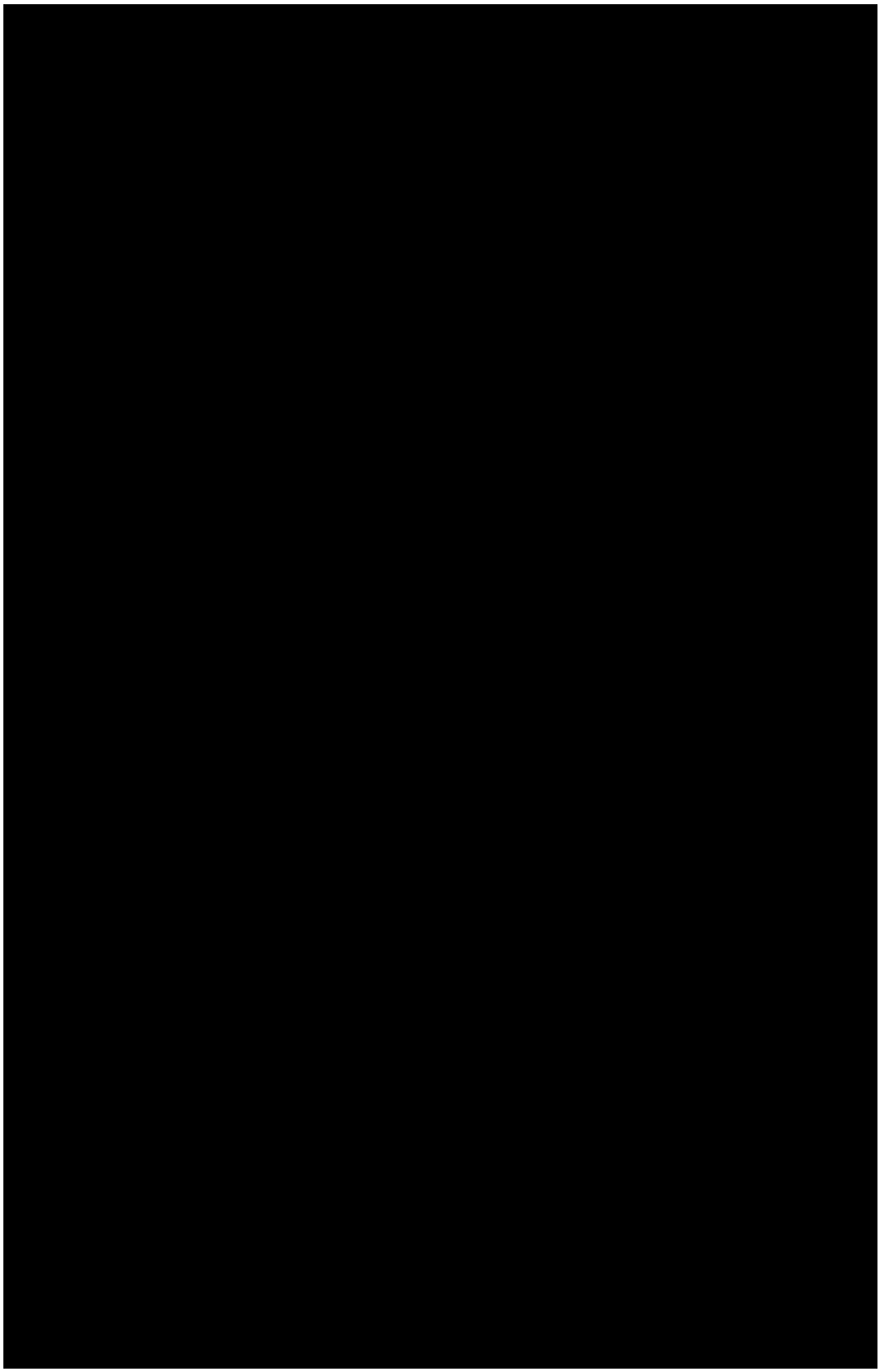

Figure 5.3.25-8 LWT Axial Dimensions – BUP-500 Capsules and WESF Capsules

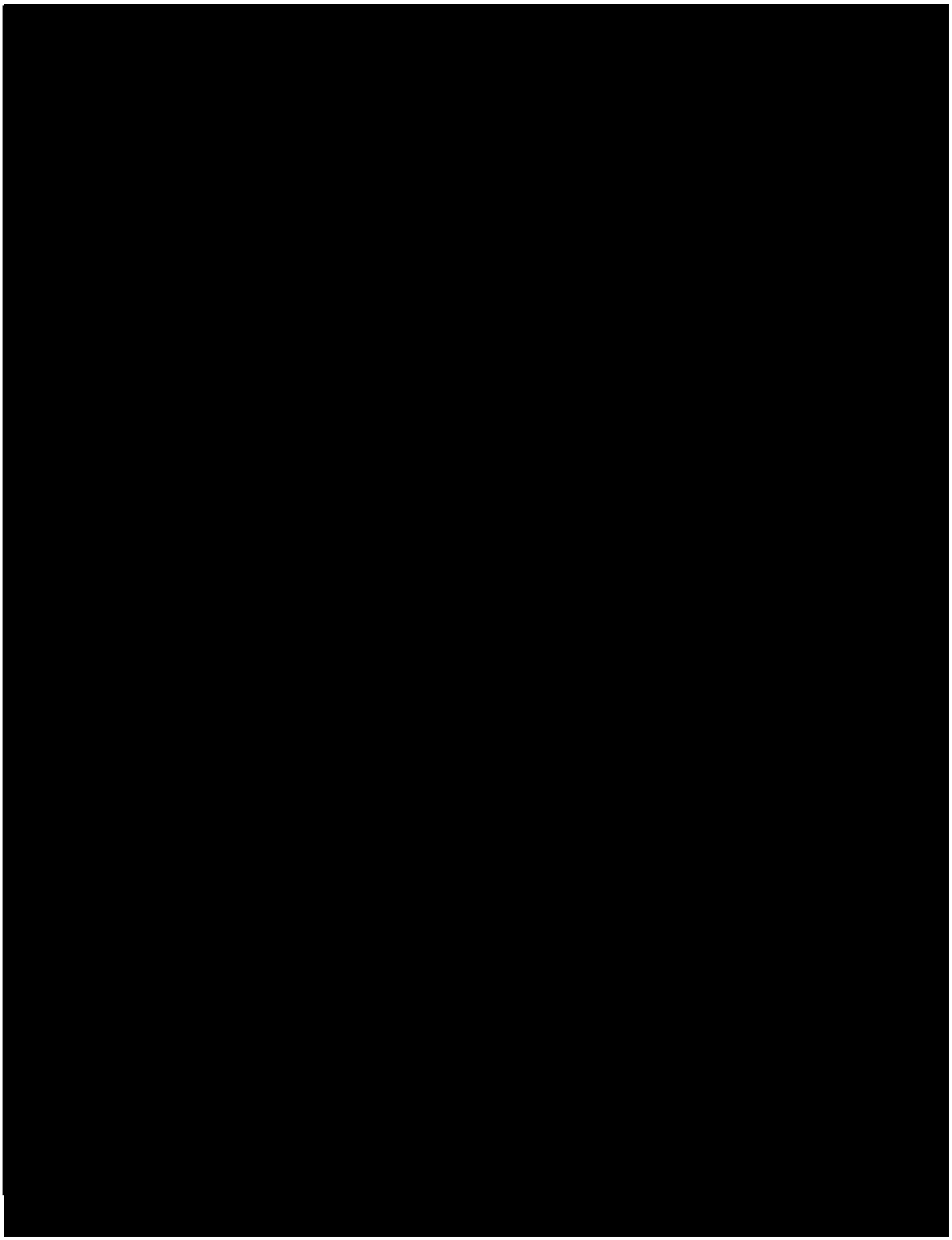

Figure 5.3.25-9 Maximum Radial Surface Dose Rate Profile for Normal Conditions – WESF Capsules



Figure 5.3.25-10 Maximum Radial 2m Dose Rate Profile for Normal Conditions – WESF Capsules



Table 5.3.25-1 1 Curie Strontium-90 Source

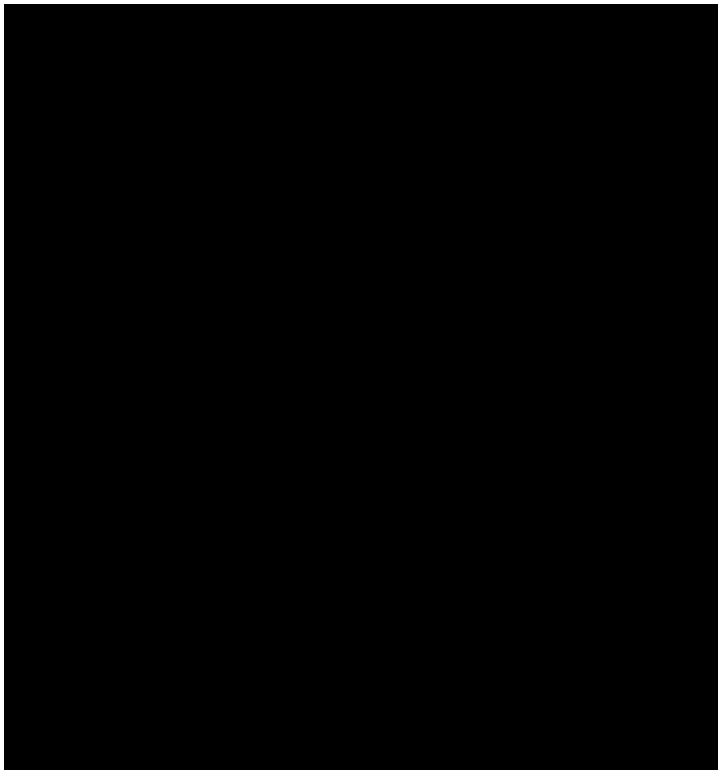

Table 5.3.25-2 Material Descriptions for BUP-500 Capsules and WESF Capsules

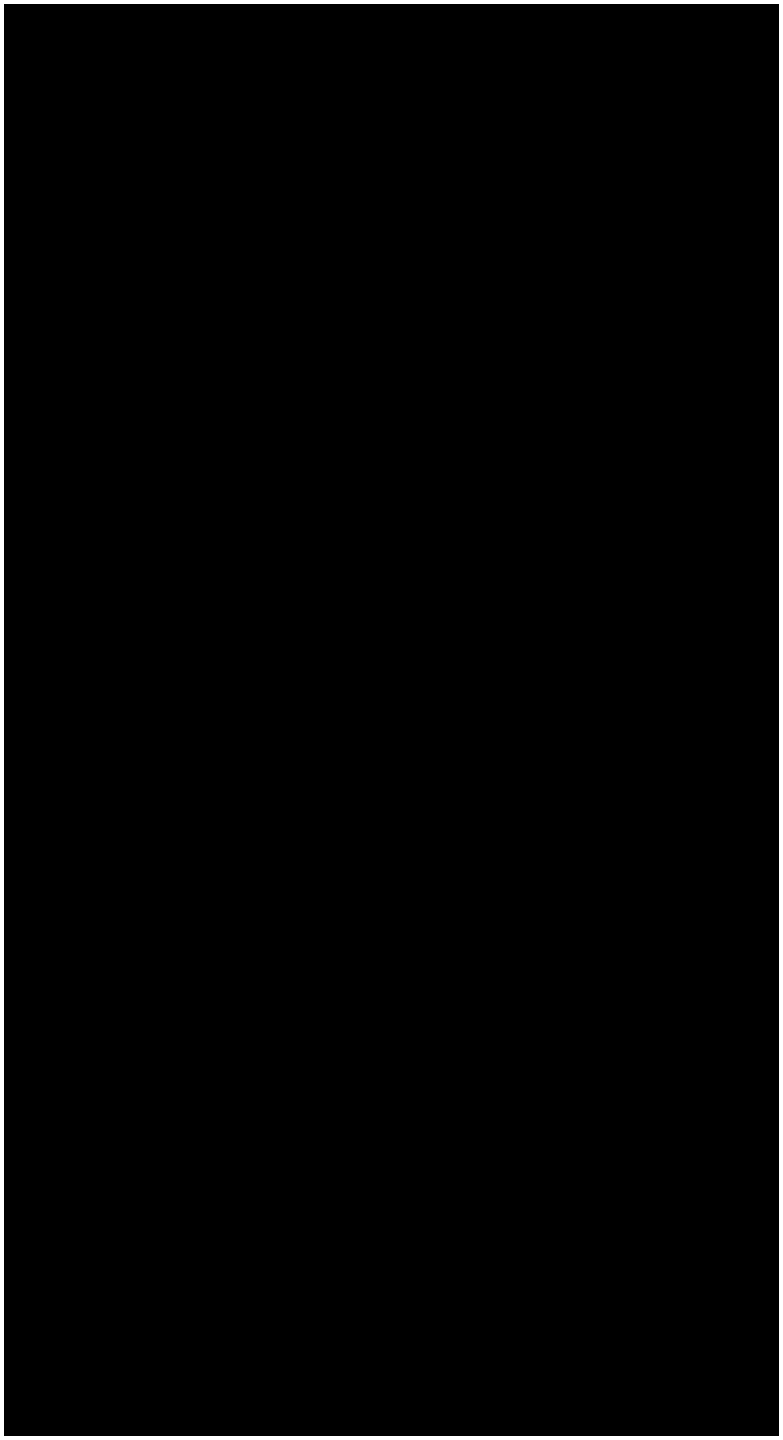

Table 5.3.25-3 BUP-500 Capsule Dimensions

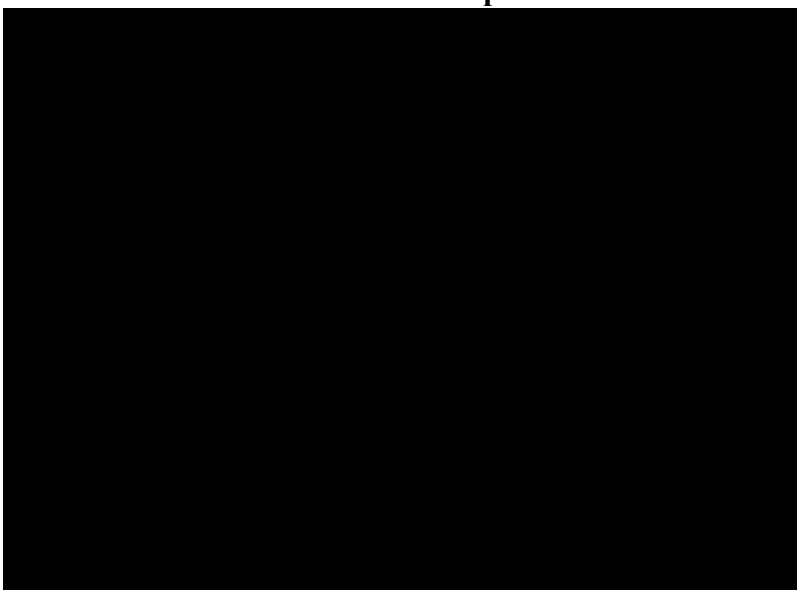

Table 5.3.25-4 WESF Capsule Dimensions

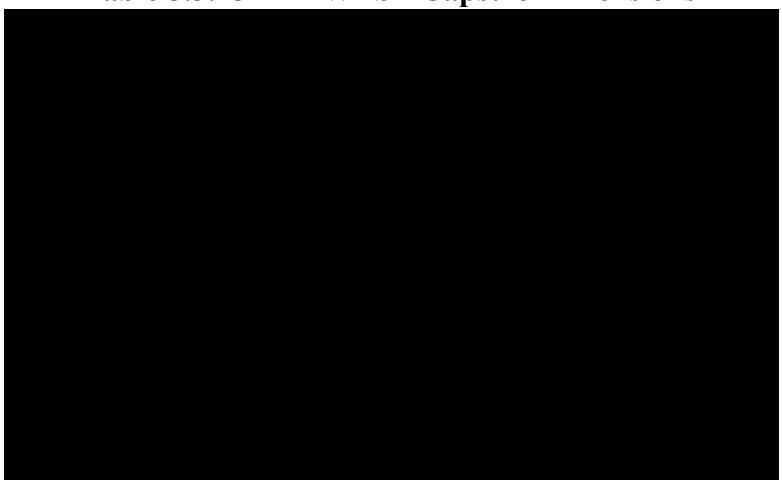

[2] Smaller height used for radial and bottom dose rates and taller height used for top dose rates.

Table 5.3.25-5 ANSI/ANS 6.1.1-1977 Gamma Flux-to-Dose Conversion Factors

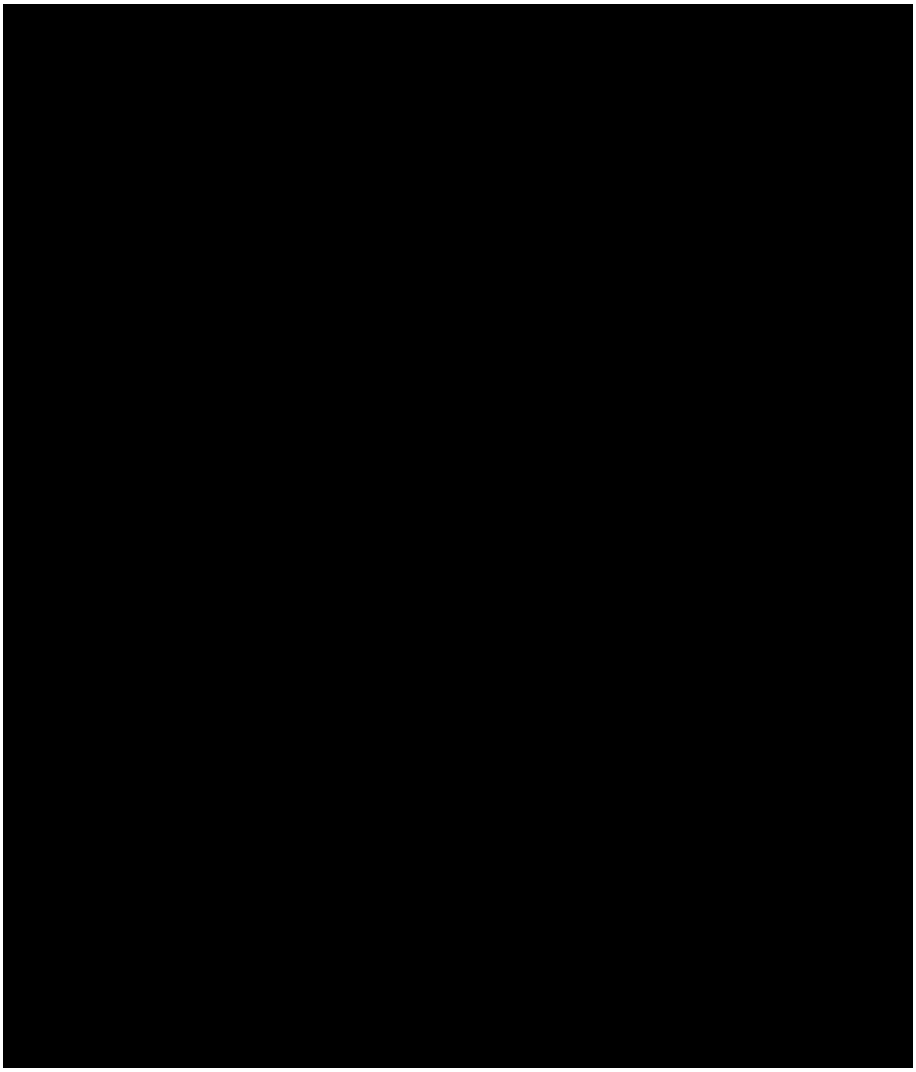

Table 5.3.25-6 BUP-500 Capsule Dose Rate Summary

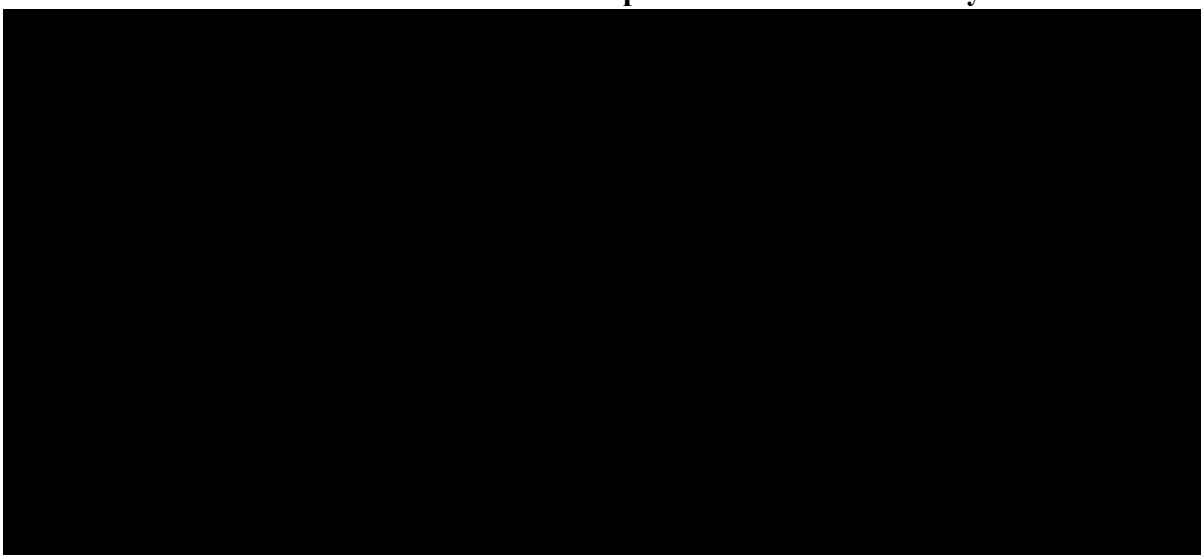

Table 5.3.25-7 WESF Capsule Dose Rate Summary



Table 5.3.25-8 Summary of Maximum Dose Rates for BUP-500 Capsules and WESF Capsules



5.3.26 High Burnup Steel/Iron Clad PWR and BWR Rods in a Rod Holder

Results of a shielding analysis for up to 25 high burnup PWR or BWR fuel rods with a maximum of 14 non-zirconium clad fuel rods are presented in this section. The non-zirconium clad materials are considered damaged in this evaluation. The 14 damaged fuel rods are analyzed with steel/iron clad [redacted]. The rods have burnups up to 80,000 MWd/MTU. Based on the evaluation of steel/iron clad rods instead of zirconium-based clad rods, the minimum cool times developed in Section 5.3.8 require an extension to ensure that maximum dose rates do not exceed dose rate limits. [redacted] Dose rates are calculated using the MCNP three-dimensional Monte Carlo transport code.

Source Terms

Source terms employed in this analysis are identical to those employed in Section 5.3.8 above. The SAS2H-generated source spectra are rebinned onto 28-group neutron and 22-group gamma schemes as shown in Table 5.3.11-1 and Table 5.3.11-2, respectively.

Source terms are presented in Table 5.3.26-1 through Table 5.3.26-3 for PWR and BWR fuel. PWR and BWR 8×8 fuel types are analyzed at 80,000 MWd/MTU and 240 days cool time. BWR 7×7 fuel is analyzed at 80,000 MWd/MTU and 300 days cool time. These cool times represent a 90 day addition to the zirconium alloy based high burnup fuel rods minimum cool times.

The effect of subcritical neutron multiplication is computed directly in MCNP.

Axial Source Profile

The axial source profiles employed in MCNP for PWR and BWR fuel are identical to those employed in Section 5.3.12.2. Profiles are input by evaluating the fraction of source in each axial bin. A uniform source is applied to the damaged fuel concentrated at the top of the cask. The nonlinear impact of burnup on the total neutron source strength is accounted for in both the damaged and intact fuel regions.

Shielding Model

MCNP three-dimensional shielding analysis allows detailed modeling of the fuel, basket, and cask shield configurations. For the fuel rod sources, some fuel rod detail is homogenized in the model to simplify model input and improve computational efficiency. Thus, the three-dimensional models represent the various fuel assembly source regions as homogenized zones within the rod holder, but explicitly model the axial extent of the source regions. The basket and cask body details are explicitly modeled, including the axial extents described by the License Drawings.

The geometric description of a MCNP model is based on the combinatorial geometry system embedded in the code. In this system, bodies such as cylinders and rectangular parallelepipeds, and their logical intersections and unions, are used to describe the extent of material zones.

MCNP weight windows are used to accelerate problem convergence.

Fuel Rod Model

Based on the fuel parameters provided in Section 5.3.8, and the rod holder cross-sectional detail provided by the License Drawings, homogenized treatments of fuel rod source regions are developed. The homogenized fuel rods are represented in the model as a stack of boxes with width equal to the rod holder interior width. The height of each box corresponds to the modeled height of the corresponding source region.

The intact fuel region homogenizations are shown in Table 5.3.26-4 through Table 5.3.26-6, based on a homogenization area of [redacted]. Components of the fuel homogenization are subdivided to account for the various area fractions present in the homogenized fuel description. "Interstitial" refers to the space within the rod holder canister but outside the 5×5 tube array. "Insert void" refers to the space inside the rod holder tubes but outside the fuel rods. "Gap" refers to the pellet to clad gap. All three regions are assigned a void material as part of the shielding evaluation since the cask cavity is dry during all transport conditions. Combined with the fuel rod clad, fuel material, and tube materials, the void accounts for the total fuel region volume. The clad region from a material composition perspective is set to zirconium alloy (density 6.56 g/cm^3) for both PWR and BWR fuel. The non-zirconium alloys are slightly higher in density and therefore provides slightly higher source self-shielding.

[redacted]

[redacted]
mixture calculations are summarized in Table 5.3.26-7.

Credit is taken for the self-shielding of intact and damaged fuel spanning the top of the active fuel region. Similarly, credit is taken for the reduction in active fuel source required for the dispersion of 14 rods. The total source evaluated is 25 rods.

Basket Model

For a given fuel type, the MCNP description of the basket elements forms a common sub-model employed in the analysis. The key features of the model are the detailed representation of pin canister, PWR insert, and PWR basket.

NAC-LWT Model

The three-dimensional model of the NAC-LWT cask is based on the following features:

Normal conditions:

- Radial neutron shield and shield shell
- Aluminum impact limiters with [redacted] (calculated based on the impact limiter weight and dimensions) and diameter equal to the neutron shield shell diameter

Accident conditions:

- Removal of radial neutron shield and shield shell
- Loss of upper and lower impact limiters

Common to both the normal and accident conditions models is a [redacted]. The elevation of the source regions is controlled such that the offset of the rod holder canister from the bottom of the NAC-LWT [redacted] as shown in Figure 5.3.10-6, the least radial shielding is located.

Detailed model parameters used in creating the three-dimensional model are taken directly from the License Drawings. Elevations associated with the three-dimensional features are established with respect to the center bottom of the NAC-LWT cask cavity for the MCNP combinatorial model. The three-dimensional NAC-LWT models are identical to those shown in Figure 5.3.12-1 and Figure 5.3.12-2.

Shield Regional Densities

Based on the homogenization described for the fuel rod model, the resulting fuel regional densities are shown in Table 5.3.26-8. Material compositions for structural and shield materials are shown in Table 5.3.17-12.

Shielding Evaluation

Calculational Methods

The shielding evaluation is performed using MCNP. As described above, the evaluation includes the effect of fuel burnup peaking on fuel neutron and gamma source terms.

The MCNP shielding model is utilized with the source terms described above to estimate the dose rate profiles at various distances from the side, top, and bottom of the cask for both normal and accident conditions. The method of solution is continuous energy Monte Carlo with weight windows used to accelerate problem convergence.

Significant validation literature is available for MCNP as it is an industry standard tool for spent fuel cask evaluations. Available literature covers a range of shielding penetration problems ranging from slab geometry to spent fuel cask geometries. Confirmatory calculations against other validated shielding codes (SCALE and MCBEND) on NAC casks have further validated the use of MCNP for shielding evaluations.

Flux-to-Dose Rate Conversion Factors

The ANSI/ANS 6.1.1-1977 flux-to-dose rate conversion factors are employed in the MCNP analysis. The ANSI/ANS gamma and neutron dose conversion factors are shown in Table 5.3.11-23 and Table 5.3.11-24.

Three-Dimensional Dose Rates for High Burnup Fuel

Table 5.3.26-9 and Table 5.3.26-10 summarize the computed dose rates for each fuel type at the tabulated distances and transport conditions (normal and accident). The highest calculated radial dose rates at the surface and 2-meter locations under normal conditions are for BWR 8×8 and BWR 7×7 rods, respectively. The highest calculated radial dose rates at 1 meter from the cask under accident conditions are for BWR 7×7 rods.

Normal condition radial surface dose rates for all three fuel types are in excess of 200 mrem/hr, necessitating an exclusive use designation for the NAC-LWT. The maximum dose rate is dominated by the damaged fuel neutron component, which comprises approximately 77% of the maximum dose rate. The axial elevation of the maximum dose rate is above the neutron shield. The dose rate profile is shown in Figure 5.3.26-1.

The normal condition maximum radial 2-meter dose rate is 9.6 mrem/hr. At this distance, the damaged fuel neutron component contributes approximately 43% of the maximum. The dose rate profile is skewed towards the top of cask, as shown Figure 5.3.26-2.

Accident condition radial 1-meter dose rates for all three fuel types are well below the 1,000 mrem/hr limit. The maximum dose rate is dominated by the mixture fuel neutron component,

which contributes approximately 51% towards the maximum. The dose rate profile is shown in Figure 5.3.26-3.

As shown in Table 5.3.26-10, axial surface dose rates are well below limits for all three fuel types. Significant margin is present for the normal condition 2-meter and accident condition 1-meter dose rate limits.

Figure 5.3.26-1 Normal Condition Axial Surface Dose Rate Profile by Source Type – Damaged Fuel Rods with Steel/Iron Clad



Figure 5.3.26-2 Normal Condition Radial 2m Dose Rate Profile by Source Type – Damaged Fuel Rods with Steel/Iron Clad



Figure 5.3.26-3 Accident Condition Radial 1m Dose Rate Profile by Source Type – Damaged Fuel Rods with Steel/Iron Clad



Table 5.3.26-1 PWR Rods 80,000 MWd/MTU, 240 Day Cool Time Source Terms

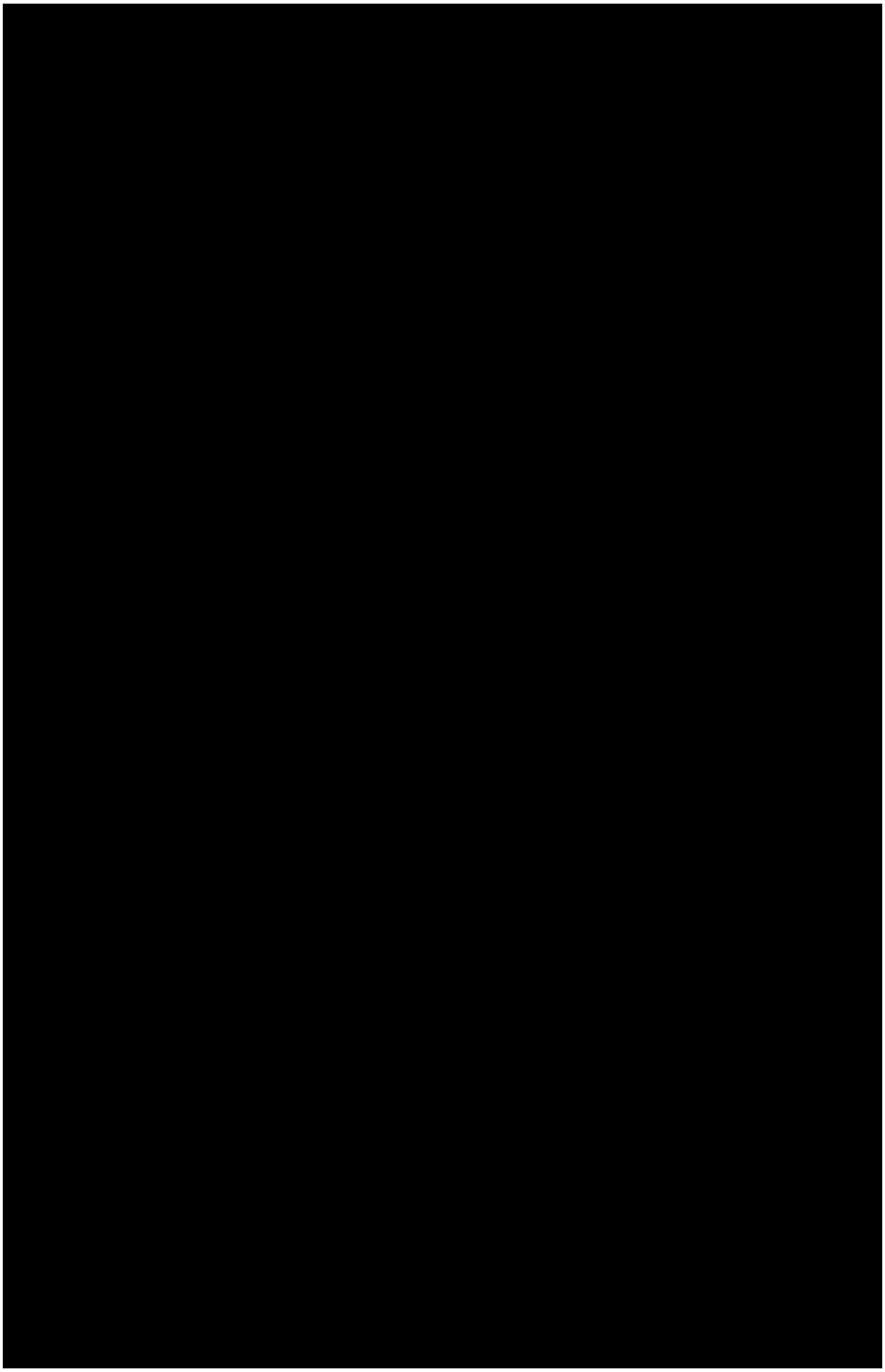

Table 5.3.26-2 BWR 7×7 Rods 80,000 MWd/MTU, 300 Day Cool Time Source Terms

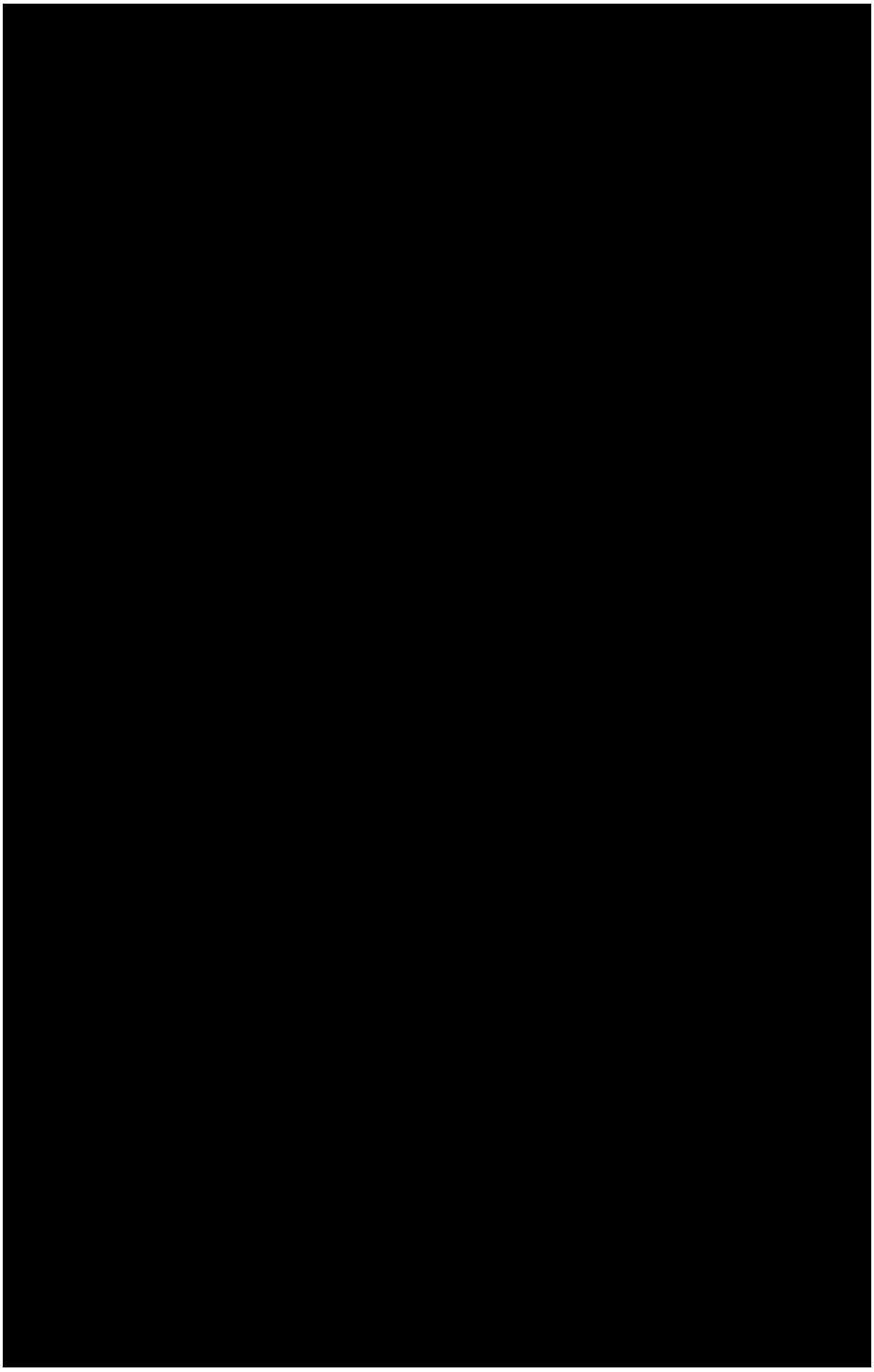

Table 5.3.26-3 BWR 8×8 Rods 80,000 MWd/MTU, 240 Day Cool Time Source Terms

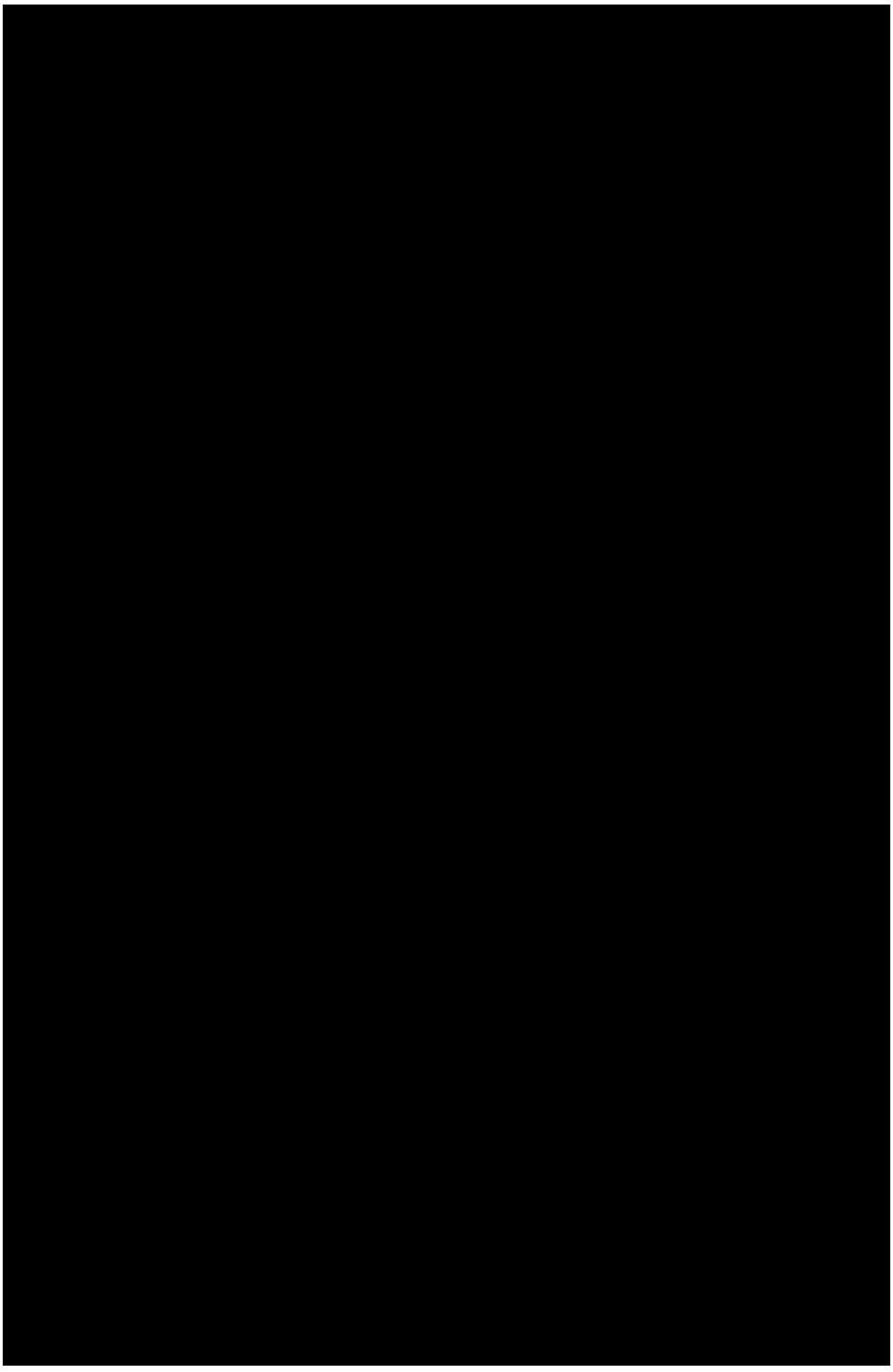

Table 5.3.26-4 Fuel Region Homogenization for PWR Fuel Rods



Table 5.3.26-5 Fuel Region Homogenization for BWR 7×7 Fuel Rods



Table 5.3.26-6 Region Homogenization for BWR 8×8 Fuel Rods



Table 5.3.26-7 Intact/Damaged Fuel Mixture Composition Determinations



Table 5.3.26-8 Fuel Region Homogenized Material Description

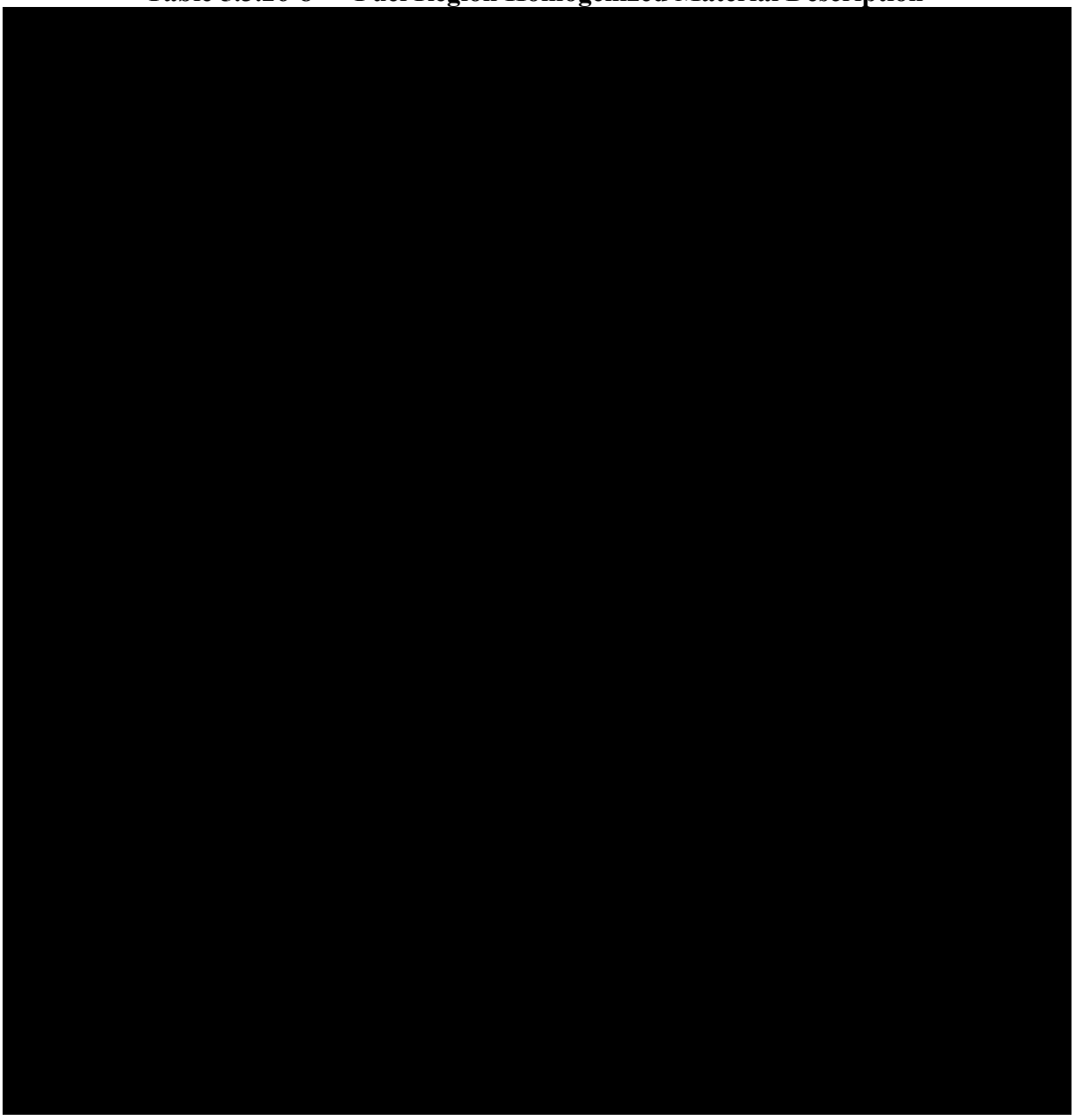

Table 5.3.26-9 Maximum Radial Dose Rates for Damaged PWR and BWR Fuel Rods

[redacted]

Table 5.3.26-10 Maximum Axial Dose Rates for Damaged PWR and BWR Fuel Rods

[redacted]

5.3.27 UCS Assemblies with WESF Capsules

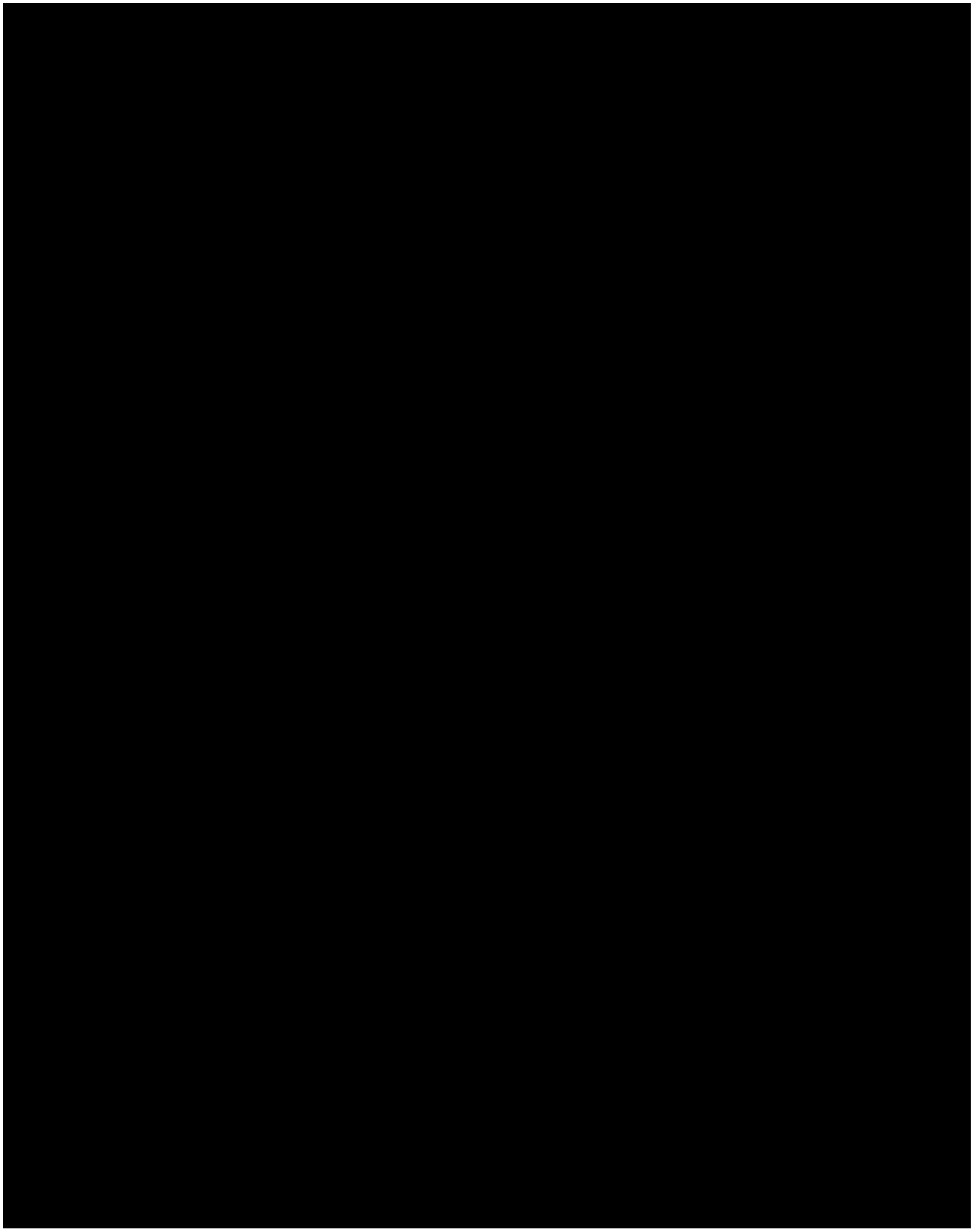



Figure 5.3.27-1 VISED Sketch of LWT with UCS Radial Detail



Figure 5.3.27-2 VISED Sketch of LWT with UCS Axial Detail

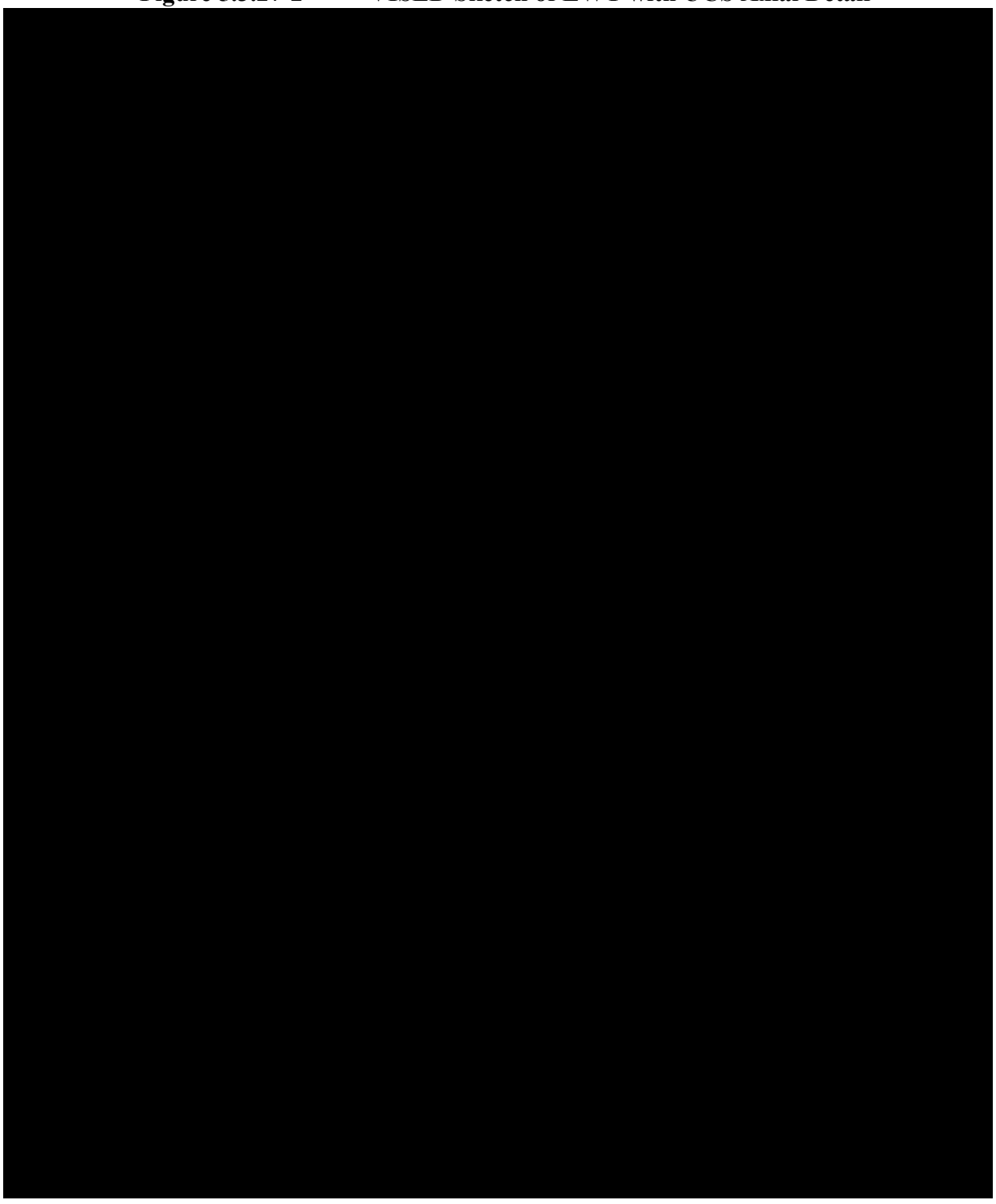

Figure 5.3.27-3 Maximum Radial Surface Dose Rate Profile for Normal Conditions – UCS Assemblies with WESF Capsules

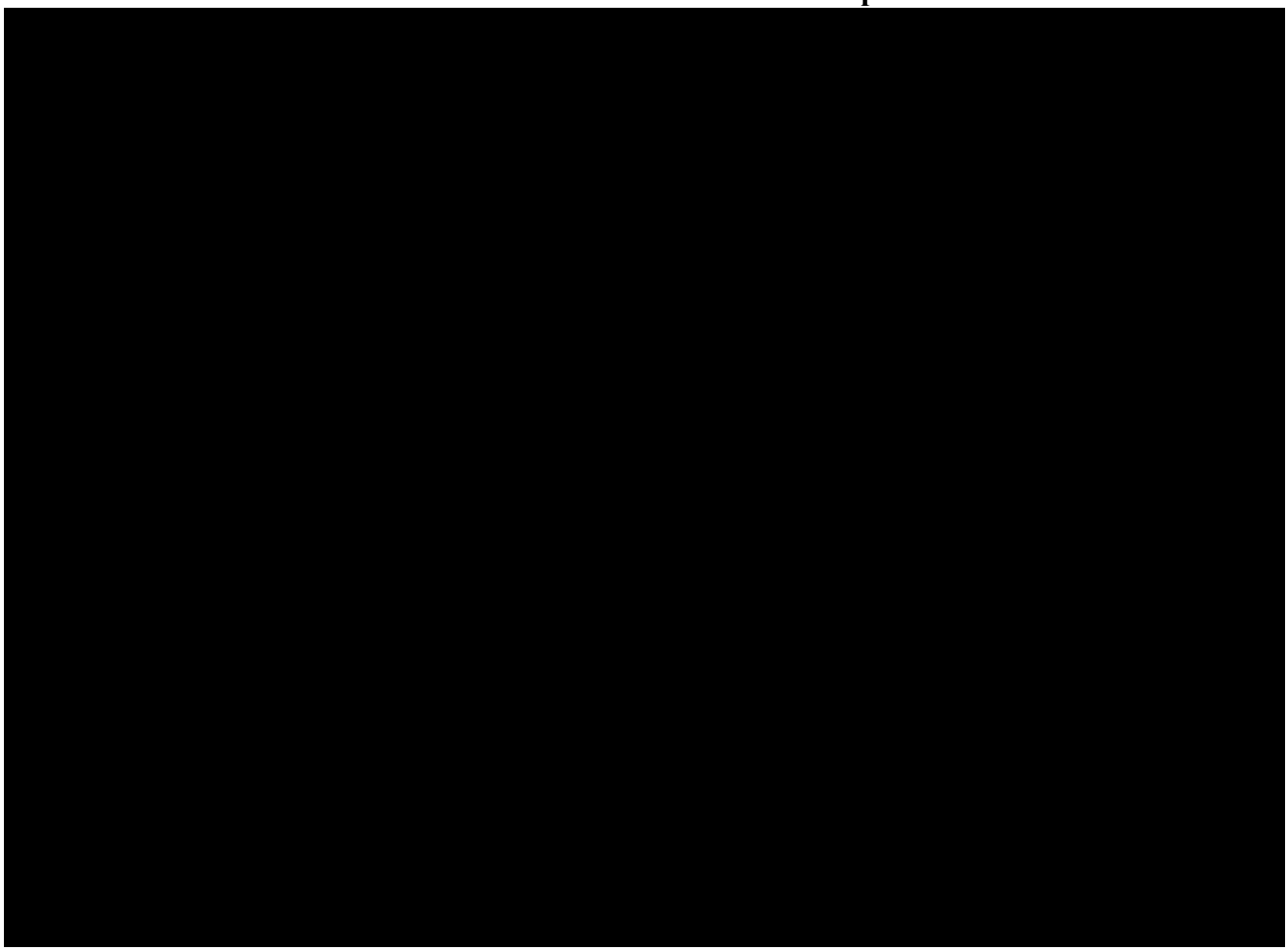

Figure 5.3.27-4 Maximum Radial 2m Dose Rate Profile for Normal Conditions – UCS Assemblies with WESF Capsules

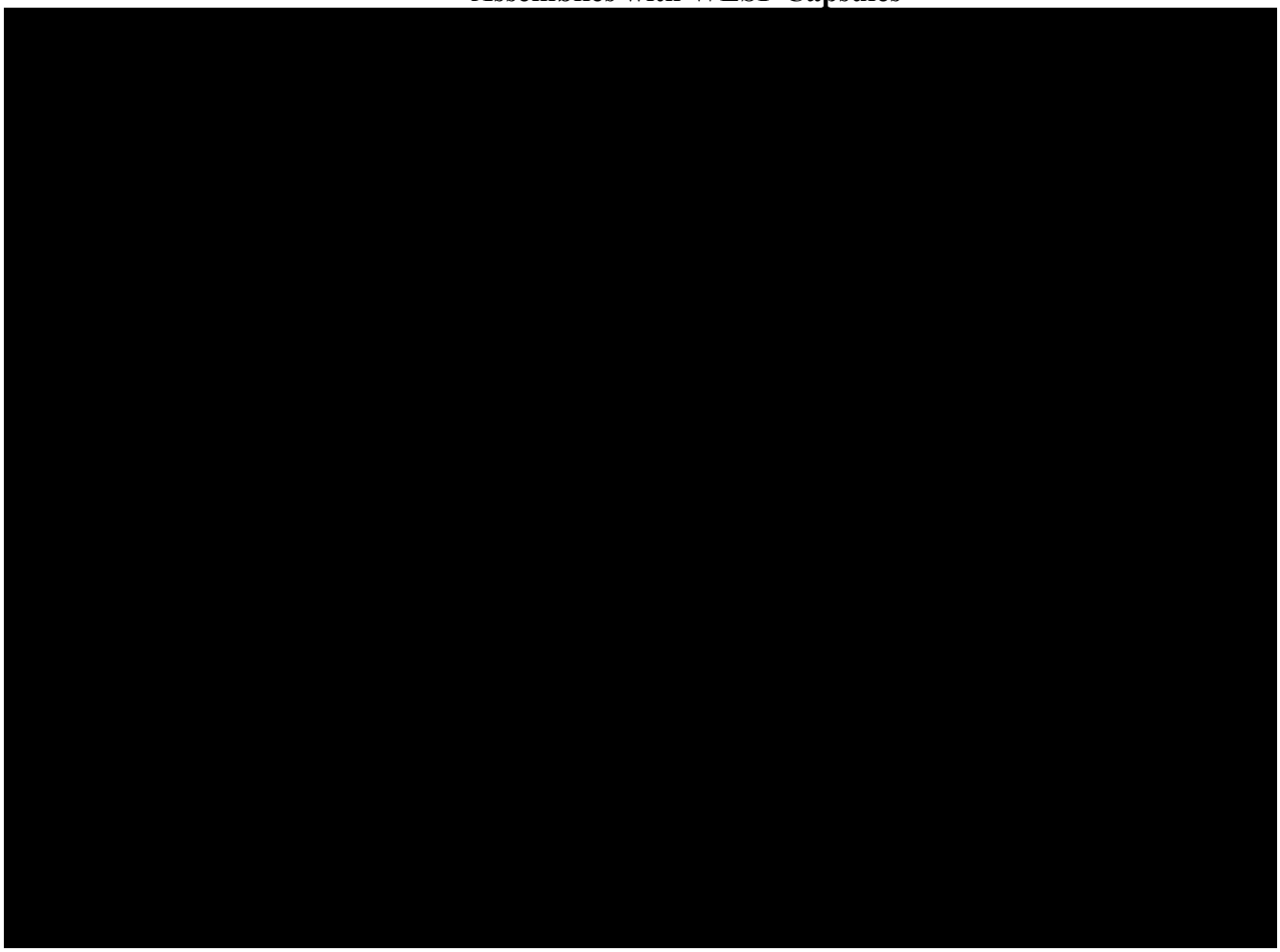

Table 5.3.27-1 UCS and UCS Basket Dimensions

[redacted]

Table 5.3.27-2 UCS Assemblies with WESF Capsules Dose Rate Summary

[redacted]

Table 5.3.27-3 Summary of Maximum Dose Rates for UCS Assemblies with WESF Capsules

[redacted]

5.4 Shielding Evaluation

5.4.1 Shielding Evaluation Codes

The two codes used in the shielding evaluation of the NAC-LWT cask are XSDRNPM (NUREG/CR-0200, Vol. 2, F3) and QAD-CG (Cain). XSDRNPM is a 1-dimensional multigroup code developed by Oak Ridge National Laboratories (ORNL) for reactivity calculations. In this case, it is used to perform shielding analysis by solving the Boltzmann transport equation including anisotropic scattering by the discrete ordinates method. In this analysis, the P_3S_8 approximation is used for a more accurate dose rate calculation. The SCALE (NUREG/CR-0200) 27N/18G group coupled neutron-gamma cross section master library is processed through NITAWL (NUREG/CR-0200, Vol. 2, F2) and XSDRNPM for self-shielding resonance treatment and cell weighting. This step is necessary to generate the working data library required as input for XSDRNPM to perform dose rate calculations. The QAD-CG combinatorial geometry version of QAD was also developed at ORNL. It is a 3-dimensional computer code that is used extensively in industry and yields good results for gamma-ray calculations and usually satisfactory results for neutron calculations. The code uses buildup factors based on the Goldstein and Wilkins moments method calculations for gamma-ray transport in an infinite homogeneous medium. The code uses Capo's fit to the Goldstein-Wilkins data with bivariant polynomial expressions to calculate the approximate buildup factors as a function of the gamma-ray energy and the number of mean free paths from the source to the detector. The buildup factor selected for all of the shielding calculations in this case is for iron, which yields conservative results. For neutron dose calculations, the code uses either a modified Albert-Welton kernel or kernels obtained from the moments method solution of the Boltzmann transport equation. With the moments method kernels, the neutron spectrum penetrating a shield is determined on the basis of the equivalent length of a reference material between the source point and the receiver point.

XSDRNPM has been shown to be an accurate shielding code, but it has geometrical limitations. To perform calculations with XSDRNPM, a flat source distribution along the fuel axial direction and an equivalent circularized cylindrical source core are used. For the design basis Westinghouse 15 × 15 PWR assembly, the fuel area is 458.05 square centimeters, which yields an effective radius of 12.07 centimeters, as shown in Figure 5.3.3-6. In actuality, an axial source distribution (Figure 3.4-2) exists, which introduces higher dose rates at the peak axial source location. Also, the circularized core underestimates the dose at points where the real source region is nearer the cask surface.

QAD-CG is used to correct for the axial source distribution and the three-dimensional effects of geometry. Calculations are done with QAD for a three-dimensional model with an axial source distribution (Table 5.4.1-1) and for a 1-dimensional model with a flat source distribution. The flux to dose conversion factors for these models are found in the Radiological Health Handbook and are listed in Table 5.4.1-2. The buildup factor used for both of these models is for iron, since it has the largest number of mean free paths. The detector points are placed on the surface for the flat source distribution and at 2 meters from the personnel barrier for the axial source distribution. This gives a 3-dimensional to 1-dimensional correction factor, which is applied to the XSDRNPM results to calculate the actual dose. This method is used to calculate the dose rates from the side of the cask, at the surface, and at 2 meters from the personnel barrier (Table 5.1.1-4).

For the radial dose rates, an additional correction factor is applied to account for scattering. Schaeffer's Reactor Engineering for Nuclear Engineers is used to determine the scattering factors of 5 percent for primary and secondary gammas and 45 percent for neutrons. These values are found in tables 7.10 and 7.18 (Schaeffer) generated using total albedos. The use of total albedos rather than differential albedos is conservative, since total albedos take into account scattering angles that do not allow radiation to reach the detector point. It is also important to note that since this is high energy radiation, the probability of it scattering through large angles is very low.

The end-fitting calculations are straight forward. To calculate the end-fitting gamma as well as the fuel contribution to the dose rates at the ends of the cask, a simple QAD-CG model is used. The model is an arrangement of stacked disks and uses a flat source distribution so that a correction factor is not necessary. The various contributions are added together to obtain the total dose rate. The dose rates are included in Table 5.1.1-4.

The dose rates for a loss of the neutron shield are calculated using both XSDRNPM and QAD-CG. XSDRNPM is used to calculate a ratio of the dose rate on the surface with the neutron shield to the dose rate without the neutron shield. QAD-CG is used to calculate a 3-dimensional to 1-dimensional geometrical correction factor. The QAD-CG dose points are located on the surface, with a flat source distribution, and at 1 meter using an axial source distribution (Figure 3.4-2). The dose rates at 1 meter without the neutron shield are obtained by multiplying the normal operations dose rate at the surface by the 3-dimensional to 1-dimensional geometric correction factor. This product is then multiplied by the ratio of dose rates without water to with water, to obtain the hypothetical accident dose rate at 1 meter. The dose rate at 1 meter from the surface of the cask for this accident is 77.5 mrem/hour (Table 5.1.1-5), which is well below the limits of 49 CFR 173.

The lead slump accident is analyzed using QAD-CG. Models are created for the top and bottom end-fittings of a PWR and the bottom end-fitting of a BWR. The BWR bottom end-fitting is analyzed since it is bigger and has a larger ^{60}Co source than the PWR bottom end-fitting. It also sits closer to the bottom of the cask and, therefore, closer to the lead slump than the PWR bottom end-fitting. The analysis is not performed for the BWR top end-fitting because it is smaller and, therefore, has a lower source strength than the BWR bottom end-fitting. Detector points are placed at various positions along the outside of the cask in order to determine if the lead "window" that could be created during the cask drop would have adverse shielding consequences. The resulting dose rates are presented in Table 5.1.1-6.

For completeness, a normal transport conditions shielding analysis is performed for the NAC-LWT cask, which takes into account the shell tolerances found in the license drawings (Section 1.4). The method used is identical to the one used for the fuel radial calculations; however, neutrons and secondary gammas are not recalculated because a small reduction in the lead thickness would not significantly affect either the neutrons or the secondary gammas. The lead density in this analysis was determined by multiplying the maximum density at room temperature (11.35 g/cc) by a ratio of the volume of lead at 620°F to the volume of lead at room temperature (335,779.9/339,930.5). A thermal insulator is used to preclude lead melt during the 10 CFR 71 hypothetical fire accident. The displacement of the lead by the thermal insulator is also taken into account. The dose rate, accounting for tolerances and thermal insulator, is 8.93 mrem/hour at the fuel midplane, 2 meters from the personnel barrier, an increase of only 0.79 mrem/hour. Therefore, under normal transport conditions, with the tolerances and the thermal insulator taken into account, the cask is within the limits of 10 CFR 71.

Table 5.4.1-1 Discrete Axial Source Distribution

Axial Location Above Bottom of Active Fuel Length (cm)	Relative Axial Source Strength	Axial Location Above Bottom of Active Fuel Length (cm)	Relative Axial Source Strength
0.0	0.35	99.72	1.20
5.54	0.45	105.26	1.20
11.08	0.563	110.80	1.20
16.62	0.685	116.34	1.20
22.16	0.768	121.88	1.20
27.70	0.843	127.42	1.20
33.24	0.909	132.96	1.20
38.78	0.965	138.50	1.20
44.32	1.015	144.04	1.20
49.86	1.039	149.58	1.20
55.40	1.074	155.12	1.20
60.94	1.103	160.66	1.20
66.48	1.128	166.20	1.20
72.02	1.148	171.74	1.20
77.56	1.166	177.28	1.20
83.10	1.175	182.82	1.20
88.64	1.20	188.36	1.20
94.18	1.20	193.90	1.187

Table 5.4.1-1 Discrete Axial Source Distribution (Continued)

Axial Location Above Bottom of Active Fuel Length (cm)	Relative Axial Source Strength	Axial Location Above Bottom of Active Fuel Length (cm)	Relative Axial Source Strength
199.44	1.175	288.08	1.04
204.98	1.175	293.62	0.934
210.52	1.175	299.16	0.88
216.06	1.175	304.70	0.88
221.60	1.152	310.24	0.88
227.14	1.14	315.78	0.88
232.68	1.14	321.32	0.88
238.22	1.14	326.86	0.88
243.76	1.14	332.40	0.839
249.30	1.14	337.94	0.769
254.84	1.14	343.48	0.665
260.38	1.089	349.02	0.591
265.92	1.04	354.56	0.513
271.46	1.04	360.10	0.523
277.00	1.04	365.75	0.301
282.54	1.04		

Table 5.4.1-2 Flux to Dose Conversion Factors

Energy (MeV)	Flux-to-Dose
0.35	5.13E-4
0.452	8.00E-4
0.79	1.52E-3
0.90	1.67E-3
1.25	2.17E-3
1.29	2.38E-3
1.58	2.63E-3
1.74	2.86E-3
2.35	3.45E-3

Table of Contents

6 CRITICALITY EVALUATION 6-1

6.1 Discussion and Results 6.1-1

6.2 Package Fuel Loading 6.2-1
6.2.1 PWR Fuel Assemblies 6.2.1-1
6.2.2 BWR Fuel Assemblies 6.2.2-1
6.2.3 MTR Fuel Elements 6.2.3-1
6.2.4 PWR and BWR Rods in a Rod Holder or Fuel Assembly Lattice 6.2.4-1
6.2.5 TRIGA Fuel Elements 6.2.5-1
6.2.6 TRIGA Fuel Cluster Rods 6.2.6-1
6.2.7 Metallic Fuel Rods 6.2.7-1
6.2.8 DIDO Fuel Assemblies 6.2.8-1
6.2.9 General Atomics Irradiated Fuel Material 6.2.9-1
6.2.10 PULSTAR Fuel Elements 6.2.10-1
6.2.11 Spiral Fuel Assemblies 6.2.11-1
6.2.12 MOATA Plate Bundles 6.2.12-1

6.3 Criticality Model Specifications 6.3.1-1
6.3.1 PWR Fuel Assemblies 6.3.1-1
6.3.2 BWR Fuel Assemblies 6.3.2-1
6.3.3 MTR Fuel Elements 6.3.3-1
6.3.4 PWR and BWR Rods in a Rod Holder or Fuel Assembly Lattice 6.3.4-1
6.3.5 TRIGA Fuel Elements and Cluster Rods 6.3.5-1
6.3.6 DIDO Fuel Assemblies 6.3.6-1
6.3.7 General Atomics Irradiated Fuel Material 6.3.7-1
6.3.8 PULSTAR Fuel Contents 6.3.8-1
6.3.9 ANSTO Basket Payload 6.3.9-1
6.3.10 ANSTO-DIDO Combined Basket Payload 6.3.10-1

6.4 Criticality Calculations 6.4.1-1
6.4.1 PWR Fuel Assemblies 6.4.1-1
6.4.2 BWR Fuel Assemblies 6.4.2-1
6.4.3 MTR Fuel Elements 6.4.3-1
6.4.4 PWR and BWR Rods in a Rod Holder or Fuel Assembly Lattice 6.4.4-1
6.4.5 TRIGA Fuel Elements 6.4.5-1
6.4.6 TRIGA Fuel Cluster Rods 6.4.6-1
6.4.7 DIDO Fuel Assemblies 6.4.7-1
6.4.8 General Atomics Irradiated Fuel Material 6.4.8-1
6.4.9 PULSTAR Fuel Contents 6.4.9-1
6.4.10 ANSTO Basket Payloads 6.4.10-1
6.4.11 Combined DIDO-ANSTO Basket Payloads 6.4.11-1

6.5 Criticality Benchmarks 6.5.1-1
6.5.1 CSAS25 Criticality Benchmark for LEU LWR Oxide Fuel 6.5.1-1
6.5.2 CSAS25 Criticality Benchmarks for Research Reactor Fuel Elements (MTR and DIDO) 6.5.2-1

Table of Contents (Continued)

6.5.3 CSAS25 Criticality Benchmarks for TRIGA Fuel Elements 6.5.3-1
6.5.4 MCNP Criticality Benchmarks LEU Oxide and MOX LWR Fuels..... 6.5.4-1
6.5.5 MCNP Criticality Benchmarks for Research Reactor Fuels..... 6.5.5-1
6.5.6 MCNP5 Version 1.60 and MCNP6.2 Criticality Benchmarks for Research Reactor Fuels..... 6.5.6-1
6.5.7 MCNP Criticality Benchmarks for Uranyl Nitrates..... 6.5.7-1

6.7 Payload Specific Details 6.7.1-1
6.7.1 PWR Mixed Oxide Fuel Rods 6.7.1-1
6.7.2 SLOWPOKE Fuel Rods 6.7.2-1
6.7.3 NRU and NRX Fuel Assemblies 6.7.3-1
6.7.4 HEUNL..... 6.7.4-1
6.7.5 SLOWPOKE Fuel Core..... 6.7.5-1
6.7.6 EFN Rods, Moly Targets and Booster Rods..... 6.7.6-1
6.7.7 LANL MOX Fuel Rods 6.7.7-1

Note: See separate Section 6.6 for Appendices to this chapter.

List of Figures

Figure 6.2.3-1 Design Basis HFBR MTR Fuel Element 6.2.3-2
Figure 6.2.5-1 Aluminum Clad TRIGA Fuel Element 6.2.5-2
Figure 6.2.5-2 Stainless Steel Clad TRIGA Fuel Element 6.2.5-3
Figure 6.2.6-1 TRIGA Fuel Cluster Rod Details 6.2.6-2
Figure 6.2.8-1 DIDO Fuel Assembly 6.2.8-2
Figure 6.2.10-1 PULSTAR Fuel Assembly 6.2.10-2
Figure 6.2.11-1 Spiral Fuel Assembly Cross-Section Sketch 6.2.11-2
Figure 6.2.12-1 MOATA Plate Bundle Sketch 6.2.12-2
Figure 6.3.1-1 KENO-Va Model of the NAC-LWT Cask Model with PWR Basket and 15×15 PWR Assembly 6.3.1-4
Figure 6.3.1-2 KENO-Va Model of the NAC-LWT Cask with PWR Basket and Westinghouse 17×17 OFA Assembly 6.3.1-5
Figure 6.3.2-1 KENO-Va Model of the NAC-LWT Cask Model with BWR Basket and 2 Exxon 9×9-2/80 Assemblies 6.3.2-3
Figure 6.3.3-1 KENO-Va Fuel/Basket Unit Cell Model for MTR Fuel 6.3.3-4
Figure 6.3.3-2 KENO-Va Model of NAC-LWT Cask with MTR Fuel 6.3.3-5
Figure 6.3.3-3 Intermediate MTR 42 Basket Module 6.3.3-6
Figure 6.3.3-4 Full Length NAC-LWT Cask Model with 42 MTR Fuel Elements 6.3.3-7
Figure 6.3.3-5 MTR Fuel Basket Module Loading Pattern 6.3.3-8
Figure 6.3.4-1 Triangular Pitch Lattice Formation of 25 PWR Rods 6.3.4-5
Figure 6.3.4-2 KENO-Va Model of the NAC-LWT Cask with 25 PWR Rods 6.3.4-6
Figure 6.3.4-3 Maximum Reactivity Triangular Pitch Lattice Formation of Damaged Fuel Rods 6.3.4-7
Figure 6.3.4-4 KENO-Va Model of the NAC-LWT Cask with Damaged Fuel Rods – Radial Detail 6.3.4-8
Figure 6.3.4-5 KENO-Va Model of the NAC-LWT Cask with Damaged Fuel Rods – Axial Detail 6.3.4-9
Figure 6.3.5-1 Fuel Rod Handling Insert for TRIGA Fuel Cluster Rods 6.3.5-5
Figure 6.3.5-2 Fuel/Basket Unit Cell Model for TRIGA Fuel Elements 6.3.5-6
Figure 6.3.5-3 NAC-LWT Cask with TRIGA Fuel, Nonpoisoned Basket – Radial View 6.3.5-7
Figure 6.3.5-4 KENO-Va Model of NAC-LWT with Poisoned Basket - Radial View 6.3.5-8
Figure 6.3.5-5 NAC-LWT Cask Model with TRIGA Fuel Elements, Nonpoisoned Basket – Axial View 6.3.5-9
Figure 6.3.5-6 Full-Length NAC-LWT Cask Model with TRIGA Fuel Elements, Nonpoisoned Basket – Axial View 6.3.5-10
Figure 6.3.6-1 Intermediate DIDO 42 Basket Module 6.3.6-3
Figure 6.3.6-2 KENO-Va DIDO Fuel in Fuel Tube and Basket Cross-Section 6.3.6-4
Figure 6.3.6-3 KENO-Va Model of NAC-LWT Cask Cross-Section with DIDO Fuel 6.3.6-5
Figure 6.3.6-4 Full Length NAC-LWT Cask Model with 42 DIDO Fuel Assemblies 6.3.6-6
Figure 6.3.7-1 PICTURE Representation of NAC-LWT Cavity with ‘Rectangular’ Array of GA IFM TRIGA Elements 6.3.7-2
Figure 6.3.7-2 PICTURE Representation of NAC-LWT Cavity with ‘Square’ Array of GA IFM TRIGA Elements 6.3.7-2

List of Figures (Continued)

Figure 6.3.7-3 KENO-Va Model of NAC-LWT Cask Cross-Section with GA IFM 6.3.7-3
Figure 6.3.8-1 PICTURE Representation of NAC-LWT Cavity with PULSTAR Assemblies 6.3.8-3
Figure 6.3.8-2 PICTURE Representation of NAC-LWT Cavity with PULSTAR Elements in 4×4 Rod Insert 6.3.8-3
Figure 6.3.8-3 PICTURE Representation of NAC-LWT Cavity with Canned Discrete PULSTAR Elements 6.3.8-4
Figure 6.3.8-4 PICTURE Representation of NAC-LWT Cavity with Canned Homogenized PULSTAR Elements 6.3.8-4
Figure 6.3.8-5 KENO-Va Model of NAC-LWT Cask Cross-Section with 28 MTR 7-Element Basket 6.3.8-5
Figure 6.3.8-6 Finite Length KENO-Va Model of NAC-LWT Cask with 700 PULSTAR Fuel Elements 6.3.8-6
Figure 6.3.9-1 Intermediate ANSTO Basket Module 6.3.9-3
Figure 6.3.9-2 KENO-Va ANSTO Payloads and Basket Cross-Section 6.3.9-4
Figure 6.3.9-3 KENO-Va Model of NAC-LWT Cask Cross-Section with ANSTO Basket 6.3.9-5
Figure 6.4.3-1 Cask Interior Moderator Density and Blocked Cell Study Results 6.4.3-16
Figure 6.4.4-1 Maximum Reactivity Pitch Determination for Damaged BWR Rod Arrays – Water Exterior 6.4.4-8
Figure 6.4.4-2 Maximum Reactivity Pitch Determination for Damaged PWR Rod Arrays – Water Exterior 6.4.4-8
Figure 6.4.4-3 Maximum Reactivity Determination for Homogenized UO_2/Water Mixture 6.4.4-9
Figure 6.4.5-1 Finite Cask Array Reactivity versus Fuel Zirconium Mass (Dry Cask Cavity) 6.4.5-17
Figure 6.4.5-2 Finite Cask Array Reactivity versus H/Zr Ratio (Dry Cask Cavity) 6.4.5-17
Figure 6.4.5-3 Finite Cask Array Reactivity versus Fuel Mass (Study of ZrH Displacement of Fissile Material for a Fixed Fuel Geometry) 6.4.5-18
Figure 6.4.5-4 Intact Fuel Optimum Moderator Study – 70 wt % ^{235}U Various Zirconium Masses 6.4.5-18
Figure 6.4.5-5 Detailed Intact Fuel Optimum Moderator Study – H/Zr Ratio, Fuel Element Characteristics and Location Varied 6.4.5-19
Figure 6.4.5-6 Screened and Sealed Can Optimum Moderator Study – Maximum Reactivity Fuel Configuration – 70 wt% ^{235}U Steel Clad 6.4.5-19
Figure 6.4.5-7 Screened and Sealed Can Debris Height Study – Maximum Reactivity Fuel Configuration – 70 wt% ^{235}U Steel Clad 6.4.5-20
Figure 6.4.5-8 Screened Can – 4 Elements per Can – Maximum Reactivity Fuel Configuration – 70 wt% ^{235}U Steel Clad 6.4.5-20
Figure 6.4.5-9 PICTURE Representation of NAC-LWT Eight Cask Array for Accident Condition TRIGA Unpoisoned Basket Analysis 6.4.5-21
Figure 6.4.5-10 PICTURE Representation of NAC-LWT TRIGA Payload – Fully Loaded Basket Analysis and Mixed TRIGA Loading 6.4.5-22

List of Figures (Continued)

Figure 6.4.5-11 PICTURE Representation of NAC-LWT TRIGA Payload – Reduced Number of Elements in High Fissile Material Element Basket – Top and Bottom Baskets 6.4.5-22
Figure 6.4.5-12 Sample Input File for High Mass HEU TRIGA Analysis – 3 Intact Elements of 175 g ^{235}U at 95 wt % ^{235}U per Basket Opening in Top and Bottom Basket –Accident Array Calculation with 8 Casks 6.4.5-23
Figure 6.4.5-13 Sample Input File for High Mass HEU TRIGA Analysis – 2 Damaged Elements of 175 g ^{235}U at 95 wt % ^{235}U per Basket Opening in Top and Bottom Basket – Accident Array Calculation with 8 Casks 6.4.5-28
Figure 6.4.6-1 HEU Cluster Rod Reactivity versus H/Zr Ratio – Accident Condition Cask Array 6.4.6-9
Figure 6.4.6-2 LEU Cluster Rod Reactivity versus H/Zr Ratio – Accident Condition Cask Array 6.4.6-9
Figure 6.4.6-3 HEU TRIGA Cluster Rod System Reactivity versus Cask Cavity Moderator 6.4.6-10
Figure 6.4.6-4 LEU TRIGA Cluster Rod System Reactivity versus Cask Cavity Moderator 6.4.6-10
Figure 6.4.6-5 TRIGA Cluster Rod Reactivity versus Damaged Fuel Can Moderator (Pref Flood – Dry Cask Cavity) 6.4.6-11
Figure 6.4.9-1 PICTURE Schematic of Modified PULSTAR Fuel Assembly Alignment Configuration 6.4.9-5
Figure 6.4.9-2 PULSTAR Intact Assembly Model Moderator Density Study Graphical Results 6.4.9-6
Figure 6.4.10-1 Spiral Fuel – Moderator Density Plot 6.4.10-7
Figure 6.4.10-2 MOATA Plate Bundle – Moderator Density Plot 6.4.10-8
Figure 6.5.1-1 KENO-Va Validation—27 Group Library Results: Frequency Distribution of k_{eff} Values 6.5.1-6
Figure 6.5.1-2 KENO-Va Validation—27-Group Library Results: k_{eff} versus Enrichment 6.5.1-7
Figure 6.5.1-3 KENO-Va Validation—27-Group Library Results: k_{eff} versus Rod Pitch 6.5.1-8
Figure 6.5.1-4 KENO-Va Validation—27-Group Library Results: k_{eff} versus H/U Volume Ratio 6.5.1-9
Figure 6.5.1-5 KENO-Va Validation—27-Group Library Results: k_{eff} versus Average Group of Fission 6.5.1-10
Figure 6.5.4-1 LEU USLSTATS Output for EALCF 6.5.4-5
Figure 6.5.4-2 k_{eff} versus Fuel Enrichment (LEU) 6.5.4-9
Figure 6.5.4-3 k_{eff} versus Rod Pitch (LEU) 6.5.4-9
Figure 6.5.4-4 k_{eff} versus Fuel Pellet Diameter (LEU) 6.5.4-10
Figure 6.5.4-5 k_{eff} versus Fuel Rod Outside Diameter (LEU) 6.5.4-10
Figure 6.5.4-6 k_{eff} versus Hydrogen/^{235}U Atom Ratio (LEU) 6.5.4-11
Figure 6.5.4-7 k_{eff} versus Soluble Boron Concentration (LEU) 6.5.4-11
Figure 6.5.4-8 k_{eff} versus Cluster Gap Thickness (LEU) 6.5.4-12

List of Figures (Continued)

Figure 6.5.4-9 k_{eff} versus ^{10}B Plate Loading (LEU) 6.5.4-12
Figure 6.5.4-10 k_{eff} versus Energy of Average Neutron Lethargy Causing Fission (LEU) 6.5.4-13
Figure 6.5.4-11 PWR MOX USLSTATS Output for Water to Fuel Volume Ratio 6.5.4-36
Figure 6.5.4-12 Adjusted k_{eff} vs. Energy of Average Neutron Lethargy Causing Fission 6.5.4-41
Figure 6.5.4-13 Adjusted k_{eff} vs. $^{235}U/^{238}U$ Ratio 6.5.4-41
Figure 6.5.4-14 Adjusted k_{eff} vs. $^{238}Pu/^{238}U$ Ratio 6.5.4-42
Figure 6.5.4-15 Adjusted k_{eff} vs. $^{239}Pu/^{238}U$ Ratio 6.5.4-42
Figure 6.5.4-16 Adjusted k_{eff} vs. $^{240}Pu/^{238}U$ Ratio 6.5.4-43
Figure 6.5.4-17 Adjusted k_{eff} vs. $^{241}Pu/^{238}U$ Ratio 6.5.4-43
Figure 6.5.4-18 Adjusted k_{eff} vs. $^{242}Pu/^{238}U$ Ratio 6.5.4-44
Figure 6.5.4-19 Adjusted k_{eff} vs. Water-to-Fuel Volume Ratio 6.5.4-44
Figure 6.5.5-1 k_{eff} versus Fuel Enrichment (MCNP – Research Reactor Fuel) 6.5.5-5
Figure 6.5.5-2 k_{eff} versus Energy of Average Neutron Lethargy Causing Fission (MCNP – Research Reactor Fuel) 6.5.5-5
Figure 6.5.5-3 MCNP Research Reactor Fuel USLSTATS Output for EALCF 6.5.5-6
Figure 6.5.5-4 MCNP Research Reactor Fuel USLSTATS Output for wt% ^{235}U 6.5.5-7
Figure 6.5.6-1 k_{eff} versus Fuel Enrichment (MCNP5 v1.60– Research Reactor Fuel) 6.5.6-6
Figure 6.5.6-2 k_{eff} versus Energy of Average Neutron Lethargy Causing Fission (MCNP5 v1.60– Research Reactor Fuel) 6.5.6-6
Figure 6.5.6-3 MCNP Research Reactor Fuel USLSTATS Output for EALCF 6.5.6-7
Figure 6.5.6-4 MCNP Research Reactor Fuel USLSTATS Output for wt% ^{235}U 6.5.6-8
Figure 6.5.7-1 K_{eff} versus Fuel Enrichment (MCNP – Highly Enriched Uranyl Nitrates) 6.5.7-12
Figure 6.5.7-2 K_{eff} versus Energy of Average Neutron Lethargy Causing Fission (MCNP – Highly Enriched Uranyl Nitrates) 6.5.7-13
Figure 6.5.7-3 MCNP Highly Enriched Uranyl Nitrates USLSTATS Output for EALCF 6.5.7-15
Figure 6.7.1-1 MCNP Model Sketch of the NAC-LWT Cask with PWR MOX/UO_2 Rods 6.7.1-3
Figure 6.7.1-2 VISED Sketch of LWT Radial View – Hex Rod Array– Normal Conditions 6.7.1-4
Figure 6.7.1-3 VISED Sketch of LWT Radial View – Square Rod Pitch – Accident Conditions 6.7.1-5
Figure 6.7.1-4 VISED Sketch of LWT Axial View – Accident Conditions 6.7.1-6
Figure 6.7.1-5 PWR MOX Rod Shipment – Reactivity versus Rod Pitch 6.7.1-12
Figure 6.7.1-6 Moderator Density Study – UO_2 Fuel Material – 3.0 cm Rod Pitch 6.7.1-12
Figure 6.7.1-7 Moderator Density Study – MS Fuel Material – 3.6 cm Rod Pitch 6.7.1-13
Figure 6.7.1-8 Moderator Density Study – PWR MOX ^{241}Pu Fuel Material – 3.6 cm Rod Pitch 6.7.1-13
Figure 6.7.2-1 SLOWPOKE Fuel Element 6.7.2-3
Figure 6.7.2-2 MCNP Model Sketch of the NAC-LWT Cask with SLOWPOKE Fuel Rods 6.7.2-4

List of Figures (Continued)

Figure 6.7.2-3 VISED Sketch of LWT Radial View – Undamaged Fuel 6.7.2-5
Figure 6.7.2-4 VISED Sketch of LWT Axial View – Undamaged Fuel – Normal Conditions 6.7.2-6
Figure 6.7.2-5 SLOWPOKE Moderator Density Study (Percent Full Density Water) .. 6.7.2-13
Figure 6.7.3-1 NRU Fuel Assembly 6.7.3-11
Figure 6.7.3-2 NRX Fuel Assembly 6.7.3-12
Figure 6.7.3-3 NRU Fuel Rod 6.7.3-12
Figure 6.7.3-4 NRX Fuel Rod 6.7.3-13
Figure 6.7.3-5 MCNP NRU Fuel in Fuel Tube Cross-Section (No Flow Tube) 6.7.3-14
Figure 6.7.3-6 MCNP NRX Fuel in Fuel Tube Cross-Section (Caddy) 6.7.3-15
Figure 6.7.3-7 Sketch of NAC-LWT Cask Cross-Section with NRU/NRX Basket 6.7.3-16
Figure 6.7.3-8 Full Length NAC-LWT Cask Sketch with NRU/NRX Basket 6.7.3-17
Figure 6.7.3-9 VISED Maximum Reactivity NRU HEU Fuel (Rod Segments) 6.7.3-18
Figure 6.7.3-10 NRU HEU Assembly Moderator Density Study Graphical Results 6.7.3-19
Figure 6.7.3-11 NRX HEU Assembly Moderator Density Study Graphical Results 6.7.3-19
Figure 6.7.3-12 NRU HEU Fuel Rod Pitch Study Graphical Results 6.7.3-20
Figure 6.7.3-13 NRX HEU Fuel Rod Pitch Study Graphical Results 6.7.3-20
Figure 6.7.3-14 NRU HEU Number of Rod Sections (Broken Rods) Graphical Results 6.7.3-21
Figure 6.7.3-15 NRX HEU Number of Rod Sections (Broken Rods) Graphical Results 6.7.3-21
Figure 6.7.3-16 NRU HEU Rod Section (Broken Rods) Moderator Density Study Graphical Results 6.7.3-22
Figure 6.7.3-17 NRX HEU Rod Section (Broken Rods) Moderator Density Study Graphical Results 6.7.3-22
Figure 6.7.3-18 Sample NRX MCNP5 Input File for Normal Conditions 6.7.3-23
Figure 6.7.3-19 Sample NRU MCNP5 Input File for Accident Conditions 6.7.3-26
Figure 6.7.3-20 NRU HEU Sample Model for Rod Section Removal 6.7.3-29
Figure 6.7.3-21 Sample Model Images (VISED) for Clad Removed in Fuel Center Region (All Rods Clad Removed) 6.7.3-30
Figure 6.7.3-22 Sample Model Images (VISED) for Clad Removed on Center Fuel Rod Only (X-Y Slice) 6.7.3-31
Figure 6.7.3-23 Sample Model Image (VISED) X-Y Slice for Caddy Model NRU HEU 6.7.3-32
Figure 6.7.4-1 VISED X-Z Cross-Section of NAC-LWT with HEUNL 6.7.4-10
Figure 6.7.4-2 VISED X-Z Cross-Section of HEUNL Container Detail 6.7.4-10
Figure 6.7.4-3 VISED X-Y Cross-Section of NAC-LWT with HEUNL 6.7.4-11
Figure 6.7.4-4 Axial Sketch of NAC-LWT with HEUNL 6.7.4-12
Figure 6.7.4-5 Radial Sketch of NAC-LWT with HEUNL 6.7.4-13
Figure 6.7.4-6 Axial Sketch of HEUNL Container 6.7.4-14
Figure 6.7.4-7 Reactivity Results by HEUNL [redacted] H/U Ratio 6.7.4-15
Figure 6.7.4-8 Reactivity Results by HEUNL [redacted] H/U Ratio 6.7.4-15
Figure 6.7.4-9 VISED X-Z Cross-Section of HEUNL with Alternating Shift 6.7.4-16

List of Figures (Continued)

Figure 6.7.4-10 VISED X-Z Cross-Section of HEUNL with Inward Shift 6.7.4-16
Figure 6.7.4-11 Cask Cavity Moderator Study Reactivity Results for HEUNL 6.7.4-16
Figure 6.7.5-1 MCNP Model Sketch of the NAC-LWT Cask with SLOWPOKE Fuel Core 6.7.5-3
Figure 6.7.5-2 VISED Sketch of LWT Radial View – SLOWPOKE Fuel Core 6.7.5-4
Figure 6.7.5-3 VISED Sketch of LWT Axial View – SLOWPOKE Fuel Core – Normal Conditions – Cask Top Portion 6.7.5-5
Figure 6.7.5-4 VISED XY Slice of SLOWPOKE Fuel Core with Spread, Nominal Rod Pitch Configuration 6.7.5-10
Figure 6.7.5-5 VISED XY Slice of SLOWPOKE Fuel Core with Center Cells Filled, Maximum Rod Pitch Configuration 6.7.5-11
Figure 6.7.5-6 SLOWPOKE Fuel Core, Fuel Rod Pitch Study Results 6.7.5-12
Figure 6.7.5-7 SLOWPOKE Fuel Core Moderator Density Study Results (Percent Full Density Water) 6.7.5-13
Figure 6.7.5-8 VISED XZ Slice of SLOWPOKE Fuel Core with Licensed Basket Model 6.7.5-14
Figure 6.7.6-1 EFN, Moly and Booster Rod Illustrations 6.7.6-8
Figure 6.7.6-2 Caddy NRU HEU Sample Model – 36 Rods – 3 Center Rods 6.7.6-9
Figure 6.7.6-3 Caddy NRU HEU Sample Model – 37 Rods – 1 Center Rod 6.7.6-9
Figure 6.7.6-4 Caddy NRU HEU Sample Model – 37 Rods Hex Array 6.7.6-10
Figure 6.7.6-5 Caddy NRU Complete Clad Removal k_{eff}– Pattern and # Rod Segment Study 6.7.6-10
Figure 6.7.6-6 Caddy NRU Clad Removal versus Minimum Clad k_{eff} Study 6.7.6-11
Figure 6.7.6-7 NRU to EFN Comparison k_{eff} Study 6.7.6-11
Figure 6.7.6-8 Moly Rod Segment k_{eff} Study 6.7.6-12
Figure 6.7.6-9 Moly Inner Alternate Model with Caddy Moved Out 6.7.6-13
Figure 6.7.6-10 Moly Inner Alternate Model with Rod Segments Moved Out 6.7.6-13
Figure 6.7.6-11 Booster Rod Clad Removal k_{eff}– Pattern and # Rod Segment Study 6.7.6-14
Figure 6.7.6-12 Booster Rod Maximum Reactivity Segment Configuration (57 Rods Segments) 6.7.6-14
Figure 6.7.6-13 Caddy NRU Moderator Density Study 6.7.6-15
Figure 6.7.6-14 Booster Moderator Density Study 6.7.6-15
Figure 6.7.7-1 VISED Sketch of LWT Radial View – Normal Conditions (Cask and Basket Detail) 6.7.7-3
Figure 6.7.7-2 VISED Sketch of LWT Axial View – Normal Conditions 6.7.7-4
Figure 6.7.7-3 LANL MOX Fuel Rods Moderator Density Study 6.7.7-11
Figure 6.7.7-4 LANL MOX Fuel Rods Damaged Fuel Height Study 6.7.7-12
Figure 6.7.7-5 LANL MOX Fuel Rods Damaged Fuel Underloading Rod Loading Patterns 6.7.7-13
Figure 6.7.7-6 LANL MOX Fuel Rods Damaged Fuel Underloading Results – ROD1063 at 6 Tubes 6.7.7-14

List of Figures (Continued)

Figure 6.7.7-7 LANL MOX Fuel Rods Damaged Fuel Underloading Results – NIS5 at 4 Tubes and 530-000 at 1 Tube 6.7.7-15
Figure 6.7.7-8 LANL MOX Fuel Rods Moderator Density Study – Damaged Fuel 6.7.7-16

Note: See separate Section 6.6 for Appendices to this chapter.

List of Tables

Table 6.2.1-1 B&W, CE and Westinghouse PWR Fuel Assembly Data 6.2.1-2
Table 6.2.1-2 Exxon/ANF PWR Fuel Assembly Data 6.2.1-3
Table 6.2.2-1 GE BWR Fuel Assembly Data 6.2.2-2
Table 6.2.2-2 Exxon BWR Fuel Assembly Data 6.2.2-2
Table 6.2.2-3 BWR Fuel Assembly Data 6.2.2-3
Table 6.2.3-1 Characteristics of Design Basis HEU MTR Fuels 6.2.3-3
Table 6.2.3-2 Characteristics of Design Basis LEU MTR Fuel 6.2.3-6
Table 6.2.3-3 Characteristics of Design Basis MEU MTR Fuel 6.2.3-7
Table 6.2.5-1 Characteristics of Design Basis TRIGA Fuels Elements 6.2.5-4
Table 6.2.5-2 Characteristics of Design Basis TRIGA Fuels -Fuel Compositions 6.2.5-5
Table 6.2.6-1 Characteristics of TRIGA Fuel Cluster Rods 6.2.6-3
Table 6.2.6-2 Characteristics of TRIGA Fuel Cluster Rods - Fuel Compositions 6.2.6-3
Table 6.2.7-1 Characteristics of Design-Basis Metallic Fuel Rods 6.2.7-2
Table 6.2.8-1 Characteristics of DIDO Fuel Assemblies 6.2.8-3
Table 6.2.8-2 DIDO Fuel Assembly Tolerances 6.2.8-3
Table 6.2.9-1 GA IFM RERTR/TRIGA Fuel Parameters 6.2.9-3
Table 6.2.9-2 GA IFM RERTR/TRIGA Fuel Composition 6.2.9-3
Table 6.2.9-3 GA IFM RERTR/TRIGA Clad Composition 6.2.9-3
Table 6.2.9-4 GA IFM Elemental Constituents 6.2.9-4
Table 6.2.9-5 GA IFM Primary and Secondary Enclosure Dimensions 6.2.9-4
Table 6.2.10-1 PULSTAR Fuel Characteristics 6.2.10-3
Table 6.2.11-1 Spiral Fuel Assemblies Characteristics 6.2.11-3
Table 6.2.11-2 Spiral Fuel Assemblies Tolerances Applied 6.2.11-3
Table 6.2.12-1 MOATA Plate Bundle Characteristics 6.2.12-3
Table 6.2.12-2 MOATA Plate Bundle Tolerances Applied 6.2.12-4
Table 6.3.1-1 Compositions and Number Densities Used in the Criticality Analysis of PWR Fuel Assemblies 6.3.1-6
Table 6.3.2-1 Compositions and Number Densities Used in the Criticality Analysis of BWR Fuel Assemblies 6.3.2-4
Table 6.3.3-1 Composition Densities Used in Criticality Analysis of MTR Fuel 6.3.3-9
Table 6.3.4-1 Compositions and Number Densities Used in the Criticality Analysis of PWR and BWR Rods 6.3.4-10
Table 6.3.5-1 Sample Compositions and Number Densities Used in Criticality Analysis of TRIGA Fuel Elements 6.3.5-11
Table 6.3.5-2 Sample Composition and Number Densities Used in Criticality Analysis of TRIGA Fuel Cluster Rods 6.3.5-12
Table 6.3.6-1 DIDO Fuel Parameters 6.3.6-7
Table 6.3.6-2 DIDO Basket and Cask Parameters 6.3.6-8
Table 6.3.6-3 Composition Densities Used in Criticality Analysis of DIDO Fuel 6.3.6-9
Table 6.3.7-1 Composition Densities Used in Criticality Analysis of GA IFM 6.3.7-4
Table 6.3.8-1 Composition Densities Used in Criticality Analysis of PULSTAR Fuel 6.3.8-7
Table 6.3.9-1 ANSTO Basket and Cask Parameters 6.3.9-6

List of Tables (Continued)

Table 6.3.9-2 Composition Densities Used in Criticality Analysis of ANSTO Basket Payloads 6.3.9-7
Table 6.4.1-1 PWR Fuel Assembly at 3.7% Enrichment Most Reactive Assembly Results 6.4.1-5
Table 6.4.1-2 PWR Fuel Assembly at 3.5% Enrichment Most Reactive Assembly Results 6.4.1-6
Table 6.4.1-3 Westinghouse 17×17 OFA Assembly Geometric Tolerances and Mechanical Perturbations Results 6.4.1-7
Table 6.4.1-4 Exxon 15×15 Geometric Tolerances and Mechanical Perturbations Results 6.4.1-7
Table 6.4.1-5 Reactivity with Design Basis PWR Fuel vs. Basket Moderator Density, Normal Conditions 6.4.1-8
Table 6.4.1-6 Reactivity with Design Basis PWR Fuel vs. Basket Moderator Density, Accident Conditions 6.4.1-9
Table 6.4.1-7 PWR Single Package 10 CFR 71.55(b)(3) Evaluation k_{eff} Summary for 3.5% Enrichment 6.4.1-10
Table 6.4.1-8 PWR Single Package 10 CFR 71.55(b)(3) Evaluation k_{eff} Summary for 3.7% Enrichment 6.4.1-10
Table 6.4.2-1 BWR Most Reactive Assembly Analysis Results 6.4.2-5
Table 6.4.2-2 BWR Basket Tolerances 6.4.2-6
Table 6.4.2-3 BWR Fuel Assembly Geometric Tolerances and Mechanical Perturbations Results 6.4.2-7
Table 6.4.2-4 Reactivity with BWR Fuel vs. Basket Moderator Density, Normal Conditions, Array of 20 Casks 6.4.2-8
Table 6.4.2-5 Reactivity with BWR Fuel vs. Basket Moderator Density, Accident Conditions, Array of 20 Casks 6.4.2-9
Table 6.4.2-6 BWR Single Package 10 CFR 71.55(b)(3) Evaluation k_{eff} Summary 6.4.2-10
Table 6.4.3-1 Fuel/Basket Unit Cell k_{eff} versus MTR Fuel Element Type 6.4.3-17
Table 6.4.3-2 Cask k_{eff} versus Fuel Plate Spacing 6.4.3-17
Table 6.4.3-3 MTR Basket Geometric Tolerances 6.4.3-18
Table 6.4.3-4 MTR Basket/Intact Fuel Element Geometric Tolerances and Mechanical Perturbations Results 6.4.3-18
Table 6.4.3-5 MTR Basket/Optimally Spaced Fuel Plates Geometric Tolerances and Mechanical Perturbations Results 6.4.3-18
Table 6.4.3-6 Reactivity with MTR Fuel vs. Basket Moderator Density, Normal Conditions, Dry Exterior, Infinite Array of Casks 6.4.3-19
Table 6.4.3-7 Reactivity with MTR Fuel vs. Basket Moderator Density, Accident Conditions, Dry Exterior, Infinite Array of Casks 6.4.3-20
Table 6.4.3-8 MTR Fuel Element Rotation Perturbation Study 6.4.3-21
Table 6.4.3-9 MTR Basket/Center Fuel Element Perturbation Study 6.4.3-21
Table 6.4.3-10 Mixed HEU/LEU MTR Fuel Perturbation Study 6.4.3-21
Table 6.4.3-11 MTR Single Package 10 CFR 71.55(b)(3) Evaluation k_{eff} Summary 6.4.3-21

List of Tables (Continued)

Table 6.4.3-12 MTR Fuel Uranium Weight Percentage Perturbations 6.4.3-22
Table 6.4.3-13 MEU MTR Unit Cell k_{eff} Comparison (Enrichment Variation) 6.4.3-22
Table 6.4.3-14 MEU MTR Basket k_{eff} Comparison (Plate Location) 6.4.3-23
Table 6.4.3-15 Physical Characteristics of McMaster MTR Fuels 6.4.3-23
Table 6.4.3-16 Reactivity of Various Parameter Variations for 10-Plate McMaster Element 6.4.3-24
Table 6.4.3-17 Reactivity of Various Parameter Variations for 18-Plate McMaster Element 6.4.3-24
Table 6.4.3-18 MTR Limiting Fuel Configurations 6.4.3-25
Table 6.4.3-19 Initial Fuel Configurations for MTR Bounding Evaluations 6.4.3-25
Table 6.4.3-20 Reactivity Impact of Parameter Variations in the Finite Cask Model 6.4.3-26
Table 6.4.3-21 Baseline MTR Bounding Configurations 6.4.3-27
Table 6.4.3-22 High Fissile Mass MTR Fuel – Bounding Parameter Analysis 6.4.3-28
Table 6.4.3-23 MTR High Fissile Content Loading Evaluation (460 g ^{235}U) 6.4.3-29
Table 6.4.3-24 LEU MTR Active Fuel Width Increase Evaluation 6.4.3-29
Table 6.4.3-25 Summary of LEU MTR Bounding Configurations 6.4.3-30
Table 6.4.3-26 Summary of Previous Bounding Configurations for Use in High Mass LEU Calculations 6.4.3-31
Table 6.4.3-27 High Fissile Mass LEU (32 g ^{235}U per Plate) Analysis Results 6.4.3-32
Table 6.4.3-28 LEU High Fissile Mass Bounding Configuration 6.4.3-33
Table 6.4.3-29 Cask Interior Moderator Density and Blocked Cell Study Results 6.4.3-34
Table 6.4.3-30 LEU MTR Element Specification Studies (23.5g ^{235}U per Plate) 6.4.3-35
Table 6.4.4-1 NAC-LWT Cask with 25 PWR Rods, k_{eff} versus Fuel Rod Pitch, 5.0 wt % ^{235}U Initial Enrichment 6.4.4-10
Table 6.4.4-2 Reactivity with 25 PWR Rods vs. Basket Moderator Density, Normal Conditions, Infinite Array of Casks 6.4.4-11
Table 6.4.4-3 Reactivity with 25 PWR Rods vs. Basket Moderator Density, Accident Conditions, Infinite Array of Casks 6.4.4-12
Table 6.4.4-4 PWR Rods, Single Package 10 CFR 71.55(b)(3) Evaluation k_{eff} Summary 6.4.4-13
Table 6.4.4-5 NAC-LWT Cask with 25 BWR rods, k_{eff} versus Fuel Rod Pitch, 5.0 wt % ^{235}U Initial Enrichment 6.4.4-13
Table 6.4.4-6 Reactivity with 25 BWR Rods vs. Basket Moderator Density, Normal Conditions, Infinite Array of Casks 6.4.4-14
Table 6.4.4-7 Reactivity with 25 BWR Rods vs. Basket Moderator Density, Accident Conditions, Infinite Array of Casks 6.4.4-15
Table 6.4.4-8 BWR Rods, Single Package 10 CFR 71.55(b)(3) Evaluation k_{eff} Summary 6.4.4-16
Table 6.4.4-9 Maximum Reactivity Pitch Determination for 25 BWR Rods – Water Exterior 6.4.4-16
Table 6.4.4-10 Maximum Reactivity Pitch Determination for 25 PWR Rods – Water Exterior 6.4.4-17
Table 6.4.4-11 Maximum Reactivity Pitch Determination for 37 BWR Rods – Water Exterior 6.4.4-17

List of Tables (Continued)

Table 6.4.4-12 Maximum Reactivity Pitch Determination for 37 PWR Rods – Water Exterior 6.4.4-18
Table 6.4.4-13 Maximum Reactivity Pitch Determination for 61 BWR Rods – Water Exterior 6.4.4-18
Table 6.4.4-14 Maximum Reactivity Pitch Determination for 61 PWR Rods – Water Exterior 6.4.4-19
Table 6.4.4-15 Maximum Reactivity Pitch Determination for 61 BWR Rods – Void Exterior 6.4.4-19
Table 6.4.4-16 Maximum Reactivity Pitch Determination for 61 PWR Rods – Void Exterior 6.4.4-20
Table 6.4.4-17 Maximum Reactivity Pitch Determination for 61 BWR Rods – Void Exterior and Preferential Flooding of Cask Cavity 6.4.4-20
Table 6.4.4-18 Maximum Reactivity Pitch Determination for 61 PWR Rods – Void Exterior and Preferential Flooding of Cask Cavity 6.4.4-21
Table 6.4.4-19 Damaged Rod Array Area Calculation – Flooded Cask Cavity 6.4.4-21
Table 6.4.4-20 Damaged Rod Array Area Calculation – Preferential Flooding 6.4.4-22
Table 6.4.4-21 Maximum Reactivity Determination for Homogenized UO_2/ Water Mixture 6.4.4-22
Table 6.4.4-22 Homogenized UO_2/Water Cask Cavity Moderator Density Study Results - Void Exterior 6.4.4-22
Table 6.4.4-23 Homogenized UO_2/Water Cask Cavity Moderator Density Study Results - Water Exterior 6.4.4-23
Table 6.4.4-24 Homogenized UO_2/Water Exterior Moderator Density Study Results – Void Cask Cavity 6.4.4-23
Table 6.4.4-25 Homogenized UO_2/Water Exterior Moderator Density Study Results – Water Cask Cavity 6.4.4-24
Table 6.4.4-26 Single Cask Containment Reflected Results Comparison for Homogenized UO_2/Water Model 6.4.4-24
Table 6.4.5-1 Parametric Study – Fuel / Basket k-infinity versus TRIGA Fuel Element Type, Nonpoisoned Basket 6.4.5-34
Table 6.4.5-2 Parametric Study – Cask k_{eff} versus TRIGA Fuel Element Type, Poisoned Basket 6.4.5-35
Table 6.4.5-3 Axially Infinite Cask k_{eff} with TRIGA Fuel Elements- Fuel Element Placement Perturbations, Nonpoisoned Basket 6.4.5-36
Table 6.4.5-4 Axially Infinite Cask k_{eff} with TRIGA Fuel Elements - Fuel Element Placement Perturbations, Poisoned Basket 6.4.5-36
Table 6.4.5-5 Axially Infinite Cask k_{eff} with TRIGA Fuel Elements – Basket Manufacturing Tolerance Perturbations, Nonpoisoned Basket 6.4.5-37
Table 6.4.5-6 Axially Infinite Cask k_{eff} with TRIGA Fuel Elements – Basket Manufacturing Tolerance Perturbations, Poisoned Basket 6.4.5-37
Table 6.4.5-7 Screened Can Preferential Flooding and Partial Loading Reactivity Evaluations for TRIGA Fuel Elements, Nonpoisoned and Poisoned Baskets 6.4.5-38

List of Tables (Continued)

Table 6.4.5-8 Sealed Can Preferential Flooding and Partial Loading Reactivity Evaluations for TRIGA Fuel Elements, Nonpoisoned and Poisoned Baskets 6.4.5-39
Table 6.4.5-9 Summary of Most Reactive Configurations, TRIGA Fuel Elements, Nonpoisoned Basket 6.4.5-40
Table 6.4.5-10 Summary of Most Reactive Configurations, TRIGA Fuel Elements, Poisoned Basket 6.4.5-40
Table 6.4.5-11 Reactivity Results for TRIGA Fuel Elements, Sealed Cans, Normal Conditions, Nonpoisoned Basket 6.4.5-41
Table 6.4.5-12 Reactivity Results for TRIGA Fuel Elements, Sealed Cans, Accident Conditions, Nonpoisoned Basket 6.4.5-42
Table 6.4.5-13 Reactivity Results for TRIGA Fuel Elements, Screened Cans, Normal Conditions, Poisoned Basket 6.4.5-43
Table 6.4.5-14 Reactivity Results for TRIGA Fuel Elements, Screened Cans, Accident Conditions, Poisoned Basket 6.4.5-44
Table 6.4.5-15 Single Package 10 CFR 71.55(b)(3) Evaluation k_{eff} Summary, TRIGA Fuel Element, Nonpoisoned Basket 6.4.5-45
Table 6.4.5-16 Single Package 10 CFR 71.55(b)(3) Evaluation k_{eff} Summary, TRIGA Fuel Element, Poisoned Basket 6.4.5-45
Table 6.4.5-17 Fuel Element Physical Characteristics Evaluation 6.4.5-46
Table 6.4.5-18 Element Variation to Reduce k_s Below 0.95 ..... 6.4.5-47
Table 6.4.5-19 General Model Configuration – Dry to Wet System Reactivity Changes, 70 wt% ^{235}U Stainless Steel Clad Fuel – Nominal Fuel Parameters 6.4.5-47
Table 6.4.5-20 Primary Fuel Type Reactivity Comparison – Accident Conditions Eight-Cask Array (No Cans) 6.4.5-48
Table 6.4.5-21 Normal Condition Maximum System Reativities (No Cans) 6.4.5-48
Table 6.4.5-22 Increased Enrichment for 20 wt % and 70 wt % TRIGA Fuel Elements 6.4.5-49
Table 6.4.5-23 Increased ^{235}U Mass TRIGA Fuel Elements 6.4.5-49
Table 6.4.5-24 Limited Quantity Study for LEU Fissile Mass Increase 6.4.5-49
Table 6.4.5-25 95 wt % TRIGA Fuel Elements 6.4.5-49
Table 6.4.5-26 TRIGA Damaged Fuel Canister – Sealed Canister in Top and Bottom Basket Module 6.4.5-50
Table 6.4.5-27 TRIGA Fuel Element Pitch/Screened Canister Evaluation 6.4.5-50
Table 6.4.5-28 TRIGA Structural Intact Fuel Canister – Screened Canister in Top and Bottom Basket Module 6.4.5-50
Table 6.4.5-29 TRIGA Cluster Rod Study in TRIGA Fuel Element Shipment 6.4.5-51
Table 6.4.6-1 Cask k_{eff} with TRIGA Fuel Cluster Rods – Fuel Rod Placement Perturbations, Nonpoisoned Basket 6.4.6-12
Table 6.4.6-2 Cask k_{eff} with TRIGA Fuel Cluster Rods – Fuel Rod Placement Perturbations, Poisoned Basket 6.4.6-12

List of Tables (Continued)

Table 6.4.6-3 Axially Infinite Cask k_{eff} with TRIGA Fuel Cluster Rods – Basket and Insert Manufacturing Tolerance Perturbations, Nonpoisoned Basket 6.4.6-13
Table 6.4.6-4 Axially Infinite Cask k_{eff} with TRIGA Fuel Cluster Rods – Basket and Insert Manufacturing Tolerance Perturbations, Poisoned Basket 6.4.6-13
Table 6.4.6-5 Sealed Can Preferential Flooding and Partial Loading Reactivity Evaluations for TRIGA Fuel Rod Clusters, Nonpoisoned Basket 6.4.6-14
Table 6.4.6-6 Sealed Can Preferential Flooding and Partial Loading Reactivity Evaluations for TRIGA Fuel Rod Clusters, Poisoned Basket 6.4.6-14
Table 6.4.6-7 Summary of Most Reactive Configurations, TRIGA Fuel Cluster Rods, Nonpoisoned Basket 6.4.6-15
Table 6.4.6-8 Summary of Most Reactive Configurations, TRIGA Fuel Cluster Rods, Poisoned Basket 6.4.6-15
Table 6.4.6-9 Reactivity Results for TRIGA Fuel Cluster Rods, Sealed Cans, Normal Conditions, Nonpoisoned Basket 6.4.6-16
Table 6.4.6-10 Reactivity Results for TRIGA Fuel Cluster Rods, Sealed Can, Accident Conditions, Nonpoisoned Basket 6.4.6-17
Table 6.4.6-11 Reactivity Results for TRIGA Fuel Cluster Rods, Sealed Cans, Normal Conditions, Poisoned Basket 6.4.6-18
Table 6.4.6-12 Reactivity Results for TRIGA Fuel Cluster Rods, Sealed Cans, Accident Conditions, Poisoned Basket 6.4.6-19
Table 6.4.6-13 Single Package 10 CFR 71.55(b)(3) Evaluation k_{eff} Summary, TRIGA Fuel Cluster Rod, Nonpoisoned Basket 6.4.6-20
Table 6.4.6-14 Single Package 10 CFR 71.55(b)(3) Evaluation k_{eff} Summary, TRIGA Fuel Cluster Rod, Poison Basket 6.4.6-20
Table 6.4.6-15 Increased Fuel Dimensional Parameter k_{eff} Summary, TRIGA Fuel Cluster Rod, Nonpoisoned Basket 6.4.6-20
Table 6.4.6-16 TRIGA Cluster Rod Reactivities – Accident Conditions 6.4.6-21
Table 6.4.6-17 TRIGA Cluster Rod Reactivities – Normal Conditions 6.4.6-21
Table 6.4.6-18 TRIGA Cluster Rod Reactivities – Single Cask with Containment Fully Water Reflected 6.4.6-21
Table 6.4.6-19 Summary of TRIGA Cluster Rod Maximum Reactivity Configuration .. 6.4.6-21
Table 6.4.6-20 Licensing Parameters for TRIGA Cluster Rods 6.4.6-22
Table 6.4.7-1 Normal Condition HEU, LEU, MEU DIDO Evaluation 6.4.7-7
Table 6.4.7-2 HEU DIDO Accident Evaluation – Radial Shift and Exterior Moderator Density Variation 6.4.7-8
Table 6.4.7-3 DIDO Heat Shunt and Aluminum Shell Evaluation Results 6.4.7-8
Table 6.4.7-4 DIDO Basket Geometric Tolerance Study Results 6.4.7-8
Table 6.4.7-5 DIDO Fuel Assembly Tolerance Study Results 6.4.7-9
Table 6.4.7-6 DIDO Fuel Maximum Reactivity Combinations 6.4.7-10
Table 6.4.7-7 Moderator Density Study for the Infinite Array of Casks (Nominal Fuel and Basket Configuration) 6.4.7-11

List of Tables (Continued)

Table 6.4.7-8 DIDO Single Package 10 CFR 71.55(b)(3) Evaluation k_{eff} Summary 6.4.7-12
Table 6.4.7-9 DIDO Fuel Assembly Tolerance Study Results (Reduced Clad Thickness) 6.4.7-12
Table 6.4.7-10 DIDO Fuel Maximum Reactivity Combinations (Reduced Clad Thickness) 6.4.7-12
Table 6.4.7-11 DIDO Fuel Maximum Reactivity Combinations (Reduced Clad and Maximum Pitch) 6.4.7-13
Table 6.4.7-12 DIDO Bounding Configurations 6.4.7-13
Table 6.4.8-1 GA IFM Payload Evaluation Result Summary 6.4.8-5
Table 6.4.8-2 GA IFM TRIGA Rectangular Array Pitch Evaluation Result Summary .. 6.4.8-6
Table 6.4.8-3 GA IFM TRIGA Square Array Pitch Evaluation Result Summary 6.4.8-6
Table 6.4.8-4 GA IFM Interior Moderator Density Evaluation Result Summary 6.4.8-7
Table 6.4.8-5 GA IFM HTGR Matrix Moderator Density Evaluation Result Summary. 6.4.8-8
Table 6.4.8-6 GA IFM Exterior Moderator Density Evaluation Result Summary 6.4.8-9
Table 6.4.8-7 GA IFM Partial Flooding Comparison Result Summary 6.4.8-10
Table 6.4.8-8 GA IFM Partial Flooding Interior Moderator Density, Void Exterior Result Summary 6.4.8-10
Table 6.4.8-9 GA IFM Partial Flooding Interior Moderator Density, Water Exterior Result Summary 6.4.8-11
Table 6.4.8-10 GA IFM Partial Flooding Exterior Moderator Density, Void Interior Result Summary 6.4.8-12
Table 6.4.8-11 GA IFM Partial Flooding Exterior Moderator Density, Water Interior Result Summary 6.4.8-13
Table 6.4.8-12 GA IFM Partial Flooding Single Cask Result Comparison 6.4.8-13
Table 6.4.8-13 GA IFM Damaged TRIGA Fuel Result Summary 6.4.8-14
Table 6.4.9-1 PULSTAR Intact Assembly Shift Results 6.4.9-7
Table 6.4.9-2 PULSTAR Intact Assembly Mechanical Perturbation Results 6.4.9-7
Table 6.4.9-3 PULSTAR Intact Assembly Lattice Moderator Ratio Results 6.4.9-8
Table 6.4.9-4 PULSTAR Canned Intact Element Results 6.4.9-8
Table 6.4.9-5 PULSTAR Canned Homogenized Element Results 6.4.9-9
Table 6.4.9-6 PULSTAR Maximum Reactivity Summary 6.4.9-9
Table 6.4.10-1 Spiral Fuel Assembly – Base Data Comparisons 6.4.10-9
Table 6.4.10-2 Spiral Fuel Assembly – Basket Tolerance Evaluations 6.4.10-10
Table 6.4.10-3 Spiral Fuel Assembly – Fuel Tolerance Evaluations 6.4.10-11
Table 6.4.10-4 Spiral Fuel Assembly – Moderator Density Variations 6.4.10-12
Table 6.4.10-5 Spiral Fuel Assembly – Maximum Reactivity Case Summary 6.4.10-13
Table 6.4.10-6 MOATA Plate Bundle – Base Data Comparisons 6.4.10-14
Table 6.4.10-7 MOATA Plate Bundle – Basket Tolerance Evaluations 6.4.10-15
Table 6.4.10-8 MOATA Plate Bundle – Fuel Tolerance Evaluations 6.4.10-16
Table 6.4.10-9 MOATA Plate Bundle – Moderator Density Variations 6.4.10-17
Table 6.4.10-10 MOATA Plate Bundle – Maximum Reactivity Case Summary 6.4.10-18
Table 6.4.11-1 DIDO/ANSTO Basket Module Replacement 6.4.11-5

List of Tables (Continued)

Table 6.4.11-2 DIDO/ANSTO Mixed Payload Analysis Results 6.4.11-5
Table 6.4.11-3 DIDO/ANSTO Basket Plate Separation Evaluation 6.4.11-6
Table 6.4.11-4 DIDO/ANSTO Basket DFC Addition 6.4.11-6
Table 6.4.11-5 DIDO/ANSTO Basket Preferential Flood Analysis 6.4.11-7
Table 6.4.11-6 DIDO/ANSTO Basket Cask Cavity Moderator Density Study 6.4.11-7
Table 6.4.11-7 DIDO/ANSTO Basket Segmented Plate Study 6.4.11-7
Table 6.5.1-1 KENO-Va and 27-Group Library Validation Statistics 6.5.1-11
Table 6.5.2-1 Criticality Results for High Enrichment Uranium Systems 6.5.2-3
Table 6.5.4-1 LEU Range of Applicability for Complete Set of 186 Benchmark Experiments 6.5.4-7
Table 6.5.4-2 LEU Correlation Coefficients and USLs for Benchmark Experiments 6.5.4-7
Table 6.5.4-3 LEU MCNP Validation Statistics 6.5.4-14
Table 6.5.4-4 PWR MOX Range of Applicability for Complete Set of 59 Benchmark Experiments 6.5.4-38
Table 6.5.4-5 PWR MOX Correlation Coefficients and USLs for Benchmark Experiments 6.5.4-39
Table 6.5.4-6 MCNP Validation Statistics 6.5.4-45
Table 6.5.5-1 MCNP Benchmark Configurations for Research Reactor Fuel Benchmarks 6.5.5-8
Table 6.5.5-2 Research Reactor Fuel Benchmark K_{eff}'s and Uncertainties 6.5.5-12
Table 6.5.5-3 MCNP Criticality Results Research Reactor Fuel Benchmarks 6.5.5-13
Table 6.5.5-4 Range of Applicability and Excel Generated Correlation Coefficients of Research Reactor Fuel Benchmarks 6.5.5-15
Table 6.5.5-5 MCNP Research Reactor Fuel USLSTATS Generated USLs for Benchmark Experiments 6.5.5-15
Table 6.5.6-1 MCNP5 v1.60 Benchmark Configurations for Research Reactor Fuel Benchmarks 6.5.6-9
Table 6.5.6-2 Research Reactor Fuel Benchmark K_{eff}'s and Uncertainties (MCNP5 v1.60 Validation) 6.5.6-13
Table 6.5.6-3 MCNP5 v1.60 Criticality Results Research Reactor Fuel Benchmarks 6.5.6-14
Table 6.5.6-4 MCNP5 v1.60 Range of Applicability and Excel Generated Correlation Coefficients of Research Reactor Fuel Benchmarks 6.5.6-16
Table 6.5.6-5 MCNP5 v1.60 Research Reactor Fuel USLSTATS Generated USLs for Benchmark Experiments 6.5.6-16
Table 6.5.6-6 MCNP6.2 Validated Cross-Section Libraries 6.5.6-17
Table 6.5.6-7 MCNP6.2 Criticality Results 6.5.6-18
Table 6.5.6-8 MCNP6.2 Research Reactor Fuel USLSTATS Generated USLs for Benchmark Experiments 6.5.6-20
Table 6.5.7-1 Highly Enriched Uranyl Nitrates Benchmark K_{eff}'s and Uncertainties 6.5.7-4
Table 6.5.7-2 MCNP Criticality Results Highly Enriched Uranyl Nitrates Benchmarks 6.5.7-8
Table 6.5.7-3 Range of Parameters and Correlation Coefficients for Highly Enriched Uranyl Nitrates Benchmarks 6.5.7-17

List of Tables (Continued)

Table 6.5.7-4 MCNP Highly Enriched Uranyl Nitrates – USLSTATS Generated USLs for Benchmark Experiments 6.5.7-17
Table 6.5.7-5 MCNP Highly Enriched Uranyl Nitrates – Area of Applicability for Benchmark Experiments 6.5.7-17
Table 6.5.7-6 Highly Enriched Uranyl Nitrates Validated Cross-Section Libraries 6.5.7-18
Table 6.7.1-1 PWR MOX Fuel Analysis Compositions and Number Densities 6.7.1-7
Table 6.7.1-2 PWR MOX Fuel Analysis Isotope Weight Fraction 6.7.1-7
Table 6.7.1-3 PWR MOX Rod Shipment – Reactivity as a Function of Geometry and Material 6.7.1-14
Table 6.7.1-4 PWR MOX Fuel Shipment – Fuel Rod Pitch Study 6.7.1-15
Table 6.7.1-5 PWR MOX Fuel Shipment – Optimum Moderator Study Maximum Reactivity Summary 6.7.1-15
Table 6.7.1-6 PWR MOX Fuel Shipment Reactivity Summary for Single Cask Containment Fully Reflected Cases 6.7.1-16
Table 6.7.1-7 PWR MOX Fuel Shipment Reactivity Summary for Normal Condition Array Cases 6.7.1-16
Table 6.7.1-8 PWR MOX Fuel Shipments – Summary of Maximum Reactivity Configurations 6.7.1-17
Table 6.7.1-9 PWR MOX Fuel Shipments – PWR MOX Comparison to Area of Applicability 6.7.1-17
Table 6.7.1-10 PWR MOX Fuel Shipments – UO_2 Comparison to Area of Applicability 6.7.1-18
Table 6.7.1-11 Bounding Parameters for PWR MOX/UO_2 Rod Shipments 6.7.1-18
Table 6.7.1-12 B&W, CE and Westinghouse PWR Fuel Assembly Data 6.7.1-19
Table 6.7.1-13 Exxon/ANF PWR Fuel Assembly Data 6.7.1-19
Table 6.7.2-1 SLOWPOKE Fuel Configuration 6.7.2-7
Table 6.7.2-2 Modeled SLOWPOKE Fuel Configuration 6.7.2-7
Table 6.7.2-3 SLOWPOKE Analysis Compositions and Number Densities 6.7.2-8
Table 6.7.2-4 Preliminary Reactivity Results for Undamaged SLOWPOKE Fuel 6.7.2-14
Table 6.7.2-5 SLOWPOKE Component Shift Reactivity Study Results 6.7.2-14
Table 6.7.2-6 SLOWPOKE Component Tolerance Reactivity Study Results 6.7.2-14
Table 6.7.2-7 SLOWPOKE Moderator Density Study 6.7.2-15
Table 6.7.2-8 SLOWPOKE Undamaged Fuel Maximum Reactivity Results 6.7.2-16
Table 6.7.2-9 SLOWPOKE Damaged Fuel Maximum Reactivity Results 6.7.2-16
Table 6.7.3-1 NRU/NRX Fuel Characteristics 6.7.3-33
Table 6.7.3-2 NRU/NRX Evaluated Fuel Parameters 6.7.3-33
Table 6.7.3-3 NRU/NRX Basket and Cask Parameters 6.7.3-34
Table 6.7.3-4 Composition Densities Used in Criticality Analysis of NRU/NRX Fuel 6.7.3-35
Table 6.7.3-5 NRU Manufacturing Tolerance Study 6.7.3-36
Table 6.7.3-6 Maximum Reactivity Summary 6.7.3-36
Table 6.7.3-7 Cask Fuel Conditions for Maximum System Reactivity 6.7.3-37
Table 6.7.3-8 NRU Most Reactive Case Rod Removal 6.7.3-38

List of Tables (Continued)

Table 6.7.3-9 NRU HEU Base Results From Undamaged Analysis Plus Caddy Impact 6.7.3-38
Table 6.7.3-10 NRU HEU Results – Loss of Clad Evaluations 6.7.3-39
Table 6.7.4-1 Composition of HEUNL Solution 6.7.4-17
Table 6.7.4-2 HEUNL Evaluated Model Composition 6.7.4-17
Table 6.7.4-3 HEUNL Actinide Concentration 6.7.4-17
Table 6.7.4-4 Evaluated HEUNL Isotopic Composition 6.7.4-18
Table 6.7.4-5 Evaluated HEUNL Properties 6.7.4-19
Table 6.7.4-6 HEUNL Container Design Parameters 6.7.4-19
Table 6.7.4-7 HEUNL Analysis Compositions and Number Densities 6.7.4-20
Table 6.7.4-8 HEUNL Scoping Reactivity Results 6.7.4-20
Table 6.7.4-9 Sample HEUNL Isotopic Composition for [redacted] Uranyl Nitrate – Water Mixture 6.7.4-21
Table 6.7.4-10 HEUNL Reactivity Results for [redacted] of Uranyl Nitrate – Water Mixtures 6.7.4-22
Table 6.7.4-11 HEUNL Reactivity Results for [redacted] of Uranyl Nitrate 6.7.4-23
Table 6.7.4-12 HEUNL Reactivity Results for Fissile Material Shift Study 6.7.4-23
Table 6.7.4-13 HEUNL Reactivity Results for Cask Cavity Moderator Study 6.7.4-24
Table 6.7.4-14 HEUNL Reactivity Results for Container Tolerance Study 6.7.4-25
Table 6.7.4-15 HEUNL Reactivity Results for Mercury Removal 6.7.4-26
Table 6.7.4-16 HEUNL Maximum Reactivity per 10 CFR 71.55 ..... 6.7.4-26
Table 6.7.4-17 HEUNL Maximum Reactivity per 10 CFR 71.59 ..... 6.7.4-26
Table 6.7.4-18 Validation Area of Applicability Comparison with HEUNL Results 6.7.4-26
Table 6.7.4-19 HEUNL Reactivity Comparisons for Design Modification and Reflector Dimension Change 6.7.4-27
Table 6.7.4-20 HEUNL Evaluated Libraries 6.7.4-27
Table 6.7.4-21 Evaluated HEUNL Properties for Increased Enrichment 6.7.4-27
Table 6.7.4-22 HEUNL Maximum Reactivity per 10 CFR 71.55 for Increased Enrichment 6.7.4-27
Table 6.7.4-23 HEUNL Maximum Reactivity per 10 CFR 71.59 for Increased Enrichment 6.7.4-28
Table 6.7.5-1 SLOWPOKE Fuel Core Design Basis Characteristics 6.7.5-6
Table 6.7.5-2 SLOWPOKE Fuel Core Analysis Compositions and Number Densities 6.7.5-6
Table 6.7.5-3 Reactivity Results for SLOWPOKE Fuel Core under Normal and Accident Conditions 6.7.5-15
Table 6.7.5-4 Reactivity Results for SLOWPOKE Fuel Core Alternate Rod Arrangements 6.7.5-15
Table 6.7.5-5 Reactivity Results for SLOWPOKE Fuel Core, Fuel Rod Pitch Study 6.7.5-15
Table 6.7.5-6 Reactivity Results for SLOWPOKE Fuel Core, Axial Shift Study 6.7.5-15
Table 6.7.5-7 10 CFR 71.55 and 10 CFR 71.59 Case Matrix for the NAC-LWT with SLOWPOKE Fuel Core 6.7.5-16

List of Tables (Continued)

Table 6.7.5-8 Area of Applicability for SLOWPOKE Fuel Core Validation 6.7.5-16
Table 6.7.5-9 Comparison of Modeled and Licensed Basket Reactivity for the SLOWPOKE Fuel Core 6.7.5-16
Table 6.7.6-1 NRU Physical and Material Comparison to EFN, Moly, and Booster Rods/Targets 6.7.6-16
Table 6.7.6-2 Caddy NRU Complete Clad Removal k_{eff} as a Function of Number of Rod Segments 6.7.6-17
Table 6.7.6-3 Caddy NRU Comparison of a Full Cask Load versus Outer Tubes Only 6.7.6-17
Table 6.7.6-4 Caddy NRU Minimum Clad (0.02 cm equivalent Clad Thickness) 6.7.6-17
Table 6.7.6-5 Caddy NRU to EFN Comparison 6.7.6-18
Table 6.7.6-6 Study on Moly Target with NRU in Outer Tube Locations 6.7.6-18
Table 6.7.6-7 Booster Rod Complete Clad Removal k_{eff} as a Function of Number of Rod Segments 6.7.6-19
Table 6.7.6-8 Caddy NRU Model with Minimum Clad Moderator Density Study 6.7.6-20
Table 6.7.6-9 Booster Rod Model with No Clad Moderator Density Study 6.7.6-21
Table 6.7.6-10 Limitation on EFN and Booster Rods and Moly Targets 6.7.6-22
Table 6.7.7-1 LANL MOX Fuel Rods Basket/Cask Compositions and Number Densities 6.7.7-5
Table 6.7.7-2 LANL MOX Fuel Rods Compositions and Number Densities 6.7.7-5
Table 6.7.7-3 LANL MOX Fuel Rods Reactivity as a Function of Rod Type 6.7.7-17
Table 6.7.7-4 LANL MOX Fuel Rods Reactivity as a Function of Divider Thickness and Rod Pitch 6.7.7-17
Table 6.7.7-5 LANL MOX Fuel Rods Reactivity Summary for Accident Condition Array Cases 6.7.7-17
Table 6.7.7-6 LANL MOX Fuel Rods Reactivity Summary for Single Cask Containment Fully Reflected Cases 6.7.7-17
Table 6.7.7-7 LANL MOX Fuel Rods Reactivity Summary for Normal Condition Array Cases 6.7.7-18
Table 6.7.7-8 LANL MOX Fuel Rods Reactivity Summary for Damaged Fuel Height Study 6.7.7-18
Table 6.7.7-9 LANL MOX Fuel Rods Reactivity Summary for Damaged Fuel Underloading Study 6.7.7-18
Table 6.7.7-10 LANL MOX Fuel Rods Reactivity Summary for Accident Condition Array Cases – Damaged Fuel 6.7.7-18
Table 6.7.7-11 LANL MOX Fuel Rods Reactivity Summary for Single Cask Containment Fully Reflected Cases – Damaged Fuel 6.7.7-19
Table 6.7.7-12 LANL MOX Fuel Rods Summary of Maximum Reactivity Configurations 6.7.7-19
Table 6.7.7-13 LANL MOX Fuel Rods MOX Comparison to Area of Applicability 6.7.7-19
Table 6.7.7-14 LANL MOX Fuel Rods UO_2 Comparison to Area of Applicability 6.7.7-19

6 CRITICALITY EVALUATION

The NAC-LWT cask is designed to transport either 1 pressurized water reactor (PWR) assembly; up to 25 intact PWR or BWR rods in a rod holder or fuel assembly lattice; up to 25 PWR or BWR fuel rods with a maximum of 14 of the rods classified as damaged in a rod holder; up to 16 PWR UO_2 or MOX rods in a rod holder; 2 boiling water reactor (BWR) assemblies; 15 sound metallic fuel rods; 6 failed metallic fuel rods; up to 42 high enriched uranium (HEU), medium enriched uranium (MEU) or low enriched uranium (LEU) Materials Test Reactor (MTR) fuel elements, or DIDO fuel assemblies; up to 140 TRIGA fuel elements; two packages of General Atomics Irradiated Fuel Material (GA IFM); up to 560 TRIGA fuel cluster rods; 1 consolidation canister with up to 300 TPBARs (including up to 2 damaged TPBARs); up to 700 PULSTAR fuel elements; up to 42 spiral fuel assemblies; up to 42 MOATA plate bundles; up to 800 SLOWPOKE rods; up to 18 NRU or NRX fuel assemblies; 4 HEUNL containers; one SLOWPOKE fuel core; or up to 18 NRU/NRX caddies loaded with EFN rods, Booster rods, or Moly targets; up to two BUP-500 capsules or 18 WESF capsules or up to 16 transfer tubes with LANL MOX Fuel Rods (which include both MOX, i.e. plutonium as the primary fissile material, and enriched UO2 based fuel material rods). This chapter illustrates that all packages meet the requirements of parts 71.55, 71.59 and 71.71 of 10 CFR 71.

In accordance with the requirements of 10 CFR 71.59 (b), the NAC-LWT cask is assigned a Criticality Safety Index (CSI) for criticality control for the authorized contents as follows:

Approved Contents	CSI
PWR fuel assemblies	100
BWR fuel assemblies	5.0
MTR fuel elements	0.0
Metallic fuel rods	0.0
TRIGA fuel elements (in poisoned TRIGA fuel baskets)	0.0
TRIGA fuel elements (in nonpoisoned TRIGA fuel baskets)	12.5
TRIGA fuel cluster rods	0.0
High burnup PWR (UO_2 or MOX) rods*	0.0
High burnup BWR rods*	0.0
DIDO fuel elements	12.5
General Atomic Irradiated Fuel Material (GA IFM)	0.0
TPBARS and segmented TPBARS	0.0
Intact (uncanned) PULSTAR fuel	0.0
Canned PULSTAR fuel	33.4
ANSTO fuel (spiral and/or MOATA)	0.0
Solid irradiated hardware	0.0
ANSTO-DIDO fuel combination	0.0
SLOWPOKE fuel rods (undamaged or damaged)	0.0
NRU and NRX; EFN Rods, Booster Rods, Moly Targets	100
HEUNL containers	0.0
SLOWPOKE Fuel Core	100
BUP-500 or WESF capsules	0.0
LANL MOX Fuel Rods	25

* up to 14 damaged rods

6.1 Discussion and Results

Analyses are performed on the NAC-LWT cask for one PWR assembly and two BWR assemblies. Both PWR and BWR packages are examined for normal transport conditions and hypothetical accident conditions. The hypothetical accident conditions are modeled with the fuel at its most reactive credible configuration. The design of the cask and the fuel basket is such that, under all conditions, the highest neutron multiplication factor with correction for bias and uncertainty is less than 0.95. Analyses to demonstrate conformance to this criterion include (1) no dissolved boron in the neutron shield tank, thus improving the shield tank neutron reflection, (2) no structural material present in the assembly, and (3) no dissolved boron in the cask cavity or surrounding loading or storage area. No credit is included for burnup or for the buildup of fission product neutron poisons.

Analyses are performed for the NAC-LWT cask with the most limiting single PWR assembly and also for the most limiting BWR assemblies. Sections 6.3.1 and 6.3.2 present the methods (CSAS25) and KENO-Va models used in the analysis for each of these respective fuel assemblies. Sections 6.4.1 and 6.4.2 present the criticality analysis results for the PWR and BWR fuel assemblies, respectively. The maximum PWR fuel enrichment is set at 3.7 wt % ^{235}U, but it was found that certain PWR fuel assemblies were required to be limited to a maximum uranium enrichment of 3.5 wt % ^{235}U. Thus, two design-basis PWR assemblies were consequently selected. Namely, a design basis case with the uranium enrichment limited to 3.7 wt % ^{235}U and a second design basis case for those assemblies with the uranium enrichment limited to 3.5 wt % ^{235}U.

Analyses are performed on the NAC-LWT with fuel baskets designed to transport up to 42 MTR research reactor fuel elements. Shipment of MTR loose fuel plates is evaluated inside an MTR plate canister. Section 6.3.2 presents the methods (CSAS25) and KENO-Va models used in the analysis. Section 6.4.3 presents the criticality analysis results of the NAC-LWT loaded with MTR fuel. Section 6.5.2 presents the validation of CSAS25 for use in criticality evaluations of MTR fuel. Criticality of the NAC-LWT cask with the most limiting MTR fuel assembly type and basket configuration is evaluated. The fuel assemblies are assumed to be unburned. An infinite array of casks of infinite axial extent is analyzed. The cask/basket configuration is examined for normal transport and accident conditions. Both normal and accident conditions consider variation in moderator density inside and outside the cask as well as the spacing between casks. Reactivity penalties for mechanical perturbations are also considered. The results show that the k_{eff} of an infinite array of NAC-LWT casks with the most limiting MTR fuel and at optimum interspersed moderation is always below 0.95 including the method bias, method uncertainty, Monte Carlo uncertainty and penalties due to mechanical perturbations.

Analyses are performed on the NAC-LWT with up to 25 PWR or BWR fuel rods of 5.0 wt % ^{235}U initial enrichment. Separate evaluations are performed for a payload consisting of only intact rods in a rod holder, a payload including up to 14 damaged rods in a rod holder, and rods in a fuel assembly lattice. Section 6.3.3 presents the methods (CSAS25) and KENO-Va model used in the rod holder or fuel assembly lattice analyses. Section 6.4.4 presents the criticality analysis results of the NAC-LWT loaded with up to 25 PWR or BWR fuel rods in either a rod holder or a fuel assembly lattice. The system reactivity of the NAC-LWT with up to 25 PWR or BWR fuel rods in intact (rod holder or lattice) or damaged configurations is evaluated as a function of rod pitch. Damaged fuel evaluations include the removal of clad and fuel and moderator mixture studies. The fuel is assumed to be fresh, i.e., no burnup credit. An infinite array of casks is analyzed. Variation of moderator density inside and outside the cask also is considered. The results show that the k_{eff} of an infinite array of NAC-LWT casks at optimum fuel rod pitch and at optimum interspersed moderation is significantly below 0.95 including the method bias, method uncertainty and Monte Carlo uncertainty.

Poisoned and nonpoisoned basket configurations of the NAC-LWT cask are evaluated for TRIGA fuel elements with up to 70 wt % ^{235}U initial enrichment and TRIGA fuel cluster rods with up to 93.3 wt % ^{235}U initial enrichment. The placement of sealed canisters in the top and bottom baskets of the cask is also evaluated to permit the transport of failed TRIGA fuel. Section 6.3.4 presents the methods (CSAS25) and the models used in the analyses. Section 6.4.5 presents the criticality analysis results for the NAC-LWT cask loaded with TRIGA fuel elements, while Section 6.4.6 presents the results for TRIGA fuel cluster rods. The fuel is assumed to be fresh (unirradiated) and the effects of burnable absorbers are conservatively ignored. An infinite array of casks is analyzed. Variation of moderator density inside and outside the cask is considered. Variation of geometrical configurations are also analyzed, including the tolerances of the TRIGA basket materials and fuel element positioning, to determine the most reactive configuration. The results show that the k_{eff} of an array of NAC-LWT casks with TRIGA fuel at optimum fuel element pitch, geometrical configuration, and optimum moderation is always below 0.95, including corrections for bias and uncertainty. An infinite cask array is evaluated for the poisoned and nonpoisoned TRIGA cluster rod baskets and the poisoned TRIGA fuel element basket, while a finite cask array is applied to the nonpoisoned TRIGA fuel element evaluations.

Analyses are performed on the NAC-LWT with fuel baskets designed to transport up to 42 DIDO fuel assemblies. Section 6.1.1 presents the methods (CSAS25) and KENO-VA models used in the analysis. Section 6.4.7 presents the criticality analysis results of the NAC-LWT loaded with DIDO fuel. Section 6.5.2 presents the validation of CSAS25 for use in criticality evaluations of DIDO fuel. Criticality of the NAC-LWT cask with the most limiting DIDO fuel assembly type

(HEU) and basket configuration is evaluated. The fuel elements are assumed to be unburned. An infinite array of casks of infinite axial extent is analyzed. The cask/basket configuration is examined for normal transport and accident conditions. Variations in moderator density inside and outside the cask are evaluated. Reactivity penalties for mechanical perturbations are also considered. The results show that the bias adjusted k_{eff} of an infinite array of NAC-LWT casks with the most limiting DIDO fuel under accident conditions at optimum interspersed moderation (void) is above 0.95. Limiting the accident array to a maximum of eight casks results in a k_{eff} below 0.95, including the method bias, method uncertainty, Monte Carlo uncertainty, and penalties due to mechanical perturbations.

Analyses are performed of the NAC-LWT with a fuel basket designed to transport two Fuel Handling Units (packages) of General Atomics (GA) Irradiated Fuel Material (IFM). The first IFM package is composed of Reduced-Enrichment Research and Test Reactor (RERTR) type TRIGA fuel and the second is composed of High-Temperature Gas-cooled Reactor (HTGR) type fuel. Each set of IFM is packaged into stainless steel weld-encapsulated primary and secondary enclosures. Section 6.3.8 presents the methods (CSAS25) and KENO-Va models used in the analyses. Section 6.4.8 presents the criticality analysis results of the two GA IFM packages in the NAC-LWT. Section 6.1.1 presents the validation of CSAS25 for use in criticality evaluations of TRIGA fuel, which is deemed relevant for the GA IFM as discussed in Section 6.4.8. Criticality of the NAC-LWT cask with GA IFM is evaluated using pre-irradiation material compositions. No credit is taken for the basket structure axially or radially, and an infinite array of casks of infinite axial extent is analyzed. Variations in moderator density inside and outside the cask are evaluated, as well as the partial flooding of the IFM packages. The results show that the bias adjusted k_{eff} of an infinite array of NAC-LWT casks under accident conditions at optimum internal and interstitial moderation is less than 0.95, including corrections for bias and uncertainty. Maximum reactivity is obtained with flooded IFM packages, a void NAC-LWT cavity, and a void exterior.

The metallic fuel rods are not analyzed because the metallic fuel is at natural enrichment, and cannot become critical without the presence of heavy water (Paxton).

Criticality evaluations for the NAC-LWT loaded with TPBARs (Tritium Producing Burnable Absorber Rods) are not required because the TPBARs do not contain fissile material and, therefore, cannot form a critical configuration.

Analyses are performed of the NAC-LWT with a stack of four 28 MTR 7-element modules with a PULSTAR fuel element payload. PULSTAR fuel assemblies are comprised of a 5×5 rectangular fuel element array surrounded by a Zircaloy box with aluminum upper and lower fittings. The fuel elements are Zircaloy-clad UO_2 pellets conservatively evaluated at an

enrichment of 6.5 wt % ^{235}U. PULSTAR fuel assemblies may be loaded directly into the module cells. Individual intact PULSTAR fuel elements may be loaded into either a 4×4 fuel rod insert, or one of two PULSTAR cans. The can loadings are only permissible in the top and base modules. Damaged PULSTAR fuel elements or debris must be loaded into either of the cans. Section 6.3.7 presents the methods (CSAS25) and KENO-Va models used in the analyses. Section 6.4.9 presents the criticality analyses results of the various permissible loading configurations. Section 6.5.1 presents the validation of CSAS25 for use in criticality evaluations of PWR and BWR fuel, which is deemed relevant for PULSTAR fuel as discussed in Section 6.4.9. Criticality is evaluated using pre-irradiation material compositions. The basket structure axial and radial extents are explicitly modeled in a cask of finite axial extent. Cask arrays analyzed are dependent on the payload of either intact fuel or a mixed loading of intact fuel and canned elements. Variations in moderator density inside and outside the cask are evaluated, as well as the preferential flooding of the cans. The results show that the bias adjusted k_{eff} under accident conditions at optimum internal and interstitial moderation is less than 0.95, including corrections for bias and uncertainty. Maximum reactivity is obtained for a preferentially flooded cask containing two modules baskets of intact fuel assemblies and two modules of cans (each can contains 25 damaged fuel elements). Preferential flooding in this case is a void NAC-LWT cavity, flooded fuel cans, and a void cask exterior (including a void neutron shield).

Analyses are performed on the NAC-LWT with ANSTO fuel baskets designed to transport up to 42 spiral fuel assemblies, 42 MOATA plate bundles, or a combination of spiral assembly baskets and plate bundle baskets. Section 6.3.8 presents the methods (CSAS25) and KENO-VA models used in the analysis. Section 6.4.10 presents the criticality analysis results of the NAC-LWT loaded with spiral fuel assemblies or plate bundles. Section 6.5.2 presents the validation of CSAS25 for use in criticality evaluations of the ANSTO basket. Criticality of the NAC-LWT cask with the most limiting fuel characteristics and basket configuration is evaluated. The fuel elements are assumed to be unburned. An infinite array of casks in both the radial and axial extent is analyzed. The cask/basket configuration is examined for normal transport and accident conditions. Variations in moderator density inside and outside the cask are evaluated. Reactivity penalties for mechanical perturbations are also considered. The results show that the bias adjusted k_{eff} of an infinite array of NAC-LWT casks with the most-limiting ANSTO basket payload under normal and accident conditions at optimum interspersed moderation (void) is below 0.95.

Analyses are performed on the NAC-LWT with up to 16 PWR (UO_2 or MOX) fuel rods. UO_2 fuel rods are permitted with up to 5.0 wt % ^{235}U initial enrichment. Mixed oxide (MOX) rods are evaluated up to 7 wt % fissile plutonium ($^{239}Pu + {}^{241}Pu$). The payload consists of undamaged

fuel rods (i.e., no gross fuel failure, hairline cracks or pinholes are allowed). All evaluation detail, including input, method, analysis results and critical benchmarks, are included in Section 6.7.1. Included are the fuel rod geometry and material description, the MCNP model used in the rod holder analyses, and the criticality analysis results of the NAC-LWT loaded with up to 16 PWR rods (fueled with either UO_2 or MOX material). The system reactivity of the NAC-LWT with up to 16 undamged PWR rods is evaluated as a function of rod pitch. The fuel is assumed to be fresh, i.e., no burnup credit. An infinite array of casks is analyzed. Variation of moderator density inside and outside the cask is considered. Also included in the analysis are preferential flooding evaluations of the canister that contains the rod array. The results show that the bias adjusted k_{eff} of an infinite array of NAC-LWT casks at optimum fuel rod pitch and at optimum interspersed moderation is significantly below the upper safety limit (USL) for MOX and UO_2 criticality benchmarks.

Analyses are performed on the NAC-LWT with five DIDO baskets containing DIDO elements and an ANSTO top basket module containing DIDO or ANSTO fuel elements. ANSTO basket contents have been evaluated with an aluminum damaged fuel can (DFC). Section 6.3.10 presents the methods (CSAS25) and KENO-VA models used in the analysis. Section 6.4.11 presents the criticality analysis results of the NAC-LWT cask loaded with the combined payload. Criticality of the NAC-LWT cask with the most limiting fuel characteristics and basket configuration is evaluated. The fuel elements are assumed to be unburned. An infinite array of casks in both the radial and axial extent is analyzed. The results of the analysis show that the bias adjusted k_{eff} of an infinite array of NAC-LWT casks with the most-limiting DIDO/ANSTO basket payload under normal and accident conditions at optimum interspersed moderation (void) is below 0.95.

Analyses are performed on the NAC-LWT with up to 800 SLOWPOKE rods. SLOWPOKE fuel rods are permitted with up to 95.0 wt % ^{235}U initial enrichment. The payload consists of undamaged and/or damaged fuel. All evaluation details, including input, method, and analysis results, are included in Section 6.7.2. The criticality benchmark (defined here) analysis for this material is shown in Section 6.5.5. Included in Section 6.7.2 are the fuel rod geometry and material description, the MCNP model used in the canister, and the criticality analysis results of the NAC-LWT loaded with up to 800 SLOWPOKE rods. The fuel is assumed to be fresh, i.e., no burnup credit. An infinite array of casks is analyzed. Variation of moderator density inside and outside the cask is considered. Also included in the analysis are preferential flooding evaluations of the canister that contains the rod array. The results show that the bias adjusted k_{eff} of an infinite array of NAC-LWT casks at optimum fuel rod pitch and at optimum interspersed moderation is significantly below the upper safety limit (USL).

Analyses are performed on the NAC-LWT with 18 NRU or NRX fuel assemblies or 18 NRU/NRX caddies loaded with EFN rods, Booster rods, or Moly targets. Section 6.7.3 and

Section 6.7.6 present the methods and MCNP models used in the analyses. Section 6.7.3.3 presents the criticality analysis results of the NAC-LWT cask loaded with the NRU/NRX payload, with caddy results for EFN rods, Booster rods, or Moly targets in section 6.7.6.3. Criticality of the NAC-LWT cask with the most reactive configuration is evaluated. The fuel assemblies are assumed to be unburned. A single cask is analyzed. The results of the analysis show that the $k_{eff} + 2\sigma$ of the NAC-LWT cask with the most reactive configuration under normal and accident conditions is below the upper safety limit (USL) for highly enriched uranium (HEU) fuel.

Analyses are performed on the NAC-LWT with 4 HEUNL containers. The HEUNL material is permitted with up to 7.40 g/L ^{235}U at a maximum ^{235}U enrichment of 93.4 wt%. The evaluated payload considers a bounding container volume of 64.3 L (17.0 gal). Due to void volume in the container that allows HEUNL thermal expansion, actual container capacity is less. All evaluation detail, including input, method, and analysis results are included in Section 6.7.4. The criticality benchmark for this material is provided in Section 6.5.7. Criticality of the NAC-LWT cask with the most reactive configuration is evaluated. Considered in the most reactive configuration is the uranyl nitrate (other nitrates separated) at optimal H/U. The results show that the bias adjusted k_{eff} of an infinite array of NAC-LWT casks with the most reactive HEUNL configuration under normal and accident conditions is below the upper safety limit (USL) for highly enriched uranyl nitrates.

Analyses are performed on the NAC-LWT with one SLOWPOKE fuel core. The SLOWPOKE fuel core is permitted to contain up to 298 SLOWPOKE fuel rods with up to 95.3 wt % ^{235}U initial enrichment. The payload consists of undamaged fuel. All evaluation details, including input, method, and analysis results, are included in Section 6.7.5. The criticality benchmark analysis for this material is shown in Section 6.5.5. Included in Section 6.7.5 are the fuel core geometry and material description, the MCNP model used in the basket, and the criticality analysis results of the NAC-LWT loaded with one SLOWPOKE fuel core. The fuel is assumed to be fresh, i.e., no burnup credit. With the exception of the normal condition array, a single cask is analyzed. The fuel rod pitch is optimized. Variation of moderator density is considered. This includes preferential flooding evaluations of the basket that contains the fuel core. The results show that the bias adjusted k_{eff} of an NAC-LWT cask at maximum reactivity fuel rod pitch and at maximum reactivity interspersed moderation is below the upper safety limit (USL).

Criticality evaluations for the NAC-LWT loaded with SrF_2 capsules (BUP-500 or WESF capsules) are not required because the capsules do not contain fissile material and, therefore, cannot form a critical configuration.

Analyses are performed on the NAC-LWT with up to 16 transfer tubes with LANL MOX Fuel Rods. The payload consists of undamaged fuel rods (i.e., no gross fuel failure, hairline cracks or

pinholes are allowed). All evaluation detail, including input, method, analysis results and critical benchmarks, are included in Section 6.7.7. Included are the fuel rod geometry and material description, the MCNP model used in the rod holder analyses, and the criticality analysis results of the NAC-LWT loaded with up to 16 transfer tubes. The fuel is assumed to be fresh, i.e., no burnup credit. Variation of moderator density inside and outside the cask is considered. Also included in the analysis are preferential flooding evaluations of the canister that contains the rod array. The results show that the bias adjusted k_{eff} of a 4-cask array of NAC-LWT casks at optimum fuel rod pitch and at optimum interspersed moderation is below the upper safety limit (USL) for MOX and UO_2 criticality benchmarks.

6.2 Package Fuel Loading

The NAC-LWT cask can safely transport 1 PWR assembly, up to 25 intact PWR or BWR rods in a rod holder or fuel assembly lattice, up to 25 PWR or BWR rods with up to 14 of the fuel rods classified as damaged in a rod holder, 2 BWR assemblies, 15 sound metallic fuel rods, 6 failed metallic fuel rods, up to 42 MTR fuel elements, up to 140 TRIGA fuel elements, up to 560 TRIGA fuel cluster rods, up to 42 DIDO fuel assemblies, two General Atomics Irradiated Fuel Material packages, up to 300 TPBARs (of which three can be damaged), up to 700 PULSTAR fuel elements, up to 42 spiral fuel assemblies, up to 42 MOATA plate bundles, up to 800 SLOWPOKE rods, up to 18 AECL NRU or NRX fuel assemblies, 18 NRU/NRX caddies loaded with EFN rods, Booster rods, or Moly targets, one SLOWPOKE fuel core or, two BUP-500 capsules or 18 WESF capsules, or up to 16 transfer tubes with LANL MOX Fuel Rods. The characteristics for payloads containing fissile material are presented in the following sections. Fresh fuel is conservative because the fuel becomes less reactive as burnup increases. Burnable poisons, such as the gadolinium rods sometimes used in BWR assemblies, are ignored for conservatism.

TPBARs are stainless steel clad rods containing $LiA1O_2$ absorber pellets and nickel-plated Zircaloy getter tube or nickel-plated zirconium (NPZ) alloy spacer tubes with no absorber pellets. The TPBARs do not contain any fissile material.

[redacted]

6.2.1 PWR Fuel Assemblies

Table 6.2.1-1 and Table 6.2.1-2 contain the geometry data for the PWR assemblies. Relevant dimensions are in three categories: Fuel Rod, Guide Tube and Instrument Tube. Fuel rod data includes the number of fuel rods, pitch, diameter, clad thickness, clad material, pellet diameter and active fuel length. The guide tube and instrument tube geometry sections include the number of tubes, tube diameter, tube thickness and tube material.

Table 6.2.1-1 B&W, CE and Westinghouse PWR Fuel Assembly Data

Fuel Type/ Parameter	B&W 15x15 Mark B4	B&W 17x17 Mark C	CE 14x14	CE 16x16 SYS 80	West 14x14 Std	West 14x14 OFA	West 15x15	West 17x17	West 17x17 OFA
Fuel Rod Data									
# Rods	208	264	176	236	179	179	204	264	264
Pin Pitch (in)	0.568	0.502	0.58	0.506	0.556	0.556	0.563	0.496	0.496
Rod Dia. (in)	0.43	0.379	0.44	0.382	0.422	0.4	0.422	0.374	0.36
Clad Thick. (in)	0.0265	0.024	0.028	0.025	0.0225	0.0243	0.0242	0.0225	0.0225
Clad Mat.	Zirc	Zirc	Zirc	Zirc	Zirc	Zirc	Zirc	Zirc	Zirc
Pellet Dia. (in)	0.3686	0.3232	0.3765	0.325	0.3674	0.3444	0.3659	0.3225	0.3088
Act. Length (in)	144	143	137	150	145.2	144	144	144	144
Guide Tube Data									
# Tubes	16	24	5	5	16	N/A	16	24	24
Tube Dia. (in)	0.53	0.465	1.15	0.98	0.539	N/A	0.545	0.482	0.482
Tube Thick. (in)	0.016	0.0175	0.04	0.035	0.034	N/A	0.015	0.016	0.016
Tube Mat.	Zirc	Zirc	Zirc	Zirc	Zirc	Zirc	Zirc	Zirc	Zirc
Instrument Tube Data									
# Inst. Tubes	1	1	0	0	1	N/A	1	1	1
Tube Dia. (in)	0.493	0.42	------	------	0.539	N/A	0.545	0.482	0.482
Tube Thick. (in)	0.026	0.015	------	------	0.034	N/A	0.015	0.016	0.016
Tube Mat.	Zirc	Zirc	------	------	Zirc	N/A	Zirc	Zirc	Zirc

N/A – Not Available. Westinghouse 14×14 standard data used in analysis.

Table 6.2.1-2 Exxon/ANF PWR Fuel Assembly Data

Fuel Type/ Parameter	Ex/ANF 14×14 WE	Ex/ANF 15×15 WE	Ex/ANF 17×17 WE	Ex/ANF 14×14 CE
Fuel Rod Data				
# Rods	179	204	264	176
Pin Pitch (in)	0.556	0.563	0.496	0.58
Rod Dia. (in)	0.424	0.424	0.36	0.44
Clad Thick. (in)	0.03	0.03	0.025	0.031
Clad Mat.	Zirc	Zirc	Zirc	Zirc
Pellet Dia. (in)	0.3505	0.3565	0.303	0.37
Act. Length (in)	142	144	144	134
Guide Tube Data				
# Tubes	N/A	20	24	4
Tube Dia. (in)	N/A	0.544	0.48	1.115
Tube Thick. (in)	N/A	0.017	0.016	0.036
Tube Mat.	N/A	Zirc	Zirc	Zirc
Instrument Tube Data				
# Inst. Tubes	N/A	1	1	1
Tube Dia. (in)	N/A	0.544	0.48	1.115
Tube Thick. (in)	N/A	0.017	0.016	0.036
Tube Mat. (in)	N/A	Zirc	Zirc	Zirc

N/A – Not Available. Westinghouse 14×14 standard data used in analysis.BWR Fuel Assemblies

6.2.2 BWR Fuel Assemblies

Table 6.2.2-1 through Table 6.2.3-3 contains the geometry data for the BWR assemblies. Relevant dimensions are in three categories: Fuel Rod, Water Rod and Channel. Fuel rod data includes the number of fuel rods, pitch, clad inner radius, clad outer radius, clad material, pellet radius and active fuel length. The water rod and channel geometry sections include the number of water rods, rod radii, rod and channel thickness and material.

Table 6.2.2-1 GE BWR Fuel Assembly Data

Parameter	GE 7×7	GE 8×8-1	GE 8×8-2	GE 8×8-4		GE 9×9
Fuel Rod						
Pellet Rad. (cm)	0.6058	0.5283	0.5207	0.5200	0.5200	0.4775
Clad Inner Rad. (cm)	0.6210	0.5398	0.5321	0.5350	0.5350	0.4890
Clad Outer Rad. (cm)	0.7150	0.6261	0.6134	0.6150	0.6150	0.5600
Clad Material	Zircaloy	Zircaloy	Zircaloy	Zircaloy	Zircaloy	Zircaloy
Pitch / 2 (cm)	0.9373	0.8128	0.8128	0.8100	0.8100	0.7190
Zircaloy Water Rod						
Inner Rad. (cm)	-------	0.5398	0.6744	0.5370	1.5000	1.1800
Outer Rad. (cm)	-------	0.6261	0.7506	0.6150	1.6000	1.2500
Zircaloy Channel 80 Mil						
Inner Dim. (cm)	±6.7031	±6.7031	±6.7031	±6.7500	±6.7900	±6.8000
Outer Dim. (cm)	±6.9063	±6.9063	±6.9063	±6.9500	±6.9500	±7.0000
Thickness (cm)	0.2032	0.2032	0.2032	0.2000	0.1600	0.2000
Zircaloy Channel 100 Mil						
Inner Dim. (cm)	N/A	±6.7031	±6.7031	N/A	N/A	N/A
Outer Dim. (cm)	N/A	±6.9571	±6.9571	N/A	N/A	N/A
Thickness (cm)	N/A	0.2540	0.2540	N/A	N/A	N/A
Zircaloy Channel 120 Mil						
Inner Dim. (cm)	N/A	±6.7031	N/A	N/A	N/A	N/A
Outer Dim. (cm)	N/A	±7.0079	N/A	N/A	N/A	N/A
Thickness (cm)	N/A	0.3048	N/A	N/A	N/A	N/A

N/A – Not Applicable. See Table 6.2.2-3 for combinations of fuel/channel.

Table 6.2.2-2 Exxon BWR Fuel Assembly Data

Parameter	Exxon 7×7	Exxon 8×8-1	Exxon 8×8-2	Exxon 9×9
Fuel Rod				
Pellet Rad. (cm)	0.6223	0.5137	0.5137	0.4528
Clad Inner Rad. (cm)	0.6325	0.5232	0.5232	0.4623
Clad Outer Rad. (cm)	0.7239	0.6147	0.6147	0.5385
Clad Material	Zircaloy	Zircaloy	Zircaloy	Zircaloy
Pitch / 2 (cm)	0.9373	0.8141	0.8141	0.7264
Zircaloy Channel <=80 Mil				
Inner Width (cm)	6.7031	6.7031	6.7031	6.8000

Table 6.2.2-3 BWR Fuel Assembly Data

Assembly Type	Number Rods		Channel Thickness	Active Fuel Length (in)
	Fuel	Water		
Exxon 9x9	79	2	80 Mil	150
Exxon 9x9	79	2	2mm	150
Exxon 9x9	74	2	2mm	150
GE 8x8	62	2	80 Mil	150
GE 8x8	62	2	100 Mil	150
GE 9x9	74	2	80 Mil	150
GE 7x7	49	0	80 Mil	146
Exxon 8x8-2	62	2	80 Mil	150
GE 8x8	60	4	2mm	150
GE 9x9	79	2	2mm	150
Exxon 8x8-1	63	1	80 Mil	145.2
GE 9x9	79	2	80 Mil	150
Exxon 7x7	49	0	80 Mil	144
GE 8x8	63	1	120 Mil	146
GE 8x8	63	1	100 Mil	146
GE 8x8	63	1	80 Mil	146

6.2.3 MTR Fuel Elements

The NAC-LWT MTR basket designs can transport up to 42 MTR research reactor fuel elements. This configuration consists of seven fuel elements placed radially in each of four, five or six axial fuel basket segments. The analysis provided herein is bounding for all MTR element loading configurations.

An MTR fuel element comprises fuel plates held in a parallel arrangement by thick aluminum slotted side plates. The number of fuel plates range from 10 to 23 per element. The fuel plates have a fuel meat composed of either U_3O_8-Al, U-Al or USi-Al. The listed fuel enrichment ranges up to slightly greater than 93 wt% ^{235}U. Thus, initial criticality analysis is performed at a nominal 93 wt% ^{235}U with a reactivity penalty of ±1 wt% ^{235}U applied to allow for enrichment variation up to 94 wt% and with a reactivity penalty of ±5 grams per element to allow for loading variation up to 355 grams per element. Figure 6.2.3-1 shows a cross-sectional view of the design basis MTR fuel element. The various design basis HEU, LEU and MEU MTR fuel characteristics are shown in Table 6.2.3-1, Table 6.2.3-2 and Table 6.2.3-3, respectively. The High Flux Beam Reactor (HFBR) is modeled in the criticality analysis as the design basis MTR fuel element design, and is shown in Figure 6.2.3-1. The listed fuel dimensions are extended to arrive at bounding fuel configurations in Section 6.4.3.

The bounding fuel dimensions provide for loading MTR fuel elements containing up to a maximum ^{235}U content of 460 grams (20 grams per plate in 23 plates), and LEU specific loads up to 736 grams ^{235}U (32 grams per plate in 23 plates). Total ^{235}U content of the fuel elements modeled in the criticality evaluations may exceed that used in the Chapter 5 shielding analysis. For cases containing a lower fissile material content in the shielding evaluations, the lower value represents the cask payload limit.

MTR fuel plates can also be transported. The loose plates are placed inside an MTR plate canister prior to placement into the NAC-LWT MTR basket. The number of fuel plates in each canister is restricted to that of an equivalent MTR fuel element.

Figure 6.2.3-1 Design Basis HFBR MTR Fuel Element

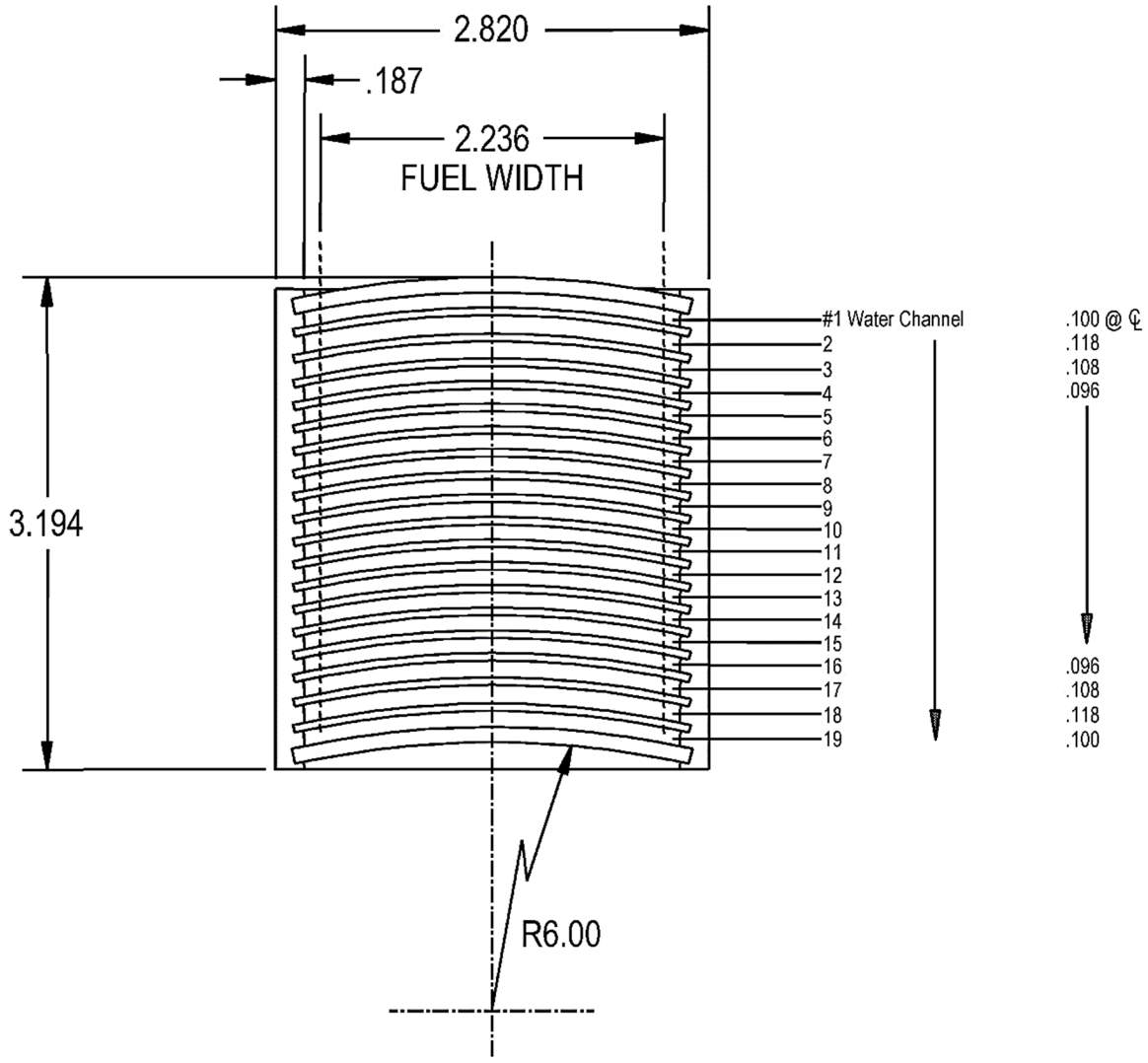

(18) INNER FUEL PLATES, 23 3/4" LONG, .050" THICK
FUEL ALLOY CORE 22 3/4 LONG, .021 THICK
CLADDING .0145" THICK. TOTAL U^{235} CONTENT – 351 g
OUTER ALUMINUM PLATES .100" THICK

Table 6.2.3-1 Characteristics of Design Basis HEU MTR Fuels

Reactor1/ Fuel Parameters	HFBR	ORR #1	ORR #2	OWR	BSR	NISTR3	THOR
Element Length (cm)	145.4	97.5	97.5	108.31	94.3	34	100.3
Element Width (cm)	7.2	7.6	7.6	7.7	7.6	7.6	7.6
Element Depth (cm)	8.2	8.0	8.0	8.4	8.4	8.3	7.7
Side Plate Thickness (cm)	0.475	0.475	0.475	0.475	0.475	0.475	0.51
No. of Plates	18+2 Al	19	19	19	19	17+2 Al	10
Plate Thickness (cm)	0.127	0.127	0.127	0.127	0.129	0.127	0.251
Active Fuel Length (cm)	57.8	60.0	60.0	61.2	59.8	28.0	60.0
Active Fuel Width (cm)	5.72	6.35	6.35	6.47	6.3	6.35	6.0
Active Fuel Thickness (cm)	0.053	0.051	0.051	0.051	0.051	0.051	0.175
Clad Thickness (cm)	0.037	0.038	0.038	0.038	0.038	0.038	0.038
Water Channel Thickness (cm)	0.244[2]	0.295	0.295	0.295	0.295	0.295	0.51
Fuel Composition	U_3O_8-Al	U-Al	U_3O_8-Al	U_3O_8-Al	U-Al[4]	U_3O_8-Al	U-Al
Wt% ^{235}U (nominal)[5]	93	93	93	93	93	93	93
^{235}U per Fuel Element (grams)	351	202	285	232	223	181.05	140
^{235}U per Plate (grams)	19.5	10.6	15	12.21	11.7	10.65	14
U Density (g U/cm^3)	1.197	0.59	0.83	0.60	0.66	1.25	0.23
U in Fuel Composition (wt%)	30	20	25	25	20	30	8

Notes:

1. Reactors:
   HFBR – High Flux Beam Reactor, Brookhaven USA
   ORR – Oak Ridge Research Reactor, Oak Ridge USA
   OWR – Omega West Reactor, Los Alamos USA
   BSR – Bulk Shielding Reactor, Oak Ridge USA
   NISTR – National Institute of Standards Test Reactor, Washington D.C. USA
   THOR – Tsing Hua Open-Pool Reactor, Hsinchu, Taiwan
2. Variable outer plate spacing.
3. Fuel element cut in half. Two half-sections are loaded into each basket cell.
4. Two plates in some fuel elements contain U_3O_8.
5. Maximum 94 wt % enrichment analyzed in Section 6.4.3.4 for conservatism.

Table 6.2.3-1 Characteristics of Design Basis HEU MTR Fuels (Continued)

Reactor1/ Fuel Parameters	GRR #1 (NUKEM)	GRR #2 (US Nuc)	GRR #3 (CERCA)	ASTRA	SAPFIR #1	SAPFIR #2	PRR
Element Length (cm)	95.0	95.0	95.0	87.3	87.3	87.3	100.3
Element Width (cm)	7.6	7.6	7.6	7.6	7.6	7.6	7.6
Element Depth (cm)	8.0	8.0	8.0	8.0	8.0	8.0	7.6
Side Plate Thickness (cm)	0.45	0.45	0.45	0.45	0.45	0.45	0.47
No. of Plates	19	18	18	23	23	23	18
Plate Thickness (cm)	0.127	0.127	0.152	0.127	0.127	0.127	0.152
Active Fuel Length (cm)	60.	60.	60.	62.5	62.5	62.5	62.2
Active Fuel Width (cm)	6.3	6.3	6.3	6.28	6.28	6.28	6.12
Active Fuel Thickness (cm)	0.051	0.051	0.050	0.051	0.051	0.051	0.1016
Clad Thickness (cm)	0.038	0.038	0.051	0.038	0.038	0.038	0.0254
Water Channel Thickness (cm)	0.295	0.315	0.290	0.223	0.223	0.223	0.279
Fuel Composition	U-Al	U-Al	U-Al	U-Al	U-Al	U_3Si_2-Al	U-Al
Wt% ^{235}U (nominal)	93	93	93	93	90	93	94
^{235}U per Fuel Element (grams)	180.5	187.2	180.9	281	281	281	247
^{235}U per Plate (grams)	9.5	10.4	10.05	12.2	12.2	12.2	13.7
U Density (g U/cm^3)	0.53	0.58	0.57	0.66	0.68	0.66	0.378
U in Fuel Composition (wt%)	20	20	20	20	20	20	12.5

Notes:

1. Reactors:
   GRR – Greek Research Reactor, Greece
   ASTRA – Adapter Schwimmbecken Tank Reaktor, Austria
   SAPFIR – Research Reactor, Switzerland
   PRR – Philippine Research Reactor, Philippines

Table 6.2.3-1 Characteristics of Design Basis HEU MTR Fuels (Continued)

Reactor1/ Fuel Parameters	PRR (Mod)	CNEA #1	CNEA #2	CNEA (Hybrid)
Element Length (cm)	100.3	88.0	88.0	88.0
Element Width (cm)	7.6	7.62	7.6	7.62
Element Depth (cm)	8.03	8.4	8.4	8.4
Side Plate Thickness (cm)	0.47	0.52	0.49	0.49
No. of Plates	19	19	19	19
Plate Thickness (cm)	0.1496	0.130 ± 0.015	0.140 (+0.05, -0.02)	0.108
Active Fuel Length (cm)	62.2	61.5 ± 1.0	61.5 ± 1.0	60.5
Active Fuel Width (cm)	6.12	6.0 ± 0.13	5.9 (+0.05, -0.0)	6.15
Active Fuel Thickness (cm)	0.1016	0.052 ± 0.003	0.056 ± 0.003	0.060
Clad Thickness (cm)	0.024	0.039	0.042 ± 0.006	0.024
Water Channel Thickness (cm)	0.279	0.312 ± 0.015	0.302 (+0.05, -0.02)	0.334
Fuel Composition	U-Al	U-Al	U-Al	U-Al
Wt% ^{235}U (nominal)	94	90 ± 1	90 ± 1	91
^{235}U per Fuel Element (grams)	262	148.2 ± 5.7	200.1 ± 10.1	218.5
^{235}U per Plate (grams)	13.7	7.8 ± 0.3	10.53 ± 0.53	11.5
U Density (g U/cm^3)	0.378	0.452 (+0.071, -0.061)	0.576 (+0.081, -0.075)	0.566
U in Fuel Composition (wt%)	12.5	15.0% ± 0.6%	18.3% ± 0.9%	20.5%
Fuel Meat Al Alloy Weight (g)	102.02	49.1	52.3	49.0

Notes:

1. Reactors:
   PRR (Mod) – NAC modified PRR fuel element – 19 plates and reduced clad thickness (0.024 cm).
   CNEA – Comision Nacional De Energia Atomica.
   CNEA (Hybrid) – NAC modified CNEA element containing maximum reactivity dimensions from the two CNEA plate/element types.

Table 6.2.3-2 Characteristics of Design Basis LEU MTR Fuel

Reactor1/ Fuel Parameters	BSR	ZPRL	THOR	RSG-GAS	IEA-R1
Element Length (cm)	97.5	100.3	100.3	N/A	N/A
Element Width (cm)	7.8	7.7	7.62	7.7	7.7
Element Depth (cm)	8.4	7.7	7.73	7.7	7.7
Side Plate Thickness (cm)	0.475	0.477	0.510	0.477	0.477
Number of Plates	19	10	10	21	18
Plate Thickness (cm)	0.127	0.251	0.251	0.130	0.150
Active Fuel Length (cm)	60	60	60	60	60
Active Fuel Width (cm)	6.35	6	6	6.275	6
Active Fuel Thickness (cm)	0.051	0.175	0.175	0.064	0.084
Clad Thickness (cm)	0.038	0.038	0.038	0.033	0.033
Water Channel Thickness (cm)	0.295	0.5356	0.510	0.2724	0.3138
Fuel Composition	U_3Si_2-Al	U-Al	U-Al	U_3O_8-Al	U-Al
Weight Percent ^{235}U (wt %)	19.75	20	20	19.75	20
^{235}U per Fuel Element (grams)	340	210	210	271	180
^{235}U per Plate (grams)	17.9	21	21	13	10
U Density (grams U/cm^3)	4.66	0.64	0.64	3	1.8
U in Fuel Composition (wt %)	74	40	40	57	40

Notes:

1. Reactors:
   BSR – Bulk Shielding Reactor, ORNL
   ZPRL – ZPRL Research Reactor Facility, Taiwan
   THOR – Tsing Hua Open-Pool Reactor, Hsinchu, Taiwan
   RSG-GAS – National Center for Research and Technology, Serpong, Indonesia
   IEA-R1 – IEA-R1 Facility, Brazil

Table 6.2.3-3 Characteristics of Design Basis MEU MTR Fuel

Reactor1/ Fuel Parameters	ASTRA	MEUG
Element Length (cm)	68.65 (cut)	--- [2]
Element Width (cm)	7.61	7.61
Element Depth (cm)	8.05	8.05
Side Plate Thickness (cm)	0.45	0.45
Number of Plates	23	23
Plate Thickness (cm)	0.127	0.127
Active Fuel Length (cm)	60.0	60.0
Active Fuel Width (cm)	6.275	6.275
Active Fuel Thickness (cm)	0.051	0.053
Clad Thickness (cm)	0.038/0049	0.037
Water Channel Thickness (cm)	0.221[3]	0.221[3]
Fuel Composition	UAl_x-Al	UAl_x-Al[4]
Weight Percent ^{235}U (wt %)	45%	20%-80%
^{235}U per Fuel Element (grams)	320	333.5
^{235}U per Plate (grams)	13.9	14.5
U Density (grams U/cm^3)	1.63	0.91-2.08
U in Fuel Composition (wt %)	63	38-87

Notes:

1. Reactors:
   ASTRA – Adaptierter Schwimmbecken Tank Reactor Austria
   MEUG – Modified ASTRA MEU fuel element parameters
2. Not required for infinite length criticality evaluation.
3. Channel thickness was not included in reference information. Indicated channel thickness is the result of assuming a constant channel between all plates and one-half the channel beyond the outer plates.
4. Based on a constant fuel mass and material thickness, the fuel material composition (ex. U_3O_8, UAl_x, Usi_2) will not have a significant impact on the reactivity of the system.

6.2.4 PWR and BWR Rods in a Rod Holder or Fuel Assembly Lattice

The NAC-LWT cask may transport up to 25 intact PWR or BWR fuel rods in a fuel rod holder or fuel assembly lattice. Up to 14 of 25 PWR or BWR fuel rods in a fuel rod holder may be classified as damaged.

6.2.4.1 Intact PWR or BWR Rods in a Rod Holder or Fuel Assembly Lattice

To bound all PWR and BWR rods that may be transported in the NAC-LWT cask, rods with a maximum enrichment of 5.0 wt % ^{235}U were analyzed. Characteristics of the design basis PWR rods are presented in Table 6.2.1-1 and Table 6.2.1-2. Characteristics of the design basis BWR rods are presented in Table 6.2.2-1, Table 6.2.2-2 and Table 6.2.2-3. Given an infinite length rod and an enrichment of 5.0 wt % ^{235}U as the basis for this analysis, the most reactive PWR and BWR rod has the greatest fissile mass, i.e. the rod with the largest pellet radius. Therefore, the rod used in the CE 14×14 assembly was chosen as the most reactive PWR fuel rod and the rod used in the Exxon 7×7 assembly was chosen as the most reactive BWR fuel rod. A maximum of 25 PWR or BWR rods were used in the analysis.

6.2.4.2 Damaged PWR or BWR Rods in a Rod Holder

The evaluation of the damaged fuel rods uses the bounding fuel characteristics for the intact fuel rod condition as described in Section 6.2.4.1, but assumes that up to 14 of the fuel rods are classified as damaged. Fuel transported in this configuration must be in a fuel rod holder. The fuel rod used in the CE 14×14 assembly was chosen as the most reactive PWR fuel rod, and the rod used in the Exxon 7×7 assembly was chosen as the most reactive BWR fuel rod.

While the bounding fuel characteristics described in Section 6.2.4.1 are based on zirconium alloy clad fuel the damaged fuel criticality analysis using the rod holder conservatively removes the cladding from the analysis models, see Section 6.4.4.2. As such the evaluation bounds the presence of non-zirconium based clad fuel rods such as FeCrAl alloys.

6.2.5 TRIGA Fuel Elements

The NAC-LWT TRIGA non-poisoned and poisoned basket designs can transport up to 140 TRIGA fuel elements. These configurations contain sets of up to 4 intact TRIGA fuel elements. Each set of elements is placed in the cells of the five TRIGA basket modules. In the non-poisoned configuration, the central cell of each module is blocked to prohibit the placement of fuel elements in that location. The NAC-LWT TRIGA basket design can also accommodate sets of four follower control rod (FFCR) elements per cell in the top module. The TRIGA base and top basket modules can accommodate screened failed fuel cans or sealed failed fuel cans for TRIGA failed fuel or fuel debris. The screened failed fuel can is able to hold up to four intact TRIGA fuel elements. The sealed failed fuel can is limited to the equivalent content of two TRIGA fuel elements.

Figure 6.2.5-1 and Figure 6.2.5-2 show typical TRIGA aluminum and stainless steel clad fuel elements, respectively (Tomsio). The various design basis TRIGA fuel element characteristics are shown in Table 6.2.5-1 and Table 6.2.5-2. The TRIGA fuel matrix is a solid uranium-zirconium-hydride metal alloy in which the zirconium-hydride moderator is homogeneously combined with the enriched uranium into pellets. Uranium enrichment in the TRIGA fuel elements is typically either nominal 20 wt % or 70 wt % with test fuel element enrichment up to 93 wt %. The fuel pellets are loaded into cylindrical rods approximately 1.5 inches in diameter and 30 inches long. Sections of graphite are placed above and below the active fuel section of the TRIGA fuel elements. TRIGA fuel elements can be aluminum clad or stainless steel clad. The FFCR TRIGA fuel element is 45 inches long and has a 15 inch U-ZrH active fuel region with a slightly smaller diameter than 1.5 inches, a 15-inch boron carbide upper section and 6 inch void lower section.

As shown in Figure 6.4.5-1, the design basis TRIGA fuel element type for criticality evaluations is the stainless steel clad element with the FLIP composition enriched to 70 wt % ^{235}U (HEU) and with 137 grams ^{235}U per element. This fuel element design bounds all the other standard TRIGA fuel elements under consideration, including the stainless steel clad FLIP LEU-II fuel element enriched to 20 wt% ^{235}U and with 169 grams ^{235}U per element. The FFCR elements are also bounded by the design basis TRIGA fuel element.

Analysis in Section 6.4.5 addressess TRIGA fuel elements with fissile material mass and enrichment fabrication tolerances slightly above the initial design basis element values, and test elements with substantially higher fissile material mass and/or enrichments.

Figure 6.2.5-1 Aluminum Clad TRIGA Fuel Element

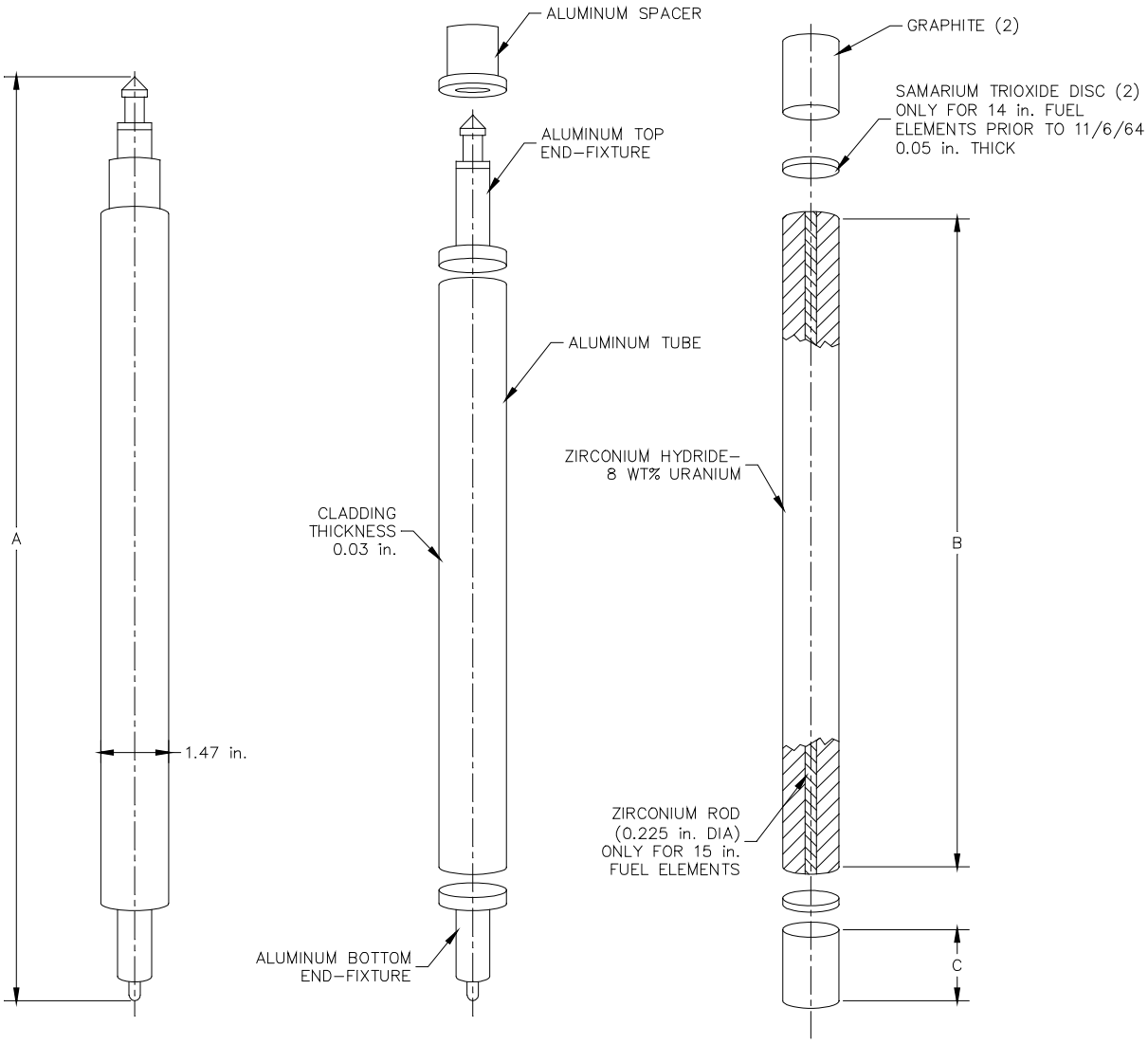

TRIGA Fuel Type	A (in.)	B (in.)	C (in.)
Original - 14 in.	28.37	14.0	3.95
Original - 15 in.	28.3	15.0	3.53

Figure 6.2.5-2 Stainless Steel Clad TRIGA Fuel Element

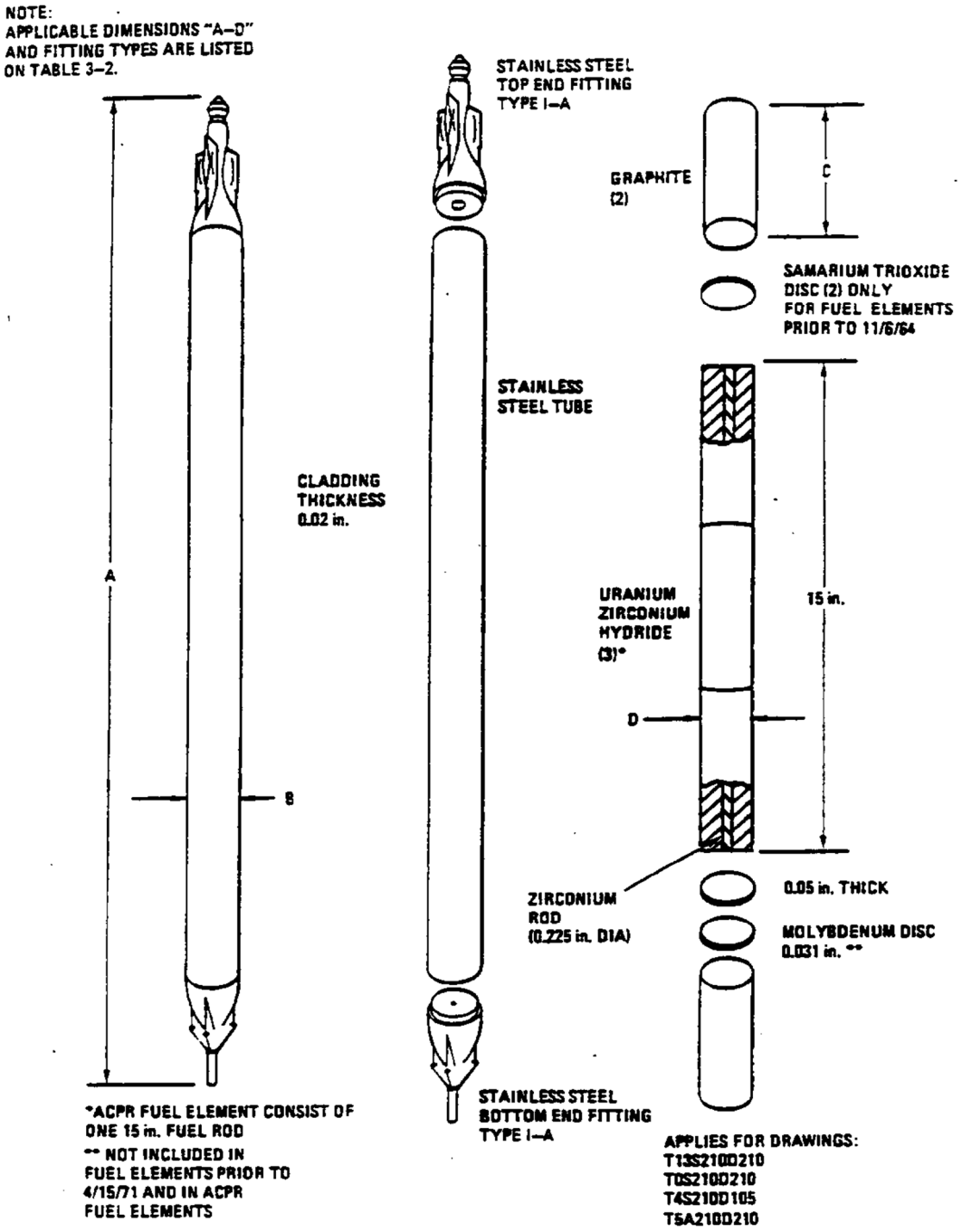

TRIGA Fuel Type	A (in.)	B (in.)	C (in.)	D(in.)
Standard - streamline	29.68	1.478	2.56(2)	1.435
Standard - plain	28.9	1.478	3.42	1.435
ACPR(1)	28.89	1.478	3.45	1.40

(1) Annular Core Pulse Reactor
(2) Lower graphite is 3.72 inches

Table 6.2.5-1 Characteristics of Design Basis TRIGA Fuels Elements

Element Type	Al Clad	ACPR(1)	Steel Clad	Fuel Follower Standard Control Rod(6)
Element Diameter (in.)	1.47	1.478	1.478	1.355
Element Length(in.)	28.4(2) 28.3(3)	28.89	29.7(4) 28.9(5)	45
Active Length (in.)	14(2) 15(3)	15	15	15
Graphite Reflector (in.)	3.53	3.45	2.56, 3.72(4) 3.42 (5)	-
Graphite Diameter	1.41	1.40	1.435	-
Reflector (2) Mass (g)	450	450	450	-
End Fitting Mass (g)	140	530	530	290
Clad Material	Al	SS304	SS304	SS304
Clad Thickness (in.)	0.03	0.02	0.02	0.02
Clad Mass (g)	140	270	270	462
Fuel Material	U-ZrH	U-ZrH	U-ZrH	U-ZrH
Pellet Diameter (in.)	1.41	1.40	1.435	1.311(7)
Central Hole (in.)	0.25	0.25	0.25	0.25
Filling Rod Mat'l	Zirc	Zirc	Zirc	Zirc
Filling Rod Dia. (in.)	0.225	0.225	0.225	0.225

Notes:
1. Annular Core Pulse Reactor.
2. Al clad fuel with 14-inch active fuel has no central hole with Zircaloy rod.
3. Al clad fuel 15-inch active fuel has a central hole with Zircaloy rod.
4. Steel clad standard streamline fuel has 2.56 and 3.72-inch upper and lower graphite reflectors.
5. Steel clad standard plain fuel has 3.42-inch upper and lower graphite reflectors.
6. Fuel follower control rod has an uppermost 6.5-inch air void section, a 15-inch boron carbide upper section, a 15-inch UZrH fuel section, and 5.88-inch lower void section.
7. Fuel meat diameter.

Table 6.2.5-2 Characteristics of Design Basis TRIGA Fuels – Fuel Compositions

		Steel Clad					Fuel Follower Control Rod		
Element Type	Al Clad	ACPR	Stand.	FLIP[1]	FLIP LEU-I	FLIP LEU-II	Stand.	FLIP LEU-I	ACPR
U in Fuel (max. wt%)	8.5	12.5	12	8.5	20	31	8.5	8.5	12.5
^{238}U- Mass (g)	164	224	164	59	403	676	150	387	224
^{235}U in U (wt%)	20	20	20	70	20	20	20	20	20
^{235}U-Mass (g)	41	56	41	137	101	169	38	97	56
H to Zr Ratio	1.0	1.7	1 - 1.7	1.6	1.6	1.6	1.6	1.6	1.7
Zr Mass (g)	2300	1962	2300	2060	1988	1886	2004	1908	1962

[1] FLIP – Fuel Life Improvement Program

Note:

Variation in fuel characteristics from the indicated values is evaluated in Section 6.4.5.

6.2.6 TRIGA Fuel Cluster Rods

The NAC-LWT TRIGA non-poisoned and poisoned basket designs can transport up to 560 TRIGA fuel cluster rods. These configurations contain sets of up to 16 intact TRIGA fuel cluster rods within an insert. Each set of elements is placed in the cells of the five TRIGA basket modules. In the non-poisoned configuration, the central cell of each module is blocked to prohibit the placement of fuel elements in that location. The NAC-LWT TRIGA basket design can also accommodate sets of four follower control rod (FFCR) elements per cell in the top module. The TRIGA base and top basket modules can accommodate sealed failed fuel cans containing failed TRIGA fuel cluster rods or debris. The sealed failed fuel can is limited to the equivalent content of six TRIGA fuel cluster rods.

Figure 6.2.6-1 shows details of typical TRIGA fuel cluster rods (Tomsio). The design-basis TRIGA fuel cluster rod characteristics are shown in Table 6.2.6-1 and Table 6.2.6-2. The TRIGA fuel matrix is a solid uranium-zirconium-hydride metal alloy in which the zirconium-hydride moderator is homogeneously combined with the enriched uranium into pellets. Uranium enrichment in the HEU TRIGA fuel cluster rods is 93.3 wt % ^{235}U. LEU TRIGA cluster rods contain a uranium enrichment of 20 wt % ^{235}U. The fuel pellets are loaded into cylindrical rods approximately 0.5 inch in diameter and 30 inches long. TRIGA cluster rods are clad with Incoloy 800 material.

Figure 6.2.6-1 TRIGA Fuel Cluster Rod Details

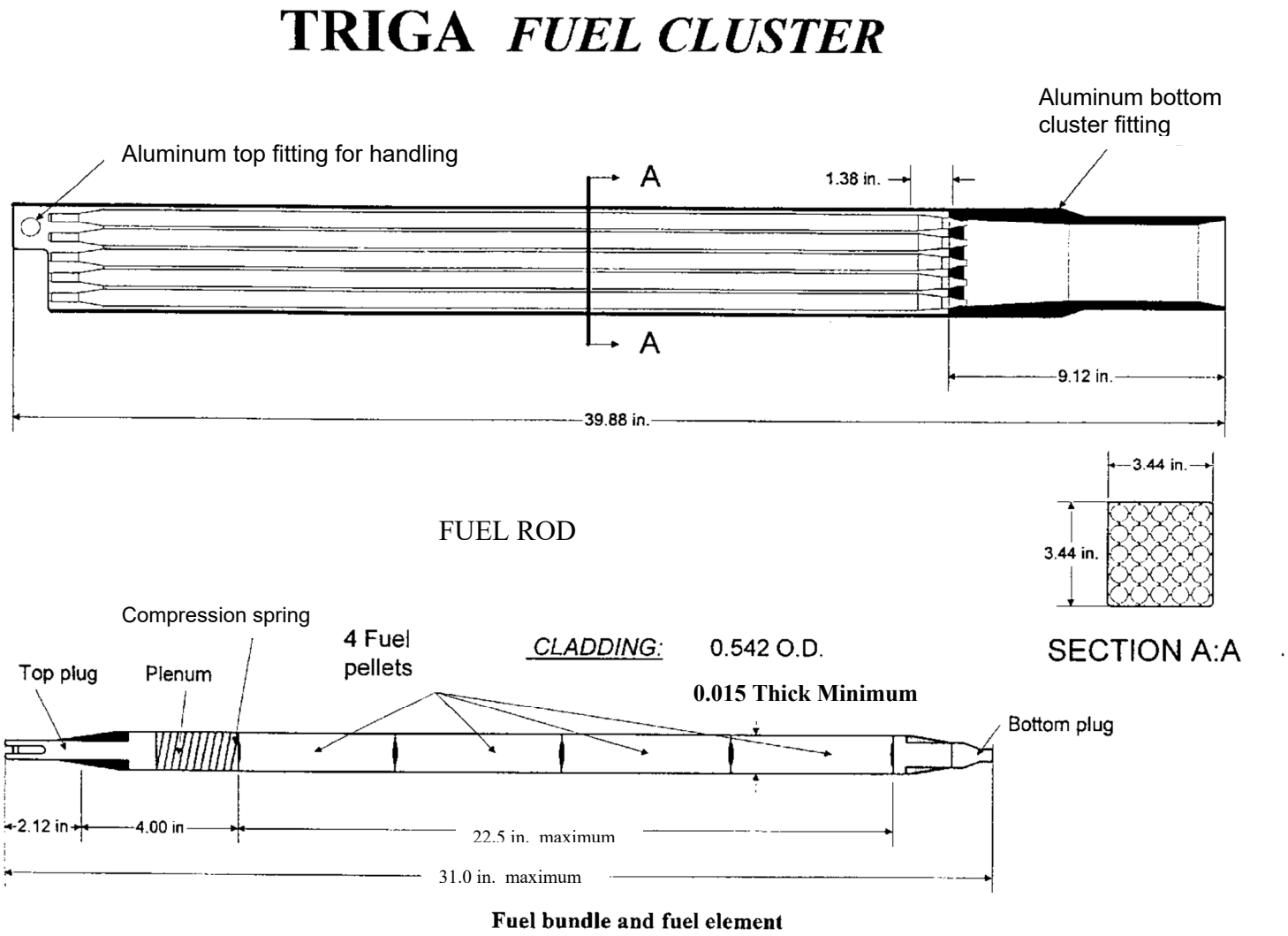

Fuel bundle and fuel element

Table 6.2.6-1 Characteristics of TRIGA Fuel Cluster Rods

Element Type	TRIGA Fuel Cluster Rod
Element Diameter (in.)	0.542
Element Length (in.)	30.13
Active Length (in.)	22
End Fitting Mass (g)	121
Clad Material	Incoloy 800
Clad Thickness (in.)	0.016
Clad Mass (g)	210
Fuel Material	U-ZrH
Pellet Diameter (in.)	0.51

Table 6.2.6-2 Characteristics of TRIGA Fuel Cluster Rods – Fuel Compositions

Parameter	HEU Value	LEU Value
U in Fuel (wt%)	10.2	45
235U in U Mass (wt%)	93.3	20
235U Mass (g)	42	54
H to Zr Ratio[1]	1.6	1.6
Zr Mass (g)	380	--[2]

[1] Specifications allow for a maximum H to Zr ratio of 1.7.

[2] Zirconium mass is calculated in the analysis section based on the uranium percentage in the fuel meat. Range of the as-fabricated fuel meat is 43 to 47 wt % uranium.

6.2.7 Metallic Fuel Rods

The design characteristics of the metallic fuel rods are shown in Table 6.2.7-1. As stated in Section 6.1, no criticality analyses are performed for these contents because naturally enriched uranium cannot become critical in light water.

Table 6.2.7-1 Characteristics of Design-Basis Metallic Fuel Rods

Parameter	Metallic
Assembly Rod Array	N/A
Assembly Weight, lbs	1,805 (15 rods)
Fuel Rod Length, in	120.5
Active Fuel Length, in	120.0
Number of Fuel Rods/Assembly	N/A
Fuel Rod Diameter, in	1.36
Cladding Material	Al
Cladding Thickness, in	0.080
Pellet Diameter, in	1.36
Fuel Cell Pitch, in	N/A
Pellet Material	Uranium metal
Theoretical Density percent	100
Maximum Initial Enrichment wt % ^{235}U	Natural
Design-basis Burnup, MWd/MTU	1,600
Weight of Uranium, kg/assembly	54.5
Weight of UO_2, kg/assembly	N/A

6.2.8 DIDO Fuel Assemblies

The NAC-LWT DIDO fuel basket module design can transport up to 42 DIDO research reactor fuel assemblies in six fuel basket modules. This configuration consists of seven fuel assemblies per basket, one placed in a center tube and one in each of six peripheral tubes. The analysis provided herein is bounding for all DIDO fuel assembly loading configurations.

A DIDO fuel assembly is comprised of four annular fuel elements that may be crimped at a common point after the assembly is cut to size. The fuel elements have a fuel meat composed of either U_3O_8-Al, U_3Si_2-Al, or U_3Si_2 in an aluminum matrix dispersing material. While data available did not indicate U-Al mixture, it will be enveloped by the evaluation shown in Section 6.4.7. Highly enriched, medium enriched and low enriched assemblies are available at maximum enrichments of 93 wt % ^{235}U, 45 wt % ^{235}U and 20 wt % ^{235}U, respectively. HEU fuel assemblies are conservatively evaluated at 94 wt % ^{235}U. Figure 6.2.8-1 shows a view of the DIDO fuel assembly. Nominal characteristics for the DIDO fuel assemblies are shown in Table 6.2.8-1. Uranium weight percent in the fuel composition is indicated as 57.5, 33.7, and 18.4 weight percent for the HEU, MEU and LEU fuel, respectively. The listed fuel dimensions are extended by the tolerances shown in Table 6.2.8-2 to arrive at bounding fuel configurations in Section 6.4.3.

Figure 6.2.8-1 DIDO Fuel Assembly



Table 6.2.8-1 Characteristics of DIDO Fuel Assemblies

Fuel Parameters	Units	U3Si2-Al	U3Si2	U3O8
Tube 1 outer diameter	[cm]	6.395	6.38	6.38
Tube 1 ^{235}U	[g]	36.0	35.67	35.67
Tube 2 outer diameter	[cm]	7.375	7.36	7.36
Tube 2 ^{235}U	[g]	42.0	41.88	41.88
Tube 3 outer diameter	[cm]	8.355	8.34	8.34
Tube 3 ^{235}U	[g]	48.0	48.09	48.09
Tube 4 outer diameter	[cm]	9.335	9.32	9.32
Tube 4 ^{235}U	[g]	54.0	54.36	54.36
Clad thickness	[cm]	0.048	0.0425	0.0425
Tube thickness	[cm]	0.146	0.15	0.15
Fuel meat thickness	[cm]	0.050	0.065	0.065
Active fuel length	[cm]	60.90	60.0	60.0
Total element length	[cm]	66.04	62.5	62.5
^{235}U per fuel assembly	[g]	180.0	180.0	180.0

Table 6.2.8-2 DIDO Fuel Assembly Tolerances

Description	Units	Value
Fuel Tube Diameter	[cm]	0.20
Plate Thickness	[cm]	0.02
Clad Thickness	[cm]	0.01
Fuel Cylinder Pitch	[cm]	0.02
Active Fuel Length	[cm]	1.25
Fuel Element Length	[cm]	1.00
235U per Fuel Assembly	[g]	10.00
U wt% in Fuel Composition		5

6.2.9 General Atomics Irradiated Fuel Material

The NAC-LWT General Atomics (GA) Irradiated Fuel Material (IFM) basket module is designed to transport two IFM packages, also referred to as Fuel Handling Units (FHUs). The module is placed in the top of the NAC-LWT cavity with a bottom spacer to facilitate unloading of the IFM packages.

The two GA IFM FHUs are intended for a single shipment in the NAC-LWT. The first IFM FHU contains a Reduced-Enrichment Research and Test Reactor (RERTR) type fuel and the second contains a High-Temperature Gas-cooled Reactor (HTGR) type fuel. Each FHU consists of stainless steel weld-encapsulated primary and secondary enclosures that contain the GA IFM.

The RERTR IFM is comprised of 20 irradiated TRIGA fuel elements; 13 of the elements are intact and the remaining seven have been previously sectioned for examination purposes. The component segments of each sectioned element have been collected into separate aluminum tubes with crimped ends. Since the TRIGA elements are loaded in both intact and sectioned configurations, two models of the TRIGA fuel are considered: 1) intact elements in a regular array, and 2) fuel homogenization within the confines of the RERTR primary enclosure. The latter model is used to demonstrate system subcriticality for a damaged package.

Parameters characterizing the RERTR/TRIGA fuel elements are shown in Table 6.2.9-1. Three distinct mass loadings of uranium were used in the 20 TRIGA elements: 20, 30 and 45 wt % U; the average mass of the fueled portion of these elements is 551 g with an enrichment of 19. 7 wt % ^{235}U. The overall mass fractions of the 20 elements are given in Table 6.2.9-2 and the composition of the incoloy clad is given in Table 6.2.9-3. For a homogenized (damaged) fuel description, equivalent densities calculated for each of the RERTR/TRIGA elemental constituents are shown in Table 6.2.9-4. The volume inside the RERTR primary enclosure is 436 in^3 (7140 cm^3).

The HTGR IFM is comprised of fuel in four forms: fuel particles (kernels), fuel particles (coatings), fuel compacts (rods), and fuel pebbles. Fuel kernels are solid, spheridized, high-temperature sintered fully-densified, ceramic kernel substrate, composed of: UC_2, UCO, UO_2, $(Th,U)C_2$, or $(Th,U)O_2$. The as-manufactured enrichment of the HTGR fuel varies from ~10.0 to 93.15 wt % ^{235}U. Fuel coatings are solid, spheridized, isotropic, discrete multi-layered fuel particle coatings with chemical composition including pyrolitic-carbon (PyC) and silicon carbide (SiC). Fuel compacts are multi-coated ceramic fuel particles, bound in solid, cylindrical, injection-molded, high-temperature heat-treated compacts. The fuel compact matrix is composed of carbonized graphite shim, coke, and graphite powder. Fuel pebbles are multi-coated fuel particles, bound in solid, spherical injection-molded, high-temperature heat-treated

pebbles. The fully-cured binding matrix is composed of carbonized graphite shim, coke and graphite powder.

The HTGR material composition is provided for the entire IFM package as shown in Table 6.2.9-4. Based on the dimensions of the stainless steel cylinders encapsulating both the RERTR and HTGR material, shown in Table 6.2.9-5, equivalent densities calculated for each of the HTGR elemental constituents are also shown in Table 6.2.9-4. The volume inside the HTGR primary enclosure is 583 in^3 (9555 cm^3).

Table 6.2.9-1 GA IFM RERTR/TRIGA Fuel Parameters

Description	Unit	Value
Fuel OD	[cm]	1.3
Fuel Length	[cm]	56.0
Clad OD	[cm]	1.38
Clad Thickness	[cm]	0.041
Element Length	[cm]	76.0
Number of Elements		20
Enrichment	[wt % 235U]	19.7

Table 6.2.9-2 GA IFM RERTR/TRIGA Fuel Composition

Constituent	Mass Fraction [wt %]
Zr	62.42
U	35.77
H	1.08
Er	0.59
C	0.14

Table 6.2.9-3 GA IFM RERTR/TRIGA Clad Composition

Constituent	Mass Fraction [wt %]
Fe	40
Ni	35
Cr	25

Table 6.2.9-4 GA IFM Elemental Constituents

Fuel Type	Element	Mass [g]	Density [g/cc]
RERTR	Zr	6721.1	0.9413
	U	3850.66	0.5393
	H	116.02	0.0162
	Er	63.32	0.0089
	C	15.44	0.0022
	Fe	1704.5	0.2387
	NI	919.1	0.1287
	Cr	761.7	0.1067
	Mn	30.8	0.0043
	Mo	17.3	0.0024
	Total	14199.94	1.9888
HTGR	C	7075.55	0.7405
	Th	1956.87	0.2048
	Si	1408.37	0.1474
	U	204.81	0.0214
	O	22.40	0.0023
	Total	10668.00	1.1165

Table 6.2.9-5 GA IFM Primary and Secondary Enclosure Dimensions

Description	Value [in]
RERTR Primary Enclosure Interior Height	34.50
RERTR Primary Enclosure OD	4.25
RERTR Secondary Enclosure OD	4.75
RERTR Enclosure Wall Thickness	0.12
HTGR Primary Enclosure Interior Height	36.50
HTGR Primary Enclosure OD	4.75
HTGR Secondary Enclosure OD	5.25
HTGR Enclosure Wall Thickness	0.12

6.2.10 PULSTAR Fuel Elements

Four 28 MTR 7-element modules are stacked in the NAC-LWT cavity to accommodate PULSTAR fuel elements. PULSTAR fuel elements (rods) may be loaded as either loose rods or intact fuel assemblies. PULSTAR fuel elements are zirconium-alloy-clad UO_2 pellets with an analyzed enrichment of 6.5 wt % ^{235}U. PULSTAR fuel assemblies are a 5×5 rectangular array of elements surrounded by a zirconium alloy box with aluminum upper and lower fittings.

Possible loading configurations for PULSTAR fuel elements are listed below.

- intact assemblies loaded directly into any 28 MTR module cell
- up to 16 intact elements loaded in the 4×4 TRIGA fuel rod insert (rod insert is placed into a module cell),
- up to 25 intact or damaged (failed) elements and nonfuel components of fuel assemblies in the PULSTAR can, or (failed fuel or screened can)

Damaged fuel elements may include severe fuel damage, i.e., fuel debris.

PULSTAR fuel element and assembly characteristics are summarized in Table 6.2.10-1. A sketch of a PULSTAR fuel assembly is shown in Figure 6.2.10-1.

Figure 6.2.10-1 PULSTAR Fuel Assembly

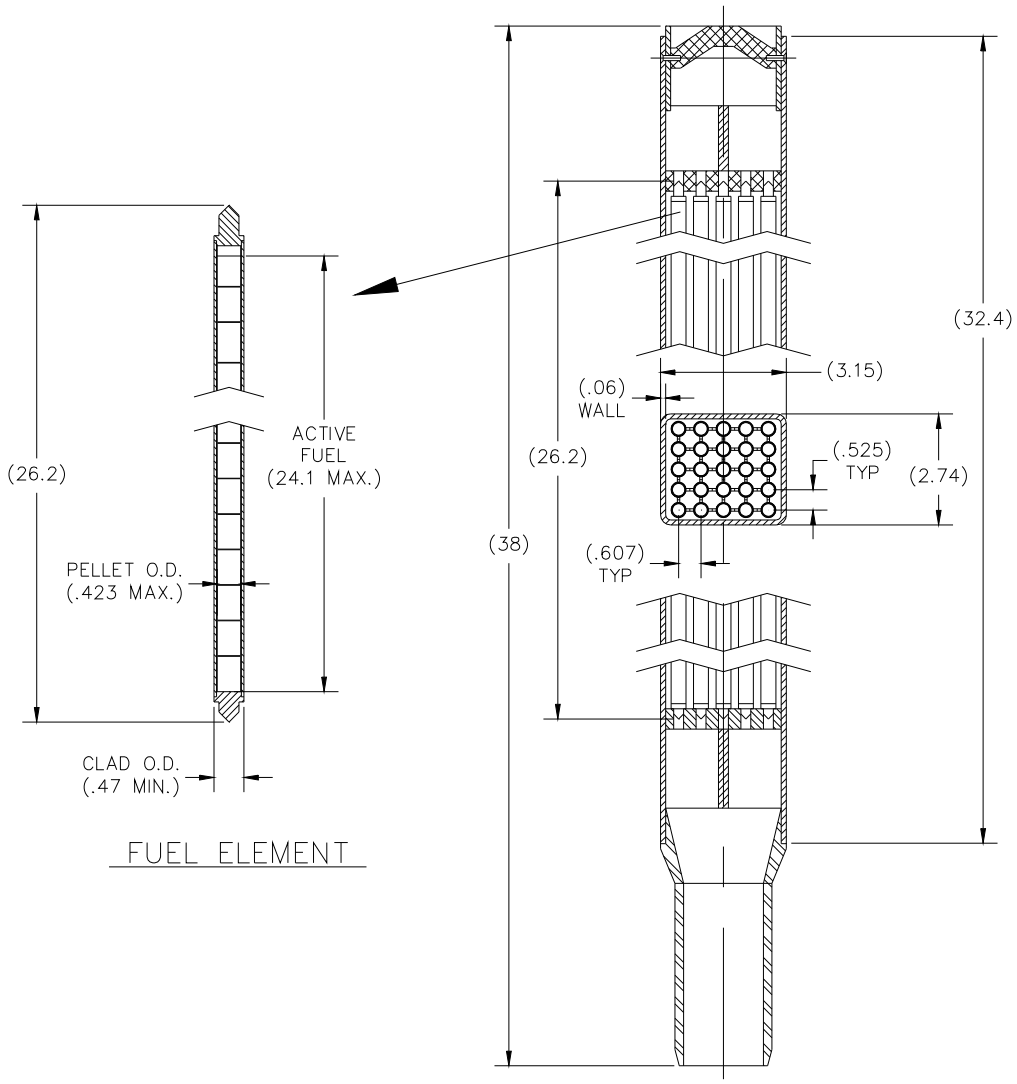

Table 6.2.10-1 PULSTAR Fuel Characteristics

Description	Value [in]
Maximum Pellet Diameter (inch)	0.423
Minimum Clad Thickness (inch)	0.0185
Minimum Element (Rod) Diameter (inch)	0.470
Maximum Active Fuel Height (inch)	24.1
Fuel Element (Rod) Length (inch)	26.2
Rod Pitch (inch)	0.525×0.607
Assembly Length	38 inch
Box Width	2.745×3.155
Box Thickness	0.06
Maximum Enrichment (wt % 235U)	6.5
Maximum 235U Content per Element (g)	33
No of Element (Rods) per Assembly	25

6.2.11 Spiral Fuel Assemblies

The NAC-LWT ANSTO fuel basket module design can transport up to 42 spiral fuel assemblies in six fuel basket modules. This configuration consists of seven fuel assemblies per basket, one placed in a center fuel tube and one in each of six peripheral fuel tubes.

A spiral fuel assembly is comprised of 10 curved fuel plates in a spiral pattern located in the annulus formed by two concentric aluminum sleeves. The assembly top and bottom sections may be cropped outside the fuel region to allow the fuel assembly to fit within the basket cavity. The fuel elements have a fuel meat composed of U-Al alloy. Nominal enrichment for the assembly is 80 wt % ^{235}U enriched. The assemblies are evaluated up to 85 wt % ^{235}U enriched. Figure 6.2.11-1 shows a cross-section view of the spiral fuel assembly. Nominal characteristics for the spiral assemblies are shown in Table 6.2.11-1. The listed fuel dimensions are extended by the tolerances shown in Table 6.2.11-2 to arrive at bounding fuel configurations in Section 6.4.10.

Figure 6.2.11-1 Spiral Fuel Assembly Cross-Section Sketch

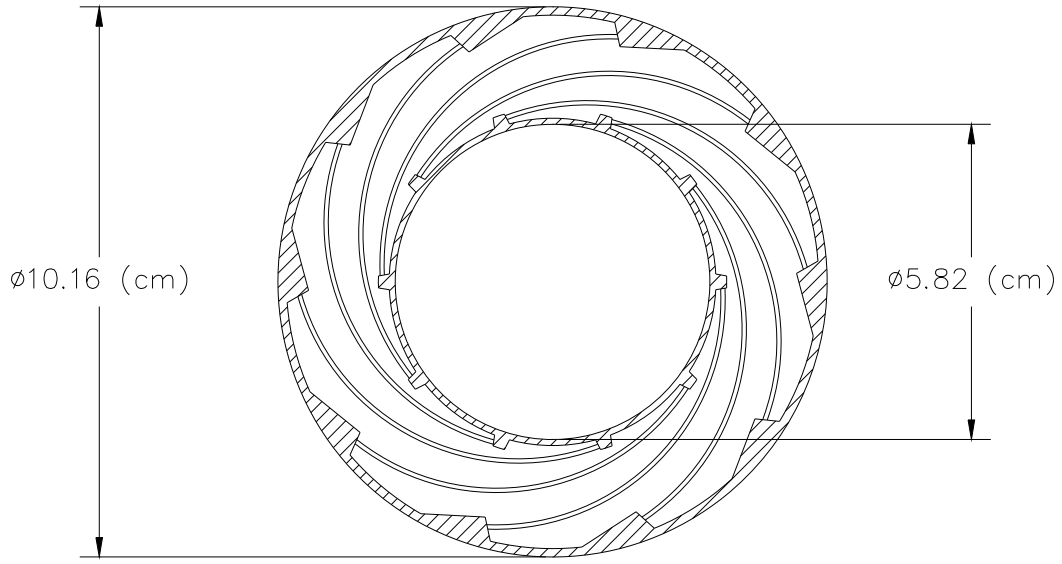

Table 6.2.11-1 Spiral Fuel Assemblies Characteristics

Fuel Parameters	Units	Value
Number of plates		10
Inner aluminum plate ID	[cm]	5.82
Inner aluminum plate OD	[cm]	6.045
Outer aluminum plate ID	[cm]	9.85
Outer aluminum plate OD	[cm]	10.16
Fuel length	[cm]	60.325
Active Fuel Width	[cm]	6.0
Active Fuel Thickness	[cm]	0.061
Plate Width	[cm]	7.33
Plate Thickness	[cm]	0.147
Total element length	[cm]	63.5
Fuel Material		U-Al
Clad Material		Al
Enrichment (wt % ^{235}U)		80%
Maximum ^{235}U per Assembly (nominal)	[g]	150.0
U wt % in Fuel Composition		38%
Mass of uranium (calculated)	[g]	176.5

Table 6.2.11-2 Spiral Fuel Assemblies Tolerances Applied

Fuel Parameters	Units	Value
Plate Thickness	[cm]	0.02
Clad Thickness	[cm]	0.020
Active Fuel Length	[cm]	1.25
Fuel Element Length	[cm]	1.00
^{235}U per Fuel Assembly	[g]	10.00
^{235}U wt % in U		5%
U wt % in Fuel Composition		20%

6.2.12 MOATA Plate Bundles

The NAC-LWT ANSTO fuel basket module design can transport up to 42 MOATA plate bundles in six fuel basket modules. This configuration consists of seven fuel assemblies per basket, one placed in a center fuel tube and one in each of six peripheral fuel tubes.

A plate bundle is comprised of a maximum 14 flat fuel plates sandwiched between two thick, nonfuel, aluminum side plates. The plates are pinned together at the top and bottom, outside the active fuel region, and the plates are separated by spacer disks. The fuel elements have a fuel meat composed of U-Al alloy. Nominal enrichment for the assembly is 90 wt % ^{235}U enriched. The assemblies are evaluated up to 92 wt % ^{235}U enriched. Figure 6.2.12-1 shows cross-section views of the plate bundle. Nominal characteristics for the plate bundle are shown in Table 6.2.12-1. The listed fuel dimensions are extended by the tolerances shown in Table 6.2.12-2 to arrive at bounding fuel configurations in Section 6.4.10.

Figure 6.2.12-1 MOATA Plate Bundle Sketch

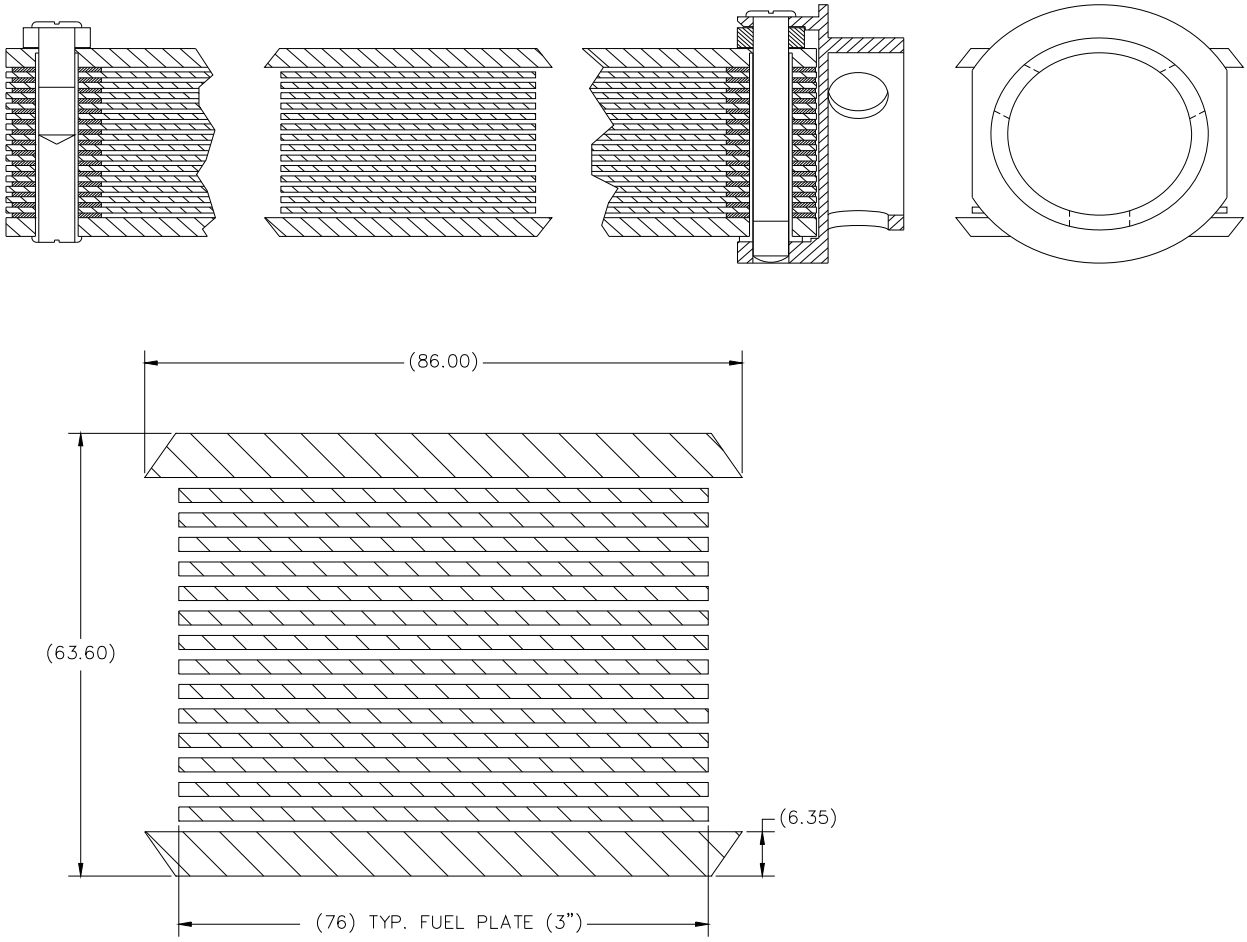

Table 6.2.12-1 MOATA Plate Bundle Characteristics

Fuel Parameters	Units	Value
Maximum Number of Plates		14
Plate Thickness	[cm]	0.2032
Plate Width		7.62
Total element length	[cm]	66.04
Clad thickness	[cm]	0.05
Fuel Meat Thickness (min)	[cm]	0.1032
Active Fuel Width	[cm]	6.985
Active Fuel Length	[cm]	58.42
Plate Spacer Thickness	[cm]	0.15
Side Plate Thickness	[cm]	0.635
Side Plate Width	[cm]	7.87[3]
Angle Cut-Back (degrees)		30
Fuel Composition		U-Al-alloy
Enrichment wt % ^{235}U		90%
Maximum ^{235}U per Plate (nominal)	[g]	22.0
U wt % in Fuel (Calculated)		18%
Mass of uranium - Calculated	[g]	23.9
Assembly Width (Y) – Calculated[2]	[cm]	7.87
Assembly Depth (X) - Calculated	[cm]	6.36

[3] Nominal width of "long side" is 8.60 cm. Listed value is "short side" to account for 30-degree chamfer.

[2] Assembly width and depth are calculated values based on the size of the plate stack-up. Circular plate bundle end-fittings and the "chamfered" side plates will minimize movement of fuel within the tube opening.

Table 6.2.12-2 MOATA Plate Bundle Tolerances Applied

Fuel Parameters	Units	Value
Plate Thickness	[cm]	0.00508
Plate Width	[cm]	0.0381
Fuel Element Length	[cm]	0.0381
Clad Thickness	[cm]	N/A
Active Fuel Width (calculated)[1]	[cm]	0.3175
Active Fuel Length	[cm]	1.27
Spacer Thickness	[cm]	0.03
Side Plate Thickness	[cm]	0.02
Side Plate Width	[cm]	0.02
235U per plate	[g]	0.30
Enrichment wt % 235U		2%
U wt % in Fuel Composition		10%

[1] Tolerance applied is one-half the difference between plate width and active fuel width.

6.3 Criticality Model Specifications

This section describes the models that are used in the criticality analyses for the NAC-LWT cask. The models presented are for cask loadings of one PWR assembly, two BWR assemblies, up to 42 HEU, MEU or LEU, MTR elements, up to 42 HEU, MEU or LEU DIDO assemblies, up to 140 TRIGA fuel elements, up to 560 TRIGA fuel cluster rods, two General Atomics Irradiated Fuel Material packages, 25 intact PWR or BWR rods in a rod holder or fuel assembly lattice, 25 PWR or BWR fuel rods with up to 14 of the fuel rods classified as damaged in a fuel rod holder, up to 700 PULSTAR fuel elements, up to 42 spiral fuel assemblies, or up to 42 MOATA plate bundles. The models are analyzed separately under normal operations and hypothetical accident conditions to ensure that all possible configurations are subcritical. The metallic fuel rods are not analyzed since this fuel is not enriched and cannot achieve criticality in light water.

6.3.1 PWR Fuel Assemblies

This section describes the methodology and the models used in the criticality analysis of the NAC-LWT cask with the design basis PWR assemblies. The methodology uses a 27 group neutron cross section library (27GROUPNDF4) and KENO-Va to determine the multiplication factor, k_{eff}, of the system. The models presented utilize configurations of the various PWR assemblies in the basket and the NAC-LWT cask.

The calculational methodology is the SCALE, CSAS25 criticality analysis sequence (Petrie). This sequence includes a material information processor (Landers), cross section and resonance treatment processing with the NITAWL code (Greene) and KENO-Va (Petrie) criticality analysis. The material information processor in the SCALE package calculates nuclide number densities for standard and non-standard compositions. The NITAWL code prepares a working library and performs resonance treatments on ^{235}U and ^{238}U. The KENO-Va code is used to model the PWR assemblies, basket and cask body of the NAC-LWT. KENO-Va uses Monte Carlo techniques to track neutrons through the geometry and determine the multiplication factor, k_{eff}, of the system. In these analyses, approximately 300 batches of 1000 neutrons per batch are tracked through the system.

6.3.1.1 Description of Calculational Models

Since it is planned to transport many types of PWR fuel assemblies in the NAC-LWT cask, a determination of the most limiting, i.e., highest k_{eff}, assembly must be made for criticality purposes. KENO-Va models of the assemblies in Table 6.2.1-1 and Table 6.2.1-2 are evaluated to determine the most limiting PWR assembly. This determination was first performed at a uranium enrichment of 3.7 wt % ^{235}U. The assembly with the highest reactivity, not exceeding

0.95 while accounting for bias statistical uncertainties, was then selected as the most limiting assembly for a uranium enrichment of 3.7 wt % ^{235}U. Those assemblies exceeding 0.95 were reexamined at a uranium enrichment of 3.5 wt % ^{235}U. A most limiting assembly was likewise selected for this uranium enrichment. The KENO-Va models developed to select the most limiting assemblies incorporate a single PWR fuel assembly in the fuel basket and the NAC-LWT cask as shown in Figure 6.3.1-1 and Figure 6.3.1-2. These KENO-Va models incorporate water at 1 gm/cc modeled between the fuel rods, in the basket holes surrounding the assemblies, in the neutron shield, and in the cask exterior. An active fuel length of 12 ft was utilized in constructing the KENO-Va PWR assembly models. The ends were reflected with water for the most reactive assembly analysis and with actual cask materials for the NCT and HAC moderator studies. The assemblies, the aluminum PWR basket, and the cask with radial shield regions are explicitly represented. There are no homogenizations of fuel, moderator or basket. In addition, water albedo boundary conditions were utilized as the boundary conditions for the cask exterior. The most limiting assembly analysis was performed with both a dry and a wet fuel pellet to clad gap.

The most limiting assembly models were analyzed to determine their most reactive configurations due to geometrical tolerances and mechanical perturbations. The models were analyzed under accident conditions with water at 1 gm/cc modeled between the fuel rods, in the basket holes surrounding the assemblies, in the neutron shield, and in the cask exterior. The most reactive configuration analysis incorporates the more reactive of the wet or dry gap configurations.

As shown in Section 6.4.1, the most limiting PWR fuel assemblies for 3.7 and 3.5 wt % ^{235}U enrichments were determined to be the Exxon ANF 15×15 and the Westinghouse 17×17 OFA fuel assemblies, respectively. The most reactive configurations are the nominal configuration for the Exxon ANF 15×15 assembly and the maximum basket opening for the Westinghouse 17×17 OFA assembly. The material properties used in the model are shown in Table 6.3.1-1.

These KENO-Va models of the most limiting assemblies in their most reactive configurations were then analyzed to determine the effects moderator variations in the cavity and outside the cask under normal conditions and inside the neutron shield tank under accident conditions. The k_{eff} results for single casks loaded with the most limiting design basis PWR assemblies for both 3.5 and 3.7 wt % ^{235}U are always below 0.95 including all biases and uncertainties.

6.3.1.2 Package Regional Densities

The composition densities (gm/cc) and nuclide number densities (atm/b-cm) calculated by the material information processor and used in the subsequent criticality analyses are shown in Table 6.3.1-1.

Figure 6.3.1-1 KENO-Va Model of the NAC-LWT Cask Model with PWR Basket and 15×15 PWR Assembly

(Dimensions in centimeters)

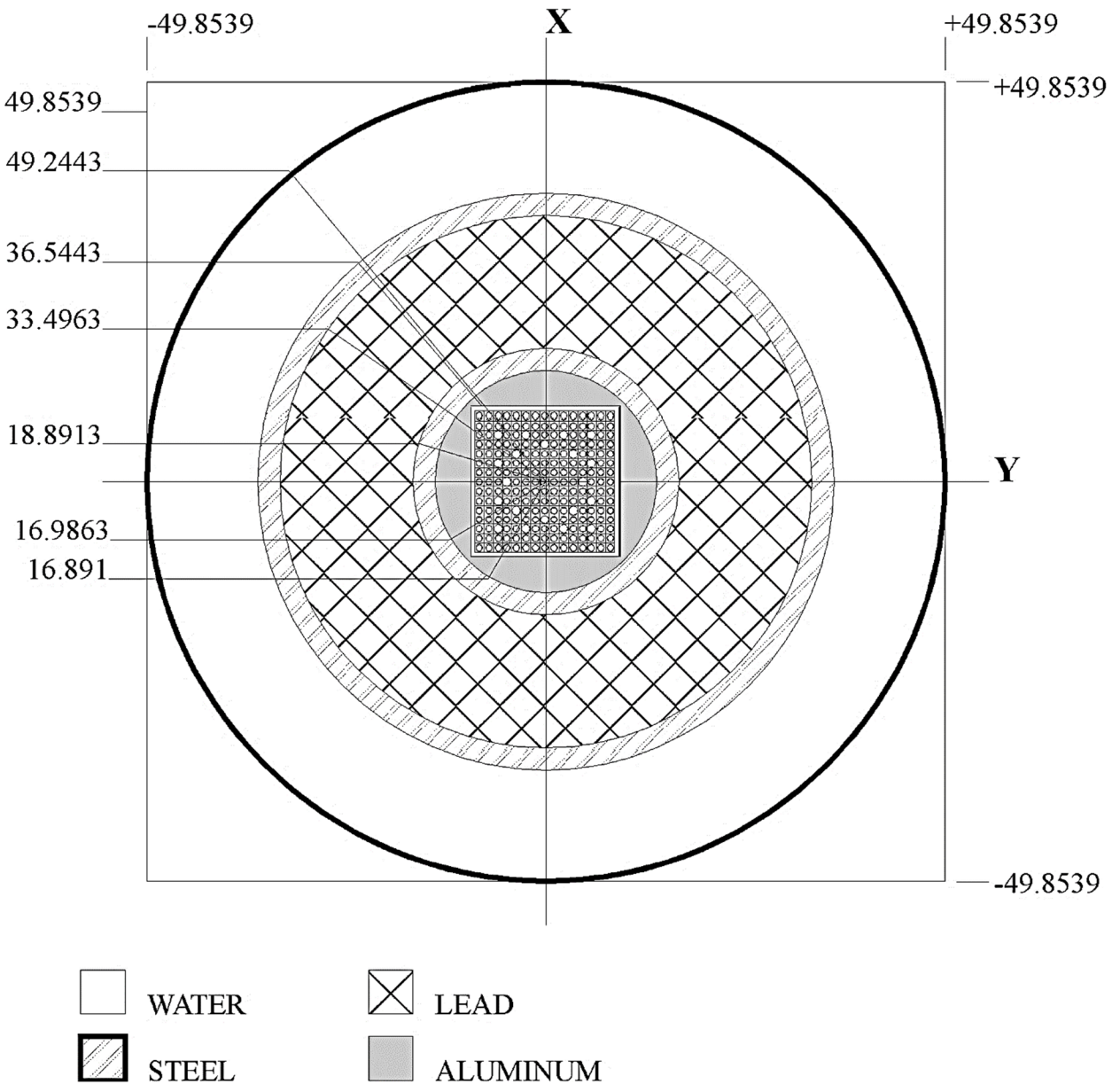

Figure 6.3.1-2 KENO-Va Model of the NAC-LWT Cask with PWR Basket and Westinghouse 17×17 OFA Assembly

(Dimensions in centimeters)

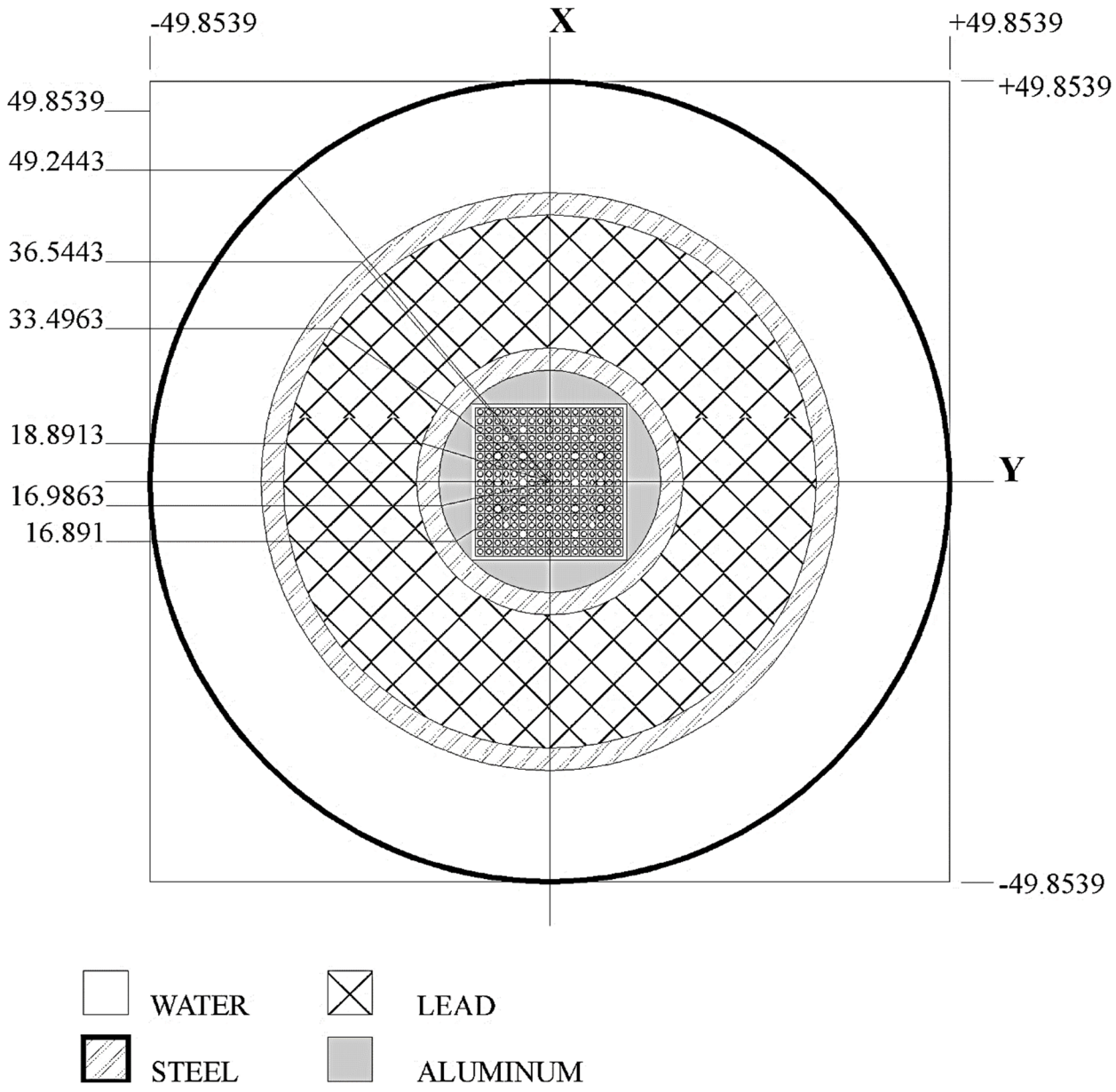

Table 6.3.1-1 Compositions and Number Densities Used in the Criticality Analysis of PWR Fuel Assemblies

Material	3.7% Enriched UO2	3.5% Enriched UO2	Zr	H2O	304 Stainless Steel	Pb	Al
Density, gm/cc	10.412	10.412	6.49	0.998	7.920	11.344	2.702
Nuclide	atm/b-cm						
^{235}U	8.701E-4	8.231E-4					
^{238}U	2.236E-2	2.241E-2					
Oxygen	4.646E-2	4.646E-2		3.338E-2			
Hydrogen				6.677E-2			
Zirconium			4.285E-2				
Iron					5.936E-2		
Chromium					1.743E-2		
Nickel					7.721E-3		
Manganese					1.736E-3		
Lead						3.297E-2	
Aluminum							6.031E-2

6.3.2 BWR Fuel Assemblies

This section describes the methodology and the models used in the criticality analysis of the NAC-LWT cask with the design basis BWR assemblies. The methodology uses a 27 group neutron cross section library (27GROUPNDF4) and KENO-Va to determine the multiplication factor, k_{eff}, of the system. The models presented utilize configurations of the various BWR assemblies in the basket and the NAC-LWT cask.

The calculation methodology is the SCALE, CSAS25 criticality analysis sequence (Petrie, June 1990). This sequence includes a material information processor (Landers), cross section and resonance treatment processing with the NITAWL code (Greene) and KENO-Va (Petrie, August 1990) criticality analysis. The material information processor in the SCALE package calculates nuclide number densities for standard and non-standard compositions. The NITAWL code prepares a working library and performs resonance treatments on ^{235}U and ^{238}U. The KENO-Va code is used to model the BWR assemblies, basket and cask body of the NAC-LWT. KENO-Va uses the Monte Carlo technique to track neutrons through the geometry and determine the multiplication factor, k_{eff}, of the system. In these analyses, approximately 300 batches of 1000 neutrons per batch are tracked through the system.

6.3.2.1 Description of Calculational Models

Since it is planned to transport different BWR assemblies in the NAC-LWT cask, a determination of the most limiting, i.e., higher k_{eff}, assembly must be made for criticality purposes. KENO-Va models of the assemblies in Table 6.2.2-1 and Table 6.2.2-2 are evaluated to determine the most limiting assembly. The KENO-Va models incorporate a mid-fuel slice of two identical BWR assemblies in the BWR basket and the NAC-LWT cask as shown in Figure 6.3.2-1. The most limiting assembly analysis is performed for accident conditions with water at 1 gm/cc modeled between the fuel rods and in the basket holes surrounding the assemblies. In addition, the neutron shield and cask exterior contain no water. The analysis is performed with these conditions with a dry and a wet clad gap. Reflecting boundary conditions are imposed on the sides, top and bottom of the KENO-Va CUBOID containing the loaded cask simulating an infinite array with no axial leakage. This produces the k_{eff} of an infinite array of BWR assemblies in the basket and cask. The most limiting assembly is the model that produces the highest k_{eff}. The most limiting assembly model is analyzed to determine its most reactive configuration due to geometric tolerances and mechanical perturbations. The model is analyzed for accident conditions with water at 1 gm/cc modeled between the fuel rods and in the basket holes surrounding the assemblies. In addition, the neutron shield and cask exterior contain no water. The most reactive configuration analysis incorporates the more reactive of the wet or dry gap configurations. The material properties used in the model are shown in Table 6.2.3-1.

A finite array KENO-Va model of the NAC-LWT cask with the design basis BWR fuel is developed from the KENO-Va model of the most limiting assembly in the most reactive configuration. As shown in Section 6.4.2, the Exxon 9×9 assembly with two water rods and an 80 mil channel (Ex 9×9-2/80) is the most limiting assembly and the nominal configuration is the most reactive configuration for the NAC-LWT cask with the two assembly BWR basket design. In the finite array model, the fuel assemblies, aluminum BWR basket, and the cask with radial shield regions are explicitly modeled. Twenty casks are placed on a triangular pitch in a KENO-Va region using the HOLE instruction. Finally, a CUBOID surrounds the array of casks. The KENO-Va model has an axial extent of ± 10 cm, but with reflecting boundary conditions imposed on top and bottom, the model is effectively infinite in axial extent. The water moderator is allowed to vary in the cavity and outside the cask under normal conditions and is allowed to vary inside the neutron shield tank under accident conditions. Cask center-to-center spacing is varied by adjusting the HOLE positions of the casks. The optimally moderated, most reactive configuration is then evaluated without the assembly channel to verify subcriticality in this arrangement. The k_{eff} results of this finite array model are always below 0.95, including all biases and uncertainties.

6.3.2.2 Package Regional Densities

The composition densities (gm/cc) and nuclide number densities (atm/b-cm) calculated by the material information processor and used in the subsequent criticality analyses are shown in Table 6.3.2-1.

Figure 6.3.2-1 KENO-Va Model of the NAC-LWT Cask Model with BWR Basket and 2 Exxon 9×9-2/80 Assemblies

(Dimensions in centimeters)

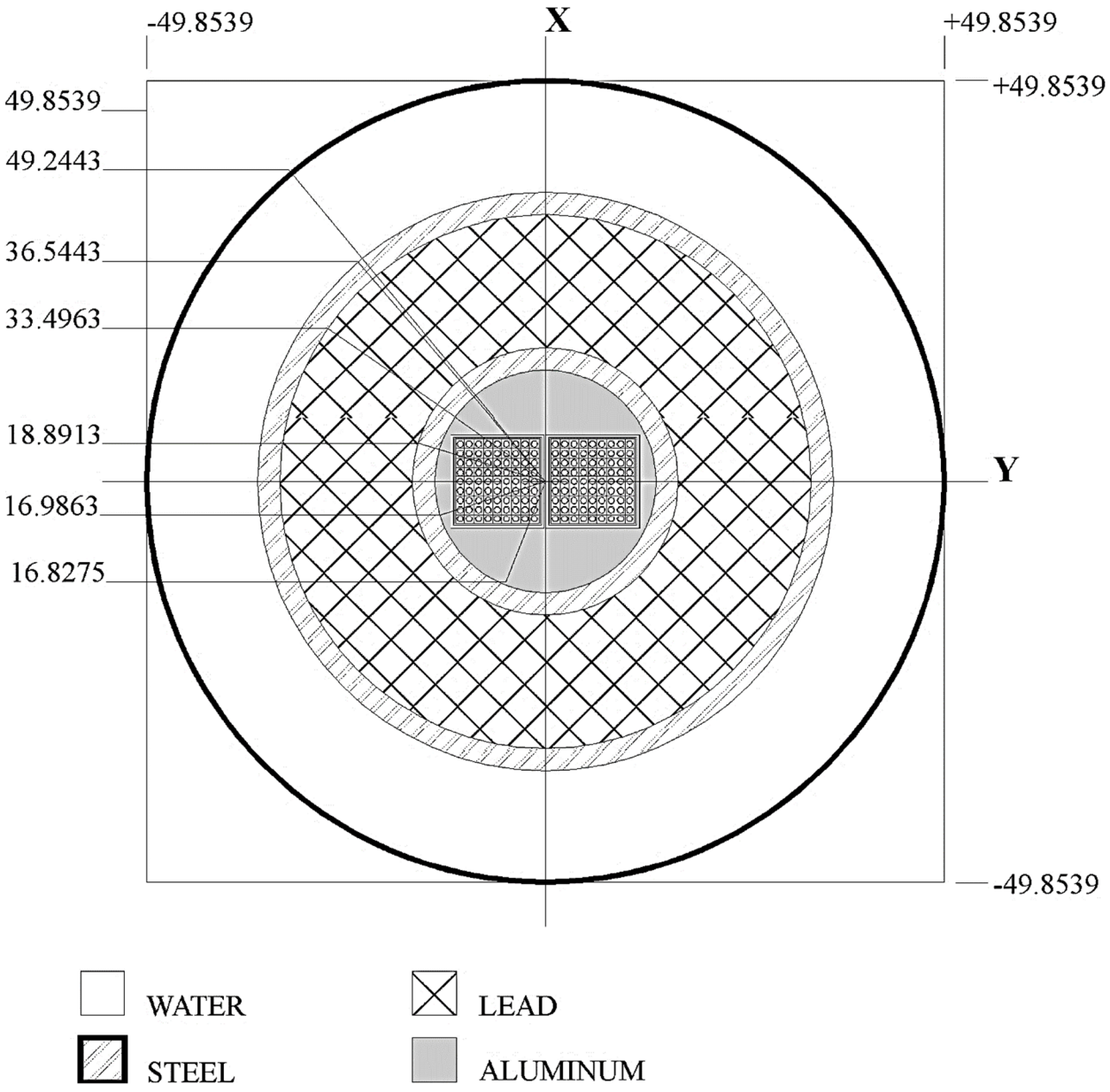

Table 6.3.2-1 Compositions and Number Densities Used in the Criticality Analysis of BWR Fuel Assemblies

Material	4.0% Enriched UO2	Zircaloy	H2O	304 Stainless Steel	Pb	Al
Density, gm/cc	10.412	6.56	0.9982	7.920	11.344	2.702
Nuclide	atm/b-cm					
^{235}U	9.406E-4					
^{238}U	2.229E-2					
Oxygen	4.646E-2		3.338E-2			
Hydrogen			6.677E-2			
Zircaloy		4.331E-2				
Iron				5.936E-2		
Chromium				1.743E-2		
Nickel				7.721E-3		
Manganese				1.736E-3		
Lead					3.297E-2	
Aluminum						6.031E-2

6.3.3 MTR Fuel Elements

6.3.3.1 Description of Calculational Models

Since it is planned to transport many types of MTR fuel elements in the NAC-LWT, a determination of the most limiting, i.e., higher k_{eff}, element must be made for criticality purposes. Primary candidates for the most limiting element from the MTR elements in Table 6.2.3-1 through Table 6.2.3-3 are selected for analysis. Limiting elements are primarily selected based on fissile material content. After establishing trends in reactivity versus the elements' physical characteristics, bounding element characteristics are defined.

Evaluations are performed with three distinct fuel element models. First stage evaluations compare reactivities between intact fuel element types in an infinite array of basket unit cells. The second phase of the evaluations employs a basket model representing a cross section of the cask at infinite height and is used to establish maximum reactivity basket configurations and moderator densities. Finally, the limiting fuel element parameters are defined by a three-dimensional cask model containing six baskets.

In the KENO-Va fuel/basket unit cell analysis, a unit cell of the fuel element and the basket is modeled. This includes the fuel element in a 3.44" × 3.44" (8.738 cm x 8.738 cm) opening surrounded by a 5/16" (0.7938 cm) web. Water at 1 gm/cc is modeled between the fuel plates and in the basket hole surrounding the fuel element as shown in Figure 6.3.3-1. Reflecting boundary conditions are imposed on the sides, top and bottom simulating an infinite array with no axial leakage. This produces the k_{eff} of an infinite array of fuel elements and basket cells without modeling the entire basket and cask.

The KENO-Va model of the NAC-LWT cask with the design basis MTR fuel is derived from a radial slice of the NAC-LWT at the active fuel region as shown in Figure 6.3.3-2. As described in Section 6.4.3.1, the HFBR fuel element is selected as the most limiting assembly for the seven element basket design. The KENO-Va model has an axial extent of ± 10 cm, but with reflecting boundary conditions imposed on top and bottom, the model is effectively infinite in axial extent. The fuel elements, steel basket and cask with radial shield regions are explicitly represented. There are no homogenizations of fuel, moderator or basket. A CUBOID surrounds the casks with reflecting boundary conditions imposed on the sides, top and bottom simulating an infinite array of infinite axial extent. Moderator (H_2O) is allowed to vary in the cavity and outside the cask under normal conditions and, also, is allowed to vary inside the neutron shield tank under accident conditions. Cask center-to-center spacing is varied by adjusting the X-Y spacing of the CUBOID surrounding the cask. The k_{eff} results of this infinite array model are always below 0.95 including all biases and uncertainties. Because the integrity of MTR fuel is not assured, the

fuel plates of an element may assume a more optimum configuration during accident conditions. Therefore, KENO-Va models of the NAC-LWT cask with MTR element plates optimally spaced within the limits of the basket opening are analyzed to verify that the HFBR element is the most limiting MTR element.

The full cask models are identical in cross section to the axially infinite cask models, but rather than axially reflecting an active fuel elevation section of a basket module, six basket modules are stacked into an array. The module chosen for stacking is the intermediate basket module. While axial extents differ from the bottom and top modules, the basket horizontal cross section is identical in all modules. Axial variations are associated with the stacking of the units, with all units containing the 0.5-inch thick base plate.

Figure 6.3.3-3 displays a side view of the intermediate module, with Figure 6.3.3-4 showing this basket module stacked six high inside the NAC-LWT. The cask bottom weldment and lid enclose the basket module array with its associated radial shielding. Reflecting boundary conditions on all sides simulate an infinite array of casks. This model neglects the impact limiters that would provide additional spacing between casks, and models the cask under accident conditions with the neutron shield voided.

As discussed in Section 6.4.3.10, the accident, optimum plate pitch configuration bounds the configuration of loose plates in the MTR plate canister. Therefore, no separate models are constructed for the loose plate evaluation.

For high fissile material payloads, the MTR basket may require partial loading. Figure 6.3.3-5 contains a basket layout with each potential loading position numbered to correlate the analysis in Section 6.4.3 to allowed loading locations. The model construction for partially loaded baskets is identical to that of the fully loaded basket with the exception of cask interior moderator material being assigned to the basket opening rather than an array of fuel plates and the side plates. The basket opening not occupied by a fuel element may be blocked to physically prevent loading of an element. The spacer consists of an aluminum tube, evaluated at an outer diameter of 3.25 inches and a 1/8-inch thickness, with a rectangular aluminum top plate. For baskets containing multiple fuel types, the SCALE material information processor input DAN and RES variables are provided for the fuel material not included in the LATTICECELL description. The Dancoff factors are extracted from LATTICECELL calculations of the single fuel type runs.

6.3.3.2 Package Regional Densities

The composition densities (gm/cc) and nuclide number densities (atm/b-cm) calculated by the SCALE material information processor for a range of elements evaluated in subsequent criticality analyses are shown in Table 6.3.3-1. Additional material densities may be obtained from the sample input/output files provided in Section 6.6.

Figure 6.3.3-1 KENO-Va Fuel/Basket Unit Cell Model for MTR Fuel

(Dimensions in Centimeters)

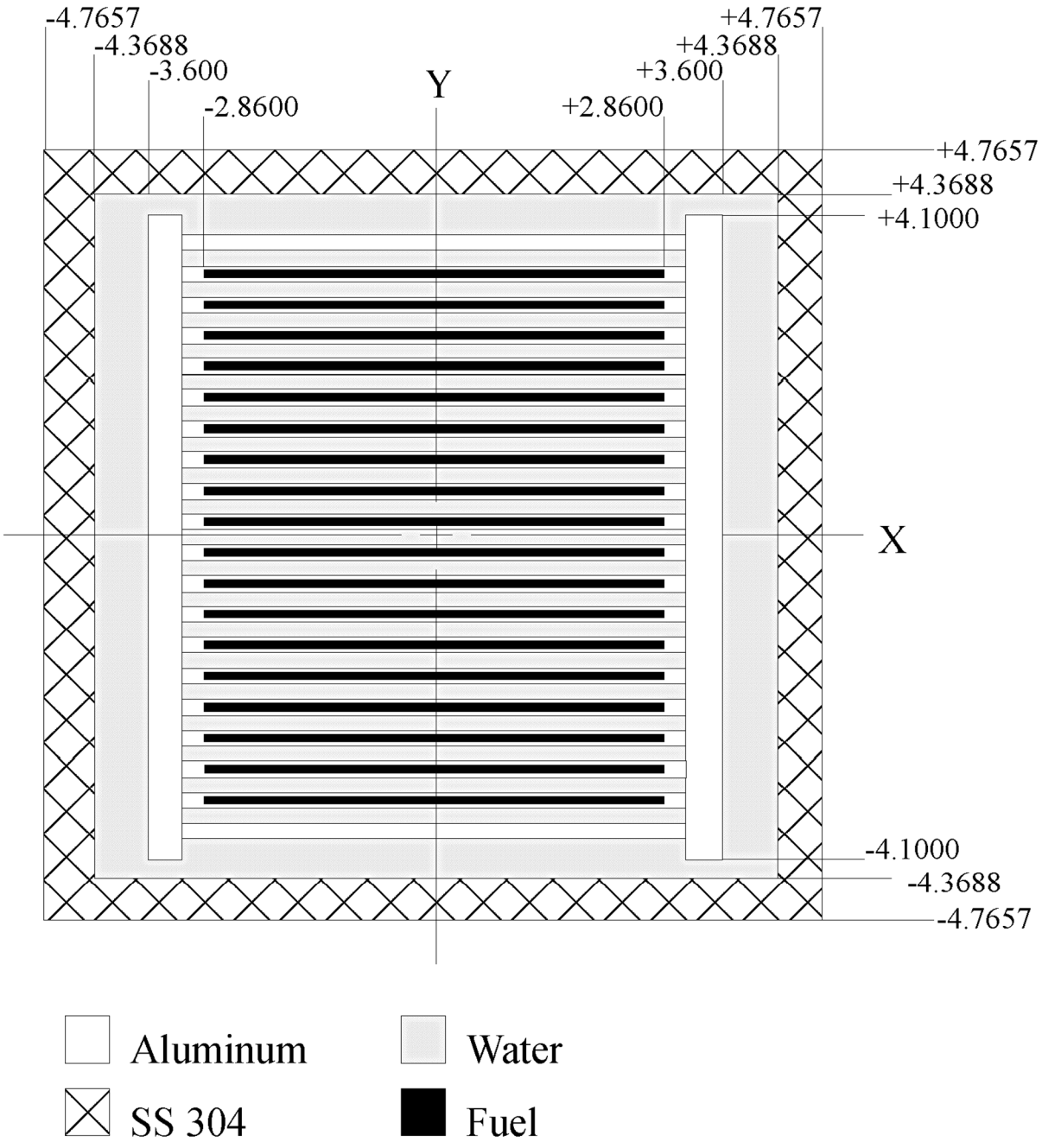

Figure 6.3.3-2 KENO-Va Model of NAC-LWT Cask with MTR Fuel

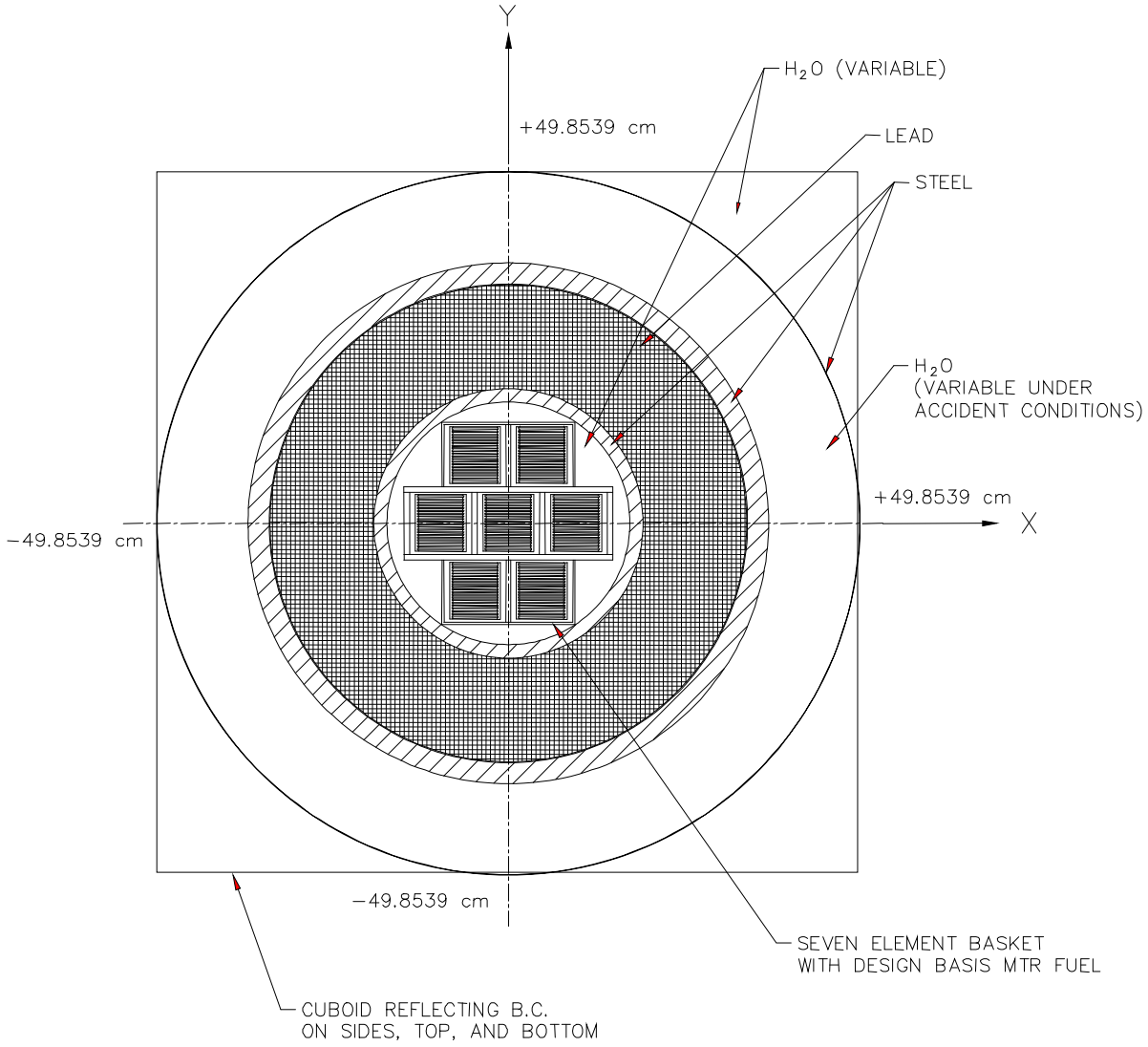

Figure 6.3.3-3 Intermediate MTR 42 Basket Module

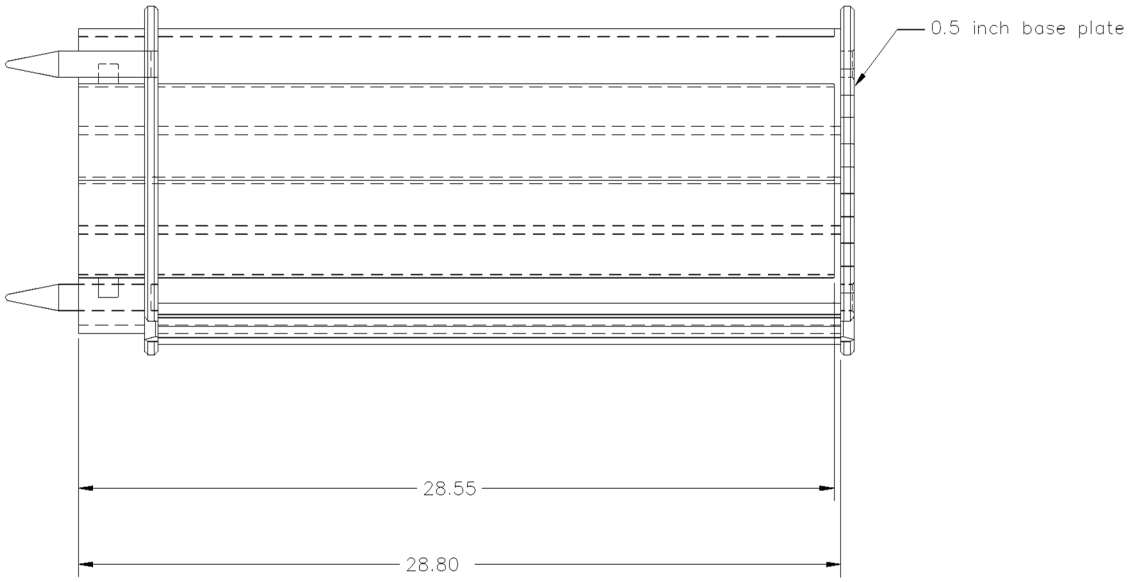

Figure 6.3.3-4 Full Length NAC-LWT Cask Model with 42 MTR Fuel Elements

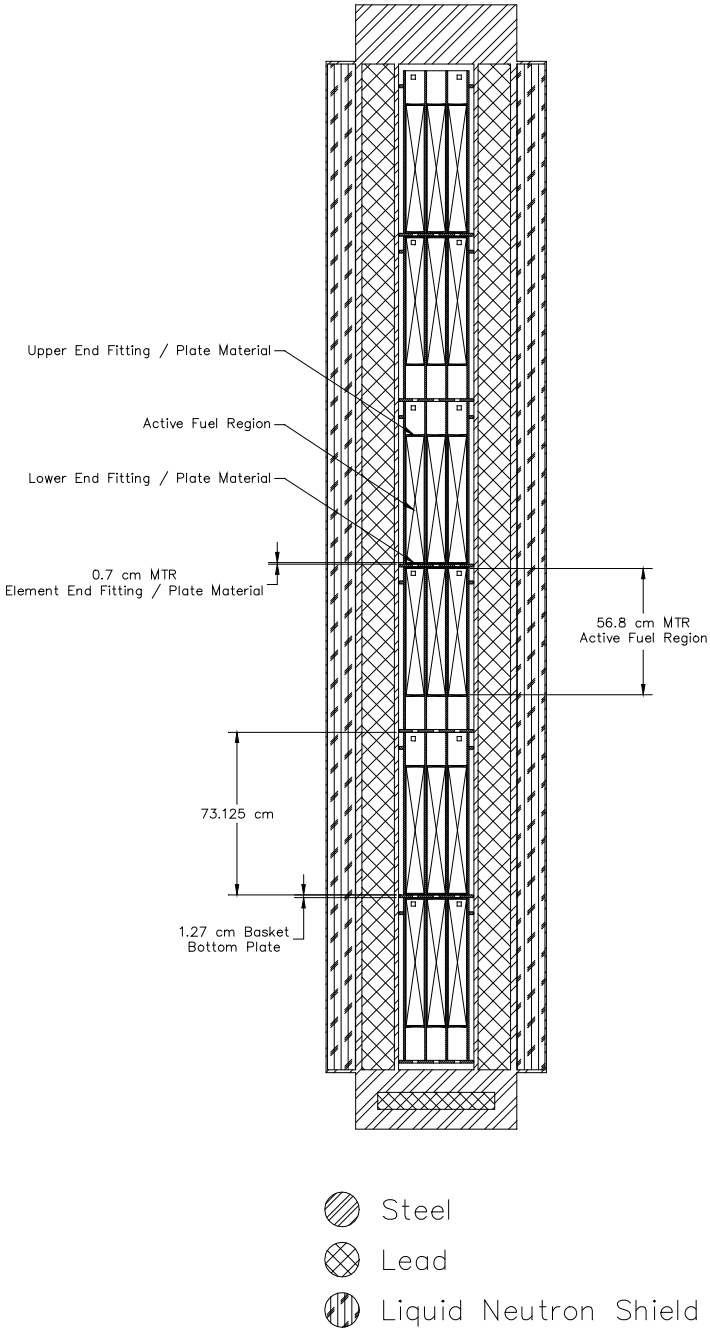

Figure 6.3.3-5 MTR Fuel Basket Module Loading Pattern

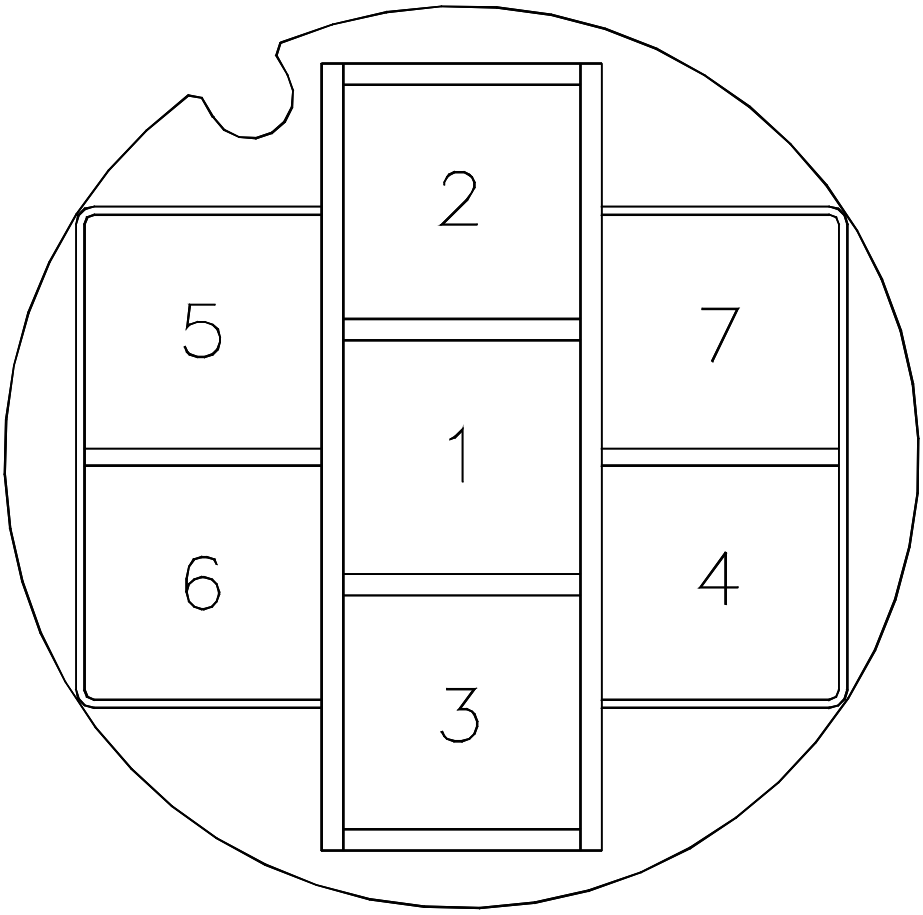

Table 6.3.3-1 Composition Densities Used in Criticality Analysis of MTR Fuel

Material	HFBR U3O8-Al	ORR U3O8-Al	GRR U-Al	IEA-R1 U-Al	THOR HEU UAl	THOR LEU U-Al	RSG-GAS U3O8-Al	BSR U3Si2	ZPRL U-Al
Density, gm/cc	3.99	3.32	2.90	4.10	2.90	4.10	4.80	5.01	4.10
Nuclide	atm/b-cm								
Uranium 235	2.852-3	1.978-3	1.382-3	8.493E-4	5.683E-4	8.542E-4	1.366E-3	2.358E-3	8.542E-4
Uranium 238	2.120-4	1.470-4	1.027-4	3.354E-3	4.12E-5	3.373E-3	5.480E-3	9.460E-3	3.373E-3
Silicon								7.505E-3	
Aluminum	5.630-2	5.222-2	5.178-2	5.502E-2	5.950E-2	5.499E-2	3.713E-2		5.499E-2
Oxygen	8.142-3	5.662-3					1.826E-2		

Material	RSG-GAS Clad	Al Clad	H_2O	304 Stainless Steel	Pb	ASTRA[1] UAl_x-A	MEUG UAl_x-A 35 wt %	CNEA U-Al	PRR U-Al
Density, gm/cc	2.7	2.699	0.998	7.920	11.350	1.57	2.08	2.76	3.03
Nuclide	atm/b-cm								
Uranium 235						1.786E-3	1.862E-3	1.320E-3	9.113E-4
Uranium 238						2.205E-3	3.415E-3	1.289E-4	5.743E-5
Magnesium	9.916E-4								
Aluminum	5.892E-2	6.024E-2				5.303E-2	5.303E-2	4.900E-2	5.911E-2
Oxygen			6.675E-2						
Hydrogen			3.338E-2						
Iron				5.936E-2					
Chromium				1.743E-2					
Nickel				7.721E-3					
Manganese				1.736E-3					
Lead					3.299E-2				

[1] Based on 0.053 cm fuel meat width.

6.3.4 PWR and BWR Rods in a Rod Holder or Fuel Assembly Lattice

The NAC-LWT cask may transport up to 25 intact PWR or BWR fuel rods that are in a fuel rod holder or fuel assembly lattice. Up to 14 of 25 PWR or BWR fuel rods in a fuel rod holder may be classified as damaged.

Nonfuel-bearing irradiated guide tubes and water rods may be included in the rod holder. These components displace moderator space between fuel rods and reduce the maximum amount of fissile material in the cask. The model developed in this section, therefore, bounds the inclusion of nonfuel-bearing materials such as guide tubes and water rods in the NAC-LWT rod holder/insert.

6.3.4.1 Intact PWR or BWR Rods in a Rod Holder or Fuel Assembly Lattice

This section describes the methodology and the models used in the criticality analysis of the NAC-LWT with 25 design basis PWR or BWR rods in a rod holder or fuel assembly lattice. The methodology uses the CSAS25 criticality sequence from the SCALE 4.3 computer code package with the 27-group END/B-IV cross-section set. CSAS25 is the control sequence for the Material Information Processor (MIP), BONAMI, NITAWL-II and KENO-Va computer codes. The Material Information Processor generates number densities and prepares the geometry data for the resonance self shielding calculation. BONAMI and NITAWL-II calculate the resonance corrected cross sections in AMPX working format. KENO-Va uses the Monte Carlo technique to calculate the k_{eff} of a system. In these analyses, approximately 300 batches of 1000 neutrons per batch are tracked through the system.

Description of Calculational Models

The KENO-Va model of the NAC-LWT with 25 intact PWR or BWR fuel rods includes a triangular lattice formation of design basis rods centered in the cask cavity. No credit is taken for geometry control provided by either the rod holder or the fuel assembly lattice. The fuel rods, cask cavity and radial shields are explicitly modeled as shown in Figure 6.3.4-2. The KENO-Va model has two UNITs. UNIT 1 represents a PWR or BWR rod cell. It uses concentric CYLINDERs to model the fuel pellet, clad gap, and the cladding of the fuel rod. UNIT 2 is the GLOBAL UNIT containing CYLINDERs that model the cask, cavity, steel liners, and shields. There are 25 HOLEs placed in the cask cavity with X, Y, and Z coordinates that place rods in a triangular lattice position. The cask outer CYLINDER is surrounded by a CUBOID, and reflecting boundary conditions are imposed on the sides, top and bottom which simulates an infinite array of casks of infinite length. Adjusting the X-Y spacing of the

CUBOID surrounding the cask varies cask center-to-center spacing. The material properties used in the model are shown in Table 6.3.4-1.

To determine the optimum configuration, cask k_{eff} is studied as a function of fuel rod pitch within the cask cavity. This is done by changing the coordinates of the rod HOLEs. Twenty different pitch values that range from the most compact configuration to the most dispersed configuration are evaluated. Figure 6.3.4-1 shows a simplified view of the cask with three different configurations. The analysis is performed for accident conditions with water at 1 gm/cc modeled between the fuel rods, in the cask cavity surrounding the rods. In addition, the neutron shield and cask exterior contain no water. The analysis is performed with these conditions with a dry and a wet clad gap.

An infinite array KENO-Va model of the NAC-LWT cask with 25 PWR or BWR fuel rods at the optimum pitch is used to evaluate the reactivity of the cask. The water moderator is allowed to vary in the cavity and outside the cask under normal conditions and is allowed to vary inside the neutron shield tank under accident conditions. Cask center-to-center spacing is varied by adjusting the dimensions of the CUBOID surrounding the cask. The k_{eff} results of this infinite array model are always below 0.95 including all biases and uncertainties.

Package Regional Densities

The composition densities (gm/cc) and nuclide number densities (atm/b-cm) calculated by the material information processor and used in the subsequent criticality analyses are shown in Table 6.3.4-1.

6.3.4.2 Damaged PWR and BWR Rods in a Rod Holder

This section describes the methodology and the models used in the criticality analysis of the NAC-LWT with 25 PWR or BWR rods, up to 14 of which may be damaged. Although the NAC-LWT payload is limited to 14 damaged fuel rods in a 25-rod shipment, the analysis conservatively considers all 25 rods as failing during transport.

The methodology uses the CSAS25 criticality sequence from the SCALE 4.3 computer code package with the 27-group ENDF/B-IV cross-section set. CSAS25 is the control sequence for the Material Information Processor, BONAMI, NITAWL-II and KENO-Va computer codes. The Material Information Processor generates number densities and prepares the geometry data for the resonance self-shielding calculation. BONAMI and NITAWL-II calculate the resonance corrected cross-sections in AMPX working format. KENO-Va uses the Monte Carlo technique to calculate the k_{eff} of a system. In these analyses, approximately 300 batches of 1,000 neutrons per batch are tracked through the system.

Description of Calculational Models

Two calculational models were employed to evaluate the NAC-LWT system reactivity with damaged fuel rods.

The first model explicitly models unclad UO_2 rods in a triangular pitch. System reactivity is maximized by increasing the number of fuel rods while decreasing the rod diameter to conserve fuel area in the infinite height model (i.e., reflective boundary conditions are placed on the active fuel region). Fuel rod arrays of 25, 37 and 61 rods are considered. The latter two arrays are hexagonal with no lattice vacancies. For each of the three postulated rod arrays, the maximum reactivity pitch is determined for both PWR and BWR rods. System reactivity is determined using an axially infinite cask model in an infinite cask array. In establishing the trend of increasing reactivity with larger rod arrays, k_{eff} values for the explicit rod cases are calculated with full density water in the cask interior, exterior, and neutron shield. Void exterior and void neutron shield (accident) conditions are considered for the 61 rod array in addition to preferential flooding of the cask cavity. The maximum reactivity configuration for 61 rods (with an active fuel cross-sectional area equivalent to 25 intact rods) is shown in Figure 6.3.4-3. Fuel rod arrays with greater than 61 rods are not considered. As demonstrated in Section 6.4.4.2, increasing the number of fuel rods modeled increases the cross-sectional area of the most reactive lattice. The cross-sectional area required for the 61-rod array exceeds the area available in the interior of the rod holder and, therefore, represents a bounding, conservative configuration.

The second model considers a homogenized mixture of UO_2 and water with a square cross-section and finite axial height within the NAC-LWT fuel rod holder. The square cross-sectional area of the rod holder is conservatively based on the exterior width of the rod holder, 13.97 cm. Based on the maximum BWR pellet diameter and fuel length of 150 inches, the finite axial height of the fuel mixture is calculated based on various UO_2 volume fractions. The UO_2 volume fraction is varied until the maximum reactivity is determined. System reactivity is determined using an infinite cask array with a periodic reflection axial boundary condition. Given the limiting UO_2/water fuel material description, water moderation variations are considered in the cask cavity (outside the rod holder), the cask exterior, and the cask neutron shield. The neutron shield material definition is tied to the exterior moderator definition; a void exterior includes a void neutron shield. Thus, the accident condition of loss of neutron shielding is explicitly modeled when the exterior moderator is set to void. Figure 6.3.4-4 and Figure 6.3.4-5 give dimensions of the maximum reactivity homogenized mixture configuration of finite extent.

Package Regional Densities

The composition densities (gm/cc) and nuclide number densities (atm/b-cm) calculated by the material information processor and used in the subsequent criticality analyses are identical to those shown for intact fuel evaluations, Figure 6.3.4-1. Additional material densities may be obtained from the sample input/output file provided in Section 6.6.10.

Figure 6.3.4-1 Triangular Pitch Lattice Formation of 25 PWR Rods

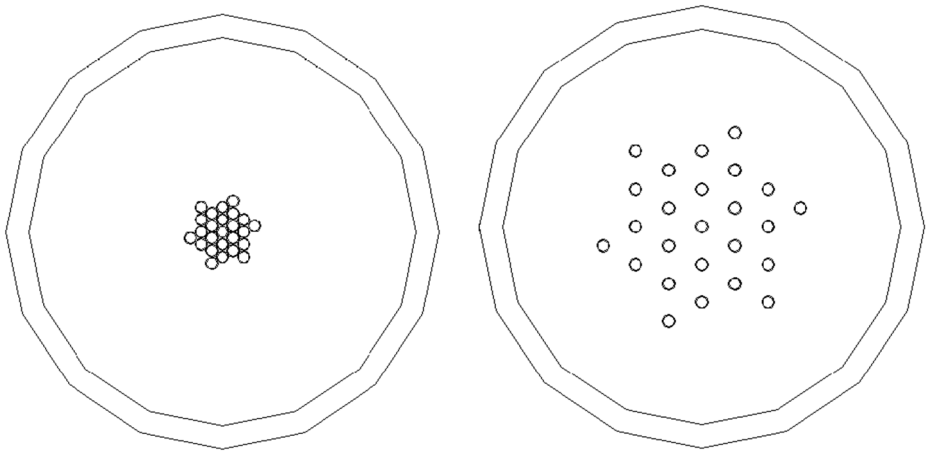

(a) Smallest Pitch (b) Optimum Pitch

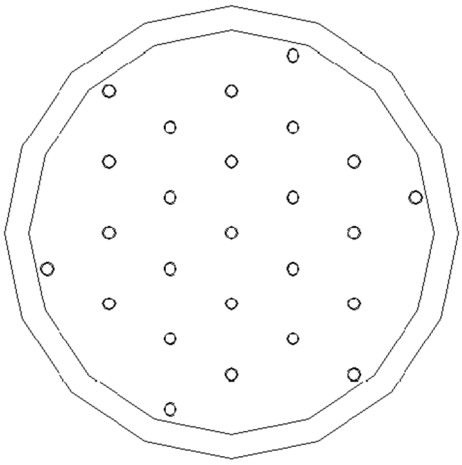

(c) Maximum Pitch

Figure 6.3.4-2 KENO-Va Model of the NAC-LWT Cask with 25 PWR Rods

(Dimensions in centimeters)

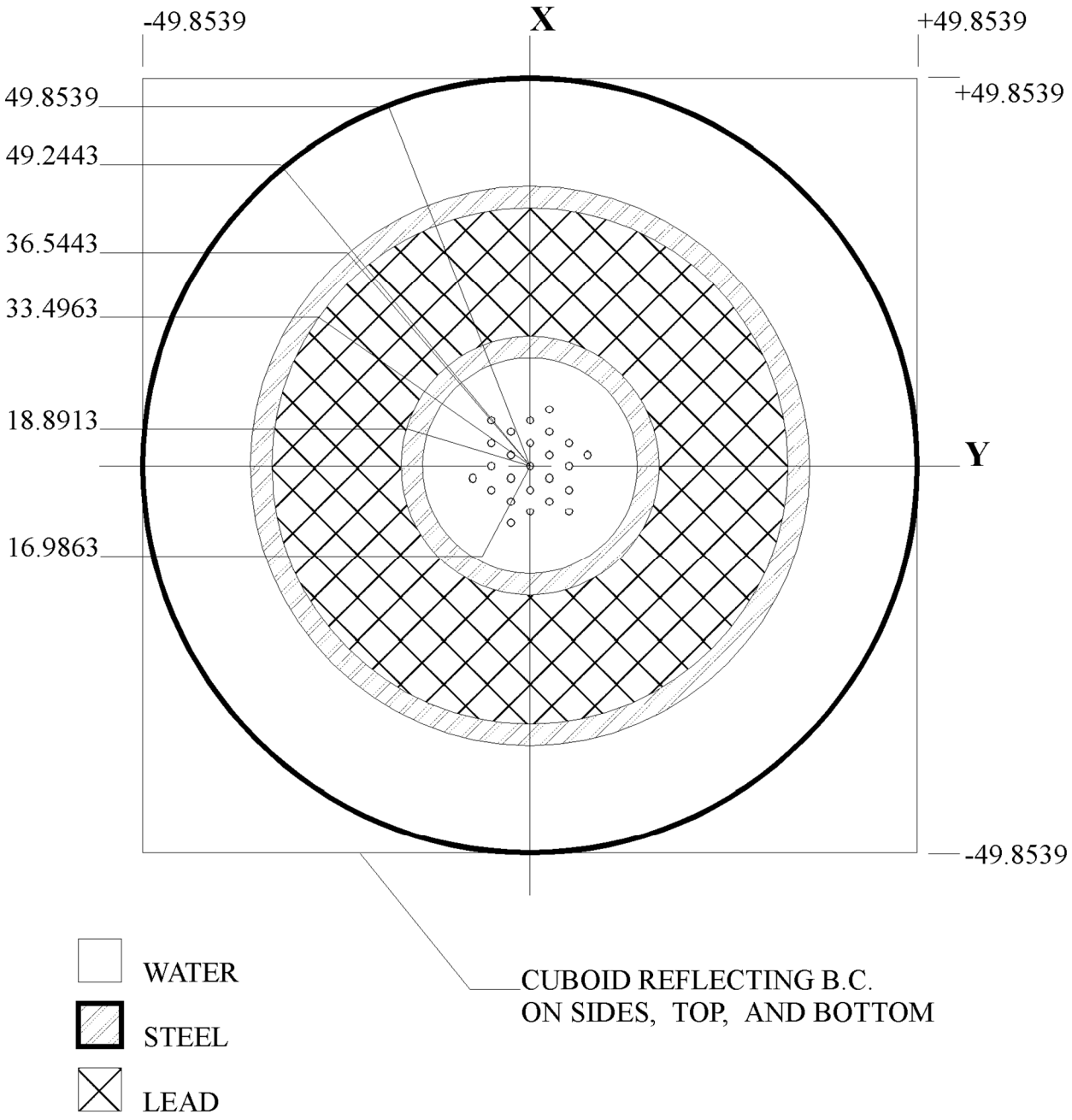

Figure 6.3.4-3 Maximum Reactivity Triangular Pitch Lattice Formation of Damaged Fuel Rods

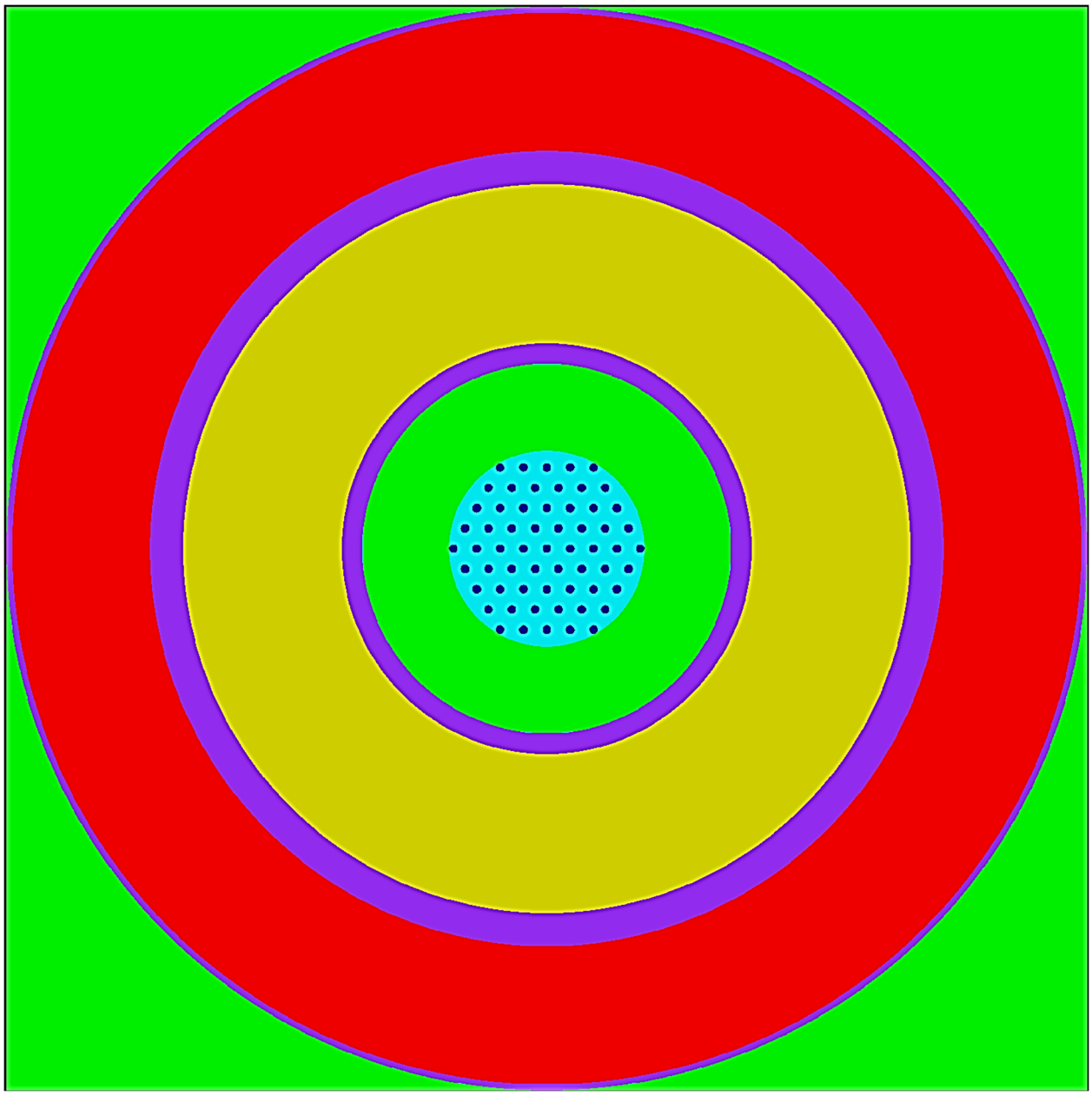

Figure 6.3.4-4 KENO-Va Model of the NAC-LWT Cask with Damaged Fuel Rods – Radial Detail

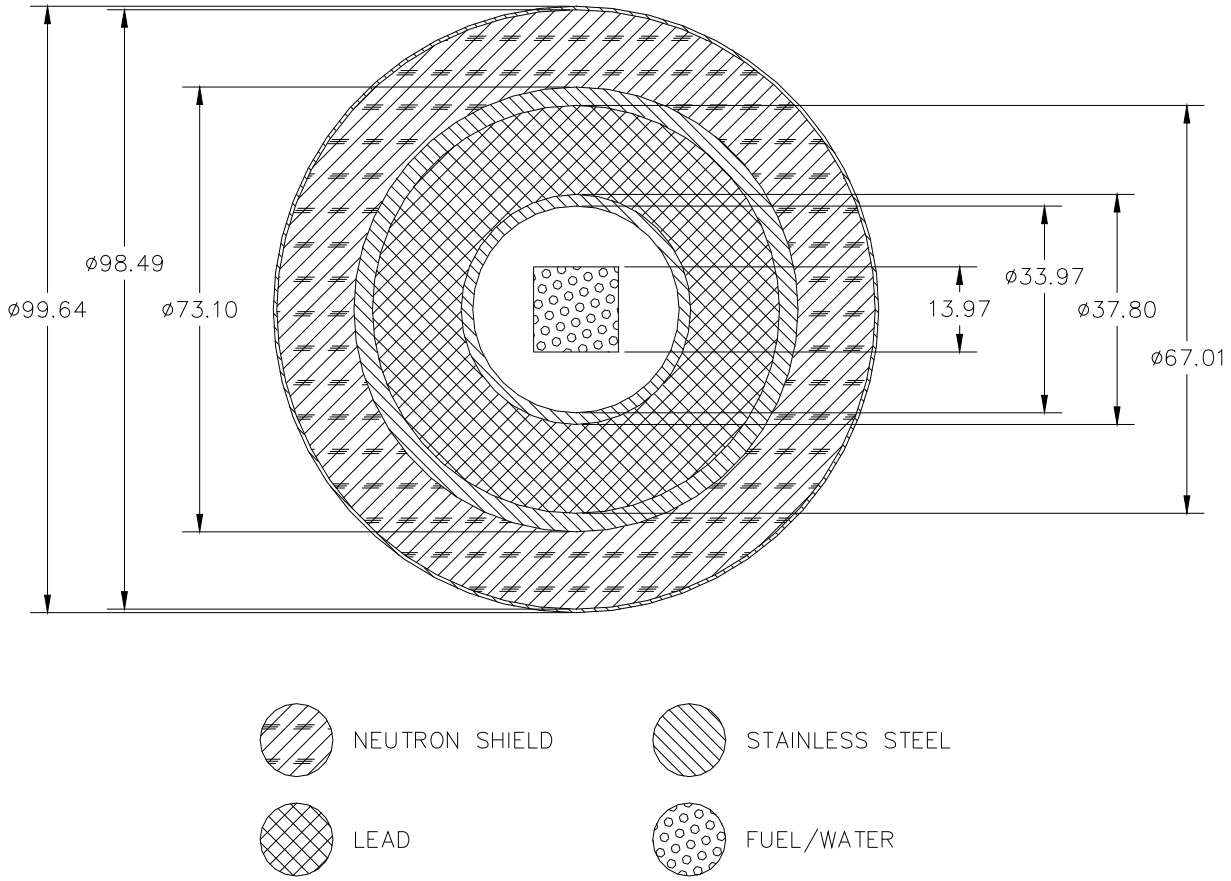

(Dimensions in centimeters)

Figure 6.3.4-5 KENO-Va Model of the NAC-LWT Cask with Damaged Fuel Rods – Axial Detail

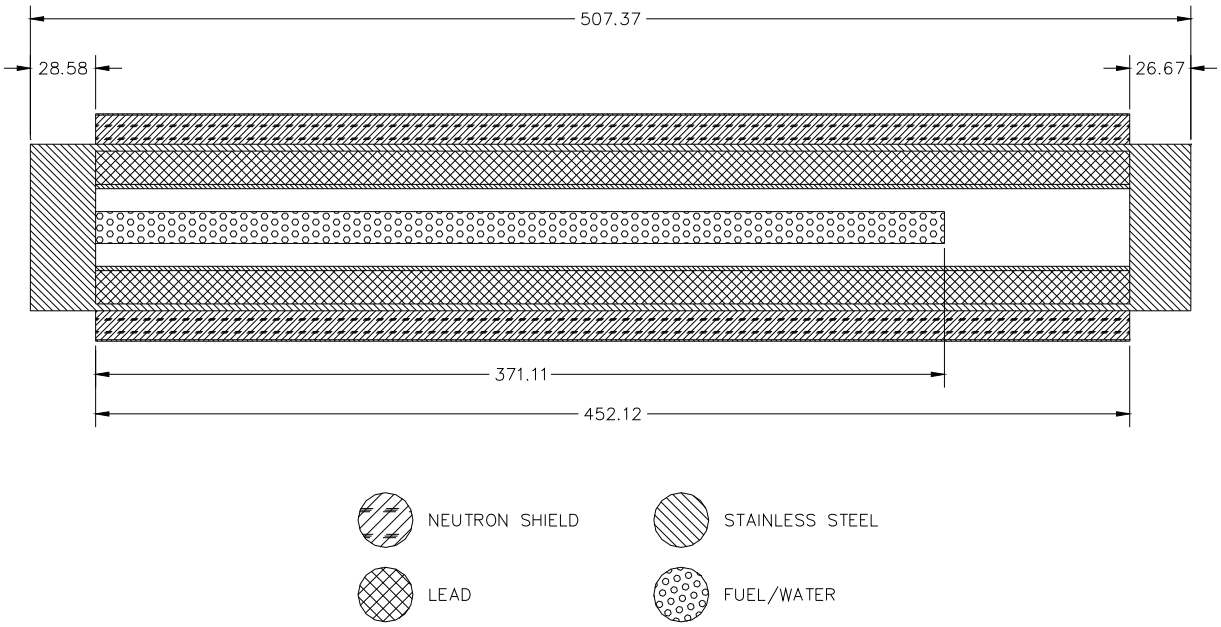

(Dimensions in centimeters)

Table 6.3.4-1 Compositions and Number Densities Used in the Criticality Analysis of PWR and BWR Rods

Material	5.0% Enriched UO2	Zirconium Alloy	H2O	304 Stainless Steel	Pb	Al
Density, gm/cc	10.412	6.56	0.9982	7.920	11.344	2.702
Nuclide	atm/b-cm					
Uranium 235	1.176E-3					
Uranium 238	2.206E-2					
Oxygen	4.647E-2		3.338E-2			
Hydrogen			6.677E-2			
Zirconium Alloy		4.331E-2				
Iron				5.936E-2		
Chromium				1.743E-2		
Nickel				7.721E-3		
Manganese				1.736E-3		
Lead					3.297E-2	
Aluminum						6.031E-2

6.3.5 TRIGA Fuel Elements and Cluster Rods

As previously described, TRIGA fuel elements and fuel cluster rods may be transported in nonpoisoned or poisoned TRIGA basket modules. The following sections detail the analyses performed on these four combinations of design-basis TRIGA fuel types and basket configurations. Nonpoisoned basket designs are analyzed with a maximum of 120 TRIGA fuel elements, or 480 TRIGA fuel cluster rods, while the poisoned basket designs are analyzed with a maximum of 140 TRIGA fuel elements or 560 TRIGA fuel cluster rods.

6.3.5.1 Description of Calculational Models

6.3.5.1.1 TRIGA Fuel Element Methodology

To evaluate the nonpoisoned basket with TRIGA fuel elements, three models are utilized: a fuel/basket unit cell containing four intact TRIGA fuel elements, an axially infinite length cask model and a full cask model. Each of the two NAC-LWT cask models contains up to four TRIGA fuel elements, or screened or sealed cans, in each of the six peripheral TRIGA basket cells. In the case of the axially infinite cask model, a single basket module is surrounded by the cask radial shields and is axially reflected to simulate an infinite length cask. In the case of the full cask model, the NAC-LWT cask is represented with five TRIGA basket modules in the cavity surrounded by the cask radial and axial shields. In this model, the axial shields include an explicit representation of the cask lid and bottom forging. The fuel/basket unit cell model is used to determine the bounding TRIGA fuel element type (Section 6.4.5.1). The cask models are used to determine the maximum k_{eff} of the cask under normal and accident conditions with the bounding fuel element type (Section 6.4.5.2). The infinite length cask model is employed in the criticality evaluation of the intact TRIGA fuel elements in the most reactive basket configuration (Section 6.4.5.3). The full cask model is employed in the criticality evaluation of TRIGA basket modules with failed fuel (top and bottom baskets only) in the NAC-LWT cask under normal and accident conditions (Section 6.4.5.4). A finite cask array is employed in the revised TRIGA fuel element characteristics section (Section 6.4.5.6). The finite cask array model uses the same length cask model developed for the infinite array calculation. However, rather than applying reflective (mirror) boundary conditions to the single cask unit, the cask unit is placed into an 8 (or 4)-cask close-packed configuration.

To evaluate the poisoned basket with TRIGA fuel elements, the non-poisoned axially infinite length cask and full cask models are modified to include the borated stainless steel poison plates. Again, the infinite length cask model is used to evaluate intact TRIGA fuel elements in the most reactive basket configuration (Section 6.4.5.2) and the full cask model is used to evaluate the

basket modules with failed fuel (top and bottom baskets only) in the most reactive basket configuration (Section 6.4.5.3). In the poisoned basket, the central cell, in addition to the six peripheral basket cells, contains intact fuel elements, or (top and bottom baskets only) screened or sealed cans. The bounding TRIGA fuel element type in the non-poisoned basket is verified as the bounding element in the poisoned basket with the axially infinite length cask model.

6.3.5.1.2 TRIGA Fuel Cluster Rod Methodology

To evaluate the nonpoisoned basket with the TRIGA fuel cluster rods, two models are utilized: an axially infinite length cask model and a full cask model. The axially infinite cask model is a single basket module with up to 16 TRIGA fuel cluster rods in a fuel pin handling insert (Figure 6.3.5-1) in the six peripheral basket openings. The single basket module is surrounded by the cask radial shields and is axially reflected to simulate an infinite length cask. The infinite length cask model is employed in the criticality evaluation of the undamaged HEU TRIGA fuel cluster rods at the base material composition in the most reactive basket configuration (Section 6.4.6.1). The full, finite length, cask model used to evaluate the failed (damaged) fuel, contains five TRIGA basket modules in the cavity surrounded by the cask radial and axial shields (Section 6.4.6.2). The three central modules contain intact TRIGA fuel cluster rods in the peripheral openings, and the peripheral openings of the top and bottom modules contain sealed failed fuel cans with up to six rods of TRIGA fuel cluster rod active fuel material. In this model, the axial shields include an explicit representation of the cask lid and bottom forging. The cask models are used to determine the maximum k_{eff} of the cask under normal and accident conditions (Section 6.4.6.3).

To evaluate the poisoned basket with TRIGA fuel cluster rods, the non-poisoned axially infinite length cask and full cask models are modified to include borated stainless steel poison plates. Again, the infinite length cask model is used to evaluate intact TRIGA fuel cluster rods in the most reactive basket configuration (Section 6.4.6.1) and the full cask model is used to evaluate the basket modules with failed fuel (top and bottom baskets only) in the most reactive basket configuration (Section 6.4.6.2). In the poisoned basket, the central cell, in addition to the six peripheral basket cells, contains intact fuel elements, or sealed cans (top and bottom baskets only) with up to six rods of TRIGA fuel cluster rod active fuel material.

The nonpoisoned finite length cask model is also used to evaluate the expanded fuel characteristics for undamaged and damaged HEU fuel cluster rods and the addition of LEU fuel cluster rods (Section 6.4.6.5). For the undamaged fuel configuration, five identical basket modules, with no damaged fuel cans, are located between the cask lid and the bottom forging.

6.3.5.1.3 TRIGA Fuel Element Parametric Study Models

For the parametric evaluation of the most reactive TRIGA fuel element, a unit cell of fuel elements and the basket is modeled for each TRIGA fuel element type (Figure 6.2.5-2). This includes four fuel elements in a 3.44-inch (8.738 cm) square opening surrounded by a 5/16-inch (0.7938 cm) web. The models are evaluated dry and with water at 1 gm/cc in the basket opening.

Reflecting boundary conditions are imposed on the sides, top and bottom simulating an infinite array with no axial leakage. These models were used to determine which of TRIGA fuel element types is most reactive. The most reactive type was then used as the design-basis element in subsequent analyses for normal conditions of transport and hypothetical accident conditions. Combinations of fuel were also analyzed to ensure that fuel enrichment combinations would be bounded by the design-basis loading and enrichment.

6.3.5.1.4 Infinite Axial Length Cask Model

The infinite length models of the NAC-LWT cask with the TRIGA fuel basket are presented in Figure 6.3.5-3 through Figure 6.3.5-5. These models represent TRIGA baskets loaded with up to 24 (nonpoisoned) or 28 (poisoned) TRIGA fuel elements, or 480 (nonpoisoned) or 560 (poisoned) TRIGA fuel cluster rods surrounded by the NAC-LWT radial shields. Since the nonpoisoned TRIGA basket center location is blocked, no fuel elements are present in this location. The models are surrounded by a CUBOID with reflecting boundary conditions imposed on the sides, top and bottom, simulating an infinite array of casks with an infinite axial extent. Water moderator density is allowed to vary in the cavity and outside the cask under normal conditions, and also is allowed to vary inside the neutron shield tank under accident conditions. Cask center-to-center spacing is varied by adjusting the X-Y spacing of the CUBOID surrounding the cask.

6.3.5.1.5 Full (Finite Length) Cask Model

The full cask models are similar to the axially infinite cask models, but rather than axially reflecting single basket modules, five basket module arrays are created (Figure 6.3.5-6). The basket module arrays are enclosed by the modeling of the cask body and the lid. The CUBOID surrounding the cask is surrounded by reflecting boundary conditions on all sides simulating an infinite array of casks. For cask configurations including cans, screened or sealed failed fuel cans are placed into the appropriate openings of the top and bottom basket. The appropriate openings of the three intermediate baskets are filled with uncanned TRIGA fuel elements. Appropriate openings consist of peripheral openings for nonpoisoned baskets and all openings

for poisoned baskets. Moderator variations, including preferential flooding of the screened cans and sealed cans, are evaluated.

6.3.5.1.6 Finite Cask Array Model

The finite cask array model is similar to the infinite array model, but rather than axially and radially reflecting the finite length cask, the KENO-Va HOLE function is used to place a number of casks (either 4 or 8, depending on the configuration evaluated) into a close-packed configuration. The CUBOID surrounding the cask array is reflected by the use of an H_2O reflector card to maximize neutron reflection back into the system.

6.3.5.2 Package Regional Densities

The composition densities (gm/cc) and nuclide number densities (atm/b-cm) calculated by the material information processor and used in the subsequent criticality analyses are shown in Table 6.3.5-1.

Since the SCALE standard composition library does not contain U-ZrH as a standard composition, number densities (atm/barn-cm) were calculated based on dimensional and gram load data from Table 6.2.5-2 (Tomsio). Hydrogen atom densities were calculated based on stoichiometric Zr-H or Zr_5H_8 for the base evaluations. For TRIGA elements in a nonpoisoned basket, variations in ZrH_x composition with a hydrogen-to-zirconium ratio up to the maximum possible (2.0) were evaluated. For TRIGA cluster rods, a stochiometric ratio (H/Zr) of up to 1.7 is evaluated. The homogenized end fitting volume fractions were based on the SCALE default Type 304 stainless steel density and dimensional and gram load data from Table 6.2.5-1. A sample set of TRIGA fuel element number densities used in the criticality analyses is shown in Table 6.3.6-1 and the design basis TRIGA fuel cluster rod number densities are presented in Table 6.3.5-2.

In all criticality models, the fuel elements are explicitly represented. In the case of the TRIGA fuel elements, an explicit 15-inch (38.1 cm) active fuel region of U-ZrH is modeled including 3.42 inches (8.687 cm) of graphite reflector segments above and below the active fuel. TRIGA fuel cluster rods have an active fuel length of 22 inches. All fuel elements are modeled as explicit nested CYLINDERS, but due to their unusual geometry, the TRIGA fuel element end fittings and the spring loaded section of the plenum in the TRIGA fuel cluster rods are modeled as homogenized stainless steel and water. With the exception of the homogenization of fuel debris within the sealed failed fuel cans to represent the worst case damage to the fuel, this is the only homogenization in the geometry.

Figure 6.3.5-1 Fuel Rod Handling Insert for TRIGA Fuel Cluster Rods

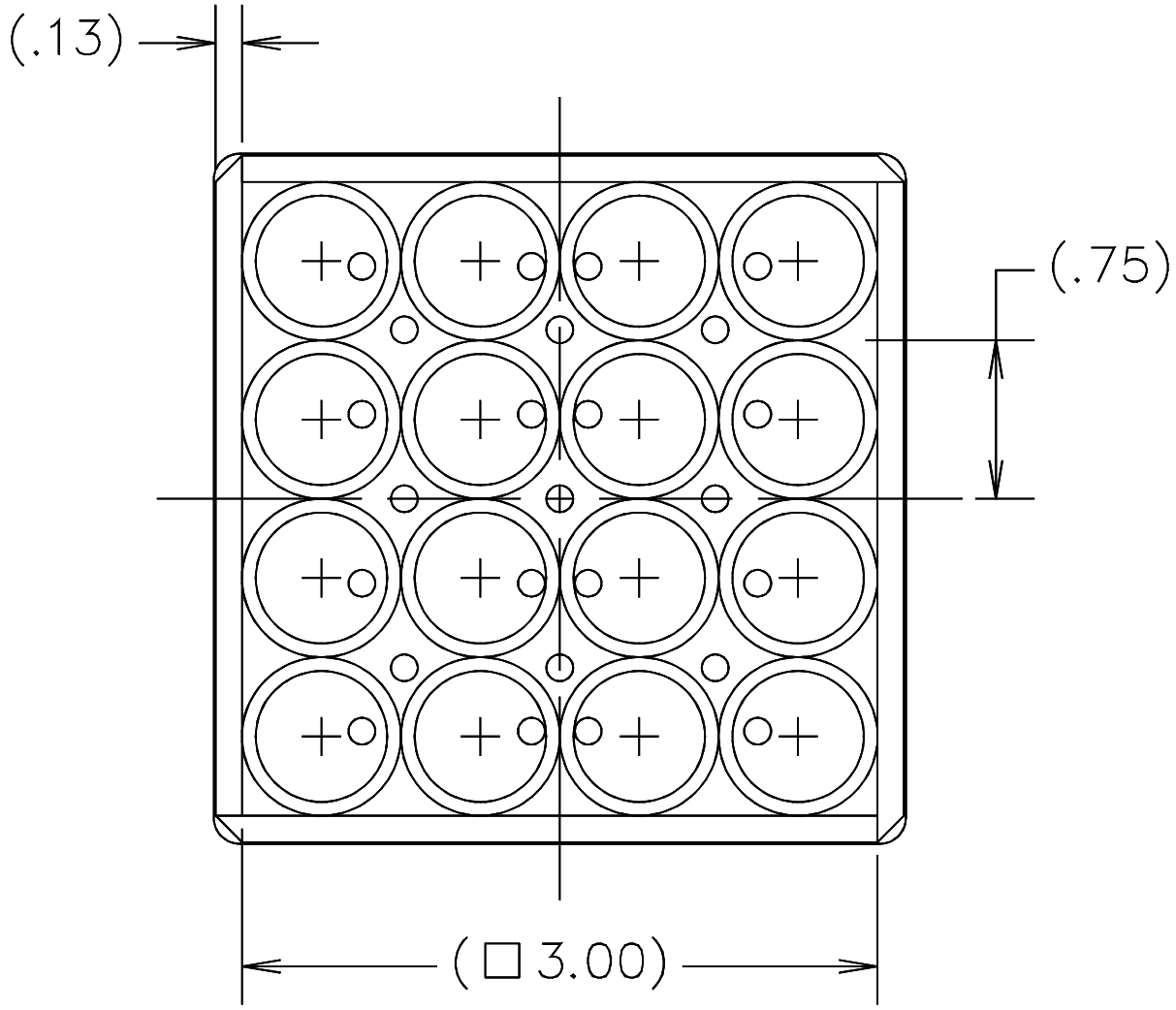

(Nominal Dimensions in Inches)

Figure 6.3.5-2 Fuel/Basket Unit Cell Model for TRIGA Fuel Elements

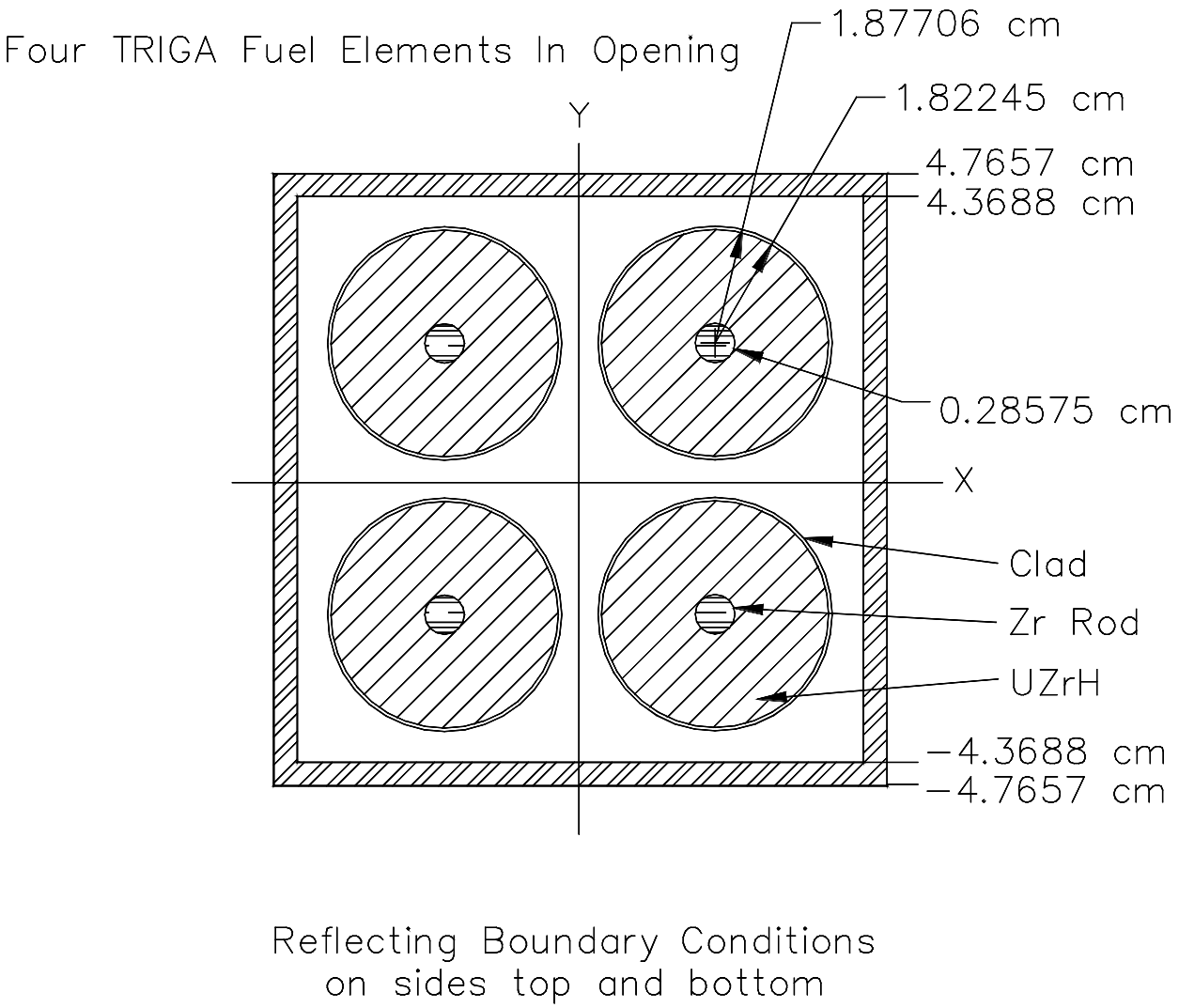

Figure 6.3.5-3 NAC-LWT Cask with TRIGA Fuel, Nonpoisoned Basket – Radial View

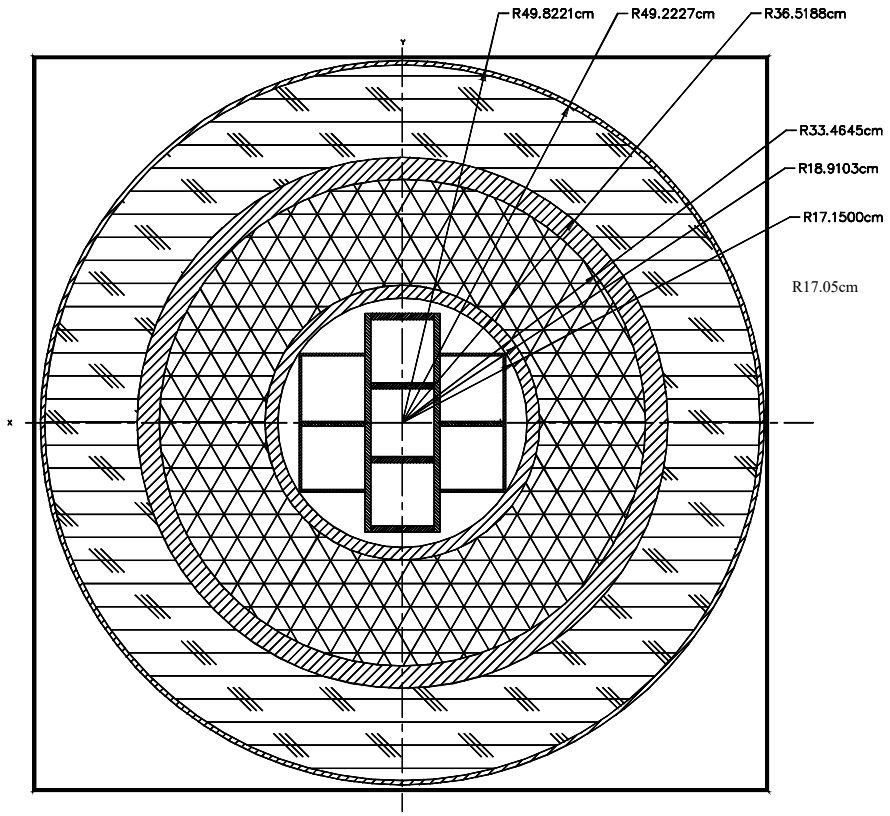

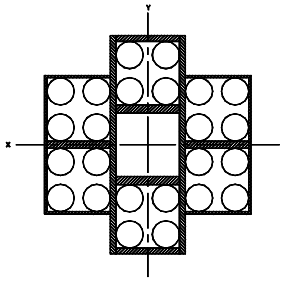

TRIGA Fuel Elements
Most Reactive
Wet Configuration

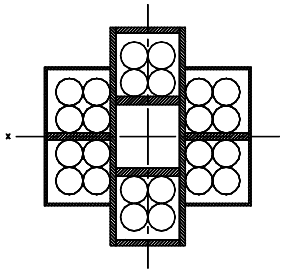

TRIGA Fuel Elements
Most Reactive
Dry Configuration

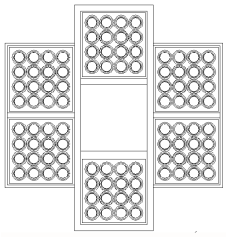

Incoloy 800 Clad Fuel
Nominal Configuration

TRIGA Fuel Cluster Rods
Nominal
Configuration

Steel

Lead

Liquid Neutron Shield

Figure 6.3.5-4 KENO-Va Model of NAC-LWT with Poisoned Basket - Radial View

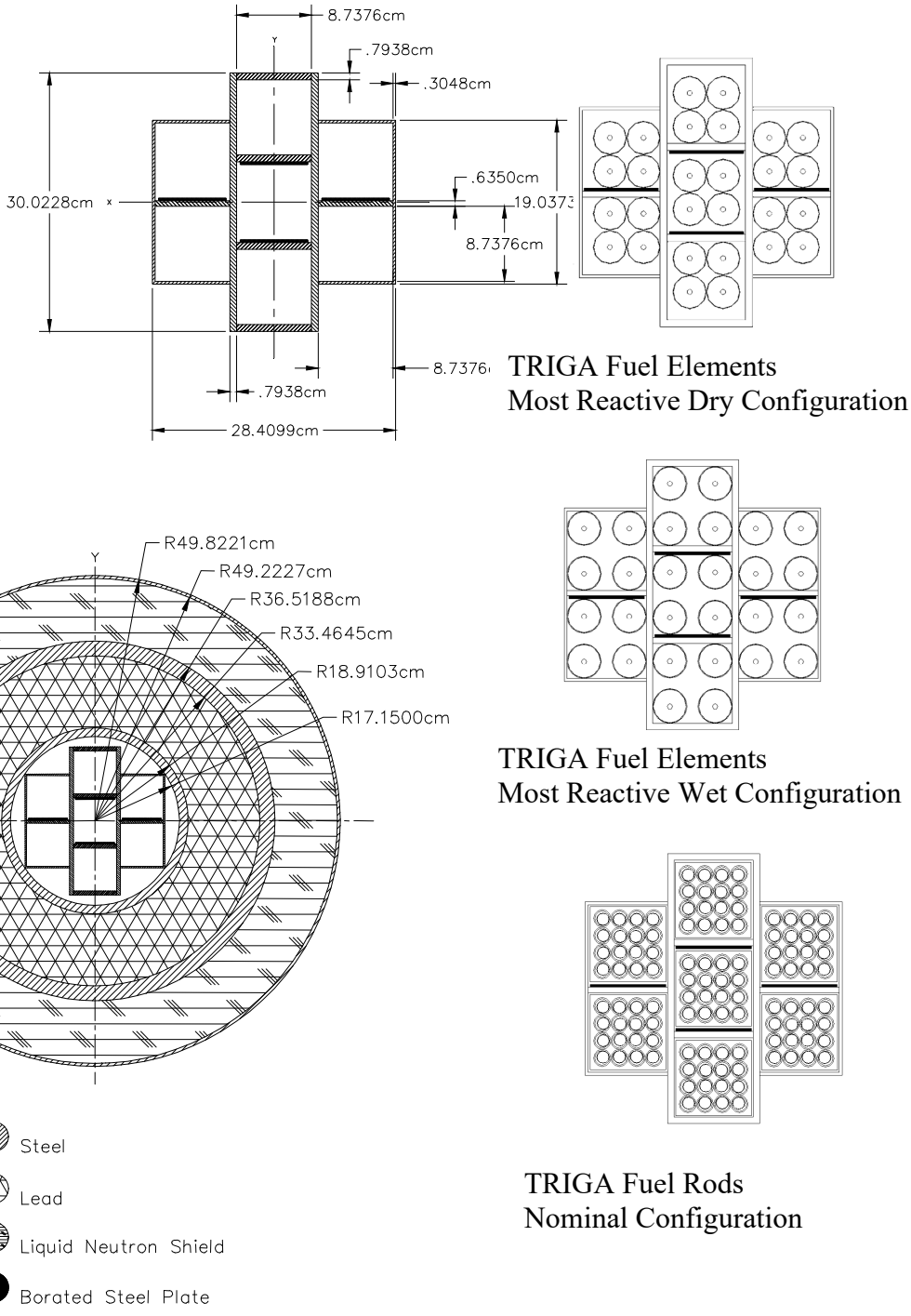

Figure 6.3.5-5 NAC-LWT Cask Model with TRIGA Fuel Elements, Nonpoisoned Basket – Axial View

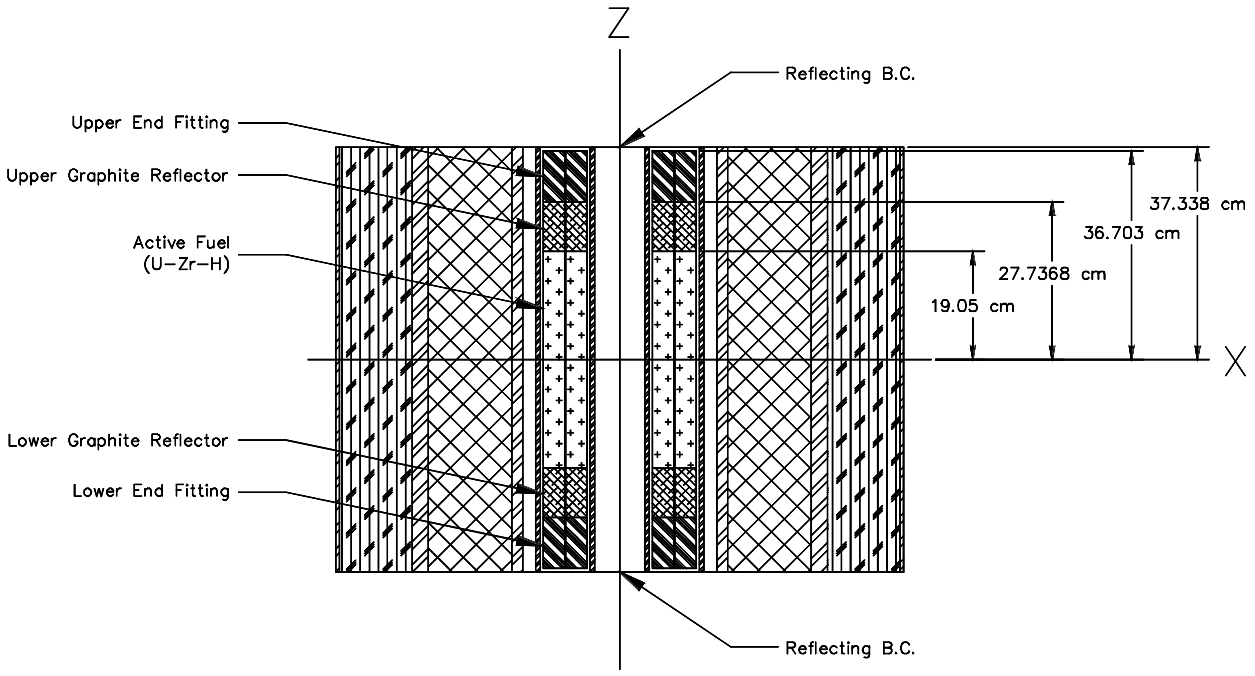

Figure 6.3.5-6 Full-Length NAC-LWT Cask Model with TRIGA Fuel Elements, Nonpoisoned Basket – Axial View

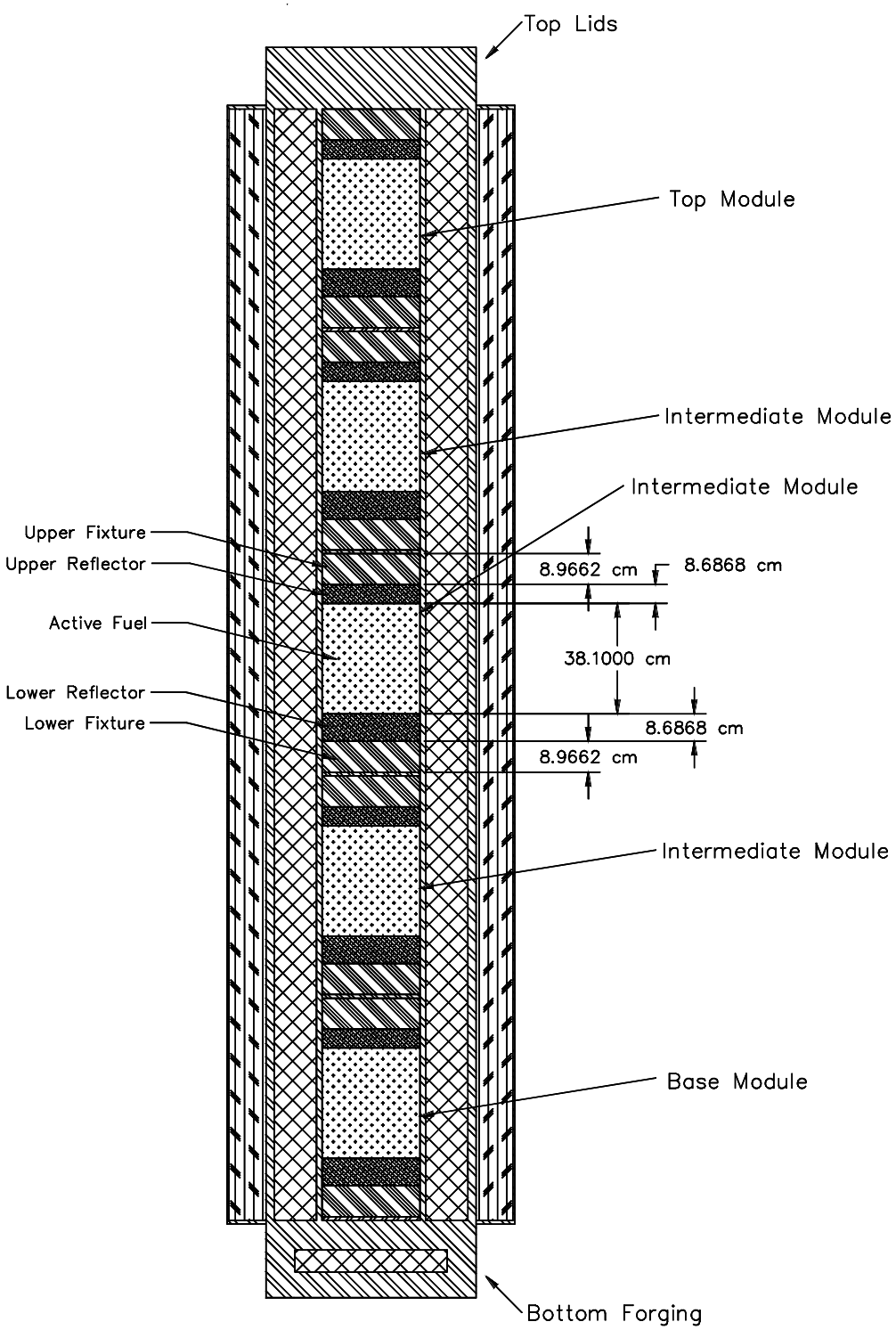

Table 6.3.5-1 Sample Compositions and Number Densities Used in Criticality Analysis of TRIGA Fuel Elements

Material	FLIP Fuel U-ZrH_x	Aluminum	H_2O	304 Stainless Steel	Graphite	Lead
Density, gm/cc	--	2.70	0.998	7.920	2.1	11.350
Nuclide				atm/barn-cm		
Uranium 235	9.053E-4	--	--	--	--	--
Uranium 238	3.849E-4	--	--	--	--	--
Zirconium	3.446E-2	--	--	--	--	--
Hydrogen	5.514E-2	--	3.338E-2	--	--	--
Oxygen	--	--	6.675E-2	--	--	--
Carbon	--	--	--	--	1.054E-1	--
Aluminum	--	6.024E-2	--	--	--	--
Iron	--	--	--	5.936E-2	--	--
Chromium	--	--	--	1.743E-2	--	--
Nickel	--	--	--	7.721E-3	--	--
Manganese	--	--	--	1.736E-3	--	--
Lead	--	--	--	--	--	3.297E-2

Table 6.3.5-2 Sample Composition and Number Densities Used in Criticality Analysis of TRIGA Fuel Cluster Rods

Material	U-ZrH$_x$[1]	Aluminum Insert	H_2O	304 Stainless Steel	Lead
Density, gm/cc	--	2.70	0.998	7.920	11.350
Nuclide	atm/barn-cm				
Uranium 235	1.46137E-03	--	--	--	--
Uranium 238	1.03065E-04	--	--	--	--
Zirconium	3.40686E-02	--	--	--	--
Hydrogen	5.35638E-02	--	3.338E-2	--	--
Oxygen	--	--	6.675E-2	--	--
Carbon	--	--	--	--	--
Aluminum	--	6.024E-2	--	--	--
Iron	--	--	--	5.936E-2	--
Chromium	--	--	--	1.743E-2	--
Nickel	--	--	--	7.721E-3	--
Manganese	--	--	--	1.736E-3	--
Lead	--	--	--	--	3.297E-2

[1] Sample fuel composition for typical HEU TRIGA cluster rods. Increases in fuel mass, changes in H/Zr ratio, and LEU rods are evaluated in Section 6.4.6.5.

6.3.6 DIDO Fuel Assemblies

6.3.6.1 Description of Calculational Models

Since it is planned to transport many types of DIDO fuel assemblies in the NAC-LWT, a determination of the most limiting, i.e., highest k_{eff}, assembly must be made for criticality purposes. Fuel parameters in Table 6.3.6-1 are employed for the evaluations of HEU, MEU and LEU types and are based on the data presented in Table 6.2.8-1. The tolerances in Table 6.2.8-2 are used in trending reactivity versus the assembly's physical characteristics and produce a bounding fuel assembly characteristic set.

Evaluations are performed with two distinct models. The first stage evaluates reactivity in an infinite array of casks by modeling a single cask with mirrored boundary conditions. The second phase of the evaluations employs a finite array of eight casks. The basket and cask models constructed for the DIDO assembly evaluations are based on the dimensions listed in Table 6.3.6-2.

The KENO-Va model of the NAC-LWT cask with DIDO fuel is centered on a stack of six DIDO baskets. The cask radial shields surround the basket stack. The basket stack surrounded by shields has the lid and bottom weldment added. The module chosen for stacking is the intermediate basket module. While axial extents differ from the bottom and top modules, the basket horizontal cross section is identical in all modules. Axial variations are associated with the stacking of the units, with all units containing the 0.5-inch thick base plate. Figure 6.3.6-1 displays a side view of the intermediate module. A cross-section of the basket with fuel tubes numbered one through seven and the aluminum shell is shown in Figure 6.3.6-2. Two assumptions were made in the DIDO model due to limitation in the KENO-Va input structure and complexity of the model: (1) the heat transfer shunts are modeled as a set of three small cylinders versus a rectangular bar and (2) the aluminum shell is modeled over the full extent of the tube, neglecting the intermediate steel disk. An evaluation is provided in Section 6.4.7 to demonstrate that each of these assumptions is conservative.

Figure 6.3.6-2 also includes a sketch of the two types of fuel configurations evaluated shown in a cross-section, loose and crimped cylinders. The "loose" cylinder configuration spaces the fuel at a constant pitch identical to that of the element during in-core configuration. The second configuration represents the fuel in a "crimped" configuration. For fuel shipment, the assembly can be cut and individual cylinders may be crimped. A radial sketch of the basket cross-section in the cask is shown in Figure 6.3.6-3.

Figure 6.3.6-4 shows this basket module stacked six high inside the NAC-LWT. Reflecting boundary conditions on all sides simulate an infinite array of casks. This model neglects the

impact limiters that would provide additional spacing between casks, and models the cask under accident conditions with the neutron shield voided.

Tubes comprising the basket structure are defined to be stainless steel per licensing drawings. Aluminum tubes are evaluated in the DIDO calculation sets. This evaluation provides significant conservatism in the calculation, as stainless steel contains significant absorber nuclides while aluminum has no significant effect on system reactivity (beyond volume displacement).

The eight-cask array places the casks in a tight triangular pitch configuration. Seven casks are located in a tight cylindrical arrangement similar to that employed in the basket. The eighth cask is placed in a triangular pitch to the lower right corner of the seven cask array.

6.3.6.2 Package Regional Densities

The composition densities (gm/cc) and nuclide number densities (atm/b-cm) calculated by the SCALE material information processor for a range of assemblies evaluated in subsequent criticality analyses are shown in Table 6.3.6-3. Displayed are the HEU, MEU and LEU material densities for the nominal fuel cylinders. Additional material densities may be obtained from the sample input/output files provided in Section 6.6.8.

Figure 6.3.6-1 Intermediate DIDO 42 Basket Module

(Dimensions in inches)

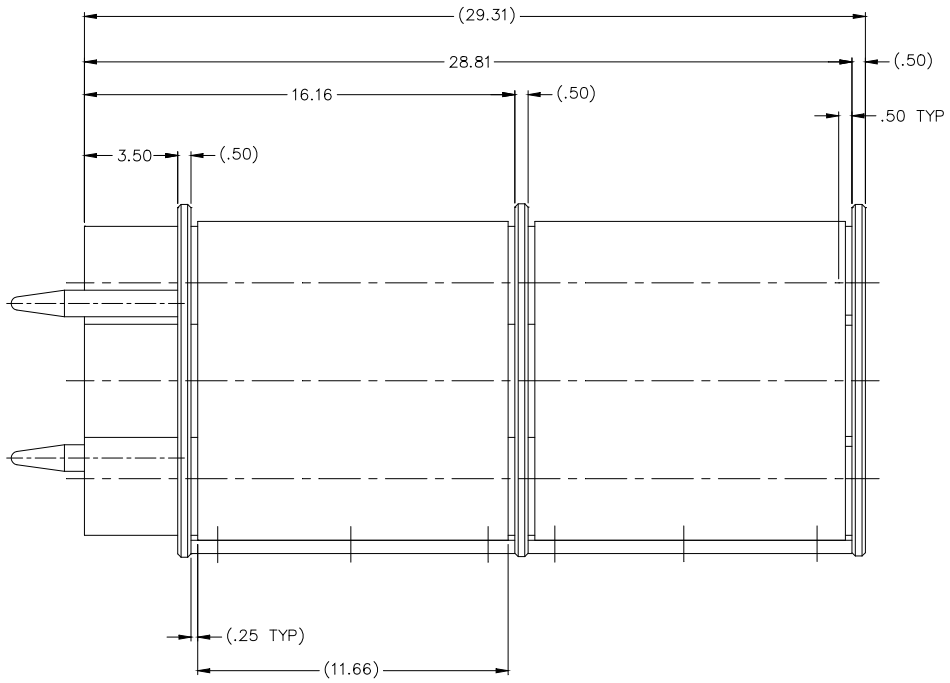

Figure 6.3.6-2 KENO-Va DIDO Fuel in Fuel Tube and Basket Cross-Section

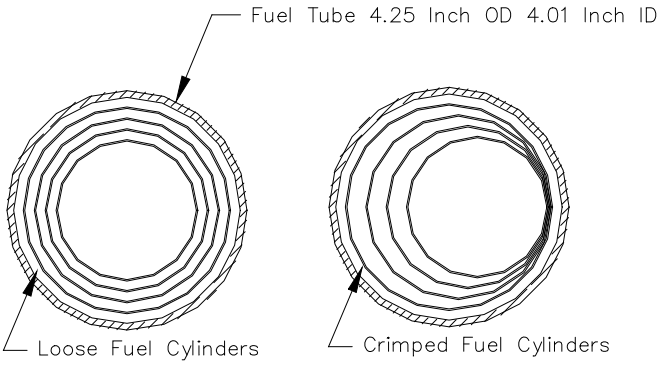

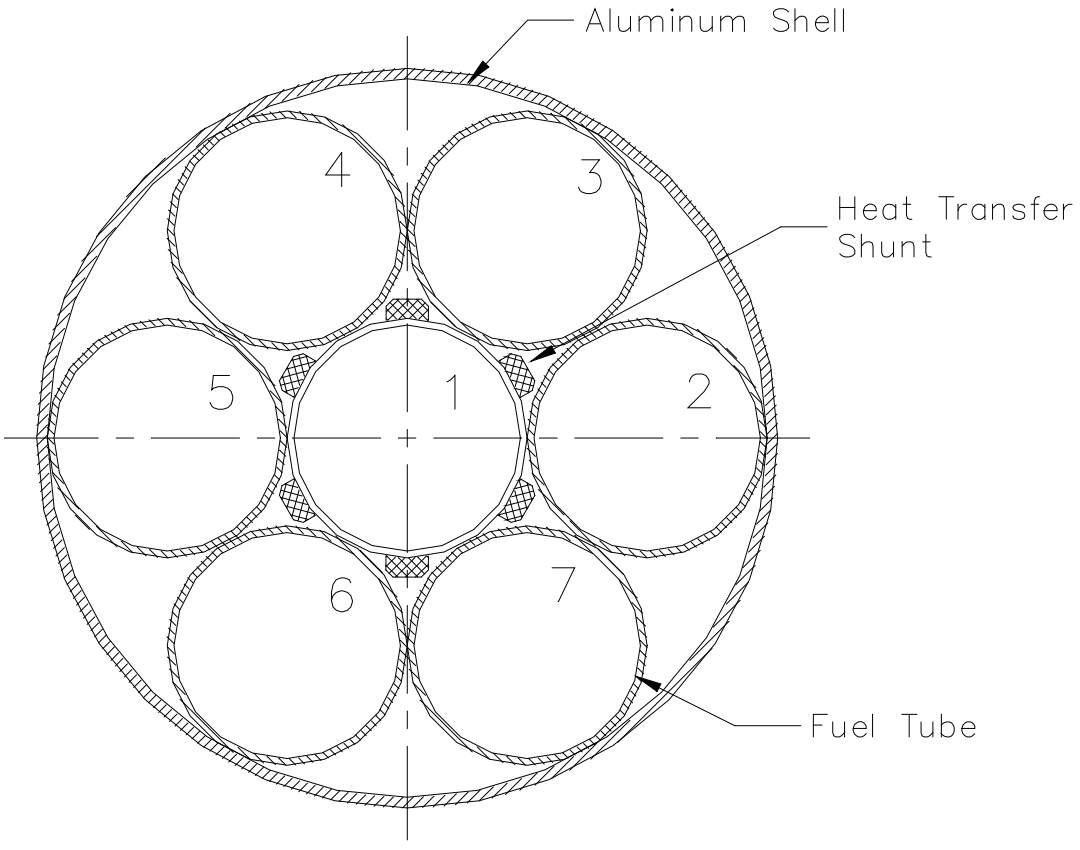

Figure 6.3.6-3 KENO-Va Model of NAC-LWT Cask Cross-Section with DIDO Fuel

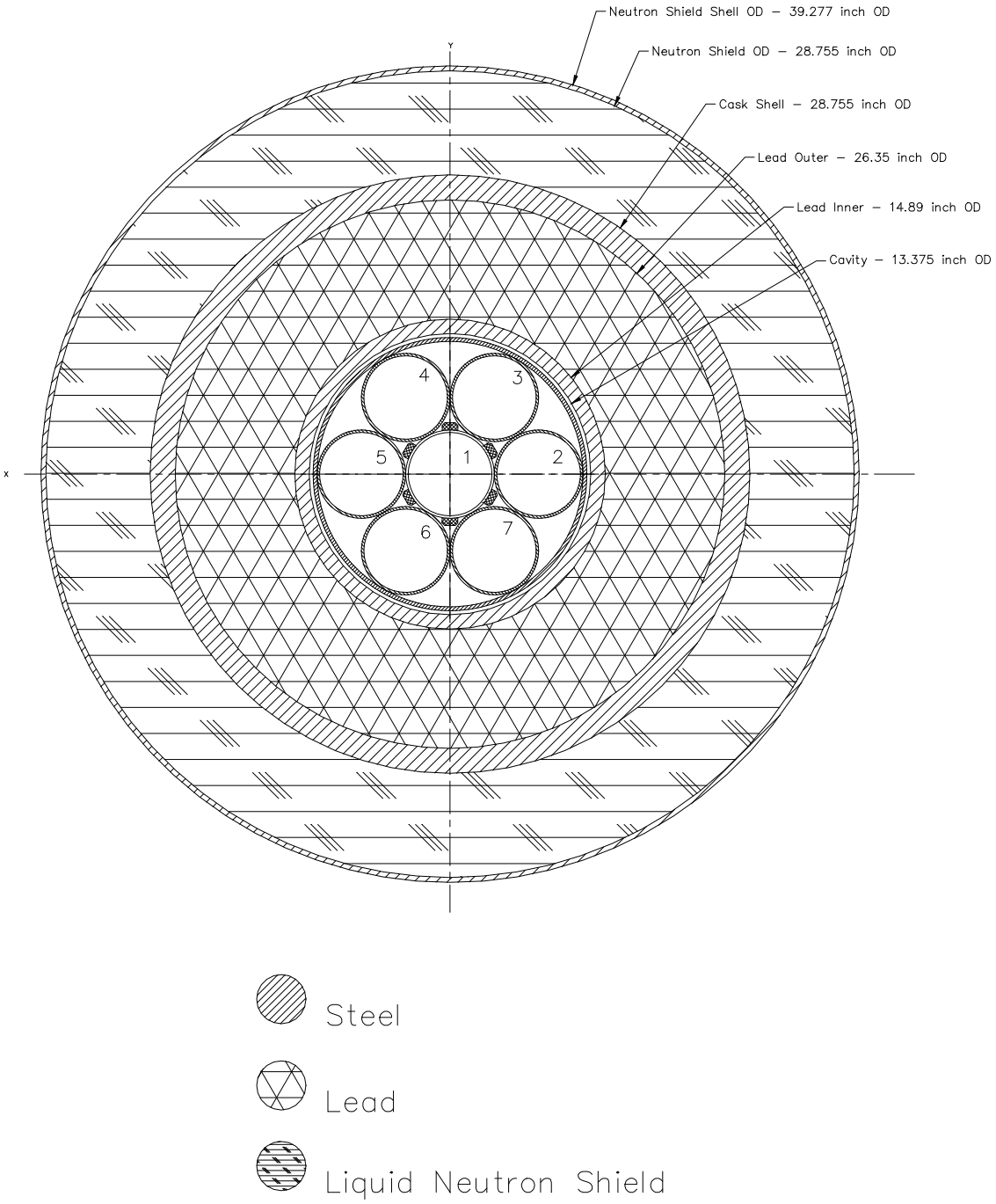

Figure 6.3.6-4 Full Length NAC-LWT Cask Model with 42 DIDO Fuel Assemblies

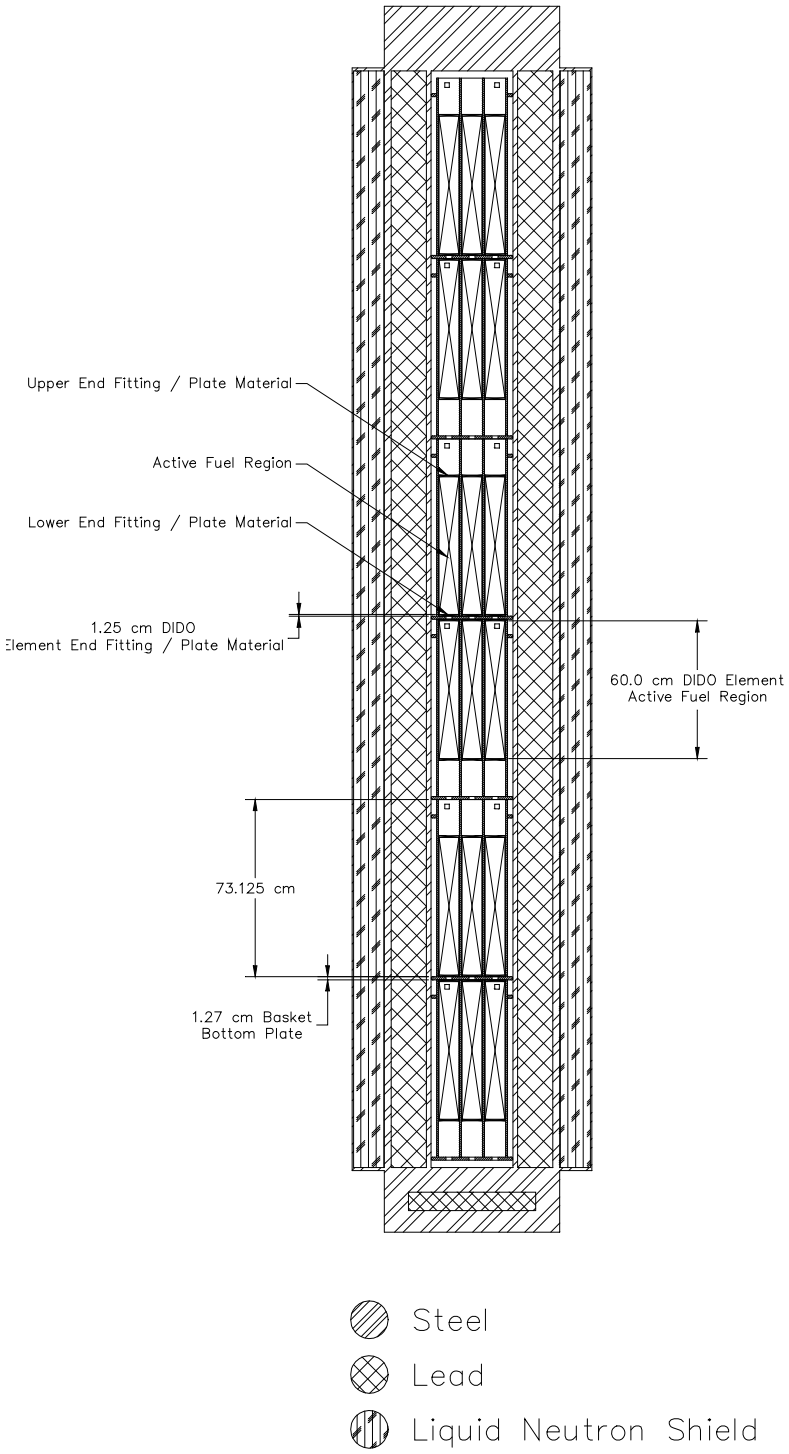

Table 6.3.6-1 DIDO Fuel Parameters

Fuel Parameters	Units	Value
Tube 1 Outer Diameter	[cm]	6.38
Tube 2 Outer Diameter	[cm]	7.36
Tube 3 Outer Diameter	[cm]	8.34
Tube 4 Outer Diameter	[cm]	9.32
Clad Thickness	[cm]	0.0425
Tube Thickness	[cm]	0.15
Fuel Meat Thickness	[cm]	0.065
Active Fuel Length	[cm]	60
Total Element Length	[cm]	62.5
Tube Pitch	[cm]	---
Fuel Composition		U-Al
Weight Percent ^{235}U		Note 1
Maximum ^{235}U per Fuel Assembly	[g]	180.0
U wt % in Fuel Composition		Note 1
Mass of Uranium	[g]	Note 1

Note:

1. ^{235}U weight percent, uranium mass and weight percent of uranium in the fuel meat are dependent on the enrichment type evaluated and tolerances employed.

Table 6.3.6-2 DIDO Basket and Cask Parameters

Description	Dimension [in]
Fuel tube outer diameter	4.250
Fuel tube wall thickness	0.120
Fuel tube outer diameter tolerance (maximum)	0.015
Fuel tube outer diameter tolerance (minimum)	0.025
Fuel tube thickness tolerance (maximum)	22%
Fuel tube thickness tolerance (minimum)	0%
Outer ring tube location diameter	8.500
Tube location angle	60.000
Fuel basket outer diameter	13.265
Fuel basket base plate thickness	0.500
Fuel basket base plate thickness tolerance	0.020
Basket bottom plate hole size	1.000
Aluminum shell thickness	0.188
Aluminum shunt width	0.750
Aluminum shunt depth	0.375
Basket cavity height	28.81
Basket cavity height tolerance	0.060
Cask cavity diameter	13.375
Lead shield inner diameter	14.890
Lead shield outer diameter	26.350
Lead shield outer diameter of taper	24.880
Cask outer diameter	28.755
Cask lid thickness	11.250
Bottom forging thickness	10.500
Bottom forging lead insert diameter	20.750
Bottom forging lead insert thickness	3.000
Offset bottom of cask to lead	3.500
Neutron shield thickness	5.000
Neutron shield tank skin	0.236
Number of baskets per cask	6.000

Table 6.3.6-3 Composition Densities Used in Criticality Analysis of DIDO Fuel

Material	HEU U-Al	MEU U-Al	LEU U-Al
Density, gm/cc	U=0.501 Al=2.250	U=1.060,Al=2.085	U=2.415,Al=1.786
Nuclide	Atoms/barn-cm		
Uranium 235	1.222-3	1.222-3	1.222-3
Uranium 238	7.702-5	1.475-3	4.900-3

Material	Al Clad	H2O	304 Stainless Steel	Pb	H2O/ Glycol
Density, gm/cc	2.702	0.998	7.920	11.350	0.9437
Nuclide	Atoms/barn-cm				
Aluminum	6.031E-2				
Oxygen		3.338E-2			2.459E-2
Hydrogen		6.675E-2			5.988E-2
Iron			5.936E-2		
Chromium			1.743E-2		
Nickel			7.721E-3		
Manganese			1.736E-3		
Lead				3.299E-2	
Carbon					1.070E-2

6.3.7 General Atomics Irradiated Fuel Material

6.3.7.1 Description of Calculational Models

Criticality evaluations are performed for three payload combinations: RERTR (TRIGA) fuel only, HTGR fuel only, and both RERTR and HTGR fuel. The results of these analyses show which fuel material is most reactive and establish a basis for choosing a reactivity bias for the combined system. In the models of either RERTR or HTGR fuel, the radial detail of the basket tubes is included. In the combined payload model, the basket tubes are conservatively not modeled, and the RERTR and HTGR enclosures (Fuel Handling Units (FHUs)) intersect tangentially at the centerline of the cask cavity.

The KENO-Va model of the NAC-LWT cask with a combined payload of GA IFM is axially infinite in height, with the active fuel length of the TRIGA elements chosen as the modeled axial extent. Note that two pitch scenarios are evaluated for the 20 TRIGA fuel elements. This first scenario places the elements in a 4×5 rectangular array, as shown in Figure 6.3.7-1, and is denoted as 'Rectangular' in the result tables in Section 6.4.8. The second scenario places 16 elements in a 4×4 array with the remaining four elements inserted in the center of each face on a triangular pitch as shown in Figure 6.3.7-2. For convenience, this scenario is denoted as 'Square' in the result tables in Section 6.4.8. The centerline parameters are calculated as a function of pitch. The HTGR fuel matrix is a homogenized cylinder with outer diameter equal to the inner diameter of the HTGR primary enclosure. The two IFM enclosures intersect tangentially at the centerline of the cask cavity and are surrounded by the cask radial shields. A sketch of the cross-section in the cask is shown in Figure 6.3.7-3. Reflecting boundary conditions on all sides simulate an infinite array of casks. The neutron shield material definition is tied to the exterior moderator definition; a void exterior includes a void neutron shield. Thus, the accident condition of loss of neutron shielding is explicitly modeled when the exterior moderator is set to void.

6.3.7.2 Package Regional Densities

The composition densities (g/cc) and nuclide number densities (atm/b-cm) calculated by the SCALE material information processor are shown in Table 6.3.7-1. Two material descriptions exist for the RERTR/TRIGA fuel: 1) intact fuel with clad; and 2) homogenized fuel without clad.

Figure 6.3.7-1 PICTURE Representation of NAC-LWT Cavity with 'Rectangular' Array of GA IFM TRIGA Elements

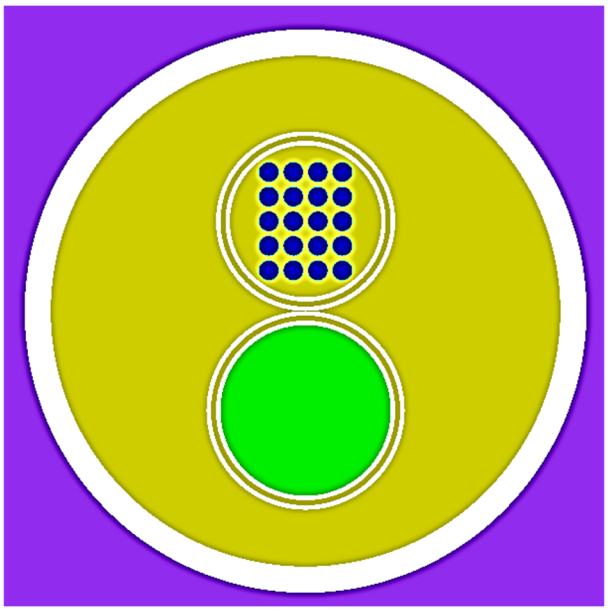

Figure 6.3.7-2 PICTURE Representation of NAC-LWT Cavity with 'Square' Array of GA IFM TRIGA Elements

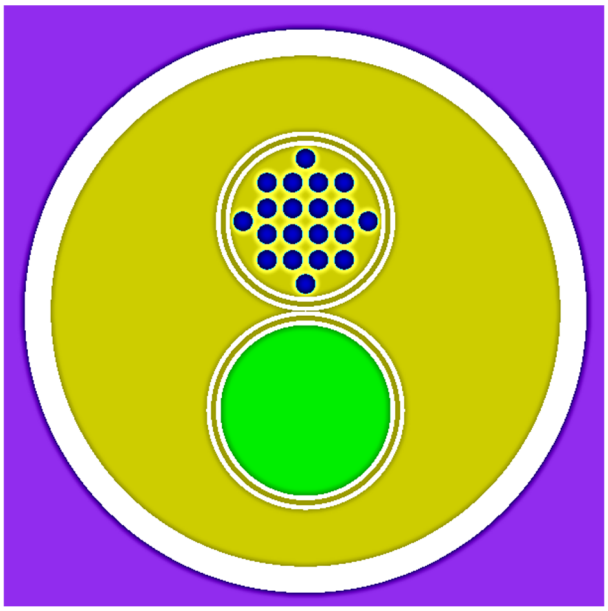

Figure 6.3.7-3 KENO-Va Model of NAC-LWT Cask Cross-Section with GA IFM

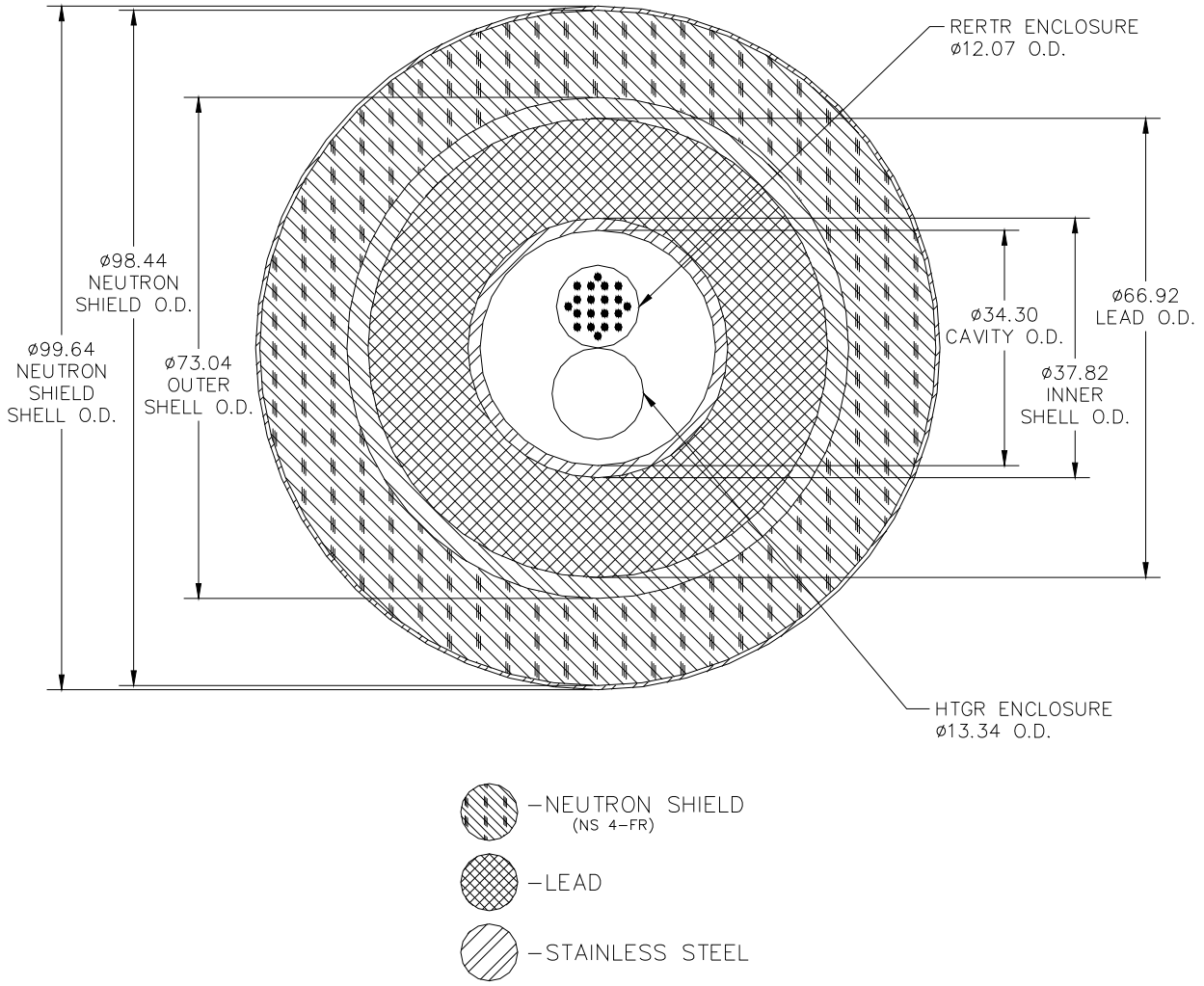

[Dimensions in cm]

Table 6.3.7-1 Composition Densities Used in Criticality Analysis of GA IFM

Material	Intact RERTR Fuel	Intact RERTR Clad	Homog. RERTR Fuel	HTGR Fuel	H2O	304 Stainless Steel	Pb
Density, g/cc	7.409	7.940	1.499	1.116	0.998	7.920	11.344
Nuclide	Atoms/barn-cm						
Hydrogen	4.779E-02		9.717E-03		6.677E-02		
Carbon	5.199E-04		1.084E-04	3.716E-02			
Zirconium	3.052E-02		6.214E-03				
Uranium-235	1.337E-03		2.722E-04	5.117E-05			
Uranium-238	5.382E-03		1.096E-03	3.719E-06			
Chromium		2.298E-02				1.743E-02	
Iron		3.424E-02				5.936E-02	
Nickel		2.850E-02				7.721E-03	
Oxygen				8.810E-05	3.338E-02		
Silicon				3.160E-03			
Thorium				5.315E-04			
Manganese						1.736E-03	
Lead							3.297E-02

6.3.8 PULSTAR Fuel Contents

6.3.8.1 Description of Calculational Models

Four types of basket loadings are considered in the criticality evaluation: (1) intact assemblies loaded directly into the module cell, (2) up to 16 intact elements loaded in the 4×4 fuel rod holder, (3) up to 25 intact or damaged (failed) elements in the PULSTAR failed fuel can, or (4) up to 25 intact or damaged (failed) elements in the PULSTAR screened can. For the evaluation of the canned fuel elements, both discrete and homogenized fuel descriptions are employed.

Fuel elements are modeled using the parameters in Section 6.1.1. Using a conservatively selected enrichment of 6.5 wt % ^{235}U and a loading of 33 grams ^{235}U per element, the calculated UO_2 density is 10.38 g/cm^3. The assembly is modeled as a 25-element rectangular rod array with no credit is taken for the assembly upper and lower fittings. The modeled height for intact elements is 26.2 inches, which includes the active fuel height of 24.1 inches and upper and lower end caps. No element (rod) plenum space is modeled.

A bounding can cavity dimension of 3.3-inch width × 30-inch height is chosen to bound the PULSTAR can dimensions. Neither canister wall nor end-plates are included in the model. The 3.3-inch cavity is wider than physically feasible in the minimum 3.38-inch basket opening when adding in the canister wall thicknesses.

PULSTAR fuel evaluations rely on base models developed for the MTR fuel reactivity calculations, as the PULSTAR elements are placed in the 28 MTR basket configuration with spacers. No credit for spacers is taken in the PULSTAR fuel calculations. Base PULSTAR fuel evaluations are performed with minimum basket opening and minimum basket plate thickness, fuel centered within each basket cell, fuel assemblies axially centered in the basket, a flooded cask cavity, and a void cask exterior. Infinite cask arrays are used where possible, with a reduced array specified when necessary to maintain system reactivity below licensing limits.

MTR KENO models are modified to include the PULSTAR fuel assemblies, fuel rod holder and cans. Models are configured to evaluated basket mechanical perturbations and payload radial and axial shifting. Can, cask cavity, neutron shield and cask exterior models are defined as separate materials to allow optimum moderator density and preferential flooding studies.

As indicated in Section 6.1.1, PULSTAR fuel assemblies are rectangular, not square; therefore, assembly alignment (rotation), dubbed ‘Xlong’ and ‘Ylong’, is evaluated.

The four types of basket loadings are illustrated in Figure 6.3.8-1 through Figure 6.3.8-4. Dimensioned model sketches with cask materials are shown in Figure 6.3.8-5 and Figure 6.3.8-6. The axial view shows the highest reactivity payload combination of cans and intact fuel assemblies shifted "alternating" into close contact. Note that no spacers are included in the model.

6.3.8.2 Package Regional Densities

The composition densities (g/cc) and nuclide number densities (atm/b-cm) calculated by the SCALE material information processor are shown in Table 6.3.8-1.

Figure 6.3.8-1 PICTURE Representation of NAC-LWT Cavity with PULSTAR Assemblies

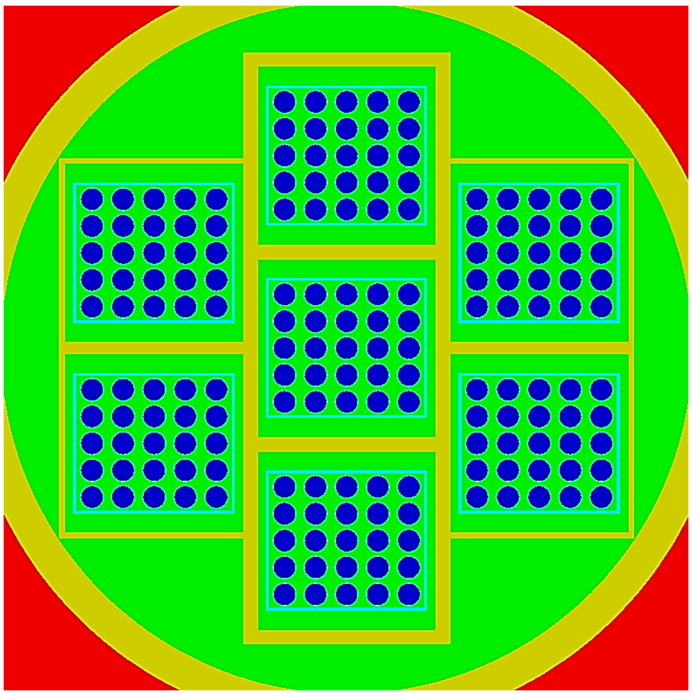

Figure 6.3.8-2 PICTURE Representation of NAC-LWT Cavity with PULSTAR Elements in 4×4 Rod Insert

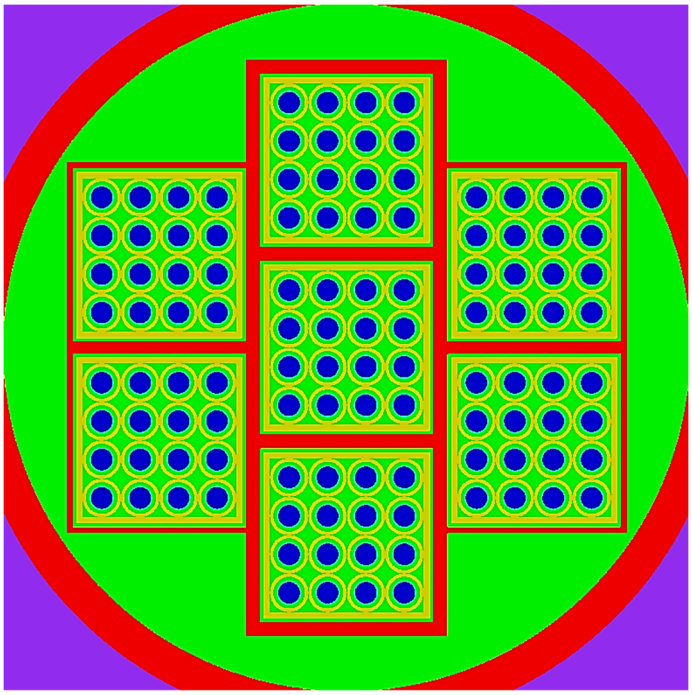

Figure 6.3.8-3 PICTURE Representation of NAC-LWT Cavity with Canned Discrete PULSTAR Elements

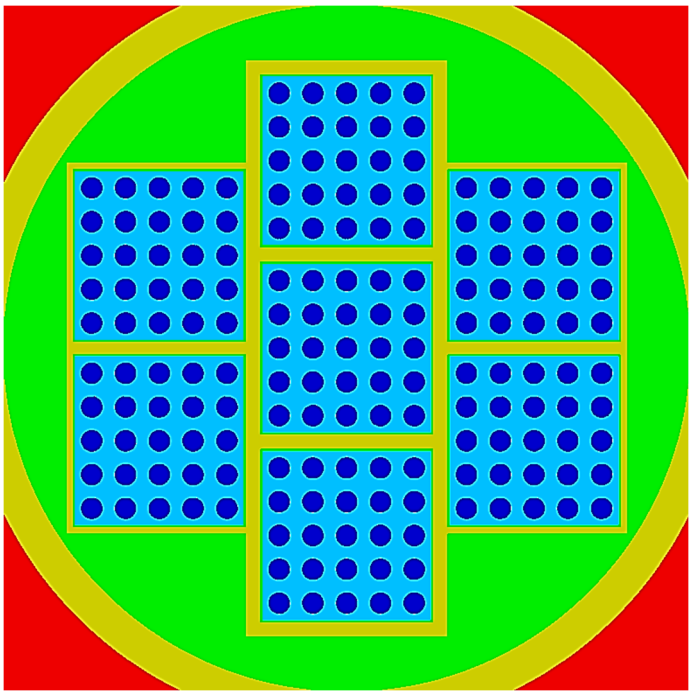

Figure 6.3.8-4 PICTURE Representation of NAC-LWT Cavity with Canned Homogenized PULSTAR Elements

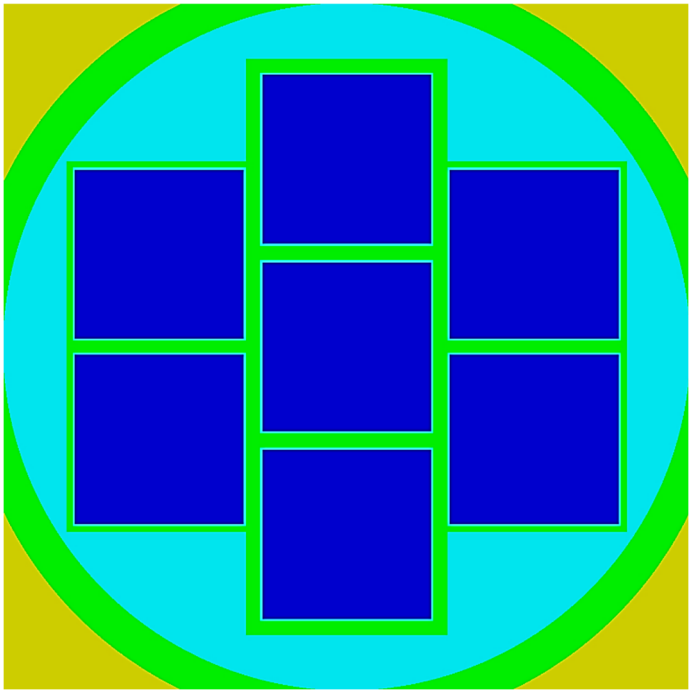

Figure 6.3.8-5 KENO-Va Model of NAC-LWT Cask Cross-Section with 28 MTR 7-Element Basket

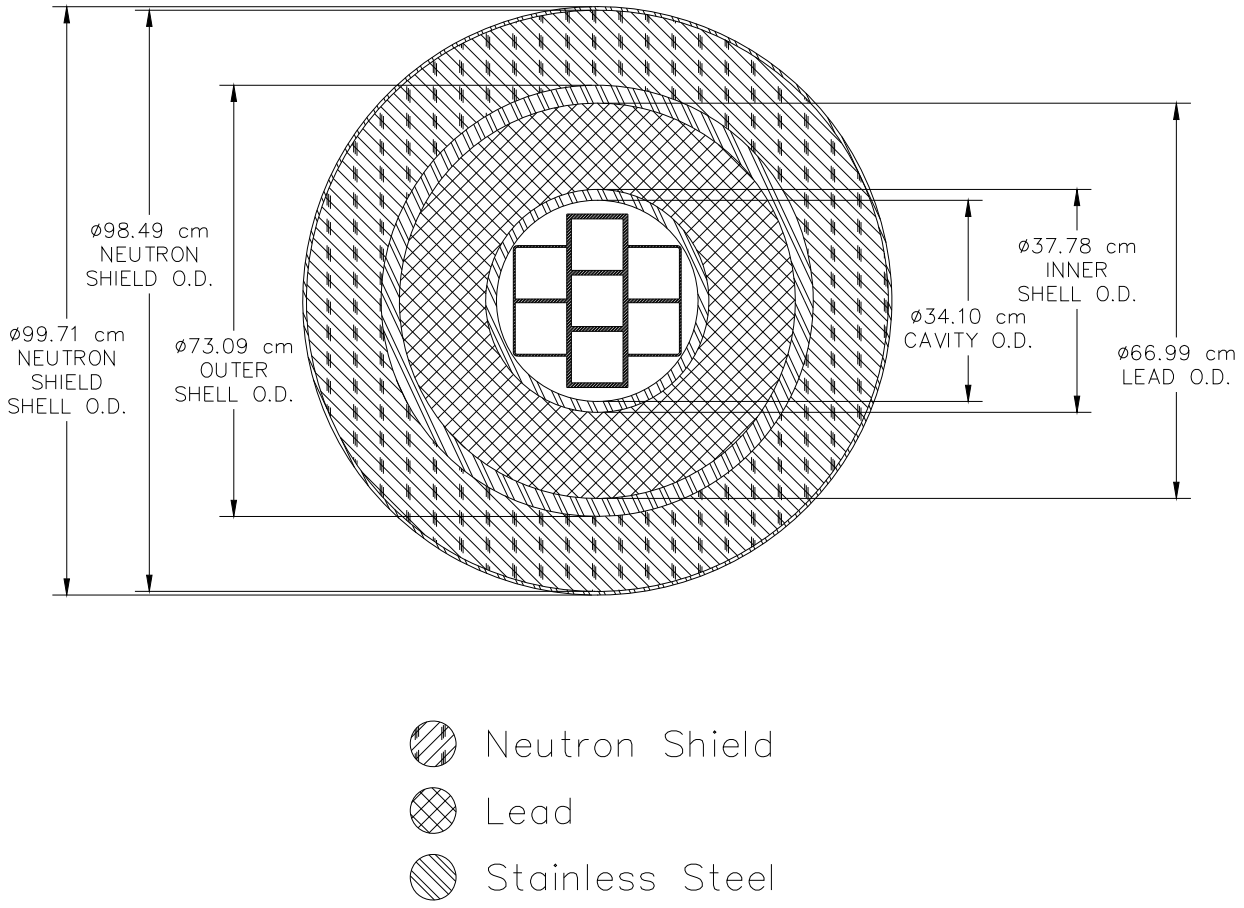

Figure 6.3.8-6 Finite Length KENO-Va Model of NAC-LWT Cask with 700 PULSTAR Fuel Elements

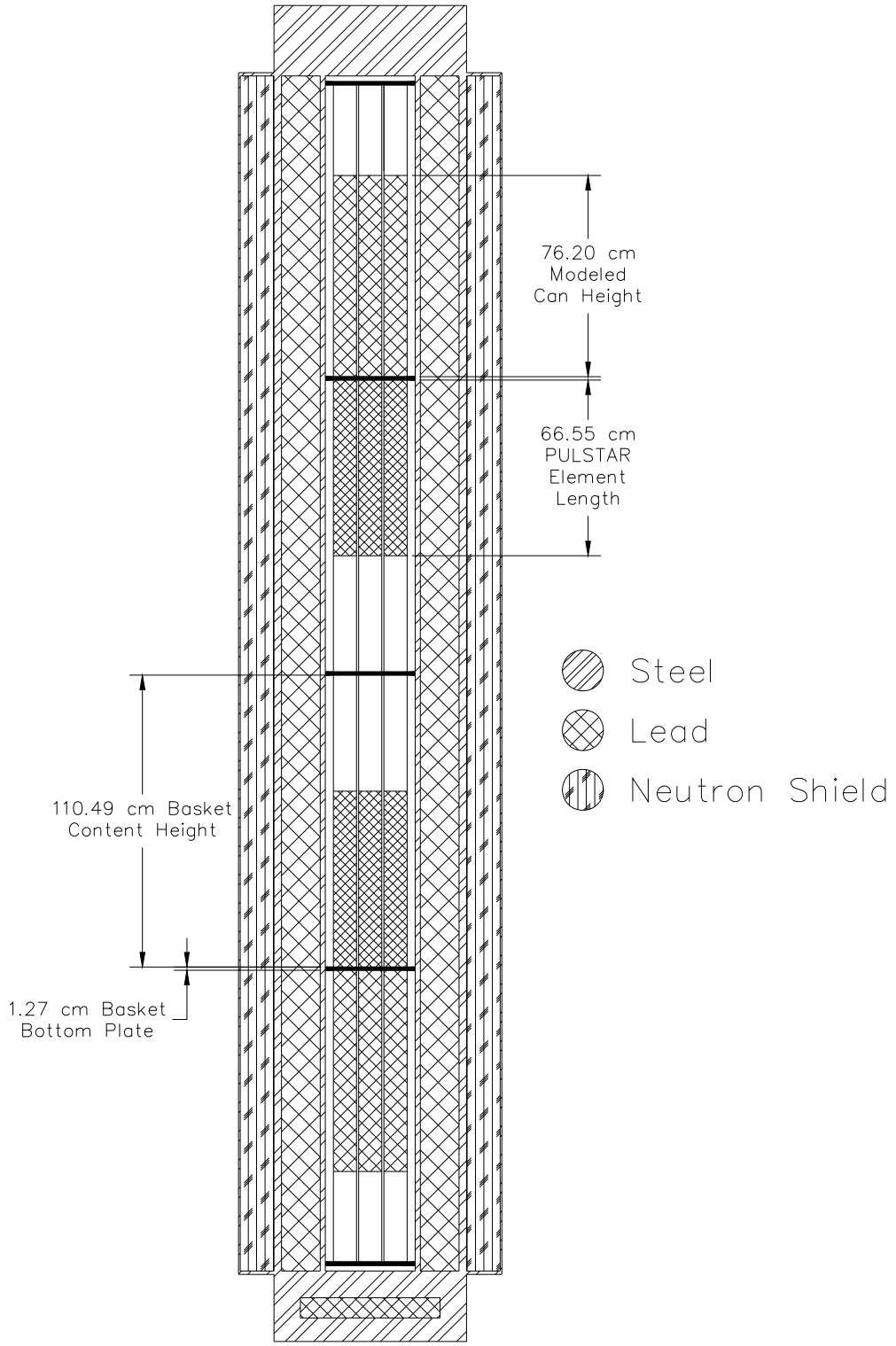

Table 6.3.8-1 Composition Densities Used in Criticality Analysis of PULSTAR Fuel

Material	Intact PULSTAR Fuel	Intact PULSTAR Clad	Homog. PULSTAR Fuel	H2O	304 Stainless Steel	Pb
Density, g/cc	10.38	6.56	3.013.01	0.998	7.920	11.344
Nuclide	Atoms/barn-cm					
Hydrogen				6.677E-02		
Oxygen	4.633E-02			3.338E-02		
Uranium-235	1.524E-03		3.950E-04			
Uranium-238	2.164E-02		5.610E-03			
Zircaloy		4.331E-02	2.096E-03			
Chromium					1.743E-02	
Iron					5.936E-02	
Nickel					7.721E-03	
Manganese					1.736E-03	
Lead						3.297E-02

6.3.9 ANSTO Basket Payload

6.3.9.1 Description of Calculational Models

Fuel parameters in Table 6.2.11-1, spiral fuel assembly, and Table 6.2.12-1, MOATA plate bundle, are employed to build criticality models for the payloads within the NAC-LWT ANSTO baskets. The fuel tolerances in Table 6.2.11-2 and Table 6.2.12-2 are used in trending reactivity versus the assembly's physical characteristics and produce a bounding fuel assembly characteristic set.

Evaluations are performed with an infinite array of casks by modeling a single cask with mirrored boundary conditions. An additional evaluation is performed to demonstrate that a single cask, with containment boundary fully reflected by water, is subcritical with a reactivity below that of the bounding accident configuration array. The ANSTO basket and NAC-LWT cask models are based on the dimensions listed in Table 6.3.9-1 and are identical to the DIDO basket with the exception of slightly larger and thicker fuel tubes and the removal of the aluminum heat transfer components in the basket.

The KENO-Va model of the NAC-LWT cask with the spiral fuel assembly and plate bundle is centered on a stack of six ANSTO baskets. The cask radial shields surround the basket stack. The basket stack, surrounded by shields, has the lid and bottom weldment added. The module chosen for stacking is the intermediate basket module. While axial extents differ from the bottom and top modules, the basket horizontal cross-section is identical in all modules. Axial variations are associated with the stacking of the units, with all units containing the 0.5-inch thick base plate.

Figure 6.3.9-1 displays a side view of the intermediate module. A cross-section of the basket with fuel tubes numbered one through seven is shown in Figure 6.3.9-2. To simplify model construction, the six steel disks surrounding the tubes are not included in the model. They represent a minor amount of parasitic absorber outside the fuel region and, therefore, will have no significant effect on system reactivity.

Figure 6.3.9-2 also includes a sketch of the two types of payload included in the cask. Note that the MOATA plate bundle side plates are modeled without chamfers, allowing additional space for the bundle to move within the tube and allowing a closer approach to adjoining plate bundles than feasible in the as-built assembly configuration. Assembly end-fittings are also not modeled, allowing a significantly closer approach of fuel material in the alternating shifted payload. Structural evaluations of the plate bundle have demonstrated that the as-built configuration of the bundle is maintained through all normal and accident conditions. Structural evaluations of the

spiral fuel assembly demonstrate that the inner and outer shells will maintain their geometry. Since the fuel plates of the spiral assembly are locked into tabs attached to the shells, they will also retain their configuration. To bound a possible reconfiguration of spiral assembly fuel plates within the annular regions, criticality evaluations are performed for variations in fuel locations beyond those feasible by assembly fabrication. Included in the fuel sketches are images of the spiral fuel assembly as-built and the model approximation of three annular fuel rings. A radial sketch of the cask cross-section is shown in Figure 6.3.9-3. The axial stack of baskets is identical to that of the DIDO baskets as shown in Figure 6.3.6-4, with differences limited to payload height. Reflecting boundary conditions on all sides simulate an infinite array of casks. This model neglects the impact limiters that would provide additional spacing between casks, and models the cask under accident conditions with the neutron shield voided.

6.3.9.2 Package Regional Densities

The composition densities (gm/cc) and nuclide number densities (atm/b-cm) calculated by the SCALE material information processor for the nominal characteristic ANSTO payloads used in subsequent criticality analyses are shown in Table 6.3.9-2.

Figure 6.3.9-1 Intermediate ANSTO Basket Module

(Dimensions in inches)

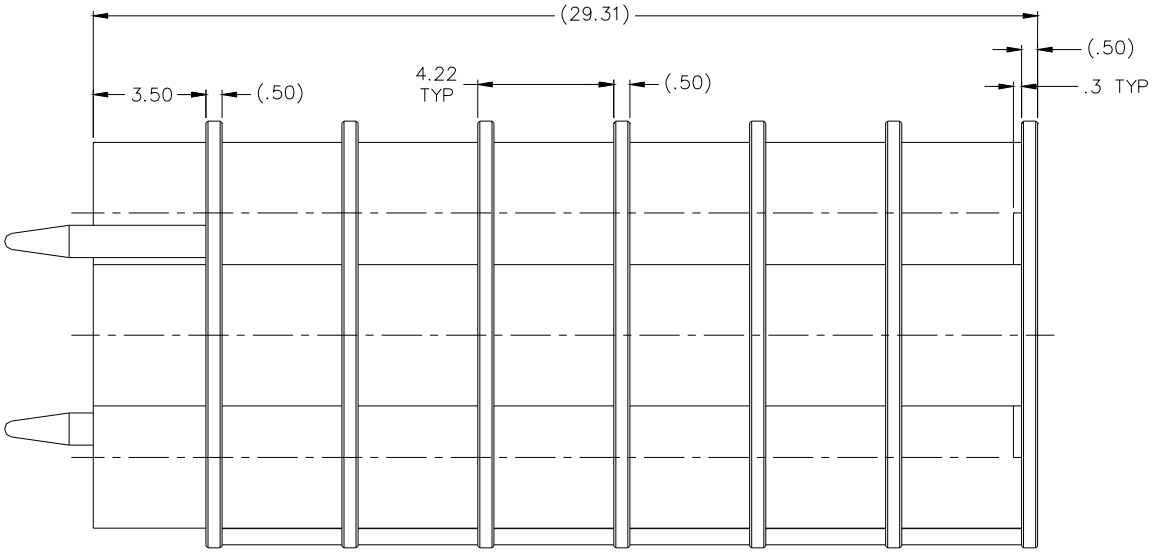

Figure 6.3.9-2 KENO-Va ANSTO Payloads and Basket Cross-Section

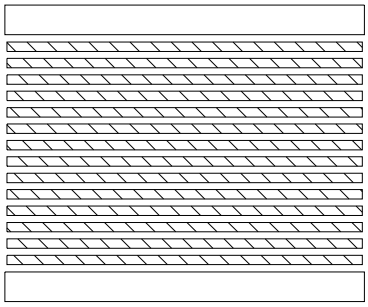

MOATA Plate Bundle Model

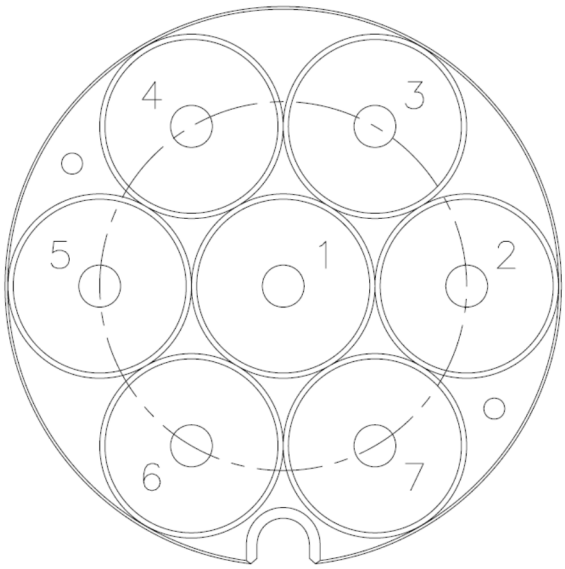

ANSTO Basket

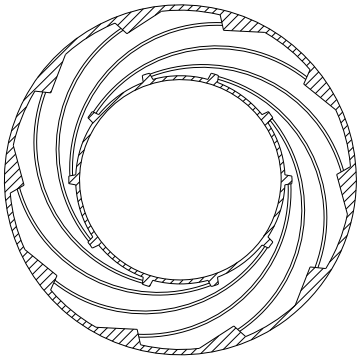

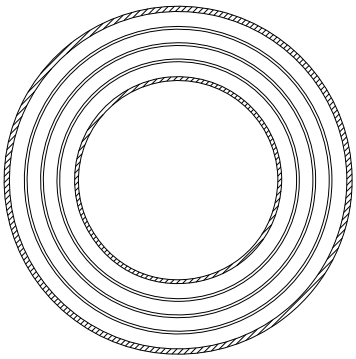

Spiral Fuel Assembly Model

Figure 6.3.9-3 KENO-Va Model of NAC-LWT Cask Cross-Section with ANSTO Basket

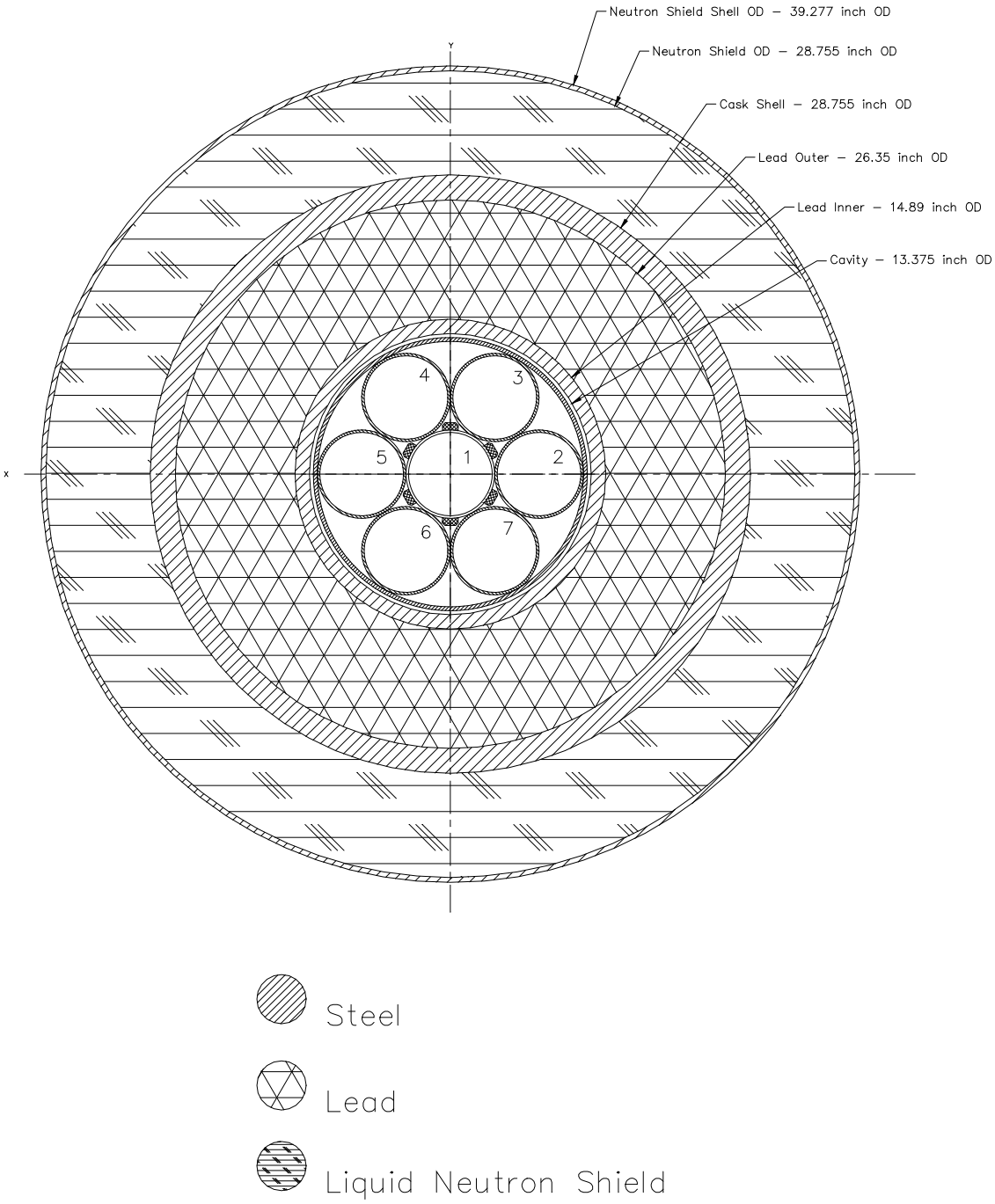

Table 6.3.9-1 ANSTO Basket and Cask Parameters

Description	Dimension [in]
Fuel tube outer diameter	4.375
Fuel tube wall thickness	0.125
Fuel tube outer diameter tolerance (maximum)	0.015
Fuel tube outer diameter tolerance (minimum)	0.025
Fuel tube thickness tolerance (maximum)	22%
Fuel tube thickness tolerance (minimum)	0%
Tube location angle (degrees)	60
Fuel basket outer diameter	13.265
Fuel basket base plate thickness	0.500
Fuel basket base plate thickness tolerance	0.020
Basket bottom plate hole size	1.000
Basket cavity height	28.81
Basket cavity height tolerance	0.060
Cask cavity diameter	13.375
Lead shield inner diameter	14.890
Lead shield outer diameter	26.350
Lead shield outer diameter of taper	24.880
Cask outer diameter	28.755
Cask lid thickness	11.250
Bottom forging thickness	10.500
Bottom forging lead insert diameter	20.750
Bottom forging lead insert thickness	3.000
Offset bottom of cask to lead	3.500
Neutron shield thickness	5.000
Neutron shield tank skin	0.236
Number of baskets per cask	6

Table 6.3.9-2 Composition Densities Used in Criticality Analysis of ANSTO Basket Payloads

Material	Sprial Assembly U-Al	MOATA Plate Bundles U-Al
Density, gm/cc	U=0.847 Al=1.382	U=0.567,Al=2.517
Nuclide	Atoms/barn-cm	
Uranium 235	1.85E-03	1.34E-03
Uranium 238	3.21E-04	1.15E-04
Al	3.08E-02	5.62E-02

Material	Al Clad	H_2O	304 Stainless Steel	Pb	H_2O/ Glycol
Density, gm/cc	2.702	0.998	7.920	11.350	0.9437
Nuclide	Atoms/barn-cm				
Aluminum	6.031E-2				
Oxygen		3.338E-2			2.459E-2
Hydrogen		6.675E-2			5.988E-2
Iron			5.936E-2		
Chromium			1.743E-2		
Nickel			7.721E-3		
Manganese			1.736E-3		
Lead				3.299E-2	
Carbon					1.070E-2

Note: Fuel material density and composition values are based on nominal fuel dimensions, mass and enrichment. Values used in the CSAS models vary due to tolerances applied to the fuel material specification and/or dimension.

6.3.10 ANSTO-DIDO Combined Basket Payload

6.3.10.1 Description of Calculational Models

Mixed ANSTO-DIDO payloads considered in the evaluations include placement of an ANSTO basket top module, containing DIDO and/or ANSTO fuel, on a DIDO basket stack, or including DIDO fuel within the top ANSTO basket module in an ANSTO basket stack. As the results in Section 6.4.7, DIDO, and Section 6.4.10, ANSTO, indicate a higher reactivity for the DIDO basket assembly, the evaluations of the combined payload concentrate on this configuration.

The DIDO and ANSTO fuel models developed in Sections 6.4.7 and 6.4.10 are combined to form a mock-up for a cask model containing both DIDO and ANSTO basket modules. The ANSTO module is modeled to contain DIDO, ANSTO or combination payloads. Fuel parameters are not modified from those described in the individual basket evaluation sections. Model changes are limited to correcting the material composition of the DIDO basket tubes (stainless steel versus aluminum in the Section 6.4.7 evaluations) and the addition of an aluminum damaged fuel can (DFC) to contain intact elements or loose and/or segmented plate material. The DFC can physically only be located in the ANSTO module as its diameter will not allow it to be located in the DIDO basket tube. The inner and outer diameters of the aluminum canister are 98.4 mm and 101.6 mm (see canister sketch in Figure 1.2.3-18) versus a nominal DIDO tube inner diameter of 101.8 mm (including any tube bow or twist, a 0.2-mm gap is insufficient for DFC placement).

Evaluations are performed with an infinite array of casks by modeling a single cask with mirrored boundary conditions. Single cask analyses are not performed as the DIDO and ANSTO calculations in Sections 6.4.7 and 6.4.10 demonstrate that a single cask, with containment boundary fully reflected by water, has a reactivity below that of the bounding accident configuration array. The ANSTO and DIDO basket models are identical with the exception that the ANSTO basket contains slightly larger and thicker fuel tubes and the aluminum heat transfer components are removed from the basket.

The KENO-Va model of the NAC-LWT cask with the combined baskets is composed of a stack of five DIDO basket modules and one top ANSTO basket module. The cask radial shields surround the basket stack. The basket stack, surrounded by shields, has the lid and bottom weldment added. Geometry changes made to the combined model are the inclusion of an aluminum DFC. The only component of the DFC included in the model is the radial aluminum shell. Neglecting the bottom structure allows fissile material in adjoining baskets a closer approach and is, therefore, conservative. The top structure has no effect as the only analysis

component affected is neutron backscatter/reflection that, due to geometry aspects (low radius to height ratio), is not significant to system performance.

The SCALE 4.3 CSAS25 sequence used in this analysis is limited to one material definition within its material information processor geometry cards and is, therefore, limited to calculating a self-shielding correction for only one fuel material. In the combined baskets model, multiple fuel materials may be required. The code input options RES and DAN are, therefore, used to enter the relevant parameters directly. Input values for the resonance correction were calculated with stand-alone CSAS runs for each fuel geometry/material description.

6.3.10.2 Package Regional Densities

The composition densities (gm/cc) and nuclide number densities (atm/b-cm) were calculated by the SCALE material information processor and are identical to those used in Sections 6.4.7 and 6.4.10.

6.4 Criticality Calculations

The criticality calculations for the contents to be transported in the NAC-LWT are described in Sections 6.4.1 through 6.4.10.

6.4.1 PWR Fuel Assemblies

This section presents the criticality analysis for the NAC-LWT cask with the PWR fuel assembly and basket configuration. Criticality analyses of this single assembly arrangement for the most limiting assembly type were performed to satisfy the criticality safety requirements of 10 CFR Parts 71.55 and 71.59 as well as IAEA Transportation Safety Standards (TS-R-1). In these analyses, the bounding PWR fuel assembly was determined for uranium enrichments of 3.7 and 3.5 wt % ^{235}U. Single casks loaded separately with the two design basis PWR fuel assemblies were studied for criticality under both normal and accident conditions. The reactivity effects associated with mechanical and geometric perturbations of the PWR fuel assembly and the basket opening are quantified. The analyses demonstrate that, including all calculational and mechanical uncertainties, the NAC-LWT cask remains subcritical under both normal and accident conditions for all PWR assemblies similar in construction and enrichment to those described herein.

6.4.1.1 Design Basis PWR Fuel Assembly

The k_{eff} values of a single NAC-LWT cask with the PWR fuel assemblies shown in Table 6.2.1-1 and Table 6.2.1-2 are given in Table 6.4.1-1. These results assume a uranium enrichment limit of 3.7 wt % ^{235}U and that full density water is present in the fuel clad gap. As seen in the table, the PWR assembly with the highest reactivity not exceeding 0.95 with uncertainties and bias per Section 6.4.1.6 was found to be the Exxon 15×15ANF WE assembly. Thus, this assembly was selected as the most limiting assembly for a uranium enrichment limit of 3.7 wt % ^{235}U. This assembly will serve as the basis to demonstrate that the CE 14×14, CE 16×16, Exxon 14×14 CE, Exxon 14×14 WE, Westinghouse 14×14, and the Westinghouse 14×14 OFA are sufficiently subcritical under both normal and accident conditions with an enrichment limit of 3.7 wt % ^{235}U.

The PWR fuel assemblies with k_s reactivities exceeding 0.95 were reanalyzed with a uranium enrichment limit of 3.5 wt % ^{235}U. The reactivities of a single NAC-LWT cask with these PWR assemblies and a uranium enrichment of 3.5 wt % ^{235}U are shown in Table 6.4.1-2. From this table it is shown that the reactivity of all re-analyzed assemblies were below the 0.95 limit and that the Westinghouse 17×17 OFA assembly is the most reactive. Consequently, this assembly was selected as the most limiting assembly for a uranium enrichment of 3.5 wt % ^{235}U. This fuel assembly will serve as the basis to demonstrate that the B&W 15×15, B&W 17×17, Exxon

17×17 WE, Westinghouse 15×15, and the Westinghouse 17×17 assemblies are sufficiently subcritical under both normal and accident conditions with an enrichment limit of 3.5 wt % ^{235}U.

6.4.1.2 PWR Fuel Perturbation Studies

The criticality evaluation for the NAC-LWT cask with the design basis PWR assemblies includes studying geometric tolerances and mechanical perturbations. The tolerances and perturbations are independently evaluated for the limiting PWR assemblies at uranium enrichments of 3.5 and 3.7 wt % ^{235}U. The following perturbations and tolerances are analyzed:

I. Mechanical Perturbation
A. Fuel movement in the basket

II. Geometric Tolerances
A. Basket opening size

The geometric tolerance associated with the manufacture of the PWR basket is an opening tolerance of 8.88 ± 0.03 inches. Mechanical perturbations, i.e., fuel movement within the basket, arise from the gap between the assembly and the basket opening.

The effect of these tolerances and perturbations on the reactivity of the most limiting PWR fuel assemblies in the NAC-LWT cask is shown in the results presented in Table 6.4.1-3 and Table 6.4.1-4. Table 6.4.1-3 shows that there is one perturbed configuration with a larger reactivity than the nominal design configuration of the Westinghouse 17×17 OFA fuel assembly. However, the increase in reactivity was not statistically significant, i.e., less than 2σ. Thus, the nominal configuration, i.e. a centered assembly with nominal basket dimensions, of the Westinghouse 17×17 OFA PWR is the most reactive configuration of the most limiting PWR assembly for a uranium enrichment limit of 3.5 wt % ^{235}U. This configuration serves as the design basis and is retained for subsequent moderator density variation studies.

For the Exxon 15×15 ANF WE fuel assembly, the effect of geometrical and mechanical perturbations is presented in Table 6.4.1-4. Analysis of the results reveals that the maximum basket opening causes a statistically significant increase, i.e., >2σ, on reactivity. This configuration serves as the design basis and is retained for subsequent normal and accident condition, moderator density variation studies at the 3.7 wt % enrichment limit.

6.4.1.3 Normal Condition Moderator Density Evaluations

Table 6.4.1-5 presents the cask k_{eff} for the most reactive normal condition configuration as a function of moderator density inside and outside a single cask for enrichment limits of 3.5 and 3.7 wt % ^{235}U. The results show an increase in reactivity with increasing internal moderator density. This indicates that moderator density changes due to increasing temperature have a negative reactivity effect. Low density moderation inside or outside of the cask does not produce abrupt increases in reactivity in comparison to other density values. The calculations show that k_{eff} does not vary significantly when varying external water with constant full density internal moderator. Because external water density does not affect reactivity within statistical limits, the most reactive case is chosen to be internal and external moderator density at 1.0 gm/cc. The k_{eff} in this case for 3.5 and 3.7 wt % ^{235}U are 0.9279 ± 0.0014 and 0.9288 ± 0.0014, respectively. The k_{eff} for the normal condition cask with a dry cavity is very subcritical, i.e., ~ 0.15 and is insensitive to external moderator density variations.

6.4.1.4 Accident Condition Moderator Density Evaluations

Table 6.4.1-6 shows the cask k_{eff} for the most reactive accident condition configuration as a function of moderator density variation in the cavity, neutron shield tank and outside a single cask for enrichment limits of 3.5 and 3.7 wt % ^{235}U. Again, the results show an increase in reactivity with increasing internal moderator density. Low density moderation inside or outside of the cask does not produce abrupt increases in reactivity in comparison to other density values. The calculations show that the k_{eff} for the accident condition with a dry cavity, neutron shield and exterior is very subcritical, i.e., ~ 0.16. The most reactive case occurs with the moderator density at 1.0 gm/cc in the cavity and the neutron shield tank as well as outside. The k_{eff} in this case for 3.5 and 3.7 wt % ^{235}U are 0.9325 ± 0.0013 and 0.9320 ± 0.0013, respectively.

6.4.1.5 Single Package Evaluations

To satisfy 10 CFR 71.55(b)(3), an analysis of the reflection of the containment system (inner shell) by water is performed on a single wet cask. Successive replacement of the cask radial shields with water reflection is also evaluated. The results of this evaluation can be seen in Table 6.4.1-7 and Table 6.4.1-8. The reactivity of the system drops as each radial shield of the cask is replaced by water, k_{eff} = 0.9251 ± 0.013 and k_{eff} = 0.9295 ± 0.0013 for 3.5 and 3.7 wt % ^{235}U, respectively for the full cask surrounded by water to k_{eff} = 0.8372 ± 0.013 and k_{eff} = 0.8363 ± 0.0014 for 3.5 and 3.7 wt % ^{235}U, respectively, for the inner shell surrounded by water.

6.4.1.6 Conclusion

A calculation of k_s under normal and accident conditions can now be made based on the previous results and based on the KENO-Va validation statistics presented in Section 6.5.1 for low enriched uranium fuel. The value k_s is calculated based on the KENO-Va Monte Carlo average plus any biases and uncertainties associated with the methods and the modeling, i.e.:

$$k_s = k_{eff} + 2\sigma_{mc} + \Delta k_{Bias} + \Delta k_{BU}$$

In the validation presented in Section 6.5.1, a bias of 0.0052 (allowance for under prediction of k_{eff}) and a 95/95 method uncertainty of ± 0.0087 was determined. With this bias and uncertainty, the equation for k_s becomes:

$$k_s = k_{eff} + 2\sigma_{mc} + 0.0052 + 0.0087$$

Thus, $k_s = 0.9446$ and $k_s = 0.9455$ for 3.5 and 3.7 wt % ^{235}U, respectively, under normal conditions for a single NAC-LWT cask with a design basis PWR assembly, and a flooded basket cavity and exterior. Both are below the 0.95 regulatory limit. Under accident conditions, $k_s = 0.9490$ and $k_s = 0.9485$ for 3.5 and 3.7 wt % ^{235}U, respectively, for a single NAC-LWT cask with a design basis PWR assembly with a flooded basket cavity, neutron shield and exterior.

For both normal and accident conditions, the calculated k_{eff} values, after correction for biases and uncertainties, are below the 0.95 limit. The analyses demonstrate that, including all calculational and mechanical uncertainties, a single NAC-LWT cask with PWR fuel assemblies remains subcritical under normal and accident conditions.

Table 6.4.1-1 PWR Fuel Assembly at 3.7% Enrichment Most Reactive Assembly Results

PWR Fuel	k_{eff} (Dry Gap)	σ (Dry Gap)	k_{eff} (Wet Gap)	σ (Wet Gap)	k_s
W17×17 OFA	N/A	N/A	0.9428	0.0013	0.9593
W15×15	N/A	N/A	0.9407	0.0014	0.9574
B&W 15×15	N/A	N/A	0.9385	0.0014	0.9552
Ex17×17 WE	N/A	N/A	0.9381	0.0013	0.9546
B&W 17×17	N/A	N/A	0.9378	0.0014	0.9545
W17×17	N/A	N/A	0.9375	0.0013	0.9540
Ex15×15 WE	0.9246	0.0013	0.9321	0.0014	0.9488
CE16×16	0.9106	0.0013	0.9117	0.0014	0.9284
CE14×14	0.9059	0.0013	0.9103	0.0014	0.9270
Ex14×14 CE	0.9033	0.0014	0.9087	0.0013	0.9252
W14×14 OFA	0.8959	0.0014	0.9026	0.0014	0.9193
W14×14	0.8919	0.0014	0.9016	0.0013	0.9181
Ex14×14 WE	0.8805	0.0014	0.8944	0.0014	0.9111

Table 6.4.1-2 PWR Fuel Assembly at 3.5% Enrichment Most Reactive Assembly Results

PWR Fuel	k_{eff} (Dry Gap)	σ (Dry Gap)	k_{eff} (Wet Gap)	σ (Wet Gap)	k_s (Wet Gap)
W17×17 OFA	0.9279	0.0013	0.9326	0.0013	0.9491
B&W 17×17	0.9212	0.0013	0.9314	0.0013	0.9479
Ex17×17 WE	0.9248	0.0012	0.9309	0.0014	0.9476
W15×15	0.9235	0.0012	0.9303	0.0013	0.9468
W17×17	0.9208	0.0013	0.9284	0.0014	0.9451
B&W 15×15	0.9202	0.0013	0.9278	0.0014	0.9445

Table 6.4.1-3 Westinghouse 17×17 OFA Assembly Geometric Tolerances and Mechanical Perturbations Results

Configuration	k_{eff}	σ	$k_{eff} + 2\sigma$
Nominal Configuration	0.9326	0.0013	0.9352
Max. Basket Opening	0.9315	0.0013	0.9341
Min. Basket Opening	0.9342	0.0014	0.9370
Assembly on Side	0.9306	0.0014	0.9334
Assembly in Corner	0.9298	0.0014	0.9326

Table 6.4.1-4 Exxon 15×15 Geometric Tolerances and Mechanical Perturbations Results

Configuration	k_{eff}	σ	$k_{eff} + 2\sigma$
Nominal Configuration	0.9321	0.0014	0.9349
Max. Basket Opening	0.9353	0.0013	0.9379
Min. Basket Opening	0.9316	0.0014	0.9344
Assembly on Side	0.9294	0.0013	0.9320
Assembly in Corner	0.9286	0.0013	0.9312

Table 6.4.1-5 Reactivity with Design Basis PWR Fuel vs. Basket Moderator Density, Normal Conditions

Moderator Density	3.5% Enrichment	3.7% Enrichment
Dry Exterior, Vary Internal Density		
0.0000	0.1496 ± 0.0003	0.1561 ± 0.0003
0.0010	0.1502 ± 0.0003	0.1571 ± 0.0004
0.0100	0.1584 ± 0.0003	0.1656 ± 0.0004
0.0250	0.1733 ± 0.0004	0.1795 ± 0.0004
0.0500	0.1995 ± 0.0005	0.2069 ± 0.0005
0.0750	0.2292 ± 0.0005	0.2347 ± 0.0006
0.1000	0.2588 ± 0.0006	0.2645 ± 0.0006
0.2000	0.3822 ± 0.0009	0.3849 ± 0.0009
0.4000	0.5927 ± 0.0011	0.5926 ± 0.0011
0.6000	0.7417 ± 0.0014	0.7399 ± 0.0013
0.8000	0.8465 ± 0.0013	0.8492 ± 0.0015
0.9000	0.8923 ± 0.0013	0.8896 ± 0.0013
1.0000	0.9279 ± 0.0014	0.9288 ± 0.0014
Wet Interior, Vary External Density		
0.0000	0.9279 ± 0.0014	0.9288 ± 0.0014
0.0010	0.9295 ± 0.0013	0.9284 ± 0.0013
0.0100	0.9251 ± 0.0013	0.9266 ± 0.0013
0.0250	0.9292 ± 0.0013	0.9255 ± 0.0012
0.0500	0.9277 ± 0.0013	0.9297 ± 0.0014
0.0750	0.9284 ± 0.0013	0.9241 ± 0.0014
0.1000	0.9260 ± 0.0013	0.9248 ± 0.0013
0.2000	0.9247 ± 0.0014	0.9289 ± 0.0013
0.4000	0.9254 ± 0.0013	0.9268 ± 0.0013
0.6000	0.9265 ± 0.0013	0.9282 ± 0.0012
0.8000	0.9285 ± 0.0013	0.9271 ± 0.0013
0.9000	0.9266 ± 0.0014	0.9286 ± 0.0013
1.0000	0.9251 ± 0.0013	0.9244 ± 0.0012
Vary Interior and Exterior Density Simultaneously		
0.0000	0.1496 ± 0.0003	0.1561 ± 0.0003
0.0010	0.1508 ± 0.0004	0.1576 ± 0.0004
0.0100	0.1583 ± 0.0004	0.1644 ± 0.0004
0.0250	0.1737 ± 0.0004	0.1784 ± 0.0004
0.0500	0.2004 ± 0.0005	0.2062 ± 0.0005
0.0750	0.2293 ± 0.0006	0.2341 ± 0.0006
0.1000	0.2599 ± 0.0006	0.2637 ± 0.0006
0.2000	0.3834 ± 0.0009	0.3851 ± 0.0009
0.4000	0.5909 ± 0.0011	0.5942 ± 0.0011
0.6000	0.7398 ± 0.0012	0.7416 ± 0.0012
0.8000	0.8486 ± 0.0013	0.8487 ± 0.0014
0.9000	0.8886 ± 0.0014	0.8926 ± 0.0013
1.0000	0.9251 ± 0.0013	0.9244 ± 0.0012

Table 6.4.1-6 Reactivity with Design Basis PWR Fuel vs. Basket Moderator Density, Accident Conditions

Moderator Density	3.5% Enrichment	3.7% Enrichment
Dry Exterior, Vary Internal Density		
0.0000	0.1554 ± 0.0004	0.1637 ± 0.0004
0.0010	0.1561 ± 0.0004	0.1632 ± 0.0003
0.0100	0.1649 ± 0.0004	0.1737 ± 0.0004
0.0250	0.1808 ± 0.0004	0.1883 ± 0.0005
0.0500	0.2096 ± 0.0005	0.2159 ± 0.0005
0.0750	0.2390 ± 0.0006	0.2464 ± 0.0006
0.1000	0.2683 ± 0.0007	0.2767 ± 0.0007
0.2000	0.3928 ± 0.0009	0.3985 ± 0.0009
0.4000	0.5975 ± 0.0012	0.5995 ± 0.0012
0.6000	0.7462 ± 0.0012	0.7478 ± 0.0012
0.8000	0.8510 ± 0.0014	0.8535 ± 0.0014
0.9000	0.8936 ± 0.0012	0.8946 ± 0.0014
1.0000	0.9300 ± 0.0012	0.9296 ± 0.0014
Wet Interior, Vary External Density		
0.0000	0.9300 ± 0.0012	0.9296 ± 0.0014
0.0010	0.9283 ± 0.0014	0.9281 ± 0.0013
0.0100	0.9295 ± 0.0012	0.9303 ± 0.0013
0.0250	0.9304 ± 0.0014	0.9305 ± 0.0014
0.0500	0.9313 ± 0.0014	0.9330 ± 0.0013
0.0750	0.9291 ± 0.0013	0.9334 ± 0.0013
0.1000	0.9308 ± 0.0014	0.9326 ± 0.0013
0.2000	0.9303 ± 0.0013	0.9308 ± 0.0013
0.4000	0.9325 ± 0.0013	0.9319 ± 0.0013
0.6000	0.9310 ± 0.0013	0.9331 ± 0.0014
0.8000	0.9293 ± 0.0014	0.9317 ± 0.0013
0.9000	0.9303 ± 0.0013	0.9322 ± 0.0014
1.0000	0.9325 ± 0.0013	0.9320 ± 0.0013
Vary Interior and Exterior Density Simultaneously		
0.0000	0.1554 ± 0.0004	0.1637 ± 0.0004
0.0010	0.1566 ± 0.0004	0.1642 ± 0.0004
0.0100	0.1659 ± 0.0004	0.1740 ± 0.0004
0.0250	0.1826 ± 0.0004	0.1918 ± 0.0004
0.0500	0.2135 ± 0.0005	0.2220 ± 0.0006
0.0750	0.2450 ± 0.0006	0.2523 ± 0.0006
0.1000	0.2781 ± 0.0007	0.2840 ± 0.0006
0.2000	0.4035 ± 0.0010	0.4059 ± 0.0010
0.4000	0.6045 ± 0.0012	0.6071 ± 0.0012
0.6000	0.7518 ± 0.0012	0.7519 ± 0.0013
0.8000	0.8556 ± 0.0013	0.8572 ± 0.0013
0.9000	0.8988 ± 0.0013	0.8991 ± 0.0014
1.0000	0.9325 ± 0.0013	0.9335 ± 0.0013

Table 6.4.1-7 PWR Single Package 10 CFR 71.55(b)(3) Evaluation k_{eff} Summary for 3.5% Enrichment

Description	$k_{eff} \pm \sigma$	$k_{eff} + 2\sigma$
Single Cask / Inner Shell Reflected with H_2O	0.8372 ± 0.0013	0.8398
Single Cask / Inner Shell and Lead Reflected with H_2O	0.9165 ± 0.0013	0.9191
Single Cask / Inner Shell, Lead & Outer Shell Reflected with H_2O	0.9260 ± 0.0014	0.9288
Single Intact Cask Reflected with H_2O	0.9251 ± 0.0013	0.9277

Table 6.4.1-8 PWR Single Package 10 CFR 71.55(b)(3) Evaluation k_{eff} Summary for 3.7% Enrichment

Description	$k_{eff} \pm \sigma$	$k_{eff} + 2\sigma$
Single Cask / Inner Shell Reflected with H_2O	0.8363 ± 0.0014	0.8391
Single Cask / Inner Shell and Lead Reflected with H_2O	0.9184 ± 0.0014	0.9212
Single Cask / Inner Shell, Lead & Outer Shell Reflected with H_2O	0.9280 ± 0.0013	0.9306
Single Intact Cask Reflected with H_2O	0.9295 ± 0.0013	0.9321

6.4.2 BWR Fuel Assemblies

This section presents the criticality analyses for the NAC-LWT cask with the BWR assembly and basket configuration. Criticality analyses of the two assembly arrangement with the most limiting assembly type are performed to satisfy the criticality safety requirements of 10 CFR Parts 71.55 and 71.59 as well as IAEA Transportation Safety Standards (TS-R-1). In this analysis, the bounding BWR assembly type is determined, and an array of 20 NAC-LWT casks loaded with this design basis BWR assembly is studied for criticality under both normal and accident conditions. Spacing between the casks and moderator density in the cavity, neutron shield tank, and outside is varied to determine the maximum k_{eff}. The reactivity effects of mechanical and geometric perturbations on the assemblies and the basket are quantified. The analyses demonstrate that, including all calculational and mechanical uncertainties, the NAC-LWT remains subcritical under both normal and accident conditions for all BWR assemblies similar in construction to those described herein.

6.4.2.1 Design Basis BWR Fuel Assembly

The k_{eff} values for infinite arrays of BWR assemblies in the basket and cask are shown in Table 6.4.2-1. The arrays contain an infinite number of infinitely long, fully loaded BWR casks on a square pitch with surfaces touching. Conditions include water at 1 gm/cc between the fuel rods and in the basket holes surrounding the assemblies. The neutron shield and cask exterior do not contain water. In addition, the results are reported for wet and dry clad gap configurations. As seen in the table, the Exxon 9×9 assembly with two water rods and an 80 mil channel (Ex 9×9-2/80) is more reactive than the other assembly types. Thus, the Ex 9×9-2/80 assembly is the most limiting, i.e., bounding, BWR assembly.

6.4.2.2 BWR Fuel Perturbation Studies

The criticality evaluation of the NAC-LWT cask with the basket loaded with design basis BWR assemblies includes studying geometric tolerances and mechanical perturbations. The tolerances and perturbations are independently evaluated for the most reactive BWR assembly, i.e., the Ex 9×9-2/80. The following perturbations and tolerances are analyzed:

I. Mechanical Perturbation
A. Fuel movement in the basket

II. Geometric Tolerances
A. Basket opening size
B. Basket divider plate thickness

The geometric tolerances associated with the manufacture of the BWR basket are listed in Table 6.4.2-2. Mechanical perturbations, i.e., fuel movement within the basket, arise from the gap between the fuel and the basket tube. The most reactive configuration analysis that evaluates these effects is performed for an infinite array of casks loaded with the design basis Ex 9×9-2/80 assembly and accident conditions with water at 1 gm/cc modeled between the fuel rods, in the clad gap, and in the basket holes surrounding the assemblies. The neutron shield and cask exterior do not contain water.

The effect of these tolerances and perturbations on the reactivity of BWR assemblies in the BWR basket and NAC-LWT cask is shown in the results presented in Table 6.4.2-3. This table shows that the perturbations do not have a statistically significant, i.e. greater than 2σ, differential in k_{eff} than the nominal case. Thus, the most reactive configuration of BWR assemblies in the basket and cask is the nominal configuration with centered assemblies and nominal basket dimensions. This configuration with the Ex 9×9-2/80 assemblies is utilized in subsequent normal and accident condition moderator density variation analyses.

6.4.2.3 Normal Condition Moderator Density Evaluations

Table 6.4.2-4 presents the cask k_{eff} for the most reactive normal condition configuration as a function of moderator density inside and outside the cask. An array of 20 casks on a triangular pitch is modeled at three cask pitches: touching (99.7 cm), 2-foot surface-to-surface (160.7 cm), and ISO-container spacing (242.84 cm). Moderator density is varied from 1.0 gm/cc to 0.0 gm/cc and for normal conditions. In addition, it is assumed that the neutron shield is filled with water. The results show an increase in reactivity with increasing internal moderator density. This indicates that moderator density changes due to increasing temperature have a negative reactivity effect. Low density moderation inside or outside of the cask does not produce abrupt increases in reactivity in comparison to other density values. The calculations show that cask pitch has no significant impact on the reactivity of the cask array under normal conditions and that k_{eff} does not vary significantly when varying external moderator with constant full density internal moderator. Because external moderator does not affect reactivity within statistical limits, the most reactive case is chosen with both internal and external moderator density at 1.0 gm/cc. The k_{eff} in this case is 0.8447 ± 0.0014. The k_{eff} for the normal condition cask array with a dry cavity is very subcritical, i.e., ~ 0.15 and is insensitive to external moderator density variations.

6.4.2.4 Accident Condition Moderator Density Evaluations

Table 6.4.2-5 shows the cask k_{eff} for the most reactive accident condition configuration as a function of moderator density variation in the cavity, neutron shield tank and outside the cask.

Again, three cask spacings are presented: touching (99.7 cm), 2-foot surface-to-surface (160.7 cm), and the ISO-container spacing (242.84 cm). Moderator density is varied from 1.0 gm/cc to 0.0 gm/cc. For accident conditions it is assumed that the neutron shield tank is punctured and that the moderator density in the tank is the same as the exterior moderator density. Again, the results show an increase in reactivity with increasing internal moderator density. Low density moderation inside or outside of the cask does not produce abrupt increases in reactivity in comparison to other density values. The calculations show that cask pitch does affect reactivity when the neutron shield is empty and that the k_{eff} for the accident condition cask array with a dry cavity, neutron shield and exterior is very subcritical, i.e., ~ 0.24. The most reactive case occurs with casks touching and the moderator density at 1.0 gm/cc in the cavity and at 0.0 gm/cc in the neutron shield tank as well as exterior. The k_{eff} in this case is 0.9232 ± 0.0013. Finally, this configuration has been modified to remove the channel. The resulting k_{eff} is 0.9292 ± 0.0012.

6.4.2.5 Single Package Evaluations

To satisfy 10 CFR 71.55(b)(3), an analysis of the reflection of the containment system (inner shell) by water is performed on a single wet cask. Successive replacement of the cask radial shields with water reflection is also evaluated. The reactivity of the system drops as each radial shield of the cask is replaced by water, from a k_{eff} = 0.8413 ± 0.0014 (k_s = 0.8580) for the full cask surrounded by water, to a k_{eff} = 0.7411 ± 0.0014 (k_s = 0.7578) for the inner shell surrounded by water. The results of this evaluation can be seen in Table 6.4.2-6.

6.4.2.6 Conclusion

A calculation of k_s under normal and accident conditions can now be made based on the previous results and based on the KENO-Va validation statistics presented in Section 6.5.1 for low enriched uranium fuel. The value k_s is calculated based on the KENO-Va Monte Carlo average plus any biases and uncertainties associated with the methods and the modeling, i.e.:

$$k_s = k_{eff} + 2\sigma_{mc} + \Delta k_{Bias} + \Delta k_{BU}$$

In the validation presented in Section 6.5.1, a bias of 0.0052 (allowance for under prediction of k_{eff}) and a 95/95 method uncertainty of ± 0.0087 was determined. With this bias and uncertainty, the equation for k_s becomes:

$$k_s = k_{eff} + 2\sigma_{mc} + 0.0052 + 0.0087$$

Thus, k_s = 0.8614 under normal conditions for an array of 20 NAC-LWT casks fully loaded with BWR design basis fuel and a flooded basket cavity and exterior. This is below the 0.95 regulatory limit. Under accident conditions, k_s = 0.9455 for an array of 20 NAC-LWT casks fully loaded with BWR design basis fuel and with a flooded basket cavity and dry neutron shield and exterior.

For both normal and accident conditions, the calculated k_{eff} values, after correction for biases and uncertainties, are below the 0.95 limit. The analyses demonstrate that, including all calculational and mechanical uncertainties, an array of 20 NAC-LWT casks with BWR fuel remains subcritical under normal and accident conditions.

Table 6.4.2-1 BWR Most Reactive Assembly Analysis Results

Assembly Type	Number Rods		Channel Thickness	Dry Gap		Wet Gap	
	Fuel	Water		k_{eff}	σ	k_{eff}	σ
Exxon 9×9	79	2	80 Mil	0.9687	0.0013	0.9766	0.0013
Exxon 9×9	79	2	2mm	0.9711	0.0012	0.9728	0.0013
Exxon 9×9	74	2	2mm	0.9686	0.0013	0.9718	0.0012
GE 8×8	62	2	80 Mil	0.9651	0.0014	0.9711	0.0013
GE 8×8	62	2	100 Mil	0.9643	0.0013	0.9696	0.0013
GE 9×9	74	2	80 Mil	0.9636	0.0013	0.9686	0.0012
GE 7×7	49	0	80 Mil	0.9601	0.0012	0.9682	0.0013
Exxon 8×8 -2	62	2	80 Mil	0.9647	0.0013	0.9672	0.0013
GE 8×8	60	4	2mm	0.9613	0.0013	0.9669	0.0014
GE 9×9	79	2	2mm	0.9609	0.0014	0.9666	0.0012
Exxon 8×8 -1	63	1	80 Mil	0.9585	0.0012	0.9661	0.0013
GE 9×9	79	2	80 Mil	0.9604	0.0014	0.9657	0.0013
Exxon 7×7	49	0	80 Mil	0.9585	0.0013	0.9645	0.0012
GE 8×8	63	1	120 Mil	0.9557	0.0012	0.9641	0.0012
GE 8×8	63	1	100 Mil	0.9597	0.0013	0.9632	0.0012
GE 8×8	63	1	80 Mil	0.9616	0.0013	0.9631	0.0012

Table 6.4.2-2 BWR Basket Tolerances

Component	Dimension / Tolerance
Basket Diameter	13.25 in
Basket Opening	5.75 ± 0.02 in
1/8” Plate Thickness	0.125 / -0.0045 in

Table 6.4.2-3 BWR Fuel Assembly Geometric Tolerances and Mechanical Perturbations Results

Configuration	k_{eff}	σ
Nominal Configuration	0.9746	0.0013
Assemblies Moved Out	0.9761	0.0013
Assemblies Moved in Close	0.9654	0.0013
Assemblies on Opposite Sides	0.9711	0.0013
Assemblies on Opposite Corners	0.9737	0.0012
Max. Basket Opening	0.9731	0.0013
Min. Basket Opening	0.9754	0.0013
Min. Basket Plate Thickness	0.9739	0.0013

Table 6.4.2-4 Reactivity with BWR Fuel vs. Basket Moderator Density, Normal Conditions, Array of 20 Casks

Moderator Density	Casks Touching	2 Foot Surf.-to-Surf.	ISO Container 242.84 cm Pitch
Dry Exterior, Vary Internal Density			
0.0000	0.1428 ± 0.0003	0.1425 ± 0.0003	0.1421 ± 0.0003
0.0010	0.1433 ± 0.0004	0.1435 ± 0.0003	0.1432 ± 0.0003
0.0100	0.1508 ± 0.0003	0.1506 ± 0.0004	0.1495 ± 0.0004
0.0250	0.1630 ± 0.0004	0.1632 ± 0.0004	0.1628 ± 0.0004
0.0500	0.1861 ± 0.0005	0.1857 ± 0.0005	0.1854 ± 0.0005
0.0750	0.2096 ± 0.0005	0.2107 ± 0.0005	0.2104 ± 0.0005
0.1000	0.2358 ± 0.0006	0.2359 ± 0.0006	0.2357 ± 0.0006
0.2000	0.3398 ± 0.0008	0.3413 ± 0.0008	0.3408 ± 0.0008
0.4000	0.5272 ± 0.0011	0.5248 ± 0.0011	0.5265 ± 0.0012
0.6000	0.6673 ± 0.0012	0.6673 ± 0.0013	0.6652 ± 0.0013
0.8000	0.7666 ± 0.0013	0.7685 ± 0.0012	0.7684 ± 0.0013
0.9000	0.8107 ± 0.0013	0.8095 ± 0.0013	0.8113 ± 0.0013
1.0000	0.8464 ± 0.0013	0.8412 ± 0.0012	0.8451 ± 0.0014
Wet Interior, Vary External Density			
0.0000	0.8449 ± 0.0013	0.8442 ± 0.0013	0.8441 ± 0.0013
0.0010	0.8441 ± 0.0013	0.8435 ± 0.0014	0.8438 ± 0.0013
0.0100	0.8423 ± 0.0014	0.8437 ± 0.0013	0.8437 ± 0.0013
0.0250	0.8447 ± 0.0014	0.8434 ± 0.0013	0.8429 ± 0.0013
0.0500	0.8438 ± 0.0014	0.8434 ± 0.0013	0.8436 ± 0.0013
0.0750	0.8446 ± 0.0014	0.8445 ± 0.0015	0.8439 ± 0.0014
0.1000	0.8441 ± 0.0014	0.8431 ± 0.0013	0.8429 ± 0.0012
0.2000	0.8437 ± 0.0014	0.8474 ± 0.0013	0.8434 ± 0.0014
0.4000	0.8445 ± 0.0014	0.8435 ± 0.0013	0.8444 ± 0.0014
0.6000	0.8444 ± 0.0013	0.8427 ± 0.0013	0.8437 ± 0.0013
0.8000	0.8457 ± 0.0013	0.8463 ± 0.0013	0.8439 ± 0.0014
0.9000	0.8429 ± 0.0013	0.8439 ± 0.0013	0.8447 ± 0.0012
1.0000	0.8447 ± 0.0014	0.8450 ± 0.0013	0.8447 ± 0.0012
Vary Interior and Exterior Density Simultaneously			
0.0000	0.1428 ± 0.0003	0.1425 ± 0.0003	0.1425 ± 0.0003
0.0010	0.1434 ± 0.0003	0.1431 ± 0.0003	0.1437 ± 0.0003
0.0100	0.1505 ± 0.0004	0.1502 ± 0.0004	0.1501 ± 0.0004
0.0250	0.1625 ± 0.0004	0.1631 ± 0.0004	0.1630 ± 0.0004
0.0500	0.1860 ± 0.0004	0.1856 ± 0.0005	0.1862 ± 0.0004
0.0750	0.2107 ± 0.0005	0.2100 ± 0.0005	0.2109 ± 0.0006
0.1000	0.2351 ± 0.0006	0.2354 ± 0.0006	0.2362 ± 0.0006
0.2000	0.3403 ± 0.0008	0.3402 ± 0.0008	0.3418 ± 0.0009
0.4000	0.5280 ± 0.0011	0.5271 ± 0.0010	0.5264 ± 0.0011
0.6000	0.6658 ± 0.0013	0.6641 ± 0.0013	0.6646 ± 0.0012
0.8000	0.7696 ± 0.0013	0.7681 ± 0.0014	0.7692 ± 0.0013
0.9000	0.8093 ± 0.0013	0.8090 ± 0.0013	0.8087 ± 0.0013
1.0000	0.8446 ± 0.0013	0.8433 ± 0.0014	0.8446 ± 0.0015

Table 6.4.2-5 Reactivity with BWR Fuel vs. Basket Moderator Density, Accident Conditions, Array of 20 Casks

Moderator Specific Gravity	Casks Touching	2 Foot Surface-to-Surface	ISO 242.84 cm Pitch
Dry Exterior, Vary Internal Density			
0.0000	0.2355 ± 0.0004	0.1849 ± 0.0004	0.1665 ± 0.0004
0.0010	0.2371 ± 0.0004	0.1854 ± 0.0004	0.1681 ± 0.0004
0.0100	0.2479 ± 0.0005	0.1940 ± 0.0004	0.1768 ± 0.0004
0.0250	0.2659 ± 0.0005	0.2105 ± 0.0005	0.1915 ± 0.0005
0.0500	0.2962 ± 0.0006	0.2387 ± 0.0006	0.2166 ± 0.0005
0.0750	0.3271 ± 0.0007	0.2677 ± 0.0006	0.2444 ± 0.0006
0.1000	0.3603 ± 0.0007	0.2970 ± 0.0006	0.2718 ± 0.0007
0.2000	0.4750 ± 0.0009	0.4096 ± 0.0009	0.3814 ± 0.0009
0.4000	0.6534 ± 0.0011	0.5911 ± 0.0011	0.5638 ± 0.0011
0.6000	0.7791 ± 0.0012	0.7212 ± 0.0013	0.6986 ± 0.0012
0.8000	0.8606 ± 0.0013	0.8151 ± 0.0013	0.7950 ± 0.0013
0.9000	0.8970 ± 0.0013	0.8519 ± 0.0014	0.8337 ± 0.0013
1.0000	0.9232 ± 0.0013	0.8822 ± 0.0014	0.8668 ± 0.0013
Wet Interior, Vary External Density			
0.0000	0.9200 ± 0.0012	0.8812 ± 0.0012	0.8678 ± 0.0013
0.0010	0.9220 ± 0.0012	0.8816 ± 0.0014	0.8622 ± 0.0014
0.0100	0.9060 ± 0.0013	0.8690 ± 0.0014	0.8564 ± 0.0014
0.0250	0.8869 ± 0.0013	0.8602 ± 0.0014	0.8491 ± 0.0014
0.0500	0.8719 ± 0.0014	0.8522 ± 0.0014	0.8511 ± 0.0013
0.0750	0.8653 ± 0.0013	0.8498 ± 0.0013	0.8509 ± 0.0012
0.1000	0.8604 ± 0.0014	0.8520 ± 0.0013	0.8506 ± 0.0014
0.2000	0.8513 ± 0.0013	0.8486 ± 0.0014	0.8506 ± 0.0012
0.4000	0.8501 ± 0.0013	0.8507 ± 0.0013	0.8501 ± 0.0013
0.6000	0.8512 ± 0.0013	0.8498 ± 0.0013	0.8512 ± 0.0014
0.8000	0.8494 ± 0.0013	0.8504 ± 0.0014	0.8501 ± 0.0013
0.9000	0.8498 ± 0.0013	0.8486 ± 0.0013	0.8515 ± 0.0013
1.0000	0.8528 ± 0.0014	0.8513 ± 0.0013	0.8500 ± 0.0013
Vary Interior and Exterior Density Simultaneously			
0.0000	0.2364 ± 0.0005	0.1841 ± 0.0004	0.1672 ± 0.0004
0.0010	0.2357 ± 0.0005	0.1855 ± 0.0004	0.1671 ± 0.0004
0.0100	0.2318 ± 0.0005	0.1856 ± 0.0004	0.1709 ± 0.0004
0.0250	0.2279 ± 0.0005	0.1895 ± 0.0004	0.1777 ± 0.0004
0.0500	0.2345 ± 0.0006	0.2051 ± 0.0005	0.1999 ± 0.0005
0.0750	0.2495 ± 0.0006	0.2284 ± 0.0006	0.2254 ± 0.0006
0.1000	0.2688 ± 0.0007	0.2541 ± 0.0007	0.2530 ± 0.0006
0.2000	0.3641 ± 0.0009	0.3563 ± 0.0008	0.3594 ± 0.0008
0.4000	0.5410 ± 0.0011	0.5400 ± 0.0011	0.5417 ± 0.0011
0.6000	0.6790 ± 0.0013	0.6759 ± 0.0013	0.6763 ± 0.0012
0.8000	0.7771 ± 0.0013	0.7756 ± 0.0013	0.7767 ± 0.0013
0.9000	0.8157 ± 0.0014	0.8152 ± 0.0013	0.8199 ± 0.0014
1.0000	0.8519 ± 0.0013	0.8495 ± 0.0013	0.8505 ± 0.0013

Table 6.4.2-6 BWR Single Package 10 CFR 71.55(b)(3) Evaluation k_{eff} Summary

Description	$k_{eff} \pm \sigma$	$k_{eff} + 2\sigma$
Single Cask / Inner Shell Reflected with H_2O	0.7411 ± 0.0014	0.7439
Single Cask / Inner Shell and Lead Reflected with H_2O	0.8331 ± 0.0013	0.8357
Single Cask / Inner Shell, Lead & Outer Shell Reflected with H_2O	0.8417 ± 0.0014	0.8445
Single Intact Cask Reflected with H_2O	0.8413 ± 0.0014	0.8441

6.4.3 MTR Fuel Elements

This section presents the criticality analyses for the NAC-LWT with the MTR fuel element and basket configuration. Criticality analyses of the seven element arrangement with the most limiting assembly type are performed with the SCALE 4.3 CSAS sequence to satisfy the criticality safety requirements of 10 CFR Parts 71.55 and 71.59 as well as IAEA Transportation Safety Standards (TS-R-1). In this analysis, the bounding MTR fuel element type is determined, and an infinite array of NAC-LWT casks loaded with this design basis MTR fuel is studied for criticality under normal and accident conditions. Spacing between the casks and moderator density in the cavity, neutron shield tank and outside is varied to determine the maximum k_{eff}. The reactivity effects of partial basket loading, loss of fuel integrity and mechanical and geometric perturbations of the fuel elements and basket plate material are quantified. The analyses demonstrate that, including all calculational and mechanical uncertainties, the NAC-LWT remains subcritical under normal and accident conditions for all MTR fuel elements that are bounded in enrichment and fissile uranium loading by the design basis assembly.

6.4.3.1 Design Basis MTR Fuel Element

The fuel/basket unit cell k_{eff} values for the HEU and LEU MTR element types are shown in Table 6.4.3-1. The results show that the HEU ORR #2, HEU HFBR and the LEU BSR fuel elements are significantly more reactive than the other element types. In addition, these three element types have the highest fissile loadings, as listed in Table 6.2.3-1 and Table 6.2.3-2. Furthermore, a study of the reactivity of the highest fissile uranium loading HEU (HFBR) and LEU (BSR) elements as a function of the spacing between fuel plates is performed, as shown in Table 6.4.3-2. As shown, the HFBR fuel element is the most reactive when the plates are free to expand to their maximum possible pitch with the basket opening, as is postulated to occur under accident conditions. Also, it is shown that the HFBR element is most reactive with its full load of 18 fuel plates. The greater spacing allowed by fewer fuel plates is shown to be less reactive. Because of this and the minor difference between the other fuel types for intact elements, the HFBR element is chosen as the design basis for further analyses.

6.4.3.2 MTR Fuel Perturbation Studies

The criticality evaluation of the NAC-LWT cask with the baskets fully loaded with design basis HFBR MTR fuel elements includes studying geometric tolerances, mechanical perturbations, moderator (H_2O) density variation and spacing variation between casks. Moderator density is varied from 1.0 gm/cc to 0.0 gm/cc. Cask center-to-center spacing is varied from touching (99.7 cm cask pitch) to ISO-container array spacing (242.84 cm cask pitch). Under normal conditions it is assumed that the neutron shield is filled with water and the fuel element plate

spacing is intact. Under accident conditions it is assumed that the fuel element plate spacing is at its most reactive within each basket opening, the neutron shield tank is punctured, and that the moderator density in the tank is the same as the exterior moderator density.

As shown in Table 6.4.3-2, k_{eff} varies significantly with plate spacing. This is because the intact HFBR fuel element is undermoderated. The largest possible pitch of the HFBR fuel plates within the MTR basket, 0.4572 cm, yields the greatest k_{eff}. Hypothetical accident condition analyses utilize fuel plates with this pitch spacing.

Geometric tolerances and mechanical perturbations are independently evaluated for intact HFBR elements during normal conditions, and optimally spaced HFBR fuel plates during accident conditions. The following perturbations and tolerances are analyzed:

I. Mechanical Perturbation
A. Fuel movement in the basket

II. Geometric Tolerances
A. Basket opening size
B. Basket steel plate thickness

The geometric tolerances associated with the manufacture of the MTR basket are listed in Table 6.4.3-3. Mechanical perturbations, i.e., fuel movement within the basket, arise from the gap between the MTR fuel and the basket tube.

The effect of these tolerances and perturbations on the reactivity of intact elements in the MTR basket and NAC-LWT cask is shown in the results presented in Table 6.4.3-4. This table shows there are three perturbations that have a higher k_{eff} than the nominal case. Two of these cases, "elements moved in close" and "elements moved in closest," are mechanical perturbations. These perturbations correspond to moving the outer elements toward the center element first on one axis and then on two axes, i.e., the top and bottom two elements are first moved down and up, respectively and then moved into the corners nearest to the center of the basket. The complementary configurations are labeled "elements moved out" and "elements moved out farthest," i.e., the top and bottom two elements are first moved up and down, respectively, and then moved into the corners farthest from the center of the basket. Since only one of these mechanical perturbations can occur at a time, the configuration with the greatest reactivity, "elements moved in close" is selected as a significant perturbation. The third case, "basket plate minimum thickness," is a geometric perturbation and is also selected as a significant perturbation. The most reactive configuration of intact elements includes the impact of fuel movement, with the elements moved in close, and the impact of geometric tolerances, by using

the minimum basket plate thickness. This configuration is utilized in the subsequent normal condition moderator density variation analyses.

The results of the mechanical and geometric perturbations for the optimally spaced fuel plates are shown in Table 6.4.3-5. This table shows that there are two perturbations that have a higher k_{eff} than the nominal case. The "minimum basket plate thickness" configuration is a geometric perturbation and the "plates moved in" configuration is a mechanical perturbation. Because the expanded plates cannot move in the vertical direction, the "plates moved in" configuration corresponds to moving the plate bundles on the horizontal axis towards the basket centerline. Conversely, the less reactive "plates moved out" configuration corresponds to moving the plate bundles away from the centerline. The most reactive configuration of optimally spaced fuel plates includes the impact of fuel movement, with the plates moved in, and the impact of geometric tolerances, by using the minimum basket plate thickness. This configuration is utilized in the subsequent hypothetical accident condition moderator density variation analyses. It should be noted that the maximum basket opening perturbation results do not exceed the nominal case by a statistically significant margin and is, therefore, not considered a part of the most reactive configuration.

6.4.3.3 MTR Fuel Moderator Density Criticality Evaluations for Normal Conditions

Table 6.4.3-6 presents the cask k_{eff} for the most reactive normal condition configuration as a function of moderator density inside and outside the cask. An infinite array of casks is modeled at three cask pitches: touching (99.7 cm), 2-foot surface-to-surface (160.7 cm), and ISO-container spacing (242.84 cm). The results show a monotonic increase in reactivity with increasing internal moderator density. This indicates that moderator density changes due to increasing temperature have a negative reactivity effect. Low density moderation inside or outside of the cask does not produce abrupt increases in reactivity in comparison to other density values. The calculations show that cask pitch has no significant impact on the reactivity of the cask array under normal conditions and that k_{eff} does not vary significantly when varying external moderator with constant full density internal moderator. Because external moderator does not affect reactivity within statistical limits, the most reactive case is chosen with both internal and external moderator density at 1.0 gm/cc. The k_{eff} in this case is 0.8107 ± 0.0024. The k_{eff} for the normal condition cask array with a dry cavity is very subcritical, i.e., ~ 0.07 and is insensitive to external moderator density variations.

The effect of partial basket loading on cask k_{eff} under normal conditions is investigated to determine if increased moderation might offset the loss of fuel loading. In this model, the central basket location is empty and filled with water instead of fuel. Also, the outer fuel elements are moved closer to the center. Moderator density is varied from 1.0 gm/cc to 0.01 gm/cc. The

results are shown in the last column of Table 6.4.3-6. These results show the same basic increase in reactivity with increasing moderator density, and a level of k_{eff} consistently below that calculated for the fully loaded basket cases.

6.4.3.4 MTR Fuel Moderator Density Criticality Evaluations for Accident Conditions

Table 6.4.3-7 shows the cask k_{eff} for the most reactive accident condition configuration as a function of moderator density variation in the cavity, neutron shield tank and outside the cask. Again, three cask spacings are presented: touching (99.7 cm), 2-foot surface-to-surface (160.7 cm), and the ISO-container spacing (242.84 cm). Again, the results show a monotonic increase in reactivity with increasing internal moderator density. Low density moderation inside or outside of the cask does not produce abrupt increases in reactivity in comparison to other density values. The calculations show that cask pitch and exterior moderator density variation does significantly affect reactivity when the neutron shield is empty and that the k_{eff} for the accident condition cask array with a dry cavity, neutron shield and exterior is very subcritical, i.e., ~ 0.31. The most reactive case occurs with casks touching and the moderator density at 1.0 gm/cc in the cavity and at 0.0 gm/cc in the neutron shield tank as well as outside. The k_{eff} in this case is 0.9005 ± 0.0021. To address the potential for slightly higher enrichments and fissile uranium loadings, this most reactive case has been analyzed with 94 wt % ^{235}U enrichment and 355 grams ^{235}U per element. The resulting k_{eff} is 0.9021 ± 0.0020.

6.4.3.5 Element Rotation

No controls are placed on the orientation, i.e., plate direction, of MTR elements within a basket opening. Thus, different orientations of MTR elements in the fuel basket are possible. To model this situation, unit cells from the HFBR unit cell analysis are stacked in a 3×3 array. The elements are arranged in several combinations with vacuum boundary conditions. It can be seen in Table 6.4.3-8 that the differences in reactivity of the different orientations are not statistically significant. Therefore, using a single element orientation in the analysis of MTR fuel is sufficient to model all permutations of element orientation.

6.4.3.6 Center Fuel Element Perturbation

The most reactive configurations of intact elements and expanded plates was developed with a nominally positioned, i.e., centered, central element or plate. To verify that these are the most reactive configurations, perturbations of the central component's position have been performed. The results are contained in Table 6.4.3-9. As seen in the table, the reactivity of the perturbations under normal conditions (intact fuel elements) do not vary by a statistically significant margin. Under accident conditions (optimum spaced plates), moving the central

element decreases reactivity. Therefore, it is reasonable to utilize a centered central fuel element for the criticality evaluations.

6.4.3.7 Mixing HEU and LEU MTR Fuel

LEU and HEU fuel elements may be mixed within an MTR basket module. To model this situation, the unit cell models for HFBR and RSG-GAS fuel elements are stacked in a 3×3 array in a KENO-Va model. The RSG-GAS fuel element is selected because, as shown in Table 6.4.3-1.

Table 6.4.3-1 has a relatively high reactivity, but the reactivity is sufficiently lower than the HEU to allow the impact of mixing HEU and LEU elements within the model to be more readily apparent. The fuels are arranged in several combinations within the array with vacuum boundary conditions. It can be seen in Table 6.4.3-10 that the reactivities of the different combinations of the HEU and LEU fuel elements within the model show a trend for lower reactivity with increasing number of LEU fuel elements within the model. Therefore, the mixing of HEU and LEU MTR fuels is bounded by the analysis of HFBR MTR fuel.

6.4.3.8 Uranium Weight Fraction in Fuel Meat

MTR fuel "meat" material is composed of a mixture of the uranium metal, or uranium oxide/silicide, with an aluminum alloying material. The design basis fuel parameters listed in Table 6.2.3-1 and Table 6.2.3-2 include the weight fraction of uranium in the fuel meat. This fraction may vary from the nominal values presented in the tables due to the manufacturing process for the fuel material. Based on the limiting maximum uranium quantities specified for the fuel and the fuel meat volume, the quantity and density of the aluminum in the meat may be calculated. The aluminum densities in the sheet are typically greater than 90% of aluminum's natural density of 2.7 g/cm^3. Since the MTR fuel plates are manufactured from a combination of U-metal, U_3O_8, or U_3Si_2 and aluminum, some variations in the nominal uranium weight fraction reported in Table 6.2.3-1 and Table 6.2.3-2 are expected. A sensitivity study is, therefore, performed on the uranium weight fraction of five types of MTR fuel elements chosen for their bounding configuration (i.e., HEU thin, medium, and thick fuel meat thickness, and LEU thin and thick fuel meat thickness). Because each MTR fuel element type contains effective aluminum densities within 10% of theoretical, the evaluations concentrate on the reactivity effect of reducing the aluminum weight percent while utilizing a fixed maximum uranium mass and enrichment for each fuel element type. This serves to vary the uranium weight fraction in the fuel meat, while maintaining the uranium mass in the fuel element at its fixed maximum value. For a given uranium mass and fuel meat volume, it is expected that reducing the mass of aluminum in the fuel meat volume would serve to increase reactivity by reducing potential neutron absorbers from the system.

The perturbation study of the aluminum weight fraction on reactivity was performed with the infinite lattice cell model used to establish the bounding fuel types as described in Section 6.4.3.1. As shown in Table 6.4.3-12, the reactivity of the system is relatively unaffected by an decrease in the uranium weight percent. For the bounding reactivity MTR fuel element (HFBR), a 50% reduction in aluminum density resulted in an increase in reactivity of less than 0.005 Δk. This compares to a reactivity margin of 0.025 below 0.95 for the highest reactivity MTR fuel element as reported in Section 6.4.3.10. All cases studied resulted in reactivity increases of less than 0.02 Δk, as reported in Table 6.4.3-12. The maximum reactivity increases occurred for the PRR and THOR MTR fuel element designs, which considered aluminum weight fraction reductions of as much as one-third that of the nominal fuel meat. Both the PRR and THOR fuel element designs have reactivities significantly below that of the design basis HFBR fuel element and do not exceed the reactivity of the HFBR element even at the low aluminum densities. Therefore it is concluded that for a fixed uranium mass in the fuel meat, the aluminum weight fraction does not have a significant effect on the bounding reactivity of the MTR fuel elements in the NAC-LWT.

6.4.3.9 Single Package Criticality Evaluation

To satisfy 10 CFR 71.55(b)(3), an analysis of the reflection of the containment system (inner shell) by water is performed on a single wet cask. Successive replacement of the cask radial shields with water reflection is also evaluated (Table 6.4.3-11). The reactivity of the system drops as each radial shield of the cask is replaced by water, from a $k_{eff} = 0.8094 \pm 0.0021$ ($k_s = 0.8317$) for the full cask surrounded by water, to a $k_{eff} = 0.7682 \pm 0.0021$ ($k_s = 0.7905$) for the inner shell surrounded by water.

6.4.3.10 MTR Loose Fuel Plate Evaluation

Loose MTR fuel plates may be shipped inside the NAC-LWT using an MTR plate canister. The canister consists of four rectangular aluminum side plates, and top and bottom lids, forming a 2.82 inch by 2.95 inch opening. Two parallel side plates are 0.25 inch (0.635 cm) thick with the remaining two side plates at 0.125-inch (0.3175 cm) thickness. The loose plates are inserted into the canister, which in turn is placed into one of the seven MTR basket openings. The number of fuel plates in each canister is restricted to those of an intact MTR fuel element. By restricting the number of plates to those of an intact fuel element, the criticality evaluation considering optimum pitch of the expanded MTR element, shown in Section 6.4.3.1 and Table 6.4.3-2, is applicable.

While intact, the MTR plate canister restricts the loose fuel plate pitch to a significantly smaller envelope than the basket opening (3.44 inch) employed in the evaluation shown in Table 6.4.3-2.

Since the evaluation results in Table 6.4.3-2 indicate an increase in reactivity up to the maximum fuel plate pitch possible in the basket opening, the reactivity of the MTR plate canister configuration will be significantly lower than that of the uncanistered payload.

Also considered for criticality analysis is a loose plate canister configuration in which the canister plate separates. This configuration is bounded by the accident evaluation of MTR fuel plates where the two MTR element side plates separate from the fuel plates. The accident evaluation of MTR plates is the highest reactivity case for MTR fuel and models the maximum fuel plate pitch obtainable in an MTR basket cell. The additional two canister plates running parallel to the fuel plates restrict the maximum plate pitch possible in the canister opening. The reduced pitch reduces the reactivity of the system.

6.4.3.11 Code Bias and Code Bias Uncertainty Adjustments

A calculation of k_s under normal and accident conditions can now be made based on the previous results and based on the SCALE 4.3 CSAS sequence KENO-Va validation statistics presented in Section 6.5.2 for high enriched uranium fuel. The value k_s is calculated based on the KENO-Va Monte Carlo average plus any biases and uncertainties associated with the methods and the modeling, i.e.:

$$k_s = k_{eff} + \Delta k_{\text{Bias}} + \Delta k_{\text{BU}} + 2\sigma_{\text{MC}} \leq 0.95$$

In the validation presented in Section 6.5.2, a bias of -0.0044 (allowance for overprediction of k_{eff}) and a 95/95 method uncertainty of ± 0.0181 was determined. For added conservatism, the -0.0044 bias correction is neglected. With these biases and uncertainties, the equation for k_s becomes:

$$k_s = k_{eff} + 0.0181 + 2\sigma_{\text{MC}}$$

Thus, $k_s = 0.8336$ under normal conditions for an infinite array of NAC-LWT casks with a full load of HFBR design basis fuel elements, and a flooded basket cavity and exterior. Both are below the 0.95 regulatory limit. Under accident conditions, $k_s = 0.9242$ for an infinite array of NAC-LWT casks with a full load of 94 wt % / 355 g ^{235}U per element HFBR fuel with plates expanded to their maximum pitch within the basket, and with a flooded basket cavity and dry neutron shield and exterior.

For both normal and accident conditions, the calculated k_{eff} values, after correction for biases and uncertainties, are well below the 0.95 limit. The analyses demonstrate that, including all calculational and mechanical uncertainties, an infinite array of NAC-LWT casks with MTR fuel remains subcritical under normal and accident conditions.

6.4.3.12 Bounding Physical Characteristics for MTR Fuel Elements

The purpose of this section is to document an extended licensing envelope for the NAC-LWT cask. This is accomplished by constructing and evaluating an MTR element with a set of physical characteristics bounding the fuel inventory previously documented, with margin for manufacturing tolerance and expected variations in nominal element characteristics. Since this composite fuel element is expected to significantly increase the maximum reactivity of the NAC-LWT MTR configuration, a finite cask model is constructed. The existing evaluations employed an infinite element length model, which by its nature, contained a significant conservative margin that will be required to maximize the MTR payload fissile material quantities.

To establish bounding fuel element criteria, the analysis trends in Sections 6.4.3.1 through 6.4.3.10 are reviewed. Where necessary, additional analysis is performed to establish reactivity trends on the physical parameters of the elements.

Sections 6.4.3.1 through 6.4.3.4 demonstrate that MTR elements in their intact configuration are undermoderated, and that increased reactivity is achieved by maximizing plate pitch and total fissile material mass. The evaluations also showed that the maximum reactivity basket configuration for the loose fuel plates is obtained by modeling minimum basket plate thickness and fuel plates moved toward the basket center. Fuel element rotation and shifting of the center fuel element in the basket opening have been shown not to impact reactivity of the system significantly. Section 6.4.8 documents the impact of varying the uranium weight fraction at a fixed fissile mass. As the uranium weight fraction increases and the aluminum mass decreases, the system reactivity increases.

To support the addition of MEU fuel elements to the allowable content description, an infinite array of MEU elements was evaluated in the infinite basket cell model. The results of this evaluation, shown in Table 6.4.3-13, show that increasing the ^{235}U enrichment at a fixed fissile mass raises system reactivity. Table 6.4.3-14 demonstrates that the MEU element evaluated (k_{eff} = 0.8312) is lower in reactivity than the HFBR design basis element in the intact configuration (k_{eff} = 0.8471). When evaluating the MEU element in the axially infinite basket model, containing 7 elements inside the radial shields, a maximum reactivity was obtained by maximizing plate pitch (see Table 6.4.3-14). This is consistent with the HEU and LEU evaluations shown in previous sections. The MEU evaluation also demonstrated that moving fuel plates against the basket plates (Configuration B) for a maximum pitch increases reactivity over the configuration with fuel plates separated from the basket plates by a water gap.

Reactivity trends as a function of plate pitch, fuel meat thickness, and fuel plate thickness were obtained from an infinite basket cell model containing McMaster HEU MTR elements. Physical characteristics of the McMaster HEU fuels are provided in Table 6.4.3-15. The McMaster fuel

evaluation results shown in Table 6.4.4-16 and Table 6.4.3-17 document that maximizing plate pitch, decreasing plate thickness, and increasing plate fuel meat thickness produce increases in reactivity. The evaluation also showed increases in reactivity as the result of maximizing the active fuel width.

Based on the above listed trends, the following fuel plate characteristics result in a maximum reactivity configuration.

1. Minimum clad thickness (implies maximum fuel thickness for a given plate thickness)
2. Minimum plate thickness
3. Maximum active fuel width
4. Maximum fuel mass
5. Maximum enrichment (reduces parasitic absorption in ^{238}U)
6. Minimum side plate width/length (increases moderator volume in basket cell)
7. Maximum fissile material density (at a fixed geometry, increasing fissile material mass will increase reactivity)
8. Reducing the number of fuel plates at a fixed fissile material mass per plate decreases reactivity (i.e., the increase in reactivity produced by raising the H/U ratio is offset by the decrease in fissile mass)

No trend to active fuel height is available from previous evaluations. Larger active fuel heights increase reactivity due to improved fuel to moderator ratios, but also lead to separating of the fissile material masses in the finite height basket models. The impact of active fuel height variations is, therefore, evaluated later in this section. To apply the above characteristics to the MTR elements listed in Section 6.2, a set of hybrid bounding element definitions is as shown in Table 6.4.3-18. Limits are established for HEU and LEU elements. MEU element characteristics are enveloped by the HEU fuel characteristics. Various modifications of the listed parameters are addressed in later sections of this evaluation. Modifications to the parameters are made to demonstrate that the listed value is either bounding or provides a maximum licensing envelope value. Little information is available on the tolerances associated with the fuel element parameters; therefore, the larger the envelope, the more likely that any given element will fall within the licensing basis.

Based on the information listed in Table 6.4.3-17 and the analysis trends discussed above, an initial data set with margins in the parameters for tolerances and normal variations in element characteristics is compiled for 94 wt % ^{235}U enriched fuel. The resulting data set is shown in Table 6.4.3-19. The listed data does not represent a bounding configuration for all fuel types, but does represent a starting configuration from which bounding limits for the various fuel types may be determined. The bounding configurations may contain combinations of lower fissile mass per plate, lower enrichment, varying active fuel width or height, a lower number of fuel plates or

reduced enrichment. The fuel plate pitch is determined by spacing the plates to the maximum extent, with the outer fuel plates resting on the basket plates. The resulting basket model serves as the basis for all remaining evaluations.

Results for all MTR criticality evaluations performed in this calculation package are listed in Table 6.4.3-20 and have been divided into matrix cases A through I. Each set (or individual case for certain evaluations) is designed to investigate a potential perturbation of the system or to provide a new group of limiting cask parameters.

Based on the results of analysis documented in Sets A through I, the NAC-LWT MTR cask containing up to 42 elements remains within the subcritical margin ($k_s \leq 0.95$) under the conditions listed in Table 6.4.3-21. Note that the further evaluations documented in Sections 6.4.3.13 and 6.4.3.14 provide additional allowed configurations for MTR fuel elements loaded into the NAC-LWT.

Sets A and B

Set A cases determine the most reactive placement of the fuel plates axially within the basket openings. As shown, the maximum reactivity is obtained by shifting plates toward the adjoining basket (i.e., three groups of two baskets). Set B employs the most reactive shifted scenario and varies the active fuel height. While the fuel plates are undermoderated, increasing the active fuel height serves to separate fissile material in the two baskets. As shown in the result table, the effect of separating the fissile material dominates the undermoderated state of the plates themselves and results in the minimum height model (56 cm) being bounding. Differences in reactivity for both sets of cases (Δk_{eff}) are taken from the 56 cm active fuel height shifted model.

Sets C, D and E

As shown in the Set B evaluation, the maximum bias adjusted reactivity of the NAC-LWT with the MTR containing 20 g ^{235}U per plate is significantly above the 0.95 limit. Set C, therefore, performs a fissile material study to determine the maximum amount of ^{235}U that may be placed in each plate. To remain below a k_s of 0.95, the plates are limited to 18 g ^{235}U each. Evaluating the fuel at a lower enrichment (50 wt % ^{235}U) shows that the HEU (94 wt% ^{235}U) is bounding. To demonstrate that a lower number of plates in the cask is less reactive at the 18g ^{235}U limit, Set D evaluates a reduced number of plates at maximum (optimal) pitch. Reactivity for these cases is significantly lower than that of the 23-plate case. Set E evaluates various perturbations to the input parameters of the model to demonstrate that the given input is bounding. As shown, there is no significant impact of uranium weight percent changes, modeling an aluminum extension to the width of the fuel plate, or shifting of the aluminum side plates within the plane of the basket. Reactivity decreases with a decreasing plate pitch, an extension of the element length by unfueled plate or end fitting, or changes to the plate thickness by either increasing the fuel core

material thickness or the clad thickness. Reactivity increases by decreasing the element side plate thickness, and decreases significantly when inserting two additional aluminum plates approximating the configuration with a loose fuel plate canister inserted into the model. Differences in reactivity (Δk_{eff}) for set C, D, and E are taken from the 56 cm active fuel height shifted model with 18 g ^{235}U.

Set F

Not all MTR fuel plates contain less than 18 g ^{235}U. The HFBR fuel, in particular, contains up to 19.5 g ^{235}U per plate but is limited to 18 fuel plates. An analysis is therefore performed with a bounding 19 plate and 20 g ^{235}U per plate model. The k_s for this system is below 0.95.

Set G

A limited quantity of MTR plates exist with an active fuel width greater than the 6.6 cm evaluated. Therefore, additional analysis is performed at a 7.3 cm active fuel width. Based on the evaluation of an 18 g ^{235}U per plate model, the reactivity of this system is significantly higher than that of the 6.6 cm width case. Therefore, fissile quantity per plate is restricted to 16.5 g ^{235}U.

Set H

Low enriched uranium fuel (LEU) can reach a per plate loading up 21 g ^{235}U. Therefore, evaluations at 7.3 cm and 6.6 cm active fuel width are performed with 23 plates at 22 g of LEU material (maximum 25 wt% ^{235}U). The 7.3 cm active fuel width resulted in a reactivity higher than the allowed limit. The 22 g ^{235}U plates of LEU material are, therefore, restricted to a maximum active fuel width of 6.6 cm.

Set I

NISTR fuel presents an exception to the standard MTR fuel element, since each plate has two fuel sections that are separated by a short section of non fuel-bearing aluminum. These plates may be cut at the aluminum strip, with both sections inserted into a basket opening. This evaluation demonstrates that both an intact and cut element would remain below the licensing limits at 22 grams per plate.

Sets A and B determined that a minimum active fuel should be applied as a constraining parameter. This parameter sets a lower bound on the fissile material axial linear density (g ^{235}U/cm). At a fixed linear fissile material density, while maintaining other fuel bounding parameters, reactivity of the system will be reduced as fissile material is removed from the system. Table 6.4.3-21 footnote 6 credits this system behavior by allowing lower active fuel height when reducing allowed fissile mass per plate/assembly proportionally (i.e., reducing

fissile material content by the ratio of a specific fuel assembly's active fuel height to that of the 56 cm reference minimum height).

6.4.3.13 MTR Fuel Elements with High Fissile Material Loading

This section determines the requirements for loading a high fissile material content MTR fuel element with up to 20 g ^{235}U per plate (460 g ^{235}U per element based on 23 plates). Section 6.4.3.12 has demonstrated that the HEU fuel is more reactive than LEU and MEU fuel. Therefore, only the HEU fuel is evaluated in this section. Additional evaluations are provided with the limiting characteristics of an HEU MTR element containing up to 21g ^{235}U per plate.

The models employed are similar to those of Section 6.4.3.12 with any differences originating in the modified minimum plate thickness and the amount of axial non-active fuel region material (or spacer material) in the basket. Section 6.4.3.12 relied on a minimum plate thickness of 0.115 cm and a minimum 0.7 cm offset of the active fuel region to the end of the fuel element. The offset of 0.7 cm assured an active fuel region separation of 2.67 cm (2 x 0.7 cm plus the 1.27 cm base plate). Section 6.4.3.12 analyses have shown that increasing the axial separation distance between the fissile material or increasing plate thickness will decrease system reactivity. Both of these effects are taken credit for in the evaluation of the high fissile material loaded MTR element. The minimum plate thickness and element axial end region hardware length are adjusted until k_s is below 0.95.

Evaluations for various amounts of axial hardware material reveal that with only this change, a minimum 4 cm offset, 8 cm total hardware (spacer material) must be provided for the system reactivity to remain below 0.95 (Table 6.4.3-23). Similarly, Table 6.4.3-23 shows that increasing the fuel plate thickness to 0.123 cm (1.23 mm) is insufficient by itself to reduce reactivity below 0.95. A combination of 2 cm of hardware at the top and bottom of the element, for a total of 4 cm fuel element hardware, in combination with the 0.123 cm minimum plate thickness produces the required result. While the model employed a symmetric 2 cm fuel plate extension on each end of the active fuel region, any combination of top or bottom hardware or basket spacer material resulting in a 4 cm total is sufficient to assure criticality safety. Based on this evaluation, it is permissible to load a 460 g ^{235}U element, provided that the fuel plates are at minimum 0.123 cm in thickness and that cropping of the fuel element or basket spacer material assures 4 cm axial element material separating the active fuel region. Note that 4 cm of fuel element or spacer material plus the 1.27 cm basket base plate result in a total 5.27 cm of axial separation for the limiting configuration. An enhanced fuel characteristic set is generated and shown in Table 6.4.3-22 to reflect the requirements for loading of the increased fissile material element.

At 21g ^{235}U per plate, additional loading constraint must be applied. The evaluations of the 21g ^{235}U per plate HEU elements are based on the 0.7 cm minimum offset of the active fuel region and decrease the number of plates per element and/or increase the plate minimum thickness. The results of this evaluation are added to Table 6.4.3-23 with a bounding set of fuel characteristics added to Table 6.4.3-22.

6.4.3.14 LEU MTR Fuel Elements with Increased Active Fuel Width and/or Increased Fissile Material Mass

Increased Active Fuel Width

This section determines the requirements for loading LEU fuel elements with an active fuel width larger than 6.6 cm. Section 6.4.3.12 has demonstrated an active fuel width of 7.3 cm yields a k_s of greater than 0.95. This section extends the licensing envelope to a maximum active fuel width of 7.0, 7.1 or 7.15 cm for LEU fuel.

The models employed are similar to those of Section 6.4.3.12 with differences originating in the modifications made in active fuel width, plate thickness, ^{235}U loading per plate, active fuel height, and number of fuel plates.

The 7.0 cm active fuel width evaluation shows that plate thickness, ^{235}U loading per plate, and active fuel height adjustments were sufficient to reduce system reactivity below 0.95. Evaluations of the 7.1 cm active fuel width envelope relied on changes in the number of fuel plates and plate thickness. Extending the active fuel width to 7.15 cm required an increased plate minimum thickness (0.119 cm) in conjunction with a decreased number of fuel plates, increased minimum active fuel height, or decreased fissile material load per plate. Evaluation results are shown in Table 6.4.3-24. A summary of the allowable LEU fuel characteristics is shown in Table 6.4.3-25.

An additional 7.0 cm active width plate configuration is evaluated with a maximum a 23.5 g ^{235}U per plate. To reduce system reactivity to levels bounded by the HEU design basis element (the "generic" element defined in Table 6.4.3-21) the plate thickness in this case is increased to a minimum 0.13 cm. Table 6.4.3-30 contains the results of the element characteristic analyses demonstrating that at a minimum thickness of 0.13 inch up to 23 plates of 23.5 g ^{235}U may be loaded with a maximum active fuel width of 7.0 cm, minimum active fuel height of 56 cm, and clad thickness of 0.02 cm. A maximum number of plates is defined as the limiting quantity per Section 6.4.3-12. To verify that this analysis result holds true for the thicker minimum plate thickness of 0.13 cm, a study on the number of plates in the element was performed. Table 6.4.3-30 contains the data demonstrating that no reactivity increase occurs as plate number is decreased at the minimum 0.13 cm plate thickness specified for this evaluation.

Increased Fissile Material Mass (32 g ^{235}U per plate)

LEU fuel elements may contain a ^{235}U content of up to 32 grams per plate. Based on the analysis trends observed in the previous sections, a full cask load of elements containing fissile material significantly above 22 grams per plate will exceed safety limits. Additional analyses are, therefore, performed limiting the contents of the basket module with 32 gram ^{235}U plates to four elements per basket. The center row of elements (locations 1, 2 and 3 in Figure 6.3.3-5) are not loaded. The LEU plate characteristics applied are a maximum 7.3 cm active fuel width, a minimum 56 cm fuel height, and a minimum 0.115 cm plate thickness. Twenty-three plate elements are modeled.

Table 6.4.3-27 contains the results of the criticality evaluations with the revised model. Each of the bounding MTR configurations (summarized in Table 6.4.3-26) is evaluated at full load and with a partial load in the top and bottom baskets. A single fuel type is included in this analysis set. As shown in Table 6.4.3-26, the system reactivity of the 32 gram ^{235}U per plate element (Case 25%-J) is above safety limits for both full and partially loaded top and bottom baskets (k_s must be less than 0.95). Partially loading the top and bottom baskets reduces system reactivity by approximately 0.01 Δk across all fuel types. Loading the high fissile mass (high reactivity) 32 g ^{235}U per plate LEU elements in a partially loaded basket, and locating the partially loaded baskets at the top and bottom of the basket stack have no significant effect on system reactivities ─ i.e., system reactivity is controlled by the adjacent (cask center) baskets containing higher reactivity, fully loaded baskets.

An evaluation of six baskets with four elements per basket of the 32 gram ^{235}U per plate LEU fuel element results in a k_{eff} of approximately 0.7. This clearly demonstrates that removing three elements from the basket reduces the basket reactivity significantly, and that replacing any fully loaded basket by the partially loaded high fissile material content element basket is bounded by the evaluations of a fully loaded (42 element) cask configuration.

Loading of the high fissile material elements is, therefore, allowed provided that the elements meet the characteristics of Table 6.4.3-28, including the limitation that any basket containing LEU MTR plates above 22 gram ^{235}U must be limited to four elements (or an equivalent number of fuel plates in a plate canister) with no fuel material in basket openings 1, 2 and 3 per Figure 6.3.3-5.

The specified (partially loaded) basket configuration relies on the moderator in the center basket row to neutronically separate the fissile material in the outer sections. As moderator density in the cask decreases, neutronic interaction among the high fissile mass LEU elements in the outer basket sections will increase. Because previous evaluations have demonstrated that the MTR element reactivity rapidly decreases as moderator density is decreased, it is, therefore, not expected that reduced moderator density will result in a system reactivity increase. To provide

quantitative support to this conclusion, moderator density studies are performed for the system with partially loaded baskets located at the top and bottom of the stack, for a system with partially loaded baskets in the cask center baskets, and for a system containing six partially loaded baskets. The partially loaded baskets contain the high fissile mass LEU elements, while the fully loaded baskets contain the maximum reactivity HEU elements ("94%-D").

As demonstrated in Figure 6.4.3-1 and Table 6.4.3-29, maximum reactivity is achieved by a fully moderated cask interior for all conditions.

Figure 6.4.3-1 also contains the results of a full set of moderator density evaluations for a system containing cell blocks that will physically prevent elements from being loaded into baskets containing high fissile mass LEU elements. The block body is composed of an aluminum tube and an aluminum top plate. As the length of the block depends on the type of MTR basket employed, and the tube represents the majority of the block mass (the top plate occupies less than three cubic inches), only the tube portion of the block is included in the model. As shown in the moderator density plot, Figure 6.4.3-1, and the result summary in Table 6.4.3-29, there is no effect from the insertion of the cell block on the models containing both full and partially loaded baskets, and only a minor effect on the lower reactivity models containing all partially loaded baskets.

6.4.3.15 MTR Payload Criticality Safety Index

Evaluations included in Sections 6.4.3.1 through 6.4.3.14 demonstrate that the bias and uncertainty adjusted reactivity (k_s) for an infinite array of NAC-LWT casks containing MTR fuel elements remains below 0.95. Therefore, the Criticality Safety Index (CSI) for all MTR payloads is 0.

Figure 6.4.3-1 Cask Interior Moderator Density and Blocked Cell Study Results

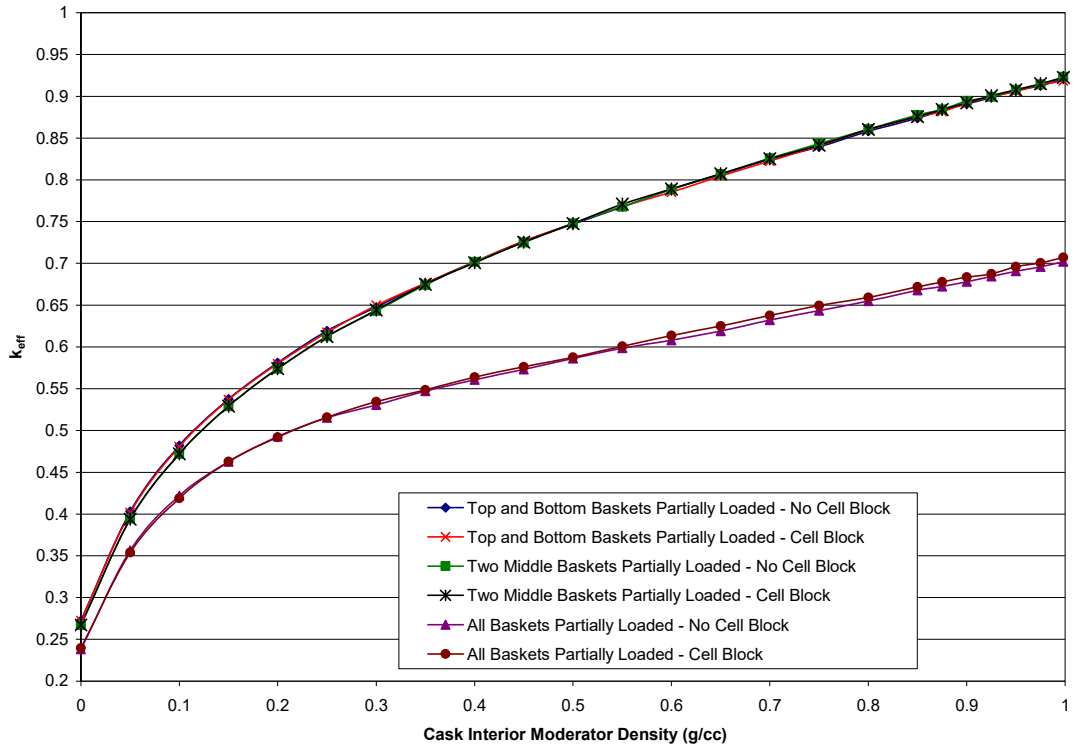

Table 6.4.3-1 Fuel/Basket Unit Cell k_{eff} versus MTR Fuel Element Type

MTR Type	Plate Pitch (cm)	^{235}U Loading (grams)	$k_{eff} \pm \sigma$
HEU ORR	0.422	285	1.2475 ± 0.0025
LEU BSR	0.422	340	1.2486 ± 0.0022
HEU HFBR	0.371[1]	351	1.2396 ± 0.0022
HEU NISTR	0.422[2]	362	1.1808 ± 0.0027
LEU RSG-GAS	0.369	271	1.1502 ± 0.0033
HEU PRR	0.432	247	1.1594 ± 0.0027
LEU THOR	0.761	210	1.0600 ± 0.0032
LEU ZPRL	0.776	210	1.0596 ± 0.0030
LEU IEA-R1	0.431	180	1.0219 ± 0.0039
HEU THOR	0.761	140	0.9479 ± 0.0039
GRR	0.442	187.2	1.0982 ± 0.0037

1. Variable outer plate spacing.
2. Two half-sections stacked together in the basket cell. Section cuts are a minimum of 1 inch from active fuel on each end.

Table 6.4.3-2 Cask k_{eff} versus Fuel Plate Spacing

Fuel Type	# of Fuel Plates	Pitch (cm)	k_{eff}	σ	$k_{eff} + 2\sigma$
HFBR	13	0.6330*	0.7901	0.0034	0.7969
	14	0.5878*	0.8120	0.0036	0.8192
	15	0.5486*	0.8161	0.0040	0.8241
	16	0.5142*	0.8341	0.0034	0.8409
	17	0.4840*	0.8398	0.0030	0.8458
	18	0.4572*	0.8471	0.0033	0.8537
	18	0.3708	0.7918	0.0043	0.8004
	18	0.2921	0.7131	0.0040	0.7211
	18	0.2250	0.6462	0.0039	0.6540
	18	0.1270	0.5166	0.0035	0.5236
BSR	19	0.4782	0.8375	0.0027	0.8429
	19	0.3878	0.7967	0.0029	0.8027

* Maximum possible spacing of fuel and end plates of HFBR fuel element within basket opening.

Table 6.4.3-3 MTR Basket Geometric Tolerances

Component	Dimension / Tolerance
Basket Opening	3.44 inch + 0.04 / - 0.06 inch
5/16 inch Plate Thickness	0.3125 nom. / 0.28 inch min.
1/4 inch Plate Thickness	0.25 nom. / 0.24 inch min.
11 Gauge Sheet	0.12 inch min.

Table 6.4.3-4 MTR Basket/Intact Fuel Element Geometric Tolerances and Mechanical Perturbations Results

Configuration	k_{eff}	σ	$k_{eff} + 2\sigma$
Elements Moved in Close	0.8023	0.0021	0.8065
Min. Basket Plate Thickness	0.8014	0.0032	0.8078
Elements Moved in Closest	0.7969	0.0021	0.8011
Nominal Configuration	0.7943	0.0031	0.8005
Elements Resting on Basket	0.7928	0.0020	0.7968
Max. Basket Opening	0.7898	0.0035	0.7960
Min. Basket Opening	0.7931	0.0032	0.7995
Elements Moved Out	0.7759	0.0019	0.7797
Elements Moved Out Furthest	0.7667	0.0020	0.7707

Table 6.4.3-5 MTR Basket/Optimally Spaced Fuel Plates Geometric Tolerances and Mechanical Perturbations Results

Configuration	k_{eff}	σ	$k_{eff} + 2\sigma$
Min. Basket Plate Thickness	0.8585	0.0035	0.8655
Plates Moved In	0.8577	0.0020	0.8617
Nominal Configuration	0.8471	0.0033	0.8537
Max. Basket Opening	0.8485	0.0037	0.8559
Min. Basket Opening	0.8406	0.0031	0.8468
Plates Moved Out	0.8290	0.0019	0.8328

Table 6.4.3-6 Reactivity with MTR Fuel vs. Basket Moderator Density, Normal Conditions, Dry Exterior, Infinite Array of Casks

Moderator Density	Casks Touching	2 Foot Surf.-to-Surf.	ISO Container 242.84 cm Pitch	Touching, Center Position Empty
Dry Exterior, Vary Internal Density				
0.0000	0.0705 ± 0.0004	0.0700 ± 0.0004	0.0716 ± 0.0004	N/A
0.0010	0.0728 ± 0.0004	0.0725 ± 0.0004	0.0722 ± 0.0004	N/A
0.0100	0.0912 ± 0.0006	0.0910 ± 0.0005	0.0912 ± 0.0005	0.0793 ± 0.0010
0.0250	0.1227 ± 0.0007	0.1231 ± 0.0007	0.1246 ± 0.0008	N/A
0.0500	0.1789 ± 0.0009	0.1795 ± 0.0009	0.1779 ± 0.0009	0.1612 ± 0.0018
0.0750	0.2285 ± 0.0011	0.2294 ± 0.0011	0.2292 ± 0.0011	N/A
0.1000	0.2741 ± 0.0012	0.2772 ± 0.0013	0.2771 ± 0.0012	0.2513 ± 0.0025
0.2000	0.4207 ± 0.0016	0.4211 ± 0.0016	0.4178 ± 0.0017	0.3886 ± 0.0032
0.4000	0.5868 ± 0.0019	0.5861 ± 0.0018	0.5864 ± 0.0019	0.5170 ± 0.0037
0.6000	0.6831 ± 0.0021	0.6792 ± 0.0020	0.6817 ± 0.0019	0.5829 ± 0.0037
0.8000	0.7511 ± 0.0020	0.7515 ± 0.0020	0.7539 ± 0.0020	0.6289 ± 0.0041
0.9000	0.7830 ± 0.0019	0.7773 ± 0.0021	0.7827 ± 0.0020	N/A
1.0000	0.8072 ± 0.0019	0.8105 ± 0.0020	0.8102 ± 0.0019	0.6639 ± 0.0041
Wet Interior, Vary External Density				
0.0000	0.8139 ± 0.0021	0.8067 ± 0.0020	0.8080 ± 0.0022	N/A
0.0010	0.8116 ± 0.0020	0.8128 ± 0.0020	0.8136 ± 0.0023	N/A
0.0100	0.8108 ± 0.0021	0.8061 ± 0.0019	0.8085 ± 0.0022	N/A
0.0250	0.8078 ± 0.0019	0.8107 ± 0.0021	0.8074 ± 0.0021	N/A
0.0500	0.8066 ± 0.0022	0.8082 ± 0.0020	0.8072 ± 0.0020	N/A
0.0750	0.8113 ± 0.0020	0.8054 ± 0.0022	0.8082 ± 0.0022	N/A
0.1000	0.8097 ± 0.0020	0.8075 ± 0.0019	0.8081 ± 0.0019	N/A
0.2000	0.8133 ± 0.0020	0.8075 ± 0.0023	0.8087 ± 0.0020	N/A
0.4000	0.8096 ± 0.0018	0.8113 ± 0.0020	0.8087 ± 0.0018	N/A
0.6000	0.8110 ± 0.0018	0.8098 ± 0.0020	0.8103 ± 0.0020	N/A
0.8000	0.8072 ± 0.0023	0.8108 ± 0.0019	0.8096 ± 0.0018	N/A
0.9000	0.8133 ± 0.0021	0.8080 ± 0.0021	0.8069 ± 0.0020	N/A
1.0000	0.8107 ± 0.0024	0.8096 ± 0.0022	0.8103 ± 0.0021	N/A
Vary Interior and Exterior Density Simultaneously				
0.0000	0.0705 ± 0.0004	0.0700 ± 0.0004	0.0716 ± 0.0004	N/A
0.0010	0.0736 ± 0.0004	0.0724 ± 0.0005	0.0733 ± 0.0004	N/A
0.0100	0.0906 ± 0.0005	0.0909 ± 0.0005	0.0895 ± 0.0005	N/A
0.0250	0.1239 ± 0.0007	0.1244 ± 0.0007	0.1245 ± 0.0007	N/A
0.0500	0.1774 ± 0.0008	0.1774 ± 0.0009	0.1778 ± 0.0009	N/A
0.0750	0.2291 ± 0.0011	0.2272 ± 0.0010	0.2307 ± 0.0010	N/A
0.1000	0.2750 ± 0.0011	0.2741 ± 0.0012	0.2753 ± 0.0013	N/A
0.2000	0.4204 ± 0.0016	0.4215 ± 0.0016	0.4187 ± 0.0015	N/A
0.4000	0.5809 ± 0.0018	0.5829 ± 0.0018	0.5825 ± 0.0019	N/A
0.6000	0.6833 ± 0.0020	0.6811 ± 0.0021	0.6802 ± 0.0020	N/A
0.8000	0.7547 ± 0.0020	0.7521 ± 0.0019	0.7495 ± 0.0022	N/A
0.9000	0.7821 ± 0.0021	0.7822 ± 0.0018	0.7828 ± 0.0021	N/A
1.0000	0.8107 ± 0.0024	0.8096 ± 0.0022	0.8103 ± 0.0021	N/A

Table 6.4.3-7 Reactivity with MTR Fuel vs. Basket Moderator Density, Accident Conditions, Dry Exterior, Infinite Array of Casks

Moderator Specific Gravity	Casks Touching	2 Foot Surface-to-Surface	ISO 242.84 cm Pitch
Dry Exterior, Vary Internal Density			
0.0000	0.3126 ± 0.0009	0.1031 ± 0.0005	0.1000 ± 0.0005
0.0010	0.3169 ± 0.0009	0.1071 ± 0.0005	0.1024 ± 0.0005
0.0100	0.3493 ± 0.0010	0.1316 ± 0.0006	0.1266 ± 0.0006
0.0250	0.3980 ± 0.0010	0.1720 ± 0.0008	0.1686 ± 0.0007
0.0500	0.4629 ± 0.0011	0.2343 ± 0.0010	0.2336 ± 0.0010
0.0750	0.5152 ± 0.0013	0.2910 ± 0.0010	0.2845 ± 0.0012
0.1000	0.5592 ± 0.0015	0.3425 ± 0.0012	0.3335 ± 0.0013
0.2000	0.6643 ± 0.0018	0.4836 ± 0.0014	0.4830 ± 0.0016
0.4000	0.7625 ± 0.0019	0.6440 ± 0.0018	0.6424 ± 0.0019
0.6000	0.8138 ± 0.0021	0.7390 ± 0.0019	0.7367 ± 0.0020
0.8000	0.8598 ± 0.0021	0.8138 ± 0.0021	0.8061 ± 0.0021
0.9000	0.8777 ± 0.0022	0.8428 ± 0.0021	0.8411 ± 0.0019
1.0000	0.9005 ± 0.0021	0.8717 ± 0.0021	0.8690 ± 0.0019
Wet Interior, Vary External Density			
0.0000	0.9005 ± 0.0021	0.8694 ± 0.0021	0.8739 ± 0.0020
0.0010	0.8975 ± 0.0020	0.8686 ± 0.0023	0.8680 ± 0.0022
0.0100	0.8851 ± 0.0022	0.8673 ± 0.0020	0.8683 ± 0.0021
0.0250	0.8737 ± 0.0022	0.8648 ± 0.0022	0.8671 ± 0.0020
0.0500	0.8709 ± 0.0020	0.8656 ± 0.0021	0.8648 ± 0.0022
0.0750	0.8681 ± 0.0020	0.8648 ± 0.0020	0.8658 ± 0.0020
0.1000	0.8645 ± 0.0019	0.8614 ± 0.0020	0.8618 ± 0.0020
0.2000	0.8625 ± 0.0020	0.8632 ± 0.0021	0.8616 ± 0.0021
0.4000	0.8625 ± 0.0020	0.8601 ± 0.0022	0.8594 ± 0.0019
0.6000	0.8592 ± 0.0021	0.8589 ± 0.0020	0.8591 ± 0.0021
0.8000	0.8600 ± 0.0020	0.8611 ± 0.0020	0.8589 ± 0.0021
0.9000	0.8629 ± 0.0020	0.8599 ± 0.0022	0.8584 ± 0.0021
1.0000	0.8606 ± 0.0023	0.8591 ± 0.0022	0.8602 ± 0.0020
Vary Interior and Exterior Density Simultaneously			
0.0000	0.3126 ± 0.0009	0.1031 ± 0.0005	0.1000 ± 0.0005
0.0010	0.2985 ± 0.0008	0.1054 ± 0.0005	0.1025 ± 0.0005
0.0100	0.2306 ± 0.0008	0.1270 ± 0.0006	0.1245 ± 0.0007
0.0250	0.2097 ± 0.0009	0.1579 ± 0.0008	0.1594 ± 0.0008
0.0500	0.2286 ± 0.0010	0.2072 ± 0.0010	0.2092 ± 0.0009
0.0750	0.2640 ± 0.0011	0.2534 ± 0.0011	0.2533 ± 0.0012
0.1000	0.2996 ± 0.0011	0.2963 ± 0.0012	0.2972 ± 0.0012
0.2000	0.4348 ± 0.0015	0.4337 ± 0.0015	0.4332 ± 0.0017
0.4000	0.6048 ± 0.0017	0.6066 ± 0.0020	0.6037 ± 0.0018
0.6000	0.7126 ± 0.0021	0.7144 ± 0.0020	0.7134 ± 0.0019
0.8000	0.7960 ± 0.0019	0.7892 ± 0.0022	0.7984 ± 0.0022
0.9000	0.8295 ± 0.0020	0.8303 ± 0.0021	0.8289 ± 0.0021
1.0000	0.8606 ± 0.0023	0.8591 ± 0.0022	0.8602 ± 0.0020

Table 6.4.3-8 MTR Fuel Element Rotation Perturbation Study

Case	k_{eff}	σ	$k_{eff} + 2\sigma$
All Horizontal Plates	0.6011	0.0027	0.6065
Corners-Only Horizontal	0.6033	0.0025	0.6083
Corners-Only Vertical	0.6045	0.0027	0.6099
All Vertical Plates	0.6053	0.0027	0.6107

Table 6.4.3-9 MTR Basket/Center Fuel Element Perturbation Study

Fuel Type	Center Element Configuration	k_{eff}	σ	$k_{eff} + 2\sigma$
Intact Elements	Centered	0.8107	0.0020	0.8147
Intact Elements	Corner	0.8066	0.0021	0.8108
Intact Elements	Right	0.8122	0.0021	0.8164
Intact Elements	Up	0.8133	0.0021	0.8175
Expanded Plates	Centered	0.8606	0.0023	0.8652
Expanded Plates	Right	0.8547	0.0019	0.8585

Table 6.4.3-10 Mixed HEU/LEU MTR Fuel Perturbation Study

Case	k_{eff}	σ	$k_{eff} + 2\sigma$
9 HEU	0.6011	0.0027	0.6065
8 HEU 1 LEU centered	0.6033	0.0030	0.6093
6 HEU 3 LEU center row	0.5976	0.0030	0.6036
4 HEU 5 LEU + pattern	0.5894	0.0026	0.5946
8 LEU 1 HEU centered	0.5789	0.0027	0.5843
9 LEU	0.5685	0.0025	0.5735

Table 6.4.3-11 MTR Single Package 10 CFR 71.55(b)(3) Evaluation k_{eff} Summary

Description	$k_{eff} \pm \sigma$	$k_{eff} + 2\sigma$
Single Cask / Inner Shell Reflected with H_2O	0.7682 ± 0.0021	0.7724
Single Cask / Inner Shell and Lead Reflected with H_2O	0.8043 ± 0.0021	0.8085
Single Cask / Inner Shell, Lead & Outer Shell Reflected with H_2O	0.8047 ± 0.0022	0.8091
Single Intact Cask Reflected with H_2O	0.8094 ± 0.0021	0.8136

Table 6.4.3-12 MTR Fuel Uranium Weight Percentage Perturbations

Fuel Type	U wt%[1]	Effective Al Density (g/cm3)	% of Theoretical Al Density	k_{eff}	Δk_{eff}
HEU HFBR	30%[2]	2.58	96%	1.2396 ± 0.0022	n/a
	45%	1.25	46%	1.2426 ± 0.0027	0.0030
HEU PRR	12.5%[2]	2.65	98%	1.1594 ± 0.0027	n/a
	18.75%	1.64	61%	1.1679 ± 0.0025	0.0085
	33%	0.77	28%	1.1763 ± 0.0024	0.0169
HEU THOR	8.0%[2]	2.67	99%	0.9479 ± 0.0039	n/a
	12%	1.75	65%	0.9530 ± 0.0035	0.0051
	20%	0.95	35%	0.9647 ± 0.0035	0.0168
LEU THOR	40%[2]	2.46	91%	1.0600 ± 0.0032	n/a
	50%	1.64	61%	1.0628 ± 0.0035	0.0028
	60%	1.09	41%	1.0718 ± 0.0036	0.0118
LEU IEA	40%[2]	2.47	91%	1.0219 ± 0.0039	n/a
	50%	1.64	61%	1.0266 ± 0.0036	0.0047
	60%	1.09	40%	1.0272 ± 0.0042	0.0053

Notes:

[1] Uranium in Fuel Composition (wt %)
[2] Nominal value
n/a – not applicable

Table 6.4.3-13 MEU MTR Unit Cell k_{eff} Comparison (Enrichment Variation)

Description	k_{eff}	σ
13.91 g ^{235}U - 44.44 wt% ^{235}U – Al Clad	1.2476	0.0008
13.91 g ^{235}U - 44.44 wt% ^{235}U – AlMg Clad	1.2475	0.0008
14.5 g ^{235}U – 35 wt% ^{235}U – Al Clad	1.2501	0.0008
14.5 g ^{235}U – 50 wt% ^{235}U – Al Clad	1.2642	0.0008
14.5 g ^{235}U – 80 wt% ^{235}U – Al Clad	1.2844	0.0008

Table 6.4.3-14 MEU MTR Basket k_{eff} Comparison (Plate Location)

Number of Plates	Configuration(1)	k_{eff}	σ
23	A	0.8242	0.0011
22	A	0.8230	0.0010
21	A	0.8176	0.0010
23	B	0.8312	0.0010
22	B	0.8265	0.0010
21	B	0.8206	0.0010

Note:

1. Configuration A places the outer fuel plates separated from the basket plates by a space equal to one-half the spacing between the interior plates. Configuration B places the plates directly against the basket plates.

Table 6.4.3-15 Physical Characteristics of McMaster MTR Fuels

Fuel Parameters	10 Plate	18 Plate
Element Width (cm)	7.61	7.61
Element Depth (cm)	8.03	8.23
Side Plate Thickness (cm)	0.48 (0.19 inch)	0.48
No. of Plates	10	18
Plate Thickness (cm)	0.153 ± 0.005	0.127 ± 0.005
Active Fuel Length (cm)	61.0	59.1 to 60.0
Active Fuel Width (cm)	7.3	5.92 to 6.54
Active Fuel Thickness (cm)	0.051	0.0508
Clad Thickness (cm)	0.05 ± 0.008	0.038 ± 0.008
Plate Pitch	0.319 ± 0.004 inch	0.442 ± 0.004 cm
Fuel Composition	U-Al	U-Al
Wt % ^{235}U (nominal)	93.1 ± 0.1	93.1 ± 0.1
^{235}U per Fuel Element (g)	161.4 ± 0.1	212.1 ± 6
^{235}U per Plate (g)	16.0 ± 0.48	12.25 ± 0.37
Alloy per Plate (Al) (g)	58.9	50.4

Table 6.4.3-16 Reactivity of Various Parameter Variations for 10-Plate McMaster Element

k_{eff}	σ	$k_{eff}+2\sigma$	Δk_{eff}	$\Delta k_{eff}/\sigma$	Description
1.11679	0.00083	1.11845	-	-	nominal fuel (0.153 cm plate, 0.051 cm meat, 0.8103 cm pitch)
1.11451	0.00077	1.11605	-0.00240	-3.1	decreased pitch -0.010 cm
1.11975	0.00078	1.12131	0.00286	3.7	increased pitch +0.010 cm
1.12042	0.00079	1.12200	0.00069	0.9	max pitch and decreased plate thickness -0.008
1.12020	0.00080	1.12180	0.00049	0.6	max pitch and increased plate thickness +0.008
1.11680	0.00080	1.11840	-0.00291	-3.6	max pitch/min plate thickness and decreased fuel meat thick. (0.029 cm)
1.12154	0.00080	1.12314	0.00183	2.3	max pitch/min plate thickness and increased fuel meat thick. (0.061 cm)
1.12346	0.00081	1.12508	0.00377	4.7	max pitch/min plate thickness and increased fuel meat thick. (0.077 cm)
1.13520	0.00080	1.13680	0.01549	19.4	max pitch/min plate thickness and increased fuel meat thick. (0.145 cm)

Table 6.4.3-17 Reactivity of Various Parameter Variations for 18-Plate McMaster Element

k_{eff}	σ	$k_{eff}+2\sigma$	Δk_{eff}	$\Delta k_{eff}/\sigma$	Description
1.17730	0.00111	1.17952	-	-	nominal fuel (0.127 cm plate, 0.051 cm meat, 0.8103 cm pitch)
1.17068	0.00117	1.17302	-0.00650	-5.6	decreased pitch -0.010 cm
1.17810	0.00112	1.18034	0.00082	0.7	increased pitch +0.010 cm
1.17956	0.00119	1.18194	0.00160	1.3	max pitch and decreased plate thickness -0.008
1.17753	0.00117	1.17987	-0.00047	-0.4	max pitch and increased plate thickness +0.008
1.17646	0.00114	1.17874	-0.00160	-1.4	max pitch/min plate thickness and decreased fuel meat thick. (0.029 cm)
1.18002	0.00117	1.18236	0.00202	1.7	max pitch/min plate thickness and increased fuel meat thick. (0.061 cm)
1.19393	0.00116	1.19625	0.01591	13.7	max pitch/min plate thickness and increased fuel meat thick. (0.119 cm)
1.15124	0.00122	1.15368	-0.02584	-21.2	nominal case at minimum active fuel width (5.92 cm)

Table 6.4.3-18 MTR Limiting Fuel Configurations

Parameter	HEU/MEU	LEU
Min. side plate thickness (cm)	0.45	0.475
Min. side plate length (cm)	7.6	7.62
Min. plate thickness (cm)	0.122	0.127
Min. clad thickness (cm)	0.024	0.033
Maximum number of fuel plates	23	21
235U content per plate (g)	19.5	21
Enrichment (wt % 235U)	94	20
Max. Active Width (cm)	6.54(1)	6.0
Max. Active Fuel Height (cm)	62.5	60.0
Max. Uranium Wt %	50(2)	74

Notes:

1. A 7.3 cm active fuel width is modeled for reduced fissile material mass (^{235}U) and/or a reduced number of fuel plates.
2. Based on MEU fuel.

Table 6.4.3-19 Initial Fuel Configurations for MTR Bounding Evaluations

Variable	Value
Min. side plate thickness (cm)	0.40
Min. side plate length (cm)	7.5
Min. plate thickness (cm)	0.115
Min. clad thickness (cm)	0.020
Maximum number of fuel plates	23
235U content per plate (g)	21
Enrichment (wt % 235U)	94
Max. Active Width (cm)	6.6
Max. Active Fuel Height (cm)	65
Max. Uranium Wt %	50
Element/Plate Material Above/Below Active Fuel (cm)	0.7

Table 6.4.3-20 Reactivity Impact of Parameter Variations in the Finite Cask Model

Set	Number of Plates	^{235}U per Plate (g)	U wt %	^{235}U wt %	Fuel Width (cm)	Fuel Height (cm)	Additional Description of File Parameters	k_{eff}	σ	$k_{eff}+2\sigma$	k_s	Δk	$\Delta k_{eff}/\sigma$
A	23	20	50%	94%	6.6	65.0	Plates at bottom	0.91822	0.00093	0.92008	0.93818	-0.01358	-14.6
	23	20	50%	94%	6.6	65.0	Axial shift to cask center	0.92549	0.00094	0.92737	0.94547	-0.00631	-6.7
	23	20	50%	94%	6.6	65.0	Axial shift alternating	0.93180	0.00091	0.93362	0.95172	--	--
B	23	20	50%	94%	6.6	56.0	Alternating shift (a.s.)	0.94724	0.00091	0.94906	0.96716	0.01544	17.0
	23	20	50%	94%	6.6	60.0	Alternating shift	0.94157	0.00092	0.94341	0.96151	0.00977	10.6
	23	20	50%	94%	6.6	71.752	Alternating shift	0.93015	0.00092	0.93199	0.95009	-0.00165	-1.8
C	23	30	50%	94%	6.6	56.0	Alternating shift	1.01772	0.00097	1.01966	1.03776	0.09128	94.1
	23	19	50%	94%	6.6	56.0	Alternating shift	0.93739	0.00091	0.93921	0.95731	0.01095	12.0
	23	18	50%	94%	6.6	56.0	Alternating shift	0.92644	0.00093	0.92830	0.94640	--	--
	23	17	50%	94%	6.6	56.0	Alternating shift	0.91468	0.00099	0.91666	0.93476	-0.01176	-11.9
	23	18	50%	50%	6.6	56.0	a.s.; MEU Core	0.90732	0.00092	0.90916	0.92726	-0.01912	-20.8
D	21	18	50%	94%	6.6	56.0	Alternating shift	0.91806	0.00092	0.91990	0.93800	-0.00838	-9.1
	19	18	50%	94%	6.6	56.0	Alternating shift	0.90657	0.00097	0.90851	0.92661	-0.01987	-20.5
E	23	18	75%	94%	6.6	56.0	Alternating shift	0.92567	0.00091	0.92749	0.94559	-0.00077	-0.8
	23	18	30%	94%	6.6	56.0	Alternating shift	0.92753	0.00097	0.92947	0.94757	0.00109	1.1
	23	18	50%	94%	6.6	56.0	a.s.; pitch -0.02 cm	0.91104	0.00096	0.91296	0.93106	-0.01540	-16.0
	23	18	50%	94%	6.6	56.0	a.s.; pitch -0.04 cm	0.89691	0.00095	0.89881	0.91691	-0.02953	-31.1
	23	18	50%	94%	6.6	56.0	a.s.; side plate lateral shift	0.92711	0.00094	0.92899	0.94709	0.00067	0.7
	23	18	50%	94%	6.6	56.0	a.s.; side plates 0.5 cm	0.92357	0.00093	0.92543	0.94353	-0.00287	-3.1
	23	18	50%	94%	6.6	56.0	a.s.; side plates 0.3 cm	0.92975	0.00093	0.93161	0.94971	0.00331	3.6
	23	18	50%	94%	6.6	56.0	a.s.; canister plates added	0.89768	0.00193	0.90154	0.91964	-0.02876	-14.9
	23	18	50%	94%	6.6	56.0	a.s.; clad width +1cm	0.92573	0.00097	0.92767	0.94577	-0.00071	-0.7
	23	18	50%	94%	6.6	56.0	a.s.; clad length +4cm	0.91304	0.00094	0.91492	0.93302	-0.01340	-14.3
	23	18	50%	94%	6.6	56.0	a.s.; plate 0.125, clad 0.025	0.91525	0.00094	0.91713	0.93523	-0.01119	-11.9
	23	18	50%	94%	6.6	56.0	a.s.; plate 0.115, clad 0.020	0.91405	0.00094	0.91593	0.93403	-0.01239	-13.2
F	19	20	50%	94%	6.6	56.0	Alternating shift	0.92822	0.00096	0.93014	0.94824	--	--
G	23	18	50%	94%	7.3	56.0	Alternating shift	0.94448	0.00090	0.94628	0.96438	--	--
	23	17	50%	94%	7.3	56.0	Alternating shift	0.93237	0.00092	0.93421	0.95231	--	--
	23	16.5	50%	94%	7.3	56.0	Alternating shift	0.92550	0.00094	0.92738	0.94548	--	--
H	23	22	75%	25%	7.3	56.0	Alternating shift; LEU Core	0.94090	0.00091	0.94272	0.96082	--	--
	23	22	75%	25%	6.6	56.0	Alternating shift; LEU Core	0.91993	0.00092	0.92177	0.93987	--	--
I	34	11	50%	94%	6.6	26.0	Alternating shift	0.87068	0.00094	0.87256	0.89066	--	--
	34	11	50%	94%	6.6	30.0	Alternating shift	0.87146	0.00095	0.87336	0.89146	--	--
	17	22	50%	94%	6.6	26.0	Fuel split by 2 cm spacer	0.92616	0.00091	0.92798	0.94608	--	--

Table 6.4.3-21 Baseline MTR Bounding Configurations

Parameter[1]	Generic	NISTR[2]
Plate thickness	≥ 0.115 cm	≥ 0.115 cm
Clad thickness	≥ 0.02 cm	≥ 0.02 cm
Number of fuel plates	≤ 23[3]	≤ 17
^{235}U content per plate	≤ 18 g[3,4,5]	≤ 22 g
Enrichment wt % ^{235}U	≤ 94[4]	≤ 94
Active width	≤ 6.6 cm[5]	≤ 6.6 cm
Active fuel height	≥ 56 cm[6]	≥ 54 cm
Maximum reactivity (k_s)	0.9482	0.9461

Notes:

(1) Loose fuel plates meeting the requirements in this table must be loaded into a MTR plate canister.

(2) Fuel plates may be cut in half with each half limited to 11g ^{235}U and an active fuel length between 27 and 30 cm.

(3) At a 19 fuel plate maximum, the plates are limited to 20g ^{235}U per plate.

(4) LEU fuel plate with up to 22g ^{235}U may be loaded at a maximum enrichment of 25 wt % ^{235}U.

(5) At a maximum active fuel width of 7.3 cm, the plates are limited to 16.5g ^{235}U.

(6) Active fuel height below 56 cm is allowed provided the axial (height) fissile material linear density is maintained. This is achieved by a proportionate reduction in the maximum allowed fissile material mass per plate by the ratio of the fuel plate fissile material height to the 56 cm reference height. As an example, at a minimum 42 cm active fuel height, the generic 18 g ^{235}U maximum plate (56 cm minimum active fuel height) would be reduced to an allowable maximum of 13.5 g ^{235}U (18g ^{235}U * 42/56) per plate. Reduced fuel heights may similarly be applied to the fuel configurations described in Notes 2, 3 and 4.

Table 6.4.3-22 High Fissile Mass MTR Fuel – Bounding Parameter Analysis

Parameter	Variation From Baseline (Generic) MTR		
	Increased Plate Thickness and Fissile Mass (1)	Increased Plate Thickness and Fissile Mass and Decreased Number of Plates	Increased Fissile Mass and Decreased Number of Plates
Plate thickness [cm]	≥ 0.123	≥ 0.200	≥ 0.115
Clad thickness [cm]	≥ 0.02	≥ 0.02	≥ 0.02
Number of fuel plates	≤ 23	≤ 19	≤ 17
^{235}U content per plate [g]	≤ 20	≤ 21	≤ 21
Enrichment [wt % ^{235}U]	≤ 94	≤ 94	≤ 94
Active Width [cm]	≤ 6.6	≤ 6.6	≤ 6.6
Active Fuel Height [cm]	≥ 56	≥ 56	≥ 56
Maximum reactivity (k_s)	0.9488	0.8753	0.9451

(1) Requires a minimum 4 cm of fuel element hardware (or spacer material) separating the fuel segments axially.

Table 6.4.3-23 MTR High Fissile Content Loading Evaluation (460 g ^{235}U)

Number of Plates	^{235}U per Plate (g)	Fuel Width (cm)	Fuel Height (cm)	Plate Thickness (cm)	Offset (cm)	k_{eff}	σ	$k_{eff}+2\sigma$	k_s	Δk
23	20.0	6.6	56.0	0.115	0.7	0.94724	0.00091	0.94906	0.96716	--
23	20.0	6.6	56.0	0.115	1.7	0.94161	0.00093	0.94347	0.96157	-0.00563
23	20.0	6.6	56.0	0.115	2.0	0.93810	0.00094	0.93998	0.95808	-0.00914
23	20.0	6.6	56.0	0.115	3.0	0.93339	0.00112	0.93563	0.95373	-0.01385
23	20.0	6.6	56.0	0.115	4.0	0.92770	0.00107	0.92984	0.94794	-0.01954
23	20.0	6.6	56.0	0.123	0.7	0.93729	0.00095	0.93919	0.95729	-0.00995
23	20.0	6.6	56.0	0.123	1.7	0.93036	0.00093	0.93222	0.95032	-0.01688
23	20.0	6.6	56.0	0.123	2.0	0.92883	0.00093	0.93069	0.94879	-0.01841
19	21.0	6.6	56.0	0.200	0.7	0.85540	0.0093	0.85726	0.87526	--
17	21.0	6.6	56.0	0.115	0.7	0.92509	0.0095	0.92699	0.94509	--

Table 6.4.3-24 LEU MTR Active Fuel Width Increase Evaluation

Number of Plates	^{235}U per Plate (g)	U wt%	^{235}U wt%	Fuel Width (cm)	Fuel Height (cm)	Plate Thickness (cm)	k_{eff}	σ	$k_{eff}+2\sigma$	k_s
23	22.0	75%	25%	6.6	56.0	0.115	0.91993	0.00092	0.92177	0.93987
23	22.0	75%	25%	7.0	56.0	0.115	0.93387	0.00093	0.93573	0.95383
23	22.0	75%	25%	7.0	56.0	0.119	0.92717	0.00090	0.92897	0.94707
23	21.5	75%	25%	7.0	56.0	0.115	0.92915	0.00087	0.93089	0.94899
23	22.0	75%	25%	7.0	63.0	0.115	0.92154	0.00087	0.92328	0.94138
17	22.0	75%	25%	7.1	56.0	0.115	0.90885	0.00093	0.91071	0.92881
23	22.0	75%	25%	7.1	56.0	0.200	0.81898	0.00089	0.82076	0.83886
23	22.0	75%	25%	7.15	56.0	0.119	0.93169	0.00086	0.93341	0.95151
22	22.0	75%	25%	7.15	56.0	0.119	0.92981	0.00092	0.93165	0.94975
23	21.5	75%	25%	7.15	56.0	0.119	0.92662	0.00090	0.92842	0.94652
23	22.0	75%	25%	7.15	61.0	0.119	0.92512	0.00091	0.92694	0.94504

Table 6.4.3-25 Summary of LEU MTR Bounding Configurations

Parameter	LEU Baseline	7.0 cm Active Width			7.1 cm Active Width		7.15 cm Active Width		
		Plate Thickness	^{235}U Content	Active Length	Plate Thickness	Number of Plates	Number of Plates	^{235}U Content	Active Length
Plate thickness [cm]	≥ 0.115	≥ 0.119	≥ 0.115	≥ 0.115	≥ 0.200	≥ 0.115	≥ 0.119	≥ 0.119	≥ 0.119
Clad thickness [cm]	≥ 0.02	≥ 0.02	≥ 0.02	≥ 0.02	≥ 0.02	≥ 0.02	≥ 0.02	≥ 0.02	≥ 0.02
Number of fuel plates	≤ 23	≤ 23	≤ 23	≤ 23	≤ 23	≤ 17	≤ 22	≤ 23	≤ 23
^{235}U content per plate [g]	≤ 22	≤ 22	≤ 21.5	≤ 22	≤ 22	≤ 22	≤ 22	≤ 21.5	≤ 22
Enrichment [wt % ^{235}U]	≤ 25	≤ 25	≤ 25	≤ 25	≤ 25	≤ 25	≤ 25	≤ 25	≤ 25
Active Width [cm]	≤ 6.6	≤ 7.0	≤ 7.0	≤ 7.0	≤ 7.1	≤ 7.1	≤ 7.15	≤ 7.15	≤ 7.15
Active Fuel Height [cm]	≥ 56	≥ 56	≥ 56	≥ 63	≥ 56	≥ 56	≥ 56	≥ 56	≥ 61
Maximum reactivity (k_s)	0.93987	0.94707	0.94899	0.94138	0.83886	0.92881	0.94975	0.94652	0.94504

Table 6.4.3-26 Summary of Previous Bounding Configurations for Use in High Mass LEU Calculations

Fuel ID	Plate Thickness [cm]	Clad Thickness [cm]	Number of Fuel Plates	^{235}U per Plate [g]	Enrichment [wt % ^{235}U]	Active Width [cm]	Active Height [cm]	Fuel Offset [cm]
25%-A	0.115	0.02	23	22	25	6.6	56	0.7
25%-B	0.119	0.02	23	22	25	7	56	0.7
25%-C	0.115	0.02	23	21.5	25	7	56	0.7
25%-D	0.115	0.02	23	22	25	7	63	0.7
25%-E	0.2	0.02	23	22	25	7.1	56	0.7
25%-F	0.115	0.02	17	22	25	7.1	56	0.7
25%-G	0.119	0.02	22	22	25	7.15	56	0.7
25%-H	0.119	0.02	23	21.5	25	7.15	56	0.7
25%-I	0.119	0.02	23	22	25	7.15	61	0.7
25%-J[1]	0.115	0.02	23	32	25	7.3	56	0.7
25%-K[1]	0.130	0.02	23	23.5	25	7.0	56	0.7
94%-A	0.115	0.02	23	18	94	6.6	56	0.7
94%-B	0.115	0.02	19	20	94	6.6	56	0.7
94%-C	0.115	0.02	23	16.5	94	7.3	56	0.7
94%-D	0.123	0.02	23	20	94	6.6	56	2.0
94%-E	0.2	0.02	19	21	94	6.6	56	0.7
94%-F	0.115	0.02	17	21	94	6.6	56	0.7

Note: All configurations previously evaluated as bounding are included with the exception of NISTR fuel plates. The split plate design adds an additional model complexity not required in the evaluations. The LEU high fissile mass analysis scope is designed to demonstrate that the addition of a partially loaded basket to the previous payloads is bounded by the maximum reactivities already documented. Conclusions drawn from the remaining payloads are applicable to the NISTR fuel.

[1] Content added in Section 6.4.3.14

Table 6.4.3-27 High Fissile Mass LEU (32 g ^{235}U per Plate) Analysis Results

Fuel ID[1]	Same Fuel All Baskets				32g ^{235}U PBL[2] - 7.3 cm Width		
	Full Load		Partial Top/Bottom			Full Load	Partial Load
	k_{eff}	Dancoff Factor	k_{eff}	Δk	k_{eff}	Δk	Δk
25%-A	0.92134	0.50241715	0.91073	-0.011	0.91254	-0.009	0.002
25%-B	0.92813	0.50706971	0.91656	-0.012	0.91521	-0.013	-0.001
25%-C	0.92913	0.50241715	0.91915	-0.010	0.91769	-0.011	-0.001
25%-D	0.92391	0.50241715	0.91091	-0.013	0.91053	-0.013	0.000
25%-E	0.81720	0.61588436	0.80189	-0.015	0.80451	-0.013	0.003
25%-F	0.91075	0.36430386	0.89951	-0.011	0.89608	-0.015	-0.003
25%-G	0.92995	0.48636374	0.91938	-0.011	0.91798	-0.012	-0.001
25%-H	0.92940	0.50706971	0.91356	-0.016	0.91640	-0.013	0.003
25%-I	0.92533	0.50706971	0.90939	-0.016	0.91298	-0.012	0.004
25%-J[3]	0.99842	0.50241715	0.98432	-0.014	--	--	--
94%-A	0.92885	0.50241715	0.91645	-0.012	0.91873	-0.010	0.002
94%-B	0.92823	0.41448367	0.91949	-0.009	0.91825	-0.010	-0.001
94%-C	0.92533	0.50241715	0.91439	-0.011	0.91572	-0.010	0.001
94%-D	0.93162	0.51188898	0.91978	-0.012	0.92071	-0.011	0.001
94%-E	0.85605	0.50536168	0.84241	-0.014	0.84414	-0.012	0.002
94%-F	0.92381	0.36430386	0.91394	-0.010	0.91466	-0.009	0.001

Note: LEU payload defined as 25%-K case in Table 6.4.3-27 is not evaluated for interface with the 32g ^{235}U top/bottom basket loading. As demonstrated in Table 6.4.3-30 the 25%-K case element reactivity is lower than other elements in this table. The table demonstrates that addition of a partial loaded basket reduces system reactivity for the full range of MTR fuel types making the evaluation of mixed load with the 25%-K case unnecessary.

[1] Fuel ID is the identifier for the fuel material contained in all baskets for the cases containing one fuel type, and for the fuel material in the middle baskets for cases containing two fuel types.

[2] Partial basket loading (PBL) in the top and bottom baskets. Partially loaded baskets contain four 32 g ^{235}U per plate LEU elements per basket loaded in locations 4, 5, 6 and 7 per Figure 6.3.3-5.

[3] LEU fuel material of 32 g ^{235}U per plate, up to 23 plates.

Table 6.4.3-28 LEU High Fissile Mass Bounding Configuration

Parameter	Value
Number of Elements per Basket	4
Plate thickness [cm]	≥ 0.115
Clad thickness [cm]	≥ 0.02
Number of fuel plates	≤ 23
^{235}U content per plate [g]	≤ 32
Enrichment [wt % ^{235}U]	≤ 25
Active Width [cm]	≤ 7.3
Active Fuel Height [cm]	≥ 56

Table 6.4.3-29 Cask Interior Moderator Density and Blocked Cell Study Results

Water Density	k_{eff} - No Block in Cells			k_{eff} - Cells Blocked		
(g/cc)	Top/Bottom	Middle	All	Top/Bottom	Middle	All
0.0001	0.27234	0.26713	0.23817	0.27245	0.26739	0.23954
0.05	0.40294	0.39430	0.35646	0.40162	0.39373	0.35399
0.1	0.48197	0.47202	0.42209	0.48063	0.47190	0.41877
0.15	0.53747	0.52908	0.46242	0.53688	0.52916	0.46267
0.2	0.58102	0.57382	0.49272	0.57990	0.57397	0.49199
0.25	0.61913	0.61263	0.51513	0.61741	0.61234	0.51569
0.3	0.64772	0.64313	0.53051	0.64984	0.64416	0.53452
0.35	0.67598	0.67399	0.54706	0.67618	0.67494	0.54860
0.4	0.70176	0.70168	0.56069	0.70205	0.70071	0.56383
0.45	0.72644	0.72472	0.57294	0.72649	0.72528	0.57630
0.5	0.74703	0.74779	0.58607	0.74782	0.74773	0.58752
0.55	0.76761	0.76773	0.59845	0.76797	0.77091	0.60062
0.6	0.78894	0.78853	0.60810	0.78536	0.78906	0.61363
0.65	0.80652	0.80700	0.61890	0.80456	0.80727	0.62501
0.7	0.82463	0.82581	0.63197	0.82236	0.82511	0.63753
0.75	0.83955	0.84342	0.64340	0.84073	0.84144	0.64965
0.8	0.85813	0.86053	0.65486	0.86006	0.86031	0.65927
0.85	0.87370	0.87748	0.66785	0.87507	0.87554	0.67184
0.875	0.88346	0.88416	0.67243	0.88172	0.88412	0.67783
0.9	0.89071	0.89426	0.67804	0.89148	0.89217	0.68348
0.925	0.89848	0.89942	0.68416	0.89951	0.90069	0.68737
0.95	0.90695	0.90763	0.69048	0.90568	0.90782	0.69599
0.975	0.91266	0.91418	0.69592	0.91351	0.91492	0.70057
0.9982	0.92071	0.92323	0.70202	0.91870	0.92264	0.70720

Table 6.4.3-30 LEU MTR Element Specification Studies (23.5g ^{235}U per Plate)

Enrichment [wt % ^{235}U]	Plate thickness [cm]	Clad thickness [cm]	Number of fuel plates	^{235}U per plate [g]	Active Width [cm]	k_{eff}	Delta to Base [Δk]
94	0.115	0.02	23	18	6.6	0.92885	N/A
25	0.13	0.02	23	23.5	7.0	0.92525	-0.0036
25	0.13	0.02	22	23.5	7.0	0.9237	-0.00515
25	0.13	0.02	21	23.5	7.0	0.92355	-0.0053
25	0.13	0.02	20	23.5	7.0	0.91981	-0.00904
25	0.13	0.02	19	23.5	7.0	0.91896	-0.00989

6.4.4 PWR and BWR Rods in a Rod Holder or Fuel Assembly Lattice

The NAC-LWT cask may transport up to 25 intact PWR or BWR fuel rods that are in a fuel rod holder or fuel assembly lattice. Up to 14 of 25 PWR or BWR fuel rods in a fuel rod holder may be classified as damaged.

6.4.4.1 Intact PWR and BWR Rods in a Rod Holder or Fuel Assembly Lattice

This section presents the criticality analysis for the NAC-LWT with up to 25 PWR or 25 BWR fuel rods of up to 5.0 wt % ^{235}U initial enrichment. No credit is taken for geometry control that is provided by the rod holder and no rod positions are specified for the rods in the lattice. Since various fuel rod arrangements may be shipped, the criticality of the PWR and BWR rods in the NAC-LWT cask cavity is studied to determine the optimum pitch and, therefore, the maximum k_{eff} for the cask. Both PWR and BWR studies evaluate rods unrestrained in the cavity. No credit is taken for any basket structure.

Cask k_{eff} versus rod fuel rod pitch is shown in Table 6.4.4-1 for the PWR analysis and Table 6.4.4-5 for the BWR study. The rod pitch, which corresponds to center-to-center spacing in a triangular and most reactive lattice formation, is varied from 1.128 cm to 5.997 cm. The limits 1.1278 cm and 5.997 cm correspond to the most compact and the most dispersed PWR rod formations in a triangular pitch, respectively. Due to the larger rod diameter, the BWR range is from 1.640 cm to 5.228 cm. These evaluations are based on an infinite array of casks with water at 1 gm/cc between the fuel rods and in the basket cavity. The neutron shield and cask exterior do not contain water and the results are reported for wet and dry clad gap configurations.

Table 6.4.4-1 and Table 6.4.4-5 show that a broad peak in k_{eff} occurs in the rod pitch range from 2.5 to 3.5 cm for the PWR rods and 3.0 to 4.0 for the BWR rods, and that there is no statistically significant difference between wet gap and dry gap reactivities. Therefore, the most reactive configuration is chosen for the PWR rod system with a wet gap and a pitch of 2.922 cm and $k_{eff} = 0.6082 \pm 0.0035$. The BWR rod most reactive configuration occurs at a pitch of 3.691 cm and a dry gap $k_{eff} = 0.7045 \pm 0.0033$. These pitches will be used in the subsequent moderator studies.

25 PWR or BWR Rods Moderator Density Criticality Evaluations for Normal Conditions

With the fuel rods at optimum pitch (2.922 cm, PWR, or 3.691 cm, BWR), Table 6.4.4-2 and Table 6.4.4-6 present the cask k_{eff} as a function of moderator density inside and outside the cask.

An infinite array of casks on a square pitch is modeled at three cask pitches: touching (99.7 cm), 2-foot surface-to-surface (160.7 cm), and ISO-container spacing (242.84 cm). The water moderator density is varied from 1.0 gm/cc to 0.0 gm/cc, and for normal conditions it is assumed

that the clad gap is dry and the neutron shield is filled with water. The results show an increase in reactivity with increasing internal moderator density. This indicates that moderator density changes due to increasing temperature have a negative reactivity effect. Low density moderation inside or outside of the cask does not produce abrupt increases in reactivity in comparison to other density values. There is no optimum at low density as expected from an undermoderated system. The calculations show that cask pitch has no significant impact on the reactivity of the cask array under normal conditions and that k_{eff} does not vary significantly when varying external moderator with constant full density internal moderator. For the PWR cases, the external moderator does not affect reactivity within statistical limits, and the most reactive case is chosen with both internal and external moderator density at 1.0 gm/cc. The k_{eff} in this case is 0.6070 ± 0.0033. Similarly, the most reactive BWR case is for a fully moderated interior, but a dry exterior, resulting in a k_{eff} of 0.7045 ± 0.0038. The external moderator does not affect reactivity since the fully moderated exterior case produces a slightly lower k_{eff} that is within statistics. For both the PWR and BWR analysis, the k_{eff} for the normal condition cask array with a dry cavity is very subcritical, i.e. ~ <0.1 and is insensitive to external moderator density variations.

Thus, up to 25 PWR or BWR rods with 5.0 wt % ^{235}U initial enrichment are acceptable in the NAC-LWT cask. An infinite array of casks with optimum interspersed moderation has been analyzed and the NAC-LWT cask with up to 25 PWR or BWR fuel rod of up to 5.0 wt % ^{235}U remains subcritical in all of the normal transport and accident conditions.

25 PWR or BWR Rods Moderator Density Criticality Evaluations for Accident Conditions

With the fuel rods at optimum pitch, Table 6.4.4-3 (PWR) and Table 6.4.4-7 (BWR) show the cask k_{eff} for the most reactive accident condition configuration as a function of moderator density variation in the cavity, neutron shield tank and outside the cask. Again, three cask spacings are presented: touching (99.7 cm), 2-foot surface-to-surface (160.7 cm), and the ISO-container spacing (242.84 cm). Moderator density is varied from 1.0 gm/cc to 0.0 gm/cc. For accident conditions it is assumed that the clad gap contains full density water and that the neutron shield tank is punctured and the moderator density in the tank is the same as the exterior moderator density. Again, the results show an increase in reactivity with increasing internal moderator density. Low density moderation inside or outside of the cask does not produce abrupt increases in reactivity in comparison to other density values. For both the PWR and BWR analyses, the calculations show that cask pitch does affect reactivity and that the k_{eff} for the accident condition cask array with a dry cavity, neutron shield and exterior is very subcritical, i.e. is less than 0.20. Reactivity is dominated by full density internal moderator. All other variations do not affect reactivity significantly. Therefore, the most reactive PWR case is chosen with casks touching and the moderator density at 1.0 gm/cc in the cavity and at 0.0 gm/cc in the neutron shield tank

as well as exterior. The k_{eff} in this case is 0.6077 ± 0.0030. Likewise, the most reactive BWR case is chosen with casks that are 242.82 cm apart (ISO case) and the moderator density at 1.0 gm/cc in the cavity and at 0.0 gm/cc in the neutron shield tank as well as exterior. The k_{eff} in this case is 0.7135 ± 0.0033.

Single Package Criticality Evaluation

To satisfy 10 CFR 71.55(b)(3), an analysis of the reflection of the containment system (inner shell) by water is performed on a single wet cask. Successive replacement of the cask radial shields with water reflection is also evaluated. The reactivity of the PWR system does not vary with statistical significance as each radial shield of the cask is replaced by water, from a k_{eff} = 0.6008 ± 0.0034 (k_s = 0.6215) for the full cask surrounded by water, to a k_{eff} = 0.6001 ± 0.0030 (k_s = 0.6200) for the inner shell surrounded by water. BWR results are k_{eff}s of 0.6932 and 0.6943 for a full cask reflected and the inner shell water reflected, respectively. The results from this evaluation can be seen in Table 6.4.4-4 (PWR) and Table 6.4.4-8 (BWR).

Conclusion

A calculation of k_s under normal and accident conditions can now be made based on the previous results and based on the KENO-Va validation statistics presented in Section 6.5.1 for low enriched uranium fuel. The value k_s is calculated based on the KENO-Va Monte Carlo average plus any biases and uncertainties associated with the methods and the modeling, i.e.:

$$k_s = k_{eff} + 2\sigma_{mc} + \Delta k_{Bias} + \Delta k_{BU}$$

In the validation presented in Section 6.5.1, a bias of 0.0052 (allowance for under prediction of k_{eff}) and a 95/95 method uncertainty of ± 0.0087 was determined. With this bias and uncertainty, the equation for k_s becomes:

$$k_s = k_{eff} + 2\sigma_{mc} + 0.0052 + 0.0087$$

Thus, k_s = 0.6275 under normal conditions for an infinite array of NAC-LWT casks loaded with 25 PWR design basis fuel rods and a flooded basket cavity and exterior. This is below the 0.95 regulatory limit. Under accident conditions, k_s = 0.6276 for an infinite array of NAC-LWT casks loaded with 25 PWR design basis fuel rods and with a flooded basket cavity and dry neutron shield and exterior.

Under normal conditions, k_s = 0.7251 for an infinite array of NAC-LWT casks loaded with 25 BWR design basis fuel rods and a flooded basket cavity and a dry exterior. This is below the 0.95 regulatory limit. Under accident conditions, k_s = 0.7340 for an infinite array of NAC-LWT casks loaded with 25 BWR design basis fuel rods and with a flooded basket cavity and dry neutron shield and exterior.

For both normal and accident conditions, the calculated k_{eff} values, after correction for biases and uncertainties, are below the 0.95 limit. The analyses demonstrate that, including all calculational and mechanical uncertainties, an infinite array of NAC-LWT casks with 25 PWR or BWR fuel rods remains subcritical under normal and accident conditions.

For both normal and accident conditions, the calculated k_{eff} values, after correction for biases and uncertainties, are below the 0.95 limit. The analyses demonstrate that, including all calculational and mechanical uncertainties, an infinite array of NAC-LWT casks with 25 PWR fuel remains subcritical under normal and accident conditions.

6.4.4.2 Damaged PWR and BWR Rods in a Rod Holder

This section presents the criticality analysis for the NAC-LWT with 25 PWR or BWR fuel rods of up to 5.0 wt % ^{235}U initial enrichment classified as damaged. Although the contents is limited to 14 damaged fuel rods in a 25-rod shipment, the analysis conservatively considers all 25 rods as failing during transport. No credit is taken for any parasitic absorption in the basket, fuel can or rod holder structure. Credit is taken for the rod holder weldment to contain the fissile material during water-fuel mixture studies. Criticality analyses are performed to satisfy the criticality safety requirements of 10 CFR Parts 71.55 and 71.59, as well as IAEA Transportation Safety Standards (TS-R-1). A single cask evaluation is also performed to comply with 10CFR71.55(b)(3). The analyses demonstrate that, including all calculational and mechanical uncertainties, the NAC-LWT is subcritical during normal and accident conditions with up to 25 damaged PWR or BWR rods.

Damaged Fuel Rod Evaluation – Heterogeneous (Rod) Configurations

Damaged fuel rods are evaluated in heterogeneous configurations by analyzing unclad fuel rods in a triangular pitch. Removing the cladding conservatively removes any potential parasitic absorbers while increasing the available volume for water moderator. Three rod arrays are considered: 25 rods, 37 rods, and 61 rods. The latter two arrays are complete hexagonal arrays. The limiting pitch is determined for each PWR and BWR array. The fuel region cross-sectional area is conserved in each of the configurations. The fuel rod radii for the various arrays are summarized in Table 6.4.4-19.

Water Exterior Evaluations

As shown in Table 6.4.4-9 through Table 6.4.4-14 and Figure 6.4.4-1 and Figure 6.4.4-2, the system reactivity increases as the number of rods is increased. As the number of rods increases, so does the cross-sectional area occupied by the rod array. Since the canister provides a limited cross-sectional area for the rod array, evaluations for arrays larger than 61 rods are not required.

Based on the can outer width of 5.5 inches (13.97 cm), the can cross-sectional area is 195.16 cm^2. Using the rod radius, rod pitch, and number of rods, the area of an enclosing hexagon is calculated for each of the three PWR and BWR arrays, shown in Table 6.4.4-19. This area is compared to the can area. For both BWR and PWR fuel, the 37-rod array results in an enclosing area that is larger than the can. A further increase in the cross-sectional lattice area, required for maximum reactivity, is seen in the 61-rod array. Therefore, the use of a 61-rod array is bounding for the NAC-LWT with no larger arrays requiring analysis.

Void Exterior/Preferential Flooding Evaluations

To increase the coupling of adjacent casks in the infinite array, system reactivity is evaluated for two additional scenarios: void exterior with fully flooded cask cavity and void exterior with preferentially flooded cask cavity. Preferential flooding removes the cask interior moderator outside the fuel rod lattice providing for increased neutronic interaction between casks in the infinite array. The 61-rod hexagonal array is employed.

As shown in Table 6.4.4-15 and Table 6.4.4-16, the void exterior, completely flooded cask cavity, scenario produced slightly higher reactivities than the scenario containing a water cask exterior. This is the result of increased neutronic interaction between casks and indicates the need for preferential flooding evaluations.

The preferential flooding model encloses the 61-rod array in a fully flooded cylinder with the remaining cask cavity filled with the exterior moderator material. This allows the array to remain flooded while voiding from the remaining cask cavity space, the neutron shield and cask exterior. A range of rod pitches is evaluated for both BWR and PWR fuel to determine the maximum reactivity pitch in this configuration. Given the increased neutronic interaction between casks, the most reactive rod pitch of the previously evaluated isolated cask changes. A check is also made to determine whether the modeled array remains conservative with respect to the envelope of the rod holder.

As shown in Table 6.4.4-17 and Table 6.4.4-18, system reactivity is much higher given the preferential flooding scenario. As shown in Table 6.4.4-20, the 61-rod array remains conservative for BWR fuel under the preferential flooding scenario. A 61-rod array of PWR fuel at its most reactive pitch produces a cross sectional area slightly smaller than that produced by the rod holder exterior (186.9 cm^2 versus 195.2 cm^2 calculated for the canister). However, the area calculation takes no credit for the rod holder wall material and fuel rod tube insert, which reduce the available cross-sectional area significantly. A larger array of PWR fuel rods (with reduced diameter) is, therefore, not investigated.

Single Cask Evaluation

10 CFR 71.55(b)(3) requires an evaluation of the NAC-LWT with the containment system fully reflected by water. The containment for the NAC-LWT is the cask inner shell. While no operating condition results in a removal of the cask outer shell and lead gamma shield, the most reactive preferential flooding case for BWR fuel is reevaluated by removing the lead and outer shells (including neutron shield), and reflecting the system by water at full density on the X and Y faces (the Z boundary condition remains mirrored). The results of this analysis, a k_s = 0.60117, demonstrates that the system reactivity of the single cask, with containment fully reflected, is significantly below regulatory limits.

Homogenized Fuel/Water Evaluation

A homogenized mixture of UO_2 and water is analyzed in a finite axial model with an infinite array of casks. The width chosen for the fuel homogenization, 13.97 cm, is conservative in that the fuel material must be enclosed by the inner dimension of the rod holder.

Given the maximum fuel volume for 25 BWR fuel rods, 11588 cm^3, and a UO_2 volume fraction, the height of the homogenized mixture of UO_2 and water is calculated. For a UO_2 volume fraction of 0.16, the cross-sectional area of UO_2 is 31.23 cm^2 (195.16 $cm^2 \times 0.16$) and the resultant axial extent is 371.11 cm. The fuel mixture is modeled at the top of the cask cavity.

The limiting UO_2 volume fraction is calculated using a void cask cavity (i.e., preferential flooding), cask exterior and neutron shield to maximize neutron interaction in the cask array. As shown in Table 6.4.4-21 and Figure 6.4.4-3, the maximum reactivity is calculated with a UO_2 volume fraction of 16 percent.

Four sets of moderator density studies are performed, as shown in Table 6.4.4-22 through Table 6.4.4-25. The studies all serve to demonstrate the maximum reactivity configuration of the voided cask cavity and cask exterior. All cases with a voided cask exterior also have a voided neutron shield; thus, the accident condition of loss of neutron shield is explicitly considered.

Single Cask Evaluation

10 CFR 71.55(b)(3) requires an evaluation of the NAC-LWT with the containment system fully reflected by water. The containment for the NAC-LWT is the cask inner shell. While no operating condition results in a removal of the cask outer shell and lead gamma shield, each of the partial flooding cases is reevaluated by removing the lead and outer shells (including neutron shield), and reflecting the system by full density water on the X and Y faces. The results of this analysis are shown in Table 6.4.4-26 and demonstrate that the system reactivity decreases with the removal of the lead, outer shell and neutron shield reflectors.

Code Bias and Code Bias Uncertainty Adjustments

A calculation of k_s under normal and accident conditions can now be made based on the results for the heterogeneous rod and the homogenized fuel/water evaluatons. Since the fuel rod (heterogeneous) configuration resulted in a significantly higher k_{eff} than the homogeneous configuration the KENO-Va validation statistics presented in Section 6.5.1 for low enriched uranium fuel are applied. The value k_s is calculated based on the KENO-Va Monte Carlo average plus any biases and uncertainties associated with the methods and the modeling, i.e.:

$$k_s = k_{eff} + 2\sigma_{mc} + \Delta k_{Bias} + \Delta k_{BU}$$

In the validation presented in Section 6.5.1, a bias of 0.0052 (allowance for under prediction of k_{eff}) and a 95/95 method uncertainty of ± 0.0087 were determined. With this bias and uncertainty, the equation for k_s becomes:

$$k_s = k_{eff} + 2\sigma_{mc} + 0.0052 + 0.0087$$

Each of the resulting tables for arrays of damaged fuel rods, Table 6.4.4-19 through Table 6.4.4-26, includes the calculated k_s. Mixtures with significantly lower k_{eff} results are not limiting.

Under accident conditions (i.e., dry neutron shield) and preferential flooding, $k_s = 0.89950$ for an infinite array of NAC-LWT casks loaded with 25 BWR design basis damaged fuel rods. The calculated k_s for PWR fuel rods is 0.77156.

The calculated k_{eff} values, after correction for biases and uncertainties, are below the 0.95 limit. The analyses demonstrate that, including all calculational and mechanical uncertainties, an infinite array of NAC-LWT casks with 25 PWR or BWR damaged fuel rods remains subcritical under normal and accident conditions.

Figure 6.4.4-1 Maximum Reactivity Pitch Determination for Damaged BWR Rod Arrays – Water Exterior

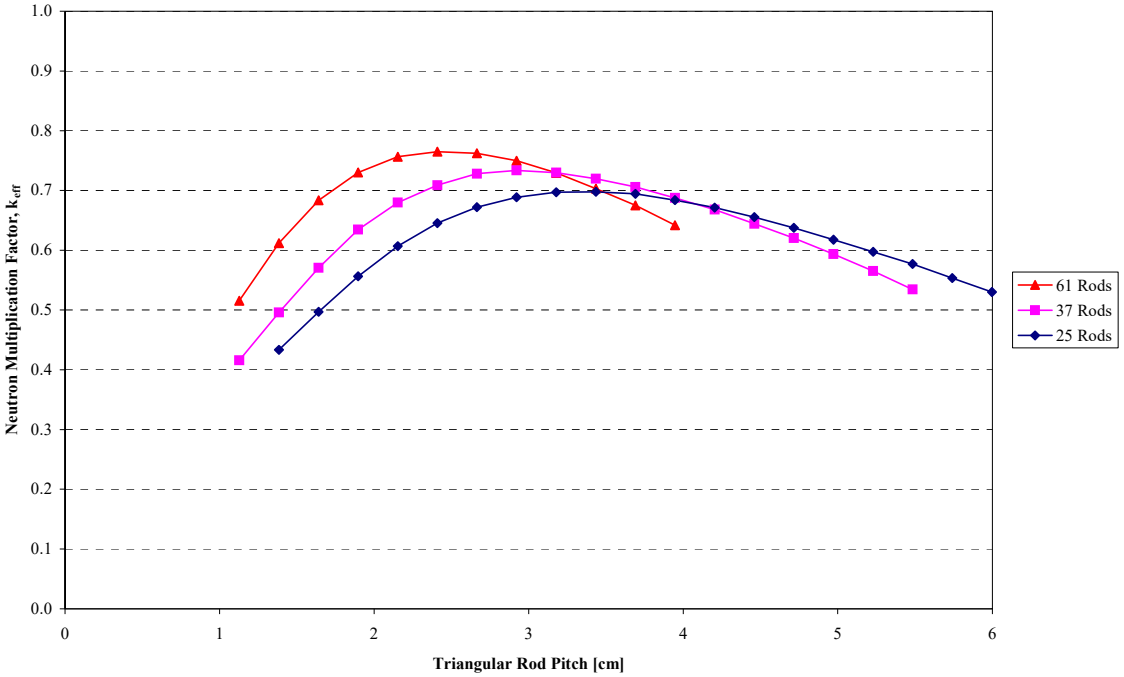

Figure 6.4.4-2 Maximum Reactivity Pitch Determination for Damaged PWR Rod Arrays – Water Exterior

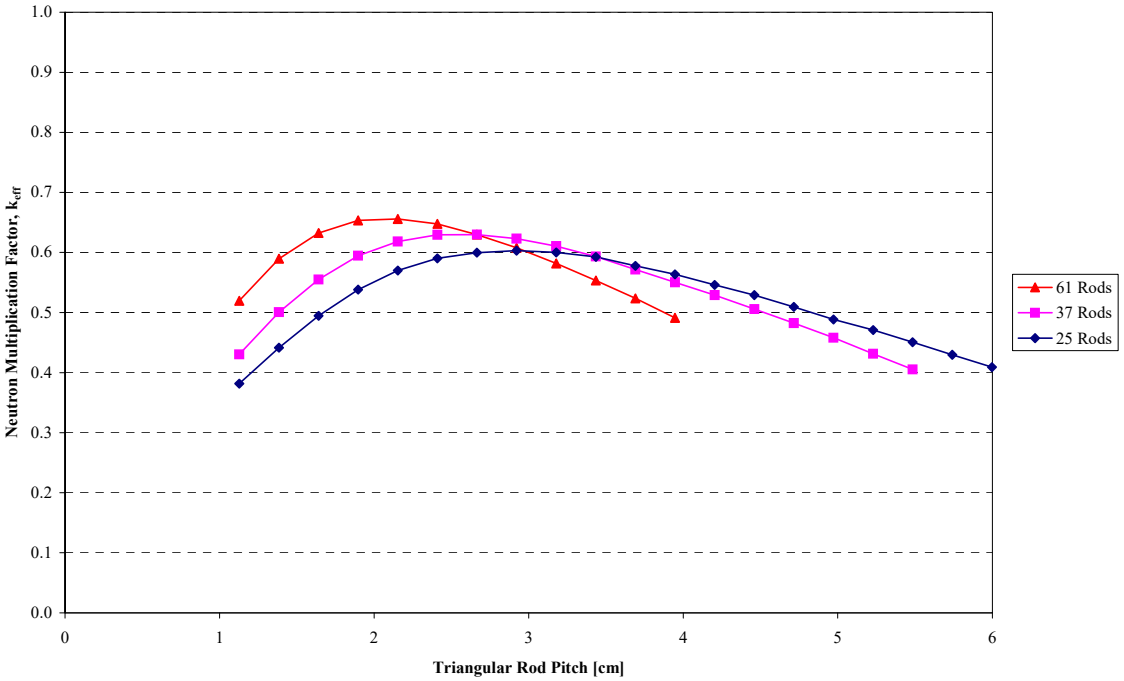

Figure 6.4.4-3 Maximum Reactivity Determination for Homogenized UO_2/Water Mixture

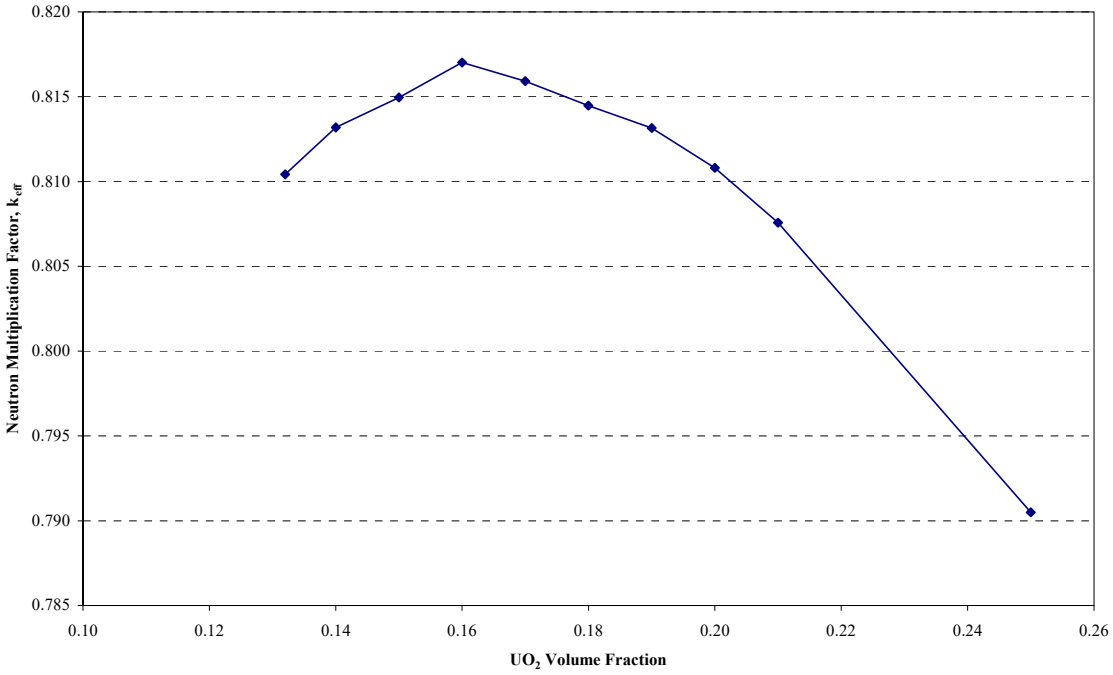

Table 6.4.4-1 NAC-LWT Cask with 25 PWR Rods, k_{eff} versus Fuel Rod Pitch, 5.0 wt % ^{235}U Initial Enrichment

Fuel Rod Pitch (cm)	Cask $k_{eff} \pm \sigma$ Wet Gap	Cask $k_{eff} \pm \sigma$ Dry Gap
1.12769	0.3581 ± 0.0027	0.3577 ± 0.0029
1.38399	0.4150 ± 0.0030	0.4167 ± 0.0033
1.64029	0.4757 ± 0.0032	0.4705 ± 0.0034
1.89659	0.5250 ± 0.0039	0.5268 ± 0.0032
2.15289	0.5578 ± 0.0035	0.5588 ± 0.0035
2.40919	0.5841 ± 0.0034	0.5801 ± 0.0035
2.66539	0.6018 ± 0.0033	0.6030 ± 0.0034
2.92169	0.6082 ± 0.0035	0.6037 ± 0.0035
3.17799	0.6037 ± 0.0034	0.6102 ± 0.0035
3.43429	0.5988 ± 0.0033	0.6002 ± 0.0033
3.69059	0.5838 ± 0.0034	0.5847 ± 0.0035
3.94689	0.5743 ± 0.0036	0.5725 ± 0.0033
4.20319	0.5610 ± 0.0032	0.5582 ± 0.0027
4.45949	0.5415 ± 0.0028	0.5464 ± 0.0036
4.71579	0.5217 ± 0.0027	0.5286 ± 0.0026
4.97209	0.5113 ± 0.0028	0.5109 ± 0.0028
5.22839	0.4858 ± 0.0026	0.4885 ± 0.0032
5.48459	0.4756 ± 0.0026	0.4763 ± 0.0030
5.74089	0.4562 ± 0.0029	0.4564 ± 0.0029
5.99719	0.4402 ± 0.0029	0.4385 ± 0.0028

Table 6.4.4-2 Reactivity with 25 PWR Rods vs. Basket Moderator Density, Normal Conditions, Infinite Array of Casks

Moderator Density	Casks Touching	2 Foot Surf.-to-Surf.	ISO Container 242.84 cm Pitch
Dry Exterior, Vary Internal Density			
0.0000	0.0413 ± 0.0004	0.0410 ± 0.0004	0.0410 ± 0.0005
0.0010	0.0414 ± 0.0005	0.0419 ± 0.0004	0.0421 ± 0.0004
0.0100	0.0483 ± 0.0005	0.0477 ± 0.0006	0.0488 ± 0.0005
0.0250	0.0652 ± 0.0008	0.0664 ± 0.0008	0.0645 ± 0.0008
0.0500	0.1026 ± 0.0014	0.1036 ± 0.0012	0.1051 ± 0.0012
0.0750	0.1429 ± 0.0017	0.1424 ± 0.0016	0.1453 ± 0.0015
0.1000	0.1845 ± 0.0021	0.1828 ± 0.0019	0.1860 ± 0.0022
0.2000	0.3075 ± 0.0029	0.3053 ± 0.0027	0.3070 ± 0.0026
0.4000	0.4296 ± 0.0033	0.4237 ± 0.0034	0.4265 ± 0.0036
0.6000	0.4959 ± 0.0036	0.4988 ± 0.0037	0.4931 ± 0.0030
0.8000	0.5615 ± 0.0035	0.5562 ± 0.0038	0.5560 ± 0.0034
0.9000	0.5823 ± 0.0035	0.5868 ± 0.0033	0.5866 ± 0.0036
1.0000	0.6056 ± 0.0036	0.6002 ± 0.0035	0.6030 ± 0.0030
Wet Interior, Vary External Density			
0.0000	0.5993 ± 0.0031	0.6027 ± 0.0036	0.6035 ± 0.0036
0.0010	0.5976 ± 0.0036	0.6021 ± 0.0034	0.6028 ± 0.0035
0.0100	0.6079 ± 0.0036	0.6052 ± 0.0037	0.6005 ± 0.0035
0.0250	0.6050 ± 0.0036	0.6034 ± 0.0033	0.6027 ± 0.0036
0.0500	0.6003 ± 0.0030	0.6005 ± 0.0034	0.6100 ± 0.0036
0.0750	0.6072 ± 0.0036	0.6009 ± 0.0033	0.5996 ± 0.0035
0.1000	0.6042 ± 0.0036	0.6038 ± 0.0036	0.5995 ± 0.0030
0.2000	0.6032 ± 0.0035	0.6034 ± 0.0035	0.6016 ± 0.0036
0.4000	0.6050 ± 0.0031	0.6032 ± 0.0031	0.5987 ± 0.0034
0.6000	0.6025 ± 0.0032	0.6071 ± 0.0037	0.6003 ± 0.0031
0.8000	0.5975 ± 0.0030	0.6045 ± 0.0034	0.6040 ± 0.0030
0.9000	0.5993 ± 0.0034	0.6033 ± 0.0039	0.6082 ± 0.0037
1.0000	0.6037 ± 0.0037	0.5970 ± 0.0033	0.6036 ± 0.0033
Vary Interior and Exterior Density Simultaneously			
0.0000	0.0407 ± 0.0005	0.0405 ± 0.0004	0.0409 ± 0.0004
0.0010	0.0418 ± 0.0004	0.0411 ± 0.0004	0.0418 ± 0.0005
0.0100	0.0480 ± 0.0005	0.0481 ± 0.0005	0.0488 ± 0.0005
0.0250	0.0669 ± 0.0008	0.0656 ± 0.0008	0.0649 ± 0.0007
0.0500	0.1051 ± 0.0012	0.1002 ± 0.0013	0.1034 ± 0.0012
0.0750	0.1415 ± 0.0016	0.1430 ± 0.0016	0.1464 ± 0.0018
0.1000	0.1850 ± 0.0020	0.1865 ± 0.0022	0.1826 ± 0.0019
0.2000	0.3014 ± 0.0025	0.3043 ± 0.0028	0.3011 ± 0.0027
0.4000	0.4245 ± 0.0030	0.4246 ± 0.0033	0.4193 ± 0.0032
0.6000	0.5022 ± 0.0037	0.4916 ± 0.0036	0.4998 ± 0.0031
0.8000	0.5567 ± 0.0034	0.5551 ± 0.0029	0.5550 ± 0.0034
0.9000	0.5865 ± 0.0035	0.5810 ± 0.0031	0.5725 ± 0.0033
1.0000	0.6070 ± 0.0033	0.6012 ± 0.0032	0.6012 ± 0.0034

Table 6.4.4-3 Reactivity with 25 PWR Rods vs. Basket Moderator Density, Accident Conditions, Infinite Array of Casks

Moderator Specific Gravity	Casks Touching	2 Foot Surface-to-Surface	ISO 242.84 cm Pitch
Dry Exterior, Vary Internal Density			
0.0000	0.1127 ± 0.0008	0.1135 ± 0.0008	0.1125 ± 0.0006
0.0010	0.1158 ± 0.0007	0.1161 ± 0.0007	0.1149 ± 0.0007
0.0100	0.1365 ± 0.0009	0.1377 ± 0.0009	0.1355 ± 0.0009
0.0250	0.1782 ± 0.0013	0.1778 ± 0.0012	0.1761 ± 0.0013
0.0500	0.2438 ± 0.0019	0.2392 ± 0.0018	0.2401 ± 0.0019
0.0750	0.2971 ± 0.0021	0.2974 ± 0.0021	0.2982 ± 0.0022
0.1000	0.3442 ± 0.0028	0.3404 ± 0.0027	0.3392 ± 0.0025
0.2000	0.4417 ± 0.0034	0.4417 ± 0.0030	0.4381 ± 0.0035
0.4000	0.4958 ± 0.0031	0.4941 ± 0.0032	0.4852 ± 0.0036
0.6000	0.5290 ± 0.0033	0.5228 ± 0.0034	0.5297 ± 0.0037
0.8000	0.5701 ± 0.0036	0.5689 ± 0.0034	0.5667 ± 0.0031
0.9000	0.5952 ± 0.0034	0.5842 ± 0.0030	0.5853 ± 0.0034
1.0000	0.6045 ± 0.0033	0.6040 ± 0.0032	0.6101 ± 0.0032
Wet Interior, Vary External Density			
0.0000	0.6008 ± 0.0033	0.6057 ± 0.0032	0.6047 ± 0.0034
0.0010	0.6053 ± 0.0033	0.6023 ± 0.0031	0.6046 ± 0.0036
0.0100	0.6010 ± 0.0033	0.6031 ± 0.0030	0.6036 ± 0.0032
0.0250	0.6058 ± 0.0035	0.6056 ± 0.0034	0.6002 ± 0.0029
0.0500	0.6052 ± 0.0035	0.5996 ± 0.0036	0.6028 ± 0.0037
0.0750	0.5991 ± 0.0035	0.6043 ± 0.0032	0.6017 ± 0.0034
0.1000	0.6022 ± 0.0037	0.6007 ± 0.0033	0.6081 ± 0.0036
0.2000	0.5975 ± 0.0033	0.6064 ± 0.0034	0.6016 ± 0.0032
0.4000	0.6063 ± 0.0038	0.6020 ± 0.0032	0.6090 ± 0.0035
0.6000	0.6063 ± 0.0032	0.6024 ± 0.0032	0.6014 ± 0.0035
0.8000	0.6044 ± 0.0035	0.6016 ± 0.0035	0.6018 ± 0.0034
0.9000	0.6010 ± 0.0033	0.6069 ± 0.0029	0.6041 ± 0.0035
1.0000	0.5986 ± 0.0031	0.6024 ± 0.0038	0.6060 ± 0.0034
Vary Interior and Exterior Density Simultaneously			
0.0000	0.1136 ± 0.0006	0.1110 ± 0.0006	0.1134 ± 0.0007
0.0010	0.1100 ± 0.0006	0.0985 ± 0.0007	0.0825 ± 0.0006
0.0100	0.0989 ± 0.0008	0.0696 ± 0.0007	0.0556 ± 0.0007
0.0250	0.1031 ± 0.0010	0.0769 ± 0.0010	0.0670 ± 0.0008
0.0500	0.1312 ± 0.0013	0.1090 ± 0.0013	0.1037 ± 0.0014
0.0750	0.1628 ± 0.0019	0.1483 ± 0.0018	0.1453 ± 0.0016
0.1000	0.1977 ± 0.0021	0.1854 ± 0.0020	0.1853 ± 0.0020
0.2000	0.3101 ± 0.0029	0.3018 ± 0.0025	0.3069 ± 0.0028
0.4000	0.4269 ± 0.0029	0.4287 ± 0.0032	0.4225 ± 0.0035
0.6000	0.4965 ± 0.0033	0.4952 ± 0.0035	0.4983 ± 0.0038
0.8000	0.5606 ± 0.0032	0.5614 ± 0.0035	0.5572 ± 0.0035
0.9000	0.5803 ± 0.0032	0.5782 ± 0.0037	0.5837 ± 0.0036
1.0000	0.6077 ± 0.0030	0.6011 ± 0.0037	0.5974 ± 0.0036

Table 6.4.4-4 PWR Rods, Single Package 10 CFR 71.55(b)(3) Evaluation k_{eff} Summary

Description	$k_{eff} \pm \sigma$	$k_{eff} + 2\sigma$
Single Cask / Inner Shell Reflected with H_2O	0.6001 ± 0.0030	0.6061
Single Cask / Inner Shell and Lead Reflected with H_2O	0.6079 ± 0.0036	0.6151
Single Cask / Inner Shell, Lead & Outer Shell Reflected with H_2O	0.6020 ± 0.0031	0.6082
Single Intact Cask Reflected with H_2O	0.6008 ± 0.0034	0.6076

Table 6.4.4-5 NAC-LWT Cask with 25 BWR rods, k_{eff} versus Fuel Rod Pitch, 5.0 wt % ^{235}U Initial Enrichment

Fuel Rod Pitch (cm)	Cask $k_{eff} \pm \sigma$ Wet Gap			Cask $k_{eff} \pm \sigma$ Dry Gap		
1.64029	0.45706	±	0.00286	0.45873	±	0.00342
1.89659	0.52452	±	0.00385	0.52673	±	0.00355
2.15289	0.58707	±	0.00413	0.57828	±	0.00381
2.40919	0.62675	±	0.00393	0.62288	±	0.00333
2.66539	0.66556	±	0.00348	0.66648	±	0.00382
2.92169	0.68714	±	0.00383	0.68098	±	0.00317
3.17799	0.69181	±	0.00380	0.70311	±	0.00372
3.43429	0.69862	±	0.00368	0.70173	±	0.00300
3.69059	0.70297	±	0.00367	0.70447	±	0.00333
3.94689	0.69617	±	0.00347	0.69925	±	0.00329
4.20319	0.68521	±	0.00315	0.68556	±	0.00301
4.45949	0.67665	±	0.00369	0.6743	±	0.00337
4.71579	0.65473	±	0.00331	0.66008	±	0.00322
4.97209	0.64283	±	0.00344	0.64691	±	0.00330
5.22839	0.62652	±	0.00300	0.62668	±	0.00293

Table 6.4.4-6 Reactivity with 25 BWR Rods vs. Basket Moderator Density, Normal Conditions, Infinite Array of Casks

Moderator Specific Gravity	Casks Touching			2 Foot Surface-to-Surface			ISO 242.82 cm		
Dry Exterior, Vary Internal Density									
0.0000	0.05656	+ OR -	0.00055	0.05605	+ OR -	0.00059	0.05682	+ OR -	0.00057
0.0010	0.05819	+ OR -	0.00054	0.05788	+ OR -	0.00052	0.05871	+ OR -	0.00055
0.0100	0.06800	+ OR -	0.00062	0.06777	+ OR -	0.00073	0.06698	+ OR -	0.00065
0.0250	0.09072	+ OR -	0.00091	0.09067	+ OR -	0.00099	0.09127	+ OR -	0.00093
0.0500	0.13923	+ OR -	0.00146	0.13684	+ OR -	0.00140	0.13990	+ OR -	0.00125
0.0750	0.18606	+ OR -	0.00191	0.18738	+ OR -	0.00173	0.18799	+ OR -	0.00184
0.1000	0.23476	+ OR -	0.00216	0.23439	+ OR -	0.00210	0.23364	+ OR -	0.00212
0.2000	0.38517	+ OR -	0.00344	0.37607	+ OR -	0.00269	0.37838	+ OR -	0.00317
0.4000	0.53477	+ OR -	0.00344	0.53398	+ OR -	0.00357	0.53238	+ OR -	0.00399
0.6000	0.61570	+ OR -	0.00363	0.61111	+ OR -	0.00332	0.61508	+ OR -	0.00342
0.8000	0.66499	+ OR -	0.00388	0.66829	+ OR -	0.00360	0.66555	+ OR -	0.00367
0.9000	0.67966	+ OR -	0.00366	0.68529	+ OR -	0.00334	0.68097	+ OR -	0.00328
1.0000	0.69240	+ OR -	0.00386	0.70201	+ OR -	0.00364	0.69756	+ OR -	0.00346
Moderator Specific Gravity	**Casks Touching**			**2 Foot Surface-to-Surface**			**ISO 242.82 cm**		
Wet Interior, Vary External Density									
0.0000	0.69610	+ OR -	0.00339	0.69135	+ OR -	0.00338	0.69935	+ OR -	0.00329
0.0010	0.70161	+ OR -	0.00391	0.70301	+ OR -	0.00358	0.69066	+ OR -	0.00388
0.0100	0.69020	+ OR -	0.00397	0.69402	+ OR -	0.00352	0.70044	+ OR -	0.00329
0.0250	0.69884	+ OR -	0.00379	0.69871	+ OR -	0.00389	0.70458	+ OR -	0.00381
0.0500	0.69110	+ OR -	0.00349	0.69663	+ OR -	0.00384	0.69940	+ OR -	0.00326
0.0750	0.69634	+ OR -	0.00374	0.70282	+ OR -	0.00323	0.69400	+ OR -	0.00373
0.1000	0.69592	+ OR -	0.00367	0.69793	+ OR -	0.00317	0.69605	+ OR -	0.00352
0.2000	0.69566	+ OR -	0.00323	0.69491	+ OR -	0.00368	0.69803	+ OR -	0.00339
0.4000	0.69463	+ OR -	0.00382	0.69520	+ OR -	0.00331	0.70063	+ OR -	0.00348
0.6000	0.69541	+ OR -	0.00364	0.69413	+ OR -	0.00337	0.69327	+ OR -	0.00354
0.8000	0.69669	+ OR -	0.00329	0.69355	+ OR -	0.00380	0.69196	+ OR -	0.00365
0.9000	0.69587	+ OR -	0.00348	0.70373	+ OR -	0.00343	0.70134	+ OR -	0.00335
1.0000	0.70298	+ OR -	0.00377	0.70245	+ OR -	0.00365	0.69863	+ OR -	0.00333
Moderator Specific Gravity	**Casks Touching**			**2 Foot Surface-to-Surface**			**ISO 242.82 cm**		
Vary Interior and Exterior Density Simultaneously									
0.0000	0.05730	+ OR -	0.00053	0.05650	+ OR -	0.00052	0.05718	+ OR -	0.00049
0.0010	0.05797	+ OR -	0.00060	0.05815	+ OR -	0.00056	0.05839	+ OR -	0.00059
0.0100	0.06703	+ OR -	0.00062	0.06801	+ OR -	0.00070	0.06772	+ OR -	0.00074
0.0250	0.09224	+ OR -	0.00088	0.09213	+ OR -	0.00091	0.09063	+ OR -	0.00087
0.0500	0.14064	+ OR -	0.00150	0.13757	+ OR -	0.00153	0.13709	+ OR -	0.00145
0.0750	0.18790	+ OR -	0.00202	0.18714	+ OR -	0.00212	0.18650	+ OR -	0.00176
0.1000	0.23532	+ OR -	0.00225	0.23607	+ OR -	0.00229	0.23225	+ OR -	0.00256
0.2000	0.38056	+ OR -	0.00314	0.38750	+ OR -	0.00297	0.37600	+ OR -	0.00334
0.4000	0.53150	+ OR -	0.00323	0.53738	+ OR -	0.00338	0.53434	+ OR -	0.00372
0.6000	0.61988	+ OR -	0.00371	0.61154	+ OR -	0.00338	0.61457	+ OR -	0.00380
0.8000	0.66446	+ OR -	0.00377	0.66538	+ OR -	0.00334	0.66393	+ OR -	0.00362
0.9000	0.68590	+ OR -	0.00405	0.68149	+ OR -	0.00338	0.68109	+ OR -	0.00357
1.0000	0.70435	+ OR -	0.00312	0.69210	+ OR -	0.00383	0.69897	+ OR -	0.00348

Table 6.4.4-7 Reactivity with 25 BWR Rods vs. Basket Moderator Density, Accident Conditions, Infinite Array of Casks

Moderator Specific Gravity	Casks Touching			2 Foot Surface-to-Surface			ISO 242.82 cm		
Dry Exterior, Vary Internal Density									
0.0000	0.16678	+ OR -	0.00082	0.16532	+ OR -	0.00081	0.16417	+ OR -	0.00076
0.0010	0.16927	+ OR -	0.00092	0.16818	+ OR -	0.00076	0.16919	+ OR -	0.00083
0.0100	0.19533	+ OR -	0.00098	0.19554	+ OR -	0.00111	0.19714	+ OR -	0.00108
0.0250	0.24529	+ OR -	0.00150	0.24317	+ OR -	0.00136	0.24647	+ OR -	0.00156
0.0500	0.32172	+ OR -	0.00192	0.32000	+ OR -	0.00171	0.32349	+ OR -	0.00190
0.0750	0.38479	+ OR -	0.00267	0.38527	+ OR -	0.00234	0.38571	+ OR -	0.00253
0.1000	0.44132	+ OR -	0.00298	0.43394	+ OR -	0.00301	0.43722	+ OR -	0.00262
0.2000	0.56027	+ OR -	0.00330	0.56105	+ OR -	0.00321	0.55792	+ OR -	0.00334
0.4000	0.62723	+ OR -	0.00380	0.63534	+ OR -	0.00388	0.62068	+ OR -	0.00368
0.6000	0.65834	+ OR -	0.00371	0.65642	+ OR -	0.00342	0.65566	+ OR -	0.00399
0.8000	0.68180	+ OR -	0.00370	0.67879	+ OR -	0.00333	0.68134	+ OR -	0.00369
0.9000	0.69219	+ OR -	0.00333	0.69177	+ OR -	0.00348	0.69876	+ OR -	0.00338
1.0000	0.70574	+ OR -	0.00346	0.70062	+ OR -	0.00308	0.70613	+ OR -	0.00336
Moderator Specific Gravity	**Casks Touching**			**2 Foot Surface-to-Surface**			**ISO 242.82 cm**		
Wet Interior, Vary External Density									
0.0000	0.70485	+ OR -	0.00350	0.70537	+ OR -	0.00380	0.71353	+ OR -	0.00333
0.0010	0.70559	+ OR -	0.00330	0.70379	+ OR -	0.00376	0.70277	+ OR -	0.00317
0.0100	0.69932	+ OR -	0.00319	0.69971	+ OR -	0.00303	0.69208	+ OR -	0.00359
0.0250	0.69882	+ OR -	0.00378	0.69308	+ OR -	0.00346	0.69471	+ OR -	0.00343
0.0500	0.69939	+ OR -	0.00409	0.68428	+ OR -	0.00368	0.69751	+ OR -	0.00374
0.0750	0.69777	+ OR -	0.00369	0.69635	+ OR -	0.00352	0.69247	+ OR -	0.00358
0.1000	0.70068	+ OR -	0.00317	0.69051	+ OR -	0.00326	0.70317	+ OR -	0.00354
0.2000	0.69652	+ OR -	0.00304	0.69519	+ OR -	0.00337	0.69979	+ OR -	0.00329
0.4000	0.69578	+ OR -	0.00351	0.70041	+ OR -	0.00331	0.69308	+ OR -	0.00310
0.6000	0.69367	+ OR -	0.00362	0.69188	+ OR -	0.00404	0.69766	+ OR -	0.00327
0.8000	0.70330	+ OR -	0.00363	0.69912	+ OR -	0.00373	0.70236	+ OR -	0.00344
0.9000	0.69400	+ OR -	0.00340	0.69387	+ OR -	0.00385	0.69551	+ OR -	0.00386
1.0000	0.69902	+ OR -	0.00350	0.69844	+ OR -	0.00344	0.70029	+ OR -	0.00335
Moderator Specific Gravity	**Casks Touching**			**2 Foot Surface-to-Surface**			**ISO 242.82 cm**		
Vary Interior and Exterior Density Simulataneously									
0.0000	0.16499	+ OR -	0.00076	0.16534	+ OR -	0.00084	0.16534	+ OR -	0.00084
0.0010	0.15978	+ OR -	0.00082	0.11798	+ OR -	0.00081	0.11798	+ OR -	0.00081
0.0100	0.14066	+ OR -	0.00100	0.07981	+ OR -	0.00085	0.07981	+ OR -	0.00085
0.0250	0.14370	+ OR -	0.00128	0.09501	+ OR -	0.00100	0.09501	+ OR -	0.00100
0.0500	0.17380	+ OR -	0.00174	0.13825	+ OR -	0.00129	0.13825	+ OR -	0.00129
0.0750	0.21261	+ OR -	0.00179	0.19305	+ OR -	0.00197	0.19305	+ OR -	0.00197
0.1000	0.25648	+ OR -	0.00229	0.23437	+ OR -	0.00233	0.23437	+ OR -	0.00233
0.2000	0.38917	+ OR -	0.00323	0.37995	+ OR -	0.00299	0.37995	+ OR -	0.00299
0.4000	0.53569	+ OR -	0.00371	0.52997	+ OR -	0.00334	0.52997	+ OR -	0.00334
0.6000	0.61450	+ OR -	0.00367	0.61391	+ OR -	0.00352	0.61391	+ OR -	0.00352
0.8000	0.66387	+ OR -	0.00329	0.66631	+ OR -	0.00384	0.66631	+ OR -	0.00384
0.9000	0.68209	+ OR -	0.00360	0.68136	+ OR -	0.00384	0.68136	+ OR -	0.00384
1.0000	0.69742	+ OR -	0.00378	0.68992	+ OR -	0.00387	0.68992	+ OR -	0.00387

Table 6.4.4-8 BWR Rods, Single Package 10 CFR 71.55(b)(3) Evaluation k_{eff} Summary

Description	$k_{eff} \pm \sigma$			$k_{eff} + 2\sigma$
Single Cask/ Inner Shell H_2O Reflected	0.69428	±	0.00368	0.70164
Single Cask/ Inner Shell & Lead H_2O Reflected	0.69355	±	0.00397	0.70149
Single Cask/ Inner Shell, Lead, & Outer Shell H_2O Reflected	0.69532	±	0.00373	0.70278
Single Cask H_2O Reflected	0.69322	±	0.00381	0.70084

Table 6.4.4-9 Maximum Reactivity Pitch Determination for 25 BWR Rods – Water Exterior

Cask Cavity (g/cc)	Exterior (g/cc)	Pitch (cm)	k_{eff}	σ	k_s	$k_{eff}+2\sigma$	Δk	$\Delta k/\sigma$
1	1	1.3840	0.43688	0.00070	0.45218	0.43828	-0.26228	-374.7
1	1	1.6403	0.49775	0.00076	0.51317	0.49927	-0.20129	-264.9
1	1	1.8966	0.55826	0.00078	0.57372	0.55982	-0.14074	-180.4
1	1	2.1529	0.60670	0.00083	0.62226	0.60836	-0.09220	-111.1
1	1	2.4092	0.64459	0.00080	0.66009	0.64619	-0.05437	-68.0
1	1	2.6654	0.67337	0.00081	0.68889	0.67499	-0.02557	-31.6
1	1	2.9217	0.68893	0.00084	0.70451	0.69061	-0.00995	-11.8
1	1	3.1780	0.69768	0.00080	0.71318	0.69928	-0.00128	-1.6
1	1	3.4343	0.69896	0.00080	0.71446	0.70056	--	--
1	1	3.6906	0.69337	0.00077	0.70881	0.69491	-0.00565	-7.3
1	1	3.9469	0.68509	0.00075	0.70049	0.68659	-0.01397	-18.6
1	1	4.2032	0.66997	0.00075	0.68537	0.67147	-0.02909	-38.8
1	1	4.4595	0.65593	0.00074	0.67131	0.65741	-0.04315	-58.3
1	1	4.7158	0.63801	0.00076	0.65343	0.63953	-0.06103	-80.3
1	1	4.9721	0.61716	0.00072	0.63250	0.61860	-0.08196	-113.8
1	1	5.2284	0.59692	0.00070	0.61222	0.59832	-0.10224	-146.1
1	1	5.4846	0.57611	0.00073	0.59147	0.57757	-0.12299	-168.5
1	1	5.7409	0.55318	0.00068	0.56844	0.55454	-0.14602	-214.7
1	1	5.9972	0.53013	0.00070	0.54543	0.53153	-0.16903	-241.5

Table 6.4.4-10 Maximum Reactivity Pitch Determination for 25 PWR Rods – Water Exterior

Cask Cavity (g/cc)	Exterior (g/cc)	Pitch (cm)	k_{eff}	σ	k_s	$k_{eff}+2\sigma$	Δk	$\Delta k/\sigma$
1	1	1.1277	0.38430	0.00070	0.39960	0.38570	-0.21964	-313.8
1	1	1.3840	0.44279	0.00072	0.45813	0.44423	-0.16111	-223.8
1	1	1.6403	0.49656	0.00077	0.51200	0.49810	-0.10724	-139.3
1	1	1.8966	0.53980	0.00073	0.55516	0.54126	-0.06408	-87.8
1	1	2.1529	0.56950	0.00075	0.58490	0.57100	-0.03434	-45.8
1	1	2.4092	0.59041	0.00078	0.60587	0.59197	-0.01337	-17.1
1	1	2.6654	0.60073	0.00077	0.61617	0.60227	-0.00307	-4.0
1	1	2.9217	0.60380	0.00077	0.61924	0.60534	--	--
1	1	3.1780	0.59904	0.00074	0.61442	0.60052	-0.00482	-6.5
1	1	3.4343	0.59206	0.00078	0.60752	0.59362	-0.01172	-15.0
1	1	3.6906	0.57836	0.00069	0.59364	0.57974	-0.02560	-37.1
1	1	3.9469	0.56256	0.00068	0.57782	0.56392	-0.04142	-60.9
1	1	4.2032	0.54640	0.00070	0.56170	0.54780	-0.05754	-82.2
1	1	4.4595	0.52823	0.00069	0.54351	0.52961	-0.07573	-109.8
1	1	4.7158	0.51025	0.00067	0.52549	0.51159	-0.09375	-139.9
1	1	4.9721	0.49011	0.00068	0.50537	0.49147	-0.11387	-167.5
1	1	5.2284	0.47064	0.00066	0.48586	0.47196	-0.13338	-202.1
1	1	5.4846	0.45036	0.00063	0.46552	0.45162	-0.15372	-244.0
1	1	5.7409	0.42865	0.00062	0.44379	0.42989	-0.17545	-283.0
1	1	5.9972	0.40918	0.00059	0.42426	0.41036	-0.19498	-330.5

Table 6.4.4-11 Maximum Reactivity Pitch Determination for 37 BWR Rods – Water Exterior

Cask Cavity (g/cc)	Exterior (g/cc)	Pitch (cm)	k_{eff}	σ	k_s	$k_{eff}+2\sigma$	Δk	$\Delta k/\sigma$
1	1	1.1277	0.41793	0.00067	0.43317	0.41927	-0.31608	-471.8
1	1	1.3840	0.49679	0.00073	0.51215	0.49825	-0.23710	-324.8
1	1	1.6403	0.57355	0.00077	0.58899	0.57509	-0.16026	-208.1
1	1	1.8966	0.63372	0.00081	0.64924	0.63534	-0.10001	-123.5
1	1	2.1529	0.67993	0.00087	0.69557	0.68167	-0.05368	-61.7
1	1	2.4092	0.71022	0.00085	0.72582	0.71192	-0.02343	-27.6
1	1	2.6654	0.72818	0.00082	0.74372	0.72982	-0.00553	-6.7
1	1	2.9217	0.73371	0.00082	0.74925	0.73535	--	--
1	1	3.1780	0.73076	0.00082	0.74630	0.73240	-0.00295	-3.6
1	1	3.4343	0.72100	0.00078	0.73646	0.72256	-0.01279	-16.4
1	1	3.6906	0.70690	0.00076	0.72232	0.70842	-0.02693	-35.4
1	1	3.9469	0.68847	0.00081	0.70399	0.69009	-0.04526	-55.9
1	1	4.2032	0.66618	0.00075	0.68158	0.66768	-0.06767	-90.2
1	1	4.4595	0.64430	0.00073	0.65966	0.64576	-0.08959	-122.7
1	1	4.7158	0.61821	0.00071	0.63353	0.61963	-0.11572	-163.0
1	1	4.9721	0.59337	0.00073	0.60873	0.59483	-0.14052	-192.5
1	1	5.2284	0.56602	0.00068	0.58128	0.56738	-0.16797	-247.0
1	1	5.4846	0.53531	0.00068	0.55057	0.53667	-0.19868	-292.2

Table 6.4.4-12 Maximum Reactivity Pitch Determination for 37 PWR Rods – Water Exterior

Cask Cavity (g/cc)	Exterior (g/cc)	Pitch (cm)	k_{eff}	σ	k_s	$k_{eff}+2\sigma$	Δk	$\Delta k/\sigma$
1	1	1.1277	0.43247	0.00068	0.44773	0.43383	-0.19855	-292.0
1	1	1.3840	0.50187	0.00077	0.51731	0.50341	-0.12897	-167.5
1	1	1.6403	0.55749	0.00078	0.57295	0.55905	-0.07333	-94.0
1	1	1.8966	0.59561	0.00081	0.61113	0.59723	-0.03515	-43.4
1	1	2.1529	0.61842	0.00078	0.63388	0.61998	-0.01240	-15.9
1	1	2.4092	0.62864	0.00079	0.64412	0.63022	-0.00216	-2.7
1	1	2.6654	0.63084	0.00077	0.64628	0.63238	--	--
1	1	2.9217	0.62153	0.00072	0.63687	0.62297	-0.00941	-13.1
1	1	3.1780	0.60939	0.00072	0.62473	0.61083	-0.02155	-29.9
1	1	3.4343	0.59297	0.00070	0.60827	0.59437	-0.03801	-54.3
1	1	3.6906	0.57112	0.00067	0.58636	0.57246	-0.05992	-89.4
1	1	3.9469	0.54994	0.00067	0.56518	0.55128	-0.08110	-121.0
1	1	4.2032	0.52793	0.00069	0.54321	0.52931	-0.10307	-149.4
1	1	4.4595	0.50588	0.00065	0.52108	0.50718	-0.12520	-192.6
1	1	4.7158	0.48106	0.00066	0.49628	0.48238	-0.15000	-227.3
1	1	4.9721	0.45664	0.00063	0.47180	0.45790	-0.17448	-277.0
1	1	5.2284	0.43149	0.00061	0.44661	0.43271	-0.19967	-327.3
1	1	5.4846	0.40582	0.00062	0.42096	0.40706	-0.22532	-363.4

Table 6.4.4-13 Maximum Reactivity Pitch Determination for 61 BWR Rods – Water Exterior

Cask Cavity (g/cc)	Exterior (g/cc)	Pitch (cm)	k_{eff}	σ	k_s	$k_{eff}+2\sigma$	Δk	$\Delta k/\sigma$
1	1	1.1277	0.52008	0.00072	0.53542	0.52152	-0.24512	-340.4
1	1	1.3840	0.61379	0.00081	0.62931	0.61541	-0.15123	-186.7
1	1	1.6403	0.68471	0.00083	0.70027	0.68637	-0.08027	-96.7
1	1	1.8966	0.73218	0.00083	0.74774	0.73384	-0.03280	-39.5
1	1	2.1529	0.75701	0.00082	0.77255	0.75865	-0.00799	-9.7
1	1	2.4092	0.76498	0.00083	0.78054	0.76664	--	--
1	1	2.6654	0.76171	0.00078	0.77717	0.76327	-0.00337	-4.3
1	1	2.9217	0.74933	0.00075	0.76473	0.75083	-0.01581	-21.1
1	1	3.1780	0.72877	0.00074	0.74415	0.73025	-0.03639	-49.2
1	1	3.4343	0.70376	0.00073	0.71912	0.70522	-0.06142	-84.1
1	1	3.6906	0.67540	0.00072	0.69074	0.67684	-0.08980	-124.7
1	1	3.9469	0.64190	0.00069	0.65718	0.64328	-0.12336	-178.8

Table 6.4.4-14 Maximum Reactivity Pitch Determination for 61 PWR Rods – Water Exterior

Cask Cavity (g/cc)	Exterior (g/cc)	Pitch (cm)	k_{eff}	σ	k_s	$k_{eff}+2\sigma$	Δk	$\Delta k/\sigma$
1	1	1.1277	0.52230	0.00075	0.53770	0.52380	-0.13379	-178.4
1	1	1.3840	0.58974	0.00078	0.60520	0.59130	-0.06629	-85.0
1	1	1.6403	0.63319	0.00083	0.64875	0.63485	-0.02274	-27.4
1	1	1.8966	0.65233	0.00077	0.66777	0.65387	-0.00372	-4.8
1	1	2.1529	0.65607	0.00076	0.67149	0.65759	--	--
1	1	2.4092	0.64753	0.00076	0.66295	0.64905	-0.00854	-11.2
1	1	2.6654	0.63012	0.00072	0.64546	0.63156	-0.02603	-36.2
1	1	2.9217	0.60859	0.00073	0.62395	0.61005	-0.04754	-65.1
1	1	3.1780	0.58257	0.00070	0.59787	0.58397	-0.07362	-105.2
1	1	3.4343	0.55274	0.00066	0.56796	0.55406	-0.10353	-156.9
1	1	3.6906	0.52407	0.00066	0.53929	0.52539	-0.13220	-200.3
1	1	3.9469	0.49246	0.00062	0.50760	0.49370	-0.16389	-264.3

Table 6.4.4-15 Maximum Reactivity Pitch Determination for 61 BWR Rods – Void Exterior

Cask Cavity (g/cc)	Exterior (g/cc)	Pitch (cm)	k_{eff}	σ	k_s	$k_{eff}+2\sigma$	Δk	$\Delta k/\sigma$
1	0	1.1277	0.52156	0.00075	0.53696	0.52306	-0.25209	-336.1
1	0	1.3840	0.61695	0.00083	0.63251	0.61861	-0.15654	-188.6
1	0	1.6403	0.68835	0.00083	0.70391	0.69001	-0.08514	-102.6
1	0	1.8966	0.73509	0.00085	0.75069	0.73679	-0.03836	-45.1
1	0	2.1529	0.76248	0.00083	0.77804	0.76414	-0.01101	-13.3
1	0	2.4092	0.77355	0.00080	0.78905	0.77515	--	--
1	0	2.6654	0.77146	0.00079	0.78694	0.77304	-0.00211	-2.7
1	0	2.9217	0.76267	0.00075	0.77807	0.76417	-0.01098	-14.6
1	0	3.1780	0.74480	0.00072	0.76014	0.74624	-0.02891	-40.2
1	0	3.4343	0.72517	0.00073	0.74053	0.72663	-0.04852	-66.5
1	0	3.6906	0.70227	0.00069	0.71755	0.70365	-0.07150	-103.6
1	0	3.9469	0.67451	0.00071	0.68983	0.67593	-0.09922	-139.7

Table 6.4.4-16 Maximum Reactivity Pitch Determination for 61 PWR Rods – Void Exterior

Cask Cavity (g/cc)	Exterior (g/cc)	Pitch (cm)	k_{eff}	σ	k_s	$k_{eff}+2\sigma$	Δk	$\Delta k/\sigma$
1	0	1.1277	0.52341	0.00079	0.53889	0.52499	-0.13907	-176.0
1	0	1.3840	0.59319	0.00077	0.60863	0.59473	-0.06933	-90.0
1	0	1.6403	0.63388	0.00079	0.64936	0.63546	-0.02860	-36.2
1	0	1.8966	0.65655	0.00078	0.67201	0.65811	-0.00595	-7.6
1	0	2.1529	0.66256	0.00075	0.67796	0.66406	--	--
1	0	2.4092	0.65394	0.00072	0.66928	0.65538	-0.00868	-12.1
1	0	2.6654	0.63865	0.00070	0.65395	0.64005	-0.02401	-34.3
1	0	2.9217	0.61660	0.00069	0.63188	0.61798	-0.04608	-66.8
1	0	3.1780	0.59274	0.00066	0.60796	0.59406	-0.07000	-106.1
1	0	3.4343	0.56934	0.00065	0.58454	0.57064	-0.09342	-143.7
1	0	3.6906	0.54287	0.00064	0.55805	0.54415	-0.11991	-187.4
1	0	3.9469	0.51595	0.00063	0.53111	0.51721	-0.14685	-233.1

Table 6.4.4-17 Maximum Reactivity Pitch Determination for 61 BWR Rods – Void Exterior and Preferential Flooding of Cask Cavity

Cask Cavity (g/cc)	Exterior (g/cc)	Pitch (cm)	k_{eff}	σ	k_s	$k_{eff}+2\sigma$	Δk	$\Delta k/\sigma$
0	0	1.1277	0.53776	0.00070	0.55306	0.53916	-0.34644	-494.9
0	0	1.3840	0.70636	0.00077	0.72180	0.70790	-0.17770	-230.8
0	0	1.6403	0.81018	0.00082	0.82572	0.81182	-0.07378	-90.0
0	0	1.8966	0.86442	0.00079	0.87990	0.86600	-0.01960	-24.8
0	0	2.1529	0.88400	0.00080	0.89950	0.88560	--	--
0	0	2.4092	0.87897	0.00077	0.89441	0.88051	-0.00509	-6.6
0	0	2.6654	0.86184	0.00079	0.87732	0.86342	-0.02218	-28.1
0	0	2.9217	0.83244	0.00073	0.84780	0.83390	-0.05170	-70.8
0	0	3.1780	0.79468	0.00071	0.81000	0.79610	-0.08950	-126.1
0	0	3.4343	0.75931	0.00070	0.77461	0.76071	-0.12489	-178.4
0	0	3.6906	0.71973	0.00073	0.73509	0.72119	-0.16441	-225.2

Table 6.4.4-18 Maximum Reactivity Pitch Determination for 61 PWR Rods – Void Exterior and Preferential Flooding of Cask Cavity

Cask Cavity (g/cc)	Exterior (g/cc)	Pitch (cm)	k_{eff}	σ	k_s	$k_{eff}+2\sigma$	Δk	$\Delta k/\sigma$
0	0	1.1277	0.55291	0.00071	0.56823	0.55433	-0.20333	-286.4
0	0	1.3840	0.67194	0.00076	0.68736	0.67346	-0.08420	-110.8
0	0	1.6403	0.73270	0.00078	0.74816	0.73426	-0.02340	-30.0
0	0	1.8966	0.75614	0.00076	0.77156	0.75766	--	--
0	0	2.1529	0.75121	0.00076	0.76663	0.75273	-0.00493	-6.5
0	0	2.4092	0.73087	0.00076	0.74629	0.73239	-0.02527	-33.3
0	0	2.6654	0.70242	0.00072	0.71776	0.70386	-0.05380	-74.7
0	0	2.9217	0.66618	0.00068	0.68144	0.66754	-0.09012	-132.5
0	0	3.1780	0.62965	0.00067	0.64489	0.63099	-0.12667	-189.1
0	0	3.4343	0.59036	0.00065	0.60556	0.59166	-0.16600	-255.4
0	0	3.6906	0.55310	0.00063	0.56826	0.55436	-0.20330	-322.7

Table 6.4.4-19 Damaged Rod Array Area Calculation – Flooded Cask Cavity

Moderation	Number of Rods	Fuel Type	Pitch [cm]	Rod Radius [cm]	# Rods Max	Diameter [cm]	$Area_{Hex}$ [cm^2]
Water Cavity	25	BWR	3.434	0.622	5	14.98	168.3
Water Exterior		PWR	2.922	0.478	5	12.64	119.9
Water Cavity	37	BWR	2.922	0.512	7	18.55	258.2
Water Exterior		PWR	2.665	0.393	7	16.78	211.1
Water Cavity	61	BWR	2.409	0.398	9	20.07	302.1
Water Exterior		PWR	2.153	0.306	9	17.84	238.6

Table 6.4.4-20 Damaged Rod Array Area Calculation – Preferential Flooding

Moderation	Number of Rods	Fuel Type	Pitch [cm]	Rod Radius [cm]	# Rods Max	Diameter [cm]	$Area_{Hex}$ [cm^2]
Partially Flooded Cavity	61	BWR	2.153	0.398	9	18.02	243.5
Void Exterior		PWR	1.897	0.306	9	15.78	186.9

Table 6.4.4-21 Maximum Reactivity Determination for Homogenized UO_2/Water Mixture

Cask Cavity (g/cc)	Exterior (g/cc)	UO_2 Vol Frac	k_{eff}	σ	$k_{eff}+2\sigma$	Δk	$\Delta k/\sigma$
0	0	0.132	0.81043	0.00075	0.81193	-0.00665	-8.9
0	0	0.14	0.81319	0.00075	0.81469	-0.00389	-5.2
0	0	0.15	0.81495	0.00071	0.81637	-0.00221	-3.1
0	0	0.16	0.81702	0.00078	0.81858	--	--
0	0	0.17	0.81592	0.00076	0.81744	-0.00114	-1.5
0	0	0.18	0.81448	0.00078	0.81604	-0.00254	-3.3
0	0	0.19	0.81315	0.00079	0.81473	-0.00385	-4.9
0	0	0.20	0.81080	0.00080	0.81240	-0.00618	-7.7

Table 6.4.4-22 Homogenized UO_2/Water Cask Cavity Moderator Density Study Results - Void Exterior

Cask Cavity (g/cc)	Exterior (g/cc)	UO_2 Vol Frac	k_{eff}	σ	$k_{eff}+2\sigma$	Δk	$\Delta k/\sigma$
0.0	0	0.16	0.81702	0.00078	0.81858	--	--
0.1	0	0.16	0.80234	0.00078	0.80390	-0.01468	-18.8
0.2	0	0.16	0.79078	0.00083	0.79244	-0.02614	-31.5
0.3	0	0.16	0.77986	0.00082	0.78150	-0.03708	-45.2
0.4	0	0.16	0.77082	0.00084	0.77250	-0.04608	-54.9
0.5	0	0.16	0.76440	0.00086	0.76612	-0.05246	-61.0
0.6	0	0.16	0.75856	0.00081	0.76018	-0.05840	-72.1
0.7	0	0.16	0.75823	0.00079	0.75981	-0.05877	-74.4
0.8	0	0.16	0.75812	0.00079	0.75970	-0.05888	-74.5
0.9	0	0.16	0.75836	0.00080	0.75996	-0.05862	-73.3
1.0	0	0.16	0.76077	0.00085	0.76247	-0.05611	-66.0

Table 6.4.4-23 Homogenized UO_2/Water Cask Cavity Moderator Density Study Results - Water Exterior

Cask Cavity (g/cc)	Exterior (g/cc)	UO_2 Vol Frac	k_{eff}	σ	$k_{eff}+2\sigma$	Δk	$\Delta k/\sigma$
0.0	1	0.16	0.65512	0.00078	0.65668	-0.10233	-131.2
0.1	1	0.16	0.68935	0.00083	0.69101	-0.06800	-81.9
0.2	1	0.16	0.70977	0.00084	0.71145	-0.04756	-56.6
0.3	1	0.16	0.72173	0.00084	0.72341	-0.03560	-42.4
0.4	1	0.16	0.72868	0.00079	0.73026	-0.02875	-36.4
0.5	1	0.16	0.73455	0.00083	0.73621	-0.02280	-27.5
0.6	1	0.16	0.73958	0.00081	0.74120	-0.01781	-22.0
0.7	1	0.16	0.74478	0.00082	0.74642	-0.01259	-15.4
0.8	1	0.16	0.74887	0.00084	0.75055	-0.00846	-10.1
0.9	1	0.16	0.75191	0.00082	0.75355	-0.00546	-6.7
1.0	1	0.16	0.75743	0.00079	0.75901	--	--

Table 6.4.4-24 Homogenized UO_2/Water Exterior Moderator Density Study Results – Void Cask Cavity

Cask Cavity (g/cc)	Exterior (g/cc)	UO_2 Vol Frac	k_{eff}	σ	$k_{eff}+2\sigma$	Δk	$\Delta k/\sigma$
0	0.0	0.16	0.81702	0.00078	0.81858	--	--
0	0.1	0.16	0.66923	0.00081	0.67085	-0.14773	-182.4
0	0.2	0.16	0.65897	0.00080	0.66057	-0.15801	-197.5
0	0.3	0.16	0.65619	0.00078	0.65775	-0.16083	-206.2
0	0.4	0.16	0.65607	0.00078	0.65763	-0.16095	-206.3
0	0.5	0.16	0.65449	0.00079	0.65607	-0.16251	-205.7
0	0.6	0.16	0.65513	0.00081	0.65675	-0.16183	-199.8
0	0.7	0.16	0.65479	0.00077	0.65633	-0.16225	-210.7
0	0.8	0.16	0.65445	0.00077	0.65599	-0.16259	-211.2
0	0.9	0.16	0.65591	0.00081	0.65753	-0.16105	-198.8
0	1.0	0.16	0.65512	0.00078	0.65668	-0.16190	-207.6

Table 6.4.4-25 Homogenized UO_2/Water Exterior Moderator Density Study Results – Water Cask Cavity

Cask Cavity (g/cc)	Exterior (g/cc)	UO_2 Vol Frac	k_{eff}	σ	$k_{eff}+2\sigma$	Δk	$\Delta k/\sigma$
1	0.0	0.16	0.76077	0.00085	0.76247	--	--
1	0.1	0.16	0.75700	0.00085	0.75870	-0.00377	-4.4
1	0.2	0.16	0.75719	0.00080	0.75879	-0.00368	-4.6
1	0.3	0.16	0.75696	0.00081	0.75858	-0.00389	-4.8
1	0.4	0.16	0.75430	0.00083	0.75596	-0.00651	-7.8
1	0.5	0.16	0.75574	0.00081	0.75736	-0.00511	-6.3
1	0.6	0.16	0.75516	0.00080	0.75676	-0.00571	-7.1
1	0.7	0.16	0.75480	0.00085	0.75650	-0.00597	-7.0
1	0.8	0.16	0.75601	0.00084	0.75769	-0.00478	-5.7
1	0.9	0.16	0.75542	0.00081	0.75704	-0.00543	-6.7
1	1.0	0.16	0.75743	0.00079	0.75901	-0.00346	-4.4

Table 6.4.4-26 Single Cask Containment Reflected Results Comparison for Homogenized UO_2/Water Model

Cask Configuration	Cask Cavity (g/cc)	Exterior (g/cc)	UO_2 Vol Frac	k_{eff}	σ	$k_{eff}+2\sigma$	Δk	$\Delta k/\sigma$
Array	0	0	0.16	0.81702	0.00078	0.81858	--	--
Single	0	0	0.16	0.50369	0.00076	0.50521	-0.31337	-412.3
Array	1	0	0.16	0.76077	0.00085	0.76247	--	--
Single	1	0	0.16	0.74882	0.00085	0.75052	-0.01195	-14.1
Array	1	1	0.16	0.75743	0.00079	0.75901	--	--
Single	1	1	0.16	0.75043	0.00080	0.75203	-0.00698	-8.7
Array	0	1	0.16	0.65512	0.00078	0.65668	--	--
Single	0	1	0.16	0.54351	0.00078	0.54507	-0.11161	-143.1

6.4.5 TRIGA Fuel Elements

This section presents the criticality evaluation for TRIGA fuel elements in the NAC-LWT with nonpoisoned and poisoned basket modules for intact and failed fuel. In the non-poisoned configuration, up to 120 intact TRIGA fuel elements can be transported in the NAC-LWT cask. In the poisoned configuration, up to 140 intact TRIGA elements can be transported in the NAC-LWT cask. Up to four TRIGA fuel elements can be contained in screened canisters. Up to two failed TRIGA fuel elements can be contained in sealed canisters. The analyses are performed to satisfy the requirements of 10 CFR Parts 71.55 and 71.59 as well as IAEA Transportation Safety Standards (TS-R-1).

The most reactive TRIGA fuel element type in the NAC-LWT TRIGA basket is evaluated in Section 6.4.5.1. The most reactive basket and intact fuel configurations, including both geometric perturbations and manufacturing tolerances, under wet and dry conditions are evaluated in Section 6.4.5.2. The most reactive cask configuration with three baskets of intact design-basis TRIGA fuel and two baskets of fuel, either in screened cans or in sealed cans, is evaluated under normal and accident conditions in Section 6.4.5.3. Preferential flooding of the screened and sealed failed fuel cans is also evaluated. The maximum k_{eff} of the NAC-LWT cask loaded with design-basis TRIGA fuel is evaluated under normal and accident conditions in Section 6.4.5.4. A single package evaluation, in accordance with 10 CFR 71.55(b)(3), is performed in Section 6.4.5.5. An expanded set of TRIGA fuel characteristics is evaluated in Section 6.4.5.6. The analyses demonstrate that, including all calculational and mechanical uncertainties, the NAC-LWT cask remains subcritical ($k_s < 0.95$) under normal and accident conditions.

Any combination of TRIGA fuel element types can be placed in the NAC-LWT TRIGA baskets. TRIGA fuel cluster rods are analyzed as separate loadings in Section 6.4.6 and will not be shipped with TRIGA fuel elements. Transportation of a limited quantity of cluster rods within a TRIGA fuel element shipment is analyzed in Section 6.4.5.6.5.

6.4.5.1 Most Reactive TRIGA Fuel Element

Of the four main types of TRIGA fuel elements (Table 6.2.5-1), three (aluminum clad, stainless steel clad, and FFCR) are explicitly analyzed to determine which element is bounding in terms of criticality. The ACPR fuel element and fuel follower control rod types are eliminated from consideration due to their low ^{235}U loading. For steel clad fuel, the standard, and FLIP LEU-I compositions (Table 6.2.5-2) are also eliminated from further consideration due to their low ^{235}U loading. These element types are bounded by this analysis. The two types of Al clad fuel elements, each with 20 wt % ^{235}U loading are analyzed, and the two types of stainless steel clad elements (standard streamlined and standard plain) both enriched to either 20 wt % or 70 wt % in

^{235}U are analyzed. The FFCR element is analyzed with FLIP LEU-I composition enriched to 20 wt % ^{235}U. Higher enrichment elements, evaluated to 95 wt % ^{235}U, and minor increases in the 20 wt % ^{235}U and 70 wt% ^{235}U fuel elements fissile mass and enrichment are evaluated in Section 6.4.5.6.4.

6.4.5.1.1 Nonpoisoned Basket Most Reactive TRIGA Fuel Element Evaluation

The parametric evaluation of the TRIGA fuel element types for the nonpoisoned basket is performed with the fuel/basket unit cell infinite array model. The reactivities of the seven candidate fuel types are presented in Table 6.4.5-1. The results show that the stainless steel clad, standard plain, TRIGA fuel element with FLIP composition at 70 wt % ^{235}U is the most reactive of all TRIGA fuel element types. Table 6.4.5-1 also includes the results for several combinations of steel FLIP LEU (20 wt % ^{235}U) and FLIP HEU (70 wt % ^{235}U) which are bounded by the results for four 70 wt % ^{235}U elements per basket cell.

6.4.5.1.2 Poisoned Basket Most Reactive TRIGA Fuel Element Evaluation

The parametric evaluation of TRIGA fuel element types for the poisoned basket is performed with an infinite cask array model. The reactivity of the candidate fuel types is presented in Table 6.4.5-2. Again, the results show that the stainless steel clad, standard plain, TRIGA fuel element with FLIP composition at 70 wt % ^{235}U is the most reactive of all TRIGA fuel element types, and combinations of steel FLIP LEU (20 wt % ^{235}U) and FLIP HEU (70 wt % ^{235}U) are bounded by the results for four 70 wt % ^{235}U elements per basket cell. Because of the low relative reactivity of the 14-inch aluminum clad and FFCR (Table 6.4.5-1) elements, it is not necessary to re-analyze these elements.

6.4.5.1.3 Summary of Most Reactive TRIGA Fuel Element Evaluation

The stainless steel clad, standard plain, TRIGA fuel element with FLIP composition at 70 wt% ^{235}U is the most reactive of all TRIGA fuel element types in the poisoned and non-poisoned baskets. Four of these elements in basket openings bound the other element types and any combination with other such elements. This TRIGA fuel element type and the TRIGA fuel cluster rods will be utilized in subsequent evaluations of the NAC-LWT cask with poisoned and nonpoisoned baskets.

6.4.5.2 Most Reactive Fuel Element and Basket Configurations

The primary basket tolerances affecting system reactivity are geometric tolerances, including the positioning of the fuel elements in the cell opening, the size of the cell opening; and manufacturing tolerances, including the thickness of the steel plate dividing the basket openings. The effect of these tolerances is evaluated sequentially in this section.

6.4.5.2.1 Geometric Perturbations

The TRIGA fuel elements are held in place by basket modules. Each cell opening in the basket module can contain up to four TRIGA fuel elements. The TRIGA fuel elements are not constrained in the opening and, therefore, may shift to any location in the opening. Wet and dry conditions of the TRIGA fuel are evaluated to determine the most reactive fuel element and basket configuration.

Table 6.4.5-3 and Table 6.4.5-4 show the nonpoisoned and poisoned axially infinite basket cask k_{eff} with design-basis TRIGA fuel elements. The effects evaluated in the tables include fuel element movement and partial loading in wet and dry basket openings.

For each basket configuration, the most reactive wet configuration contains four design-basis TRIGA fuel elements moved outward to the corners of each cell opening, with $k_{eff} = 0.83468 \pm 0.00101$ and 0.87874 ± 0.00123 for nonpoisoned and poisoned basket configurations, respectively. Although the reactivity of the nonpoisoned basket configurations with three fuel elements in a cell are similar to that with four rods, the four rod configuration is selected as the most reactive because it contains the greatest amount of ^{235}U. The wet configuration maximizes the moderation between TRIGA fuel elements within the wet cavity and is referred to as the wet configuration for TRIGA fuel elements.

The most reactive dry configuration, with no water in the neutron shield, contains four design-basis TRIGA fuel elements touching in each opening and moved inward to the basket center with $k_{eff} = 0.93434 \pm 0.00115$ and 0.88969 ± 0.00122 for nonpoisoned and poisoned basket configurations, respectively. This dry configuration minimizes the neutron leakage of TRIGA fuel elements within the dry basket and is referred to as the dry configuration for TRIGA fuel elements. The partial loading evaluations show a general decrease in reactivity with a decreasing number of fuel elements.

6.4.5.2.2 Manufacturing Tolerance Perturbations

In addition to geometric tolerances, the wet and dry configurations were evaluated to determine the effect of manufacturing tolerances. The dimensional ranges of the plate materials used to construct the basket openings are 0.28 inch minimum/0.3125 inch maximum for the center plate, 0.24 inch minimum/0.295 inch maximum for the outside divider plate, and 0.12 inch minimum/0.13 inch maximum for the outside plate. The cell opening is checked during fabrication to ensure a minimum cell opening of 3.38 inches square, and a maximum cell opening size of 3.48 inches square. The most reactive configurations based on geometric tolerances are utilized in this analysis.

Table 6.4.5-5 and Table 6.4.5-6 show the nonpoisoned and poisoned basket, cask k_{eff} with design-basis TRIGA fuel elements. The effects evaluated in the tables include perturbations on

basket plate thickness and basket opening size. For the nonpoisoned basket, within statistical limits, the most reactive wet and dry configurations contain baskets with the minimum stainless steel thickness divider plates. The reactivity of these wet and dry configurations are k_{eff} = 0.86861 ± 0.00094 and k_{eff} = 0.90501 ± 0.00109, respectively. Furthermore, the most reactive dry configuration for manufacturing tolerances contains the minimum basket opening, k_{eff} = 0.90817 ± 0.00105. For the poisoned basket configuration, the perturbations do not significantly increase reactivity.

6.4.5.3 Sealed and Screened Cans Criticality Evaluation

Criticality calculations were performed in screened and sealed failed fuel cans in the top and base basket modules of the cask. Three cases are examined for each basket combination, an all dry system, a full wet system, and a preferentially wet system with water only in the screened or sealed failed fuel can. Fuel in sealed cans is modeled both homogeneously, heterogeneously, and with partial loadings. The three central modules contain intact fuel in the most reactive wet or dry configurations, as appropriate, as determined in Section 6.4.5.2. The reactivities of the failed fuel combinations are compared to the reactivities of respective intact fuel configurations, and moderator density studies are performed on the most reactive configurations in Section 6.4.5.4.

6.4.5.3.1 Screened Failed Fuel Can Evaluations

Table 6.4.5-7 shows the results of the preferential flooding and partial loading studies of the screened failed fuel can configurations with design-basis TRIGA fuel elements in non-poisoned and poisoned baskets. As seen in the table, the most reactive configurations for the NAC-LWT cask containing screened cans with TRIGA fuel elements is an infinite array of casks with dry cavities, loaded with preferentially flooded screened cans, with each can containing four fuel elements in the corners of the cans. The most reactive poisoned configuration also contains the maximum can opening size.

The reactivity, k_{eff}, for the nonpoisoned and poisoned configurations is 0.90926 ± 0.00126 and 0.90224 ± 0.00128, respectively. The reactivity of the screened cans in the nonpoisoned basket configuration is bounded by the sealed can evaluations presented in Section 6.4.5.3.2.

6.4.5.3.2 Sealed Failed Fuel Can Evaluations

Table 6.4.5-8 shows the results of the preferential flooding and partial loading studies of the sealed failed fuel can configurations with TRIGA fuel elements in non-poisoned and poisoned baskets. Included in the sealed can evaluations are homogenous fuel/moderator mixture cases, representing fuel debris, with the mixture either being solid (no water), filling one half of the can

or filling the whole can. Cases are evaluated for the solid in the mixture both with and without graphite.

As seen in the table, the most reactive configuration for the NAC-LWT cask with the non-poisoned basket containing sealed cans is for an infinite array of casks with dry cavities loaded with preferentially flooded, maximum diameter, sealed cans, each can containing a homogeneous mixture of water and the fissile material equivalent to two TRIGA fuel elements. The most reactive nonpoisoned configuration is $k_{eff} = 0.91355 \pm 0.00119$. The "Wet Cask / Wet Can, Elements Out" case for the non-poisoned basket was not analyzed because the reactivity of the element configurations is significantly lower than the homogenized mixture configurations.

The most reactive poisoned basket configuration is selected as the case containing flooded cask and cans with elements touching the can wall. The reactivity, k_{eff}, for this configuration is 0.88574 ± 0.00130. Since the screened can reactivity presented in Section 6.4.5.3.1 is higher, this configuration is bounded.

6.4.5.4 Moderator Density Criticality Evaluations for Intact TRIGA Fuel Elements

The evaluations for normal and accident conditions include moderator density variations in the cask cavity and external environment to the cask. One evaluation is performed for each basket (non-poisoned / poisoned) combination.

Table 6.4.5-9 and Table 6.4.5-10 show the most reactive configurations for these combinations as determined in Section 6.4.5.3. The tables contain results for infinite axial length models for the intact fuel and finite axial length models with cask end caps for failed fuel. Comparing the reactivity of the more conservative infinite models with finite models is acceptable, provided the result with the highest k_{eff} is always selected. Alternately, converting conservative infinite axial length models to finite axial length models is equally acceptable.

As seen in Table 6.4.5-9, $k_{eff} = 0.93434 \pm 0.00115$ for the most reactive dry configuration with intact, TRIGA fuel elements in the non-poisoned basket. When reevaluated as a finite axial length cask model with end caps, the resulting $k_{eff} = 0.89731 \pm 0.00117$. As a result, the most reactive configuration of TRIGA fuel elements in the nonpoisoned basket becomes the configuration with two baskets with sealed cans preferentially flooded with a dry cask, $k_{eff} =$

0.91355 ± 0.00119. This configuration is chosen for further moderator density variation evaluations. As seen in Table 6.4.5-10, the most reactive configuration of TRIGA fuel elements in the poisoned basket contains two screened cans preferentially flooded with a dry cask. This configuration is chosen for moderator density variations. Results of the moderator density

variation cases for normal and accident conditions for the two basket configurations are presented in Table 6.4.5-11 through Table 6.4.5-14.

As seen in Table 6.4.5-12, the most reactive configuration for the TRIGA fuel elements in the nonpoisoned basket contains two baskets with sealed cans, preferentially flooded, under accident conditions with no water in the cask interior, neutron shield, or exterior, $k_{eff} = 0.9136 \pm 0.0012$. Per Section 6.1.1, this corresponds to $k_s = 0.9328$.

As seen in Table 6.4.5-14, the most reactive configuration for the TRIGA fuel elements in the poisoned basket, contains two baskets with sealed cans, preferentially flooded, under accident conditions with no water in the cask interior, neutron shield, or exterior, $k_{eff} = 0.9022 \pm 0.0015$. Per Section 6.1.1, this corresponds to $k_s = 0.9220$.

6.4.5.5 Single Package Criticality Evaluation

To satisfy 10 CFR 71.55(b)(3), an analysis of the reflection of the containment system (inner shell) by water is performed on a single wet cask. Successive replacement of the cask radial shields with water reflection is also evaluated for each basket (nonpoisoned/poisoned) combination. As seen in Table 6.4.5-15 and Table 6.4.5-16, the reactivity of the system drops as each radial shield of the cask is replaced by water from the full cask surrounded by water, to the inner shell surrounded by water.

6.4.5.6 Revised TRIGA Fuel Element Characteristics for Nonpoisoned Baskets

The purpose of this section is to demonstrate reactivity results for a revised set of TRIGA fuel element characteristics.

The analysis is broken into five sections. The first section establishes a minimum number of fuel characteristics meeting criticality safety limits for intact fuel (cask shipments with no cans). The second section evaluates severely damaged TRIGA fuel, including debris, in sealed and screened cans. The third section contains the evaluations for a screened can containing TRIGA elements with potential clad damage, but meeting structural requirements for transport. The fourth section evaluates increases in the range of enrichment and fissile material mass of TRIGA fuel elements in intact, screened, and sealed canister configurations. The fifth section contains the evaluation of a mixed shipment of TRIGA fuel elements and TRIGA cluster rods. Unless otherwise indicated, all models represent the accident condition cask (i.e., no neutron shield) in a finite cask array of eight casks. The array of eight casks is placed in a close-pack triangular pitch configuration as shown in Figure 6.4.5-9. As demonstrated in the analysis results sections, neutronic coupling between casks in an array, with void between casks, maximizes reactivity. Placing the casks in a tight pitch array, therefore, represents the most reactive configuration. The

CSI based on the eight-cask accident array is 12.5 (N=4, CSI=50/N). Under normal conditions, with the neutron shield in place, the system is evaluated for an infinite array of casks (reflective boundary condition on a cuboid surrounding the cask) producing a CSI of 0.

While the analyses evaluate both screened and sealed cans, shipment is only permitted in the sealed canister configuration.

6.4.5.6.1 Intact Fuel Elements (No Can)

Basic TRIGA fuel element characteristics affecting system reactivity are itemized in the following paragraphs, with a qualitative description as to their effect on system reactivity.

Following the qualitative description are the result discussions of the KENO-Va calculations for the individual parameters.

Enrichment

TRIGA fuel elements are constructed at two basic enrichment levels (20 wt % and 70 wt % ^{235}U).

Fissile Material Mass

Maximum fissile material mass for each enrichment/fuel clad material combination is assigned to the models. Maximum fissile material mass will result in maximum system reactivity.

Zirconium Mass and Hydrogen-to-Zirconium (H/Zr) Ratio

The combination of zirconium mass and the H/Zr ratio determines the quantity of moderator (hydrogen) within the fuel matrix. Previous evaluations indicate that increasing the moderator quantity has the potential to increase system reactivity (i.e., the fuel element itself is under-moderated). Therefore, maximum system reactivity is obtained from a H/Zr ratio of 2.0 (maximum for zirconium hydride) and a maximum fuel zirconium content (limited by the fuel region volume).

Rod Diameter

Modifying rod diameter at a fixed fuel geometry and mass has a small negative effect for stainless steel clad elements, as it increases clad volume (stainless steel is a parasitic absorber). There is no significant effect on aluminum clad fuel. A secondary effect of a rod diameter increase is the separation of the fuel in the dry cavity cask case and reduction in water between elements in the wet cavity cask case. Both result in minor negative reactivity trends.

When allowing the fuel to expand to the clad inner surface, a maximum rod OD allows for additional moderator (in the form of ZrH), which more than offsets the minor reactivity effects discussed previously and, therefore, represents a bounding configuration.

Clad Thickness

Reducing clad thickness removes parasitic absorber for the stainless steel clad fuel element. At a fixed outer diameter, reduced clad thickness provides additional rod interior volume. For a fixed fuel mass, the reactivity effect of a reduced clad thickness is, therefore, limited to the parasitic absorber removal while, at a maximum fuel mass, the reduced thickness clad provides volume for additional ZrH.

Fuel Outer and Inner Diameter

Inner and outer fuel diameters have no effect on system reactivity at a fixed fuel mass. Maximum outer diameter (i.e., contact with the clad) and minimum inner diameter (i.e., contact with the center zirconium rod where applicable) provide for additional ZrH volume and, therefore, represent a bounding configuration.

Central Zirconium Rod Diameter

A change in the diameter of the central zirconium rod at a fixed fuel geometry has no significant system reactivity effect, as it involves neutronically transparent material. A minimum zirconium rod is bounding for the modified fuel dimensions (maximum ZrH).

Active Fuel Length

The reactivity variations associated with the active fuel length have distinctly different trends when considering a system at a fixed (nominal) ZrH quantity and for a system maximizing the ZrH quantity. At a fixed ZrH quantity, the minimum active fuel height compacts the fissile material region (potentially above theoretical density) and, therefore, increases system reactivity. At the maximum ZrH quantity, the effect of a compacted (reduced leakage) fuel region is offset by the reduced moderator ratio in the fuel region, resulting in a slight decrease in reactivity for a dry cask cavity and no statistically resolvable effect for a wet cask cavity (bounding for the finite array of casks modeled). Therefore, active fuel length variations have no significant effects on the highest system reactivity cases containing maximum ZrH.

Zirconium Content and H/Zr Ratio

The effect of zirconium mass changes at a fixed H/Zr ratio of 1.6 is illustrated in Figure 6.4.5-1 for a finite cask array of eight casks. Similar reactivity changes as a function of H/Zr ratio are shown in Figure 6.4.5-2. Both figures clearly demonstrate that maximum zirconium quantity and H/Zr ratio are bounding for the system. Analysis trends hold true for both wet and dry cask cavity cases. Note that the 20% enriched material curve indicates a higher reactivity than the 70% enriched curve for the H/Zr ratio study (dry cask cavity). This is the result of specifying an artificially high zirconium content of the fuel material. The composition for the 20 wt % rod with 2,300 grams of zirconium in the fuel results in a ZrH_x density of approximately 6.9 g/cm^3,

well above the actual density of 5.61 g/cm3. The 2,300 grams base value is obtained from a fuel element with only 41 grams of ^{235}U versus 167 grams in the design basis element. Figure 6.4.5-3 demonstrates that a maximum fissile material content is bounding for fuel containing the maximum ZrH content feasible at a maximum H/Zr ratio of 2.0.

At the maximum ZrH quantity possible in the fuel rod, the 70 wt % case is bounding as demonstrated in Table 6.4.5-20 and discussed later in this section.

Maximum Reactivity Fuel Element Configuration

Fuel assembly characteristics are evaluated by allowing:

- Rod diameter to reach a maximum of 1.5 inches
- Clad to be reduced to 0.0001 cm (essentially a no clad case, allowing the basic KENO cells to be retained within the input file structure)
- Fuel outer diameter to be maximized into contact with the clad inner surface and be minimized by 0.1 inch (arbitrary value chosen for study purposes)
- Fuel inner diameter to be minimized into contact with the zirconium center rod (no maximum was evaluated as analysis trends all indicate a reduced fuel volume to be bounding)
- Zirconium inner rod to be reduced (minimum) to a 0.0001 cm radius (essentially a "no inner rod" case with the KENO cell for the rod retained) or increased (maximum) to contact the fuel inner diameter
- Active fuel length to be varied by 0.5 inch

As shown in Table 6.4.5-17, maximum system reactivity is achieved for a fuel element with the following characteristics:

- Maximum zirconium content

  Calculated based on the physical dimensions of the fuel region and zirconium hydride at full density (occupying all nonuranium volume)

- Maximum H/Zr atom ratio (2.0)

  Based on the H/Zr ratio study in the previous section having determined a maximum H/Zr ratio to be bounding for wet and dry cask configurations, all fuel element physical characteristic studies applied the maximum ratio of 2.0.

- Maximum rod outer diameter of 1.5 inches

  Fixed fuel mass cases show a slight decrease in reactivity due to the additional clad volume (stainless steel) associated with a larger fuel rod at a constant clad thickness. When considering increased fuel diameter and the associated increase in volume for zirconium hydride, a maximum rod diameter is bounding.

- Minimum clad thickness

Provides a significant increase in reactivity as the result of reduced parasitic absorber and increased volume for the fuel. Note that bias adjusted reactivities for a 0.0001 cm clad case exceed a 0.95 limit. Further evaluations documented in Table 6.4.5-18 indicate a model containing a 0.01 inch clad is sufficient to demonstrate reactivity below the 0.95 limit. This model change is adopted for the screened and sealed can evaluations.

- Maximum fuel outer diameter, minimum inner diameter and a minimum (removed) central rod

  All three properties increase the potential fuel volume and, therefore, provide additional ZrH volume.

- No significant reactivity effect of fuel length for the bounding (wet) fuel configurations

  The maximum active fuel length is specified to be a bounding configuration as it provides the largest amount of integral fuel moderator (ZrH_x) to the system.

Optimum Moderation, Fuel Element Location and Basket Manufacturing Tolerances

Reference criticality calculations for TRIGA fuel in either an infinite basket cell or infinite cask array configuration indicate that maximum system reactivity is obtained from a dry cask cavity with fuel elements shifted toward the basket center in a minimum opening size basket. Finite cask array calculations on the fuel parameters evaluated herein indicate that this configuration is not bounding for a finite cask array. Water in the model not only thermalizes neutrons to support reactions with the fissile material, but also absorbs neutrons. Since the TRIGA elements contain moderator in the fuel matrix, independent of the water in the element-to-basket gaps, an infinite array of casks provides significant neutronic interactions on a dry cask basis. In the finite array models, the additional neutrons supplied by other casks are significantly reduced, resulting in a system with a water cavity being bounding.

A sample evaluation of reactivity trends as a function of model configuration is shown in Table 6.4.5-19. The data demonstrate a sharp drop-off in reactivity as the number of fuel units is reduced (infinite basket unit cell to finite cask model, to finite cask array, and finally to a single cask model) for a dry cask, while reactivity for a wet cask remains relatively constant across array sizes. Initial reactivity studies for the 70 wt % enriched steel clad fuel at various moderator quantities (accomplished by varying fuel zirconium quantity at a fixed H/Zr ratio) confirm that system reactivity increases with increased moderator density, but levels off at densities above 0.5 g/cm3 (see Figure 6.4.5-4). At this level, increased moderation between elements in a basket opening is offset by reduced interaction between the basket opening, baskets in the cask, and casks in the array. Detailed moderator density studies for the system considering various fuel element moderator quantities (adjusted by H/Zr ratio), TRIGA element configuration (nominal

and most reactive element), rod locations (shifted in – optimal for dry system; shifted to basket corners – optimal for wet system), and basket opening size (minimum and maximum) are illustrated in Figure 6.4.5-5. These studies demonstrate that maximum reactivity is the result of:

- Fully moderated cask cavity (water density 1 g/cm^3)
- Most reactive element configuration defined in the previous section
- Shifted out (to basket corners) fuel elements

No significant changes in reactivity occurred as the result of basket opening size changes for a fully flooded (maximum reactivity) basket configuration.

Maximum Intact Fuel Reactivity and Criticality Safety Index

Based on a 1.5-inch maximum rod diameter, a minimum clad thickness of 0.01 inch, a conservatively removed central zirconium rod, and a maximum ZrH content system, reactivities are calculated for each of the primary TRIGA fuel types. Results for the analyses are listed in Table 6.4.5-20. Maximum bias adjusted reactivity (k_s) for the revised TRIGA fuel description is 0.94842 (k_{eff} = 0.93024 ± 0.00069) under accident conditions with a cask array limited to eight casks (CSI = 12.5). Table 6.4.5-4 also illustrates the large reactivity increase associated with the move from a nominal fuel element to the bounding configuration specified here.

The normal condition (intact neutron shield) maximum reactivity for the system is shown in Table 6.4.5-21 for an infinite cask array. Therefore, the CSI for intact fuel shipments is 12.5.

6.4.5.6.2 Screened and Sealed Can Criticality Evaluations for Severely Damaged Fuel (Up to Two Elements per Can)

The NAC-LWT system may be loaded with screened or sealed cans in the top and bottom basket modules. The sealed can was previously evaluated for a damaged content of up to two equivalent intact rods. Based on an accident cask condition (i.e., no neutron shield), reactivity evaluations for a finite array of eight casks are repeated in this section for the revised TRIGA fuel element definition. In addition, the screened can is similarly evaluated to contain up to two equivalent intact rods.

Screened and sealed can reactivity evaluations are performed at various cask cavity and can moderator combinations for a solid fuel material and for a fuel mixture filling the can cavity. The results plotted in Figure 6.4.5-6 demonstrate that the reactivity of the system is controlled by the uncanned baskets with no significant feedback from the can locations regardless of can fuel height or moderator fraction. Note that the can contents are limited to the equivalent of two fuel elements, while uncanned basket locations contain up to four rods. Similar results are obtained from a study of debris height at various can moderator densities as shown in Figure 6.4.5-7. The study demonstrates no statistically significant effect of debris height on system reactivity.

Maximum system reactivity was calculated at a k_{eff} of 0.93159 ± 0.00066 for a k_s of 0.94971 after adjusting for a calculation bias uncertainty of 0.0168 (code bias is an approximately 0.02 Δk over-prediction and is, therefore, set to 0 for the bias adjusted reactivity). This reactivity is not statistically different from that of the intact fuel. As an eight-cask array was modeled under accident conditions, the system CSI is 12.5.

Maximum normal condition reactivity for an infinite array of casks containing cans with up to two TRIGA elements worth of fuel material is 0.92351 ± 0.00071 (wet cask and can).

The overall system CSI for casks containing cans with up to four fuel elements per can, including fuel debris, is 12.5.

6.4.5.6.3 Screened Can Criticality Evaluations (Four Elements per Can – Elements Retaining Structural Integrity)

The NAC-LWT system may be loaded with screened cans in the top and bottom basket modules. The screened can was previously evaluated for a content of up to four intact TRIGA elements. Based on an accident cask condition (i.e., no neutron shield), reactivity evaluations for a finite array of casks are repeated in this section for the revised TRIGA fuel element definition.

Reactivity evaluations are performed at various cask cavity and can moderator combinations for four elements per can in an eight-cask array. The results plotted in Figure 6.4.5-8 demonstrate that the maximum reactivity is achieved by a dry cask cavity with a full density, preferentially flooded can. Bias adjusted reactivity for this system is slightly above 0.95. Evaluations are, therefore, repeated for a four-cask array (CSI = 25) with the corresponding results added to the Figure 6.4.5-8 plot. Maximum system reactivity for the four-cask array is k_{eff} of 0.92798 ± 0.00070 for a k_s of 0.94618. Moderator condition for the maximum reactivity case is a wet (1 g/cm^3) cask and wet can at 0.4 g/cm^3 moderator density (note that there is no statistically significant change in system reactivity as a function of can cavity moderator density).

Maximum normal condition reactivity for an infinite array of casks containing the screened cans with four TRIGA elements is 0.92484 ± 0.00068 (wet cask/wet can).

The overall system CSI for casks containing cans with up to four fuel elements per can, including fuel debris, is 25.

6.4.5.6.4 Higher Fissile Material Mass and Enrichment Study

The NAC-LWT cask is evaluated to contain increased fissile material mass and enrichment elements. Revised parameters are designed to bound TRIGA fuel elements up to 25 wt % enriched with 275g ^{235}U fissile mass, up to 71 wt % enriched with up to 138g ^{235}U, and up to 95 wt % enriched with up to 175g ^{235}U. The evaluation justifying the slight increase in fissile

content for 20 wt % and 70 wt % elements and the signficantly higher 95 wt % elements is divided into intact and damaged fuel sections.

Intact Fuel Elements (No Canister)

Analysis in this section evaluates increases in fissile material mass and enrichment and provides loading restrictions where necessary for the increased payload definition.

Increased Fuel Enrichment (20 wt % ^{235}U and 70 wt % ^{235}U Base Cases)

The first analysis phase was an increase in the ^{235}U enrichment. The LEU was increased from 20 to 25 wt % ^{235}U, while the HEU had a smaller increase from 70 to 71 wt %. The cases model an NAC-LWT cask with a full payload of maximum reactivity fuel (maximum clad diameter, minimum clad thickness, and maximum H/Zr ratio). This fuel type has been documented in the previous TRIGA analysis section to be bounding. Table 6.4.5-22 displays the results of the increased enrichment analysis for the 20 wt % and 70 wt % fuels. The 20 wt % enriched fuel showed a small increase in reactivity, but is still significantly below the 70 wt % fuel in reactivity. The small increase in enrichment in the 70 wt % fuel yielded a similarly small change in reactivity. The change in reactivity is a fraction of the uncertainty associated with the reactivity and is statistically insignificant. The increased enrichment fuel payload remained well under the reactivity limit of 0.95.

Increased Mass of ^{235}U (25 wt % ^{235}U and 71 wt % ^{235}U Base Cases)

The next phase of the analysis increased the mass of ^{235}U in addition to the increased enrichment. The 71 wt % maximum ^{235}U mass was increased from 137 to 138 grams, while the LEU (25 wt %) maximum was increased from 169 to 275 grams. Results for this analysis, with four elements per basket opening, are documented in Table 6.4.5-23. The increase in fissile material in the HEU fuel was small and, again, produced an insignificant change in reactivity when compared to the previous HEU run. All HEU reactivities remained under the 0.95 limit.

Because the full payload of 25%, 275g ^{235}U enriched LEU exceeds the reactivity limit, the fuel must have loading restrictions implemented to meet the limits. The 275g ^{235}U LEU is restricted to the bottom and top baskets of the previously most reactive payload, the 71%, 138 g loading. To implement the restrictions, the material cards of the 25%, 275g LEU were copied and added to the input file of the 138g HEU and a MORE DATA card was added to allow for the Dancoff correction of the second fuel. The result of the LEU restriction to the bottom and top baskets of the HEU payload also exceeded the reactivity limit, so the LEU basket was further restricted, allowing only three rods per basket opening instead of four. Table 6.4.5-24 displays the results of the TRIGA payloads containing the 25%, 275g LEU fuel, as well as comparing them to the full payload of 71%, 138g fuel. A tube basket spacer will be used to limit the loading within the basket opening, while retaining the ability to flood and drain the basket freely.

95% HEU Fuel Loading

A full payload of 95% weight enriched and 175g ^{235}U HEU fuel was evaluated. As with the 25%, 275g LEU fuel, the full payload of 95% HEU fuel resulted in a reactivity over 0.95. The same loading restrictions were tested with the 95% HEU fuel, including restricting the fuel to the bottom and top baskets and only allowing three rods per basket opening. The loading evaluation, documented in Table 6.4.5-25, found that to remain under the 0.95 reactivity limit, the 95% HEU fuel must be restricted to the top and bottom baskets with only three rods per opening. The 71%, 138g HEU fuel was loaded in the middle three baskets of the payloads, while the 95% HEU fuel was restricted to the top and bottom baskets. Figure 6.4.5-12 lists the input for the 95% HEU three-element restricted configuration.

PICTURE, a module within the SCALE package, is used to generate representations of the system geometry. Figure 6.4.5-10 contains the image of a fully loaded basket containing four TRIGA elements or mixed loading of TRIGA elements and TRIGA cluster rods. This evaluation represents the center baskets of the transport configuration containing the 95 wt % enriched fuel in the top and bottom baskets. Figure 6.4.5-11 displays the cross-section of the top and bottom baskets with payload limited to three elements. A dummy TRIGA tube will be inserted into the basket to prohibit loading of a fourth element into the basket cell. The dummy tube is not included in the model.

Damaged Fuel

The NAC-LWT cask is licensed to transport both intact and damaged TRIGA fuel elements. Damaged fuel is restricted to the top and bottom basket modules. The most reactive 25%, 275g ^{235}U LEU, 71%, 138g ^{235}U HEU fuel and 95%, 175g ^{235}U HEU TRIGA fuel were modeled as damaged fuel and restricted to the top and bottom baskets of a payload. The remaining baskets were loaded with the previously most reactive full payload, which was the 71%, 138g HEU fuel.

The damaged fuel model was used as the base model, and the 71%, 138g HEU material cards were inserted into the input file. The damaged fuel was modeled as both intact and rubble fuel. The rubble fuel is sealed in a damaged fuel canister and limited to two rods worth of fuel, while the intact fuel was placed into basket openings in a screened canister and can contain full four rods per canister.

Results of the damaged, rubble fuel analyses shown in Table 6.4.5-26 demonstrate that the restriction to two fuel rods in the sealed canister reduces basket reactivity in the damaged fuel locations to that below the intact fuel center baskets (i.e., system reactivity is controlled by the center intact fuel baskets, and no significant system reactivity change results from the placement of the sealed damaged fuel canisters). Figure 6.4.5-13 lists the input for the 95% HEU damaged fuel configuration.

Screened canisters are expected to reduce reactivity for the full, four element per basket opening payload as a result of the additional stainless steel material in the canister body, axial fuel offset produced by the canister bottom and lid structure, and reduced element pitch available in the canister. The most reactive configuration study in previous evaluations documented the reduced reactivity for smaller fuel element pitch. This effect is verified for the higher load fuel elements in Table 6.4.5-27. Results in Table 6.4.5-27 also include the additional effect of adding the canister materials and the axial offset produced by the canister. The combination of these effects results in a lower screened canister basket reactivity than that of the central baskets with a resulting statistically insignificant change in system reactivity. Screened canister evaluations are performed for all increased payload definitions with the results documented in Table 6.4.5-28. None of the cases showed a statistically significant change in reactivity and no case exceeds the 0.95 allowable k_s.

6.4.5.6.5 Mixed TRIGA Fuel Element and Cluster Rod Study

The NAC-LWT cask may contain a mix payload of TRIGA fuel including cluster rods. The most reactive payload (71%, 138g HEU) was modeled with one of the basket openings loaded with TRIGA cluster fuel. The cluster rods were modeled both as intact in a 4 × 4 holder, and as damaged fuel rods as rubble in a sealed canister. The intact rods had a full loading of 16 rods per basket opening, while the damaged fuel was restricted to the equivalent of six rods in the sealed canister. The resulting reactivity is displayed in Table 6.4.5-29. Replacing the 71 wt % HEU rods with cluster rods in one basket opening shows no stastical change in reactivity, as the system reactivity is driven by the fully loaded fuel element baskets.

6.4.5.6.6 Revised Fuel Parameter Reactivity Summary

The reactivity evaluation of the NAC-LWT cask containing up to 120 TRIGA elements demonstrates that subcritical margin ($k_s \leq 0.95$) can be maintained under the following condition:

		Any Mix Loading				Top/Bottom Basket Only	
Fuel Type		LEU	LEU	HEU	Cluster	LEU	HEU
Clad Type		SS	Al	SS	Incoloy	SS	SS
^{235}U Enrichment (wt %)		25%	25%	71%	95%	25%	95%
^{235}U Content (grams)		≤ 169	≤ 41	≤ 138	≤ 46.5	≤ 275	≤ 175
Max.# of Elements/Rods per Opening	Intact	4			16	3	3
	Sealed	2			6	2	2
Rod Diameter		≤ 1.5 inch			≤ 0.53	≤ 1.5 inch	
H/ZR Ratio		2.0			1.7	2.0	
Fuel Material		$U\text{-}ZrH_x$					
Clad Thickness		≥ 0.01 inch					
Maximum Reactivity (k_s)		0.949					

Due to limitations on the array size for accident conditions, the criticality safety index (CSI) for the package is 12.5 for loading of intact fuel and sealed cans containing up to two fuel elements (in any condition, including severely damaged fuel and debris). The basket top module may contain TRIGA cluster rods in either intact or canned form.

6.4.5.7 Conclusion

Thus, including all calculational and mechanical uncertainties, an infinite array of NAC-LWT casks remains subcritical, and is below the 0.95 limit, corrected for bias and uncertainty, under normal and accident conditions with:

Nonpoisoned Baskets:

1. 120 TRIGA fuel elements,
2. Sealed cans (top and bottom baskets only) with two damaged TRIGA fuel elements or fuel debris equivalent to two elements.
3. TRIGA cluster rods in the rod holder desribed in Section 6.4.6 inserted into the top basket module of a TRIGA fuel element shipment.

Poisoned Baskets:

4. 140 TRIGA fuel elements,
5. Sealed cans (top and bottom baskets only) with two damaged TRIGA fuel elements or fuel debris equivalent to two elements.

Figure 6.4.5-1 Finite Cask Array Reactivity versus Fuel Zirconium Mass (Dry Cask Cavity)

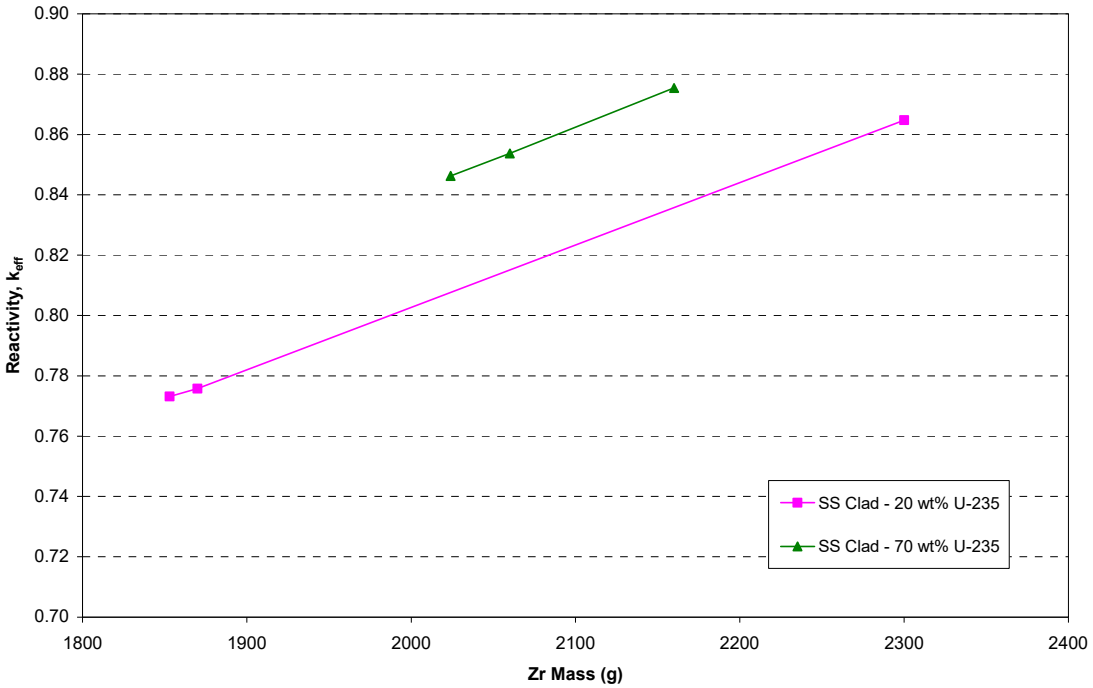

Figure 6.4.5-2 Finite Cask Array Reactivity versus H/Zr Ratio (Dry Cask Cavity)

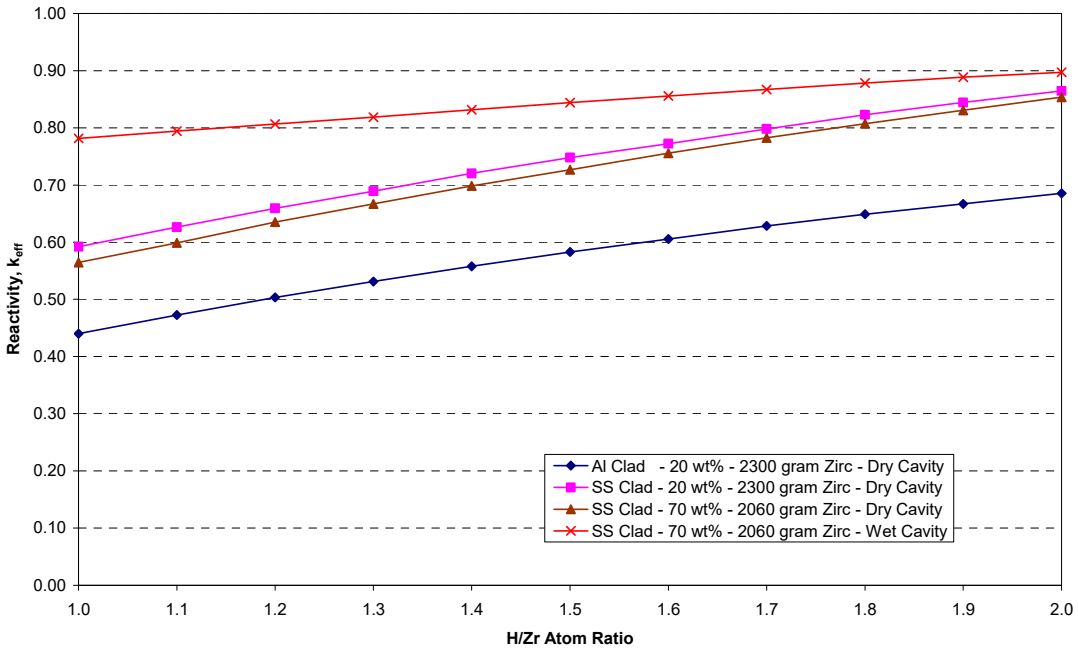

Figure 6.4.5-3 Finite Cask Array Reactivity versus Fuel Mass (Study of ZrH Displacement of Fissile Material for a Fixed Fuel Geometry)

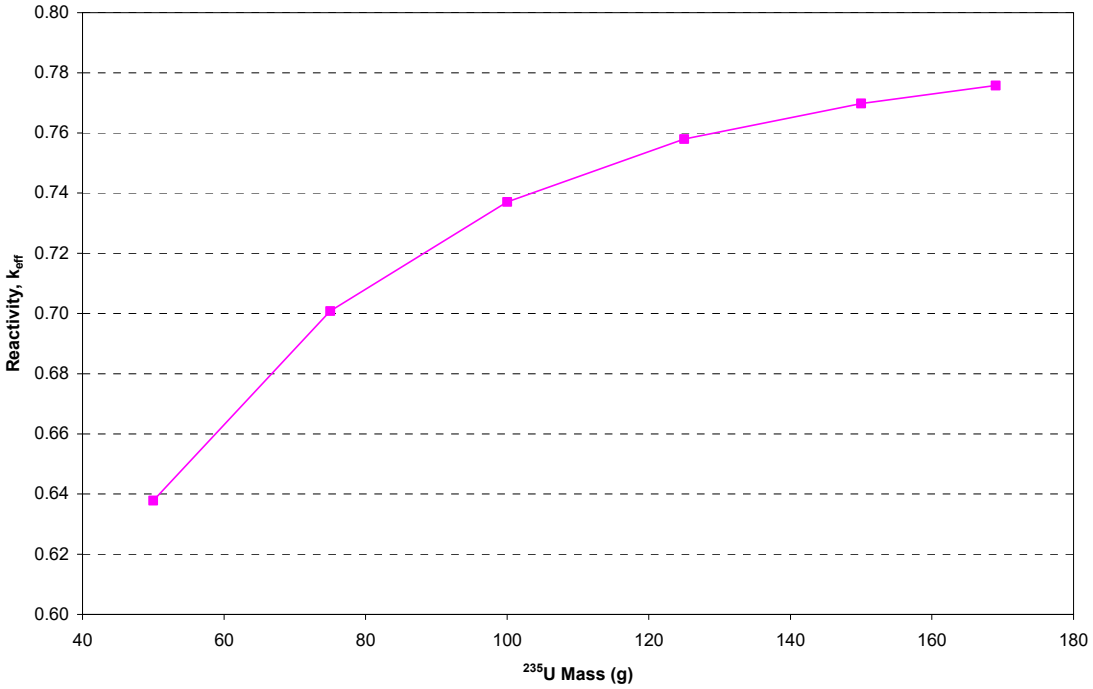

Figure 6.4.5-4 Intact Fuel Optimum Moderator Study – 70 wt % ^{235}U Various Zirconium Masses

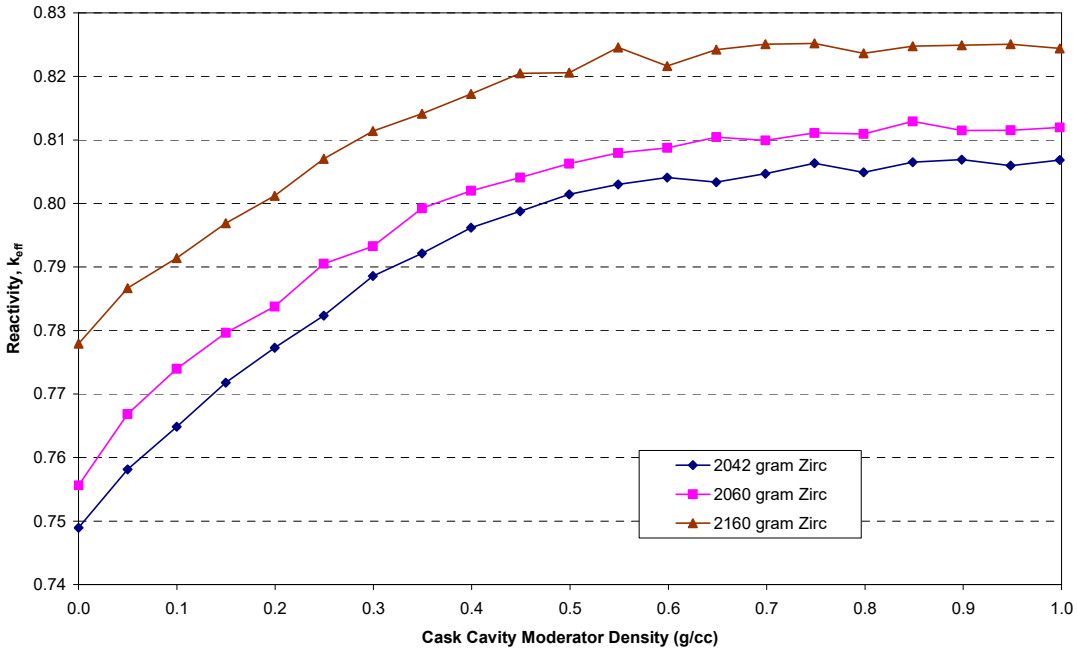

Figure 6.4.5-5 Detailed Intact Fuel Optimum Moderator Study – H/Zr Ratio, Fuel Element Characteristics and Location Varied

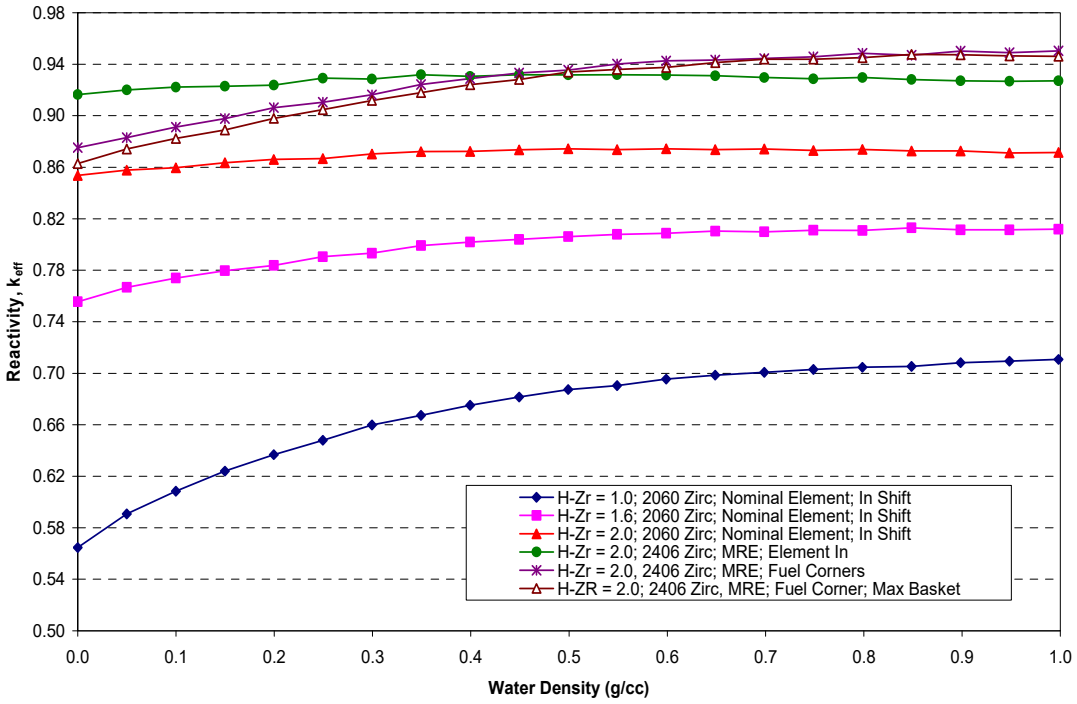

Figure 6.4.5-6 Screened and Sealed Can Optimum Moderator Study – Maximum Reactivity Fuel Configuration – 70 wt% ^{235}U Steel Clad

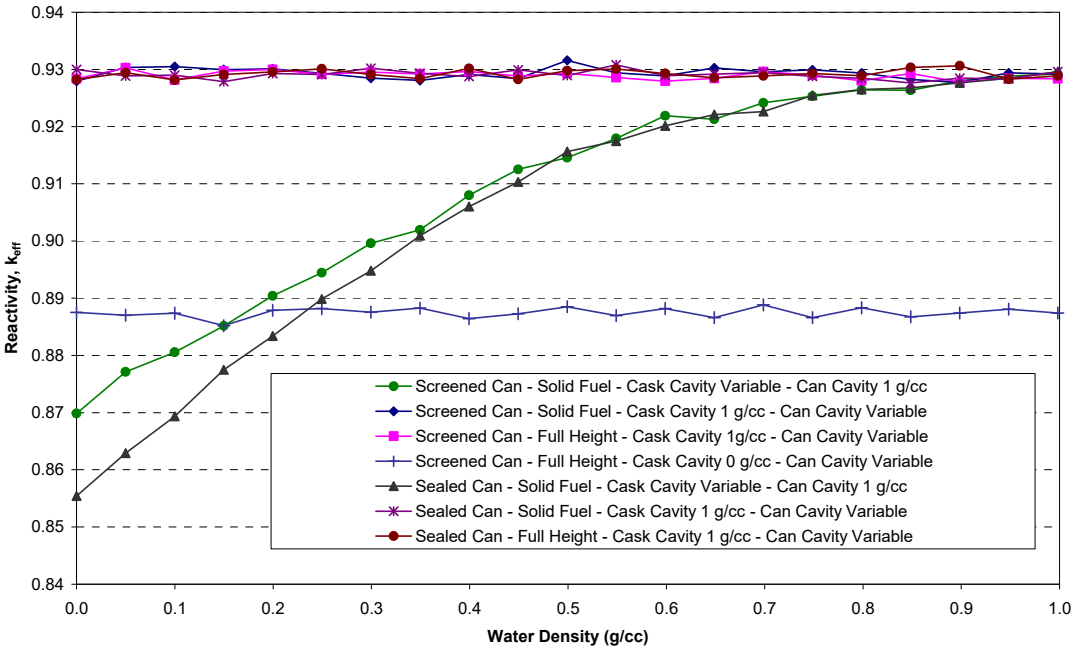

Figure 6.4.5-7 Screened and Sealed Can Debris Height Study – Maximum Reactivity Fuel Configuration – 70 wt% ^{235}U Steel Clad

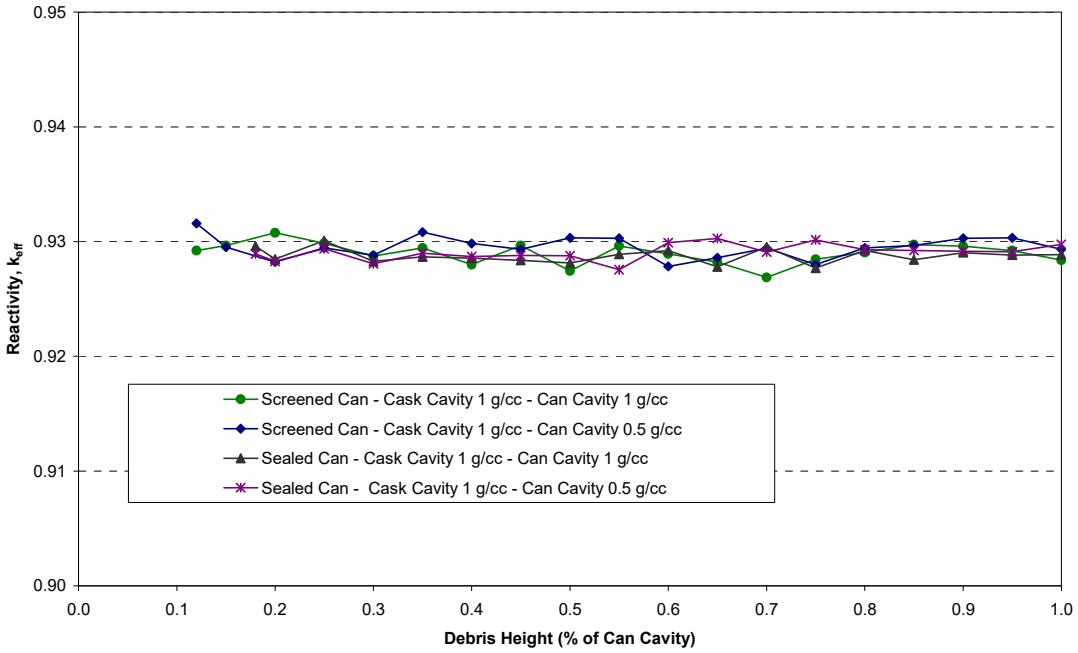

Figure 6.4.5-8 Screened Can – 4 Elements per Can – Maximum Reactivity Fuel Configuration – 70 wt% ^{235}U Steel Clad

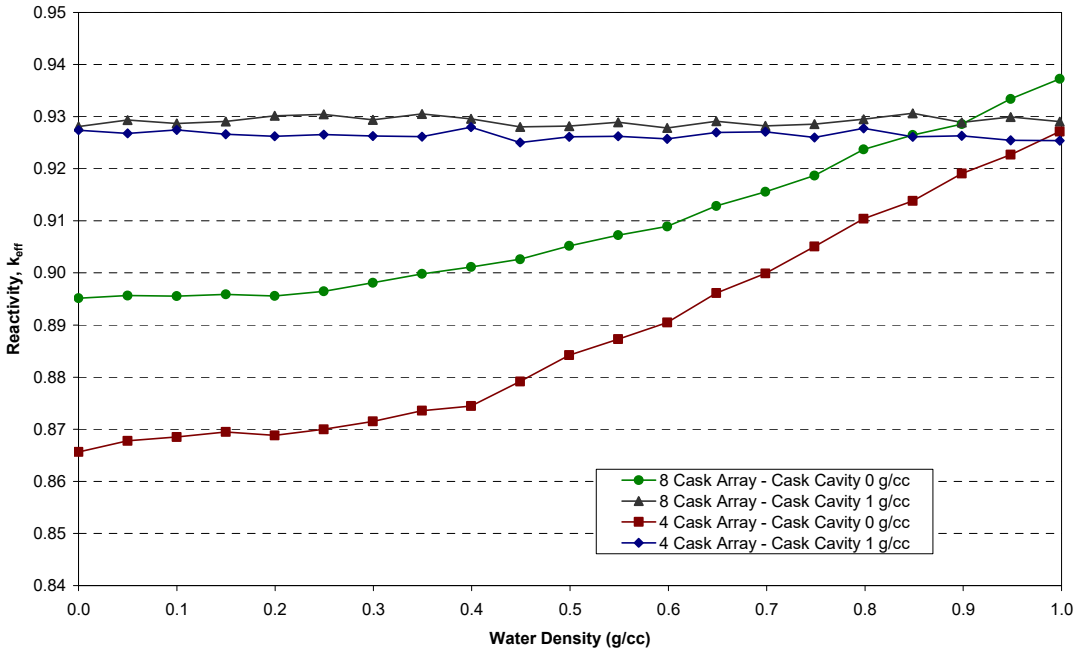

Figure 6.4.5-9 PICTURE Representation of NAC-LWT Eight Cask Array for Accident Condition TRIGA Unpoisoned Basket Analysis

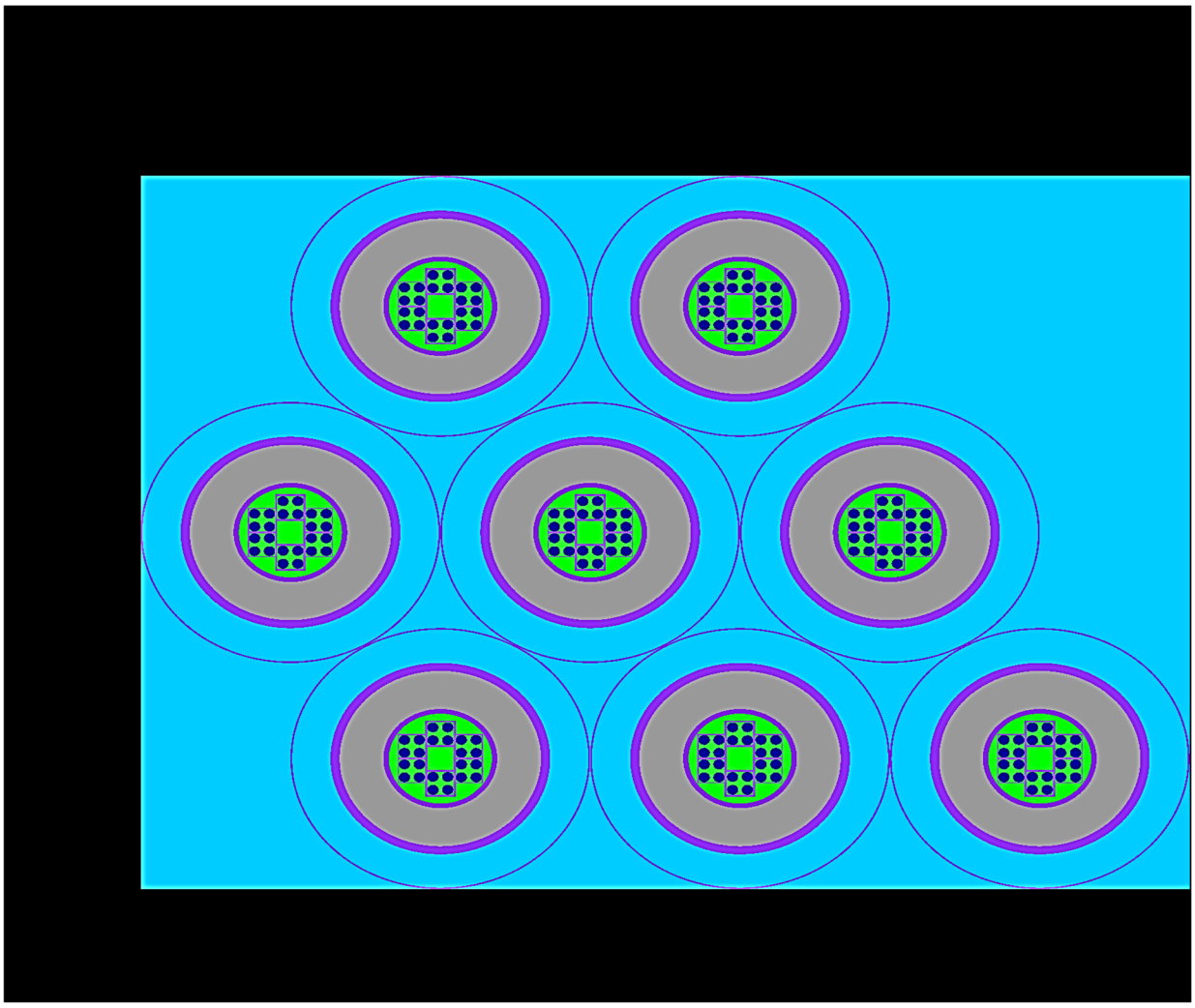

Figure 6.4.5-10 PICTURE Representation of NAC-LWT TRIGA Payload – Fully Loaded Basket Analysis and Mixed TRIGA Loading[4]

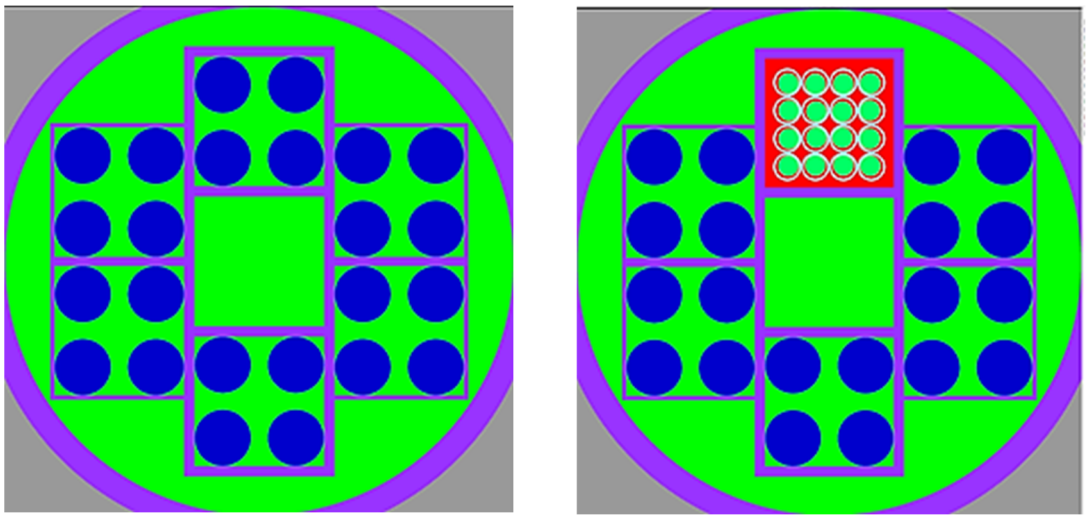

Figure 6.4.5-11 PICTURE Representation of NAC-LWT TRIGA Payload – Reduced Number of Elements in High Fissile Material Element Basket – Top and Bottom Baskets

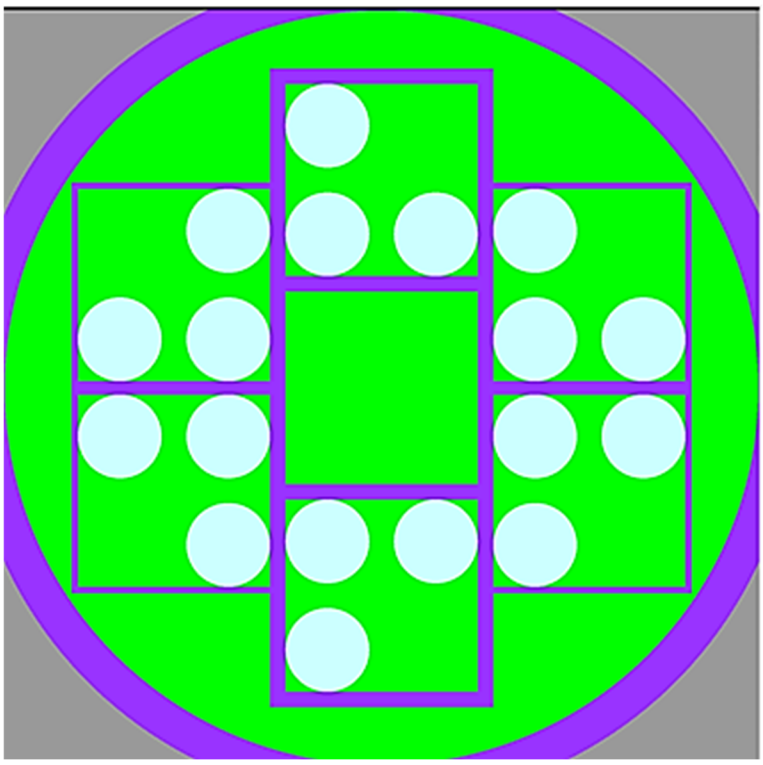

[4] Fully loaded baskets represent the center baskets for the high fissile material load analysis (>138g ^{235}U for HEU and >169g ^{235}U for LEU) and any basket for lower fissile mass and/or mixed TRIGA element/TRIGA cluster rod contents.

Figure 6.4.5-12 Sample Input File for High Mass HEU TRIGA Analysis – 3 Intact Elements of 175 g ^{235}U at 95 wt % ^{235}U per Basket Opening in Top and Bottom Basket –Accident Array Calculation with 8 Casks

```
=CSAS25
TRIGA - WET INTERIOR, DRY EXTERIOR - FINITE CASK ARRAY
'2 Fuel run with 2nd fuel in bottom and top baskets
'Fuel 1: 71_2342Zr_U5_138g - middle 3 baskets
'Fuel 2: 95_2345Zr_U5_175g - top and bottom baskets
27GROUPNDF4  LATTICECELL
'FUEL 1
U-235     1 0.0 8.09244E-04 293.0 END
U-238     1 0.0 3.24241E-04 293.0 END
ZR        1 0.0 3.53871E-02 293.0 END
H         1 0.0 7.07742E-02 293.0 END
'CLAD
SS304     2 1.0 293.0 END
'CASK INTERNAL MODERATOR
H2O       3 1.0 293.0 END
'ZIRCONIUM ROD
ZR        4 1.0 293.0 END
'GRAPHITE REFLECTOR
C         5 1.0 293.0 END
'BASKET AND CASK STEEL
SS304     6 1.0 293.0 END
'LEAD SHIELD
PB        7 1.0 293.0 END
'NEUTRON SHIELD
H2O       8 1.0 293.0 END
'CASK EXTERNAL MATERIAL
H2O       9 1E-20 293.0 END
'END FITTING FOR FUEL ELEMENT
SS304     10 0.337137 293.0 END
H2O       10 0.662863 293.0 END
'FUEL 2
U-235     11 0.0 1.02622E-03 293.0 END
U-238     11 0.0 5.21101E-05 293.0 END
ZR        11 0.0 3.54310E-02 293.0 END
H         11 0.0 7.08620E-02 293.0 END
END COMP
SQUAREPITCH 3.8101 3.7592 1 3 3.81 2 3.7592 0 END
MORE DATA
RES=11  CYLINDER 1.87960  DAN(11)=8.52196E-01  END
TRIGA - WET INTERIOR, DRY EXTERIOR - MOST REACTIVE CONFIGURATION
READ PARAM TME=170.0 GEN=803 NPG=2000 RUN=YES PLT=NO
TBA=2.0 END PARAM
READ GEOM
UNIT 41
COM='TRIGA FUEL ELEMENT'
CYLINDER 4 1 0.00010 2P19.6850
'
CYLINDER 1 1 1.87960 2P19.6850
CYLINDER 5 1 1.87960 2P28.3718
'
CYLINDER 2 1 1.90500 2P28.3718
CYLINDER 10 1 1.90500 2P36.7030
UNIT 45
COM='3.38 in Width / 0.28 in Thickness DIVIDER CENTER STACK'
CUBOID   6 1 2P4.29260 0.71120 0.00000 2P36.7030
```

Figure 6.4.5-12 Sample Input File for High Mass HEU TRIGA Analysis – 3 Intact Elements of 175 g ^{235}U at 95 wt % ^{235}U per Basket Opening in Top and Bottom Basket –Accident Array Calculation with 8 Casks (Continued)

```
UNIT 46
COM='3.38 in Width / 0.24 in Thickness DIVIDER OUTSIDE STACK'
CUBOID   6 1 2P4.29260 0.60960 0.00000 2P36.7030
UNIT 50
COM='TRIGA ELEMENTS - Top of 3.38 in x 3.38 in OPENING'
CUBOID   3 1 2P4.29260 2P4.29260 2P36.7030
HOLE     41 +2.3875 +2.3875 0.0000
HOLE     41 -2.3875 +2.3875 0.0000
HOLE     41 -2.3875 -2.3875 0.0000
HOLE     41 +2.3875 -2.3875 0.0000
UNIT 51
COM='TRIGA ELEMENTS - Bottom of 3.38 in x 3.38 in OPENING'
CUBOID   3 1 2P4.29260 2P4.29260 2P36.7030
HOLE     41 +2.3875 +2.3875 0.0000
HOLE     41 -2.3875 +2.3875 0.0000
HOLE     41 -2.3875 -2.3875 0.0000
HOLE     41 +2.3875 -2.3875 0.0000
UNIT 52
COM='TRIGA ELEMENTS - Bottom Right of 3.38 in x 3.38 in OPENING'
CUBOID   3 1 2P4.29260 2P4.29260 2P36.7030
HOLE     41 +2.3875 +2.3875 0.0000
HOLE     41 -2.3875 +2.3875 0.0000
HOLE     41 -2.3875 -2.3875 0.0000
HOLE     41 +2.3875 -2.3875 0.0000
UNIT 53
COM='TRIGA ELEMENTS - Top Right of 3.38 in x 3.38 in OPENING'
CUBOID   3 1 2P4.29260 2P4.29260 2P36.7030
HOLE     41 +2.3875 +2.3875 0.0000
HOLE     41 -2.3875 +2.3875 0.0000
HOLE     41 -2.3875 -2.3875 0.0000
HOLE     41 +2.3875 -2.3875 0.0000
UNIT 54
COM='TRIGA ELEMENTS - Bottom Left of 3.38 in x 3.38 in OPENING'
CUBOID   3 1 2P4.29260 2P4.29260 2P36.7030
HOLE     41 +2.3875 +2.3875 0.0000
HOLE     41 -2.3875 +2.3875 0.0000
HOLE     41 -2.3875 -2.3875 0.0000
HOLE     41 +2.3875 -2.3875 0.0000
UNIT 55
COM='TRIGA ELEMENTS - Top Left of 3.38 in x 3.38 in OPENING'
CUBOID   3 1 2P4.29260 2P4.29260 2P36.7030
HOLE     41 +2.3875 +2.3875 0.0000
HOLE     41 -2.3875 +2.3875 0.0000
HOLE     41 -2.3875 -2.3875 0.0000
HOLE     41 +2.3875 -2.3875 0.0000
UNIT 56
COM='TRIGA BASKET 3.38 in x 3.38 in CENTER OPENING'
CUBOID   3 1 2P4.29260 2P4.29260 2P36.7030
UNIT 60
COM='CENTER COLUMN OF THREE OPENINGS w/ 0.28 in plate'
ARRAY 11 -4.2926 -13.5890 -36.7030
REPLICATE 6 1 4R0.7112 2R0.0 1
UNIT 61
COM='LEFT OUTSIDE COLUMN OF TWO OPENINGS w/ 0.12 in plate'
ARRAY 12 -4.2926 -8.8900 -36.7030
```

Figure 6.4.5-12 Sample Input File for High Mass HEU TRIGA Analysis – 3 Intact Elements of 175 g ^{235}U at 95 wt % ^{235}U per Basket Opening in Top and Bottom Basket –Accident Array Calculation with 8 Casks (Continued)

```
REPLICATE 6 1 0.0 0.3048 2R0.3048 2R0.0 1
UNIT 62
COM='RIGHT OUTSIDE COLUMN OF TWO OPENINGS w/ 0.12 in plate'
ARRAY 13 -4.2926 -8.8900 -36.7030
REPLICATE 6 1 0.3048 0.0 2R0.3048 2R0.0 1
UNIT 70
COM='NAC-LWT TRIGA BASKET WITH RADIAL CASK SHIELD'
CYLINDER 3 1 17.15000 2P36.7030
HOLE     60 0.0000 0.0000 0.0000
HOLE     61 -9.2965 0.0000 0.0000
HOLE     62 +9.2965 0.0000 0.0000
CYLINDER 6 1 18.91030 2P37.3379
CYLINDER 7 1 33.46450 2P37.3379
CYLINDER 6 1 36.51880 2P37.3379
CYLINDER 9 1 49.22270 2P37.3379
CYLINDER 6 1 49.82210 2P37.3379
'---------------2nd Fuel Units------------------------------
UNIT 141
COM='TRIGA FUEL ELEMENT'
CYLINDER 4 1 0.00010 2P19.6850
'
CYLINDER 11 1 1.87960 2P19.6850
CYLINDER 5 1 1.87960 2P28.3718
'
CYLINDER 2 1 1.90500 2P28.3718
CYLINDER 10 1 1.90500 2P36.7030

UNIT 150
COM='TRIGA ELEMENTS - Top of 3.38 in x 3.38 in OPENING (Fuel 2)'
CUBOID   3 1 2P4.29260 2P4.29260 2P36.7030
'HOLE     141 +2.3875 +2.3875 0.0000
HOLE     141 -2.3875 +2.3875 0.0000
HOLE     141 -2.3875 -2.3875 0.0000
HOLE     141 +2.3875 -2.3875 0.0000
UNIT 151
COM='TRIGA ELEMENTS - Bottom of 3.38 in x 3.38 in OPENING (Fuel 2)'
CUBOID   3 1 2P4.29260 2P4.29260 2P36.7030
HOLE     141 +2.3875 +2.3875 0.0000
HOLE     141 -2.3875 +2.3875 0.0000
HOLE     141 -2.3875 -2.3875 0.0000
'HOLE     141 +2.3875 -2.3875 0.0000
UNIT 152
COM='TRIGA ELEMENTS - Bottom Right of 3.38 in x 3.38 in OPENING (Fuel 2)'
CUBOID   3 1 2P4.29260 2P4.29260 2P36.7030
HOLE     141 +2.3875 +2.3875 0.0000
HOLE     141 -2.3875 +2.3875 0.0000
HOLE     141 -2.3875 -2.3875 0.0000
'HOLE     141 +2.3875 -2.3875 0.0000
UNIT 153
COM='TRIGA ELEMENTS - Top Right of 3.38 in x 3.38 in OPENING (Fuel 2)'
CUBOID   3 1 2P4.29260 2P4.29260 2P36.7030
'HOLE     141 +2.3875 +2.3875 0.0000
HOLE     141 -2.3875 +2.3875 0.0000
HOLE     141 -2.3875 -2.3875 0.0000
HOLE     141 +2.3875 -2.3875 0.0000
```

Figure 6.4.5-12 Sample Input File for High Mass HEU TRIGA Analysis – 3 Intact Elements of 175 g ^{235}U at 95 wt % ^{235}U per Basket Opening in Top and Bottom Basket –Accident Array Calculation with 8 Casks (Continued)

```
UNIT 154
COM='TRIGA ELEMENTS - Bottom Left of 3.38 in x 3.38 in OPENING (Fuel 2)'
CUBOID   3 1 2P4.29260 2P4.29260 2P36.7030
HOLE     141 +2.3875 +2.3875 0.0000
HOLE     141 -2.3875 +2.3875 0.0000
'HOLE     141 -2.3875 -2.3875 0.0000
HOLE     141 +2.3875 -2.3875 0.0000
UNIT 155
COM='TRIGA ELEMENTS - Top Left of 3.38 in x 3.38 in OPENING (Fuel 2)'
CUBOID   3 1 2P4.29260 2P4.29260 2P36.7030
HOLE     141 +2.3875 +2.3875 0.0000
'HOLE     141 -2.3875 +2.3875 0.0000
HOLE     141 -2.3875 -2.3875 0.0000
HOLE     141 +2.3875 -2.3875 0.0000
UNIT 160
COM='CENTER COLUMN OF THREE OPENINGS w/ 0.28 in plate'
ARRAY 111 -4.2926 -13.5890 -36.7030
REPLICATE 6 1 4R0.7112 2R0.0 1
UNIT 161
COM='LEFT OUTSIDE COLUMN OF TWO OPENINGS w/ 0.12 in plate'
ARRAY 112 -4.2926 -8.8900 -36.7030
REPLICATE 6 1 0.0 0.3048 2R0.3048 2R0.0 1
UNIT 162
COM='RIGHT OUTSIDE COLUMN OF TWO OPENINGS w/ 0.12 in plate'
ARRAY 113 -4.2926 -8.8900 -36.7030
REPLICATE 6 1 0.3048 0.0 2R0.3048 2R0.0 1
UNIT 170
COM='NAC-LWT TRIGA BASKET WITH RADIAL CASK SHIELD'
CYLINDER 3 1 17.15000 2P36.7030
HOLE     160 0.0000 0.0000 0.0000
HOLE     161 -9.2965 0.0000 0.0000
HOLE     162 +9.2965 0.0000 0.0000
CYLINDER 6 1 18.91030 2P37.3379
CYLINDER 7 1 33.46450 2P37.3379
CYLINDER 6 1 36.51880 2P37.3379
CYLINDER 9 1 49.22270 2P37.3379
CYLINDER 6 1 49.82210 2P37.3379
'-----------End 2nd Fuel Units------------------------------
UNIT 80
COM='NAC-LWT WITH 5 TRIGA BASKETS - NO LID OR BOTTOM WELDMENT'
CYLINDER 3 1 49.82210 373.3800 0.0000
HOLE     170 0.0000 0.0000 +37.3380
HOLE     70 0.0000 0.0000 +112.0140
HOLE     70 0.0000 0.0000 +186.6900
HOLE     70 0.0000 0.0000 +261.3660
HOLE     170 0.0000 0.0000 +336.0420
UNIT 90
COM='SIMPLIFIED LID STRUCTURE NAC-LWT'
CYLINDER 6 1 36.5188 2P14.1351
CYLINDER 9 1 49.8221 2P14.1351
UNIT 91
COM='SIMPLIFIED CASK BOTTOM STRUCTURE NAC-LWT'
CYLINDER 7 1 26.3525 2P3.81
CYLINDER 6 1 36.6188 +13.97 -12.7
CYLINDER 9 1 49.8221 +13.97 -12.7
UNIT 92
COM='SINGLE CASK'
```

Figure 6.4.5-12 Sample Input File for High Mass HEU TRIGA Analysis – 3 Intact Elements of 175 g ^{235}U at 95 wt % ^{235}U per Basket Opening in Top and Bottom Basket –Accident Array Calculation with 8 Casks (Continued)

```
CYLINDER 9 1 49.82210 428.3204 0.0000
HOLE     91 0.0000 0.0000 +12.7000
HOLE     80 0.0000 0.0000 +26.6700
HOLE     90 0.0000 0.0000 +414.1852
GLOBAL UNIT 93
COM='FINITE CASK ARRAY - 8 CASKS'
CUBOID   9 1 199.28960 -149.46660 2P136.11700 428.3204 0.0000
HOLE     92 0.0000 0.0000 0.0000
HOLE     92 +99.6444 0.0000 0.0000
HOLE     92 +49.8222 +86.2946 0.0000
HOLE     92 -49.8222 +86.2946 0.0000
HOLE     92 -99.6444 0.0000 0.0000
HOLE     92 -49.8222 -86.2946 0.0000
HOLE     92 +49.8222 -86.2946 0.0000
HOLE     92 +149.4666 -86.2946 0.0000
END GEOM
READ ARRAY
ARA=11 NUX=1 NUY=5 NUZ=1 FILL 50 45 56 45 51 END FILL
ARA=12 NUX=1 NUY=3 NUZ=1 FILL 53 46 52 END FILL
ARA=13 NUX=1 NUY=3 NUZ=1 FILL 55 46 54 END FILL
ARA=111 NUX=1 NUY=5 NUZ=1 FILL 151 45 56 45 150 END FILL
ARA=112 NUX=1 NUY=3 NUZ=1 FILL 154 46 155 END FILL
ARA=113 NUX=1 NUY=3 NUZ=1 FILL 152 46 153 END FILL
END ARRAY
READ BOUNDS ALL=H2O END BOUNDS
READ PLOT
TTL='X-Y PLOT OF BASKET'
SCR=YES PIC=MAT LPI=10
UAX=1.0 VDN=-1.0 NAX=1600
XUL=-17.2 YUL=17.2 ZUL=215
XLR=17.2 YLR=-17.2 ZLR=215 END
TTL='X-Y PLOT OF PERIPHERAL OPENING'
SCR=YES PIC=MAT LPI=10
UAX=1.0 VDN=-1.0 NAX=1600
XUL=-7.0 YUL=16.0 ZUL=215
XLR=7.0  YLR=4.0 ZLR=215 END
TTL='Y-Z PLOT OF BASKET (CENTER OF FUEL ELEMENTS,CANISTER ELEVATION)'
SCR=YES PIC=MAT LPI=10
VAX=1.0 WDN=-1.0 NAX=1600
XUL=2.12 YUL=-14.0 ZUL=330
XLR=2.12 YLR=-4.5 ZLR=235 END
TTL='Y-Z PLOT OF BASKET (CASK)'
SCR=YES PIC=MAT LPI=10
VAX=1.0 WDN=-1.0 NAX=1600
XUL=2.12 YUL=-51 ZUL=465
XLR=2.12 YLR=+51 ZLR=0 END
TTL='X-Y PLOT OF ARRAY'
SCR=YES PIC=MAT LPI=10
UAX=1.0 VDN=-1.0 NAX=1600
XUL=-200 YUL=200 ZUL=215
XLR=200  YLR=-200 ZLR=215
END PLOT
END DATA
END
```

Figure 6.4.5-13 Sample Input File for High Mass HEU TRIGA Analysis – 2 Damaged Elements of 175 g ^{235}U at 95 wt % ^{235}U per Basket Opening in Top and Bottom Basket – Accident Array Calculation with 8 Casks

```
=CSAS25
TRIGA - PREF. FLOOD DEBRIS CANISTER - SEALED CAN - 2 RODS
27GROUPNDF4  INFHOMMEDIUM
'Sealed Fuel: 95_2345Zr_U5_175g
'Middle Baskets Fuel: 71_2342Zr_U5_138g'FUEL
U-235     1 0.0 1.80754E-04 293.0 END
U-238     1 0.0 9.17849E-06 293.0 END
ZR        1 0.0 6.24069E-03 293.0 END
H         1 0.0 1.24814E-02 293.0 END
H2O       1 0.823864 293.0 END
'
'
'CANISTER INTERNAL MODERATOR
H2O       3 1.0 293.0 END
'ZIRCONIUM ROD
ZR        4 1.0 293.0 END
'GRAPHITE REFLECTOR
C         5 1.0 293.0 END
'BASKET AND CASK STEEL
SS304     6 1.0 293.0 END
'LEAD SHIELD
PB        7 1.0 293.0 END
'NEUTRON SHIELD
H2O       8 1.0 293.0 END
'CASK EXTERNAL MATERIAL
H2O       9 1E-20 293.0 END
'
'
'
'INTACT FUEL MATERIAL COMPOSITION
U-235     11 0.0 8.09244E-04 293.0 END
U-238     11 0.0 3.24241E-04 293.0 END
ZR        11 0.0 3.53871E-02 293.0 END
H         11 0.0 7.07742E-02 293.0 END
'INTACT FUEL CLAD
SS304     12 1.0 293.0 END
'CASK INTERIOR MODERATOR MATERIAL
H2O       13 1.0 293.0 END
'INTACT FUEL END-FITTING
SS304     14 0.337137 293.0 END
H2O       14 0.662863 293.0 END
END COMP
MORE DATA
RES=11  CYLINDER 1.8796 DAN(11)=8.52196E-01
END MORE
TRIGA - PREF. FLOOD CANISTER  - 2 ROD FILLING CANISTER + TOLERANCE
READ PARAM TME=170.0 GEN=803 NPG=2000 RUN=YES PLT=NO
TBA=2.0 END PARAM
READ GEOM
UNIT 1
COM='TRIGA FUEL (SEALED)'
CYLINDER 1 1 3.98770 99.3130 0.0010
UNIT 5
COM='3.38 in Width / 0.28 in Thickness DIVIDER CENTER STACK (SEALED)'
CUBOID   6 1 2P4.29260 0.71120 0.00000 112.6490 -8.2550
UNIT 6
```

Figure 6.4.5-13 Sample Input File for High Mass HEU TRIGA Analysis – 2 Damaged Elements of 175 g ^{235}U at 95 wt % ^{235}U per Basket Opening in Top and Bottom Basket – Accident Array Calculation with 8 Casks (Continued)

```
COM='3.38 in Width / 0.24 in Thickness DIVIDER OUTSIDE STACK (SEALED)'
CUBOID   6 1 2P4.29260 0.60960 0.00000 112.6490 -8.2550
UNIT 7
COM=' SEALED CANISTER'
CYLINDER 3 1 3.98780 99.3140 0.0000
HOLE     1 0.0000 0.0000 0.0000
CYLINDER 6 1 4.15290 101.8540 -1.2700
CYLINDER 13 1 4.15290 112.6490 -8.2550
UNIT 10
COM='TRIGA ELEMENTS - Top of 3.38 in x 3.38 in OPENING (SEALED)'
CUBOID   13 1 2P4.29260 2P4.29260 112.6490 -8.2550
HOLE     7 0.0000 +0.1396 0.0000
UNIT 11
COM='TRIGA ELEMENTS - Bottom of 3.38 in x 3.38 in OPENING (SEALED)'
CUBOID   13 1 2P4.29260 2P4.29260 112.6490 -8.2550
HOLE     7 0.0000 -0.1396 0.0000
UNIT 12
COM='TRIGA ELEMENTS - Bottom Right of 3.38 in x 3.38 in OPENING (SEALED)'
CUBOID   13 1 2P4.29260 2P4.29260 112.6490 -8.2550
HOLE     7 +0.1396 -0.1396 0.0000
UNIT 13
COM='TRIGA ELEMENTS - Top Right of 3.38 in x 3.38 in OPENING (SEALED)'
CUBOID   13 1 2P4.29260 2P4.29260 112.6490 -8.2550
HOLE     7 +0.1396 +0.1396 0.0000
UNIT 14
COM='TRIGA ELEMENTS - Bottom Left of 3.38 in x 3.38 in OPENING (SEALED)'
CUBOID   13 1 2P4.29260 2P4.29260 112.6490 -8.2550
HOLE     7 -0.1396 -0.1396 0.0000
UNIT 15
COM='TRIGA ELEMENTS - Top Left of 3.38 in x 3.38 in OPENING (SEALED)'
CUBOID   13 1 2P4.29260 2P4.29260 112.6490 -8.2550
HOLE     7 -0.1396 +0.1396 0.0000
UNIT 16
COM='TRIGA BASKET 3.38 in x 3.38 in CENTER OPENING (SEALED)'
CUBOID   13 1 2P4.29260 2P4.29260 112.6490 -8.2550
UNIT 20
COM='CENTER COLUMN OF THREE OPENINGS w/ 0.28 in plate (SEALED)'
ARRAY 1 -4.2926 -13.5890 -8.2550
REPLICATE 6 1 4R0.7112 2R0.0 1
UNIT 21
COM='LEFT OUTSIDE COLUMN OF TWO OPENINGS w/ 0.12 in plate (SEALED)'
ARRAY 2 -4.2926 -8.8900 -8.2550
REPLICATE 6 1 0.0 0.3048 2R0.3048 2R0.0 1
UNIT 22
COM='RIGHT OUTSIDE COLUMN OF TWO OPENINGS w/ 0.12 in plate (SEALED)'
ARRAY 3 -4.2926 -8.8900 -8.2550
REPLICATE 6 1 0.3048 0.0 2R0.3048 2R0.0 1
UNIT 30
COM='NAC-LWT TRIGA BASKET (SEALED)'
CYLINDER 13 1 17.15000 112.6491 -8.2551
HOLE     20 0.0000 0.0000 0.0000
HOLE     21 -9.2965 0.0000 0.0000
HOLE     22 +9.2965 0.0000 0.0000
CYLINDER 6 1 18.91030 113.2838 -8.8898
CYLINDER 7 1 33.46450 113.2838 -8.8898
CYLINDER 6 1 36.51880 113.2838 -8.8898
```

Figure 6.4.5-13 Sample Input File for High Mass HEU TRIGA Analysis – 2 Damaged Elements of 175 g ^{235}U at 95 wt % ^{235}U per Basket Opening in Top and Bottom Basket – Accident Array Calculation with 8 Casks (Continued)

```
CYLINDER 9 1 49.22270 113.2838 -8.8898
CYLINDER 6 1 49.82210 113.2838 -8.8898
UNIT 41
COM='TRIGA FUEL ELEMENT'
CYLINDER 4 1 0.00010 2P19.6850

CYLINDER 11 1 1.87960 2P19.6850
CYLINDER 5 1 1.87960 2P28.3718

CYLINDER 12 1 1.90500 2P28.3718
CYLINDER 14 1 1.90500 2P36.7030
UNIT 45
COM='3.38 in Width / 0.28 in Thickness DIVIDER CENTER STACK'
CUBOID   6 1 2P4.29260 0.71120 0.00000 2P36.7030
UNIT 46
COM='3.38 in Width / 0.24 in Thickness DIVIDER OUTSIDE STACK'
CUBOID   6 1 2P4.29260 0.60960 0.00000 2P36.7030
UNIT 50
COM='TRIGA ELEMENTS - Top of 3.38 in x 3.38 in OPENING'
CUBOID   13 1 2P4.29260 2P4.29260 2P36.7030
HOLE     41 +2.3875 +2.3875 0.0000
HOLE     41 -2.3875 +2.3875 0.0000
HOLE     41 -2.3875 -2.3875 0.0000
HOLE     41 +2.3875 -2.3875 0.0000
UNIT 51
COM='TRIGA ELEMENTS - Bottom of 3.38 in x 3.38 in OPENING'
CUBOID   13 1 2P4.29260 2P4.29260 2P36.7030
HOLE     41 +2.3875 +2.3875 0.0000
HOLE     41 -2.3875 +2.3875 0.0000
HOLE     41 -2.3875 -2.3875 0.0000
HOLE     41 +2.3875 -2.3875 0.0000
UNIT 52
COM='TRIGA ELEMENTS - Bottom Right of 3.38 in x 3.38 in OPENING'
CUBOID   13 1 2P4.29260 2P4.29260 2P36.7030
HOLE     41 +2.3875 +2.3875 0.0000
HOLE     41 -2.3875 +2.3875 0.0000
HOLE     41 -2.3875 -2.3875 0.0000
HOLE     41 +2.3875 -2.3875 0.0000
UNIT 53
COM='TRIGA ELEMENTS - Top Right of 3.38 in x 3.38 in OPENING'
CUBOID   13 1 2P4.29260 2P4.29260 2P36.7030
HOLE     41 +2.3875 +2.3875 0.0000
HOLE     41 -2.3875 +2.3875 0.0000
HOLE     41 -2.3875 -2.3875 0.0000
HOLE     41 +2.3875 -2.3875 0.0000
UNIT 54
COM='TRIGA ELEMENTS - Bottom Left of 3.38 in x 3.38 in OPENING'
CUBOID   13 1 2P4.29260 2P4.29260 2P36.7030
HOLE     41 +2.3875 +2.3875 0.0000
HOLE     41 -2.3875 +2.3875 0.0000
HOLE     41 -2.3875 -2.3875 0.0000
HOLE     41 +2.3875 -2.3875 0.0000
UNIT 55
COM='TRIGA ELEMENTS - Top Left of 3.38 in x 3.38 in OPENING'
CUBOID   13 1 2P4.29260 2P4.29260 2P36.7030
HOLE     41 +2.3875 +2.3875 0.0000
```

Figure 6.4.5-13 Sample Input File for High Mass HEU TRIGA Analysis – 2 Damaged Elements of 175 g ^{235}U at 95 wt % ^{235}U per Basket Opening in Top and Bottom Basket – Accident Array Calculation with 8 Casks (Continued)

```
HOLE     41 -2.3875 +2.3875 0.0000
HOLE     41 -2.3875 -2.3875 0.0000
HOLE     41 +2.3875 -2.3875 0.0000
UNIT 56
COM='TRIGA BASKET 3.38 in x 3.38 in CENTER OPENING'
CUBOID   13 1 2P4.29260 2P4.29260 2P36.7030
UNIT 60
COM='CENTER COLUMN OF THREE OPENINGS w/ 0.28 in plate'
ARRAY 11 -4.2926 -13.5890 -36.7030
REPLICATE 6 1 4R0.7112 2R0.0 1
UNIT 61
COM='LEFT OUTSIDE COLUMN OF TWO OPENINGS w/ 0.12 in plate'
ARRAY 12 -4.2926 -8.8900 -36.7030
REPLICATE 6 1 0.0 0.3048 2R0.3048 2R0.0 1
UNIT 62
COM='RIGHT OUTSIDE COLUMN OF TWO OPENINGS w/ 0.12 in plate'
ARRAY 13 -4.2926 -8.8900 -36.7030
REPLICATE 6 1 0.3048 0.0 2R0.3048 2R0.0 1
UNIT 70
COM='NAC-LWT TRIGA BASKET WITH RADIAL CASK SHIELD'
CYLINDER 13 1 17.15000 2P36.7030
HOLE     60 0.0000 0.0000 0.0000
HOLE     61 -9.2965 0.0000 0.0000
HOLE     62 +9.2965 0.0000 0.0000
CYLINDER 6 1 18.91030 2P37.3379
CYLINDER 7 1 33.46450 2P37.3379
CYLINDER 6 1 36.51880 2P37.3379
CYLINDER 9 1 49.22270 2P37.3379
CYLINDER 6 1 49.82210 2P37.3379
UNIT 81
COM='NAC-LWT WITH 5 TRIGA BASKETS - NO LID OR BOTTOM WELDMENT'
CYLINDER 13 1 49.82210 468.3760 0.0000
HOLE     30 0.0000 0.0000 +8.8900
HOLE     70 0.0000 0.0000 +159.5120
HOLE     70 0.0000 0.0000 +234.1880
HOLE     70 0.0000 0.0000 +308.8640
HOLE     30 0.0000 0.0000 +355.0920
UNIT 90
COM='SIMPLIFIED LID STRUCTURE NAC-LWT'
CYLINDER 6 1 36.5188 2P14.1351
CYLINDER 9 1 49.8221 2P14.1351
UNIT 91
COM='SIMPLIFIED CASK BOTTOM STRUCTURE NAC-LWT'
CYLINDER 7 1 26.3525 2P3.81
CYLINDER 6 1 36.6188 +13.97 -12.7
CYLINDER 9 1 49.8221 +13.97 -12.7
UNIT 92
COM='SINGLE CASK'
CYLINDER 9 1 49.82210 523.3164 0.0000
HOLE     91 0.0000 0.0000 +12.7000
HOLE     81 0.0000 0.0000 +26.6700
HOLE     90 0.0000 0.0000 +509.1812
GLOBAL UNIT 93
COM='FINITE CASK ARRAY - 8 CASKS'
CUBOID   9 1 199.28960 -149.46660 2P136.11700 523.3164 0.0000
HOLE     92 0.0000 0.0000 0.0000
HOLE     92 +99.6444 0.0000 0.0000
HOLE     92 +49.8222 +86.2946 0.0000
```

Figure 6.4.5-13 Sample Input File for High Mass HEU TRIGA Analysis – 2 Damaged Elements of 175 g ^{235}U at 95 wt % ^{235}U per Basket Opening in Top and Bottom Basket – Accident Array Calculation with 8 Casks (Continued)

```
HOLE      92 -49.8222 +86.2946 0.0000
HOLE      92 -99.6444 0.0000 0.0000
HOLE      92 -49.8222 -86.2946 0.0000
HOLE      92 +49.8222 -86.2946 0.0000
HOLE      92 +149.4666 -86.2946 0.0000
END GEOM
READ ARRAY
ARA=1 NUX=1 NUY=5 NUZ=1 FILL 10 5 16 5 11 END FILL
ARA=2 NUX=1 NUY=3 NUZ=1 FILL 13 6 12 END FILL
ARA=3 NUX=1 NUY=3 NUZ=1 FILL 15 6 14 END FILL
ARA=11 NUX=1 NUY=5 NUZ=1 FILL 50 45 56 45 51 END FILL
ARA=12 NUX=1 NUY=3 NUZ=1 FILL 53 46 52 END FILL
ARA=13 NUX=1 NUY=3 NUZ=1 FILL 55 46 54 END FILL
END ARRAY
READ BOUNDS ALL=H2O END BOUNDS
READ PLOT
TTL='X-Y PLOT OF CASK (CANISTER ELEVATION)'
SCR=YES PIC=MAT LPI=10
UAX=1.0 VDN=-1.0 NAX=1600
XUL=-50.0 YUL=50.0 ZUL=50
XLR=50.0 YLR=-50.0 ZLR=50 END
TTL='X-Y PLOT OF BASKET (CANISTER ELEVATION)'
SCR=YES PIC=MAT LPI=10
UAX=1.0 VDN=-1.0 NAX=1600
XUL=-17.2 YUL=17.2 ZUL=50
XLR=17.2 YLR=-17.2 ZLR=50 END
TTL='X-Y PLOT OF BASKET (CAVITY MID PLANE)'
SCR=YES PIC=MAT LPI=10
UAX=1.0 VDN=-1.0 NAX=1600
XUL=-17.2 YUL=17.2 ZUL=210.0
XLR=17.2 YLR=-17.2 ZLR=210.0 END
TTL='X-Y PLOT OF CENTER OPENING (CANISTER ELEVATION)'
SCR=YES PIC=MAT LPI=10
UAX=1.0 VDN=-1.0 NAX=1600
XUL=-7.0 YUL=7.0 ZUL=50
XLR=7.0 YLR=-7.0 ZLR=50 END
TTL='X-Y PLOT OF PERIPHERAL OPENING (CANISTER ELEVATION)'
SCR=YES PIC=MAT LPI=10
UAX=1.0 VDN=-1.0 NAX=1600
XUL=-7.0 YUL=16.0 ZUL=50
XLR=7.0  YLR=4.0 ZLR=50 END
TTL='Y-Z PLOT OF BASKET (CENTER OF FUEL ELEMENTS,CANISTER ELEVATION)'
SCR=YES PIC=MAT LPI=10
VAX=1.0 WDN=-1.0 NAX=1600
XUL=2.12 YUL=-14.0 ZUL=100.69
XLR=2.12 YLR=-4.5 ZLR=20 END
TTL='Y-Z PLOT OF BASKET (CASK)'
SCR=YES PIC=MAT LPI=10
VAX=1.0 WDN=-1.0 NAX=1600
XUL=2.12 YUL=-51 ZUL=500
XLR=2.12 YLR=+51 ZLR=0 END
TTL='X-Y PLOT OF ARRAY'
SCR=YES PIC=MAT LPI=10
UAX=1.0 VDN=-1.0 NAX=1600
```

Figure 6.4.5-13 Sample Input File for High Mass HEU TRIGA Analysis – 2 Damaged Elements of 175 g ^{235}U at 95 wt % ^{235}U per Basket Opening in Top and Bottom Basket – Accident Array Calculation with 8 Casks (Continued)

```
XUL=-200 YUL=200 ZUL=215
XLR=200  YLR=-200 ZLR=215
END PLOT
END DATA
END
```

Table 6.4.5-1 Parametric Study – Fuel / Basket k-infinity versus TRIGA Fuel Element Type, Nonpoisoned Basket

(Infinite Array of Nonpoisoned TRIGA Basket Cells with Four (4) Elements)

Fuel Element Type	Initial U Content wt%	Total U grams	^{235}U wt%	Wet Case Results K(infinity) ± σ	Dry Case Results k(infinity) ± σ
Original Al Clad 14 inch Active Fuel	8-8.5	205	20.0	1.01740 ± 0.00081	1.04129 ± 0.00066
Original Al Clad 15 inch Active Fuel	8-8.5	205	20.0	1.00636 ± 0.00081	1.02634 ± 0.00065
Stand. Streamlined Steel Clad 15 inch Active Fuel (FLIP)	8.5	196	70.0	1.33900 ± 0.00094	1.43012 ± 0.00078
Stand. Plain Steel Clad 15 Active Fuel (FLIP)	8.5	196	70.0	1.33969 ± 0.00097	1.43009 ± 0.00077
Stand. Streamlined Steel Clad FLIP-LEU-II	30.6	845	20.0	1.28517 ± 0.00087	1.31180 ± 0.00073
Stand. Plain Steel Clad FLIP-LEU-II	30.6	845	20.0	1.28512 ± 0.00088	1.31198 ± 0.00072
FFCR Element FLIP-LEU-I	20.0	484	20.0	1.16407 ± 0.00086	1.23186 ± 0.00071
1-70 wt% ^{235}U + 3-20 wt% ^{235}U	--	--	--	1.30429 ± 0.00091	1.34060 ± 0.00071
3-70 wt% ^{235}U + 1-20 wt% ^{235}U	--	--	--	1.32896 ± 0.00092	1.40083 ± 0.00077
2-70 wt% ^{235}U + 2-20 wt% ^{235}U	--	--	--	1.31601 ± 0.00094	1.37156 ± 0.00076

LEU Low Enriched Uranium
FLIP Fuel Life Improvement Program
FFCR Fuel Follower Control Rod

* Resonance treatment for two different fuel types is included.

Table 6.4.5-2 Parametric Study – Cask k_{eff} versus TRIGA Fuel Element Type, Poisoned Basket

Fuel Element Type	Initial U Content wt%	Total U grams	^{235}U wt%	Wet Case Results $k_{eff} \pm \sigma$	Dry Case Results $K_{eff} \pm \sigma$
Original Al Clad 15 inch Active Fuel	8-8.5	205	20.0	0.58906 ± 0.00097	0.47118 ± 0.00076
Stand. Streamlined Steel Clad 15 inch Active Fuel (FLIP)	8.5	196	70.0	0.86504 ± 0.00134	0.85705 ± 0.00112
Stand. Plain Steel Clad 15 Active Fuel (FLIP)	8.5	196	70.0	0.86647 ± 0.00137	0.86610 ± 0.00115
Stand. Streamlined Steel Clad FLIP-LEU-II	30.6	845	20.0	0.83413 ± 0.00130	0.80073 ± 0.00103
Stand. Plain Steel Clad FLIP-LEU-II	30.6	845	20.0	0.83604 ± 0.00127	0.80492 ± 0.00099
1-70 wt% ^{235}U + 3-20 wt% ^{235}U	--	--	--	0.84391 ± 0.00133	0.81589 ± 0.00101
3-70 wt% ^{235}U + 1-20 wt% ^{235}U	--	--	--	0.85826 ± 0.00131	0.84917 ± 0.00108
2-70 wt% ^{235}U + 2-20 wt% ^{235}U	--	--	--	0.85162 ± 0.00129	0.83177 ± 0.00103

Table 6.4.5-3 Axially Infinite Cask k_{eff} with TRIGA Fuel Elements – Fuel Element Placement Perturbations, Nonpoisoned Basket

Basket Configuration	Wet Case Results $k_{eff} \pm \sigma$	Dry Case Results $k_{eff} \pm \sigma$
Elements Touching, Moved In	-	0.93434 ± 0.00115
Elements Touching, Centered	0.77382 ± 0.00109	0.92672 ± 0.00185
Elements Out	0.83468 ± 0.00101	0.90817 ± 0.00105
Elements Centered, Quadrants	0.81340 ± 0.00107	-
Three - 70 wt% ^{235}U Elements (Equilateral)	0.83646 ± 0.00112	-
Three - 70 wt% ^{235}U Elements (in corner)	0.83579 ± 0.00101	0.80629 ± 0.00110
Three - 70 wt% ^{235}U Elements (Isosceles)	0.83468 ± 0.00101	-
Two - 70 wt% ^{235}U Elements (Center)	0.67480 ± 0.00097	0.63503 ± 0.00108
One - 70 wt% ^{235}U Elements (Center)	0.44428 ± 0.00091	-

Table 6.4.5-4 Axially Infinite Cask k_{eff} with TRIGA Fuel Elements – Fuel Element Placement Perturbations, Poisoned Basket

Basket Configuration	Wet Case Results $k_{eff} \pm \sigma$	Dry Case Results $k_{eff} \pm \sigma$
Elements Touching, Moved In	-	0.88969 ± 0.00122
Elements Touching, Centered	0.82705 ± 0.00136	0.87833 ± 0.00122
Elements Touching, Moved Out	-	0.87871 ± 0.00112
Elements Centered, Quadrants	0.86647 ± 0.00134	0.86610 ± 0.00115
Elements Out	0.87874 ± 0.00123	0.85348 ± 0.00114
27 Elements, Touching	0.85014 ± 0.00131	0.66829 ± 0.00114
27 Elements, Corners	0.84686 ± 0.00124	-
26 Elements, Touching	0.82959 ± 0.00124	0.64354 ± 0.00117
26 Elements, Corners	0.81959 ± 0.00126	-
21 Elements, Touching	0.70693 ± 0.00127	0.55021 ± 0.00110
21 Elements, Corners	0.73134 ± 0.00133	-
14 Elements, Touching	0.58154 ± 0.00136	0.39354 ± 0.00097
14 Elements, Corners	0.55112 ± 0.00117	-

Table 6.4.5-5 Axially Infinite Cask k_{eff} with TRIGA Fuel Elements – Basket Manufacturing Tolerance Perturbations, Nonpoisoned Basket

Basket Configuration	Wet Case Results w/ Dry Neutron Shield $k_{eff} \pm \sigma$	Dry Case Results $k_{eff} \pm \sigma$
Base Case[1]	0.86190 ± 0.00089[3]	0.90053 ± 0.00115[4]
Thin SS Plates	0.86861 ± 0.00094	0.90501 ± 0.00109
Maximum Basket Opening[2]	0.86864 ± 0.00097	0.90023 ± 0.00107
Minimum Basket Opening[2]	0.86489 ± 0.00091	0.90817 ± 0.00105

Notes:

1. Both wet and dry base case configurations include elements out to corners of basket openings.
2. Incorporates minimum thickness stainless steel, basket divider plates.
3. Comparable to the "elements out," k_{eff} = 0.83468 ± 0.00101, configuration of Table 6.4.5-3 except the neutron shield is dry.
4. Incorporates the "elements out" configuration.

Table 6.4.5-6 Axially Infinite Cask k_{eff} with TRIGA Fuel Elements – Basket Manufacturing Tolerance Perturbations, Poisoned Basket

Basket Configuration	Wet Case Results $k_{eff} \pm \sigma$	Dry Case Results $k_{eff} \pm \sigma$
Base Case[1]	0.87874 ± 0.00123	0.88969 ± 0.00122
Minimum Opening[2]	0.87832 ± 0.00127	0.89054 ± 0.00107
Increased Central Opening[2]	0.87981 ± 0.00133	0.88722 ± 0.00118
Increased Exterior Openings[2]	0.87875 ± 0.00134	0.88998 ± 0.00120
Increased Central Opening, Decreased Exterior Openings[2]	0.87475 ± 0.00134	0.88724 ± 0.00116

Notes:

1. Most reactive configurations from Table 6.4.5-4.
2. Incorporates minimum thickness stainless steel, basket divider plates.

Table 6.4.5-7 Screened Can Preferential Flooding and Partial Loading Reactivity Evaluations for TRIGA Fuel Elements, Nonpoisoned and Poisoned Baskets

Description	$k_{eff} \pm \sigma$ Nonpoisoned Basket	$k_{eff} \pm \sigma$ Poisoned Basket
Wet Cask / Wet Can	0.84040 ± 0.00132	0.88010 ± 0.00139
Dry Cask / Dry Can	0.89383 ± 0.00120	0.86228 ± 0.00128
Dry Cask / Wet Can – Elements To Center of Cask	0.89778 ± 0.00124	0.88272 ± 0.00124
Dry Cask / Wet Can – Elements To Center of Can	0.89435 ± 0.00124	0.87727 ± 0.00124
Dry Cask / Wet Can – Elements Quadrant Centered	0.89821 ± 0.00129	0.88737 ± 0.00123
Dry Cask / Wet Can – Elements in Corners	0.90926 ± 0.00126	0.89957 ± 0.00118
Dry Cask / Wet Can – Elements in Corners, Max. Can	0.90673 ± 0.00123	0.90224 ± 0.00128
18 Elements per Basket Module	0.84896 ± 0.00121	0.82527 ± 0.00114
12 Elements per Basket Module	0.82532 ± 0.00125	0.80281 ± 0.00119

Table 6.4.5-8 Sealed Can Preferential Flooding and Partial Loading Reactivity Evaluations for TRIGA Fuel Elements, Nonpoisoned and Poisoned Baskets

Description	$k_{eff} \pm \sigma$ Nonpoisoned Basket	$k_{eff} \pm \sigma$ Poisoned Basket
Wet Cask / Wet Can, Elements Out	-	0.88574 ± 0.00130
Wet Cask / Wet Can	0.84331 ± 0.00129	0.88036 ± 0.00125
Dry Cask / Dry Can	0.85693 ± 0.00121	0.83021 ± 0.00118
Dry Cask / Wet Can	0.84376 ± 0.00129	0.78084 ± 0.00114
2 Rods per Can - 3 Five Inch Fuel Pellets	0.84346 ± 0.00128	0.88212 ± 0.00133
Mixture Solid (No Moderator)- 2 Rods Per Can	0.87512 ± 0.00122	0.88371 ± 0.00125
Mixture Half Can Height - 2 Rods Per Can	0.90691 ± 0.00212	0.88564 ± 0.00146
Mixture Full Can Height - 2 Rods Per Can	0.91088 ± 0.00106	0.88411 ± 0.00129
Mixture - Solid (No Moderator) - 1 Rod Per Can	0.85868 ± 0.00132	0.88472 ± 0.00131
Mixture - Half Can Height - 1 Rod Per Can	0.87411 ± 0.00117	0.88204 ± 0.00130
Mixture - Full Can Height - 1 Rod Per Can	0.85913 ± 0.00117	0.88477 ± 0.00142
2 Rods Per Can + Graphite – Solid	0.87208 ± 0.00117	0.88616 ± 0.00138
2 Rods Per Can + Graphite – Full Can Height	0.89867 ± 0.00118	0.88431 ± 0.00129
Increased Can Diameter (+0.02 inch)[1]	0.91355 ± 0.00119	0.88436 ± 0.00138

Note:

1. The increased can diameter cases were analyzed using the most reactive cases for each basket configuration (nonpoisoned / poisoned). The "Wet Cask / Wet Can, Elements Out" case was selected for the poisoned basket configuration due to the lack of statistically significant differences in the above reported results.

Table 6.4.5-9 Summary of Most Reactive Configurations, TRIGA Fuel Elements, Nonpoisoned Basket

	Wet	Dry	Preferential
Intact Fuel	0.86861 ± 0.00094	0.93434 ± 0.00115 [1]	-
Screened Fuel Cans	0.84040 ± 0.00132	0.89383 ± 0.00120	0.90926 ± 0.00126
Sealed Fuel Cans	0.84331 ± 0.00129	0.85693 ± 0.00121	0.91355 ± 0.00199

Note:

1. As reported in Section 6.4.5.4, this case is reevaluated with a finite axial length model, making the preferentially flooded, sealed can case the most reactive.

Table 6.4.5-10 Summary of Most Reactive Configurations, TRIGA Fuel Elements, Poisoned Basket

	Wet	Dry	Preferential
Intact Fuel	0.87874 ± 0.00123	0.88969 ± 0.00122	-
Screened Fuel Cans	0.88010 ± 0.00139	0.86228 ± 0.00128	0.90224 ± 0.00128
Sealed Fuel Cans	0.88574 ± 0.00130	0.83021 ± 0.00118	0.88564 ± 0.00146

Table 6.4.5-11 Reactivity Results for TRIGA Fuel Elements, Sealed Cans, Normal Conditions, Nonpoisoned Basket

Moderator SG	Casks Touching ($k_{eff} \pm \sigma$)	8 Foot Center-To-Center ($k_{eff} \pm \sigma$)
Dry Exterior, Vary Internal Density		
0.00000	0.7239 ± 0.0012	0.7203 ± 0.0012
0.00100	0.7205 ± 0.0012	0.7212 ± 0.0012
0.00178	0.7231 ± 0.0013	0.7201 ± 0.0012
0.00316	0.7216 ± 0.0012	0.7202 ± 0.0012
0.00562	0.7227 ± 0.0012	0.7181 ± 0.0012
0.01000	0.7234 ± 0.0012	0.7224 ± 0.0012
0.01780	0.7205 ± 0.0012	0.7223 ± 0.0013
0.03160	0.7249 ± 0.0012	0.7242 ± 0.0012
0.05620	0.7263 ± 0.0012	0.7285 ± 0.0012
0.10000	0.7295 ± 0.0012	0.7303 ± 0.0012
0.17800	0.7446 ± 0.0012	0.7415 ± 0.0012
0.31600	0.7674 ± 0.0012	0.7647 ± 0.0013
0.56200	0.7887 ± 0.0013	0.7884 ± 0.0013
0.70000	0.7977 ± 0.0014	0.7961 ± 0.0014
0.80000	0.8009 ± 0.0013	0.7974 ± 0.0013
0.90000	0.8000 ± 0.0013	0.8008 ± 0.0012
1.00000	0.8020 ± 0.0013	0.8022 ± 0.0014
Optimally Moderated Cask Interior (SG = 1.0), Vary External Density		
0.00000	0.8020 ± 0.0013	0.8022 ± 0.0013
0.00100	0.8013 ± 0.0014	0.8010 ± 0.0013
0.00178	0.7993 ± 0.0014	0.8003 ± 0.0013
0.00316	0.8017 ± 0.0014	0.8024 ± 0.0013
0.00562	0.8041 ± 0.0014	0.8002 ± 0.0013
0.01000	0.8018 ± 0.0013	0.8032 ± 0.0013
0.01780	0.8025 ± 0.0013	0.8018 ± 0.0013
0.03160	0.8001 ± 0.0013	0.8023 ± 0.0013
0.05620	0.8004 ± 0.0014	0.7993 ± 0.0013
0.10000	0.8008 ± 0.0012	0.8000 ± 0.0013
0.17800	0.8018 ± 0.0014	0.8019 ± 0.0013
0.31600	0.8034 ± 0.0014	0.8019 ± 0.0013
0.56200	0.7996 ± 0.0013	0.8025 ± 0.0013
0.70000	0.8018 ± 0.0014	0.8026 ± 0.0014
0.80000	0.8013 ± 0.0013	0.8009 ± 0.0013
0.90000	0.7998 ± 0.0013	0.8009 ± 0.0012
1.00000	0.8019 ± 0.0015	0.8003 ± 0.0013
Vary Internal and External Density Simultaneously		
0.00000	0.7239 ± 0.0012	0.7203 ± 0.0013
0.00100	0.7212 ± 0.0012	0.7192 ± 0.0012
0.00178	0.7210 ± 0.0011	0.7236 ± 0.0012
0.00316	0.7202 ± 0.0012	0.7217 ± 0.0012
0.00562	0.7225 ± 0.0012	0.7218 ± 0.0012
0.01000	0.7229 ± 0.0012	0.7236 ± 0.0012
0.01780	0.7230 ± 0.0012	0.7239 ± 0.0012
0.03160	0.7253 ± 0.0013	0.7236 ± 0.0012
0.05620	0.7273 ± 0.0012	0.7261 ± 0.0013
0.10000	0.7311 ± 0.0012	0.7296 ± 0.0013
0.17800	0.7439 ± 0.0013	0.7429 ± 0.0012
0.31600	0.7634 ± 0.0013	0.7650 ± 0.0013
0.56200	0.7882 ± 0.0014	0.7898 ± 0.0013
0.70000	0.7950 ± 0.0014	0.7941 ± 0.0012
0.80000	0.7950 ± 0.0013	0.7973 ± 0.0013
0.90000	0.7984 ± 0.0012	0.8002 ± 0.0012
1.00000	0.8000 ± 0.0013	0.8029 ± 0.0014

Table 6.4.5-12 Reactivity Results for TRIGA Fuel Elements, Sealed Cans, Accident Conditions, Nonpoisoned Basket

Moderator SG	Casks Touching ($k_{eff} \pm \sigma$)	8 Foot Center-To-Center ($k_{eff} \pm \sigma$)
Dry Exterior and Neutron Shield, Vary Internal Moderator		
0.00000	0.9136 ± 0.0012	0.9057 ± 0.0011
0.00100	0.9119 + 0.0012	0.9054 + 0.0011
0.00178	0.9101 + 0.0012	0.9041 + 0.0011
0.00316	0.9110 + 0.0011	0.9040 + 0.0011
0.00562	0.9095 + 0.0012	0.9046 + 0.0011
0.01000	0.9059 + 0.0012	0.8999 + 0.0012
0.01780	0.9021 + 0.0012	0.8979 + 0.0012
0.03160	0.8965 + 0.0012	0.8908 + 0.0011
0.05620	0.8842 + 0.0013	0.8793 + 0.0012
0.10000	0.8660 + 0.0012	0.8622 + 0.0012
0.17800	0.8432 + 0.0012	0.8419 + 0.0012
0.31600	0.8275 + 0.0013	0.8222 + 0.0012
0.56200	0.8185 + 0.0013	0.8153 + 0.0014
0.70000	0.8144 + 0.0013	0.8124 + 0.0013
0.80000	0.8140 + 0.0013	0.8091 + 0.0013
0.90000	0.8154 + 0.0012	0.8082 + 0.0013
1.00000	0.8117 + 0.0013	0.8081 + 0.0013
Optimally Moderated Internal (SG = 0.0), Vary Neutron Shield and Exterior		
0.00000	0.9136 ± 0.0012	0.9057 ± 0.0011
0.00100	0.8950 + 0.0011	0.8208 + 0.0012
0.00178	0.8887 + 0.0011	0.7931 + 0.0012
0.00316	0.8732 + 0.0012	0.7651 + 0.0012
0.00562	0.8505 + 0.0012	0.7454 + 0.0011
0.01000	0.8210 + 0.0011	0.7311 + 0.0012
0.01780	0.7957 + 0.0012	0.7233 + 0.0012
0.03160	0.7655 + 0.0012	0.7192 + 0.0011
0.05620	0.7432 + 0.0012	0.7195 + 0.0013
0.10000	0.7325 + 0.0013	0.7177 + 0.0012
0.17800	0.7252 + 0.0011	0.7206 + 0.0012
0.31600	0.7216 + 0.0012	0.7213 + 0.0012
0.56200	0.7211 + 0.0012	0.7211 + 0.0012
0.70000	0.7199 + 0.0012	0.7190 + 0.0012
0.80000	0.7213 + 0.0012	0.7184 + 0.0012
0.90000	0.7183 + 0.0013	0.7196 + 0.0012
1.00000	0.7189 + 0.0011	0.7194 + 0.0013
Vary Interior, Exterior and Neutron Shield Simultaneously		
0.00000	0.9136 ± 0.0012	0.9057 ± 0.0011
0.00100	0.8964 + 0.0012	0.8189 + 0.0012
0.00178	0.8879 + 0.0011	0.7913 + 0.0013
0.00316	0.8726 + 0.0012	0.7673 + 0.0013
0.00562	0.8496 + 0.0011	0.7459 + 0.0012
0.01000	0.8223 + 0.0012	0.7345 + 0.0012
0.01780	0.7903 + 0.0012	0.7237 + 0.0012
0.03160	0.7685 + 0.0012	0.7223 + 0.0011
0.05620	0.7504 + 0.0012	0.7242 + 0.0012
0.10000	0.7415 + 0.0013	0.7296 + 0.0012
0.17800	0.7445 + 0.0013	0.7404 + 0.0013
0.31600	0.7674 + 0.0013	0.7658 + 0.0013
0.56200	0.7904 + 0.0013	0.7898 + 0.0013
0.70000	0.7972 + 0.0014	0.7936 + 0.0014
0.80000	0.7969 + 0.0013	0.7956 + 0.0014
0.90000	0.8003 + 0.0013	0.8007 + 0.0013
1.00000	0.8000 ± 0.0013	0.8013 ± 0.0013

Table 6.4.5-13 Reactivity Results for TRIGA Fuel Elements, Screened Cans, Normal Conditions, Poisoned Basket

Moderator SG	Casks Touching ($k_{eff} \pm \sigma$)	8 Foot Center-To-Center ($k_{eff} \pm \sigma$)
Dry Exterior, Vary Internal Density		
0.00000	0.8376 ± 0.0018	0.8381 ± 0.0017
0.00100	0.8408 + 0.0017	0.8418 + 0.0016
0.00178	0.8408 + 0.0018	0.8412 + 0.0018
0.00316	0.8390 + 0.0017	0.8432 + 0.0016
0.00562	0.8371 + 0.0017	0.8399 + 0.0017
0.01000	0.8420 + 0.0017	0.8397 + 0.0018
0.01780	0.8383 + 0.0017	0.8419 + 0.0017
0.03160	0.8413 + 0.0017	0.8427 + 0.0017
0.05620	0.8466 + 0.0017	0.8448 + 0.0017
0.10000	0.8433 + 0.0016	0.8479 + 0.0017
0.17800	0.8510 + 0.0017	0.8502 + 0.0017
0.31600	0.8497 + 0.0016	0.8505 + 0.0016
0.56200	0.8453 + 0.0017	0.8484 + 0.0017
0.70000	0.8444 + 0.0016	0.8464 + 0.0017
0.80000	0.8321 + 0.0017	0.8432 + 0.0017
0.90000	0.8458 + 0.0017	0.8437 + 0.0017
1.00000	0.8527 + 0.0017	0.8540 + 0.0017
Optimally Moderated Cask Interior (SG = 1.0), Vary External Density		
0.00000	0.8527 ± 0.0017	0.8540 ± 0.0017
0.00100	0.8482 + 0.0018	0.8513 + 0.0016
0.00178	0.8532 + 0.0017	0.8513 + 0.0016
0.00316	0.8516 + 0.0017	0.8531 + 0.0017
0.00562	0.8546 + 0.0017	0.8539 + 0.0017
0.01000	0.8521 + 0.0018	0.8517 + 0.0019
0.01780	0.8528 + 0.0018	0.8515 + 0.0018
0.03160	0.8543 + 0.0017	0.8526 + 0.0017
0.05620	0.8506 + 0.0018	0.8503 + 0.0017
0.10000	0.8523 + 0.0018	0.8542 + 0.0016
0.17800	0.8507 + 0.0018	0.8478 + 0.0016
0.31600	0.8539 + 0.0017	0.8518 + 0.0016
0.56200	0.8545 + 0.0017	0.8525 + 0.0017
0.70000	0.8512 + 0.0017	0.8534 + 0.0017
0.80000	0.8548 + 0.0017	0.8529 + 0.0017
0.90000	0.8523 + 0.0016	0.8522 + 0.0017
1.00000	0.8540 + 0.0018	0.8523 + 0.0017
Vary Internal and External Density Simultaneously		
0.00000	0.8376 ± 0.0018	0.8381 ± 0.0017
0.00100	0.8396 + 0.0017	0.8382 + 0.0017
0.00178	0.8404 + 0.0016	0.8404 + 0.0017
0.00316	0.8430 + 0.0016	0.8413 + 0.0017
0.00562	0.8448 + 0.0017	0.8391 + 0.0016
0.01000	0.8400 + 0.0017	0.8398 + 0.0017
0.01780	0.8419 + 0.0017	0.8424 + 0.0018
0.03160	0.8394 + 0.0017	0.8439 + 0.0017
0.05620	0.8437 + 0.0017	0.8385 + 0.0017
0.10000	0.8477 + 0.0017	0.8477 + 0.0017
0.17800	0.8502 + 0.0017	0.8469 + 0.0017
0.31600	0.8463 + 0.0017	0.8494 + 0.0018
0.56200	0.8484 + 0.0017	0.8513 + 0.0017
0.70000	0.8471 + 0.0017	0.8459 + 0.0018
0.80000	0.8440 + 0.0017	0.8462 + 0.0016
0.90000	0.8429 + 0.0017	0.8451 + 0.0017
1.00000	0.8540 ± 0.0018	0.8523 ± 0.0017

Table 6.4.5-14 Reactivity Results for TRIGA Fuel Elements, Screened Cans, Accident Conditions, Poisoned Basket

Moderator SG	Casks Touching ($k_{eff} \pm \sigma$)	8 Foot Center-To-Center ($k_{eff} \pm \sigma$)
Dry Exterior and Neutron Shield, Vary Internal Moderator		
0.00000	0.9022 ± 0.0015	0.9015 ± 0.0016
0.00100	0.9019 + 0.0016	0.9022 + 0.0016
0.00178	0.8998 + 0.0016	0.9003 + 0.0016
0.00316	0.8992 + 0.0016	0.9009 + 0.0016
0.00562	0.8995 + 0.0017	0.9015 + 0.0017
0.01000	0.8998 + 0.0017	0.8956 + 0.0017
0.01780	0.8979 + 0.0017	0.9003 + 0.0017
0.03160	0.8966 + 0.0018	0.8946 + 0.0016
0.05620	0.8949 + 0.0015	0.8889 + 0.0015
0.10000	0.8893 + 0.0018	0.8844 + 0.0017
0.17800	0.8843 + 0.0018	0.8822 + 0.0016
0.31600	0.8772 + 0.0017	0.8765 + 0.0016
0.56200	0.8635 + 0.0018	0.8640 + 0.0017
0.70000	0.8586 + 0.0017	0.8657 + 0.0017
0.80000	0.8620 + 0.0016	0.8594 + 0.0016
0.90000	0.8622 + 0.0016	0.8600 + 0.0017
1.00000	0.8662 + 0.0017	0.8629 + 0.0018
Optimally Moderated Internal (SG = 0.0), Vary Neutron Shield and Exterior		
0.00000	0.9022 ± 0.0015	0.9015 ± 0.0016
0.00100	0.8970 + 0.0016	0.8644 + 0.0017
0.00178	0.8910 + 0.0016	0.8596 + 0.0018
0.00316	0.8862 + 0.0015	0.8542 + 0.0016
0.00562	0.8789 + 0.0016	0.8457 + 0.0016
0.01000	0.8687 + 0.0015	0.8438 + 0.0017
0.01780	0.8618 + 0.0017	0.8409 + 0.0018
0.03160	0.8539 + 0.0016	0.8386 + 0.0017
0.05620	0.8482 + 0.0017	0.8403 + 0.0018
0.10000	0.8427 + 0.0015	0.8381 + 0.0017
0.17800	0.8433 + 0.0017	0.8418 + 0.0016
0.31600	0.8424 + 0.0018	0.8405 + 0.0018
0.56200	0.8422 + 0.0017	0.8391 + 0.0017
0.70000	0.8438 + 0.0017	0.8399 + 0.0016
0.80000	0.8429 + 0.0018	0.8407 + 0.0017
0.90000	0.8423 + 0.0017	0.8445 + 0.0016
1.00000	0.8398 + 0.0016	0.8383 + 0.0017
Vary Interior, Exterior and Neutron Shield Simultaneously		
0.00000	0.9022 ± 0.0015	0.9015 ± 0.0016
0.00100	0.8948 + 0.0016	0.8662 + 0.0016
0.00178	0.8932 + 0.0017	0.8577 + 0.0016
0.00316	0.8881 + 0.0016	0.8524 + 0.0017
0.00562	0.8762 + 0.0016	0.8429 + 0.0017
0.01000	0.8722 + 0.0017	0.8431 + 0.0017
0.01780	0.8628 + 0.0016	0.8412 + 0.0017
0.03160	0.8586 + 0.0016	0.8450 + 0.0017
0.05620	0.8533 + 0.0017	0.8448 + 0.0018
0.10000	0.8496 + 0.0017	0.8458 + 0.0017
0.17800	0.8494 + 0.0017	0.8489 + 0.0017
0.31600	0.8500 + 0.0017	0.8459 + 0.0017
0.56200	0.8489 + 0.0018	0.8488 + 0.0018
0.70000	0.8443 + 0.0017	0.8463 + 0.0017
0.80000	0.8459 + 0.0017	0.8407 + 0.0018
0.90000	0.8421 + 0.0017	0.8483 + 0.0017
1.00000	0.8540 ± 0.0018	0.8504 ± 0.0019

Table 6.4.5-15 Single Package 10 CFR 71.55(b)(3) Evaluation k_{eff} Summary, TRIGA Fuel Element, Nonpoisoned Basket

Description	$k_{eff} \pm \sigma$	k_s
Single Cask / Inner Shell Reflected with H_2O	0.80664 ± 0.00136	0.82616
Single Cask / Inner Shell and Lead Reflected with H_2O	0.84194 ± 0.00130	0.86134
Single Cask / Inner Shell, Lead & Outer Shell Reflected with H_2O	0.84398 ± 0.00128	0.86334
Single Intact Cask Reflected with H_2O	0.84446 ± 0.00126	0.86392

Table 6.4.5-16 Single Package 10 CFR 71.55(b)(3) Evaluation k_{eff} Summary, TRIGA Fuel Element, Poisoned Basket

Description	$k_{eff} \pm \sigma$	k_s
Single Cask / Inner Shell Reflected with H_2O	0.85480 ± 0.00135	0.87430
Single Cask / Inner Shell and Lead Reflected with H_2O	0.87788 ± 0.00136	0.89740
Single Cask / Inner Shell, Lead & Outer Shell Reflected with H_2O	0.88369 ± 0.00133	0.90315
Single Intact Cask Reflected with H_2O	0.88117 ± 0.00131	0.90059

Table 6.4.5-17 Fuel Element Physical Characteristics Evaluation

Parameter							Cask Cavity Moderator Condition/Fuel Location							
							Dry - In Shift		0.5 g/cc - In Shift		1 g/cc - In Shift		1 g/cc – Shifted Out	
Fuel Rod OD	Clad Thickness	Fuel OD	Fuel ID	Active Fuel Length	Zirc Interior Rod OD	Zirc Mass (gram)	k_{eff}	Δk/σ	k_{eff}	Δk/σ	k_{eff}	Δk/σ	k_{eff}	Δk/σ
Nominal	Nominal	Nominal	Nominal	Nominal	Nominal	2059	0.85521	-	0.87591	-	0.87217	-	0.89939	-
Max	Nominal	Nominal	Nominal	Nominal	Nominal	2059	0.85102	-2.8	0.87063	-5.6	0.86795	-4.4	0.89480	-4.8
Nominal	Min	Nominal	Nominal	Nominal	Nominal	2059	0.85966	6.2	0.88920	14.0	0.89067	19.4	0.92184	23.3
Nominal	Nominal	Min	Nominal	Nominal	Nominal	1765	0.78425	-72.2	0.82168	-58.1	0.82388	-51.7	0.85987	-42.6
Nominal	Nominal	Max	Nominal	Nominal	Nominal	2068	0.85611	2.6	0.87530	-0.6	0.87327	1.2	0.90107	1.8
Nominal	Nominal	Nominal	Min	Nominal	Nominal	2071	0.85409	0.4	0.87776	2.0	0.87334	1.2	0.90196	2.7
Nominal	Nominal	Nominal	Nominal	Min	Nominal	1988	0.84974	-4.2	0.87304	-3.0	0.87192	-0.3	0.89885	-0.6
Nominal	Nominal	Nominal	Nominal	Max	Nominal	2129	0.85762	4.2	0.87705	1.2	0.87078	-1.5	0.89995	0.6
Nominal	Nominal	Nominal	Nominal	Nominal	Min	2059	0.85370	0.0	0.87322	-2.8	0.87095	-1.3	0.89785	-1.6
Nominal	Nominal	Nominal	Nominal	Nominal	Max	2059	0.85360	-0.1	0.87502	-0.9	0.87125	-1.0	0.89966	0.3
Nominal	Min	Max	Nominal	Nominal	Nominal	2191	0.88846	36.9	0.91259	37.9	0.91057	39.6	0.93977	42.6
Max	Min	Max	Nominal	Nominal	Nominal	2261	0.89797	46.7	0.92086	47.8	0.91631	44.9	0.94365	46.4
Max	Min	Max	Nominal	Nominal	Min	2261	0.89729	45.3	0.92035	46.6	0.91583	46.1	0.94260	44.9
Max	Min	Max	Min	Nominal	Min	2327	0.91165	60.7	0.92950	55.7	0.92648	56.0	0.94983	51.3
Max	Min	Max	Min	Max	Min	2406	0.91646	66.2	0.93183	57.7	0.92716	56.3	0.95048	52.7
Max	Min	Max	Min	Min	Min	2248	0.90919	58.1	0.92962	57.1	0.92491	54.8	0.95030	52.2

Table 6.4.5-18 Element Variation to Reduce k_s Below 0.95

Variation	k_{eff}	σ	k_s	Δk
Base	0.95048	0.00069	0.9687	
Single Cask	0.94221	0.00068	0.9604	-0.00827
Min Clad 0.01 inch	0.93007	0.00068	0.9482	-0.02041
Center rod 0.1 inch	0.94559	0.00066	0.9637	-0.00489
Center Rod 0.1 inch and Clad 0.01 inch	0.92465	0.00069	0.9428	-0.02583

Table 6.4.5-19 General Model Configuration – Dry to Wet System Reactivity Changes, 70 wt% ^{235}U Stainless Steel Clad Fuel - Nominal Fuel Parameters

Model Type	Fuel Material	Dry Interior		Wet Interior		Dry to Wet	Dry to Wet
		k_{eff}	σ	k_{eff}	σ	Δk	Δk/σ
Unit Cell	2060 g Zirc 1.6 H/Zr	1.43854	0.00074	1.34434	0.00088	-0.0942	-82
Unit Cell	2060 g Zirc 2.0 H/Zr	1.47297	0.00072	1.37063	0.00095	-0.1023	-86
Infinite Cask Array	2060 g Zirc 1.6 H/Zr	0.91389	0.00058	0.82201	0.00069	-0.0919	-102
Infinite Cask Array	2060 g Zirc 2.0 H/Zr	0.99893	0.00060	0.87887	0.00069	-0.1201	-131
Finite Cask Array	2060 g Zirc 2.0 H/Zr	0.85371	0.00068	0.87160	0.00067	0.0179	19
Single Cask	2060 g Zirc 1.6 H/Zr	0.69491	0.00059	0.80561	0.00066	0.1107	125

Table 6.4.5-20 Primary Fuel Type Reactivity Comparison[1] – Accident Conditions Eight-Cask Array (No Cans)

Fuel Type	Cask Cavity Moderator	Fuel Characteristics	Rod Location	k_{eff}	σ	k_s	Δk/σ
Al Clad	Dry	Nominal	Shifted In	0.61831	0.00053	0.63617	-
14 inch	Wet	Nominal	Shifted In	0.67516	0.00056	0.69308	73.7
	Wet	Most Reactive	Shifted In	0.68914	0.00056	0.70706	91.9
	Wet	Most Reactive	Shifted Out	0.68690	0.00054	0.70478	90.7
Al Clad -	Dry	Nominal	Shifted In	0.60606	0.00051	0.62388	-
15 inch	Wet	Nominal	Shifted In	0.66104	0.00058	0.67900	71.2
	Wet	Most Reactive	Shifted In	0.68272	0.00055	0.70062	102.2
	Wet	Most Reactive	Shifted Out	0.67985	0.00052	0.69769	101.3
SS Clad -	Dry	Nominal	Shifted In	0.77575	0.00058	0.79371	-
20% Enriched	Wet	Nominal	Shifted In	0.82684	0.00064	0.84492	59.2
	Wet	Most Reactive	Shifted In	0.86114	0.00061	0.87916	101.4
	Wet	Most Reactive	Shifted Out	0.89909	0.00064	0.91717	142.8
SS Clad	Dry	Nominal	Shifted In	0.85521	0.00068	0.87337	-
70% Enriched	Wet	Nominal	Shifted In	0.87217	0.00067	0.89031	17.8
	Wet	Most Reactive	Shifted In	0.90587	0.00069	0.92405	52.3
	Wet	Most Reactive	Shifted Out	0.93024	0.00069	0.94842	77.4

Table 6.4.5-21 Normal Condition Maximum System Reativities (No Cans)[2]

Array Size	Neutron Shield	Cask Cavity	Fuel Config	k_{eff}	σ	k_s
Infinite	Yes	Dry	MRE	0.84554	0.00066	0.86366
Infinite	Yes	Wet	MRE	0.92398	0.00068	0.94214

[1] Fueled follower rods are not evaluated separately as their physical characteristics and fuel compositions are bounded by a stainless steel clad 20% enriched element.

[2] Most reactive element configuration as documented under accident conditions.

Table 6.4.5-22 Increased Enrichment for 20 wt % and 70 wt % TRIGA Fuel Elements

wt %	g ^{235}U	k_{eff}	σ	k_s	$\Delta k_s/\sigma$
20	169	0.89973	0.00064	0.91781	--
25	169	0.91236	0.00065	0.93046	13.9
70	137	0.93063	0.00067	0.94877	--
71	137	0.93066	0.00068	0.94882	0.1

Table 6.4.5-23 Increased ^{235}U Mass TRIGA Fuel Elements

wt %	g ^{235}U	k_{eff}	σ	k_s	$\Delta k_s/\sigma$
25	169	0.91236	0.00065	0.93046	--
25	275	0.95139	0.00068	0.96955	41.6
71	137	0.93066	0.00068	0.94882	--
71	138	0.93159	0.00066	0.94971	0.9

Table 6.4.5-24 Limited Quantity Study for LEU Fissile Mass Increase

Baskets									
Bottom/Top			Three Middle						
# Rods	wt %	g ^{235}U	# Rods	wt %	g ^{235}U	k_{eff}	σ	k_s	$\Delta k_s/\sigma$
4	71	138	4	71	138	0.93159	0.00066	0.94971	--
4	25	275	4	25	275	0.95139	0.00068	0.96955	20.9
4	25	275	4	71	138	0.94928	0.00067	0.96742	18.8
3	25	275	4	71	138	0.92997	0.00067	0.94811	-1.7

Table 6.4.5-25 95 wt% TRIGA Fuel Elements

Baskets									
Bottom/Top			Three Middle						
# Rods	wt %	g ^{235}U	# Rods	wt %	g ^{235}U	k_{eff}	σ	k_s	$\Delta k_s/\sigma$
4	71	138	4	71	138	0.93159	0.00066	0.94971	--
4	95	175	4	95	175	0.97990	0.00069	0.99808	50.7
4	95	175	4	71	138	0.97662	0.00066	0.99474	48.2
3	95	175	4	71	138	0.93030	0.00064	0.94838	-1.4

Table 6.4.5-26 TRIGA Damaged Fuel Canister – Sealed Canister in Top and Bottom Basket Module

Baskets									
Bottom / Top			Three Middle						
# Rods	wt %	g ^{235}U	# Rods	wt %	g ^{235}U	k_{eff}	σ	k_s	$\Delta k_s/\sigma$
4	71	138	4	71	138	0.93159	0.00066	0.94971	--
2	71	138	4	71	138	0.93032	0.00068	0.94848	-1.3
2	25	275	4	71	138	0.93109	0.00070	0.94929	-0.4
2	95	175	4	71	138	0.93071	0.00068	0.94887	-0.9

Table 6.4.5-27 TRIGA Fuel Element Pitch/Screened Canister Evaluation

	Baskets									
	Bottom / Top			Three Middle						
DFC	Pitch	wt %	g ^{235}U	Pitch	wt %	g ^{235}U	k_{eff}	σ	k_s	$\Delta k_s/\sigma$
No	4.7750	95	175	4.775	71	138	0.97662	0.00066	0.99474	--
No	4.1924	95	175	4.775	71	138	0.95679	0.00068	0.97495	-20.9
Yes	4.1924	95	175	4.775	71	138	0.92977	0.00068	0.94793	-49.4

Table 6.4.5-28 TRIGA Structural Intact Fuel Canister -- Screened Canister in Top and Bottom Basket Module

Baskets									
Bottom / Top			Three Middle						
# Rods	wt %	g ^{235}U	# Rods	wt %	g ^{235}U	k_{eff}	σ	k_s	$\Delta k_s/\sigma$
4	71	138	4	71	138	0.93159	0.00066	0.94971	--
4	71	138	4	71	138	0.92971	0.00069	0.94789	-1.9
4	25	275	4	71	138	0.93055	0.00065	0.94865	-1.1
4	95	175	4	71	138	0.92977	0.00068	0.94793	-1.9

Table 6.4.5-29 TRIGA Cluster Rod Study in TRIGA Fuel Element Shipment

Baskets									
1 Opening			Remaining Payload						
# Rods	wt %	g ^{235}U	# Rods	wt %	g ^{235}U	k_{eff}	σ	k_s	$\Delta k_s/\sigma$
4	71	138	4	71	138	0.93159	0.00066	0.94971	--
6	95	46.5	4	71	138	0.93085	0.00064	0.94893	-0.8
16	95	46.5	4	71	138	0.93141	0.00065	0.94951	-0.2

6.4.6 TRIGA Fuel Cluster Rods

This section presents the criticality evaluation for the NAC-LWT with nonpoisoned and poisoned basket modules for intact and failed TRIGA fuel cluster rods. In the nonpoisoned configuration, up to 480 intact TRIGA fuel cluster rods can be transported in the NAC-LWT cask. In the poisoned configuration, up to 560 intact TRIGA fuel cluster rods can be transported in the NAC-LWT cask. Up to six TRIGA fuel cluster rods can be contained in sealed canisters. The analyses are performed to satisfy the requirements of 10 CFR Parts 71.55 and 71.59, as well as IAEA Transportation Safety Standards (TS-R-1).

The design basis TRIGA fuel cluster rod is evaluated for the most reactive basket and intact fuel configurations, including both geometric perturbations and manufacturing tolerances, under wet and dry conditions in Section 6.4.6.1. The most reactive cask configuration with three baskets of intact design-basis TRIGA fuel and two baskets of fuel in sealed cans, is evaluated under normal and accident conditions in Section 6.4.6.2. Preferential flooding of the sealed failed fuel cans is also evaluated. The maximum k_{eff} of the NAC-LWT cask loaded with design-basis TRIGA fuel cluster rods is evaluated under normal and accident conditions in Section 6.4.6.3. A single package evaluation, in accordance with 10 CFR 71.55(b)(3), is performed in Section 6.4.6.4. The analyses demonstrate that, including all calculational and mechanical uncertainties, the NAC-LWT cask remains subcritical ($k_s < 0.95$) under normal and accident conditions.

The poisoned and nonpoisoned basket may contain both HEU and LEU cluster rods. The evaluations of LEU cluster rods are based on the analysis trends observed for the HEU rods. As the nonpoisoned basket is significantly more reactive than the poisoned basket configuration, expanded scope HEU and LEU evaluations are based on the nonpoisoned basket model. LEU evaluations, in conjunction with expanded HEU characteristics, are included in Section 6.4.6.5.

6.4.6.1 Most Reactive Fuel and Basket Configurations

The primary basket tolerances affecting system reactivity are geometric tolerances, including the positioning of the fuel cluster rods and aluminum tube insert in the cell opening, the size of the cell opening; and manufacturing tolerances, including the thickness of the steel plate dividing the basket openings. The effect of these tolerances is evaluated sequentially in this section.

6.4.6.1.1 Geometric Perturbations

The TRIGA fuel cluster rods are held in place by basket modules and a fuel rod insert (Figure 6.2.6-1) with a welded, 4×4 array of 0.75-inch OD aluminum tubes. The TRIGA fuel cluster rods, one per insert tube, may shift to any location in a tube. Wet and dry conditions of the

TRIGA fuel cluster rods are evaluated to determine the most reactive fuel and basket configuration.

Table 6.4.6-1 and Table 6.4.6-2 show the cask k_{eff} for the nonpoisoned and poisoned baskets with TRIGA fuel cluster rods. The effects evaluated in the tables include fuel movement within the fuel rod inserts and partial loadings under wet and dry moderation conditions.

The most reactive wet configuration contains 16 TRIGA fuel cluster rods moved outward from the center of each 4 × 4 insert array and the inserts moved to the center of the basket with k_{eff} = 0.7571 ± 0.0025 and 0.7995 ± 0.0026, for the nonpoisoned and poisoned basket configurations, respectively. This wet configuration maximizes the moderation between TRIGA fuel cluster rods within wet inserts and maximizes the interaction between inserts. It is referred to as the wet configuration for TRIGA fuel cluster rods.

The dry configuration selected as most reactive, including no water in the neutron shield, contains 16 TRIGA fuel cluster rods moved inward to the center of each 4 × 4 insert array and the inserts moved to the center of the basket with k_{eff} = 0.8047 ± 0.0020 and 0.7489 ± 0.0019 for the non-poisoned and poisoned basket configurations, respectively. This dry configuration minimizes the neutron leakage of TRIGA fuel cluster rods within the dry basket and is referred to as the dry configuration.

Finally, the effect of partial fuel element loading was examined. Table 6.4.6-1 and Table 6.4.6-2 show that partial loading of the elements in the basket generally serves to decrease the reactivity for both the wet and dry poisoned and non-poisoned baskets. Although the case with one rod removed from the wet, nonpoisoned basket has a higher k_{eff} than the most reactive full load configuration, the difference in k_{eff} values is significantly less than 2σ. This makes the result statistically insignificant, and the full loading cases can be selected for further evaluation as stated above.

6.4.6.1.2 Manufacturing Tolerance Perturbations

The manufacturing tolerance analyses were performed by sequentially analyzing perturbations to the most reactive configurations from Section 6.4.6.1.1 and retaining appropriate perturbations. First, the effect of reducing the basket plate thickness was examined. Table 6.4.6-3 and Table 6.4.6-4 show that, for the non-poisoned and poisoned baskets, reducing the thickness of the basket plates increases the reactivity of the system. Thus, this configuration is utilized for the subsequent analyses.

Next, the dimensional tolerances of the aluminum tube inserts were evaluated. Three different cases were examined. The first case examined an increase in the aluminum tube diameter, while retaining the nominal thickness, the second case examined a decrease in the aluminum tube

diameter while retaining the nominal wall thickness, and the third case examined the effect of reducing the aluminum tube thickness. The results presented in Table 6.4.6-3 and Table 6.4.6-4 show that, for the non-poisoned and poisoned basket configurations, the highest k_{eff} values are obtained for the aluminum tubes at maximum diameter, and for the dry case with the aluminum tubes at minimum thickness. While these cases produced the highest values of k_{eff}, it should be noted that the differences between these results and the previous case is insignificant because they are within 2σ of one another.

After incorporating the previously described modifications, the effect of minimizing the basket insert opening was examined. As shown in Table 6.4.6-3 and Table 6.4.6-4, this perturbation results in equal or higher k_{eff} values for 3 of the 4 cases, with the dry, non-poisoned case resulting in a slight decrease in k_{eff}. As previously described, these differences are considered insignificant because they differ by less than 2σ. Nevertheless, because this perturbation is expected to increase the interaction between the individual baskets, it is retained in the most reactive configuration for further analysis.

Therefore, the most reactive case for intact fuel in the poisoned basket is selected as a wet configuration consisting of the following features: fuel elements moved away from the center of the aluminum center, aluminum insert moved towards the basket center, minimum divider plate thickness, minimum basket opening, and maximum aluminum tube insert diameter. The resulting reactivity for this system is, $k_{eff} = 0.8025 \pm 0.0025$. Likewise, the most reactive case for intact fuel in the non-poisoned basket is selected as a dry configuration consisting of the following features: fuel elements moved toward the center of the aluminum insert, aluminum insert moved towards the basket center, minimum divider plate thickness, and minimum basket opening. The resulting reactivity for this system is, $k_{eff} = 0.8129 \pm 0.0021$.

6.4.6.2 Sealed Cans Criticality Evaluation

Criticality calculations were performed for sealed failed fuel cans in the top and base basket modules of the cask. Three cases are examined for each basket combination, an all dry system, a full wet system, and a preferentially wet system with water only in the sealed failed fuel can. Fuel in sealed cans is modeled homogeneously, heterogeneously, and with partial loadings. The three central modules contain intact fuel in the most reactive wet or dry configurations, as appropriate, as determined in Section 6.4.5.2. The reactivities of the failed fuel combinations are compared to the reactivities of respective intact fuel configurations, and moderator density studies are performed on the most reactive configurations in Section 6.4.6.3.

Table 6.4.6-5 and Table 6.4.6-6 show the results of the preferential flooding and partial loading studies of the sealed failed fuel can configurations with TRIGA fuel cluster rods in nonpoisoned and poisoned baskets. Each sealed can contains up to six equivalent TRIGA fuel cluster rods.

The most reactive cases for the non-poisoned and poisoned baskets contain maximum outer diameter, preferential wet sealed fuel cans filled with a homogeneous mixture of fuel material and water. The most reactive nonpoisoned and poisoned cases are $k_{eff} = 0.8669 \pm 0.0022$ and $k_{eff} = 0.8384 \pm 0.0021$, respectively.

6.4.6.3 Moderator Density Criticality Evaluations for TRIGA Fuel Cluster Rods

The evaluations for normal and accident conditions include moderator density variations in the cask cavity and external environment to the cask. One evaluation is performed for each basket (non-poisoned / poisoned) combination. Table 6.4.6-7 and Table 6.4.6-8 show the most reactive configurations for these combinations as determined in Section 6.4.6.2. The tables contain results for infinite axial length models for the intact fuel and finite models with cask end caps for failed fuel. Comparing the reactivity of the more conservative infinite models with finite models is acceptable, provided the result with the highest k_{eff} is always selected. Alternately, converting infinite models to finite models is equally acceptable.

As seen in Table 6.4.6-7 and Table 6.4.6-8, the most reactive nonpoisoned and poisoned basket configurations with TRIGA fuel cluster rods contain two baskets with sealed cans preferentially flooded with a dry cask, $k_{eff} = 0.8669 \pm 0.0022$ and $k_{eff} = 0.8384 \pm 0.0021$, respectively. These configurations are chosen for moderator density variations.

Results of the moderator density variation cases for normal and accident conditions for the nonpoisoned and poisoned basket configurations are presented in Table 6.4.6-9 through Table 6.4.6-12.

As seen in Table 6.4.6-10, the most reactive configuration for the TRIGA fuel cluster rods in the non-poisoned basket, analyzed conservatively without end caps, contains 5 baskets with intact fuel under accident conditions with no water in the cask interior, neutron shield, or exterior, $k_{eff} = 0.8756 \pm 0.0023$. Per Section 6.1.1, this corresponds to $k_s = 0.8970$.

As seen in Table 6.4.6-12, the most reactive configuration for the TRIGA fuel cluster rods in the poisoned basket, contains two baskets with maximum diameter sealed cans, preferentially flooded, under accident conditions with no water in the cask interior, neutron shield, or exterior, $k_{eff} = 0.8399 \pm 0.0021$. Per Section 6.1.1, this corresponds to $k_s = 0.8609$.

6.4.6.4 Single Package Criticality Evaluation

To satisfy 10 CFR 71.55(b)(3), an analysis of the reflection of the containment system (inner shell) by water is performed on a single wet cask. Successive replacement of the cask radial shields with water reflection is also evaluated for each basket (poisoned/nonpoisoned)

configuration. As seen in Table 6.4.6-13 and Table 6.4.6-14, the reactivity of the system drops as each radial shield of the cask is replaced by water, from the full cask surrounded by water, to the inner shell surrounded by water.

6.4.6.5 Increased Content Scope for TRIGA Cluster Rods

The TRIGA cluster rod content is modified by first expanding on the HEU fuel characteristics, i.e., fuel volume and clad thickness, followed by evaluations increasing the allowed fuel composition range, i.e. changes in H/Zr ratio, ^{235}U enrichment, wt % U in the fuel matrix, and ^{235}U mass.

6.4.6.5.1 Increased Fuel Volume and Reduced Clad Thickness Evaluations for HEU Fuel

The HEU TRIGA fuel cluster rod contents evaluated previously in this section, and as presented in Table 6.2.6-1 and Table 6.2.6-2, are based on nominal, dimensional and compositional values. To ensure that criticality safety is maintained for parameter values slightly different from those listed in the tables, a set of calculations are performed with increased active fuel length, increased fuel pellet diameter, decreased cladding thickness, and corresponding increases in the uranium and zirconium masses due to the increased volume.

Calculations are performed for two cases based on the most reactive configuration presented in Section 6.4.6.3, which is for the nonpoisoned basket configuration. In each case, the active fuel length is increased to 22.5 inches, the cladding thickness is decreased to 0.015 inch, and the pellet diameter is set at 0.52 inch for the first case, then 0.53 inch for the second case. The results are presented in Table 6.4.6-15. As seen in the results, the increase in the fuel volume for the maximum pellet diameter (0.53 inch) results in an increase in k_s of 1.2 percent. The resulting value is well below the 0.95 limit. Note that for the dry system, reducing clad thickness allows the fuel rods to shift closer to the center of each cluster rod insert. For the wet system, a reduced clad thicknessincreases the moderator volume.

6.4.6.5.2 Variations in Fuel Material Compostions Including the Addition of LEU Fuel Material

Criticality evaluations for the fuel material composition changes are divided into three sets of analysis. The first analysis stage uses the HEU and LEU intact and damaged fuel models to determine the effect of the H/Zr ratio on system reactivity. Next, cask cavity moderator density studies confirm that the most reactive system configuration at the requested fissile material mass, enrichment, and H/Zr ratio remains the preferentially flooded cask with dry cask cavity. These evaluations all rely on an accident cask configuration with no neutron shield, coupling the casks in the infinite array modeled. The final set of evaluations runs normal condition models to

demonstrate that the accident condition bounds and the criticality safety index (CSI) is 0 for all conditions. The set also includes the necessary analysis to demonstrate that the results from a single cask, containment reflected, is bounded. TRIGA fuel rod geometry for the HEU and LEU evaluations is based on the previously determined geometry summarized in Table 6.4.6-20. The maximum fuel mass (grams ^{235}U), maximum enrichment (wt % ^{235}U), and minimum weight percent uranium employed in the analysis are also contained in Table 6.4.6-20. In conjunction with the hydrogen to zirconium ratio, the minimum uranium weight percent in the fuel matrix determines the maximum quantity of moderator (hydrogen) within the fuel matrix.

Hydrogen to Zirconium Ratio Studies

For the accident condition cask array model, including loss of neutron shield with a dry cask exterior, the system reactivities are evaluated for H/Zr ratios from 1.5 to 1.7. The system is evaluated for intact fuel and damaged fuel with a flooded and a dry cask cavity. For the dry cavity, the fuel is placed in the maximum reactivity dry cavity geometry configuration, while for the flooded cavity, the wet cavity most reactive geometry configuration is used. Note that for the dry cask cavity damaged fuel case, a preferentially flooded (full density water) canister is modeled. As seen in Figure 6.4.6-1 and Figure 6.4.6-2, the maximum reactivity is associated with a maximum H/Zr ratio (1.7) for LEU and HEU fuel under both dry and wet conditions. The magnitude of the increase varies by configuration and ranges from Δk=0.011 to 0.045. Increases in reactivity are higher for the HEU material than for the LEU configuration. Therefore, a maximum H/Zr ratio of 1.7 is used for the optimum moderator density evaluation.

Maximum Reactivity Moderator / Optimum Moderator Condition Study

HEU and LEU configurations are evaluated at various cask cavity moderator density conditions. All models employ fuel at the maximum H/Zr ratio of 1.7. The maximum reactivity condition cask, i.e., preferentially flooded damaged fuel can (damaged fuel model only), cask accident model, and exterior moderator (dry), is used in these evaluations. HEU and LEU optimum moderator density plots for the dry cavity most reactive basket configuration ("Dry Cavity MRC") and the wet cavity most reactive basket configuration ("Wet Cavity MRC") are included in Figure 6.4.6-3 and Figure 6.4.6-4. Maximum system reactivity is obtained from the damaged fuel can model with a dry cask cavity. Figure 6.4.6-5 confirms that the fully flooded damaged fuel can represents the bounding scenario.

The maximum system reactivities for the accident models are summarized in Table 6.4.6-16.

Single Cask Containment (Fully Reflected) and Normal Condition Array Evaluations

A normal condition infinite cask array is evaluated to demonstrate compliance with 10 CFR 71.55 and 71.59. Normal condition cask array results are summarized in Table 6.4.6-17.

Reactivity of the normal condition array is lower, as the radial neutron shield reduces neutronic interaction between casks.

A single cask evaluation is performed to comply with 10 CFR 71.55(b)(3). The containment for the NAC-LWT is the cask inner shell. While no operating condition results in removal of the cask outer shell and lead gamma shield, the most reactive preferential flooded and fully flooded cases are reevaluated by removing the lead and outer shells (including neutron shield), and reflecting the system by 20 cm water at full density on the X, Y and Z faces. Single cask, with containment fully water reflected reactivities are summarized in Table 6.4.6-18.

Maximum Reactivities and Comparison to Limits

Based on the TRIGA bias k_s, the bias and uncertainty adjusted Monte Carlo-generated system reactivity is summarized in Table 6.4.6-19 for each of the three primary analysis groups.

The maximum adjusted neutron multiplication factor, (k_s), is 0.9303. The maximum reactivity is based on the following model characteristics:

- HEU rods
- 0.53-inch pellet diameter, 0.015-inch clad thickness and 22.5 inches active fuel length
- Maximum 95 wt % ^{235}U enriched material with a minimum 9.5 wt % U in the fuel meat (bounds LEU fuel material maximum 20 wt % ^{235}U enriched material with a minimum 43 wt % U in the fuel meat)
- Damaged fuel cans containing an equivalent 6 intact fuel rods per can
- Preferentially flooded can
- Void cask cavity and exterior
- Loss of neutron shield

The maximum reactivity is calculated under hypothetical accident conditions. As an infinite cask array remains subcritical under normal and accident conditions, the criticality safety index (CSI) is 0.

6.4.6.6 Conclusion

Thus, including all calculational and mechanical uncertainties, an infinite array of NAC-LWT casks remains subcritical, and is below the 0.95 limit, corrected for bias and uncertainty, under normal and accident conditions with fuel rod parameters as defined in Table 6.4.6-20 and the following defined quantity limits:

Nonpoisoned Baskets:

1. 480 TRIGA fuel cluster rods.

2. Sealed damaged fuel cans (DFCs), top and bottom baskets only, with up to six damaged TRIGA fuel cluster rods or fuel debris and remainder of baskets filled with undamaged fuel.

Poisoned Baskets:

1. 560 TRIGA fuel cluster rods.
2. Sealed DFCs, top and bottom baskets only, with up to six damaged TRIGA fuel cluster rods or fuel debris and remainder of baskets filled with undamaged fuel.

Figure 6.4.6-1 HEU Cluster Rod Reactivity versus H/Zr Ratio – Accident Condition Cask Array

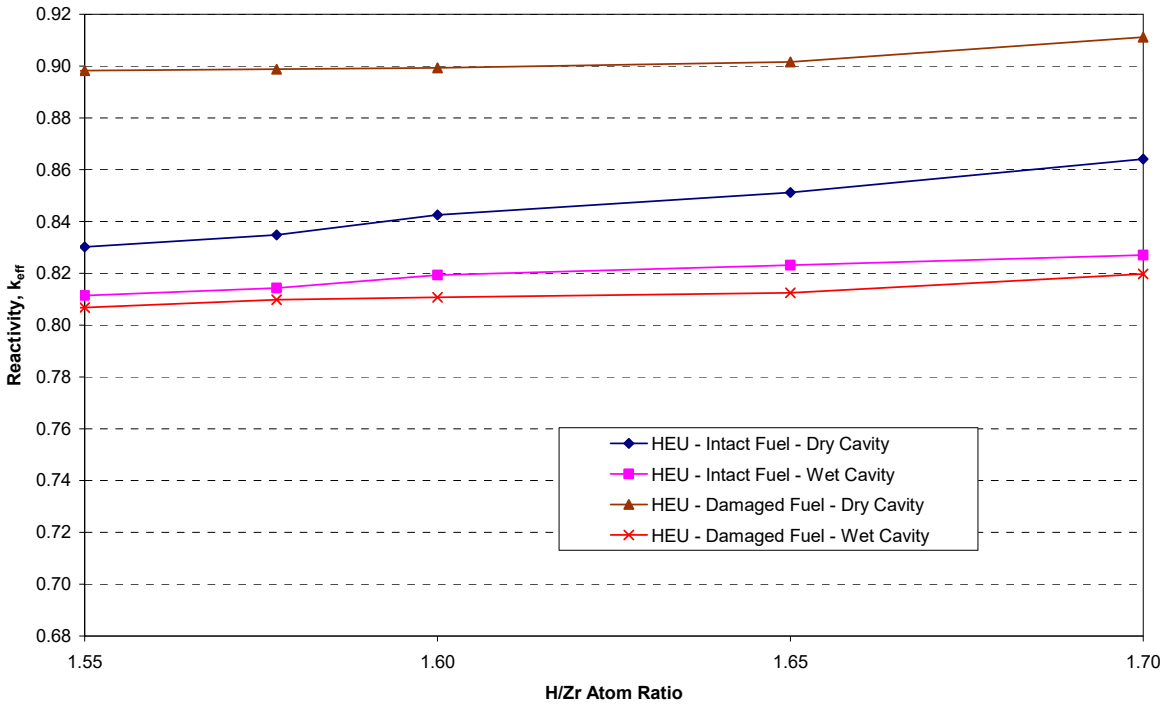

Figure 6.4.6-2 LEU Cluster Rod Reactivity versus H/Zr Ratio – Accident Condition Cask Array

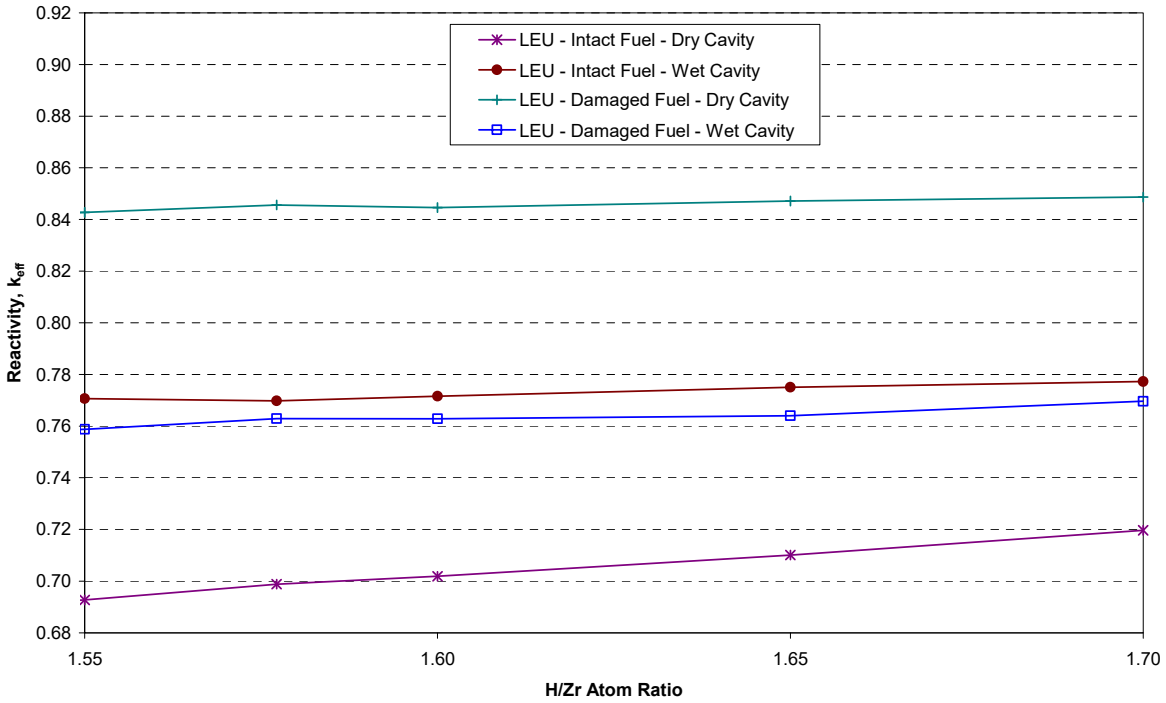

Figure 6.4.6-3 HEU TRIGA Cluster Rod System Reactivity versus Cask Cavity Moderator

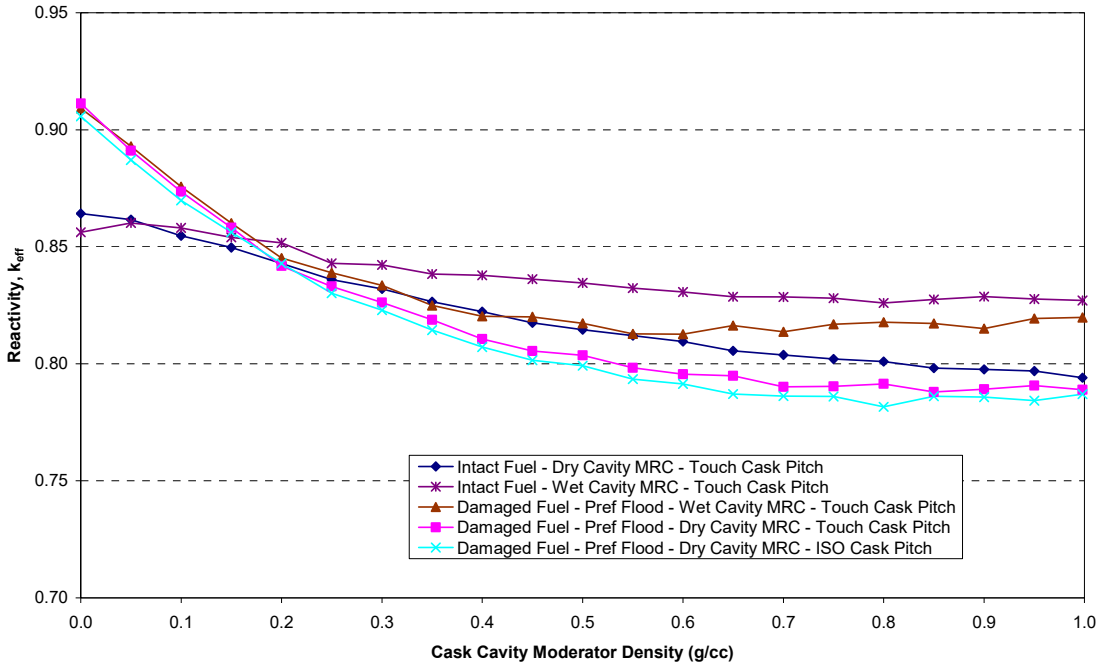

Figure 6.4.6-4 LEU TRIGA Cluster Rod System Reactivity versus Cask Cavity Moderator

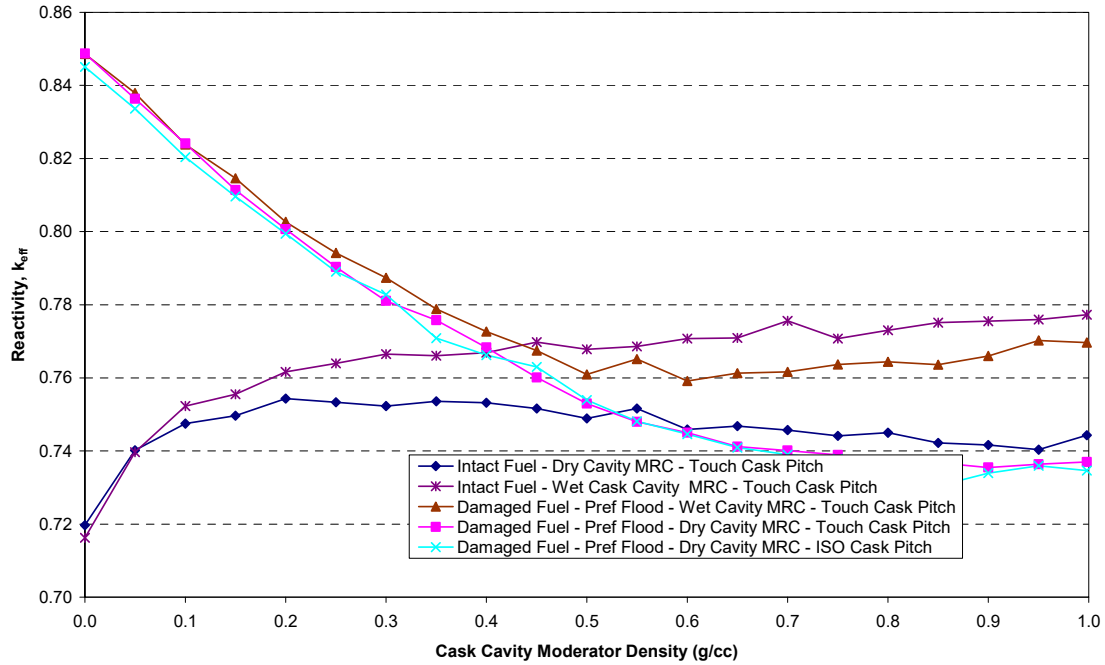

Figure 6.4.6-5 TRIGA Cluster Rod Reactivity versus Damaged Fuel Can Moderator (Pref Flood – Dry Cask Cavity)

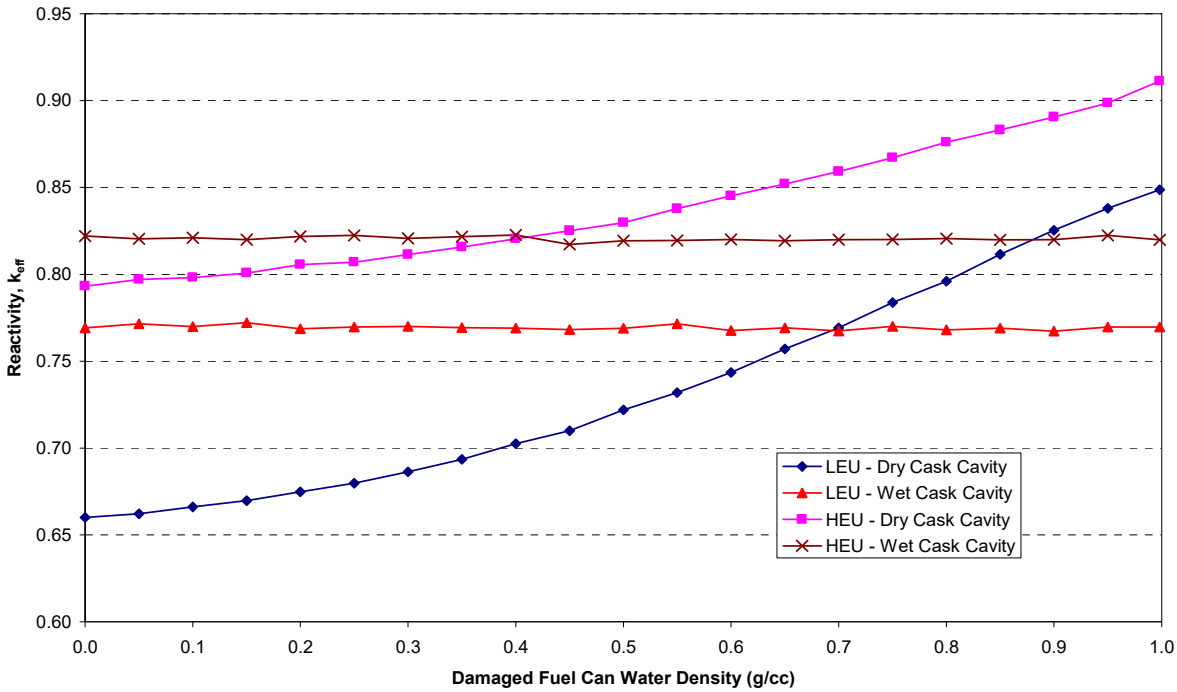

Table 6.4.6-1 Cask k_{eff} with TRIGA Fuel Cluster Rods – Fuel Rod Placement Perturbations, Nonpoisoned Basket

Basket Configuration	Wet Case Results $k_{eff} \pm \sigma$	Dry Case Results $k_{eff} \pm \sigma$
Nominal Centered Fuel and Al Insert	0.7340 ± 0.0026	0.8001 ± 0.0019
Elements Moved To Al Insert Center	0.7110 ± 0.0027	0.8076 ± 0.0019
Elements Moved Away From Al Insert Center	0.7458 ± 0.0026	0.8005 ± 0.0020
Al Insert Moved To Basket Center[1]	0.7571 ± 0.0025	0.8047 ± 0.0020
Al Insert Moved Away From Basket Center[1]	0.7391 ± 0.0025	0.8027 ± 0.0020
1 Rod Removed From Each Al Insert	0.7576 ± 0.0026	0.7782 ± 0.0020
2 Rods Removed From Each Al Insert	0.7558 ±0.0024	0.7503 ± 0.0020
3 Rods Removed From Each Al Insert	0.7414 ± 0.0022	-

Note:

[1] The most reactive fuel positioning is retained.

Table 6.4.6-2 Cask k_{eff} with TRIGA Fuel Cluster Rods – Fuel Rod Placement Perturbations, Poisoned Basket

Basket Configuration	Wet Case Results $k_{eff} \pm \sigma$	Dry Case Results $k_{eff} \pm \sigma$
Nominal Centered Fuel and Al Insert	0.7809 ± 0.0026	0.7435 ± 0.0020
Elements Moved To Al Insert Center	0.7654 ± 0.0025	0.7501 ± 0.0019
Elements Moved Away From Al Insert Center	0.7922 ± 0.0027	0.7468 ± 0.0020
Al Insert Moved To Basket Center[1]	0.7995 ± 0.0026	0.7489 ± 0.0019
Al Insert Moved Away From Basket Center[1]	0.7914 ± 0.0027	0.7476 ± 0.0022
1 Rod Removed From Each Al Insert	0.7956 ± 0.0027	0.7163 ± 0.0019
2 Rods Removed From Each Al Insert	0.7882 ± 0.0026	0.6831 ± 0.0019
3 Rods Removed From Each Al Insert	0.7764 ± 0.0026	-

Note:

[1] The most reactive fuel in tube motion is retained.

Table 6.4.6-3 Axially Infinite Cask k_{eff} with TRIGA Fuel Cluster Rods – Basket and Insert Manufacturing Tolerance Perturbations, Nonpoisoned Basket

Basket Configuration	Wet Case Results $k_{eff} \pm \sigma$	Dry Case Results $k_{eff} \pm \sigma$
Base Case[1]	0.7571 ± 0.0025	0.8047 ± 0.0020
Thin SS Basket Plates	0.7652 ± 0.0025	0.8140 ± 0.0020
Maximum Al Insert Tube Diameter[2]	0.7653 ± 0.0027	0.8146 ± 0.0022
Minimum Al Insert Tube Diameter[2]	0.7487 ± 0.0025	0.8084 ± 0.0019
Minimum Al Insert Tube Thickness[2]	0.7625 ± 0.0026	0.8157 ± 0.0021
Minimum Basket Opening[2]	0.7682 ± 0.0026 [3]	0.8129 ± 0.0021

Notes:

1 Most reactive configurations as determined in Section 6.4.6.1.1.

2 Incorporates minimum thickness stainless steel, basket divider plates.

3 Maximum aluminum tube diameter.

Table 6.4.6-4 Axially Infinite Cask k_{eff} with TRIGA Fuel Cluster Rods – Basket and Insert Manufacturing Tolerance Perturbations, Poisoned Basket

Basket Configuration	Wet Case Results $k_{eff} \pm \sigma$	Dry Case Results $k_{eff} \pm \sigma$
Base Case[1]	0.7995 ± 0.0026	0.7489 ± 0.0019
Thin SS Basket Plates	0.8019 ± 0.0024	0.7513 ± 0.0020
Maximum Al Insert Tube Diameter[2]	0.8055 ± 0.0027	0.7512 ± 0.0019
Minimum Al Insert Tube Diameter[2]	0.7969 ± 0.0026	0.7507 ± 0.0018
Minimum Al Insert Tube Thickness[2]	0.7995 ± 0.0023	0.7518 ± 0.0019
Minimum Basket Opening[2]	0.8025 ± 0.0025 [3]	0.7518 ± 0.0018 [4]

Notes:

1 Most reactive configurations as determined in Section 6.4.6.1.1.

2 Incorporates minimum thickness stainless steel, basket divider plates.

3 Maximum aluminum tube diameter.

4 Minimum aluminum tube thickness.

Table 6.4.6-5 Sealed Can Preferential Flooding and Partial Loading Reactivity Evaluations for TRIGA Fuel Rod Clusters, Nonpoisoned Basket

Description	$k_{eff} \pm \sigma$ Dry Cask/Dry Can	$k_{eff} \pm \sigma$ Wet Cask/Wet Can	$k_{eff} \pm \sigma$ Dry Cask/Wet Can
1 Solid Fuel Lump	0.7184 ± 0.0025	0.7654 ± 0.0024	0.6954 ± 0.0022
2 Solid Fuel Lumps	0.7053 ± 0.0021	0.7546 ± 0.0025	0.6721 ± 0.0020
3 Solid Fuel Lumps	0.6946 ± 0.0022	0.7597 ± 0.0025	0.6704 ± 0.0022
4 Solid Fuel Lumps	0.6983 ± 0.0020	0.7672 ± 0.0026	0.6714 ± 0.0023
5 Solid Fuel Lumps	0.6995 ± 0.0024	0.7620 ± 0.0028	0.6723 ± 0.0022
Mixture Full Can Height	0.6917 ± 0.0021	0.7592 ± 0.0024	0.8669 ± 0.0022
Mixture Half Can Height	0.6932 ± 0.0021	0.7582 ± 0.0025	0.7226 ± 0.0022
Mixture Full Can Height, 50 % mass	0.6807 ± 0.0022	0.7606 ± 0.0025	0.7416 ± 0.0021

Table 6.4.6-6 Sealed Can Preferential Flooding and Partial Loading Reactivity Evaluations for TRIGA Fuel Rod Clusters, Poisoned Basket

Description	$k_{eff} \pm \sigma$ Dry Cask/Dry Can	$k_{eff} \pm \sigma$ Wet Cask/Wet Can	$k_{eff} \pm \sigma$ Dry Cask/Wet Can
1 Solid Fuel Lump	0.6957 ± 0.0022	0.7937 ± 0.0025	0.6662 ± 0.0020
2 Solid Fuel Lumps	0.6704 ± 0.0021	0.7942 ± 0.0026	0.6405 ± 0.0022
3 Solid Fuel Lumps	0.6610 ± 0.0020	0.7959 ± 0.0026	0.6389 ± 0.0019
4 Solid Fuel Lumps	0.6592 ± 0.0020	0.7986 ± 0.0025	0.6389 ± 0.0022
5 Solid Fuel Lumps	0.6561 ± 0.0019	0.8001 ± 0.0023	0.6409 ± 0.0020
Mixture Full Can Height	0.6507 ± 0.0019	0.7993 ±0.0025	0.8384 ± 0.0021
Mixture Half Can Height	0.6575 ± 0.0019	0.8045 ± 0.0029	0.6741 ± 0.0022
Mixture Full Can Height, 50 % mass	0.6422 ± 0.0019	0.7992 ± 0.0027	0.6957 ± 0.0020

Table 6.4.6-7 Summary of Most Reactive Configurations, TRIGA Fuel Cluster Rods, Nonpoisoned Basket

	Wet	Dry	Preferential
Intact Fuel	0.7682 ± 0.0026	0.8129 ± 0.0021	-
Sealed Fuel Cans[1]	0.7672 ± 0.0026	0.7184 ± 0.0025	0.8669 ± 0.0022

Note:

[1] Remainder of baskets filled with intact fuel.

Table 6.4.6-8 Summary of Most Reactive Configurations, TRIGA Fuel Cluster Rods, Poisoned Basket

	Wet	Dry	Preferential
Intact Fuel	0.8025 ± 0.0025	0.7518 ± 0.0018	-
Sealed Fuel Cans[1]	0.8045 ± 0.0029	0.6957 ± 0.0022	0.8384 ± 0.0021

Note:

[1] Remainder of baskets filled with intact fuel.

Table 6.4.6-9 Reactivity Results for TRIGA Fuel Cluster Rods, Sealed Cans, Normal Conditions, Nonpoisoned Basket

Moderator SG	Casks Touching ($k_{eff} \pm \sigma$)	8 Foot Center-To-Center ($k_{eff} \pm \sigma$)
Dry Exterior, Vary Internal Density		
0.00000	0.7292 ± 0.0023	0.7270 ± 0.0025
0.00100	0.7294 + 0.0024	0.7258 + 0.0026
0.00178	0.7262 + 0.0025	0.7312 + 0.0025
0.00316	0.7267 + 0.0024	0.7316 + 0.0024
0.00562	0.7277 + 0.0024	0.7294 + 0.0024
0.01000	0.7240 + 0.0024	0.7312 + 0.0023
0.01780	0.7249 + 0.0025	0.7279 + 0.0025
0.03160	0.7307 + 0.0026	0.7322 + 0.0025
0.05620	0.7392 + 0.0024	0.7333 + 0.0024
0.10000	0.7345 + 0.0024	0.7349 + 0.0025
0.17800	0.7354 + 0.0025	0.7339 + 0.0024
0.31600	0.7298 + 0.0025	0.7285 + 0.0025
0.56200	0.7074 + 0.0024	0.7100 + 0.0026
0.70000	0.7064 + 0.0022	0.7055 + 0.0026
0.80000	0.7140 + 0.0027	0.7083 + 0.0024
0.90000	0.7137 + 0.0026	0.7201 + 0.0024
1.00000	0.7168 + 0.0026	0.7216 + 0.0027
Optimally Moderated Cask Interior (SG = 0.05620), Vary External Density		
0.00000	0.7292 ± 0.0023	0.7270 ± 0.0025
0.00100	0.7354 + 0.0024	0.7352 + 0.0028
0.00178	0.7351 + 0.0025	0.7360 + 0.0026
0.00316	0.7347 + 0.0024	0.7347 + 0.0023
0.00562	0.7329 + 0.0025	0.7372 + 0.0025
0.01000	0.7303 + 0.0023	0.7316 + 0.0024
0.01780	0.7306 + 0.0024	0.7296 + 0.0027
0.03160	0.7296 + 0.0025	0.7339 + 0.0024
0.05620	0.7321 + 0.0023	0.7324 + 0.0022
0.10000	0.7369 + 0.0023	0.7305 + 0.0021
0.17800	0.7325 + 0.0024	0.7343 + 0.0025
0.31600	0.7307 + 0.0026	0.7324 + 0.0024
0.56200	0.7297 + 0.0028	0.7359 + 0.0025
0.70000	0.7341 + 0.0021	0.7300 + 0.0022
0.80000	0.7316 + 0.0024	0.7359 + 0.0024
0.90000	0.7334 + 0.0025	0.7313 + 0.0026
1.00000	0.7308 + 0.0025	0.7318 + 0.0023
Vary Internal and External Density Simultaneously		
0.00000	0.7292 ± 0.0023	0.7270 ± 0.0025
0.00100	0.7291 + 0.0023	0.7275 + 0.0025
0.00178	0.7271 + 0.0026	0.7309 + 0.0024
0.00316	0.7316 + 0.0025	0.7271 + 0.0024
0.00562	0.7286 + 0.0027	0.7277 + 0.0023
0.01000	0.7288 + 0.0025	0.7254 + 0.0024
0.01780	0.7329 + 0.0024	0.7296 + 0.0024
0.03160	0.7309 + 0.0026	0.7300 + 0.0026
0.05620	0.7321 + 0.0023	0.7313 + 0.0026
0.10000	0.7364 + 0.0024	0.7299 + 0.0025
0.17800	0.7344 + 0.0026	0.7335 + 0.0023
0.31600	0.7299 + 0.0024	0.7301 + 0.0026
0.56200	0.7139 + 0.0026	0.7118 + 0.0025
0.70000	0.7024 + 0.0025	0.7025 + 0.0027
0.80000	0.7116 + 0.0024	0.7029 + 0.0023
0.90000	0.7177 + 0.0028	0.7142 + 0.0024
1.00000	0.7204 ± 0.0025	0.7187 ± 0.0026

Table 6.4.6-10 Reactivity Results for TRIGA Fuel Cluster Rods, Sealed Can, Accident Conditions, Nonpoisoned Basket

Moderator SG	Casks Touching ($k_{eff} \pm \sigma$)	8 Foot Center-To-Center ($k_{eff} \pm \sigma$)
Dry Exterior and Neutron Shield, Vary Internal Moderator		
0.00000	0.8669 ± 0.0022	0.8756 ± 0.0023
0.00100	0.8725 + 0.0022	0.8687 + 0.0022
0.00178	0.8737 + 0.0022	0.8668 + 0.0022
0.00316	0.8721 + 0.0024	0.8744 + 0.0024
0.00562	0.8703 + 0.0022	0.8693 + 0.0024
0.01000	0.8716 + 0.0022	0.8646 + 0.0021
0.01780	0.8658 + 0.0022	0.8614 + 0.0021
0.03160	0.8620 + 0.0023	0.8620 + 0.0021
0.05620	0.8536 + 0.0022	0.8561 + 0.0025
0.10000	0.8345 + 0.0023	0.8373 + 0.0023
0.17800	0.8138 + 0.0022	0.8152 + 0.0024
0.31600	0.7862 + 0.0021	0.7830 + 0.0024
0.56200	0.7570 + 0.0025	0.7500 + 0.0024
0.70000	0.7439 + 0.0023	0.7424 + 0.0027
0.80000	0.7383 + 0.0025	0.7404 + 0.0026
0.90000	0.7415 + 0.0027	0.7391 + 0.0025
1.00000	0.7398 + 0.0026	0.7303 + 0.0026
Optimally Moderated Internal (SG = 0.0), Vary Neutron Shield and Exterior		
0.00000	0.8669 ± 0.0022	0.8756 ± 0.0023
0.00100	0.8620 + 0.0022	0.7950 + 0.0023
0.00178	0.8488 + 0.0022	0.7755 + 0.0025
0.00316	0.8366 + 0.0023	0.7509 + 0.0024
0.00562	0.8209 + 0.0022	0.7403 + 0.0024
0.01000	0.7994 + 0.0023	0.7341 + 0.0024
0.01780	0.7795 + 0.0022	0.7272 + 0.0022
0.03160	0.7618 + 0.0024	0.7270 + 0.0025
0.05620	0.7497 + 0.0025	0.7251 + 0.0025
0.10000	0.7395 + 0.0023	0.7238 + 0.0025
0.17800	0.7300 + 0.0023	0.7244 + 0.0025
0.31600	0.7280 + 0.0024	0.7285 + 0.0022
0.56200	0.7311 + 0.0025	0.7283 + 0.0024
0.70000	0.7322 + 0.0024	0.7243 + 0.0025
0.80000	0.7305 + 0.0025	0.7267 + 0.0024
0.90000	0.7237 + 0.0022	0.7324 + 0.0023
1.00000	0.7286 + 0.0024	0.7287 + 0.0025
Vary Interior, Exterior and Neutron Shield Simultaneously		
0.00000	0.8669 ± 0.0022	0.8756 ± 0.0023
0.00100	0.8615 + 0.0023	0.7989 + 0.0022
0.00178	0.8550 + 0.0023	0.7755 + 0.0025
0.00316	0.8397 + 0.0022	0.7520 + 0.0024
0.00562	0.8268 + 0.0022	0.7439 + 0.0024
0.01000	0.7988 + 0.0025	0.7333 + 0.0025
0.01780	0.7788 + 0.0024	0.7305 + 0.0023
0.03160	0.7600 + 0.0023	0.7259 + 0.0024
0.05620	0.7510 + 0.0024	0.7350 + 0.0024
0.10000	0.7444 + 0.0024	0.7349 + 0.0024
0.17800	0.7397 + 0.0025	0.7298 + 0.0024
0.31600	0.7284 + 0.0025	0.7297 + 0.0024
0.56200	0.7106 + 0.0022	0.7056 + 0.0024
0.70000	0.7051 + 0.0025	0.7004 + 0.0025
0.80000	0.7146 + 0.0025	0.7104 + 0.0027
0.90000	0.7107 + 0.0025	0.7195 + 0.0026
1.00000	0.7204 ± 0.0025	0.7251 ± 0.0025

Table 6.4.6-11 Reactivity Results for TRIGA Fuel Cluster Rods, Sealed Cans, Normal Conditions, Poisoned Basket

Moderator SG	Casks Touching ($k_{eff} \pm \sigma$)	8 Foot Center-To-Center ($k_{eff} \pm \sigma$)
Dry Exterior, Vary Internal Density		
0.00000	0.7274 ± 0.0026	0.7319 ± 0.0024
0.00100	0.7342 ± 0.0022	0.7283 ± 0.0023
0.00178	0.7296 ± 0.0024	0.7268 ± 0.0023
0.00316	0.7286 ± 0.0024	0.7328 ± 0.0024
0.00562	0.7294 ± 0.0023	0.7277 ± 0.0023
0.01000	0.7309 ± 0.0022	0.7338 ± 0.0024
0.01780	0.7319 ± 0.0023	0.7308 ± 0.0023
0.03160	0.7338 ± 0.0023	0.7334 ± 0.0023
0.05620	0.7349 ± 0.0024	0.7290 ± 0.0023
0.10000	0.7328 ± 0.0021	0.7339 ± 0.0026
0.17800	0.7346 ± 0.0024	0.7339 ± 0.0023
0.31600	0.7332 ± 0.0026	0.7315 ± 0.0023
0.56200	0.7324 ± 0.0024	0.7308 ± 0.0024
0.70000	0.7245 ± 0.0025	0.7304 ± 0.0023
0.80000	0.7401 ± 0.0025	0.7310 ± 0.0024
0.90000	0.7455 ± 0.0025	0.7375 ± 0.0028
1.00000	0.7573 ± 0.0027	0.7593 ± 0.0026
Optimally Moderated Cask Interior (SG = 1.0), Vary External Density		
0.00000	0.7274 ± 0.0026	0.7319 ± 0.0024
0.00100	0.7667 ± 0.0026	0.7623 ± 0.0026
0.00178	0.7635 ± 0.0024	0.7652 ± 0.0025
0.00316	0.7636 ± 0.0026	0.7596 ± 0.0027
0.00562	0.7675 ± 0.0028	0.7636 ± 0.0027
0.01000	0.7697 ± 0.0025	0.7661 ± 0.0026
0.01780	0.7634 ± 0.0025	0.7615 ± 0.0029
0.03160	0.7664 ± 0.0027	0.7641 ± 0.0024
0.05620	0.7635 ± 0.0030	0.7688 ± 0.0026
0.10000	0.7599 ± 0.0029	0.7676 ± 0.0024
0.17800	0.7622 ± 0.0024	0.7637 ± 0.0024
0.31600	0.7620 ± 0.0026	0.7690 ± 0.0023
0.56200	0.7685 ± 0.0030	0.7643 ± 0.0028
0.70000	0.7632 ± 0.0025	0.7684 ± 0.0028
0.80000	0.7645 ± 0.0028	0.7657 ± 0.0027
0.90000	0.7615 ± 0.0028	0.7624 ± 0.0027
1.00000	0.7641 ± 0.0028	0.7659 ± 0.0025
Vary Internal and External Density Simultaneously		
0.00000	0.7274 ± 0.0026	0.7319 ± 0.0024
0.00100	0.7328 ± 0.0022	0.7281 ± 0.0024
0.00178	0.7279 ± 0.0025	0.7297 ± 0.0024
0.00316	0.7306 ± 0.0023	0.7310 ± 0.0023
0.00562	0.7323 ± 0.0024	0.7331 ± 0.0025
0.01000	0.7291 ± 0.0026	0.7291 ± 0.0024
0.01780	0.7306 ± 0.0024	0.7309 ± 0.0024
0.03160	0.7291 ± 0.0022	0.7314 ± 0.0023
0.05620	0.7292 ± 0.0026	0.7299 ± 0.0024
0.10000	0.7302 ± 0.0026	0.7356 ± 0.0025
0.17800	0.7363 ± 0.0024	0.7288 ± 0.0023
0.31600	0.7366 ± 0.0025	0.7316 ± 0.0025
0.56200	0.7296 ± 0.0026	0.7300 ± 0.0025
0.70000	0.7318 ± 0.0023	0.7276 ± 0.0025
0.80000	0.7350 ± 0.0025	0.7385 ± 0.0024
0.90000	0.7423 ± 0.0027	0.7385 ± 0.0024
1.00000	0.7641 ± 0.0028	0.7659 ± 0.0029

Table 6.4.6-12 Reactivity Results for TRIGA Fuel Cluster Rods, Sealed Cans, Accident Conditions, Poisoned Basket

Moderator SG	Casks Touching ($k_{eff} \pm \sigma$)	8 Foot Center-To-Center ($k_{eff} \pm \sigma$)
Dry Exterior and Neutron Shield, Vary Internal Moderator		
0.00000	0.8384 ± 0.0021	0.8375 ± 0.0023
0.00100	0.8394 + 0.0022	0.8343 + 0.0021
0.00178	0.8376 + 0.0022	0.8316 + 0.0022
0.00316	0.8373 + 0.0022	0.8319 + 0.0024
0.00562	0.8399 + 0.0021	0.8336 + 0.0025
0.01000	0.8356 + 0.0022	0.8321 + 0.0023
0.01780	0.8380 + 0.0022	0.8314 + 0.0022
0.03160	0.8302 + 0.0025	0.8208 + 0.0021
0.05620	0.8240 + 0.0021	0.8188 + 0.0024
0.10000	0.8127 + 0.0023	0.8112 + 0.0023
0.17800	0.7993 + 0.0024	0.7936 + 0.0022
0.31600	0.7773 + 0.0024	0.7738 + 0.0027
0.56200	0.7616 + 0.0026	0.7559 + 0.0023
0.70000	0.7570 + 0.0025	0.7578 + 0.0022
0.80000	0.7647 + 0.0026	0.7589 + 0.0025
0.90000	0.7728 + 0.0028	0.7671 + 0.0026
1.00000	0.7802 + 0.0026	0.7803 + 0.0026
Optimally Moderated Internal (SG = 0.0), Vary Neutron Shield and Exterior		
0.00000	0.8384 ± 0.0021	0.8375 ± 0.0023
0.00100	0.8282 + 0.0022	0.7710 + 0.0023
0.00178	0.8210 + 0.0021	0.7593 + 0.0024
0.00316	0.8150 + 0.0022	0.7532 + 0.0023
0.00562	0.7993 + 0.0023	0.7398 + 0.0024
0.01000	0.7882 + 0.0024	0.7336 + 0.0024
0.01780	0.7664 + 0.0026	0.7326 + 0.0024
0.03160	0.7546 + 0.0024	0.7290 + 0.0023
0.05620	0.7480 + 0.0022	0.7285 + 0.0023
0.10000	0.7387 + 0.0022	0.7267 + 0.0022
0.17800	0.7308 + 0.0023	0.7265 + 0.0026
0.31600	0.7324 + 0.0023	0.7310 + 0.0025
0.56200	0.7278 + 0.0025	0.7291 + 0.0022
0.70000	0.7320 + 0.0023	0.7317 + 0.0025
0.80000	0.7320 + 0.0024	0.7268 + 0.0026
0.90000	0.7313 + 0.0025	0.7291 + 0.0026
1.00000	0.7329 + 0.0025	0.7329 + 0.0025
Vary Interior, Exterior and Neutron Shield Simultaneously		
0.00000	0.8384 ± 0.0021	0.8375 ± 0.0023
0.00100	0.8269 + 0.0024	0.7802 + 0.0024
0.00178	0.8258 + 0.0021	0.7625 + 0.0022
0.00316	0.8089 + 0.0022	0.7525 + 0.0023
0.00562	0.7928 + 0.0022	0.7409 + 0.0025
0.01000	0.7825 + 0.0023	0.7308 + 0.0025
0.01780	0.7721 + 0.0023	0.7305 + 0.0026
0.03160	0.7552 + 0.0023	0.7327 + 0.0023
0.05620	0.7457 + 0.0023	0.7283 + 0.0025
0.10000	0.7420 + 0.0024	0.7343 + 0.0025
0.17800	0.7365 + 0.0023	0.7322 + 0.0026
0.31600	0.7379 + 0.0024	0.7333 + 0.0024
0.56200	0.7292 + 0.0026	0.7333 + 0.0022
0.70000	0.7286 + 0.0023	0.7307 + 0.0027
0.80000	0.7334 + 0.0023	0.7292 + 0.0023
0.90000	0.7516 + 0.0026	0.7517 + 0.0024
1.00000	0.7608 ± 0.0029	0.7608 ± 0.0029

Table 6.4.6-13 Single Package 10 CFR 71.55(b)(3) Evaluation k_{eff} Summary, TRIGA Fuel Cluster Rod, Nonpoisoned Basket

Description	$k_{eff} \pm \sigma$	k_s
Single Cask / Inner Shell Reflected with H_2O	0.73003 ± 0.00254	0.75191
Single Cask / Inner Shell and Lead Reflected with H_2O	0.76100 ± 0.00243	0.78266
Single Cask / Inner Shell, Lead & Outer Shell Reflected with H_2O	0.76366 ± 0.00240	0.78526
Single Intact Cask Reflected with H_2O	0.76360 ± 0.00273	0.78586

Table 6.4.6-14 Single Package 10 CFR 71.55(b)(3) Evaluation k_{eff} Summary, TRIGA Fuel Cluster Rod, Poison Basket

Description	$k_{eff} \pm \sigma$	k_s
Single Cask / Inner Shell Reflected with H_2O	0.76615 ± 0.00265	0.78825
Single Cask / Inner Shell and Lead Reflected with H_2O	0.80117 ± 0.00287	0.82371
Single Cask / Inner Shell, Lead & Outer Shell Reflected with H_2O	0.80106 ± 0.00250	0.82286
Single Intact Cask Reflected with H_2O	0.79815 ± 0.00228	0.81951

Table 6.4.6-15 Increased Fuel Dimensional Parameter k_{eff} Summary, TRIGA Fuel Cluster Rod, Nonpoisoned Basket

Description	$k_{eff} \pm \sigma$	k_s
Base Case (Section 6.4.6.3)	0.8756 ± 0.0023	0.8970
22.5-inch Active Fuel Height 0.015-inch Cladding Thickness 0.52-inch Fuel Pellet Diameter	0.8793 ± 0.0024	0.9009
22.5-inch Active Fuel Height 0.015-inch Cladding Thickness 0.53-inch Fuel Pellet Diameter	0.8876 ± 0.0021	0.9086

Table 6.4.6-16 TRIGA Cluster Rod Reactivities – Accident Conditions

	HEU			LEU		
	Cask Cavity	**k_{eff}**	**σ**	**Cask Cavity**	**k_{eff}**	**σ**
Intact Fuel	Dry (0 g/cc)	0.86414	0.00112	Wet (0.9882 g/cc)	0.77727	0.00121
Damaged Fuel	Dry (0 g/cc)	0.91119	0.00117	Dry (0 g/cc)	0.84872	0.00109

Table 6.4.6-17 TRIGA Cluster Rod Reactivities – Normal Conditions

Description	**k_{eff}**	**σ**
HEU - Dry Normal Condition Array	0.56007	0.00114
HEU - Dry Cask Cavity - Preferential Flooded Can - Normal Condition Array	0.74210	0.00132
LEU - Dry Normal Condition Array	0.44760	0.00094
LEU - Dry Cask Cavity - Preferential Flooded Can - Normal Condition Array	0.71750	0.00123

Table 6.4.6-18 TRIGA Cluster Rod Reactivities – Single Cask with Containment Fully Water Reflected

Description	**k_{eff}**	**σ**
HEU - Dry Cask Cavity - Preferential Flooded Can	0.74059	0.00120
LEU - Dry Cask Cavity - Preferential Flooded Can	0.71063	0.00117

Table 6.4.6-19 Summary of TRIGA Cluster Rod Maximum Reactivity Configuration

Fuel Material **Configuration**	HEU			LEU		
	k_{eff}	**σ**	**k_s**	**k_{eff}**	**σ**	**k_s**
Accident Array – Preferentially Flooded	0.91119	0.00117	0.93033	0.84872	0.00109	0.86770
Normal Array – Preferentially Flooded	0.74210	0.00132	0.76154	0.71750	0.00123	0.73676
Normal Array – Dry	0.56007	0.00114	0.57915	0.44760	0.00094	0.46628
Single Cask Fully (Water) Reflected	0.74059	0.00120	0.75979	0.71063	0.00117	0.72977

Table 6.4.6-20 Licensing Parameters for TRIGA Cluster Rods

Parameter	Value
Fuel Form	U-ZrH_x
Number of Rods Per Basket Opening	16
Clad Material	Incoloy
HEU Max. Enrichment (wt % ^{235}U)	95
HEU Min. U in Fuel Meat (wt %)	9.5[1]
HEU Max ^{235}U Per Rod (g)	46.5
LEU Max. Enrichment (wt % ^{235}U)	20
LEU Min. U in Fuel Meat (wt %)	43[2]
LEU Max ^{235}U Per Rod (g)	55
Maximum Hydrogen to Zirconium Ratio	1.70
Maximum Pellet Diameter (inch)	0.53
Minimum Clad Thickness (inch)	0.015
Maximum Active Fuel Length (inch)	22.5

[1] Equivalent to 457 grams zirconium

[2] Equivalent to 357 grams zirconium

6.4.7 DIDO Fuel Assemblies

This section presents the criticality analyses for the NAC-LWT cask with the DIDO fuel assembly and basket configuration. Criticality analyses of the seven assembly arrangement with the most limiting assembly type is performed to satisfy the criticality safety requirements of 10 CFR Parts 71.55 and 71.59, as well as IAEA Transportation Safety Standards (TS-R-1). In this analysis, the bounding DIDO fuel assembly type is determined, and infinite and finite arrays of NAC-LWT casks loaded with the design basis DIDO fuel are studied for criticality under normal and accident conditions. Moderator density in the cavity, neutron shield tank and outside is varied to determine the maximum k_{eff}. The analyses demonstrate that, including all calculational and mechanical uncertainties, the NAC-LWT remains subcritical under normal and accident conditions for all DIDO fuel assemblies.

6.4.7.1 Maximum Reactivity DIDO Assembly

This evaluation determines the maximum reactivity based on LEU, MEU and HEU fuel assembly configurations. Assemblies and baskets are modeled at nominal characteristics under normal conditions (i.e., the neutron shield is assumed intact). The cask interior and exterior are flooded with full density water. Based on the thickness of the neutron shield little interaction between casks is expected resulting in minimal impact of exterior moderator density variations. The results in Table 6.4.7-1 show that the maximum reactivity is obtained from HEU assemblies. The HEU assembly is more reactive than the LEU and MEU assemblies due to reduced parasitic absorption by ^{238}U. The fuel assembly is modeled with uniform cylinder spacing, referred to as "loose fuel elements" in this section, which has reactivity significantly higher than the reactivity of the crimped fuel element.

As demonstrated, the reactivity for LEU and MEU fuel assemblies is significantly lower than that of the HEU assembly. Shipment of LEU, MEU and HEU assemblies in the same basket is therefore permissible.

6.4.7.2 Radial and Axial Assembly Shifting Under Normal Conditions

The reactivity result in Table 6.4.7-1 shows that fuel assemblies axially shifted towards the adjoining basket (i.e., three groups of two baskets) are more reactive than those placed at the top or bottom of the basket. Shifting fuel assemblies in adjoining baskets towards one another brings the maximum fissile material into its closest proximity.

Radial outward shifting of both crimped and loose fuel assemblies shows that system reactivity decreases when shifting the assembly radially out from the center of the cask. Patterns designated as "in" shift the six peripheral fuel assemblies towards the basket center with the

centered tube assembly pushed out to approach the +x axis assembly. The radial "out" pattern similarly pushes the six peripheral assemblies away from the basket center. The "custom" pattern indicated in the result table represents the "in" pattern with the center assembly shifted out at 45 degrees. The crimped pattern indicated as "single" corresponds to all assemblies being crimped in the same direction (for this evaluation at an angle of 45 degrees). For the loose fuel cylinder model, there appears to be no statistically significant reactivity difference between the centered or shifted radially in fuel assemblies. For the crimped pattern, crimping the fuel assembly radially out provides for a significant increase in reactivity in the radially shifted in assembly configuration. No significant difference in reactivity for modified crimp directions is shown in the radially out assembly configuration.

6.4.7.3 Radial Shifting and Exterior Moderator Density Changes Under Accident Conditions

The cask accident configuration is one where the material of the neutron shield is replaced by the cask exterior material definition. Both loose and crimped assemblies are evaluated at full density water in the cask interior and at a void exterior under various radial shift conditions. All cases are based on the alternate axial shifting of fuel shown in Section 6.4.7.2 to be the most reactive. Results of these analyses are shown in Table 6.4.7-2. As expected, the void exterior condition produces the maximum reactivity configuration. Reactivity increases due to increased interaction between individual casks in the array.

In addition to the shifted standard "in" configuration, the inward shifted configuration with a centered middle assembly is also evaluated (designated as InC in the result table). This configuration is slightly more reactive than the configuration with all assemblies centered, but it is within the statistical uncertainty band (2 sigma) of the Monte Carlo base result. Mechanical perturbation and uncertainty results are therefore evaluated with the all assemblies centered configuration.

Table 6.4.7-3 displays results for test cases based on modifying the material of the aluminum shell surrounding the basket and the heat transfer shunts in the center of the basket. The base case for this analysis is the radially centered, fully moderated interior, dry exterior configuration. Replacing the shell material by water or steel in the accident model inhibits interaction between packages and produces lower reactivities in the infinite array of casks. Modeling the heat transfer shunts as all water increases reactivity slightly. This supports modeling the shunts as a set of three small rods with a smaller cross-section area.

6.4.7.4 Basket Manufacturing Tolerance Evaluation

In this evaluation, set basket tolerances are applied to the criticality evaluation. The base case for this evaluation is the cask accident model (i.e, neutron shield replaced by exterior moderator which in this case is void) with centered fuel assembly. As shown in Table 6.4.7-4, basket tolerances do not produce a significant reactivity increase. Note that the tube wall thickness minimum tolerance is set to a zero percent change. The minimum tube wall case is, therefore, identical to the base case. All further analysis is, therefore, set to nominal basket parameters.

6.4.7.5 Fuel Assembly Tolerance Evaluation

This evaluation contains the fuel assembly perturbation studies. Each of the parameters is evaluated independently with the results compared to the cask accident condition base case. For fuel cylinder pitch, two studies are performed. The first fixes the inner plate (cylinder) and varies the outer three cylinders and is noted as "IF." The second fixes the outer plate and is noted as "OF." Per the reactivity results in Table 6.4.7-5, tolerances that produce an increase in reactivity are:

- Minimum plate thickness (increases moderator between plates)
- Minimum clad thickness
- Maximum plate pitch (outer diameter fixed; increasing the outer diameter will decrease the amount of moderator between assemblies)
- Minimum active fuel height (reduces the space between fissile material in the alternating shifted model)
- Minimum element height (reduces the space between fissile material in the alternating shifted model)
- Maximum fissile mass
- Maximum uranium weight percent (minimum impact but is added to the final reactivity models)

6.4.7.6 Maximum Reactivity Configuration

The parameters shown in Section 6.4.7.5 to increase system reactivity are combined to form a worst case cask payload configuration. The limiting fuel assembly description based on the critical fuel assembly parameters is shown in Table 6.4.7-12. Table 6.4.7-6 displays the evaluation results of the worst case configured DIDO NAC-LWT. Since the radially in configuration with a centered basket middle assembly was statistically the same as the all centered configuration (see Table 6.4.7-2), both configurations are evaluated with the toleranced fuel parameters. The most reactive configuration for the DIDO assembly in the infinite array configuration is above 0.95. To remain below 0.95 under all conditions, a finite array of 8 casks

in close pitch configuration is modeled. The array is reflected by a water boundary condition and is evaluated with a flooded cask interior and void cask exterior. Both eight cask array configurations result in maximum k_s below 0.95. The CSI for the eight cask accident configuration is 12.5. Based on the normal to accident condition reactivity difference of 0.04 Δk, versus the 0.01 Δk that 0.95 was exceeded for the infinite array, the CSI for normal condition is 0 (infinite array is acceptable).

6.4.7.7 Moderator Density Variation Reactivity Configuration

Table 6.4.7-7 contains a cask interior and exterior moderator density variation study for the HEU fuel assembly in the accident configuration. All basket and fuel parameters are set to nominal conditions and an infinite array of casks is evaluated. The basket shows a relatively constant reactivity between cask interior densities of 1.0 g/cm^3 and 0.9 g/cm^3. While reactivity increases above the two sigma (95/95) uncertainty band typically applied in this calculation as statistically significant, the results are within the three sigma (99% confidence) band and are considered constant for the purposes of this calculation (Note that the maximum reactivity of the 8-cask array is below 0.92). At lower interior water densities the reactivity begins to decrease significantly. The exterior density study demonstrates that any significant amount of cask exterior moderator density will reduce the interaction between casks in the array.

6.4.7.8 Single Package Criticality Evaluation

To satisfy 10 CFR 71.55(b)(3), an analysis of the reflection of the containment system (inner shell) by water is performed on a single wet cask. Successive replacement of the cask radial shields with water reflection is also evaluated. A significant decrease in reactivity occurs when the lead gamma shield is replaced by water. The results from this evaluation can be seen in Table 6.4.7-8.

6.4.7.9 Reduced Clad Thickness Evaluations

This section documents the reactivity change due to a reduction in the DIDO element minimum clad thickness to 0.025 cm. The analysis in the previous sections is for a minimum clad thickness of 0.0325 cm.

The effect of the reduced clad thickness on system reactivity is determined by repeating cases from Section 6.4.7.5 and Section 6.4.7.6. Table 6.4.7-9 repeats the Section 6.4.7.5 minimum clad thickness case for the reduced value and compares it to the main section results. As expected, the reduced minimum clad thickness yields a proportional increase in k_{eff}. Table 6.4.7-10 show the results for the worst-case tolerance combination with the reduced clad thickness for the cases discussed in Section 6.4.7.6. The maximum k_{eff} is based on an eight-cask

array with a void exterior. All cases show a slight increase in reactivity due to the reduced clad thickness.

6.4.7.10 Expanded Inner and Outer Shell Diameter Evaluations

Based on the fuel assembly tolerance and moderator studies, a combination of a reduced inner diameter fuel tube ID (Tube 1) with a maximized outer fuel tube ID (Tube 4) is expected to maximize system reactivity (i.e., fuel plates are under-moderated with the previously evaluated conditions and increased pitch will increase system reactivity). Based on tolerances previously applied, the minimum Tube 1 ID is 5.88 cm and the maximum Tube 4 OD is 9.52 cm. This range is evaluated by fixing the Tube 1 ID at minimum and evaluating the nominal, minimum and maximum Tube 4 OD according to the values in the following list.

Tube Number	Min OD (cm)	Nom OD (cm)	Max OD (cm)
1	6.01	6.01	6.01
2	7.05	7.11	7.18
3	8.08	8.22	8.35
4	9.12	9.32	9.52

For this study, the tube pitch is a calculated variable and is larger than the maximum pitch considered in the previous calculation sections.

Table 6.4.7-11 documents the results of the tube diameter study. Based on the trend of increasing reactivity with increasing outer tube OD, the system remains under-moderated. The maximum k_s for the system is 0.9304 for an eight-cask array. Note that significant margin exists in these results, as the basket tube material is modeled as aluminum rather than stainless steel. System reactivity for the steel tube basket at the specified maximum reactivity configuration is < 0. 8.

6.4.7.11 Code Bias and Code Bias Uncertainty Adjustments

A calculation of k_s under normal and accident conditions can now be made based on the previous results and based on the KENO-Va validation statistics presented in Section 6.5.2 for high enriched uranium fuel. The value k_s is calculated based on the KENO-Va Monte Carlo average plus any biases and uncertainties associated with the methods and the modeling, i.e.:

$$k_s = k_{eff} + \Delta k_{Bias} + \Delta k_{BU} + 2\sigma_{MC} \leq 0.95$$

In the validation presented in Section 6.5.2, a bias of -0.0044 (allowance for overprediction of k_{eff}) and a 95/95 method uncertainty of ± 0.0181 was determined. For added conservatism, the -

0.0044 bias correction is neglected. With these biases and uncertainties, the equation for k_s becomes:

$$k_s = k_{eff} + 0.0181 + 2\sigma_{MC}$$

k_s values for the relevant analysis are included in Table 6.4.7-1 through Table 6.4.7-11. The maximum k_s, 0.9304, for the DIDO shipment results from the eight-cask array accident configuration model.

For both normal and accident conditions, the calculated k_{eff} values, after correction for biases and uncertainties, are well below the 0.95 limit. The analyses demonstrate that, including all calculational and mechanical uncertainties, an infinite array of NAC-LWT casks with DIDO fuel remains subcritical under normal and accident conditions.

Table 6.4.7-1 Normal Condition HEU, LEU, MEU DIDO Evaluation

Fuel Type	Fuel Configuration	Crimp Pattern	Radial Shift Pattern	Axial Shift Pattern	k_{eff}	σ	$k_{eff}+2\sigma$	k_s	Δk	$\Delta k_{eff}/\sigma$
LEU	Loose	N/A	Centered	Down	0.82771	0.00067	0.82905	0.84715	-0.03689	-55.1
LEU	Loose	N/A	Centered	Alternating	0.83842	0.00070	0.83982	0.85792	-0.02612	-37.3
LEU	Crimped	Single	Centered	Down	0.81887	0.00069	0.82025	0.83835	-0.04569	-66.2
LEU	Crimped	Single	Centered	Alternating	0.83112	0.00068	0.83248	0.85058	-0.03346	-49.2
MEU	Loose	N/A	Centered	Down	0.84006	0.00070	0.84146	0.85956	-0.02448	-35.0
MEU	Loose	N/A	Centered	Alternating	0.85333	0.00072	0.85477	0.87287	-0.01117	-15.5
MEU	Crimped	Single	Centered	Down	0.83259	0.00070	0.83399	0.85209	-0.03195	-45.6
MEU	Crimped	Single	Centered	Alternating	0.84336	0.00069	0.84474	0.86284	-0.02120	-30.7
HEU	Loose	N/A	Centered	Down	0.85243	0.00070	0.85383	0.87193	-0.01211	-17.3
HEU	Loose	N/A	Centered	Alternating	0.86462	0.00066	0.86594	0.88404	--	--
HEU	Loose	N/A	Centered	Up	0.85275	0.00071	0.85417	0.87227	-0.01177	-16.6
HEU	Loose	N/A	In	Alternating	0.86361	0.00071	0.86503	0.88313	-0.00091	-1.3
HEU	Loose	N/A	Out	Alternating	0.85625	0.00070	0.85765	0.87575	-0.00829	-11.8
HEU	Loose	N/A	Custom	Alternating	0.86562	0.00072	0.86706	0.88516	0.00112	1.6
HEU	Crimped	Single	Centered	Down	0.84084	0.00072	0.84228	0.86038	-0.02366	-32.9
HEU	Crimped	Single	Centered	Alternating	0.85512	0.00069	0.85650	0.87460	-0.00944	-13.7
HEU	Crimped	Single	Centered	Up	0.84075	0.00070	0.84215	0.86025	-0.02379	-34.0
HEU	Crimped	Single	In	Alternating	0.85628	0.00072	0.85772	0.87582	-0.00822	-11.4
HEU	Crimped	Single	Out	Alternating	0.84484	0.00072	0.84628	0.86438	-0.01966	-27.3
HEU	Crimped	Single	Custom	Alternating	0.85688	0.00069	0.85826	0.87636	-0.00768	-11.1
HEU	Crimped	In	In	Alternating	0.84841	0.00071	0.84983	0.86793	-0.01611	-22.7
HEU	Crimped	Out	Out	Alternating	0.84118	0.00072	0.84262	0.86072	-0.02332	-32.4
HEU	Crimped	In	Out	Alternating	0.84552	0.00067	0.84686	0.86496	-0.01908	-28.5
HEU	Crimped	Out	In	Alternating	0.85786	0.00074	0.85934	0.87744	-0.00660	-8.9

Table 6.4.7-2 HEU DIDO Accident Evaluation – Radial Shift and Exterior Moderator Density Variation

Fuel Configuration	Crimp Pattern	Radial Shift Pattern	Interior Moderator Density (g/cm^3)	Exterior Moderator Density (g/cm^3)	k_{eff}	σ	$k_{eff}+2\sigma$	k_s	Δk	$\Delta k_{eff}/\sigma$
Loose	N/A	Centered	0.9998	0.9998	0.86276	0.00070	0.86416	0.88226	--	--
Loose	N/A	In	0.9998	0.9998	0.86468	0.00070	0.86608	0.88418	0.00192	2.7
Crimped	Out	Centered	0.9998	0.9998	0.85355	0.00068	0.85491	0.87301	-0.00925	-13.6
Crimped	Out	In	0.9998	0.9998	0.85666	0.00069	0.85804	0.87614	-0.00612	-8.9
Loose	N/A	Centered	0.9998	0.0001	0.90900	0.00069	0.91038	0.92848	--	--
Loose	N/A	In	0.9998	0.0001	0.90808	0.00071	0.90950	0.92760	-0.00088	-1.2
Loose	N/A	InC	0.9998	0.0001	0.91011	0.00069	0.91149	0.92959	0.00111	1.6
Crimped	Out	Centered	0.9998	0.0001	0.89962	0.00071	0.90104	0.91914	-0.00934	-13.2
Crimped	Out	In	0.9998	0.0001	0.90116	0.00069	0.90254	0.92064	-0.00784	-11.4

Table 6.4.7-3 DIDO Heat Shunt and Aluminum Shell Evaluation Results

Case Description	k_{eff}	σ	$k_{eff}+2\sigma$	k_s	Δk	$\Delta k_{eff}/\sigma$
Shell modeled as steel	0.90100	0.00067	0.90234	0.92044	-0.00804	-12.0
Shell modeled as water	0.90382	0.00070	0.90522	0.92332	-0.00516	-7.4
Aluminum shunts modeled as water	0.91157	0.00067	0.91291	0.93101	0.00253	3.8

Table 6.4.7-4 DIDO Basket Geometric Tolerance Study Results

Fuel Tube Outer Diameter Tolerance	Fuel Tube Thickness Tolerance	Fuel Tube Height Tolerance	Fuel Basket Base Plate Tolerance	k_{eff}	σ	$k_{eff}+2\sigma$	k_s	Δk	$\Delta k_{eff}/\sigma$
Min	Nominal	Nominal	Nominal	0.90979	0.00070	0.91119	0.92929	0.00081	1.2
Max	Nominal	Nominal	Nominal	0.90959	0.00069	0.91097	0.92907	0.00059	0.9
Nominal	Min	Nominal	Nominal	0.90900	0.00069	0.91038	0.92848	--	--
Nominal	Max	Nominal	Nominal	0.90489	0.00071	0.90631	0.92441	-0.00407	-5.7
Nominal	Nominal	Min	Nominal	0.90954	0.00068	0.91090	0.92900	0.00052	0.8
Nominal	Nominal	Max	Nominal	0.90953	0.00069	0.91091	0.92901	0.00053	0.8
Nominal	Nominal	Nominal	Min	0.90922	0.00067	0.91056	0.92866	0.00018	0.3
Nominal	Nominal	Nominal	Max	0.90858	0.00068	0.90994	0.92804	-0.00044	-0.6

Table 6.4.7-5 DIDO Fuel Assembly Tolerance Study Results

Fuel Cylinder Diameter Tolerance	Fuel Plate Thickness Tolerance	Fuel Plate Clad Thickness Tolerance	Fuel Cylinder Pitch Tolerance	Active Fuel Length Tolerance	Fuel Assembly Height Tolerance	^{235}U Mass Tolerance	Uranium Weight Fraction Tolerance	k_{eff}	σ	$k_{eff}+2\sigma$	k_s	Δk	$\Delta k_{eff}/\sigma$
Min	--	--	--	--	--	--	--	0.91024	0.00069	0.91162	0.92972	0.00124	1.8
Max	--	--	--	--	--	--	--	0.90691	0.00067	0.90825	0.92635	-0.00213	-3.2
--	Min	--	--	--	--	--	--	0.91188	0.00067	0.91322	0.93132	0.00284	4.2
--	Max	--	--	--	--	--	--	0.90539	0.00068	0.90675	0.92485	-0.00363	-5.3
--	--	Min	--	--	--	--	--	0.91253	0.00069	0.91391	0.93201	0.00353	5.1
--	--	Max	--	--	--	--	--	0.90685	0.00069	0.90823	0.92633	-0.00215	-3.1
--	--	--	IF - Max	--	--	--	--	0.90993	0.00068	0.91129	0.92939	0.00091	1.3
--	--	--	IF - Min	--	--	--	--	0.90864	0.00071	0.91006	0.92816	-0.00032	-0.5
--	--	--	OF - Max	--	--	--	--	0.91175	0.00068	0.91311	0.93121	0.00273	4.0
--	--	--	OF - Min	--	--	--	--	0.90787	0.00065	0.90917	0.92727	-0.00121	-1.9
--	--	--	--	Min	--	--	--	0.91067	0.00071	0.91209	0.93019	0.00171	2.4
--	--	--	--	Max	--	--	--	0.90853	0.00068	0.90989	0.92799	-0.00049	-0.7
--	--	--	--	--	Min	--	--	0.91108	0.00066	0.91240	0.93050	0.00202	3.1
--	--	--	--	--	Max	--	--	0.90735	0.00069	0.90873	0.92683	-0.00165	-2.4
--	--	--	--	--	--	Min	--	0.89234	0.00070	0.89374	0.91184	-0.01664	-23.8
--	--	--	--	--	--	Max	--	0.92431	0.00068	0.92567	0.94377	0.01529	22.5
--	--	--	--	--	--	--	Min	0.90761	0.00068	0.90897	0.92707	-0.00141	-2.1
--	--	--	--	--	--	--	Max	0.91070	0.00070	0.91210	0.93020	0.00172	2.5

Table 6.4.7-6 DIDO Fuel Maximum Reactivity Combinations

Cask Array	Radial Shift Pattern	Fuel Cylinder Diameter Tolerance	Fuel Plate Thickness Tolerance	Fuel Plate Clad Thickness Tolerance	Fuel Cylinder Pitch Tolerance	Active Fuel Length Tolerance	Fuel Assembly Height Tolerance	^{235}U Mass Tolerance	Uranium Weight Fraction Tolerance	k_{eff}	σ	$k_{eff}+2\sigma$	k_s
Infinite	Centered	Nominal	Min	Min	OF-Max	Min	Min	Max	Max	0.93813	0.00070	0.93953	0.95763
Infinite	InC	Nominal	Min	Min	OF-Max	Min	Min	Max	Max	0.93639	0.00073	0.93785	0.95595
8 cask	Centered	Nominal	Min	Min	OF-Max	Min	Min	Max	Max	0.89310	0.00072	0.89454	0.91264
8 cask	InC	Nominal	Min	Min	OF-Max	Min	Min	Max	Max	0.89596	0.00070	0.89736	0.91546

Table 6.4.7-7 Moderator Density Study for the Infinite Array of Casks (Nominal Fuel and Basket Configuration)

Radial Shift Pattern	Interior Moderator Density (g/cm^3)	Exterior Moderator Density (g/cm^3)	k_{eff}	σ	$k_{eff}+2\sigma$	k_s	Δk	$\Delta k_{eff}/\sigma$
Exterior Moderator Density Study								
Centered	0.9998	0.9	0.86274	0.00066	0.86406	0.88216	-0.04632	-70.2
Centered	0.9998	0.8	0.86320	0.00071	0.86462	0.88272	-0.04576	-64.5
Centered	0.9998	0.6	0.86400	0.00070	0.86540	0.88350	-0.04498	-64.3
Centered	0.9998	0.4	0.86367	0.00073	0.86513	0.88323	-0.04525	-62.0
Centered	0.9998	0.2	0.86441	0.00070	0.86581	0.88391	-0.04457	-63.7
Centered	0.9998	0.1	0.86822	0.00073	0.86968	0.88778	-0.04070	-55.8
Interior Moderator Density Study								
Centered	0.975	0.0001	0.91103	0.00069	0.91241	0.93051	0.00203	2.9
Centered	0.95	0.0001	0.91097	0.00066	0.91229	0.93039	0.00191	2.9
Centered	0.925	0.0001	0.90942	0.00070	0.91082	0.92892	0.00044	0.6
Centered	0.9	0.0001	0.91079	0.00070	0.91219	0.93029	0.00181	2.6
Centered	0.875	0.0001	0.90928	0.00068	0.91064	0.92874	0.00026	0.4
Centered	0.85	0.0001	0.90869	0.00072	0.91013	0.92823	-0.00025	-0.3
Centered	0.8	0.0001	0.90563	0.00088	0.90739	0.92549	-0.00299	-3.4
Centered	0.6	0.0001	0.88126	0.00102	0.88330	0.90140	-0.02708	-26.5
Centered	0.4	0.0001	0.80903	0.00118	0.81139	0.82949	-0.09899	-83.9
Centered	0.2	0.0001	0.62941	0.00122	0.63185	0.64995	-0.27853	-228.3
Centered	0.0001	0.0001	0.13951	0.00043	0.14037	0.15847	-0.77001	-1790.7
InC	0.975	0.0001	0.90855	0.00067	0.90989	0.92799	-0.00049	-0.7
InC	0.95	0.0001	0.90809	0.00072	0.90953	0.92763	-0.00085	-1.2
InC	0.925	0.0001	0.90723	0.00072	0.90867	0.92677	-0.00171	-2.4
InC	0.9	0.0001	0.90644	0.00071	0.90786	0.92596	-0.00252	-3.5
InC	0.875	0.0001	0.90525	0.00067	0.90659	0.92469	-0.00379	-5.7
InC	0.85	0.0001	0.90377	0.00075	0.90527	0.92337	-0.00511	-6.8
InC	0.8	0.0001	0.90218	0.00070	0.90358	0.92168	-0.00680	-9.7
InC	0.0001	0.0001	0.87289	0.00073	0.87435	0.89245	-0.03603	-49.4

Table 6.4.7-8 DIDO Single Package 10 CFR 71.55(b)(3) Evaluation k_{eff} Summary

Description	$k_{eff} \pm \sigma$	k_s
Single Cask / Inner Shell Reflected with H_2O	0.83670±0.00075	0.85630
Single Cask / Inner Shell and Lead Reflected with H_2O	0.88638±0.00070	0.90588
Single Cask / Inner Shell, Lead & Outer Shell Reflected with H_2O	0.89275±0.00070	0.91225
Single Intact Cask Reflected with H_2O	0.89352±0.00070	0.91302

Table 6.4.7-9 DIDO Fuel Assembly Tolerance Study Results (Reduced Clad Thickness)

Clad Thickness	k_{eff}	σ	$k_{eff}+2\sigma$	k_s	Δk
0.0425 cm (Nominal)	0.90900	0.00069	0.91038	0.92848	--
0.0325 cm (Min)	0.91253	0.00069	0.91391	0.93201	0.00353
0.0250 cm (Revised Min)	0.91578	0.00069	0.91716	0.93526	0.00678

Table 6.4.7-10 DIDO Fuel Maximum Reactivity Combinations (Reduced Clad Thickness)

Cask Array	Radial Shift Pattern	k_{eff}	σ	$k_{eff}+2\sigma$	k_s
Infinite	Centered	0.93921	0.00071	0.94063	0.95873
Infinite	InC	0.93866	0.00072	0.94010	0.95820
8 cask	Centered	0.89293	0.00071	0.89435	0.91245
8 cask	InC	0.89762	0.00071	0.89904	0.91714

Note: Fuel and basket configuration as detailed in Table 6.4.7-6.

Table 6.4.7-11 DIDO Fuel Maximum Reactivity Combinations (Reduced Clad and Maximum Pitch)

Configuration	k_{eff}	σ	$k_{eff}+2\sigma$	k_s
Minimum outer diameter	0.90282	0.00070	0.90422	0.92232
Nominal outer diameter	0.90770	0.00072	0.90914	0.92724
Maximum outer diameter	0.91088	0.00070	0.91228	0.93038

Note: All cases include the minimum inner diameter and the maximum reactivity fuel and basket configuration in an 8-cask array as specified in Sections 6.4.7.6 and 6.4.7.9 as bounding.

Table 6.4.7-12 DIDO Bounding Configurations

Parameter	Value
Number of Fuel Cylinders	4
Plate thickness	≥ 0.130 cm
Clad thickness	≥ 0.025 cm
^{235}U content per Assembly	≤ 190 g
Enrichment wt % ^{235}U	≤ 94
Active Fuel Height	≥ 58.75 cm
Assembly Height(1)	≥ 61.5 cm
Min Tube ID	5.88 cm
Max. Tube OD	9.52 cm

Note:

(1) Assembly height provides for spacing of fissile material. An optional spacer may be used to maintain spacing if the assembly is cut to shorter than 61.5 cm.

6.4.8 General Atomics Irradiated Fuel Material

This section presents the criticality analyses for the NAC-LWT cask with GA IFM. Criticality analyses are performed to satisfy the criticality safety requirements of 10 CFR Parts 71.55 and 71.59, as well as IAEA Transportation Safety Standards (TS-R-1). All criticality evaluations performed herein use an axially infinite model. An analysis of the NAC-LWT with a payload of either RERTR or HTGR fuel material shows that the TRIGA elements in the RERTR enclosure are more reactive than the HTGR fuel matrix. A detailed study of the combined payload evaluates TRIGA pitch, TRIGA array type (square or rectangular), interior moderator density including preferential flooding, and exterior moderator density. A single cask evaluation is also performed to comply with 10 CFR 71.55(b)(3). The analyses demonstrate that, including all calculational and mechanical uncertainties, the NAC-LWT remains subcritical under normal and accident conditions for the two GA IFM packages (FHUs).

6.4.8.1 Payload Evaluation

The results of the payload evaluation are used to determine the largest contributor to system reactivity. Four models were executed, with the characteristics listed below:

- TRIGA elements on rectangular 4×5 1.40-cm pitch.
- Flooded and dry HTGR fuel matrix.
- Interior (TRIGA package and cask cavity) moderator density at 0.9982 g/cm^3.
- Exterior moderator density at 0.9982 g/cm^3.

Results are shown in Table 6.4.8-1. Since the TRIGA fuel is the dominant contributor to the system reactivity, the TRIGA bias will be applied in order to calculate the bias-adjusted k_s. The bias is discussed in further detail in Section 6.4.8.8.

6.4.8.2 TRIGA Pitch/Array Evaluation

The combined payload model is used to evaluate the TRIGA element pitch in either a ‘Rectangular’ or ‘Square’ array as defined in Section 6.3.7. The HTGR FHU is modeled as dry in this configuration with the remaining cask void spaces flooded. Rectangular and square array results are shown in Table 6.4.8-2 and Table 6.4.8-3, respectively. In the rectangular array, the pitch is limited to 1.65 cm before interferences are created in the model. A larger pitch is possible in the square array, with a value of 1.73 cm allowed by the modeled geometry. The maximum reactivity is calculated for the square array with a pitch of 1.73 cm. Thus, the 1.73-cm pitch is employed in the optimum moderator density studies.

6.4.8.3 Interior Moderator Density Evaluation

The combined payload model is used to vary the interior moderator density with intact TRIGA elements in a square array on a 1.73-cm pitch. Based on the results shown in Table 6.4.8-4, a full density water package interior maximizes system reactivity at full density water exterior moderation.

6.4.8.4 HTGR Matrix Moderator Density Evaluation

The combined payload model is used to vary water density in the HTGR fuel matrix using the fully flooded TRIGA elements in a square array on a 1.73 cm pitch. Based on the results shown in Table 6.4.8-4, a water density of 1.0 g/cc for water homogenized with the HTGR fuel matrix maximizes system reactivity. Note that this configuration is conservative in that the HTGR fuel occupies part of the homogenized volume and full density water cannot occupy the same volume.

6.4.8.5 Exterior Moderator Density Evaluation

The combined payload model is used to vary the exterior moderator density with intact TRIGA elements in a square array on a 1.73 cm pitch. Interior moderator in the FHUs is set to full moderation as indicated by the evaluations in Sections 6.4.8.3 and 6.4.8.4. The cavity exterior to the FHUs is also flooded. Based on the results shown in Table 6.4.8-6, no significant change in system reactivity is obtained if the exterior moderator density varies below full density water. The maximum reactivity change of 2.9 $\Delta k/\sigma$ was obtained at an exterior water density of 0.0001 g/cc. This change, while outside the 2 $\Delta k/\sigma$ typical threshold for a significant change in reactivity, is less than 2.2×10^{-3} Δk and, therefore, not significant.

Note that the material description of the water neutron shield and the exterior moderator are identical in these evaluations addressing accident condition concerns (loss of neutron shield).

6.4.8.6 Partial Flooding Evaluation

During accident conditions, the loss of neutron shielding has the potential to increase neutronic interaction between casks in the infinite array. Significant amounts of moderator outside the FHUs, but in the flooded cask cavity, serves to isolate casks under the accident condition of loss of neutron shield. To investigate the potential impact of preferential flooding, an additional model is created. The model preferentially floods the RERTR and HTGR FHUs, with a separate interior moderator material filling the balance of the NAC-LWT cavity.

A full set of studies evaluating the reactivity changes associated with varying cavity interior, FHU, and exterior moderator densities is summarized in Table 6.4.8-7 through Table 6.4.8-11.

The studies indicate that the most reactive configuration is for flooding of the RERTR and HTGR enclosures (FHUs) with interior and exterior void (loss of neutron shield). This configuration produces the maximum reactivity FHUs, while maximizing interaction between the FHUs within the cask and between casks.

6.4.8.7 Single Cask Evaluation

The 10 CFR 71.55(b)(3) requires an evaluation of the NAC-LWT with the containment system fully reflected by water. The containment for the NAC-LWT is the cask inner shell. While no operating condition results in a removal of the cask outer shell and lead gamma shield, each of the partial flooding cases at four combinations of interior and exterior moderator is reevaluated by removing the lead and outer shells (including neutron shield), and reflecting the system by water at full density on the X and Y faces (the z faces are mirrored to yield an axially infinite model). The results of this analysis are shown in Table 6.4.8-12 and demonstrate that the system reactivity decreases with the removal of the lead, outer shell and neutron shield reflectors.

6.4.8.8 Damaged TRIGA Fuel Evaluation

The combined payload model with a homogenized TRIGA fuel description is used to evaluate the system reactivity in the event that both the intact and sectioned fuel elements become damaged. Models are executed by varying the volume fraction of water in the TRIGA fuel mixture from zero to unity. The maximum volume fraction is 0.6816 based on the FHU cavity volume (7140 cm^3) and the total volume of TRIGA elements (2,273 cm^3), which does not consider the volume of the aluminum tubing within the FHU primary enclosure.

Based on the results summarized in Table 6.4.8-13, homogenized TRIGA elements are more reactive than intact TRIGA elements. Evaluation results documented in Table 6.4.8-13 are based on infinite cask array models. A single cask evaluation of the maximum water volume fraction case yielded a k_{eff} of 0.38885 ± 0.00066.

6.4.8.9 Code Bias and Code Bias Uncertainty Adjustments

As shown in Section 6.4.8.1, the TRIGA elements in the RERTR enclosure are more reactive than the HTGR fuel matrix in its enclosure. Therefore, code bias and code uncertainty adjustments are based on the TRIGA fuel element criticality benchmarks in Section 6.1.1.

A calculation of k_s under normal and accident conditions can now be made based on the previous results and based on the KENO-Va validation statistics presented in Section 6.1.1. The value k_s is calculated based on the KENO-Va Monte Carlo average plus any biases and uncertainties associated with the methods and the modeling, i.e.:

$$k_s = k_{eff} + \Delta k_{Bias} + \Delta k_{BU} + 2\sigma_{MC} \leq 0.95$$

In the validation presented in Section 6.5.3, a negative bias (allowance for overprediction of k_{eff}) and a 95/95 method uncertainty of ± 0.0168 was determined. The negative bias correction is neglected. Thus, the equation for k_s becomes:

$$k_s = k_{eff} + 0.0168 + 2\sigma_{MC}$$

The k_s values for the relevant analysis are included in Table 6.4.8-1 through Table 6.4.8-13. The maximum k_s, 0.74015, for the GA IFM shipment results from an infinite height model with an infinite number of casks.

For both normal and accident conditions, the calculated k_{eff} values, after correction for uncertainty, are well below the 0.95 limit. The analyses demonstrate that, including all calculational and mechanical uncertainties, an infinite array of NAC-LWT casks with GA IFM remains subcritical under normal and accident conditions.

Table 6.4.8-1 GA IFM Payload Evaluation Result Summary

Payload	Cavity Moderator Density [g/cm^3]	HTGR Moderator Density [g/cm^3]	RERTR Moderator Density [g/cm^3]	Exterior Moderator Density [g/cm^3]	TRIGA Pitch [cm]	TRIGA Array	$k_{eff} \pm \sigma$
Combined	0.9882	0	0.9882	0.9882	1.40	Rectangular	0.44192±0.00073
RERTR	0.9882	0	0.9882	0.9882	1.40	Rectangular	0.42870±0.00080
HTGR	0.9882	0	0.9882	0.9882	N/A	N/A	0.06611±0.00020
HTGR	0.9882	0.9882	0.9882	0.9882	N/A	N/A	0.36907±0.00053

Table 6.4.8-2 GA IFM TRIGA Rectangular Array Pitch Evaluation Result Summary

Cavity (g/cc)	HTGR (g/cc)	RERTR (g/cc)	Exterior (g/cc)	TRIGA Pitch (cm)	TRIGA Array	k_{eff}	σ	k_s	$k_{eff}+2\sigma$	Δk	$\Delta k/\sigma$
1	0	1	1	1.40	Rectangular	0.44192	0.00073	0.46018	0.44338	0.00000	0.0
1	0	1	1	1.50	Rectangular	0.45796	0.00078	0.47632	0.45952	0.01614	20.7
1	0	1	1	1.60	Rectangular	0.47647	0.00080	0.49487	0.47807	0.03469	43.4
1	0	1	1	1.65	Rectangular	0.48529	0.00079	0.50367	0.48687	0.04349	55.1

Table 6.4.8-3 GA IFM TRIGA Square Array Pitch Evaluation Result Summary

Cavity (g/cc)	HTGR (g/cc)	RERTR (g/cc)	Exterior (g/cc)	TRIGA Pitch (cm)	TRIGA Array	k_{eff}	σ	k_s	$k_{eff}+2\sigma$	Δk	$\Delta k/\sigma$
1	0	1	1	1.40	Square	0.44618	0.00073	0.46444	0.44764	0.00000	0.0
1	0	1	1	1.50	Square	0.46343	0.00080	0.48183	0.46503	0.01739	21.7
1	0	1	1	1.60	Square	0.48072	0.00078	0.49908	0.48228	0.03464	44.4
1	0	1	1	1.65	Square	0.49026	0.00078	0.50862	0.49182	0.04418	56.6
1	0	1	1	1.70	Square	0.49727	0.00077	0.51561	0.49881	0.05117	66.5
1	0	1	1	1.73	Square	0.50289	0.00079	0.52127	0.50447	0.05683	71.9

Table 6.4.8-4 GA IFM Interior Moderator Density Evaluation Result Summary

Cavity (g/cc)	HTGR (g/cc)	RERTR (g/cc)	Exterior (g/cc)	TRIGA Pitch (cm)	TRIGA Array	k_{eff}	σ	k_s	$k_{eff}+2\sigma$	Δk	$\Delta k/\sigma$
1.00	0	1.00	1	1.73	Square	0.50289	0.00079	0.52127	0.50447	0.00000	0.0
0.95	0	0.95	1	1.73	Square	0.48897	0.00077	0.50731	0.49051	-0.01396	-18.1
0.90	0	0.90	1	1.73	Square	0.47787	0.00079	0.49625	0.47945	-0.02502	-31.7
0.85	0	0.85	1	1.73	Square	0.46611	0.00076	0.48443	0.46763	-0.03684	-48.5
0.80	0	0.80	1	1.73	Square	0.45420	0.00077	0.47254	0.45574	-0.04873	-63.3
0.75	0	0.75	1	1.73	Square	0.44289	0.00073	0.46115	0.44435	-0.06012	-82.4
0.70	0	0.70	1	1.73	Square	0.42888	0.00071	0.44710	0.43030	-0.07417	-104.5
0.65	0	0.65	1	1.73	Square	0.41568	0.00073	0.43394	0.41714	-0.08733	-119.6
0.60	0	0.60	1	1.73	Square	0.40369	0.00069	0.42187	0.40507	-0.09940	-144.1
0.55	0	0.55	1	1.73	Square	0.39298	0.00069	0.41116	0.39436	-0.11011	-159.6
0.50	0	0.50	1	1.73	Square	0.38075	0.00069	0.39893	0.38213	-0.12234	-177.3
0.45	0	0.45	1	1.73	Square	0.36922	0.00069	0.38740	0.37060	-0.13387	-194.0
0.40	0	0.40	1	1.73	Square	0.35645	0.00067	0.37459	0.35779	-0.14668	-218.9
0.35	0	0.35	1	1.73	Square	0.34396	0.00064	0.36204	0.34524	-0.15923	-248.8
0.30	0	0.30	1	1.73	Square	0.33007	0.00064	0.34815	0.33135	-0.17312	-270.5
0.25	0	0.25	1	1.73	Square	0.31618	0.00059	0.33416	0.31736	-0.18711	-317.1
0.20	0	0.20	1	1.73	Square	0.29802	0.00056	0.31594	0.29914	-0.20533	-366.7
0.15	0	0.15	1	1.73	Square	0.27758	0.00057	0.29552	0.27872	-0.22575	-396.1
0.10	0	0.10	1	1.73	Square	0.24971	0.00052	0.26755	0.25075	-0.25372	-487.9
0.05	0	0.05	1	1.73	Square	0.21145	0.00048	0.22921	0.21241	-0.29206	-608.5

Table 6.4.8-5 GA IFM HTGR Matrix Moderator Density Evaluation Result Summary

Cavity (g/cc)	HTGR (g/cc)	RERTR (g/cc)	Exterior (g/cc)	TRIGA Pitch (cm)	TRIGA Array	k_{eff}	σ	k_s	$k_{eff}+2\sigma$	Δk	$\Delta k/\sigma$
1	0.00	1	1	1.73	Square	0.50289	0.00079	0.52127	0.50447	0.00000	0.0
1	0.05	1	1	1.73	Square	0.50363	0.00076	0.52195	0.50515	0.00068	0.9
1	0.10	1	1	1.73	Square	0.50425	0.00079	0.52263	0.50583	0.00136	1.7
1	0.15	1	1	1.73	Square	0.50570	0.00076	0.52402	0.50722	0.00275	3.6
1	0.20	1	1	1.73	Square	0.50755	0.00077	0.52589	0.50909	0.00462	6.0
1	0.25	1	1	1.73	Square	0.50701	0.00078	0.52537	0.50857	0.00410	5.3
1	0.30	1	1	1.73	Square	0.50888	0.00079	0.52726	0.51046	0.00599	7.6
1	0.35	1	1	1.73	Square	0.50994	0.00079	0.52832	0.51152	0.00705	8.9
1	0.40	1	1	1.73	Square	0.51168	0.00079	0.53006	0.51326	0.00879	11.1
1	0.45	1	1	1.73	Square	0.51327	0.00079	0.53165	0.51485	0.01038	13.1
1	0.50	1	1	1.73	Square	0.51492	0.00078	0.53328	0.51648	0.01201	15.4
1	0.55	1	1	1.73	Square	0.51524	0.00080	0.53364	0.51684	0.01237	15.5
1	0.60	1	1	1.73	Square	0.51628	0.00078	0.53464	0.51784	0.01337	17.1
1	0.65	1	1	1.73	Square	0.51911	0.00077	0.53745	0.52065	0.01618	21.0
1	0.70	1	1	1.73	Square	0.52034	0.00076	0.53866	0.52186	0.01739	22.9
1	0.75	1	1	1.73	Square	0.52100	0.00074	0.53928	0.52248	0.01801	24.3
1	0.80	1	1	1.73	Square	0.52193	0.00076	0.54025	0.52345	0.01898	25.0
1	0.85	1	1	1.73	Square	0.52120	0.00075	0.53950	0.52270	0.01823	24.3
1	0.90	1	1	1.73	Square	0.52407	0.00074	0.54235	0.52555	0.02108	28.5
1	0.95	1	1	1.73	Square	0.52482	0.00076	0.54314	0.52634	0.02187	28.8
1	1.00	1	1	1.73	Square	0.52764	0.00070	0.54584	0.52904	0.02457	35.1

Table 6.4.8-6 GA IFM Exterior Moderator Density Evaluation Result Summary

Cavity (g/cc)	HTGR (g/cc)	RERTR (g/cc)	Exterior (g/cc)	TRIGA Pitch (cm)	TRIGA Array	k_{eff}	σ	k_s	$k_{eff}+2\sigma$	Δk	$\Delta k/\sigma$
1	1	1	1.00	1.73	Square	0.52764	0.00070	0.54584	0.52904	0.00000	0.0
1	1	1	0.95	1.73	Square	0.52634	0.00073	0.54460	0.52780	-0.00124	-1.7
1	1	1	0.90	1.73	Square	0.52787	0.00077	0.54621	0.52941	0.00037	0.5
1	1	1	0.85	1.73	Square	0.52539	0.00073	0.54365	0.52685	-0.00219	-3.0
1	1	1	0.80	1.73	Square	0.52733	0.00075	0.54563	0.52883	-0.00021	-0.3
1	1	1	0.75	1.73	Square	0.52921	0.00079	0.54759	0.53079	0.00175	2.2
1	1	1	0.70	1.73	Square	0.52632	0.00071	0.54454	0.52774	-0.00130	-1.8
1	1	1	0.65	1.73	Square	0.52551	0.00073	0.54377	0.52697	-0.00207	-2.8
1	1	1	0.60	1.73	Square	0.52695	0.00079	0.54533	0.52853	-0.00051	-0.6
1	1	1	0.55	1.73	Square	0.52712	0.00078	0.54548	0.52868	-0.00036	-0.5
1	1	1	0.50	1.73	Square	0.52612	0.00077	0.54446	0.52766	-0.00138	-1.8
1	1	1	0.45	1.73	Square	0.52584	0.00076	0.54416	0.52736	-0.00168	-2.2
1	1	1	0.40	1.73	Square	0.52669	0.00076	0.54501	0.52821	-0.00083	-1.1
1	1	1	0.35	1.73	Square	0.52661	0.00076	0.54493	0.52813	-0.00091	-1.2
1	1	1	0.30	1.73	Square	0.52735	0.00078	0.54571	0.52891	-0.00013	-0.2
1	1	1	0.25	1.73	Square	0.52644	0.00076	0.54476	0.52796	-0.00108	-1.4
1	1	1	0.20	1.73	Square	0.52775	0.00080	0.54615	0.52935	0.00031	0.4
1	1	1	0.15	1.73	Square	0.52812	0.00075	0.54642	0.52962	0.00058	0.8
1	1	1	0.10	1.73	Square	0.52904	0.00073	0.54730	0.53050	0.00146	2.0
1	1	1	0.05	1.73	Square	0.52655	0.00072	0.54479	0.52799	-0.00105	-1.5
1	1	1	0.00	1.73	Square	0.52970	0.00073	0.54796	0.53116	0.00212	2.9

Table 6.4.8-7 GA IFM Partial Flooding Comparison Result Summary

Cavity (g/cc)	HTGR (g/cc)	RERTR (g/cc)	Exterior (g/cc)	TRIGA Pitch (cm)	TRIGA Array	k_{eff}	σ	k_s	$k_{eff}+2\sigma$	Δk	$\Delta k/\sigma$
0	1	0	0	1.73	Square	0.57362	0.00054	0.59150	0.57470	0.00000	0.0
0	1	1	0	1.73	Square	0.70197	0.00076	0.72029	0.70349	0.12879	169.5

Table 6.4.8-8 GA IFM Partial Flooding Interior Moderator Density, Void Exterior Result Summary

Cavity (g/cc)	HTGR (g/cc)	RERTR (g/cc)	Exterior (g/cc)	TRIGA Pitch (cm)	TRIGA Array	k_{eff}	σ	k_s	$k_{eff}+2\sigma$	Δk	$\Delta k/\sigma$
0.0	1	1	0	1.73	Square	0.70197	0.00076	0.72029	0.70349	0.00000	0.0
0.1	1	1	0	1.73	Square	0.63582	0.00076	0.65414	0.63734	-0.06615	-87.0
0.2	1	1	0	1.73	Square	0.59419	0.00074	0.61247	0.59567	-0.10782	-145.7
0.3	1	1	0	1.73	Square	0.57060	0.00078	0.58896	0.57216	-0.13133	-168.4
0.4	1	1	0	1.73	Square	0.55551	0.00073	0.57377	0.55697	-0.14652	-200.7
0.5	1	1	0	1.73	Square	0.54367	0.00074	0.56195	0.54515	-0.15834	-214.0
0.6	1	1	0	1.73	Square	0.53824	0.00074	0.55652	0.53972	-0.16377	-221.3
0.7	1	1	0	1.73	Square	0.53478	0.00075	0.55308	0.53628	-0.16721	-222.9
0.8	1	1	0	1.73	Square	0.53243	0.00074	0.55071	0.53391	-0.16958	-229.2
0.9	1	1	0	1.73	Square	0.53192	0.00075	0.55022	0.53342	-0.17007	-226.8
1.0	1	1	0	1.73	Square	0.52970	0.00073	0.54796	0.53116	-0.17233	-236.1

Table 6.4.8-9 GA IFM Partial Flooding Interior Moderator Density, Water Exterior Result Summary

Cavity (g/cc)	HTGR (g/cc)	RERTR (g/cc)	Exterior (g/cc)	TRIGA Pitch (cm)	TRIGA Array	k_{eff}	σ	k_s	$k_{eff}+2\sigma$	Δk	$\Delta k/\sigma$
0.0	1	1	1	1.73	Square	0.55598	0.00074	0.57426	0.55746	0.00000	0.0
0.1	1	1	1	1.73	Square	0.54649	0.00073	0.56475	0.54795	-0.00951	-13.0
0.2	1	1	1	1.73	Square	0.53804	0.00075	0.55634	0.53954	-0.01792	-23.9
0.3	1	1	1	1.73	Square	0.53458	0.00073	0.55284	0.53604	-0.02142	-29.3
0.4	1	1	1	1.73	Square	0.52971	0.00076	0.54803	0.53123	-0.02623	-34.5
0.5	1	1	1	1.73	Square	0.52610	0.00074	0.54438	0.52758	-0.02988	-40.4
0.6	1	1	1	1.73	Square	0.52725	0.00075	0.54555	0.52875	-0.02871	-38.3
0.7	1	1	1	1.73	Square	0.52668	0.00071	0.54490	0.52810	-0.02936	-41.4
0.8	1	1	1	1.73	Square	0.52630	0.00077	0.54464	0.52784	-0.02962	-38.5
0.9	1	1	1	1.73	Square	0.52711	0.00074	0.54539	0.52859	-0.02887	-39.0
1.0	1	1	1	1.73	Square	0.52764	0.00070	0.54584	0.52904	-0.02842	-40.6

Table 6.4.8-10 GA IFM Partial Flooding Exterior Moderator Density, Void Interior Result Summary

Cavity (g/cc)	HTGR (g/cc)	RERTR (g/cc)	Exterior (g/cc)	TRIGA Pitch (cm)	TRIGA Array	k_{eff}	σ	k_s	$k_{eff}+2\sigma$	Δk	$\Delta k/\sigma$
0	1	1	0.0	1.73	Square	0.70197	0.00076	0.72029	0.70349	0.00000	0.0
0	1	1	0.1	1.73	Square	0.56743	0.00075	0.58573	0.56893	-0.13456	-179.4
0	1	1	0.2	1.73	Square	0.55761	0.00075	0.57591	0.55911	-0.14438	-192.5
0	1	1	0.3	1.73	Square	0.55699	0.00076	0.57531	0.55851	-0.14498	-190.8
0	1	1	0.4	1.73	Square	0.55603	0.00072	0.57427	0.55747	-0.14602	-202.8
0	1	1	0.5	1.73	Square	0.55553	0.00071	0.57375	0.55695	-0.14654	-206.4
0	1	1	0.6	1.73	Square	0.55550	0.00073	0.57376	0.55696	-0.14653	-200.7
0	1	1	0.7	1.73	Square	0.55648	0.00075	0.57478	0.55798	-0.14551	-194.0
0	1	1	0.8	1.73	Square	0.55610	0.00075	0.57440	0.55760	-0.14589	-194.5
0	1	1	0.9	1.73	Square	0.55524	0.00075	0.57354	0.55674	-0.14675	-195.7
0	1	1	1.0	1.73	Square	0.55598	0.00074	0.57426	0.55746	-0.14603	-197.3

Table 6.4.8-11 GA IFM Partial Flooding Exterior Moderator Density, Water Interior Result Summary

Cavity (g/cc)	HTGR (g/cc)	RERTR (g/cc)	Exterior (g/cc)	TRIGA Pitch (cm)	TRIGA Array	k_{eff}	σ	k_s	$k_{eff}+2\sigma$	Δk	$\Delta k/\sigma$
1	1	1	0.0	1.73	Square	0.52970	0.00073	0.54796	0.53116	0.00000	0.0
1	1	1	0.1	1.73	Square	0.52904	0.00073	0.54730	0.53050	-0.00066	-0.9
1	1	1	0.2	1.73	Square	0.52775	0.00080	0.54615	0.52935	-0.00181	-2.3
1	1	1	0.3	1.73	Square	0.52735	0.00078	0.54571	0.52891	-0.00225	-2.9
1	1	1	0.4	1.73	Square	0.52669	0.00076	0.54501	0.52821	-0.00295	-3.9
1	1	1	0.5	1.73	Square	0.52612	0.00077	0.54446	0.52766	-0.00350	-4.5
1	1	1	0.6	1.73	Square	0.52695	0.00079	0.54533	0.52853	-0.00263	-3.3
1	1	1	0.7	1.73	Square	0.52632	0.00071	0.54454	0.52774	-0.00342	-4.8
1	1	1	0.8	1.73	Square	0.52733	0.00075	0.54563	0.52883	-0.00233	-3.1
1	1	1	0.9	1.73	Square	0.52787	0.00077	0.54621	0.52941	-0.00175	-2.3
1	1	1	1.0	1.73	Square	0.52764	0.00070	0.54584	0.52904	-0.00212	-3.0

Table 6.4.8-12 GA IFM Partial Flooding Single Cask Result Comparison

Cavity (g/cc)	HTGR (g/cc)	RERTR (g/cc)	Exterior (g/cc)	TRIGA Pitch (cm)	TRIGA Array	k_{eff}	σ	k_s	$k_{eff}+2\sigma$	Δk	$\Delta k/\sigma$
0	1	1	0	1.73	Square	0.70197	0.00076	0.72029	0.70349	0.00000	0.0
0	1	1	0	1.73	Square	0.42657	0.00066	0.44469	0.42789	-0.27560	-417.6
1	1	1	0	1.73	Square	0.52970	0.00073	0.54796	0.53116	0.00000	0.0
1	1	1	0	1.73	Square	0.52108	0.00074	0.53936	0.52256	-0.00860	-11.6
0	1	1	1	1.73	Square	0.55598	0.00074	0.57426	0.55746	0.00000	0.0
0	1	1	1	1.73	Square	0.45370	0.00074	0.47198	0.45518	-0.10228	-138.2
1	1	1	1	1.73	Square	0.52764	0.00070	0.54584	0.52904	0.00000	0.0
1	1	1	1	1.73	Square	0.52056	0.00076	0.53888	0.52208	-0.00696	-9.2

Table 6.4.8-13 GA IFM Damaged TRIGA Fuel Result Summary

Cavity (g/cc)	HTGR (g/cc)	Exterior (g/cc)	TRIGA Config.	TRIGA H_2O (g/cc)	k_{eff}	σ	k_s	$k_{eff}+2\sigma$	Δk	$\Delta k/\sigma$
0	1	0	Homog.	0.0001	0.53943	0.00055	0.55733	0.54053	-0.18282	-332.4
0	1	0	Homog.	0.1000	0.55711	0.00055	0.57501	0.55821	-0.16514	-300.3
0	1	0	Homog.	0.2000	0.57987	0.00054	0.59775	0.58095	-0.14240	-263.7
0	1	0	Homog.	0.3000	0.60672	0.00062	0.62476	0.60796	-0.11539	-186.1
0	1	0	Homog.	0.4000	0.63609	0.00062	0.65413	0.63733	-0.08602	-138.7
0	1	0	Homog.	0.5000	0.66661	0.00064	0.68469	0.66789	-0.05546	-86.7
0	1	0	Homog.	0.6000	0.69621	0.00067	0.71435	0.69755	-0.02580	-38.5
0	1	0	Homog.	0.6816	0.72199	0.00068	0.74015	0.72335	0.00000	0.0
0	1	0	Homog.	0.7000	0.72738	0.00069	0.74556	0.72876	0.00541	7.8
0	1	0	Homog.	0.8000	0.75724	0.00070	0.77544	0.75864	0.03529	50.4
0	1	0	Homog.	0.9000	0.78650	0.00071	0.80472	0.78792	0.06457	90.9
0	1	0	Homog.	1.0000	0.81239	0.00073	0.83065	0.81385	0.09050	124.0

6.4.9 PULSTAR Fuel Contents

This section presents the criticality analyses for the NAC-LWT cask with PULSTAR fuel contents. Criticality analyses are performed to satisfy the criticality safety requirements of 10 CFR Parts 71.55 and 71.59, as well as IAEA TS-R-1. All criticality evaluations performed herein use an axially finite cask model. An analysis of the NAC-LWT with each of the four postulated basket loadings shows that damaged PULSTAR fuel elements in a can are most reactive.

The maximum reactivity is based on the following model characteristics.

- 14 cans (25 elements per can) in the top and base modules
- 14 intact assemblies in the two intermediate modules
- Flooded cans
- Void cask cavity and exterior
- Loss of neutron shield

A single cask evaluation is also performed to comply with 10 CFR 71.55(b)(3). The analyses demonstrate that, including all calculational and mechanical uncertainties, the NAC-LWT remains subcritical under normal and accident conditions.

6.4.9.1 Intact Assembly Payload

An intact PULSTAR fuel assembly is placed in each of the 28 cells in the 28 MTR basket assembly. Results of the mechanical perturbation, axial and radial shift are shown in Table 6.4.9-1 through Table 6.4.9-3. Optimum moderator studies for the cask are shown in Figure 6.4.9-2. All intact fuel assembly runs are based on an infinite cask array model.

From a base model, which has the PULSTAR fuel assemblies centered in the module cell and touching the module base plates, various component shift and module plate thickness combinations are evaluated. Assembly shift results, shown in Table 6.4.9-1, indicate that a basket assembly with PULSTAR fuel assemblies in the "Xlong" alignment and axially alternated represents the most reactive scenario for intact fuel assemblies. The "modified" Ylong configuration represents a mix of rotations and is shown in Figure 6.4.9-1. Considering assembly shifts the maximum k_{eff} is 0.80517 ± 0.00083.

Mechanical perturbation results from a study of plate thickness and cell opening size are shown in Table 6.4.9-2. This study indicates that a maximum module cell width produces a slight increase in reactivity for a maximum k_{eff} of 0.80929 ± 0.00084.

Previous evaluations documented in this section are based on a flooded pellet to clad gap and fuel parameters producing the maximum lattice H/U ratio. Minimum H/U ratio and dry gap

cases are run to verify that the lattice is under moderated and that appropriate fuel parameters were chosen for the base analysis. The results of this analysis are listed in Table 6.4.9-3 and clearly demonstrate that the element lattice is under moderated and that the flooded pellet to clad gap and maximum H/U lattice model options are conservative for the analysis.

Graphical results of the optimum moderator density studies are shown in Figure 6.4.9-2. This study further confirms that the assembly is under moderated and that maximum system reactivity is obtained from a flooded cask cavity with a dry cask exterior and neutron shield.

The CSI for intact fuel assemblies is 0 as an infinite array of cask is modeled and maximum reactivity is well below the 0.95 licensing limit.

6.4.9.2 Intact Elements – Fuel Rod Insert

A single KENO-Va case is executed to demonstrate that a payload of 448 PULSTAR fuel elements (16 elements per 4×4 insert; 28 MTR basket cells) is significantly less reactive than the assembly model containing 28 intact assemblies (700 elements).

For a model with the insert radially centered within the cell, alternating axial shifting, full density water in the cavity, and a void exterior, the calculated k_{eff} is 0.70076 ± 0.00079. This reactivity is substantially lower than that of the intact assemblies. Therefore no further analysis is performed with the rod insert configuration.

6.4.9.3 Canned Elements

Intact or damaged (failed) PULSTAR fuel elements and nonfuel components of fuel assemblies may be placed into either of the PULSTAR cans. Each configuration is individually evaluated.

Intact Fuel Elements

Intact fuel element models place 25 rods into the can in a 0.66-inch square pitch. This pitch is the maximum allowed by the modeled can cavity width and is conservative as the elements were significantly under moderated at their smaller “in assembly” pitch. A can is placed into each of the 28 MTR basket assembly cells in an alternate axial shift configuration with the cask and canister cavity flooded. The alternate shift configuration was determined to be most reactive in the intact assembly analysis. For an infinite array of casks under accident condition (void exterior and neutron shield) a k_{eff} of 0.89919 ± 0.00083 is calculated. Results in Table 6.4.9-4 indicate that the preferential flooding of the canister cavity with a void cask cavity for the same physical configuration results in k_{eff} of 0.98516 ± 0.00076. Additional evaluations and limitations, are therefore, required to document an acceptable system configuration. KENO models with cans restricted to the top and base modules and intact fuel assemblies in the remaining two modules reduces system reactivity significantly as documented in Table 6.4.9-4.

Without the neutron shield (accident conditions) there is substantial neutronic coupling between casks in an array and limiting the number of casks produces a significant additional reactivity reduction. For the mixed loaded three-cask array, the calculated k_{eff} is 0.84910 ± 0.00079. A limit of a three-cask array produces a CSI of 33.4 under the accident conditions modeled. System reactivity for a normal condition infinite array of casks loaded with damaged fuel cans is low, $k_{eff} < 0.2$. The normal condition based CSI is therefore 0.

Damaged (Failed) Elements

Damaged elements are modeled as a homogenized fuel and water mixture within the can cavity. Analysis trends for the homogenized contents are similar to those for the intact elements in a can. Bias and uncertainty adjusted system reactivity of the damaged fuel elements is higher than allowed for a full cask load (28 cans), but restricting the cask array under accident condition to three casks and limiting each cask's contents to 14 damaged fuel cans, seven in each of the top and base basket modules, and intact fuel assemblies or rod holders in the intermediate basket modules, produces acceptable reactivities as shown in Table 6.4.9-5. For the 3-cask array, the maximum calculated k_{eff} is 0.86961 ± 0.00081.

6.4.9.4 Single Cask Evaluation

The 10 CFR 71.55(b)(3) requires an evaluation of the NAC-LWT with the containment system fully reflected by water. The containment for the NAC-LWT is the cask inner shell. While no operating condition results in a removal of the cask outer shell and lead gamma shield, each of the partial flooding cases at four combinations of interior and exterior moderator is reevaluated by removing the lead and outer shells (including neutron shield), and reflecting the system by water at full density on the X, Y, and Z faces. Using the maximum reactivity model from Section 6.4.9.3, the calculated k_{eff} is 0.72674 ± 0.00087.

6.4.9.5 Code Bias and Code Bias Uncertainty Adjustments

PULSTAR fuel elements are similar to LWR fuel rods with a shorter active fuel length and smaller assembly array. While the enrichment for PULSTAR fuel is outside the enrichment range validated for LWR fuel, Figure 6.5.1-2 shows no statistical trend in k_{eff} versus enrichment. Further, any trend that may be postulated from the criticality benchmarks indicates a higher predicted k_{eff} value at higher enrichments. Therefore, code bias and code uncertainty adjustments are based on the LWR fuel assembly criticality benchmarks in Section 6.5.1.

A calculation of k_s under normal and accident conditions can now be made based on the previous results and based on the KENO-Va validation statistics presented in Section 6.5.1. The value k_s is calculated based on the KENO-Va Monte Carlo average plus any biases and uncertainties associated with the methods and the modeling, i.e.:

$$k_s = k_{eff} + \Delta k_{Bias} + \Delta k_{BU} + 2\sigma_{MC} \leq 0.95$$

In the validation presented in Section 6.5.1, a bias of ± 0.0052 and a 95/95 method uncertainty of ± 0.0087 were determined. Thus, the equation for k_s becomes as follows.

$$k_s = k_{eff} + 0.0139 + 2\sigma_{MC}$$

The k_s values for each evaluated payload are summarized in Table 6.4.9-6. The maximum k_s, 0.88513, results from a mixed loading of intact assemblies and canned elements.

For both normal and accident conditions, the calculated k_{eff} values, after correction for uncertainty, are well below the 0.95 limit. The analyses demonstrate that, including all calculational and mechanical uncertainties, an array of NAC-LWT casks with PULSTAR fuel remains subcritical under normal and accident conditions.

6.4.9.6 Allowable Cask Loading

Based on the results of the previous sections, the following cask loadings are permissible. For intact elements, any combination of assemblies and 4×4 rod inserts may be loaded into any module cell. Up to 14 damaged fuel cans each containing up to 25 PULSTAR fuel elements may be loaded in the top and base modules only; module cells loaded without cans may contain any combination of intact assemblies or 4×4 rod inserts. Each can is allowed the equivalent fissile material content of 25 fuel elements in either intact or damaged (failed) form. Damaged fuel may include fuel debris.

Figure 6.4.9-1 PICTURE Schematic of Modified PULSTAR Fuel Assembly Alignment Configuration

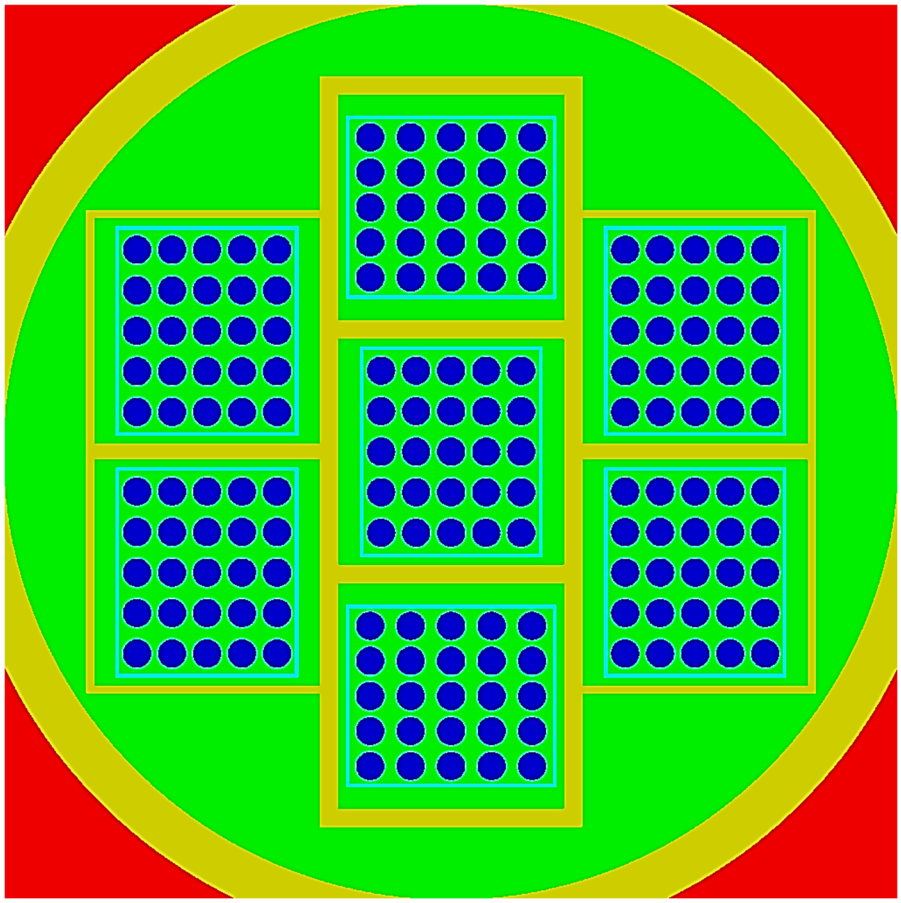

Figure 6.4.9-2 PULSTAR Intact Assembly Model Moderator Density Study Graphical Results

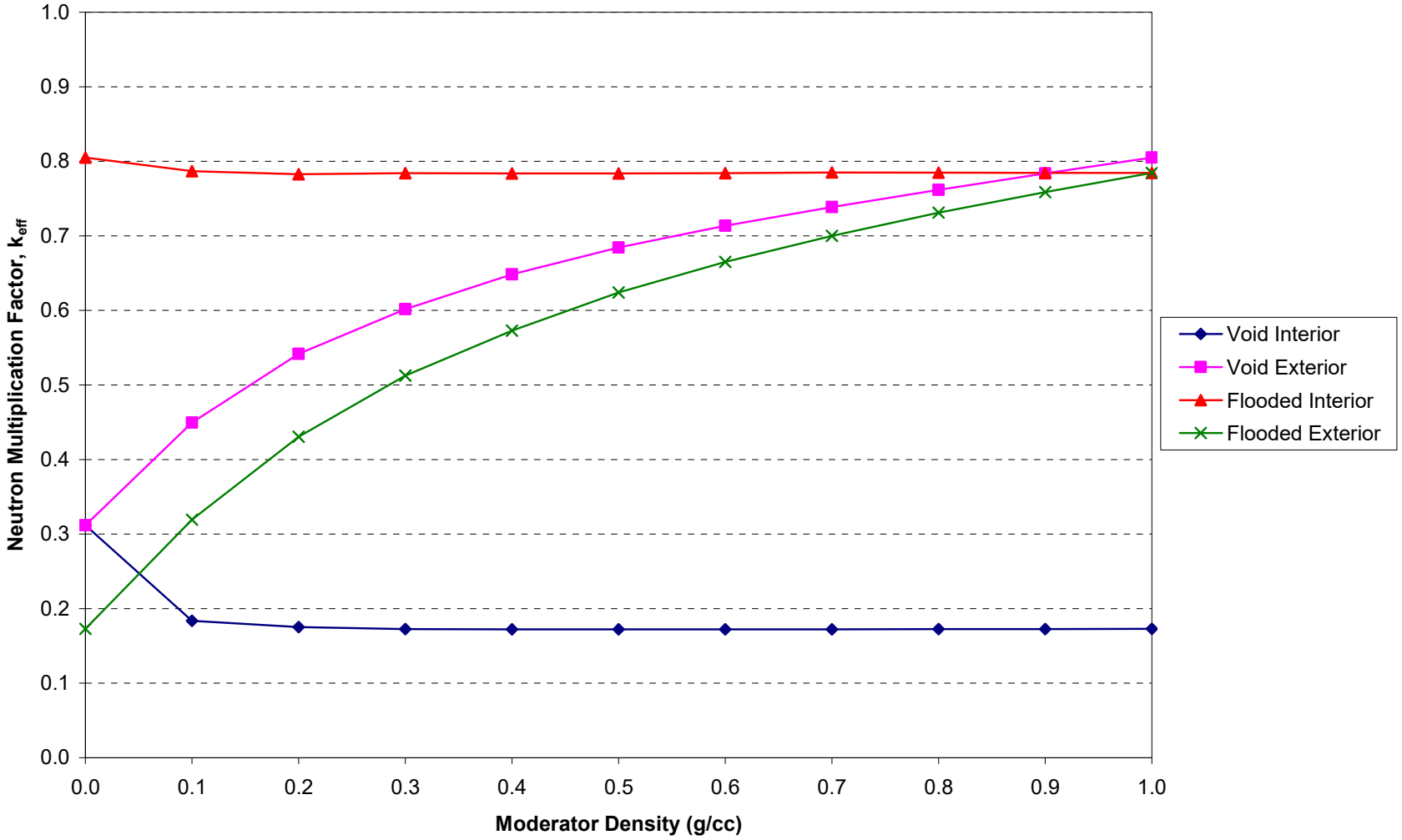

Table 6.4.9-1 PULSTAR Intact Assembly Shift Results

Alignment	Radial Shift	Axial Shift	k_{eff}	σ	$k_{eff}+2\sigma$	Δk	$\Delta k/\sigma$
Ylong	Centered	Centered	0.78916	0.00081	0.79078	--	--
Ylong	In	Centered	0.77268	0.00085	0.77438	-0.01648	-14.0
Ylong	Out	Centered	0.78773	0.00081	0.78935	-0.00143	-1.2
Xlong	Centered	Centered	0.79134	0.00083	0.79300	--	--
Xlong	In	Centered	0.77006	0.00080	0.77166	-0.02128	-18.5
Xlong	Out	Centered	0.78979	0.00080	0.79139	-0.00155	-1.3
Ylong	Centered	Alternating	0.80182	0.00084	0.80350	--	--
Ylong	In	Alternating	0.78767	0.00081	0.78929	-0.01415	-12.1
Ylong	Out	Alternating	0.80176	0.00081	0.80338	-0.00006	-0.1
Xlong	Centered	Alternating	0.80517	0.00083	0.80683	--	--
Xlong	In	Alternating	0.77968	0.00083	0.78134	-0.02549	-21.7
Xlong	Out	Alternating	0.80522	0.00080	0.80682	0.00005	0.0
Mod. Ylong	Centered	Alternating	0.80348	0.00087	0.80522	--	--
Mod. Ylong	In	Alternating	0.78247	0.00082	0.78411	-0.02101	-17.6
Mod. Ylong	Out	Alternating	0.80427	0.00081	0.80589	0.00079	0.7

Table 6.4.9-2 PULSTAR Intact Assembly Mechanical Perturbation Results

Alignment	Radial Shift	Axial Shift	Basket Cell Opening	Basket Plate Thickness	k_{eff}	σ	$k_{eff}+2\sigma$	Δk	$\Delta k/\sigma$
Xlong	Centered	Alternating	Min	Min	0.80517	0.00083	0.80683	--	--
Xlong	Centered	Alternating	Nominal	Nominal	0.80202	0.00084	0.80370	-0.00315	-2.7
Xlong	Centered	Alternating	Max	Max	0.78640	0.00081	0.78802	-0.01877	-16.2
Xlong	Centered	Alternating	Max	Min	0.80929	0.00084	0.81097	--	--
Xlong	In	Alternating	Max	Min	0.78826	0.00082	0.78990	-0.01691	-14.5
Xlong	Out	Alternating	Max	Min	0.80056	0.00081	0.80218	-0.00461	-4.0

Table 6.4.9-3 PULSTAR Intact Assembly Lattice Moderator Ratio Results

Alignment	Radial Shift	Axial Shift	Basket	Lattice H/U Ratio	Pellet to Clad Gap (g/cc)	Interior (g/cc)	Exterior (g/cc)	k_{eff}	σ	$k_{eff}+2\sigma$	Δk	Δk/σ
Xlong	Centered	Alternating	Min	Max	1	1	0	0.80517	0.00083	0.80683	--	--
Xlong	Centered	Alternating	Min	Max	1	1	0	0.79497	0.00080	0.79657	-0.01020	-8.8
Xlong	Centered	Alternating	Min	Max	1	1	0	0.80517	0.00083	0.80683	--	--
Xlong	Centered	Alternating	Min	Min	0	1	0	0.79541	0.00080	0.79701	-0.00976	-8.5

Table 6.4.9-4 PULSTAR Canned Intact Element Results

Cask Array	# Cans per Cask	Assembly Alignment	Interior (g/cc)	Exterior (g/cc)	Can (g/cc)	k_{eff}	σ	$k_{eff}+2\sigma$	Δk	Δk/σ
Infinite	28	--	1	0	1	0.89919	0.00083	0.90085	--	--
Infinite	28	--	0	0	1	0.98516	0.00076	0.98668	0.08597	76.4
Infinite	28	--	1	0	0	0.52383	0.00066	0.52515	-0.46133	-458.3
Infinite	14	Xlong	0	0	1	0.92654	0.00079	0.92812	--	--
Single	14	Xlong	0	0	1	0.84286	0.00083	0.84452	-0.08368	-73.0
3 Casks	14	Xlong	0	0	1	0.84910	0.00079	0.85068	-0.07744	-69.3
Infinite; Water Neutron Shield	14	Xlong	0	0	0	0.17042	0.00023	0.17088	-0.75612	-919.0

Table 6.4.9-5 PULSTAR Canned Homogenized Element Results

Cask Array	# Cans per Cask	Assembly Alignment	Interior (g/cc)	Exterior (g/cc)	Can (g/cc)	k_{eff}	σ	$k_{eff}+2\sigma$	Δk	$\Delta k/\sigma$
Infinite	28	--	1	0	1	0.92819	0.00079	0.92977	--	--
Infinite	28	--	0	0	1	1.01473	0.00075	1.01623	0.08654	79.4
Infinite	28	--	1	0	0	0.52684	0.00067	0.52818	-0.48789	-485.1
Infinite	14	Xlong	0	0	1	0.94917	0.00074	0.95065	--	--
Single	14	Xlong	0	0	1	0.86031	0.00081	0.86193	-0.08886	-81.0
3 Casks	14	Xlong	0	0	1	0.86961	0.00081	0.87123	-0.07956	-72.5
Infinite; Water Neutron Shield	14	Xlong	0	0	0	0.16471	0.00023	0.16517	-0.78446	-1012.3

Table 6.4.9-6 PULSTAR Maximum Reactivity Summary

Configuration	Cask Array	$k_{eff} + 2\sigma$	k_s	CSI
28 Intact Assemblies	Infinite	0.81097	0.82487	0
28 16-Element Fuel Rod Inserts	Infinite	0.70234	0.71624	0
14 Intact Assemblies & 14 Cans w/Intact Elements	3	0.85068	0.86458	33.4
14 Intact Assemblies & 14 Cans w/Homogenized Elements	3	0.87123	0.88513	33.4

6.4.10 ANSTO Basket Payloads

This section presents the criticality analyses for the NAC-LWT cask with the spiral fuel assemblies and MOATA plate bundles in the ANSTO basket configuration. This evaluation meets the criticality safety requirements of 10 CFR Parts 71.55 and 71.59, as well as IAEA Transportation Safety Standards (TS-R-1). In this analysis, the bounding assembly characteristics are determined and infinite arrays of NAC-LWT casks are studied to determine bounding basket configurations for criticality under normal and accident conditions. Moderator density in the cavity, neutron shield tank and outside is varied to determine the maximum k_{eff}. The analyses demonstrate that, including all calculational and mechanical uncertainties, the NAC-LWT remains subcritical under normal and accident conditions for spiral fuel assemblies and MOATA plate bundles in the ANSTO basket configuration.

6.4.10.1 Spiral Fuel Assemblies

Initial evaluations document the reactivity of the fuel assembly in a nominal configuration basket. The cask model is set to accident conditions with neutron shield and cask exterior material voided. This base model is then modified to evaluate basket configuration and fuel material changes individually or in combination. For all evaluations, the ^{235}U enrichment percentage is set to its maximum value, as increased ^{235}U weight percent minimizes parasitic absorption in ^{238}U.

Reactivity results for the mechanical perturbation studies of the system and tolerances applied to the fuel material definition are included in Table 6.4.10-1. Manufacturing tolerance studies of the basket are listed in Table 6.4.10-2. Basket tolerance studies, as well as fuel studies shown later, rely on a base model containing maximum tolerance fissile material mass and uranium weight percent in the fuel meat.

The majority of evaluations presented in this section are based on a volume-conserving model with three fuel rings. This model requires a significant decrease in core thickness to conserve fuel meat volume, with only a minimal change to the plate thickness. As shown in Table 6.4.10-1, the model based on the original fuel plate dimension has a slightly higher reactivity. The increased reactivity in the plate-based model is the result of a smaller clad thickness than the one applied to the volume-conserving model. Evaluations performed later in this section reduce the clad to a minimum (0.01 cm) and, therefore, bound the as-manufactured plate configuration. Further calculations are, therefore, all based on a volume-conserving base model.

Maximum reactivity material, basket tolerances, and mechanical perturbation configurations are listed in the following bullets:

- Radial shift in – close approach active fuel

  There is no statistically significant difference between a shifted middle fuel element and a centered middle fuel element. The centered middle fuel element is chosen to continue the remaining evaluations.
- Axial alternating shift – close approach active fuel
- Maximum ^{235}U mass and maximum uranium weight percentage

  Within the range of uranium weight percentages evaluated, there is no effect on system reactivity. As documented in the MTR evaluation set, a large increase in uranium percentage (well beyond reasonable manufacturing limits) will increase reactivity. Therefore, maximum uranium percentage is retained for the remaining reactivity evaluations.
- Minimum fuel tube thickness

  For the tube specified, minimum tube thickness equals nominal thickness (tolerance is defined as -0%, +22%).
- No significant effect associated with other basket tolerances

  As reduced basket bottom plate and tube height removes absorber material from the system, the remaining reactivity evaluations set these variables to minimum.
  Fuel tube OD is set to maximum as it shows a slight, if not significant, reactivity increase. Increasing tube OD trades off raised moderation against increased absorber in the larger tube.

Next, fuel assembly dimensional effects are evaluated. The results of the fuel tolerance studies are documented in Table 6.4.10-3. The maximum system reactivity fuel configuration is itemized in the following bullets.

- Minimum plate thickness – increases moderator available between inner and outer assembly sleeves
- Minimum clad thickness

  Maximum reactivity obtained from a case where clad thickness is conservatively set to a minimum of 0.01 cm.
- Minimum active fuel height – reduces the space between fissile material in the alternating shifted model
- Minimum element height – reduces the space between fissile material in the alternating shifted model

  Set to active fuel height to remove variable as a potential licensing limit.
- Minimum sleeve (shell dimensions) – conservatively set to 0.01 cm thick

  Provides additional moderation in the system.
- Maximum plate pitch

  Plates were modeled as a set of three cylinders at various pitches. Maximum reactivity is obtained from a system with the middle cylinder centered between inner and outer aluminum assembly shells (sleeves) and the remaining cylinders pushed away from the center. This significantly increases the pitch between fuel materials above the 10 plate as-built assembly. Inner and outer sleeve (shell) dimensions were

conservatively set to a thickness of 0.01 cm. This was done to increase volume inside the annular region, maximizing the volume available for fuel and moderator.

Cask interior and exterior moderator density variation studies are included in Table 6.4.10-4. Moderator density variations are performed on the most-reactive basket and cask configuration under the accident condition (i.e., loss of neutron shield integrity). These studies demonstrate that for a fully moderated cask interior, any increase in cask exterior moderator density reduces reactivity by decoupling the casks in the array. This data is consistent with the lower reactivity obtained from the normal condition case, where the cask water neutron shield isolates casks in the infinite array. The reactivity curve for modified interior density demonstrates that within the statistical uncertainty of the evaluation, a fully moderated cask interior represents a bounding condition. No significant variations in reactivity occur for moderator densities above 0.9 g/cm^3. A plot of the interior density study is shown in Figure 6.4.10-1.

Results for a nominal condition infinite cask array, worst-case configuration accident condition (voided neutron shield) and normal conditions of operations (filled neutron shield) arrays, and for a single cask with a fully reflected containment boundary are included in Table 6.4.10-5. Maximum bias adjusted system reactivity is 0.746, well below the 0.95 safety limit for the system. As an infinite array of casks is subcritical under both normal and accident conditions, the criticality safety index (CSI) is 0.

The reactivity evaluation of the NAC-LWT cask containing up to 42 spiral fuel assemblies (elements), demonstrates that subcritical margin ($k_s \leq 0.95$) can be maintained under the following conditions:

Parameter	Value
Number of Fuel Plates	10
Plate Thickness	≥ 0.124 cm
Active Fuel Height	≥ 59.075 cm
^{235}U Content per Element	≤160
Enrichment wt % ^{235}U	≤ 95[1]

[1] Section 6.4.10 is based on a maximum 85 wt % ^{235}U evaluation. The maximum 95 wt % ^{235}U content is justified in Section 6.4.11.6 for both ANSTO and combined basket configurations.

6.4.10.2 MOATA Plate Bundles

Initial evaluations document the reactivity of the plate bundle in a nominal configuration basket. The cask model is set to accident conditions with neutron shield and cask exterior material voided. This base model is then modified to evaluate basket configuration and fuel material changes individually or in combination. Results of these evaluations are documented in Table 6.4.10-6 and Table 6.4.10-7. Basket tolerance studies, as well as fuel studies shown later, rely on a base model containing maximum tolerance fissile material mass and uranium weight percent in the fuel meat. For all evaluations, the ^{235}U enrichment percentage is set to its maximum value as increased ^{235}U weight percent minimizes parasitic absorption in ^{238}U.

Maximum reactivity material, basket tolerances, and mechanical perturbation configurations are listed in the following bullets.

- Radial shift in – close approach active fuel
  No statistically significant difference between shifted middle fuel element and a centered middle fuel element. The centered middle fuel element is chosen to continue the remaining evaluations.
- Axial alternating shift – close approach active fuel
- Maximum ^{235}U mass and maximum uranium weight percentage
- Minimum fuel tube thickness
  For the tube specified, minimum tube thickness equals nominal thickness (tolerance is defined as -0%, +22%).
- No significant effect associated with other basket tolerances
  As reduced basket bottom plate and tube height removes absorber material from the system, the remaining reactivity evaluations set these variables to minimum. Fuel tube OD is retained at nominal as there is no significant effect on system reactivity for this variable, and offsetting neutronic effects occur for a change in tube size (e.g., increasing OD increases parasitic absorber and separates fissile material but provides additional moderator in the fuel region).

Next, fuel assembly dimensional and material effects are evaluated. The results of the fuel tolerance studies are documented in Table 6.4.10-8. Maximum system reactivity fuel configuration is itemized in the following bullets.

- Maximum active fuel width
  The tolerance applied to the active fuel width is one-half the distance between active fuel width and plate width. Applying this tolerance (0.3175 cm for the nominal plate width and 0.3366 cm for the maximum tolerance plate width) significantly increases system reactivity. Maximum allowed active fuel width by this analysis is 7.32 cm (conservatively rounded down from the 7.3266 cm evaluated).

- Maximum plate width
  Plate width variation taken independently has no effect on system reactivity. Analysis tied plate width to active fuel width, as no tolerance on the actual fuel width was available. Increasing plate width thereby increased the maximum active fuel width, which was shown to be bounding.
- Nominal plate thickness
  Plate bundle moderator to fuel ration (H/U) is controlled by the plate spacer thickness not plate thickness. Therefore, there is no significant effect of plate thickness on the bundle reactivity.
- Minimum clad thickness
  Maximum reactivity obtained from a case where clad thickness is conservatively set to a minimum of 0.01 cm.
- Nominal active fuel height
  Contrary to the spiral fuel and DIDO evaluation set, no significant effect of active fuel height was observed in the calculations.
- Minimum element height – reduces the space between fissile materials in the alternating shifted model
  Set to active fuel height to remove variable as a potential licensing limit. Note that the end-fitting structure of the plate bundle will assure significant separation between active fuel regions.
- Maximum plate spacer
  A conservative maximum spacer of 0.18 cm thickness was evaluated and shown to be bounding.
- Replacing aluminum side plates by water
  Provides additional moderation in the system.

Cask interior and exterior moderator density variation studies are included in Table 6.4.10-9. These studies demonstrate that for a fully moderated cask interior, any increase in cask exterior density reduces reactivity by decoupling the casks in the array. This data is consistent for reduced reactivity obtained from the normal condition case where the cask water neutron shield isolates casks in the infinite array modeled. The reactivity curve for modified interior density demonstrates that within the statistical uncertainty of the evaluation, a fully moderated cask interior represents a bounding condition. No significant variations in reactivity occur for moderator densities above 0.95 g/cm^3. A plot of the interior density study is shown in Figure 6.4.10-2.

Results for a nominal condition infinite cask array, worst-case configuration accident condition (voided neutron shield) and normal conditions of operation (filled neutron shield) arrays, and for a single cask with a fully reflected containment boundary are included in Table 6.4.10-10. Maximum bias adjusted system reactivity is 0.763, well below the 0.95 safety limit for the

system. As an infinite array of casks is subcritical under both normal and accident conditions, the criticality safety index (CSI) is 0.

The reactivity evaluation of the NAC-LWT cask containing up to 42 MOATA plate bundles demonstrates that subcritical margin ($k_s \leq 0.95$) can be maintained under the following conditions.

Parameter	MOATA Plate Bundle
Max. Number of Fuel Plates	14
Spacer Thickness	≤ 0.18 cm
Active Fuel Width	≤ 7.32 cm
235U Content per Plate	≤22.3
Enrichment wt % 235U	≤ 92

6.4.10.3 Mixed Basket Loading – Spiral Assemblies Basket and Plate Bundle Basket

The NAC-LWT may transport a combination of spiral elements and plate bundle elements. Given the low, and similar, reactivity of each payload, the combination of payloads is not expected to increase reactivity. A combination of three baskets of spiral elements and three baskets of plate bundles is evaluated to support the bounding statement. Casks are evaluated once with the top three baskets loaded with plate bundles and the bottom three baskets loaded with spiral elements, and once with an alternating spiral elements and plate bundles set. As shown in the following list, there is no increase in reactivity associated with mixed loading of plate bundles and spiral elements.

# Casks	Condition	Description	k_{eff}	σ	$k_{eff}+2\sigma$
Infinite Array	Accident	Nominal case of MOATA plate bundle load	0.68207	0.00078	0.68363
Infinite Array	Accident	Nominal case of spiral fuel	0.65957	0.00066	0.66089
Infinite Array	Accident	Alternating MOATA and spiral fuel load	0.67249	0.00068	0.67385
Infinite Array	Accident	Stack of 3 MOATA baskets and 3 spiral baskets	0.67403	0.00069	0.67541

Figure 6.4.10-1 Spiral Fuel – Moderator Density Plot

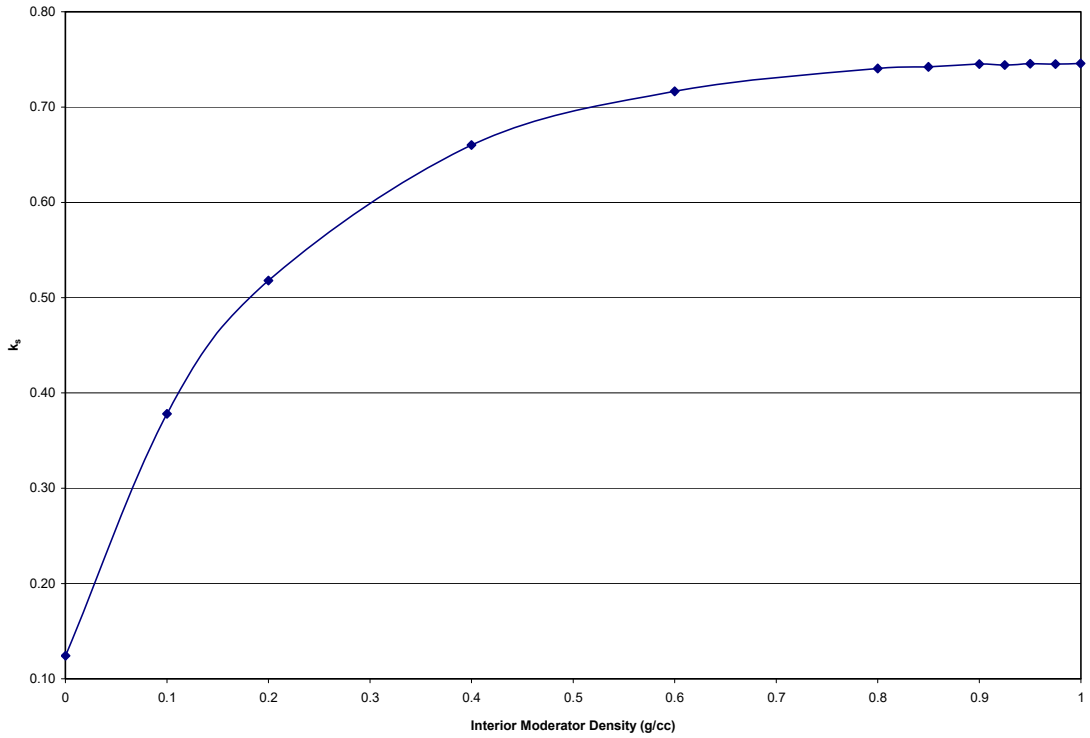

Figure 6.4.10-2 MOATA Plate Bundle – Moderator Density Plot

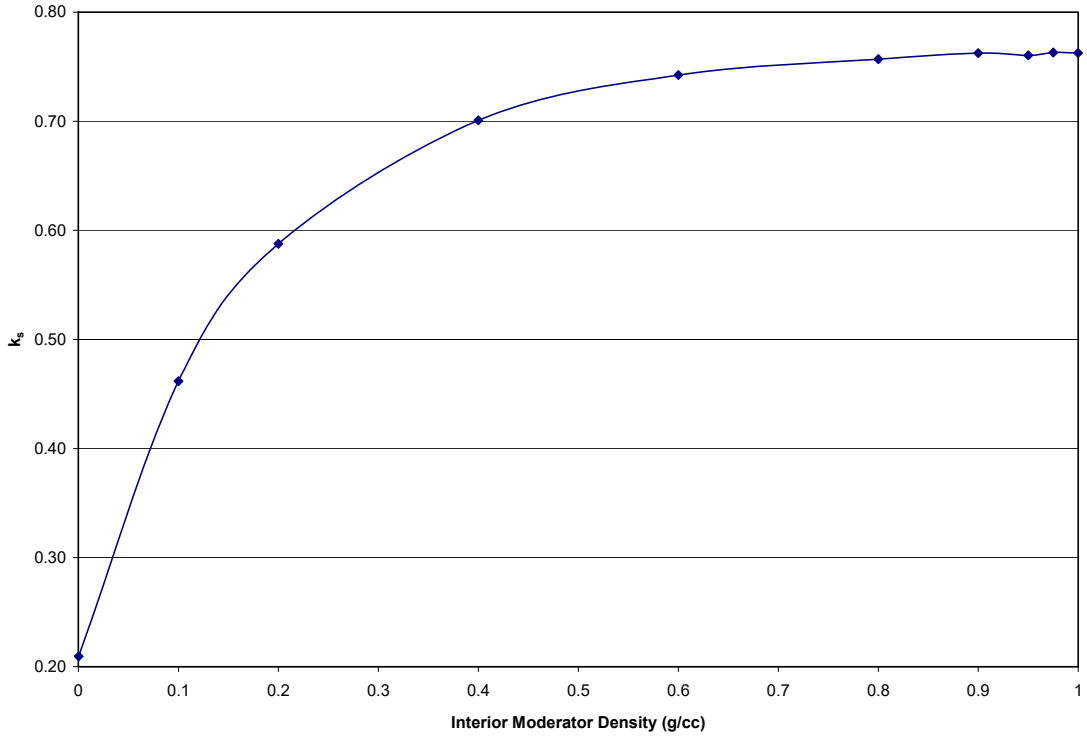

Table 6.4.10-1 Spiral Fuel Assembly – Base Data Comparisons

Base Data[1]	Cask Condition	Radial Shift Pattern	Axial Shift Pattern	^{235}U Mass Tolerance	Uranium Weight Fraction Tolerance	k_{eff}	σ	$k_{eff}+2\sigma$	k_s	Δk	$\Delta k_{eff}/\sigma$
Volume	Accident	CenteredC	Down	Nominal	Nominal	0.65222	0.00064	0.65350	0.67160	-0.00862	-13.5
Volume	Accident	CenteredC	Alternating	Nominal	Nominal	0.65957	0.00066	0.66089	0.67899	-0.00123	-1.9
Plate	Accident	CenteredC	Alternating	Nominal	Nominal	0.66084	0.00064	0.66212	0.68022	--	--
Volume	Accident	CenteredC	Alternating	Min	Nominal	0.63917	0.00067	0.64051	0.65861	-0.02161	-32.3
Volume	Accident	CenteredC	Alternating	Max	Nominal	0.68143	0.00065	0.68273	0.70083	0.02061	31.7
Volume	Accident	CenteredC	Alternating	Nominal	Min	0.65967	0.00066	0.66099	0.67909	-0.00113	-1.7
Volume	Accident	CenteredC	Alternating	Nominal	Max	0.66025	0.00065	0.66155	0.67965	-0.00057	-0.9
Volume	Accident	OutC	Alternating	Nominal	Nominal	0.65823	0.00062	0.65947	0.67757	-0.00265	-4.3
Volume	Accident	In	Alternating	Nominal	Nominal	0.66333	0.00063	0.66459	0.68269	0.00247	3.9
Volume	Accident	InC	Alternating	Nominal	Nominal	0.66273	0.00069	0.66411	0.68221	0.00199	2.9
Volume	Accident	InC	Alternating	Max	Nominal	0.68337	0.00066	0.68469	0.70279	0.02257	34.2

[1] Refers to cylindrical fuel approximation being based on the original plate dimension or on volume (i.e., H/U ratio) conserving model.

Table 6.4.10-2 Spiral Fuel Assembly – Basket Tolerance Evaluations

Fuel Tube Outer Diameter Tolerance	Fuel Tube Thickness Tolerance	Fuel Tube Height Tolerance	Fuel Basket Base Plate Tolerance	k_{eff}	σ	$k_{eff}+2\sigma$	k_s	Δk	$\Delta k_{eff}/\sigma$
Nominal	Nominal	Nominal	Nominal	0.68310	0.00069	0.68448	0.70258	--	--
Min	Nominal	Nominal	Nominal	0.68153	0.00066	0.68285	0.70095	-0.00163	-2.5
Max	Nominal	Nominal	Nominal	0.68410	0.00067	0.68544	0.70354	0.00096	1.4
Nominal	Min	Nominal	Nominal	0.68310	0.00069	0.68448	0.70258	--	--
Nominal	Max	Nominal	Nominal	0.65917	0.00067	0.66051	0.67861	-0.02397	-35.8
Nominal	Nominal	Min	Nominal	0.68368	0.00067	0.68502	0.70312	0.00054	0.8
Nominal	Nominal	Max	Nominal	0.68218	0.00065	0.68348	0.70158	-0.00100	-1.5
Nominal	Nominal	Nominal	Min	0.68341	0.00067	0.68475	0.70285	0.00027	0.4
Nominal	Nominal	Nominal	Max	0.68325	0.00064	0.68453	0.70263	0.00005	0.1
Min	Min	Min	Min	0.68254	0.00064	0.68382	0.70192	-0.00066	-1.0
Nominal	Min	Min	Min	0.68316	0.00068	0.68452	0.70262	0.00004	0.1
Max	Min	Min	Min	0.68434	0.00068	0.68570	0.70380	0.00122	1.8

Table 6.4.10-3 Spiral Fuel Assembly – Fuel Tolerance Evaluations

Fuel Plate Thickness Tolerance	Fuel Plate Clad Thickness Tolerance	Active Fuel Length Tolerance	Element Height Tolerance	H/U Study (Plate Location)	Inner & Outer Shells	k_{eff}	σ	$k_{eff}+2\sigma$	k_s	Δk	$\Delta k_{eff}/\sigma$
Nominal	Nominal	Nominal	Nominal	Nominal	Nominal	0.68310	0.00069	0.68448	0.70258	--	--
Min	Nominal	Nominal	Nominal	Nominal	Nominal	0.68643	0.00067	0.68777	0.70587	0.00329	4.9
Max	Nominal	Nominal	Nominal	Nominal	Nominal	0.68082	0.00067	0.68216	0.70026	-0.00232	-3.5
Nominal	No Clad	Nominal	Nominal	Nominal	Nominal	0.69059	0.00067	0.69193	0.71003	0.00745	11.1
Nominal	Min	Nominal	Nominal	Nominal	Nominal	0.68737	0.00066	0.68869	0.70679	0.00421	6.4
Nominal	Max	Nominal	Nominal	Nominal	Nominal	0.68003	0.00064	0.68131	0.69941	-0.00317	-5.0
Nominal	Nominal	Min	Nominal	Nominal	Nominal	0.68619	0.00067	0.68753	0.70563	0.00305	4.6
Nominal	Nominal	Max	Nominal	Nominal	Nominal	0.68111	0.00068	0.68247	0.70057	-0.00201	-3.0
Nominal	Nominal	Nominal	Fuel	Nominal	Nominal	0.68821	0.00065	0.68951	0.70761	0.00503	7.7
Nominal	Nominal	Nominal	Min	Nominal	Nominal	0.68512	0.00066	0.68644	0.70454	0.00196	3.0
Nominal	Nominal	Nominal	Max	Nominal	Nominal	0.68125	0.00068	0.68261	0.70071	-0.00187	-2.8
Nominal	Nominal	Nominal	Nominal	Min	Nominal	0.67318	0.00066	0.67450	0.69260	-0.00998	-15.1
Nominal	Nominal	Nominal	Nominal	Max	Nominal	0.69131	0.00066	0.69263	0.71073	0.00815	12.3
Nominal	Nominal	Nominal	Nominal	Min	Min	0.67580	0.00068	0.67716	0.69526	-0.00732	-10.8
Nominal	Nominal	Nominal	Nominal	Nominal	Min	0.69148	0.00067	0.69282	0.71092	0.00834	12.4
Nominal	Nominal	Nominal	Nominal	Max	Min	0.70408	0.00067	0.70542	0.72352	0.02094	31.3
Min	No_Clad	Min	Fuel	Max	Min	0.72459	0.00066	0.72591	0.74401	0.04143	62.8

Table 6.4.10-4 Spiral Fuel Assembly – Moderator Density Variations

Set	Interior Moderator Density (g/cm^3)	Exterior Moderator Density (g/cm^3)	k_{eff}	σ	$k_{eff}+2\sigma$	k_s
H1	0.9998	0.0001	0.72640	0.00067	0.72774	0.74584
	0.9998	0.1	0.69875	0.00066	0.70007	0.71817
	0.9998	0.5	0.69587	0.00067	0.69721	0.71531
	0.9998	0.9998	0.69661	0.00067	0.69795	0.71605
H2	0.9998	0.0001	0.72640	0.00067	0.72774	0.74584
	0.975	0.0001	0.72575	0.00066	0.72707	0.74517
	0.95	0.0001	0.72604	0.00066	0.72736	0.74546
	0.925	0.0001	0.72466	0.00068	0.72602	0.74412
	0.9	0.0001	0.72562	0.00066	0.72694	0.74504
	0.85	0.0001	0.72273	0.00067	0.72407	0.74217
	0.8	0.0001	0.72102	0.00069	0.72240	0.74050
	0.6	0.0001	0.69709	0.00068	0.69845	0.71655
	0.4	0.0001	0.63905	0.00150	0.64205	0.66015
	0.2	0.0001	0.49709	0.00138	0.49985	0.51795
	0.1	0.0001	0.35749	0.00125	0.35999	0.37809
	0.0001	0.0001	0.10524	0.00046	0.10616	0.12426

Table 6.4.10-5 Spiral Fuel Assembly – Maximum Reactivity Case Summary

# Casks	Condition	Description	k_{eff}	σ	$k_{eff}+2\sigma$	k_s
Infinite Array	Accident	Nominal configuration accident case	0.66084	0.00064	0.66212	0.68022
Infinite Array	Accident	Maximum reactivity material and shift case nominal fuel and basket configuration	0.68310	0.00069	0.68448	0.70258
Infinite Array	Accident	Maximum reactivity basket tolerance – nominal fuel configuration	0.68434	0.00068	0.68570	0.70380
Infinite Array	Accident	Maximum reactivity fuel tolerance – nominal basket configuration	0.72459	0.00066	0.72591	0.74401
Infinite Array	Accident	Combined maximum reactivity configuration case	0.72640	0.00067	0.72774	0.74584
Infinite Array	Normal	Combined maximum reactivity configuration case	0.69609	0.00069	0.69747	0.71557
Single Cask	N/A	Single cask / inner shell reflected with water - maximum reactivity configuration	0.65762	0.00067	0.65896	0.67706

Table 6.4.10-6 MOATA Plate Bundle – Base Data Comparisons

Cask Condition	Radial Shift Pattern	Axial Shift Pattern	^{235}U Mass Tolerance	Uranium Weight Fraction Tolerance	k_{eff}	σ	$k_{eff}+2\sigma$	k_s	Δk	$\Delta k_{eff}/\sigma$
Accident	CenteredC	Down	Nominal	Nominal	0.67757	0.00074	0.67905	0.69715	-0.00458	-6.2
Accident	CenteredC	Alternating	Nominal	Nominal	0.68207	0.00078	0.68363	0.70173	--	--
Accident	CenteredC	Alternating	Nominal	Min	0.68113	0.00077	0.68267	0.70077	-0.00096	-1.2
Accident	CenteredC	Alternating	Nominal	Max	0.68367	0.00077	0.68521	0.70331	0.00158	2.1
Accident	CenteredC	Alternating	Min	Nominal	0.68163	0.00076	0.68315	0.70125	-0.00048	-0.6
Accident	CenteredC	Alternating	Max	Nominal	0.68624	0.00076	0.68776	0.70586	0.00413	5.4
Accident	OutC	Alternating	Max	Nominal	0.67948	0.00077	0.68102	0.69912	-0.00261	-3.4
Accident	In	Alternating	Max	Nominal	0.69075	0.00078	0.69231	0.71041	0.00868	11.1
Accident	InC	Alternating	Max	Nominal	0.69125	0.00080	0.69285	0.71095	0.00922	11.5
Accident	InC	Alternating	Max	Max	0.69234	0.00078	0.69390	0.71200	0.01027	13.2

Table 6.4.10-7 MOATA Plate Bundle – Basket Tolerance Evaluations

Fuel Tube Outer Diameter Tolerance	Fuel Tube Thickness Tolerance	Fuel Tube Height Tolerance	Fuel Basket Base Plate Tolerance	k_{eff}	σ	$k_{eff}+2\sigma$	k_s	Δk	$\Delta k_{eff}/\sigma$
Nominal	Nominal	Nominal	Nominal	0.69234	0.00078	0.69390	0.71200	--	--
Min	Nominal	Nominal	Nominal	0.68994	0.00077	0.69148	0.70958	-0.00242	-3.1
Max	Nominal	Nominal	Nominal	0.69108	0.00075	0.69258	0.71068	-0.00132	-1.8
Nominal	Min	Nominal	Nominal	0.69234	0.00078	0.69390	0.71200	--	--
Nominal	Max	Nominal	Nominal	0.67140	0.00077	0.67294	0.69104	-0.02096	-27.2
Nominal	Nominal	Min	Nominal	0.69146	0.00080	0.69306	0.71116	-0.00084	-1.0
Nominal	Nominal	Max	Nominal	0.69054	0.00079	0.69212	0.71022	-0.00178	-2.3
Nominal	Nominal	Nominal	Min	0.69152	0.00078	0.69308	0.71118	-0.00082	-1.1
Nominal	Nominal	Nominal	Max	0.69204	0.00079	0.69362	0.71172	-0.00028	-0.4
Max	Min	Min	Min	0.69326	0.00078	0.69482	0.71292	0.00092	1.2
Nominal	Min	Min	Min	0.69364	0.00077	0.69518	0.71328	0.00128	1.7
Min	Min	Min	Min	0.69024	0.00079	0.69182	0.70992	-0.00208	-2.6

Table 6.4.10-8 MOATA Plate Bundle – Fuel Tolerance Evaluations

Fuel Plate Width Tolerance	Fuel Plate Thickness Tolerance	Fuel Plate Clad Thickness Tolerance	Active Fuel Length Tolerance	Active Fuel Width Tolerance	Element Height Tolerance	Spacer Thickness Tolerance	Side Plate Thickness Tolerance	Side Plate Width Tolerance	k_{eff}	σ	$k_{eff}+2\sigma$	k_s	Δk	$\Delta k_{eff}/\sigma$
Nominal	Nominal	Nominal	Nominal	Nominal	Nominal	Nominal	Nominal	Nominal	0.69234	0.00078	0.69390	0.71200	--	--
Min	Nominal	Nominal	Nominal	Nominal	Nominal	Nominal	Nominal	Nominal	0.69017	0.00078	0.69173	0.70983	-0.00217	-2.8
Max	Nominal	Nominal	Nominal	Nominal	Nominal	Nominal	Nominal	Nominal	0.69105	0.00077	0.69259	0.71069	-0.00131	-1.7
Nominal	Min	Nominal	Nominal	Nominal	Nominal	Nominal	Nominal	Nominal	0.69190	0.00078	0.69346	0.71156	-0.00044	-0.6
Nominal	Max	Nominal	Nominal	Nominal	Nominal	Nominal	Nominal	Nominal	0.69192	0.00077	0.69346	0.71156	-0.00044	-0.6
Nominal	Nominal	Min	Nominal	Nominal	Nominal	Nominal	Nominal	Nominal	0.69424	0.00077	0.69578	0.71388	0.00188	2.4
Nominal	Nominal	Max	Nominal	Nominal	Nominal	Nominal	Nominal	Nominal	0.69150	0.00078	0.69306	0.71116	-0.00084	-1.1
Nominal	Nominal	Nominal	Min	Nominal	Nominal	Nominal	Nominal	Nominal	0.68998	0.00079	0.69156	0.70966	-0.00234	-3.0
Nominal	Nominal	Nominal	Max	Nominal	Nominal	Nominal	Nominal	Nominal	0.69153	0.00078	0.69309	0.71119	-0.00081	-1.0
Nominal	Nominal	Nominal	Nominal	Min	Nominal	Nominal	Nominal	Nominal	0.68240	0.00082	0.68404	0.70214	-0.00986	-12.0
Nominal	Nominal	Nominal	Nominal	Max	Nominal	Nominal	Nominal	Nominal	0.69920	0.00080	0.70080	0.71890	0.00690	8.6
Nominal	Nominal	Nominal	Nominal	Nominal	Fuel	Nominal	Nominal	Nominal	0.70756	0.00079	0.70914	0.72724	0.01524	19.3
Nominal	Nominal	Nominal	Nominal	Nominal	Min	Nominal	Nominal	Nominal	0.69029	0.00077	0.69183	0.70993	-0.00207	-2.7
Nominal	Nominal	Nominal	Nominal	Nominal	Max	Nominal	Nominal	Nominal	0.69220	0.00080	0.69380	0.71190	-0.00010	-0.1
Nominal	Nominal	Nominal	Nominal	Nominal	Nominal	Min	Nominal	Nominal	0.67080	0.00076	0.67232	0.69042	-0.02158	-28.4
Nominal	Nominal	Nominal	Nominal	Nominal	Nominal	Max	Nominal	Nominal	0.70952	0.00078	0.71108	0.72918	0.01718	22.0
Nominal	Nominal	Nominal	Nominal	Nominal	Nominal	Nominal	Water	Nominal	0.69518	0.00080	0.69678	0.71488	0.00288	3.6
Nominal	Nominal	Nominal	Nominal	Nominal	Nominal	Nominal	Min	Nominal	0.69087	0.00079	0.69245	0.71055	-0.00145	-1.8
Nominal	Nominal	Nominal	Nominal	Nominal	Nominal	Nominal	Max	Nominal	0.69185	0.00077	0.69339	0.71149	-0.00051	-0.7
Nominal	Nominal	Nominal	Nominal	Nominal	Nominal	Nominal	Nominal	Min	0.69203	0.00075	0.69353	0.71163	-0.00037	-0.5
Nominal	Nominal	Nominal	Nominal	Nominal	Nominal	Nominal	Nominal	Max	0.69179	0.00074	0.69327	0.71137	-0.00063	-0.9
Max	Nominal	Min	Nominal	Max	Fuel	Max	Nominal	Nominal	0.73925	0.00078	0.74081	0.75891	0.04691	60.1
Max	Nominal	Min	Nominal	Max	Fuel	Max	Water	Water	0.74205	0.00081	0.74367	0.76177	0.04977	61.4

Table 6.4.10-9 MOATA Plate Bundle – Moderator Density Variations

Set	Interior Moderator Density (g/cm^3)	Exterior Moderator Density (g/cm^3)	k_{eff}	σ	$k_{eff}+2\sigma$	k_s
H1	0.9998	0.0001	0.74285	0.00081	0.74447	0.76257
	0.9998	0.1	0.71116	0.00081	0.71278	0.73088
	0.9998	0.5	0.70785	0.00080	0.70945	0.72755
	0.9998	0.9998	0.70742	0.00081	0.70904	0.72714
H2	0.9998	0.0001	0.74285	0.00081	0.74447	0.76257
	0.975	0.0001	0.74337	0.00080	0.74497	0.76307
	0.95	0.0001	0.74073	0.00078	0.74229	0.76039
	0.9	0.0001	0.74275	0.00078	0.74431	0.76241
	0.8	0.0001	0.73741	0.00077	0.73895	0.75705
	0.6	0.0001	0.72186	0.00124	0.72434	0.74244
	0.4	0.0001	0.67919	0.00174	0.68267	0.70077
	0.2	0.0001	0.56690	0.00133	0.56956	0.58766
	0.1	0.0001	0.44132	0.00118	0.44368	0.46178
	0.0001	0.0001	0.19016	0.00057	0.19130	0.20940

Table 6.4.10-10 MOATA Plate Bundle – Maximum Reactivity Case Summary

# Casks	Condition	Description	k_{eff}	σ	$k_{eff}+2\sigma$	k_s
Infinite Array	Accident	Nominal configuration accident case	0.68207	0.00078	0.68363	0.70173
Infinite Array	Accident	Maximum reactivity material and shift case	0.69234	0.00078	0.69390	0.71200
Infinite Array	Accident	Maximum reactivity basket tolerance	0.69024	0.00079	0.69182	0.70992
Infinite Array	Accident	Maximum reactivity fuel tolerance	0.74205	0.00081	0.74367	0.76177
Infinite Array	Accident	Combined maximum reactivity configuration case	0.74285	0.00081	0.74447	0.76257
Infinite Array	Normal	Combined maximum reactivity configuration case	0.70622	0.00082	0.70786	0.72596
Single Cask	N/A	Single cask / inner shell reflected with water - maximum reactivity configuration	0.65594	0.00082	0.65758	0.67568

6.4.11 Combined DIDO-ANSTO Basket Payloads

This section presents the criticality analyses for the NAC-LWT cask with a stack of five DIDO baskets containing DIDO fuel, and an ANSTO top module that may contain DIDO, spiral fuel assemblies or MOATA plate bundles. ANSTO module contents may be placed in aluminum damaged fuel cans (DFCs). DFC contents may be complete fuel elements or individual fuel plates (potentially segmented). This evaluation meets the criticality safety requirements of 10 CFR Parts 71.55 and 71.59, as well as IAEA Transportation Safety Standards (TS-R-1). In this analysis, the bounding system characteristics are determined for an infinite array of NAC-LWT casks under normal and accident conditions. Cask cavity, neutron shield tank and outside moderator density effects were studied in the DIDO and ANSTO basket evaluation sections and demonstrated maximum reactivity for a dry cask exterior and fully flooded cask cavity. Optimum moderator density evaluations in this analysis section are, therefore, limited to the effect of canister preferential flooding. The analyses demonstrate that, including all calculational and mechanical uncertainties, the NAC-LWT cask remains subcritical under normal and accident conditions containing a combination of DIDO baskets and the ANSTO top basket module, where the top basket module may contain DIDO or ANSTO fuel.

The evaluation was performed in several analysis stages to move from existing DIDO and ANSTO analyses to a bounding mixed payload analysis, including DFCs. The first analysis set establishes an initial baseline reactivity model of the NAC-LWT cask loaded with a full set of DIDO basket modules and for a set of five DIDO basket modules with a DIDO payload inside an ANSTO (top) basket module. The next analysis stage inserts ANSTO specific payloads, i.e., Mark II MOATA plate and Mark III spiral fuel, into the top ANSTO module. Following this analysis stage, mixed payloads, canistered payloads, optimum moderator conditions and segmented plates are evaluated.

6.4.11.1 DIDO Basket and ANSTO Basket Substitution

The maximum reactivity DIDO case is modified to replace the aluminum fuel tubes by the stainless steel basket tubes specified by the component drawing. Next, the input file is revised to include an ANSTO top basket module containing a full load of the bounding DIDO fuel. Modifications for this geometry change involve a duplication of the basket and tube related KENO units corresponding to the larger ANSTO fuel tubes. To minimize model development, the ANSTO basket module geometry units were copied into a DIDO input file with appropriate units renumbered. Material compositions were similarly inserted and renumbered with resonance characteristics for the non-DIDO fuels being added using the “RES” and “DAN”

CSAS input variables. The resonance characteristics for the non-DIDO fuel had to be generated using stand-alone runs each time the fuel geometry was changed.

As seen in Table 6.4.11-1, there is no statistical difference between loading DIDO elements into a DIDO or ANSTO top basket module. Further, the analysis results for the insertion of ANSTO payloads demonstrate that system reactivity is controlled by the five DIDO basket stack. This result was expected as maximum reactivities (k_{eff}) for the plate and spiral basket assemblies are less than that of the DIDO basket assembly. Therefore, inserting a lower reactivity plate and spiral payload into the DIDO basket stack does not increase system reactivity.

6.4.11.2 Mixed Payloads

Within the ANSTO top basket module plate, spiral or DIDO fuel types are permitted to be loaded into any of the basket locations. To support this loading criterion, sample mixed payload variations are evaluated. Results are shown in Table 6.4.11-2 for various combinations of fuel types. The maximum reactivity full set of DIDO elements serves as the basis for this analysis. As expected, replacing higher reactivity DIDO fuel with spiral and plate assemblies has no statistically significant effect on maximum system reactivity as the five full DIDO basket modules control system reactivity. As the maximum reactivity payload is DIDO fuel, the analysis results in this section bound placement of the mixed payload top ANSTO basket module onto an ANSTO basket stack, loaded with MOATA plate and spiral elements.

6.4.11.3 Separated Fuel Plates

MOATA plate and spiral fuel assemblies may be disassembled prior to placement into a DFC. As typical plate material is undermoderated, the plates are evaluated at various pitch configurations from touching to the maximum pitch allowed by the basket tubes. For this analysis set, no credit is taken for the DFC. Each case in this set represents a system containing five DIDO modules (loaded with DIDO fuel) and a top ANSTO module with the specified fuel type. As demonstrated in Table 6.4.11-3, system reactivity increases for maximum plate separation with MOATA plates producing a higher system reactivity than the DIDO base case and the separated spiral case.

Previous plate evaluations (Section 6.4.3) have demonstrated that a reduction in the number of plates, allowing an increase in pitch, reduces system reactivity due to the removal of fissile material and is, therefore, not duplicated here.

6.4.11.4 Aluminum DFC

Fuel material in individual plates, including plates that may have clad defects or are segmented, are transported within an aluminum DFC. Only the radial shell of the DFC is modeled. This model is conservative since including DFC bottom/top plates in the model would separate fuel material axially and increase neutron leakage. Inserting the DFC into the model constricts the allowable space for fuel plate expansion and, therefore, reduces system reactivity. To demonstrate this effect, the maximum reactivity DIDO, MOATA plate and spiral models are modified to contain a DFC (with the resulting restriction in maximum plate pitch). Results of the DFC insertion analysis are shown in Table 6.4.11-4 and demonstrate that maximum reactivity is achieved in models containing no DFC.

DFCs contain screens to facilitate draining and drying of the system. Hypothetical preferential flooding scenarios are considered by modeling various combinations of full density water and void in the canister interior and cask cavity moderator combinations. Results of the evaluations for the Table 6.4.11-4 model of five DIDO baskets and one ANSTO basket containing maximum pitch MOATA plates are shown in Table 6.4.11-5. As seen in Table 6.4.11-5, the maximum reactivity moderator condition is represented by a dry cask with flooded DFCs in the top ANSTO module. A more detailed moderator density evaluation, displayed in Table 6.4.11-6, demonstrates that as the density of the water in the cask cavity is lowered, the reactivity of the system increases. This effect is due to the increased neutron interaction between DFCs and non-canistered fuel, while retaining water within the DFC fuel lattice.

6.4.11.5 Segmented Fuel Plates

In addition to complete fuel plates, the canister may also contain segmented fuel plates. Segmenting the plates decreases the distance between fuel in adjacent baskets, but also displaces moderator. Table 6.4.11-7 contains results for reactivity evaluations of the ANSTO top basket module MOATA plate payload with each plate cut in half (i.e, 28 half-height plates in the array). System reactivity decreases as moderator is displaced in the plate array. This demonstrates that the model based on complete plates at maximum pitch is bounding.

6.4.11.6 Conclusions and Recommendations

The maximum bias adjusted reactivity (k_s) for an NAC-LWT cask loaded with five DIDO baskets containing DIDO fuel elements and an ANSTO basket with any combination of DIDO elements, MOATA plate bundles, and HIFAR spiral fuel assemblies is 0.8291. Although the maximum reactivity is above that of an NAC-LWT cask completely loaded with steel DIDO baskets and DIDO fuel, it is significantly lower than the reactivity of the previously licensed NAC-LWT cask loaded with aluminum DIDO baskets and DIDO fuel that has a maximum

reactivity of 0.93. The reactivity of the mixed basket stack bounds that of an ANSTO stack containing DFCs. This reactivity is well within the safety limit ($k_s < 0.95$). Single cask and normal condition evaluations are not performed in this calculation, as DIDO and ANSTO analyses have previously demonstrated that the accident condition array bounds (maximum reactivity) results. The criticality safety index (CSI) for the shipment is 0, as it was modeled as an infinite array of casks.

Table 6.4.11-1 DIDO/ANSTO Basket Module Replacement

Top Basket Module		k_{eff}	σ	k_s	Δk	Δk /σ
Type	Content					
DIDO[1]	DIDO	0.7709	0.0007	0.7904	--	--
ANSTO	DIDO	0.7696	0.0007	0.7891	-0.0013	-1.9
ANSTO	MOATA	0.7703	0.0007	0.7898	-0.0006	-0.9
ANSTO	Spiral	0.7691	0.0007	0.7886	-0.0018	-2.6

Note: [1] The aluminum tube DIDO basket assembly model produced a maximum k_s of 0.9304.

Table 6.4.11-2 DIDO/ANSTO Mixed Payload Analysis Results

ANSTO Module		k_{eff}	σ	k_s	Δk	Δk /σ
Interior	Exterior					
D	6D	0.7709	0.0007	0.7904	--	--
D	3D/3S	0.7697	0.0007	0.7892	-0.0012	-1.7
D	3D/3M	0.7695	0.0007	0.7890	-0.0014	-2.0
D	2D/2M/2S	0.7697	0.0007	0.7892	-0.0012	-1.7
S	2D/2M/2S	0.7705	0.0007	0.7900	-0.0004	-0.6
M	2D/2M/2S	0.7702	0.0007	0.7897	-0.0007	-1.0

Note: Abbreviated names are (M) for MOATA plate, (S) for Spiral and (D) for DIDO.

Table 6.4.11-3 DIDO/ANSTO Basket Plate Separation Evaluation

ANSTO Module		k_{eff}	σ	k_s	Δk	Δk /σ
Fuel Type	Plate Pitch (cm)					
Spiral	As Built	0.7691	0.0007	0.7886	--	--
Spiral	Touch	0.7678	0.0007	0.7873	-0.0013	-1.9
Spiral	0.3055	0.7677	0.0007	0.7872	-0.0014	-2.0
Spiral	0.4634	0.7678	0.0007	0.7873	-0.0013	-1.9
Spiral	0.6212	0.7677	0.0007	0.7872	-0.0014	-2.0
Spiral	0.7791	0.7676	0.0007	0.7871	-0.0015	-2.1
Spiral	0.8500	0.7695	0.0007	0.7890	0.0004	0.6
Spiral	*0.9370	0.7695	0.0007	0.7890	0.0004	0.6
MOATA	As Built	0.7703	0.0007	0.7898	--	--
MOATA	Touch	0.7680	0.0007	0.7875	-0.0023	-3.3
MOATA	0.2696	0.7684	0.0007	0.7879	-0.0019	-2.7
MOATA	0.3353	0.7678	0.0007	0.7873	-0.002	-3.6
MOATA	0.4011	0.7724	0.0007	0.7919	0.002	3.0
MOATA	0.4668	0.7852	0.0007	0.8047	0.015	21.3
MOATA	*0.5326	0.8096	0.0007	0.8291	0.0393	56.1

*Maximum Pitch Allowable by Tube

Table 6.4.11-4 DIDO/ANSTO Basket DFC Addition

ANSTO Module Payload	DFC	k_{eff}	σ	k_s	Δk	Δk /σ
DIDO	No	0.7709	0.0007	0.7904	--	--
DIDO	Yes	0.7690	0.0007	0.7885	-0.0019	-2.7
Spiral	No	0.7695	0.0007	0.7890	--	--
Spiral	Yes	0.7703	0.0007	0.7898	0.0008	1.1
Plate	No	0.8096	0.0007	0.8291	--	--
Plate	Yes	0.7782	0.0007	0.7977	-0.0314	-44.9

Table 6.4.11-5 DIDO/ANSTO Basket Preferential Flood Analysis

Moderator Density (g/cc)		k_{eff}	σ	k_s	Δk	Δk /σ
Cask	Can					
1.0	1.0	0.7782	0.0007	0.7977	--	--
1.0	0.0	0.7674	0.0007	0.7869	-0.0108	-15.4
0.0	1.0	0.7992	0.0007	0.8187	0.0210	30.0
0.0	0.0	0.1440	0.0002	0.1625	-0.6352	-3176.0

Table 6.4.11-6 DIDO/ANSTO Basket Cask Cavity Moderator Density Study

Moderator Density (g/cc)		k_{eff}	σ	k_s	Δk	Δk /σ
Cask	DFC					
1.0	1.0	0.7782	0.0007	0.7977	--	--
0.9	1.0	0.7796	0.0007	0.7991	0.0014	2.0
0.8	1.0	0.7827	0.0007	0.8022	0.0045	6.4
0.7	1.0	0.7844	0.0007	0.8039	0.0062	8.9
0.6	1.0	0.7885	0.0007	0.808	0.0103	14.7
0.5	1.0	0.7896	0.0007	0.8091	0.0114	16.3
0.4	1.0	0.7941	0.0007	0.8136	0.0159	22.7
0.3	1.0	0.7970	0.0007	0.8165	0.0188	26.9
0.2	1.0	0.7989	0.0008	0.8186	0.0209	26.1
0.1	1.0	0.7992	0.0008	0.8189	0.0212	26.5
0.0	1.0	0.7992	0.0007	0.8187	0.0210	30.0

Table 6.4.11-7 DIDO/ANSTO Basket Segmented Plate Study

Plate Configuration	k_{eff}	σ	k_s	Δk	Δk /σ
Complete	0.7782	0.0007	0.7977	--	--
Segmented	0.7697	0.0007	0.7892	-0.0085	-12.1

6.5 Criticality Benchmarks

The results of the criticality analyses presented in this chapter are corrected for bias and uncertainty resulting from the method using information obtained from the analysis of criticality benchmark experimental data.

6.5.1 CSAS25 Criticality Benchmark for LEU LWR Oxide Fuel

This section provides the validation of the CSAS25 criticality analysis sequence contained in Version 4.3 of the SCALE package. This validation is required by the criticality safety standards ANSI/ANS-8.1. The section describes the method, computer program and cross-section libraries used, experimental data, areas of applicability, and bias and margins of safety.

ANSI/ANS-8.17 prescribes the criterion to establish subcriticality safety margins. This criterion is as follows:

$k_s \leq k_c - \Delta k_s - \Delta k_c - \Delta k_m$ (1)

where:

k_s = calculated allowable maximum multiplication factor, k_{eff}, of system being evaluated for all normal or credible abnormal conditions or events.

k_c = mean k_{eff} that results from calculation of benchmark criticality experiments using particular calculational method. If calculated k_{eff} values for criticality experiments exhibit trend with parameter, then k_c shall be determined by extrapolation based on best fit to calculated values. Criticality experiments used as benchmarks in computing k_c should have physical compositions, configurations, and nuclear characteristics (including reflectors) similar to those of system being evaluated.

Δk_s = allowance for:

a. statistical or convergence uncertainties, or both, in computation of k_s,

b. material and fabrication tolerances, and

c. geometric or material representations used in computational method.

Δk_c = margin for uncertainty in k_c which includes allowance for:

a. uncertainties in critical experiments,

b. statistical or convergence uncertainties, or both, in computation of k_c,

c. uncertainties resulting from extrapolation of k_c outside range of experimental data, and

d. uncertainties resulting from limitations in geometrical of material representations used in computational method.

Δk_m = arbitrary margin to ensure subcriticality of k_s.

The various uncertainties are combined statistically if they are independent. Correlated uncertainties are combined additively.

Equation 1 can be rewritten as:

$$k_s \leq 1 - \Delta k_m - \Delta k_s - (1-k_c) - \Delta k_c \qquad (2)$$

Noting that the NRC requires a 5% subcriticality margin ($\Delta k_m = 0.05$) and the definition of the bias ($\Delta k_{Bias} = 1-k_c$), the Equation 2 can then be written as:

$$k_s \leq 0.95 - \Delta k_s - \Delta k_{Bias} - \Delta k_{BU} \qquad (3)$$

where $\Delta k_{BU} = \Delta k_c$. Thus, the k_s (the maximum allowable value for k_{eff}) must be below 0.95 minus the bias, uncertainties in the bias, and uncertainties in the system being analyzed (i.e., Monte Carlo, mechanical, and modeling). This is an upper safety limit criteria often used in the DOE criticality safety community.

Alternatively, Equation 3 can be rewritten applying the bias and uncertainties to the k_{eff} of the system being analyzed as:

$$k_s \equiv k_{eff} + \Delta k_s + \Delta k_{Bias} + \Delta k_{BU} \leq 0.95 \qquad (4)$$

In Equation 4, k_{eff} replaces k_s, and k_s has been redefined as the effective multiplication factor of the system being analyzed, including the method bias and all uncertainties. This is a maximum calculated k_{eff} criteria often used in LWR spent fuel storage and transport analyses.

For use in criticality evaluations of LWR fuel in storage and transport casks, both k_{Bias} and Δk_{Bias} are evaluated below for KENO-Va with the 27-group ENDF/B-IV library.

6.5.1.1 Benchmark Experiments and Applicability

The criticality safety method is CSAS embedded in SCALE version 4.3 for the PC. CSAS includes the SCALE Material Information Processor, BONAMI-S, NITAWL-S, and KENO-Va. The Material Information Processor generates number densities for standard compositions, prepares geometry data for resonance self-shielding, and creates data input files for the cross-section processing codes. The BONAMI-S and NITAWL-S codes are used to prepare a resonance-corrected cross-section library in AMPX working format. The KENO-Va code uses Monte Carlo techniques to calculate the model k_{eff}. The 27-group ENDF/B-IV neutron cross-section library is used in this validation.

6.5.1.1.1 Description of Experiments

The 63 critical experiments selected are as follows: 9 B&W 2.46 wt % ^{235}U fuel storage (Baldwin), 10 PNL 4.31 wt % ^{235}U lattice (Bierman and Clayton, July 1980), 21 PNL 2.35 and 4.31 wt % ^{235}U with metal reflectors (Bierman, April 1979 and August 1981), 12 PNL flux trap (Bierman, July 1980 and June 1988) and 11 VCML 4.74 wt % ^{235}U experiments, some involving moderator density variations (Manaranche). These experiments span a range of fuel enrichments, fuel rod pitches, neutron absorber sheet characteristics, shielding materials and geometries that are typical of LWR fuel in a cask.

To achieve accurate results, three-dimensional models, as close to the actual experiment as possible, are used to evaluate the experiments. Stochastic Monte Carlo error is kept within ±0.1% by executing at least 1,000 neutrons/generation for more than 400 generations.

6.5.1.1.2 Applicability of Experiments

All of the experiments chosen in this validation are applicable to either PWR or BWR fuel. Fuel enrichments have covered a range from 2.35 up to 4.74 wt % ^{235}U, typical of LWR fuel presently used. The experiment fuel rod and pitch characteristics are within the range of standard PWR or BWR fuel rods (i.e., pellet OD from 0.78 to 1.2 cm, rod OD from 0.95 to 1.88 cm, and pitch from 1.26 to 1.87 cm). This is particularly true of the VCML (PWR rod type) and B&W experiments (BWR rod type). The H/U volume ratios of the experimental fuel arrays are within the range of PWR fuel assemblies (1.6 to 2.32) and BWR fuel assemblies (1.6 to 1.9). The experiments addressed the influence of water and metal reflector regions, including steel and lead, such as that present in the NAC-LWT cask.

Confidence in predicting criticality, including bias and uncertainty, has been demonstrated for LWR fuel with enrichments up to 4.74 wt % ^{235}U and, based on the lack of a significant trend with increasing enrichment, confidence in extrapolating up to 5 wt % ^{235}U is still high. Confidence in predicting subcriticality has been demonstrated for arrays in which critical controls consist of flux trap or single neutron absorber sheets or simple spacing. Confidence in predicting subcriticality has also been demonstrated for LWR fuel arrays next to water and metal reflector regions.

6.5.1.2 Results of Benchmark Calculations

The k-effective results for the experiments are shown in Table 6.5.1-1 and a frequency plot is provided in Figure 6.5.1-1. Five sets of cases are presented: Set 1, B&W; Set 2, PNL lattice; Set 3, PNL reflector; Set 4, PNL flux trap, and Set 5,VCML critical experiments. Sixty-three results are reported.

The overall average and standard deviation of the 63 cases is 0.9948 ± 0.0044. The average Monte Carlo error (statistical convergence) is ± 0.0012 for the 63 cases. This uncertainty component is statistically subtracted from the uncertainties because it is previously included in the standard deviation. The KENO-Va models are three-dimensional, fully explicit representations (no homogenization) of the experimental geometry. Therefore, the uncertainty resulting from limitations of geometrical modeling is taken to be 0.0. The experiments modeled cover the range of fuel types, enrichments, and metal reflector effects so that no extrapolations are necessary outside the range of data, and the uncertainty resulting from extrapolation is also taken to be 0.0. On the basis of the reported experimental error for the B&W cases, the reported error of the critical size number of rods for the PNL cases and the reported error for the critical height in the VCML cases, the experimental error is conservatively taken to be ± 0.001. Criticality can then be represented as 1.000 ± 0.001. This uncertainty component is added to the sum of the other uncertainties.

Thus, the bias or average difference between code calculated and the critical condition is Δk_{Bias}=1-0.9948 = 0.0052. The uncertainty in the bias, accounting for the statistical convergence (Monte Carlo error) and the uncertainty in criticality is $(0.0044^2 - 0.0012^2 + 0.0010^2)^{1/2} = 0.0043$. For 63 samples of criticality, the 95/95 one-side tolerance factor is 2.012 (Owen, 1963). The result is a 95/95 one-sided uncertainty in the bias of Δk_{BU} = 2.012x0.0043=0.0087. Equation 4 now becomes:

$$k_{eff} + \Delta k_s + 0.0052 + 0.0087 \leq 0.95$$

Where Δk_s becomes the uncertainty in k_s resulting from Monte Carlo error, mechanical and material tolerances, and geometric or material representations. If the nominal representation of the system is evaluated for k_s, then the mechanical and material perturbations can be evaluated independently and can be combined statistically as the root sum of squares. If the worst-case mechanical and material tolerances are used in the analysis, then Δk_s becomes 0.0 and the Monte Carlo error, σ_{mc}, can be combined with the uncertainty in the bias as:

$$k_{eff} + 2\sigma_{mc} + 0.0052 + 0.0087 \leq 0.95$$

6.5.1.3 Trends

Frequency distribution of k_{eff} values and scatter plots of k_{eff} versus wt % ^{235}U, rod pitch, H/U volume ratio, and average neutron group causing fission are shown in Figure 6.5.1-1 through Figure 6.5.1-5. Included in the scatter plots are linear regression lines with a corresponding correlation coefficient to statistically indicate any trend or lack thereof. In particular, the correlation coefficient is a measure of the linear relationship between k_{eff} and a critical experiment parameter. If r is +1, a perfect linear relationship with a positive slope is indicated, and if r is -1, a perfect linear relationship with a negative slope is indicated. When r is 0, no linear relationship is indicated. The largest correlation coefficient indicated in the plots is 0.1302 (k_{eff} versus enrichment) and the lowest is 0.0176 (k_{eff} versus Average Group of Fission). On the basis of the correlation coefficients, no statistically significant trends exist over the range of variables studied.

Figure 6.5.1-1 KENO-Va Validation—27 Group Library Results: Frequency Distribution of k_{eff} Values

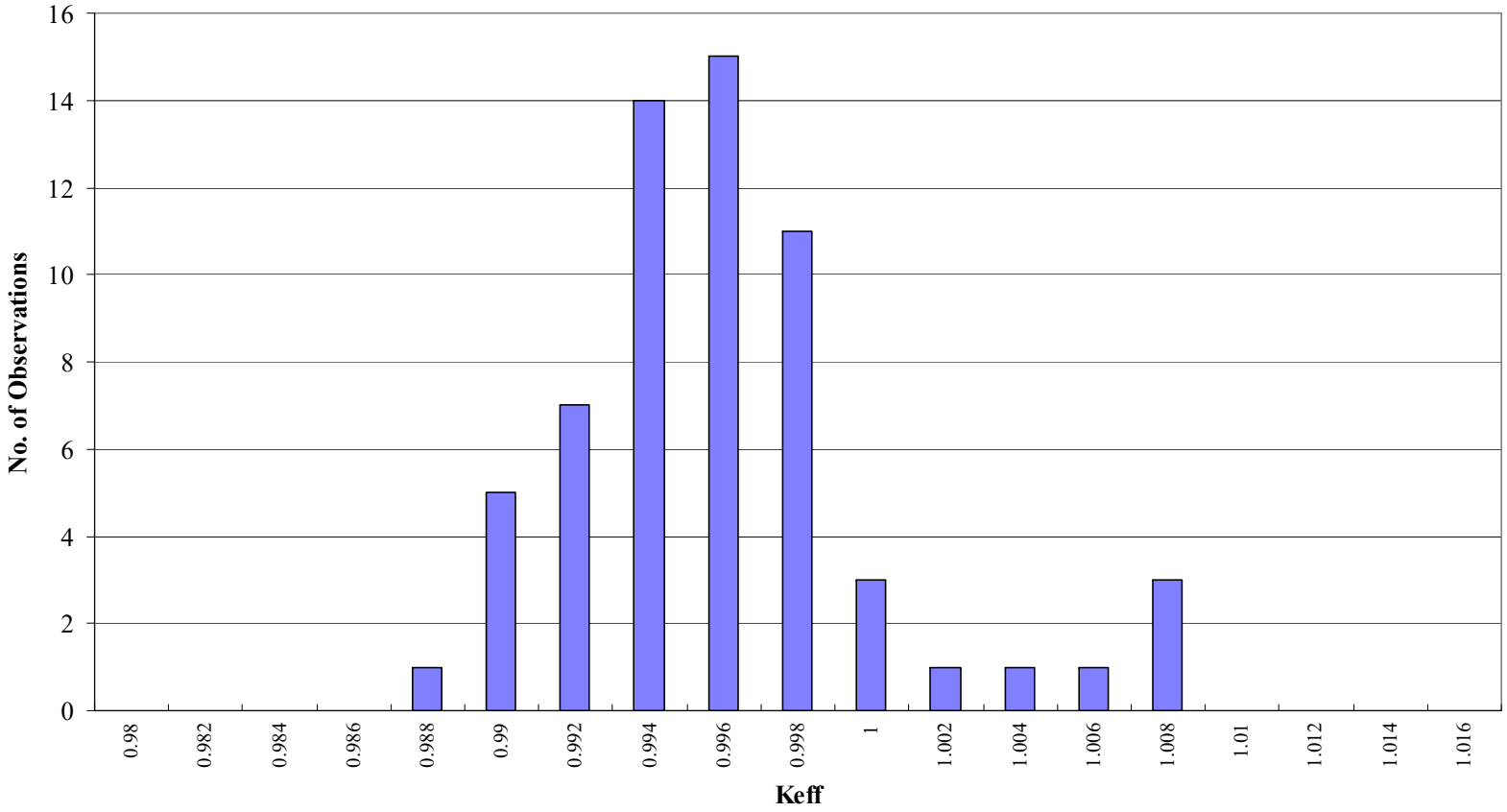

Figure 6.5.1-2 KENO-Va Validation—27-Group Library Results: k_{eff} versus Enrichment

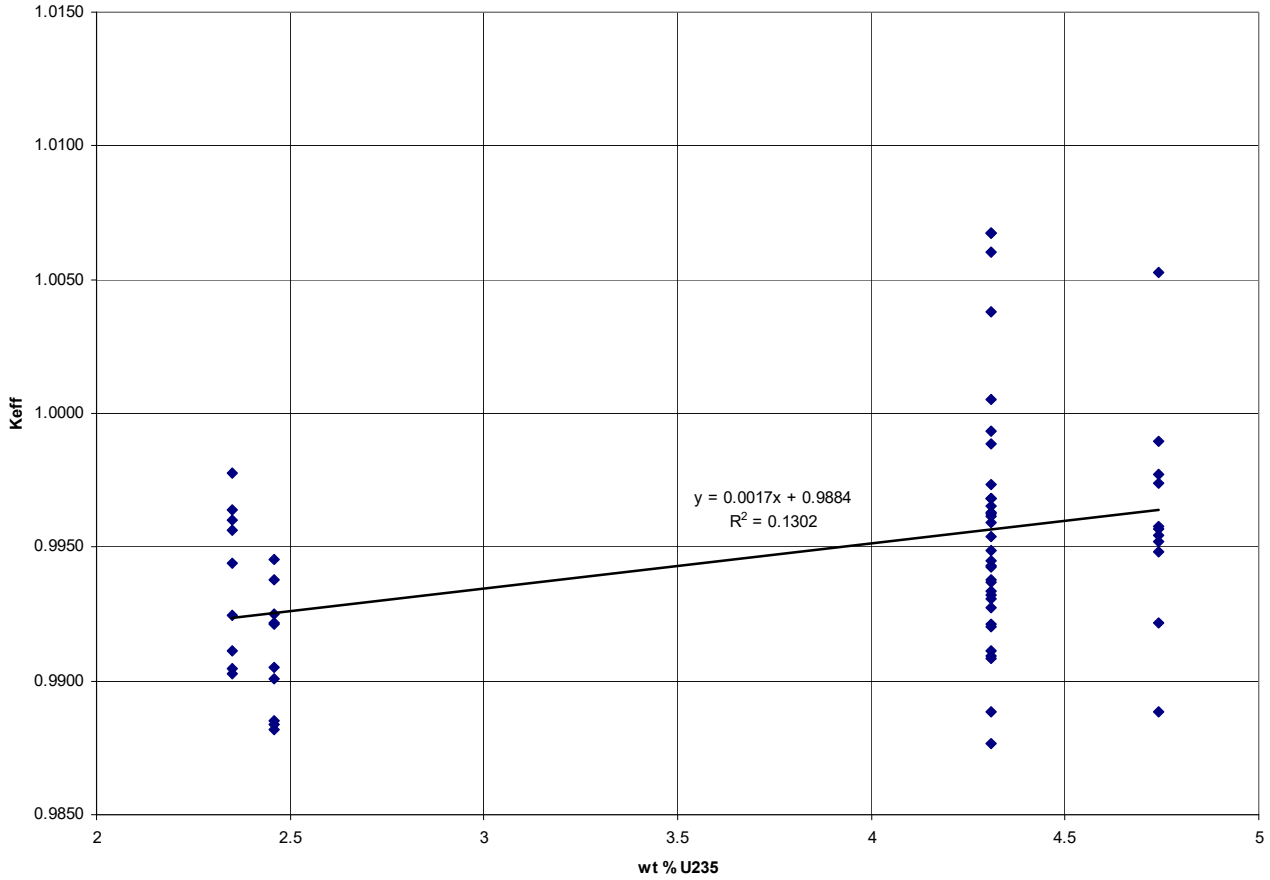

Figure 6.5.1-3 KENO-Va Validation—27-Group Library Results: k_{eff} versus Rod Pitch

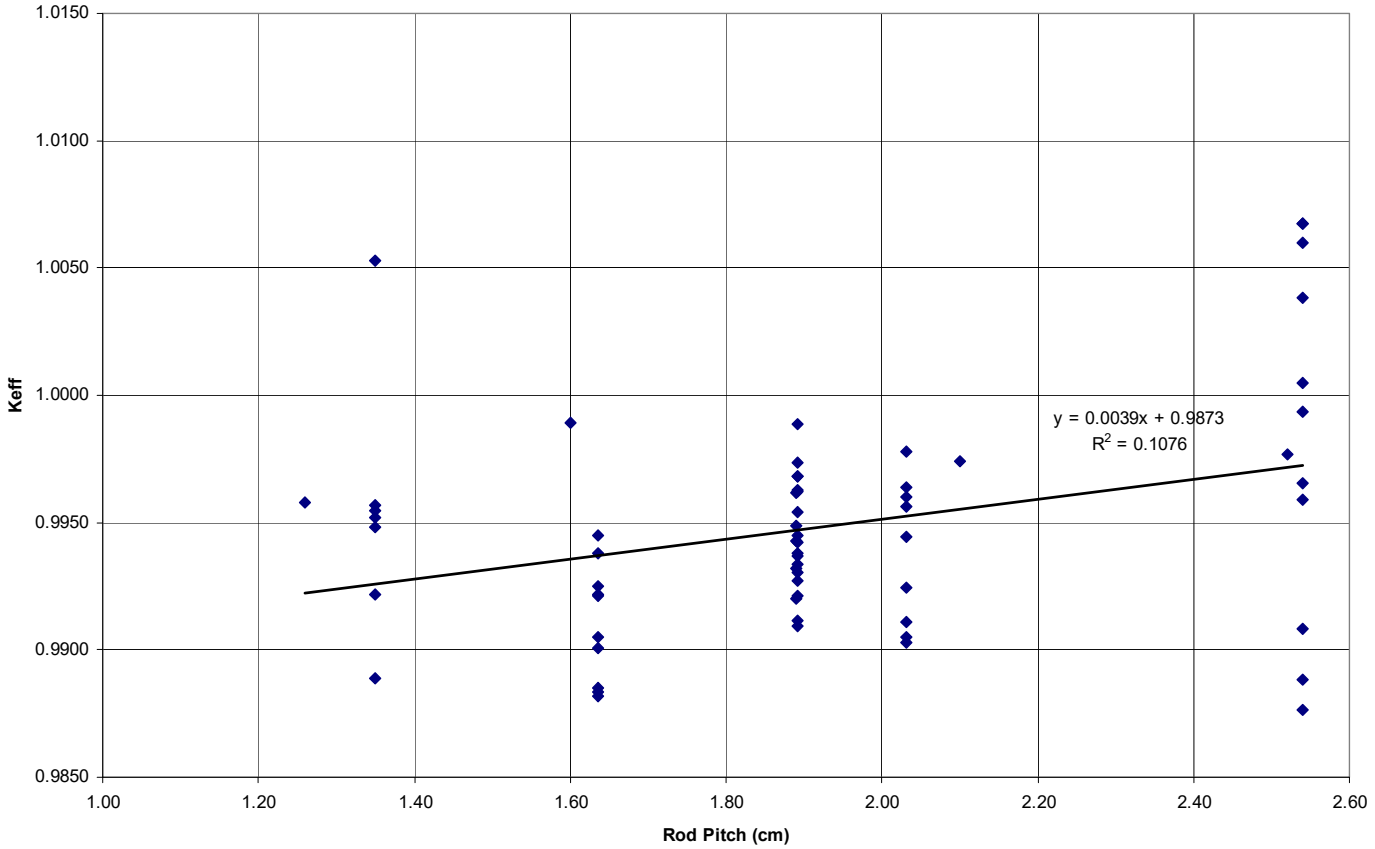

Figure 6.5.1-4 KENO-Va Validation—27-Group Library Results: k_{eff} versus H/U Volume Ratio

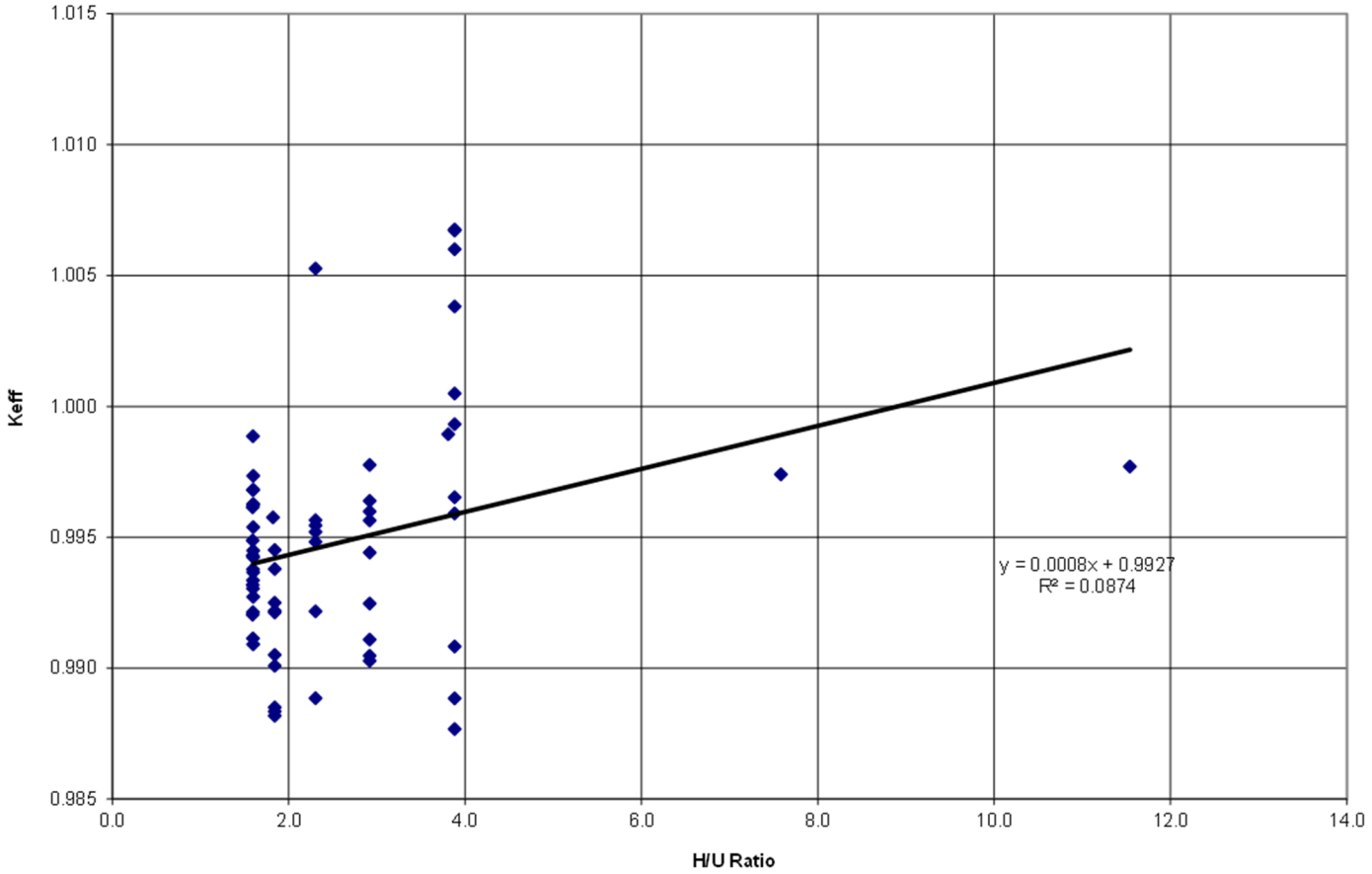

Figure 6.5.1-5 KENO-Va Validation—27-Group Library Results: k_{eff} versus Average Group of Fission

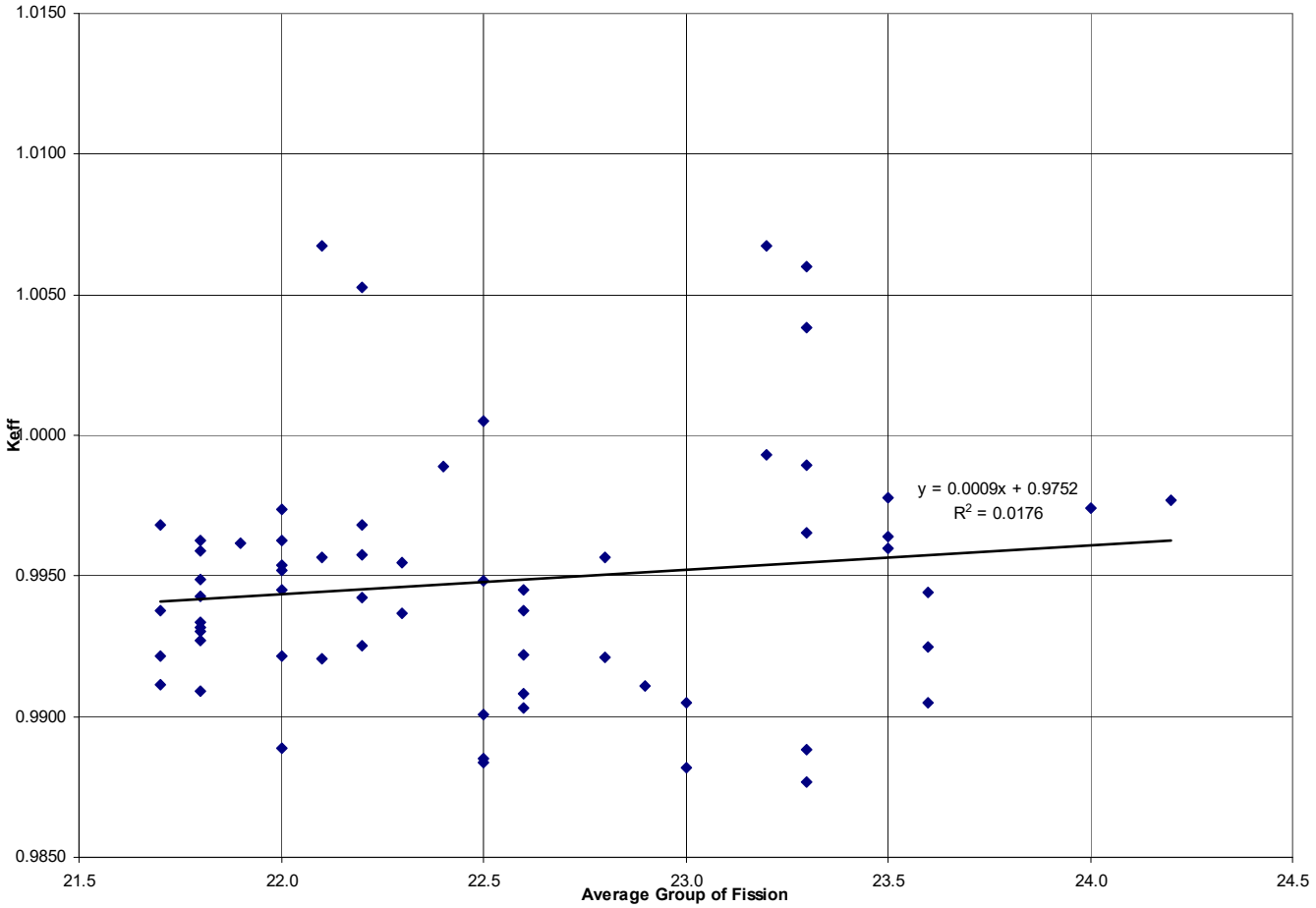

Table 6.5.1-1 KENO-Va and 27-Group Library Validation Statistics

Criticals	Configuration	wt % ^{235}U	Pitch (cm)	Pellet OD (cm)	Clad OD (cm)	H/U	Sol. B (ppm)	Poison	g $^{10}B/cm^2$	Gap(cm)	Gap Den.	Ave. Gfis	K_{eff}	k_s
Set 1										**Gap**				
B&W-I	Cylindrical	2.46	1.636	1.03	1.206	1.8	0	na	na	0		22.8	0.9921	0.0011
B&W-II	3X3-14X14	2.46	1.636	1.03	1.206	1.8	1037	na	na	0		22.2	0.9925	0.0009
B&W-III	3X3-14X14	2.46	1.636	1.03	1.206	1.8	764	na	na	1.636		22.6	0.9938	0.0009
B&W-IX	3X3-14X14	2.46	1.636	1.03	1.206	1.8	0	na	na	6.543		23	0.9905	0.0010
B&W-X	3X3-14X14	2.46	1.636	1.03	1.206	1.8	143	na	na	4.907		23	0.9882	0.0010
B&W-XI	3X3-14X14	2.46	1.636	1.03	1.206	1.8	514	Steel	0	1.636		22.6	0.9945	0.0010
B&W-XIII	3X3-14X14	2.46	1.636	1.03	1.206	1.8	15	B-Al	0.0052	1.636		22.6	0.9922	0.0010
B&W-XIV	3X3-14X14	2.46	1.636	1.03	1.206	1.8	92	B-Al	0.0040	1.636		22.5	0.9885	0.0010
B&W-XVII	3X3-14X14	2.46	1.636	1.03	1.206	1.8	487	B-Al	0.0008	1.636		22.5	0.9884	0.0010
B&W-XIX	3X3-14X14	2.46	1.636	1.03	1.206	1.8	634	B-Al	0.0003	1.636		22.5	0.9901	0.0009
												Average	0.9911	0.0023
Set 2										**Gap**				
PNL-043	17X13 Lattice	4.31	1.892	1.265	1.415	1.6	0	na	na	na	na	22.0	0.9954	0.0014
PNL-044	16X14 Lattice	4.31	1.892	1.265	1.415	1.6	0	na	na	na	na	22.0	0.9945	0.0013
PNL-045	14X16 Lattice	4.31	1.892	1.265	1.415	1.6	0	na	na	na	na	22.0	0.9974	0.0013
PNL-046	12x19 Lattice	4.31	1.892	1.265	1.415	1.6	0	na	na	na	na	22.0	0.9963	0.0013
PNL-087	4 11X14 Arrays	4.31	1.892	1.265	1.415	1.6	0	BORAL	0.066	2.83		21.8	0.9927	0.0012
PNL-079	4 11X14 Arrays	4.31	1.892	1.265	1.415	1.6	0	BORAL	0.030	2.83		21.8	0.9909	0.0012
PNL-093	4 11X14 Arrays	4.31	1.892	1.265	1.415	1.6	0	BORAL	0.026	2.83		21.8	0.9962	0.0012
PNL-115	4 9X12 Arrays	4.31	1.892	1.265	1.415	1.6	0	Aluminum	0	2.83		22.3	0.9937	0.0013
PNL-064	4 9X12 Arrays	4.31	1.892	1.265	1.415	1.6	0	Steel (.302)	0	2.83		22.2	0.9942	0.0012
PNL-071	4 9X12 Arrays	4.31	1.892	1.265	1.415	1.6	0	Steel (.485)	0	2.83		22.2	0.9968	0.0012
												Average	0.9948	0.0020

Table 6.5.1-1 KENO-Va and 27-Group Library Validation Statistics (Continued)

Criticals	Configuration	wt % ^{235}U	Pitch (cm)	Pellet OD (cm)	Clad OD (cm)	H/U	Sol. B (ppm)	Poison	g $^{10}B/cm^2$	Gap(cm)	Gap Den.	Ave. Gfis	K_{eff}	k_s
Set 3										**Cluster**	**Wall/Cluster**			
PNL-STA	3X1 St Refl.	2.35	2.032	1.1176	1.27	2.9	0	na	na	10.65	0.00	23.5	0.9964	0.0010
PNL-STB	3X1 St Refl.	2.35	2.032	1.1176	1.27	2.9	0	na	na	11.20	1.32	23.6	0.9944	0.0010
PNL-STC	3X1 St Refl.	2.35	2.032	1.1176	1.27	2.9	0	na	na	10.36	2.62	23.6	0.9905	0.0010
PNL-PBA	3X1 Pb Refl.	2.35	2.032	1.1176	1.27	2.9	0	na	na	13.84	0.00	23.5	0.9960	0.0011
PNL-PBB	3X1 Pb Refl.	2.35	2.032	1.1176	1.27	2.9	0	na	na	13.72	0.66	23.5	0.9978	0.0010
PNL_PBC	3X1 Pb Refl.	2.35	2.032	1.1176	1.27	2.9	0	na	na	11.25	2.62	23.6	0.9925	0.0010
PNL-DUA	3X1 DU Refl.	2.35	2.032	1.1176	1.27	2.9	0	na	na	11.83	0.00	22.6	0.9903	0.0009
PNL-DUB	3X1 DU Refl.	2.35	2.032	1.1176	1.27	2.9	0	na	na	14.11	1.96	22.8	0.9957	0.0010
PNL-DUC	3X1 DU Refl.	2.35	2.032	1.1176	1.27	2.9	0	na	na	13.70	2.62	22.9	0.9911	0.0010
PNL-H20	3X1 H2O Refl	4.31	2.54	1.265	1.415	3.9	0	na	na	8.24	inf	23.3	0.9877	0.0023
PNL-ST0	3X1 St Refl.	4.31	2.54	1.265	1.415	3.9	0	na	na	12.89	0	23.2	0.9993	0.0012
PNL-ST1	3X1 St Refl.	4.31	2.54	1.265	1.415	3.9	0	na	na	14.12	1.32	23.3	1.0060	0.0022
PNL-ST26	3X1 St Refl.	4.31	2.54	1.265	1.415	3.9	0	na	na	12.44	2.62	23.3	0.9965	0.0011
PNL-PB0	3X1 Pb Refl.	4.31	2.54	1.265	1.415	3.9	0	na	na	20.62	0	23.2	1.0068	0.0021
PNL-PB13	3X1 Pb Refl.	4.31	2.54	1.265	1.415	3.9	0	na	na	19.04	1.32	23.3	1.0038	0.0012
PNL-PB5	3X1 Pb Refl.	4.31	2.54	1.265	1.415	3.9	0	na	na	10.3	5.41	23.3	0.9889	0.0011
PNL-DU0	3X1 DU Refl.	4.31	2.54	1.265	1.415	3.9	0	na	na	15.38	0	21.8	0.9959	0.0011
PNL-DU13	3X1 DU Refl.	4.31	2.54	1.265	1.415	3.9	0	na	na	19.04	1.32	22.1	1.0067	0.0010
PNL-DU39	3X1 DU Refl.	4.31	2.54	1.265	1.415	3.9	0	na	na	18.05	3.91	22.5	1.0005	0.0011
PNL-DU54	3X1 DU Refl.	4.31	2.54	1.265	1.415	3.9	0	na	na	13.49	5.41	22.6	0.9908	0.0011
												Average	0.9964	0.0060

Table 6.5.1-1 KENO-Va and 27-Group Library Validation Statistics (Continued)

Criticals	Configuration	wt % ^{235}U	Pitch (cm)	Pellet OD (cm)	Clad OD (cm)	H/U	Sol. B (ppm)	Poison	g $^{10}B/cm^2$	Gap(cm)	Gap Den.	Ave. Gfis	K_{eff}	k_s
Set 4														
PNL-229	2x2 Flux Trap	4.31	1.89	1.265	1.415	1.6	0	Aluminum	0	3.81	0.9982	22.4	0.9989	0.0012
PNL-230	2x2 Flux Trap	4.31	1.89	1.265	1.415	1.6	0	BORAL	0.05	3.75	0.9982	21.7	0.9921	0.0012
PNL-228	2x2 Flux Trap	4.31	1.89	1.265	1.415	1.6	0	BORAL	0.13	3.73	0.9982	21.7	0.9911	0.0012
PNL-214	2x2 Flux Trap	4.31	1.89	1.265	1.415	1.6	0	BORAL	0.36	3.73	0.9982	21.7	0.9968	0.0013
PNL-231	2x2 Flux Trap	4.31	1.89	1.265	1.415	1.6	0	BORAL	0.45	3.71	0.9982	21.7	0.9938	0.0012
PNL-127	2x1 Flux Trap	4.31	1.89	1.265	1.415	1.6	0	BORAL	0.026	0.64	0.9982	21.8	0.9934	0.0010
PNL-126	2x1 Flux Trap	4.31	1.89	1.265	1.415	1.6	0	BORAL	0.026	1.54	0.9982	21.8	0.9931	0.0010
PNL-123	2x1 Flux Trap	4.31	1.89	1.265	1.415	1.6	0	BORAL	0.026	3.80	0.9982	21.8	0.9943	0.0010
PNL-125	2x1 Flux Trap	4.31	1.89	1.265	1.415	1.6	0	BORAL	0.026	5.16	0.9982	21.8	0.9932	0.0010
PNL-124	2x1 Flux Trap	4.31	1.89	1.265	1.415	1.6	0	BORAL	0.026	INF	0.9982	21.8	0.9949	0.0010
PNL-123-S	2x1 Flux Trap	4.31	1.89	1.265	1.415	1.6	0	Steel	0	3.80	0.9982	22.1	0.9920	0.0010
PNL-124-S	2x1 Flux Trap	4.31	1.89	1.265	1.415	1.6	0	Steel	0	INF	0.9982	21.9	0.9962	0.0010
												Average	0.9941	0.0022
Set 5										**Gap(cm)**	**Gap Den.**			
VCML	2x2 Water Gap	4.74	1.35	0.79	0.94	2.3	0	na	na	1.90	0	22.0	0.9922	0.0013
VCML	2x2 Water Gap	4.74	1.35	0.79	0.94	2.3	0	na	na	1.90	0.0323	22.0	0.9889	0.0013
VCML	2x2 Water Gap	4.74	1.35	0.79	0.94	2.3	0	na	na	1.90	0.2879	22.1	0.9957	0.0013
VCML	2x2 Water Gap	4.74	1.35	0.79	0.94	2.3	0	na	na	1.90	0.5540	22.2	1.0053	0.0011
VCML	2x2 Water Gap	4.74	1.35	0.79	0.94	2.3	0	na	na	2.50	0.9982	22.3	0.9955	0.0012
VCML	2x2 Water Gap	4.74	1.35	0.79	0.94	2.3	0	na	na	5.00	0.9982	22.5	0.9948	0.0013
VCML	Square Lattice	4.74	1.26	0.79	0.94	1.8	0	na	na	na	na	22.2	0.9958	0.0012
VCML	Square Lattice	4.74	1.35	0.79	0.94	2.3	0	na	na	na	na	22.0	0.9952	0.0012
VCML	Square Lattice	4.74	1.60	0.79	0.94	3.8	0	na	na	na	na	23.3	0.9989	0.0013
VCML	Square Lattice	4.74	2.10	0.79	0.94	7.6	0	na	na	na	na	24.0	0.9974	0.0012
VCML	Square Lattice	4.74	2.52	0.79	0.94	11.5	0	na	na	na	na	24.2	0.9977	0.0011
												Average	0.9961	0.0041

6.5.2 CSAS25 Criticality Benchmarks for Research Reactor Fuel Elements (MTR and DIDO)

In this section, the CSAS25 SCALE criticality analysis sequence is validated for use with high enrichment uranium (HEU), 80-90 wt % ^{235}U based, research reactor fuel. Not included in this validation section is Zirconium hydride based (TRIGA) fuel. This validation provides an estimate of the method bias and uncertainty to be applied in setting criticality safety limits for the NAC-LWT with MTR and DIDO fuel elements. Spiral type fuel and MOATA plate bundles are composed of MTR type fuel elements (flat or curved metallic plates with a uranium-aluminum alloy fuel meat within an aluminum clad). Bias established for the MTR and DIDO fuels is, therefore, applicable to the spiral fuel assemblies and plate bundles.

A subset of high enrichment critical experiments is selected from (Jordan) and (Johnson). (Johnson) contains detailed critical experiments with SPERT-D MTR plate fuel. The selected experiments are described in more detail below.

Five sets of critical experiments were selected from (Jordan). The first set included five experiments with various uranyl nitrate solutions in an unreflected cylindrical aluminum tank. Criticality was achieved by varying concentration, solution level or tank diameter. The second set included four experiments, which utilized the same solutions and tanks, but surrounded the tank with rectangular plexiglass reflector. The third set included seven experiments with various unreflected and reflected metal shapes. The fourth set included five experiments with various unreflected and reflected arrays of uranium metal cylinders in which criticality was achieved by spacing between arrays. The fifth set included four experiments with rectangular uranyl fluoride solution tanks made of aluminum in which criticality was achieved by adjusting tank spacing and solution height.

Five critical experiments were selected from (Johnson). The experiments selected were 4x4 arrays of MTR fuel plate type elements in which criticality was studied versus spacing between fuel elements. Criticality was achieved by setting up a 4x4 array with the given spacing and loading the outer row of fuel elements with a partial loading of fuel plates. The maximum loading of fuel plates in an element was 22. In order to preserve rectangular geometry, each partial element in a row contained the same number of fuel plates, ± 1 plate.

The results for the thirty cases executed on NAC's version of CSAS25 are shown in Table 6.5.1-1. The average, standard deviation, average Monte Carlo error, method bias and method uncertainty are evaluated as follows:

Average: $\bar{k} = \frac{1}{30}\sum_{1}^{30} k_i = 1.0044$

Raw Standard Deviation: $\sigma = \sqrt{\frac{1}{29}\sum_{1}^{30}(k_i - \bar{k})} = \pm 0.0089$

Average Monte Carlo Error: $\sigma_{mc} = \sqrt{\frac{1}{30}\sum_{1}^{30}\sigma_i} = \pm 0.0037$

Method Bias: $\Delta k_{bias} = 1 - \bar{k} = -0.0044$

Method Uncertainty: $\Delta k_{BU} = \sqrt{\sigma^2 - \sigma_{mc}^2} = \pm 0.0081$

95/95 One Sided Factor for 30 Cases: 2.23 (Owen)
95/95 Method Uncertainty: 2.23 * 0.0081 = 0.0181

These statistical results lead to the following equation for calculating criticality safety limits:

$$k_s = k_{nom} - 0.0044 + 0.0181 + 2\sigma_{mc}$$

where:

k_{nom} is the k_{eff} of the KENO-Va calculation

Δk_{BU} is the uncertainty associated with the benchmark calculations

σ_{mc} is the KENO-Va Monte Carlo Error associated with the calculated k_{eff} value

After conservatively neglecting the negative bias associated with the overprediction in k_{eff} produced by KENO-Va for these cases, the equation becomes:

$$k_s = k_{nom} + 0.0181 + 2\sigma_{mc}$$

No specific benchmarks are available for DIDO fuel assemblies. Since the fuel cylinders for the DIDO assembly are comprised of fuel plates similar in composition to those of the MTR element, the validation for the MTR element is considered to be applicable to the DIDO assembly.

Table 6.5.2-1 Criticality Results for High Enrichment Uranium Systems

Case	Geometry	Composition/ wt % ^{235}U	$k_{eff} \pm \sigma$
1	28 cm Cylindrical Tank 142.92 gU/l Solution	$UO_2(NO_3)_2$ 93.172	1.0238 ± 0.0042
2	28 cm Cylindrical Tank 357.71 gU/l Solution	$UO_2(NO_3)_2$ 93.172	1.0225 ± 0.0042
3	33 cm Cylindrical Tank 54.98 gU/l Solution	$UO_2(NO_3)_2$ 93.172	1.0037 ± 0.0034
4	33 cm Cylindrical Tank 137.4 gU/l Solution	$UO_2(NO_3)_2$ 93.172	1.0007 ± 0.0042
5	33 cm Cylindrical Tank 357.71 gU/l Solution	$UO_2(NO_3)_2$ 93.172	1.0031 ± 0.0040
6	28 cm Cyl. Plexi. Refl. 147.66 gU/l Solution	$UO_2(NO_3)_2$ 93.172	1.0114 ± 0.0043
7	28 cm Cyl. Plexi. Refl. 345.33 gU/l Solution	$UO_2(NO_3)_2$ 93.172	1.0094 ± 0.0040
8	33 cm Cyl. Plexi. Refl. 147.66 gU/l Solution	$UO_2(NO_3)_2$ 93.172	1.0082 ± 0.0038
9	33 cm Cyl. Plexi. Refl. 345.33 gU/l Solution	$UO_2(NO_3)_2$ 93.172	1.0090 ± 0.0048
10	17.4 cm Sphere	U Metal 93.8	1.0056 ± 0.0029
11	20.3 cm Cylinder Annulus	U-Mo Alloy 93.2	1.0048 ± 0.0026
12	70 cm Sphere	UO_2F_2 Solution 93.2	1.0016 ± 0.0021
13	64 cm Cylinder U/Graphite Annulus	U Metal/Graphite 93.2	1.0167 ± 0.0030
14	7.62 x 8.89 x 15.24 cm^3 Cuboid, Nat U Refl.	U Metal 94	1.0088 ± 0.0038
15	12.7 cm Hemisphere H_2O Reflector	U Metal 93.5	1.0053 ± 0.0030
16	13 cm Sphere H_2O Reflector	U Metal 97.67	1.0002 ± 0.0033

Table 6.5.2-1 Criticality Results for High Enrichment Uranium Systems (Continued)

Case	Geometry	Composition/ wt % ^{235}U	$K_{eff} \pm \sigma$
17	11.5 cm Cylinders 4x4x4 Array	U Metal 93.2	0.9937 ± 0.0028
18	11.5 cm Cylinders 2x2x2 Array	U Metal 93.2	1.0038 ± 0.0029
19	9.1 cm Cylinders 2x2x2 Array Paraf Refl	U Metal 93.2	1.0072 ± 0.0035
20	11.5 cm Cylinders 2x2x2 Array Paraf Refl	U Metal 93.2	1.0047 ± 0.0027
21	11.5 cm Cylinders 2x2x2 Array Paraf Refl	U Metal 93.2	1.0134 ± 0.0030
22	U Sol. Slabs bet. Al 3x1x1 Array 0 Sep.	UO_2F_2 Solution 93.2	1.0055 ± 0.0037
23	U Sol. Slabs bet. Al 3x1x1 2.54 cm Sep.	UO_2F_2 Solution 93.2	0.9866 ± 0.0036
24	U Sol. Slabs bet. Al 3x1x1 7.62 cm Sep.	UO_2F_2 Solution 93.2	0.9806 ± 0.0040
25	U Sol. Slabs bet. Al 3x1x1 11.43 cm Sep.	UO_2F_2 Solution 93.2	0.9939 ± 0.0044
26	22 U-Al Plates 4x4 Array 0.0” Spacing	U-Al Metal 93.17	1.0049 ± 0.0042
27	22 U-Al Plates 4x4 Array .25” Spacing	U-Al Metal 93.17	0.9980 ± 0.0038
28	22 U-Al Plates 4x4 Array .50” Spacing	U-Al Metal 93.17	1.0060 ± 0.0045
29	22 U-Al Plates 4x4 Array .75” Spacing	U-Al Metal 93.17	0.9979 ± 0.0041
30	22 U-Al Plates 4x4 Array 1.00” Spacing	U-Al Metal 93.17	1.0024 ± 0.0044

6.5.3 CSAS25 Criticality Benchmarks for TRIGA Fuel Elements

Three core configurations presented in the TRIGA MARK II Benchmark (Mele) were modeled with KENO-Va and the 27 Group ENDF/B-IV neutron cross section library to establish the KENO-Va. bias as part of the SCALE 4.3 package for use on TRIGA fuel elements. The core analyzed is an LEU (low enriched fuel, 20%) fueled core. Due to the relatively high ^{235}U density in the fuel element, the trend of this analysis is expected to be similar for the HEU (high enriched uranium, 70 wt% ^{235}U) elements. The results are summarized below.

Configuration	keff $\pm \sigma$
Core 132	1.01892 $\pm$ 0.00126
Core 133	1.02206 $\pm$ 0.00125
Core 134	1.01774 $\pm$ 0.00129
Average $\pm \sigma$	1.0196 $\pm$ 0.0022

Thus, the bias for these critical experiments is an approximate 2% over-prediction. This over-prediction will be conservatively ignored in the k_s calculations. The 95/95 Uncertainty Factor from [Owen] for 3 data points is 7.656. Therefore, the uncertainty factory to be applied in the k_s calculation is the standard deviation from the critical experiments multiplied by the 95/95 factor for 3 data points, or 7.656 × 0.0022 = 0.0168.

A review of the calculations performed for the benchmark experiments shows that the average energy causing fission is approximately 0.05 eV. The average energy causing fission for the wet base case is 0.0999 eV, while for the dry base case it is 0.415 eV. Because the benchmark calculation and TRIGA 24 fissions occur at energies below 1 eV, it is reasonable to assume that the benchmarks are applicable to these cases.

In the case of the TRIGA fuel criticality evaluations, the basic form for the application of bias and uncertainty is:

$$k_s = k_{mc} + \Delta k_{\text{Meth Bias}} + \Delta k_{\text{Benchmark Uncertainty}} + \Delta k_{\text{Basket Tolerances}} + 2\sigma_{mc}$$

where:

k_{mc} - CSAS reported reactivity

$\Delta k_{\text{Meth Bias}}$- Method bias for TRIGA Fuel from benchmark calculations

$\Delta k_{\text{Benchmark Uncertainty}}$ - Uncertainty associated with the TRIGA benchmark calculations

$\Delta k_{\text{Basket Tolerances}}$ - Mechanical biases associated with the basket and fuel configuration

σ_{mc} - Uncertainty associated with the CSAS reported reactivity

Based on benchmark information, the k_s equation is written as follows:

$$k_s = k_{mc} + 0.0 + 0.0168 + \Delta k_{Basket\ Tolerances} + 2\sigma_{mc}$$

If the worst case fuel element and basket configuration are used, the above equation reduces to:

$$k_s = k_{mc} + 0.0168 + 2\sigma_{mc}$$

6.5.4 MCNP Criticality Benchmarks LEU Oxide and MOX LWR Fuels

The results of the criticality analyses presented in this chapter must be compared to the upper subcritical limit (USL). The USL accounts for bias and uncertainty resulting from the method using information obtained from the analysis of criticality benchmark experimental data.

Criticality code validation is performed for the Monte Carlo evaluation code and neutron cross-section libraries. Criticality validation is required by the criticality safety standard ANSI/ANS-8.1.

6.5.4.1 Benchmark Experiments and Applicability Discussion

NUREG/CR-6361, "Criticality Benchmark Guide for Light-Water-Reactor Fuel in Transportation and Storage Packages" (NUREG), provides a guide to LWR criticality benchmark calculations and the determination of bias and subcritical limits in critical safety evaluations. In Section 2 of the NUREG, a series of LWR critical experiments is described in sufficient detail for independent modeling. In Section 3, the critical experiments are modeled, and the results (k_{eff} values) are presented. The method utilized in the NUREG is KENO-Va with the 44-group ENDF/B-V cross-section library embedded in SCALE 4.3. In Section 4, a guide for the determination of bias and subcritical safety limits is provided based on ANSI/ANS-8.1 and statistical analysis of the trending in the bias. Finally, guidelines for experiment selection and applicability are presented in Section 5. The approach outlined in Section 4 of the NUREG is described in detail herein and is implemented for MCNP5 with continuous energy ENDF/B-VII cross-sections.

NUREG/CR-6361 implements ANSI/ANS-8.1 criticality safety criterion as follows.

$$k_s \leq k_c - \Delta k_s - \Delta k_c - \Delta k_m \quad \text{(Equation 1)}$$

where:

k_s = calculated allowable maximum multiplication factor, k_{eff}, of the system being evaluated for all normal or credible abnormal conditions or events.

k_c = mean k_{eff} that results from a calculation of benchmark criticality experiments using a particular calculation method. If the calculated k_{eff} values for the criticality experiments exhibit a trend with an independent parameter, then k_c shall be determined by extrapolation based on best fit to calculated values. Criticality experiments used as benchmarks in computing k_c should have physical compositions, configurations and nuclear characteristics (including reflectors) similar to those of the system being evaluated.

Δk_s = allowance for the following:

- statistical or convergence uncertainties, or both, in computation of k_s

- material and fabrication tolerances
- geometric or material representations used in computational method

Δk_c = margin for uncertainty in kc, which includes allowance for the following:

- uncertainties in critical experiments
- statistical or convergence uncertainties, or both, in computation of k_c
- uncertainties resulting from extrapolation of k_c outside range of experimental data
- uncertainties resulting from limitations in geometrical or material representations used in the computational method

Δk_m = arbitrary administrative margin to ensure subcriticality of ks

The various uncertainties are combined statistically if they are independent. Correlated uncertainties are combined by addition.

Equation 1 can be rewritten as shown.

$$k_s \leq 1 - \Delta k_m - \Delta k_s - (1 - k_c) - \Delta k_c \quad \text{(Equation 2)}$$

Noting that the definition of the bias is $\beta = 1 - k_c$, Equation 2 can be written as shown.

$$k_s + \Delta k_s \leq 1 - \Delta km - \beta - \Delta\beta \quad \text{(Equation 3)}$$

where:

$$\Delta\beta = \Delta k_c$$

Thus, the maximum allowable value for k_{eff} plus uncertainties in the system being analyzed must be below 1 minus an administrative margin (typically 0.05), which includes the bias and the uncertainty in the bias. This can also be written as shown.

$$k_s + \Delta k_s \leq \text{Upper Subcritical Limit (USL)} \quad \text{(Equation 4)}$$

where:

$$USL \equiv 1 - \Delta k_m - \beta - \Delta\beta \quad \text{(Equation 5)}$$

This is the USL criterion as described in Section 4 of NUREG/CR-6361. Two methods are prescribed for the statistical determination of the USL. The "Confidence Band with Administrative Margin (USL-1)" approach is implemented here and is referred to generically as USL. A $\Delta k_m = 0.05$ and a lower confidence band are specified based on a linear regression of k_{eff} as a function of some system parameter. As recommended in NUREG/CR-6361, a simple linear regression is performed on each system parameter, and the line with the greatest correlation is used to functionalize β.

Application specific sections (e.g., low enriched uranium, MOX) contains the list of criticality benchmarks employed in the validation of MCNP with its continuous energy neutron cross-

section libraries and the processing of the experimental results into the USL. Included in the subsequent sections are linear fits of reactivity (k_{eff}) to each of the system parameters. Experiments were chosen to reflect the fuel geometry and materials as closely as available.

6.5.4.2 LEU (Maximum 5 wt % ^{235}U in UO_2) Results of Benchmark Calculations

The range of parameters included in the low enriched uranium (LEU) benchmarks is shown in Table 6.5.4-1. Experiments are chosen to reflect the fuel evaluated for shipment. This includes the use of arrays of low enriched uranium oxide fuel rods with light water moderation. To cover potential borated water conditions within spent fuel pools or absorbers placed into the basket experiments with criticality control by spacing, borated moderator and/or borated absorber panels and tubes are included in the benchmarks effort. Trending in k_{eff} was evaluated for the following independent variables: wt % ^{235}U, rod pitch, H/U volume ratio, energy of the average neutron lethargy causing fission (EALCF), ^{10}B loading of the absorber sheet, and soluble boron loading. No statistically significant trends were found for any of the system parameters. USLs are, therefore, generated for each of the independent variables. A minimum USL covering the range of applicability of the benchmark set is determined.

To evaluate the relative importance of the trend analysis to the upper subcritical limits, correlation coefficients are required for all independent parameters. The linear correlation coefficient, R, is calculated by taking the square root of the R^2 value. In particular, the correlation coefficient, R, is a measure of the linear relationship between k_{eff} and a critical experiment parameter. If R is +1, a perfect linear relationship with a positive slope is indicated. If R is -1, a perfect linear relationship with a negative slope is indicated. When R is 0, no linear relationship is indicated.

Table 6.5.4-2 contains the correlation coefficient, R, for each linear fit of k_{eff} versus experimental parameter. Linear fits and correlation constants are based on the 183 data-point evaluation sets plotted in Section 6.5.4.3. The cluster gap plot is limited to the 137 data points for experiments containing multiple fuel rod clusters. Single fuel rod cluster experiments documented in LEU-COMP-THERM sets 06, 14, 35 and 50, in addition to LEU-COMP-THERM experiments 01-01, 02-01 to -03, and 08-01 to -15, were, therefore, excluded from the cluster gap study. The 183 data points evaluated for the remaining parameters represent the complete set of experiments listed in Section 6.5.4.3 minus the three high energy lethargy experiments above 0.35 eV (Experiments LEU-COMP-THERM 14-05, -06 and -07). The addition of these points, while not resulting in a significant linear fit, produces a noticeable slope to the USL correlation not representative of the remaining data fits. As this increased slope results in a higher USL, it is acceptable to discard these data points. The three higher energy points are removed from all independent variables for consistency.

As there is no significant correlation to any of the independent variables, the USL for each independent variable is calculated and shown with its range of applicability in Table 6.5.4-2. A sample output for EALCF is shown in Figure 6.5.4-1. Uncertainties included in the USLSTATS evaluation are the Monte Carlo uncertainty associated with the reactivity calculation and experimental uncertainty that was provided in the literature for each of the cases.

Based on all the independent variable correlations, a lower limit constant USL of 0.9376 may be applied. The range of applicability (area of applicability) of this limit may be extended to 5 wt % enriched fuel, as the correlation shows no significant trend with enrichment between 2.35 and 4.74 wt %, and that the limited trending observed increases the USL. Extending the range of applicability for the average neutron lethargy is based on a minimal, but positive, trend of the USL versus EALCF. Studies, including additional data points up to 0.7722 eV, indicate that the trending continues to the higher energy levels.

Figure 6.5.4-1 LEU USLSTATS Output for EALCF

```
  ************************************************************************
                        Version 1.4, April 23, 2003
                      Oak Ridge National Laboratory
  ************************************************************************
   Input to statistical treatment from file:enrich-183.in
Title: keff vs enrichment
   Proportion of the population = .995
   Confidence of fit            = .950
   Confidence on proportion     = .950
   Number of observations       =  183
   Minimum value of closed band =    0.00
   Maximum value of closed band =    0.00
   Administrative margin        =    0.05
```

independent variable - x	dependent variable - y	deviation in y	independent variable - x	dependent variable - y	deviation in y
2.35000E+00	9.94910E-01	3.42000E-03	2.35000E+00	9.95090E-01	3.46000E-03
2.35000E+00	9.92830E-01	3.38000E-03	2.35000E+00	9.92520E-01	3.47000E-03
2.35000E+00	9.98060E-01	3.38000E-03	2.35000E+00	9.95620E-01	3.50000E-03
2.35000E+00	9.96550E-01	3.42000E-03	2.35000E+00	9.93130E-01	3.55000E-03
2.35000E+00	9.89310E-01	3.44000E-03	2.35000E+00	9.98130E-01	3.58000E-03
2.35000E+00	9.95340E-01	3.41000E-03	2.35000E+00	9.96700E-01	3.56000E-03
2.35000E+00	9.93880E-01	3.44000E-03	2.35000E+00	9.93830E-01	3.55000E-03
2.35000E+00	9.89690E-01	3.36000E-03	2.35000E+00	9.92770E-01	3.47000E-03
4.30600E+00	9.95160E-01	2.79000E-03	2.35000E+00	9.92920E-01	3.50000E-03
4.30600E+00	9.93670E-01	2.54000E-03	2.35000E+00	9.96410E-01	3.46000E-03
4.30600E+00	9.96340E-01	2.76000E-03	2.35000E+00	9.93060E-01	3.49000E-03
4.30600E+00	9.93110E-01	2.64000E-03	2.35000E+00	9.96500E-01	3.45000E-03
4.30600E+00	9.93000E-01	2.49000E-03	2.35000E+00	9.94680E-01	3.50000E-03
2.59600E+00	9.92680E-01	2.10000E-03	2.35000E+00	9.93300E-01	3.47000E-03
2.59600E+00	9.93190E-01	2.14000E-03	2.35000E+00	9.91810E-01	3.46000E-03
2.59600E+00	9.92990E-01	2.13000E-03	2.35000E+00	9.93920E-01	3.47000E-03
2.59600E+00	9.94790E-01	2.13000E-03	2.35000E+00	9.95560E-01	3.55000E-03
2.59600E+00	9.93100E-01	2.12000E-03	2.35000E+00	9.94540E-01	3.51000E-03
2.59600E+00	9.93240E-01	2.12000E-03	2.35000E+00	9.94490E-01	3.47000E-03
2.59600E+00	9.91990E-01	2.12000E-03	2.35000E+00	9.91300E-01	3.52000E-03
2.59600E+00	9.93820E-01	2.12000E-03	2.35000E+00	9.94800E-01	3.47000E-03
2.59600E+00	9.94450E-01	2.12000E-03	2.35000E+00	9.93500E-01	3.60000E-03
2.59600E+00	9.95440E-01	2.13000E-03	2.35000E+00	9.94000E-01	3.45000E-03
2.59600E+00	9.94410E-01	2.12000E-03	2.35000E+00	9.96280E-01	3.53000E-03
2.59600E+00	9.93920E-01	2.15000E-03	2.35000E+00	9.92620E-01	3.45000E-03
2.59600E+00	9.95090E-01	2.14000E-03	2.35000E+00	9.94100E-01	3.53000E-03
2.59600E+00	9.93780E-01	2.12000E-03	2.35000E+00	9.96470E-01	3.52000E-03
2.59600E+00	9.95040E-01	2.14000E-03	2.35000E+00	9.93600E-01	3.47000E-03
2.59600E+00	9.94380E-01	2.11000E-03	2.35000E+00	9.97020E-01	3.49000E-03
2.59600E+00	9.95730E-01	2.12000E-03	2.35000E+00	9.94970E-01	3.50000E-03
2.59600E+00	9.94270E-01	2.14000E-03	2.35000E+00	9.91950E-01	3.55000E-03
2.45900E+00	9.98350E-01	1.34000E-03	2.59600E+00	9.93410E-01	1.93000E-03
2.45900E+00	9.96860E-01	1.36000E-03	2.59600E+00	9.91310E-01	2.05000E-03
2.45900E+00	9.99310E-01	1.24000E-03	4.73800E+00	9.95860E-01	4.36000E-03
2.45900E+00	9.97950E-01	1.36000E-03	4.73800E+00	9.93580E-01	4.53000E-03
2.45900E+00	9.97650E-01	1.38000E-03	4.73800E+00	9.95390E-01	4.58000E-03
2.45900E+00	9.96990E-01	1.35000E-03	4.73800E+00	9.92370E-01	4.54000E-03
2.45900E+00	9.97230E-01	1.37000E-03	4.73800E+00	9.91440E-01	4.62000E-03
2.45900E+00	9.96590E-01	1.40000E-03	4.73800E+00	9.98780E-01	4.82000E-03
2.45900E+00	9.95260E-01	1.40000E-03	4.73800E+00	9.94180E-01	4.94000E-03
2.45900E+00	9.97450E-01	1.36000E-03	4.73800E+00	9.92400E-01	4.90000E-03
2.45900E+00	9.97590E-01	1.38000E-03	4.73800E+00	9.96930E-01	4.98000E-03
2.45900E+00	9.97650E-01	1.36000E-03	4.73800E+00	9.91370E-01	5.05000E-03
2.45900E+00	9.98880E-01	1.39000E-03	2.35000E+00	9.92500E-01	2.34000E-03
2.45900E+00	9.97350E-01	1.37000E-03	2.35000E+00	9.95140E-01	2.43000E-03
2.45900E+00	9.97580E-01	1.39000E-03	2.35000E+00	9.92190E-01	2.33000E-03
2.45900E+00	9.97720E-01	1.39000E-03	2.35000E+00	9.94760E-01	2.40000E-03
2.45900E+00	9.96910E-01	1.35000E-03	2.35000E+00	9.94690E-01	3.67000E-03
4.30600E+00	9.95480E-01	2.84000E-03	2.35000E+00	9.94340E-01	2.49000E-03
4.30600E+00	9.93430E-01	2.78000E-03	2.35000E+00	9.93190E-01	2.39000E-03
4.30600E+00	9.93300E-01	2.81000E-03	4.73800E+00	9.93300E-01	1.28000E-03
4.30600E+00	9.93710E-01	2.85000E-03	4.73800E+00	9.93400E-01	1.23000E-03
4.30600E+00	9.95930E-01	2.73000E-03	4.73800E+00	9.94890E-01	1.25000E-03
4.30600E+00	9.92950E-01	2.85000E-03	4.73800E+00	9.93190E-01	1.25000E-03
4.30600E+00	9.96160E-01	2.89000E-03	4.73800E+00	9.93060E-01	1.28000E-03
4.30600E+00	9.93890E-01	2.73000E-03	2.45900E+00	9.91330E-01	2.03000E-03
4.30600E+00	9.95710E-01	2.96000E-03	2.45900E+00	9.95970E-01	2.43000E-03
4.30600E+00	9.93190E-01	2.60000E-03	2.45900E+00	9.95550E-01	2.42000E-03
4.30600E+00	9.93780E-01	2.75000E-03	2.45900E+00	9.94860E-01	2.42000E-03
4.30600E+00	9.92630E-01	2.84000E-03	2.45900E+00	9.95040E-01	2.42000E-03
4.30600E+00	9.95660E-01	2.75000E-03	2.45900E+00	9.95420E-01	2.42000E-03
4.30600E+00	9.94310E-01	2.82000E-03	2.45900E+00	9.95300E-01	2.42000E-03

Figure 6.5.4-1 LEU USLSTATS Output for EALCF (Continued)

```
  4.30600E+00     9.96390E-01     2.95000E-03             2.45900E+00     9.95070E-01     2.42000E-03
  4.30600E+00     9.96860E-01     2.79000E-03             2.45900E+00     9.93680E-01     1.93000E-03
  4.30600E+00     9.97160E-01     2.68000E-03             2.45900E+00     9.92100E-01     1.93000E-03
  4.30600E+00     9.92370E-01     2.86000E-03             2.45900E+00     9.94470E-01     1.93000E-03
  4.30600E+00     9.97190E-01     2.81000E-03             2.45900E+00     9.90730E-01     1.93000E-03
  4.30600E+00     9.94340E-01     2.76000E-03             2.45900E+00     9.86520E-01     2.23000E-03
  4.30600E+00     9.96920E-01     2.79000E-03             2.45900E+00     9.86340E-01     1.93000E-03
  4.30600E+00     9.96060E-01     2.83000E-03             2.45900E+00     9.90420E-01     2.42000E-03
  4.30600E+00     9.97400E-01     2.94000E-03             2.45900E+00     9.89740E-01     2.03000E-03
  4.30600E+00     9.92810E-01     2.69000E-03             2.45900E+00     9.91520E-01     2.72000E-03
  4.30600E+00     9.92560E-01     2.88000E-03             2.45900E+00     9.90290E-01     2.13000E-03
  4.30600E+00     9.93650E-01     2.88000E-03             2.45900E+00     9.89270E-01     1.93000E-03
  4.30600E+00     9.94970E-01     2.85000E-03             2.60000E+00     9.95710E-01     1.42000E-03
  2.45900E+00     9.94820E-01     3.21000E-03             2.60000E+00     9.96180E-01     1.42000E-03
  2.45900E+00     9.94940E-01     3.21000E-03             2.60000E+00     9.95340E-01     1.52000E-03
  2.45900E+00     9.95140E-01     3.21000E-03             2.60000E+00     9.95470E-01     1.52000E-03
  2.45900E+00     9.95640E-01     3.21000E-03             2.60000E+00     9.96910E-01     1.42000E-03
  2.45900E+00     9.95080E-01     3.21000E-03             2.60000E+00     9.96140E-01     1.42000E-03
  2.45900E+00     9.95260E-01     3.21000E-03             2.60000E+00     9.95890E-01     1.42000E-03
  2.45900E+00     9.95200E-01     3.21000E-03             2.60000E+00     9.96240E-01     1.62000E-03
  4.30600E+00     9.94020E-01     1.92000E-03             2.60000E+00     9.96670E-01     1.52000E-03
  4.30600E+00     9.94460E-01     1.91000E-03             2.60000E+00     9.96760E-01     1.62000E-03
  4.30600E+00     9.93550E-01     1.91000E-03             2.60000E+00     9.96370E-01     1.62000E-03
  4.30600E+00     9.94010E-01     1.91000E-03             2.60000E+00     9.96430E-01     1.72000E-03
  4.30600E+00     9.92810E-01     3.27000E-03             2.60000E+00     9.97010E-01     1.62000E-03
  4.30600E+00     9.94960E-01     1.91000E-03             2.60000E+00     9.96500E-01     1.62000E-03
  4.30600E+00     9.93780E-01     1.90000E-03             2.60000E+00     9.96340E-01     1.62000E-03
  4.30600E+00     9.96680E-01     1.95000E-03             2.60000E+00     9.96580E-01     1.71000E-03
  4.30600E+00     9.85950E-01     7.71000E-03             2.60000E+00     9.96450E-01     1.62000E-03
  2.35000E+00     9.94940E-01     3.54000E-03
 chi =  2.5464 (upper bound = 9.49). The data tests normal.
       Output from statistical treatment
 keff vs enrichment
  Number of data points (n)                        183
  Linear regression, k(X)                          0.9950 + (-1.5719E-04)*X
  Confidence on fit (1-gamma) [input]               95.0%
  Confidence on proportion (alpha) [input]          95.0%
  Proportion of population falling above
  lower tolerance interval (rho) [input]            99.5%
  Minimum value of X                                2.3500E+00
  Maximum value of X                                4.7380E+00
  Average value of X                                3.0597E+00
  Average value of k                                 0.99453
  Minimum value of k                                 0.98595
  Variance of fit, s(k,X)^2                         5.0408E-06
  Within variance, s(w)^2                           7.8633E-06
  Pooled variance, s(p)^2                           1.2904E-05
  Pooled std. deviation, s(p)                       3.5922E-03
  C(alpha,rho)*s(p)                                 1.5554E-02
  student-t @ (n-2,1-gamma)                         1.64500E+00
  Confidence band width, W                          5.9793E-03
  Minimum margin of subcriticality, C*s(p)-W        9.5746E-03

  Upper subcritical limits: (  2.3500     <= X <=   4.7380    )
  ***** ********** *******
  USL Method 1 (Confidence Band with
  Administrative Margin)             USL1 = 0.9390 + (-1.5719E-04)*X
  USL Method 2 (Single-Sided Uniform
  Width Closed Interval Approach)    USL2 = 0.9795 + (-1.5719E-04)*X
  USLs Evaluated Over Range of Parameter X:
  **** ********* **** ***** ** ********* **

  X:  2.35E+0  2.69E+0  3.03E+0  3.37E+0  3.71E+0  4.06E+0  4.40E+0  4.74E+0
     ------------------------------------------------------------------------
USL-1:    0.9387   0.9386   0.9386   0.9385   0.9385   0.9384   0.9383   0.9383
USL-2:    0.9791   0.9790   0.9790   0.9789   0.9789   0.9788   0.9788   0.9787
     ------------------------------------------------------------------------
```

Table 6.5.4-1 LEU Range of Applicability for Complete Set of 186 Benchmark Experiments

Parameter	Minimum	Maximum
Enrichment (wt % ^{235}U)	2.350%	4.738%
Fuel rod pitch (cm)	1.30	2.54
Fuel pellet outer diameter (cm)	0.790	1.265
Fuel rod diameter (cm)	0.9400	1.4172
H/^{235}U atom ratio	72.7	403.9
Soluble boron (ppm by weight)	0	4986
Cluster gap (cm)	1.206	13.750
Boron (^{10}B) plate loading (g/cm^2)	0.0000	0.0670
Energy of average neutron lethargy causing fission (eV)	0.09781	0.77219

Table 6.5.4-2 LEU Correlation Coefficients and USLs for Benchmark Experiments

Variable	R^2	R	Range of Applicability	USLSTATS Correlation	USL Low	USL High
Enrichment (wt % ^{235}U)	0.00410	0.064	2.35<=X<=4.738	0.9390-1.57E-04X	0.9382	0.9386
Fuel rod pitch (cm)	0.00150	0.039	1.3<=X<=2.54	0.9380+2.64E-04X	0.9383	0.9386
Fuel pellet outer diameter (cm)	0.00260	0.051	0.79<=X<=1.265	0.9376+8.25E-04X	0.9382	0.9386
Fuel rod diameter (cm)	0.00380	0.062	0.94<=X<=1.4172	0.9372+1.01E-03X	0.9381	0.9386
H/^{235}U atom ratio	3.00E-06	0.002	106.2<=X<=403.9	0.9386-4.74E-08X	0.9385	0.9385
Soluble boron (ppm by weight)	0.01730	0.132	0<=X<=4986	0.9379+3.96E-07X	0.9379	0.9398
Cluster gap (cm)	0.01940	0.139	1.2<=X<=13.8	0.9375+9.82E-05X	0.9376	0.9388
Boron (^{10}B) plate loading (g/cm^2)	0.00006	0.008	0<=X<=0.067	0.9382-1.37E-03X	0.9381	0.9382
Energy of average neutron lethargy causing fission (eV)	0.00900	0.095	0.09781<=X<=0.3447	0.9379+3.45E-03X	0.9382	0.9390

6.5.4.3 LEU (Maximum 5 wt % ^{235}U in UO_2) Criticality Benchmarks

From the International Handbook of Evaluated Criticality Safety Benchmark Experiments, 186 experiments are selected as the basis of the MCNP benchmarking. Experiments were selected for compatibility of materials and geometry with the spent fuel casks. Of particular interest are benchmarks with arrays of low enriched uranium oxide fuel rods.

MCNP benchmark cases represent a collection of files composed of inputs directly obtained from references (with cross-section sets adjusted to those used in the cask analysis), NAC modified input files representing unique geometries based on reference input files, and input files constructed from the experimental material and geometry information. All cases were reviewed on a "preparer/checker" principle for modeling consistency with the cask models and the choice of code options. Due to large variations in the benchmark complexities, not all options employed in the cask models are reflected in each of the benchmarks (e.g., UNIVERSE structure). A review of the criticality results did not indicate any result trend due to particular modeling choices (e.g., using the UNIVERSE structure versus a single universe, or employing KSRC versus SDEF sampling).

Key system parameters, the experimental uncertainty, and calculated k_{eff} and σ for each experiment are shown in Table 6.5.4-3. Stochastic Monte Carlo error is kept within ±0.2% and each output is checked to assure that the MCNP built-in statistical checks on the results are passed and that all fissile material is sampled.

Scatter plots of k_{eff} versus system parameters for 183 data point sets (full set minus three high lethargy points above 0.35 eV) are created (see Figure 6.5.4-2 through Figure 6.5.4-10). Included in these scatter plots are linear regression lines with a corresponding correlation coefficient (R^2) to statistically indicate any trend or lack thereof. Scatter plates are created for k_{eff} versus the following.

- Enrichment in ^{235}U (wt % ^{235}U)
- Fuel rod pitch (cm)
- Fuel pellet outer diameter (cm)
- Fuel rod outer diameter (cm)
- Hydrogen/uranium (^{235}U) atom ratio
- Soluble boron (ppm by weight)
- Cluster gap spacing (spacing between assemblies in cm)
- Boron (^{10}B) plate loading (g/cm^2)
- Energy of average neutron lethargy causing fission (eV)

Figure 6.5.4-2 k_{eff} versus Fuel Enrichment (LEU)

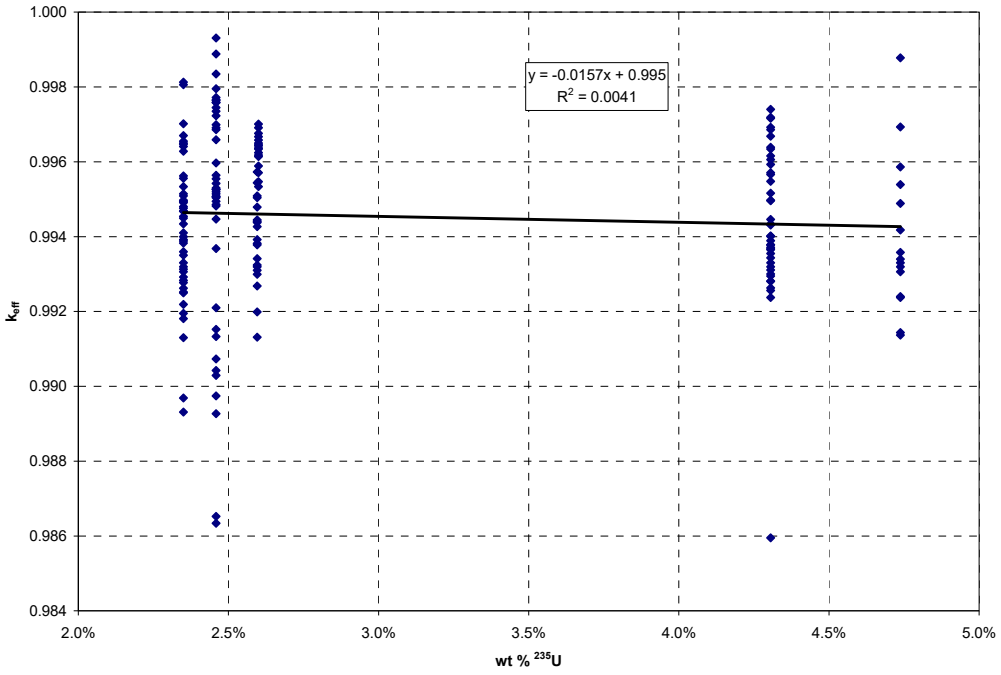

Figure 6.5.4-3 k_{eff} versus Rod Pitch (LEU)

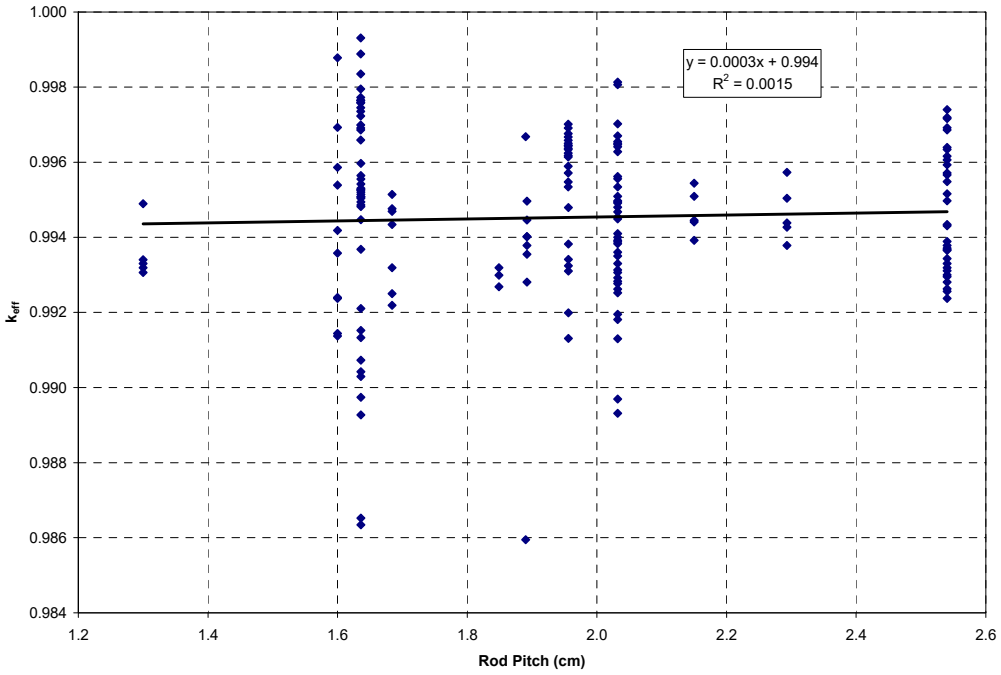

Figure 6.5.4-4 k_{eff} versus Fuel Pellet Diameter (LEU)

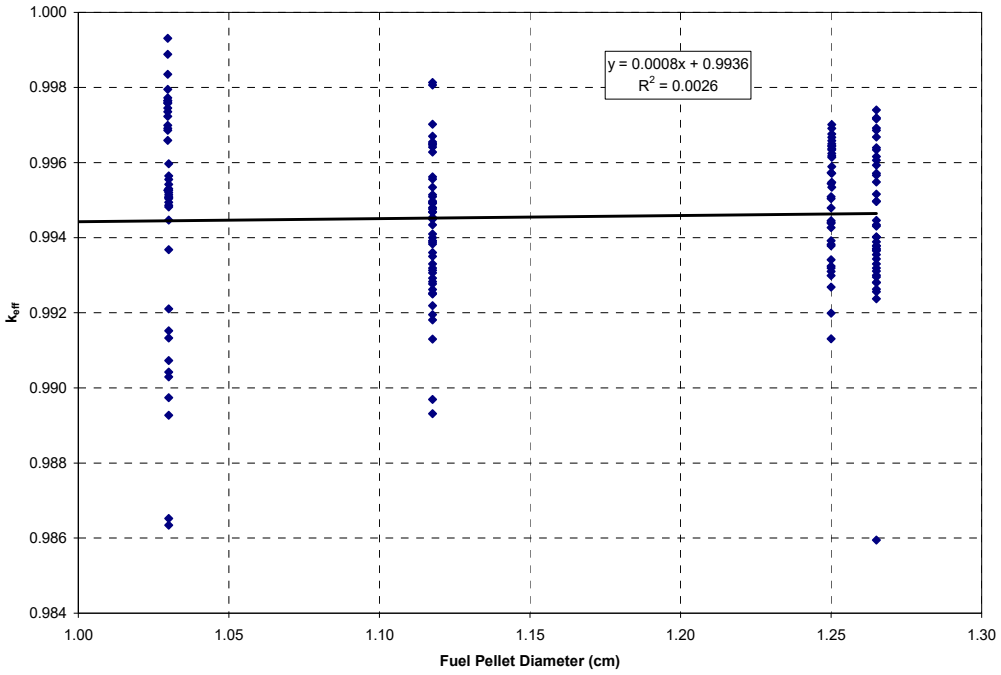

Figure 6.5.4-5 k_{eff} versus Fuel Rod Outside Diameter (LEU)

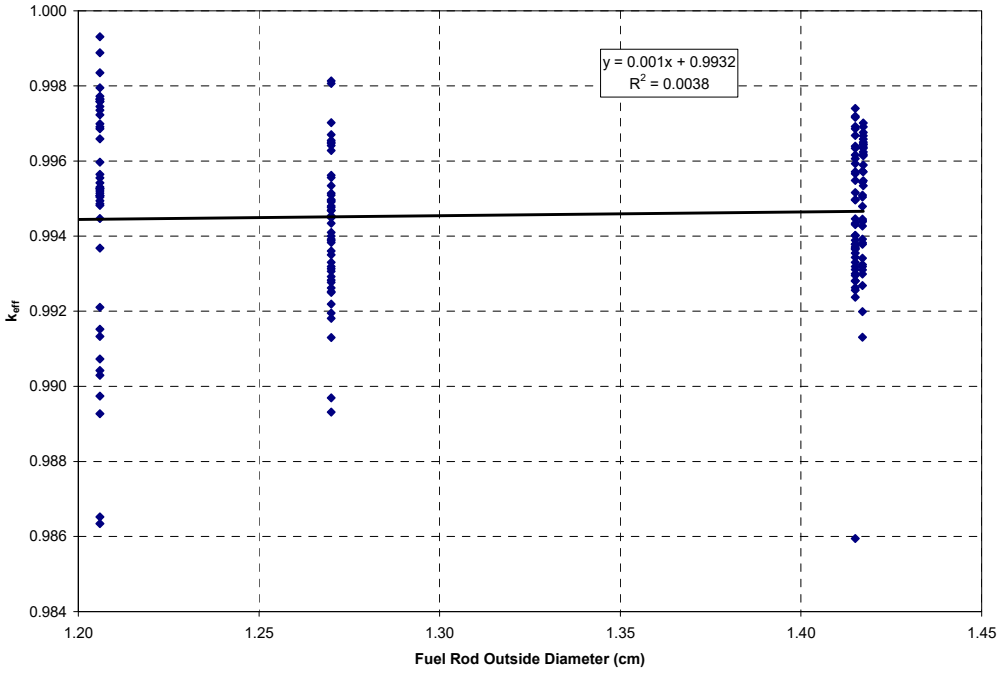

Figure 6.5.4-6 k_{eff} versus Hydrogen/^{235}U Atom Ratio (LEU)

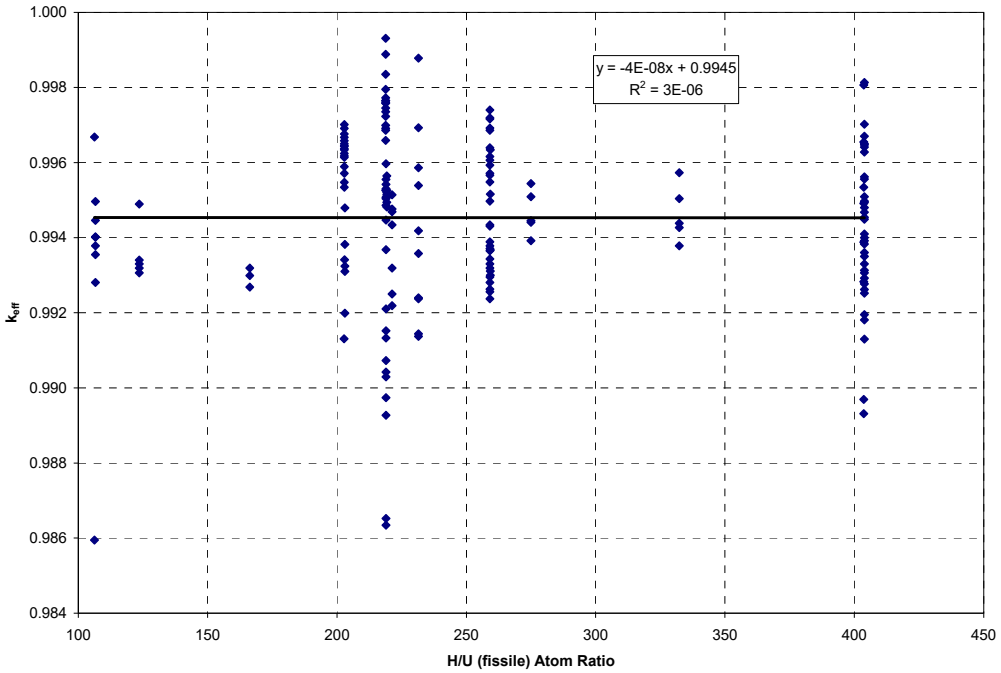

Figure 6.5.4-7 k_{eff} versus Soluble Boron Concentration (LEU)

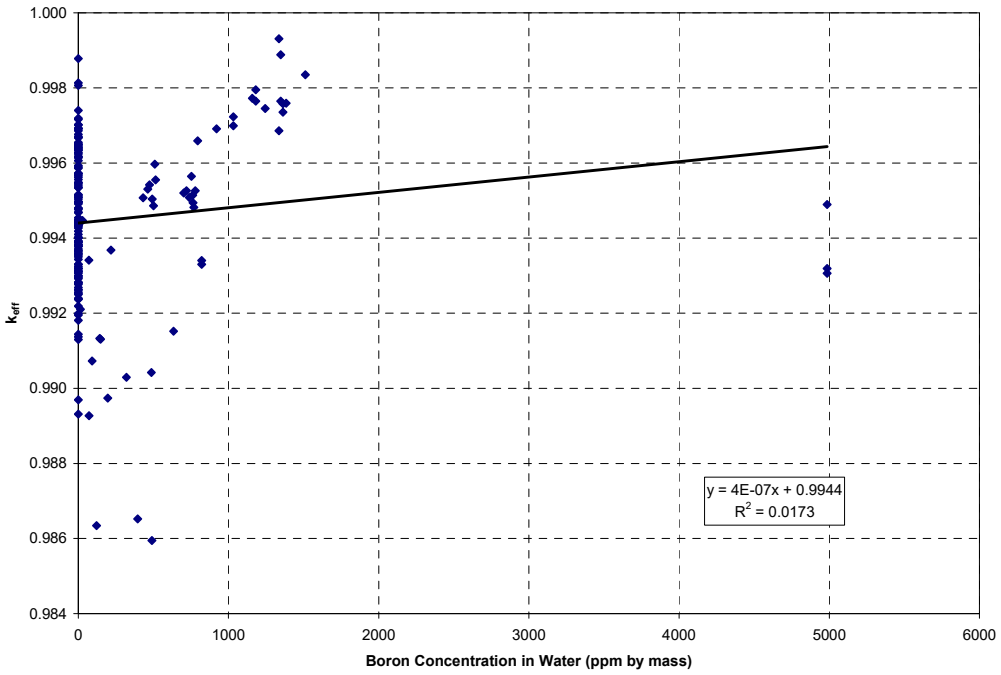

Figure 6.5.4-8 k_{eff} versus Cluster Gap Thickness (LEU)

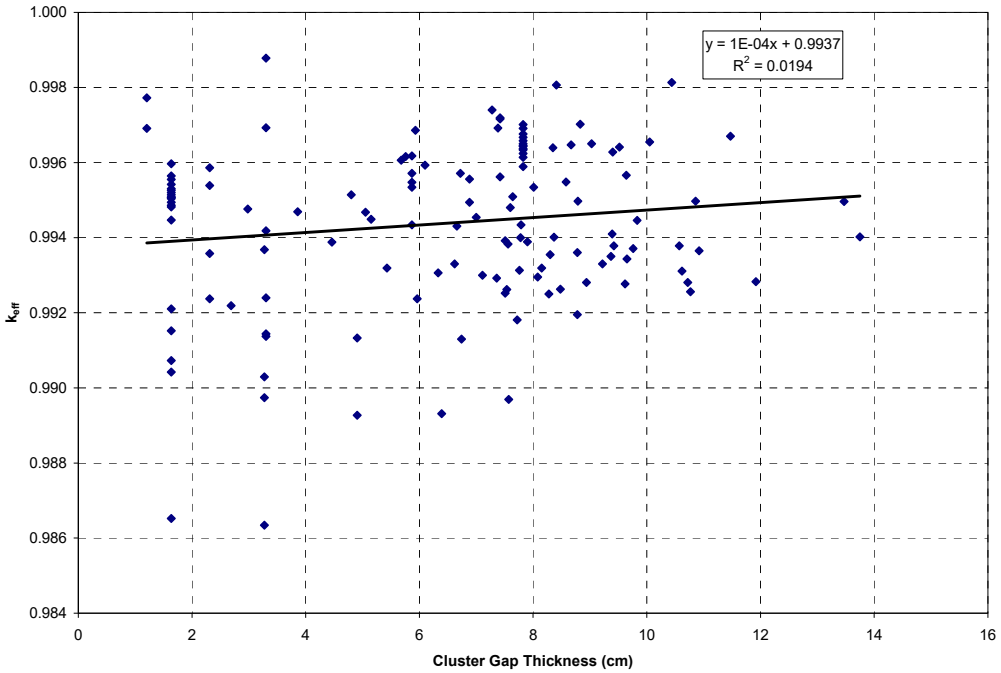

Figure 6.5.4-9 k_{eff} versus ^{10}B Plate Loading (LEU)

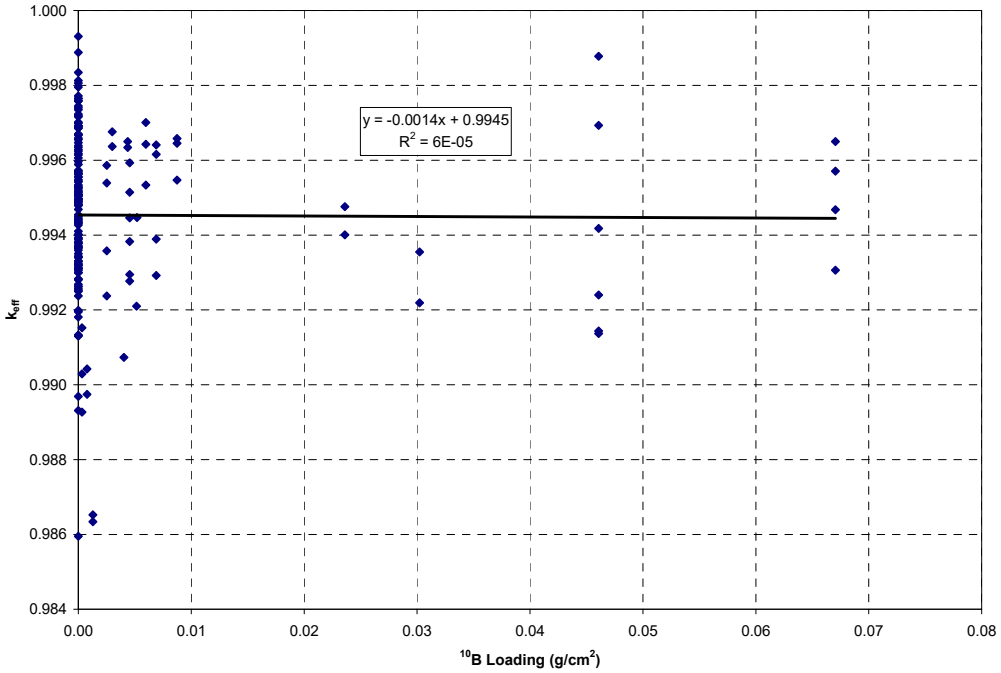

Figure 6.5.4-10 k_{eff} versus Energy of Average Neutron Lethargy Causing Fission (LEU)

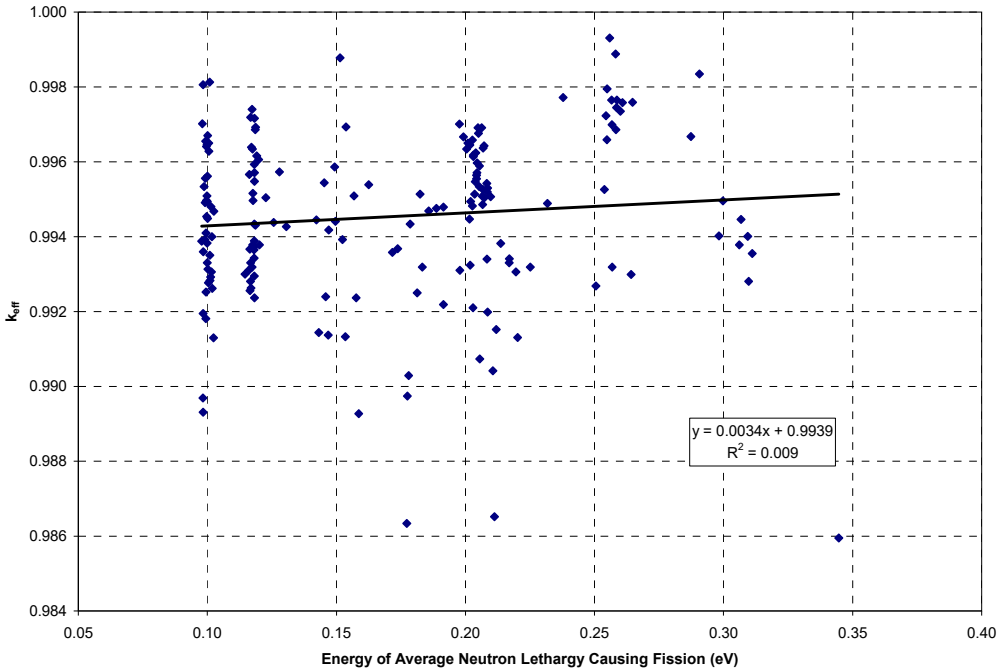

Table 6.5.4-3 LEU MCNP Validation Statistics

Case	1.01	1.02	1.03	1.04	1.05	1.06	1.07	1.08
Clusters	1	3	3	3	3	3	3	3
Enrichment (wt % ^{235}U)	2.35%	2.35%	2.35%	2.35%	2.35%	2.35%	2.35%	2.35%
Pitch (cm)	2.032	2.032	2.032	2.032	2.032	2.032	2.032	2.032
Fuel OD (cm)	1.118	1.118	1.118	1.118	1.118	1.118	1.118	1.118
Clad OD (cm)	1.270	1.270	1.270	1.270	1.270	1.270	1.270	1.270
Clad Material	Al	Al	Al	Al	Al	Al	Al	Al
H/U (fissile)	404	404	404	404	404	404	404	404
Soluble B (ppm)	--	--	--	--	--	--	--	--
Absorber Type	--	--	--	--	--	--	--	--
Cluster Gap (cm)	--	11.9	8.4	10.1	6.4	8.0	4.5	7.6
Reflector	H_2O	H_2O	H_2O	H_2O	H_2O	H_2O	H_2O	H_2O
Plate Loading (g $^{10}B/cm^2$)	--	--	--	--	--	--	--	--
EALCF (MeV)	9.916E-8	1.010E-7	9.838E-8	9.933E-8	9.837E-8	9.874E-8	9.781E-8	9.826E-8
Exp. σ	0.0030	0.0030	0.0030	0.0030	0.0030	0.0030	0.0031	0.0030
k_{eff}	0.99491	0.99283	0.99806	0.99655	0.98931	0.99534	0.99388	0.98969
σ	0.00165	0.00155	0.00155	0.00165	0.00169	0.00162	0.00150	0.00152

Table 6.5.4-3 LEU MCNP Validation Statistics (Continued)

Case	2.01	2.02	2.03	2.04	2.05
Clusters	1	1	1	3	3
Enrichment (wt % ^{235}U)	4.31%	4.31%	4.31%	4.31%	4.31%
Pitch (cm)	2.540	2.540	2.540	2.540	2.540
Fuel OD (cm)	1.265	1.265	1.265	1.265	1.265
Clad OD (cm)	1.415	1.415	1.415	1.415	1.415
Clad Material	Al	Al	Al	Al	Al
H/U (fissile)	259	259	259	259	259
Soluble B (ppm)	--	--	--	--	--
Absorber Type	--	--	--	--	--
Cluster Gap (cm)	--	--	--	10.6	7.1
Reflector	H_2O	H_2O	H_2O	H_2O	H_2O
Plate Loading (g $^{10}B/cm^2$)	--	--	--	--	--
EALCF (MeV)	1.177E-7	1.164E-7	1.175E-7	1.161E-7	1.146E-7
Exp. σ	0.0020	0.0020	0.0020	0.0018	0.0019
k_{eff}	0.99516	0.99367	0.99634	0.99311	0.99300
σ	0.00195	0.00157	0.00190	0.00193	0.00161

Table 6.5.4-3 LEU MCNP Validation Statistics (Continued)

Case	6.01	6.02	6.03	6.04	6.05	6.06	6.07	6.08	6.09
Clusters	1	1	1	1	1	1	1	1	1
Enrichment (wt % ^{235}U)	2.60%	2.60%	2.60%	2.60%	2.60%	2.60%	2.60%	2.60%	2.60%
Pitch (cm)	1.849	1.849	1.849	1.956	1.956	1.956	1.956	1.956	2.150
Fuel OD (cm)	1.250	1.250	1.250	1.250	1.250	1.250	1.250	1.250	1.250
Clad OD (cm)	1.417	1.417	1.417	1.417	1.417	1.417	1.417	1.417	1.417
Clad Material	Al	Al	Al	Al	Al	Al	Al	Al	Al
H/U (fissile)	166	166	166	203	203	203	203	203	275
Soluble B (ppm)	--	--	--	--	--	--	--	--	--
Absorber Type	--	--	--	--	--	--	--	--	--
Cluster Gap (cm)	--	--	--	--	--	--	--	--	--
Reflector	H_2O	H_2O	H_2O	H_2O	H_2O	H_2O	H_2O	H_2O	H_2O
Plate Loading (g $^{10}B/cm^2$)	--	--	--	--	--	--	--	--	--
EALCF (MeV)	2.506E-7	2.568E-7	2.642E-7	1.915E-7	1.978E-7	2.018E-7	2.085E-7	2.136E-7	1.422E-7
Exp. σ	0.0020	0.0020	0.0020	0.0020	0.0020	0.0020	0.0020	0.0020	0.0020
k_{eff}	0.99268	0.99319	0.99299	0.99479	0.99310	0.99324	0.99199	0.99382	0.99445
σ	0.00065	0.00076	0.00074	0.00074	0.00069	0.00070	0.00071	0.00071	0.00069

Table 6.5.4-3 LEU MCNP Validation Statistics (Continued)

Case	6.10	6.11	6.12	6.13	6.14	6.15	6.16	6.17	6.18
Clusters	1	1	1	1	1	1	1	1	1
Enrichment (wt % ^{235}U)	2.60%	2.60%	2.60%	2.60%	2.60%	2.60%	2.60%	2.60%	2.60%
Pitch (cm)	2.150	2.150	2.150	2.150	2.293	2.293	2.293	2.293	2.293
Fuel OD (cm)	1.250	1.250	1.250	1.250	1.250	1.250	1.250	1.250	1.250
Clad OD (cm)	1.417	1.417	1.417	1.417	1.417	1.417	1.417	1.417	1.417
Clad Material	Al	Al	Al	Al	Al	Al	Al	Al	Al
H/U (fissile)	275	275	275	275	332	332	332	332	332
Soluble B (ppm)	--	--	--	--	--	--	--	--	--
Absorber Type	--	--	--	--	--	--	--	--	--
Cluster Gap (cm)	--	--	--	--	--	--	--	--	--
Reflector	H_2O	H_2O	H_2O	H_2O	H_2O	H_2O	H_2O	H_2O	H_2O
Plate Loading (g $^{10}B/cm^2$)	--	--	--	--	--	--	--	--	--
EALCF (MeV)	1.453E-7	1.496E-7	1.523E-7	1.568E-7	1.202E-7	1.227E-7	1.257E-7	1.280E-7	1.306E-7
Exp. σ	0.0020	0.0020	0.0020	0.0020	0.0020	0.0020	0.0020	0.0020	0.0020
k_{eff}	0.99544	0.99441	0.99392	0.99509	0.99378	0.99504	0.99438	0.99573	0.99427
σ	0.00073	0.00071	0.00078	0.00076	0.00070	0.00075	0.00067	0.00070	0.00076

Table 6.5.4-3 LEU MCNP Validation Statistics (Continued)

Case	8.01	8.02	8.03	8.04	8.05	8.06	8.07	8.08
Clusters	3 x 3	3 x 3	3 x 3	3 x 3	3 x 3	3 x 3	3 x 3	3 x 3
Enrichment (wt % ^{235}U)	2.46%	2.46%	2.46%	2.46%	2.46%	2.46%	2.46%	2.46%
Pitch (cm)	1.636	1.636	1.636	1.636	1.636	1.636	1.636	1.636
Fuel OD (cm)	1.030	1.030	1.030	1.030	1.030	1.030	1.030	1.030
Clad OD (cm)	1.206	1.206	1.206	1.206	1.206	1.206	1.206	1.206
Clad Material	Al	Al	Al	Al	Al	Al	Al	Al
H/U (fissile)	219	219	219	219	219	219	219	219
Soluble B (ppm)	1511	1336	1336	1182	1182	1033	1033	794
Absorber Type	--	--	--	--	--	--	--	--
Cluster Gap (cm)	--	--	--	--	--	--	--	--
Reflector	H_2O	H_2O	H_2O	H_2O	H_2O	H_2O	H_2O	H_2O
Plate Loading (g $^{10}B/cm^2$)	--	--	--	--	--	--	--	--
EALCF (MeV)	2.907E-7	2.583E-7	2.559E-7	2.548E-7	2.566E-7	2.568E-7	2.544E-7	2.548E-7
Exp. σ	0.0012	0.0012	0.0012	0.0012	0.0012	0.0012	0.0012	0.0012
k_{eff}	0.99835	0.99686	0.99931	0.99795	0.99765	0.99699	0.99723	0.99659
σ	0.00060	0.00063	0.00032	0.00063	0.00069	0.00061	0.00066	0.00073

Table 6.5.4-3 LEU MCNP Validation Statistics (Continued)

Case	8.09	8.10	8.11	8.12	8.13	8.14	8.15	8.16	8.17
Clusters	3 x 3	3 x 3	3 x 3	3 x 3	3 x 3	3 x 3	3 x 3	5	5 x 5
Enrichment (wt % ^{235}U)	2.46%	2.46%	2.46%	2.46%	2.46%	2.46%	2.46%	2.46%	2.46%
Pitch (cm)	1.636	1.636	1.636	1.636	1.636	1.636	1.636	1.636	1.636
Fuel OD (cm)	1.030	1.030	1.030	1.030	1.030	1.030	1.030	1.030	1.030
Clad OD (cm)	1.206	1.206	1.206	1.206	1.206	1.206	1.206	1.206	1.206
Clad Material	Al	Al	Al	Al	Al	Al	Al	Al	Al
H/U (fissile)	219	219	219	219	219	219	219	219	219
Soluble B (ppm)	779	1245	1384	1348	1348	1363	1363	1158	921
Absorber Type	--	--	--	--	--	--	--	--	--
Cluster Gap (cm)	-	-	-	-	-	-	-	1.2	1.2
Reflector	H_2O	H_2O	H_2O	H_2O	H_2O	H_2O	H_2O	H_2O	H_2O
Plate Loading (g $^{10}B/cm^2$)	--	--	--	--	--	--	--	--	--
EALCF (MeV)	2.538E-7	2.586E-7	2.647E-7	2.587E-7	2.582E-7	2.600E-7	2.609E-7	2.379E-7	2.063E-7
Exp. σ	0.0012	0.0012	0.0012	0.0012	0.0012	0.0012	0.0012	0.0012	0.0012
k_{eff}	0.99526	0.99745	0.99759	0.99765	0.99888	0.99735	0.99758	0.99772	0.99691
σ	0.00072	0.00065	0.00068	0.00065	0.00070	0.00067	0.00071	0.00070	0.00062

Table 6.5.4-3 LEU MCNP Validation Statistics (Continued)

Case	9.01	9.02	9.03	9.04	9.05	9.06	9.07	9.08	9.09	9.10	9.11	9.12	9.13
Clusters	3	3	3	3	3	3	3	3	3	3	3	3	3
Enrichment (wt % ^{235}U)	4.31%	4.31%	4.31%	4.31%	4.31%	4.31%	4.31%	4.31%	4.31%	4.31%	4.31%	4.31%	4.31%
Pitch (cm)	2.540	2.540	2.540	2.540	2.540	2.540	2.540	2.540	2.540	2.540	2.540	2.540	2.540
Fuel OD (cm)	1.265	1.265	1.265	1.265	1.265	1.265	1.265	1.265	1.265	1.265	1.265	1.265	1.265
Clad OD (cm)	1.415	1.415	1.415	1.415	1.415	1.415	1.415	1.415	1.415	1.415	1.415	1.415	1.415
Clad Material	Al	Al	Al	Al	Al	Al	Al	Al	Al	Al	Al	Al	Al
H/U (fissile)	259	259	259	259	259	259	259	259	259	259	259	259	259
Soluble B (ppm)	-	-	-	-	-	-	-	-	-	-	-	-	-
Absorber Type	304L SS (no B)	304L SS (no B)	304L SS (no B)	304L SS (no B)	304L SS (1.05% B)	304L SS (1.05% B)	304L SS (1.62% B)	304L SS (1.62% B)	Boral	Cu	Cu	Cu	Cu
Cluster Gap (cm)	8.6	9.7	9.2	9.8	6.1	8.1	5.8	7.9	6.7	8.2	9.4	8.5	9.6
Reflector	H_2O	H_2O	H_2O	H_2O	H_2O	H_2O	H_2O	H_2O	H_2O	H_2O	H_2O	H_2O	H_2O
Plate Loading (g $^{10}B/cm^2$)	0.00000	0.00000	0.00000	0.00000	0.00455	0.00455	0.00690	0.00690	0.06704	-	-	-	-
EALCF(MeV)	1.183E-7	1.181E-7	1.168E-7	1.179E-7	1.182E-7	1.182E-7	1.191E-7	1.182E-7	1.183E-7	1.173E-7	1.176E-7	1.169E-7	1.163E-7
Exp. σ	0.0021	0.0021	0.0021	0.0021	0.0021	0.0021	0.0021	0.0021	0.0021	0.0021	0.0021	0.0021	0.0021
k_{eff}	0.99548	0.99343	0.99330	0.99371	0.99593	0.99295	0.99616	0.99389	0.99571	0.99319	0.99378	0.99263	0.99566
σ	0.00191	0.00182	0.00187	0.00192	0.00174	0.00193	0.00198	0.00175	0.00209	0.00153	0.00178	0.00191	0.00177

Table 6.5.4-3 LEU MCNP Validation Statistics (Continued)

Case	9.14	9.15	9.16	9.17	9.18	9.19	9.20	9.21	9.22	9.23	9.24	9.25	9.26	9.27
Clusters	3	3	3	3	3	3	3	3	3	3	3	3	3	3
Enrichment (wt % ^{235}U)	4.31%	4.31%	4.31%	4.31%	4.31%	4.31%	4.31%	4.31%	4.31%	4.31%	4.31%	4.31%	4.31%	4.31%
Pitch (cm)	2.540	2.540	2.540	2.540	2.540	2.540	2.540	2.540	2.540	2.540	2.540	2.540	2.540	2.540
Fuel OD (cm)	1.265	1.265	1.265	1.265	1.265	1.265	1.265	1.265	1.265	1.265	1.265	1.265	1.265	1.265
Clad OD (cm)	1.415	1.415	1.415	1.415	1.415	1.415	1.415	1.415	1.415	1.415	1.415	1.415	1.415	1.415
Clad Material	Al	Al	Al	Al	Al	Al	Al	Al	Al	Al	Al	Al	Al	Al
H/U (fissile)	259	259	259	259	259	259	259	259	259	259	259	259	259	259
Soluble B (ppm)	--	--	--	--	--	--	--	--	--	--	--	--	--	--
Absorber Type	Cu (0.989 wt % Cd)	Cu (0.989 wt % Cd)	Cd	Cd	Cd	Cd	Cd	Cd	Cd	Cd	Al (no B)	Al (no B)	Zircaloy-4	Zircaloy-4
Cluster Gap (cm)	6.7	8.4	5.9	7.4	6.0	7.4	5.9	7.4	5.7	7.3	10.7	10.8	10.9	10.9
Reflector	H_2O	H_2O	H_2O	H_2O	H_2O	H_2O	H_2O	H_2O	H_2O	H_2O	H_2O	H_2O	H_2O	H_2O
Plate Loading (g $^{10}B/cm^2$)	--	--	--	--	--	--	--	--	--	--	0.00000	0.00000	--	--
EALCF(MeV)	1.186E-7	1.171E-7	1.186E-7	1.183E-7	1.183E-7	1.168E-7	1.182E-7	1.187E-7	1.199E-7	1.173E-7	1.167E-7	1.165E-7	1.181E-7	1.177E-7
Exp. σ	0.0021	0.0021	0.0021	0.0021	0.0021	0.0021	0.0021	0.0021	0.0021	0.0021	0.0021	0.0021	0.0021	0.0021
k_{eff}	0.99431	0.99639	0.99686	0.99716	0.99237	0.99719	0.99434	0.99692	0.99606	0.99740	0.99281	0.99256	0.99365	0.99497
σ	0.00188	0.00207	0.00183	0.00166	0.00194	0.00187	0.00179	0.00183	0.00189	0.00206	0.00168	0.00197	0.00197	0.00193

Table 6.5.4-3 LEU MCNP Validation Statistics (Continued)

Case	11.03	11.04	11.05	11.06	11.07	11.08	11.09
Clusters	3	3	3	3	3	3	3
Enrichment (wt % ^{235}U)	2.46%	2.46%	2.46%	2.46%	2.46%	2.46%	2.46%
Pitch (cm)	1.636	1.636	1.636	1.636	1.636	1.636	1.636
Fuel OD (cm)	1.030	1.030	1.030	1.030	1.030	1.030	1.030
Clad OD (cm)	1.206	1.206	1.206	1.206	1.206	1.206	1.206
Clad Material	Al	Al	Al	Al	Al	Al	Al
H/U (fissile)	219	219	219	219	219	219	219
Soluble B (ppm)	769	764	762	753	739	721	702
Absorber Type	--	--	--	--	--	--	--
Cluster Gap (cm)	1.6	1.6	1.6	1.6	1.6	1.6	1.6
Reflector	H_2O	H_2O	H_2O	H_2O	H_2O	H_2O	H_2O
Plate Loading (g $^{10}B/cm^2$)	--	--	--	--	--	--	--
EALCF [MeV]	2.027E-7	2.020E-7	2.035E-7	2.044E-7	2.065E-7	2.068E-7	2.085E-7
Exp. σ	0.0032	0.0032	0.0032	0.0032	0.0032	0.0032	0.0032
k_{eff}	0.99482	0.99494	0.99514	0.99564	0.99508	0.99526	0.99520
σ	0.00031	0.00030	0.00030	0.00030	0.00031	0.00030	0.00031

Table 6.5.4-3 LEU MCNP Validation Statistics (Continued)

Case	13.01	13.02	13.03	13.04	13.05	13.06	13.07
Clusters	3	3	3	3	3	3	3
Enrichment (wt % ^{235}U)	4.31%	4.31%	4.31%	4.31%	4.31%	4.31%	4.31%
Pitch (cm)	1.892	1.892	1.892	1.892	1.892	1.892	1.892
Fuel OD (cm)	1.265	1.265	1.265	1.265	1.265	1.265	1.265
Clad OD (cm)	1.415	1.415	1.415	1.415	1.415	1.415	1.415
Clad Material	Al	Al	Al	Al	Al	Al	Al
H/U (fissile)	107	107	107	107	107	107	107
Soluble B (ppm)	--	--	--	--	--	--	--
Absorber Type	304L SS (no B)	304L SS (1.05% B)	Boral B	Boroflex	Cd	Cu	Cu (0.989 wt % Cd)
Cluster Gap (cm)	13.8	9.8	8.3	8.4	8.9	13.5	10.6
Reflector	Steel	Steel	Steel	Steel	Steel	Steel	Steel
Plate Loading (g $^{10}B/cm^2$)	0.00000	0.00455	0.03022	0.02361	--	--	--
EALCF (MeV)	2.982E-7	3.068E-7	3.111E-7	3.094E-7	3.097E-7	2.998E-7	3.061E-7
Exp. σ	0.0018	0.0018	0.0018	0.0018	0.0032	0.0018	0.0018
k_{eff}	0.99402	0.99446	0.99355	0.99401	0.99281	0.99496	0.99378
σ	0.00068	0.00064	0.00064	0.00064	0.00066	0.00063	0.00062

Table 6.5.4-3 LEU MCNP Validation Statistics (Continued)

Case	14.01	14.02	14.05	14.06	14.07
Clusters	1	1	1	1	1
Enrichment (wt % ^{235}U)	4.31%	4.31%	4.31%	4.31%	4.31%
Pitch (cm)	1.890	1.890	1.890	1.715	1.715
Fuel OD (cm)	1.265	1.265	1.265	1.265	1.265
Clad OD (cm)	1.415	1.415	1.415	1.415	1.415
Clad Material	Al	Al	Al	Al	Al
H/U (fissile)	106	106	106	73	73
Soluble B (ppm)	0	491	2539	0	1030
Absorber Type	--	--	--	--	--
Cluster Gap (cm)	--	--	--	--	--
Reflector	H_2O	H_2O	H_2O	H_2O	H_2O
Plate Loading (g $^{10}B/cm^2$)	--	--	--	--	--
EALCF (MeV)	2.873E-7	3.447E-7	6.003E-7	5.175E-7	7.722E-7
Exp. σ	0.0019	0.0077	0.0069	0.0033	0.0051
k_{eff}	0.99668	0.98595	1.00221	1.00245	0.99973
σ	0.00044	0.00045	0.00043	0.00045	0.00044

Table 6.5.4-3 LEU MCNP Validation Statistics (Continued)

Case	16.01	16.02	16.03	16.04	16.05	16.06	16.07	16.08	16.09	16.10
Clusters	3	3	3	3	3	3	3	3	3	3
Enrichment (wt % ^{235}U)	2.35%	2.35%	2.35%	2.35%	2.35%	2.35%	2.35%	2.35%	2.35%	2.35%
Pitch (cm)	2.032	2.032	2.032	2.032	2.032	2.032	2.032	2.032	2.032	2.032
Fuel OD (cm)	1.118	1.118	1.118	1.118	1.118	1.118	1.118	1.118	1.118	1.118
Clad OD (cm)	1.270	1.270	1.270	1.270	1.270	1.270	1.270	1.270	1.270	1.270
Clad Material	Al	Al	Al	Al	Al	Al	Al	Al	Al	Al
H/U (fissile)	404	404	404	404	404	404	404	404	404	404
Soluble B (ppm)	--	--	--	--	--	--	--	--	--	--
Absorber Type	304L SS (no B)	304L SS (no B)	304L SS (no B)	304L SS (no B)	304L SS (no B)	304L SS (no B)	304L SS (no B)	304L SS (1.05% B)	304L SS (1.05% B)	304L SS (1.62% B)
Cluster Gap (cm)	6.9	7.6	7.5	7.4	7.8	10.4	11.5	7.6	9.6	7.4
Reflector	H_2O	H_2O	H_2O	H_2O	H_2O	H_2O	H_2O	H_2O	H_2O	H_2O
Plate Loading (g $^{10}B/cm^2$)	0.00000	0.00000	0.00000	0.00000	0.00000	0.00000	0.00000	0.00455	0.00455	0.00690
EALCF (MeV)	1.000E-7	9.983E-8	9.947E-8	1.001E-7	1.002E-7	1.009E-7	1.001E-7	9.993E-8	1.004E-7	1.012E-7
Exp. σ	0.0031	0.0031	0.0031	0.0031	0.0031	0.0031	0.0031	0.0031	0.0031	0.0031
k_{eff}	0.99494	0.99509	0.99252	0.99562	0.99313	0.99813	0.99670	0.99383	0.99277	0.99292
σ	0.00171	0.00153	0.00157	0.00162	0.00173	0.00179	0.00175	0.00172	0.00157	0.00162

Table 6.5.4-3 LEU MCNP Validation Statistics (Continued)

Case	16.11	16.12	16.13	16.14	16.15	16.16	16.17	16.18	16.19	16.20	16.21	16.22
Clusters	3	3	3	3	3	3	3	3	3	3	3	3
Enrichment (wt % ^{235}U)	2.35%	2.35%	2.35%	2.35%	2.35%	2.35%	2.35%	2.35%	2.35%	2.35%	2.35%	2.35%
Pitch(cm)	2.032	2.032	2.032	2.032	2.032	2.032	2.032	2.032	2.032	2.032	2.032	2.032
Fuel OD (cm)	1.118	1.118	1.118	1.118	1.118	1.118	1.118	1.118	1.118	1.118	1.118	1.118
Clad OD (cm)	1.270	1.270	1.270	1.270	1.270	1.270	1.270	1.270	1.270	1.270	1.270	1.270
Clad Material	Al	Al	Al	Al	Al	Al	Al	Al	Al	Al	Al	Al
H/U (fissile)	404	404	404	404	404	404	404	404	404	404	404	404
Soluble B (ppm)	--	--	--	--	--	--	--	--	--	--	--	--
Absorber Type	304L SS (1.62% B)	Boral	Boral	Boral	Cu	Cu	Cu	Cu	Cu	Cu (0.989 wt % Cd)	Cd	Cd
Cluster Gap (cm)	9.5	6.3	9.0	5.1	6.6	7.7	7.5	6.9	7.0	5.2	6.7	7.6
Reflector	H_2O	H_2O	H_2O	H_2O	H_2O	H_2O	H_2O	H_2O	H_2O	H_2O	H_2O	H_2O
Plate Loading (g $^{10}B/cm^2$)	0.00690	0.06704	0.06704	0.06704	--	--	--	--	--	--	--	--
EALCF (MeV)	9.962E-8	1.016E-7	1.006E-7	1.025E-7	1.000E-7	9.944E-8	9.904E-8	9.919E-8	9.971E-8	1.001E-7	1.024E-7	1.014E-7
Exp. σ	0.0031	0.0031	0.0031	0.0031	0.0031	0.0031	0.0031	0.0031	0.0031	0.0031	0.0031	0.0031
k_{eff}	0.99641	0.99306	0.99650	0.99468	0.99330	0.99181	0.99392	0.99556	0.99454	0.99449	0.99130	0.99480
σ	0.00154	0.00161	0.00152	0.00162	0.00157	0.00153	0.00155	0.00172	0.00165	0.00155	0.00166	0.00157

Table 6.5.4-3 LEU MCNP Validation Statistics (Continued)

Case	16.23	16.24	16.25	16.26	16.27	16.28	16.29	16.30	16.31	16.32
Clusters	3	3	3	3	3	3	3	3	3	3
Enrichment (wt % ^{235}U)	2.35%	2.35%	2.35%	2.35%	2.35%	2.35%	2.35%	2.35%	2.35%	2.35%
Pitch(cm)	2.032	2.032	2.032	2.032	2.032	2.032	2.032	2.032	2.032	2.032
Fuel OD (cm)	1.118	1.118	1.118	1.118	1.118	1.118	1.118	1.118	1.118	1.118
Clad OD (cm)	1.270	1.270	1.270	1.270	1.270	1.270	1.270	1.270	1.270	1.270
Clad Material	Al	Al	Al	Al	Al	Al	Al	Al	Al	Al
H/U (fissile)	404	404	404	404	404	404	404	404	404	404
Soluble B (ppm)	--	--	--	--	--	--	--	--	--	--
Absorber Type	Cd	Cd	Cd	Cd	Cd	Al (no B)	Al (no B)	Al (no B)	Zircaloy-4	Zircaloy-4
Cluster Gap cm)	9.4	7.8	9.4	7.5	9.4	8.7	8.8	8.8	8.8	8.8
Reflector	H_2O	H_2O	H_2O	H_2O	H_2O	H_2O	H_2O	H_2O	H_2O	H_2O
Plate Loading (g $^{10}B/cm^2$)	--	--	--	--	--	0.00000	0.00000	0.00000	--	--
EALCF (MeV)	1.010E-7	1.018E-7	1.006E-7	1.019E-7	9.948E-8	9.991E-8	9.843E-8	9.807E-8	9.964E-8	9.834E-8
Exp. σ	0.0031	0.0031	0.0031	0.0031	0.0031	0.0031	0.0031	0.0031	0.0031	0.0031
k_{eff}	0.99350	0.99400	0.99628	0.99262	0.99410	0.99647	0.99360	0.99702	0.99497	0.99195
σ	0.00184	0.00152	0.00169	0.00151	0.00168	0.00166	0.00157	0.00160	0.00163	0.00172

Table 6.5.4-3 LEU MCNP Validation Statistics (Continued)

Case	35.01	35.02	40.01	40.02	40.03	40.04	40.05	40.06	40.07	40.08	40.09	40.10
Clusters	1	1	4	4	4	4	4	4	4	4	4	4
Enrichment (wt % ^{235}U)	2.60%	2.60%	4.74%	4.74%	4.74%	4.74%	4.74%	4.74%	4.74%	4.74%	4.74%	4.74%
Pitch (cm)	1.956	1.956	1.600	1.600	1.600	1.600	1.600	1.600	1.600	1.600	1.600	1.600
Fuel OD (cm)	1.250	1.250	0.790	0.790	0.790	0.790	0.790	0.790	0.790	0.790	0.790	0.790
Clad OD (cm)	1.417	1.417	0.940	0.940	0.940	0.940	0.940	0.940	0.940	0.940	0.940	0.940
Clad Material	Al	Al	Al alloy	Al alloy	Al alloy	Al alloy	Al alloy	Al alloy	Al alloy	Al alloy	Al alloy	Al alloy
H/U (fissile)	203	203	231	231	231	231	231	231	231	231	231	231
Soluble B (ppm)	70	148	--	--	--	--	--	--	--	--	--	--
Absorber Type	--	--	Z2 CN18/10 SS (1.10% B)	Z2 CN18/10 SS (1.10% B)	Z2 CN18/10 SS (1.10% B)	Z2 CN18/10 SS (1.10% B)	Boral	Boral	Boral	Boral	Boral	Boral
Cluster Gap (cm)	--	--	2.3	2.3	2.3	2.3	3.3	3.3	3.3	3.3	3.3	3.3
Reflector	H_2O	H_2O	H_2O	Lead	Lead	Lead	H_2O	Lead	Lead	Lead	Steel	Steel
Plate Loading (g $^{10}B/cm^2$)	--	--	0.00252	0.00252	0.00252	0.00252	0.04608	0.04608	0.04608	0.04608	0.04608	0.04608
EALCF (MeV)	2.170E-7	2.202E-7	1.493E-7	1.717E-7	1.625E-7	1.576E-7	1.432E-7	1.515E-7	1.470E-7	1.459E-7	1.537E-7	1.469E-7
Exp. σ	0.0018	0.0019	0.0039	0.0041	0.0041	0.0041	0.0042	0.0044	0.0044	0.0044	0.0046	0.0046
k_{eff}	0.99341	0.99131	0.99586	0.99358	0.99539	0.99237	0.99144	0.99878	0.99418	0.99240	0.99693	0.99137
σ	0.00070	0.00078	0.00195	0.00192	0.00203	0.00194	0.00193	0.00196	0.00224	0.00216	0.00190	0.00208

Table 6.5.4-3 LEU MCNP Validation Statistics (Continued)

Case	42.01	42.02	42.03	42.04	42.05	42.06	42.07
Clusters	3	3	3	3	3	3	3
Enrichment (wt % ^{235}U)	2.35%	2.35%	2.35%	2.35%	2.35%	2.35%	2.35%
Pitch (cm)	1.684	1.684	1.684	1.684	1.684	1.684	1.684
Fuel OD (cm)	1.118	1.118	1.118	1.118	1.118	1.118	1.118
Clad OD (cm)	1.270	1.270	1.270	1.270	1.270	1.270	1.270
Clad Material	Al	Al	Al	Al	Al	Al	Al
H/U (fissile)	221	221	221	221	221	221	221
Soluble B (ppm)	--	--	--	--	--	--	--
Absorber Type	304L SS (no B)	304L SS (1.05% B)	Boral B	Boroflex	Cd	Cu	Cu-Cd
Cluster Gap (cm)	8.3	4.8	2.7	3.0	3.9	7.8	5.4
Reflector	Steel	Steel	Steel	Steel	Steel	Steel	Steel
Plate Loading (g $^{10}B/cm^2$)	0.00000	0.00455	0.03022	0.02361	--	--	--
EALCF (MeV)	1.813E-7	1.824E-7	1.915E-7	1.887E-7	1.857E-7	1.786E-7	1.833E-7
Exp. σ	0.0016	0.0016	0.0016	0.0017	0.0033	0.0016	0.0018
k_{eff}	0.99250	0.99514	0.99219	0.99476	0.99469	0.99434	0.99319
σ	0.00171	0.00183	0.00169	0.00169	0.00161	0.00191	0.00157

Table 6.5.4-3 LEU MCNP Validation Statistics (Continued)

Case	50.03	50.03	50.03	50.03	50.03
Clusters	1	1	1	1	1
Enrichment (wt % ^{235}U)	4.74%	4.74%	4.74%	4.74%	4.74%
Pitch (cm)	1.300	1.300	1.300	1.300	1.300
Fuel OD (cm)	0.790	0.790	0.790	0.790	0.790
Clad OD (cm)	0.940	0.940	0.940	0.940	0.940
Clad Material	Al alloy	Al alloy	Al alloy	Al alloy	Al alloy
H/U (fissile)	124	124	124	124	124
Soluble B (ppm)	821	821	4986	4986	4986
Absorber Type	--	--	--	--	--
Cluster Gap (cm)	--	--	--	--	--
Reflector	Borated H_2O	Borated H_2O	Borated H_2O	Borated H_2O	Borated H_2O
Plate Loading (g $^{10}B/cm^2$)	--	--	--	--	--
EALCF (MeV)	2.170E-7	2.083E-7	2.318E-7	2.252E-7	2.195E-7
Exp. σ	0.0010	0.0010	0.0010	0.0010	0.0010
k_{eff}	0.99330	0.99340	0.99489	0.99319	0.99306
σ	0.00080	0.00071	0.00075	0.00075	0.00080

Table 6.5.4-3 LEU MCNP Validation Statistics (Continued)

Case	51.01	51.02	51.03	51.04	51.05	51.06	51.07	51.08	51.09
Clusters	9	9	9	9	9	9	9	9	9
Enrichment (wt % ^{235}U)	2.46%	2.46%	2.46%	2.46%	2.46%	2.46%	2.46%	2.46%	2.46%
Pitch (cm)	1.636	1.636	1.636	1.636	1.636	1.636	1.636	1.636	1.636
Fuel OD (cm)	1.030	1.030	1.030	1.030	1.030	1.030	1.030	1.030	1.030
Clad OD (cm)	1.206	1.206	1.206	1.206	1.206	1.206	1.206	1.206	1.206
Clad Material	Al	Al	Al	Al	Al	Al	Al	Al	Al
H/U (fissile)	219	219	219	219	219	219	219	219	219
Soluble B (ppm)	143	510	514	501	493	474	462	432	217
Absorber Type	none	SS	SS	SS	SS	SS	SS	SS	SS
Cluster Gap (cm)	4.9	1.6	1.6	1.6	1.6	1.6	1.6	1.6	3.3
Reflector	Borated H_2O	Borated H_2O	Borated H_2O	Borated H_2O	Borated H_2O	Borated H_2O	Borated H_2O	Borated H_2O	Borated H_2O
Plate Loading (g $^{10}B/cm^2$)	0.00000	--	--	--	--	--	--	--	--
EALCF (MeV)	1.535E-7	2.045E-7	2.043E-7	2.067E-7	2.074E-7	2.083E-7	2.085E-7	2.098E-7	1.737E-7
Exp. σ	0.0020	0.0024	0.0024	0.0024	0.0024	0.0024	0.0024	0.0024	0.0019
k_{eff}	0.99133	0.99597	0.99555	0.99486	0.99504	0.99542	0.99530	0.99507	0.99368
σ	0.00033	0.00035	0.00033	0.00034	0.00034	0.00034	0.00034	0.00034	0.00033

Table 6.5.4-3 LEU MCNP Validation Statistics (Continued)

Case	51.10	51.11	51.12	51.13	51.14	51.15	51.16	51.17	51.18	51.19
Clusters	9	9	9	9	9	9	9	9	9	9
Enrichment (wt % ^{235}U)	2.46%	2.46%	2.46%	2.46%	2.46%	2.46%	2.46%	2.46%	2.46%	2.46%
Pitch (cm)	1.636	1.636	1.636	1.636	1.636	1.636	1.636	1.636	1.636	1.636
Fuel OD (cm)	1.030	1.030	1.030	1.030	1.030	1.030	1.030	1.030	1.030	1.030
Clad OD (cm)	1.206	1.206	1.206	1.206	1.206	1.206	1.206	1.206	1.206	1.206
Clad Material	Al	Al	Al	Al	Al	Al	Al	Al	Al	Al
H/U (fissile)	219	219	219	219	219	219	219	219	219	219
Soluble B (ppm)	15	28	92	395	121	487	197	634	320	72
Absorber Type	B/Al Set 5	B/Al Set 5A	B/Al Set 4	B/Al Set 3	B/Al Set 3	B/Al Set 2	B/Al Set 2	B/Al Set 1	B/Al Set 1	B/Al Set 1
Cluster Gap (cm)	1.6	1.6	1.6	1.6	3.3	1.6	3.3	1.6	3.3	4.9
Reflector	Borated H_2O	Borated H_2O	Borated H_2O	Borated H_2O	Borated H_2O	Borated H_2O	Borated H_2O	Borated H_2O	Borated H_2O	Borated H_2O
Plate Loading (g $^{10}B/cm^2$)	0.00517	0.00519	0.00403	0.00128	0.00128	0.00078	0.00078	0.00032	0.00032	0.00032
EALCF (MeV)	2.029E-7	2.015E-7	2.056E-7	2.112E-7	1.773E-7	2.106E-7	1.775E-7	2.119E-7	1.780E-7	1.587E-7
p. σ	0.0019	0.0019	0.0019	0.0022	0.0019	0.0024	0.0020	0.0027	0.0021	0.0019
k_{eff}	0.99210	0.99447	0.99073	0.98652	0.98634	0.99042	0.98974	0.99152	0.99029	0.98927
σ	0.00034	0.00034	0.00034	0.00034	0.00034	0.00034	0.00034	0.00034	0.00035	0.00035

Table 6.5.4-3 LEU MCNP Validation Statistics (Continued)

Case	65.01	65.02	65.03	65.04	65.05	65.06	65.07	65.08
Clusters	2	2	2	2	2	2	2	2
Enrichment (wt % ^{235}U)	2.60%	2.60%	2.60%	2.60%	2.60%	2.60%	2.60%	2.60%
Pitch (cm)	1.956	1.956	1.956	1.956	1.956	1.956	1.956	1.956
Fuel OD (cm)	1.250	1.250	1.250	1.250	1.250	1.250	1.250	1.250
Clad OD (cm)	1.417	1.417	1.417	1.417	1.417	1.417	1.417	1.417
Clad Material	Al	Al	Al	Al	Al	Al	Al	Al
H/U (fissile)	203	203	203	203	203	203	203	203
Soluble B (ppm)	--	--	--	--	--	--	--	--
Absorber Type	none	304L SS (No B)	304L SS (0.67% B)	304L SS (0.98% B)	none	304L SS (No B)	304L SS (No B)	304L SS (No B)
Cluster Gap (cm)	5.9	5.9	5.9	5.9	7.8	7.8	7.8	7.8
Reflector	H_2O	H_2O	H_2O	H_2O	H_2O	H_2O	H_2O	H_2O
Plate Loading (g $^{10}B/cm^2$)	--	0.00000	0.00599	0.00875	--	0.00000	0.00000	0.00000
EALCF [MeV]	2.045E-7	2.030E-7	2.054E-7	2.038E-7	2.049E-7	2.030E-7	2.055E-7	2.040E-7
Exp. σ	0.0014	0.0014	0.0015	0.0015	0.0014	0.0014	0.0014	0.0016
k_{eff}	0.99571	0.99618	0.99534	0.99547	0.99691	0.99614	0.99589	0.99624
σ	0.00023	0.00022	0.00023	0.00023	0.00023	0.00023	0.00023	0.00023

Table 6.5.4-3 LEU MCNP Validation Statistics (Continued)

Case	65.09	65.10	65.11	65.12	65.13	65.14	65.15	65.16	65.17
Clusters	2	2	2	2	2	2	2	2	2
Enrichment (wt % ^{235}U)	2.60%	2.60%	2.60%	2.60%	2.60%	2.60%	2.60%	2.60%	2.60%
Pitch (cm)	1.956	1.956	1.956	1.956	1.956	1.956	1.956	1.956	1.956
Fuel OD (cm)	1.250	1.250	1.250	1.250	1.250	1.250	1.250	1.250	1.250
Clad OD (cm)	1.417	1.417	1.417	1.417	1.417	1.417	1.417	1.417	1.417
Clad Material	Al	Al	Al	Al	Al	Al	Al	Al	Al
H/U (fissile)	203	203	203	203	203	203	203	203	203
Soluble B (ppm)	--	--	--	--	--	--	--	--	--
Absorber Type	304L SS (No B)	304L SS (0.67% B)	304L SS (0.67% B)	304L SS (0.67% B)	304L SS (0.67% B)	304L SS (0.98% B)	304L SS (0.98% B)	304L SS (0.98% B)	304L SS (0.98% B)
Cluster Gap (cm)	7.8	7.8	7.8	7.8	7.8	7.8	7.8	7.8	7.8
Reflector	H_2O	H_2O	H_2O	H_2O	H_2O	H_2O	H_2O	H_2O	H_2O
Plate Loading (g $^{10}B/cm^2$)	0.00000	0.00299	0.00299	0.00599	0.00599	0.00438	0.00438	0.00875	0.00875
EALCF [MeV]	1.993E-7	2.050E-7	2.069E-7	2.072E-7	1.977E-7	2.010E-7	2.004E-7	2.027E-7	2.017E-7
Exp. σ	0.0015	0.0016	0.0016	0.0017	0.0016	0.0016	0.0016	0.0017	0.0016
k_{eff}	0.99667	0.99676	0.99637	0.99643	0.99701	0.99650	0.99634	0.99658	0.99645
σ	0.00022	0.00022	0.00023	0.00023	0.00022	0.00023	0.00023	0.00022	0.00023

6.5.4.4 MOX (Plutonium Oxide/Uranium Oxide Mix) Results of Benchmark Calculations

The range of parameters included in the MOX benchmarks is shown in Table 6.5.4-4. Experiments are chosen to reflect the fuel evaluated for shipment. This includes the use of arrays of MOX rods (<10 wt % Pu) with light water moderation. Trending in k_{eff} was evaluated for the following independent variables: isotope weight percent as a function of ^{238}U fraction, moderator to fuel volume ratio, and energy of the average neutron lethargy causing fission (EALCF). No statistically significant trends were found for any of the system parameters. USLs are, therefore, generated for each of the independent variables. A minimum USL covering the range of applicability of the benchmark set is determined.

To evaluate the relative importance of the trend analysis to the upper subcritical limits, correlation coefficients are required for all independent parameters. The linear correlation coefficient, R, is calculated by taking the square root of the R^2 value. In particular, the correlation coefficient, R, is a measure of the linear relationship between k_{eff} and a critical experiment parameter. If R is +1, a perfect linear relationship with a positive slope is indicated. If R is -1, a perfect linear relationship with a negative slope is indicated. When R is 0, no linear relationship is indicated.

Table 6.5.4-5 contains the correlation coefficient, R, for each linear fit of k_{eff} versus experimental parameter. Linear fits and correlation constants are based on the 59 data-point evaluation sets plotted in Section 6.5.4.5.

As there is no significant correlation to any of the independent variables, the USL for each independent variable is calculated and shown with its range of applicability in Table 6.5.4-2. A sample output for EALCF is shown in Figure 6.5.4-11. Uncertainties included in the USLSTATS evaluation are the Monte Carlo uncertainty associated with the reactivity calculation and experimental uncertainty that was provided in the literature for each of the cases.

The $^{242}Pu/^{238}U$ ratio had the strongest correlation and the water-to-fuel volume ratio produced the minimum USL for all the independent variables correlated. Upper subcritical limits (USLs) are generated based on minimum margins of subcriticality (MMS), also referred to as administrative margin of 5%. The resulting minimum USLSTATS derived USL is 0.9331.

Figure 6.5.4-11 PWR MOX USLSTATS Output for Water to Fuel Volume Ratio

```
            uslstats: a utility to calculate upper subcritical
                      limits for criticality safety applications

  ***************************************************************************
                         Version 1.4, April 23, 2003
                        Oak Ridge National Laboratory
  ***************************************************************************


    Input to statistical treatment from file:w2fvr5.in

 Title: keff vs Water-to-Fuel Volume Ratio

    Proportion of the population = .995
    Confidence of fit            = .950
    Confidence on proportion     = .950
    Number of observations       =   59
    Minimum value of closed band =    0.00
    Maximum value of closed band =    0.00
    Administrative margin        =    0.05
```

independent variable - x	dependent variable - y	deviation in y	independent variable - x	dependent variable - y	deviation in y
1.19000E+00	9.91550E-01	5.96000E-03	1.52000E+00	9.88170E-01	5.14000E-03
1.19000E+00	9.95580E-01	4.59000E-03	2.49000E+00	9.93450E-01	3.65000E-03
2.52000E+00	9.93540E-01	3.02000E-03	3.52000E+00	9.87870E-01	3.65000E-03
2.52000E+00	1.00039E+00	2.26000E-03	4.40000E+00	9.93650E-01	4.44000E-03
3.64000E+00	9.93960E-01	2.34000E-03	6.28000E+00	9.96480E-01	5.43000E-03
3.64000E+00	1.00264E+00	2.53000E-03	7.05000E+00	9.93170E-01	5.13000E-03
1.68000E+00	9.93170E-01	7.16000E-03	2.49000E+00	9.96100E-01	3.53000E-03
2.16000E+00	9.91940E-01	5.77000E-03	3.52000E+00	9.91630E-01	3.93000E-03
2.16000E+00	9.96120E-01	5.28000E-03	4.40000E+00	9.94460E-01	4.62000E-03
4.71000E+00	9.94700E-01	2.95000E-03	6.28000E+00	9.95150E-01	5.72000E-03
5.67000E+00	9.94430E-01	2.56000E-03	7.05000E+00	9.91400E-01	6.11000E-03
1.08000E+01	9.99990E-01	2.16000E-03	1.52000E+00	9.90720E-01	3.27000E-03
2.42000E+00	9.90540E-01	4.71000E-03	2.49000E+00	9.91190E-01	3.05000E-03
2.42000E+00	9.95620E-01	4.72000E-03	3.52000E+00	9.91770E-01	3.84000E-03
2.42000E+00	1.00016E+00	4.72000E-03	4.40000E+00	9.97310E-01	4.73000E-03
2.98000E+00	9.92510E-01	4.05000E-03	6.28000E+00	9.97440E-01	5.62000E-03
2.98000E+00	9.95970E-01	4.02000E-03	7.05000E+00	9.96110E-01	6.52000E-03
2.98000E+00	1.00453E+00	4.02000E-03	1.10000E+00	9.93110E-01	5.43000E-03
4.24000E+00	9.94610E-01	4.12000E-03	1.56000E+00	9.89370E-01	4.93000E-03
4.24000E+00	9.98940E-01	4.14000E-03	2.71000E+00	9.88960E-01	5.03000E-03
4.24000E+00	9.99980E-01	4.12000E-03	3.79000E+00	9.89000E-01	6.22000E-03
5.55000E+00	9.94400E-01	5.18000E-03	5.14000E+00	9.89770E-01	7.42000E-03
5.55000E+00	9.97870E-01	5.19000E-03	5.58000E+00	9.90580E-01	8.01000E-03
1.93000E+00	9.93380E-01	2.27000E-03	1.14000E+01	9.99200E-01	2.48000E-03
2.56000E+00	9.92740E-01	2.67000E-03	1.14000E+01	9.98350E-01	2.47000E-03
3.62000E+00	9.99510E-01	2.96000E-03	1.14000E+01	9.99230E-01	2.58000E-03
4.53000E+00	9.96420E-01	2.86000E-03	2.07000E+01	1.00066E+00	1.89000E-03
7.27000E+00	9.98140E-01	3.63000E-03	2.07000E+01	9.97920E-01	1.71000E-03
1.01000E+01	9.97360E-01	4.23000E-03	2.07000E+01	9.97870E-01	1.70000E-03
1.16000E+01	9.99430E-01	4.23000E-03			

```
    chi =  1.2542 (upper bound = 9.49). The data tests normal.


          Output from statistical treatment

    keff vs Water-to-Fuel Volume Ratio

     Number of data points (n)                        59
     Linear regression, k(X)                         0.9932 + ( 3.5528E-04)*X
     Confidence on fit (1-gamma) [input]              95.0%
     Confidence on proportion (alpha) [input]         95.0%
     Proportion of population falling above
     lower tolerance interval (rho) [input]           99.5%
     Minimum value of X                               1.1000E+00
     Maximum value of X                               2.0700E+01
     Average value of X                               5.3212E+00
     Average value of k                                0.99509
```

Figure 6.5.4-11 PWR MOX USLSTATS Output for Water to Fuel Volume Ratio (Continued)

```
     Minimum value of k                                0.98787
     Variance of fit, s(k,X)^2                        1.2095E-05


     Within variance, s(w)^2                          1.9626E-05
     Pooled variance, s(p)^2                          3.1721E-05
     Pooled std. deviation, s(p)                      5.6322E-03
     C(alpha,rho)*s(p)                                2.2969E-02
     student-t @ (n-2,1-gamma)                        1.67295E+00
     Confidence band width, W                         1.0388E-02
     Minimum margin of subcriticality, C*s(p)-W       1.2582E-02

     Upper subcritical limits: (  1.1000     <= X <=   20.700    )
     ***** *********** *******

     USL Method 1 (Confidence Band with
     Administrative Margin)             USL1 = 0.9328 + ( 3.5528E-04)*X (X <    19.146   )
                                             = 0.9396                   (X >=   19.146   )

     USL Method 2 (Single-Sided Uniform
     Width Closed Interval Approach)    USL2 = 0.9702 + ( 3.5528E-04)*X (X <  1.91462E+01)
                                             = 0.9770                   (X >= 1.91462E+01)



     USLs Evaluated Over Range of Parameter X:
     **** ********* **** ***** ** ********* **

     X:  1.10E+0  3.90E+0  6.70E+0  9.50E+0  1.23E+1  1.51E+1  1.79E+1  2.07E+1
        ------------------------------------------------------------------------
USL-1:    0.9332   0.9342   0.9352   0.9362   0.9372   0.9382   0.9392   0.9396
USL-2:    0.9706   0.9716   0.9726   0.9736   0.9746   0.9756   0.9766   0.9770
        ------------------------------------------------------------------------

   ***************************************************************************
```

Table 6.5.4-4 PWR MOX Range of Applicability for Complete Set of 59 Benchmark Experiments

Parameter	Minimum	Maximum
Energy of average neutron lethargy causing fission (eV)	8.10E-02	8.99E-01
Uranium-235/Uranium-238 Ratio	1.58E-03	1.51E+00
Plutonium-238/Uranium-238 Ratio	1.88E-06	1.54E-04
Plutonium-239/Uranium-238 Ratio	1.39E-02	7.77E-01
Plutonium-240/Uranium-238 Ratio	1.20E-03	8.48E-02
Plutonium-241/Uranium-238 Ratio	7.90E-05	7.59E-03
Plutonium-242/Uranium-238 Ratio	4.63E-06	6.38E-04
Water-to-fuel volume ratio	1.10E+00	2.07E+01

Table 6.5.4-5 PWR MOX Correlation Coefficients and USLs for Benchmark Experiments

Variable	R^2	R	Range of Applicability	USLSTATS Correlation	USL Low	USL High
Energy of average. neutron lethargy causing fission (eV)	0.0046	0.068	8.10E-02<=X<=8.99E-01	0.9372+-1.3542E-03X	0.9359	0.9370
U-235/U-238 Ratio	0.1148	0.339	1.58E-03<=X<=1.51E+00	0.9343+2.8147E-03X	0.9343	0.9385
Pu-238/U-238 Ratio	0.1030	0.321	1.88E-06<=X<=1.54E-04	0.9343+1.8044E+01X	0.9343	0.9370
Pu-239/U-238 Ratio	0.1202	0.347	1.39E-02<=X<=7.77E-01	0.9342+5.7481E-03X	0.9342	0.9386
Pu-240/U-238 Ratio	0.1409	0.375	1.20E-03<=X<=8.48E-02	0.9341+5.8088E-02X	0.9341	0.9390
Pu-241/U-238 Ratio	0.2160	0.465	7.90E-05<=X<=7.59E-03	0.9338+8.0681E-01X	0.9338	0.9399
Pu-242/U-238 Ratio	0.2440	0.494	4.63E-06<=X<=6.38E-04	0.9338+6.7569E+00X	0.9338	0.9381
Water-to-fuel volume ratio	0.1787	0.423	1.10E+00<=X<=2.07E+01	0.9328+3.5528E-04X	0.9331	0.9401

6.5.4.5 MOX (Plutonium Oxide/Uranium Oxide Mix) Criticality Benchmarks

From the International Handbook of Evaluated Criticality Safety Benchmark Experiments, 59 experiments are selected as the basis of the MCNP benchmarking. Experiments were selected for compatibility with LWR MOX rods evaluated for shipment. Of particular interest are benchmarks with rectangular arrays of MOX rods with plutonium weight percent less than 10%.

MCNP benchmark cases represent a collection of files composed of inputs directly obtained from references (with cross-section sets adjusted to those used in the cask analysis), NAC modified input files representing unique geometries based on reference input files, and input files constructed from the experimental material and geometry information. All cases were reviewed on a "preparer/checker" principle for modeling consistency with the cask models and the choice of code options. Due to large variations in the benchmark complexities, not all options employed in the cask models are reflected in each of the benchmarks (e.g., UNIVERSE structure). A review of the criticality results did not indicate any result trend due to particular modeling choices (e.g., using the UNIVERSE structure versus a single universe, or employing KSRC versus SDEF sampling).

Identifiers for the experiment, uncertainty and calculated k_{eff} and σ for each experiment are shown in Table 6.5.4-6. Stochastic Monte Carlo error is kept within ±0.2% and each output is checked to assure that the MCNP built-in statistical checks on the results are passed and that all fissile material is sampled.

Scatter plots of k_{eff} versus system parameters for 59 data point sets (see Figure 6.5.4-12 through Figure 6.5.4-19). Included in these scatter plots are linear regression lines with a corresponding correlation coefficient (R^2) to statistically indicate any trend or lack thereof. Scatter plots are created for k_{eff} versus the following.

- Energy of average neutron lethargy causing fission
- $^{235}U/^{238}U$ ratio
- $^{238}Pu/^{238}U$ ratio
- $^{239}Pu/^{238}U$ ratio
- $^{240}Pu/^{238}U$ ratio
- $^{241}Pu/^{238}U$ ratio
- $^{242}Pu/^{238}U$ ratio
- Water-to-fuel volume ratio

Figure 6.5.4-12 Adjusted k_{eff} vs. Energy of Average Neutron Lethargy Causing Fission

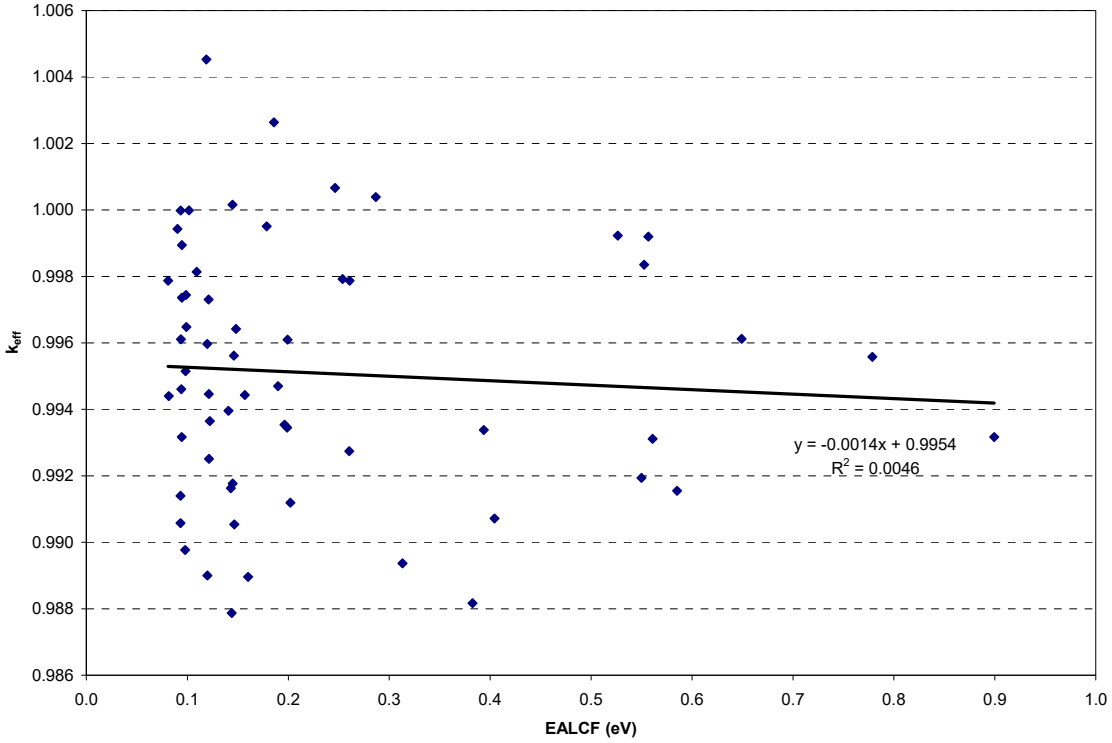

Figure 6.5.4-13 Adjusted k_{eff} vs. $^{235}U/^{238}U$ Ratio

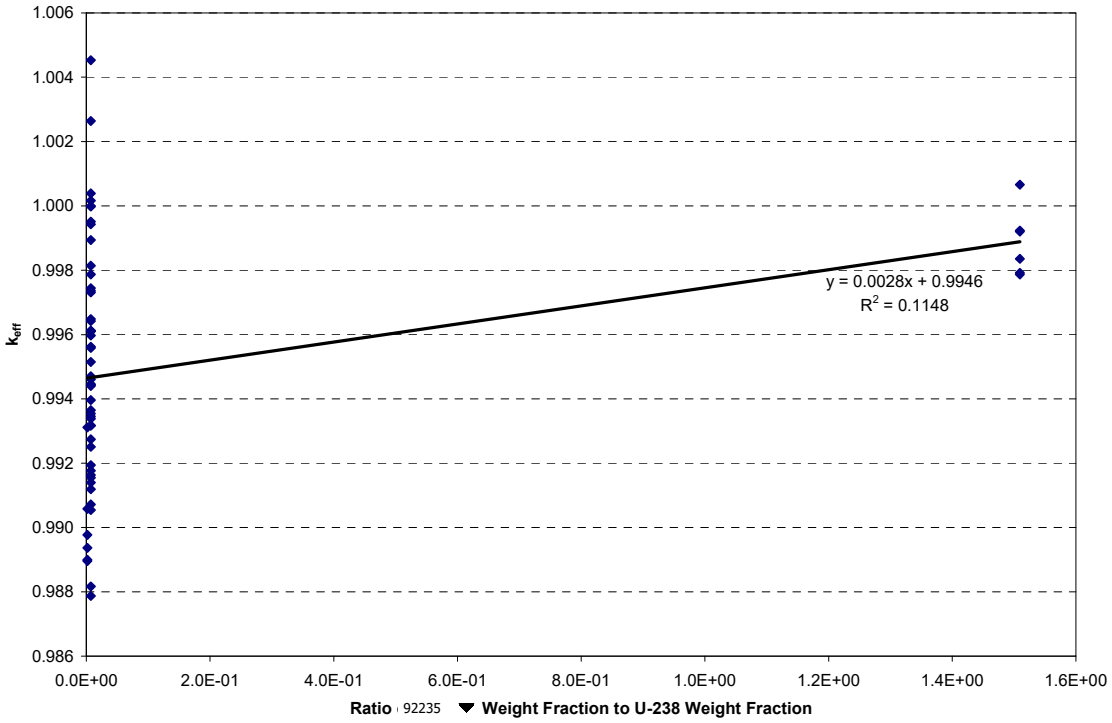

Figure 6.5.4-14 Adjusted k_{eff} vs. $^{238}Pu/^{238}U$ Ratio

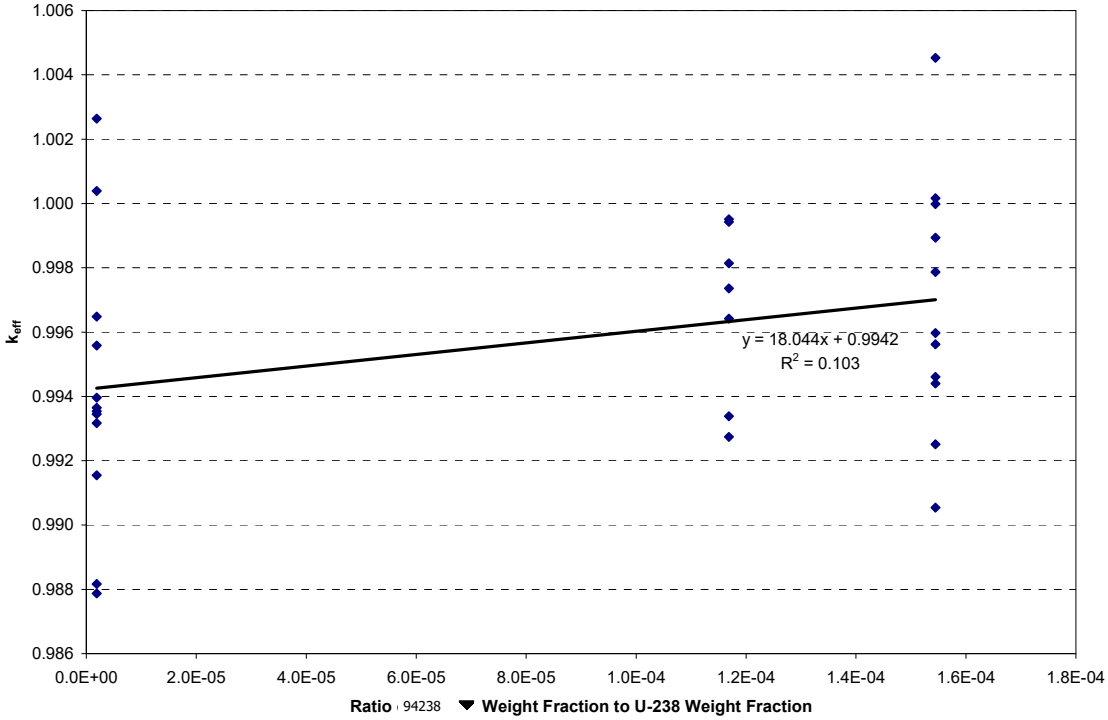

Figure 6.5.4-15 Adjusted k_{eff} vs. $^{239}Pu/^{238}U$ Ratio

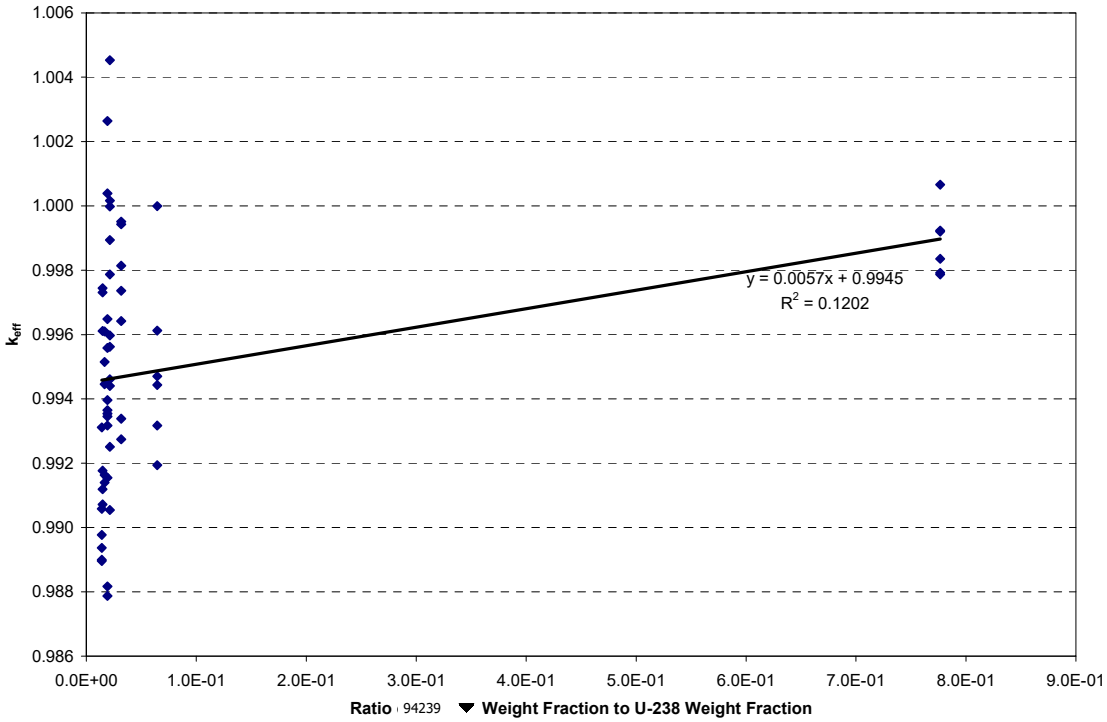

Figure 6.5.4-16 Adjusted k_{eff} vs. $^{240}Pu/^{238}U$ Ratio

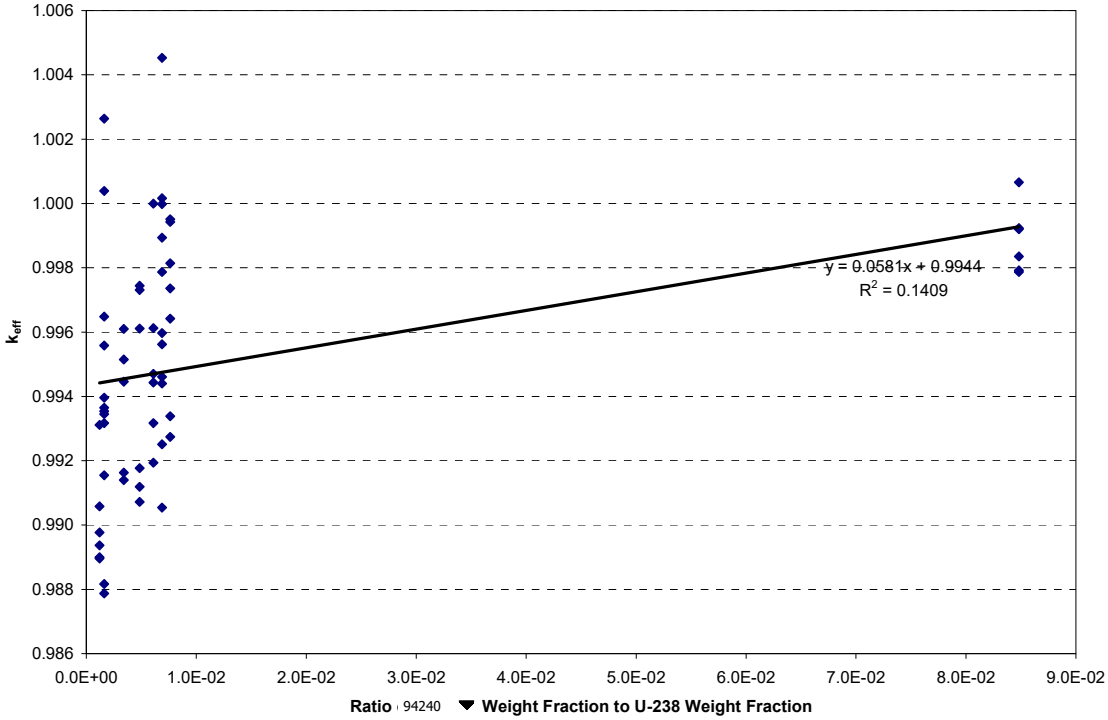

Figure 6.5.4-17 Adjusted k_{eff} vs. $^{241}Pu/^{238}U$ Ratio

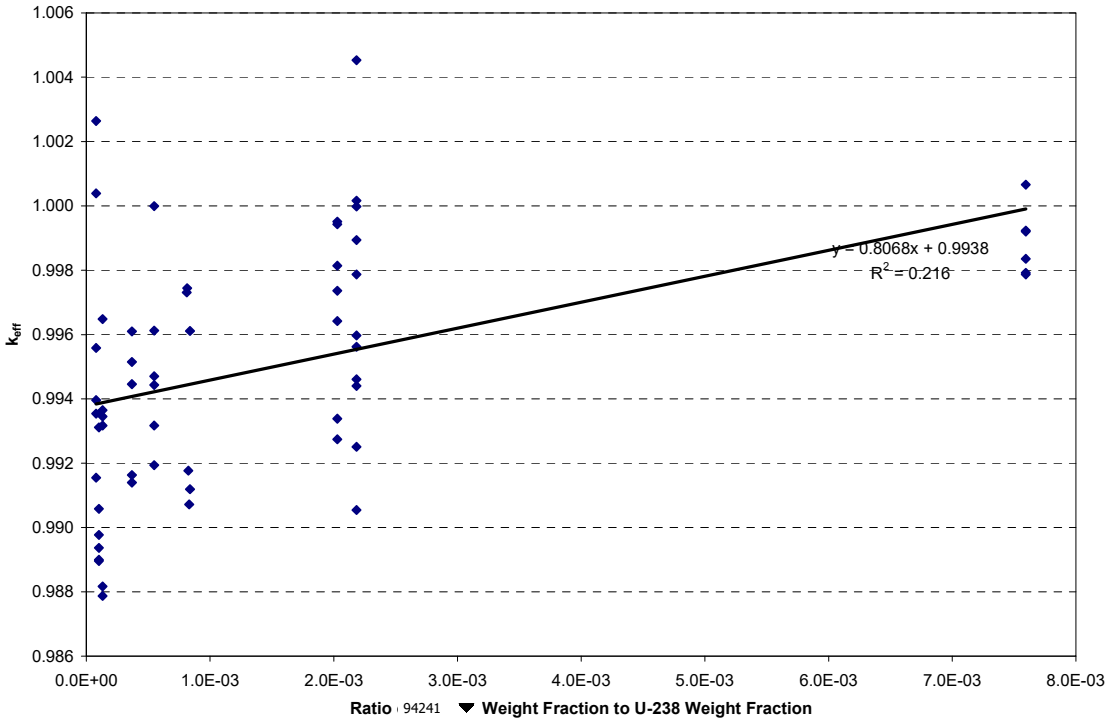

Figure 6.5.4-18 Adjusted k_{eff} vs. $^{242}Pu/^{238}U$ Ratio

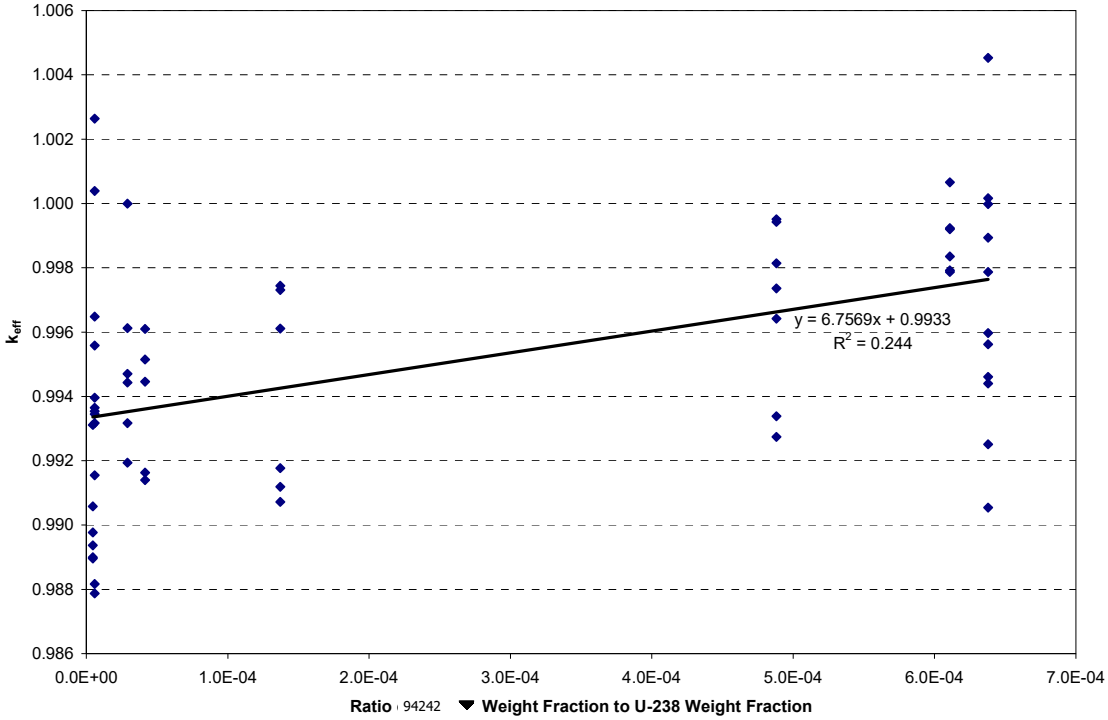

Figure 6.5.4-19 Adjusted k_{eff} vs. Water-to-Fuel Volume Ratio

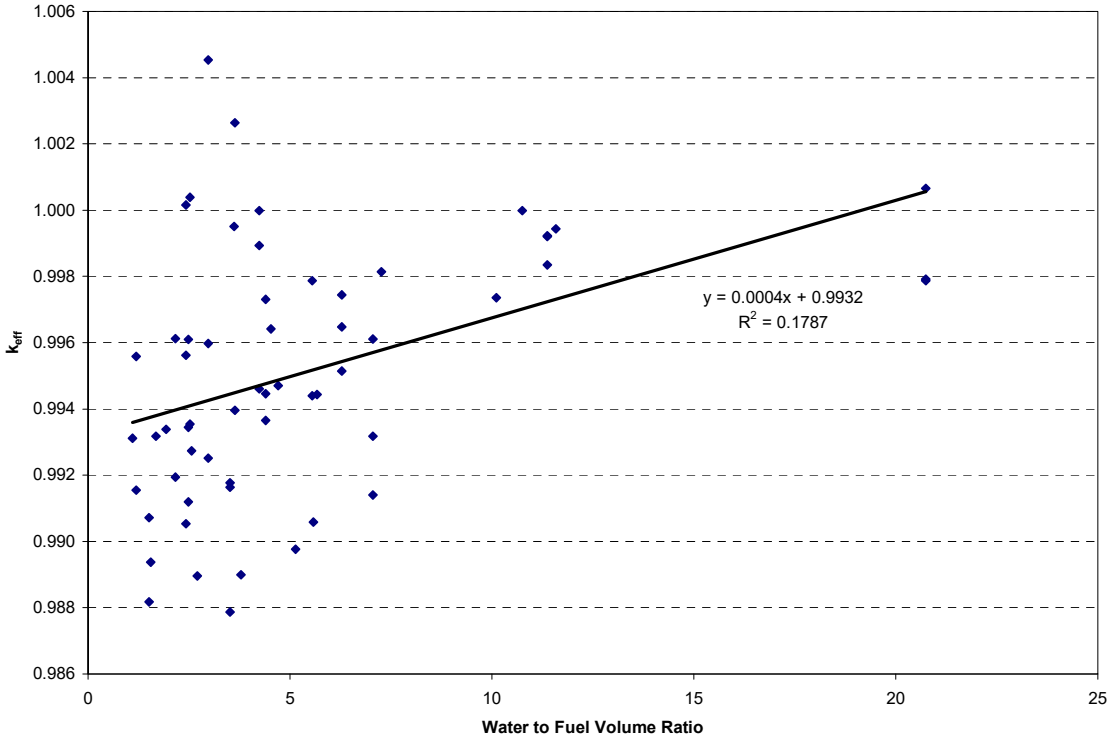

Table 6.5.4-6 MCNP Validation Statistics

		Benchmark			MCNP5 v1.30			
Identification	Water-to-Fuel Ratio	k_{eff}	σ	Δk	k_{eff}	σ	Adj. k_{eff}	EALCF (eV)
MIXCT-002-01	1.2	1.0010	0.0059	-0.0010	0.99255	0.00082	0.99155	0.58526
MIXCT-002-02	1.2	1.0009	0.0045	-0.0009	0.99648	0.00088	0.99558	0.77857
MIXCT-002-03	2.5	1.0024	0.0029	-0.0024	0.99594	0.00083	0.99354	0.19618
MIXCT-002-04	2.5	1.0024	0.0021	-0.0024	1.00279	0.00083	1.00039	0.28661
MIXCT-002-05	3.6	1.0038	0.0022	-0.0038	0.99776	0.00081	0.99396	0.14069
MIXCT-002-06	3.6	1.0029	0.0024	-0.0029	1.00554	0.00080	1.00264	0.18588
MIXCT-003-01	1.7	1.0000	0.0071	0.0000	0.99317	0.00092	0.99317	0.89937
MIXCT-003-02	2.2	1.0000	0.0057	0.0000	0.99194	0.00090	0.99194	0.54987
MIXCT-003-03	2.2	1.0000	0.0052	0.0000	0.99612	0.00093	0.99612	0.64918
MIXCT-003-04	4.7	1.0000	0.0028	0.0000	0.99470	0.00092	0.99470	0.18983
MIXCT-003-05	5.7	1.0000	0.0024	0.0000	0.99443	0.00088	0.99443	0.15707
MIXCT-003-06	10.8	1.0000	0.0020	0.0000	0.99999	0.00082	0.99999	0.10167
MIXCT-004-01	2.4	1.0000	0.0046	0.0000	0.99054	0.00099	0.99054	0.14647
MIXCT-004-02	2.4	1.0000	0.0046	0.0000	0.99562	0.00106	0.99562	0.14615
MIXCT-004-03	2.4	1.0000	0.0046	0.0000	1.00016	0.00107	1.00016	0.14470
MIXCT-004-04	3.0	1.0000	0.0039	0.0000	0.99251	0.00111	0.99251	0.12146
MIXCT-004-05	3.0	1.0000	0.0039	0.0000	0.99597	0.00098	0.99597	0.11971
MIXCT-004-06	3.0	1.0000	0.0039	0.0000	1.00453	0.00097	1.00453	0.11898
MIXCT-004-07	4.2	1.0000	0.0040	0.0000	0.99461	0.00100	0.99461	0.09396
MIXCT-004-08	4.2	1.0000	0.0040	0.0000	0.99894	0.00106	0.99894	0.09454
MIXCT-004-09	4.2	1.0000	0.0040	0.0000	0.99998	0.00097	0.99998	0.09350
MIXCT-004-10	5.6	1.0000	0.0051	0.0000	0.99440	0.00092	0.99440	0.08152
MIXCT-004-11	5.6	1.0000	0.0051	0.0000	0.99787	0.00094	0.99787	0.08098
MIXCT-005-01	1.9	1.0008	0.0022	-0.0008	0.99418	0.00057	0.99338	0.39380
MIXCT-005-02	2.6	1.0011	0.0026	-0.0011	0.99384	0.00059	0.99274	0.26049
MIXCT-005-03	3.6	1.0016	0.0029	-0.0016	1.00111	0.00058	0.99951	0.17856
MIXCT-005-04	4.5	1.0021	0.0028	-0.0021	0.99852	0.00057	0.99642	0.14820
MIXCT-005-05	7.3	1.0026	0.0036	-0.0026	1.00074	0.00049	0.99814	0.10925
MIXCT-005-06	10.1	1.0033	0.0042	-0.0033	1.00066	0.00048	0.99736	0.09455
MIXCT-005-07	11.6	1.0035	0.0042	-0.0035	1.00293	0.00046	0.99943	0.09019

Table 6.5.4-6 MCNP Validation Statistics (Continued)

		Benchmark			MCNP5 v1.30			
Identification	Water-to-Fuel Ratio	k_{eff}	σ	Δk	k_{eff}	σ	Adj. k_{eff}	EALCF (eV)
MIXCT-006-01	1.5	1.0016	0.0051	-0.0016	0.98977	0.00060	0.98817	0.38252
MIXCT-006-02	2.5	1.0017	0.0036	-0.0017	0.99515	0.00061	0.99345	0.19894
MIXCT-006-03	3.5	1.0026	0.0036	-0.0026	0.99047	0.00059	0.98787	0.14393
MIXCT-006-04	4.4	1.0051	0.0044	-0.0051	0.99875	0.00058	0.99365	0.12231
MIXCT-006-05	6.3	1.0040	0.0054	-0.0040	1.00048	0.00055	0.99648	0.09904
MIXCT-006-06	7.1	1.0055	0.0051	-0.0055	0.99867	0.00052	0.99317	0.09438
MIXCT-007-01	2.5	1.0023	0.0035	-0.0023	0.99840	0.00049	0.99610	0.19918
MIXCT-007-02	3.5	1.0024	0.0039	-0.0024	0.99403	0.00050	0.99163	0.14313
MIXCT-007-03	4.4	1.0036	0.0046	-0.0036	0.99806	0.00048	0.99446	0.12122
MIXCT-007-04	6.3	1.0037	0.0057	-0.0037	0.99885	0.00043	0.99515	0.09818
MIXCT-007-05	7.1	1.0044	0.0061	-0.0044	0.99580	0.00042	0.99140	0.09330
MIXCT-008-01	1.5	0.9997	0.0032	0.0003	0.99042	0.00066	0.99072	0.40443
MIXCT-008-02	2.5	1.0008	0.0030	-0.0008	0.99199	0.00057	0.99119	0.20199
MIXCT-008-03	3.5	1.0023	0.0038	-0.0023	0.99407	0.00056	0.99177	0.14500
MIXCT-008-04	4.4	1.0015	0.0047	-0.0015	0.99881	0.00057	0.99731	0.12108
MIXCT-008-05	6.3	1.0022	0.0056	-0.0022	0.99964	0.00050	0.99744	0.09872
MIXCT-008-06	7.1	1.0028	0.0065	-0.0028	0.99891	0.00049	0.99611	0.09362
MIXCT-009-01	1.1	1.0003	0.0054	-0.0003	0.99341	0.00059	0.99311	0.56093
MIXCT-009-02	1.6	1.0020	0.0049	-0.0020	0.99137	0.00058	0.98937	0.31308
MIXCT-009-03	2.7	1.0035	0.0050	-0.0035	0.99246	0.00056	0.98896	0.16022
MIXCT-009-04	3.8	1.0046	0.0062	-0.0046	0.99360	0.00054	0.98900	0.11987
MIXCT-009-05	5.1	1.0059	0.0074	-0.0059	0.99567	0.00049	0.98977	0.09776
MIXCT-009-06	5.6	1.0067	0.0080	-0.0067	0.99728	0.00047	0.99058	0.09313
MIXCT-011-01	11.4	1.0000	0.0024	0.0000	0.99920	0.00063	0.99920	0.55670
MIXCT-011-02	11.4	1.0000	0.0024	0.0000	0.99835	0.00060	0.99835	0.55254
MIXCT-011-03	11.4	1.0000	0.0025	0.0000	0.99923	0.00062	0.99923	0.52644
MIXCT-011-04	20.7	1.0000	0.0018	0.0000	1.00066	0.00056	1.00066	0.24638
MIXCT-011-05	20.7	1.0000	0.0016	0.0000	0.99792	0.00059	0.99792	0.25390
MIXCT-011-06	20.7	1.0000	0.0016	0.0000	0.99787	0.00058	0.99787	0.26082

6.5.5 MCNP Criticality Benchmarks for Research Reactor Fuels

The results of the criticality analyses presented in this chapter must be compared to the upper subcritical limit (USL). The USL accounts for bias and uncertainty resulting from the method using information obtained from the analysis of criticality benchmark experimental data. Code bias calculated in this section is applicable to research reactor fuel (e.g., MTR, DIDO, SLOWPOKE, and NRU/NRX) with the exception of TRIGA (U-ZrH) elements.

Criticality code validation is performed for the Monte Carlo evaluation code and neutron cross-section libraries. Criticality validation is required by the criticality safety standard ANSI/ANS-8.1.

6.5.5.1 Benchmark Experiments and Applicability Discussion

NUREG/CR-6361, "Criticality Benchmark Guide for Light-Water-Reactor Fuel in Transportation and Storage Packages," provides a guide to LWR criticality benchmark calculations and the determination of bias and subcritical limits in criticality safety evaluations. In Section 2 of the NUREG, a series of LWR criticality experiments is described in sufficient detail for independent modeling. In Section 3, the criticality experiments are modeled, and the results (k_{eff} values) are presented. The method utilized in the NUREG is KENO-Va with the 44-group ENDF/B-V cross-section library embedded in SCALE 4.3. In Section 4, a guide for the determination of bias and subcritical safety limits is provided based on ANSI/ANS-8.1 and statistical analysis of the trending in the bias. Finally, guidelines for experiment selection and applicability are presented in Section 5. The approach outlined in Section 4 of the NUREG is described in detail herein and is implemented for MCNP5 with continuous energy ENDF/B-VI cross-sections.

NUREG/CR-6361 implements ANSI/ANS-8.1 criticality safety criterion as follows.

$$k_s \leq k_c - \Delta k_s - \Delta k_c - \Delta k_m \qquad \text{(Equation 1)}$$

where:

k_s = calculated allowable maximum multiplication factor, k_{eff}, of the system being evaluated for all normal or credible abnormal conditions or events.

k_c = mean k_{eff} that results from a calculation of benchmark criticality experiments using a particular calculation method. If the calculated k_{eff} values for the criticality experiments exhibit a trend with an independent parameter, then k_c shall be determined by extrapolation based on best fit to calculated values. Criticality experiments used as benchmarks in computing k_c should have physical compositions, configurations and nuclear characteristics (including reflectors) similar to those of the system being evaluated.

Δk_s = allowance for the following:

- statistical or convergence uncertainties, or both, in computation of k_s
- material and fabrication tolerances
- geometric or material representations used in computational method

Δk_c = margin for uncertainty in k_c, which includes allowance for the following:

- uncertainties in criticality experiments
- statistical or convergence uncertainties, or both, in computation of k_c
- uncertainties resulting from extrapolation of k_c outside range of experimental data
- uncertainties resulting from limitations in geometrical or material representations used in the computational method

Δk_m = arbitrary administrative margin to ensure subcriticality of k_s

The various uncertainties are combined statistically if they are independent. Correlated uncertainties are combined by addition.

Equation 1 can be rewritten as shown.

$$k_s \leq 1 - \Delta k_m - \Delta k_s - (1 - k_c) - \Delta k_c \quad \text{(Equation 2)}$$

Noting that the definition of the bias is $\beta = 1 - k_c$, Equation 2 can be written as shown.

$$k_s + \Delta k_s \leq 1 - \Delta km - \beta - \Delta\beta \quad \text{(Equation 3)}$$

where:

$$\Delta\beta = \Delta k_c$$

Thus, the maximum allowable value for k_{eff} plus uncertainties in the system being analyzed must be below 1 minus an administrative margin (typically 0.05), which includes the bias and the uncertainty in the bias. This can also be written as shown.

$$k_s + \Delta k_s \leq \text{Upper Subcritical Limit (USL)} \quad \text{(Equation 4)}$$

where:

$$\text{USL} \equiv 1 - \Delta k_m - \beta - \Delta\beta \quad \text{(Equation 5)}$$

This is the USL criterion as described in Section 4 of NUREG/CR-6361. Two methods are prescribed for the statistical determination of the USL. The "Confidence Band with Administrative Margin (USL-1)" approach is implemented here and is referred to generically as USL. A $\Delta k_m = 0.05$ and a lower confidence band are specified based on a linear regression of k_{eff} as a function of some system parameter.

Subsequent sections contain the list of critical benchmarks employed in the validation of MCNP with its continuous energy neutron cross-section libraries and the processing of the experimental results into the USL. Also included are linear fits of reactivity (k_{eff}) to each of the system

parameters evaluated. Experiments were chosen to reflect the in-cask fuel geometry and materials as closely as available.

6.5.5.2 HEU and IEU Criticality Benchmarks

From the International Handbook of Evaluated Criticality Safety Benchmark Experiments, intermediate and high enriched thermal neutron experiments are selected as the basis of the MCNP benchmarking. Materials selected were compounds and metallic fuels. Experiments were selected for compatibility of materials and geometry with the spent fuel casks. As such, experiments containing significant neutron absorber in the form of plates, rods, or soluble poison are eliminated. Also removed are experiments containing non light water moderator. Further review eliminated experiments if they did not contain a primarily thermal neutron spectrum causing fission.

All cases were reviewed on a "preparer/checker" principle for modeling consistency with the cask models and the choice of code options. Case inputs from the handbook where modified as necessary to match experimental data or to correct modeling errors. Due to large variations in the benchmark complexities, not all options employed in the cask models are reflected in each of the benchmarks (e.g., UNIVERSE structure). A review of the criticality results did not indicate any result trend due to particular modeling choices (e.g., using the UNIVERSE structure versus a single universe, or employing KSRC versus SDEF sampling).

Key system parameters for the experiments are listed in Table 6.5.5-1. Table 6.5.5-2 lists the benchmark k_{eff} and experimental uncertainty. The NAC calculated MCNP k_{eff}'s and Monte Carlo uncertainties are shown in Table 6.5.5-3. Stochastic Monte Carlo error is kept within ±0.2% and each output is checked to assure that the MCNP built-in statistical checks on the results are passed and that all fissile material is sampled. Also included in the table are the combined Monte Carlo and experimental uncertainty and the results of the initial processing of the data indicating the minimum and average bias of each experiment.

Scatter plots of k_{eff} versus enrichment and average lethargy of neutrons causing fission are shown in Figure 6.5.5-1 and Figure 6.5.5-2. Included in these scatter plots are linear regression lines with a corresponding correlation coefficient (R^2) to statistically indicate any trend or lack thereof.

6.5.5.3 Results of MCNP Research Reactor Benchmark Calculations

Trending in k_{eff} was evaluated for wt% ^{235}U and energy of the average neutron lethargy causing fission (EALCF), the two parameters most likely to show cross section effects. No statistically significant trends were found for any of the system parameters. USLs are generated for each of

the independent variables. A minimum USL covering the range of applicability of the benchmark set is determined.

To evaluate the relative importance of the trend analysis to the upper subcritical limits, correlation coefficients are required for all independent parameters. The linear correlation coefficient, R, is calculated by taking the square root of the R^2 value. In particular, the correlation coefficient, R, is a measure of the linear relationship between k_{eff} and a critical experiment parameter. If R is +1, a perfect linear relationship with a positive slope is indicated. If R is -1, a perfect linear relationship with a negative slope is indicated. When R is 0, no linear relationship is indicated.

Table 6.5.5-4 contains the correlation coefficient, R, for each linear fit of k_{eff} versus experimental parameter. Linear fits and correlation constants are based on full 54 data-point evaluation sets plotted in the previous section.

The USL for each independent variable is calculated and shown with its range of applicability in Table 6.5.5-5. The USLSTATS output of k_{eff} versus EALCF and enrichment are shown in Figure 6.5.5-3 and Figure 6.5.5-4. Uncertainties included in the USLSTATS evaluation are the Monte Carlo uncertainty associated with the reactivity calculation, and the experimental uncertainty that was provided in the literature for each of the cases.

Based on all the independent variable correlations, a lower limit constant USL of 0.9171 may be applied. The range of applicability (area of applicability) of this limit may be extended to lower enrichment as the correlation shows an increase in USL as a function of reduced enrichment.

Figure 6.5.5-1 k_{eff} versus Fuel Enrichment (MCNP – Research Reactor Fuel)

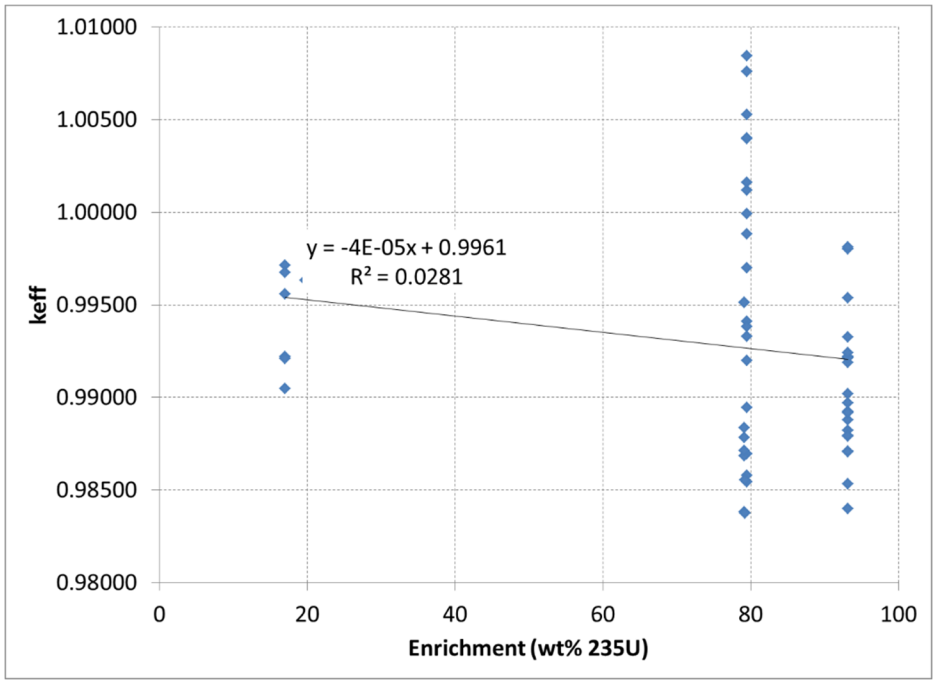

Figure 6.5.5-2 k_{eff} versus Energy of Average Neutron Lethargy Causing Fission (MCNP – Research Reactor Fuel)

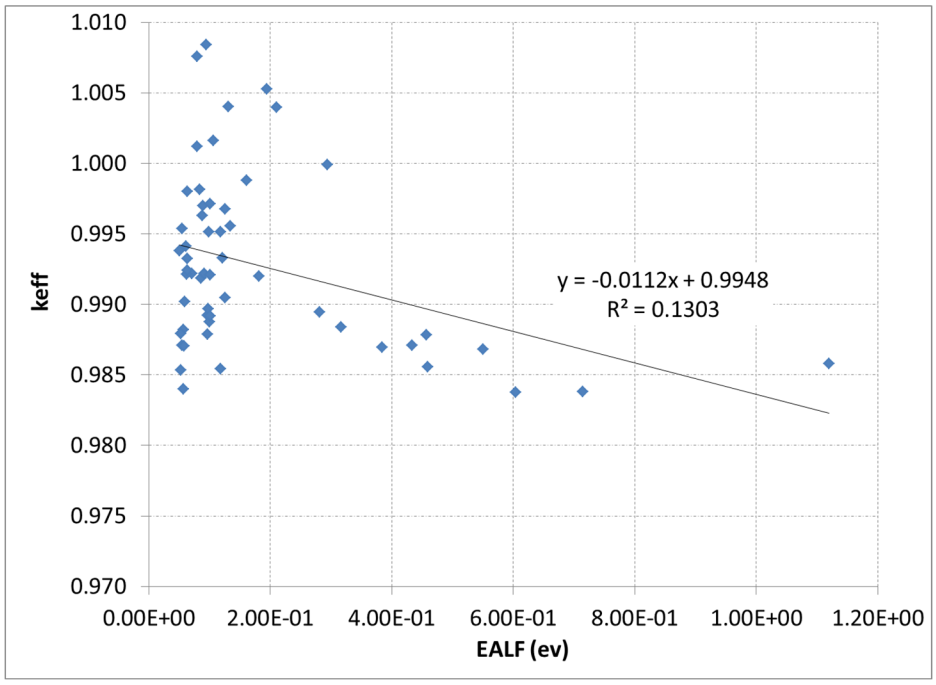

Figure 6.5.5-3 MCNP Research Reactor Fuel USLSTATS Output for EALCF

```
   Proportion of the population = .995
   Confidence of fit            = .950
   Confidence on proportion     = .950
   Number of observations       =   54
   Minimum value of closed band =    0.00
   Maximum value of closed band =    0.00
   Administrative margin        =    0.05

   independent     dependent       deviation              independent     dependent       deviation
   variable - x    variable - y      in y                 variable - x    variable - y      in y

    3.83770E-01     9.86960E-01     4.65000E-03             9.65800E-02     9.89240E-01     8.11000E-03
    2.81040E-01     9.89440E-01     4.68000E-03             9.82040E-02     9.89700E-01     8.11000E-03
    1.81510E-01     9.91990E-01     4.66000E-03             9.95040E-02     9.88780E-01     8.11000E-03
    1.21140E-01     9.93300E-01     4.62000E-03             1.00600E-01     9.89170E-01     8.11000E-03
    8.96800E-02     9.96990E-01     4.62000E-03             9.66350E-02     9.87890E-01     8.11000E-03
    2.93880E-01     9.99910E-01     4.65000E-03             8.57350E-02     9.91880E-01     4.49000E-03
    2.10270E-01     1.00396E+00     4.66000E-03             7.12960E-02     9.92190E-01     4.09000E-03
    1.94070E-01     1.00527E+00     4.62000E-03             6.39970E-02     9.98000E-01     4.08000E-03
    1.31260E-01     1.00402E+00     4.61000E-03             6.25280E-02     9.92120E-01     4.08000E-03
    9.46680E-02     1.00843E+00     4.66000E-03             5.91670E-02     9.90210E-01     4.07000E-03
    7.99520E-02     1.00758E+00     4.63000E-03             5.67170E-02     9.88230E-01     4.08000E-03
    1.18230E-01     9.85420E-01     4.62000E-03             5.50180E-02     9.87090E-01     4.06000E-03
    6.12710E-02     9.94110E-01     4.60000E-03             5.30120E-02     9.85340E-01     4.06000E-03
    1.61160E-01     9.98810E-01     4.64000E-03             5.27070E-02     9.87930E-01     4.06000E-03
    7.97960E-02     1.00119E+00     4.56000E-03             8.34310E-02     9.98130E-01     4.10000E-03
    1.11980E+00     9.85800E-01     5.96000E-03             6.31130E-02     9.93270E-01     4.08000E-03
    1.05990E-01     1.00162E+00     2.35000E-03             5.49410E-02     9.95360E-01     4.06000E-03
    5.02850E-02     9.93820E-01     4.89000E-03             5.78770E-02     9.87070E-01     4.07000E-03
    7.15000E-01     9.83810E-01     4.29000E-03             5.71950E-02     9.83980E-01     4.07000E-03
    5.50720E-01     9.86840E-01     4.31000E-03             6.37490E-02     9.92430E-01     4.08000E-03
    4.34030E-01     9.87120E-01     4.29000E-03             9.13040E-02     9.92190E-01     3.96000E-03
    6.03930E-01     9.83750E-01     3.34000E-03             1.34700E-01     9.95580E-01     4.07000E-03
    4.58840E-01     9.85560E-01     3.49000E-03             1.00680E-01     9.97130E-01     4.46000E-03
    4.57170E-01     9.87850E-01     4.30000E-03             1.25750E-01     9.96750E-01     4.46000E-03
    3.16220E-01     9.88370E-01     4.39000E-03             1.00650E-01     9.92110E-01     4.36000E-03
    1.18400E-01     9.95140E-01     4.88000E-03             1.25740E-01     9.90480E-01     4.47000E-03
    9.84130E-02     9.95140E-01     4.97000E-03             8.78000E-02     9.96310E-01     1.40000E-03

   chi =  0.6296 (upper bound = 9.49). The data tests normal.

         Output from statistical treatment

   keff vs EALCF

    Number of data points (n)                          54
    Linear regression, k(X)                           0.9948 + (-1.1154E-02)*X
    Confidence on fit (1-gamma) [input]                95.0%
    Confidence on proportion (alpha) [input]           95.0%
    Proportion of population falling above
    lower tolerance interval (rho) [input]             99.5%
    Minimum value of X                                 5.0285E-02
    Maximum value of X                                 1.1198E+00
    Average value of X                                 1.7980E-01
    Average value of k                                  0.99279
    Minimum value of k                                  0.98375
    Variance of fit, s(k,X)^2                          3.4489E-05
    Within variance, s(w)^2                            2.3078E-05
    Pooled variance, s(p)^2                            5.7567E-05
    Pooled std. deviation, s(p)                        7.5873E-03
    C(alpha,rho)*s(p)                                  3.4132E-02
    student-t @ (n-2,1-gamma)                          1.67620E+00
    Confidence band width, W                           1.5195E-02
    Minimum margin of subcriticality, C*s(p)-W         1.8937E-02

    Upper subcritical limits: ( 5.02850E-02 <= X <=   1.1198    )
    ***** ************ *******

    USL Method 1 (Confidence Band with
    Administrative Margin)             USL1 = 0.9296 + (-1.1154E-02)*X

    USL Method 2 (Single-Sided Uniform
    Width Closed Interval Approach)    USL2 = 0.9607 + (-1.1154E-02)*X

    USLs Evaluated Over Range of Parameter X:
    **** ********* **** ***** ** ********* **

    X:  5.03E-2  2.03E-1  3.56E-1  5.09E-1  6.61E-1  8.14E-1  9.67E-1  1.12E+0
       ------------------------------------------------------------------------
USL-1:    0.9290   0.9273   0.9256   0.9239   0.9222   0.9205   0.9188   0.9171
USL-2:    0.9601   0.9584   0.9567   0.9550   0.9533   0.9516   0.9499   0.9482
```

Figure 6.5.5-4 MCNP Research Reactor Fuel USLSTATS Output for wt% ^{235}U

```
Proportion of the population = .995
   Confidence of fit            = .950
   Confidence on proportion     = .950
   Number of observations       =   54
   Minimum value of closed band =    0.00
   Maximum value of closed band =    0.00
   Administrative margin        =    0.05

   independent     dependent       deviation              independent     dependent       deviation
   variable - x    variable - y      in y                 variable - x    variable - y      in y

    7.94700E+01     9.86960E-01     4.65000E-03             9.32000E+01     9.89240E-01     8.11000E-03
    7.94700E+01     9.89440E-01     4.68000E-03             9.32000E+01     9.89700E-01     8.11000E-03
    7.94700E+01     9.91990E-01     4.66000E-03             9.32000E+01     9.88780E-01     8.11000E-03
    7.94700E+01     9.93300E-01     4.62000E-03             9.32000E+01     9.89170E-01     8.11000E-03
    7.94700E+01     9.96990E-01     4.62000E-03             9.32000E+01     9.87890E-01     8.11000E-03
    7.94700E+01     9.99910E-01     4.65000E-03             9.31700E+01     9.91880E-01     4.49000E-03
    7.94700E+01     1.00396E+00     4.66000E-03             9.31700E+01     9.92190E-01     4.09000E-03
    7.94700E+01     1.00527E+00     4.62000E-03             9.31700E+01     9.98000E-01     4.08000E-03
    7.94700E+01     1.00402E+00     4.61000E-03             9.31700E+01     9.92120E-01     4.08000E-03
    7.94700E+01     1.00843E+00     4.66000E-03             9.31700E+01     9.90210E-01     4.07000E-03
    7.94700E+01     1.00758E+00     4.63000E-03             9.31700E+01     9.88230E-01     4.08000E-03
    7.94700E+01     9.85420E-01     4.62000E-03             9.31700E+01     9.87090E-01     4.06000E-03
    7.94700E+01     9.94110E-01     4.60000E-03             9.31700E+01     9.85340E-01     4.06000E-03
    7.94700E+01     9.98810E-01     4.64000E-03             9.31700E+01     9.87930E-01     4.06000E-03
    7.94700E+01     1.00119E+00     4.56000E-03             9.31700E+01     9.98130E-01     4.10000E-03
    7.94700E+01     9.85800E-01     5.96000E-03             9.31700E+01     9.93270E-01     4.08000E-03
    7.94700E+01     1.00162E+00     2.35000E-03             9.31700E+01     9.95360E-01     4.06000E-03
    7.94700E+01     9.93820E-01     4.89000E-03             9.31700E+01     9.87070E-01     4.07000E-03
    7.91900E+01     9.83810E-01     4.29000E-03             9.31700E+01     9.83980E-01     4.07000E-03
    7.91900E+01     9.86840E-01     4.31000E-03             9.31700E+01     9.92430E-01     4.08000E-03
    7.91900E+01     9.87120E-01     4.29000E-03             1.70000E+01     9.92190E-01     3.96000E-03
    7.92400E+01     9.83750E-01     3.34000E-03             1.70000E+01     9.95580E-01     4.07000E-03
    7.92400E+01     9.85560E-01     3.49000E-03             1.70000E+01     9.97130E-01     4.46000E-03
    7.91900E+01     9.87850E-01     4.30000E-03             1.70000E+01     9.96750E-01     4.46000E-03
    7.91900E+01     9.88370E-01     4.39000E-03             1.70000E+01     9.92110E-01     4.36000E-03
    7.91900E+01     9.95140E-01     4.88000E-03             1.70000E+01     9.90480E-01     4.47000E-03
    7.91900E+01     9.95140E-01     4.97000E-03             1.97700E+01     9.96310E-01     1.40000E-03

   chi =  0.6296 (upper bound = 9.49). The data tests normal.

         Output from statistical treatment

   keff vs enrichment

    Number of data points (n)                          54
    Linear regression, k(X)                           0.9961 + (-4.3735E-05)*X
    Confidence on fit (1-gamma) [input]                95.0%
    Confidence on proportion (alpha) [input]           95.0%
    Proportion of population falling above
    lower tolerance interval (rho) [input]             99.5%
    Minimum value of X                                 1.7000E+01
    Maximum value of X                                 9.3200E+01
    Average value of X                                 7.6455E+01
    Average value of k                                  0.99279
    Minimum value of k                                  0.98375
    Variance of fit, s(k,X)^2                          3.8545E-05
    Within variance, s(w)^2                            2.3078E-05
    Pooled variance, s(p)^2                            6.1623E-05
    Pooled std. deviation, s(p)                        7.8500E-03
    C(alpha,rho)*s(p)                                  3.0787E-02
    student-t @ (n-2,1-gamma)                          1.67620E+00
    Confidence band width, W                           1.4021E-02
    Minimum margin of subcriticality, C*s(p)-W         1.6767E-02

    Upper subcritical limits: (  17.000     <= X <=   93.200    )
    ***** ************ *******

    USL Method 1 (Confidence Band with
    Administrative Margin)             USL1 = 0.9321 + (-4.3735E-05)*X

    USL Method 2 (Single-Sided Uniform
    Width Closed Interval Approach)    USL2 = 0.9653 + (-4.3735E-05)*X

    USLs Evaluated Over Range of Parameter X:
    **** ********* **** ***** ** ********* **

    USLs Evaluated Over Range of Parameter X:
    **** ********* **** ***** ** ********* **

    X:  1.70E+1  2.79E+1  3.88E+1  4.97E+1  6.05E+1  7.14E+1  8.23E+1  9.32E+1
       ------------------------------------------------------------------------
USL-1:    0.9314   0.9309   0.9304   0.9299   0.9295   0.9290   0.9285   0.9280
USL-2:    0.9646   0.9641   0.9637   0.9632   0.9627   0.9622   0.9617   0.9613
```

Table 6.5.5-1 MCNP Benchmark Configurations for Research Reactor Fuel Benchmarks

Identification	%U235	Clusters	Config.	Lattice	Fuel Elements	Fuel Shape	Pitch (cm)	Fuel OD (cm)	Clad OD (cm)	Fuel Mat'l	Clad Mat'l
HCT-003-01	79.47	1	--	hex	1409	cross	1.22/0.61	0.475 side to side	varies, 0.2 on sides	UO_2+Cu	SS
HCT-003-02	79.47	1	--	hex	1243	cross	1.22/0.61	0.475 side to side	varies, 0.2 on sides	UO_2+Cu	SS
HCT-003-03	79.47	1	--	hex	1018	cross	1.22/0.61	0.475 side to side	varies, 0.2 on sides	UO_2+Cu	SS
HCT-003-04	79.47	1	--	hex	776	cross	1.22/0.61	0.475 side to side	varies, 0.2 on sides	UO_2+Cu	SS
HCT-003-05	79.47	1	--	hex	596	cross	1.22/0.61	0.475 side to side	varies, 0.2 on sides	UO_2+Cu	SS
HCT-003-06	79.47	1	--	hex	1266	cross	0.61/1.22	0.475 side to side	varies, 0.2 on sides	UO_2+Cu	SS
HCT-003-07	79.47	1	--	hex	1043	cross	0.61/1.22	0.475 side to side	varies, 0.2 on sides	UO_2+Cu	SS
HCT-003-08	79.47	1	--	hex	1006	cross	0.61/1.22	0.475 side to side	varies, 0.2 on sides	UO_2+Cu	SS
HCT-003-09	79.47	1	--	hex	764	cross	0.61/1.22	0.475 side to side	varies, 0.2 on sides	UO_2+Cu	SS
HCT-003-10	79.47	1	--	hex	589	cross	0.61/1.22	0.475 side to side	varies, 0.2 on sides	UO_2+Cu	SS
HCT-003-11	79.47	1	--	hex	500	cross	0.61/1.22	0.475 side to side	varies, 0.2 on sides	UO_2+Cu	SS
HCT-003-12	79.47	1	--	hex	1106	cross	1.83/0.61	0.475 side to side	varies, 0.2 on sides	UO_2+Cu	SS
HCT-003-13	79.47	1	--	hex	727	cross	1.83/0.61	0.475 side to side	varies, 0.2 on sides	UO_2+Cu	SS
HCT-003-14	79.47	1	--	hex	949	cross	0.61/1.82	0.475 side to side	varies, 0.2 on sides	UO_2+Cu	SS
HCT-003-15	79.47	1	--	hex	662	cross	0.61/1.83	0.475 side to side	varies, 0.2 on sides	UO_2+Cu	SS
HCT-006-01	79.47	1	--	hex	1819	cross	0.56	0.475 side to side	varies, 0.2 on sides	UO_2+Cu	SS
HCT-006-02	79.47	1	--	hex	457	cross	1	0.475 side to side	varies, 0.2 on sides	UO_2+Cu	SS
HCT-006-03	79.47	1	--	hex	554	cross	2.113	0.475 side to side	varies, 0.2 on sides	UO_2+Cu	SS

Note: Some wt%U235 values were converted from atom fractions

Table 6.5.5-1 MCNP Benchmark Configurations for Research Reactor Fuel Benchmarks (Continued)

Identification	%U235	Clusters	Config.	Lattice	Fuel Elements	Fuel Shape	Pitch (cm)	Fuel OD (cm)	Clad OD (cm)	Fuel Mat'l	Clad Mat'l
HCT-011-01	79.19	1	21x21	square	1764	cylinder	1.4	0.7	1 (0.05 thick)	UO_2+Al	SS
HCT-011-02	79.19	1	21x21	square	1764	cylinder	1.4	0.7	1 (0.05 thick)	UO_2+Al	SS
HCT-011-03	79.19	1	21x21	square	1764	cylinder	1.4	0.7	1 (0.05 thick)	UO_2+Al	SS
HCT-012-01	79.24	4	18x18	square	1296	cylinder	1.4	0.7	1 (0.05 thick)	UO_2+Al	SS
HCT-012-02	79.24	4	18x18	square	1296	cylinder	1.4	0.7	1 (0.05 thick)	UO_2+Al	SS
HCT-013-01	79.19	9	14x14	square	1764	cylinder	1.4	0.7	1 (0.05thick)	UO_2+Al	SS
HCT-013-02	79.19	9	14x14	square	1764	cylinder	1.4	0.7	1 (0.05 thick)	UO_2+Al	SS
HCT-014-01	79.19	9	10x10	square	900	cylinder	$1.4\sqrt{2}$	0.7	1 (0.05 thick)	UO_2+Al	SS
HCT-014-02	79.19	9	10x10	square	900	cylinder	$1.4\sqrt{2}$	0.7	1 (0.05thick)	UO_2+Al	SS
HCT-022-01	93.2	13	4/5/4	square	494	plate	0.40132	.0508 thick	0.0762 thick	UO_2+SS	SS
HCT-022-02	93.2	14	5/5/4	square	532	plate	0.40132	.0508 thick	0.0762 thick	UO_2+SS	SS
HCT-022-03	93.2	15	5x3	square	570	plate	0.40132	.0508 thick	0.0762 thick	UO_2+SS	SS
HCT-022-04	93.2	15	5x3	square	570	plate	0.40132	.0508 thick	0.0762 thick	UO_2+SS	SS
HCT-022-05	93.2	24	4x3&4x3	square	912	plate	0.40132	.0508 thick	0.0762 thick	UO_2+SS	SS

Note: Some wt%U235 values were converted from atom fractions

Table 6.5.5-1 MCNP Benchmark Configurations for Research Reactor Fuel Benchmarks (Continued)

Identification	%U235	Clusters	Config.	Lattice	Fuel Elements	Fuel Shape	Pitch (cm)	Fuel OD (cm)	Clad OD (cm)	Fuel Mat'l	Clad Mat'l
HMT-006-01	93.17	1	4x4	square	194	plate	0.316411	.0508 thick	0.1524	U+Al	AL
HMT-006-02	93.17	1	4x4	square	188	plate	0.316411	.0508 thick	0.1524	U+Al	AL
HMT-006-03	93.17	1	4x4	square	221	plate	0.316411	.0508 thick	0.1524	U+Al	AL
HMT-006-04	93.17	1	4x4	square	255	plate	0.316411	.0508 thick	0.1524	U+Al	AL
HMT-006-05	93.17	1	4x4	square	520	plate	0.316411	.0508 thick	0.1524	U+Al	AL
HMT-006-06	93.17	1	4x4	square	286	plate	0.316411	.0508 thick	0.1524	U+Al	AL
HMT-006-07	93.17	1	5x5	square	233	plate	0.316411	.0508 thick	0.1524	U+Al	AL
HMT-006-08	93.17	1	6x6	square	232	plate	0.316411	.0508 thick	0.1524	U+Al	AL
HMT-006-09	93.17	1	7x7	square	296	plate	0.316411	.0508 thick	0.1524	U+Al	AL
HMT-006-10	93.17	1	4x4	square	365	plate	0.316411	.0508 thick	0.1524	U+Al	AL
HMT-006-11	93.17	1	3x4	square	1487	plate	0.316411	.0508 thick	0.1524	U+Al	AL
HMT-006-12	93.17	1	4x4	square	829	plate	0.316411	.0508 thick	0.1524	U+Al	AL
HMT-006-14	93.17	1	16x3	square	420	plate	0.316411	.0508 thick	0.1524	U+Al	AL
HMT-006-15	93.17	1	16x4	square	452	plate	0.316411	.0508 thick	0.1524	U+Al	AL
HMT-006-16	93.17	2	16x4	square	488	plate	0.316411	.0508 thick	0.1524	U+Al	AL

Note: Some wt%U235 values were converted from atom fractions

Table 6.5.5-1 MCNP Benchmark Configurations for Research Reactor Fuel Benchmarks (Continued)

Identification	%U235	Clusters	Config.	Lattice	Fuel Elements	Fuel Shape	Pitch (cm)	Fuel OD (cm)	Clad OD (cm)	Fuel Mat'l	Clad Mat'l
ICT-002-01	17	1	--	hex	34	tube	6.8	4.18	4.12	UO_2	SS
ICT-002-02	17	1	--	hex	34	tube	6.8	4.18	4.12	UO_2	SS
ICT-002-03	17	1	--	hex	74	tube	6.8	4.18	4.12	UO_2	SS
ICT-002-04	17	1	--	hex	74	tube	6.8	4.18	4.12	UO_2	SS
ICT-002-05	17	1	--	hex	68	tube	6.8	4.18	4.12	UO_2	SS
ICT-002-06	17	1	--	hex	68	tube	6.8	4.18	4.12	UO_2	SS
ICT-014	19.77	1	2/1-c-1-c-1/5/1-c-1-c-1/3	square	360	plate	3.21	0.05066	0.04917	U_3Si_2	Al

Note: Some wt%U235 values were converted from atom fractions

Table 6.5.5-2 Research Reactor Fuel Benchmark K_{eff}'s and Uncertainties

Identification	k_{eff}	σ	Identification	k_{eff}	σ
HCT-003-01	1.0000	0.0044	HCT-022-01	1.0000	0.0081
HCT-003-02	1.0000	0.0044	HCT-022-02	1.0000	0.0081
HCT-003-03	1.0000	0.0044	HCT-022-03	1.0000	0.0081
HCT-003-04	1.0000	0.0044	HCT-022-04	1.0000	0.0081
HCT-003-05	1.0000	0.0044	HCT-022-05	1.0000	0.0081
HCT-003-06	1.0000	0.0044	HMT-006-01	1.0000	0.0044
HCT-003-07	1.0000	0.0044	HMT-006-02	1.0000	0.0040
HCT-003-08	1.0000	0.0044	HMT-006-03	1.0000	0.0040
HCT-003-09	1.0000	0.0044	HMT-006-04	1.0000	0.0040
HCT-003-10	1.0000	0.0044	HMT-006-05	1.0000	0.0040
HCT-003-11	1.0000	0.0044	HMT-006-06	1.0000	0.0040
HCT-003-12	1.0000	0.0044	HMT-006-07	1.0000	0.0040
HCT-003-13	1.0000	0.0044	HMT-006-08	1.0000	0.0040
HCT-003-14	1.0000	0.0044	HMT-006-09	1.0000	0.0040
HCT-003-15	1.0000	0.0044	HMT-006-10	1.0000	0.0040
HCT-006-01	1.0000	0.0058	HMT-006-11	1.0000	0.0040
HCT-006-02	1.0000	0.0020	HMT-006-12	1.0000	0.0040
HCT-006-03	1.0000	0.0048	HMT-006-14	1.0000	0.0040
HCT-011-01	0.9988	0.0042	HMT-006-15	1.0000	0.0040
HCT-011-02	0.9988	0.0042	HMT-006-16	1.0000	0.0040
HCT-011-03	0.9988	0.0042	ICT-002-01	1.0014	0.0039
HCT-012-01	0.9987	0.0032	ICT-002-02	1.0019	0.0040
HCT-012-02	0.9987	0.0034	ICT-002-03	1.0017	0.0044
HCT-013-01	0.9988	0.0042	ICT-002-04	1.0019	0.0044
HCT-013-02	0.9988	0.0043	ICT-002-05	1.0014	0.0043
HCT-014-01	0.9986	0.0048	ICT-002-06	1.0016	0.0044
HCT-014-02	0.9986	0.0049	ICT-014	1.0016	0.0014

Table 6.5.5-3 MCNP Criticality Results Research Reactor Fuel Benchmarks

	MCNP5 v1.30					Bias		
Identification	k_{eff}	σ	Adj. k_{eff}	EALCF (eV)	Total σ	Δk		
HCT-003-01	0.98696	0.00151	0.98696	0.38377	0.0047	-0.01304		
HCT-003-02	0.98944	0.00159	0.98944	0.28104	0.0047	-0.01056		
HCT-003-03	0.99199	0.00153	0.99199	0.18151	0.0047	-0.00801		
HCT-003-04	0.99330	0.00141	0.99330	0.12114	0.0046	-0.00670		
HCT-003-05	0.99699	0.00142	0.99699	0.08968	0.0046	-0.00301		
HCT-003-06	0.99991	0.00149	0.99991	0.29388	0.0046	-0.00009		
HCT-003-07	1.00396	0.00153	1.00396	0.21027	0.0047	0.00396		
HCT-003-08	1.00527	0.00140	1.00527	0.19407	0.0046	0.00527		
HCT-003-09	1.00402	0.00136	1.00402	0.13126	0.0046	0.00402		
HCT-003-10	1.00843	0.00152	1.00843	0.09467	0.0047	0.00843		
HCT-003-11	1.00758	0.00145	1.00758	0.07995	0.0046	0.00758		
HCT-003-12	0.98542	0.00141	0.98542	0.11823	0.0046	-0.01458		
HCT-003-13	0.99411	0.00133	0.99411	0.06127	0.0046	-0.00589		
HCT-003-14	0.99881	0.00147	0.99881	0.16116	0.0046	-0.00119	average	**-0.00217**
HCT-003-15	1.00119	0.00118	1.00119	0.07980	0.0046	0.00119	min	-0.01458
HCT-006-01	0.98580	0.00136	0.98580	1.11980	0.0060	-0.01420		
HCT-006-02	1.00162	0.00124	1.00162	0.10599	0.0024	0.00162	average	**-0.00625**
HCT-006-03	0.99382	0.00095	0.99382	0.05029	0.0049	-0.00618	min	-0.0142
HCT-011-01	0.98261	0.00088	0.98381	0.71500	0.0043	-0.01619		
HCT-011-02	0.98564	0.00095	0.98684	0.55072	0.0043	-0.01316	average	**-0.01408**
HCT-011-03	0.98592	0.00085	0.98712	0.43403	0.0043	-0.01288	min	-0.01619
HCT-012-01	0.98245	0.00094	0.98375	0.60393	0.0033	-0.01625	average	*-0.01535*
HCT-012-02	0.98426	0.00080	0.98556	0.45884	0.0035	-0.01444	min	-0.01625
HCT-013-01	0.98665	0.00092	0.98785	0.45717	0.0043	-0.01215	average	**-0.01189**
HCT-013-02	0.98717	0.00090	0.98837	0.31622	0.0044	-0.01163	min	-0.01215
HCT-014-01	0.99374	0.00086	0.99514	0.11840	0.0049	-0.00486	average	**-0.00486**
HCT-014-02	0.99374	0.00081	0.99514	0.09841	0.0050	-0.00486	min	-0.00486
HCT-022-01	0.98924	0.00030	0.98924	0.09658	0.0081	-0.01076		
HCT-022-02	0.98970	0.00031	0.98970	0.09820	0.0081	-0.01030		
HCT-022-03	0.98878	0.00031	0.98878	0.09950	0.0081	-0.01122		
HCT-022-04	0.98917	0.00031	0.98917	0.10060	0.0081	-0.01083	average	**-0.01104**
HCT-022-05	0.98789	0.00030	0.98789	0.09664	0.0081	-0.01211	min	-0.01211

Table 6.5.5-3 MCNP Criticality Results Research Reactor Fuel Benchmarks (Continued)

	MCNP5 v1.30					Bias		
Identification	k_{eff}	σ	Adj. k_{eff}	EALCF (eV)	Total σ	Δk		
HMT-006-01	0.99188	0.00087	0.99188	0.08574	0.0045	-0.00812		
HMT-006-02	0.99219	0.00087	0.99219	0.07130	0.0041	-0.00781		
HMT-006-03	0.99800	0.00081	0.99800	0.06400	0.0041	-0.00200		
HMT-006-04	0.99212	0.00082	0.99212	0.06253	0.0041	-0.00788		
HMT-006-05	0.99021	0.00077	0.99021	0.05917	0.0041	-0.00979		
HMT-006-06	0.98823	0.00079	0.98823	0.05672	0.0041	-0.01177		
HMT-006-07	0.98709	0.00072	0.98709	0.05502	0.0041	-0.01291		
HMT-006-08	0.98534	0.00068	0.98534	0.05301	0.0041	-0.01466		
HMT-006-09	0.98793	0.00068	0.98793	0.05271	0.0041	-0.01207		
HMT-006-10	0.99813	0.00088	0.99813	0.08343	0.0041	-0.00187		
HMT-006-11	0.99327	0.00078	0.99327	0.06311	0.0041	-0.00673		
HMT-006-12	0.99536	0.00069	0.99536	0.05494	0.0041	-0.00464		
HMT-006-14	0.98707	0.00077	0.98707	0.05788	0.0041	-0.01293		
HMT-006-15	0.98398	0.00077	0.98398	0.05720	0.0041	-0.01602	average	**-0.00912**
HMT-006-16	0.99243	0.00078	0.99243	0.06375	0.0041	-0.00757	min	-0.01602
ICT-002-01	0.99359	0.00070	0.99219	0.09130	0.0040	-0.00781		
ICT-002-02	0.99748	0.00077	0.99558	0.13470	0.0041	-0.00442		
ICT-002-03	0.99883	0.00074	0.99713	0.10068	0.0045	-0.00287		
ICT-002-04	0.99865	0.00074	0.99675	0.12575	0.0045	-0.00325		
ICT-002-05	0.99351	0.00072	0.99211	0.10065	0.0044	-0.00789	average	**-0.00596**
ICT-002-06	0.99208	0.00076	0.99048	0.12574	0.0045	-0.00952	min	-0.00952
ICT-014	0.99791	0.00009	0.99631	0.08780	0.0014	-0.00369		

Table 6.5.5-4 Range of Applicability and Excel Generated Correlation Coefficients of Research Reactor Fuel Benchmarks

Correlation	R^2	Minimum	Maximum
Enrichment (wt% ^{235}U)	0.0281	17	93.2
Energy of average neutron lethargy causing fission (eV)	0.1303	0.0503	1.12

Table 6.5.5-5 MCNP Research Reactor Fuel USLSTATS Generated USLs for Benchmark Experiments

Variable	Enrichment (wt% ^{235}U)	EALCF (eV)
# Points	54	54
AOA Range	$17 \leq X \leq 93.2$	$0.050285 \leq X \leq 1.1198$
USL Limit	0.9321 -4.3735E-05 X	0.9296 -1.1154E-02 X
USL Low	0.9280	0.9171
USL High	0.9314	0.9290

Note: USL increases as a function of decreasing enrichment. The USL determined from this data may therefore be applied to low enriched research reactor fuels (<17 wt% ^{235}U).

6.5.6 MCNP5 Version 1.60 and MCNP6.2 Criticality Benchmarks for Research Reactor Fuels

The results of the criticality analyses presented in this chapter must be compared to the upper subcritical limit (USL). The USL accounts for bias and uncertainty resulting from the method using information obtained from the analysis of criticality benchmark experimental data. Code bias calculated in this section is applicable to research reactor fuel (e.g., MTR, DIDO, SLOWPOKE, and NRU/NRX) with the exception of TRIGA (U-ZrH) elements.

Criticality code validation is performed for the Monte Carlo evaluation code and neutron cross-section libraries. Criticality validation is required by the criticality safety standard ANSI/ANS-8.1. Detailed benchmark and benchmark processing information for the MCNP5 V1.6 validation and upper safety limit (USL) are included in Section 6.5.6.1 through Section 6.5.6.3. MCNP6.2 validation and upper safety limit (USL) calculations repeat the MCNP5 evaluations with case changes limited to the applying the updated version of MCNP and use of ENDF/B-VII cross-sections as available. Section 6.5.6.4 contains the results of the MCNP6.2 evaluations.

6.5.6.1 Benchmark Experiments and Applicability Discussion

NUREG/CR-6361, "Criticality Benchmark Guide for Light-Water-Reactor Fuel in Transportation and Storage Packages," provides a guide to LWR criticality benchmark calculations and the determination of bias and subcritical limits in criticality safety evaluations. In Section 2 of the NUREG, a series of LWR criticality experiments is described in sufficient detail for independent modeling. In Section 3, the criticality experiments are modeled, and the results (k_{eff} values) are presented. The method utilized in the NUREG is KENO-Va with the 44-group ENDF/B-V cross-section library embedded in SCALE 4.3. In Section 4, a guide for the determination of bias and subcritical safety limits is provided based on ANSI/ANS-8.1 and statistical analysis of the trending in the bias. Finally, guidelines for experiment selection and applicability are presented in Section 5. The approach outlined in Section 4 of the NUREG is described in detail herein and is implemented for MCNP5 with continuous energy ENDF/B-VI cross-sections and MCNP6.2 with continuous energy ENDF/B-VII cross sections.

NUREG/CR-6361 implements ANSI/ANS-8.1 criticality safety criterion as follows.

$$k_s \leq k_c - \Delta k_s - \Delta k_c - \Delta k_m \qquad \text{(Equation 1)}$$

where:

k_s = calculated allowable maximum multiplication factor, k_{eff}, of the system being evaluated for all normal or credible abnormal conditions or events.

k_c = mean k_{eff} that results from a calculation of benchmark criticality experiments using a particular calculation method. If the calculated k_{eff} values for the criticality experiments exhibit a trend with an independent parameter, then k_c shall be determined by extrapolation based on best fit to calculated values. Criticality experiments used as benchmarks in computing k_c should have physical compositions, configurations and nuclear characteristics (including reflectors) similar to those of the system being evaluated.

Δk_s = allowance for the following:

- statistical or convergence uncertainties, or both, in computation of k_s
- material and fabrication tolerances
- geometric or material representations used in computational method

Δk_c = margin for uncertainty in k_c, which includes allowance for the following:

- uncertainties in criticality experiments
- statistical or convergence uncertainties, or both, in computation of k_c
- uncertainties resulting from extrapolation of k_c outside range of experimental data
- uncertainties resulting from limitations in geometrical or material representations used in the computational method

Δk_m = arbitrary administrative margin to ensure subcriticality of k_s

The various uncertainties are combined statistically if they are independent. Correlated uncertainties are combined by addition.

Equation 1 can be rewritten as shown.

$$k_s \leq 1 - \Delta k_m - \Delta k_s - (1 - k_c) - \Delta k_c \quad \text{(Equation 2)}$$

Noting that the definition of the bias is $\beta = 1 - k_c$, Equation 2 can be written as shown.

$$k_s + \Delta k_s \leq 1 - \Delta km - \beta - \Delta\beta \quad \text{(Equation 3)}$$

where:

$$\Delta\beta = \Delta k_c$$

Thus, the maximum allowable value for k_{eff} plus uncertainties in the system being analyzed must be below 1 minus an administrative margin (typically 0.05), which includes the bias and the uncertainty in the bias. This can also be written as shown.

$$k_s + \Delta k_s \leq \text{Upper Subcritical Limit (USL)} \quad \text{(Equation 4)}$$

where:

$$USL \equiv 1 - \Delta k_m - \beta - \Delta\beta \quad \text{(Equation 5)}$$

This is the USL criterion as described in Section 4 of NUREG/CR-6361. Two methods are prescribed for the statistical determination of the USL. The "Confidence Band with

Administrative Margin (USL-1)" approach is implemented here and is referred to generically as USL. A $\Delta k_m = 0.05$ and a lower confidence band are specified based on a linear regression of k_{eff} as a function of some system parameter.

Subsequent sections contain the list of critical benchmarks employed in the validation of MCNP with its continuous energy neutron cross-section libraries and the processing of the experimental results into the USL. Also included are linear fits of reactivity (k_{eff}) to each of the system parameters evaluated. Experiments were chosen to reflect the in-cask fuel geometry and materials as closely as available.

6.5.6.2 HEU and IEU Criticality Benchmarks

From the International Handbook of Evaluated Criticality Safety Benchmark Experiments, intermediate and high enriched thermal neutron experiments are selected as the basis of the MCNP benchmarking. Materials selected were compounds and metallic fuels. Experiments were selected for compatibility of materials and geometry with the spent fuel casks. As such, experiments containing significant neutron absorber in the form of plates, rods, or soluble poison are eliminated. Also removed are experiments containing non light water moderator. Further review eliminated experiments if they did not contain a primarily thermal neutron spectrum causing fission.

All cases were reviewed on a "preparer/checker" principle for modeling consistency with the cask models and the choice of code options. Case inputs from the handbook where modified as necessary to match experimental data or to correct modeling errors. Due to large variations in the benchmark complexities, not all options employed in the cask models are reflected in each of the benchmarks (e.g., UNIVERSE structure). A review of the criticality results did not indicate any result trend due to particular modeling choices (e.g., using the UNIVERSE structure versus a single universe, or employing KSRC versus SDEF sampling).

Key system parameters for the experiments are listed in Table 6.5.6-1. Table 6.5.6-2 lists the benchmark k_{eff} and experimental uncertainty. The NAC calculated MCNP5 k_{eff}'s and Monte Carlo uncertainties are shown in Table 6.5.6-3. Stochastic Monte Carlo error is kept within ±0.2% and each output is checked to assure that the MCNP built-in statistical checks on the results are passed and that all fissile material is sampled. Also included in the table are the combined Monte Carlo and experimental uncertainty and the results of the initial processing of the data indicating the minimum and average bias of each experiment.

NAC-LWT maximum reactivity cases are typically at thermal energy lines with EALCF (energy average lethargy causing fission) below 0.2 eV. A limited number of benchmark cases (i.e., HEU-COMP-THERM-011, HEU-COMP-THERM-012, HEU-COMP-THERM-006 Case 1, and HEU-COMP-THERM-013 Case 1) have an EALCF above 0.4. The area of applicability for this

evaluation is restricted to an EALCF below 0.4 and cases above this level are removed from plotting and USL calculations but are included in the MCNP result summary.

Scatter plots of MCNP5 k_{eff} versus enrichment and average lethargy of neutrons causing fission are shown in Figure 6.5.6-1 and Figure 6.5.6-2. Included in these scatter plots are linear regression lines with a corresponding correlation coefficient (R^2) to statistically indicate any trend or lack thereof.

6.5.6.3 Results of MCNP Research Reactor Benchmark Calculations

Trending in k_{eff} was evaluated for wt% ^{235}U and energy of the average neutron lethargy causing fission (EALCF), the two parameters most likely to show cross section effects. No statistically significant trends were found for any of the system parameters. USLs are generated for each of the independent variables. A minimum USL covering the range of applicability of the benchmark set is determined.

To evaluate the relative importance of the trend analysis to the upper subcritical limits, correlation coefficients are required for all independent parameters. The linear correlation coefficient, R, is calculated by taking the square root of the R^2 value. In particular, the correlation coefficient, R, is a measure of the linear relationship between k_{eff} and a critical experiment parameter. If R is +1, a perfect linear relationship with a positive slope is indicated. If R is -1, a perfect linear relationship with a negative slope is indicated. When R is 0, no linear relationship is indicated.

Table 6.5.6-4 contains the correlation coefficient, R^2, for each linear fit of k_{eff} versus experimental parameter. Linear fits and correlation constants are based on full 54 data-point evaluation sets plotted in the previous section.

The USL for each independent variable is calculated and shown with its range of applicability in Table 6.5.6-5. The USLSTATS output of k_{eff} versus EALCF and enrichment are shown in Figure 6.5.6-3 and Figure 6.5.6-4. Uncertainties included in the USLSTATS evaluation are the Monte Carlo uncertainty associated with the reactivity calculation and experimental uncertainty that was provided in the literature for each of the cases.

Based on all the independent variable correlations, a lower limit constant USL of 0.9270 may be applied. The range of applicability (area of applicability) of this limit may be extended to lower enrichment as the correlation shows an increase in USL as a function of reduced enrichment. The range may be extended up to fully enriched (100% ^{235}U) as the USL is only very weakly correlated to enrichment and that an extrapolated USL based on the enrichment correlation results in a higher predicted USL value than the EALCF derived 0.9270.

6.5.6.4 MCNP 6.2 Benchmark Results and USL Calculations

Cross sections evaluated with MCNP6.2 are listed in Table 6.5.6-6. They are primarily ENDF/B-VII for isotopes, with earlier cross section sets invoked for elements versus isotopes. The MCNP6.2 generated k_{eff} values are listed in Table 6.5.6-7 with the USLSTATS generated upper safety limits (USL) in Table 6.5.6-8. There is no statistically significant trend, based on R^2, for either EALCF or enrichment. The minimum USL in Table 6.5.6-8 is 0.9338.

Figure 6.5.6-1 k_{eff} versus Fuel Enrichment (MCNP5 v1.60– Research Reactor Fuel)

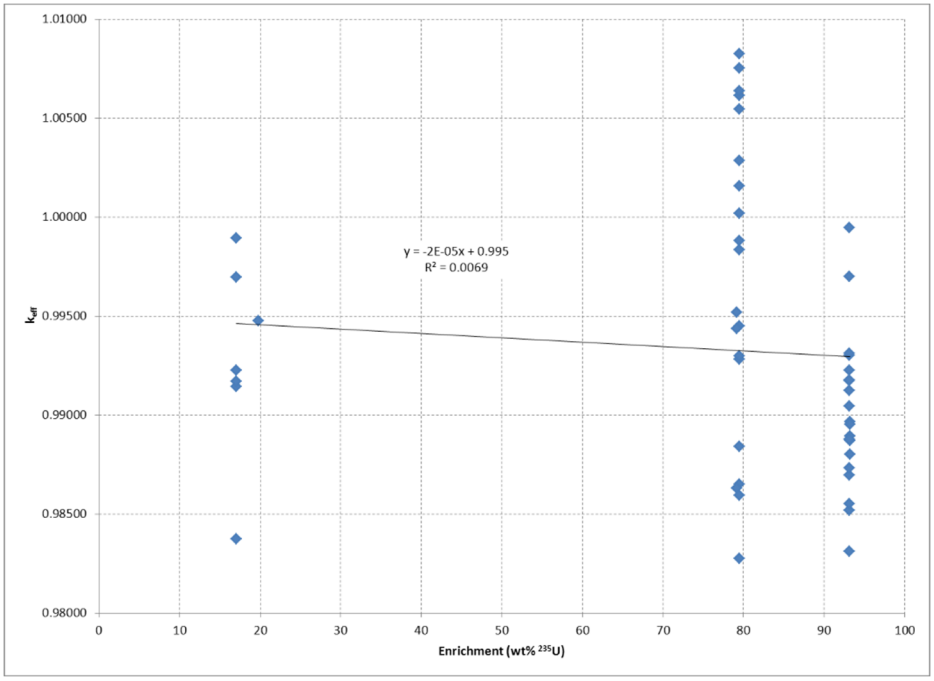

Figure 6.5.6-2 k_{eff} versus Energy of Average Neutron Lethargy Causing Fission (MCNP5 v1.60– Research Reactor Fuel)

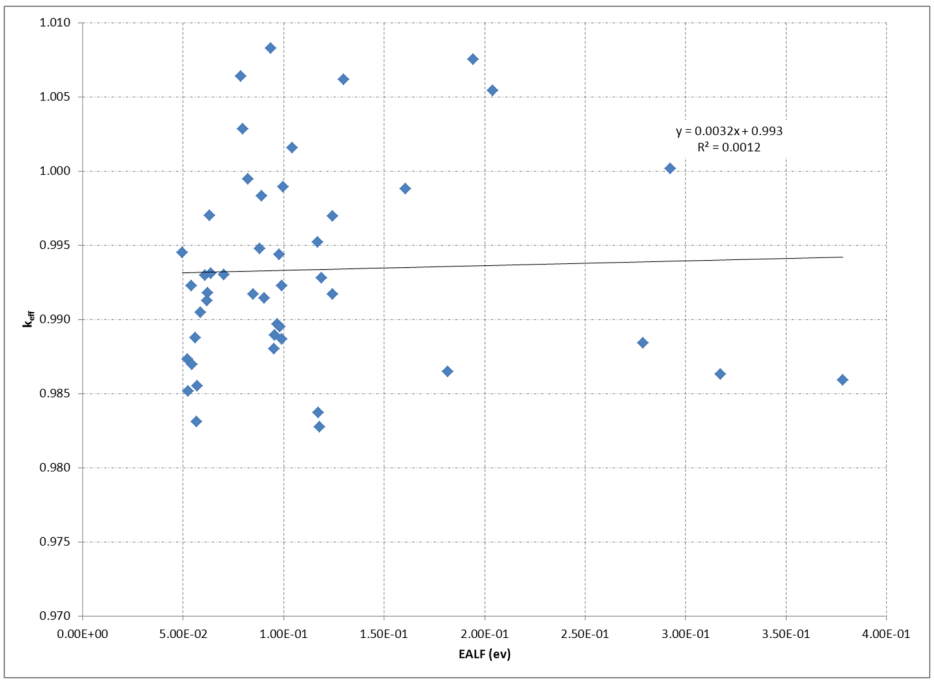

Figure 6.5.6-3 MCNP Research Reactor Fuel USLSTATS Output for EALCF

```
   Proportion of the population = .995
   Confidence of fit            = .950
   Confidence on proportion     = .950
   Number of observations       =   47
   Minimum value of closed band =    0.00
   Maximum value of closed band =    0.00
   Administrative margin        =    0.05


   independent     dependent       deviation              independent     dependent       deviation
   variable - x    variable - y      in y                 variable - x    variable - y      in y

    4.96000E-02     9.94500E-01     4.90000E-03            9.55000E-02     9.88940E-01     8.11000E-03
    5.21000E-02     9.87320E-01     4.06000E-03            9.68000E-02     9.89660E-01     8.11000E-03
    5.24000E-02     9.85170E-01     4.06000E-03            9.78000E-02     9.94370E-01     4.97000E-03
    5.43000E-02     9.92270E-01     4.06000E-03            9.81000E-02     9.89520E-01     8.11000E-03
    5.43000E-02     9.86960E-01     4.07000E-03            9.92000E-02     9.88690E-01     8.11000E-03
    5.61000E-02     9.88760E-01     4.07000E-03            9.92000E-02     9.92260E-01     4.36000E-03
    5.68000E-02     9.83120E-01     4.07000E-03            9.96000E-02     9.98940E-01     4.46000E-03
    5.71000E-02     9.85510E-01     4.07000E-03            1.04000E-01     1.00156E+00     2.41000E-03
    5.86000E-02     9.90450E-01     4.09000E-03            1.17000E-01     9.95200E-01     4.87000E-03
    6.09000E-02     9.92990E-01     4.57000E-03            1.17000E-01     9.83730E-01     4.06000E-03
    6.20000E-02     9.91250E-01     4.09000E-03            1.18000E-01     9.82760E-01     4.61000E-03
    6.22000E-02     9.91780E-01     4.09000E-03            1.19000E-01     9.92810E-01     4.66000E-03
    6.31000E-02     9.97010E-01     4.07000E-03            1.24000E-01     9.91690E-01     4.47000E-03
    6.37000E-02     9.93120E-01     4.08000E-03            1.24000E-01     9.96950E-01     4.46000E-03
    7.03000E-02     9.93020E-01     4.09000E-03            1.30000E-01     1.00615E+00     4.66000E-03
    7.86000E-02     1.00637E+00     4.64000E-03            1.61000E-01     9.98800E-01     4.62000E-03
    7.98000E-02     1.00284E+00     4.55000E-03            1.82000E-01     9.86500E-01     4.67000E-03
    8.24000E-02     9.99460E-01     4.09000E-03            1.94000E-01     1.00751E+00     4.65000E-03
    8.48000E-02     9.91720E-01     4.49000E-03            2.04000E-01     1.00544E+00     4.67000E-03
    8.82000E-02     9.94770E-01     1.40000E-03            2.79000E-01     9.88410E-01     4.65000E-03
    8.90000E-02     9.98340E-01     4.64000E-03            2.92000E-01     1.00018E+00     4.66000E-03
    9.04000E-02     9.91430E-01     3.97000E-03            3.17000E-01     9.86290E-01     4.41000E-03
    9.36000E-02     1.00826E+00     4.64000E-03            3.78000E-01     9.85930E-01     4.64000E-03
    9.51000E-02     9.88000E-01     8.11000E-03

   chi =  2.0426 (upper bound = 9.49). The data tests normal.



        Output from statistical treatment

   keff vs EALCF

    Number of data points (n)                          47
    Linear regression, k(X)                           0.9930 + ( 3.2033E-03)*X
    Confidence on fit (1-gamma) [input]                95.0%
    Confidence on proportion (alpha) [input]           95.0%
    Proportion of population falling above
    lower tolerance interval (rho) [input]             99.5%
    Minimum value of X                                 4.9600E-02
    Maximum value of X                                 3.7800E-01
    Average value of X                                 1.1280E-01
    Average value of k                                  0.99333
    Minimum value of k                                  0.98276
    Variance of fit, s(k,X)^2                          4.6641E-05
    Within variance, s(w)^2                            2.3714E-05
    Pooled variance, s(p)^2                            7.0355E-05
    Pooled std. deviation, s(p)                        8.3878E-03
    C(alpha,rho)*s(p)                                  3.6520E-02
    student-t @ (n-2,1-gamma)                          1.68075E+00
    Confidence band width, W                           1.6108E-02
    Minimum margin of subcriticality, C*s(p)-W         2.0412E-02

    Upper subcritical limits: ( 4.96000E-02 <= X <=  0.37800    )
    ***** *********** *******

    USL Method 1 (Confidence Band with
    Administrative Margin)             USL1 = 0.9269 + ( 3.2033E-03)*X

    USL Method 2 (Single-Sided Uniform
    Width Closed Interval Approach)    USL2 = 0.9565 + ( 3.2033E-03)*X



    USLs Evaluated Over Range of Parameter X:
    **** ********* **** ***** ** ********* **

    X:  4.96E-2  9.65E-2  1.43E-1  1.90E-1  2.37E-1  2.84E-1  3.31E-1  3.78E-1
       ------------------------------------------------------------------------
USL-1:    0.9270   0.9272   0.9273   0.9275   0.9276   0.9278   0.9279   0.9281
USL-2:    0.9566   0.9568   0.9569   0.9571   0.9572   0.9574   0.9575   0.9577
      -------------------------------------------------------------------------
```

Figure 6.5.6-4 MCNP Research Reactor Fuel USLSTATS Output for wt% ^{235}U

```
   Proportion of the population = .995
   Confidence of fit            = .950
   Confidence on proportion     = .950
   Number of observations       =   47
   Minimum value of closed band =    0.00
   Maximum value of closed band =    0.00
   Administrative margin        =    0.05


   independent     dependent       deviation              independent     dependent       deviation
   variable - x    variable - y      in y                 variable - x    variable - y      in y

    7.95000E+01     9.85930E-01     4.64000E-03            9.32000E+01     9.88000E-01     8.11000E-03
    7.95000E+01     9.88410E-01     4.65000E-03            9.32000E+01     9.91720E-01     4.49000E-03
    7.95000E+01     9.86500E-01     4.67000E-03            9.32000E+01     9.93020E-01     4.09000E-03
    7.95000E+01     9.92810E-01     4.66000E-03            9.32000E+01     9.97010E-01     4.07000E-03
    7.95000E+01     9.98340E-01     4.64000E-03            9.32000E+01     9.91250E-01     4.09000E-03
    7.95000E+01     1.00018E+00     4.66000E-03            9.32000E+01     9.90450E-01     4.09000E-03
    7.95000E+01     1.00544E+00     4.67000E-03            9.32000E+01     9.88760E-01     4.07000E-03
    7.95000E+01     1.00751E+00     4.65000E-03            9.32000E+01     9.86960E-01     4.07000E-03
    7.95000E+01     1.00615E+00     4.66000E-03            9.32000E+01     9.85170E-01     4.06000E-03
    7.95000E+01     1.00826E+00     4.64000E-03            9.32000E+01     9.87320E-01     4.06000E-03
    7.95000E+01     1.00637E+00     4.64000E-03            9.32000E+01     9.99460E-01     4.09000E-03
    7.95000E+01     9.82760E-01     4.61000E-03            9.32000E+01     9.91780E-01     4.09000E-03
    7.95000E+01     9.92990E-01     4.57000E-03            9.32000E+01     9.92270E-01     4.06000E-03
    7.95000E+01     9.98800E-01     4.62000E-03            9.32000E+01     9.85510E-01     4.07000E-03
    7.95000E+01     1.00284E+00     4.55000E-03            9.32000E+01     9.83120E-01     4.07000E-03
    7.95000E+01     1.00156E+00     2.41000E-03            9.32000E+01     9.93120E-01     4.08000E-03
    7.95000E+01     9.94500E-01     4.90000E-03            1.70000E+01     9.91430E-01     3.97000E-03
    7.92000E+01     9.86290E-01     4.41000E-03            1.70000E+01     9.83730E-01     4.06000E-03
    7.92000E+01     9.95200E-01     4.87000E-03            1.70000E+01     9.98940E-01     4.46000E-03
    7.92000E+01     9.94370E-01     4.97000E-03            1.70000E+01     9.96950E-01     4.46000E-03
    9.32000E+01     9.88940E-01     8.11000E-03            1.70000E+01     9.92260E-01     4.36000E-03
    9.32000E+01     9.89660E-01     8.11000E-03            1.70000E+01     9.91690E-01     4.47000E-03
    9.32000E+01     9.89520E-01     8.11000E-03            1.98000E+01     9.94770E-01     1.40000E-03
    9.32000E+01     9.88690E-01     8.11000E-03

   chi =  2.0426 (upper bound = 9.49). The data tests normal.



        Output from statistical treatment

   keff vs enrichment

    Number of data points (n)                          47
    Linear regression, k(X)                           0.9950 + (-2.1904E-05)*X
    Confidence on fit (1-gamma) [input]                95.0%
    Confidence on proportion (alpha) [input]           95.0%
    Proportion of population falling above
    lower tolerance interval (rho) [input]             99.5%
    Minimum value of X                                 1.7000E+01
    Maximum value of X                                 9.3200E+01
    Average value of X                                 7.6062E+01
    Average value of k                                  0.99333
    Minimum value of k                                  0.98276
    Variance of fit, s(k,X)^2                          4.6375E-05
    Within variance, s(w)^2                            2.3714E-05
    Pooled variance, s(p)^2                            7.0089E-05
    Pooled std. deviation, s(p)                        8.3719E-03
    C(alpha,rho)*s(p)                                  3.3389E-02
    student-t @ (n-2,1-gamma)                          1.68075E+00
    Confidence band width, W                           1.5003E-02
    Minimum margin of subcriticality, C*s(p)-W         1.8386E-02

    Upper subcritical limits: (  17.000     <= X <=   93.200    )
    ***** *********** *******

    USL Method 1 (Confidence Band with
    Administrative Margin)             USL1 = 0.9300 + (-2.1904E-05)*X

    USL Method 2 (Single-Sided Uniform
    Width Closed Interval Approach)    USL2 = 0.9616 + (-2.1904E-05)*X



    USLs Evaluated Over Range of Parameter X:
    **** ********* **** ***** ** ********* **

    X:  1.70E+1  2.79E+1  3.88E+1  4.97E+1  6.05E+1  7.14E+1  8.23E+1  9.32E+1
       ------------------------------------------------------------------------
USL-1:    0.9296   0.9294   0.9291   0.9289   0.9287   0.9284   0.9282   0.9280
USL-2:    0.9612   0.9610   0.9608   0.9605   0.9603   0.9600   0.9598   0.9596
      ------------------------------------------------------------------------
```

Table 6.5.6-1 MCNP5 v1.60 Benchmark Configurations for Research Reactor Fuel Benchmarks

Identification	%U235	Clusters	Config.	Lattice	Fuel Elements	Fuel Shape	Pitch (cm)	Fuel OD (cm)	Clad OD (cm)	Fuel Mat'l	Clad Mat'l
HCT-003-01	79.47	1	--	hex	1409	cross	1.22/0.61	0.475 side to side	varies, 0.2 on sides	UO_2+Cu	SS
HCT-003-02	79.47	1	--	hex	1243	cross	1.22/0.61	0.475 side to side	varies, 0.2 on sides	UO_2+Cu	SS
HCT-003-03	79.47	1	--	hex	1018	cross	1.22/0.61	0.475 side to side	varies, 0.2 on sides	UO_2+Cu	SS
HCT-003-04	79.47	1	--	hex	776	cross	1.22/0.61	0.475 side to side	varies, 0.2 on sides	UO_2+Cu	SS
HCT-003-05	79.47	1	--	hex	596	cross	1.22/0.61	0.475 side to side	varies, 0.2 on sides	UO_2+Cu	SS
HCT-003-06	79.47	1	--	hex	1266	cross	0.61/1.22	0.475 side to side	varies, 0.2 on sides	UO_2+Cu	SS
HCT-003-07	79.47	1	--	hex	1043	cross	0.61/1.22	0.475 side to side	varies, 0.2 on sides	UO_2+Cu	SS
HCT-003-08	79.47	1	--	hex	1006	cross	0.61/1.22	0.475 side to side	varies, 0.2 on sides	UO_2+Cu	SS
HCT-003-09	79.47	1	--	hex	764	cross	0.61/1.22	0.475 side to side	varies, 0.2 on sides	UO_2+Cu	SS
HCT-003-10	79.47	1	--	hex	589	cross	0.61/1.22	0.475 side to side	varies, 0.2 on sides	UO_2+Cu	SS
HCT-003-11	79.47	1	--	hex	500	cross	0.61/1.22	0.475 side to side	varies, 0.2 on sides	UO_2+Cu	SS
HCT-003-12	79.47	1	--	hex	1106	cross	1.83/0.61	0.475 side to side	varies, 0.2 on sides	UO_2+Cu	SS
HCT-003-13	79.47	1	--	hex	727	cross	1.83/0.61	0.475 side to side	varies, 0.2 on sides	UO_2+Cu	SS
HCT-003-14	79.47	1	--	hex	949	cross	0.61/1.82	0.475 side to side	varies, 0.2 on sides	UO_2+Cu	SS
HCT-003-15	79.47	1	--	hex	662	cross	0.61/1.83	0.475 side to side	varies, 0.2 on sides	UO_2+Cu	SS
HCT-006-01	79.47	1	--	hex	1819	cross	0.56	0.475 side to side	varies, 0.2 on sides	UO_2+Cu	SS
HCT-006-02	79.47	1	--	hex	457	cross	1	0.475 side to side	varies, 0.2 on sides	UO_2+Cu	SS
HCT-006-03	79.47	1	--	hex	554	cross	2.113	0.475 side to side	varies, 0.2 on sides	UO_2+Cu	SS

Note: Some wt%U235 values were converted from atom fractions

Table 6.5.6-1 MCNP v1.60Benchmark Configurations for Research Reactor Fuel Benchmarks (Continued)

Identification	%U235	Clusters	Config.	Lattice	Fuel Elements	Fuel Shape	Pitch (cm)	Fuel OD (cm)	Clad OD (cm)	Fuel Mat'l	Clad Mat'l
HCT-011-01	79.19	1	21x21	square	1764	cylinder	1.4	0.7	1 (0.05 thick)	UO_2+Al	SS
HCT-011-02	79.19	1	21x21	square	1764	cylinder	1.4	0.7	1 (0.05 thick)	UO_2+Al	SS
HCT-011-03	79.19	1	21x21	square	1764	cylinder	1.4	0.7	1 (0.05 thick)	UO_2+Al	SS
HCT-012-01	79.24	4	18x18	square	1296	cylinder	1.4	0.7	1 (0.05 thick)	UO_2+Al	SS
HCT-012-02	79.24	4	18x18	square	1296	cylinder	1.4	0.7	1 (0.05 thick)	UO_2+Al	SS
HCT-013-01	79.19	9	14x14	square	1764	cylinder	1.4	0.7	1 (0.05thick)	UO_2+Al	SS
HCT-013-02	79.19	9	14x14	square	1764	cylinder	1.4	0.7	1 (0.05 thick)	UO_2+Al	SS
HCT-014-01	79.19	9	10x10	square	900	cylinder	$1.4\sqrt{2}$	0.7	1 (0.05 thick)	UO_2+Al	SS
HCT-014-02	79.19	9	10x10	square	900	cylinder	$1.4\sqrt{2}$	0.7	1 (0.05thick)	UO_2+Al	SS
HCT-022-01	93.2	13	4/5/4	square	494	plate	0.40132	.0508 thick	0.0762 thick	UO_2+SS	SS
HCT-022-02	93.2	14	5/5/4	square	532	plate	0.40132	.0508 thick	0.0762 thick	UO_2+SS	SS
HCT-022-03	93.2	15	5x3	square	570	plate	0.40132	.0508 thick	0.0762 thick	UO_2+SS	SS
HCT-022-04	93.2	15	5x3	square	570	plate	0.40132	.0508 thick	0.0762 thick	UO_2+SS	SS
HCT-022-05	93.2	24	4x3&4x3	square	912	plate	0.40132	.0508 thick	0.0762 thick	UO_2+SS	SS

Note: Some wt%U235 values were converted from atom fractions

Table 6.5.6-1 MCNP5 v1.60 Benchmark Configurations for Research Reactor Fuel Benchmarks (Continued)

Identification	%U235	Clusters	Config.	Lattice	Fuel Elements	Fuel Shape	Pitch (cm)	Fuel OD (cm)	Clad OD (cm)	Fuel Mat'l	Clad Mat'l
HMT-006-01	93.17	1	4x4	square	194	plate	0.316411	.0508 thick	0.1524	U+Al	AL
HMT-006-02	93.17	1	4x4	square	188	plate	0.316411	.0508 thick	0.1524	U+Al	AL
HMT-006-03	93.17	1	4x4	square	221	plate	0.316411	.0508 thick	0.1524	U+Al	AL
HMT-006-04	93.17	1	4x4	square	255	plate	0.316411	.0508 thick	0.1524	U+Al	AL
HMT-006-05	93.17	1	4x4	square	520	plate	0.316411	.0508 thick	0.1524	U+Al	AL
HMT-006-06	93.17	1	4x4	square	286	plate	0.316411	.0508 thick	0.1524	U+Al	AL
HMT-006-07	93.17	1	5x5	square	233	plate	0.316411	.0508 thick	0.1524	U+Al	AL
HMT-006-08	93.17	1	6x6	square	232	plate	0.316411	.0508 thick	0.1524	U+Al	AL
HMT-006-09	93.17	1	7x7	square	296	plate	0.316411	.0508 thick	0.1524	U+Al	AL
HMT-006-10	93.17	1	4x4	square	365	plate	0.316411	.0508 thick	0.1524	U+Al	AL
HMT-006-11	93.17	1	3x4	square	1487	plate	0.316411	.0508 thick	0.1524	U+Al	AL
HMT-006-12	93.17	1	4x4	square	829	plate	0.316411	.0508 thick	0.1524	U+Al	AL
HMT-006-14	93.17	1	16x3	square	420	plate	0.316411	.0508 thick	0.1524	U+Al	AL
HMT-006-15	93.17	1	16x4	square	452	plate	0.316411	.0508 thick	0.1524	U+Al	AL
HMT-006-16	93.17	2	16x4	square	488	plate	0.316411	.0508 thick	0.1524	U+Al	AL

Note: Some wt%U235 values were converted from atom fractions

Table 6.5.6-1 MCNP5 v1.60 Benchmark Configurations for Research Reactor Fuel Benchmarks (Continued)

Identification	%U235	Clusters	Config.	Lattice	Fuel Elements	Fuel Shape	Pitch (cm)	Fuel OD (cm)	Clad OD (cm)	Fuel Mat'l	Clad Mat'l
ICT-002-01	17	1	--	hex	34	tube	6.8	4.18	4.12	UO_2	SS
ICT-002-02	17	1	--	hex	34	tube	6.8	4.18	4.12	UO_2	SS
ICT-002-03	17	1	--	hex	74	tube	6.8	4.18	4.12	UO_2	SS
ICT-002-04	17	1	--	hex	74	tube	6.8	4.18	4.12	UO_2	SS
ICT-002-05	17	1	--	hex	68	tube	6.8	4.18	4.12	UO_2	SS
ICT-002-06	17	1	--	hex	68	tube	6.8	4.18	4.12	UO_2	SS
ICT-014	19.77	1	2/1-c-1-c-1/5/1-c-1-c-1/3	square	360	plate	3.21	0.05066	0.04917	U_3Si_2	Al

Note: Some wt%U235 values were converted from atom fractions

Table 6.5.6-2 Research Reactor Fuel Benchmark K_{eff}'s and Uncertainties (MCNP5 v1.60 Validation)

Identification	k_{eff}	σ	Identification	k_{eff}	σ
HCT-003-01	1.0000	0.0044	HCT-022-01	1.0000	0.0081
HCT-003-02	1.0000	0.0044	HCT-022-02	1.0000	0.0081
HCT-003-03	1.0000	0.0044	HCT-022-03	1.0000	0.0081
HCT-003-04	1.0000	0.0044	HCT-022-04	1.0000	0.0081
HCT-003-05	1.0000	0.0044	HCT-022-05	1.0000	0.0081
HCT-003-06	1.0000	0.0044	HMT-006-01	1.0000	0.0044
HCT-003-07	1.0000	0.0044	HMT-006-02	1.0000	0.0040
HCT-003-08	1.0000	0.0044	HMT-006-03	1.0000	0.0040
HCT-003-09	1.0000	0.0044	HMT-006-04	1.0000	0.0040
HCT-003-10	1.0000	0.0044	HMT-006-05	1.0000	0.0040
HCT-003-11	1.0000	0.0044	HMT-006-06	1.0000	0.0040
HCT-003-12	1.0000	0.0044	HMT-006-07	1.0000	0.0040
HCT-003-13	1.0000	0.0044	HMT-006-08	1.0000	0.0040
HCT-003-14	1.0000	0.0044	HMT-006-09	1.0000	0.0040
HCT-003-15	1.0000	0.0044	HMT-006-10	1.0000	0.0040
HCT-006-01	1.0000	0.0058	HMT-006-11	1.0000	0.0040
HCT-006-02	1.0000	0.0020	HMT-006-12	1.0000	0.0040
HCT-006-03	1.0000	0.0048	HMT-006-14	1.0000	0.0040
HCT-011-01	0.9988	0.0042	HMT-006-15	1.0000	0.0040
HCT-011-02	0.9988	0.0042	HMT-006-16	1.0000	0.0040
HCT-011-03	0.9988	0.0042	ICT-002-01	1.0014	0.0039
HCT-012-01	0.9987	0.0032	ICT-002-02	1.0019	0.0040
HCT-012-02	0.9987	0.0034	ICT-002-03	1.0017	0.0044
HCT-013-01	0.9988	0.0042	ICT-002-04	1.0019	0.0044
HCT-013-02	0.9988	0.0043	ICT-002-05	1.0014	0.0043
HCT-014-01	0.9986	0.0048	ICT-002-06	1.0016	0.0044
HCT-014-02	0.9986	0.0049	ICT-014	1.0016	0.0014

Table 6.5.6-3 MCNP5 v1.60 Criticality Results Research Reactor Fuel Benchmarks

	MCNP5 v1.60					Bias		
Identification	k_{eff}	σ	Adj. k_{eff}	EALCF (eV)	Total σ	Δk		
HCT-003-01	0.98593	0.00147	0.98593	0.37808	0.0046	-0.01407		
HCT-003-02	0.98841	0.00149	0.98841	0.27888	0.0046	-0.01159		
HCT-003-03	0.98650	0.00156	0.98650	0.18180	0.0047	-0.01350		
HCT-003-04	0.99281	0.00152	0.99281	0.11899	0.0047	-0.00719		
HCT-003-05	0.99834	0.00146	0.99834	0.08900	0.0046	-0.00166		
HCT-003-06	1.00018	0.00153	1.00018	0.29235	0.0047	0.00018		
HCT-003-07	1.00544	0.00155	1.00544	0.20411	0.0047	0.00544		
HCT-003-08	1.00751	0.00150	1.00751	0.19431	0.0046	0.00751		
HCT-003-09	1.00615	0.00154	1.00615	0.12977	0.0047	0.00615		
HCT-003-10	1.00826	0.00148	1.00826	0.09363	0.0046	0.00826		
HCT-003-11	1.00637	0.00146	1.00637	0.07857	0.0046	0.00637		
HCT-003-12	0.98276	0.00137	0.98276	0.11795	0.0046	-0.01724		
HCT-003-13	0.99299	0.00122	0.99299	0.06087	0.0046	-0.00701		
HCT-003-14	0.99880	0.00140	0.99880	0.16052	0.0046	-0.00120	average	**-0.00245**
HCT-003-15	1.00284	0.00116	1.00284	0.07978	0.0046	0.00284	min	-0.01724
HCT-006-01	0.98477	0.00121	0.98338	1.09170	0.0059	-0.01553		
HCT-006-02	1.00156	0.00134	1.00156	0.10438	0.0024	0.00156	average	**-0.00197**
HCT-006-03	0.99450	0.00099	0.99450	0.04956	0.0049	-0.00550	min	-0.0055
HCT-011-01	0.98218	0.00092	0.98338	0.71067	0.0043	-0.01662		
HCT-011-02	0.98592	0.00085	0.98712	0.54510	0.0043	-0.01288	average	**-0.01404**
HCT-011-03	0.98618	0.00088	0.98738	0.43018	0.0043	-0.01262	min	-0.01662
HCT-012-01	0.98085	0.00091	0.98215	0.59930	0.0033	-0.01785	average	-0.01578
HCT-012-02	0.98500	0.00088	0.98630	0.45307	0.0035	-0.01370	min	-0.01785
HCT-013-01	0.98574	0.00094	0.98694	0.45306	0.0043	-0.01306	average	**-0.01339**
HCT-013-02	0.98509	0.00099	0.98629	0.31739	0.0044	-0.01371	min	-0.01371
HCT-014-01	0.99380	0.00083	0.99520	0.11682	0.0049	-0.00480	average	**-0.00522**
HCT-014-02	0.99297	0.00086	0.99437	0.09777	0.0050	-0.00563	min	-0.00563
HCT-022-01	0.98894	0.00031	0.98894	0.09546	0.0081	-0.01106		
HCT-022-02	0.98966	0.00030	0.98966	0.09677	0.0081	-0.01034		
HCT-022-03	0.98952	0.00031	0.98952	0.09809	0.0081	-0.01048		
HCT-022-04	0.98869	0.00031	0.98869	0.09917	0.0081	-0.01131	average	**-0.01104**
HCT-022-05	0.98800	0.00029	0.98800	0.09515	0.0081	-0.01200	min	-0.01200

Table 6.5.6-3 MCNP5 V1.60 Criticality Results Research Reactor Fuel Benchmarks (Continued)

	MCNP5 v1.30					Bias		
Identification	k_{eff}	σ	Adj. k_{eff}	EALCF (eV)	Total σ	Δk		
HMT-006-01	0.99172	0.00089	0.99172	0.08482	0.0045	-0.00828		
HMT-006-02	0.99302	0.00087	0.99302	0.07027	0.0041	-0.00698		
HMT-006-03	0.99701	0.00077	0.99701	0.06314	0.0041	-0.00299		
HMT-006-04	0.99125	0.00084	0.99125	0.06200	0.0041	-0.00875		
HMT-006-05	0.99045	0.00083	0.99045	0.05857	0.0041	-0.00955		
HMT-006-06	0.98876	0.00073	0.98876	0.05606	0.0041	-0.01124		
HMT-006-07	0.98696	0.00073	0.98696	0.05431	0.0041	-0.01304		
HMT-006-08	0.98517	0.00072	0.98517	0.05243	0.0041	-0.01483		
HMT-006-09	0.98732	0.00069	0.98732	0.05215	0.0041	-0.01268		
HMT-006-10	0.99946	0.00087	0.99946	0.08235	0.0041	-0.00054		
HMT-006-11	0.99178	0.00083	0.99178	0.06224	0.0041	-0.00822		
HMT-006-12	0.99227	0.00072	0.99227	0.05427	0.0041	-0.00773		
HMT-006-14	0.98551	0.00077	0.98551	0.05713	0.0041	-0.01449		
HMT-006-15	0.98312	0.00074	0.98312	0.05684	0.0041	-0.01688	average	**-0.00954**
HMT-006-16	0.99312	0.00081	0.99312	0.06366	0.0041	-0.00688	min	-0.01688
ICT-002-01	0.99283	0.00075	0.99143	0.09038	0.0040	-0.00857		
ICT-002-02	0.98563	0.00071	0.98373	0.11721	0.0041	-0.01627		
ICT-002-03	1.00064	0.00074	0.99894	0.09964	0.0045	-0.00106		
ICT-002-04	0.99885	0.00072	0.99695	0.12447	0.0045	-0.00305		
ICT-002-05	0.99366	0.00069	0.99226	0.09923	0.0044	-0.00774	average	**-0.00750**
ICT-002-06	0.99329	0.00076	0.99169	0.12423	0.0045	-0.00831	min	-0.01627
ICT-014	0.99637	0.00009	0.99477	0.08816	0.0014	-0.00523		

Table 6.5.6-4 MCNP5 V1.60 Range of Applicability and Excel Generated Correlation Coefficients of Research Reactor Fuel Benchmarks

Correlation	R^2	Minimum	Maximum
Enrichment (wt% ^{235}U)	0.0069	17	93.2
Energy of average neutron lethargy causing fission (eV)	0.0012	0.0496	0.378

Table 6.5.6-5 MCNP5 V1.60 Research Reactor Fuel USLSTATS Generated USLs for Benchmark Experiments

Variable	Enrichment (wt% ^{235}U)	EALCF (eV)
# Points	47	47
AOA Range	$17 \leq X \leq 93.2$	$0.0496 \leq X \leq 0.378$
USL Limit	0.9300 - 2.1904E-05 X	0.9269 + 3.2033E-03 X
USL Low	0.928	0.927
USL High	0.9296	0.9281

Note: USL increases as a function of decreasing enrichment. The USL determined from this data may therefore be applied to low enriched research reactor fuels (<17 wt% ^{235}U).

Table 6.5.6-6 MCNP6.2Validated Cross-Section Libraries

1001.90c	14028.80c	26000.55c	29063.80c	48113.80c	74183.80c
3006.80c	14029.80c	26054.80c	29065.80c	48114.80c	74184.80c
3007.80c	14030.80c	26056.80c	40000.66c	48116.80c	74186.80c
5010.80c	15031.80c	26057.80c	41093.80c	49000.66c	92234.80c
5011.80c	16000.62c	26058.80c	42000.66c	64152.80c	92235.80c
6000.80c	16032.80c	27059.80c	47107.80c	64154.80c	92236.80c
6012.50c	22000.62c	28000.50c	47109.80c	64155.80c	92238.80c
7014.80c	24000.50c	28058.80c	48000.51c	64156.80c	B/lwtr.20t
7015.80c	24050.80c	28060.80c	48106.80c	64157.80c	lwtr.20t
8016.80c	24052.80c	28061.80c	48108.80c	64158.80c	
12000.62c	24053.80c	28062.80c	48110.80c	64160.80c	
13027.80c	24054.80c	28064.80c	48111.80c	72000.60c	
14000.60c	25055.80c	29000.50c	48112.80c	74182.80c	

Table 6.5.6-7 MCNP6.2 Criticality Results

	MCNP6.2					Bias		
Identification	k_{eff}	σ	Adj. k_{eff}	EALCF (eV)	Total σ	Δk		
HCT-003-01	0.99300	0.00023	0.99300	0.36938	0.0044	-0.00700		
HCT-003-02	0.99182	0.00023	0.99182	0.27361	0.0044	-0.00818		
HCT-003-03	0.99386	0.00023	0.99386	0.17800	0.0044	-0.00614		
HCT-003-04	0.99590	0.00023	0.99590	0.11736	0.0044	-0.00410		
HCT-003-05	1.00092	0.00022	1.00092	0.08781	0.0044	0.00092		
HCT-003-06	1.00473	0.00023	1.00473	0.28640	0.0044	0.00473		
HCT-003-07	1.00721	0.00023	1.00721	0.20340	0.0044	0.00721		
HCT-003-08	1.00720	0.00023	1.00720	0.19205	0.0044	0.00720		
HCT-003-09	1.00813	0.00022	1.00813	0.12828	0.0044	0.00813		
HCT-003-10	1.00826	0.00022	1.00826	0.09351	0.0044	0.00826		
HCT-003-11	1.01009	0.00022	1.01009	0.07792	0.0044	0.01009		
HCT-003-12	0.98849	0.00021	0.98849	0.11704	0.0044	-0.01151		
HCT-003-13	0.99667	0.00019	0.99667	0.06038	0.0044	-0.00333		
HCT-003-14	1.00178	0.00022	1.00178	0.15809	0.0044	0.00178	average	**0.00075**
HCT-003-15	1.00320	0.00020	1.00320	0.07883	0.0044	0.00320	min	-0.01151
HCT-006-02	1.00565	0.00041	1.00565	0.10450	0.0020	0.00565	average	**0.00070**
HCT-006-03	0.99575	0.00031	0.99575	0.04947	0.0048	-0.00425	min	-0.00425
HCT-013-02	0.98928	0.00035	0.99048	0.31071	0.0043	-0.00952		
HCT-014-01	0.99571	0.00034	0.99711	0.11589	0.0048	-0.00289	average	**-0.00271**
HCT-014-02	0.99608	0.00034	0.99748	0.09684	0.0049	-0.00252	min	-0.00289
HCT-022-01	0.99250	0.00021	0.99250	0.09406	0.0081	-0.00750		
HCT-022-02	0.99275	0.00021	0.99275	0.09554	0.0081	-0.00725		
HCT-022-03	0.99245	0.00022	0.99245	0.09681	0.0081	-0.00755		
HCT-022-04	0.99210	0.00022	0.99210	0.09774	0.0081	-0.00790	average	-0.00767
HCT-022-05	0.99184	0.00021	0.99184	0.09398	0.0081	-0.00816	min	-0.00816

Table 6.5.6-7 MCNP6.2 Criticality Results (Continued)

	MCNP6.2					Bias		
Identification	k_{eff}	σ	Adj. k_{eff}	EALCF (eV)	Total σ	Δk		
HMT-006-01	0.99724	0.00039	0.99724	0.08366	0.0044	-0.00276		
HMT-006-02	0.99691	0.00037	0.99691	0.06970	0.0040	-0.00309		
HMT-006-03	1.00171	0.00036	1.00171	0.06272	0.0040	0.00171		
HMT-006-04	0.99625	0.00036	0.99625	0.06120	0.0040	-0.00375		
HMT-006-05	0.99578	0.00036	0.99578	0.05797	0.0040	-0.00422		
HMT-006-06	0.99472	0.00035	0.99472	0.05567	0.0040	-0.00528		
HMT-006-07	0.99387	0.00033	0.99387	0.05399	0.0040	-0.00613		
HMT-006-08	0.99114	0.00030	0.99114	0.05212	0.0040	-0.00886		
HMT-006-09	0.99534	0.00031	0.99534	0.05176	0.0040	-0.00466		
HMT-006-10	1.00419	0.00038	1.00419	0.08112	0.0040	0.00419		
HMT-006-11	0.99678	0.00037	0.99678	0.06183	0.0040	-0.00322		
HMT-006-12	1.00036	0.00033	1.00036	0.05374	0.0040	0.00036		
HMT-006-14	0.99278	0.00034	0.99278	0.05652	0.0040	-0.00722		
HMT-006-15	0.99067	0.00033	0.99067	0.05609	0.0040	-0.00933	average	**-0.00349**
HMT-006-16	0.99998	0.00036	0.99998	0.06282	0.0040	-0.00002	min	-0.00933
ICT-002-01	0.99798	0.00033	0.99658	0.08911	0.0039	-0.00342		
ICT-002-02	1.00293	0.00017	1.00103	0.13247	0.0040	0.00103		
ICT-002-03	1.00334	0.00033	1.00164	0.09849	0.0044	0.00164		
ICT-002-04	1.00202	0.00034	1.00012	0.12339	0.0044	0.00012		
ICT-002-05	0.99717	0.00032	0.99577	0.09822	0.0043	-0.00423	average	**-0.00163**
ICT-002-06	0.99667	0.00032	0.99507	0.12296	0.0044	-0.00493	min	-0.00493
ICT-014	1.00052	0.00009	0.99892	0.08698	0.0014	-0.00108		

Table 6.5.6-8 MCNP6.2 Research Reactor Fuel USLSTATS Generated USLs for Benchmark Experiments

Variable	Enrichment (wt% ^{235}U)	EALCF (ev)
# Points	47	47
R^2	0.0206	0.0002
R	0.1435	0.0141
AOA Range	$17 \leq X \leq 93.2$	$0.04947 X \leq 0.3694$
USL Limit	0.9372 -3.0435E-05 X	0.9338 + 9.3463E-04 X
USL Low	0.9343	0.9338
USL High	0.9366	0.9341

Note: USL increases as a function of decreasing enrichment. The USL determined from this data may therefore be applied to low enriched research reactor fuels (<17 wt% ^{235}U).

6.5.7 MCNP Criticality Benchmarks for Uranyl Nitrates

The results of the criticality analyses presented in this chapter must be compared to the upper subcritical limit (USL). The USL accounts for bias and uncertainty resulting from the method using information obtained from the analysis of criticality benchmark experimental data. Code bias calculated in this section is applicable to uranyl nitrates (e.g., HEUNL).

Criticality code validation is performed for the Monte Carlo evaluation code and neutron cross-section libraries. Criticality validation is required by the criticality safety standard ANSI/ANS-8.1.

6.5.7.1 Benchmark Experiments and Applicability Discussion

NUREG/CR-6361, "Criticality Benchmark Guide for Light-Water-Reactor Fuel in Transportation and Storage Packages," provides a guide to LWR criticality benchmark calculations and the determination of bias and subcritical limits in criticality safety evaluations. In Section 2 of the NUREG, a series of LWR criticality experiments is described in sufficient detail for independent modeling. In Section 3, the criticality experiments are modeled, and the results (k_{eff} values) are presented. The method utilized in the NUREG is KENO-Va with the 44-group ENDF/B-V cross-section library embedded in SCALE 4.3. In Section 4, a guide for the determination of bias and subcritical safety limits is provided based on ANSI/ANS-8.1 and statistical analysis of the trending in the bias. Finally, guidelines for experiment selection and applicability are presented in Section 5. The approach outlined in Section 4 of the NUREG is described in detail herein and is implemented for MCNP5 with continuous energy ENDF/B-VII cross-sections.

NUREG/CR-6361 implements ANSI/ANS-8.1 criticality safety criterion as follows.

$ks \leq kc - \Delta ks - \Delta kc - \Delta km$ (Equation 1)

where:

k_s = Calculated allowable maximum multiplication factor, k_{eff}, of the system being evaluated for all normal or credible abnormal conditions or events.

k_c = Mean k_{eff} that results from a calculation of benchmark criticality experiments using a particular calculation method. If the calculated k_{eff} values for the criticality experiments exhibit a trend with an independent parameter, then k_c shall be determined by extrapolation based on best fit to calculated values. Criticality experiments used as benchmarks in computing k_c should have physical compositions, configurations and nuclear characteristics (including reflectors) similar to those of the system being evaluated.

Δk_s = allowance for the following:

- statistical or convergence uncertainties, or both, in computation of k_s
- material and fabrication tolerances
- geometric or material representations used in computational method

Δk_c = margin for uncertainty in k_c, which includes allowance for the following:

- uncertainties in criticality experiments
- statistical or convergence uncertainties, or both, in computation of k_c
- uncertainties resulting from extrapolation of k_c outside range of experimental data
- uncertainties resulting from limitations in geometrical or material representations used in the computational method

Δk_m = arbitrary administrative margin to ensure subcriticality of k_s

The various uncertainties are combined statistically if they are independent. Correlated uncertainties are combined by addition.

Equation 1 can be rewritten as shown.

$$k_s \leq 1 - \Delta k_m - \Delta k_s - (1 - k_c) - \Delta k_c \quad \text{(Equation 2)}$$

Noting that the definition of the bias is $\beta = 1 - k_c$, Equation 2 can be written as shown.

$$k_s + \Delta k_s \leq 1 - \Delta km - \beta - \Delta\beta \quad \text{(Equation 3)}$$

where:

$$\Delta\beta = \Delta k_c$$

Thus, the maximum allowable value for k_{eff} plus uncertainties in the system being analyzed must be below 1 minus an administrative margin (typically 0.05), which includes the bias and the uncertainty in the bias. This can also be written as shown.

$$k_s + \Delta k_s \leq \text{Upper Subcritical Limit (USL)} \quad \text{(Equation 4)}$$

where:

$$USL \equiv 1 - \Delta k_m - \beta - \Delta\beta \quad \text{(Equation 5)}$$

This is the USL criterion as described in Section 4 of NUREG/CR-6361. Two methods are prescribed for the statistical determination of the USL. The "Confidence Band with Administrative Margin (USL-1)" approach is implemented here and is referred to generically as USL. A $\Delta k_m = 0.05$ and a lower confidence band are specified based on a linear regression of k_{eff} as a function of some system parameter.

Subsequent sections contain the list of critical benchmarks employed in the validation of MCNP with its continuous energy neutron cross-section libraries and the processing of the experimental results into the USL. Also included are linear fits of reactivity (k_{eff}) to each of the system parameters evaluated. Experiments were chosen to reflect the in-cask fuel geometry and materials as closely as available.

6.5.7.2 Highly Enriched Uranyl Nitrates Criticality Benchmarks

From the International Handbook of Evaluated Criticality Safety Benchmark Experiments, highly enriched uranyl nitrates are selected as the basis of the MCNP benchmarking. Materials selected were solutions of uranyl nitrate. Experiments were selected for compatibility of materials and geometry with the spent fuel casks. As such, experiments containing significant neutron absorber in the form of plates, rods, or soluble poison are eliminated. Also removed are experiments containing non light water moderator. Further review eliminated experiments if they did not contain a primarily thermal neutron spectrum causing fission.

All cases were reviewed on a "preparer/checker" principle for modeling consistency with the cask models and the choice of code options. Case inputs from the handbook where modified to the ENDF/B-VII library to maintain a consistent set. The validated cross-section libraries are listed in Table 6.5.7-6. For isotopes without an ENDF/B-VII library, the latest and most applicable library set was used (i.e. ENDF/B-VI, ENDF/B-V, etc.).

Table 6.5.7-1 lists the benchmark k_{eff} and experimental uncertainty. The NAC calculated MCNP k_{eff}'s and Monte Carlo uncertainties are shown in Table 6.5.7-2. Stochastic Monte Carlo error is kept within ±0.3% and each output is checked to assure that the MCNP built-in statistical checks on the results are passed and that all fissile material is sampled. Also included in the table are the combined Monte Carlo and experimental uncertainty and the results of the initial processing of the data indicating the minimum and average bias of each experiment.

Scatter plots of k_{eff} versus enrichment and average lethargy of neutrons causing fission are shown in Figure 6.5.7-1 and Figure 6.5.7-2. Included in these scatter plots are linear regression lines with a corresponding correlation coefficient (R^2) to statistically indicate any trend or lack thereof.

Table 6.5.7-1 Highly Enriched Uranyl Nitrates Benchmark K_{eff}'s and Uncertainties

Identification	k_{eff}	σ	wt% ^{235}U
HST-001-01	1.00040	0.00600	93.172 ± 0.060
HST-001-02	1.00210	0.00720	93.172 ± 0.060
HST-001-03	1.00030	0.00350	93.172 ± 0.060
HST-001-04	1.00080	0.00530	93.172 ± 0.060
HST-001-05	1.00010	0.00490	93.172 ± 0.060
HST-001-06	1.00020	0.00460	93.172 ± 0.060
HST-001-07	1.00080	0.00400	93.172 ± 0.060
HST-001-08	0.99980	0.00380	93.172 ± 0.060
HST-001-09	1.00030	0.00540	93.172 ± 0.060
HST-001-10	0.99930	0.00540	93.172 ± 0.060
HST-002-01	1.00250	0.00580	93.172 ± 0.060
HST-002-02	1.00280	0.00580	93.172 ± 0.060
HST-002-03	1.00330	0.00680	93.172 ± 0.060
HST-002-04	1.00340	0.00690	93.172 ± 0.060
HST-002-05	1.00180	0.00440	93.172 ± 0.060
HST-002-06	1.00230	0.00410	93.172 ± 0.060
HST-002-07	1.00250	0.00500	93.172 ± 0.060
HST-002-08	1.00300	0.00550	93.172 ± 0.060
HST-002-09	1.00120	0.00460	93.172 ± 0.060
HST-002-10	1.00240	0.00500	93.172 ± 0.060
HST-002-11	1.00170	0.00380	93.172 ± 0.060
HST-002-12	1.00270	0.00500	93.172 ± 0.060
HST-002-13	1.00250	0.00550	93.172 ± 0.060
HST-002-14	1.00310	0.00660	93.172 ± 0.060

Table 6.5.7-1 Highly Enriched Uranyl Nitrates Benchmark K_{eff}'s and Uncertainties (Continued)

Identification	k_{eff}	σ	wt% ^{235}U
HST-003-1	1.00160	0.00560	93.172 ± 0.060
HST-003-2	1.00160	0.00570	93.172 ± 0.060
HST-003-3	1.00140	0.00560	93.172 ± 0.060
HST-003-4	1.00090	0.00570	93.172 ± 0.060
HST-003-5	1.00210	0.00680	93.172 ± 0.060
HST-003-6	1.00130	0.00700	93.172 ± 0.060
HST-003-7	1.00060	0.00460	93.172 ± 0.060
HST-003-8	1.00030	0.00330	93.172 ± 0.060
HST-003-9	0.99960	0.00350	93.172 ± 0.060
HST-003-10	1.00110	0.00500	93.172 ± 0.060
HST-003-11	0.99970	0.00520	93.172 ± 0.060
HST-003-12	1.00060	0.00470	93.172 ± 0.060
HST-003-13	1.00040	0.00590	93.172 ± 0.060
HST-003-14	1.00050	0.00470	93.172 ± 0.060
HST-003-15	1.00000	0.00450	93.172 ± 0.060
HST-003-16	1.00020	0.00370	93.172 ± 0.060
HST-003-17	0.99940	0.00420	93.172 ± 0.060
HST-003-18	1.00090	0.00500	93.172 ± 0.060
HST-003-19	0.99910	0.00590	93.172 ± 0.060
HST-007-01	1.00000	0.00350	93.172 ± 0.060
HST-007-02	1.00000	0.00500	93.172 ± 0.060
HST-007-03	1.00000	0.00350	93.172 ± 0.060
HST-007-04	1.00000	0.00350	93.172 ± 0.060
HST-007-05	1.00000	0.00350	93.172 ± 0.060
HST-007-06	1.00000	0.00350	93.172 ± 0.060
HST-007-07	1.00000	0.00350	93.172 ± 0.060
HST-007-08	1.00000	0.00350	93.172 ± 0.060
HST-007-09	1.00000	0.00350	93.172 ± 0.060
HST-007-10	1.00000	0.00350	93.172 ± 0.060
HST-007-11	1.00000	0.00350	93.172 ± 0.060
HST-007-12	1.00000	0.00350	93.172 ± 0.060
HST-007-13	1.00000	0.00350	93.172 ± 0.060
HST-007-14	1.00000	0.00350	93.172 ± 0.060
HST-007-15	1.00000	0.00350	93.172 ± 0.060
HST-007-16	1.00000	0.00350	93.172 ± 0.060
HST-007-17	1.00000	0.00350	93.172 ± 0.060

Table 6.5.7-1 Highly Enriched Uranyl Nitrates Benchmark K_{eff}'s and Uncertainties (Continued)

Identification	k_{eff}	σ	wt% ^{235}U
HST-008-01	1.00000	0.00300	93.172 ± 0.060
HST-008-02	1.00000	0.00300	93.172 ± 0.060
HST-008-03	1.00000	0.00300	93.172 ± 0.060
HST-008-04	1.00000	0.00300	93.172 ± 0.060
HST-008-05	1.00000	0.00300	93.172 ± 0.060
HST-008-06	1.00000	0.00300	93.172 ± 0.060
HST-008-07	1.00000	0.00300	93.172 ± 0.060
HST-008-08	1.00000	0.00300	93.172 ± 0.060
HST-008-09	1.00000	0.00300	93.172 ± 0.060
HST-008-10	1.00000	0.00300	93.172 ± 0.060
HST-008-11	1.00000	0.00300	93.172 ± 0.060
HST-008-12	1.00000	0.00300	93.172 ± 0.060
HST-008-13	1.00000	0.00300	93.172 ± 0.060
HST-008-14	1.00000	0.00300	93.172 ± 0.060
HST-013-01	1.00120	0.00260	93.18
HST-032-01	1.0015	0.0026	93.21
HST-033-02A	1.00000	0.01110	93.219 ± 0.037
HST-033-02B	1.00000	0.01080	93.219 ± 0.037
HST-033-02C	1.00000	0.00650	93.219 ± 0.037
HST-033-011A	1.00000	0.01110	93.219 ± 0.037
HST-033-011B	1.00000	0.01080	93.219 ± 0.037

Table 6.5.7-1 Highly Enriched Uranyl Nitrates Benchmark K_{eff}'s and Uncertainties (Continued)

Identification	k_{eff}	σ	wt% ^{235}U
HST-040-01	0.99570	0.00630	93.17
HST-040-02	0.99200	0.00700	93.17
HST-040-03	0.99290	0.00830	93.17
HST-040-04	0.99110	0.00810	93.17
HST-040-05	0.99220	0.00820	93.17
HST-040-06	0.99260	0.00720	93.17
HST-040-07	0.99140	0.00690	93.17
HST-040-08	0.99320	0.00780	93.17
HST-040-09	0.99380	0.00670	93.17
HST-040-10	0.99340	0.00660	93.17
HST-040-11	0.99410	0.00660	93.17
HST-040-12	0.99530	0.00730	93.17
HST-040-13	0.99750	0.00690	93.17
HST-040-14	0.99680	0.00680	93.17
HST-040-15	0.99310	0.00620	93.17
HST-040-16	0.99530	0.00600	93.17
HST-040-17	0.99620	0.00770	93.17
HST-042-01	0.99570	0.00390	93.22
HST-042-02	0.99650	0.00360	93.03
HST-042-03	0.99940	0.00280	93.12
HST-042-04	1.00000	0.00340	93.11
HST-042-05	1.00000	0.00340	93.01
HST-042-06	1.00000	0.00370	92.79
HST-042-07	1.00000	0.00360	92.78
HST-042-08	1.00000	0.00350	92.82

Table 6.5.7-2 MCNP Criticality Results Highly Enriched Uranyl Nitrates Benchmarks

Case Description		MCNP	v1.60	Results			Bias
Evaluation ID	Case ID	k_{eff}	σ	Adj. k_{eff}	EALCF (eV)	Total σ	Δk
HEU-SOL-THERM-001	Case_1	0.99705	0.00202	0.99665	0.08107	0.00633	-0.00335
HEU-SOL-THERM-001	Case_2	0.99421	0.00218	0.99211	0.27340	0.00752	-0.00789
HEU-SOL-THERM-001	Case_3	0.99759	0.00197	0.99729	0.07909	0.00402	-0.00271
HEU-SOL-THERM-001	Case_4	0.99505	0.00212	0.99425	0.29374	0.00571	-0.00575
HEU-SOL-THERM-001	Case_5	0.99593	0.00167	0.99583	0.04279	0.00518	-0.00417
HEU-SOL-THERM-001	Case_6	0.99925	0.00185	0.99905	0.04431	0.00496	-0.00095
HEU-SOL-THERM-001	Case_7	0.99820	0.00220	0.99740	0.07644	0.00457	-0.00260
HEU-SOL-THERM-001	Case_8	0.99980	0.00191	1.00000	0.08110	0.00425	0.00000
HEU-SOL-THERM-001	Case_9	0.99108	0.00229	0.99078	0.29289	0.00587	-0.00922
HEU-SOL-THERM-001	Case_10	0.99370	0.00175	0.99440	0.04600	0.00568	-0.00560
HEU-SOL-THERM-002	Case_1	0.99925	0.00224	0.99675	0.07931	0.00622	-0.00325
HEU-SOL-THERM-002	Case_2	1.00403	0.00224	1.00123	0.07843	0.00622	0.00123
HEU-SOL-THERM-002	Case_3	0.99997	0.00234	0.99667	0.24636	0.00719	-0.00333
HEU-SOL-THERM-002	Case_4	1.00422	0.00206	1.00082	0.23755	0.00720	0.00082
HEU-SOL-THERM-002	Case_5	1.00221	0.00234	1.00041	0.07952	0.00498	0.00041
HEU-SOL-THERM-002	Case_6	1.00599	0.00231	1.00369	0.07795	0.00471	0.00369
HEU-SOL-THERM-002	Case_7	1.00093	0.00232	0.99843	0.24417	0.00551	-0.00157
HEU-SOL-THERM-002	Case_8	1.00439	0.00220	1.00139	0.22955	0.00592	0.00139
HEU-SOL-THERM-002	Case_9	1.00156	0.00183	1.00036	0.04403	0.00495	0.00036
HEU-SOL-THERM-002	Case_10	1.00132	0.00198	0.99892	0.04415	0.00538	-0.00108
HEU-SOL-THERM-002	Case_11	1.00209	0.00225	1.00039	0.07914	0.00442	0.00039
HEU-SOL-THERM-002	Case_12	1.00378	0.00216	1.00108	0.07703	0.00545	0.00108
HEU-SOL-THERM-002	Case_13	0.99403	0.00240	0.99153	0.24669	0.00600	-0.00847
HEU-SOL-THERM-002	Case_14	1.00448	0.00229	1.00138	0.23036	0.00699	0.00138

Table 6.5.7-2 MCNP Criticality Results Highly Enriched Uranyl Nitrates Benchmarks (Continued)

Case Description		MCNP	v1.60	Results			Bias
Evaluation ID	Case ID	k_{eff}	σ	Adj. k_{eff}	EALCF (eV)	Total σ	Δk
HEU-SOL-THERM-003	Case_1	1.00039	0.00186	0.99879	0.04389	0.00590	-0.00121
HEU-SOL-THERM-003	Case_2	1.00253	0.00213	1.00093	0.04429	0.00608	0.00093
HEU-SOL-THERM-003	Case_3	1.00114	0.00230	0.99974	0.07958	0.00605	-0.00026
HEU-SOL-THERM-003	Case_4	1.00280	0.00215	1.00190	0.07856	0.00609	0.00190
HEU-SOL-THERM-003	Case_5	0.99335	0.00253	0.99125	0.25934	0.00726	-0.00875
HEU-SOL-THERM-003	Case_6	1.00005	0.00251	0.99875	0.23639	0.00744	-0.00125
HEU-SOL-THERM-003	Case_7	1.00284	0.00191	1.00224	0.04358	0.00498	0.00224
HEU-SOL-THERM-003	Case_8	0.99867	0.00243	0.99837	0.08022	0.00410	-0.00163
HEU-SOL-THERM-003	Case_9	1.00727	0.00224	1.00767	0.07656	0.00416	0.00767
HEU-SOL-THERM-003	Case_10	0.98970	0.00221	0.98860	0.25778	0.00547	-0.01140
HEU-SOL-THERM-003	Case_11	0.99732	0.00256	0.99762	0.22161	0.00580	-0.00238
HEU-SOL-THERM-003	Case_12	0.99650	0.00207	0.99590	0.04416	0.00514	-0.00410
HEU-SOL-THERM-003	Case_13	0.99655	0.00188	0.99615	0.04314	0.00619	-0.00385
HEU-SOL-THERM-003	Case_14	1.00098	0.00210	1.00048	0.04390	0.00515	0.00048
HEU-SOL-THERM-003	Case_15	0.99555	0.00193	0.99555	0.04557	0.00490	-0.00445
HEU-SOL-THERM-003	Case_16	1.00086	0.00231	1.00066	0.08083	0.00436	0.00066
HEU-SOL-THERM-003	Case_17	1.00177	0.00216	1.00237	0.07554	0.00472	0.00237
HEU-SOL-THERM-003	Case_18	0.99632	0.00233	0.99542	0.25768	0.00552	-0.00458
HEU-SOL-THERM-003	Case_19	1.00703	0.00229	1.00793	0.21600	0.00633	0.00793
HEU-SOL-THERM-007	Case_1	1.01057	0.00189	1.01057	0.04681	0.00398	0.01057
HEU-SOL-THERM-007	Case_2	1.01134	0.00195	1.01134	0.25994	0.00537	0.01134
HEU-SOL-THERM-007	Case_3	1.00513	0.00198	1.00513	0.04619	0.00402	0.00513
HEU-SOL-THERM-007	Case_4	1.00912	0.00205	1.00912	0.23635	0.00406	0.00912
HEU-SOL-THERM-007	Case_5	1.00390	0.00198	1.00390	0.05067	0.00402	0.00390
HEU-SOL-THERM-007	Case_6	0.99989	0.00219	0.99989	0.26827	0.00546	-0.00011
HEU-SOL-THERM-007	Case_7	1.00719	0.00178	1.00719	0.04946	0.00393	0.00719
HEU-SOL-THERM-007	Case_8	0.99721	0.00225	0.99721	0.26604	0.00416	-0.00279
HEU-SOL-THERM-007	Case_9	1.00206	0.00204	1.00206	0.05135	0.00405	0.00206
HEU-SOL-THERM-007	Case_10	1.00815	0.00183	1.00815	0.05291	0.00395	0.00815
HEU-SOL-THERM-007	Case_11	1.00414	0.00208	1.00414	0.24960	0.00407	0.00414
HEU-SOL-THERM-007	Case_12	1.00792	0.00191	1.00792	0.05092	0.00399	0.00792
HEU-SOL-THERM-007	Case_13	1.00564	0.00213	1.00564	0.22987	0.00410	0.00564
HEU-SOL-THERM-007	Case_14	1.00676	0.00209	1.00676	0.23822	0.00408	0.00676
HEU-SOL-THERM-007	Case_15	1.00528	0.00225	1.00528	0.23761	0.00416	0.00528
HEU-SOL-THERM-007	Case_16	1.00839	0.00221	1.00839	0.25063	0.00414	0.00839
HEU-SOL-THERM-007	Case_17	1.00913	0.00208	1.00913	0.23465	0.00407	0.00913

Table 6.5.7-2 MCNP Criticality Results Highly Enriched Uranyl Nitrates Benchmarks (Continued)

Case Description		MCNP	v1.60	Results			Bias
Evaluation ID	Case ID	k_{eff}	σ	Adj. k_{eff}	EALCF (eV)	Total σ	Δk
HEU-SOL-THERM-008	Case_1	0.99891	0.00138	0.99891	0.04401	0.00330	-0.00109
HEU-SOL-THERM-008	Case_2	1.00709	0.00177	1.00709	0.22300	0.00348	0.00709
HEU-SOL-THERM-008	Case_3	0.99541	0.00185	0.99541	0.04315	0.00352	-0.00459
HEU-SOL-THERM-008	Case_4	1.00375	0.00214	1.00375	0.19991	0.00369	0.00375
HEU-SOL-THERM-008	Case_5	0.99828	0.00170	0.99828	0.04439	0.00345	-0.00172
HEU-SOL-THERM-008	Case_6	1.00609	0.00231	1.00609	0.24895	0.00379	0.00609
HEU-SOL-THERM-008	Case_7	0.99646	0.00184	0.99646	0.04330	0.00352	-0.00354
HEU-SOL-THERM-008	Case_8	1.00136	0.00234	1.00136	0.23821	0.00380	0.00136
HEU-SOL-THERM-008	Case_9	1.00012	0.00135	1.00012	0.04365	0.00329	0.00012
HEU-SOL-THERM-008	Case_10	1.00456	0.00226	1.00456	0.22348	0.00376	0.00456
HEU-SOL-THERM-008	Case_11	1.00000	0.00205	1.00000	0.04225	0.00363	0.00000
HEU-SOL-THERM-008	Case_12	1.00539	0.00216	1.00539	0.19416	0.00370	0.00539
HEU-SOL-THERM-008	Case_13	1.00075	0.00221	1.00075	0.22342	0.00373	0.00075
HEU-SOL-THERM-008	Case_14	1.00182	0.00198	1.00182	0.20513	0.00359	0.00182
HEU-SOL-THERM-013	Case1	0.99853	0.00041	0.99733	0.03240	0.00263	-0.00267
HEU-SOL-THERM-032	Case1	1.00029	0.00038	0.99879	0.031016	0.00263	-0.00121
HEU-SOL-THERM-033	CASE_02A	0.99825	0.00114	0.99825	0.30523	0.01116	-0.00175
HEU-SOL-THERM-033	CASE_02B	0.99586	0.00110	0.99586	0.31372	0.01086	-0.00414
HEU-SOL-THERM-033	CASE_02C	0.99639	0.00114	0.99639	0.31663	0.00660	-0.00361
HEU-SOL-THERM-033	CASE_11A	1.00322	0.00117	1.00322	0.28409	0.01116	0.00322
HEU-SOL-THERM-033	CASE_11B	1.00039	0.00111	1.00039	0.27909	0.01086	0.00039

Table 6.5.7-2 MCNP Criticality Results Highly Enriched Uranyl Nitrates Benchmarks (Continued)

Case Description		MCNP	v1.60	Results			Bias
Evaluation ID	Case ID	k_{eff}	σ	Adj. k_{eff}	EALCF (eV)	Total σ	Δk
HEU-SOL-THERM-040	Case1	0.99627	0.00050	1.00057	0.51504	0.00632	0.00057
HEU-SOL-THERM-040	Case2	0.98707	0.00049	0.99507	0.52411	0.00702	-0.00493
HEU-SOL-THERM-040	Case3	0.99802	0.00051	1.00512	0.52172	0.00832	0.00512
HEU-SOL-THERM-040	Case4	0.99229	0.00050	1.00119	0.52295	0.00812	0.00119
HEU-SOL-THERM-040	Case5	0.98982	0.00050	0.99762	0.52378	0.00822	-0.00238
HEU-SOL-THERM-040	Case6	0.99268	0.00050	1.00008	0.52375	0.00722	0.00008
HEU-SOL-THERM-040	Case7	0.99078	0.00052	0.99938	0.52266	0.00692	-0.00062
HEU-SOL-THERM-040	Case8	0.98911	0.00050	0.99591	0.52553	0.00782	-0.00409
HEU-SOL-THERM-040	Case9	0.99228	0.00051	0.99848	0.52431	0.00672	-0.00152
HEU-SOL-THERM-040	Case10	0.99932	0.00049	1.00592	0.51729	0.00662	0.00592
HEU-SOL-THERM-040	Case11	1.00217	0.00049	1.00807	0.51839	0.00662	0.00807
HEU-SOL-THERM-040	Case12	0.99763	0.00052	1.00233	0.51138	0.00732	0.00233
HEU-SOL-THERM-040	Case13	0.98865	0.00050	0.99115	0.51283	0.00692	-0.00885
HEU-SOL-THERM-040	Case14	1.00101	0.00051	1.00421	0.51565	0.00682	0.00421
HEU-SOL-THERM-040	Case15	0.98555	0.00051	0.99245	0.52099	0.00622	-0.00755
HEU-SOL-THERM-040	Case16	0.98671	0.00051	0.99141	0.52054	0.00602	-0.00859
HEU-SOL-THERM-040	Case17	0.98845	0.00051	0.99225	0.51188	0.00772	-0.00775
HEU-SOL-THERM-042	Case_1	0.99719	0.00027	1.00149	0.03165	0.00391	0.00149
HEU-SOL-THERM-042	Case_2	0.99695	0.00026	1.00045	0.03155	0.00361	0.00045
HEU-SOL-THERM-042	Case_3	1.00082	0.00022	1.00142	0.03103	0.00281	0.00142
HEU-SOL-THERM-042	Case_4	1.00209	0.00020	1.00209	0.03087	0.00341	0.00209
HEU-SOL-THERM-042	Case_5	0.99997	0.00017	0.99997	0.03072	0.00340	-0.00003
HEU-SOL-THERM-042	Case_6	1.00107	0.00018	1.00107	0.03084	0.00370	0.00107
HEU-SOL-THERM-042	Case_7	1.00133	0.00016	1.00133	0.03071	0.00360	0.00133
HEU-SOL-THERM-042	Case_8	1.00189	0.00015	1.00189	0.03060	0.00350	0.00189

Figure 6.5.7-1 K_{eff} versus Fuel Enrichment (MCNP – Highly Enriched Uranyl Nitrates)

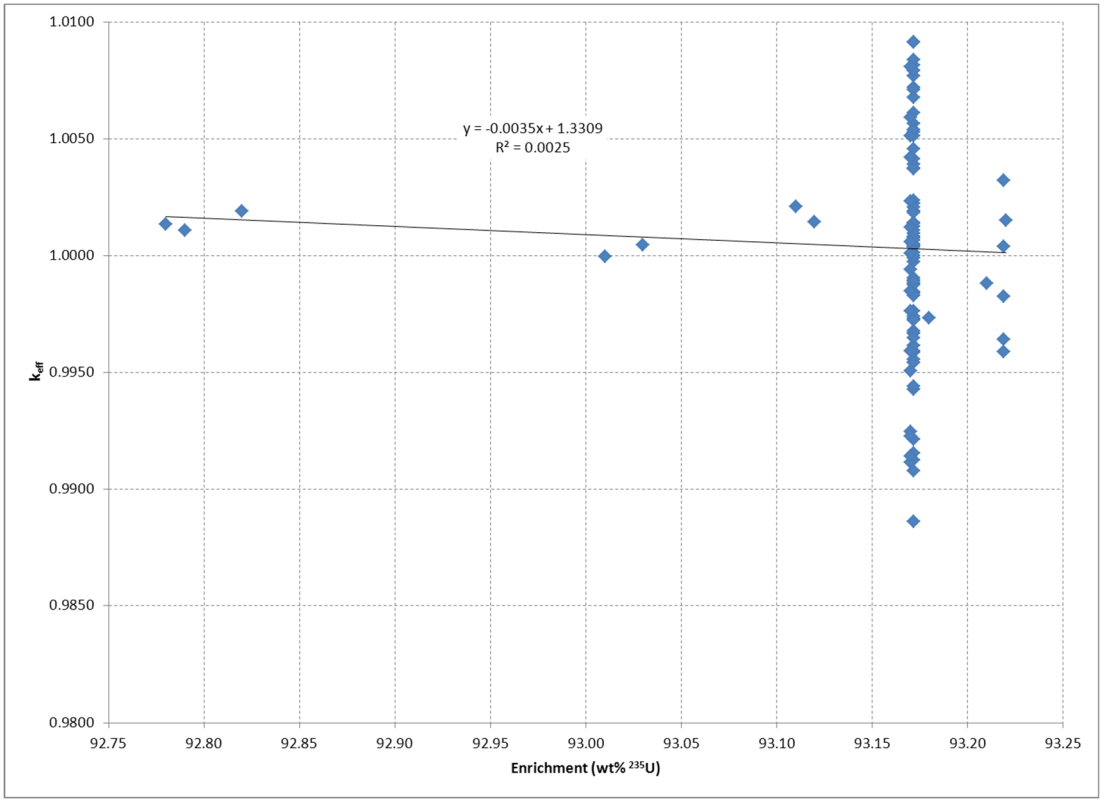

Figure 6.5.7-2 K_{eff} versus Energy of Average Neutron Lethargy Causing Fission (MCNP – Highly Enriched Uranyl Nitrates)

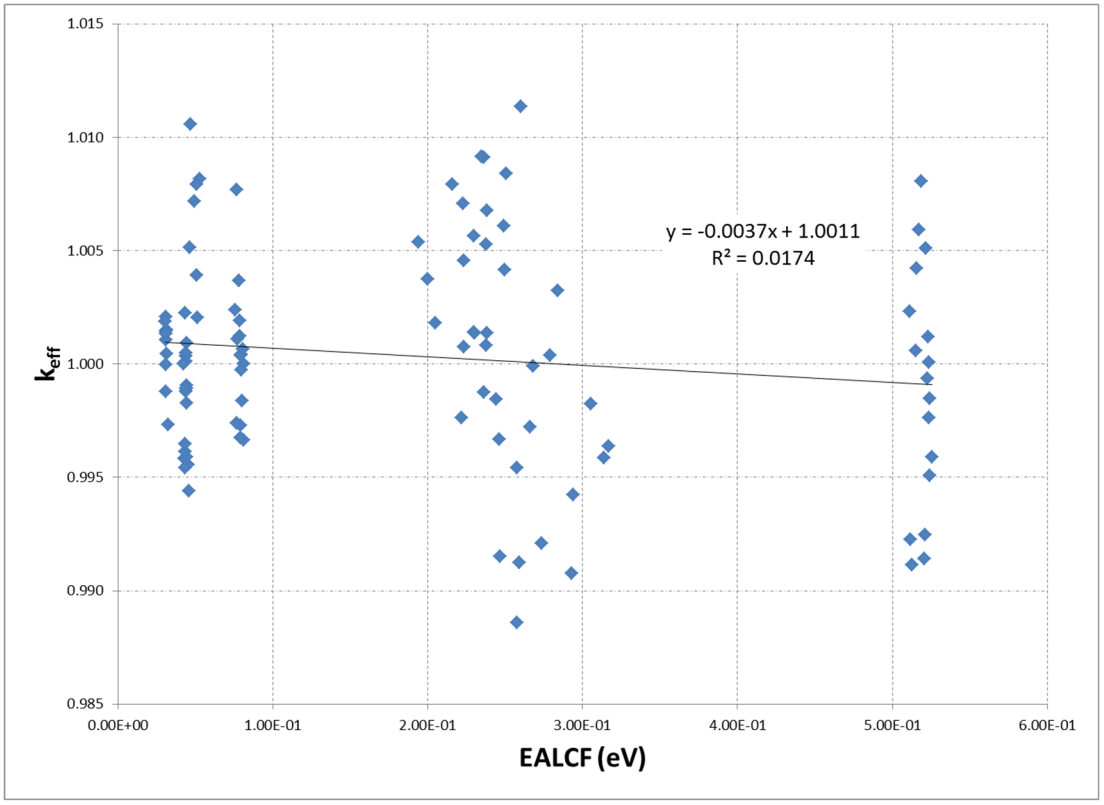

6.5.7.3 Results of MCNP Highly Enriched Uranyl Nitrates Benchmark Calculations

Trending in k_{eff} was considered for wt % ^{235}U and energy of the average neutron lethargy causing fission (EALCF), the two parameters most likely to show cross section effects.

To evaluate the relative importance of the trend analysis to the upper subcritical limits, correlation coefficients are required for all independent parameters. The linear correlation coefficient, R, is calculated by taking the square root of the R^2 value. In particular, the correlation coefficient, R, is a measure of the linear relationship between k_{eff} and a critical experiment parameter. If R is +1, a perfect linear relationship with a positive slope is indicated. If R is -1, a perfect linear relationship with a negative slope is indicated. When R is 0, no linear relationship is indicated.

Table 6.5.7-3 contains the correlation coefficient, R, for each linear fit of k_{eff} versus experimental parameter. Linear fits and correlation constants are based on 106 data-point evaluation sets plotted in the previous section. No statistically significant trends were found for either parameter. As all experiments contain primarily ^{235}U (92.78 wt% to 93.22 wt%) with minor impurities, the consistent attribute to trend analysis is the EALCF.

The USL for the EALCF is calculated and shown in Table 6.5.7-4. The USLSTATS output of k_{eff} versus EALCF is shown in Figure 6.5.7-3. Uncertainties included in the USLSTATS evaluation are the Monte Carlo uncertainty associated with the reactivity calculation and experimental uncertainty that was provided in the literature for each of the cases.

Based on all the independent variable correlations, a lower limit constant USL of 0.9366 may be applied. This validation and bias calculation is applicable to the critical configurations and parameters described in Table 6.5.7-5.

Figure 6.5.7-3 MCNP Highly Enriched Uranyl Nitrates USLSTATS Output for EALCF

```
   Input to statistical treatment from file:ealcf.in

Title: keff vs EALCF

   Proportion of the population = .995
   Confidence of fit            = .950
   Confidence on proportion     = .950
   Number of observations       =  106
   Minimum value of closed band =    0.00
   Maximum value of closed band =    0.00
   Administrative margin        =    0.05
```

independent variable - x	dependent variable - y	deviation in y	independent variable - x	dependent variable - y	deviation in y
8.11000E-02	9.96650E-01	6.33000E-03	2.50000E-01	1.00414E+00	4.07000E-03
2.73000E-01	9.92110E-01	7.52000E-03	5.09000E-02	1.00792E+00	3.99000E-03
7.91000E-02	9.97290E-01	4.02000E-03	2.30000E-01	1.00564E+00	4.10000E-03
2.94000E-01	9.94250E-01	5.71000E-03	2.38000E-01	1.00676E+00	4.08000E-03
4.28000E-02	9.95830E-01	5.18000E-03	2.38000E-01	1.00528E+00	4.16000E-03
4.43000E-02	9.99050E-01	4.96000E-03	2.51000E-01	1.00839E+00	4.14000E-03
7.64000E-02	9.97400E-01	4.57000E-03	2.35000E-01	1.00913E+00	4.07000E-03
8.11000E-02	1.00000E+00	4.25000E-03	4.40000E-02	9.98910E-01	3.30000E-03
2.93000E-01	9.90780E-01	5.87000E-03	2.23000E-01	1.00709E+00	3.48000E-03
4.60000E-02	9.94400E-01	5.68000E-03	4.32000E-02	9.95410E-01	3.52000E-03
7.93000E-02	9.96750E-01	6.22000E-03	2.00000E-01	1.00375E+00	3.69000E-03
7.84000E-02	1.00123E+00	6.22000E-03	4.44000E-02	9.98280E-01	3.45000E-03
2.46000E-01	9.96670E-01	7.19000E-03	2.49000E-01	1.00609E+00	3.79000E-03
2.38000E-01	1.00082E+00	7.20000E-03	4.33000E-02	9.96460E-01	3.52000E-03
7.95000E-02	1.00041E+00	4.98000E-03	2.38000E-01	1.00136E+00	3.80000E-03
7.80000E-02	1.00369E+00	4.71000E-03	4.36000E-02	1.00012E+00	3.29000E-03
2.44000E-01	9.98430E-01	5.51000E-03	2.23000E-01	1.00456E+00	3.76000E-03
2.30000E-01	1.00139E+00	5.92000E-03	4.23000E-02	1.00000E+00	3.63000E-03
4.40000E-02	1.00036E+00	4.95000E-03	1.94000E-01	1.00539E+00	3.70000E-03
4.42000E-02	9.98920E-01	5.38000E-03	2.23000E-01	1.00075E+00	3.73000E-03
7.91000E-02	1.00039E+00	4.42000E-03	2.05000E-01	1.00182E+00	3.59000E-03
7.70000E-02	1.00108E+00	5.45000E-03	3.24000E-02	9.97330E-01	2.63000E-03
2.47000E-01	9.91530E-01	6.00000E-03	3.10000E-02	9.98790E-01	2.63000E-03
2.30000E-01	1.00138E+00	6.99000E-03	3.05000E-01	9.98250E-01	1.11600E-02
4.39000E-02	9.98790E-01	5.90000E-03	3.14000E-01	9.95860E-01	1.08600E-02
4.43000E-02	1.00093E+00	6.08000E-03	3.17000E-01	9.96390E-01	6.60000E-03
7.96000E-02	9.99740E-01	6.05000E-03	2.84000E-01	1.00322E+00	1.11600E-02
7.86000E-02	1.00190E+00	6.09000E-03	2.79000E-01	1.00039E+00	1.08600E-02
2.59000E-01	9.91250E-01	7.26000E-03	5.15000E-01	1.00057E+00	6.32000E-03
2.36000E-01	9.98750E-01	7.44000E-03	5.24000E-01	9.95070E-01	7.02000E-03
4.36000E-02	1.00224E+00	4.98000E-03	5.22000E-01	1.00512E+00	8.32000E-03
8.02000E-02	9.98370E-01	4.10000E-03	5.23000E-01	1.00119E+00	8.12000E-03
7.66000E-02	1.00767E+00	4.16000E-03	5.24000E-01	9.97620E-01	8.22000E-03
2.58000E-01	9.88600E-01	5.47000E-03	5.24000E-01	1.00008E+00	7.22000E-03
2.22000E-01	9.97620E-01	5.80000E-03	5.23000E-01	9.99380E-01	6.92000E-03
4.42000E-02	9.95900E-01	5.14000E-03	5.26000E-01	9.95910E-01	7.82000E-03
4.31000E-02	9.96150E-01	6.19000E-03	5.24000E-01	9.98480E-01	6.72000E-03
4.39000E-02	1.00048E+00	5.15000E-03	5.17000E-01	1.00592E+00	6.62000E-03
4.56000E-02	9.95550E-01	4.90000E-03	5.18000E-01	1.00807E+00	6.62000E-03
8.08000E-02	1.00066E+00	4.36000E-03	5.11000E-01	1.00233E+00	7.32000E-03
7.55000E-02	1.00237E+00	4.72000E-03	5.13000E-01	9.91150E-01	6.92000E-03
2.58000E-01	9.95420E-01	5.52000E-03	5.16000E-01	1.00421E+00	6.82000E-03
2.16000E-01	1.00793E+00	6.33000E-03	5.21000E-01	9.92450E-01	6.22000E-03
4.68000E-02	1.01057E+00	3.98000E-03	5.21000E-01	9.91410E-01	6.02000E-03
2.60000E-01	1.01134E+00	5.37000E-03	5.12000E-01	9.92250E-01	7.72000E-03
4.62000E-02	1.00513E+00	4.02000E-03	3.16000E-02	1.00149E+00	3.91000E-03
2.36000E-01	1.00912E+00	4.06000E-03	3.15000E-02	1.00045E+00	3.61000E-03
5.07000E-02	1.00390E+00	4.02000E-03	3.10000E-02	1.00142E+00	2.81000E-03
2.68000E-01	9.99890E-01	5.46000E-03	3.09000E-02	1.00209E+00	3.41000E-03
4.95000E-02	1.00719E+00	3.93000E-03	3.07000E-02	9.99970E-01	3.40000E-03
2.66000E-01	9.97210E-01	4.16000E-03	3.08000E-02	1.00107E+00	3.70000E-03
5.14000E-02	1.00206E+00	4.05000E-03	3.07000E-02	1.00133E+00	3.60000E-03
5.29000E-02	1.00815E+00	3.95000E-03	3.06000E-02	1.00189E+00	3.50000E-03

```
   chi =  5.4151 (upper bound = 9.49). The data tests normal.
```

Figure 6.5.7-3 MCNP Highly Enriched Uranyl Nitrates USLSTATS Output for EALCF (Continued)

```
      Output from statistical treatment

   keff vs EALCF

    Number of data points (n)                        106
    Linear regression, k(X)                          1.0011 + (-3.7159E-03)*X
    Confidence on fit (1-gamma) [input]               95.0%
    Confidence on proportion (alpha) [input]          95.0%
    Proportion of population falling above
    lower tolerance interval (rho) [input]            99.5%
    Minimum value of X                               3.0600E-02
    Maximum value of X                               5.2600E-01
    Average value of X                               1.9825E-01
    Average value of k                                1.00032
    Minimum value of k                                0.98860
    Variance of fit, s(k,X)^2                        2.2267E-05
    Within variance, s(w)^2                          3.1899E-05
    Pooled variance, s(p)^2                          5.4166E-05
    Pooled std. deviation, s(p)                      7.3597E-03
    C(alpha,rho)*s(p)                                2.5589E-02
    student-t @ (n-2,1-gamma)                        1.66147E+00
    Confidence band width, W                         1.2503E-02
    Minimum margin of subcriticality, C*s(p)-W       1.3086E-02

    Upper subcritical limits: ( 3.06000E-02 <= X <=  0.52600    )
    ***** ********** *******

    USL Method 1 (Confidence Band with
    Administrative Margin)             USL1 = 0.9386 + (-3.7159E-03)*X (X >   0.28480   )
                                            = 0.9375                   (X <=  0.28480   )

    USL Method 2 (Single-Sided Uniform
    Width Closed Interval Approach)    USL2 = 0.9755 + (-3.7159E-03)*X (X >  2.84799E-01)
                                            = 0.9744                   (X <= 2.84799E-01)



    USLs Evaluated Over Range of Parameter X:
    **** ********* **** ***** ** ********* **

    X:  3.06E-2  1.01E-1  1.72E-1  2.43E-1  3.14E-1  3.84E-1  4.55E-1  5.26E-1
       ------------------------------------------------------------------------
USL-1:    0.9375   0.9375   0.9375   0.9375   0.9374   0.9371   0.9369   0.9366
USL-2:    0.9744   0.9744   0.9744   0.9744   0.9743   0.9740   0.9738   0.9735
       ------------------------------------------------------------------------
```

Table 6.5.7-3 Range of Parameters and Correlation Coefficients for Highly Enriched Uranyl Nitrates Benchmarks

Correlation	R^2	R	Minimum	Maximum
wt% ^{235}U	2.55E-03	0.0505	92.78%	93.22%
EALCF (eV)	1.74E-02	0.132	3.06E-02	5.26E-01

Table 6.5.7-4 MCNP Highly Enriched Uranyl Nitrates – USLSTATS Generated USLs for Benchmark Experiments

Variable	EALCF
File Name	ealcf.out
# Points	106
AOA Range	$0.0306 \text{ eV} \leq X \leq 0.5260 \text{ eV}$
Administrative Margin	0.05
USL	0.9366

Table 6.5.7-5 MCNP Highly Enriched Uranyl Nitrates – Area of Applicability for Benchmark Experiments

Fissile Form	Nitrate Solutions
Geometry	Spheres, Rods (Cylinders)
Moderator	Light Water, Tap Water, or None
H/U Ratio	51.010 to 2050
EALCF (eV)	3.06E-02 to 5.26E-01

Table 6.5.7-6 Highly Enriched Uranyl Nitrates Validated Cross-Section Libraries

1001.70c	14000.60c	24052.70c	28058.70c	92233.70c
1002.70c	15031.70c	24053.70c	28060.70c	92234.70c
5010.70c	16000.62c	24054.70c	28061.70c	92235.70c
6000.70c	16032.70c	25055.50c	28062.70c	92236.70c
6012.50c	17000.66c	26000.55c	28064.70c	92238.70c
7014.70c	19000.62c	26054.70c	29000.50c	lwtr.10t
7015.70c	20000.62c	26056.70c	29063.70c	
8016.70c	22000.62c	26057.70c	29065.70c	
11023.70c	23000.70c	26058.70c	42000.66c	
12000.62c	24000.50c	27059.70c	48000.51c	
13027.70c	24050.70c	28000.50c	73181.70c	

6.7 Payload Specific Details

This section contains NAC-LWT cask payload specific evaluation detail.

6.7.1 PWR Mixed Oxide Fuel Rods

This section includes input, analysis method, results, and criticality benchmark evaluations for the NAC-LWT cask containing a payload of up to 16 PWR rods. The PWR rods may be composed of uranium oxide fuel pellets or mixed oxide fuel pellets (depleted or natural uranium oxide with plutonium oxide contributing the primary quantity of fissile material).

6.7.1.1 Package Fuel Loading

The NAC-LWT cask may transport up to 16 undamaged PWR fuel rods in a fuel rod holder. To bound all PWR MOX rods that may be transported in the NAC-LWT cask, UO_2 rods are evaluated with enrichments up to 5.0 wt % ^{235}U, while MOX rods were evaluated up to 7 wt % fissile plutonium. Characteristics of the design basis PWR rods are presented in Table 6.7.1-12 and Table 6.7.1-13. Given a fixed fissile material density, defined by a maximum UO_2 enrichment or fissile plutonium weight percent, the most reactive rod has the greatest fissile mass, i.e., the rod with the largest pellet radius. Therefore, the CE 14×14 pellet diameter of 0.3765 inch is chosen as the base radius for the most reactive PWR fuel rod evaluated here. A conservative maximum fissile material length of 153.5 inches is also applied. As a maximum reactivity fuel pitch is established, and the zirconium alloy is essentially transparent to neutrons, the clad thickness has no significant effect on the analysis.

6.7.1.2 Criticality Model Specifications

This section describes the models that are used in the criticality analyses for the NAC-LWT cask containing up to 16 PWR rods. PWR rods are either low enriched uranium oxide (maximum 5 wt % ^{235}U) fueled or MOX fueled. The models are analyzed separately under normal conditions and hypothetical accident conditions to ensure that all possible configurations are subcritical.

The model uses the MCNP5 code package with the ENDF/B-VI cross-section set. No cross-section pre-processing is required prior to MCNP implementation. MCNP uses the Monte Carlo technique to calculate the k_{eff} of a system. In these analyses, approximately 530 cycles with 1,000 neutron histories per cycle are tracked through the system.

Description of Calculational Models

The MCNP model of the NAC-LWT cask with 16 undamaged PWR rods includes triangular and square lattice formation of design basis rods centered in the cask cavity. No credit is taken for

geometry control provided by the rod holder. The fuel rods, cask cavity and radial shields are explicitly modeled as shown in the Figure 6.7.1-1 model sketch.

The model of the NAC-LWT cask takes advantage of the universe structure of MCNP. Each universe defines an infinite space, bounded after its insertion into a containing cell. Four universes are employed herein. The "0" universe defines the cask universe. The remaining universes are discussed in the following sections. Each universe is developed independently as surfaces and cells. Fuel rod array surfaces and cells are configured to place the rods in either a rectangular (square) pitch array or a hex (triangular) pitch array. The rod pitch is a variable input into the model and is modified to achieve a maximum reactivity configuration. In the basket universe, the rod array is placed into a square (RPP) body that allows the moderator density outside the rod array to be adjusted independently.

The modeled accident condition completely removes the neutron shielding, the neutron shield tank and the cask impact limiters. In the normal conditions model, the impact limiter diameter is modeled as identical to the neutron shield tank diameter. This allows for closer packing for the cask array than physically possible.

VISED sketches of the assembled geometry are shown in Figure 6.7.1-2 through Figure 6.7.1-4. The cask outer surface is surrounded by a rectangular body with reflecting boundary conditions. The boundary conditions are imposed on the sides, top and bottom, which simulates an infinite array of casks.

Package Regional Densities

The composition densities (g/cc) and nuclide number densities (atm/b-cm) used in the subsequent criticality analyses are shown in Table 6.7.1-1. The various isotope weight compositions used in the MOX/UO_2 rod analysis are listed in Table 6.7.1-2.

Figure 6.7.1-1 MCNP Model Sketch of the NAC-LWT Cask with PWR MOX/UO_2 Rods

(Dimensions in centimeters)

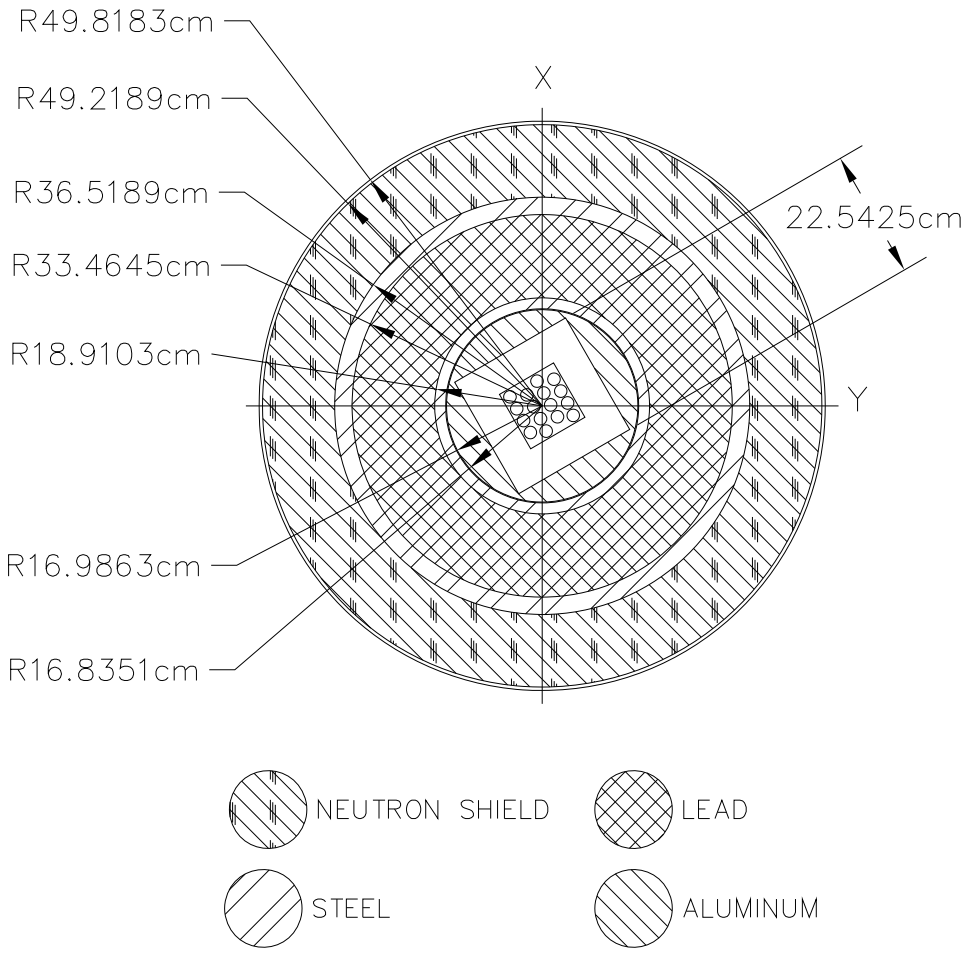

Figure 6.7.1-2 VISED Sketch of LWT Radial View – Hex Rod Array– Normal Conditions

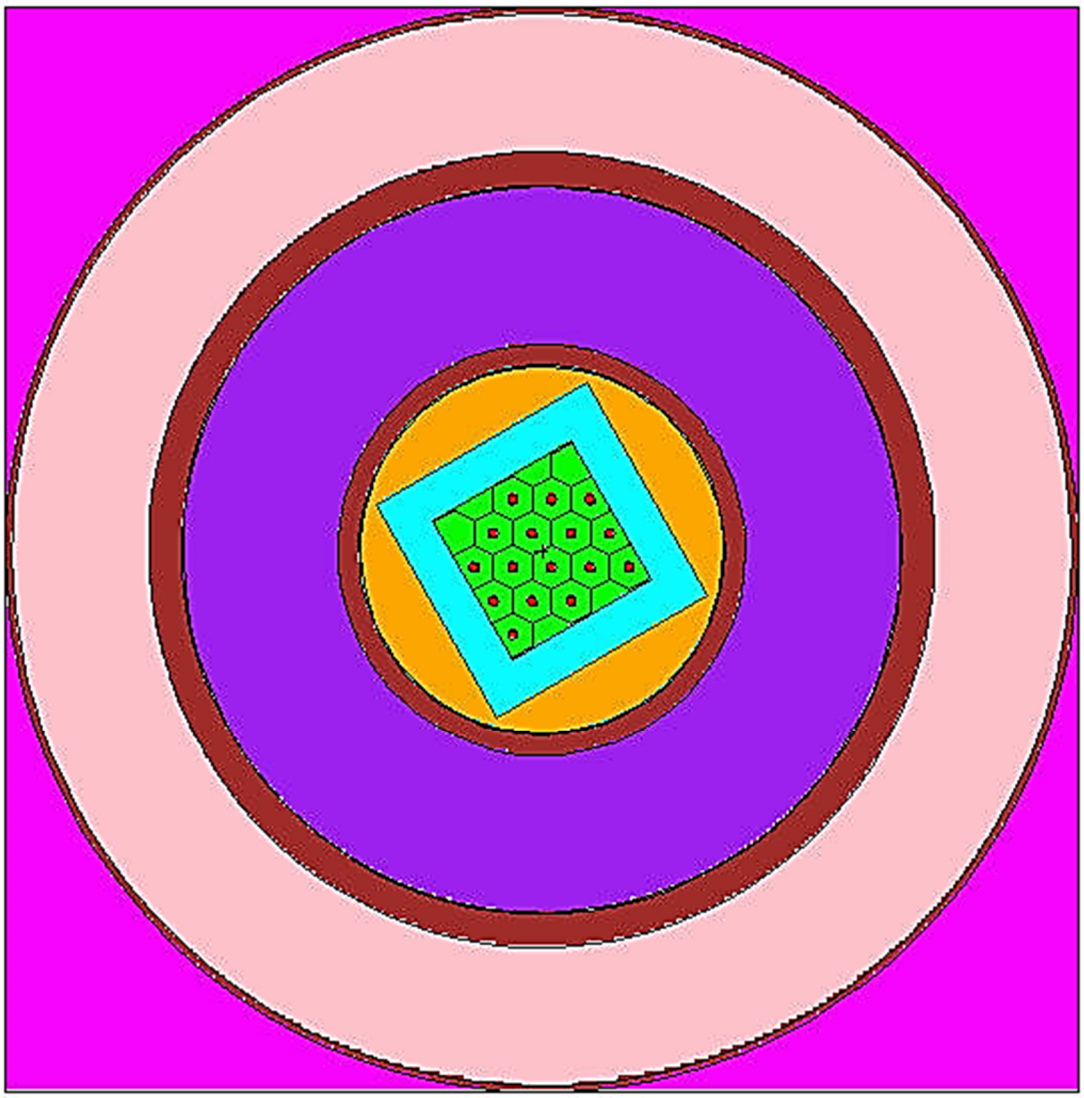

Figure 6.7.1-3 VISED Sketch of LWT Radial View – Square Rod Pitch – Accident Conditions

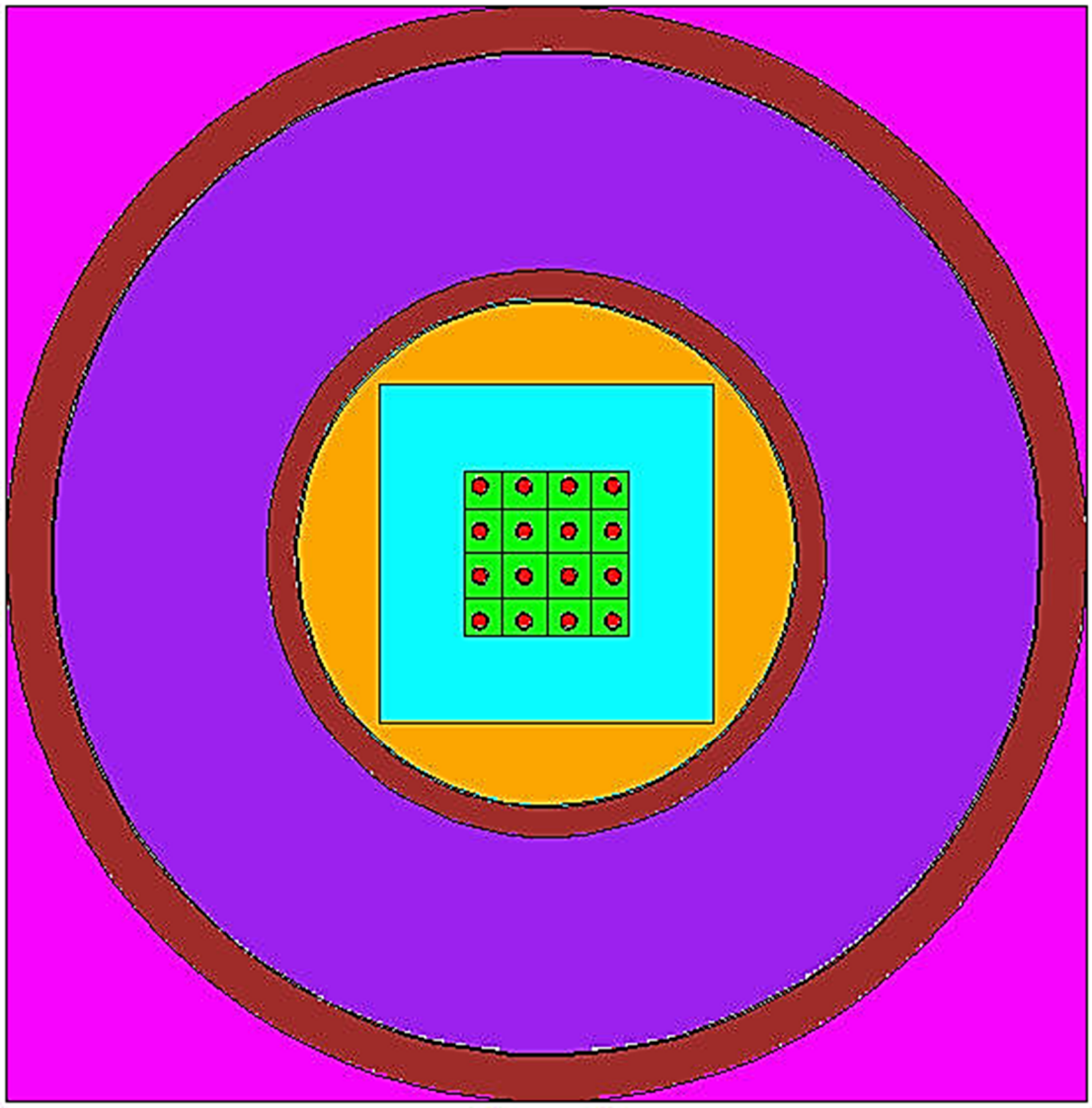

Figure 6.7.1-4 VISED Sketch of LWT Axial View – Accident Conditions



Table 6.7.1-1 PWR MOX Fuel Analysis Compositions and Number Densities

Material	5.0% Enriched UO_2	Weapons Grade (7 wt % Fissile Pu)[1]	Zirconium Alloy	H_2O	304 Stainless Steel	Pb	Al
Density, g/cc	10.522	10.556	6.56	0.9982	7.920	11.344	2.702
Density	atoms/b-cm						
Uranium-235	1.19E-03	1.54E-04					
Uranium-238	2.23E-02	2.16E-02					
Plutonium-238		9.15E-07					
Plutonium-239		1.70E-03					
Plutonium-240		1.09E-04					
Plutonium-241		7.23E-06					
Plutonium-242		9.00E-07					
Oxygen	4.70E-02	4.70E-02		3.338E-2			
Hydrogen				6.677E-2			
Zirconium Alloy			4.331E-2				
Iron					5.936E-2		
Chromium					1.743E-2		
Nickel					7.721E-3		
Manganese					1.736E-3		
Lead						3.297E-2	
Aluminum							6.031E-2

Table 6.7.1-2 PWR MOX Fuel Analysis Isotope Weight Fraction[2]

Isotope	UO_2	Weapon Grade	Fuel Grade	Power Grade	MOX Services
^{235}U	5	0.7	0.7	0.7	0.7
^{238}U	95	99.3	99.3	99.3	99.3
^{238}Pu	0	0.05	0.1	1	0.05
^{239}Pu	0	93.5	86.1	62	95
^{240}Pu	0	6	12	22	4.5
^{241}Pu	0	0.4	1.6	12	0.4
^{242}Pu	0	0.05	0.2	3	0.05

[1] Sample composition.

[2] Typical fresh fuel MOX material is composed of depleted uranium at 0.2 to 0.3 wt % ^{235}U. A bounding natural uranium enrichment of 0.7 wt % ^{235}U is used in the criticality evaluations.

6.7.1.3 Criticality Calculations

This section presents the criticality analysis for the NAC-LWT cask with up to 16 PWR UO_2 or MOX rods. UO_2 rods are enriched up to 5.0 wt % ^{235}U initial enrichment, while MOX rods contain up to 7 wt % fissile plutonium. No credit is taken for geometry control that is provided by the rod holder and no rod positions are specified for the rods in the lattice. Since various fuel rod arrangements may be shipped, the criticality of the PWR MOX rods in the NAC-LWT cask cavity is studied to determine the optimum pitch and, therefore, the maximum k_{eff} for the cask.

Criticality results are divided into individual sets of analyses.

- Evaluate the NAC-LWT accident configuration to demonstrate that, at a fixed fissile plutonium content, the maximum fissile percentage material (MOX Services definition) produces the maximum reactivity configuration.
- Determine the maximum reactivity pitch of the most reactive fuel material.
- Run the optimum moderator density evaluation.
- Evaluate normal condition and single cask "containment reflected" cases.

Included in all analyses are hypothetical plutonium compositions solely to justify the removal of the plutonium compositions as a licensing limit.

Rod Geometry and Material Composition Studies

Each of the material compositions is evaluated for the maximum fissile material mass rod. Fissile material in the uranium oxide rods is limited by the 5 wt % ^{235}U enrichment constraint, while the MOX material is limited by the 7 wt % fissile plutonium input. In addition to the physically realistic MOX material descriptions, three hypothetical MOX materials are evaluated: one containing all fissile plutonium (adding into ^{241}Pu the remaining plutonium weight fractions), an all ^{239}Pu material and an all ^{241}Pu material. The following nomenclature is used to describe the various plutonium fuel materials.

Abbreviation	Material
PG	Power grade plutonium isotopic distribution
FG	Fuel grade plutonium isotopic distribution
WG	Weapons grade plutonium isotopic distribution
MS	MOX Services "WG type" material
FP	Plutonium is modeled as all fissile plutonium
P9	Plutonium is modeled as all ^{239}Pu
P1	Plutonium is modeled as all ^{241}Pu

All cases are evaluated at a hexagonal pitch of 3.0 and 3.6 cm. Based on scoping evaluations, as validated in the following section, these fuel rod pitches approximate maximum reactivity configurations over a range of material composition.

As shown in later moderator density studies, maximum reactivity moderation is achieved by a preferentially flooded lattice with a void gap to the cask cavity. Fuel material and pitch studies are based on a flooded cask cavity. As these studies primarily rely on the interaction between rods in the lattice, rather than between casks, applying the results of the flooded cavity to the dry cavity/wet lattice is acceptable.

As seen in Table 6.7.1-3, maximum reactivity for physically realistic plutonium compositions is achieved by the MOX Services material. This result was expected as the MOX Services composition model contains the maximum fissile material within the plutonium oxide matrix. For the hypothetical compositions, the all ^{241}Pu case produces maximum reactivity. As the ^{241}Pu isotope has the highest fission cross-section, this result is to be expected.

Maximum Reactivity Rod Pitch Evaluation

The maximum fissile mass rod configuration is evaluated with uranium oxide, MOX Services (95 wt % ^{239}Pu in Pu), and 100% ^{241}Pu at a range of rod pitches to determine the maximum (optimum) pitch for a flooded cask cavity. This evaluation takes no credit for the actual pitch of the encapsulating stainless steel rod (11/16 inch at 1.75 cm OD) structure into which the rods are placed. As seen in Figure 6.7.1-5 and Table 6.7.1-4, the maximum reactivity pitch is approximately 3.4 to 3.6 cm for the MOX rods and around 3 cm for the uranium oxide rods, with a "flat" peak extending approximately 0.4 to 0.6 cm in width depending on material and configuration. Based on a three sigma uncertainty band, maximum reactivities do not statistically differ between hexagonal and square pitch configurations. The base case for the optimum moderator density studies will be the 3.6 cm hexagonal pitch for the MOX rods and the 3.0 cm hexagonal pitch for the UO_2 rods.

Optimum Moderator Density Evaluation

The maximum fissile mass rod is evaluated at various internal and external moderator densities, including preferential flooding of the fuel region. For the preferential flooding scenarios, the square container containing the rod array will be evaluated at a moderator density independent of that in the remainder of the cask cavity. Figure 6.7.1-6 through Figure 6.7.1-8 contain the moderator density plots of the uranium oxide, MOX Services, and all ^{241}Pu material configurations. All results produce identical trends in that maximum reactivity is achieved by a preferentially flooded fuel region and void cavity and cask exterior. This result was to be

expected as it provides maximum neutronic coupling within the reflective boundary (infinite array) model.

Maximum system reactivities are summarized in Table 6.7.1-5 for the UO_2 fuel composition, the MOX Services defined fuel composition, and the hypothetical fissile material composition (100% ^{241}Pu) at the bounding fissile configuration—a maximum fuel material rod (0.3765-in pellet OD, 153.5-in active fuel length).

Single Cask Containment (Fully Reflected) and Normal Condition Array Evaluations

A single cask evaluation is performed to comply with 10 CFR 71.55(b)(3).

The containment for the NAC-LWT is the cask inner shell. While no operating condition results in a removal of the cask outer shell and lead gamma shield, the most reactive preferential flooded and fully flooded cases are reevaluated by removing the lead and outer shells (including neutron shield), and reflecting the system by 20 cm water at full density on the X, Y, and Z faces. Single cask, containment fully reflected reactivities are summarized in Table 6.7.1-6.

A normal condition infinite cask array is also evaluated. As indicated by the evaluations of the accident conditions array, including the radial neutron shield reduces system reactivity by eliminating neutronic interaction between casks. Normal condition cask array results are summarized in Table 6.7.1-7.

Maximum Reactivities and Comparison to USL

The maximum $k_{eff} + 2\sigma$ results for three primary analysis groups (single cask, normal array and accident array) are summarized in Table 6.7.1-8. Two normal condition array cases are included as the cask remains dry through all operating conditions, while 10 CFR 71 requires a normal condition maximum reactivity moderator density case. The listed values represent the maximum system reactivity adjusted for Monte Carlo run uncertainty and are significantly below the lower of system USL.

No benchmarks for mixed heterogeneous UO_2 and MOX rod systems are publically available. Therefore, individual benchmarks are established for UO_2 and MOX systems. The more limiting USL is applied to the results of the MOX/UO_2 rod calculations. Per Section 6.7.3, the USL for an array of UO_2 rods is 0.9376 and 0.9331 for an array of MOX rods for a Δk of 0.0045 between the two fuel types. The evaluations demonstrated that MCNP, with its associated cross-sections, accurately predicts system reactivities containing either fuel rod type.

The focus of the evaluations is a wet (flooded) system, as no reasonable extrapolation of the data provided would indicate a safety concern for a dry system at the requested fissile material levels. While it is recognized that code performance and bias are potentially affected by the difference

in the energy level of neutron causing fission, the benchmarks accounted for the basic phenomena, and the computer code is capable of tracking particles at their relevant energy levels.

Analyses have demonstrated that the UO_2 rod payload, calculated to be at maximum reactivity flooded with an EALCF of 0.13 eV (3.0 cm pitch study UO_2 case), are significantly lower in reactivity than the MOX payload with an EALCF of 0.13 eV (note systems have identical EALCF at optimum pitch). Insertion of the lower reactivity UO_2 rods and corresponding replacement of higher reactivity MOX rods will reduce system reactivity.

Given the significant margin (Δk of 0.13) between maximum calculated reactivity for a hypothetical fuel material (all ^{241}Pu) at maximum reactivity pitch, without inclusion of the tube insert that retains the rods in a fixed position, the evaluations demonstrate that the system meets regulatory requirements. No mixed fuel evaluations are, therefore, performed and no mixed bias is discussed.

Table 6.7.1-9 compares the physical and hypothetical rod/material combinations to the area of applicability for the MOX material and maximum reactivity ^{241}Pu material. The MOX Services fuel material is within the area of applicability. No pure ^{241}Pu benchmark exists; therefore, the hypothetical configuration is significantly outside the area of applicability of the benchmark calculation. Compliance with regulatory limits is assured, as there is no significant reactivity trend versus plutonium isotopic composition. There is a significant margin to limits (0.13 Δk) versus a typical code bias in the 1-2% range, and the results are obtained from a hypothetical (conservative) isotope composition (all ^{241}Pu).

As the shipment includes uranium oxide rods, the maximum reactivity uranium oxide rod configuration characteristics are compared to the area of applicability in Table 6.7.1-10. The USL for UO_2 evaluations is 0.9372. Exceeding the area of applicability for enrichment and fuel to moderator ratios (expressed as rod pitch and H/U ratio) in the UO_2 benchmark cases is acceptable as neither function has a trend that is statistically significant and the margin to limits is large (> 0.4). A similar argument is applied to slightly lower fission energy for the maximum reactivity case than covered by the benchmark analysis. There is no statistically significant trend of reactivity versus energy, and any relative changes in USL postulated from the extrapolation is not significant versus the subcritical margin of the UO_2 rod shipment.

Evaluations of a mixed shipment of enriched UO_2 rods and MOX rods are not required, as the reactivity of the evaluated MOX rods are significantly higher than those of the UO_2 rods. Mixed shipments are, therefore, permitted.

Table 6.7.1-11 lists the bounding characteristics for the MOX/UO_2 PWR fuel rods evaluated in this section.

Figure 6.7.1-5 PWR MOX Rod Shipment – Reactivity versus Rod Pitch

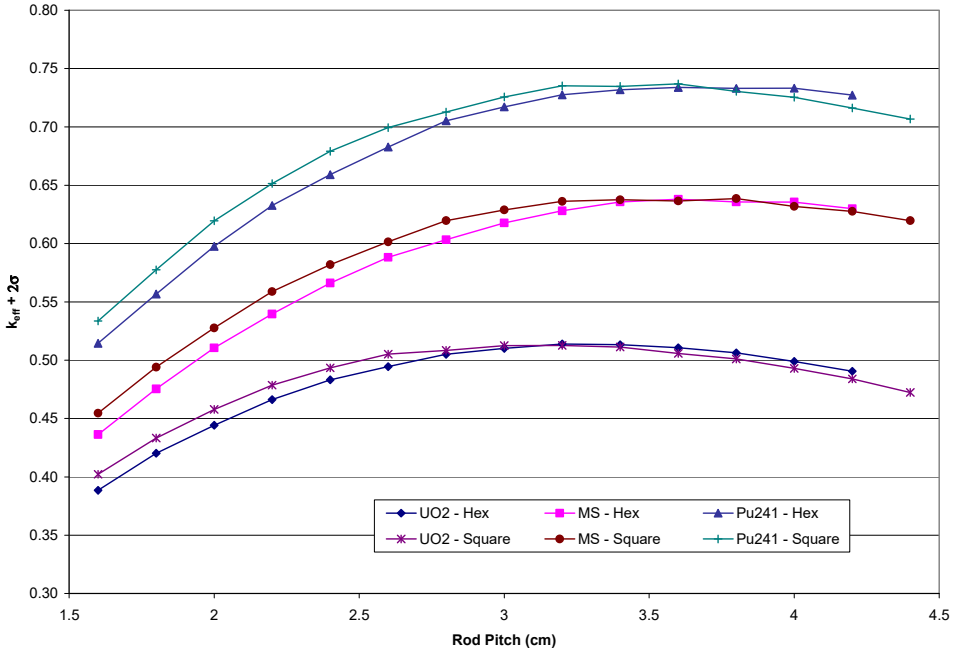

Figure 6.7.1-6 Moderator Density Study – UO_2 Fuel Material – 3.0 cm Rod Pitch

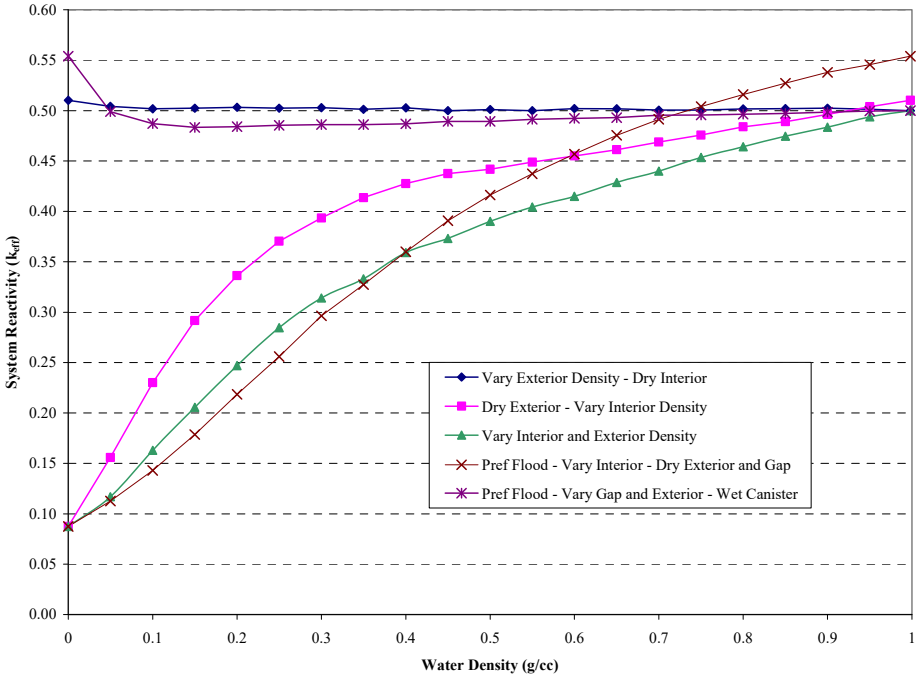

Figure 6.7.1-7 Moderator Density Study – MS Fuel Material – 3.6 cm Rod Pitch

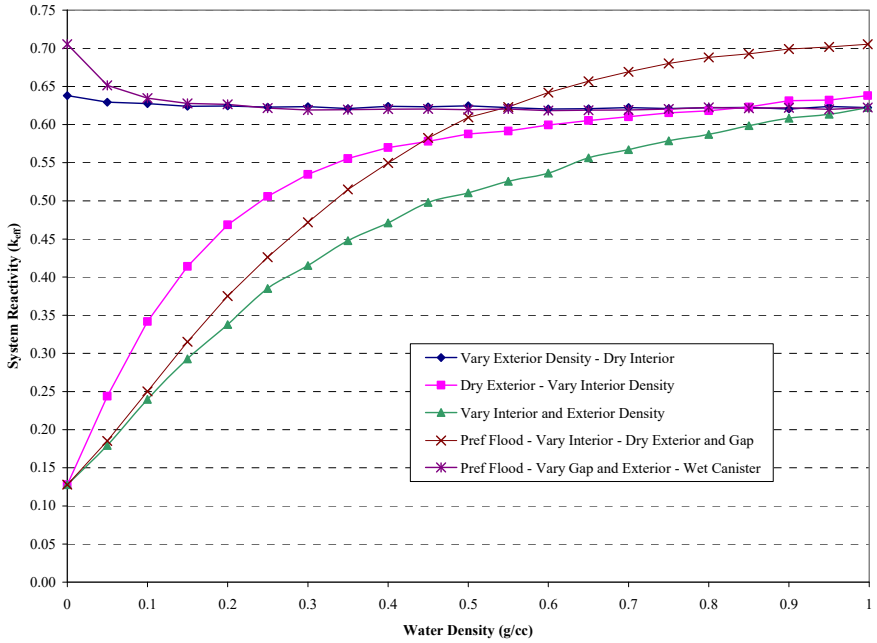

Figure 6.7.1-8 Moderator Density Study – PWR MOX ^{241}Pu Fuel Material – 3.6 cm Rod Pitch

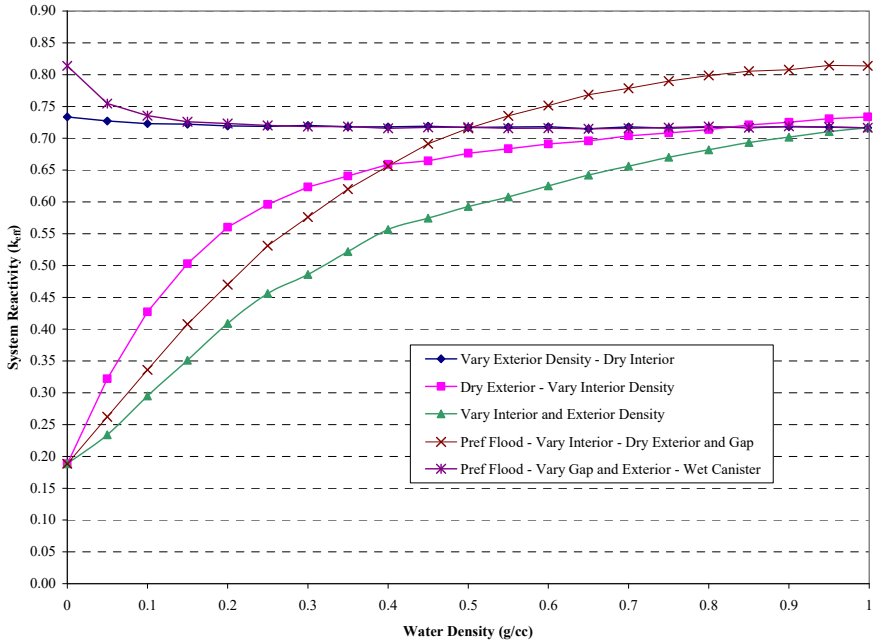

Table 6.7.1-3 PWR MOX Rod Shipment – Reactivity as a Function of Geometry and Material

Fuel Material	Rod Pitch	k_{eff}	σ	$k_{eff}+2\sigma$	vs. MS or P1 Composition	
					Δk_{eff}	$\Delta k_{eff}/\sigma$
UO_2	3.0	0.50837	0.00087	0.51011	-0.10728	-81.4
WG	3.0	0.61442	0.00106	0.61654	-0.00123	-0.8
FG	3.0	0.60516	0.00097	0.60710	-0.01049	-7.6
PG	3.0	0.59390	0.00104	0.59598	-0.02175	-15.1
MS	3.0	0.61565	0.00099	0.61763	--	--
FP	3.0	0.63359	0.00107	0.63573	-0.08132	-51.8
P9	3.0	0.62715	0.00111	0.62937	-0.08776	-54.9
P1	3.0	0.71491	0.00115	0.71721	--	--
UO_2	3.6	0.50911	0.00084	0.51079	-0.12688	-96.0
WG	3.6	0.63252	0.00098	0.63448	-0.00347	-2.5
FG	3.6	0.62282	0.00099	0.62480	-0.01317	-9.3
PG	3.6	0.61299	0.00105	0.61509	-0.02300	-15.7
MS	3.6	0.63599	0.00102	0.63803	--	--
FP	3.6	0.65225	0.00100	0.65425	-0.07909	-50.1
P9	3.6	0.64517	0.00107	0.64731	-0.08617	-53.1
P1	3.6	0.73134	0.00122	0.73378	--	--

Table 6.7.1-4 PWR MOX Fuel Shipment – Fuel Rod Pitch Study

Rod Pitch	Pitch Config	Fuel Material	k_{eff}	Fuel Material	k_{eff}	Fuel Material	k_{eff}
1.8	Hexagonal	UO_2	0.41843	MS	0.47357	^{241}Pu	0.55466
2.0	Hexagonal	UO_2	0.44262	MS	0.50841	^{241}Pu	0.59542
2.2	Hexagonal	UO_2	0.46448	MS	0.53761	^{241}Pu	0.63030
2.4	Hexagonal	UO_2	0.48147	MS	0.56403	^{241}Pu	0.65675
2.6	Hexagonal	UO_2	0.49260	MS	0.58626	^{241}Pu	0.68060
2.8	Hexagonal	UO_2	0.50325	MS	0.60145	^{241}Pu	0.70293
3.0	Hexagonal	UO_2	0.50837	MS	0.61565	^{241}Pu	0.71491
3.2	Hexagonal	UO_2	0.51224	MS	0.62593	^{241}Pu	0.72528
3.4	Hexagonal	UO_2	0.51156	MS	0.63376	^{241}Pu	0.72957
3.6	Hexagonal	UO_2	0.50911	MS	0.63599	^{241}Pu	0.73134
3.8	Hexagonal	UO_2	0.50464	MS	0.63360	^{241}Pu	0.73067
4.0	Hexagonal	UO_2	0.49718	MS	0.63359	^{241}Pu	0.73097
4.2	Hexagonal	UO_2	0.48894	MS	0.62789	^{241}Pu	0.72504
1.8	Square	UO_2	0.43146	MS	0.49220	^{241}Pu	0.57531
2.0	Square	UO_2	0.45613	MS	0.52574	^{241}Pu	0.61729
2.2	Square	UO_2	0.47678	MS	0.55687	^{241}Pu	0.64902
2.4	Square	UO_2	0.49150	MS	0.57989	^{241}Pu	0.67677
2.6	Square	UO_2	0.50343	MS	0.59949	^{241}Pu	0.69695
2.8	Square	UO_2	0.50669	MS	0.61768	^{241}Pu	0.71049
3.0	Square	UO_2	0.51090	MS	0.62688	^{241}Pu	0.72343
3.2	Square	UO_2	0.51089	MS	0.63415	^{241}Pu	0.73285
3.4	Square	UO_2	0.50965	MS	0.63544	^{241}Pu	0.73257
3.6	Square	UO_2	0.50429	MS	0.63440	^{241}Pu	0.73463
3.8	Square	UO_2	0.49939	MS	0.63658	^{241}Pu	0.72833
4.0	Square	UO_2	0.49120	MS	0.63003	^{241}Pu	0.72326
4.2	Square	UO_2	0.48232	MS	0.62576	^{241}Pu	0.71403

Table 6.7.1-5 PWR MOX Fuel Shipment – Optimum Moderator Study Maximum Reactivity Summary

Fuel Material	$k_{eff} + 2\sigma$
UO_2	0.55404
MOX Services	0.70523
^{241}Pu	0.81451

Table 6.7.1-6 PWR MOX Fuel Shipment Reactivity Summary for Single Cask Containment Fully Reflected Cases

Fuel Mat'l	Rod Gap (g/cc)	Array (g/cc)	Cavity (g/cc)	Exterior (g/cc)	k_{eff}	σ	$k_{eff} + 2\sigma$
UO_2	0.0001	0.0001	0.0001	0.9982	0.03394	0.00018	0.03430
UO_2	0.9982	0.9982	0.9982	0.9982	0.49629	0.00085	0.49799
UO_2	0.9982	0.9982	0.0001	0.9982	0.43536	0.00091	0.43718
MS	0.0001	0.0001	0.0001	0.9982	0.04527	0.00028	0.04583
MS	0.9982	0.9982	0.9982	0.9982	0.61686	0.00100	0.61886
MS	0.9982	0.9982	0.0001	0.9982	0.58689	0.00102	0.58893
^{241}Pu	0.0001	0.0001	0.0001	0.9982	0.04895	0.00036	0.04967
^{241}Pu	0.9982	0.9982	0.9982	0.9982	0.71168	0.00115	0.71398
^{241}Pu	0.9982	0.9982	0.0001	0.9982	0.67957	0.00121	0.68199

Table 6.7.1-7 PWR MOX Fuel Shipment Reactivity Summary for Normal Condition Array Cases

Fuel Mat'l	Rod Gap (g/cc)	Array (g/cc)	Cavity (g/cc)	Exterior (g/cc)	k_{eff}	σ	$k_{eff} + 2\sigma$
UO_2	0.0001	0.0001	0.0001	0.0001	0.03393	0.00016	0.03425
UO_2	0.9982	0.9982	0.9982	0.9982	0.49757	0.00089	0.49935
UO_2	0.9982	0.9982	0.9982	0.0001	0.49624	0.00092	0.49808
UO_2	0.9982	0.9982	0.0001	0.0001	0.43382	0.00087	0.43556
MS	0.0001	0.0001	0.0001	0.0001	0.04576	0.00025	0.04626
MS	0.9982	0.9982	0.9982	0.9982	0.61761	0.00101	0.61963
MS	0.9982	0.9982	0.9982	0.0001	0.61581	0.00102	0.61785
MS	0.9982	0.9982	0.0001	0.0001	0.58588	0.00099	0.58786
^{241}Pu	0.0001	0.0001	0.0001	0.0001	0.04905	0.00032	0.04969
^{241}Pu	0.9982	0.9982	0.9982	0.9982	0.71149	0.00112	0.71373
^{241}Pu	0.9982	0.9982	0.9982	0.0001	0.71256	0.0012	0.71496
^{241}Pu	0.9982	0.9982	0.0001	0.0001	0.68189	0.00118	0.68425

Table 6.7.1-8 PWR MOX Fuel Shipments – Summary of Maximum Reactivity Configurations

Fuel Material	Result	Accident Array – Preferentially Flooded	Normal Array – Preferentially Flooded	Normal Array – Dry	Single Cask Fully (Water) Reflected
UO_2	$k_{eff} + 2\sigma$	0.55404	0.49808	0.03425	0.49799
	EALCF (eV)	9.79E-02	8.83E-02	2.95E+05	8.81E-02
MS	$k_{eff} + 2\sigma$	0.70523	0.61963	0.04626	0.61886
	EALCF (eV)	1.25E-01	1.17E-01	2.14E+05	1.17E-01
^{241}Pu	$k_{eff} + 2\sigma$	0.81386	0.71496	0.04969	0.71398
	EALCF (eV)	1.33E-01	1.21E-01	8.72E+04	1.22E-01

Table 6.7.1-9 PWR MOX Fuel Shipments – PWR MOX Comparison to Area of Applicability

Parameter	Min	Max	MOX Services Materials	^{241}Pu Materials
EALCF (eV)	8.10E-02	8.99E-01	0.13	0.13
$^{235}U/^{238}U$ Weight Ratio	1.58E-03	1.51E+00	7.05E-03	7.05E-03
$^{238}Pu/^{238}U$ Weight Ratio	1.88E-06	1.54E-04	4.17E-05	0.0
$^{239}Pu/^{238}U$ Weight Ratio	1.39E-02	7.77E-01	7.92E-02	0.0
$^{240}Pu/^{238}U$ Weight Ratio	1.20E-03	8.48E-02	3.75E-03	0.0
$^{241}Pu/^{238}U$ Weight Ratio	7.90E-05	7.59E-03	3.34E-04	7.94E-02
$^{242}Pu/^{238}U$ Weight Ratio	4.63E-06	6.38E-04	4.17E-05	0.0
Water to Fuel Volume Ratio	1.10E+00	2.07E+01	1.43E+01	

Table 6.7.1-10 PWR MOX Fuel Shipments – UO_2 Comparison to Area of Applicability

Parameter	Min	Max	UO_2 Case
Enrichment (wt % ^{235}U)	2.35	4.738	5.0
Fuel rod pitch (cm)	1.3	2.54	3.0
Fuel pellet outer diameter (cm)	0.79	1.265	0.85/0.96
Fuel rod diameter (cm)	0.94	1.4172	0.93/1.12
$H/^{235}U$ atom ratio	106.2	403.9	627 to 2140[1]
EALCF (eV)	0.09781	0.3447	0.0874

Table 6.7.1-11 Bounding Parameters for PWR MOX/UO_2 Rod Shipments

Parameter	Value
Fuel Form	Clad UO_2 or MOX rod
Number of Rods	16[2]
Clad Material	Zirconium Alloy
UO_2 Rods – Max. Enrichment (wt % ^{235}U)	5
MOX Rods – Max. Fissile Pu Content (wt %)	7[3]
Maximum Heavy Metal Content Per Rod (kg)	2.60
Maximum Pellet Diameter (inch)	0.3765
Maximum Active Fuel Length (inch)	153.5

[1] Dependent on pitch configuration (square or hexagonal).

[2] Mixture of UO_2 and MOX rods is permitted.

[3] Sum of ^{239}Pu and ^{241}Pu.

Table 6.7.1-12 B&W, CE and Westinghouse PWR Fuel Assembly Data

Fuel Type/ Parameter	B&W 15×15 Mark B4	B&W 17×17 Mark C	CE 14×14	CE 16×16 SYS 80	WE 14×14 Std	WE 14×14 OFA	WE 15×15	WE 17×17	WE 17×17 OFA
Fuel Rod Data									
Rod Dia. (in)	0.43	0.379	0.44	0.382	0.422	0.4	0.422	0.374	0.36
Clad Thick. (in)	0.0265	0.024	0.028	0.025	0.0225	0.0243	0.0242	0.0225	0.0225
Clad Mat.	Zirc	Zirc	Zirc	Zirc	Zirc	Zirc	Zirc	Zirc	Zirc
Pellet Dia. (in)	0.3686	0.3232	0.3765	0.325	0.3674	0.3444	0.3659	0.3225	0.3088
Act. Length (in)	144	143	137	150	145.2	144	144	144	144

Table 6.7.1-13 Exxon/ANF PWR Fuel Assembly Data

Fuel Type/ Parameter	WE Ex/ANF 14×14	WE Ex/ANF 15×15	WE Ex/ANF 17×17	CE Ex/ANF 14×14
Fuel Rod Data				
# Rods	179	204	264	176
Pin Pitch (in)	0.556	0.563	0.496	0.58
Rod Dia. (in)	0.424	0.424	0.36	0.44
Clad Thick. (in)	0.03	0.03	0.025	0.031
Clad Mat.	Zirc	Zirc	Zirc	Zirc
Pellet Dia. (in)	0.3505	0.3565	0.303	0.37
Act. Length (in)	142	144	144	134

6.7.2 SLOWPOKE Fuel Rods

This section includes input, analysis method, results, and criticality benchmark evaluations for the NAC-LWT cask containing a payload of up to 800 SLOWPOKE rods. SLOWPOKE rods contain highly enriched uranium in an aluminum matrix material.

6.7.2.1 Package Fuel Loading

The NAC-LWT cask may transport up to 800 undamaged or its equivalent in damaged fuel rods in fuel canisters. The canisters are screened to prevent the release of gross particulate (note that based on the aluminum metal fuel material no significant release of fuel material from the rods is expected even under severe clad damage conditions). Characteristics of the design basis SLOWPOKE rods are presented in Table 6.7.2-1. Bounding characteristics applied to the model are listed in Table 6.7.2-2. The two characteristics most controlling in system reactivity are increased enrichment and ^{235}U mass per rod. This provides maximum fissile material mass while reducing parasitic absorption in ^{238}U.

6.7.2.2 Criticality Model Specifications

This section describes the models that are used in the criticality analyses for the NAC-LWT cask containing up to 800 SLOWPOKE rods. The models are analyzed separately under normal conditions and hypothetical accident conditions to ensure that all possible configurations are subcritical.

Each model uses the MCNP5 code package with the ENDF/B-VI cross-section set. No cross-section pre-processing is required prior to MCNP implementation. MCNP uses the Monte Carlo technique to calculate the k_{eff} of a system.

Description of Calculational Models

The base MCNP model of the NAC-LWT cask for the analysis of the SLOWPOKE payload is built based on the canister containing an axial stack of four canister inserts each containing a 5x5 fuel tube array (100 rods per canister). The canister is placed into the outer four openings of the NAC-LWT MTR-28 basket configuration. Only the top two baskets are loaded with the bottom two baskets acting as spacers. This allows the loading of up to 800 SLOWPOKE rods (or the equivalent material). Only the 5x5 array is evaluated. The 4x4 array, while allowing increased moderation, removes 36% of the fissile material from the system and will therefore be substantially less reactive. The SLOWPOKE fuel rod is depicted in Figure 6.7.2-1. The fuel rods, cask cavity, and radial shields are explicitly modeled as shown in Figure 6.7.2-2 model sketch.

The model of the NAC-LWT cask takes advantage of the universe structure of MCNP. Each universe defines an infinite space, bounded after its insertion into a containing cell. Four universes are employed herein. The "0" universe defines the cask universe. The remaining universes are discussed in the following sections. Each universe is developed independently as surfaces and cells. The canister interior material is defined separately from the cask cavity material to allow preferential flooding to be evaluated (i.e., different density water in the cask and canister cavity). This option is also exercised when modeling damaged fuel in which the distinct fuel rods are replaced and the canister cavity filled by a homogenized water/fuel mixture.

The modeled accident condition completely removes the neutron shielding, the neutron shield tank, and the cask impact limiters. In the normal conditions model, the impact limiter diameter is modeled as identical to the neutron shield tank diameter. This allows for closer packing for the cask array than physically possible.

VISED sketches of the assembled geometry are shown in Figure 6.7.2-3 through Figure 6.7.2-4. The cask outer surface is surrounded by a cylindrical body with the option of applying reflecting boundary conditions. The reflecting boundary conditions are imposed on the sides, top and bottom, which simulates an infinite array of casks. For single cask analysis (10 CFR 71.55), the cask is surrounded by 20 cm of water to apply full water reflection.

Package Regional Densities

The composition densities (g/cc) and nuclide number densities (atm/b-cm) used in the subsequent criticality analyses are shown in Table 6.7.2-3.

Figure 6.7.2-1 SLOWPOKE Fuel Element

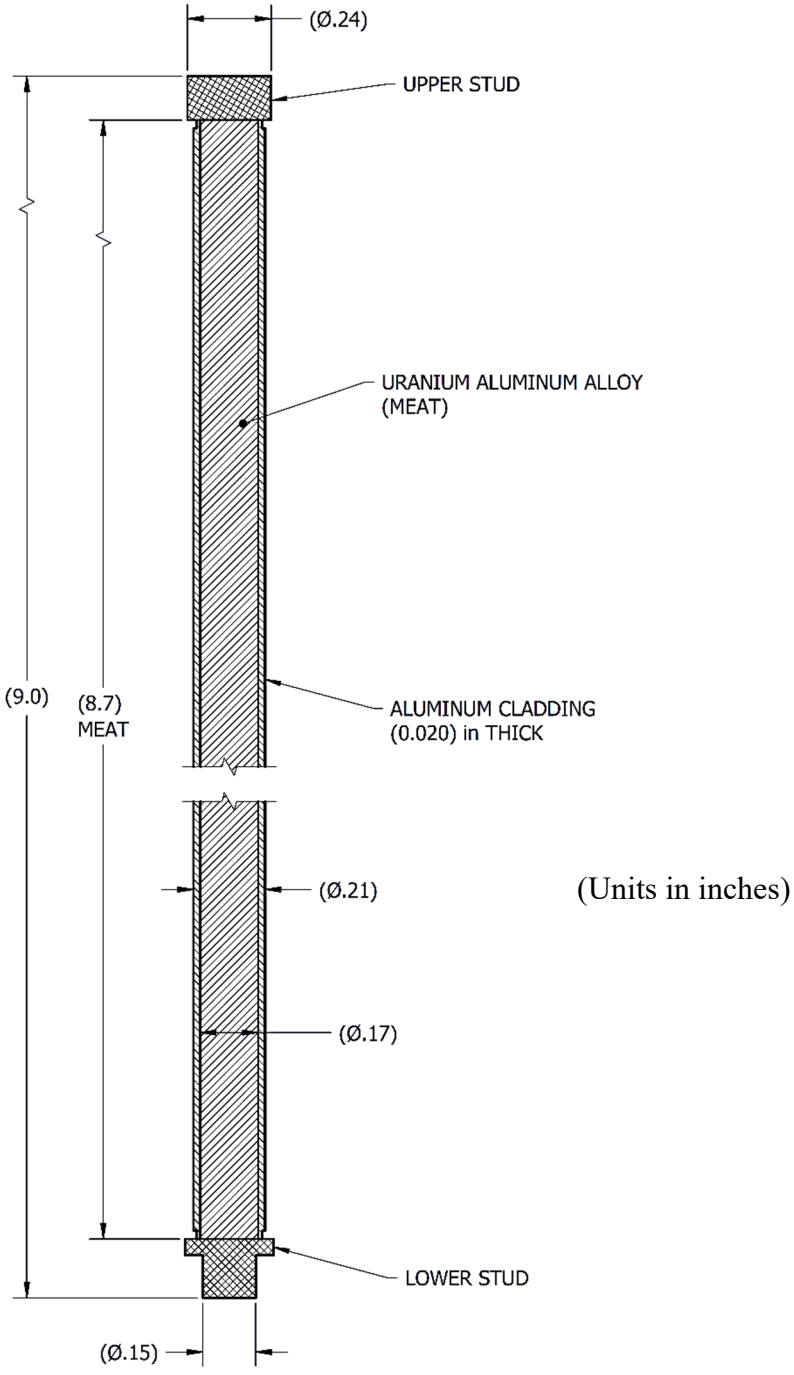

Figure 6.7.2-2 MCNP Model Sketch of the NAC-LWT Cask with SLOWPOKE Fuel Rods

(Dimensions in inches)

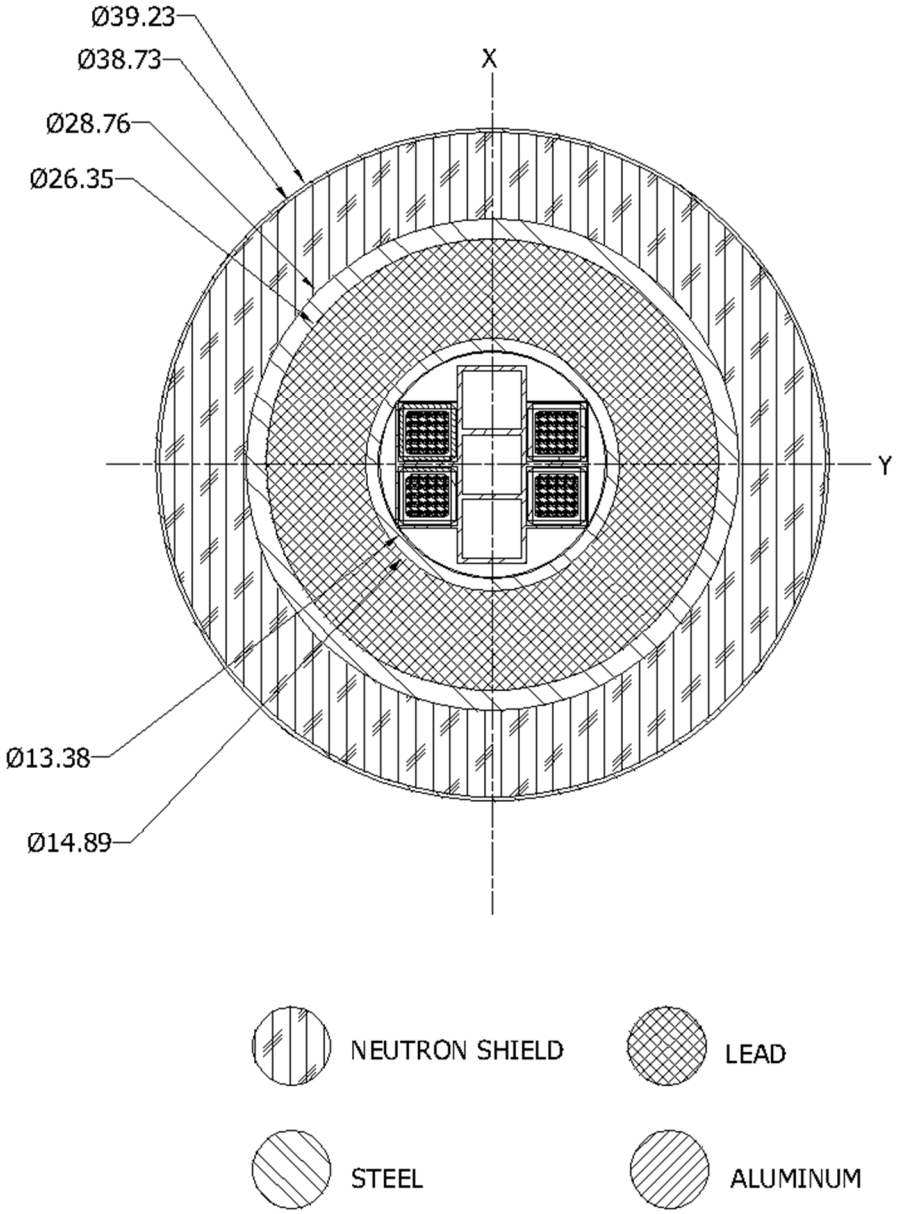

Figure 6.7.2-3 VISED Sketch of LWT Radial View – Undamaged Fuel

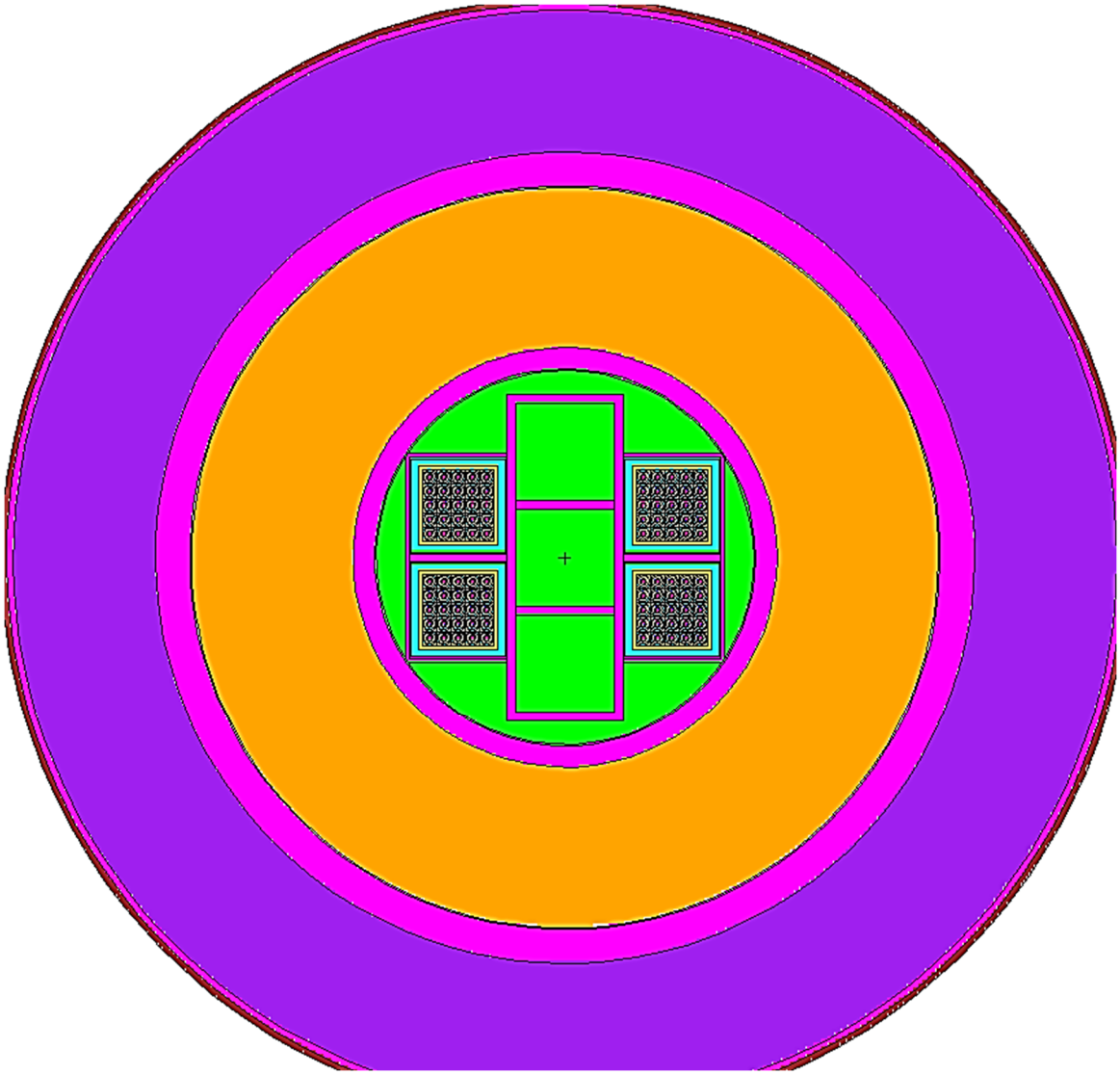

Figure 6.7.2-4 VISED Sketch of LWT Axial View – Undamaged Fuel – Normal Conditions

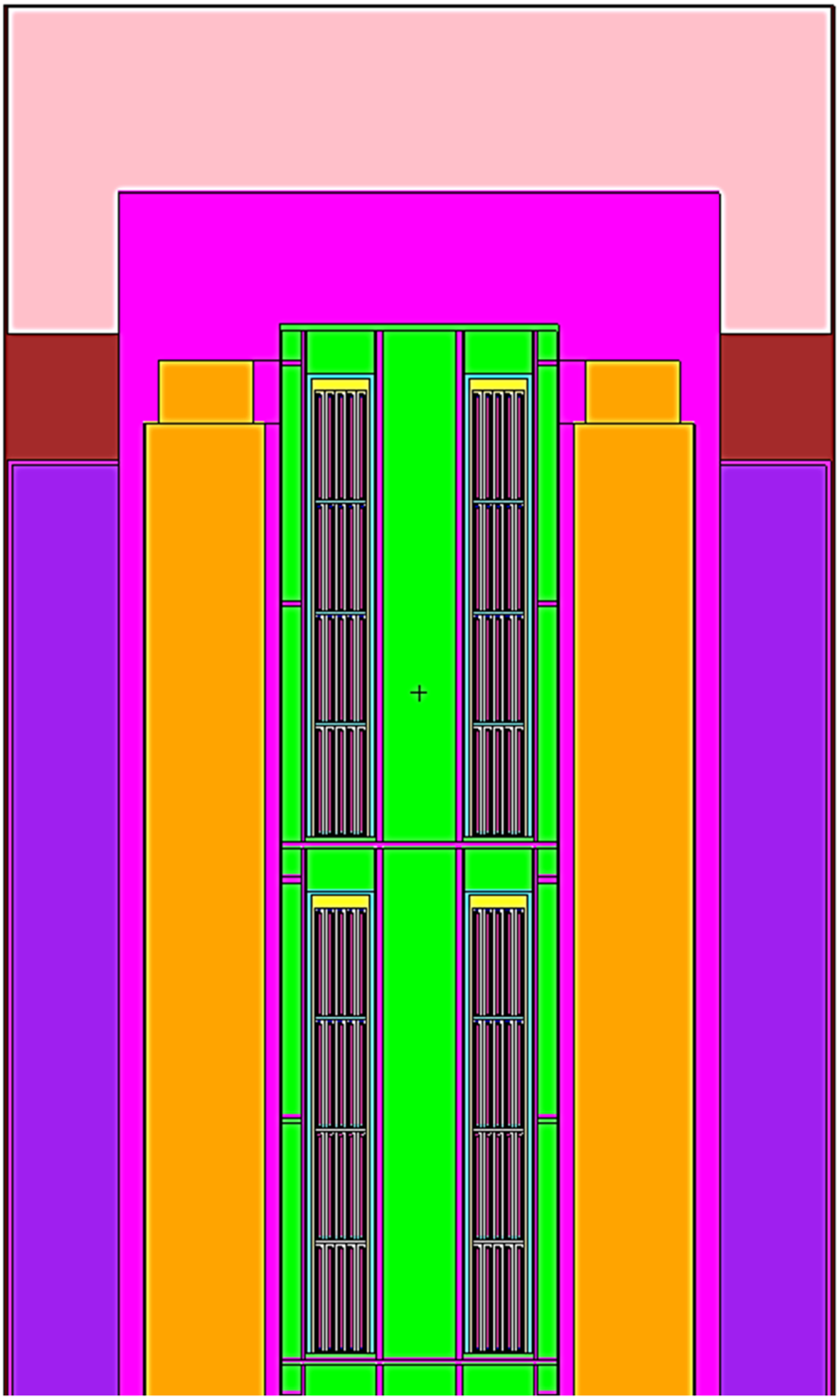

Note: Model extent shown is limited to loaded baskets. All four baskets modeled.

Table 6.7.2-1 SLOWPOKE Fuel Configuration

Parameter	Value
Fuel Matrix	U-Al Alloy
Clad Material	Al
Clad Thickness, cm	0.051
Fuel Thickness or Diameter, cm	0.422
Rod Length, cm	22.83
Active Fuel Length, cm	22.0
U-235 Enrichment, %	93
U-235 per Rod, g	2.79
U per Rod, g	2.99
Aluminum per Rod (Fuel), g	7.688
Total weight of Fuel per Rod, g	10.678
Rod End Cap Diameter, cm	0.61

Table 6.7.2-2 Modeled SLOWPOKE Fuel Configuration

Parameter	Value
U-235 Enrichment, %	95
U-235 per Rod, g	2.800
U per Rod, g	2.947
Aluminum per Rod (Fuel), g	7.688
Total Weight of Fuel per Rod, g	10.635
Active Fuel Length, cm	22.0
Fuel Thickness or Diameter, cm	0.422
Active Fuel Volume, cc	3.077
Rod Length, cm	22.83
Clad Thickness, cm	0.051
Clad Diameter, cm	0.5240
Rod End Cap Diameter, cm	0.61
Rod End Cap Height, cm	0.4150
Fuel Meat Density, g/cc (calculated)	3.457

Table 6.7.2-3 SLOWPOKE Analysis Compositions and Number Densities

Material	U-Al	H_2O	304 Stainless Steel	Pb	Al
Density, g/cc	3.457	0.9982	7.920	11.344	2.702
Density	atoms/b-cm				
Uranium-235	2.34E-03				
Uranium-238	1.14E-04				
Oxygen		3.338E-2			
Hydrogen		6.677E-2			
Zirconium Alloy					
Iron			5.936E-2		
Chromium			1.743E-2		
Nickel			7.721E-3		
Manganese			1.736E-3		
Lead				3.297E-2	
Aluminum	5.58E-02				6.031E-2

6.7.2.3 Criticality Calculations

The maximum reactivity configuration is determined by performing a series of studies. Based on preliminary calculations and results of other MTR basket payloads, it is initially assumed that accident conditions with close pitch and flooding of the canister interior provide the maximum reactivity configuration. Close pitch (surface reflected) models an infinite array of casks with void (no moderation/absorption) between cask surfaces. Other options for reflection include a cask separation of 40 cm (20 cm reflective surface from cask boundary) or no reflection modeled (single cask with 20-cm boundary at cask exterior conditions). Results of a preliminary study of reactivity versus flooding / configuration are shown in Table 6.7.2-4. A reflective condition of "none" and "wet" cask exterior conditions models a single cask that is fully water reflected. The cask condition of canister interior flooded with dry cask interior and exterior models a hypothetical preferential flooding configuration. The reactivity ($k_{eff} + 2\sigma$) of undamaged fuel is maximized for the preferential flooded configuration at a value of 0.5159 as seen in Table 6.7.2-4.

The maximum reactivity geometry and moderation studies will be based on the maximum reactivity preliminary case:

- Cask accident conditions
- Close pitch (cask surface reflected)
- Canister flooded, cask interior and exterior dry (preferential flooding)
- Nominal tolerances and no geometry perturbations
- Undamaged fuel

6.7.2.3.1 Geometric Perturbation Study

To observe potential geometry perturbations, the reactivity changes due to fuel and canister shifts were calculated. The base configuration was applied for the perturbation study. The fuel rods were shifted inside their individual tubes towards or away from the center of the 5x5 tube array. The canisters were also shifted towards or away from the center of the MTR-28 basket module. The reactivity results are shown in Table 6.7.2-5. The fuel shifted away from the center of the 5x5 array and canisters shifted toward the center produced a statistical increase (defined as $\Delta k_{eff}/\sigma > 3$). The more reactive outward fuel shift is due to the 5x5 array being under-moderated as is discussed in later sections. The more reactive inward canister shift allows for more neutron interaction between 5x5 arrays (other canisters).

6.7.2.3.2 Material Tolerance Study

The primary purpose of the material tolerance study is to observe the absorption/scatter effects of materials. It is expected that the aluminum of the canister will have no significant effect on the reactivity. The tolerance for the steel plates in the basket has a range from a low negative and to a

large positive. Parasitic absorption for stainless steel is expected to reduce system reactivity at the plus tolerances. The low negative tolerances are expected to have no significant effect. To observe potential tolerance effects in the basket and canister, the densities of the basket and canister materials were modified. A -5% and +25% density changes reflect potential tolerance thickness effects in the basket components. Density changes of ±50% for the aluminum canister are assumed. The reactivity results are shown in Table 6.7.2-6. The -5% density reduction for the toleranced basket produces a statistically negligible effect on reactivity. The increase in modeled steel density (equivalent to plate thickness increase) significantly reduces reactivity. The aluminum canister material variations have no statistical effect on the reactivity results.

6.7.2.3.3 Moderator Density Study (Including Preferential Flooding)

A moderator density study was performed to determine the moderator conditions that result in the most reactive system. The base configuration was changed from close pitch (surface reflected) to a 20-cm reflection surface to observe the variable exterior moderator conditions. Included in the moderator density study is preferential flooding. Preferential flooding includes the hypothetical flooding of the canister, interior, or exterior simultaneously.

The canister interior flooded condition with void in the cask exterior and interior remained the bounding condition (as was assumed in the base configuration). This condition allows moderation within the tube arrays and neutronic coupling of the canisters and casks. The results are tabulated in Table 6.7.2-7 and plotted in Figure 6.7.2-5.

6.7.2.3.4 Maximum Reactivity Configuration for Undamaged Fuel

Based on the previous analyses, the following conditions are bounding for the maximum reactivity configuration:

- Accident conditions
- Close pitch (surface reflected)
- Canister flooded, interior and exterior dry
- Canister shifted toward the center of basket
- Fuel shifted away from the center of 5x5 array

Toleranced components were not included as the reactivity effects were statistically negligible.

6.7.2.3.5 Undamaged Fuel Case Matrix to Conform to 10 CFR 71.55 and 10 CFR 71.59 Requirements

Compliance with the NRC Code of Federal Regulations (CFRs) for the transport of fissile material packages is evaluated. 10 CFR 71.55 general requirements are satisfied by evaluating the following configurations for both normal and accident conditions:

- Single Cask (no MCNP modeled reflective surfaces)
- Close full reflection of the containment system by water on all sides (cask exterior flooded up to 20 cm boundary, fully water reflected)
- Most reactive credible configuration:
    - Canister shifted toward the center of basket
    - Fuel shifted away from the center of 5x5 array
    - Canister interior flooded, cask interior dry

10 CFR 71.59 standards are satisfied by evaluating the maximum reactivity configuration for both normal and accident conditions for an infinite array of casks at close pitch. These requirements are satisfied by modifying the cask and cask exterior configuration of the maximum reactivity configuration established by the preceding studies. Satisfying 10 CFR 71.59 under an infinite array allows the CSI designation of 0 for the transport package. Both CFR requirements are satisfied and transport of the undamaged fuel is acceptable. The results for the configurations stipulated in the CFR requirements are shown in Table 6.7.2-8 for undamaged fuel. The maximum reactivity configuration produced a reactivity of 0.5222. Satisfying 10 CFR 71.59 under an infinite array allows the CSI designation of 0 for the transport package.

6.7.2.3.6 Damaged Fuel Case Matrix to Conform to 10 CFR 71.55 and 10 CFR 71.59 Requirements

In addition to undamaged fuel, the canister is designed to contain gross fuel material from damaged fuel. The undamaged fuel analysis demonstrated that a significantly higher reactivity is obtained from a dry cask cavity, flooded canister interior, configuration as this configuration allows neutronic interaction between the basket locations (which is reduced by the approximately 3.5 inches of water between the two sets of two canisters), between baskets, and between casks in the infinite array. This configuration is therefore adopted for the damaged fuel analysis. Also adopted is the shifted in-canister configuration which minimizes distance between fissile material components. As fuel rods are replaced by a water/fuel mixture the fuel rod shift configuration is not applicable to damaged fuel. A fuel/water mixture is analyzed for compliance with 10 CFR 71.55 and 10 CFR 71.59. The results are shown in Table 6.7.2-9. The damaged fuel resulted in a maximum reactivity increase of approximately 10% from 0.5222 to 0.5706. Both CFR requirements are satisfied and transport of the damaged fuel is acceptable. As an infinite cask array is evaluated the CSI for damaged fuel is 0.

The maximum reactivity EALCF of 0.08eV is within the area of applicability of the research reactor benchmark. The enrichment of the maximum reactivity case is slightly above the benchmark at 95 wt% versus 93.2 wt% in the critical set. The USL of 0.9171 (per Section 6.5.5) is determined

using the range of applicability for the EALCF. If the enrichment range of applicability for the USL determination was increased from 93.2wt% to 95wt%, the expected USL decrease determined by applying the enrichment trend functions would be from 0.9280 to 0.9279. The applied USL of 0.9171 based on the EALCF bounds this limit and is therefore acceptable.

Figure 6.7.2-5 SLOWPOKE Moderator Density Study (Percent Full Density Water)

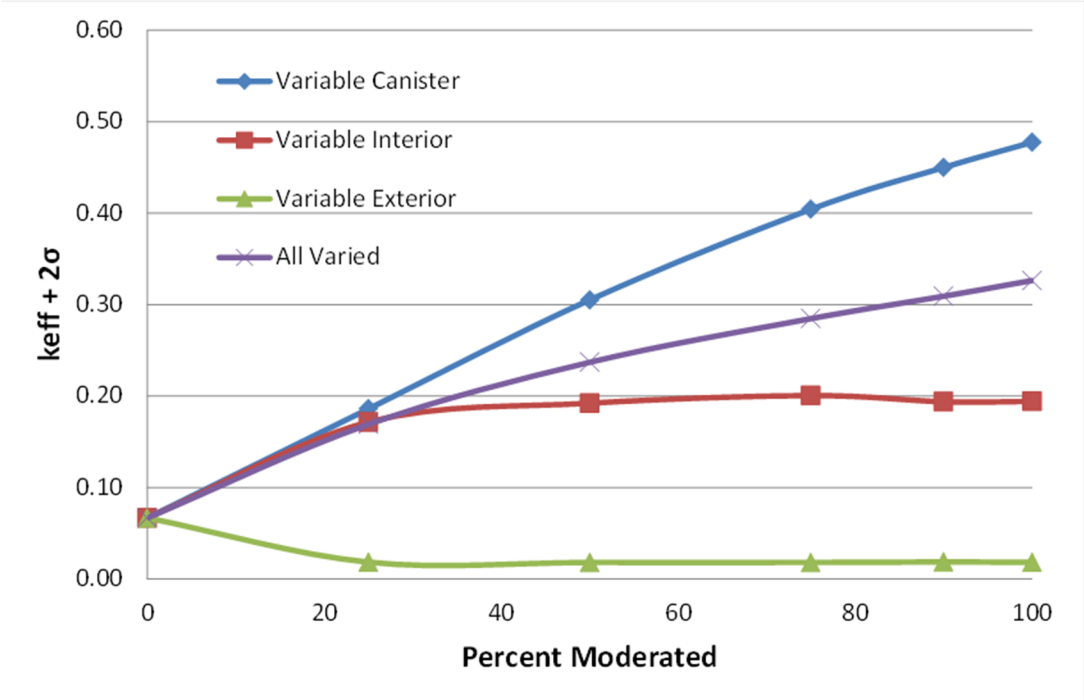

Table 6.7.2-4 Preliminary Reactivity Results for Undamaged SLOWPOKE Fuel

Condition	1	2	3	4
Canister Interior	Wet	Wet	Wet	Wet
Cask Interior	Wet	Dry	Dry	Dry
Cask Exterior	N/A	N/A	Dry	Wet
Reflected	Surface	Surface	20cm	None
$k_{eff}+2\sigma$	0.3502	0.5159	0.4774	0.3482

Table 6.7.2-5 SLOWPOKE Component Shift Reactivity Study Results

Parameter		k_{eff}	σ	$k_{eff}+2\sigma$	Δk_{eff}	$\Delta k_{eff}/\sigma$
Fuel Shift	None	0.5146	0.0007	0.5159	--	--
	In	0.5041	0.0007	0.5055	-0.0104	-11.1
	Out	0.5181	0.0006	0.5193	0.0034	3.8
Can Shift	None	0.5146	0.0007	0.5159	--	--
	In	0.5173	0.0007	0.5186	0.0028	3.0
	Out	0.5122	0.0006	0.5135	-0.0024	-2.7

Table 6.7.2-6 SLOWPOKE Component Tolerance Reactivity Study Results

Parameter	Δ%	k_{eff}	σ	$k_{eff}+2\sigma$	Δk_{eff}	$\Delta k_{eff}/\sigma$
Basket Tolerance	0%	0.5146	0.0007	0.5159	--	--
	-5%	**0.5159**	**0.0006**	**0.5171**	**0.0013**	**1.37**
	+25%	0.5078	0.0006	0.5091	-0.0068	-7.39
Canister Shell Tolerance	0%	0.5146	0.0007	0.5159	--	--
	-50%	0.5128	0.0006	0.5141	-0.0018	-2.00
	50%	0.5141	0.0006	0.5154	-0.0005	-0.53

Table 6.7.2-7 SLOWPOKE Moderator Density Study

Percent Moderated			Density [g/cc]	k_{eff}	σ	$k_{eff} + 2\sigma$
Canister Interior	Cask Interior	Cask Exterior				
0	0	0	0.00	0.0657	0.0004	0.0666
25	0	0	0.25	0.1837	0.0011	0.1859
50	0	0	0.50	0.3031	0.0010	0.3051
75	0	0	0.75	0.4030	0.0006	0.4041
90	0	0	0.90	0.4486	0.0006	0.4498
100	0	0	0.9982	0.4762	0.0006	0.4774
0	0	0	0.00	0.0657	0.0004	0.0666
0	25	0	0.25	0.1683	0.0016	0.1714
0	50	0	0.50	0.1884	0.0019	0.1921
0	75	0	0.75	0.1969	0.0018	0.2004
0	90	0	0.90	0.1898	0.0019	0.1936
0	100	0	0.9982	0.1903	0.0019	0.1940
0	0	0	0.00	0.0657	0.0004	0.0666
0	0	25	0.25	0.0177	0.0002	0.0182
0	0	50	0.50	0.0175	0.0002	0.0179
0	0	75	0.75	0.0175	0.0002	0.0179
0	0	90	0.90	0.0179	0.0003	0.0184
0	0	100	0.9982	0.0176	0.0003	0.0181
0	0	0	0.00	0.0657	0.0004	0.0666
25	25	25	0.25	0.1667	0.0012	0.1691
50	50	50	0.50	0.2345	0.0012	0.2369
75	75	75	0.75	0.2835	0.0005	0.2846
90	90	90	0.90	0.3079	0.0006	0.3091
100	100	100	0.9982	0.3250	0.0006	0.3262
100	100	0	0.9982	0.3418	0.0006	0.3430
100	0	100	0.9982	0.3485	0.0006	0.3498
0	100	100	0.9982	0.1741	0.0015	0.1771

Table 6.7.2-8 SLOWPOKE Undamaged Fuel Maximum Reactivity Results

Parameter		Cask	Pitch	Moderator			Shift		Toleranced		Reactivity Results		
				Canister	Interior	Exterior	Can	Fuel	Basket	Canister	k_{eff}	σ	$k_{eff}+2\sigma$
CFR 71.59	**Accident**	Acc	Close	Wet	Dry	Dry	In	Out	No	No	0.5209	0.0006	0.5222
	Normal	Nrm	Close	Wet	Dry	Dry	In	Out	No	No	0.3559	0.0006	0.3571
CFR 71.55	**Accident**	Acc	Single	Wet	Dry	Wet	In	Out	No	No	0.3529	0.0006	0.3542
	Normal	Nrm	Single	Wet	Dry	Wet	In	Out	No	No	0.3529	0.0006	0.3541

Table 6.7.2-9 SLOWPOKE Damaged Fuel Maximum Reactivity Results

Parameter		Cask	Pitch	Moderator			Shift		Toleranced		Reactivity Results		
				Canister	Interior	Exterior	Can	Fuel	Basket	Canister	k_{eff}	σ	$k_{eff}+2\sigma$
CFR 71.59	**Accident**	Acc	Close	Wet	Dry	Dry	In	N/A	No	No	0.5694	0.0006	0.5706
	Normal	Nrm	Close	Wet	Dry	Dry	In	N/A	No	No	0.3832	0.0005	0.3842
CFR 71.55	**Accident**	Acc	Single	Wet	Dry	Wet	In	N/A	No	No	0.3803	0.0006	0.3814
	Normal	Nrm	Single	Wet	Dry	Wet	In	N/A	No	No	0.3807	0.0006	0.3818

6.7.3 NRU and NRX Fuel Assemblies

This section includes input, analysis method, results, and criticality benchmark evaluations for the NAC-LWT cask containing a payload of up to 18 NRU or NRX fuel assemblies. NRU assemblies are built with either highly enriched uranium (HEU) or low enriched uranium (LEU) rods and NRX assemblies contain all highly enriched uranium rods. The uranium fuel meat is composed of an aluminum matrix material.

6.7.3.1 Package Fuel Loading

Up to eighteen NRU or NRX fuel assemblies may be loaded into the NAC-LWT. NRU and NRX rods may be loaded as either loose rods or fuel assemblies. NRU and NRX fuel rods are aluminum clad uranium-aluminum alloy with aluminum end plugs. The NRX fuel assemblies are analyzed at 94 wt% ^{235}U. The NRU fuel is analyzed at 94 and 21 wt% ^{235}U. The NRU assemblies are made up of 12 rods while the NRX assemblies contain 7 rods. NRU and NRX fuel rods contain fins attached to the rod clad. NRU assemblies also contain five spacer disks assuring the rods retain their in-core configurations. Both NRU and NRX assemblies are encased in an aluminum flow tube during in-core operations but NRU assemblies will have their flow tube removed before loading. NRU and NRX fuel assemblies may be cropped before loading into the NAC-LWT. NRX fuel assemblies/rods must be placed into a caddy. NRU fuel assemblies/rods may be placed into a caddy. The caddy has been structurally evaluated to retain its shape through all transport conditions.

Up to 18 NRU or NRX undamaged or damaged fuel assemblies (including up to an equivalent number of fuel rods) may be loaded into the NAC-LWT. Undamaged fuel may include loose fuel rods as the assemblies will be cropped and may have the flow tube removed before loading in the NAC-LWT. Undamaged fuel includes rods with clad damage, provided structural integrity is maintained. The analysis of damaged NRU/NRX fuel assemblies, rods, or rod sections is provided in Section 6.7.3.11.

NRU/NRX fuel rod and assembly characteristics are summarized in Table 6.7.3-1. A sketch of a NRU fuel assembly is shown in Figure 6.7.3-1 and a NRX fuel assembly is shown in Figure 6.7.3-2.

6.7.3.2 Criticality Model Specifications

This section describes the models that are used in the criticality analyses for the NAC-LWT cask containing up to 18 NRU or NRX fuel assemblies. The models are analyzed separately under normal conditions and hypothetical accident conditions to ensure that all possible configurations are subcritical.

Each model uses the MCNP5 (Version 1.60) code package with the ENDF/B-VI cross-section set. No cross-section pre-processing is required prior to MCNP implementation. MCNP uses the Monte Carlo technique to calculate the k_{eff} of a system.

Description of Calculational Models

NRU and NRX fuel are modeled in the NAC-LWT. Fuel parameters in Table 6.7.3-2 are employed for the evaluations of HEU and LEU types and are based on the data presented in Table 6.7.3-1. As the fuel will be cropped before loading the end fittings are not modeled in the evaluation.

Evaluations are performed for fuel at in-core conditions, loose fuel rods, and fractured rod sections (broken rods). The NAC-LWT has potential for significant neutron interaction when placed into an array configuration, while assuming a loss of the neutron shield. To eliminate this interaction all models, except the 10 CFR 71.59 normal condition array, employ a single cask, fully water reflected boundary. Normal condition analyses model the cask with the liquid neutron shield in place, while accident conditions remove the neutron shield and the neutron shield shell from the model. Accident conditions also remove the aluminum honeycomb impact limiters from the model. The NAC-LWT neutron shield contains soluble boron. Modeled neutron shield material, as listed in Table 6.7.3-4, does not include boron (removing a neutron absorber). For fully water-reflected single cask models, this produces similar reactivities (see Table 6.7.3-6) as radial cask model neutronic differences are limited to reflection by the ethyl glycol / water mixture and thin neutron shield shell versus reflection by water. The basket and cask models constructed for the NRU/NRX assemblies evaluations are based on the dimensions listed in Table 6.7.3-3. The caddy in the NRX model restricts component movement.

NRU and NRX rod sketches, including the radial fins attached to the clad, are illustrated in Figure 6.7.3-3 and Figure 6.7.3-4. The end plug contains a small section inserted into the fuel region. This region was modeled as fuel meat instead of an end plug. The minor quantity of additional fuel will not affect the conclusions of this analysis.

Figure 6.7.3-5 is a VISED cross-section of three basic configurations of NRU fuel evaluated. For the NRU fuel, these configurations are (a) fuel rods at a pitch identical to that of the rods during in-core configuration. The second configuration (b) represents the fuel with a maximum, most reactive pitch. The third configuration (c) represents a hypothetical condition where the rods are modeled as rod segments. Figure 6.7.3-6 is a VISED cross-section of three basic configurations of NRX fuel evaluated. For the NRX fuel, these configurations are (a) fuel rods at a pitch identical to that of the rods during in-core configuration; this includes the flow tube and fuel caddy. The second configuration (b) represents the fuel with a maximum, most reactive pitch. To achieve this pitch the flow tube is removed. The third configuration (c) represents the condition where rod segments are loaded (or hypothetically produced by rod breakage during

transport). NRX models include the caddy. NRU models conservatively do not include the caddy (caddy limits fuel movement and produces a lower reactivity configuration).

The NRU/NRX fuel is placed into an 18-tube basket in the NAC-LWT. A bottom spacer is used to shift the NRU/NRX basket up in the NAC-LWT. A cross-section of the NRU/NRX basket loaded in the NAC-LWT is shown in Figure 6.7.3-7.

A radial sketch of the basket cross-section in the NAC-LWT is shown in Figure 6.7.3-8.

This model neglects the impact limiters and models the cask under accident conditions with the neutron shield voided.

Package Regional Densities

The composition densities (gm/cc) and nuclide number densities (atm/b-cm) evaluated in subsequent criticality analyses are shown in Table 6.7.3-4. Displayed are the NRU HEU, NRU LEU, and NRX HEU material densities for the fuel assemblies.

6.7.3.3 Criticality Calculations

This section presents the criticality analyses for the NAC-LWT cask with NRU and NRX fuel assemblies. Criticality analyses are performed to satisfy the criticality safety requirements of 10 CFR Parts 71.55 and 71.59, as well as IAEA TS-R-1. All criticality evaluations performed use a single cask model. An analysis of the NAC-LWT with each of the basket loadings shows that NRX and NRU fuel remain below the USL even when they are considered damaged (rod sections). The payload is most reactive under the following model characteristics.

- Maximum OD basket tubes and caddy (NRX only)
- Minimum basket tube and caddy (NRX only) thickness
- Flooded cask cavity and exterior
- Loss of neutron shield

A single cask containment water reflected evaluation is also performed to comply with 10 CFR 71.55(b)(3). The analyses demonstrate that, including all calculation and mechanical uncertainties, the NAC-LWT remains subcritical under normal and accident conditions.

6.7.3.4 NRU/NRX HEU Assembly (Undamaged Configuration)

An undamaged NRU or NRX fuel assembly is placed in each of the 18 tubes in the NRU/NRX basket assembly. Optimum moderator studies for the package are shown in Figure 6.7.3-10 for NRU fuel and Figure 6.7.3-11 for NRX fuel. The studies show that the tube moderator significantly influences system reactivity with cask interior density having a smaller effect on reactivity. The most reactive configuration for both fuel types is a system where the tube is fully flooded at maximum density water while the cask cavity is dry.

The next stage of analysis varies the fuel rod pitch. NRU fuel contains five axial rod spacer disks (disks containing openings for each rod) which prevent rod movement. For conservatism the disks are not credited in the prevention of rod movement. NRX fuel rods are located in a flow tube which fits tightly around the array and in conjunction with the fins attached to the clad to prevent rod movement. For conservatism, the flow tube is removed from the model. Results of the rod spacing studies are shown in Figure 6.7.3-12 for NRU fuel and Figure 6.7.3-13 for NRX fuel. The results from the models presented in Figures 6.7.3-5 and 6.7.3-6 are shown in Figures 6.7.3-12 and 6.7.3-13, respectively. The model figures are annotated to indicate outer ring fuel locations for NRU and NRX fuel and inner rod locations for the NRU fuel. In the context of the result figures, "nominal" refers to the "as-built/in-core" location of the rods. Maximum outer rod location indicates shift of the outer rods away from the tube center to the maximum permitted by the tube. Shift along the "x-axis" from 1 to 11 moves the referenced rod type (inner/outer) radially out from the center of the tube, with "1" indicating a close in (minimum radial location) shift and "11" indicating the maximum permitted shift (each shift direction is limited by either adjacent rods or tube/caddy). Both models indicate that moving fuel toward tube/caddy ID is most reactive. For NRU fuel, the interior rods are spaced approximately at the midpoint between the center of the tube and outer rods are most reactive. Changes in location of the interior rods have only a minor effect on system reactivity near this midpoint. As the NRX fuel is located in a caddy, the location of the caddy in the tube affects system reactivity. As indicated in the plots, a radial shift of the caddy toward the center of the cask is most reactive. The radial maximum shift of the outer rods is most reactive; therefore, no rod shifts require analysis. Note that both wet and dry cask cavities are evaluated in this section. Most reactive condition switches to a wet cask cavity for NRX fuel when considering a radial out fuel rod pitch. There is no statistical difference in reactivity for wet or dry cask cavity conditions for the NRU fuel type.

6.7.3.5 NRU/NRX Fuel in Damaged Condition (Rod Sections)

NRU/NRX fuel sections (broken rods) were evaluated in the NRU/NRX basket tubes. For the NRX rods, the caddy was assumed to retain the rod sections, as the space between the caddy and tube is smaller than a rod and the caddy runs essentially the full length of the basket tube.

Fuel mass is conserved by reducing active fuel height as the number or rod sections increases. Although reducing active fuel height reduces the H/U ratio, it also compacts the fuel region and produces a lower neutron leakage configuration.

Plots of system reactivity for NRU and NRX assemblies, based on a function of number of rod segments, are shown in Figure 6.7.3-14 and Figure 6.7.3-15, respectively. NRU studies were done at fully flooded (1 g/cm^3) interior cask cavity and tube moderator density; as Figure 6.7.3-16 demonstrates, this is the most reactive condition for fuel rod segments. The study demonstrates a

near flat reactivity curve as a function of cask cavity moderator density above 50% density. NRX moderator density studies (run with the maximum 15 rod segments feasible within the caddy cross section) indicate small reactivity difference, wet or dry. Therefore, both were evaluated. The radial, in caddy, shift was also applied.

For both fuel types, maximum number of rod sections produced the maximum reactivity. These reactivities are well above those of the initial studies using full active fuel length rods. The k_{eff} of the NRU assembly is well above that of the NRX assembly, primarily due to the NRX fuel being restrained by the caddy. As the NRU fuel is more reactive than the NRX fuel, the effect of manufacturing tolerances on the fuel tube is only evaluated for the NRU elements.

The single cask maximum calculated $k_{eff} + 2\sigma$ is 0.92560, and is the result of a minimum tube wall thickness and maximum tube OD. There is no statistically significant effect of tube OD, as the effects of increased space for the rod shift are offset by increased separation of tube center to center and increased steel tube mass. Small tube wall thickness allows for increased moderator space and rod shift space and reduces the steel which absorbs neutrons while not affecting the tube to tube pitch.

The broken rod model is significantly higher in reactivity than the model of full length rods and, therefore, establishes the CSI. The CSI for accident conditions is 100. As a single cask model is applied, the cask accident model represents both 10 CFR 71.55 and 71.59 configurations.

To confirm that 10 CFR 71.55 required a single normal condition cask (i.e., with neutron shield and impact limiters) is not neutronically significantly different than that of the accident condition cask model, the "rod section" NRU HEU case that resulted in a $k_{eff} + 2\sigma$ of 0.92560 was evaluated with neutron shield and impact limiter on the cask. The result of a $k_{eff} + 2\sigma$ of 0.92525 demonstrates that the two configurations are not statistically different in the context of criticality analysis.

6.7.3.6 NRU LEU Fuel

All previous evaluations were at 94 wt% ^{235}U fuel assemblies. NRU assemblies were also made with an initial enrichment of 19.75 wt% ^{235}U. The enrichment was conservatively increased to 21 wt% ^{235}U and the most reactive configuration of rod sections was re-evaluated. The LEU NRU fuel results in a $k_{eff} + 2\sigma$ of 0.89508, compared to 0.92560 for the HEU fuel.

6.7.3.7 Single Cask Evaluation to Conform to 10 CFR 71.55 Requirements

The 10 CFR 71.55(b)(3) requires an evaluation of the NAC-LWT with the containment system fully reflected by water. The containment for the NAC-LWT is the cask inner shell. While no operating condition results in a removal of the cask outer shell and lead gamma shield, the most reactive normal condition case (i.e, the k_{eff} of 0.92525 case containing HEU NRU fuel with

broken fuel rod sections, fully moderated cask interior, described in Section 6.7.3.5) is reevaluated by removing the lead and outer shells (including neutron shield), and reflecting the system by 20 cm of water at full density on the X, Y, and Z faces. Using the maximum reactivity model from Section 6.7.3.5, the calculated $k_{eff} + 2\ \sigma$ is 0.85218.

6.7.3.8 Normal Condition Cask Array Evaluation to Conform to 10 CFR 71.59 Requirements

The 10 CFR 71.59 requires the evaluation of 5xN normal condition packages. Normal conditions are based on an infinite array of packages, square array / touching casks, with a dry cask interior with optimum moderator between casks. "Dry cask interior" applies dry conditions within the fuel tubes, between tubes, and any other void space in the cask cavity. Per NUREG-1617 Section 6.5.5.1, water in leakage need not be assumed during normal condition array analysis. Both full density moderator and void were evaluated between casks, and the maximum reactivity is achieved by the array having a dry exterior, resulting in a $k_{eff}+2\sigma$ of 0.07691. The resulting normal condition CSI for the infinite array is 0.

6.7.3.9 Code Bias and Upper Safety Limit (USL)

Critical benchmarks and USL are discussed in detail in Section 6.5.5. The following evaluates the applicability of the USL to the NRU/NRX fuel assemblies.

The EALCF of the most reactive case is 0.123 eV, and is within the area of applicability of the research reactor benchmark. At the thermal energy range of an EALCF at less 0.378 eV, the USL correlation derived in Section 6.5.5 provides a USL of 0.9270.

The LEU NRU assemblies are analyzed at an enrichment of 21 wt% ^{235}U, within the enrichment range of applicability for the USL. All evaluated LEU NRU fuel is below the EALCF USL, which is lower than the USL based on ^{235}U enrichment.

6.7.3.10 Allowable Cask Loading

Based on the results of the previous sections, any full loading of 18 undamaged or damaged NRU or NRX assemblies is allowed in the NAC-LWT. Undamaged fuel assemblies can include cropped fuel, loose fuel rods, or damaged fuel clad, provided the rod is structurally sound. NRU or NRX fuel assemblies, loose rods or rod segments that do not meet the structural or clad integrity requirements of the undamaged NRU or NRX fuel assembly are classified as damaged. Loose fuel rods defined as damaged, or rod segments, shall be loaded in the NRU/NRX caddy prior to placement into the NRU/NRX basket. Damaged NRU assemblies may be loaded into the NRU/NRX basket tube without use of a caddy. Damaged NRX assemblies shall be loaded into the NRU/NRX basket tube with the use of a caddy. Maximum reactivates are summarized in Table

6.7.3-6. Conditions at which the maximum reactivity cases occur are summarized in Table 6.7.3-7.

6.7.3.11 Supplemental Damaged NRU/NRX Fuel Analysis

Previous NRU/NRX evaluations were performed to assure subcritical limits are met for undamaged payloads. Maximum reactivity was evaluated in the undamaged NRU/NRX calculation assuming the hypothetical formation of rod fragments (metal alloy rods). System reactivity (k_{eff}) for a system without rod fragments is below 0.8. Only the NRU HEU payload exceeded 0.9 under the undamaged fuel evaluation condition (including the hypothetical rod segment analysis). Assuming the most reactive rod segment condition, the NRX payload resulted in $k_{eff} < 0.88$ (0.04 Δk below the NRU HEU fuel). Similar analysis for the NRU LEU ($k_{eff}+2\sigma$ of 0.89508) fuel resulted in a 0.03 Δk below the NRU HEU result ($k_{eff}+2\sigma$ of 0.9256). Based on the NRU HEU being significantly higher in reactivity than NRU LEU and NRX, only the NRU HEU cases are discussed in detail in following analysis sections. The conclusion arrived from the NRU HEU analysis is applicable to all NRU/NRX payloads.

This section includes the additional analysis required to address NRU/NRX damaged fuel. To define the scope of the analysis the following undamaged and damaged fuel definitions are applied.

Undamaged NRU or NRX Fuel Assembly

NRU HEU and NRX HEU contain uranium aluminum alloy fuel meat. NRU LEU fuel meat is U-Al-Si. Fuel assemblies may be cropped. NRU fuel assemblies have their flow channel removed. Fuel rod clad may show signs of mechanical damage or corrosion provided structural integrity is maintained and that there is no known clad through-wall damage (i.e., fuel exposure). Loose rods, up to the equivalent number of a fuel assembly, are considered undamaged provided they retain their structural integrity and meet the clad requirements. Loose rods shall be placed into a caddy. Undamaged fuel may be cropped, (i.e., non-fuel bearing components of the fuel assemblies may be removed) provided the integrity of the rod array is maintained.

Damaged NRU or NRX Fuel Assembly, Rod, or Rod Segments

Fuel assemblies, loose rods, or rod segments that do not meet the structural or clad integrity requirements of the undamaged NRU or NRX fuel assembly are classified as damaged. Loose fuel rods defined as damaged, or rod segments, shall be loaded in the NRU/NRX caddy prior to placement into the NRU/NRX basket. Damaged NRU assemblies may be loaded into the NRU/NRX basket tube without use of a caddy. Damaged NRX assemblies shall be loaded into the NRU/NRX basket tube with the use of a caddy. NRU/NRX basket and basket lid, including screens, provide the gross material boundary for damaged fuel (i.e., gross material is retained in

basket tube). Clad through-wall damage is limited to 5% of the fueled surface area. Clad removed (i.e., clad originally associated with the rod but no longer present) is limited to 2% of the fueled surface area. Clad through-wall damage without loss of cladding from the system may occur due to processes such as clad splitting. Fuel assemblies with exposed fuel material resulting from the cropping process are considered damaged but do not require use of a caddy provided loose, fuel containing, rod segments are not loaded into the same basket opening as a cropped assembly. To address these definitions the "up to a fuel assembly" quantity of material is further evaluated. Analysis are also included to address loss of cladding (i.e., through-wall clad damage).

6.7.3.11.1 Reactivity Impact of Partial Assembly (Basket Cell Underload)

The NRU/NRX fuel definition allows "up to an assembly" worth of material to be loaded. Undamaged fuel established that maximum number of rods segments, resulting in the smallest active height, is conservative (i.e., a non-optimal/under moderated H/U ratio is offset by reduced neutron leakage). The undamaged fuel scenario did not address rod removal from the maximum reactivity 27-rod segment scenario. Various removed rod configurations were evaluated to address the underloaded basket tube scenario based on the most reactive NRU HEU model (i.e., 27 rod sections and no caddy). A sample VISED slice of the MCNP model for the removed rod cases is shown in Figure 6.7.3-20. None of the configurations evaluated resulted in a significant increase in reactivity (i.e., max increase in $\Delta k < 0.001$, see Table 6.7.3-8). All results are below the system USL. A significant decrease in the number of rods or removal of an outer rod results in decreased reactivity.

While no significant increase in reactivity was seen in these evaluations as a result of missing rods, load limitations are placed on the loading of loose rods/rod fragments. Loading of loose rod segments requires the use of a caddy which provides additional geometry control, i.e. reduced moderator volume, and therefore, reduced reactivity. The reactivity change associated with the conservative assumption of not modeling the caddy with loose rods/rod segments is documented within the clad through-wall damage analysis.

6.7.3.11.2 Reactivity Effects of Clad Through-Wall Damage

The potential for through-wall clad damage exists as a result of in-core operation (e.g., excessive corrosion or clad splitting) or preparation for transport (e.g., fuel assembly cropping or flow tube removal). This section addresses the reactivity impacts of such damage. Considered in this analysis is through-wall clad damage up to 5% of the surface area. Removed is both clad and fin/spacer material over the affected area.

The undamaged fuel assembly criticality analysis resulted in a maximum reported uncertainty adjusted k_{eff} of 0.92560 which provides little margin to the USL of 0.9720. The small margin is the direct result of modeling the rod segments without the caddy that would be required of rod

segment transport. As the system is undermoderated, constraining rods/rod segments inside the caddy will significantly decrease system reactivity. The caddy model is obtained from the undamaged NRX analysis. The caddy is composed of aluminum and is included in the model as two RCC macrobodies. Maximum reactivity locations and sizing of the caddy is obtained from the NRX undamaged analysis. An initial summary documents the conservatism inherent in the previous analysis; see Table 6.7.3-9.

To retain the conservatism associated with the "no caddy assumption", loss of clad analysis is initially based on the 27-rod segment model without the caddy. For the undamaged fuel analysis, the margin to USL is significantly impacted by the 2σ uncertainty band (2σ of 0.0016 versus a 0.0014 Δk from k_{eff} + 2σ to USL). To increase the accuracy of the solution, the loss of clad analysis is performed with an increased number of NPS (samples) in the MCNP simulation (i.e., decreasing Monte Carlo uncertainty to 0.0002 from 0.0008). The 27-rod segment baseline case is similarly modified to increase its accuracy. The reduced uncertainty minimizes the number of cases that can produce statistically indeterminate result changes (i.e., changes that otherwise can be lost within the Monte Carlo error of the analysis). The current licensing basis and revised samples analysis results are shown in Table 6.7.3-10. Both sets result in similar k_{eff}+2σ values with the results for the larger number of samples converging to a slightly higher k_{eff} but having a smaller uncertainty.

Various clad removal configurations were evaluated. Removing clad from 1 or 2 rod segments results in the loss of 3.7 (1/27) and 7.4% (2/27) of the full total clad surface area, respectively. System reactivity (k_{eff}) results are shown in Table 6.7.3-10 for these cases and indicate an increase in reactivity for both scenarios, and results above the USL.

Removal of 5% of the clad (by height) across the fuel center elevation similarly increases k_{eff} (see Table 6.7.3-10). Clad was removed by adding elevations to the model that excludes both clad and fin material (i.e., cells that contain the clad are generated/limited to portions of the fuel region). The height/length of clad removed varies between models to arrive at the desired percentage of clad removed. Removal of clad/fin material is only modeled at the active fuel elevations. Fin material is affected when the modeled removal occurs at a fin containing elevation. Table 6.7.3-10 shows that removal of 5% of the clad at one axial end of the model or 2.5% at each end did not produce a significant change in reactivity from the baseline model (Δk < 0.001).

A second set of clad removal cases address a concentrated elimination of clad on one rod segment (center rod) rather than applying uniformly across all 27 rod segments (e.g., removing 50% of the clad from one rod segments yields a clad loss of 1.9%=1/27*0.5). A sample view for the single rod model is shown in Figure 6.7.3-22.

Based on the results in Table 6.7.3-10 at a maximum 2% clad removed, either as a reduction in mid-section clad across all fuel rods, or as fractional removal from the center rod, only minimal k_{eff} changes occur (< 0.003 Δk). While minimal increases in reactivity are observed, cases shown are still above the USL (by less than 0.002 Δk).

Any values above the USL are typically considered unacceptable regardless of the conservatism in the model generation. To demonstrate that maximum reactivity is below the USL, the loose rod/rod segment configuration is reevaluated considering the caddy. Any loose rods / rod segments shall be loaded into the caddy. The nominal 27-rod segment array will not physically fit into the caddy. To generate a model with the caddy and 27-rod fragments, the fuel rod spacer/fins were slightly reduced in size. The NRU HEU rod segment diameter (i.e., fin diameter) is adjusted by simply reducing the fuel rod segment boundary to a smaller diameter to allow 27 rod segments to fit into the caddy (see Figure 6.7.3-23). As shown in Table 6.7.3-10, constraining the NRU HEU material to a caddy will produce $k_{eff} + 2\sigma < 0.9$. Therefore, the undamaged fuel maximum reactivity (i.e., calculated based on a hypothetical fuel rod segmentation and no clad through-wall damage) produces bounding results and all results are below the USL.

The undamaged fuel analysis has demonstrated significant margin to the USL for all cases without rod fragmentation; therefore, the small Δk associated with a 2% loss of clad is not a criticality analysis concern.

To provide increased clad surface through-wall damage, a higher allowance of 5% is considered for conditions where the clad is not removed from the lattice location (e.g., clad splitting). As a condition such as clad splitting does not change the H/U ratio of the lattice, a higher fraction for this condition is acceptable.

6.7.3.11.3 Damaged Fuel Analysis Conclusions

When considering the use of the caddy for loose rods or rod segments, the k_{eff} values for damaged fuel scenarios are significantly below those of the undamaged fuel calculation assuming hypothetical fuel fragmentation and no caddy. All allowed NRU/NRX payload configurations are below the system USL.

Figure 6.7.3-1 NRU Fuel Assembly

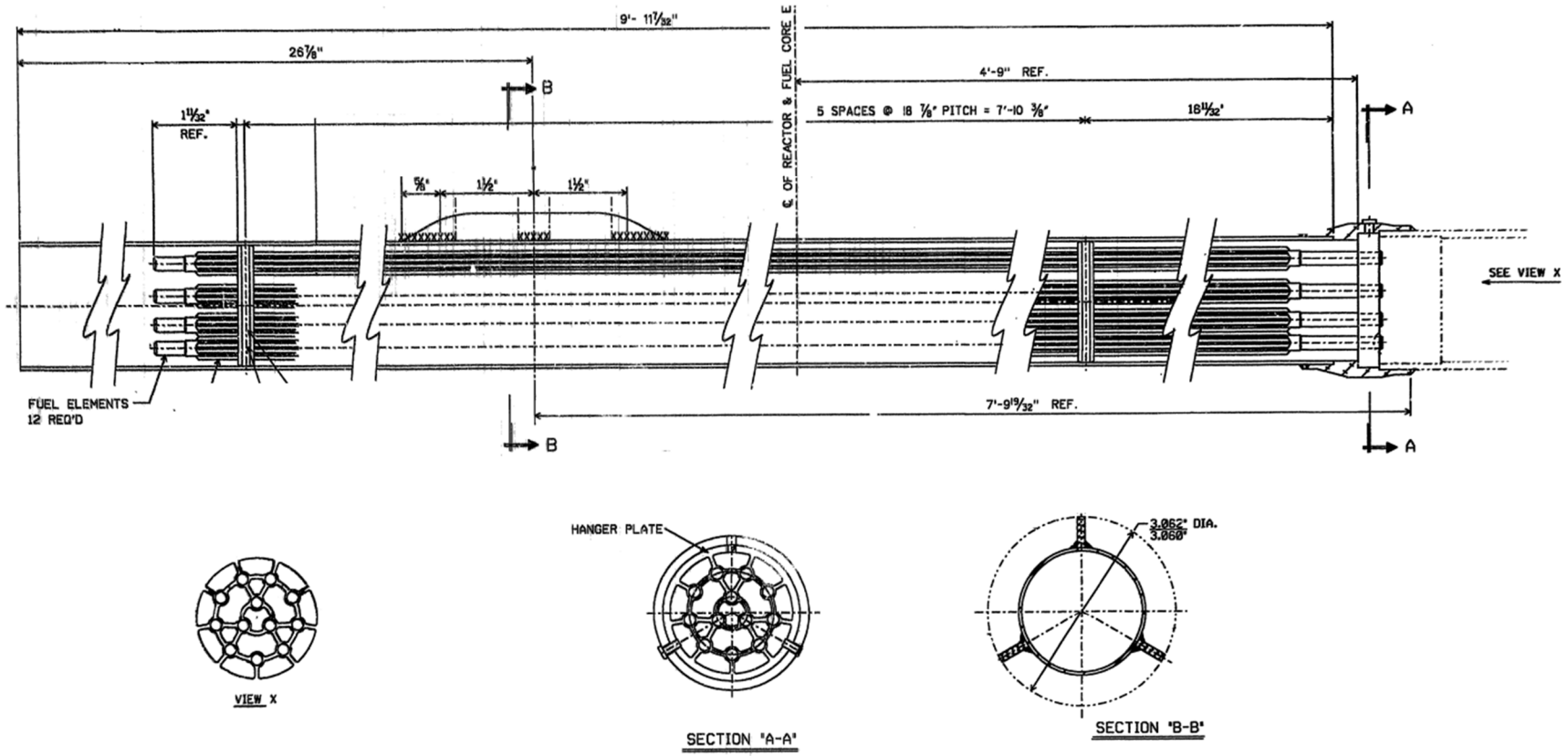

Figure 6.7.3-2 NRX Fuel Assembly

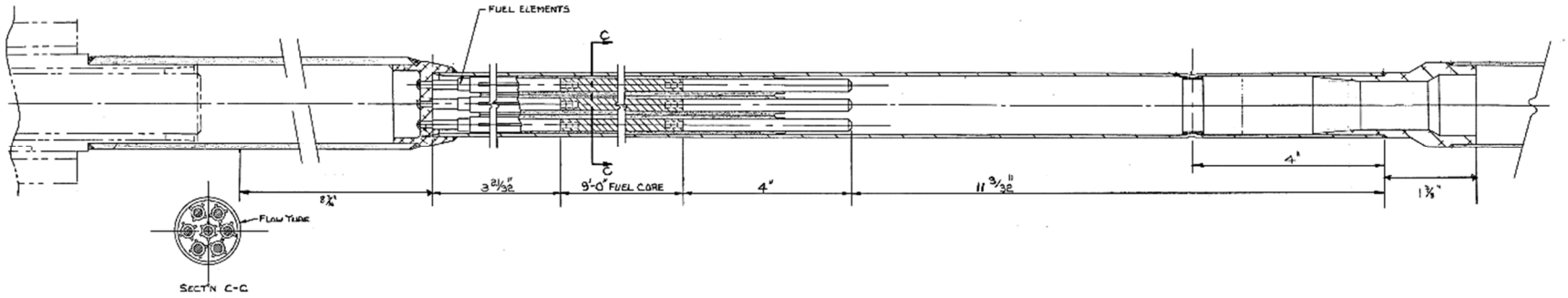

Figure 6.7.3-3 NRU Fuel Rod

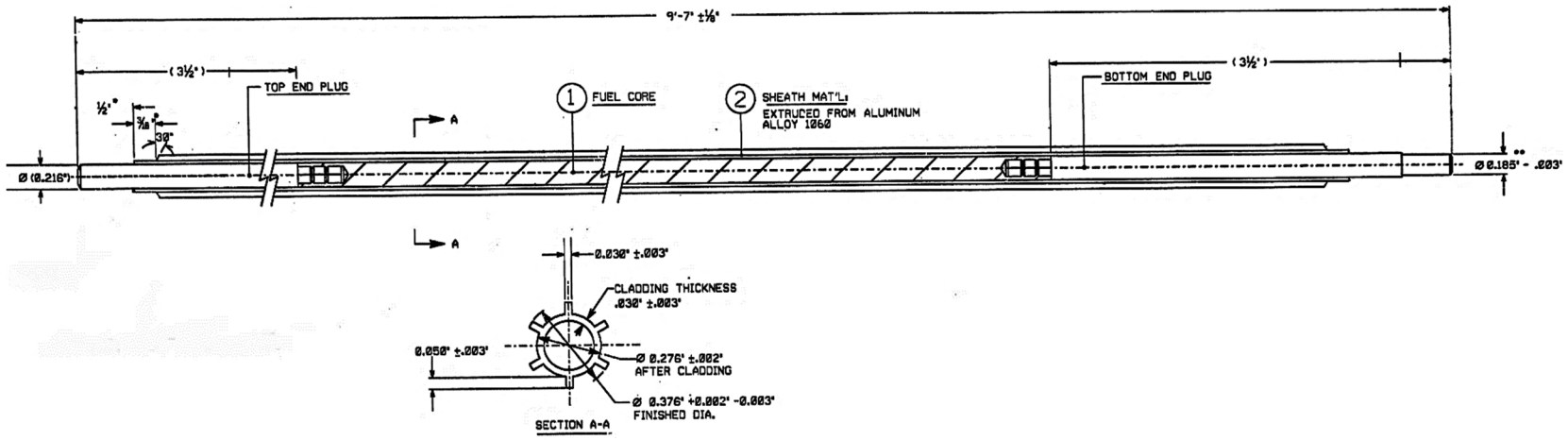

Figure 6.7.3-4 NRX Fuel Rod

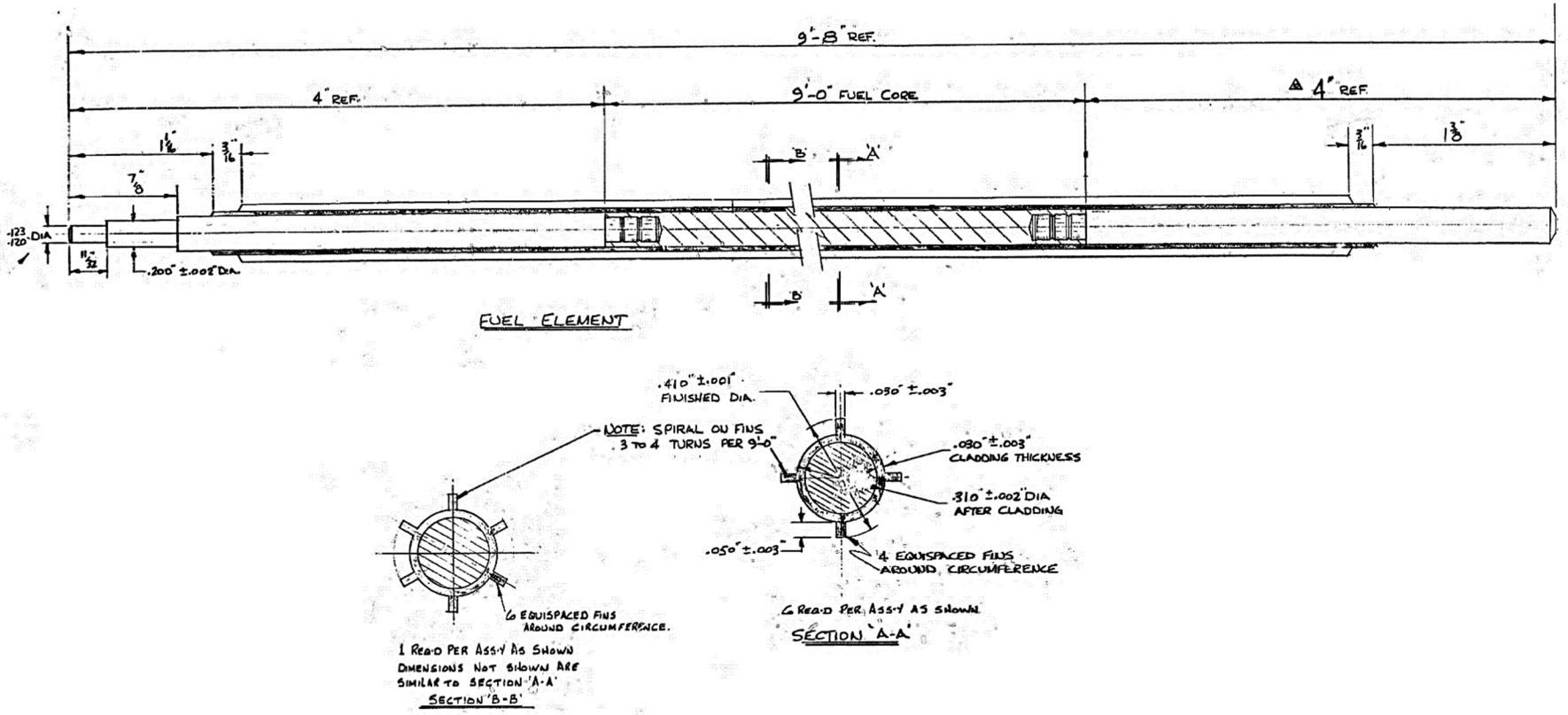

Figure 6.7.3-5 MCNP NRU Fuel in Fuel Tube Cross-Section (No Flow Tube)

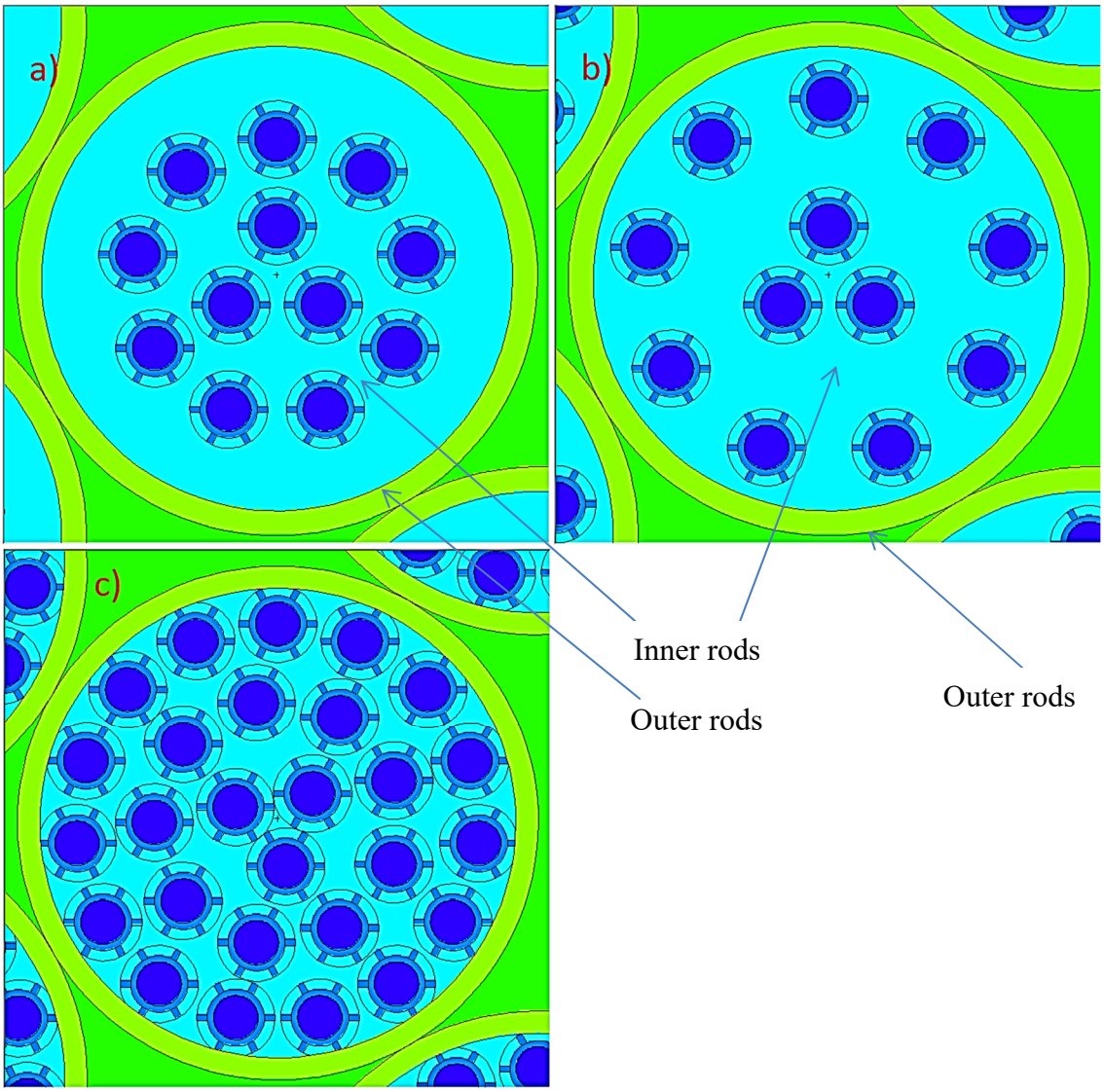

a) Fuel rods in the in-core configuration
b) Maximum reactivity rod pitch (space equivalent to flow tube thickness is retained at inner perimeter of fuel tube but fuel tube is not modeled)
c) Broken Rods – Maximum reactivity is achieved by maximum number of rod sections. Rod height reduced to conserve fuel mass

Figure 6.7.3-6 MCNP NRX Fuel in Fuel Tube Cross-Section (Caddy)

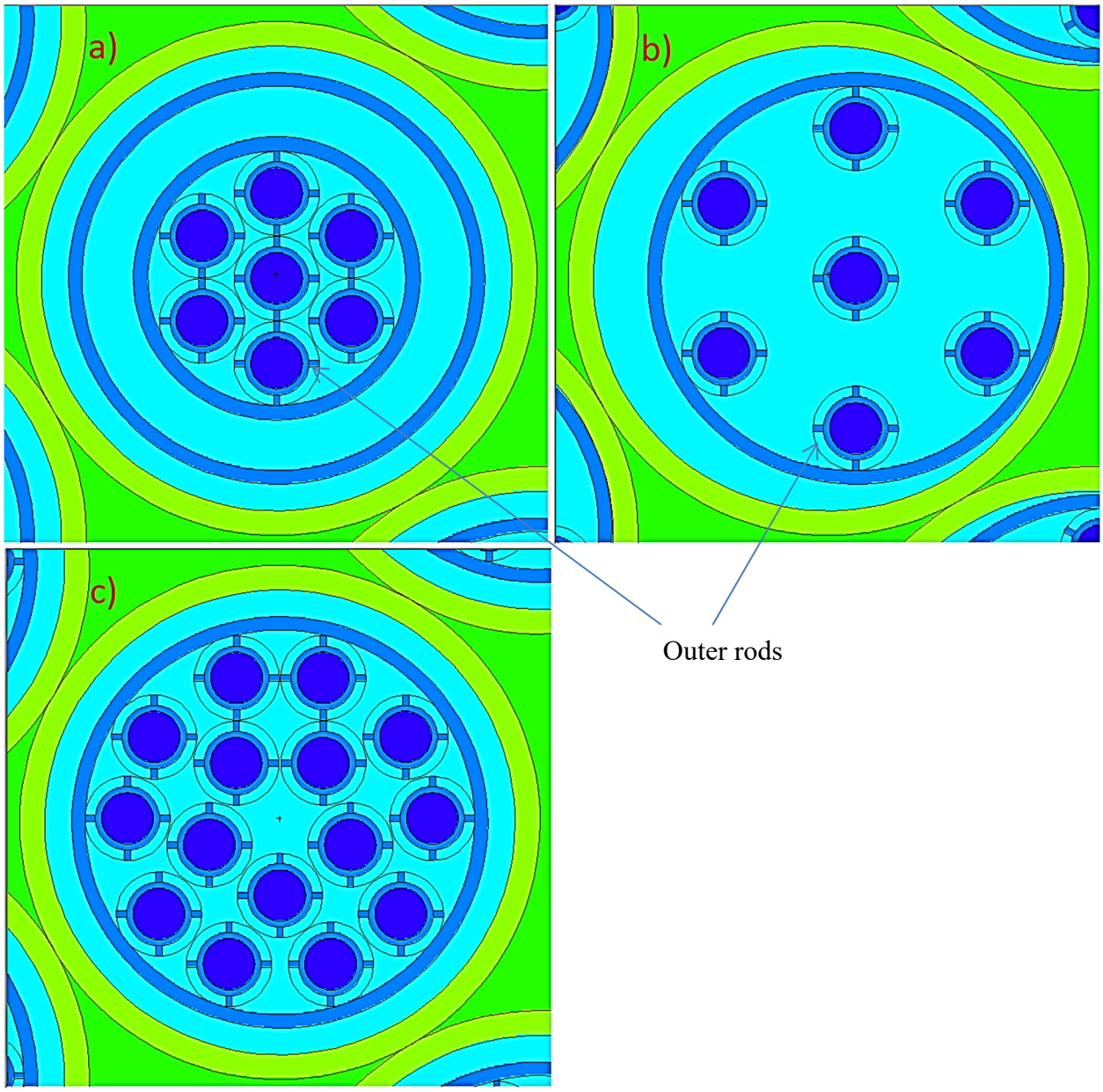

a) Fuel rods in the in-core configuration – with flow tube
b) Maximum reactivity rod pitch – Conservatively removed flow tube
c) Broken Rods – Maximum reactivity is achieved by maximum number of rod sections. Rod height reduced to conserve fuel mass

Figure 6.7.3-7 Sketch of NAC-LWT Cask Cross-Section with NRU/NRX Basket

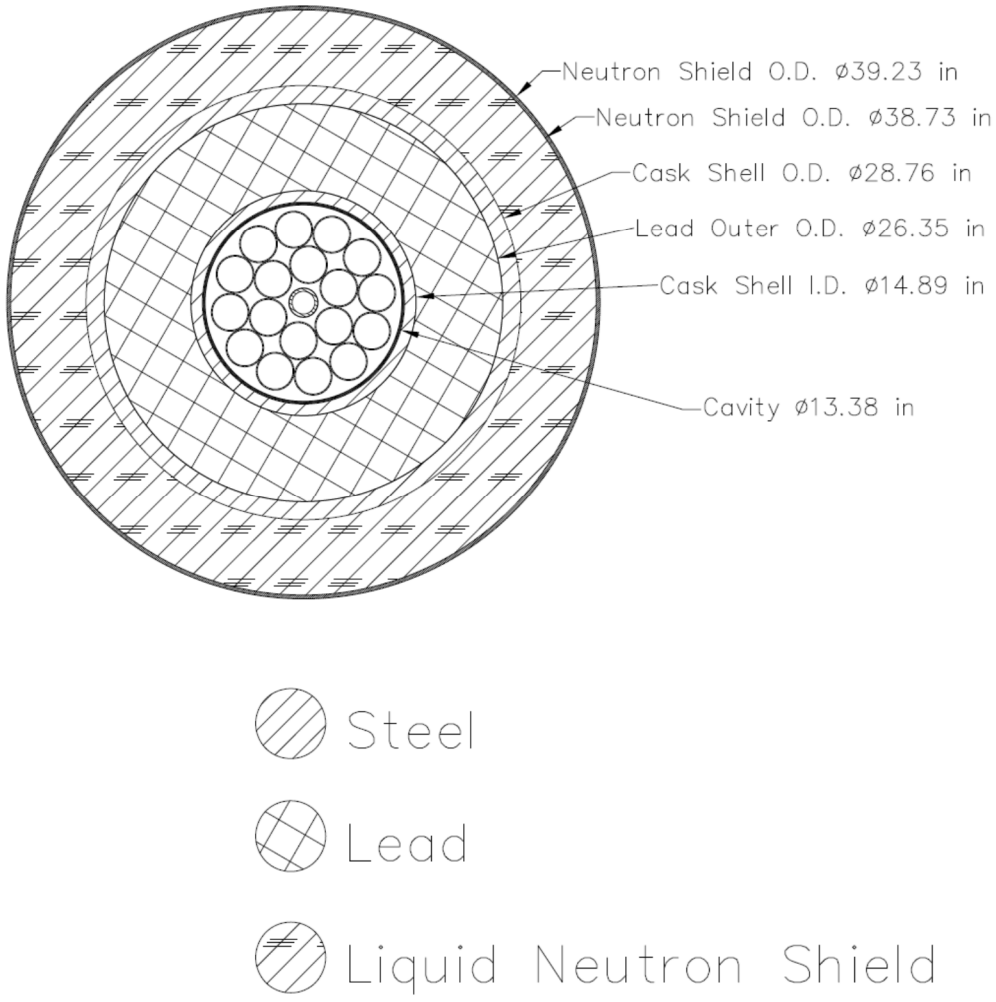

Figure 6.7.3-8 Full Length NAC-LWT Cask Sketch with NRU/NRX Basket

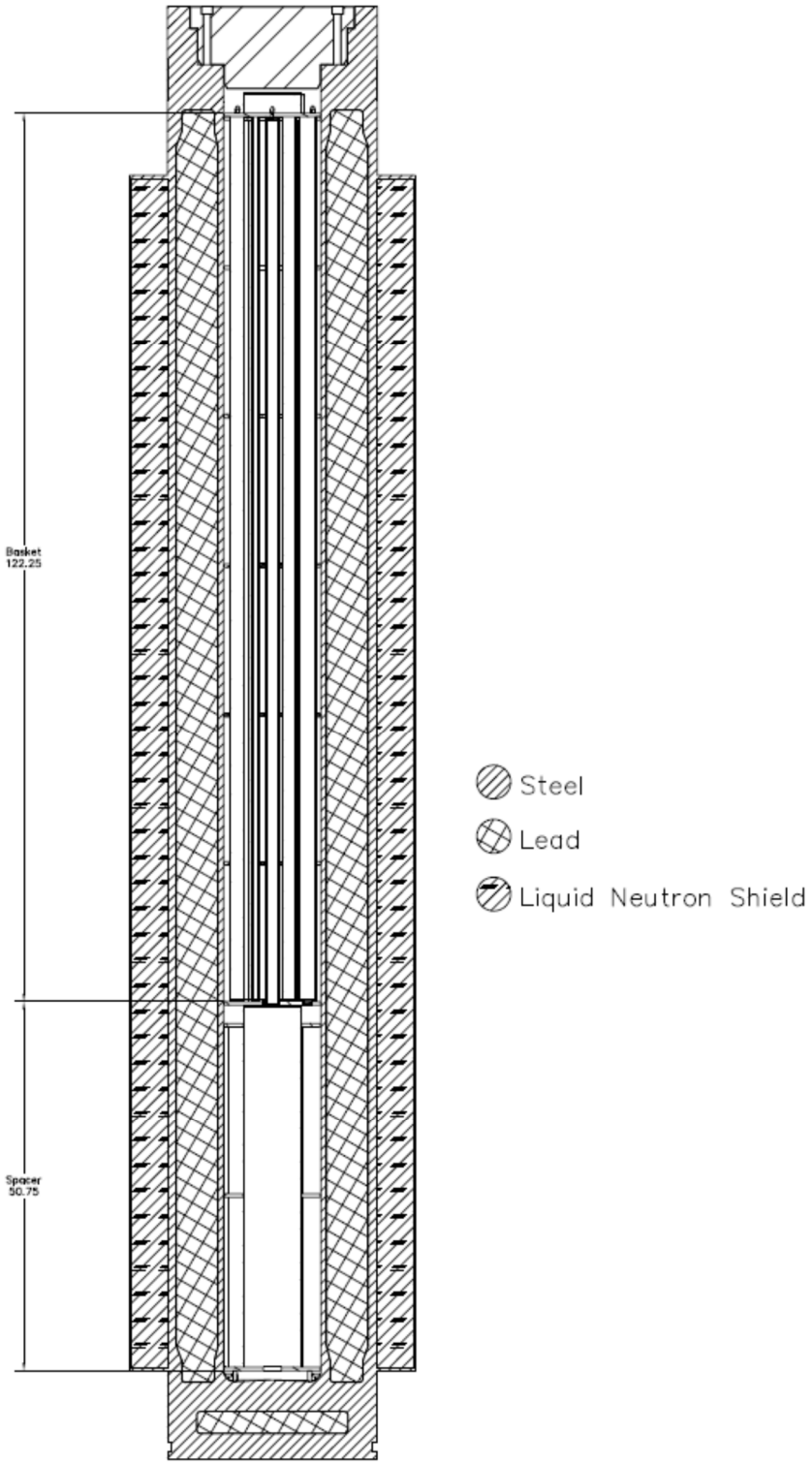

Figure 6.7.3-9 VISED Maximum Reactivity NRU HEU Fuel (Rod Segments)

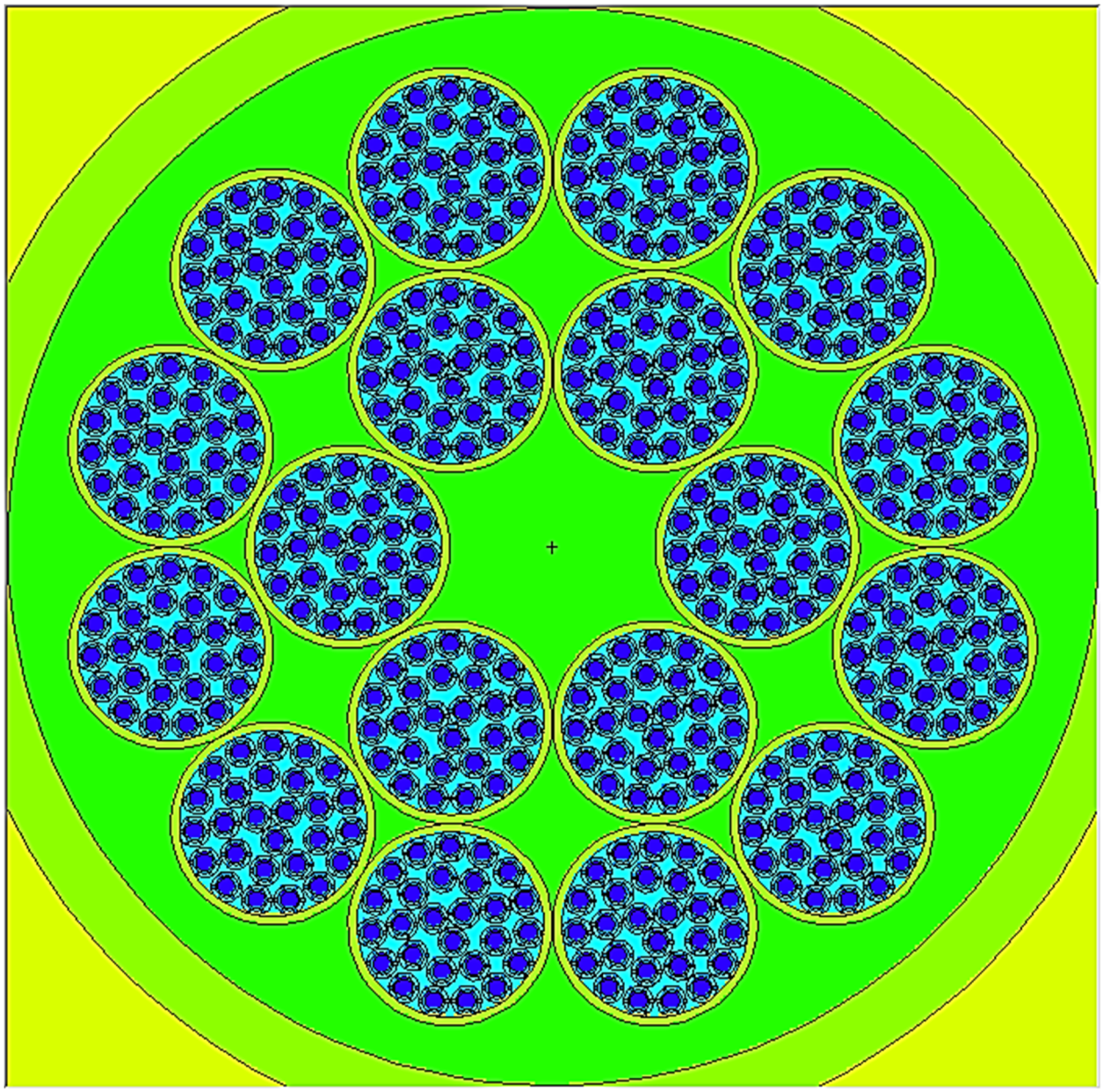

Figure 6.7.3-10 NRU HEU Assembly Moderator Density Study Graphical Results

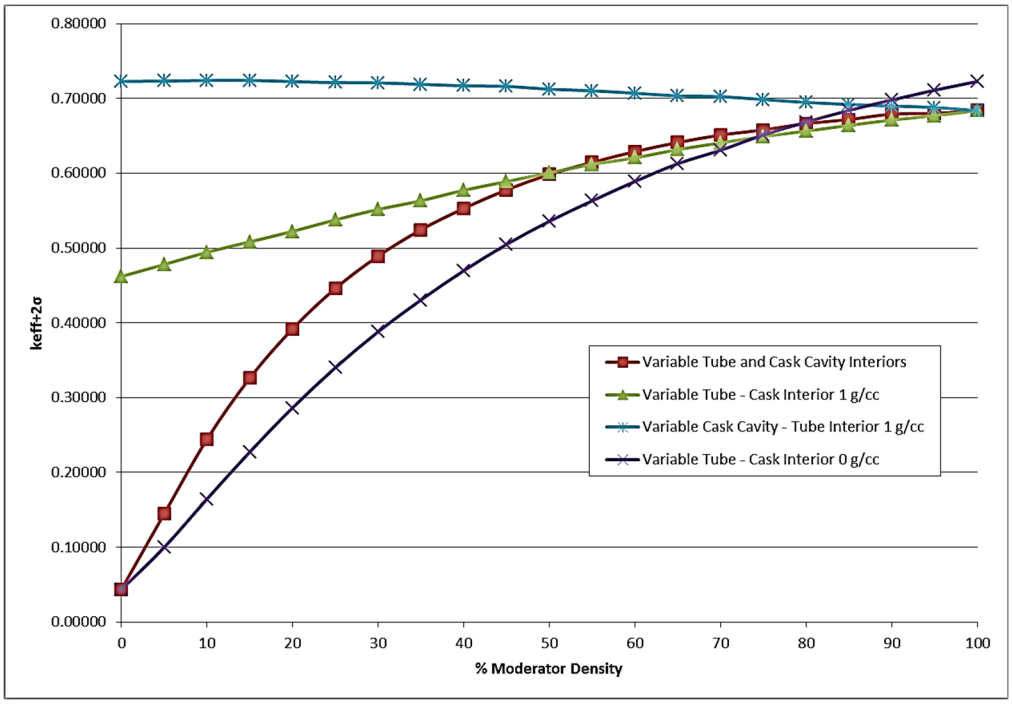

Figure 6.7.3-11 NRX HEU Assembly Moderator Density Study Graphical Results

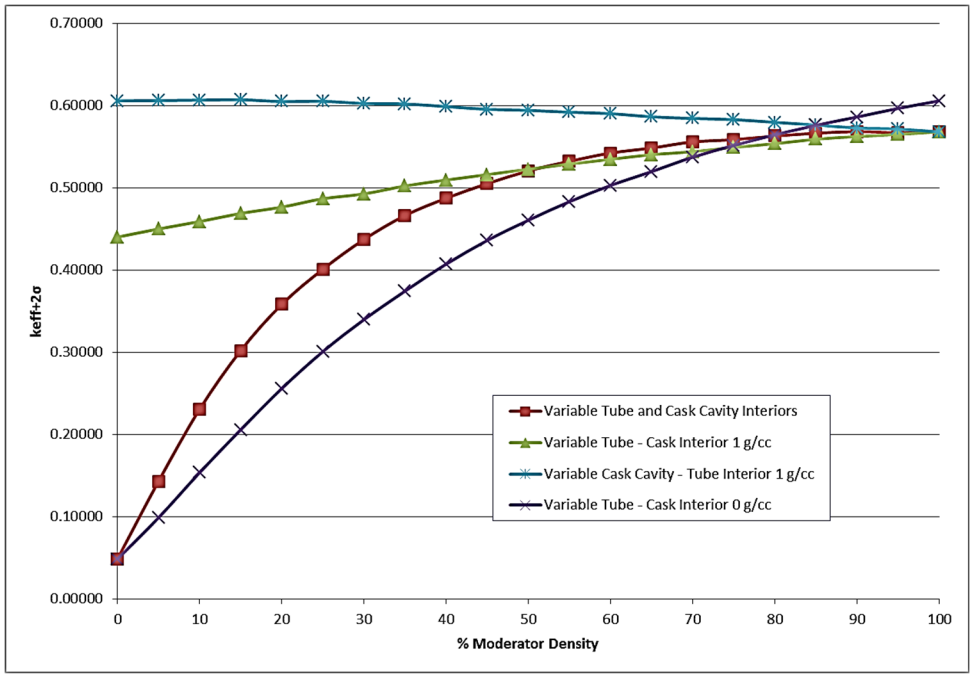

Figure 6.7.3-12 NRU HEU Fuel Rod Pitch Study Graphical Results

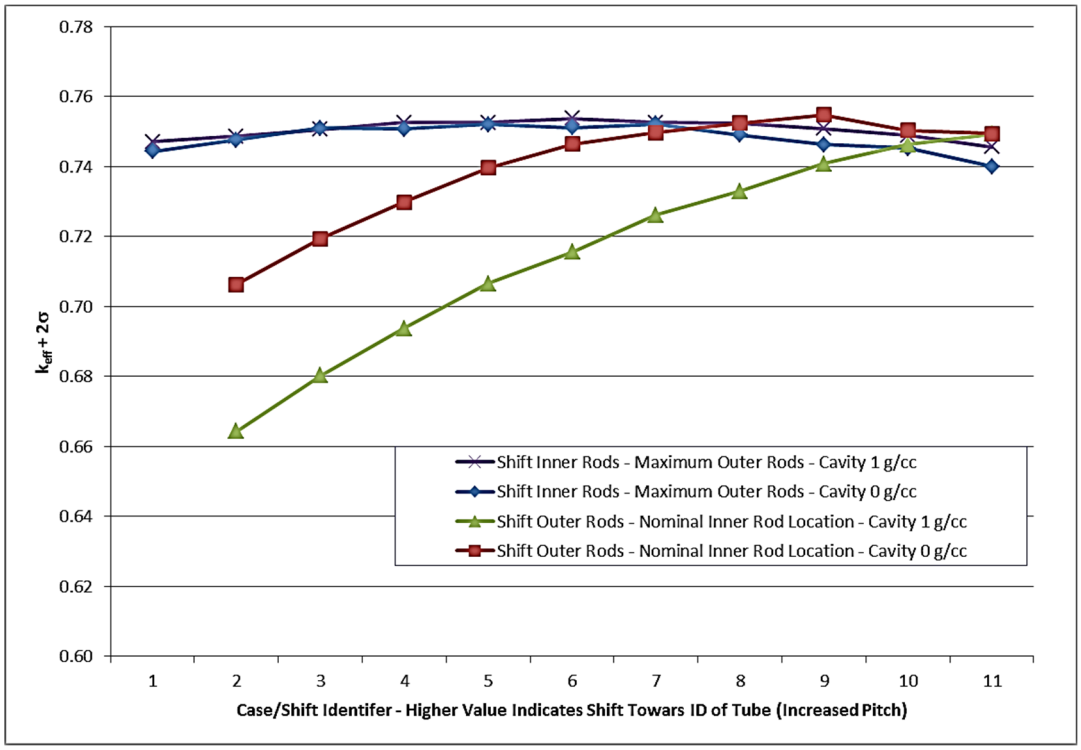

Figure 6.7.3-13 NRX HEU Fuel Rod Pitch Study Graphical Results

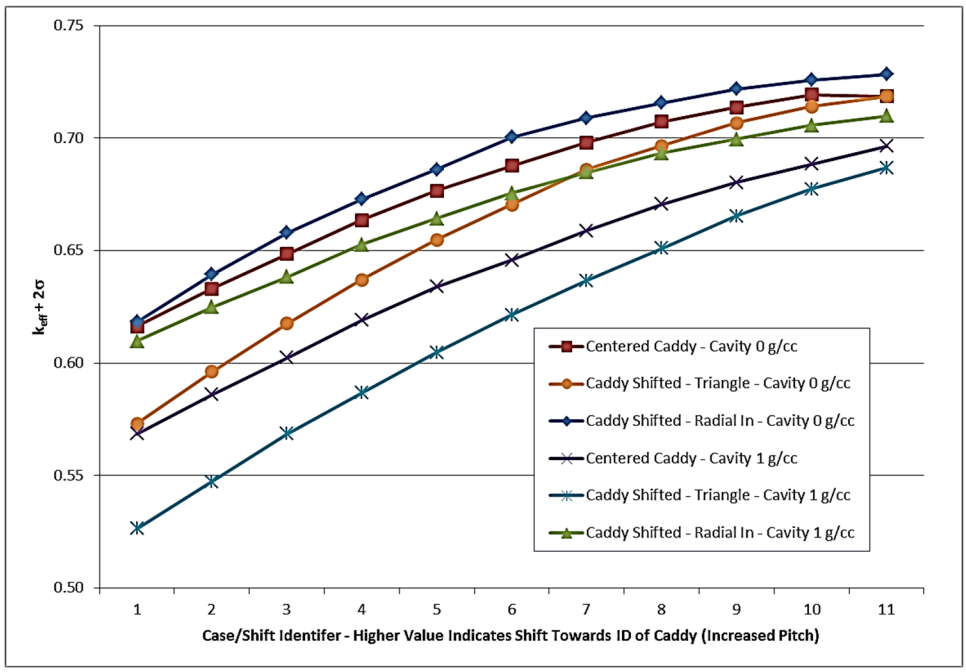

Figure 6.7.3-14 NRU HEU Number of Rod Sections (Broken Rods) Graphical Results

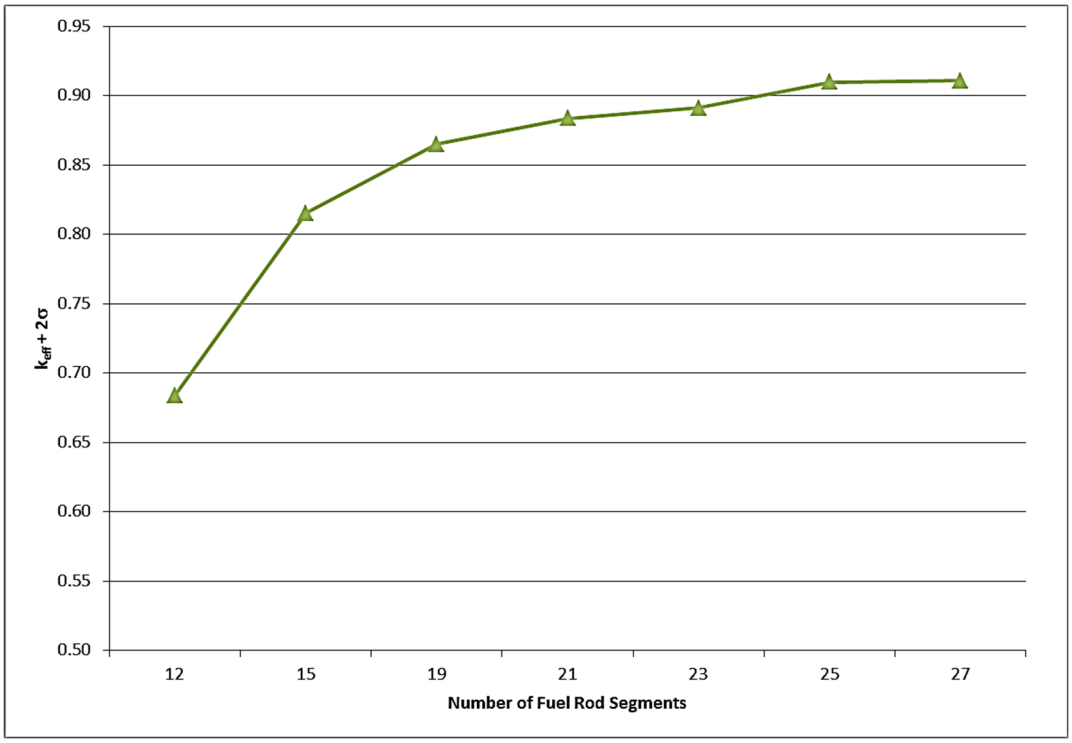

Figure 6.7.3-15 NRX HEU Number of Rod Sections (Broken Rods) Graphical Results

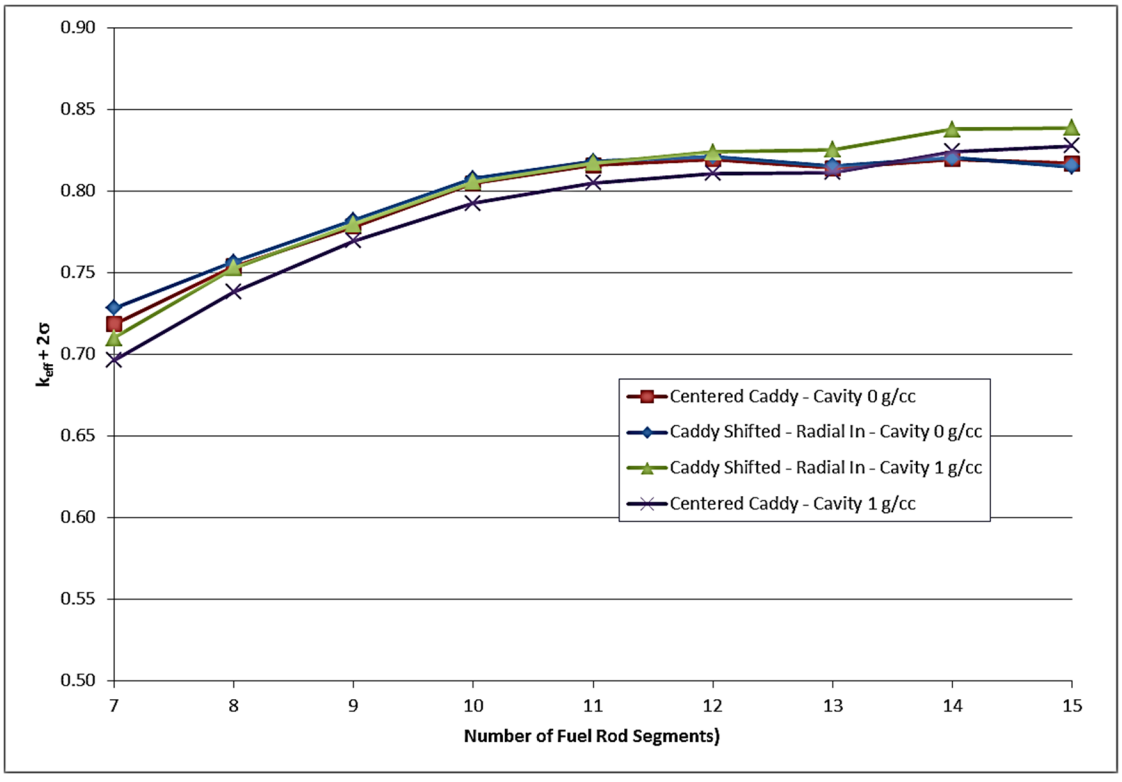

Figure 6.7.3-16 NRU HEU Rod Section (Broken Rods) Moderator Density Study Graphical Results

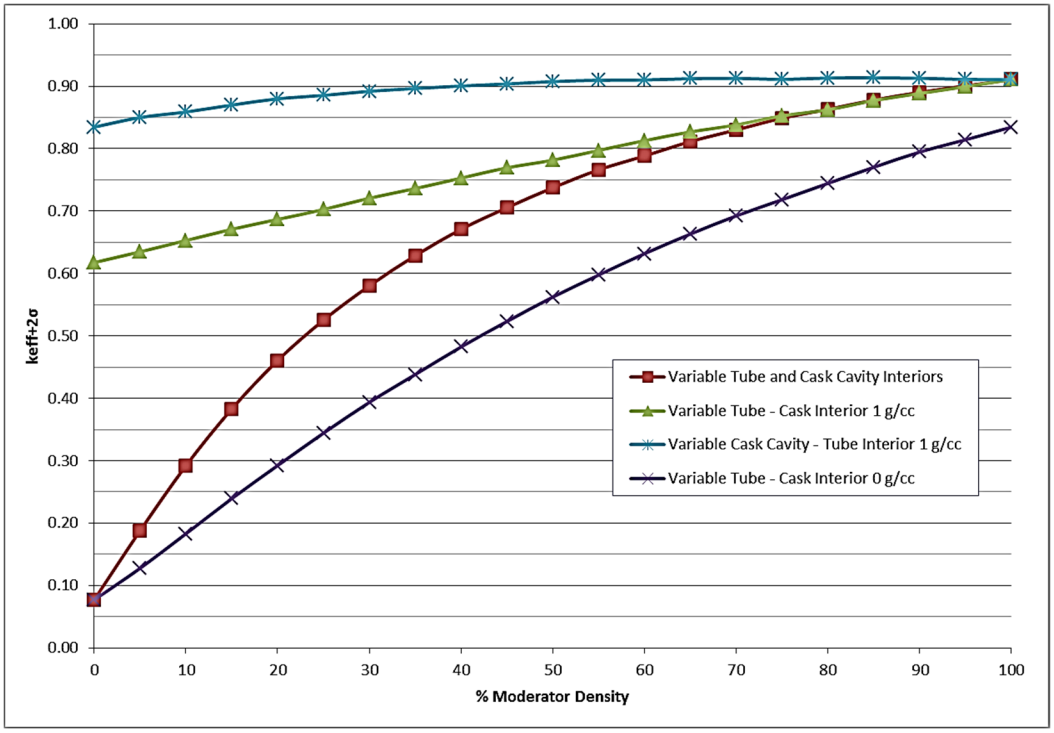

Figure 6.7.3-17 NRX HEU Rod Section (Broken Rods) Moderator Density Study Graphical Results

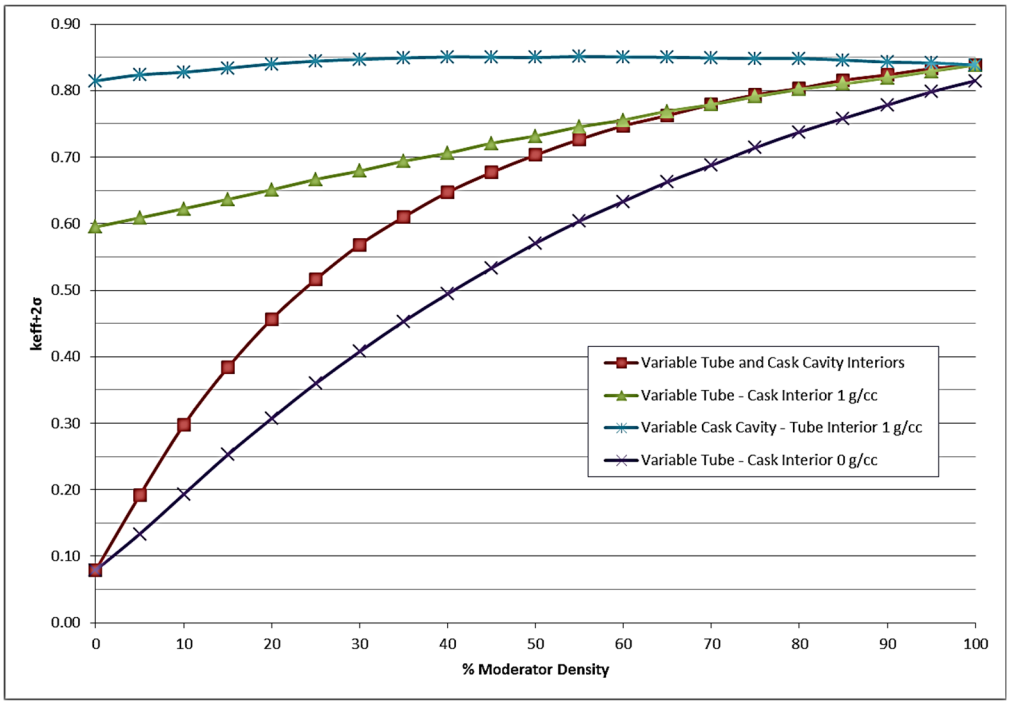

Figure 6.7.3-18 Sample NRX MCNP5 Input File for Normal Conditions

```
NAC-LWT Cask - Normal Transport Conditions
C NRX
C Fuel Rod Cells
1  2  -2.7020    -1        u=6    $ Bottom End Plug
2  1  -3.1888    -2        u=6    $ FuelMeat
3  2  -2.7020    -3 : -4 : -5        u=6    $ TopEndPlug
4  2  -2.7020    -6  #1 #2 #3       u=6    $ Sheath / Aluminum Clad
5  2  -2.7020    -7  +6      u=6    $ Clad Fins
6  2  -2.7020    -8  +6      u=6    $ Clad Fins
7  3  -0.0001    +1 +3 +4 +5 +6 +7 +8        u=6    $ Outside Fuel Rod
C Fuel Assembly Cells
11  3  -0.0001  -12  fill=6    trcl = ( 0.5365 0.7384 0.1600 )    u=5    $ Fuel Rod #1
12  like  11  but      trcl = ( -0.5365 0.7384 0.1600 )    u=5    $ Fuel Rod #2
13  like  11  but      trcl = ( -0.8681 -0.2821 0.1600 )    u=5    $ Fuel Rod #3
14  like  11  but      trcl = ( 0.0000 -0.9128 0.1600 )    u=5    $ Fuel Rod #4
15  like  11  but      trcl = ( 0.8681 -0.2821 0.1600 )    u=5    $ Fuel Rod #5
16  like  11  but      trcl = ( 0.5332 1.8001 0.1600 )    u=5    $ Fuel Rod #6
17  like  11  but      trcl = ( -0.5332 1.8001 0.1600 )    u=5    $ Fuel Rod #7
18  like  11  but      trcl = ( -1.5472 1.0634 0.1600 )    u=5    $ Fuel Rod #8
19  like  11  but      trcl = ( -1.8767 0.0491 0.1600 )    u=5    $ Fuel Rod #9
20  like  11  but      trcl = ( -1.4894 -1.1429 0.1600 )    u=5    $ Fuel Rod #10
21  like  11  but      trcl = ( -0.6267 -1.7697 0.1600 )    u=5    $ Fuel Rod #11
22  like  11  but      trcl = ( 0.6267 -1.7697 0.1600 )    u=5    $ Fuel Rod #12
23  like  11  but      trcl = ( 1.4894 -1.1429 0.1600 )    u=5    $ Fuel Rod #13
24  like  11  but      trcl = ( 1.8767 0.0491 0.1600 )    u=5    $ Fuel Rod #14
25  like  11  but      trcl = ( 1.5472 1.0634 0.1600 )    u=5    $ Fuel Rod #15
26  3  -0.0001      #11 #12 #13 #14 #15 #16 #17 #18 #19 #20
                    #21 #22
                    #23 #24 #25
                          u=5  $ Outside Fuel Rods
27  3  -0.0001  -15  -16  fill=5        u=4  $ Inside Caddy
28  2  -2.7020  -16  +15          u=4  $ Caddy
29  3  -0.0001  +16            u=4  $ Outside  Caddy
C Tube Cells
51  3  -0.0001  -51  fill=4  ( 0.3696 0.0000 0.6351 )      u=3  $ Tube Inside
52  5  -7.9200  -52  +51        u=3  $ Tube Shell
53  4  -0.0001  +52          u=3  $ Tube Exterior
C Cells - Basket
61  0           -69  fill=3  trcl=1        u=1  $ Basket Tube 1 (Inner Ring)
62  0           -69  fill=3  trcl=2        u=1  $ Basket Tube 2 (Inner Ring)
63  0           -69  fill=3  trcl=3        u=1  $ Basket Tube 3 (Inner Ring)
64  0           -69  fill=3  trcl=4        u=1  $ Basket Tube 4 (Inner Ring)
65  0           -69  fill=3  trcl=5        u=1  $ Basket Tube 5 (Inner Ring)
66  0           -69  fill=3  trcl=6        u=1  $ Basket Tube 6 (Inner Ring)
67  0           -69  fill=3  trcl=7        u=1  $ Basket Tube 7 (Inner Ring)
68  0           -69  fill=3  trcl=8        u=1  $ Basket Tube 8 (Outer Ring)
69  0           -69  fill=3  trcl=9        u=1  $ Basket Tube 9 (Outer Ring)
70  0           -69  fill=3  trcl=10        u=1  $ Basket Tube 10 (Outer Ring)
71  0           -69  fill=3  trcl=11        u=1  $ Basket Tube 11 (Outer Ring)
72  0           -69  fill=3  trcl=12        u=1  $ Basket Tube 12 (Outer Ring)
73  0           -69  fill=3  trcl=13        u=1  $ Basket Tube 13 (Outer Ring)
74  0           -69  fill=3  trcl=14        u=1  $ Basket Tube 14 (Outer Ring)
75  0           -69  fill=3  trcl=15        u=1  $ Basket Tube 15 (Outer Ring)
76  0           -69  fill=3  trcl=16        u=1  $ Basket Tube 16 (Outer Ring)
77  0           -69  fill=3  trcl=17        u=1  $ Basket Tube 17 (Outer Ring)
78  0           -69  fill=3  trcl=18        u=1  $ Basket Tube 18 (Outer Ring)
79  4  -0.0001  #61 #62 #63 #64 #65 #66 #67
                  #68 #69 #70 #71 #72 #73 #74 #75 #76 #77 #78
                  fill=2            u=1  $ Outside Outer Ring
80  5  -7.9200    -61          u=2  $ Bottom Disk
81  5  -7.9200    -62          u=2  $ Intermediate Disk
82  5  -7.9200    -63          u=2  $ Intermediate Disk
83  5  -7.9200    -64          u=2  $ Intermediate Disk
84  5  -7.9200    -65          u=2  $ Intermediate Disk
85  5  -7.9200    -66          u=2  $ Intermediate Disk
86  5  -7.9200    -67          u=2  $ Top Disk
87  4  -0.0001    #80 #81 #82 #83 #84 #85 #86           u=2  $ Outside Plates
C Cells - LWT Cask Normal Conditions
201  6  -11.344  -204            $ BotPb
202  4  -0.0001  -203  fill=1  (0 0 133.35 )        $ Cavity
203  5  -7.9200  -201  -202  +204        $ Bottom
204  5  -7.9200  -201  +202  +206  +209  +203    $ OuterShell
205  5  -7.9200  -205  +208  +203        $ InnerShellTaper
206  5  -7.9200  -207  +203          $ InnerShell
207  6  -11.344  -208  +207          $ Lead
208  6  -11.344  -206  +205  +208        $ LeadTaper
209  0           -209  +208          $ LeadGap
210  9  -0.9669  -211  +201          $ NeutronShield
211  5  -7.9200  -210  +201  +211        $ NSShell
212  7  -0.4997  -212  +201          $ UpperLimiter
213  7  -0.4997  -213  +201          $ LowerLimiter
214  8  -0.9982  -214  +201  +210  +212  +213    $ Container
215  8  -0.9982  214            $ Outside

C Fuel Rod Surfaces
1  RCC  0.0000  0.0000  0.0000  0.0000  0.0000  10.1600  0.3175    $ Bottom End Plug
2  RCC  0.0000  0.0000  10.1600  0.0000  0.0000  127.8667  0.3175    $ Fuel Meat
```

Figure 6.7.3-18 Sample NRX MCNP5 Input File for Normal Conditions (Continued)

```
3  RCC  0.0000  0.0000  138.0267  0.0000  0.0000  7.9375  0.3175    $ Top End Plug Step 1
4  RCC  0.0000  0.0000  145.9642  0.0000  0.0000  1.3494  0.2540    $ Top End Plug Step 2
5  RCC  0.0000  0.0000  147.3135  0.0000  0.0000  0.8731  0.1562    $ Top End Plug Step 3
6  RCC  0.0000  0.0000  3.4925  0.0000  0.0000  144.6148  0.3937    $ Sheath / Aluminum Clad
7  RPP  -0.5207  0.5207  -0.0381  0.0381  3.4925  144.6148      $ Clad Fin
8  22  RPP  -0.5207  0.5207  -0.0381  0.0381  3.4925  144.6148    $ Clad Fin
C Fuel Assembly Surfaces
11  RCC  0.0000  0.0000  0.0001  0.0000  0.0000  292.9998  0.5206    $ Fuel Rod Container
12  CZ  0.5205               $ Rod outer surface
13  CZ  1.5722               $ Inner Flow Channel Surface (may not be used)
14  RCC  0.0000  0.0000  0.1600  0.0000  0.0000  293.0010  1.7500    $ Outer Flow Channel Surface (may not be used)
15  RCC  0.0000  0.0000  0.1600  0.0000  0.0000  309.0080  2.3914    $ Caddy Inner Surface (may not be used)
16  RCC  0.0000  0.0000  0.0000  0.0000  0.0000  308.0080  2.5464    $ Caddy Outer Surface (may not be used)
17  CZ  2.5932               $ Surface accounting for flow tube and caddy
C Tube Surfaces
51  RCC  0.0000  0.0000  0.6350  0.0000  0.0000  308.6100  2.9159  $ Tube Inside
52  RCC  0.0000  0.0000  -0.0001  0.0000  0.0000  309.2452  3.1903  $ Tube Outside and Cap
C Surfaces - Basket
61  RCC  0.0000  0.0000  -1.2700  0.0000  0.0000  1.2699  16.8529    $ Bottom Disk
62  RCC  0.0000  0.0000  49.5300  0.0000  0.0000  1.2700  16.8529    $ Intermediate Disk 1
63  RCC  0.0000  0.0000  100.3300  0.0000  0.0000  1.2700  16.8529    $ Intermediate Disk 2
64  RCC  0.0000  0.0000  151.1300  0.0000  0.0000  1.2700  16.8529    $ Intermediate Disk 3
65  RCC  0.0000  0.0000  201.9300  0.0000  0.0000  1.2700  16.8529    $ Intermediate Disk 4
66  RCC  0.0000  0.0000  252.7300  0.0000  0.0000  1.2700  16.8529    $ Intermediate Disk 5
67  RCC  0.0000  0.0000  303.5300  0.0000  0.0000  1.2700  16.8529    $ Top Disk
68  RCC  0.0000  0.0000  -1.2701  0.0000  0.0000  310.5152  16.8530    $ Basket Outline
69  RCC  0.0000  0.0000  0.0000  0.0000  0.0000  309.2450  3.1902    $ Tube Outline
C Surfaces - LWT Cask Normal Conditions
201  RCC  0.0000  0.0000  -26.6700  0.0000  0.0000  507.3650  36.5189  $ Lwt
202  RCC  0.0000  0.0000  -26.6700  0.0000  0.0000  26.6700  36.5189  $ Bottom
203  RCC  0.0000  0.0000  0.0000  0.0000  0.0000  452.1200  16.9863  $ Cavity
204  RCC  0.0000  0.0000  -17.7800  0.0000  0.0000  7.6200  26.3525  $ Bottom gamma shield
205  RCC  0.0000  0.0000  0.0000  0.0000  0.0000  444.5000  20.1740  $ Lead id - taper
206  RCC  0.0000  0.0000  0.0000  0.0000  0.0000  444.5000  31.5976  $ Lead od - taper
207  RCC  0.0000  0.0000  13.8176  0.0000  0.0000  416.8648  18.9103  $ Lead id
208  RCC  0.0000  0.0000  13.8176  0.0000  0.0000  416.8648  33.3271  $ Lead od
209  RCC  0.0000  0.0000  13.8176  0.0000  0.0000  416.8648  33.4645  $ Lead gap
210  RCC  0.0000  0.0000  3.8100  0.0000  0.0000  419.1000  49.8183  $ Neutron shield shell
211  RCC  0.0000  0.0000  5.0800  0.0000  0.0000  416.5600  49.2189  $ Neutron shield
212  RCC  0.0000  0.0000  450.2150  0.0000  0.0000  70.5612  49.8183  $ Upper limiter
213  RCC  0.0000  0.0000  -68.0212  0.0000  0.0000  71.8312  49.8183  $ Lower limiter
214  RCC  0.0000  0.0000  -88.0212  0.0000  0.0000  628.7974  69.8183  $ Container - Gap To Reflector

C
C Materials List
C
C - wt%
m1  92235.69c  -2.8570E-01
       92238.69c  -1.8236E-02
       13027.62c  -6.9606E-01
C Aluminum
m2  13027.62c  -1.0
C Tube Cavity Water
m3  1001.62c  6.6667E-01  8016.62c  3.3333E-01
mt3  lwtr.60t
C Cask Cavity Water
m4  1001.62c  6.6667E-01  8016.62c  3.3333E-01
mt4  lwtr.60t
C Stainless Steel 304
m5  26000.55c  -0.695  24000.50c  -0.190  28000.50c  -0.095
       25055.62c  -0.020
C Lead
m6  82000.50c  -1.0
C Aluminum Honeycomb Impact Limiter
m7  13027.62c  -1.0
C Water/Glycol - Cask Neutron Shield
m9  1001.62c  -1.03651E-01  8016.62c  -6.75619E-01  6000.66c  -2.20730E-01
C Cask Exterior (Water at Various Densities)
m8  1001.62c  6.6667E-01  8016.62c  3.3333E-01
mt8  lwtr.60t
C
C Cell Importances
imp:n 1 69r 0
c
c Criticality Controls
c
kcode  2000  1.00  30  530
c
c Source Distribution for Initial Generation
SDEF  CEL=  202:D4:51:27:D5:2
       ERG=  D1
       POS=  0.0000  0.00  10.1600
       RAD=  D2
       AXS=  0.00  0.00  1.00
       EXT=  D3
C - Neutron Source Energy Source Distribution
#          SP1
       -3
C - Uniform Radial Distribution in Fuel Rod
#  SI2  SP2
```

Figure 6.7.3-18 Sample NRX MCNP5 Input File for Normal Conditions (Continued)

```
       0.0000  -21
       0.3175  1
C - Axial Source Profile
#  SI3  SP3
       0  0.0
       274  1.0
C - 18 Tubes in Cask
#     SI4          SP4
           l          d
       61  1
       62  1
       63  1
       64  1
       65  1
       66  1
       67  1
       68  1
       69  1
       70  1
       71  1
       72  1
       73  1
       74  1
       75  1
       76  1
       77  1
       78  1
C - Rods Per Assembly
#     SI5          SP5
           l          d
       11  1
       12  1
       13  1
       14  1
       15  1
       16  1
       17  1
*TR1  6.3810 0.0000 0.0000 180 270 90 90 180 90 90 90 0
*TR2  3.1905 5.5261 0.0000 120 210 90 30 120 90 90 90 0
*TR3  -3.1905 5.5261 0.0000 60 150 90 -30 60 90 90 90 0
*TR4  -6.3810 0.0000 0.0000 0 90 90 -90 0 90 90 90 0
*TR5  -3.1905 -5.5261 0.0000 -60 30 90 -150 -60 90 90 90 0
*TR6  3.1905 -5.5261 0.0000 -120 -30 90 -210 -120 90 90 90 0
*TR7  11.9071 3.1905 0.0000 165 255 90 75 165 90 90 90 0
*TR8  8.7166 8.7166 0.0000 135 225 90 45 135 90 90 90 0
*TR9  3.1905 11.9071 0.0000 105 195 90 15 105 90 90 90 0
*TR10  -3.1905 11.9071 0.0000 75 165 90 -15 75 90 90 90 0
*TR11  -8.7166 8.7166 0.0000 45 135 90 -45 45 90 90 90 0
*TR12  -11.9071 3.1905 0.0000 15 105 90 -75 15 90 90 90 0
*TR13  -11.9071 -3.1905 0.0000 -15 75 90 -105 -15 90 90 90 0
*TR14  -8.7166 -8.7166 0.0000 -45 45 90 -135 -45 90 90 90 0
*TR15  -3.1905 -11.9071 0.0000 -75 15 90 -165 -75 90 90 90 0
*TR16  3.1905 -11.9071 0.0000 -105 -15 90 -195 -105 90 90 90 0
*TR17  8.7166 -8.7166 0.0000 -135 -45 90 -225 -135 90 90 90 0
*TR18  11.9071 -3.1905 0.0000 -165 -75 90 -255 -165 90 90 90 0
*TR21  0.0 0.0 0.0 60 150 90 -30 60 90 90 90 0    $ z-rotation 60 degrees
*TR22  0.0 0.0 0.0 90 180 90 0 90 90 90 90 0    $ z-rotation 90 degrees
*TR23  0.0 0.0 0.0 -60 30 90 -150 -60 90 90 90 0    $ z-rotation -60 degrees
C Print Control
prdmp  -30 -60 1 2
print
C Random Number Generator
rand  gen=2  seed=19073486328125  stride=152917  hist=1
```

Figure 6.7.3-19 Sample NRU MCNP5 Input File for Accident Conditions

```
NAC-LWT Cask - Accident Transport Conditions
C NRU
C Fuel Rod Cells
1  2  -2.7020    -1 : -2        u=5    $ Bottom End Plug
2  1  -3.2419    -3        u=5    $ FuelMeat
3  2  -2.7020    -4        u=5    $ TopEndPlug
4  2  -2.7020    -5  #1 #2 #3       u=5    $ Sheath / Aluminum Clad
5  2  -2.7020    -6  +5      u=5    $ Clad Fins
6  2  -2.7020    -7  +5      u=5    $ Clad Fins
7  2  -2.7020    -8  +5      u=5    $ Clad Fins
8  3  -0.9982    +1 +2 +4 +5 +6 +7 +8        u=5    $ Outside Fuel Rod
C Fuel Assembly Cells
11  3  -0.9982  -12  fill=5    trcl = ( 0.4224 0.3544 0.0000 )    u=4    $ Fuel Rod #1
12  like  11  but      trcl = ( -0.5181 0.1886 0.0000 )    u=4    $ Fuel Rod #2
13  like  11  but      trcl = ( 0.0957 -0.5430 0.0000 )    u=4    $ Fuel Rod #3
14  like  11  but      trcl = ( 1.4155 0.5152 0.0000 )    u=4    $ Fuel Rod #4
15  like  11  but      trcl = ( 0.7532 1.3046 0.0000 )    u=4    $ Fuel Rod #5
16  like  11  but      trcl = ( -0.2616 1.4835 0.0000 )    u=4    $ Fuel Rod #6
17  like  11  but      trcl = ( -1.1539 0.9683 0.0000 )    u=4    $ Fuel Rod #7
18  like  11  but      trcl = ( -1.5064 0.0000 0.0000 )    u=4    $ Fuel Rod #8
19  like  11  but      trcl = ( -1.1539 -0.9683 0.0000 )    u=4    $ Fuel Rod #9
20  like  11  but      trcl = ( -0.2616 -1.4835 0.0000 )    u=4    $ Fuel Rod #10
21  like  11  but      trcl = ( 0.7532 -1.3046 0.0000 )    u=4    $ Fuel Rod #11
22  like  11  but      trcl = ( 1.4155 -0.5152 0.0000 )    u=4    $ Fuel Rod #12
23  like  11  but      trcl = ( 2.3409 0.7606 0.0000 )    u=4    $ Fuel Rod #13
24  like  11  but      trcl = ( 1.8292 1.6470 0.0000 )    u=4    $ Fuel Rod #14
25  like  11  but      trcl = ( 1.0011 2.2486 0.0000 )    u=4    $ Fuel Rod #15
26  like  11  but      trcl = ( 0.0000 2.4614 0.0000 )    u=4    $ Fuel Rod #16
27  like  11  but      trcl = ( -1.0011 2.2486 0.0000 )    u=4    $ Fuel Rod #17
28  like  11  but      trcl = ( -1.8292 1.6470 0.0000 )    u=4    $ Fuel Rod #18
29  like  11  but      trcl = ( -2.3409 0.7606 0.0000 )    u=4    $ Fuel Rod #19
30  like  11  but      trcl = ( -2.4479 -0.2573 0.0000 )    u=4    $ Fuel Rod #20
31  like  11  but      trcl = ( -2.1316 -1.2307 0.0000 )    u=4    $ Fuel Rod #21
32  like  11  but      trcl = ( -1.4468 -1.9913 0.0000 )    u=4    $ Fuel Rod #22
33  like  11  but      trcl = ( -0.5117 -2.4076 0.0000 )    u=4    $ Fuel Rod #23
34  like  11  but      trcl = ( 0.5117 -2.4076 0.0000 )    u=4    $ Fuel Rod #24
35  like  11  but      trcl = ( 1.4468 -1.9913 0.0000 )    u=4    $ Fuel Rod #25
36  like  11  but      trcl = ( 2.1316 -1.2307 0.0000 )    u=4    $ Fuel Rod #26
37  like  11  but      trcl = ( 2.4479 -0.2573 0.0000 )    u=4    $ Fuel Rod #27
38  3  -0.9982      #11 #12 #13 #14 #15 #16 #17 #18 #19 #20
                 #21 #22
                 #23 #24 #25 #26 #27 #28 #29
                 #30 #31 #32 #33 #34 #35 #36 #37
                       u=4  $ Outside Fuel Rods
C Tube Cells
51  3  -0.9982  -51  fill=4  ( 0.0000 0.0000 0.6351 )      u=3  $ Tube Inside
52  5  -7.9200  -52  +51        u=3  $ Tube Shell
53  4  -0.9982  +52          u=3  $ Tube Exterior
C Cells - Basket
61  0           -69  fill=3  trcl=1        u=1  $ Basket Tube 1 (Inner Ring)
62  0           -69  fill=3  trcl=2        u=1  $ Basket Tube 2 (Inner Ring)
63  0           -69  fill=3  trcl=3        u=1  $ Basket Tube 3 (Inner Ring)
64  0           -69  fill=3  trcl=4        u=1  $ Basket Tube 4 (Inner Ring)
65  0           -69  fill=3  trcl=5        u=1  $ Basket Tube 5 (Inner Ring)
66  0           -69  fill=3  trcl=6        u=1  $ Basket Tube 6 (Inner Ring)
67  0           -69  fill=3  trcl=7        u=1  $ Basket Tube 7 (Inner Ring)
68  0           -69  fill=3  trcl=8        u=1  $ Basket Tube 8 (Outer Ring)
69  0           -69  fill=3  trcl=9        u=1  $ Basket Tube 9 (Outer Ring)
70  0           -69  fill=3  trcl=10        u=1  $ Basket Tube 10 (Outer Ring)
71  0           -69  fill=3  trcl=11        u=1  $ Basket Tube 11 (Outer Ring)
72  0           -69  fill=3  trcl=12        u=1  $ Basket Tube 12 (Outer Ring)
73  0           -69  fill=3  trcl=13        u=1  $ Basket Tube 13 (Outer Ring)
74  0           -69  fill=3  trcl=14        u=1  $ Basket Tube 14 (Outer Ring)
75  0           -69  fill=3  trcl=15        u=1  $ Basket Tube 15 (Outer Ring)
76  0           -69  fill=3  trcl=16        u=1  $ Basket Tube 16 (Outer Ring)
77  0           -69  fill=3  trcl=17        u=1  $ Basket Tube 17 (Outer Ring)
78  0           -69  fill=3  trcl=18        u=1  $ Basket Tube 18 (Outer Ring)
79  4  -0.9982  #61 #62 #63 #64 #65 #66 #67
                    #68 #69 #70 #71 #72 #73 #74 #75 #76 #77 #78
                    fill=2            u=1  $ Outside Outer Ring
80  5  -7.9200    -61          u=2  $ Bottom Disk
81  5  -7.9200    -62          u=2  $ Intermediate Disk
82  5  -7.9200    -63          u=2  $ Intermediate Disk
83  5  -7.9200    -64          u=2  $ Intermediate Disk
84  5  -7.9200    -65          u=2  $ Intermediate Disk
85  5  -7.9200    -66          u=2  $ Intermediate Disk
86  5  -7.9200    -67          u=2  $ Top Disk
87  4  -0.9982    #80 #81 #82 #83 #84 #85 #86           u=2  $ Outside Plates
C Cells - LWT Cask Accident Conditions
201  6  -11.344  -204           $ BotPb
202  4  -0.9982  -203  fill=1  (0 0 133.35 )        $ Cavity
203  5  -7.9200  -202  +204          $ Bottom
204  5  -7.9200  -201  +202  +206  +209  +203  #202   $ OuterShell
205  5  -7.9200  -205  +208  +203        $ InnerShellTaper
206  5  -7.9200  -207  +203          $ InnerShell
207  6  -11.344  -208  +207          $ Lead
208  6  -11.344  -206  +205  +208        $ LeadTaper
209  0           -209  +208          $ LeadGap
210  8  -0.9982  +201  -210          $ Gap To Reflector
```

Figure 6.7.3-19 Sample NRU MCNP5 Input File for Accident Conditions (Continued)

```
211  0          210           $ Outside

C Fuel Rod Surfaces
1  RCC  0.0000  0.0000  0.0000  0.0000  0.0000  1.1100  0.2350    $ Bottom End Plug Step 1
2  RCC  0.0000  0.0000  1.1099  0.0000  0.0000  7.7800  0.2743    $ BottomEndPlugStep2
3  RCC  0.0000  0.0000  8.8899  0.0000  0.0000  121.7778  0.2743    $ Fuel Meat
4  RCC  0.0000  0.0000  130.6677  0.0000  0.0000  8.8900  0.2743    $ Top End Plug
5  RCC  0.0000  0.0000  2.3019  0.0000  0.0000  129.3977  0.3505    $ Sheath / Aluminum Clad
6  RPP  -0.4775  0.4775  -0.0381  0.0381  2.3019  129.3977      $ Clad Fin
7  21  RPP  -0.4775  0.4775  -0.0381  0.0381  2.3019  129.3977    $ Clad Fin
8  23  RPP  -0.4775  0.4775  -0.0381  0.0381  2.3019  129.3977    $ Clad Fin
C Fuel Assembly Surfaces
11  RCC  0.0000  0.0000  0.0001  0.0000  0.0000  290.9998  0.4774    $ Fuel Rod Container
12  CZ  0.4773               $ Rod outer surface
13  CZ  2.3122               $ Inner Flow Channel Surface (may not be used)
14  RCC  0.0000  0.0000  0.1600  0.0000  0.0000  291.0010  2.4900    $ Outer Flow Channel Surface (may not be used)
15  RCC  0.0000  0.0000  0.1600  0.0000  0.0000  309.0080  2.4143    $ Caddy Inner Surface (may not be used)
16  RCC  0.0000  0.0000  0.0000  0.0000  0.0000  308.0080  2.5591    $ Caddy Outer Surface (may not be used)
C Tube Surfaces
51  RCC  0.0000  0.0000  0.6350  0.0000  0.0000  308.6100  2.9159  $ Tube Inside
52  RCC  0.0000  0.0000  -0.0001  0.0000  0.0000  309.2452  3.1903  $ Tube Outside and Cap
C Surfaces - Basket
61  RCC  0.0000  0.0000  -1.2700  0.0000  0.0000  1.2699  16.8529    $ Bottom Disk
62  RCC  0.0000  0.0000  49.5300  0.0000  0.0000  1.2700  16.8529    $ Intermediate Disk 1
63  RCC  0.0000  0.0000  100.3300  0.0000  0.0000  1.2700  16.8529    $ Intermediate Disk 2
64  RCC  0.0000  0.0000  151.1300  0.0000  0.0000  1.2700  16.8529    $ Intermediate Disk 3
65  RCC  0.0000  0.0000  201.9300  0.0000  0.0000  1.2700  16.8529    $ Intermediate Disk 4
66  RCC  0.0000  0.0000  252.7300  0.0000  0.0000  1.2700  16.8529    $ Intermediate Disk 5
67  RCC  0.0000  0.0000  303.5300  0.0000  0.0000  1.2700  16.8529    $ Top Disk
68  RCC  0.0000  0.0000  -1.2701  0.0000  0.0000  310.5152  16.8530    $ Basket Outline
69  RCC  0.0000  0.0000  0.0000  0.0000  0.0000  309.2450  3.1902    $ Tube Outline
C Surfaces - LWT Cask Accident Conditions
201  RCC  0.0000  0.0000  -26.6700  0.0000  0.0000  507.3650  36.5189  $ Lwt
202  RCC  0.0000  0.0000  -26.6700  0.0000  0.0000  26.6700  36.5189  $ Bottom
203  RCC  0.0000  0.0000  0.0000  0.0000  0.0000  452.1200  16.9863  $ Cavity
204  RCC  0.0000  0.0000  -17.7800  0.0000  0.0000  7.6200  26.3525  $ Bottom gamma shield
205  RCC  0.0000  0.0000  0.0000  0.0000  0.0000  444.5000  20.1740  $ Lead id - taper
206  RCC  0.0000  0.0000  0.0000  0.0000  0.0000  444.5000  31.5976  $ Lead od - taper
207  RCC  0.0000  0.0000  13.8176  0.0000  0.0000  416.8648  18.9103  $ Lead id
208  RCC  0.0000  0.0000  13.8176  0.0000  0.0000  416.8648  33.3271  $ Lead od
209  RCC  0.0000  0.0000  13.8176  0.0000  0.0000  416.8648  33.4645  $ Lead gap
210  RCC  0.0000  0.0000  -46.6700  0.0000  0.0000  547.3650  56.5189  $ Container

C
C Materials List
C
C - wt%
m1  92235.69c  -2.0590E-01
       92238.69c  -1.3143E-02
       13027.62c  -7.8095E-01
C Aluminum
m2  13027.62c  -1.0
C Tube Cavity Water
m3  1001.62c  6.6667E-01  8016.62c  3.3333E-01
mt3  lwtr.60t
C Cask Cavity Water
m4  1001.62c  6.6667E-01  8016.62c  3.3333E-01
mt4  lwtr.60t
C Stainless Steel 304
m5  26000.55c  -0.695  24000.50c  -0.190  28000.50c  -0.095
       25055.62c  -0.020
C Lead
m6  82000.50c  -1.0
C Aluminum Honeycomb Impact Limiter
m7  13027.62c  -1.0
C Water/Glycol - Cask Neutron Shield
m9  1001.62c  -1.03651E-01  8016.62c  -6.75619E-01  6000.66c  -2.20730E-01
C Cask Exterior (Water at Various Densities)
m8  1001.62c  6.6667E-01  8016.62c  3.3333E-01
mt8  lwtr.60t
C
C Cell Importances
imp:n 1 75r 0
c
c Criticality Controls
c
kcode  2000  1.00  30  530
c
c Source Distribution for Initial Generation
SDEF  CEL=  202:D4:51:D5:2
       ERG=  D1
       POS=  0.0000  0.00  8.8899
       RAD=  D2
       AXS=  0.00  0.00  1.00
       EXT=  D3
C - Neutron Source Energy Source Distribution
#          SP1
       -3
C - Uniform Radial Distribution in Fuel Rod
#  SI2  SP2
```

Figure 6.7.3 -19 Sample NRU MCNP5 Input File for Accident Conditions (Continued)

```
       0.0000  -21
       0.2743  1
C - Axial Source Profile
#  SI3  SP3
       0  0.0
       274  1.0
C - 18 Tubes in Cask
#     SI4         SP4
           l         d
       61  1
       62  1
       63  1
       64  1
       65  1
       66  1
       67  1
       68  1
       69  1
       70  1
       71  1
       72  1
       73  1
       74  1
       75  1
       76  1
       77  1
       78  1
C - Rods Per Assembly
#     SI5         SP5
           l         d
       11  1
       12  1
       13  1
       14  1
       15  1
       16  1
       17  1
       18  1
       19  1
       20  1
       21  1
       22  1
*TR1  6.3810 0.0000 0.0000 0 90 90 -90 0 90 90 90 0
*TR2  3.1905 5.5261 0.0000 0 90 90 -90 0 90 90 90 0
*TR3  -3.1905 5.5261 0.0000 0 90 90 -90 0 90 90 90 0
*TR4  -6.3810 0.0000 0.0000 0 90 90 -90 0 90 90 90 0
*TR5  -3.1905 -5.5261 0.0000 0 90 90 -90 0 90 90 90 0
*TR6  3.1905 -5.5261 0.0000 0 90 90 -90 0 90 90 90 0
*TR7  11.9071 3.1905 0.0000 0 90 90 -90 0 90 90 90 0
*TR8  8.7166 8.7166 0.0000 0 90 90 -90 0 90 90 90 0
*TR9  3.1905 11.9071 0.0000 0 90 90 -90 0 90 90 90 0
*TR10  -3.1905 11.9071 0.0000 0 90 90 -90 0 90 90 90 0
*TR11  -8.7166 8.7166 0.0000 0 90 90 -90 0 90 90 90 0
*TR12  -11.9071 3.1905 0.0000 0 90 90 -90 0 90 90 90 0
*TR13  -11.9071 -3.1905 0.0000 0 90 90 -90 0 90 90 90 0
*TR14  -8.7166 -8.7166 0.0000 0 90 90 -90 0 90 90 90 0
*TR15  -3.1905 -11.9071 0.0000 0 90 90 -90 0 90 90 90 0
*TR16  3.1905 -11.9071 0.0000 0 90 90 -90 0 90 90 90 0
*TR17  8.7166 -8.7166 0.0000 0 90 90 -90 0 90 90 90 0
*TR18  11.9071 -3.1905 0.0000 0 90 90 -90 0 90 90 90 0
*TR21  0.0 0.0 0.0 60 150 90 -30 60 90 90 90 0    $ z-rotation 60 degrees
*TR22  0.0 0.0 0.0 90 180 90 0 90 90 90 90 0    $ z-rotation 90 degrees
*TR23  0.0 0.0 0.0 -60 30 90 -150 -60 90 90 90 0    $ z-rotation -60 degrees
C Print Control
prdmp  -30 -60 1 2
print
C Random Number Generator
rand  gen=2  seed=19073486328125  stride=152917  hist=1
```

Figure 6.7.3-20 NRU HEU Sample Model for Rod Section Removal

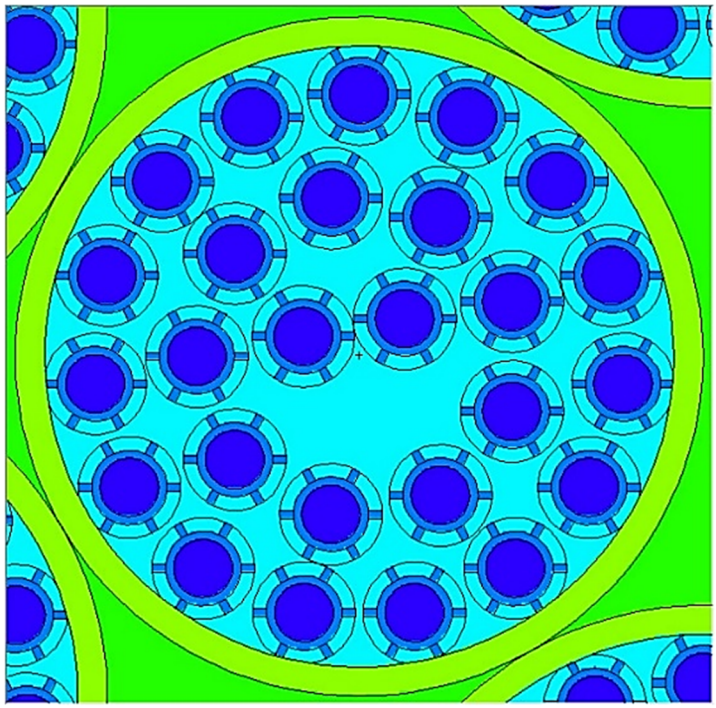

Note: Case shown is for removal of 1 interior rod.

Figure 6.7.3-21 Sample Model Images (VISED) for Clad Removed in Fuel Center Region (All Rods Clad Removed)

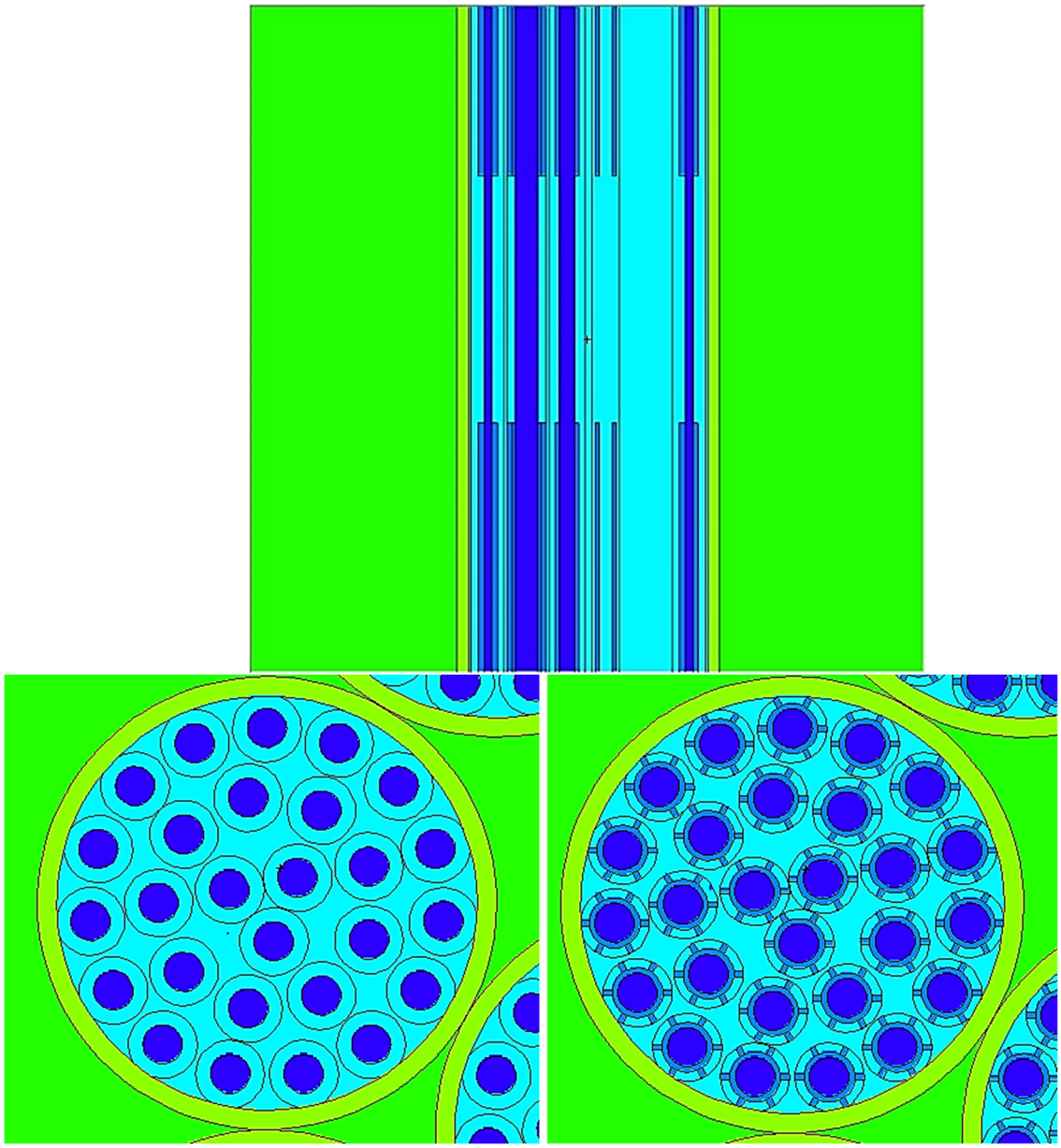

Note: Left elevation shows model at clad removed and right at elevation with clad.

Figure 6.7.3-22 Sample Model Images (VISED) for Clad Removed on Center Fuel Rod Only (X-Y Slice)

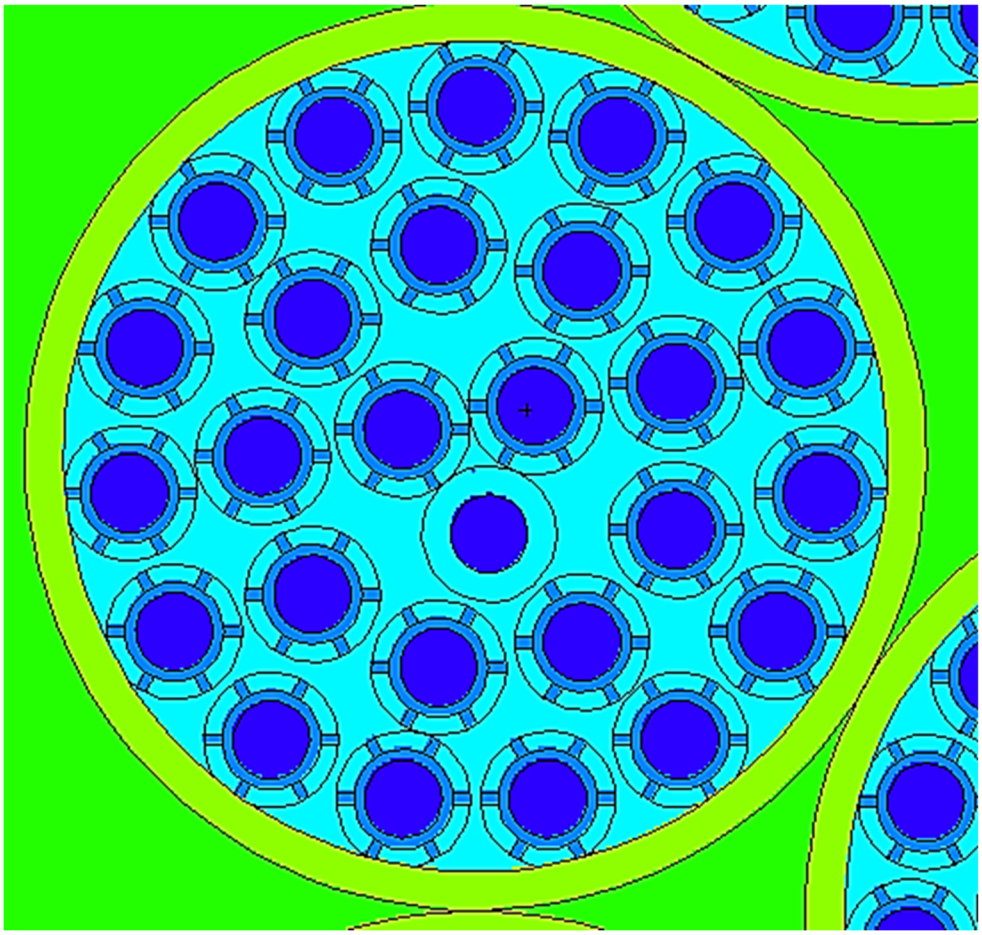

Figure 6.7.3-23 Sample Model Image (VISED) X-Y Slice for Caddy Model NRU HEU

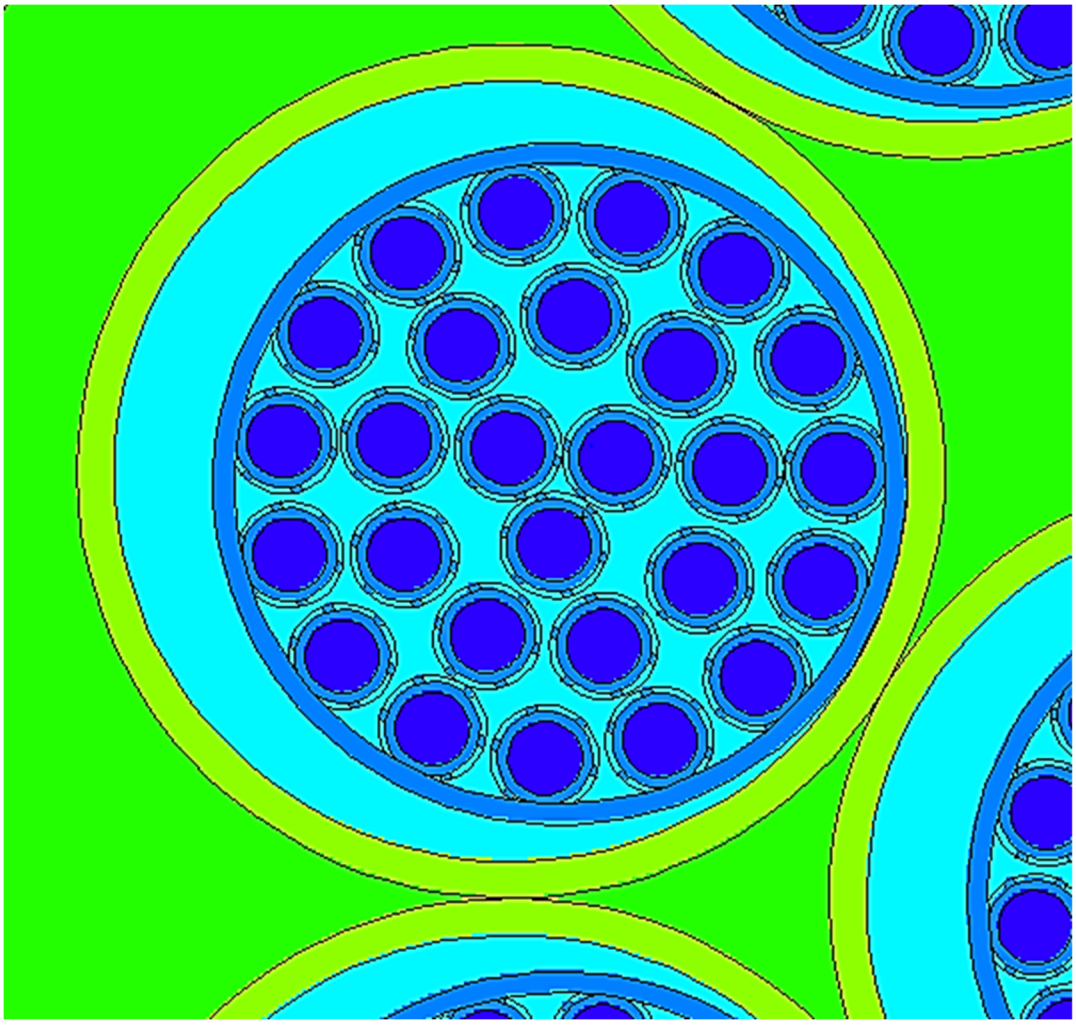

Note: Fuel evaluation with clad shown. The view in all caddy models evaluated are identical at the clad/fuel elevation. Differences are limited to the "no clad" elevations/locations.

Table 6.7.3-1 NRU/NRX Fuel Characteristics

Description		NRU [HEU]	NRX	NRU [LEU]
Fuel Rod Height	cm	291	293	291
Top End Plug Height	cm	9.6	11.1125	9.6
Bottom End Plug Height	cm	9.9	11.1125	9.9
End Plug OD	cm	0.5486	0.635	0.5486
Active Length	cm	274	274	274
Rod Diameter	cm	0.955	1.04	0.955
Clad Thickness	cm	0.0762	0.0762	0.0762
Fuel Meat Diameter	cm	0.5486	0.635	0.5486
Fuel Assembly Height	cm	291	321	291
Fuel Assembly OD	cm	4.98	3.5	4.98
Flow Tube Thickness	cm	0.1778	0.1778	0.1778
Number of Fuel Rods		12	7	12
Mass 235U [Rod]	g	41.36	78.68	43.68
Mass U [Rod]	g	44	83.7	208
Mass Fuel Meat [Rod]	g	210	276.7	
Clad Fin Thickness	cm	0.0762	0.0762	0.0762
Clad Fin Length	cm	0.1270	0.1270	0.1270

Table 6.7.3-2 NRU/NRX Evaluated Fuel Parameters

Description		NRU [HEU]	NRX	NRU [LEU]
Fuel Rod Height	cm	291	291	291
Top End Plug Height	cm	8.89	8.89	8.89
Bottom End Plug Height	cm	8.89	8.89	8.89
End Plug OD	cm	0.5486	0.635	0.5486
Active Length	cm	274	274	274
Rod Diameter	cm	0.955	1.04	0.955
Clad Thickness	cm	0.0762	0.0762	0.0762
Fuel Meat Diameter	cm	0.5486	0.635	0.5486
Fuel Assembly Height	cm	291	291	291
Fuel Assembly OD	cm	4.98	3.5	4.98
Flow Tube Thickness	cm	0.1778	0.1778	0.1778
Number of Fuel Rods		12	7	12
Mass 235U [Rod]	g	43.24	79.05	43.68
Mass U [Rod]	g	46	84.1	208
Mass Fuel Meat [Rod]	g	210	276.7	349.1

Table 6.7.3-3 NRU/NRX Basket and Cask Parameters

Description	Dimension [in]
Fuel tube outer diameter	2.5
Fuel tube wall thickness (stainless steel)	0.065
Fuel tube outer diameter tolerance	±0.012
Fuel tube thickness tolerance	±10%
Caddy Outer Diameter	2.0
Caddy Wall Thickness	0.065
Caddy Outer Diameter Tolerance	0.005
Caddy Wall Thickness Tolerance	0.004
Outer ring tube location diameter	9.78
Inner ring tube location diameter	5.06
Fuel basket outer diameter	13.27
Fuel basket disc thickness (stainless steel)	0.5
Cask cavity diameter	13.375
Lead shield inner diameter	14.89
Lead shield outer diameter	26.35
Lead shield outer diameter of taper	24.88
Cask outer diameter	28.755
Cask lid thickness	11.25
Bottom forging thickness	10.5
Bottom forging lead insert diameter	20.75
Bottom forging lead insert thickness	3
Offset bottom of cask to lead	3.5
Neutron shield thickness	5
Neutron shield tank skin	0.236

Table 6.7.3-4 Composition Densities Used in Criticality Analysis of NRU/NRX Fuel

Material	NRU HEU U-Al	NRX HEU U-Al	NRU LEU U-AlSi
Density, gm/cc	3.2419	3.1888	5.3899
Nuclide	Atoms/barn-cm		
Uranium 235	1.636E-3	2.323E-3	1.728E-3
Uranium 238	1.031E-4	1.464E-4	6.417E-3

Material	Al Clad	H_2O	304 Stainless Steel	Pb	H_2O/ Glycol
Density, gm/cc	2.702	0.998	7.920	11.344	0.9669
Nuclide	Atoms/barn-cm				
Aluminum	6.031E-2				
Oxygen		3.338E-2			2.459E-2
Hydrogen		6.675E-2			5.988E-2
Iron			5.936E-2		
Chromium			1.743E-2		
Nickel			7.721E-3		
Manganese			1.736E-3		
Lead				3.299E-2	
Carbon					1.070E-2

Table 6.7.3-5 NRU Manufacturing Tolerance Study

Tube Tolerance		k_{eff}	σ	k_{eff} + 2σ	Δ(k_{eff} + 2σ)/σ
Thickness	OD				
Nom	Nom	0.90919	0.00080	0.91079	--
Nom	Min	0.90912	0.00077	0.91066	-0.1
Nom	Max	0.90981	0.00082	0.91145	0.6
Min	Nom	0.92474	0.00083	0.92640	13.5
Max	Nom	0.89374	0.00079	0.89532	-13.8
Min	Max	0.92398	0.00081	0.92560	13.0

Table 6.7.3-6 Maximum Reactivity Summary

Description	Cask Configuration (Single / Array)	k_{eff} +2σ
10 CFR 71.55	Single Cask – Normal Conditions	0.92525
	Single Cask - Accident Conditions	0.92560
10 CFR 71.59	Infinite Array – Normal Conditions	0.07690
	Single Cask "Array" - Accident Condition	0.92560

Table 6.7.3-7 Cask Fuel Conditions for Maximum System Reactivity

	10 CFR 71.55		10 CFR 71.59	
Condition	Normal	Accident	Normal	Accident
Fuel Type	NRU HEU	NRU HEU	NRU HEU	NRU HEU
Fuel Enrichment	94wt% ^{235}U	94wt% ^{235}U	94wt% ^{235}U	94wt% ^{235}U
Fuel Condition	Broken Rods	Broken Rods	Broken Rods	Broken Rods
Cask/Array	Single Cask	Single Cask	Infinite Array	Single Cask
Neutron Reflection	20 cm Water	20 cm Water	N/A[2]	20 cm Water
Neutron Shield	Yes	No	Yes[1]	No
Cask Lead / Outer Steel Shell	Yes	Yes	Yes[1]	Yes
Fuel Tube Interior Moderator	0.9982 g/cm^3	0.9982 g/cm^3	0 g/cm^3	0.9982 g/cm^3
Fuel Tube Exterior Moderator	0.9982 g/cm^3	0.9982 g/cm^3	0 g/cm^3	0.9982 g/cm^3
Cask Exterior Moderator	0.9982 g/cm^3	0.9982 g/cm^3	N/A[2]	0.9982 g/cm^3

Notes:

1.) Section 6.7.3.7 demonstrates that removing cask material outside the containment boundary (cask inner shell) reduces system reactivity.

2.) MCNP reflective boundary condition is applied to the cask surface.

Table 6.7.3-8 NRU Most Reactive Case Rod Removal

# Rods Removed	Rod Removed Location	keff	σ	keff + 2σ	Δ(keff + 2σ)	Δ(keff + 2σ)/σ_{Δ}^{*}
Base	N/A (0%)	0.92398	0.00081	0.92560	--	--
Base (Inc. NPS)	N/A	0.92537	0.00025	0.92587	--	--
1	Interior	0.92624	0.00024	0.92672	0.00085	2.5
1	Middle Ring	0.92352	0.00025	0.92402	-0.00185	-5.2
1	Outer Ring	0.91622	0.00025	0.91672	-0.00915	-25.9
3	Spaced Middle Ring	0.91967	0.00024	0.92015	-0.00572	-16.5
5	Inner/Outer	0.88395	0.00025	0.88445	-0.04142	-117.2

$^{*}\sigma_{\Delta} = \mathrm{sqrt}(\sigma_{base}^{2}+\sigma_{modified}^{2})$

Note: NPS increase reduces uncertainty and allows the study of reactivity effects that otherwise may be lost within the statistical uncertainty of the Monte Carlo analysis.

Table 6.7.3-9 NRU HEU Base Results From Undamaged Analysis Plus Caddy Impact

Case	k_{eff}	σ	$k_{eff}+2\sigma$
12 Rods – Nominal Basket Dim. – Nominal Fuel – No Caddy	0.68227	0.00073	0.68373
12 Rods - Nominal Basket Dim. – Shifted Rods – No Caddy	0.74793	0.00071	0.74935
27 Rod Segments – Nominal Basket Dim. – No Caddy	0.90919	0.00080	0.91079
27 Rod Segments -- Max Reactivity Dim. – No Caddy	0.92398	0.00081	0.92560
27 Rod Segments – Max Reactivity Dim. - Caddy	0.84805	0.00075	0.84955

Note: Only the rod segment caddy case was generated in this calculation. All remaining results were obtained from the undamaged fuel assembly analysis.

Table 6.7.3-10 NRU HEU Results – Loss of Clad Evaluations

Case	Clad Removed	k_{eff}	σ	$k_{eff}+2\sigma$	$\Delta(k_{eff}+2\sigma)$	$\Delta(k_{eff}+2\sigma)/\sigma$
Base	N/A (0%)	0.92398	0.00081	0.92560	--	--
Base - Increase Samples	N/A (0%)	0.92537	0.00025	0.92587	--	--
1 Rod No Clad	3.7%	0.92859	0.00026	0.92911	0.00324	9.0
2 Rods No Clad	7.4%	0.93230	0.00025	0.93280	0.00693	19.6
All Rods Middle 5% Clad Removal	5%	0.93281	0.00025	0.93331	0.00744	21.0
All Top and Bottom 2.5% Removal	5%	0.92543	0.00025	0.92593	0.00006	0.2
All Rods Top 5% Clad Removal	5%	0.92568	0.00024	0.92616	0.00029	0.8
All Rods Middle 1% Clad Removal	1%	0.92626	0.00024	0.92674	0.00087	2.5
All Rods Middle 2% Clad Removal	2%	0.92754	0.00025	0.92804	0.00217	6.1
All Rods Middle 3% Clad Removal	3%	0.92937	0.00024	0.92985	0.00398	11.5
All Rods Middle 4% Clad Removal	4%	0.93064	0.00025	0.93114	0.00527	14.9
1 Rod Segment No Clad Mid 25%	0.93%	0.92677	0.00026	0.92729	0.00142	3.9
1 Rod Segment No Clad Mid 50%	1.9%	0.92792	0.00025	0.92842	0.00255	7.2
1 Rod Segment No Clad Mid 75%	2.8%	0.92857	0.00025	0.92907	0.00320	9.1
All Rods Middle 2% Clad Removal Plus Caddy	2%	0.84880	0.00056	0.84992	--	--
1 Rod Segment No Clad Mid 50% Plus Caddy	1.9%	0.84878	0.00057	0.84992	--	--

6.7.4 HEUNL

This section includes input, analysis method, and results for the NAC-LWT cask containing a payload of four HEUNL containers. The transport package is evaluated in compliance with 10 CFR 71.59 and 10 CFR 71.55. The evaluation considers an H/U study, shift study, moderator study, and container tolerance study.

6.7.4.1 Package Fuel Loading

Four HEUNL containers may be loaded into the NAC-LWT. The HEUNL material consists of uranyl nitrate, various other nitrates, and water. Composition of the HEUNL material is provided in Table 6.7.4-1. The evaluated nitrate contents are further detailed in Table 6.7.4-2. The HEUNL material density at 25°C is 1.30 g/cc.

The actual and modeled actinide concentrations are listed in Table 6.7.4-3. The HEUNL is conservatively modeled by increasing the ^{235}U partial density to 7.2 g/L. ^{234}U and ^{236}U are conservatively modeled as ^{238}U. ^{234}U (σ_t = 116 b) and ^{236}U (σ_t = 14.1 b) have higher absorption cross-sections than ^{238}U (σ_t = 12.2 b). Removing absorption from the criticality model is conservative. The evaluated ^{235}U partial density bounds all provided design input for the processed material. Additional analysis is performed for the target material initial enrichment. This additional analysis increases enrichment to 93.4 wt. % at a ^{235}U partial density of 7.40 g/L.

The HEUNL solution contains a negligible amount of ^{237}Np, ^{239}Pu, and ^{240}Pu. These isotopes are less than 0.001 wt. % of the solution and are therefore excluded from the MCNP model. Removal from the criticality evaluation will have a negligible effect.

The evaluated isotopic content for the HEUNL material is listed in Table 6.7.4-4. Critical properties for the HEUNL criticality evaluation are summarized in Table 6.7.4-5.

The water content of the solution is calculated using the solution density and nitrate inventory. The calculated water content is approximately 68 wt. %. The criticality analysis includes the uranyl nitrate at various geometries with water intrusion in the material lattice for optimal moderation. For the fissile material geometry study, a bounding container cavity volume of 17.0 gal (64.3 L) is applied. Due to void volume in the container that allows HEUNL thermal expansion, actual container capacity is less. For the initial nominal studies, a standard fill using the modeled container cavity volume is applied. The nominal case is bounded by the optimal fissile material geometry.

6.7.4.2 Criticality Model Specifications

This section describes the models that are used in the criticality analyses for the NAC-LWT cask containing four HEUNL containers. The models are analyzed separately under normal

conditions and hypothetical accident conditions to ensure that all possible configurations are subcritical.

Each model uses the MCNP5 v1.60 code package with the cross-section libraries validated for highly enriched uranyl nitrates (see Section 6.5.7). No cross-section pre-processing is required prior to MCNP use. MCNP uses the Monte Carlo technique to calculate the k_{eff} of a system.

Description of Calculational Models

Four HEUNL containers are modeled in the NAC-LWT. The containers and cask are modeled as described in the license drawings. Tube quick disconnect fittings, the bottom portion of the container outer shell that rests on the shoulder and axially overlaps the container and neck, and base plate are conservatively omitted from the shielding model. Removal of stainless steel, an absorption material, is conservative for the criticality evaluation.

Containers are shifted towards the top of the cask cavity. Axial location of the containers will have a negligible effect on the criticality evaluation. For all configurations, containers are modeled as touching to increase neutronic coupling. No evaluation of potential separation of containers with moderation is necessary as the optimal H/U ratio is established in the maximum reactivity configuration studies. Increased separation would only increase neutron leakage.

[redacted] The flat configuration will have negligible effects on the criticality evaluation as a bounding container cavity volume is applied.

The criticality evaluation considers both normal and accident conditions. The accident conditions of transport include the loss of neutron shielding material, the neutron shield shell, and the impact limiters.

The geometric description of a MCNP model is based on the combinatorial geometry system embedded in the code. In this system, bodies such as cylinders and rectangular parallelepipeds and their logical intersections and unions are used to describe the extent of material zones.

Detailed model parameters used in creating the three-dimensional model are derived from the license drawings. Elevations associated with the three-dimensional features are established with respect to the center bottom of the NAC-LWT cask cavity for the MCNP combinatorial model.

The three-dimensional NAC-LWT MCNP models are shown in Figure 6.7.4-1 through Figure 6.7.4-3, while sketches are shown in Figure 6.7.4-4 through Figure 6.7.4-6. Select container dimensions critical to the MCNP model are listed in Table 6.7.4-6.

Package Regional Densities

The composition densities (g/cc) and nuclide number densities (atm/b-cm) evaluated in subsequent criticality analyses are shown in Table 6.7.4-7.

6.7.4.3 Criticality Calculations

This section presents the criticality analyses for the NAC-LWT cask with HEUNL containers. Criticality analyses are performed to satisfy the criticality safety requirements of 10 CFR Parts 71.55 and 71.59, as well as IAEA SSR-6.

The maximum reactivity configuration is determined by implementing a series of studies. The series of studies are designed to meet 10 CFR 71.55 (b) and (e) requirements on normal and accident condition single casks. The single cask analysis by regulation must consider a fully water reflected package and be at optimum physical configuration and moderation. Each study will retain the maximum reactivity configuration from the previous study.

After the single cask analysis is complete, cask array analysis is performed to meet 10 CFR 71.59 requirements. Per the standard review plan (NUREG-1617) the 10 CFR 71.59 requirements are met by evaluating a cask array with dry cask interior and cask exterior for normal condition and optimum interior and exterior moderated array for accident conditions (see Sections 6.5.5 and 6.5.6 in NUREG-1617). [redacted] As the HEUNL containing cask array is evaluated as an infinite array, the exterior to the array condition is not applicable.

[redacted]

10 CFR 71.55 Scoping Calculation

In compliance with 10 CFR 71.55 the scoping calculations are based on a single cask with a 20 cm boundary from the cask exterior dimensions. The space between cask and boundary is flooded with full density water to produce a fully water reflected system.

Initial scoping analysis evaluates cask interior flooding conditions. Due to the system containing little cavity volume for moderation, flooding conditions have negligible effects on reactivity. Normal and accident configuration casks are expected and are confirmed to be similar from a neutronics perspective. Geometry differences are limited to the presence/absence of the neutron shield. For a fully water reflected cask, differences in neutron tracking between the models are those associated with ethyl glycol/water in the first 5 inches of reflector and Monte Carlo differences for tracking through the additional reflector.

Table 6.7.4-8 contains a summary of the scoping results. Maximum reactivity is obtained by a void cask interior. Either normal or accident condition cask geometry can be chosen for the following evaluations without a statistically significant difference in result. For this calculation the accident condition cask geometry was chosen.

10 CFR 71.55 Uranyl Nitrate H/U Study

As shown in the scoping analysis, the nominal HEUNL solution k_{eff} is below limits. The nominal HEUNL solution is defined for this criticality evaluation as the loaded solution. The worst case configuration for the HEUNL includes all non-fissile nitrates precipitating out from the solution leaving only a uranyl nitrate-water mixture.



[redacted]

10 CFR 71.55 Uranyl Nitrate Shift and Cask Cavity Moderator Study

[redacted]

10 CFR 71.55 Optimum Tolerance Studies



Results for the tolerance study are shown in Table 6.7.4-14. The tolerance results show no statistically significant increase for any tolerance. Therefore, tolerances will not be applied in the maximum configuration.

MCNP Validated Libraries

The MCNP models use the cross-section libraries validated for highly enriched uranyl nitrates (see Section 6.5.7). The evaluated libraries are listed in Table 6.7.4-20.

The ZAID library for lead, 82000.50c, was not included in the MCNP validation highly enriched uranyl nitrates. Lead is used as a shield material in the NAC-LWT MCNP model. Exterior reflector material validation is not a significant issue for moderated systems where fuel region neutronic interaction, not reflection, is the primary reactivity driver.

The ZAID library for mercury, 80000.42c, was not included in the MCNP validation of highly enriched uranyl nitrates. Mercury is a strong absorber with capture cross section, σ_γ, of 376 b. Therefore, mercury is replaced in the MCNP model with aluminum (σ_γ = 0.23 b) to account for

the lack of validation for mercury. The previously established maximum reactivity configuration is retained for this study. As shown in Table 6.7.4-15, removal of mercury statistically increases system reactivity.

All other evaluated libraries are accounted for in the validation.

10 CFR 71.55 Maximum Reactivity Summary

Based on the previous studies, the following conditions are bounding for the maximum reactivity configuration:

- Uranyl nitrate – water mixture in [redacted]
- Uranyl nitrate – water mixture optimally moderated
- Uranyl nitrate mixtures shifted in alternating configuration
- Dry cask cavity
- Mercury removed from model

Maximum system reactivities are determined with this maximum reactivity configuration under normal (neutron shield present) and accident (no neutron shield) conditions. As seen in Table 6.7.4-16, the maximum reactivity is 0.8952 and below the USL of 0.9366.

10 CFR 71.55 (b) (3) requires an evaluation of the NAC-LWT with the containment system fully reflected by water. The containment for the NAC-LWT is the cask inner shell. While no operating condition results in a removal of the cask outer shell and lead gamma shield, the most reactive case is re-evaluated by removing the lead and outer shells (including neutron shield), and reflecting the system by water at full density. Using the maximum reactivity configuration, the calculated $k_{eff}+2\sigma$ is 0.86235, which is significantly below that of the full cask water reflected model (i.e., neutron reflection produced by the lead gamma shield and outer steel cask shell produces a higher reactivity system than that produced by a water reflector.

10 CFR 71.59 Maximum Reactivity Summary

10 CFR 71.59 (a) (1) requires the evaluation of five times "N" normal condition packages. 10 CFR 71.59 (a) (2) requires the evaluation of two times "N" accident condition packages with optimum moderation. Both normal and accident conditions specified by the CFR are satisfied with the maximum reactivity configuration defined for the 10 CFR 71.55 evaluation. The model is modified by applying a reflecting surface at the cask exterior surface. This option produces an infinite array of casks. As seen in Table 6.7.4-17, while slightly increasing system reactivity above that of a single cask, both results are below the USL of 0.9366.

The resulting CSI for an infinite array of NAC-LWT casks with HEUNL is 0.

Water Reflector and Canister Dimensions



Increased Enrichment Evaluation

Previous analyses were based on measured uranium concentrations for the processed material. The analysis in this section applies the maximum initial enrichment of the target material, 93.4 wt. %. The partial density of ^{235}U is also increased from 7.20 g/L to 7.40 g/L. The modeled H/U ratio is slightly reduced from 547 to 533 for this model due to the changes in ^{235}U concentration (i.e., the sphere radius is held constant). All H/U ratios for the HEUNL evaluations and the validation in Section 6.5.7 for uranyl nitrates are in terms of moderator to fissile ratio (^{235}U). The evaluated HEUNL properties for the increased enrichment are provided in Table 6.7.4-21.

The 30 cm water reflector and increased container length are retained for this evaluation. Results for the 10 CFR 71.55 (b) and (e) evaluations are listed in Table 6.7.4-22. Results for the 10 CFR 71.59 (a) evaluations are listed in Table 6.7.4-23. For the 10 CFR 71.55 (b) (3) evaluation, the reactivity is calculated to be 0.8722. All results remain under the USL of 0.9366.

6.7.4.4 Code Validation and Area of Applicability

Critical benchmarks and USL are discussed in detail in Section 6.5.7. The following evaluates the applicability of the USL to HEUNL.

The area of applicability (AoA) for the validation is compared to the system parameters for the NAC-LWT with HEUNL most reactive case. The USL, 0.9366, used for this calculation is based on the energy of the average neutron lethargy causing fission (EALCF). Table 6.7.4-18 shows the validated range of EALCF. The USL for the validation is the minimum USL from the EALCF range. The EALCF for the most reactive HEUNL case is 0.04 eV and is within the validation range.

Exceeding the area of applicability for enrichment of the benchmark cases is acceptable as the parameter has a trend that is statistically insignificant (R = 0.05) and the difference outside the range is small (0.18 wt. %) relative to the margin to the USL (> 0.02).

6.7.4.5 Allowable Cask Loading

Based on the results of the previous sections, loading of 4 HEUNL containers is allowed in the NAC-LWT. Maximum content of the container is limited to 17 gallons of solution with a maximum 7.40 g ^{235}U per liter. The transport package has been found to be in compliance with 10 CFR 71.59 and 10 CFR 71.55. The maximum reactivity, including two sigma, of 0.9137 for the transport package is subcritical. This evaluation has considered an H/U study, shift study, moderator study, and container tolerance study. The transport package has been designated a CSI of 0.

Figure 6.7.4-1 VISED X-Z Cross-Section of NAC-LWT with HEUNL



Figure 6.7.4-2 VISED X-Z Cross-Section of HEUNL Container Detail



Figure 6.7.4-3 VISED X-Y Cross-Section of NAC-LWT with HEUNL



Figure 6.7.4-4 Axial Sketch of NAC-LWT with HEUNL

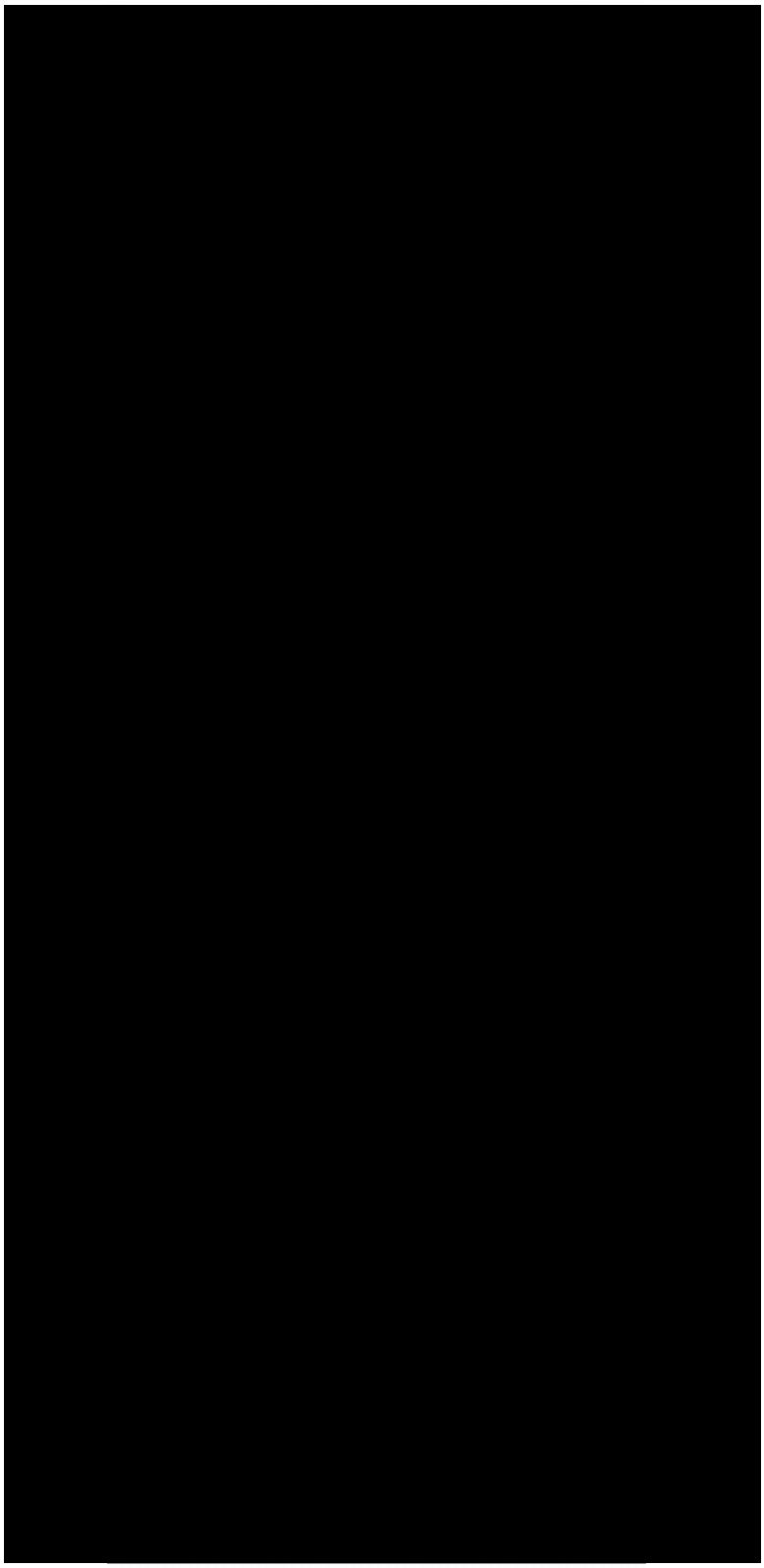

Figure 6.7.4-5 Radial Sketch of NAC-LWT with HEUNL



Figure 6.7.4-6 Axial Sketch of HEUNL Container



Figure 6.7.4-7 Reactivity Results by HEUNL [redacted] H/U Ratio



Figure 6.7.4-8 Reactivity Results by HEUNL [redacted] H/U Ratio



Figure 6.7.4-9 VISED X-Z Cross-Section of HEUNL with Alternating Shift



Figure 6.7.4-10 VISED X-Z Cross-Section of HEUNL with Inward Shift



Figure 6.7.4-11 Cask Cavity Moderator Study Reactivity Results for HEUNL

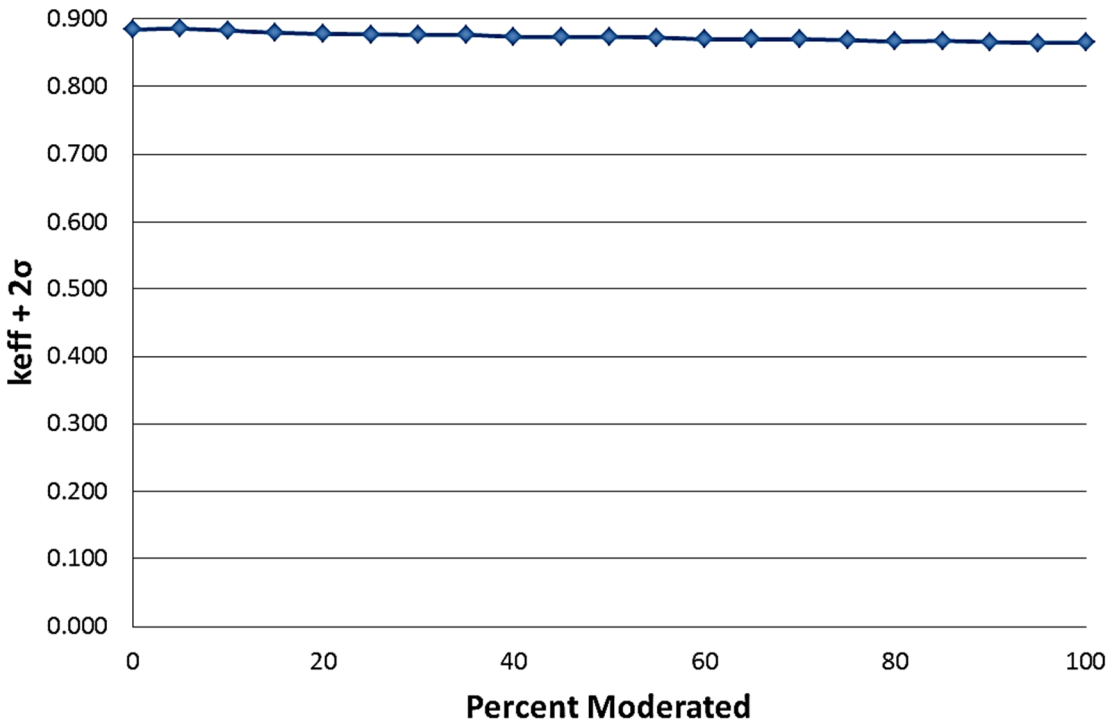

Table 6.7.4-1 Composition of HEUNL Solution

Chemical Compound	Concentration (mol/L)	Concentration of Metal Ion (g/L)
HNO_3	0.96	N/A
$Al(NO_3)_3$	1.5	40.5
$Hg(NO_3)_2$	0.053	10.6
$Fe(NO_3)_3$	0.019	1.06
$Cr(NO_3)_3$	0.005	0.26
$Ni(NO_3)_2$	0.003	0.18

Note: The listed material compositions are references for input generation. Variations in compositions are not of criticality safety significance.

Table 6.7.4-2 HEUNL Evaluated Model Composition

				Concentration (g/L)			
Solution	Metal Ion	mol/L	A_r (metal)	Ion	N	O	Solution
HNO_3	H	0.96	1.00794	0.97	13.45	46.06	60.48
$Al(NO_3)_3$	Al	1.5	26.982	40.5	63.03	215.92	319.42
$Hg(NO_3)_2$	Hg	0.053	200.59	10.6	1.48	5.09	17.20
$Fe(NO_3)_3$	Fe	0.019	55.845	1.06	0.80	2.73	4.59
$Cr(NO_3)_3$	Cr	0.005	51.9961	0.26	0.21	0.72	1.19
$Ni(NO_3)_2$	Ni	0.003	58.6934	0.18	0.08	0.29	0.55
$UO_2(NO_3)_2$	U	0.0337	235.1738	7.925	0.94	4.31	13.18
				Total:	80.00	275.12	416.61

Note: As discussed in the note to Table 6.7.4-2, the specific compositions listed for the solution is a reference data set not important to the safety conclusions drawn in this chapter.

Table 6.7.4-3 HEUNL Actinide Concentration

	DI	Modeled	
Nuclide	Conc. (g/L)	Conc. (g/L)	wt. %
^{234}U	1.23E-01	--	--
^{235}U	7.00E+00	7.20E+00	90.85%
^{236}U	1.53E-01	--	--
^{238}U	4.49E-01	7.25E-01	9.15%

Note: Listed material compositions as design input are references for input generation. They represent starting values modified through analysis (e.g., removal of ^{234}U and ^{236}U and adjustments in ^{235}U and ^{238}U shown in the table). Variations in solution composition is not of criticality safety significance provided the limits on ^{235}U (g/l and enrichment) listed in Table 6.7.4-21 are met.

Table 6.7.4-4 Evaluated HEUNL Isotopic Composition

Element	Z	A	Conc. (g/L)	wt.%
H	1	1	9.676E-01	0.074%
Al	13	27	4.047E+01	3.113%
Hg	80	NA[1]	1.063E+01	0.818%
Fe	26	NA	1.061E+00	0.082%
Cr	24	NA	2.600E-01	0.020%
Ni	28	NA	1.761E-01	0.014%
N	7	14	8.000E+01	6.154%
O	8	16	2.751E+02	21.163%
U	92	234	1.230E-01	0.009%
	92	235	7.200E+00	0.554%
	92	236	1.530E-01	0.012%
	92	238	4.490E-01	0.035%
Np	93	237	1.720E-04	0.000%
Pu	94	239	5.630E-04	0.000%
	94	240	1.070E-05	0.000%
Total - Nitrates			4.166E+02	32.047%
Water Content				
H	1	1	9.815E+01	7.550%
O	8	16	7.852E+02	60.402%
Total - Water			8.834E+02	67.953%
Total - HEUNL			1.300E+03	100.0%

[1] Natural abundance

Table 6.7.4-5 Evaluated HEUNL Properties

Description	Value
HEUNL volume in cask (L / gal)	257 / 68.0
HEUNL volume in container (L / gal)	64.3 / 17.0
HEUNL mass in cask (kg)	334
HEUNL mass in container (kg)	83.5
Uranyl Nitrate mass in cask (kg)	3.39
Uranyl Nitrate mass in container (kg)	0.848
U concentration (g/L)	7.92
^{235}U concentration (g/L)	7.20
U mass in cask (kg)	2.04
U mass in container (kg)	0.509
^{235}U mass in cask (kg)	1.85
^{235}U mass in container (kg)	0.463

Table 6.7.4-6 HEUNL Container Design Parameters



Table 6.7.4-7 HEUNL Analysis Compositions and Number Densities

Material	U-Al	H_2O	304 Stainless Steel	Pb	Al
Density, g/cc	1.300	0.9982	7.920	11.344	2.702
Density	atoms/b-cm				
Uranium-235	1.845E-05				
Uranium-238	1.834E-06				
Nitrogen	3.439E-03				
Oxygen	3.992E-02	3.340E-02			
Hydrogen	5.922E-02	6.679E-02			
Chromium	3.011E-06		1.747E-02		
Manganese			1.741E-03		
Iron	1.144E-05		5.854E-02		
Nickel	1.807E-06		7.739E-03		
Carbon			3.185E-04		
Silicon			1.702E-03		
Phosphorus			6.947E-05		
Lead				3.297E-02	
Aluminum	1.807E-06				6.030E-02

Table 6.7.4-8 HEUNL Scoping Reactivity Results

Condition	1	2	3	4
Interior	Dry	Wet	Dry	Wet
Exterior	Wet	Wet	Wet	Wet
Condition	Normal	Normal	Accident	Accident
$k_{eff}+2\sigma$	0.3359	0.3277	0.3359	0.3271

Table 6.7.4-9 Sample HEUNL Isotopic Composition for [redacted] Uranyl Nitrate – Water Mixture

Element	Z	A	Conc. (g/L)	Mass (g/container)	wt.%
N	7	14	8.000E+01	6.074E+01	0.577%
O	8	16	2.751E+02	2.774E+02	2.636%
U	92	234	1.230E-01	7.914E+00	0.075%
	92	235	7.200E+00	4.633E+02	4.402%
	92	236	1.530E-01	9.845E+00	0.094%
	92	238	4.490E-01	2.889E+01	0.275%
Total - Nitrates			4.166E+02	8.482E+02	8.059%
Water Content					
H	1	1	9.815E+01	1.075E+03	10.216%
O	8	16	7.852E+02	8.601E+03	81.725%
Total - Water			8.834E+02	9.676E+03	91.941%
Total - HEUNL			1.300E+03	1.052E+04	100.0%

Table 6.7.4-10 HEUNL Reactivity Results for [redacted] of Uranyl Nitrate – Water Mixtures

[redacted]	H/U	$k_{eff}+2\sigma$
		0.3359
4.6	2	0.2329
6.0	29	0.3960
7.8	90	0.5985
9.8	201	0.7514
11.1	302	0.8158
11.6	347	0.8314
12.1	397	0.8437
12.6	451	0.8544
13.0	498	0.8570
13.4	547	0.8618
13.8	600	0.8605
14.2	655	0.8596
14.5	699	0.8560
14.8	745	0.8506
15.1	791	0.8443
15.5	855	0.8348
15.8	903	0.8244
16.4	1003	0.8076
17.5	1197	0.7713

Table 6.7.4-11 HEUNL Reactivity Results for [redacted] of Uranyl Nitrate

Height (cm)	H/U	$k_{eff}+2\sigma$
		0.3359
0.7	3	0.3233
1.4	30	0.3761
3.0	90	0.4779
5.9	200	0.6212
8.5	300	0.7089
9.8	350	0.7405
11.1	400	0.7641
12.5	450	0.7848
13.8	500	0.7989
15.1	550	0.8114
16.4	600	0.8183
17.8	650	0.8229
19.1	700	0.8243
20.4	750	0.8251
21.7	800	0.8251
23.0	850	0.8223
24.4	900	0.8187
27.0	1000	0.8099
32.3	1200	0.7853

Table 6.7.4-12 HEUNL Reactivity Results for Fissile Material Shift Study

	Parameter		k_{eff}	σ	$k_{eff}+2\sigma$
Flooded Cask	[redacted]	Nom	0.8530	0.0009	0.8548
		In	0.8614	0.0009	0.8631
		Alt	0.8628	0.0009	0.8647
		Nom	0.8226	0.0008	0.8243
		In	0.8412	0.0008	0.8429
		Alt	0.8388	0.0009	0.8405
Dry Cask		Nom	0.8598	0.0010	0.8618
		In	0.8814	0.0009	0.8832
		Alt	0.8821	0.0009	0.8838
		Nom	0.8235	0.0008	0.8251
		In	0.8630	0.0009	0.8647
		Alt	0.8631	0.0008	0.8648

Table 6.7.4-13 HEUNL Reactivity Results for Cask Cavity Moderator Study

Density [g/cc]	k_{eff}	σ	$k_{eff} + 2\sigma$	Δk_{eff}/sigma
0.9982	0.8628	0.0009	0.8647	-15.0
0.9500	0.8627	0.0008	0.8644	-15.9
0.9000	0.8637	0.0009	0.8655	-14.2
0.8500	0.8655	0.0010	0.8674	-12.5
0.8000	0.8645	0.0009	0.8663	-13.9
0.7500	0.8667	0.0009	0.8684	-12.3
0.7000	0.8678	0.0009	0.8697	-10.9
0.6500	0.8681	0.0009	0.8698	-11.2
0.6000	0.8679	0.0008	0.8696	-11.7
0.5500	0.8704	0.0009	0.8723	-9.0
0.5000	0.8715	0.0009	0.8733	-8.2
0.4500	0.8711	0.0009	0.8730	-8.4
0.4000	0.8715	0.0009	0.8733	-8.4
0.3500	0.8746	0.0009	0.8763	-6.0
0.3000	0.8744	0.0009	0.8762	-5.9
0.2500	0.8752	0.0009	0.8769	-5.6
0.2000	0.8758	0.0010	0.8777	-4.7
0.1500	0.8774	0.0009	0.8792	-3.6
0.1000	0.8808	0.0009	0.8826	-1.0
0.0500	0.8834	0.0009	0.8852	1.1
0.00	0.8821	0.0009	0.8838	

Table 6.7.4-14 HEUNL Reactivity Results for Container Tolerance Study

Parameter		keff	σ	$k_{eff}+2\sigma$	Δk_{eff}	$\Delta k_{eff}/\sigma$
Container Bottom Thickness	Nom	0.8821	0.0009	0.8838	--	
	Min	0.8818	0.0009	0.8836	-0.0002	-0.2
	Max	0.8829	0.0009	0.8848	0.0010	0.7
Container Length	Nom	0.8821	0.0009	0.8838	--	
	Min	0.8840	0.0009	0.8859	0.0020	1.6
	Max	0.8805	0.0008	0.8821	-0.0017	-1.4
Container Top to Cavity Top Segment Length	Nom	0.8821	0.0009	0.8838	--	
	Min	0.8806	0.0009	0.8824	-0.0014	-1.1
	Max	0.8827	0.0009	0.8844	0.0006	0.4
Container Top to Bottom Plate Length	Nom	0.8821	0.0009	0.8838	--	
	Min	0.8805	0.0008	0.8821	-0.0017	-1.4
	Max	0.8822	0.0009	0.8840	0.0002	0.1

Table 6.7.4-15 HEUNL Reactivity Results for Mercury Removal

Parameter	k_{eff}	σ	$k_{eff}+2\sigma$	Δk_{eff}	$\Delta k_{eff}/\sigma$
Nom	0.8821	0.0009	0.8838	--	--
Removed	0.8932	0.0009	0.8950	0.0112	8.9

Table 6.7.4-16 HEUNL Maximum Reactivity per 10 CFR 71.55

Geometry	k_{eff}	σ	$k_{eff}+2\sigma$
Normal Conditions per 10 CFR 71.55 (b)	0.8935	0.0009	0.8952
Accident Conditions per 10 CFR 71.55 (e)	0.8932	0.0009	0.8950

Table 6.7.4-17 HEUNL Maximum Reactivity per 10 CFR 71.59

Geometry	k_{eff}	σ	$k_{eff}+2\sigma$	CSI
Normal Conditions per 10 CFR 71.59 (a) (1)	0.8947	0.0009	0.8965	0
Accident Conditions per 10 CFR 71.59 (a) (2)	0.9053	0.0009	0.9071	0

Table 6.7.4-18 Validation Area of Applicability Comparison with HEUNL Results

Parameter	Uranyl Nitrate Validation	HEUNL
Fissile Form	Nitrate Solutions	Uranyl Nitrate
Moderator	Light Water, Tap Water, or None	Light Water
H/U Ratio	51.010 to 2050	533
EALCF (eV)	3.06E-02 to 5.26E-01	0.04
Enrichment (wt%)	92.78 to 93.22	93.4

Table 6.7.4-19 HEUNL Reactivity Comparisons for Design Modification and Reflector Dimension Change

Geometry	Baseline Evaluation k_{eff}	Modified Design / Reflector 30 cm k_{eff}	Δk	Δk/σ
Normal Conditions per 10 CFR 71.55 (b)	0.8935	0.8940	0.0005	<1
Accident Conditions per 10 CFR 71.55 (e)	0.8932	0.8935	0.0003	<1
Normal Conditions per 10 CFR 71.59 (a) (1)	0.8947	0.8954	0.0007	<1
Accident Conditions per 10 CFR 71.59 (a) (2)	0.9053	0.9052	0.0001	<1

Table 6.7.4-20 HEUNL Evaluated Libraries

1001.70c	13027.70c	25055.50c	92238.70c
6000.70c	14000.60c	26000.55c	lwtr.10t
7014.70c	15031.70c	28000.50c	80000.42c
8016.70c	24000.50c	92235.70c	82000.50c

Table 6.7.4-21 Evaluated HEUNL Properties for Increased Enrichment

Description	Value
HEUNL volume in container (L / gal)	64.3 / 17.0
Enrichment (wt. %)	93.4
^{235}U concentration (g/L)	7.40
^{235}U mass in container (kg)	0.476

Table 6.7.4-22 HEUNL Maximum Reactivity per 10 CFR 71.55 for Increased Enrichment

Geometry	k_{eff}	σ	$k_{eff}+2\sigma$
Normal Conditions per 10 CFR 71.55 (b)	0.8997	0.0009	0.9014
Accident Conditions per 10 CFR 71.55 (e)	0.9016	0.0009	0.9035

Table 6.7.4-23 HEUNL Maximum Reactivity per 10 CFR 71.59 for Increased Enrichment

Geometry	k_{eff}	σ	$k_{eff}+2\sigma$	CSI
Normal Conditions per 10 CFR 71.59 (a) (1)	0.9019	0.0009	0.9037	0
Accident Conditions per 10 CFR 71.59 (a) (2)	0.9120	0.0009	0.9137	0

6.7.5 SLOWPOKE Fuel Core

This section includes input, analysis method, results, and criticality benchmark evaluations for the NAC-LWT cask containing a payload of the SLOWPOKE fuel core. The SLOWPOKE fuel core may contain up to 298 undamaged SLOWPOKE fuel rods. SLOWPOKE rods are aluminum clad and contain highly enriched uranium in an aluminum matrix material. Rods are located in a hexagonal pitch configuration using an upper and lower aluminum plate into which the rod end plugs are inserted. This section evaluates criticality for a fuel core in a SLOWPOKE fuel core basket. Loose SLOWPOKE rods in canisters are evaluated in Section 6.7.2.

6.7.5.1 Package Fuel Loading

The NAC-LWT cask may transport a SLOWPOKE fuel core. The core is packaged inside the SLOWPOKE fuel core basket. Characteristics of the SLOWPOKE fuel core are presented in Table 6.7.5-1. Key characteristics for the criticality safety evaluation of the SLOWPOKE fuel core package are initial enrichment and fissile material (^{235}U) mass. Maximizing the number of fuel rods, ^{235}U content per rods and ^{235}U enrichment will produce maximum fissile material mass while reducing parasitic absorption in ^{238}U.

6.7.5.2 Criticality Model Specifications

This section describes the models that are used in the criticality analyses for the NAC-LWT cask containing a SLOWPOKE fuel core. The models are analyzed separately under normal conditions and hypothetical accident conditions to ensure that all possible configurations are subcritical. The input file for the maximum reactivity case is provided in Section 6.6.19.

Each model uses the MCNP5 Version 1.30 code package with the ENDF/B-VI cross-section set. No cross-section pre-processing is required prior to MCNP implementation. MCNP uses the Monte Carlo technique to calculate the k_{eff} of a system.

Description of Calculational Models

The base MCNP model of the SLOWPOKE fuel core payload is built using only the SLOWPOKE fuel rod array and basket. Fuel core components not modeled include the center tube and upper and lower plates. These components are considered removed/damaged for modifying the fuel rod pitch and re-arrangement of the rods for maximum reactivity. The upper and lower plates are thin (0.1-inch) aluminum plates that will not significantly influence system reactivity. The center tube is a thin wall (0.043-inch wall thickness) perforated aluminum tube which will also not significantly influence system reactivity.

The fuel rods, basket, cask cavity, and radial shields are explicitly modeled as shown in Figure 6.7.5-1 model sketch. The axial geometry of the basket with SLOWPOKE fuel core is assumed

for all studies. The licensed basket includes a stainless steel lid with two thick plates with a spacer in-between that distances the core from the cask top. The lid mounting plate is 2.5 inches thick, and the lid shield plate is 1.5 inches thick. The modeled lid is 3.5 inches of stainless steel with the fuel core located directly below. This positions the core near the LWT lid which is 11.25 inches of stainless steel reflection. Based on the results of the moderator density studies in Section 6.3.3, there is no moderator between the LWT lid and basket. The stainless steel bottom plate is modeled away from the core. The reflection from the plate (0.50-inch thick) is not significant to the model. The modeled basket is shown to be conservative in Section 6.7.5.3.9.

The model of the NAC-LWT cask takes advantage of the universe structure of MCNP. Each universe defines an infinite space, bounded after its insertion into a containing cell. Four universes are employed herein. The "0" universe defines the cask universe. Each universe is developed independently as surfaces and cells. The basket interior material is defined separately from the cask cavity material to allow preferential flooding to be evaluated (i.e., different density water in the cask and basket cavity).

The modeled accident condition completely removes the neutron shielding, the neutron shield tank, and the cask impact limiters. In the normal conditions model, the impact limiter diameter is modeled as identical to the neutron shield tank diameter. Cask exterior conditions for a single cask evaluation are shown to have negligible impact in Section 6.7.5.3.1. For the 10 CFR 71.59 normal condition array evaluation, the reduced diameter allows a more closely packed array.

Sample VISED sketches of the assembled geometry are shown in Figure 6.7.5-2 and Figure 6.7.5-3. Additional fuel rod arrangements are evaluated in Section 6.7.5.3.2. The cask outer surface is surrounded by a cylindrical body with the option of applying reflecting boundary conditions. For single cask analysis, the cask is surrounded by 30 cm of water to apply full water reflection. A single cask is evaluated for all evaluations with the exception of the 10 CFR 71.59 (a.1) evaluation.

Package Regional Densities

The composition densities (g/cc) and nuclide number densities (atoms/b-cm) used in the subsequent criticality analyses are shown in Table 6.7.5-2. The NAC-LWT neutron shield contains soluble boron. Modeled neutron shield material does not include boron (removal of neutron absorber).

Figure 6.7.5-1 MCNP Model Sketch of the NAC-LWT Cask with SLOWPOKE Fuel Core

(Dimensions in inches)

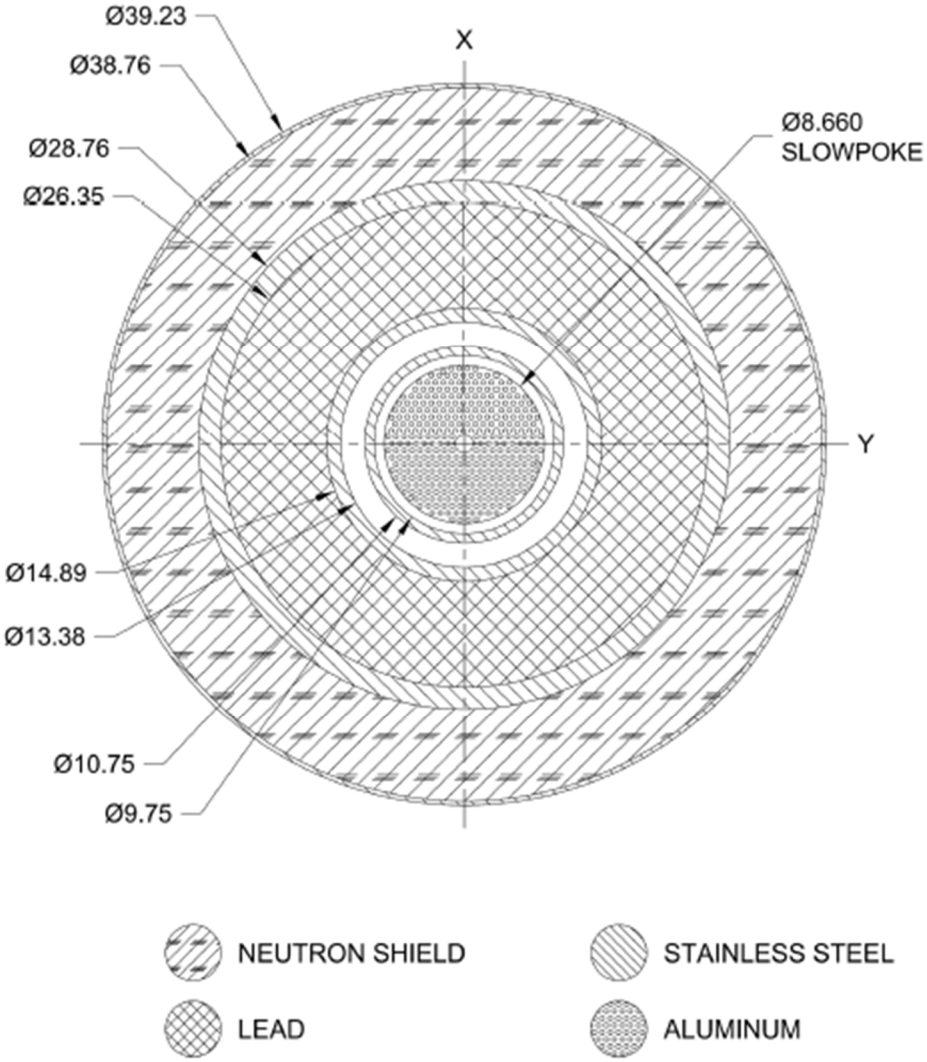

Figure 6.7.5-2 VISED Sketch of LWT Radial View – SLOWPOKE Fuel Core

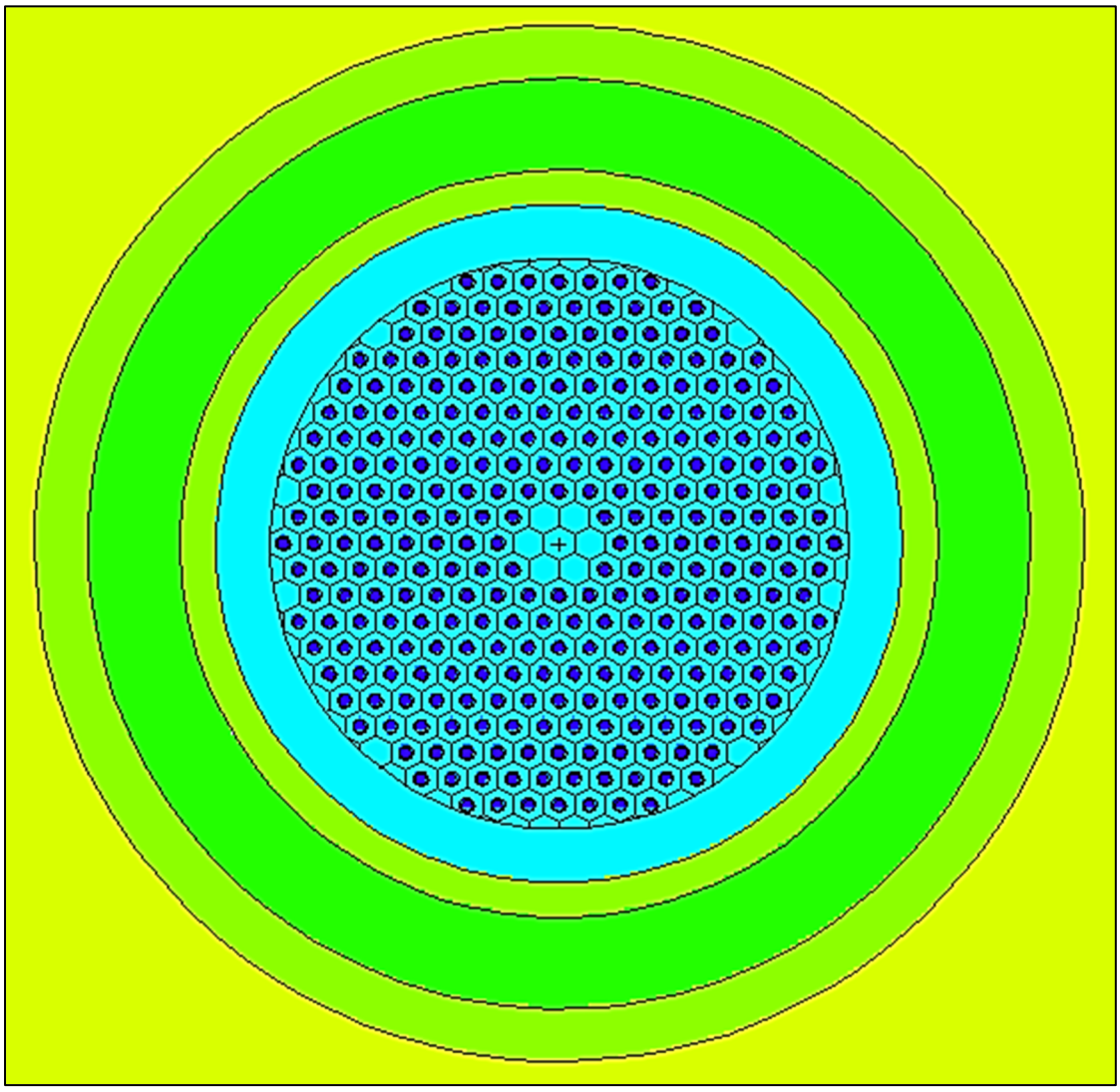

Figure 6.7.5-3 VISED Sketch of LWT Axial View – SLOWPOKE Fuel Core – Normal Conditions – Cask Top Portion

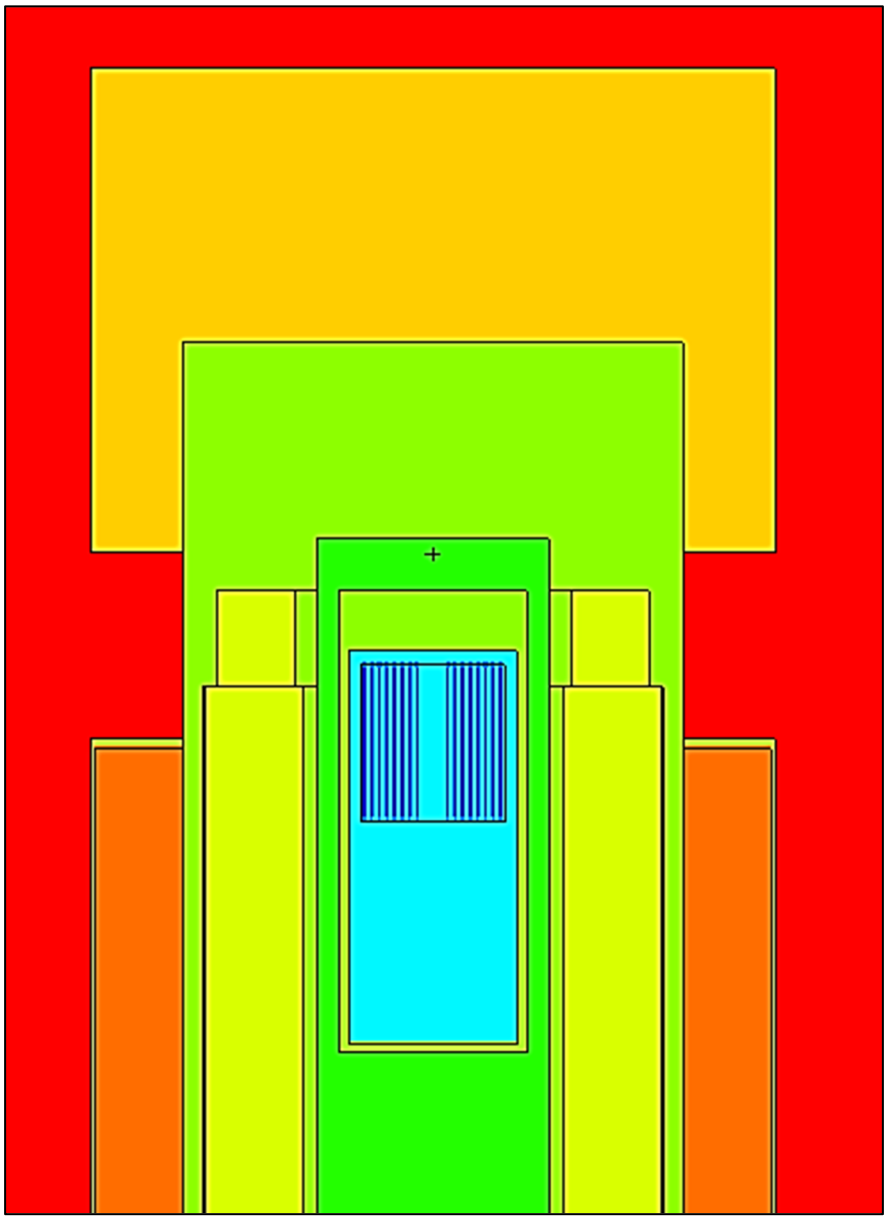

Table 6.7.5-1 SLOWPOKE Fuel Core Design Basis Characteristics

Parameter	Value
Rods per Assembly	298
Initial ^{235}U per Rod, g	2.830
U per Rod, g	2.970
Initial ^{235}U Enrichment, wt. %	95.30
Aluminum in Fuel Matrix per Rod, g	7.714
Clad Material	Aluminum
Weight of Fuel per Rod, g	10.684
Total ^{235}U in Core, g	843.340
Fuel Volume, cm^3	3.071
Fuel Density, g/cm^3	3.478

Table 6.7.5-2 SLOWPOKE Fuel Core Analysis Compositions and Number Densities

Material	U-Al	Al	H_2O	304 Stainless Steel	Lead Shield	Neutron Shield
Density, g/cm3	3.4785	2.7020	0.9982	7.9400	11.3440	0.9400
Atom Density	atoms/b-cm					
^{235}U	2.361E-03					
^{238}U	1.150E-04					
Aluminum	5.602E-02	6.027E-02				
Hydrogen			6.679E-02			5.840E-02
Oxygen			3.340E-02			2.414E-02
Carbon				3.185E-04		1.010E-02
Silicon				1.703E-03		
Phosphorus				6.941E-05		
Chromium				1.747E-02		
Manganese				1.739E-03		
Iron				5.854E-02		
Nickel				7.739E-03		
Lead					3.297E-02	

6.7.5.3 Criticality Calculations

The maximum reactivity configuration is determined by performing a series of studies on a single, fully water-reflected cask (30-cm full density water reflector). Criticality evaluation of the SLOWPOKE fuel core payload is limited to a single cask, with the exception of the low reactivity normal condition array (10 CFR 71.59) calculation included in Section 6.7.5.3.7.

6.7.5.3.1 Normal versus Accident Conditions Cask Configuration

An initial scoping evaluation considers both normal and accident conditions under a preferential flooding scenario (basket fully flooded, cask cavity dry). As shown in Table 6.7.5-3, cask condition has no statistically resolvable effect on reactivity ($\Delta k_{eff}/\sigma < 3$). Accident conditions are applied in the following studies.

6.7.5.3.2 Fuel Rod Arrangement Study

For this study, the effects of re-arranging rods in the fuel rod array are considered. The first configuration moves fuel rods to the outer ring of the SLOWPOKE fuel core. This configuration is denoted as "spread" in the results shown in Table 6.7.5-4. In the second configuration for this evaluation, the center tube and upper and lower grid plates are assumed to be damaged, resulting in the re-arrangement of the fuel rods. Rods from the exterior are moved to the empty center cells. This configuration is denoted as "center filled" in Table 6.7.5-4. The hexagonal fuel rod pitch is retained for this study. The maximum fuel rod pitch is also applied in this study. Additional pitches are examined in Section 6.7.5.3.3.

Both configurations confirm that the lattice is undermoderated. For both configurations there are reactivity tradeoffs between moderation and leakage.

For the spread configuration, reactivity is increased for both nominal and maximum pitch. Additional moderator for fuel rods adjoining the open lattice locations increases reactivity. Additional moderation from increasing the pitch to the maximum possible shows no effects as reactivity increases from additional moderation are being offset by additional leakage.

For the center filled configuration, filling the center cells (7 open equivalent lattice locations) shows no significant change at nominal pitch. Removal of moderator in the center decreases available moderator to adjoining lattice locations while adding fuel to the center, low leakage region increases reactivity. At maximum pitch (near the highest reactivity lattice H/U) the center filled arrangement is significantly more reactive than all other configurations as moderation is increased without an increase in leakage.

Remaining studies will include the maximum reactivity configuration with the center cells filled. An example VISED XY cross-section of the configuration with rods in the outer ring and

nominal fuel rod pitch is shown in Figure 6.7.5-4. An example VISED XY cross-section of the configuration with center cells filled and maximum fuel rod pitch is shown in Figure 6.7.5-5.

6.7.5.3.3 Fuel Rod Pitch Study

A pitch study is performed to determine maximum reactivity fuel rod pitch. The results are shown in Table 6.7.5-5 and plotted in Figure 6.7.5-6. The results demonstrate that peak reactivity is reached prior to the fuel rod array extending beyond the basket cavity radius. As seen in Table 6.7.5-5, after rising rapidly, the slope of reactivity versus rod pitch (H/U ratio) levels out between P4 and Max pitch with no statistically significant variation. Therefore, the lattice is at maximum reactivity pitch within the constraints of the basket. Given the statistically constant reactivity across a range of rod pitches, no basket tolerance study is necessary for this evaluation. The maximum pitch of 1.3417 cm is applied in the remaining criticality calculations.

Previous evaluations of the array containing a center tube/center opening or rods in the outer ring were performed at nominal and max pitch. To confirm that maximum reactivity was not achieved at an intermediate pitch, a pitch study was also run for these configurations. The results are plotted in Figure 6.7.5-6 and demonstrate that the center filled configuration provides the maximum reactivity configuration at the maximum pitch.

6.7.5.3.4 Moderator Density Study (Including Preferential Flooding)

As the pitch study places the rods at maximum reactivity by increasing the H/U ratio, decreases in interior moderator density are expected to reduce system reactivity. This is confirmed by evaluations of variable basket interior moderator densities with dry cask cavity, variable cask cavity moderator densities with wet basket interior, and simultaneous basket and cask cavity density changes. All results are plotted in Figure 6.7.5-7. The preferential flood scenario with a full density basket and dry cask cavity remains the maximum reactivity case.

6.7.5.3.5 Axial Shift Study

The basket and fuel core are shifted towards the cask cavity top to evaluate potential reactivity increases due to reflection changes. The fuel core shift permitted by the model is 0.81 inches (2.0574 cm), and the basket shift permitted by the model is 0.20 inches (0.5080 cm). The small shifts permitted will result in statistically non-resolvable changes in reactivity, as seen in Table 6.7.5-6. Remaining studies retain the shifted down axial location of the basket and fuel core.

6.7.5.3.6 Maximum Reactivity Configuration

Based on the previous analyses, the following conditions are bounding for the maximum reactivity configuration:

- Loss of center tube (fuel rods shifted to center locations)

- Increased fuel rod pitch (loose fuel rods)
- Preferential flooding of basket (dry cask cavity with a flooded basket assembly)

6.7.5.3.7 Case Matrix to Conform to 10 CFR 71.55 and 10 CFR 71.59 Requirements

Compliance with the NRC code of federal regulations (CFRs) for the transport of fissile material packages is evaluated. The 10 CFR 71.55 and 10 CFR 71.59 requirements are satisfied and transport of the SLOWPOKE fuel core is acceptable. The results for the configurations stipulated in the CFR requirements are shown in Table 6.7.5-7. The maximum reactivity configuration produced a reactivity of 0.87189, which is under the USL of 0.9171 (USL documented in Section 6.5.5). The CSI for the package is 100.

6.7.5.3.8 Area of Applicability

The SLOWPOKE fuel core is compared in Table 6.7.5-8 to the set of validated experiments used in Section 6.5.5 to establish the USL. The EALCF is within the validated range. The design basis enrichment of the SLOWPOKE fuel core is outside the validated range. There is no trend found for enrichment in the validation that would result in a lower USL.

6.7.5.3.9 Licensed SLOWPOKE Fuel Core Basket versus Modeled Basket

The licensed SLOWPOKE fuel core basket differs from the basket model in previous evaluations as described in Section 6.7.5.2. The modeled basket increases reflection by removing moderator between the fuel and cask lid, which provides 11.25 inches of stainless steel reflection. The increased reflection is expected to increase reactivity. This is confirmed by the results provided in Table 6.7.5-9. For the licensed basket, the space in the lid spacer is modeled as flooded, as drain holes lead to the basket interior. A preferential flood elevation in the actual basket would increase reflection by removing moderator similar to the previously evaluated configuration. Therefore, no additional evaluation is needed to confirm that the analysis is conservative. A VISED slice of the modeled licensed SLOWPOKE fuel core basket is shown in Figure 6.7.5-8.

Figure 6.7.5-4 VISED XY Slice of SLOWPOKE Fuel Core with Spread, Nominal Rod Pitch Configuration

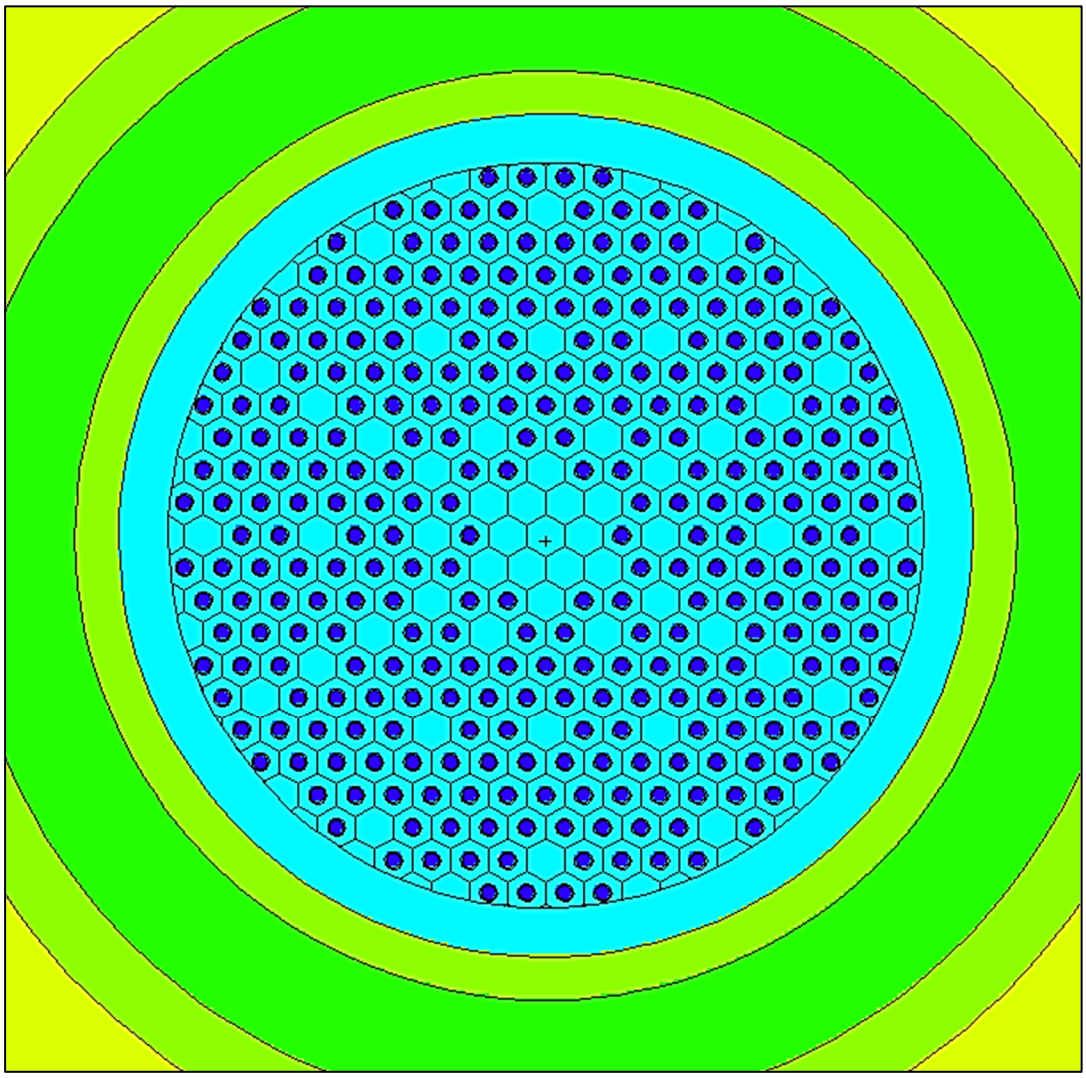

Figure 6.7.5-5 VISED XY Slice of SLOWPOKE Fuel Core with Center Cells Filled, Maximum Rod Pitch Configuration

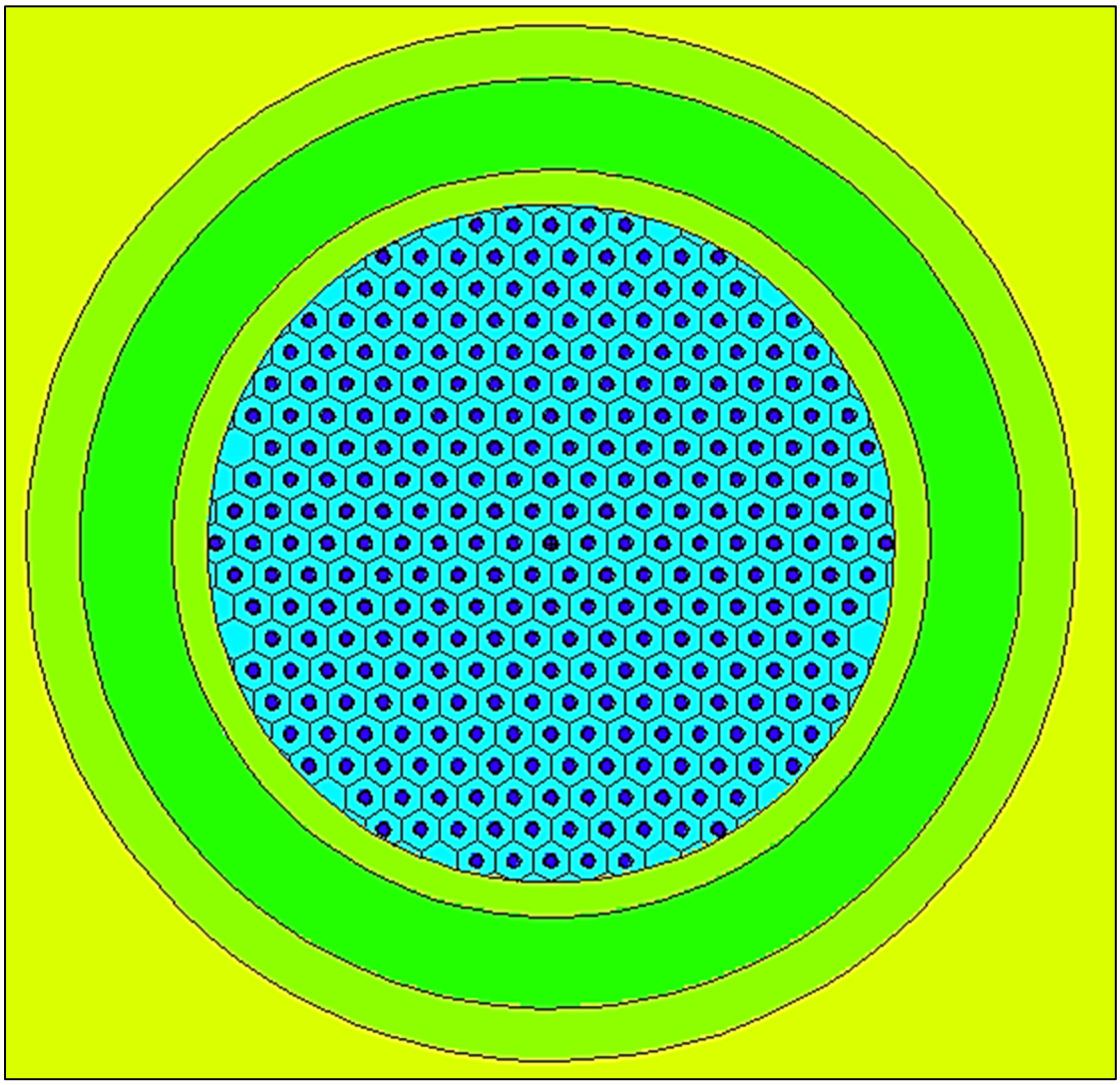

Figure 6.7.5-6 SLOWPOKE Fuel Core, Fuel Rod Pitch Study Results

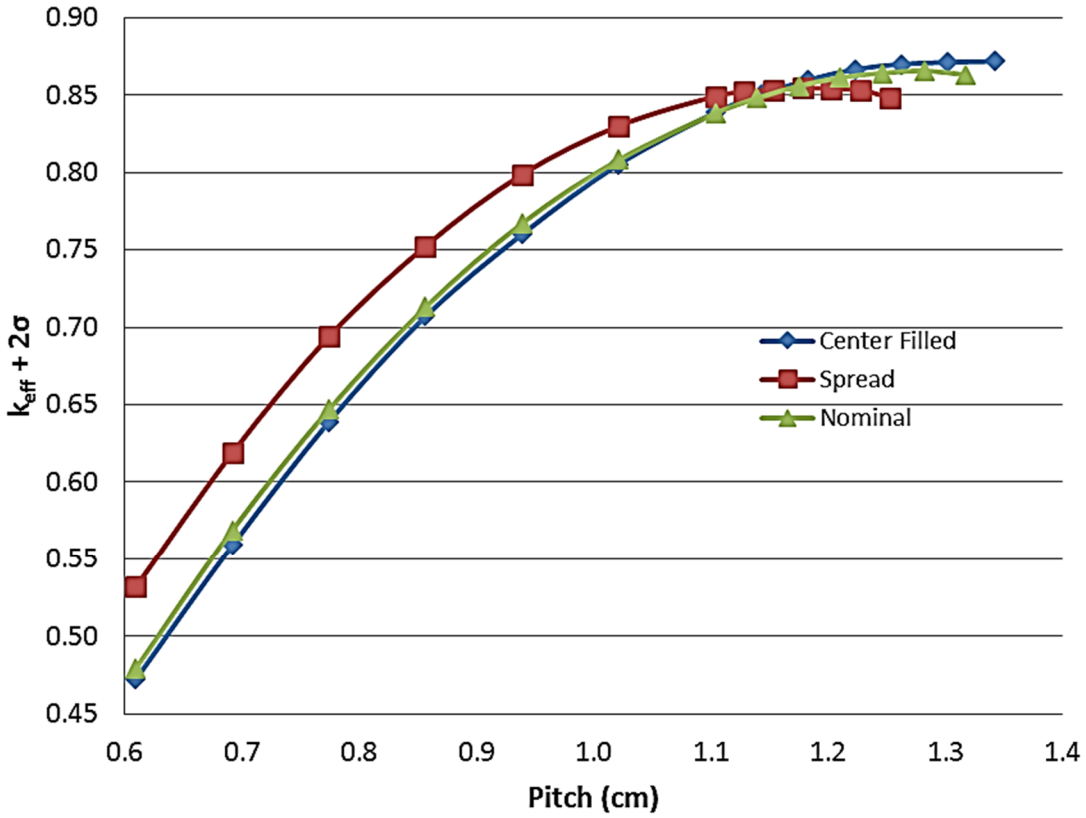

Figure 6.7.5-7 SLOWPOKE Fuel Core Moderator Density Study Results (Percent Full Density Water)

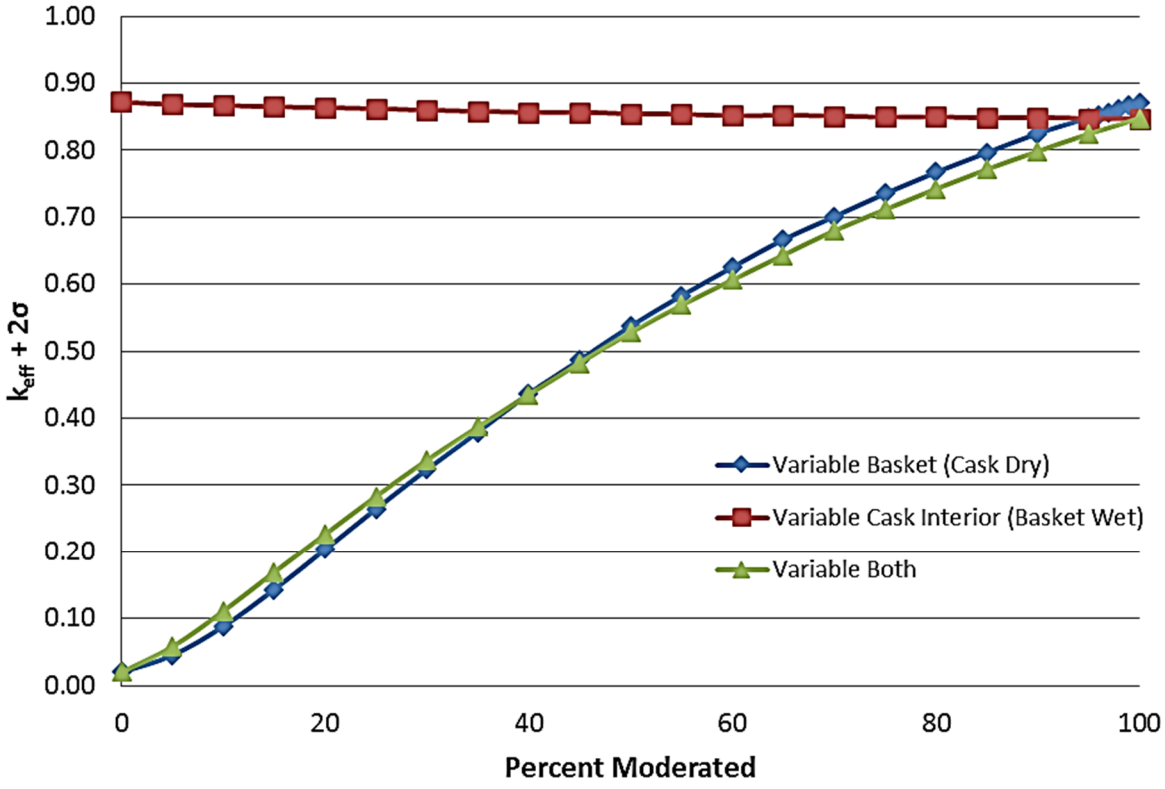

Figure 6.7.5-8 VISED XZ Slice of SLOWPOKE Fuel Core with Licensed Basket Model

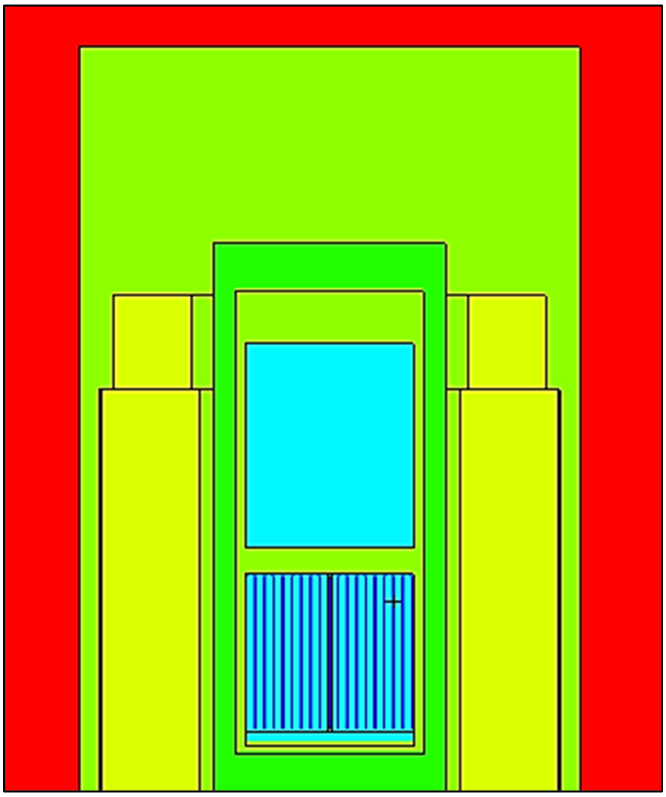

Table 6.7.5-3 Reactivity Results for SLOWPOKE Fuel Core under Normal and Accident Conditions

Cask	k_{eff}	σ	$k_{eff}+2\sigma$	$\Delta k_{eff}/\sigma$
Normal	0.83671	0.00073	0.83817	--
Accident	0.83669	0.00074	0.83817	0.0

Table 6.7.5-4 Reactivity Results for SLOWPOKE Fuel Core Alternate Rod Arrangements

Rod Configuration	Rod Pitch	k_{eff}	σ	$k_{eff}+2\sigma$	Δk_{eff}	$\Delta k_{eff}/\sigma$
Nominal	Nom	0.83669	0.00074	0.83817	--	--
Nominal	Max	0.86169	0.00074	0.86317	0.02500	23.9
Spread	Nom	0.84776	0.00077	0.84930	0.01107	10.4
Spread	Max	0.84697	0.00072	0.84841	0.01028	10.0
Center Filled	Nom	0.83723	0.00073	0.83869	0.00054	0.5
Center Filled	Max	0.87049	0.00070	0.87189	0.03380	33.2

Table 6.7.5-5 Reactivity Results for SLOWPOKE Fuel Core, Fuel Rod Pitch Study

Description	Pitch (cm)	k_{eff}	σ	$k_{eff}+2\sigma$	Δk_{eff}	$\Delta k_{eff}/\sigma$
Max	1.3417	0.87049	0.00070	0.87189	--	--
P5	1.3020	0.86970	0.00077	0.87124	-0.0008	-0.8
P4	1.2623	0.86855	0.00073	0.87001	-0.0019	-1.9
P3	1.2227	0.86520	0.00072	0.86664	-0.0053	-5.3
P2	1.1830	0.85829	0.00077	0.85983	-0.0122	-11.7
P1	1.1433	0.84924	0.00073	0.85070	-0.0213	-21.0
Nom	1.1036	0.83723	0.00073	0.83869	-0.0333	-32.9
N1	1.0213	0.80382	0.00075	0.80532	-0.0667	-65.0
N2	0.9390	0.75868	0.00073	0.76014	-0.1118	-110.6
N3	0.8566	0.70568	0.00073	0.70714	-0.1648	-163.0
N4	0.7743	0.63758	0.00074	0.63906	-0.2329	-228.7
N5	0.6919	0.55783	0.00065	0.55913	-0.3127	-327.3
Min	0.6096	0.47131	0.0006	0.47251	-0.3992	-433.0

Table 6.7.5-6 Reactivity Results for SLOWPOKE Fuel Core, Axial Shift Study

Description	k_{eff}	σ	$k_{eff}+2\sigma$	Δk_{eff}	$\Delta k_{eff}/\sigma$
Bottom Shifted (Nom.)	0.87049	0.00070	0.87189	--	--
Top Shifted	0.86786	0.00070	0.86926	-0.0026	-2.7

Table 6.7.5-7 10 CFR 71.55 and 10 CFR 71.59 Case Matrix for the NAC-LWT with SLOWPOKE Fuel Core

Regulation	Cask Condition	Cask Interior Moderator Conditions	Array Size	Reflection	$k_{eff}+2\sigma$	CSI
71.55	Containment	Pref. Flood	1	30 cm Water	0.82225	--
71.55	Normal	Pref. Flood	1	30 cm Water	0.87110	--
71.55	Accident	Pref. Flood	1	30 cm Water	0.87189	--
71.59 (a.1)	Normal	Dry	Infinite	Cask Surface	0.02308	0
71.59 (a.2)	Accident	Pref. Flood	1	30 cm Water	0.87189	100

Table 6.7.5-8 Area of Applicability for SLOWPOKE Fuel Core Validation

Parameter	Minimum	Maximum	Evaluated
Enrichment (wt.% ^{235}U)	17.0	93.2	95.3
EALCF (eV)	0.0503	1.120	0.0660

Table 6.7.5-9 Comparison of Modeled and Licensed Basket Reactivity for the SLOWPOKE Fuel Core

Basket Description	Fuel Core and Basket Shift	k_{eff}	σ	$k_{eff}+2\sigma$	Δk_{eff}	$\Delta k_{eff}/\sigma$
Modeled	Nom	0.87049	0.00070	0.87189	--	--
Licensed	Nom	0.84503	0.00071	0.84645	-0.0255	-25.5
Licensed	Top	0.84924	0.00071	0.85066	-0.0213	-21.3

6.7.6 EFN Rods, Moly Targets, and Booster Rods

This section includes input, analysis method, results, and criticality benchmark evaluations for the NAC-LWT cask containing a payload of up to 18 caddies containing EFN rods, Moly targets, or Booster rods. EFN rods and Moly targets may be placed into a single package, however fuel types may not be mixed in a single caddy. All payload types are based on highly enriched uranium. The uranium fuel meat is composed of an aluminum matrix material. Fuel meat is surrounded by an aluminum clad with aluminum fins.

6.7.6.1 Package Fuel Loading

Up to eighteen caddies may be loaded into the NAC-LWT. EFN rods, Moly targets, or Booster rods may be loaded as rods/targets, or rod/target fragments. Fragments too small to be retained axially within the caddy have a caddy plug installed that will ensure material remains in the caddy. The caddy has been structurally evaluated to retain its shape through all transport conditions. All rods/targets are aluminum clad uranium-aluminum alloy with aluminum end plugs. The rods/targets are analyzed at 94 wt% ^{235}U. Quantity, or equivalent quantity for damaged materials, for each of the payload types along with physical characteristic for the payloads are listed in Table 6.7.6-1. Each of the rod/target types is illustrated in Figure 6.7.6-1. The sketches illustrate that all three paylaods types are similar to the NRU fuel type disccused in Section 6.7.3. EFN rods and Moly Targets have physical cross sections similar to the NRU rods while Booster rods have a similar clad OD but a significantly smaller fuel meat/core diameter.

The caddy modeled with a design basis load of 12 NRU-HEU rods, contains the largest quantity of fissile material and can be used to bound both EFN rods and Moly targets. Undamaged NRU rods clearly bound undamaged Booster rods as Booster rod clad diameter is larger than that of the NRU rods with a significantly smaller fissile content. Due to the significantly smaller core/meat diameter Booster rods will require additional analysis in the “clad removed” evaluations.

Based on the similar materials and geometry, conclusions drawn from the bounding mass NRU rods can be directly applied to the EFN and Moly payloads.

6.7.6.2 Criticality Model Specifications

Section 6.7.3 describes the models that are used in the criticality analyses for the NAC-LWT cask containing up to 18 caddies. These models are modified to contain the various payloads described in Section 6.7.6.1. Model changes are restricted to rod parameters (e.g. active fuel height, number of rod segments, segment location, etc.).

Each model uses the MCNP (MCNP 6.2) code package with the ENDF/B-VII cross-section set. No cross-section pre-processing is required prior to MCNP implementation. MCNP uses the Monte Carlo technique to calculate the k_{eff} of a system.

All discussions in Section 6.7.3.2 on cask geometry, accident versus normal models, etc. are applicable to these evaluations. Analyses are mostly based on "clad removed" rod fragment, configuration. Reduced clad was determined to produce maximum reactivity and is therefore the focus of the evaluation in Section 6.7.6.3.

The composition densities (g/cm^3) and nuclide number densities (atm/b-cm) evaluated in subsequent criticality analyses are based on Table 6.7.3-4 (NRU/NRX evaluations). Modifications are limited to adjusting, as necessary, the NRU-HEU fuel density to bound the remaining payloads ^{235}U density (g/cm^3).

6.7.6.3 Criticality Calculations

This section presents the criticality analyses for the NAC-LWT cask with 18 caddies of EFN rods, Moly targets, or Booster rods. Criticality analyses are performed to satisfy the criticality safety requirements of 10 CFR Parts 71.55 and 71.59. All criticality evaluations performed use a single cask model (CSI=100).

An analysis of the NAC-LWT with each of the basket loadings shows results below the USL, even when considering limited or no credit for rod clad. The maximum reactivity configuration previously determined for similar NRU-HEU fuel were:

- Flooded cask cavity and exterior
- Loss of neutron shield

Section 6.7.3 calculations were performed to determine maximum reactivity for undamaged NRU HEU assuming rod fragments and damaged fuel/partial removal of clad. In this calculation the extent of clad removal is extended up to 100% and the resulting trends applied to EFN rods, Moly Targets, and Booster rods. Complete loss of clad is not an expected transport configuration and is solely applied as a conservative bounding configuration.

NRU-HEU rods are used as the baseline for the Moly target and EFN rod evaluations as the fuel meat and clad cross sections are identical to those of the NRU-HEU rods. Booster rods are similar in clad outer dimensions but have a smaller core. All are composed of similar fuel meat composition (in terms of fuel enrichment and uranium weight fractions). The variations are bounded within the evaluation of the specific fuel types.

Section 6.7.3 calculations determined that a fully flooded system was most reactive (i.e., no preferential flooding). This is applicable to the increased and/or complete clad loss calculations is verified with limited moderator density studies on the cask/tube cavity outside the caddy.

Caddies with damaged material will have a plug installed and preferential flooding could be postulated.

As a result of the clad removal an increased number of rod sections can be placed at a given elevation. The evaluations in this calculation will determine if a further increase in number of rod sections at an elevation is bounding, i.e., is reduced neutron leakage offsetting decreases in the fueled area H/U ratio. This evaluation will address a range of number of fuel rod sections at a given caddy elevation.

All cases run with MCNP6.2 apply 10,000 source history per cycle to avoid an MCNP warning that insufficient histories may be applied to obtain adequate statistics. Enough cycles are skipped to assure passing the Shannon entropy check (MCNP models skip the first 60 cycles out of 1060).

6.7.6.3.1 Physical Characteristic Differences Between Payloads.

EFN rods and Moly Targets have physical cross sections similar to the NRU rods while Booster rods have a similar clad OD but a significantly smaller fuel meat/core diameter. Key characteristics for this comparison are listed in Table 6.7.6-1. All core materials are very similar, and all rod/target types are aluminum clad.

Per Section 6.7.3 the NRU caddy, with 12 rods, contains a larger amount of fissile material and is therefore expected to bound both EFN rods and Moly targets. Undamaged NRU rods clearly bound undamaged Booster rods as Booster rod clad diameter is larger than that of the NRU rods with a significantly smaller fissile content. Due to the significantly smaller core/meat diameter Booster rods will require additional analysis in the "clad removed" evaluations.

Table 6.7.6-1 contains the adjustment fractions for total active fuel length per caddy (maximum number of rods times active length per rod) and fissile material density (gram $^{235}U/cm^3$ of fuel core/meat).

Based on the similar materials and geometry, conclusions drawn from the bounding mass NRU rods can be directly applied to the EFN and Moly payloads.

It should be noted that while nominal Booster rod fissile material content and uranium fraction in the fuel meat is similar to the NRU HEU fuel composition, the as evaluated/tolerance applied Booster rods are higher in fissile material concentration than the NRU HEU elements.

6.7.6.3.2 Reactivity Impacts of Clad Removal from NRU Models in Caddy

The 27-rod section NRU model from the damaged fuel calculation is revised to remove the remaining clad and place the rod sections/fragments inside the caddy. Variations in the number of rod sections is then evaluated. Both hex arrays and polar arrays are evaluated (see Figures

6.7.6-2 through Figure 6.7.6-4). Figure 6.7.6-5 plots the three basic array types evaluated in the range of maximum reactivity (i.e., the trend where increases in k_{eff} as number of rod segments are increased followed by a reduction in k_{eff} as the impact of reduced H/U ratio overcomes reduced neutron leakage). As shown in Figure 6.7.6-5 the layout with three center rods is significantly more reactive than the either the single rod center or hex array. k_{eff} values for the most reactive layout are listed in Table 6.7.6-2. Results of this evaluation resulted in k_{eff} values well above the USL. While the modeled configuration is extremely conservative in that all clad is removed and rods are placed in an unrealistic configuration, further evaluations are performed to determine what configurations produce a k_{eff} below the USL. The additional evaluations include a study of limiting the payload to the outer 12 tubes of the NRU/NRX basket and crediting a small amount of clad back into the models.

MCNP evaluations removing payload from the inner ring (6 fuel tubes) applies the 34-rod segment NRU pattern. This pattern is < 0.001 Δk away from the maximum k_{eff} value in a fully loaded configuration and is suitable for this study. Per Table 6.7.6-3 this case produced a very low k_{eff}, <0.7, in the underloaded configuration. Due to the low k_{eff}, transport of "unclad" NRU type fuel rods is permitted provided inner fuel tube locations are not loaded. As the purpose of this calculation is to allow EFN rods, Booster rods, and Moly targets in fully loaded casks no further analysis is performed with the underload configuration. Additional cases using the most reactive outer ring of NRU rods are included in the Moly rod analysis section. The evaluation in that section is designed to allow loading of Moly rods into the inner 6 basket tube locations.

Next a limited amount of clad was modeled as a 0.02 cm thick layer around the fuel meat (versus a nominal 0.0762 cm clad for <30% of the material credited). As seen in Table 6.7.6-4 and Figure 6.7.6-6, reactivity is significantly reduced from the non-clad evaluation with all evaluated cases below the USL of 0.9338 and within the evaluated EALCF range (maximum reactivity case has an EALCF of 0.168 eV). Figure 6.7.6-6 indicates maximum reactivity is being achieved as the number of rod segments is increased with the curve flattening out between 34 and 35 rod patterns. No further increase in the number of rod segments was evaluated as additional rods would not physically fit into the evaluated caddy layout without further reduction in the modeled clad or a change in the modeled array. Changing array configuration has been shown to significantly lower reactivity. Increased localized removal of clad is bounded by this analysis as with a fixed percentage of clad credited the localized decrease in clad would be offset by the additional rod spacing, and therefore decreased number of rod segments in a ring, associated with the "moved" clad elsewhere in the pattern.

6.7.6.3.3 Reactivity Effects Associated with EFN Fuel Rods versus NRU-HEU Fuel Rods

EFN fuel rods are very similar to the NRU rods. They have identical listed fuel core diameter and clad thickness. Based on the Table 6.7.6-1 data and maximum allowed content of a caddy, the ratio of the total caddy active fuel length (active fuel length times number of rods) is 0.89 with EFN rods being lower. Conversely the total amount of ^{235}U per unit EFN fuel meat volume is slightly higher at 101% (slightly higher U loading). To evaluate the EFN rods the active height of the fuel rod segments was decreased, and the core density slightly increased by the indicated ratios. The adjustment to fuel density will also adjust the aluminum content but aluminum does not have a significant neutron cross section and the changes are minor and will not significantly impact the conclusions of the analysis.

Evaluations were limited to the maximum reactivity range of NRU rod segments. As shown in Table 6.7.6-5 and Figure 6.7.6-7 this study covers the peak reactivity region for both NRU and EFN rods. As expected, the reactivity of the EFN rods is lower due to the lower total fissile content associated with similar density and fuel radius and a smaller total active height and therefore fuel mass. The lower results are still above the USL and would therefore not permit loading of severely damaged (unclad) material. Evaluations of minimum clad are not performed as the NRU results can be applied to the EFN rods by requiring a minimum 30% of clad material to be remaining.

6.7.6.3.4 Reactivity Effects Associated with NRU/EFN Fuel Rods with Moly Targets

Previous analysis demonstrated that a cask loaded of NRU/EFN rods in caddies produces k_{eff} values above the USL when assuming unclad materials. The analysis also demonstrated that a configuration with the six interior basket tubes empty is significantly below the USL. Rather than leaving the interior locations empty the low fissile mass Moly targets are placed into the inner 6 tubes. With a fissile mass of the bounding Moly caddy (containing Double Length Moly targets) being <20% that of the NRU caddy, engineering judgement indicates that results will be below the USL. Using the maximum reactivity (36 rod segment) NRU caddy model a composite/mixed basket is evaluated. The Moly sections are moved axially towards the center of the NRU fuel region to assure maximum neutronic interaction with the NRU fuel region. Moly targets (referred to as rod segments same as the EFN/NRU rods) are evaluated in various configurations. As seen in Figure 6.7.6-8 and Table 6.7.6-6 the optimum number of Moly targets is significantly lower than that of the NRU rods, even though both are modeled with the same core diameter. This result reflects the small mass of the Moly rods and the positive feedback of stretching the mass along the tube for increased interaction with the NRU rods. This feedback is limited and stops producing increased k_{eff} prior to extending the full NRU length.

Two additional studies were run for the Moly targets to assure that variations in previous bounding configurations do not result in significant reactivity increases.

Maximum reactivity caddy models move caddies radially towards the center of the cask providing increased moderation between caddies. As this configuration relies significantly on the interaction between inner and outer caddies the 12 Moly rod segment was modified to shift the caddy radial out towards the outer tubes (see Figure 6.7.6-9). This configuration is documented to reduce reactivity.

With a limited number of rod segments, it can be postulated that rod segments movement towards the outer tubes versus evenly distributed within the caddy could increase reactivity. The 8-rod pattern is re-evaluated with shifted rod positions. The 8-rod pattern was chosen as a lower number of rods is expected to increase the impact on system reactivity due to rod location in the mixed loaded cask. A VISED slice for this geometry (8A) is included in Figure 6.7.6-10. Reactivity for this configuration is also lower than the corresponding evenly distributed model. As there was a significant drop in reactivity one additional pattern is evaluated moving all 8 rods to the far side of the caddy, case "B" (essentially a 180 degree rotation of the caddy). The reactivity of the Moly segments moved further from the NRU segments is closer, but still lower than, the result from the evenly distributed version of the model (where the 8 rods are in a polar arrangement on the periphery of the caddy).

All results are significantly below the USL and therefore permit loading of a mixed NRU payload in the outer tubes with inner Moly targets with no credit for the clad. As EFN rod caddies are lower in reactivity than the NRU caddies loading of EFN rods in the outer with Moly inner caddies is permitted.

6.7.6.3.5 Reactivity Effects Associated with Booster Rods

Booster rods have significantly smaller fuel meat/core diameter than the NRU rods. In an unclad configuration many more rod segments may be located at a fixed elevation. Geometrically up to 112 were shown to fit into an elevation without clad. Based on previous analysis this type of packing fraction is not expected to produce maximum reactivity as very small amounts of moderator is available in the lattice. Results of the booster rod segment study for the 3-center rod pattern, same as NRU, are listed in Table 6.7.6-7. Figure 6.7.6-11 illustrates that the 3-center rod pattern produces the maximum reactivity configuration by comparing results to the single center rod polar array and hex configurations. The dip in the 3-center rod configuration at 58 segments is due to the need to slightly move a single rod segment in the outer ring radial inwards as it would otherwise not physically fit into the ring and a different segment pattern would be required (lower reactivity). Reactivity of the 57-segment pattern is significantly below that of

the maximum reactivity 54 rod segment model demonstrating that the maximum reactivity peak was passed. A VISED slice of the most reactive caddy is shown in Figure 6.7.6-12.

The maximum $k_{eff}+2\sigma$ value of 0.93222 for the boosters without clad is below the USL. The EALCF of this model is 0.126 eV and is within the benchmark range.

6.7.6.3.6 Moderator Density Studies for NRU, EFN, and Booster Rods and Moly Targets

All previous evaluations relied on a full density moderator within the caddy and cask cavity. This is the density that was calculated to be bounding and/or near bounding during previous NRU/NRX studies (bounding for NRU and very similar for NRX). To assure that this conclusion is applicable to the added payloads two of the configurations are evaluated for preferential flooding. The two configurations evaluated are the NRU with minimal clad credited (0.02 cm clad) and the Booster rod configuration. Only cask interior moderator density is studied as rod locations were optimized for full density caddy moderator and geometry studies indicate that even small reduction in caddy moderator (such as crediting clad) will reduce reactivity quickly. Results of the studies are listed in Table 6.7.6-8 and Table 6.7.6-9 and illustrated in Figure 6.7.6-13 and Figure 6.7.6-14, for the minimum clad NRU rods and unclad Booster rods respectively. Maximum reactivity is obtained from a fully moderated, 0.9982 g/cm^3, model.

6.7.6.4 Code Bias and Upper Safety Limit (USL)

Critical benchmarks and USL are discussed in detail in Section 6.5.6. While the enrichment evaluated (94%) is slightly above the indicated range the trend (minimal correlation) is for a higher USL and the enrichment used is less than 1% higher with an evaluated range of 17 to 93.2%. It is therefore acceptable to apply the calculated minimum USL of 0.9338 from the EACLF (lethargy) correlation. As listed in previous section most reactive configuration are within the EALCF range of the code bias evaluation.

6.7.6.5 Allowable Cask Loading

Based on the results of the previous sections, any full loading of 18 undamaged or damaged caddies containing EFN Rods, Booster Rods and Moly targets are allowed in the NAC-LWT. Limitations on the transport of the payloads are listed in Table 6.7.6-10.

Figure 6.7.6-1 EFN, Moly and Booster Rod Illustrations

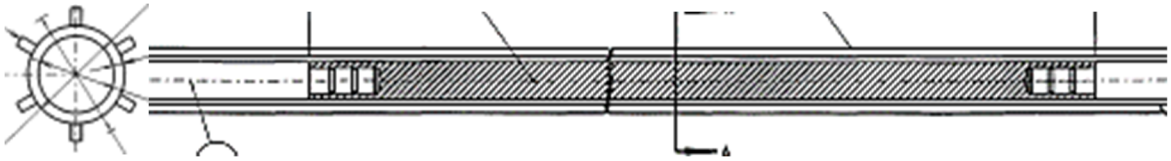

EFN Rod

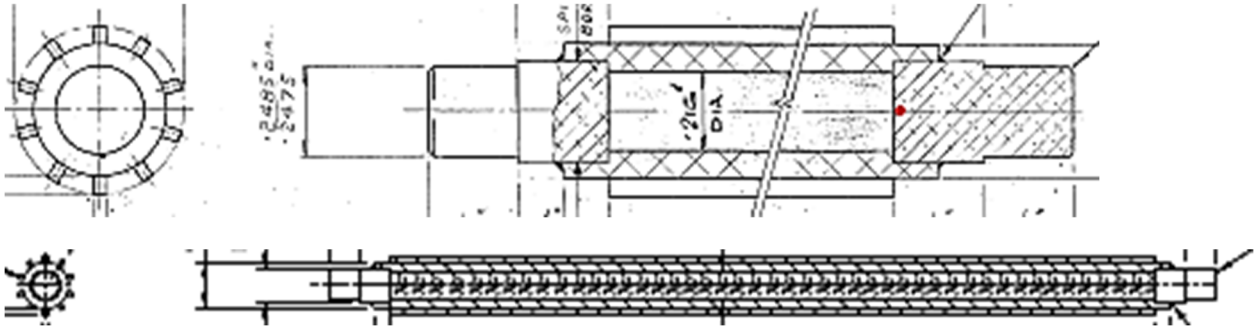

Moly Target(s)

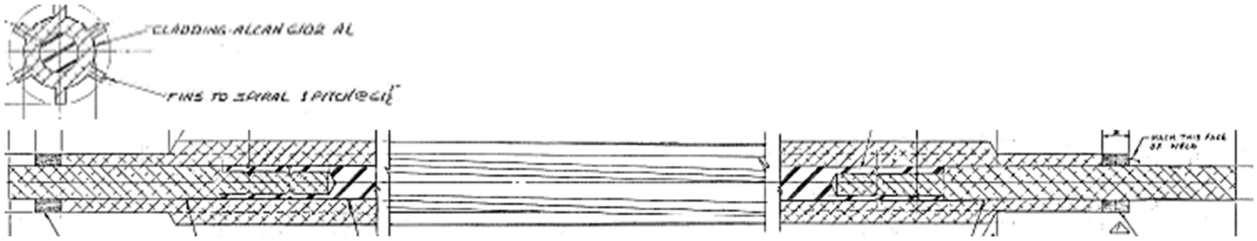

Booster Rod

Figure 6.7.6-2 Caddy NRU HEU Sample Model – 36 Rods – 3 Center Rods

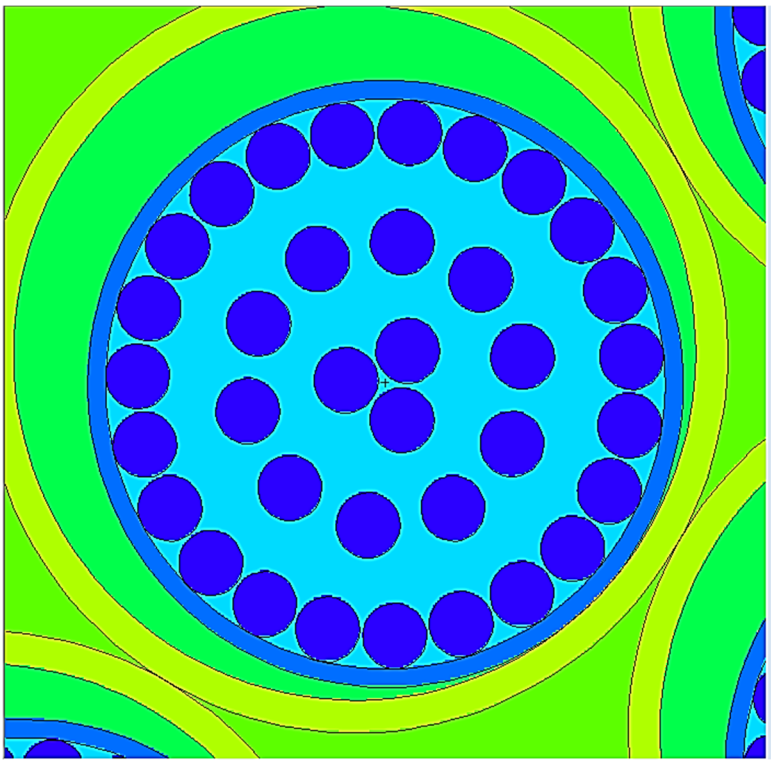

Figure 6.7.6-3 Caddy NRU HEU Sample Model – 37 Rods – 1 Center Rod

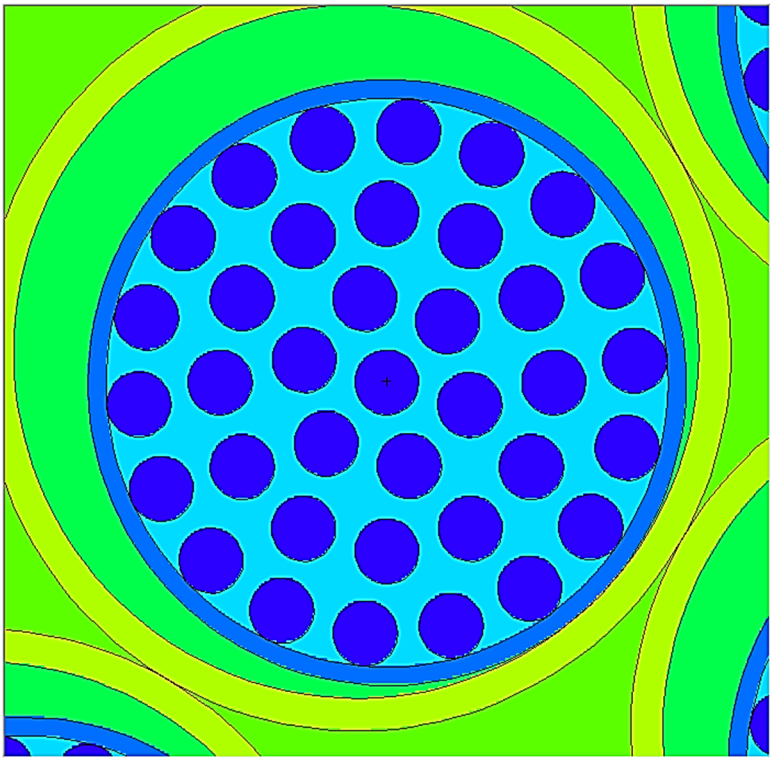

Figure 6.7.6-4 Caddy NRU HEU Sample Model – 37 Rods Hex Array

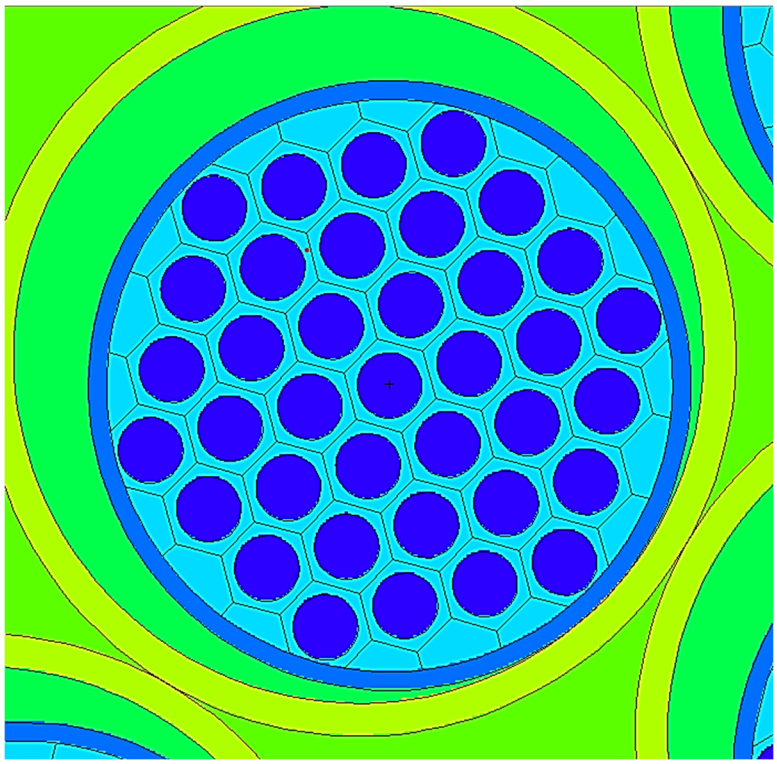

Figure 6.7.6-5 Caddy NRU Complete Clad Removal k_{eff}– Pattern and # Rod Segment Study

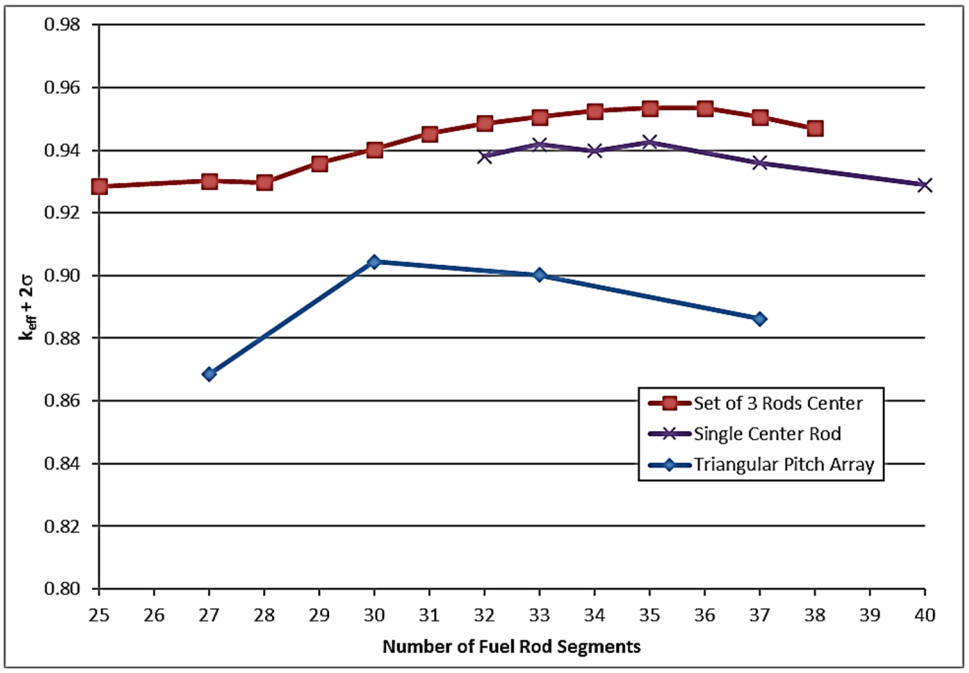

Figure 6.7.6-6 Caddy NRU Clad Removal versus Minimum Clad k_{eff} Study

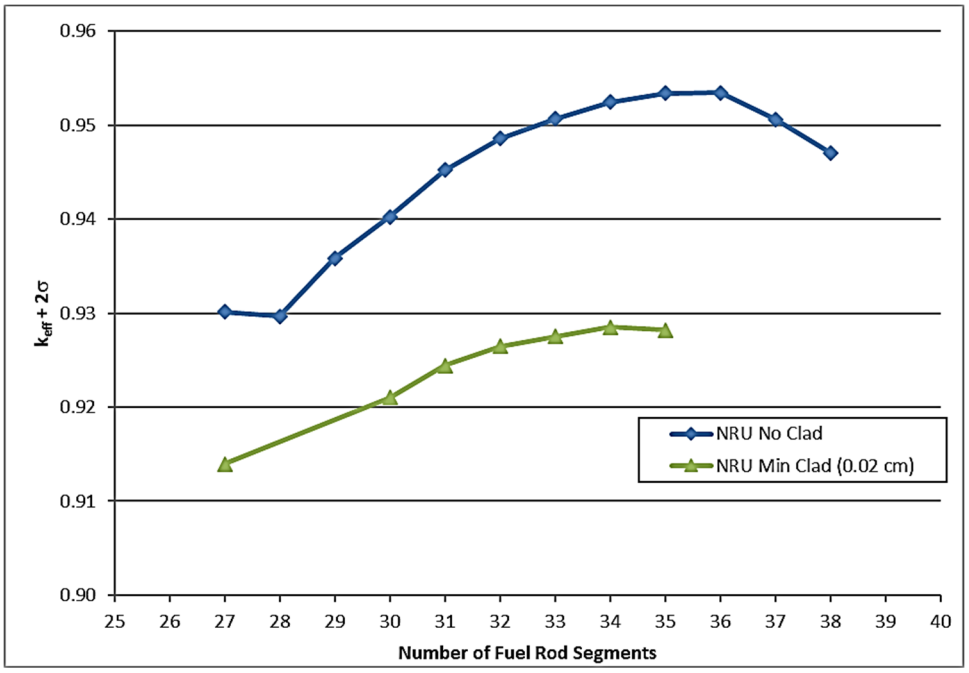

Figure 6.7.6-7 NRU to EFN Comparison k_{eff} Study

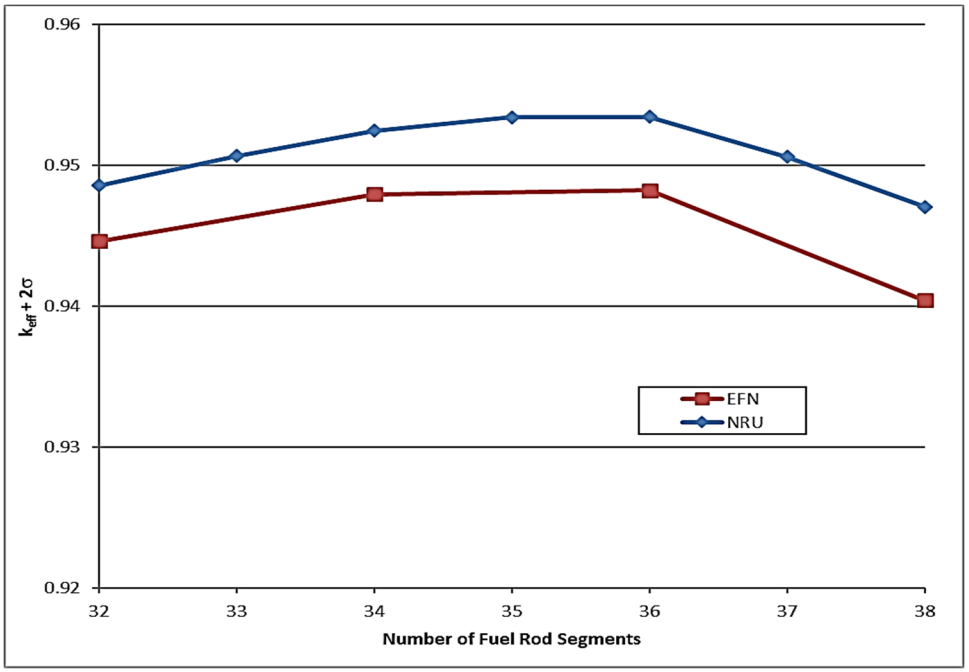

Figure 6.7.6-8 Moly Rod Segment k_{eff} Study

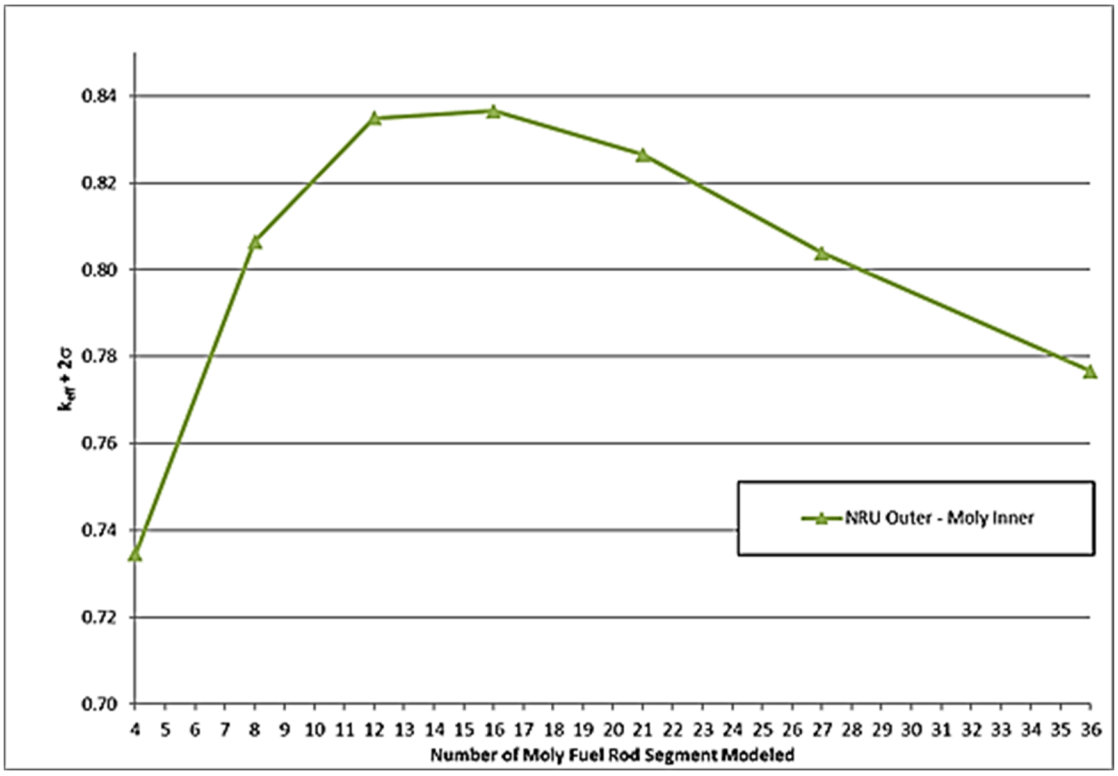

Figure 6.7.6-9 Moly Inner Alternate Model with Caddy Moved Out

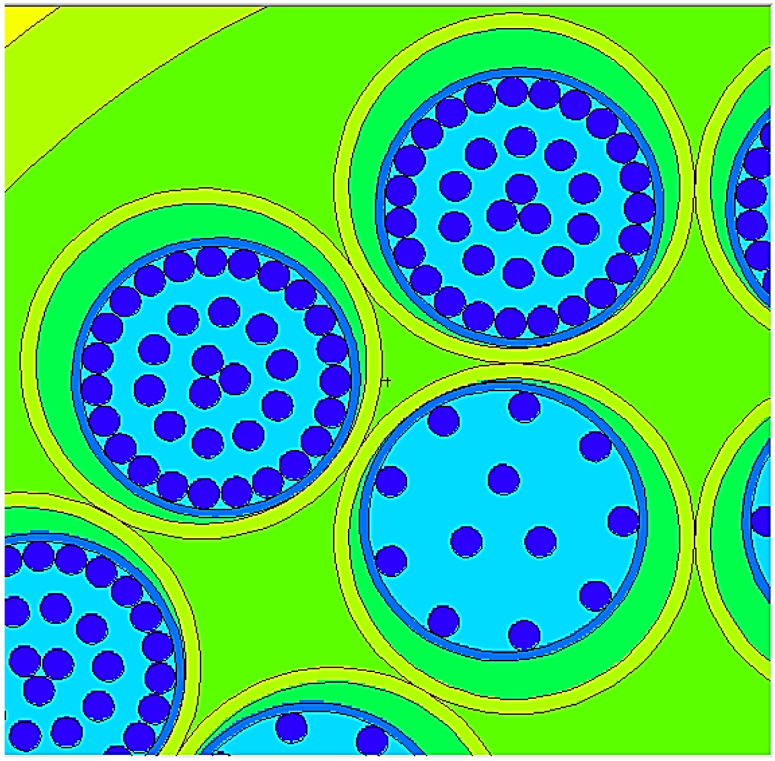

Figure 6.7.6-10 Moly Inner Alternate Model with Rod Segments Moved Out

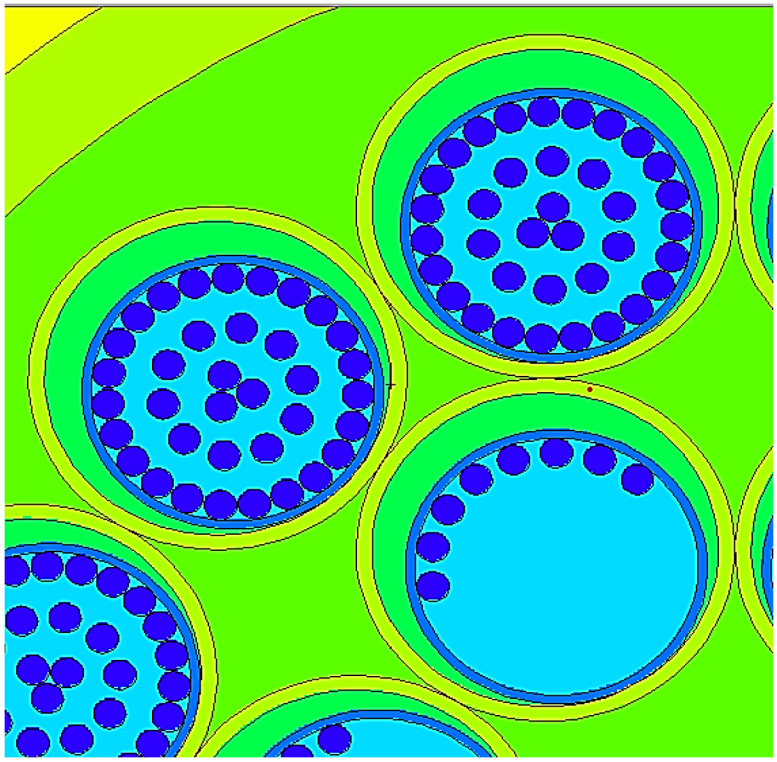

Figure 6.7.6-11 Booster Rod Clad Removal k_{eff}– Pattern and # Rod Segment Study

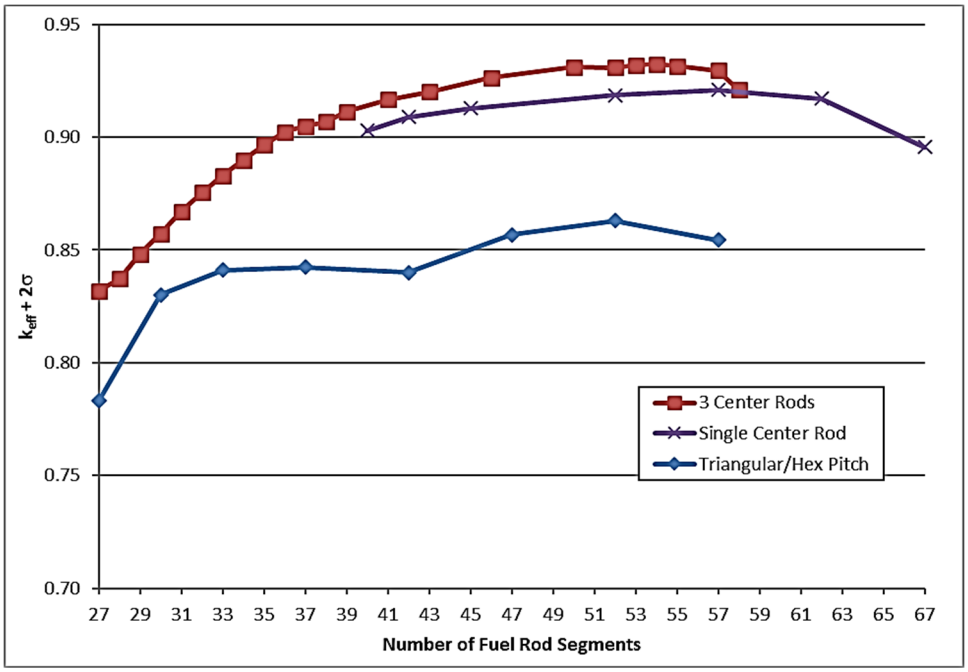

Figure 6.7.6-12 Booster Rod Maximum Reactivity Segment Configuration (57 Rods Segments)

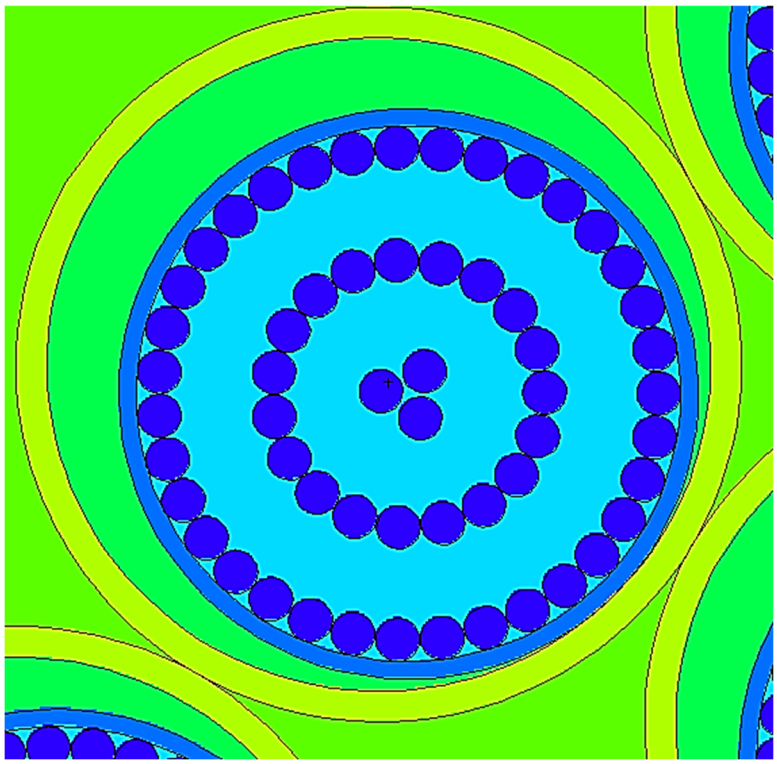

Figure 6.7.6-13 Caddy NRU Moderator Density Study

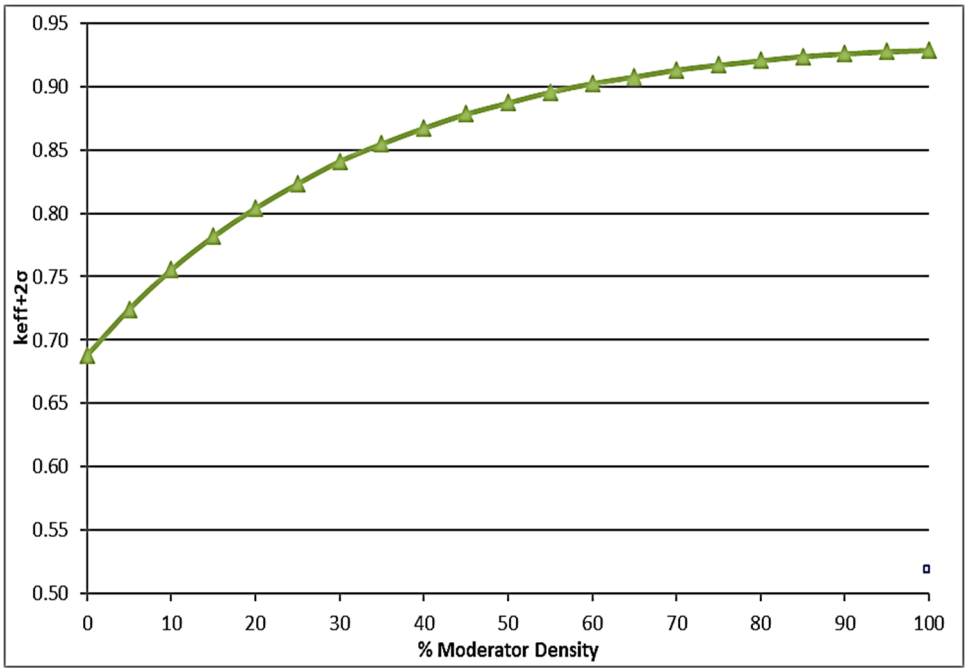

Figure 6.7.6-14 Booster Moderator Density Study

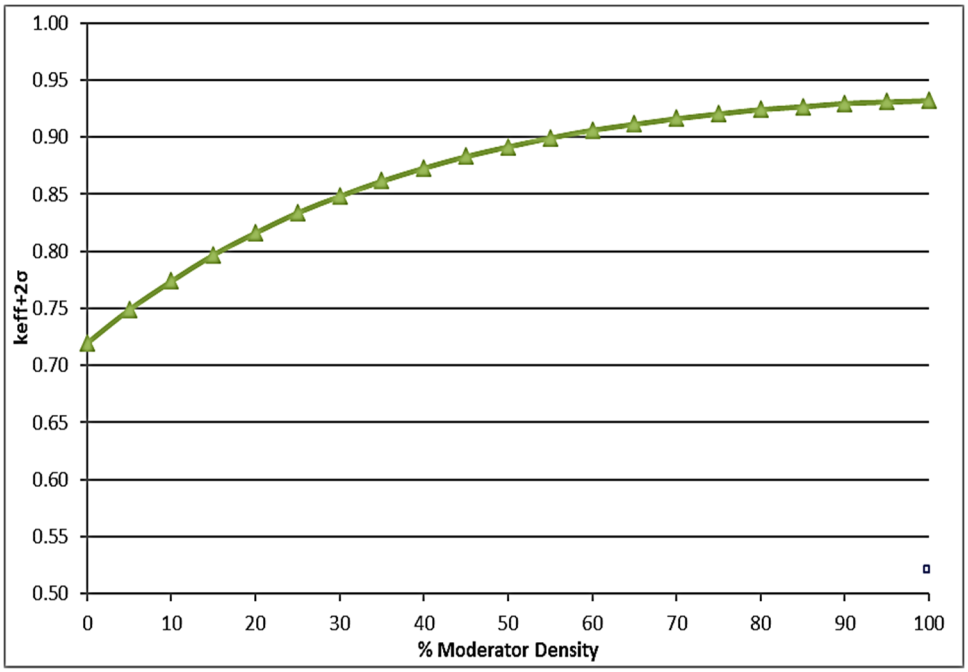

Table 6.7.6-1 NRU Physical and Material Comparison to EFN, Moly, and Booster Rods/Targets

Name	NRU HEU	Short Moly	Double Length Moly	EFN	Boosters
Fuel Form	U-Al	U-Al	U-Al	U-Al	U-Al
Fuel Meat Length (cm)	274	6.67	15.88	81.3	210
Fuel Meat Diameter (cm)	0.549	0.549	0.549	0.549	0.386
Weight of ^{235}U (g)	41.0 ± 2	1.0 ± 0.002	2.4 ± 0.005	12.4 ± 0.6	17.2 ± 0.9
Weight of Total U (g)	44.0 ± 2.2	1.1 ± 0.002	2.58 ± 0.005	13.3 ± 0.7	18.5 ± 0.9
Fuel Aluminum Weight (g)	166	4	9.7	49.9	63.7
Total Weight of Fuel Meat (g)	210	5.1	12.3	63.1	82.2
Clad Material	Al	Al	Al	Al	Al
Clad Thickness (cm)	0.0762	0.202	0.202	0.076	0.152
Fuel Element Diameter (cm) [Inc. Fin]	0.955	1.21	1.21	0.955	0.986
Fuel Element Diameter (cm) [No Fin Calc.]	0.701	0.956	0.956	0.701	0.692
# of Fins per Element	6	10	10	6	6 (Spiral)
Max ^{235}U per Rod (g)	43.24	1.01	2.41	13	18.1
Max Number Rods or Targets in Tube	12	20	36	36	16
U percent of Fuel Meat (Nominal)	79.0%	78.4%	78.9%	79.1%	77.5%
Total ^{235}U per Tube (gram)	518.88	20.2	86.76	468	289.6
Fuel Volume per Tube/Caddy (cm3)	778.33	31.58	135.33	692.83	393.19
Fuel Density (g ^{235}U/cm3)	0.6667	0.6397	0.6411	0.6755	0.7365
Gram^{235}U/cm per rod	0.1578	0.1514	0.1518	0.1599	0.0862
Ratio of ^{235}U gram /cm3 to NRU	--	0.9595	0.9617	1.0133	1.1048
cm of active Fuel	3288	133.4	571.68	2926.8	3360
Ratio of cm Fuel to NRU Fuel	--	0.041	0.174	0.890	1.022

Table 6.7.6-2 Caddy NRU Complete Clad Removal k_{eff} as a Function of Number of Rod Segments

# Rod Segments	k_{eff}	σ	k_{eff} + 2σ
23	0.90953	0.00025	0.91003
25	0.92790	0.00025	0.92840
27	0.92963	0.00026	0.93015
28	0.92913	0.00026	0.92965
29	0.93534	0.00026	0.93586
30	0.93970	0.00026	0.94022
31	0.94471	0.00025	0.94521
32	0.94803	0.00026	0.94855
33	0.95012	0.00027	0.95066
34	0.95193	0.00026	0.95245
35	0.95285	0.00027	0.95339
36	0.95291	0.00026	0.95343
37	0.95008	0.00026	0.95060
38	0.94653	0.00026	0.94705

Table 6.7.6-3 Caddy NRU Comparison of a Full Cask Load versus Outer Tubes Only

Configuration	k_{eff}	σ	k_{eff} + 2σ
Full Cask Load	**0.95193**	**0.00026**	**0.95245**
Only Outer Locations	0.63960	0.00024	0.64008

Table 6.7.6-4 Caddy NRU Minimum Clad (0.02 cm equivalent Clad Thickness)

# Rod Segments	k_{eff}	σ	k_{eff} + 2σ
27	0.91339	0.00027	0.91393
30	0.92053	0.00026	0.92105
31	0.92392	0.00025	0.92442
32	0.92593	0.00027	0.92647
33	0.92702	0.00025	0.92752
34	0.92802	0.00026	0.92854
35	0.92766	0.00026	0.92818

Table 6.7.6-5 Caddy NRU to EFN Comparison

# Rod Segments	NRU $k_{eff} + 2\sigma$	EFN $k_{eff} + 2\sigma$	Δk
32	0.94855	0.94461	0.00394
34	0.95245	0.94793	0.00452
36	0.95343	0.94822	0.00521
38	0.94705	0.94039	0.00666

Table 6.7.6-6 Study on Moly Target with NRU in Outer Tube Locations

# Moly Rod Segments	k_{eff}	Σ	$k_{eff} + 2\sigma$
4	0.73404	0.00024	0.73452
8	0.80595	0.00024	0.80643
12	0.83444	0.00025	0.83494
16	0.83599	0.00025	0.83649
21	0.82599	0.00025	0.82649
27	0.80333	0.00026	0.80385
36	0.77614	0.00026	0.77666
8A (1)	0.74794	0.00025	0.74844
8B (1)	0.79469	0.00025	0.79519
12 (1)	0.80961	0.00025	0.81011

Note 1: Modified rod and/or caddy location.

Table 6.7.6-7 Booster Rod Complete Clad Removal k_{eff} as a Function of Number of Rod Segments

# Rod Segments	k_{eff}	σ	$k_{eff} + 2\sigma$
23	0.78910	0.00023	0.78956
25	0.81640	0.00023	0.81686
27	0.83131	0.00024	0.83179
28	0.83672	0.00024	0.83720
29	0.84775	0.00023	0.84821
30	0.85672	0.00024	0.85720
31	0.86657	0.00024	0.86705
32	0.87487	0.00025	0.87537
33	0.88253	0.00024	0.88301
34	0.88926	0.00025	0.88976
35	0.89584	0.00025	0.89634
36	0.90163	0.00025	0.90213
37	0.90431	0.00026	0.90483
38	0.90617	0.00025	0.90667
39	0.91081	0.00026	0.91133
41	0.91607	0.00025	0.91657
43	0.91952	0.00025	0.92002
46	0.92580	0.00025	0.92630
50	0.93053	0.00027	0.93107
52	0.93034	0.00026	0.93086
53	0.93140	0.00026	0.93192
54	0.93168	0.00027	0.93222
55	0.93087	0.00026	0.93139
57	0.92887	0.00027	0.92941
58	0.92036	0.00026	0.92088

Table 6.7.6-8 Caddy NRU Model with Minimum Clad Moderator Density Study

Cask Interior	Caddy Interior	Cask Exterior	k_{eff}	σ	$k_{eff} + 2\sigma$	$\Delta(k_{eff} + 2\sigma)/\sigma$
Tube Density Study - Cavity 100						
0	100	100	0.68729	0.00025	0.68779	-667.5
5	100	100	0.72370	0.00027	0.72424	-545.0
10	100	100	0.75496	0.00025	0.75546	-479.9
15	100	100	0.78115	0.00026	0.78167	-399.4
20	100	100	0.80348	0.00026	0.80400	-338.7
25	100	100	0.82274	0.00027	0.82328	-280.8
30	100	100	0.84046	0.00026	0.84098	-238.1
35	100	100	0.85433	0.00027	0.85487	-196.5
40	100	100	0.86666	0.00027	0.86720	-163.6
45	100	100	0.87781	0.00027	0.87835	-133.9
50	100	100	0.88659	0.00027	0.88713	-110.5
55	100	100	0.89515	0.00027	0.89569	-87.6
60	100	100	0.90189	0.00027	0.90243	-69.7
65	100	100	0.90717	0.00026	0.90769	-56.7
70	100	100	0.91265	0.00026	0.91317	-41.8
75	100	100	0.91652	0.00027	0.91706	-30.6
80	100	100	0.91996	0.00026	0.92048	-21.9
85	100	100	0.92335	0.00025	0.92385	-13.0
90	100	100	0.92533	0.00026	0.92585	-7.3
95	100	100	0.92713	0.00026	0.92765	-2.4
100	100	100	0.92802	0.00026	**0.92854**	--

Table 6.7.6-9 Booster Rod Model with No Clad Moderator Density Study

Cask Interior	Caddy Interior	Cask Exterior	k_{eff}	σ	$k_{eff} + 2\sigma$	$\Delta(k_{eff} + 2\sigma)/\sigma$
Tube Density Study - Cavity 100						
0	100	100	0.71914	0.00025	0.71964	-577.7
5	100	100	0.74846	0.00025	0.74896	-498.0
10	100	100	0.77346	0.00026	0.77398	-422.2
15	100	100	0.79655	0.00027	0.79709	-353.9
20	100	100	0.81580	0.00027	0.81634	-303.5
25	100	100	0.83344	0.00026	0.83396	-262.1
30	100	100	0.84797	0.00026	0.84849	-223.4
35	100	100	0.86118	0.00027	0.86172	-184.6
40	100	100	0.87263	0.00026	0.87315	-157.6
45	100	100	0.88279	0.00026	0.88331	-130.5
50	100	100	0.89129	0.00026	0.89181	-107.8
55	100	100	0.89907	0.00027	0.89961	-85.4
60	100	100	0.90589	0.00026	0.90641	-68.9
65	100	100	0.91104	0.00026	0.91156	-55.1
70	100	100	0.91596	0.00027	0.91650	-41.2
75	100	100	0.92013	0.00027	0.92067	-30.2
80	100	100	0.92402	0.00025	0.92452	-20.9
85	100	100	0.92645	0.00026	0.92697	-14.0
90	100	100	0.92931	0.00025	0.92981	-6.5
95	100	100	0.93058	0.00025	0.93108	-3.1
100	100	100	0.93168	0.00027	**0.93222**	--

Table 6.7.6-10 Limitation on EFN and Booster Rods and Moly Targets

	EFN Rods	Moly Targets	Booster Rods
Caddy Required	Yes		
Fuel Condition	Damaged/Undamaged		
Max Enrichment wt% ^{235}U	94		
Maximum # Rod/Targets per Caddy	36	36	16
Transport Limitations	No Clad Credit: Outer Tubes only with/optional Moly Interior 30% Clad Credit: Any Location	Any Basket Location – Clad not credited	Any Basket Location – Clad not credited

6.7.7 LANL MOX Fuel Rods

This section includes input, analysis method, results, and criticality benchmark applicability evaluations for the NAC-LWT cask containing a payload of up to 16 transfer tubes loaded with LANL MOX Fuel Rods, see list in Table 1.2-20. The fuel rods may be composed of uranium oxide fuel pellets, plutonium oxide fuel pellets, mixed oxide fuel pellets, plutonium carbide fuel pellets, or mixed carbide fuel pellets.

6.7.7.1 Package Fuel Loading

The NAC-LWT cask may transport up to 16 transfer tubes with undamaged fuel rods. There are six unique rod types that bound the rods intended for shipment. Characteristics and quantity limits of the design basis fuel rods are presented in Table 1.2-20. Each of the rods is significantly shorter than the transfer tube array. The allowed number of rods per transfer tube shown in Table 1.2-20 are based on the number of rods that will physically fit into a transfer tube, except for fuel type 530-000, where only one rod is authorized per transfer tube, despite there being space for more than one.

6.7.7.2 Criticality Model Specifications

This section describes the models that are used in the criticality analyses for the NAC-LWT cask containing up to 16 transfer tubes loaded with LANL MOX Fuel Rods. The rods consist of natural uranium mixed with plutonium, highly enriched uranium with no plutonium, plutonium rods with no uranium, or highly enriched uranium with plutonium. The models are analyzed separately under normal conditions and hypothetical accident conditions to ensure that all possible configurations are subcritical.

The model uses the MCNP6.2 code package with the ENDF/B-VI cross-section set. No cross-section pre-processing is required prior to MCNP implementation. MCNP uses the Monte Carlo technique to calculate the k_{eff} of a system. In these analyses, approximately 1000 cycles with 10,000 neutron histories per cycle are tracked through the system. There are no statistical differences between MCNP6.2 and MCNP5, which was used for the UO_2 and MOX validations in Section 6.5.4.

Description of Calculational Models

The MCNP model of the NAC-LWT cask with up to 16 transfer tubes includes a 4x4 array of transfer tubes in the PWR insert and can weldment. No credit is taken for the divider plate; this is acceptable as parasitic absorption is removed from the system and the maximum rod pitch is larger. The cask is explicitly modeled and identical to the model shown in Figure 6.7.1-1.

The model of the NAC-LWT cask takes advantage of the universe structure of MCNP. Each universe defines an infinite space, bounded after its insertion into a containing cell. The "0" universe defines the cask universe. Other universes are defined for the basket, fuel rod array, transfer tube, and fuel rod. Each universe is developed independently as surfaces and cells. In the basket universe, the rod array is placed into a square (RPP) body that allows the moderator density outside the rod/tube array to be adjusted independently.

The modeled accident condition completely removes the neutron shielding, the neutron shield tank and the cask impact limiters. In the normal conditions model, the impact limiter diameter is modeled as identical to the neutron shield tank diameter. This allows for closer packing for the cask array than physically possible.

VISED sketches of the assembled geometry are shown in Figure 6.7.7-1 and Figure 6.7.7-2. Under normal conditions, the cask outer surface is surrounded by a rectangular body with reflecting boundary conditions. The boundary conditions are imposed on the sides, top and bottom, which simulates an infinite array of casks. Under accident conditions, a 4-cask array is modeled and surrounded by a full density water reflector. Therefore, the CSI is 25.

Package Regional Densities

Basket and cask composition densities (g/cc) and nuclide number densities (atm/b-cm) used in the subsequent criticality analyses are shown in Table 6.7.7-1. The various fuel compositions used are listed in Table 6.7.7-2.

Figure 6.7.7-1 VISED Sketch of LWT Radial View – Normal Conditions (Cask and Basket Detail)

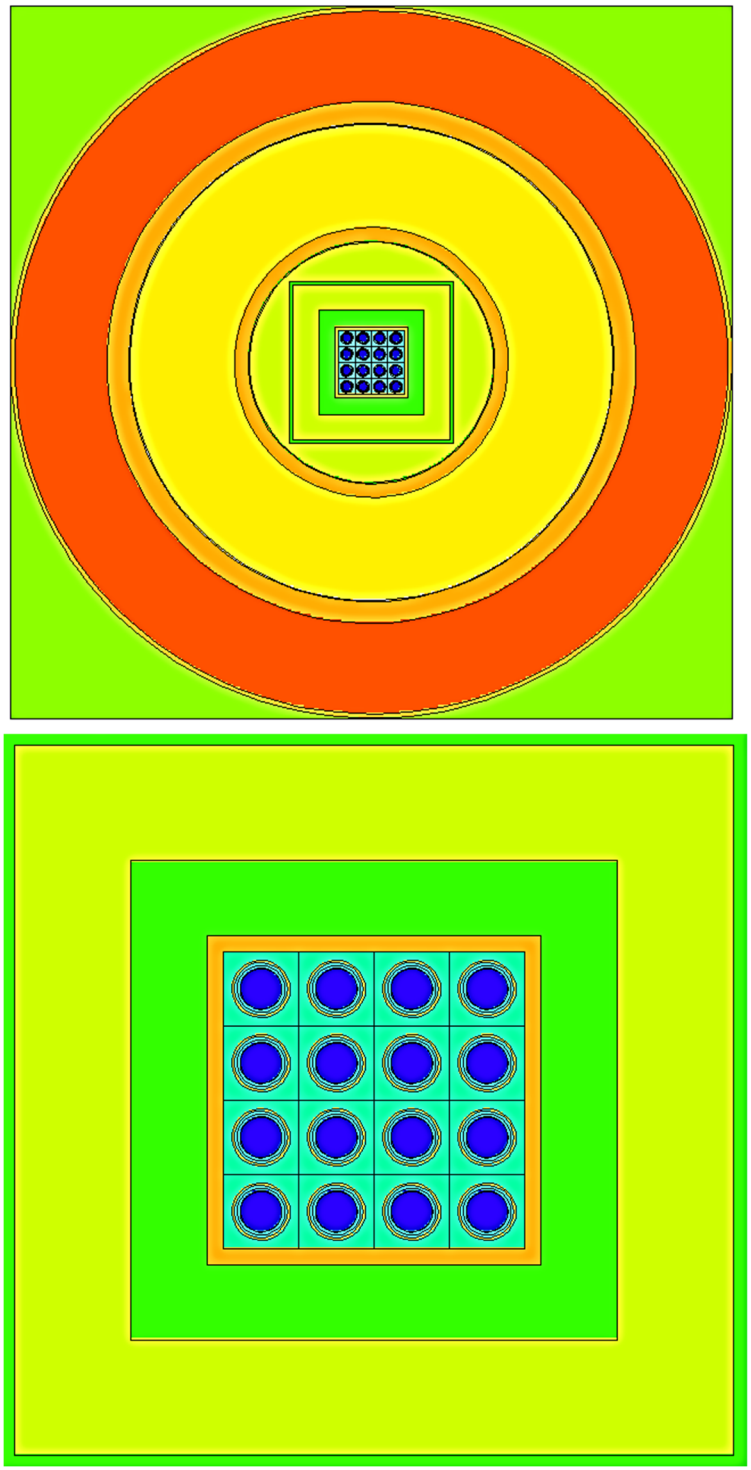

Figure 6.7.7-2 VISED Sketch of LWT Axial View – Normal Conditions

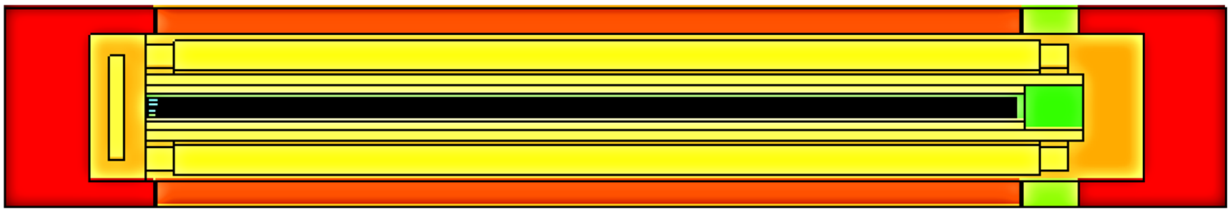

Table 6.7.7-1 LANL MOX Fuel Rods Basket/Cask Compositions and Number Densities

Parameter	H_2O	304 Stainless Steel	Pb	Al
Density, g/cc	0.9982	7.940	11.344	2.702
Oxygen, atoms/b-cm	3.338E-2			
Hydrogen, atoms/b-cm	6.677E-2			
Iron, atoms/b-cm		5.951E-2		
Chromium, atoms/b-cm		1.747E-2		
Nickel, atoms/b-cm		7.739E-3		
Manganese, atoms/b-cm		1.741E-3		
Lead, atoms/b-cm			3.297E-2	
Aluminum, atoms/b-cm				6.031E-2

Table 6.7.7-2 LANL MOX Fuel Rods Compositions and Number Densities

Parameter	PNNL	EXXON	UO_2	ROD1063	530-000[1]	NIS5
Fuel Density, g/cc	10.546	10.551	10.522	11.002	13.328	13.352
^{235}U, atoms/b-cm	1.601E-04	1.585E-04	2.231E-02	--	--	2.449E-02
^{238}U, atoms/b-cm	2.205E-02	2.183E-02	1.406E-03	--	--	1.543E-03
^{239}Pu, atoms/b-cm	9.906E-04	1.166E-03	--	1.980E-02	2.590E-02	5.525E-03
^{240}Pu, atoms/b-cm	2.088E-04	2.458E-04	--	2.434E-03	3.184E-03	2.547E-04
^{241}Pu, atoms/b-cm	1.091E-04	1.285E-04	--	2.182E-03	2.853E-03	6.087E-04
Oxygen, atoms/b-cm	4.700E-02	4.702E-02	4.744E-02	4.886E-02	--	--
Carbon, atoms/b-cm	--	--	--	--	3.194E-02	3.242E-02
Clad Density, g/cc	6.56	6.56	7.94	6.56	6.56	8
Clad Material	Zr Alloy	Zr Alloy	SS304	Zr Alloy	Zr Alloy	SS316
Clad Density, atoms/b-cm	4.334E-02	4.334E-02	8.646E-02	4.334E-02	4.334E-02	8.655E-02

[1] Shown for bounding carbide fuel form.

6.7.7.3 Criticality Calculations

This section presents the criticality analysis for the NAC-LWT cask with up to 16 transfer tubes loaded with LANL MOX Fuel Rods. As stated above, there are six rod types that bound the rods intended for shipment. The rods consist of natural uranium mixed with plutonium, highly enriched uranium with no plutonium, plutonium rods with no uranium, or highly enriched uranium with plutonium.

The baseline evaluation considers undamaged fuel. As no structural evaluations were performed to assure stability of the rods during HAC, the HAC criticality evaluation is augmented with a damaged fuel evaluation.

6.7.7.3.1 Criticality Evaluation – Undamaged Fuel

Criticality results are divided into individual sets of analyses.

- Evaluate the NAC-LWT accident configuration to determine the bounding fuel type(s), and rod pitch.
- Run the optimum moderator density evaluation.
- Evaluate normal condition and single cask "containment reflected" cases.

Rod Type Study

Each of the six rod types is evaluated to determine the bounding fuel type using the thin divider plate and the maximum pitch. Results are shown in Table 6.7.7-3, summarized as follows:

- Due to their high plutonium contents, the 530-000 and ROD1063 rods are significantly more reactive than the other rods. These rods are modeled with one and three rods axially per tube, respectively. The contents are limited to one 530-000 rod per tube (and one tube per cask) and three ROD1063 rods per tube (12 tubes per cask). Rod 530-000 is either oxide or carbide. The carbide form (denoted by the "-C" suffix) is significantly more reactive than the oxide form (denoted by the "-O" suffix).
- The NIS5 carbide rods are modeled with 3 rods axially per tube. These rods are subcritical ($k_{eff}+2\sigma < 0.51$).
- The UO_2 rods have a small area that allows for more than one rod in the x/y plane. Therefore, two and four rods per elevation are also considered. These rods are subcritical ($k_{eff}+2\sigma < 0.67$) with up to four rods per elevation (eight per tube).
- The PNNL and Exxon rods are natural uranium with a relatively small amount of plutonium. The PNNL rods are modeled with four axially per tube and the Exxon rods are modeled with two axially per tube. These rods are subcritical ($k_{eff}+2\sigma < 0.41$).

Based on these results, a mixed loading need not be considered. In particular, with the payload limited to a maximum of one 530-000 rod/tube per cask and three ROD1063 rods per tube (12 tubes per cask), 16 tubes of ROD1063 (48 rods per cask) represents a bounding reactivity configuration. ROD1063 is used for the studies that follow.

The next step varies the pitch (for ROD1063). Results are shown in Table 6.7.7-4. The maximum pitch is the most reactive. This configuration maximizes the H/U-235 ratio.

Optimum Moderator Density Evaluation

ROD1063 is evaluated at various internal and external moderator densities, including preferential flooding of the fuel region. For the preferential flooding scenarios, the square container containing the rod array is evaluated at a moderator density independent of that in the remainder of the cask cavity. Figure 6.7.7-3 contains the moderator density plot. The maximum reactivity is achieved by a preferentially flooded fuel region and void cavity and cask exterior. This result was to be expected as it provides maximum neutronic coupling within the four-cask array. Results are summarized in Table 6.7.7-5.

Single Cask Containment (Fully Reflected) and Normal Condition Array Evaluations

A single cask evaluation is performed to comply with 10 CFR 71.55(b)(3).

The containment for the NAC-LWT is the cask inner shell. While no operating condition results in a removal of the cask outer shell and lead gamma shield, the most reactive preferential flooded and fully flooded cases are reevaluated by removing the lead and outer shells (including neutron shield), and reflecting the system by 20 cm water at full density on the X, Y, and Z faces. Single cask, containment fully reflected reactivities are summarized in Table 6.7.7-6.

A normal condition infinite cask array is also evaluated. As indicated by the evaluations of the accident conditions array, including the radial neutron shield reduces system reactivity by eliminating neutronic interaction between casks. Normal condition cask array results are summarized in Table 6.7.7-7.

6.7.7.3.2 Criticality Evaluation – Damaged Fuel

As no structural evaluations were performed to assure stability of the rods during HAC, the HAC criticality evaluation is augmented with a damaged fuel evaluation. The required transfer tube spacers at the top and bottom of the transfer tube will assure gross fuel material confinement within the handling tube. No credit is applied to intermediate handling tube spacers for separation of fissile material. A conservative criticality evaluation removes all rod structural material (e.g., clad and end plugs) and evaluates optimal moderation within the handling tube via fuel/water mixture height studies.

Material Homogenization

The first step in developing the damaged fuel model is the material homogenization. The fuel/water mixture is smeared across the cross-sectional area of the transfer tube. The height of the fuel/water mixture is varied in 5 cm increments to capture the maximum reactivity height. The minimum mixture height is governed by the fuel volume and the maximum mixture height is governed by the transfer tube interior height.

Rod Type Study

Only the most reactive rod types from the undamaged fuel evaluation require study. A full cask load of 16 transfer tubes is evaluated at the maximum pitch. As expected, maximum reactivity values are greater than those shown in Section 6.7.7.3.1 due to optimizing the H/U or H/Pu ratio. Results are shown in Figure 6.7.7-4 and Table 6.7.7-8, summarized as follows:

- ROD1063 will require an underloaded cask. A mixture height below the minimum shown in the graph (215 cm) is not physically feasible.
- Up to eight UO_2 rods per tube have $k_{eff}+2\sigma < 0.77$.
- The NIS5 rods (analyzed using ELR1) have $k_{eff}+2\sigma < 0.73$. These rods are logical candidates for also loading 530-000 (only one in the inventory).
- The PNNL and EXXON rods have $k_{eff}+2\sigma < 0.47$. For PNNL rods, a mixture height above the maximum shown in the graph (415 cm) is not physically feasible.

Underloading Study

Underloadings are evaluated for the ROD1063 loading and NIS5/530-000 mixed loading. Varying rod patterns are evaluated for each of these underloadings, shown in Figure 6.7.7-5.

A six tube configuration is analyzed for ROD1063 with 10 empty tubes. Results are shown in Figure 6.7.7-6 and Table 6.7.7-9. The maximum reactivity is less than that in Section 6.7.7.3.1 for undamaged rods in 16 transfer tubes. Loadings of six tubes at 2 rods/tube and 1 rod/tube yields decreased reactivity.

The NIS5 rods are evaluated using four tubes in addition to one tube with one 530-000 rod (the remaining 11 tubes are empty). Results are shown in Figure 6.7.7-7 and Table 6.7.7-9.

Optimum Moderator Density Evaluation

The UO_2 rods are the most reactive for damaged fuel for a full loading of 16 transfer tubes. These rods are evaluated at various internal and external moderator densities including preferential flooding of the fuel region. For the preferential flooding scenarios, the square container containing the rod array is evaluated at a moderator density independent of that in the

remainder of the cask cavity. Figure 6.7.7-8 contains the moderator density plot. The maximum reactivity is achieved by a preferentially flooded fuel region and void cavity and cask exterior. This result was to be expected as it provides maximum neutronic coupling within the four-cask array. Results are summarized in Table 6.7.7-10. An additional configuration, with flooded transfer tubes and 0.0001 g/cm^3 water outside of the tubes, yields $k_{eff}+2\sigma$ of 0.44879.

Single Cask Containment (Fully Reflected) Evaluation

A single cask evaluation is performed to comply with 10 CFR 71.55(b)(3).

The containment for the NAC-LWT is the cask inner shell. While no operating condition results in a removal of the cask outer shell and lead gamma shield, the most reactive preferential flooded and fully flooded cases are reevaluated by removing the lead and outer shells (including neutron shield), and reflecting the system by 20 cm water at full density on the X, Y, and Z faces. Single cask, containment fully reflected reactivities are summarized in Table 6.7.7-11.

6.7.7.3.3 Maximum Reactivities and Comparison to USL

The maximum $k_{eff}+2\sigma$ results for three primary analysis groups (single cask, normal array, and accident array) are summarized in Table 6.7.7-8. Two normal condition array cases are included as the cask remains dry through all operating conditions, while 10 CFR 71 requires a normal condition maximum reactivity moderator density case. The listed values represent the maximum system reactivity adjusted for Monte Carlo run uncertainty and are below the lower of the two system USLs.

No benchmarks for mixed heterogeneous UO_2 and MOX rod systems are publicly available. Therefore, individual benchmarks are established for UO_2 and MOX systems. The more limiting USL is applied to the results. Per Section 6.5.4, the USL for an array of UO_2 rods is 0.9376 and 0.9331 for an array of MOX rods for a Δk of 0.0045 between the two fuel types. The evaluations demonstrated that MCNP, with its associated cross-sections, accurately predicts system reactivities containing either fuel rod type.

The focus of the evaluations is a wet (flooded) system, as no reasonable extrapolation of the data provided would indicate a safety concern for a dry system at the requested fissile material levels. While it is recognized that code performance and bias are potentially affected by the difference in the energy level of neutron causing fission, the benchmarks accounted for the basic phenomena, and the computer code is capable of tracking particles at their relevant energy levels.

Table 6.7.7-13 compares the rod/material combinations to the area of applicability for ROD1063. ROD1063 is PuO_2 only; therefore, the hypothetical configuration is significantly outside the area of applicability of the benchmark calculation. There is no statistically significant trend of

reactivity versus energy and any relative changes in USL postulated from the extrapolation is not significant.

As the shipment includes uranium oxide rods, the maximum reactivity uranium oxide rod configuration characteristics are compared to its area of applicability in Table 6.7.7-14. Exceeding the area of applicability for enrichment, pellet diameter, rod diameter, and $H/^{235}U$ ratio in the UO_2 benchmark cases is acceptable as none of these variables has a trend that is statistically significant. Similarly, there is no statistically significant trend of reactivity versus energy and any relative changes in USL postulated from the extrapolation is not significant.

Table 6.7.7-12 and Table 6.7.7-13 also include relevant parameters for damaged fuel. Although homogenized fuel material was not validated, the relative magnitudes of energy of average neutron lethargy causing fission, water to fuel volume ratio, and $H/^{235}U$ atom ratio are similar to those of undamaged fuel. Therefore, the conclusions reached above for undamaged fuel are applied to damaged fuel.

Table 1.2-20 lists the bounding characteristics for the fuel rods evaluated in this section.

Figure 6.7.7-3 LANL MOX Fuel Rods Moderator Density Study

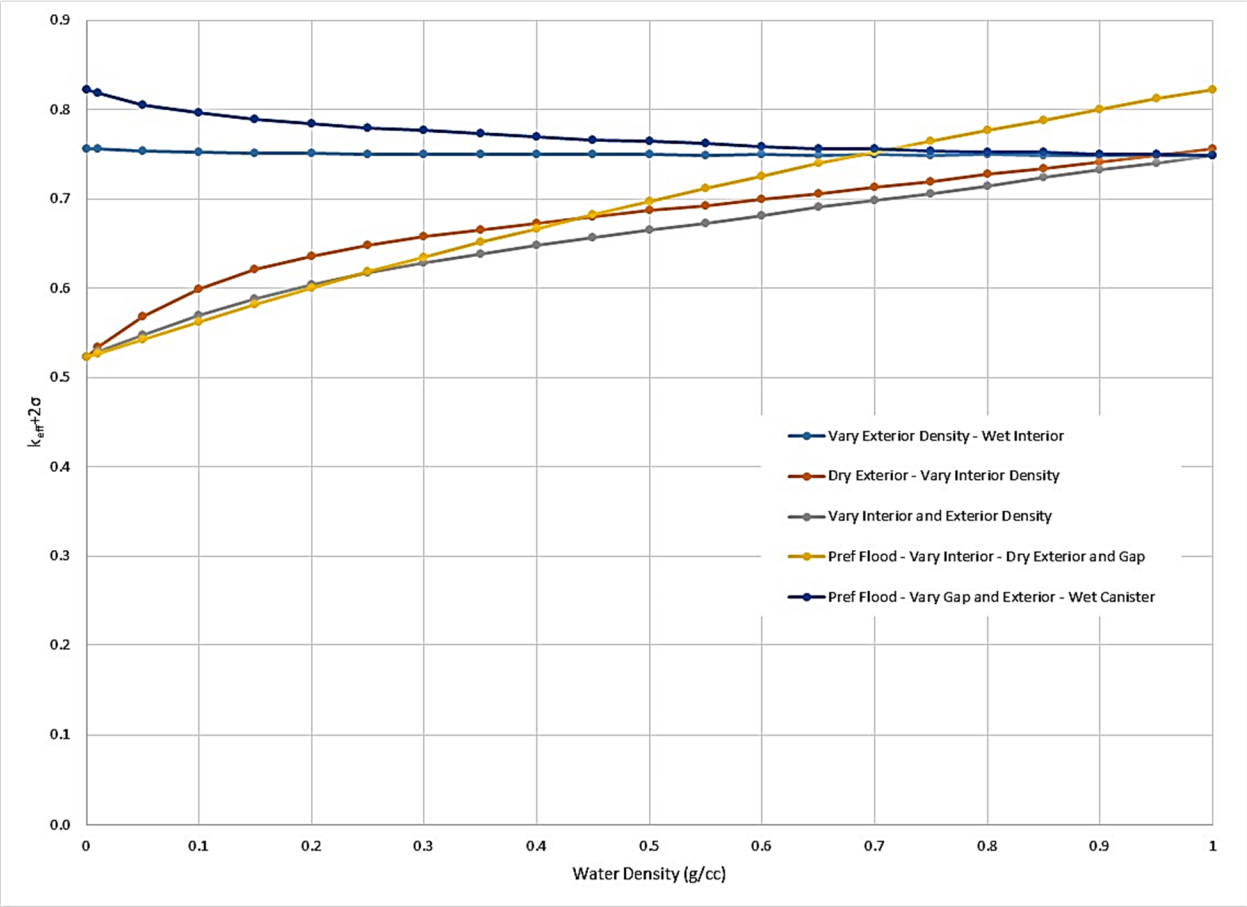

Figure 6.7.7-4 LANL MOX Fuel Rods Damaged Fuel Height Study

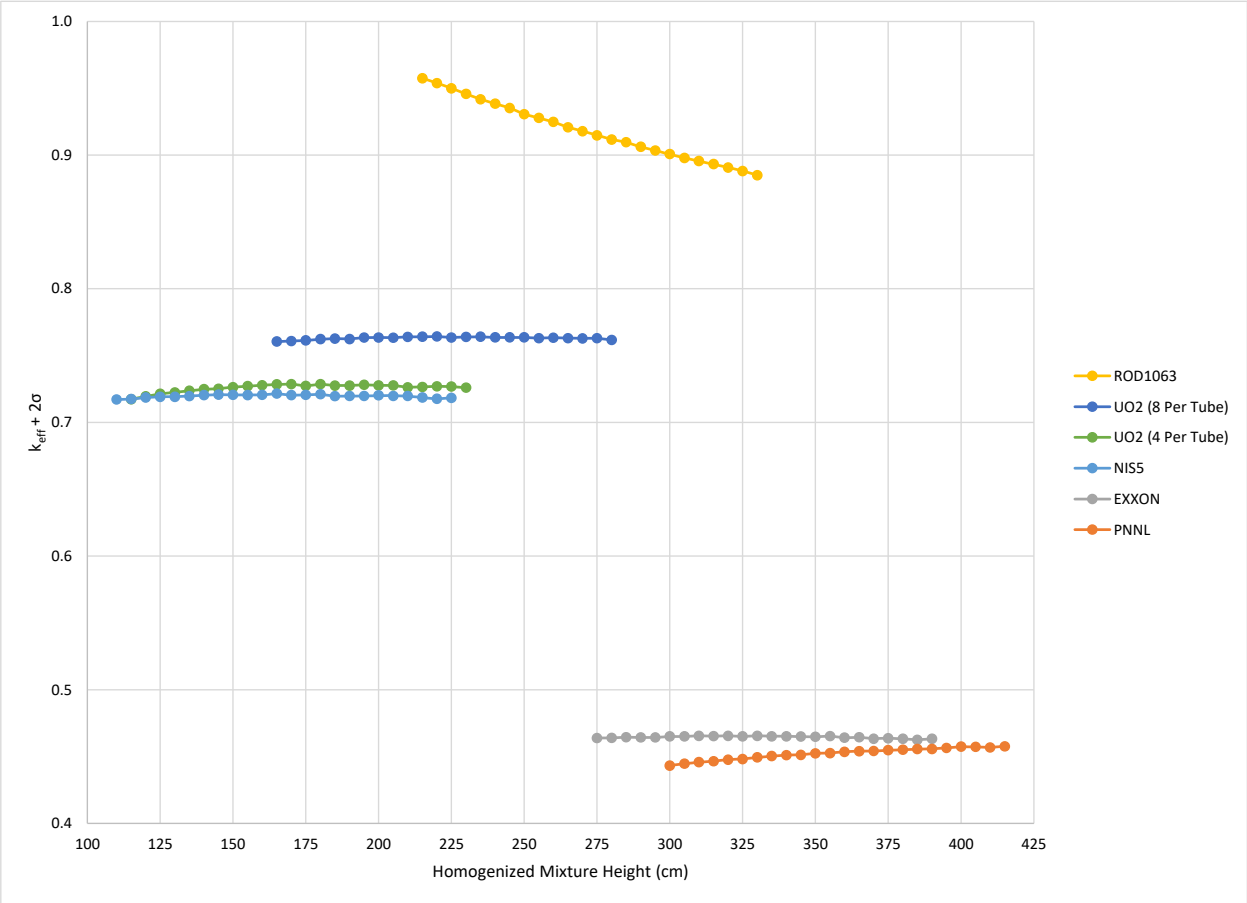

Figure 6.7.7-5 LANL MOX Fuel Rods Damaged Fuel Underloading Rod Loading Patterns

ROD1063

Pattern A

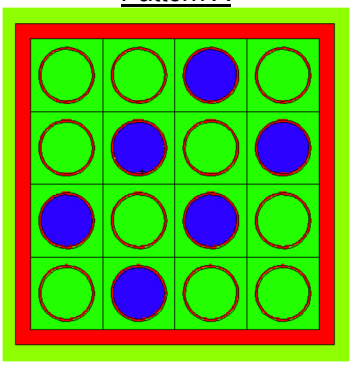

Pattern B

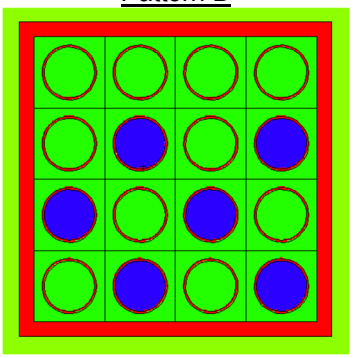

Pattern C

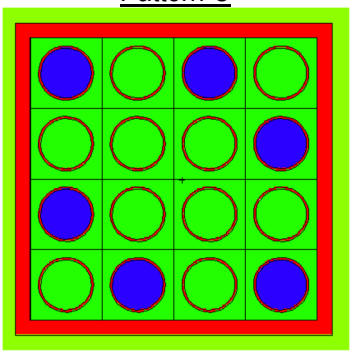

NIS5/530-000

Pattern A

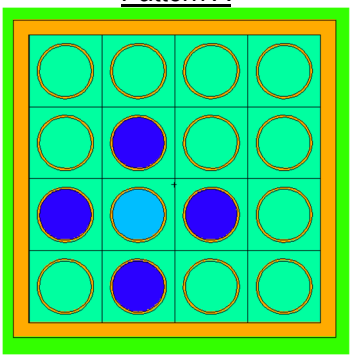

Pattern B

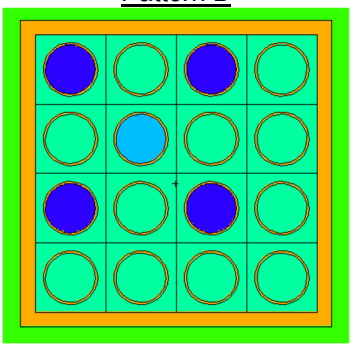

Pattern C

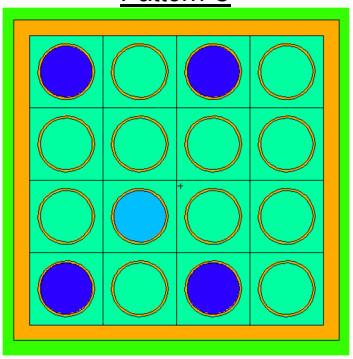

Figure 6.7.7-6 LANL MOX Fuel Rods Damaged Fuel Underloading Results – ROD1063 at 6 Tubes

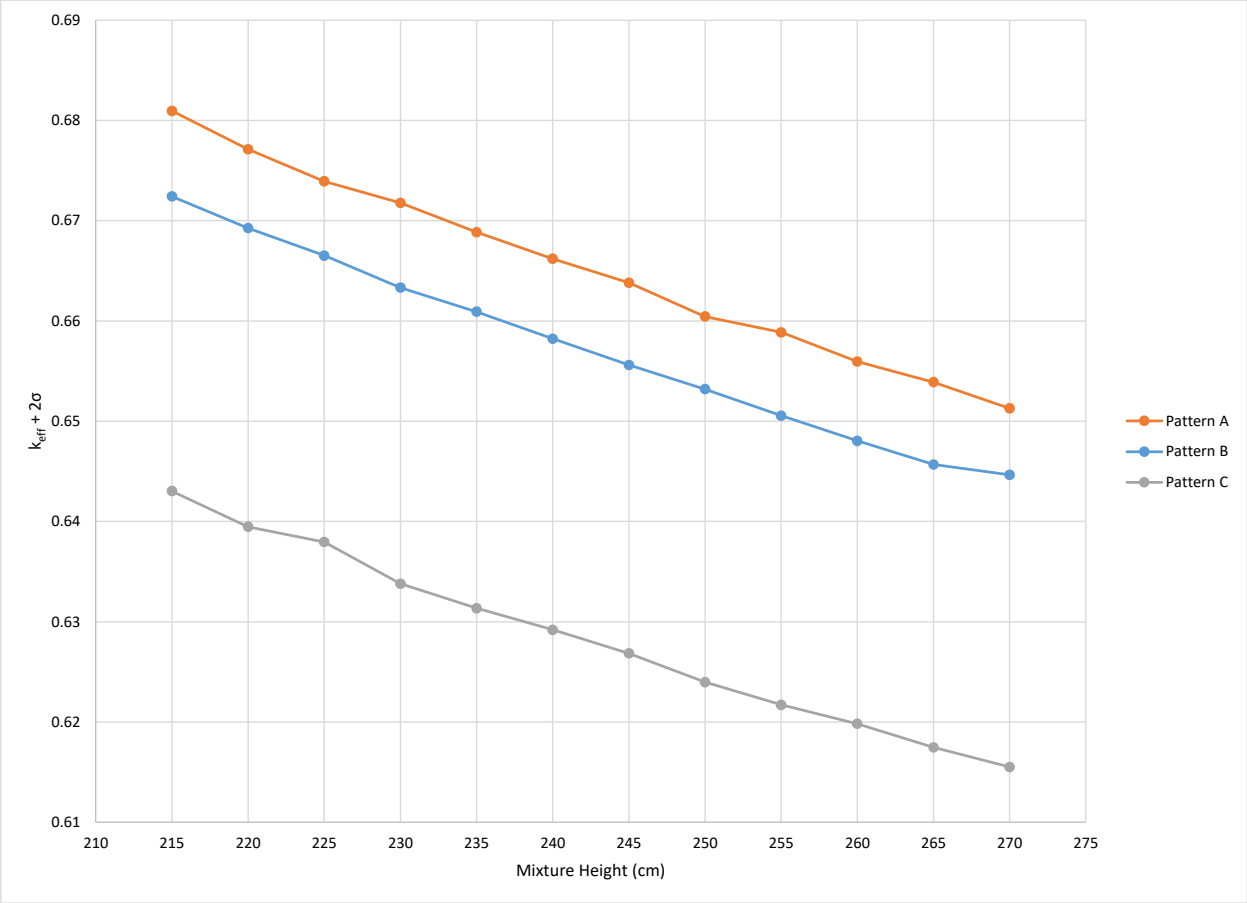

Figure 6.7.7-7 LANL MOX Fuel Rods Damaged Fuel Underloading Results – NIS5 at 4 Tubes and 530-000 at 1 Tube

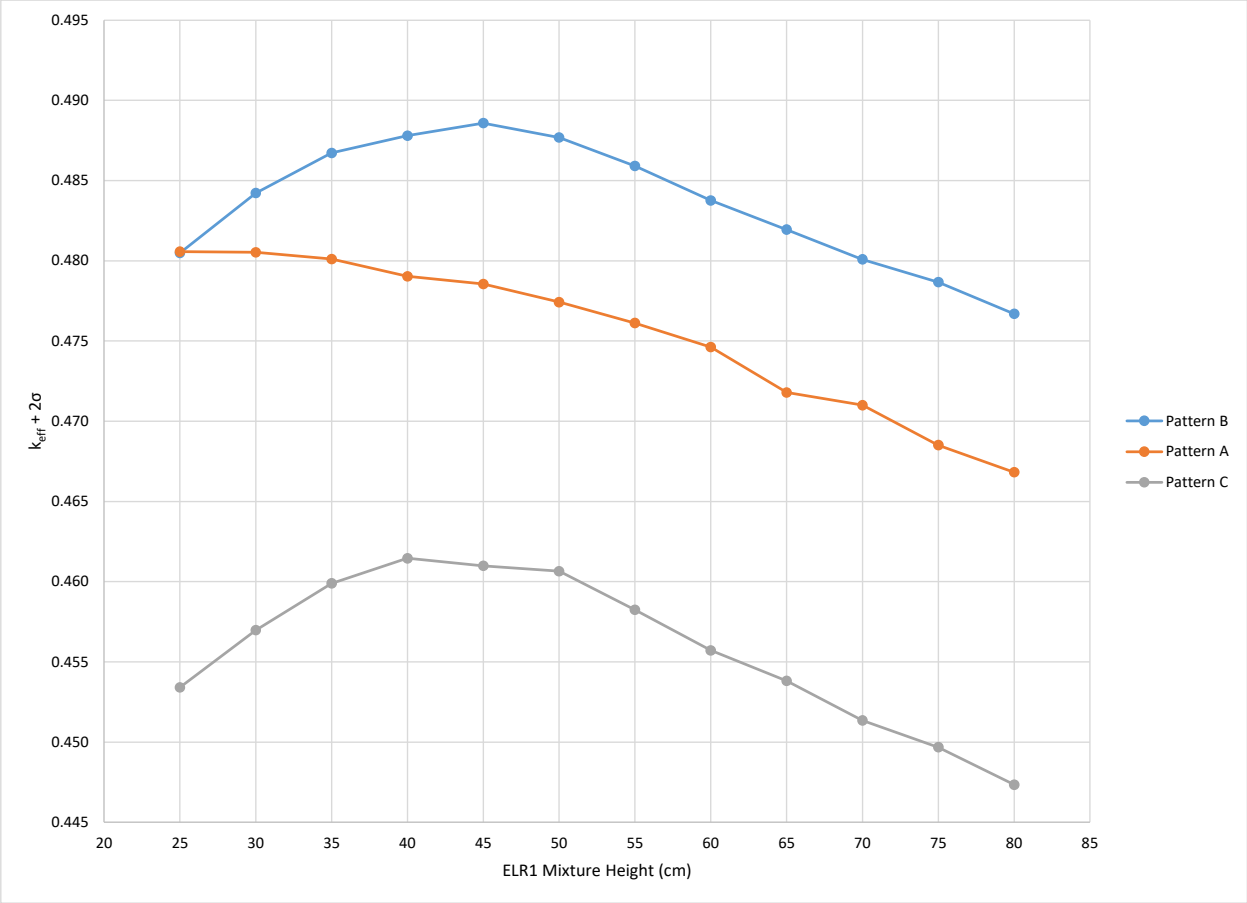

Figure 6.7.7-8 LANL MOX Fuel Rods Moderator Density Study – Damaged Fuel

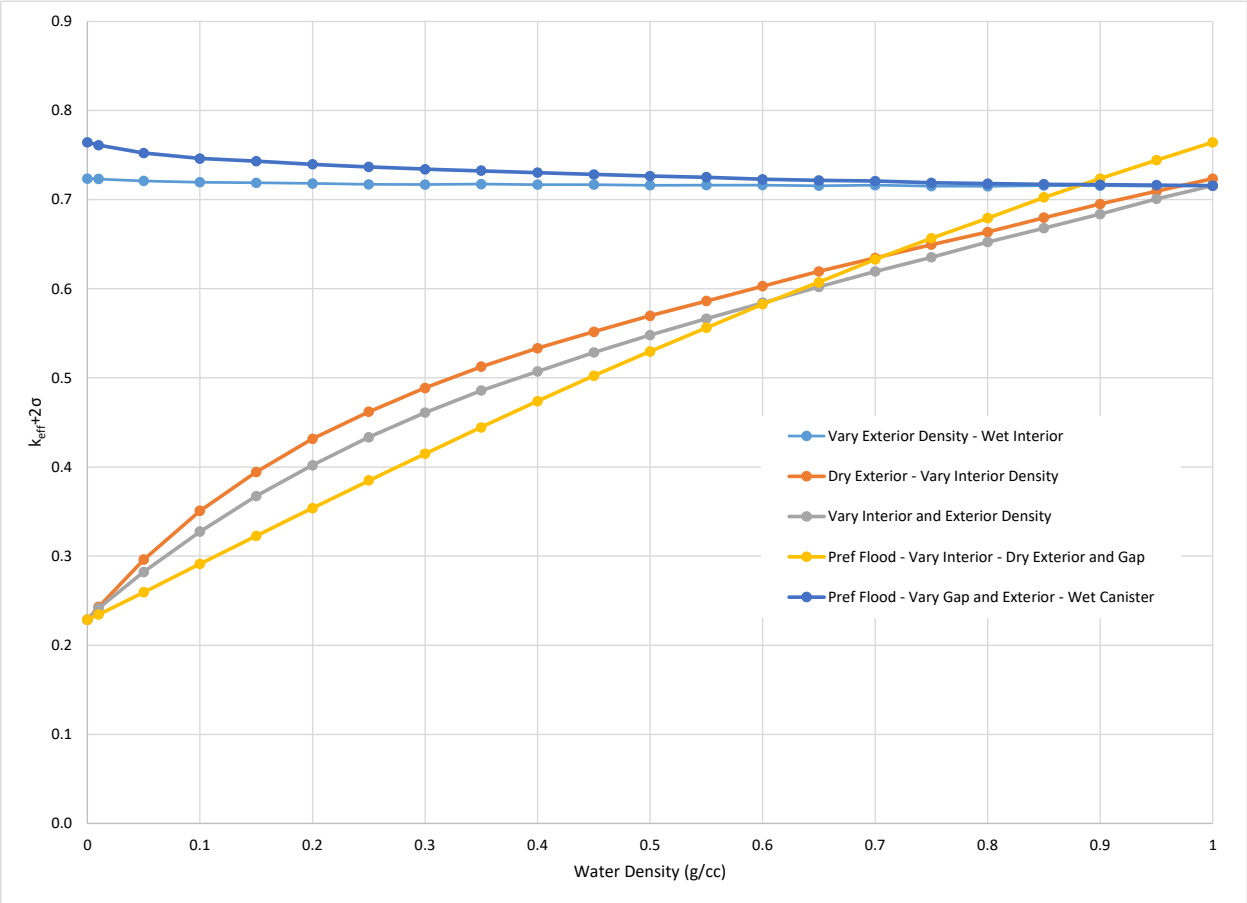

Table 6.7.7-3 LANL MOX Fuel Rods
Reactivity as a Function of Rod Type

Fuel Type	Stack	# Rods	$k_{eff}+2\sigma$
530-000-C	1	16	0.82517
ROD1063	3	48	0.82274
530-000-O	1	16	0.73603
NIS5	3	48	0.50905
UO_2	2	128	0.66817
UO_2	2	64	0.58015
UO_2	2	32	0.46088
EXXON	2	32	0.40129
PNNL	4	64	0.40984

Table 6.7.7-4 LANL MOX Fuel Rods
Reactivity as a Function of Divider Thickness and Rod Pitch

Fuel Type	Pitch	$k_{eff}+2\sigma$
ROD1063	Max (2.2606 cm)	0.82274
	Mid (2.0034 cm)	0.80058
	Min (1.7463 cm)	0.77087

Table 6.7.7-5 LANL MOX Fuel Rods
Reactivity Summary for Accident Condition Array Cases

Rod Gap (g/cc)	Rod Array (g/cc)	Cavity (g/cc)	Exterior (g/cc)	$k_{eff}+2\sigma$
0.0001	0.0001	0.0001	0.0001	0.49455
0.9982	0.9982	0.9982	0.9982	0.72850
0.9982	0.9982	0.9982	0.0001	0.75619
0.9982	0.9982	0.0001	0.0001	0.82274

Table 6.7.7-6 LANL MOX Fuel Rods
Reactivity Summary for Single Cask Containment Fully Reflected Cases

Rod Gap (g/cc)	Rod Array (g/cc)	Cavity (g/cc)	Exterior (g/cc)	$k_{eff}+2\sigma$
0.0001	0.0001	0.0001	0.9982	0.37749
0.9982	0.9982	0.9982	0.9982	0.71407
0.9982	0.9982	0.0001	0.9982	0.64603

Table 6.7.7-7 LANL MOX Fuel Rods
Reactivity Summary for Normal Condition Array Cases

Rod Gap (g/cc)	Rod Array (g/cc)	Cavity (g/cc)	Exterior (g/cc)	$k_{eff}+2\sigma$
0.0001	0.0001	0.0001	0.0001	0.42616
0.9982	0.9982	0.9982	0.9982	0.74681
0.9982	0.9982	0.9982	0.0001	0.74645
0.9982	0.9982	0.0001	0.0001	0.76307

Table 6.7.7-8 LANL MOX Fuel Rods
Reactivity Summary for Damaged Fuel Height Study

Rod Type	Rods/Tube	Height (cm)	$k_{eff}+2\sigma$
ROD1063	3	215	0.95743
UO2-TUBES	8	220	0.76425
UO2-TUBES	4	170	0.72869
ELR1	3	165	0.72152
EXXON	2	330	0.46556
PNNL	4	415	0.45772

Table 6.7.7-9 LANL MOX Fuel Rods
Reactivity Summary for Damaged Fuel Underloading Study

Rod Type	# Tubes	Rods/Tube	Bounding	Height (cm)	$k_{eff}+2\sigma$
ROD1063	6	3	Pattern A	215	0.68094
		2		145	0.66219
		1		75	0.61154
ELR1/530-000-C	4/1	3/1	Pattern B	45/40	0.48858

Table 6.7.7-10 LANL MOX Fuel Rods
Reactivity Summary for Accident Condition Array Cases – Damaged Fuel

Rod Array (g/cc)	Cavity (g/cc)	Exterior (g/cc)	$k_{eff}+2\sigma$
0.0001	0.0001	0.0001	0.22861
0.9982	0.9982	0.9982	0.71566
0.9982	0.9982	0.0001	0.72351
0.9982	0.0001	0.0001	0.76425

Table 6.7.7-11 LANL MOX Fuel Rods
Reactivity Summary for Single Cask Containment Fully Reflected Cases – Damaged Fuel

Rod Array (g/cc)	Cavity (g/cc)	Exterior (g/cc)	$k_{eff}+2\sigma$
0.0001	0.0001	0.9982	0.16657
0.9982	0.9982	0.9982	0.67399
0.9982	0.0001	0.9982	0.58525

Table 6.7.7-12 LANL MOX Fuel Rods
Summary of Maximum Reactivity Configurations

Configuration	Undamaged		Damaged	
	k_{eff} + 2σ	EALCF (eV)	k_{eff} + 2σ	EALCF (eV)
Accident Array – Pref. Flooded	0.82274	1.99E+02	0.76425	7.39E+00
Normal Array – Pref. Flooded	0.76307	2.63E+02	--	--
Normal Array – Dry	0.42616	3.15E+05	--	--
Single Cask Fully (Water) Reflected	0.71407	1.11E+02	0.67399	3.44E+00

Table 6.7.7-13 LANL MOX Fuel Rods
MOX Comparison to Area of Applicability

Parameter	Min	Max	Undamaged	Damaged
EALCF (eV)	8.10E-02	8.99E-01	1.99E+02	1.11E+02
$^{235}U/^{238}U$ Weight Ratio	1.58E-03	1.51E+00	N/A	N/A
$^{238}Pu/^{238}U$ Weight Ratio	1.88E-06	1.54E-04	N/A	N/A
$^{239}Pu/\ ^{238}U$ Weight Ratio	1.39E-02	7.77E-01	N/A	N/A
$^{240}Pu/^{238}U$ Weight Ratio	1.20E-03	8.48E-02	N/A	N/A
$^{241}Pu\ /^{238}U$ Weight Ratio	7.90E-05	7.59E-03	N/A	N/A
$^{242}Pu\ /^{238}U$ Weight Ratio	4.63E-06	6.38E-04	N/A	N/A
Water to Fuel Volume Ratio	1.10E+00	2.07E+01	2.74E+00	3.12E+00

Table 6.7.7-14 LANL MOX Fuel Rods
UO_2 Comparison to Area of Applicability

Parameter	Min	Max	Undamaged	Damaged
Enrichment (wt % ^{235}U)	2.35	4.738	94	94
Fuel rod pitch (cm)	1.3	2.54	1.7463	N/A
Fuel pellet outer diameter (cm)	0.79	1.265	0.5050	N/A
Fuel rod diameter (cm)	0.94	1.4172	0.5817	N/A
$H/^{235}U$ atom ratio	72.7	403.9	13.7	52.346
EALCF (eV)	0.09781	0.3447	16.378	7.3878

Table of Contents

6.6 Appendix 6.6-1

6.6.1 PWR Fuel Assemblies 6.6.1-1
6.6.2 BWR Fuel Assemblies 6.6.2-1
6.6.3 MTR Fuel Elements 6.6.3-1
6.6.4 Intact PWR and BWR Fuel Rods in a Rod Holder or Fuel Assembly Lattice 6.6.4-1
6.6.5 TRIGA Fuel Elements 6.6.5-1
6.6.6 TRIGA Fuel Cluster Rods 6.6.6-1
6.6.7 MTR Fuel Bounding Configuration 6.6.7-1
6.6.8 DIDO Fuel Assemblies 6.6.8-1
6.6.9 General Atomics Irradiated Fuel Material 6.6.9-1
6.6.10 Damaged Fuel Rods in a Rod Holder 6.6.10-1
6.6.11 PULSTAR Fuel Elements in the LWT Cask 6.6.11-1
6.6.12 Spiral Fuel Assemblies in the LWT Cask 6.6.12-1
6.6.13 MOATA Plate Bundles in the LWT Cask 6.6.13-1
6.6.14 High Fissile Mass LEU (32 g ^{235}U per Plate) MTR Fuel Elements 6.6.14-1
6.6.15 PWR MOX Fuel Rods 6.6.15-1
6.6.16 ANSTO/DIDO Combined Basket Payload 6.6.16-1
6.6.17 SLOWPOKE Fuel MCNP Input 6.6.17-1
6.6.18 HEUNL in the LWT Cask 6.6.18-1
6.6.19 SLOWPOKE Fuel Core MCNP Input 6.6.19-1

List of Figures

Figure 6.6.1-1 CSAS Input/Output for NAC-LWT with PWR Fuel – 3.7% Enrichment - Most Reactive Normal Condition Configuration 6.6.1-2
Figure 6.6.1-2 CSAS Input/Output for NAC-LWT with PWR Fuel – 3.7% Enrichment – Most Reactive Accident Condition Configuration 6.6.1-32
Figure 6.6.1-3 CSAS Input/Output for NAC-LWT with PWR Fuel – 3.5% Enrichment – Most Reactive Normal Condition Configuration 6.6.1-57
Figure 6.6.1-4 CSAS Input/Output for NAC-LWT with PWR Fuel – 3.5% Enrichment – Most Reactive Accident Condition Configuration 6.6.1-85
Figure 6.6.2-1 CSAS Input/Output for NAC-LWT with BWR Fuel Assemblies – Most Reactive Normal Condition Configuration 6.6.2-2
Figure 6.6.2-2 CSAS Input/Output for NAC-LWT with BWR Fuel Assemblies – Most Reactive Accident Condition Configuration 6.6.2-29
Figure 6.6.3-1 CSAS Input/Output for NAC-LWT with Design Basis MTR Fuel - Most Reactive Normal Condition Configuration 6.6.3-2
Figure 6.6.3-2 CSAS Input/Output for NAC-LWT with Design Basis MTR Fuel - Most Reactive Accident Condition Configuration – 94 wt %, 355 g ^{235}U 6.6.3-37
Figure 6.6.4-1 CSAS Input/Output for NAC-LWT with 25 PWR Rods – Most Reactive Normal Condition Configuration 6.6.4-2
Figure 6.6.4-2 CSAS Input/Output for NAC-LWT with 25 PWR Rods – Most Reactive Accident Condition Configuration 6.6.4-21
Figure 6.6.4-3 CSAS Input/Output for NAC-LWT with 25 BWR Rods – Most Reactive Normal Condition Configuration 6.6.4-40
Figure 6.6.4-4 CSAS Input/Output for NAC-LWT with 25 BWR Rods – Most Reactive Accident Condition Configuration 6.6.4-59
Figure 6.6.5-1 Summary of CSAS Input/Output for NAC-LWT with TRIGA Fuel Elements - Most Reactive Nonpoisoned Basket Configuration 6.6.5-2
Figure 6.6.5-2 Summary of CSAS25 Input/Output for NAC-LWT with TRIGA Fuel Elements - Most Reactive Poisoned Basket Configuration 6.6.5-36
Figure 6.6.5-3 Summary of CSAS Input/Output for TRIGA Benchmark Core 132 ..... 6.6.5-73
Figure 6.6.6-1 TRIGA Fuel Cluster Rods – Base Fuel Configuration - Nonpoisoned Basket 6.6.6-2
Figure 6.6.6-2 TRIGA Fuel Cluster Rods – Base Fuel Configuration - Poisoned Basket 6.6.6-40
Figure 6.6.6-3 TRIGA Fuel Cluster Rods - Maximum Reactivity LEU Case 6.6.6-77
Figure 6.6.6-4 TRIGA Fuel Cluster Rods – Maximum Reactivity HEU Case 6.6.6-119
Figure 6.6.7-1 MTR Finite Cask Model 6.6.7-2
Figure 6.6.7-2 HEU MTR Finite Cask Model (460 g ^{235}U) 6.6.7-49
Figure 6.6.8-1 Maximum Reactivity DIDO Configuration – Eight Cask Array 6.6.8-2
Figure 6.6.8-2 Maximum Reactivity DIDO Configuration – Infinite Array 6.6.8-97
Figure 6.6.9-1 Maximum Reactivity GA IFM Configuration 6.6.9-2
Figure 6.6.10-1 Damaged BWR Rods in a Rod Holder 6.6.10-2
Figure 6.6.11-1 Maximum Reactivity PULSTAR Configuration 6.6.11-2
Figure 6.6.12-1 Maximum Reactivity Spiral Fuel Assembly Configuration 6.6.12-2

List of Figures (Continued)

Figure 6.6.13-1 Maximum Reactivity MOATA Plate Bundle Configuration 6.6.13-2
Figure 6.6.14-1 High Fissile Mass LEU MTR Sample Input 6.6.14-2
Figure 6.6.15-1 Hexagonal Pitch MOX Rods – MOX Services Fuel Composition 6.6.15-2
Figure 6.6.15-2 Hexagonal Pitch MOX Rods – ^{241}Pu Fuel Composition 6.6.15-23
Figure 6.6.15-3 Square Pitch MOX Rods – MOX Services Fuel Composition 6.6.15-44
Figure 6.6.16-1 Combined DIDO and ANSTO Basket Sample Input/Output 6.6.16-2
Figure 6.6.17-1 Maximum Reactivity Input for Undamaged SLOWPOKE Fuel 6.6.17-2
Figure 6.6.17-2 Maximum Reactivity Input for Damaged SLOWPOKE Fuel 6.6.17-5
Figure 6.6.18-1 Maximum Reactivity HEUNL Configuration 6.6.18-2
Figure 6.6.19-1 Maximum Reactivity Input for the SLOWPOKE Fuel Core Payload 6.6.19-2

6.6 Appendix

This appendix contains computer input/output for the analyses presented in Section 6.4.

6.6.1 PWR Fuel Assemblies

This section contains abbreviated output files from the most reactive normal condition and accident condition moderator density variation cases.

Figure 6.6.1-1 CSAS Input/Output for NAC-LWT with PWR Fuel – 3.7% Enrichment – Most Reactive Normal Condition Configuration

```
PRIMARY MODULE ACCESS AND INPUT RECORD ( SCALE DRIVER - 95/03/29 - 09:06:37 )
   MODULE CSAS25   WILL BE CALLED
     LWT ANALYSIS; Exxon 15x15(W) ASSEMBLY;  NO WATER IN GAP
     27GROUPNDF4 LATTICECELL
     UO2  1  0.95 293.0 92235 3.7 92238 96.3 END
     ZR   2  1.0  293.0  END
     H2O   3 1.000 293.0 END
     AL   4  1.0  293.0  END
     SS304 5 1.0  293.0  END
     PB    6 1.0 293.0 END
     H2O   7 1.0 293.0 END
     H2O   8 1.0E-20 293.0 END
     H2O   9 1.0E-20 293.0 END
     END COMP
     SQUAREPITCH  1.4300 0.9056 1 3 1.0770 2 0.9246 9 END
     LWT ANALYSIS; Exxon 15x15(W) ASSEMBLY;  NO WATER IN GAP
     READ PARAM RUN=YES PLT=NO TME=5000 GEN=303 NPG=1000 END PARAM
     READ GEOM
     UNIT  1
     COM='FUEL PIN CELL - WITH H2O'
     CYLINDER  1 1  0.4528   2P182.88
     CYLINDER  9 1  0.4623   2P182.88
     CYLINDER  2 1  0.5385   2P182.88
     CUBOID    3 1  4P0.7150 2P182.88
     UNIT  2
     COM='WATER ROD CELL - WITH H2O'
     CYLINDER  3 1  0.6477   2P182.88
     CYLINDER  2 1  0.6909   2P182.88
     CUBOID    3 1  4P0.7150 2P182.88
     GLOBAL UNIT 9
     ARRAY  1  -10.7250 -10.7250 -182.88
     CUBOID 3 1 4P11.3157 2P182.88
     CYLINDER 4 1 16.891 2P182.88
     CYLINDER 3 1 16.9863 2P182.88
     CYLINDER 5 1 18.8913 2P182.88
     CYLINDER 6 1 33.4963 2P182.88
     CYLINDER 5 1 36.5443 2P182.88
     CYLINDER 7 1 49.2443 2P182.88
     CYLINDER 5 1 49.8539 212.48 -192.16
     CYLINDER 6 1 49.8539 212.48 -199.78
     CYLINDER 5 1 49.8539 212.48 -208.67
     CUBOID 8 1 4P81.0000 243.00 -240.00
     END GEOM
     READ ARRAY
     ARA=1   NUX=15 NUY=15 NUZ=1  FILL
                        30R1
     2R1   2   2R1   2   3R1   2   2R1   2   2R1
                     7R1   2   7R1
               4R1   2   5R1   2   4R1
               2R1   2   9R1   2   2R1
                        15R1
          3R1   2   3R1   2   3R1   2   3R1
                        15R1
               2R1   2   9R1   2   2R1
               4R1   2   5R1   2   4R1
                     7R1   2   7R1
     2R1   2   2R1   2   3R1   2   2R1   2   2R1
                        30R1
     END FILL
     END ARRAY
     READ BOUNDS ZFC=VAC YXF=VAC END BOUNDS
     END DATA

   SECONDARY MODULE O0O008   HAS BEEN CALLED.

   MODULE O0O008   IS FINISHED. COMPLETION CODE     0. CPU TIME USED     1.32 (SECONDS).

   SECONDARY MODULE O0O002   HAS BEEN CALLED.

   MODULE O0O002   IS FINISHED. COMPLETION CODE     0. CPU TIME USED    13.68 (SECONDS).

   SECONDARY MODULE O0O009   HAS BEEN CALLED.

   MODULE O0O009   IS FINISHED. COMPLETION CODE     0. CPU TIME USED   593.36 (SECONDS).

   MODULE CSAS25   IS FINISHED. COMPLETION CODE     0. CPU TIME USED   612.37 (SECONDS).
```

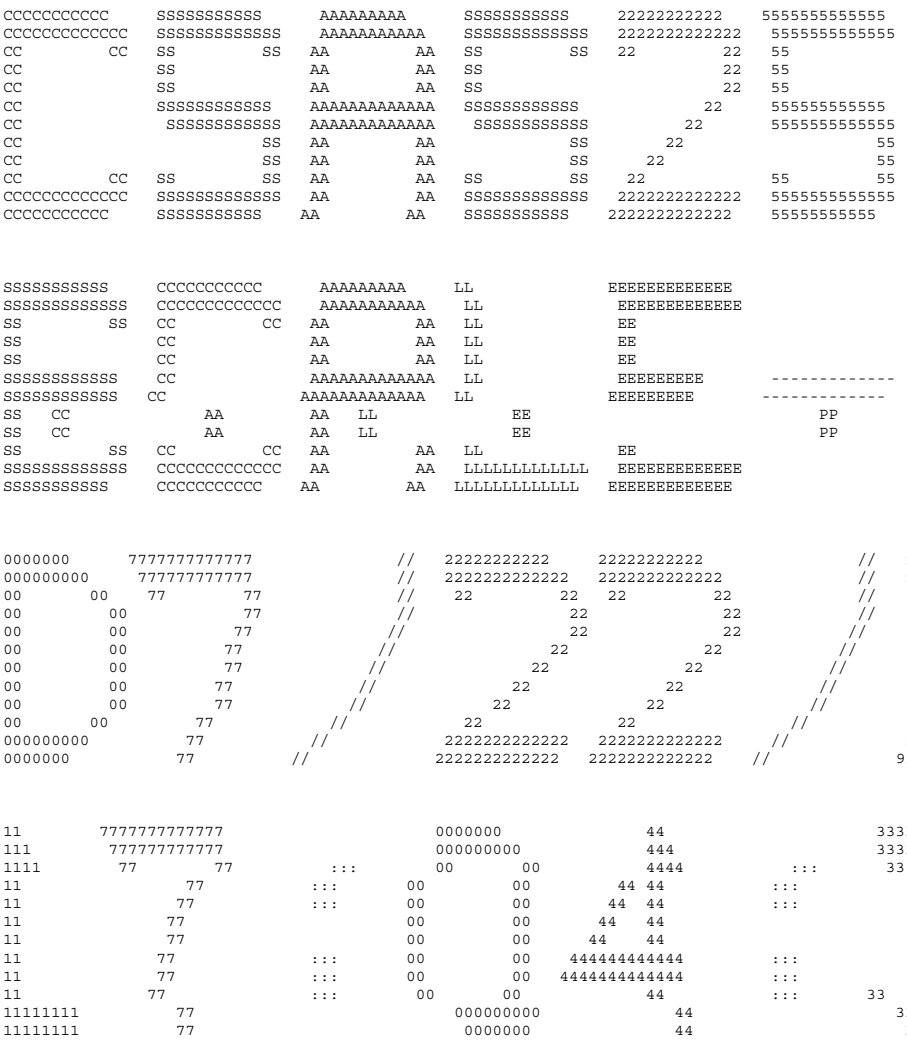

```
  SSSSSSSSSS     CCCCCCCCCC      AAAAAAAA     LL             EEEEEEEEEEEE                 PPPPPPPPPPP     CCCCCCCCCC
 SSSSSSSSSSSS   CCCCCCCCCCCC    AAAAAAAAAA    LL             EEEEEEEEEEEE                 PPPPPPPPPPPP   CCCCCCCCCCCC
 SS          SS CC          CC  AA          AA  LL             EE                           PP         PP  CC          CC
 SS             CC              AA          AA  LL             EE                           PP         PP  CC
 SS             CC              AA          AA  LL             EE                           PP         PP  CC
 SSSSSSSSSSSS   CC              AAAAAAAAAAAAAA  LL             EEEEEEEEE       -------------PPPPPPPPPPPP  CC
  SSSSSSSSSSSS  CC              AAAAAAAAAAAAAA  LL             EEEEEEEEE       -------------PPPPPPPPPPP   CC
           SS   CC              AA          AA  LL             EE                           PP             CC
           SS   CC              AA          AA  LL             EE                           PP             CC
 SS        SS   CC          CC  AA          AA  LL             EE                           PP             CC          CC
 SSSSSSSSSSSS   CCCCCCCCCCCC    AA          AA  LLLLLLLLLLLL   EEEEEEEEEEEE                 PP             CCCCCCCCCCCC
  SSSSSSSSSS     CCCCCCCCCC     AA          AA  LLLLLLLLLLLL   EEEEEEEEEEEE                 PP              CCCCCCCCCC
```

```
*******************************************************************************
*******************************************************************************
*******************************************************************************
*****                                                                     *****
*****                  PROGRAM VERIFICATION INFORMATION                   *****
*****                                                                     *****
*****                CODE SYSTEM:  SCALE-PC VERSION:  4.3                 *****
*****                                                                     *****
*******************************************************************************
*******************************************************************************
*****                                                                     *****
*****                                                                     *****
*****              PROGRAM:  CSAS                                         *****
*****                                                                     *****
*****        CREATION DATE:  03/08/96                                     *****
*****                                                                     *****
*****              VOLUME:   ENG                                          *****
*****                                                                     *****
*****              LIBRARY:  G:\SCALE43\WIN_NT\EXE                        *****
*****                                                                     *****
*****                                                                     *****
*****      PRODUCTION CODE:  CSAS                                         *****
*****                                                                     *****
*****              VERSION:  3.1                                          *****
*****                                                                     *****
*****              JOBNAME:  SCALE-PC                                     *****
*****                                                                     *****
*****    DATE OF EXECUTION:  07/22/98                                     *****
*****                                                                     *****
*****    TIME OF EXECUTION:  17:04:30                                     *****
*****                                                                     *****
*****                                                                     *****
*******************************************************************************
*******************************************************************************
*******************************************************************************
```

```
LWT ANALYSIS; EXXON 15X15(W) ASSEMBLY;  NO WATER IN GAP


**** PROBLEM PARAMETERS ****

LIB 27GROUPNDF4  LIBRARY
MXX            9 MIXTURES
MSC            9 COMPOSITION SPECIFICATIONS
IZM            4 MATERIAL ZONES
GE  LATTICECELL  GEOMETRY
MORE           0 0/1 DO NOT READ/READ OPTIONAL PARAMETER DATA
MSLN           0 FUEL SOLUTIONS


**** PROBLEM COMPOSITION DESCRIPTION ****

SC  UO2          STANDARD COMPOSITION
MX             1 MIXTURE NO.
VF        0.9500 VOLUME FRACTION
ROTH     10.9600 THEORETICAL DENSITY
NEL            2 NO. ELEMENTS
ICP            1 0/1 MIXTURE/COMPOUND
TEMP       293.0 DEG KELVIN
           92000      1.00 ATOM/MOLECULE
                           92235     3.700 WT%
                           92238    96.300 WT%
            8016      2.00 ATOMS/MOLECULE
END

SC  ZR           STANDARD COMPOSITION
MX             2 MIXTURE NO.
VF        1.0000 VOLUME FRACTION
ROTH      6.4900 THEORETICAL DENSITY
NEL            1 NO. ELEMENTS
ICP            1 0/1 MIXTURE/COMPOUND
TEMP       293.0 DEG KELVIN
           40000      1.00 ATOM/MOLECULE
END

SC  H2O          STANDARD COMPOSITION
MX             3 MIXTURE NO.
VF        1.0000 VOLUME FRACTION
ROTH      0.9982 THEORETICAL DENSITY
NEL            2 NO. ELEMENTS
ICP            1 0/1 MIXTURE/COMPOUND
TEMP       293.0 DEG KELVIN
            1001      2.00 ATOMS/MOLECULE
            8016      1.00 ATOM/MOLECULE
END

SC  AL           STANDARD COMPOSITION
MX             4 MIXTURE NO.
VF        1.0000 VOLUME FRACTION
ROTH      2.7020 THEORETICAL DENSITY
NEL            1 NO. ELEMENTS
ICP            1 0/1 MIXTURE/COMPOUND
TEMP       293.0 DEG KELVIN
           13027      1.00 ATOM/MOLECULE
END

SC  SS304        STANDARD COMPOSITION
MX             5 MIXTURE NO.
VF        1.0000 VOLUME FRACTION
ROTH      7.9200 THEORETICAL DENSITY
NEL            4 NO. ELEMENTS
ICP            0 0/1 MIXTURE/COMPOUND
TEMP       293.0 DEG KELVIN
           24304    19.000 WT%
           25055     2.000 WT%
           26304    69.500 WT%
           28304     9.500 WT%
END

SC  PB           STANDARD COMPOSITION
MX             6 MIXTURE NO.
VF        1.0000 VOLUME FRACTION
ROTH     11.3440 THEORETICAL DENSITY
NEL            1 NO. ELEMENTS
ICP            1 0/1 MIXTURE/COMPOUND
TEMP       293.0 DEG KELVIN
           82000      1.00 ATOM/MOLECULE
END

SC  H2O          STANDARD COMPOSITION
MX             7 MIXTURE NO.
VF        1.0000 VOLUME FRACTION
ROTH      0.9982 THEORETICAL DENSITY
NEL            2 NO. ELEMENTS
ICP            1 0/1 MIXTURE/COMPOUND
TEMP       293.0 DEG KELVIN
            1001      2.00 ATOMS/MOLECULE
            8016      1.00 ATOM/MOLECULE
END

SC  H2O          STANDARD COMPOSITION
```

```
MX             8 MIXTURE NO.
VF        0.0000 VOLUME FRACTION
ROTH      0.9982 THEORETICAL DENSITY
NEL            2 NO. ELEMENTS
ICP            1 0/1 MIXTURE/COMPOUND
TEMP       293.0 DEG KELVIN
            1001      2.00 ATOMS/MOLECULE
            8016      1.00 ATOM/MOLECULE
END

SC  H2O          STANDARD COMPOSITION
MX             9 MIXTURE NO.
VF        0.0000 VOLUME FRACTION
ROTH      0.9982 THEORETICAL DENSITY
NEL            2 NO. ELEMENTS
ICP            1 0/1 MIXTURE/COMPOUND
TEMP       293.0 DEG KELVIN
            1001      2.00 ATOMS/MOLECULE
            8016      1.00 ATOM/MOLECULE
END


**** PROBLEM GEOMETRY ****

CTP SQUAREPITCH  CELL TYPE
PITCH     1.4300 CM CENTER TO CENTER SPACING
FUELOD    0.9056 CM FUEL DIAMETER OR SLAB THICKNESS
MFUEL          1 MIXTURE NO. OF FUEL
MMOD           3 MIXTURE NO. OF MODERATOR
CLADOD    1.0770 CM CLAD OUTER DIAMETER
MCLAD          2 MIXTURE NO. OF CLAD
GAPOD     0.9246 CM GAP OUTER DIAMETER
MGAP           9 MIXTURE NO. OF GAP


ZONE SPECIFICATIONS FOR LATTICECELL GEOMETRY

               ZONE  1 IS FUEL
               ZONE  2 IS GAP
               ZONE  3 IS CLAD
               ZONE  4 IS MOD
```

```
*****************************************************************************************************************
***                                                                                                           ***
***                            LWT ANALYSIS; EXXON 15X15(W) ASSEMBLY;  NO WATER IN GAP                        ***
***                                                                                                           ***
*****************************************************************************************************************
*****************************************************************************************************************
***                                                                                                           ***
***                              ********** DATA LIBRARY INFORMATION **********                              ***
***                                                                                                           ***
***          UNIT                                                VOLUME                                       ***
***         NUMBER               DATA SET NAME                   NAME        UNIT FUNCTION                    ***
***         ------               -------------                   ----        -------------                    ***
***                                                                                                           ***
***           89     G:\scale43\DATALIB\FT89F001                              STANDARD COMPOSITION LIBRARY     ***
***                                                                                                           ***
***           82     G:\scale43\DATALIB\FT82F001                              CROSS SECTION LIBRARY            ***
***                                                                                                           ***
***           11     D:\PROJECTS\BU85-C~1\pwrfin02\15NX1M\FT11F00             SHORT CROSS SECTION LIBRARY      ***
***                                                                                                           ***
***           90     D:\PROJECTS\BU85-C~1\pwrfin02\15NX1M\FT90F00             INPUT DATA DIRECT ACCESS         ***
***                                                                                                           ***
*****************************************************************************************************************
*****************************************************************************************************************
***                                                                                                           ***
***                                                                                                           ***
***                                    STANDARD COMPOSITION LIBRARY DATA                                      ***
***                                    ---------------------------------                                      ***
***                                                                                                           ***
***            UNIT NUMBER  :  89                                                                             ***
***                                                                                                           ***
***            DATASET NAME :  G:\scale43\DATALIB\FT89F001                                                    ***
***                                                                                                           ***
***            LIBRARY TITLE:  SCALE-4 STANDARD COMPOSITION LIBRARY                                           ***
***                            637 STANDARD COMPOSITIONS, 490 NUCLIDES                                        ***
***                            90 ELEMENTS WITH VARIABLE ISOTOPIC DISTRBUTIONS.                               ***
***                                                                                                           ***
***            CREATION DATE:   6/30/95                                                                       ***
***                                                                                                           ***
***                                                                                                           ***
***                                                                                                           ***
***                                       CROSS SECTION LIBRARY DATA                                          ***
***                                       --------------------------                                          ***
***                                                                                                           ***
***            UNIT NUMBER  :  82                                                                             ***
***                                                                                                           ***
***            DATASET NAME :  G:\scale43\DATALIB\FT82F001                                                    ***
***                                                                                                           ***
***            LIBRARY TITLE:  SCALE 4.2 - 27 GROUP NEUTRON GROUP LIBRARY                                     ***
***                               BASED ON ENDF-B VERSION 4 DATA                                              ***
***                                  COMPILED FOR NRC     1/27/89                                           ***
      ***                                      LAST UPDATED                                          08/12/94  ***
      ***                                         L.M.PETRIE   -   ORNL                                       ***
      ***                                                                                                     ***
      ***                                                                                                     ***
      ***                                                                                                     ***
      ***                                                                                                     ***
      *****************************************************************************************************************
      *****************************************************************************************************************

                            ........    0 IO'S WERE USED BEFORE READING KENO V DATA    ........

                            ........    0 IO'S WERE USED READING THE KENO V PARAMETER DATA    ........

                           *************** DATA READING COMPLETED ***************

                            ........    0 IO'S WERE USED PREPARING THE KENO V INPUT DATA    ........

                            ........    0 IO'S WERE USED LOADING THE KENO V DATA    ........

                            ........    0 IO'S WERE USED LOADING THE DATA    ........

                            ........    0 IO'S WERE USED CHECKING THE KENO V GEOMETRY DATA    ........
                            *****  RESTART DATA HAS BEEN WRITTEN ON UNIT 95  *****

                            ........    0 IO'S WERE USED WRITING THE KENO V - CSAS DATA    ........

                            ........    0 IO'S WERE USED PROCESSING CSAS INPUT DATA    ........


 CONTROL MODULE CSAS25   IS COMPLETE.
```

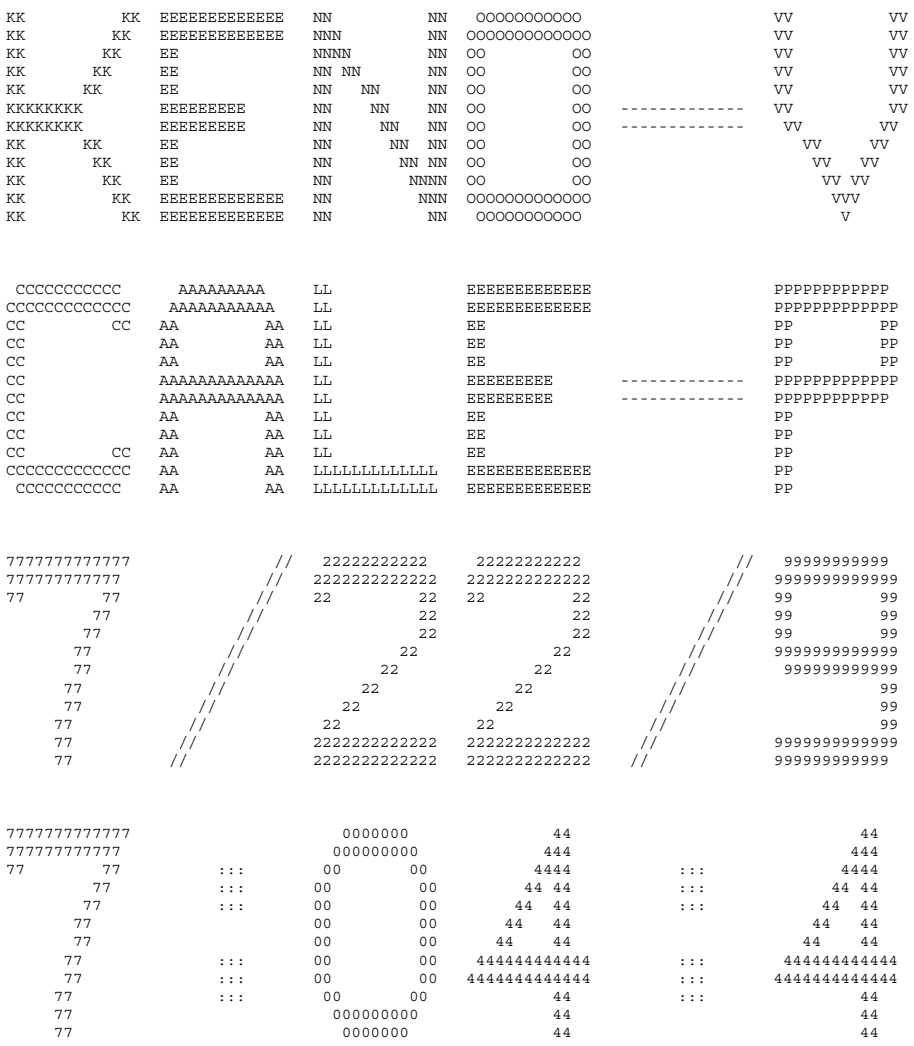
KK KK EEEEEEEEEEEE NN NN OOOOOOOOOO VV VV
KK KK EEEEEEEEEEEE NNN NN OOOOOOOOOOOO VV VV
KK KK EE NNNN NN OO OO VV VV
KK KK EE NN NN NN OO OO VV VV
KK KK EE NN NN NN OO OO VV VV
KKKKKKKK EEEEEEEEE NN NN NN OO OO VV VV
KKKKKKKK EEEEEEEEE NN NN NN OO OO VV VV
KK KK EE NN NN NN OO OO VV VV
KK KK EE NN NN NN OO OO VV VV
KK KK EE NN NNNN OO OO VV VV
KK KK EEEEEEEEEEEE NN NNN OOOOOOOOOOOO VVV
KK KK EEEEEEEEEEEE NN NN OOOOOOOOOO V
SSSSSSSSSS CCCCCCCCCC AAAAAAAAA LL EEEEEEEEEEEE PPPPPPPPPP CCCCCCCCCC
SSSSSSSSSSS CCCCCCCCCCCC AAAAAAAAAA LL EEEEEEEEEEEE PPPPPPPPPPP CCCCCCCCCCCC
SS SS CC CC AA AA LL EE PP PP CC CC
SS CC AA AA LL EE PP PP CC
SS CC AA AA LL EE PP PP CC
SSSSSSSSSSS CC AAAAAAAAAAAAA LL EEEEEEEEE PPPPPPPPPPP CC
SSSSSSSSSS CC AAAAAAAAAAAAA LL EEEEEEEEE PPPPPPPPPP CC
SS CC AA AA LL EE PP CC
SS CC AA AA LL EE PP CC
SS SS CC CC AA AA LL EE PP CC CC
SSSSSSSSSSS CCCCCCCCCCCC AA AA LLLLLLLLLLL EEEEEEEEEEE PP CCCCCCCCCCC
SSSSSSSSSS CCCCCCCCCC AA AA LLLLLLLLLLL EEEEEEEEEEE PP CCCCCCCCCC
0000000 7777777777777 // 22222222222 22222222222 // 99999999999 88888888888
000000000 777777777777 // 2222222222222 2222222222222 // 9999999999999 8888888888888
00 00 77 77 // 22 22 22 22 // 99 99 88 88
00 00 77 // 22 22 // 99 99 88 88
00 00 77 // 22 22 // 99 99 88 88
00 00 77 // 22 22 // 9999999999999 88888888888
00 00 77 // 22 22 // 999999999999 88888888888
00 00 77 // 22 22 // 99 88 88
00 00 77 // 22 22 // 99 88 88
00 00 77 // 22 22 // 99 88 88
000000000 77 // 2222222222222 2222222222222 // 9999999999999 8888888888888
0000000 77 // 2222222222222 2222222222222 // 999999999999 88888888888
11 7777777777777 0000000 44 44 88888888888
111 777777777777 000000000 444 444 8888888888888
1111 77 77 ::: 00 00 4444 ::: 4444 88 88
11 77 ::: 00 00 44 44 ::: 44 44 88 88
11 77 ::: 00 00 44 44 ::: 44 44 88 88
11 77 00 00 44 44 44 44 88888888888
11 77 00 00 44 44 44 44 88888888888
11 77 ::: 00 00 444444444444 ::: 444444444444 88 88
11 77 ::: 00 00 4444444444444 ::: 4444444444444 88 88
11 77 ::: 00 00 44 ::: 44 88 88
11111111 77 000000000 44 44 8888888888888
11111111 77 0000000 44 44 88888888888

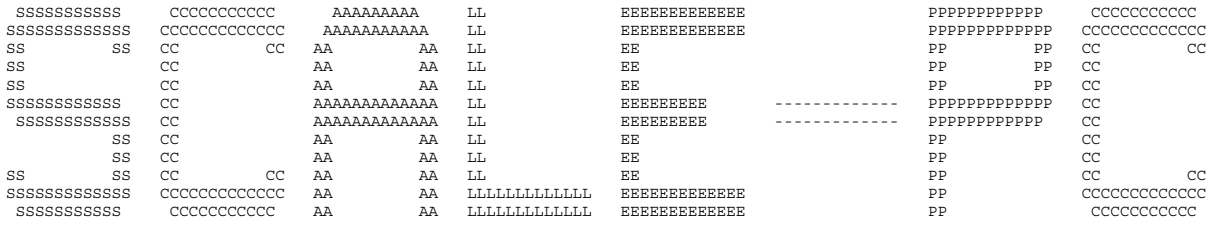


```
*******************************************************************************
*******************************************************************************
*******************************************************************************
*****                                                                     *****
*****                  PROGRAM VERIFICATION INFORMATION                   *****
*****                                                                     *****
*****                CODE SYSTEM:  SCALE-PC VERSION:  4.3                 *****
*****                                                                     *****
*******************************************************************************
*******************************************************************************
*****                                                                     *****
*****                                                                     *****
*****              PROGRAM:  O0O009                                       *****
*****                                                                     *****
*****        CREATION DATE:  03/08/96                                     *****
*****                                                                     *****
*****              VOLUME:   ENG                                          *****
*****                                                                     *****
*****              LIBRARY:  G:\SCALE43\WIN_NT\EXE                        *****
*****                                                                     *****
*****                                                                     *****
*****      PRODUCTION CODE:  KENOVA                                       *****
*****                                                                     *****
*****              VERSION:  3.1                                          *****
*****                                                                     *****
*****              JOBNAME:  SCALE-PC                                     *****
*****                                                                     *****
*****    DATE OF EXECUTION:  07/22/98                                     *****
*****                                                                     *****
*****    TIME OF EXECUTION:  17:04:48                                     *****
*****                                                                     *****
*****                                                                     *****
*******************************************************************************
*******************************************************************************
*******************************************************************************
```

```
*****************************************************************************************************************
***                                                                                                           ***
***                          LWT ANALYSIS; EXXON 15X15(W) ASSEMBLY;  NO WATER IN GAP                          ***
***                                                                                                           ***
*****************************************************************************************************************
***                          ******       NUMERIC PARAMETERS       ******                                    ***
***                                                                                                           ***
***                                                                                                           ***
***            TME         MAXIMUM PROBLEM TIME (MIN)                        ******                       ***
***                                                                                                           ***
***            TBA         TIME PER GENERATION (MIN)                           0.50                       ***
***                                                                                                           ***
***            GEN         NUMBER OF GENERATIONS                                303                       ***
***                                                                                                           ***
***            NPG         NUMBER PER GENERATION                               1000                       ***
***                                                                                                           ***
***            NSK         NUMBER OF GENERATIONS TO BE SKIPPED                    3                       ***
***                                                                                                           ***
***            BEG         BEGINNING GENERATION NUMBER                            1                       ***
***                                                                                                           ***
***            RES         GENERATIONS BETWEEN CHECKPOINTS                        0                       ***
***                                                                                                           ***
***            X1D         NUMBER OF EXTRA 1-D CROSS SECTIONS                     1                       ***
***                                                                                                           ***
***            NBK         NEUTRON BANK SIZE                                   1025                       ***
***                                                                                                           ***
***            XNB         EXTRA POSITIONS IN NEUTRON BANK                        0                       ***
***                                                                                                           ***
***            NFB         FISSION BANK SIZE                                   1000                       ***
***                                                                                                           ***
***            XFB         EXTRA POSITIONS IN FISSION BANK                        0                       ***
***                                                                                                           ***
***            WTA         DEFAULT VALUE OF WEIGHT AVERAGE                   0.5000                       ***
***                                                                                                           ***
***            WTH         WEIGHT HIGH FOR SPLITTING                         3.0000                       ***
***                                                                                                           ***
***            WTL         WEIGHT LOW FOR RUSSIAN ROULETTE                   0.3333                       ***
***                                                                                                           ***
***            RND         STARTING RANDOM NUMBER                         BB827100001                     ***
***                                                                                                           ***
***            NB8         NUMBER OF D.A. BLOCKS ON UNIT  8                     200                       ***
***                                                                                                           ***
***            NL8         LENGTH OF D.A. BLOCKS ON UNIT  8                     512                       ***
***                                                                                                           ***
***            ADJ         MODE OF CALCULATION                               FORWARD                      ***
***                                                                                                           ***
***                        INPUT DATA WRITTEN ON RESTART UNIT                     NO                       ***
***                                                                                                           ***
***                        BINARY DATA INTERFACE                                 YES                       ***
***                                                                                                           ***
***                                                                                                           ***
*****************************************************************************************************************
*****************************************************************************************************************
```

```
*****************************************************************************************************************
*****************************************************************************************************************
***                                                                                                           ***
***                            LWT ANALYSIS; EXXON 15X15(W) ASSEMBLY;  NO WATER IN GAP                        ***
***                                                                                                           ***
*****************************************************************************************************************
***                                ******      LOGICAL PARAMETERS        ******                               ***
***                                                                                                           ***
***  RUN  EXECUTE PROBLEM AFTER CHECKING DATA    YES            PLT  PLOT PICTURE MAP(S)                    NO ***
***                                                                                                           ***
***  FLX  COMPUTE FLUX                            NO            FDN  COMPUTE FISSION DENSITIES              NO ***
***                                                                                                           ***
***  SMU  COMPUTE AVG UNIT SELF-MULTIPLICATION    NO            NUB  COMPUTE NU-BAR & AVG FISSION GROUP     YES ***
***                                                                                                           ***
***  MKU  COMPUTE MATRIX K-EFF BY UNIT NUMBER     NO            MKP  COMPUTE MATRIX K-EFF BY UNIT LOCATION  NO ***
***                                                                                                           ***
***  CKU  COMPUTE COFACTOR K-EFF BY UNIT NUMBER   NO            CKP  COMPUTE COFACTOR K-EFF BY UNIT LOCATION NO ***
***                                                                                                           ***
***  FMU  PRINT FISS PROD MATRIX BY UNIT NUMBER   NO            FMP  PRINT FISS PROD MATRIX BY UNIT LOCATION NO ***
***                                                                                                           ***
***  MKH  COMPUTE MATRIX K-EFF BY HOLE NUMBER     NO            MKA  COMPUTE MATRIX K-EFF BY ARRAY NUMBER   NO ***
***                                                                                                           ***
***  CKH  COMPUTE COFACTOR K-EFF BY HOLE NUMBER   NO            CKA  COMPUTE COFACTOR K-EFF BY ARRAY NUMBER NO ***
***                                                                                                           ***
***  FMH  PRINT FISS PROD MATRIX BY HOLE NUMBER   NO            FMA  PRINT FISS PROD MATRIX BY ARRAY NUMBER NO ***
***                                                                                                           ***
***  HHL  COLLECT MATRIX BY HIGHEST HOLE LEVEL    NO            HAL  COLLECT MATRIX BY HIGHEST ARRAY LEVEL  NO ***
***                                                                                                           ***
***  AMX  PRINT ALL MIXED CROSS SECTIONS          NO            FAR  PRINT FIS. AND ABS. BY REGION          NO ***
***                                                                                                           ***
***  XS1  PRINT 1-D MIXTURE X-SECTIONS            NO            GAS  PRINT FAR BY GROUP                     NO ***
***                                                                                                           ***
***  XS2  PRINT 2-D MIXTURE X-SECTIONS            NO            PAX  PRINT XSEC-ALBEDO CORRELATION TABLES   NO ***
***                                                                                                           ***
***  XAP  PRINT MIXTURE ANGLES & PROBABILITIES    NO            PWT  PRINT WEIGHT AVERAGE ARRAY             NO ***
***                                                                                                           ***
***  PKI  PRINT FISSION SPECTRUM                  NO            PGM  PRINT INPUT GEOMETRY                   NO ***
***                                                                                                           ***
***  P1D  PRINT EXTRA 1-D CROSS SECTIONS          NO            BUG  PRINT DEBUG INFORMATION                NO ***
***                                                                                                           ***
***                                                             TRK  PRINT TRACKING INFORMATION             NO ***
***                                                                                                           ***
***                                                                                                           ***
*****************************************************************************************************************
*****************************************************************************************************************
*****************************************************************************************************************
                                  PARAMETER INPUT COMPLETED

                     ........    0 IO'S WERE USED READING THE PARAMETER DATA      ........

                    ************** DATA READING COMPLETED **************
```

```
*****************************************************************************************************************************
***                                                                                                                       ***
***                              LWT ANALYSIS; EXXON 15X15(W) ASSEMBLY;  NO WATER IN GAP                                  ***
***                                                                                                                       ***
*****************************************************************************************************************************
*****************************************************************************************************************************
***                                                                                                                       ***
***          UNIT                                                VOLUME                                                   ***
***         NUMBER               DATA SET NAME                   NAME        UNIT FUNCTION                              ***
***         ------               -------------                   ----        -------------                              ***
***                                                                                                                       ***
***      XSC  14     D:\PROJECTS\BU85-C~1\pwrfin02\15NX1M\FT14F00              MIXED CROSS SECTIONS                       ***
***                                                                                                                       ***
***      ALB  79     G:\scale43\DATALIB\FT79F001                               INPUT ALBEDOS                              ***
***                                                                                                                       ***
***      WTS  80     G:\scale43\DATALIB\FT80F001                               INPUT WEIGHTS                              ***
***                                                                                                                       ***
***      SKT  16      UNKNOWN                                                  WRITE SCRATCH DATA                         ***
***                                                                                                                       ***
***      BIN  95     D:\PROJECTS\BU85-C~1\pwrfin02\15NX1M\FT95F00              BINARY INPUT DATA                          ***
***                                                                                                                       ***
***      RST  95     D:\PROJECTS\BU85-C~1\pwrfin02\15NX1M\FT95F00              READ RESTART DATA                          ***
***                                                                                                                       ***
***      LIB   4     D:\PROJECTS\BU85-C~1\pwrfin02\15NX1M\FT04F00              INPUT AMPX WORKING LIBRARY                 ***
***                                                                                                                       ***
***             8     D:\PROJECTS\BU85-C~1\pwrfin02\15NX1M\FT08F00              INPUT DATA DIRECT ACCESS                   ***
***                                                                                                                       ***
***             9      UNKNOWN                                                  SUPER GROUPED DIRECT ACCESS                ***
***                                                                                                                       ***
***            10      UNKNOWN                                                  XSEC MIXING DIRECT ACCESS                  ***
***                                                                                                                       ***
*****************************************************************************************************************************

                        ........    0 IO'S WERE USED PREPARING INPUT DATA    ........


                          CROSS SECTIONS READ FROM THE AMPX WORKING LIBRARY ON UNIT    4
```

```
                                LWT ANALYSIS; EXXON 15X15(W) ASSEMBLY;  NO WATER IN GAP

                                          MIXING TABLE

                                    NUMBER OF SCATTERING ANGLES =  2
                                CROSS SECTION MESSAGE THRESHOLD =3.0E-05

MIXTURE =     1          DENSITY(G/CC) =  10.412
   NUCLIDE   ATOM-DENS.   WGT. FRAC.     ZA      AWT             NUCLIDE TITLE
   1008016  4.64601E-02  1.18483E-01    8016    15.9904      OXYGEN-16      ENDF/B-IV MAT 1276                      UPDATED
08/12/94
   1092235  8.70095E-04  3.26161E-02   92235   235.0441      URANIUM-235    ENDF/B-IV MAT 1261                      UPDATED
08/12/94
   1092238  2.23600E-02  8.48901E-01   92238   238.0510      URANIUM-238    ENDF/B-IV MAT 1262                      UPDATED
08/12/94

MIXTURE =     2          DENSITY(G/CC) =  6.4900
   NUCLIDE   ATOM-DENS.   WGT. FRAC.     ZA      AWT             NUCLIDE TITLE
   2040000  4.28457E-02  1.00000E+00   40000    91.2196      ZIRCONIUM      ENDF/B-IV MAT 7141                      UPDATED
08/12/94

MIXTURE =     3          DENSITY(G/CC) = 0.99817
   NUCLIDE   ATOM-DENS.   WGT. FRAC.     ZA      AWT             NUCLIDE TITLE
   3001001  6.67692E-02  1.11927E-01    1001     1.0077      HYDROGEN       ENDF/B-IV MAT 1269/THRM1002             UPDATED
08/12/94
   3008016  3.33846E-02  8.88074E-01    8016    15.9904      OXYGEN-16      ENDF/B-IV MAT 1276                      UPDATED
08/12/94

MIXTURE =     4          DENSITY(G/CC) =  2.7020
   NUCLIDE   ATOM-DENS.   WGT. FRAC.     ZA      AWT             NUCLIDE TITLE
   4013027  6.03066E-02  1.00000E+00   13027    26.9818     AL-27 1193 218 GP 040375(5)                            UPDATED
08/12/94

MIXTURE =     5          DENSITY(G/CC) =  7.9200
   NUCLIDE   ATOM-DENS.   WGT. FRAC.     ZA      AWT             NUCLIDE TITLE
   5024304  1.74286E-02  1.90000E-01   24000    51.9957     CR 1191 WT SS-304(1/EST) P-3 293K SP=5+4(42375)'        UPDATED
08/12/94
   5025055  1.73633E-03  1.99999E-02   25055    54.9379      MANGANESE-55   ENDF/B-IV MAT 1197                      UPDATED
08/12/94
   5026304  5.93579E-02  6.95000E-01   26000    55.8447     FE 1192 WT SS-304(1/EST) P-3 293K SP=5+4(42375)'        UPDATED
08/12/94
   5028304  7.72070E-03  9.50001E-02   28000    58.6872     NI 1190 WT SS-304(1/EST) P-3 293K SP=5+4(42375)'        UPDATED
08/12/94

MIXTURE =     6          DENSITY(G/CC) =  11.344
   NUCLIDE   ATOM-DENS.   WGT. FRAC.     ZA      AWT             NUCLIDE TITLE
   6082000  3.29690E-02  1.00000E+00   82000   207.2100     PB   1288 218NGP 042375 P-3 293K                        UPDATED
08/12/94

MIXTURE =     7          DENSITY(G/CC) = 0.99817
   NUCLIDE   ATOM-DENS.   WGT. FRAC.     ZA      AWT             NUCLIDE TITLE
   7001001  6.67692E-02  1.11927E-01    1001     1.0077      HYDROGEN       ENDF/B-IV MAT 1269/THRM1002             UPDATED
08/12/94
   7008016  3.33846E-02  8.88074E-01    8016    15.9904      OXYGEN-16      ENDF/B-IV MAT 1276                      UPDATED
08/12/94

MIXTURE =     8          DENSITY(G/CC) = 0.99817E-20
   NUCLIDE   ATOM-DENS.   WGT. FRAC.     ZA      AWT             NUCLIDE TITLE
   8001001  6.67692E-22  1.11927E-01    1001     1.0077      HYDROGEN       ENDF/B-IV MAT 1269/THRM1002             UPDATED
08/12/94
   8008016  3.33846E-22  8.88073E-01    8016    15.9904      OXYGEN-16      ENDF/B-IV MAT 1276                      UPDATED
08/12/94

MIXTURE =     9          DENSITY(G/CC) = 0.99817E-20
   NUCLIDE   ATOM-DENS.   WGT. FRAC.     ZA      AWT             NUCLIDE TITLE
   9001001  6.67692E-22  1.11927E-01    1001     1.0077      HYDROGEN       ENDF/B-IV MAT 1269/THRM1002             UPDATED
08/12/94
   9008016  3.33846E-22  8.88073E-01    8016    15.9904      OXYGEN-16      ENDF/B-IV MAT 1276                      UPDATED
08/12/94

                           3001001     HYDROGEN       ENDF/B-IV MAT 1269/THRM1002            UPDATED 08/12/94
                           7001001     HYDROGEN       ENDF/B-IV MAT 1269/THRM1002            UPDATED 08/12/94
                           8001001     HYDROGEN       ENDF/B-IV MAT 1269/THRM1002            UPDATED 08/12/94
                           9001001     HYDROGEN       ENDF/B-IV MAT 1269/THRM1002            UPDATED 08/12/94
                           1008016     OXYGEN-16      ENDF/B-IV MAT 1276                     UPDATED 08/12/94
                           3008016     OXYGEN-16      ENDF/B-IV MAT 1276                     UPDATED 08/12/94
                           7008016     OXYGEN-16      ENDF/B-IV MAT 1276                     UPDATED 08/12/94
                           8008016     OXYGEN-16      ENDF/B-IV MAT 1276                     UPDATED 08/12/94
                           9008016     OXYGEN-16      ENDF/B-IV MAT 1276                     UPDATED 08/12/94
                           4013027    AL-27 1193 218 GP 040375(5)                           UPDATED 08/12/94
                           5024304    CR 1191 WT SS-304(1/EST) P-3 293K SP=5+4(42375)'       UPDATED 08/12/94
                           5025055     MANGANESE-55   ENDF/B-IV MAT 1197                    UPDATED 08/12/94
                           5026304    FE 1192 WT SS-304(1/EST) P-3 293K SP=5+4(42375)'       UPDATED 08/12/94
                           5028304    NI 1190 WT SS-304(1/EST) P-3 293K SP=5+4(42375)'       UPDATED 08/12/94
                           2040000     ZIRCONIUM      ENDF/B-IV MAT 7141                     UPDATED 08/12/94
                           6082000    PB   1288 218NGP 042375 P-3 293K                      UPDATED 08/12/94
                           1092235     URANIUM-235    ENDF/B-IV MAT 1261                     UPDATED 08/12/94
                           1092238     URANIUM-238    ENDF/B-IV MAT 1262                     UPDATED 08/12/94

KENO MESSAGE NUMBER K5-222       1 TRANSFERS FOR MIXTURE     3 WERE CORRECTED FOR BAD MOMENTS.
KENO MESSAGE NUMBER K5-222       1 TRANSFERS FOR MIXTURE     7 WERE CORRECTED FOR BAD MOMENTS.
KENO MESSAGE NUMBER K5-222       1 TRANSFERS FOR MIXTURE     8 WERE CORRECTED FOR BAD MOMENTS.
KENO MESSAGE NUMBER K5-222       1 TRANSFERS FOR MIXTURE     9 WERE CORRECTED FOR BAD MOMENTS.

                             1-D CROSS SECTION ARRAY ID NUMBERS
                                1  2002  1452    27    18  1018

                            ........    0 IO'S WERE USED PREPARING THE CROSS SECTIONS    ........
```

```
*****************************************************************************************************
***                                                                                               ***
***          LWT ANALYSIS; EXXON 15X15(W) ASSEMBLY;  NO WATER IN GAP                              ***
***                                                                                               ***
*****************************************************************************************************
*****************************************************************************************************
***                                                                                               ***
***                              ****** ADDITIONAL INFORMATION ******                             ***
***                                                                                               ***
***  NUMBER OF ENERGY GROUPS               27       USE LATTICE GEOMETRY                    YES  ***
***                                                                                               ***
***  NO. OF FISSION SPECTRUM SOURCE GROUP   1       GLOBAL ARRAY NUMBER                       1  ***
***                                                                                               ***
***  NO. OF SCATTERING ANGLES IN XSECS      2       NUMBER OF UNITS IN THE GLOBAL X DIR.     15  ***
***                                                                                               ***
***  ENTRIES/NEUTRON IN THE NEUTRON BANK   16       NUMBER OF UNITS IN THE GLOBAL Y DIR.     15  ***
***                                                                                               ***
***  ENTRIES/NEUTRON IN THE FISSION BANK    9       NUMBER OF UNITS IN THE GLOBAL Z DIR.      1  ***
***                                                                                               ***
***  NUMBER OF MIXTURES USED                9       USE A GLOBAL REFLECTOR                  YES  ***
***                                                                                               ***
***  NUMBER OF BIAS ID'S USED               1       USE NESTED HOLES                         NO  ***
***                                                                                               ***
***  NUMBER OF DIFFERENTIAL ALBEDOS USED    0       NUMBER OF HOLES                           0  ***
***                                                                                               ***
***  TOTAL INPUT GEOMETRY REGIONS          19       MAXIMUM HOLE NESTING LEVEL                0  ***
***                                                                                               ***
***  NUMBER OF GEOMETRY REGIONS USED       19       USE NESTED ARRAYS                        NO  ***
***                                                                                               ***
***  LARGEST GEOMETRY UNIT NUMBER           9       NUMBER OF ARRAYS USED                     1  ***
***                                                                                               ***
***  LARGEST ARRAY NUMBER                   1       MAXIMUM ARRAY NESTING LEVEL               1  ***
***                                                                                               ***
***                                                                                               ***
***  +X BOUNDARY CONDITION                VAC       -X BOUNDARY CONDITION                   VAC  ***
***                                                                                               ***
***  +Y BOUNDARY CONDITION                VAC       -Y BOUNDARY CONDITION                   VAC  ***
***                                                                                               ***
***  +Z BOUNDARY CONDITION                VAC       -Z BOUNDARY CONDITION                   VAC  ***
***                                                                                               ***
*****************************************************************************************************
```

```
*******************************************************************************************
***                                                                                     ***
***          LWT ANALYSIS; EXXON 15X15(W) ASSEMBLY;  NO WATER IN GAP                    ***
***                                                                                     ***
*******************************************************************************************
*******************************************************************************************
***                                                                                     ***
***                    ****** SPACE AND SUPERGROUP INFORMATION ******                   ***
***                                                                                     ***
***       100000 WORDS IS THE TOTAL SPACE AVAILABLE.                                    ***
***                                                                                     ***
***        28389 WORDS WERE USED FOR NON-SUPERGROUP STORAGE.                            ***
***                                                                                     ***
***        71611 WORDS OF STORAGE ARE AVAILABLE FOR SUPERGROUPED DATA.                  ***
***                                                                                     ***
***        99759 WORDS OF STORAGE ARE AVAILABLE FOR CONSTRUCTING THE SUPERGROUPS.       ***
***                                                                                     ***
***        71551 WORDS OF STORAGE ARE AVAILABLE TO EACH SUPERGROUP.                     ***
***                                                                                     ***
***         1172 WORDS ARE NEEDED FOR THE LARGEST GROUP.                                ***
***                                                                                     ***
***        29777 WORDS OF STORAGE IS SUFFICIENT TO RUN THIS PROBLEM.                    ***
***                                                                                     ***
***        41991 WORDS OF STORAGE WILL ALLOW THE PROBLEM TO RUN WITH ONE SUPERGROUP.     ***
***                                                                                     ***
***        42144 WORDS OF STORAGE WILL BE USED TO RUN THIS PROBLEM.                     ***
***                                                                                     ***
*******************************************************************************************
*******************************************************************************************
***                                                                                     ***
***                   STARTING       ENDING        XSEC        ALBEDO       TOTAL       ***
***   SUPERGROUP        GROUP         GROUP       LENGTH       LENGTH       LENGTH       ***
***                                                                                     ***
***                                                                                     ***
***          1            1             27         2697            0        13542       ***
***                                                                                     ***
*******************************************************************************************

            ........    0 IO'S WERE USED IN SUPERGROUPING    ........

            ........    0 IO'S WERE USED LOADING THE DATA    ........
```

LWT ANALYSIS; EXXON 15X15(W) ASSEMBLY; NO WATER IN GAP

REGION	MEDIA NUM	BIAS ID	GEOMETRY DESCRIPTION FOR THOSE UNITS UTILIZED IN THIS PROBLEM					
			----- UNIT 1 -----					
FUEL PIN CELL - WITH H2O								
1 CYLINDER	1	1	RADIUS = 0.45280	+Z = 182.88	-Z = -182.88	CENTERLINE IS AT	X = 0.00000	Y = 0.00000
2 CYLINDER	9	1	RADIUS = 0.46230	+Z = 182.88	-Z = -182.88	CENTERLINE IS AT	X = 0.00000	Y = 0.00000
3 CYLINDER	2	1	RADIUS = 0.53850	+Z = 182.88	-Z = -182.88	CENTERLINE IS AT	X = 0.00000	Y = 0.00000
4 CUBOID	3	1	+X = 0.71500	-X =-0.71500	+Y = 0.71500	-Y =-0.71500	+Z = 182.88	-Z = -182.88
			----- UNIT 2 -----					
WATER ROD CELL - WITH H2O								
1 CYLINDER	3	1	RADIUS = 0.64770	+Z = 182.88	-Z = -182.88	CENTERLINE IS AT	X = 0.00000	Y = 0.00000
2 CYLINDER	2	1	RADIUS = 0.69090	+Z = 182.88	-Z = -182.88	CENTERLINE IS AT	X = 0.00000	Y = 0.00000
3 CUBOID	3	1	+X = 0.71500	-X =-0.71500	+Y = 0.71500	-Y =-0.71500	+Z = 182.88	-Z = -182.88
			********** GLOBAL **********					
			----- UNIT 9 EXTERNAL TO LATTICE 1 -----					
1 ARRAY NUMBER	1		+X = 10.725	-X = -10.725	+Y = 10.725	-Y = -10.725	+Z = 182.88	-Z = -182.88
2 CUBOID	3	1	+X = 11.316	-X = -11.316	+Y = 11.316	-Y = -11.316	+Z = 182.88	-Z = -182.88
3 CYLINDER	4	1	RADIUS = 16.891	+Z = 182.88	-Z = -182.88	CENTERLINE IS AT	X = 0.00000	Y = 0.00000
4 CYLINDER	3	1	RADIUS = 16.986	+Z = 182.88	-Z = -182.88	CENTERLINE IS AT	X = 0.00000	Y = 0.00000
5 CYLINDER	5	1	RADIUS = 18.891	+Z = 182.88	-Z = -182.88	CENTERLINE IS AT	X = 0.00000	Y = 0.00000
6 CYLINDER	6	1	RADIUS = 33.496	+Z = 182.88	-Z = -182.88	CENTERLINE IS AT	X = 0.00000	Y = 0.00000
7 CYLINDER	5	1	RADIUS = 36.544	+Z = 182.88	-Z = -182.88	CENTERLINE IS AT	X = 0.00000	Y = 0.00000
8 CYLINDER	7	1	RADIUS = 49.244	+Z = 182.88	-Z = -182.88	CENTERLINE IS AT	X = 0.00000	Y = 0.00000
9 CYLINDER	5	1	RADIUS = 49.854	+Z = 212.48	-Z = -192.16	CENTERLINE IS AT	X = 0.00000	Y = 0.00000
10 CYLINDER	6	1	RADIUS = 49.854	+Z = 212.48	-Z = -199.78	CENTERLINE IS AT	X = 0.00000	Y = 0.00000
11 CYLINDER	5	1	RADIUS = 49.854	+Z = 212.48	-Z = -208.67	CENTERLINE IS AT	X = 0.00000	Y = 0.00000
12 CUBOID	8	1	+X = 81.000	-X = -81.000	+Y = 81.000	-Y = -81.000	+Z = 243.00	-Z = -240.00

```
                        LWT ANALYSIS; EXXON 15X15(W) ASSEMBLY;  NO WATER IN GAP

                  -------  UNIT ORIENTATION DESCRIPTION FOR ARRAY   1         -------

Z LAYER   1, X COLUMN   1 TO  15 LEFT TO RIGHT   Y ROW   1 TO  15  BOTTOM TO TOP

 1 1 1 1 1 1 1 1 1 1 1 1 1 1 1

 1 1 1 1 1 1 1 1 1 1 1 1 1 1 1

 1 1 2 1 1 2 1 1 1 2 1 1 2 1 1

 1 1 1 1 1 1 1 2 1 1 1 1 1 1 1

 1 1 1 1 2 1 1 1 1 1 2 1 1 1 1

 1 1 2 1 1 1 1 1 1 1 1 1 2 1 1

 1 1 1 1 1 1 1 1 1 1 1 1 1 1 1

 1 1 1 2 1 1 1 2 1 1 1 2 1 1 1

 1 1 1 1 1 1 1 1 1 1 1 1 1 1 1

 1 1 2 1 1 1 1 1 1 1 1 1 2 1 1

 1 1 1 1 2 1 1 1 1 1 2 1 1 1 1

 1 1 1 1 1 1 1 2 1 1 1 1 1 1 1

 1 1 2 1 1 2 1 1 1 2 1 1 2 1 1

 1 1 1 1 1 1 1 1 1 1 1 1 1 1 1

 1 1 1 1 1 1 1 1 1 1 1 1 1 1 1
```

LWT ANALYSIS; EXXON 15X15(W) ASSEMBLY; NO WATER IN GAP
VOLUMES FOR THOSE UNITS UTILIZED IN THIS PROBLEM

UNIT	REGION	GEOMETRY REGION	VOLUME	CUMULATIVE VOLUME
1	1	1	2.35591E+02 CM**3	2.35591E+02 CM**3
	2	2	9.98936E+00 CM**3	2.45581E+02 CM**3
	3	3	8.76291E+01 CM**3	3.33210E+02 CM**3
	4	4	4.14733E+02 CM**3	7.47943E+02 CM**3
2	1	5	4.82052E+02 CM**3	4.82052E+02 CM**3
	2	6	6.64478E+01 CM**3	5.48500E+02 CM**3
	3	7	1.99443E+02 CM**3	7.47943E+02 CM**3
SURROUNDING GEOMETRY VOLUMES -		GEOMETRY REGION	8 IS AN ARRAY PLACEMENT BOUNDARY REGION	
9	1	8	1.68287E+05 CM**3	1.68287E+05 CM**3
	2	9	1.90480E+04 CM**3	1.87335E+05 CM**3
	3	10	1.40501E+05 CM**3	3.27836E+05 CM**3
	4	11	3.70972E+03 CM**3	3.31546E+05 CM**3
	5	12	7.85353E+04 CM**3	4.10081E+05 CM**3
	6	13	8.79177E+05 CM**3	1.28926E+06 CM**3
	7	14	2.45308E+05 CM**3	1.53457E+06 CM**3
	8	15	1.25193E+06 CM**3	2.78649E+06 CM**3
	9	16	3.72996E+05 CM**3	3.15949E+06 CM**3
	10	17	5.94983E+04 CM**3	3.21899E+06 CM**3
	11	18	6.94145E+04 CM**3	3.28840E+06 CM**3
	12	19	9.38745E+06 CM**3	1.26759E+07 CM**3

UNIT	USES	REGION	MIXTURE	TOTAL VOLUME
1	204	1	1	4.80606E+04 CM**3
		2	9	2.03783E+03 CM**3
		3	2	1.78763E+04 CM**3
		4	3	8.46055E+04 CM**3
2	21	1	3	1.01231E+04 CM**3
		2	2	1.39540E+03 CM**3
		3	3	4.18830E+03 CM**3
9	1	1		1.68287E+05 CM**3
		2	3	1.90480E+04 CM**3
		3	4	1.40501E+05 CM**3
		4	3	3.70972E+03 CM**3
		5	5	7.85353E+04 CM**3
		6	6	8.79177E+05 CM**3
		7	5	2.45308E+05 CM**3
		8	7	1.25193E+06 CM**3
		9	5	3.72996E+05 CM**3
		10	6	5.94983E+04 CM**3
		11	5	6.94145E+04 CM**3
		12	8	9.38745E+06 CM**3

TOTAL MIXTURE VOLUMES

MIXTURE	TOTAL VOLUME	MASS(G)
1	4.80606E+04 CM**3	5.00406E+05
2	1.92717E+04 CM**3	1.25074E+05
3	1.21675E+05 CM**3	1.21452E+05
4	1.40501E+05 CM**3	3.79634E+05
5	7.66253E+05 CM**3	6.06873E+06
6	9.38675E+05 CM**3	1.06483E+07
7	1.25193E+06 CM**3	1.24964E+06
8	9.38745E+06 CM**3	9.37028E-14
9	2.03783E+03 CM**3	2.03410E-17

****
***
*** BIASING INFORMATION ***
***
*** A DEFAULT WEIGHT OF 0.500 WILL BE USED FOR ALL BIAS ID'S. ***
***
****

..... 0 IO'S WERE USED IN KENO-V BEFORE TRACKING .....

..... 0.01650 MINUTES WERE USED PROCESSING DATA. .....

VOLUME FRACTION OF FISSILE MATERIAL IN THE CORE= 2.85587E-01

START TYPE 0 WAS USED.

THE NEUTRONS WERE STARTED WITH A FLAT DISTRIBUTION IN A CUBOID DEFINED BY:
+X= 1.07250E+01 -X=-1.07250E+01 +Y= 1.07250E+01 -Y=-1.07250E+01 +Z= 1.82880E+02 -Z=-1.82880E+02
THE FLAG TO START NEUTRONS IN THE REFLECTOR WAS TURNED OFF

0.09867 MINUTES WERE REQUIRED FOR STARTING. TOTAL ELAPSED TIME IS 0.11733 MINUTES.

LWT ANALYSIS; EXXON 15X15(W) ASSEMBLY; NO WATER IN GAP

GENERATION	GENERATION K-EFFECTIVE	ELAPSED TIME MINUTES	AVERAGE K-EFFECTIVE	AVG K-EFF DEVIATION	MATRIX K-EFFECTIVE	MATRIX K-EFF DEVIATION
KENO MESSAGE NUMBER K5-132		WARNING....ONLY	987 INDEPENDENT FISSION POINTS WERE GENERATED			
1	8.94813E-01	1.53833E-01	1.00000E+00	0.00000E+00	0.00000E+00	0.00000E+00
2	8.81756E-01	1.87667E-01	1.00000E+00	0.00000E+00	0.00000E+00	0.00000E+00
3	9.26407E-01	2.19667E-01	9.26407E-01	0.00000E+00	0.00000E+00	0.00000E+00
4	9.47962E-01	2.52667E-01	9.37184E-01	1.07775E-02	0.00000E+00	0.00000E+00
5	9.44398E-01	2.84667E-01	9.39589E-01	6.67085E-03	0.00000E+00	0.00000E+00
6	9.57348E-01	3.16667E-01	9.44028E-01	6.47781E-03	0.00000E+00	0.00000E+00
7	9.08890E-01	3.50667E-01	9.37001E-01	8.63509E-03	0.00000E+00	0.00000E+00
8	9.21987E-01	3.80833E-01	9.34499E-01	7.48138E-03	0.00000E+00	0.00000E+00
9	9.25118E-01	4.12000E-01	9.33158E-01	6.46338E-03	0.00000E+00	0.00000E+00
10	9.55106E-01	4.44000E-01	9.35902E-01	6.23361E-03	0.00000E+00	0.00000E+00
11	9.07018E-01	4.77833E-01	9.32693E-01	6.36572E-03	0.00000E+00	0.00000E+00
12	9.39932E-01	5.10833E-01	9.33416E-01	5.73951E-03	0.00000E+00	0.00000E+00
13	9.50831E-01	5.42833E-01	9.35000E-01	5.42759E-03	0.00000E+00	0.00000E+00
14	9.66727E-01	5.75833E-01	9.37644E-01	5.61601E-03	0.00000E+00	0.00000E+00
15	9.31262E-01	6.07833E-01	9.37153E-01	5.18925E-03	0.00000E+00	0.00000E+00
16	9.19301E-01	6.39000E-01	9.35878E-01	4.97064E-03	0.00000E+00	0.00000E+00
17	9.05264E-01	6.72833E-01	9.33837E-01	5.05748E-03	0.00000E+00	0.00000E+00
18	9.66305E-01	7.04000E-01	9.35866E-01	5.14771E-03	0.00000E+00	0.00000E+00
19	9.19402E-01	7.35167E-01	9.34897E-01	4.93146E-03	0.00000E+00	0.00000E+00
20	9.26002E-01	7.67167E-01	9.34403E-01	4.67562E-03	0.00000E+00	0.00000E+00
21	9.12766E-01	7.98333E-01	9.33264E-01	4.56695E-03	0.00000E+00	0.00000E+00
22	9.45442E-01	8.28500E-01	9.33873E-01	4.37516E-03	0.00000E+00	0.00000E+00
23	9.38969E-01	8.57833E-01	9.34116E-01	4.16868E-03	0.00000E+00	0.00000E+00
24	9.52939E-01	8.88833E-01	9.34972E-01	4.06573E-03	0.00000E+00	0.00000E+00
25	9.21769E-01	9.19167E-01	9.34398E-01	3.92711E-03	0.00000E+00	0.00000E+00
26	8.98143E-01	9.52000E-01	9.32887E-01	4.05203E-03	0.00000E+00	0.00000E+00
27	9.47410E-01	9.81333E-01	9.33468E-01	3.92974E-03	0.00000E+00	0.00000E+00
28	8.74141E-01	1.01517E+00	9.31186E-01	4.41152E-03	0.00000E+00	0.00000E+00
29	9.01779E-01	1.04900E+00	9.30097E-01	4.38248E-03	0.00000E+00	0.00000E+00
30	9.57997E-01	1.08200E+00	9.31093E-01	4.33903E-03	0.00000E+00	0.00000E+00
31	9.34656E-01	1.11400E+00	9.31216E-01	4.18854E-03	0.00000E+00	0.00000E+00
32	8.76054E-01	1.14700E+00	9.29377E-01	4.44469E-03	0.00000E+00	0.00000E+00
33	9.15205E-01	1.17900E+00	9.28920E-01	4.32317E-03	0.00000E+00	0.00000E+00
34	9.46478E-01	1.21117E+00	9.29469E-01	4.22169E-03	0.00000E+00	0.00000E+00
35	9.16337E-01	1.24317E+00	9.29071E-01	4.11107E-03	0.00000E+00	0.00000E+00
36	9.25952E-01	1.27517E+00	9.28979E-01	3.98938E-03	0.00000E+00	0.00000E+00
37	9.18173E-01	1.30633E+00	9.28671E-01	3.88601E-03	0.00000E+00	0.00000E+00
38	8.87881E-01	1.33750E+00	9.27537E-01	3.94282E-03	0.00000E+00	0.00000E+00
39	9.43313E-01	1.36950E+00	9.27964E-01	3.85841E-03	0.00000E+00	0.00000E+00
40	9.03753E-01	1.40250E+00	9.27327E-01	3.80916E-03	0.00000E+00	0.00000E+00
41	9.28225E-01	1.43533E+00	9.27350E-01	3.71028E-03	0.00000E+00	0.00000E+00
42	9.87952E-01	1.46750E+00	9.28865E-01	3.92087E-03	0.00000E+00	0.00000E+00
43	9.16508E-01	1.50133E+00	9.28563E-01	3.83590E-03	0.00000E+00	0.00000E+00
44	9.29004E-01	1.53433E+00	9.28574E-01	3.74347E-03	0.00000E+00	0.00000E+00
45	9.22795E-01	1.56533E+00	9.28440E-01	3.65785E-03	0.00000E+00	0.00000E+00
46	8.95947E-01	1.60017E+00	9.27701E-01	3.64925E-03	0.00000E+00	0.00000E+00
47	9.60195E-01	1.63033E+00	9.28423E-01	3.63958E-03	0.00000E+00	0.00000E+00
48	9.23892E-01	1.66333E+00	9.28325E-01	3.56094E-03	0.00000E+00	0.00000E+00
49	9.09483E-01	1.69633E+00	9.27924E-01	3.50734E-03	0.00000E+00	0.00000E+00
50	8.85010E-01	1.72833E+00	9.27030E-01	3.54798E-03	0.00000E+00	0.00000E+00
51	9.38381E-01	1.76133E+00	9.27261E-01	3.48253E-03	0.00000E+00	0.00000E+00
52	9.41845E-01	1.79517E+00	9.27553E-01	3.42462E-03	0.00000E+00	0.00000E+00
53	9.46666E-01	1.82633E+00	9.27928E-01	3.37765E-03	0.00000E+00	0.00000E+00
54	9.24769E-01	1.85917E+00	9.27867E-01	3.31262E-03	0.00000E+00	0.00000E+00
55	9.41126E-01	1.89317E+00	9.28117E-01	3.25913E-03	0.00000E+00	0.00000E+00
56	9.71286E-01	1.92517E+00	9.28917E-01	3.29660E-03	0.00000E+00	0.00000E+00
57	9.32230E-01	1.95717E+00	9.28977E-01	3.23667E-03	0.00000E+00	0.00000E+00
58	9.08528E-01	1.99100E+00	9.28612E-01	3.19925E-03	0.00000E+00	0.00000E+00
59	9.67088E-01	2.02133E+00	9.29287E-01	3.21430E-03	0.00000E+00	0.00000E+00
60	9.16362E-01	2.05233E+00	9.29064E-01	3.16625E-03	0.00000E+00	0.00000E+00
61	9.21463E-01	2.08633E+00	9.28935E-01	3.11479E-03	0.00000E+00	0.00000E+00
62	9.52391E-01	2.11917E+00	9.29326E-01	3.08728E-03	0.00000E+00	0.00000E+00
63	9.43213E-01	2.15033E+00	9.29554E-01	3.04477E-03	0.00000E+00	0.00000E+00
64	9.49338E-01	2.18233E+00	9.29873E-01	3.01221E-03	0.00000E+00	0.00000E+00
65	9.37709E-01	2.21533E+00	9.29997E-01	2.96662E-03	0.00000E+00	0.00000E+00
66	9.33550E-01	2.24833E+00	9.30053E-01	2.92043E-03	0.00000E+00	0.00000E+00
67	9.78257E-01	2.28033E+00	9.30794E-01	2.96925E-03	0.00000E+00	0.00000E+00
68	8.92296E-01	2.31417E+00	9.30211E-01	2.98153E-03	0.00000E+00	0.00000E+00
69	9.03144E-01	2.34533E+00	9.29807E-01	2.96435E-03	0.00000E+00	0.00000E+00
70	9.37593E-01	2.37550E+00	9.29922E-01	2.92267E-03	0.00000E+00	0.00000E+00
71	9.27195E-01	2.40750E+00	9.29882E-01	2.88027E-03	0.00000E+00	0.00000E+00
72	9.34762E-01	2.44150E+00	9.29952E-01	2.83969E-03	0.00000E+00	0.00000E+00
73	9.19989E-01	2.47250E+00	9.29811E-01	2.80292E-03	0.00000E+00	0.00000E+00
74	9.33397E-01	2.50650E+00	9.29861E-01	2.76416E-03	0.00000E+00	0.00000E+00
75	9.10163E-01	2.53850E+00	9.29591E-01	2.73936E-03	0.00000E+00	0.00000E+00
76	9.32267E-01	2.57050E+00	9.29628E-01	2.70233E-03	0.00000E+00	0.00000E+00
77	9.26710E-01	2.60250E+00	9.29589E-01	2.66634E-03	0.00000E+00	0.00000E+00
78	8.98330E-01	2.63550E+00	9.29177E-01	2.66297E-03	0.00000E+00	0.00000E+00
79	9.35670E-01	2.66750E+00	9.29262E-01	2.62951E-03	0.00000E+00	0.00000E+00
80	9.33596E-01	2.69967E+00	9.29317E-01	2.59618E-03	0.00000E+00	0.00000E+00
81	9.48769E-01	2.72983E+00	9.29563E-01	2.57490E-03	0.00000E+00	0.00000E+00
82	9.39203E-01	2.76183E+00	9.29684E-01	2.54537E-03	0.00000E+00	0.00000E+00
83	9.28844E-01	2.79200E+00	9.29674E-01	2.51377E-03	0.00000E+00	0.00000E+00
84	8.94824E-01	2.82317E+00	9.29249E-01	2.51903E-03	0.00000E+00	0.00000E+00
85	9.08282E-01	2.85517E+00	9.28996E-01	2.50129E-03	0.00000E+00	0.00000E+00
86	9.15407E-01	2.88917E+00	9.28834E-01	2.47662E-03	0.00000E+00	0.00000E+00
87	9.93412E-01	2.92017E+00	9.29594E-01	2.56252E-03	0.00000E+00	0.00000E+00
88	9.42819E-01	2.95400E+00	9.29748E-01	2.53721E-03	0.00000E+00	0.00000E+00
89	9.39362E-01	2.98517E+00	9.29858E-01	2.51031E-03	0.00000E+00	0.00000E+00
90	9.64034E-01	3.01633E+00	9.30247E-01	2.51183E-03	0.00000E+00	0.00000E+00

91	9.41603E-01	3.04933E+00	9.30374E-01	2.48672E-03	0.00000E+00	0.00000E+00
92	9.26417E-01	3.08217E+00	9.30330E-01	2.45933E-03	0.00000E+00	0.00000E+00
93	9.39822E-01	3.11433E+00	9.30434E-01	2.43439E-03	0.00000E+00	0.00000E+00
94	9.41933E-01	3.14633E+00	9.30559E-01	2.41102E-03	0.00000E+00	0.00000E+00
95	9.08772E-01	3.17833E+00	9.30325E-01	2.39644E-03	0.00000E+00	0.00000E+00
96	9.68022E-01	3.20667E+00	9.30726E-01	2.40448E-03	0.00000E+00	0.00000E+00
97	9.63263E-01	3.23700E+00	9.31069E-01	2.40357E-03	0.00000E+00	0.00000E+00
98	9.49781E-01	3.26983E+00	9.31264E-01	2.38637E-03	0.00000E+00	0.00000E+00
99	8.80497E-01	3.30383E+00	9.30740E-01	2.41894E-03	0.00000E+00	0.00000E+00
100	9.29169E-01	3.33583E+00	9.30724E-01	2.39418E-03	0.00000E+00	0.00000E+00
101	9.14967E-01	3.36883E+00	9.30565E-01	2.37521E-03	0.00000E+00	0.00000E+00
102	9.58820E-01	3.40083E+00	9.30848E-01	2.36826E-03	0.00000E+00	0.00000E+00
103	9.43701E-01	3.43383E+00	9.30975E-01	2.34814E-03	0.00000E+00	0.00000E+00
104	9.40429E-01	3.46583E+00	9.31068E-01	2.32685E-03	0.00000E+00	0.00000E+00
105	9.08479E-01	3.49883E+00	9.30848E-01	2.31457E-03	0.00000E+00	0.00000E+00
106	8.98088E-01	3.53167E+00	9.30533E-01	2.31375E-03	0.00000E+00	0.00000E+00
107	9.19000E-01	3.56100E+00	9.30423E-01	2.29424E-03	0.00000E+00	0.00000E+00
108	9.46591E-01	3.59400E+00	9.30576E-01	2.27760E-03	0.00000E+00	0.00000E+00
109	9.09390E-01	3.62517E+00	9.30378E-01	2.26489E-03	0.00000E+00	0.00000E+00
110	9.05182E-01	3.65533E+00	9.30145E-01	2.25591E-03	0.00000E+00	0.00000E+00
111	9.27537E-01	3.68550E+00	9.30121E-01	2.23525E-03	0.00000E+00	0.00000E+00
112	9.22314E-01	3.71850E+00	9.30050E-01	2.21597E-03	0.00000E+00	0.00000E+00
113	9.10178E-01	3.75133E+00	9.29871E-01	2.20320E-03	0.00000E+00	0.00000E+00
114	9.28726E-01	3.78433E+00	9.29861E-01	2.18347E-03	0.00000E+00	0.00000E+00
115	9.26631E-01	3.81733E+00	9.29832E-01	2.16425E-03	0.00000E+00	0.00000E+00
116	9.21527E-01	3.85033E+00	9.29759E-01	2.14641E-03	0.00000E+00	0.00000E+00
117	9.45762E-01	3.88317E+00	9.29898E-01	2.13221E-03	0.00000E+00	0.00000E+00
118	9.52413E-01	3.91433E+00	9.30092E-01	2.12265E-03	0.00000E+00	0.00000E+00
119	9.15698E-01	3.94817E+00	9.29969E-01	2.10802E-03	0.00000E+00	0.00000E+00
120	9.03018E-01	3.97933E+00	9.29741E-01	2.10252E-03	0.00000E+00	0.00000E+00
121	9.42731E-01	4.01050E+00	9.29850E-01	2.08763E-03	0.00000E+00	0.00000E+00
122	9.28797E-01	4.04067E+00	9.29841E-01	2.07018E-03	0.00000E+00	0.00000E+00
123	8.99805E-01	4.07267E+00	9.29593E-01	2.06795E-03	0.00000E+00	0.00000E+00
124	9.50440E-01	4.10383E+00	9.29764E-01	2.05804E-03	0.00000E+00	0.00000E+00
125	9.34668E-01	4.13583E+00	9.29804E-01	2.04163E-03	0.00000E+00	0.00000E+00
126	9.35066E-01	4.16700E+00	9.29846E-01	2.02554E-03	0.00000E+00	0.00000E+00
127	9.12199E-01	4.20083E+00	9.29705E-01	2.01422E-03	0.00000E+00	0.00000E+00
128	9.04448E-01	4.23300E+00	9.29505E-01	2.00820E-03	0.00000E+00	0.00000E+00
129	9.19795E-01	4.26583E+00	9.29428E-01	1.99380E-03	0.00000E+00	0.00000E+00
130	9.34935E-01	4.29700E+00	9.29471E-01	1.97863E-03	0.00000E+00	0.00000E+00
131	9.75830E-01	4.33000E+00	9.29831E-01	1.99585E-03	0.00000E+00	0.00000E+00
132	9.55577E-01	4.36300E+00	9.30029E-01	1.99031E-03	0.00000E+00	0.00000E+00
133	9.51182E-01	4.39317E+00	9.30190E-01	1.98165E-03	0.00000E+00	0.00000E+00
134	9.32807E-01	4.42433E+00	9.30210E-01	1.96668E-03	0.00000E+00	0.00000E+00
135	9.24365E-01	4.45533E+00	9.30166E-01	1.95233E-03	0.00000E+00	0.00000E+00
136	8.97090E-01	4.48833E+00	9.29919E-01	1.95337E-03	0.00000E+00	0.00000E+00
137	9.25851E-01	4.52317E+00	9.29889E-01	1.93908E-03	0.00000E+00	0.00000E+00
138	9.04873E-01	4.55783E+00	9.29705E-01	1.93354E-03	0.00000E+00	0.00000E+00
139	9.46926E-01	4.59083E+00	9.29831E-01	1.92348E-03	0.00000E+00	0.00000E+00
140	9.14020E-01	4.62283E+00	9.29716E-01	1.91293E-03	0.00000E+00	0.00000E+00
141	9.23100E-01	4.65583E+00	9.29669E-01	1.89971E-03	0.00000E+00	0.00000E+00
142	9.62653E-01	4.68700E+00	9.29904E-01	1.90075E-03	0.00000E+00	0.00000E+00
143	9.30360E-01	4.72083E+00	9.29907E-01	1.88723E-03	0.00000E+00	0.00000E+00
144	9.26224E-01	4.75200E+00	9.29881E-01	1.87407E-03	0.00000E+00	0.00000E+00
145	9.54848E-01	4.78317E+00	9.30056E-01	1.86909E-03	0.00000E+00	0.00000E+00
146	8.96790E-01	4.81517E+00	9.29825E-01	1.87039E-03	0.00000E+00	0.00000E+00
147	9.04833E-01	4.84817E+00	9.29653E-01	1.86542E-03	0.00000E+00	0.00000E+00
148	8.98946E-01	4.88200E+00	9.29442E-01	1.86450E-03	0.00000E+00	0.00000E+00
149	9.33294E-01	4.91400E+00	9.29469E-01	1.85196E-03	0.00000E+00	0.00000E+00
150	9.34657E-01	4.94700E+00	9.29504E-01	1.83974E-03	0.00000E+00	0.00000E+00
151	9.18472E-01	4.97983E+00	9.29430E-01	1.82885E-03	0.00000E+00	0.00000E+00
152	8.67052E-01	5.01467E+00	9.29014E-01	1.86360E-03	0.00000E+00	0.00000E+00
153	9.27600E-01	5.04483E+00	9.29004E-01	1.85124E-03	0.00000E+00	0.00000E+00
154	9.47229E-01	5.07783E+00	9.29124E-01	1.84293E-03	0.00000E+00	0.00000E+00
155	9.32962E-01	5.10900E+00	9.29149E-01	1.83102E-03	0.00000E+00	0.00000E+00
156	9.72611E-01	5.14017E+00	9.29432E-01	1.84085E-03	0.00000E+00	0.00000E+00
157	9.65798E-01	5.17033E+00	9.29666E-01	1.84392E-03	0.00000E+00	0.00000E+00
158	9.17370E-01	5.20233E+00	9.29587E-01	1.83376E-03	0.00000E+00	0.00000E+00
159	9.10247E-01	5.23617E+00	9.29464E-01	1.82620E-03	0.00000E+00	0.00000E+00
160	9.13379E-01	5.26917E+00	9.29362E-01	1.81746E-03	0.00000E+00	0.00000E+00
161	9.28367E-01	5.30117E+00	9.29356E-01	1.80600E-03	0.00000E+00	0.00000E+00
162	9.19275E-01	5.33700E+00	9.29293E-01	1.79579E-03	0.00000E+00	0.00000E+00
163	9.35844E-01	5.36900E+00	9.29334E-01	1.78506E-03	0.00000E+00	0.00000E+00
164	9.11599E-01	5.40200E+00	9.29224E-01	1.77738E-03	0.00000E+00	0.00000E+00
165	9.78200E-01	5.43217E+00	9.29525E-01	1.79182E-03	0.00000E+00	0.00000E+00
166	9.48222E-01	5.46333E+00	9.29639E-01	1.78450E-03	0.00000E+00	0.00000E+00
167	9.32245E-01	5.49433E+00	9.29655E-01	1.77372E-03	0.00000E+00	0.00000E+00
168	9.59548E-01	5.52650E+00	9.29835E-01	1.77218E-03	0.00000E+00	0.00000E+00
169	9.26540E-01	5.55483E+00	9.29815E-01	1.76165E-03	0.00000E+00	0.00000E+00
170	9.56491E-01	5.58317E+00	9.29974E-01	1.75831E-03	0.00000E+00	0.00000E+00
171	9.66214E-01	5.61517E+00	9.30188E-01	1.76098E-03	0.00000E+00	0.00000E+00
172	8.99076E-01	5.64817E+00	9.30005E-01	1.76014E-03	0.00000E+00	0.00000E+00
173	9.28426E-01	5.68017E+00	9.29996E-01	1.74984E-03	0.00000E+00	0.00000E+00
174	8.75995E-01	5.71417E+00	9.29682E-01	1.76774E-03	0.00000E+00	0.00000E+00
175	9.07432E-01	5.74983E+00	9.29553E-01	1.76219E-03	0.00000E+00	0.00000E+00
176	9.06518E-01	5.78267E+00	9.29421E-01	1.75703E-03	0.00000E+00	0.00000E+00
177	9.02496E-01	5.81750E+00	9.29267E-01	1.75372E-03	0.00000E+00	0.00000E+00
178	9.32729E-01	5.84950E+00	9.29287E-01	1.74384E-03	0.00000E+00	0.00000E+00
179	9.45110E-01	5.87983E+00	9.29376E-01	1.73626E-03	0.00000E+00	0.00000E+00
180	9.40149E-01	5.91083E+00	9.29437E-01	1.72754E-03	0.00000E+00	0.00000E+00
181	8.96099E-01	5.94200E+00	9.29250E-01	1.72793E-03	0.00000E+00	0.00000E+00
182	9.11153E-01	5.97317E+00	9.29150E-01	1.72124E-03	0.00000E+00	0.00000E+00
183	8.87411E-01	6.00617E+00	9.28919E-01	1.72717E-03	0.00000E+00	0.00000E+00
184	9.49590E-01	6.03817E+00	9.29033E-01	1.72140E-03	0.00000E+00	0.00000E+00
185	8.81613E-01	6.07117E+00	9.28774E-01	1.73147E-03	0.00000E+00	0.00000E+00

186	9.11404E-01	6.10500E+00	9.28679E-01	1.72462E-03	0.00000E+00	0.00000E+00
187	9.02526E-01	6.13983E+00	9.28538E-01	1.72109E-03	0.00000E+00	0.00000E+00
188	9.31905E-01	6.17183E+00	9.28556E-01	1.71191E-03	0.00000E+00	0.00000E+00
189	9.08840E-01	6.20483E+00	9.28451E-01	1.70599E-03	0.00000E+00	0.00000E+00
190	9.42424E-01	6.23583E+00	9.28525E-01	1.69852E-03	0.00000E+00	0.00000E+00
191	9.30885E-01	6.26700E+00	9.28537E-01	1.68955E-03	0.00000E+00	0.00000E+00
192	9.48939E-01	6.29900E+00	9.28645E-01	1.68406E-03	0.00000E+00	0.00000E+00
193	9.08979E-01	6.33100E+00	9.28542E-01	1.67838E-03	0.00000E+00	0.00000E+00
194	9.15399E-01	6.36217E+00	9.28473E-01	1.67102E-03	0.00000E+00	0.00000E+00
195	9.47854E-01	6.39233E+00	9.28574E-01	1.66537E-03	0.00000E+00	0.00000E+00
196	9.42632E-01	6.42350E+00	9.28646E-01	1.65835E-03	0.00000E+00	0.00000E+00
197	8.91985E-01	6.45733E+00	9.28458E-01	1.66050E-03	0.00000E+00	0.00000E+00
198	9.18838E-01	6.49033E+00	9.28409E-01	1.65273E-03	0.00000E+00	0.00000E+00
199	9.75930E-01	6.52050E+00	9.28650E-01	1.66192E-03	0.00000E+00	0.00000E+00
200	9.16611E-01	6.55267E+00	9.28590E-01	1.65463E-03	0.00000E+00	0.00000E+00
201	8.98135E-01	6.58550E+00	9.28437E-01	1.65339E-03	0.00000E+00	0.00000E+00
202	9.50982E-01	6.61850E+00	9.28549E-01	1.64896E-03	0.00000E+00	0.00000E+00
203	9.12632E-01	6.65150E+00	9.28470E-01	1.64264E-03	0.00000E+00	0.00000E+00
204	9.43946E-01	6.68350E+00	9.28547E-01	1.63629E-03	0.00000E+00	0.00000E+00
205	9.34774E-01	6.71550E+00	9.28577E-01	1.62849E-03	0.00000E+00	0.00000E+00
206	8.96601E-01	6.74667E+00	9.28421E-01	1.62806E-03	0.00000E+00	0.00000E+00
207	9.29265E-01	6.77783E+00	9.28425E-01	1.62010E-03	0.00000E+00	0.00000E+00
208	9.12953E-01	6.80983E+00	9.28350E-01	1.61396E-03	0.00000E+00	0.00000E+00
209	9.25468E-01	6.84283E+00	9.28336E-01	1.60621E-03	0.00000E+00	0.00000E+00
210	9.23886E-01	6.87667E+00	9.28314E-01	1.59861E-03	0.00000E+00	0.00000E+00
211	9.47202E-01	6.90783E+00	9.28405E-01	1.59351E-03	0.00000E+00	0.00000E+00
212	9.95862E-01	6.93900E+00	9.28726E-01	1.61811E-03	0.00000E+00	0.00000E+00
213	9.76294E-01	6.97183E+00	9.28951E-01	1.62612E-03	0.00000E+00	0.00000E+00
214	9.04657E-01	7.00567E+00	9.28837E-01	1.62249E-03	0.00000E+00	0.00000E+00
215	8.92376E-01	7.03783E+00	9.28666E-01	1.62390E-03	0.00000E+00	0.00000E+00
216	9.49883E-01	7.06983E+00	9.28765E-01	1.61933E-03	0.00000E+00	0.00000E+00
217	9.32266E-01	7.10000E+00	9.28781E-01	1.61186E-03	0.00000E+00	0.00000E+00
218	9.11619E-01	7.13300E+00	9.28702E-01	1.60635E-03	0.00000E+00	0.00000E+00
219	9.71129E-01	7.16417E+00	9.28897E-01	1.61084E-03	0.00000E+00	0.00000E+00
220	9.10902E-01	7.19617E+00	9.28815E-01	1.60556E-03	0.00000E+00	0.00000E+00
221	9.48981E-01	7.22817E+00	9.28907E-01	1.60086E-03	0.00000E+00	0.00000E+00
222	9.19034E-01	7.26117E+00	9.28862E-01	1.59420E-03	0.00000E+00	0.00000E+00
223	9.28355E-01	7.29317E+00	9.28860E-01	1.58697E-03	0.00000E+00	0.00000E+00
224	9.28464E-01	7.32700E+00	9.28858E-01	1.57981E-03	0.00000E+00	0.00000E+00
225	9.44280E-01	7.35917E+00	9.28927E-01	1.57423E-03	0.00000E+00	0.00000E+00
226	9.11169E-01	7.39300E+00	9.28848E-01	1.56919E-03	0.00000E+00	0.00000E+00
227	8.98061E-01	7.42600E+00	9.28711E-01	1.56818E-03	0.00000E+00	0.00000E+00
228	9.34595E-01	7.45700E+00	9.28737E-01	1.56144E-03	0.00000E+00	0.00000E+00
229	9.01249E-01	7.48817E+00	9.28616E-01	1.55926E-03	0.00000E+00	0.00000E+00
230	9.00532E-01	7.51933E+00	9.28493E-01	1.55728E-03	0.00000E+00	0.00000E+00
231	9.65530E-01	7.54950E+00	9.28654E-01	1.55888E-03	0.00000E+00	0.00000E+00
232	9.05497E-01	7.58250E+00	9.28554E-01	1.55535E-03	0.00000E+00	0.00000E+00
233	9.32295E-01	7.61550E+00	9.28570E-01	1.54868E-03	0.00000E+00	0.00000E+00
234	9.39394E-01	7.64750E+00	9.28616E-01	1.54270E-03	0.00000E+00	0.00000E+00
235	9.24179E-01	7.68133E+00	9.28597E-01	1.53618E-03	0.00000E+00	0.00000E+00
236	9.00026E-01	7.71433E+00	9.28475E-01	1.53447E-03	0.00000E+00	0.00000E+00
237	9.26802E-01	7.74717E+00	9.28468E-01	1.52794E-03	0.00000E+00	0.00000E+00
238	9.10312E-01	7.78117E+00	9.28391E-01	1.52340E-03	0.00000E+00	0.00000E+00
239	9.25053E-01	7.81500E+00	9.28377E-01	1.51702E-03	0.00000E+00	0.00000E+00
240	9.51164E-01	7.84700E+00	9.28473E-01	1.51367E-03	0.00000E+00	0.00000E+00
241	9.42666E-01	7.87717E+00	9.28532E-01	1.50849E-03	0.00000E+00	0.00000E+00
242	9.56394E-01	7.91017E+00	9.28648E-01	1.50667E-03	0.00000E+00	0.00000E+00
243	9.17748E-01	7.94317E+00	9.28603E-01	1.50109E-03	0.00000E+00	0.00000E+00
244	9.51436E-01	7.97517E+00	9.28698E-01	1.49785E-03	0.00000E+00	0.00000E+00
245	9.64962E-01	8.00633E+00	9.28847E-01	1.49912E-03	0.00000E+00	0.00000E+00
246	8.98459E-01	8.04017E+00	9.28722E-01	1.49814E-03	0.00000E+00	0.00000E+00
247	9.54002E-01	8.07217E+00	9.28825E-01	1.49558E-03	0.00000E+00	0.00000E+00
248	9.21945E-01	8.10433E+00	9.28797E-01	1.48975E-03	0.00000E+00	0.00000E+00
249	9.16143E-01	8.13717E+00	9.28746E-01	1.48459E-03	0.00000E+00	0.00000E+00
250	9.25566E-01	8.16933E+00	9.28733E-01	1.47865E-03	0.00000E+00	0.00000E+00
251	9.48658E-01	8.20133E+00	9.28813E-01	1.47487E-03	0.00000E+00	0.00000E+00
252	9.34766E-01	8.23333E+00	9.28837E-01	1.46915E-03	0.00000E+00	0.00000E+00
253	9.68129E-01	8.26450E+00	9.28994E-01	1.47164E-03	0.00000E+00	0.00000E+00
254	8.64140E-01	8.29467E+00	9.28736E-01	1.48821E-03	0.00000E+00	0.00000E+00
255	8.96829E-01	8.32667E+00	9.28610E-01	1.48767E-03	0.00000E+00	0.00000E+00
256	9.27779E-01	8.35967E+00	9.28607E-01	1.48180E-03	0.00000E+00	0.00000E+00
257	9.35282E-01	8.39167E+00	9.28633E-01	1.47621E-03	0.00000E+00	0.00000E+00
258	9.36664E-01	8.42550E+00	9.28665E-01	1.47077E-03	0.00000E+00	0.00000E+00
259	9.21719E-01	8.45667E+00	9.28638E-01	1.46528E-03	0.00000E+00	0.00000E+00
260	9.18450E-01	8.48967E+00	9.28598E-01	1.46013E-03	0.00000E+00	0.00000E+00
261	9.36405E-01	8.52267E+00	9.28628E-01	1.45479E-03	0.00000E+00	0.00000E+00
262	9.22285E-01	8.55550E+00	9.28604E-01	1.44939E-03	0.00000E+00	0.00000E+00
263	8.93737E-01	8.58667E+00	9.28470E-01	1.44999E-03	0.00000E+00	0.00000E+00
264	9.65537E-01	8.61867E+00	9.28612E-01	1.45136E-03	0.00000E+00	0.00000E+00
265	9.45569E-01	8.64900E+00	9.28676E-01	1.44727E-03	0.00000E+00	0.00000E+00
266	9.37357E-01	8.68183E+00	9.28709E-01	1.44215E-03	0.00000E+00	0.00000E+00
267	9.23928E-01	8.71583E+00	9.28691E-01	1.43681E-03	0.00000E+00	0.00000E+00
268	8.63376E-01	8.74967E+00	9.28445E-01	1.45231E-03	0.00000E+00	0.00000E+00
269	9.47296E-01	8.78167E+00	9.28516E-01	1.44858E-03	0.00000E+00	0.00000E+00
270	9.61230E-01	8.81367E+00	9.28638E-01	1.44832E-03	0.00000E+00	0.00000E+00
271	9.03436E-01	8.84667E+00	9.28544E-01	1.44596E-03	0.00000E+00	0.00000E+00
272	9.29466E-01	8.87867E+00	9.28548E-01	1.44060E-03	0.00000E+00	0.00000E+00
273	9.12897E-01	8.91167E+00	9.28490E-01	1.43644E-03	0.00000E+00	0.00000E+00
274	9.22394E-01	8.94550E+00	9.28468E-01	1.43132E-03	0.00000E+00	0.00000E+00
275	9.33945E-01	8.97667E+00	9.28488E-01	1.42621E-03	0.00000E+00	0.00000E+00
276	9.18429E-01	9.00600E+00	9.28451E-01	1.42147E-03	0.00000E+00	0.00000E+00
277	9.11184E-01	9.03617E+00	9.28388E-01	1.41768E-03	0.00000E+00	0.00000E+00
278	9.44100E-01	9.07000E+00	9.28445E-01	1.41368E-03	0.00000E+00	0.00000E+00
279	9.31465E-01	9.10383E+00	9.28456E-01	1.40861E-03	0.00000E+00	0.00000E+00
280	9.47174E-01	9.13783E+00	9.28523E-01	1.40515E-03	0.00000E+00	0.00000E+00

281	9.35082E-01	9.16983E+00	9.28547E-01	1.40030E-03	0.00000E+00	0.00000E+00
282	9.27815E-01	9.20183E+00	9.28544E-01	1.39530E-03	0.00000E+00	0.00000E+00
283	9.31773E-01	9.23567E+00	9.28556E-01	1.39037E-03	0.00000E+00	0.00000E+00
284	9.16095E-01	9.26867E+00	9.28512E-01	1.38613E-03	0.00000E+00	0.00000E+00
285	9.84640E-01	9.30067E+00	9.28710E-01	1.39539E-03	0.00000E+00	0.00000E+00
286	9.25277E-01	9.33100E+00	9.28698E-01	1.39052E-03	0.00000E+00	0.00000E+00
287	9.09745E-01	9.36300E+00	9.28631E-01	1.38723E-03	0.00000E+00	0.00000E+00
288	9.57832E-01	9.39600E+00	9.28733E-01	1.38614E-03	0.00000E+00	0.00000E+00
289	9.24622E-01	9.42700E+00	9.28719E-01	1.38137E-03	0.00000E+00	0.00000E+00
290	8.97633E-01	9.46100E+00	9.28611E-01	1.38079E-03	0.00000E+00	0.00000E+00
291	9.12205E-01	9.49383E+00	9.28554E-01	1.37718E-03	0.00000E+00	0.00000E+00
292	9.76897E-01	9.52500E+00	9.28721E-01	1.38251E-03	0.00000E+00	0.00000E+00
293	9.34423E-01	9.55800E+00	9.28741E-01	1.37789E-03	0.00000E+00	0.00000E+00
294	9.58806E-01	9.58900E+00	9.28844E-01	1.37702E-03	0.00000E+00	0.00000E+00
295	8.90681E-01	9.62200E+00	9.28713E-01	1.37848E-03	0.00000E+00	0.00000E+00
296	8.85455E-01	9.65500E+00	9.28566E-01	1.38164E-03	0.00000E+00	0.00000E+00
297	9.45813E-01	9.68800E+00	9.28625E-01	1.37819E-03	0.00000E+00	0.00000E+00
298	9.52040E-01	9.71817E+00	9.28704E-01	1.37580E-03	0.00000E+00	0.00000E+00
299	9.51573E-01	9.74833E+00	9.28781E-01	1.37332E-03	0.00000E+00	0.00000E+00
300	9.49305E-01	9.78033E+00	9.28850E-01	1.37043E-03	0.00000E+00	0.00000E+00
301	9.08119E-01	9.81150E+00	9.28780E-01	1.36760E-03	0.00000E+00	0.00000E+00
302	9.20235E-01	9.84450E+00	9.28752E-01	1.36333E-03	0.00000E+00	0.00000E+00
303	9.30871E-01	9.87467E+00	9.28759E-01	1.35881E-03	0.00000E+00	0.00000E+00

KENO MESSAGE NUMBER K5-123 EXECUTION TERMINATED DUE TO COMPLETION OF THE SPECIFIED NUMBER OF GENERATIONS.

LWT ANALYSIS; EXXON 15X15(W) ASSEMBLY; NO WATER IN GAP

LIFETIME = 9.73114E-05 + OR - 2.94167E-07 GENERATION TIME = 3.71858E-05 + OR - 9.05456E-08
NU BAR = 2.43684E+00 + OR - 1.00493E-04 AVERAGE FISSION GROUP = 2.24236E+01 + OR - 5.68246E-03
ENERGY(EV) OF THE AVERAGE LETHARGY CAUSING FISSION = 1.68092E-01 + OR - 8.11248E-04

NO. OF INITIAL GENERATIONS SKIPPED	AVERAGE K-EFFECTIVE	DEVIATION	67 PER CENT CONFIDENCE INTERVAL	95 PER CENT CONFIDENCE INTERVAL	99 PER CENT CONFIDENCE INTERVAL	NUMBER OF HISTORIES
3	0.92877	+ OR - 0.00136	0.92740 TO 0.93013	0.92604 TO 0.93149	0.92468 TO 0.93286	300000
4	0.92870	+ OR - 0.00137	0.92734 TO 0.93007	0.92597 TO 0.93144	0.92460 TO 0.93280	299000
5	0.92865	+ OR - 0.00137	0.92728 TO 0.93002	0.92591 TO 0.93139	0.92454 TO 0.93276	298000
6	0.92855	+ OR - 0.00137	0.92718 TO 0.92992	0.92581 TO 0.93130	0.92444 TO 0.93267	297000
7	0.92862	+ OR - 0.00137	0.92725 TO 0.92999	0.92587 TO 0.93137	0.92450 TO 0.93274	296000
8	0.92864	+ OR - 0.00138	0.92726 TO 0.93002	0.92588 TO 0.93140	0.92451 TO 0.93278	295000
9	0.92865	+ OR - 0.00138	0.92727 TO 0.93004	0.92589 TO 0.93142	0.92450 TO 0.93280	294000
10	0.92856	+ OR - 0.00139	0.92718 TO 0.92995	0.92579 TO 0.93133	0.92441 TO 0.93272	293000
11	0.92864	+ OR - 0.00139	0.92725 TO 0.93003	0.92586 TO 0.93141	0.92447 TO 0.93280	292000
12	0.92860	+ OR - 0.00139	0.92721 TO 0.92999	0.92581 TO 0.93138	0.92442 TO 0.93278	291000
17	0.92849	+ OR - 0.00141	0.92709 TO 0.92990	0.92568 TO 0.93130	0.92428 TO 0.93271	286000
22	0.92839	+ OR - 0.00142	0.92697 TO 0.92982	0.92555 TO 0.93124	0.92413 TO 0.93266	281000
27	0.92833	+ OR - 0.00144	0.92689 TO 0.92977	0.92546 TO 0.93121	0.92402 TO 0.93265	276000
32	0.92869	+ OR - 0.00143	0.92726 TO 0.93012	0.92583 TO 0.93155	0.92440 TO 0.93298	271000
37	0.92877	+ OR - 0.00145	0.92732 TO 0.93022	0.92587 TO 0.93168	0.92441 TO 0.93313	266000
42	0.92874	+ OR - 0.00145	0.92729 TO 0.93019	0.92584 TO 0.93164	0.92439 TO 0.93309	261000
47	0.92882	+ OR - 0.00147	0.92735 TO 0.93028	0.92588 TO 0.93175	0.92442 TO 0.93322	256000
52	0.92900	+ OR - 0.00148	0.92752 TO 0.93048	0.92603 TO 0.93196	0.92455 TO 0.93345	251000
57	0.92871	+ OR - 0.00150	0.92721 TO 0.93021	0.92571 TO 0.93171	0.92421 TO 0.93321	246000
62	0.92862	+ OR - 0.00152	0.92710 TO 0.93013	0.92559 TO 0.93165	0.92407 TO 0.93317	241000
67	0.92820	+ OR - 0.00153	0.92667 TO 0.92973	0.92514 TO 0.93126	0.92361 TO 0.93279	236000
72	0.92840	+ OR - 0.00155	0.92685 TO 0.92995	0.92530 TO 0.93150	0.92375 TO 0.93305	231000
77	0.92848	+ OR - 0.00158	0.92690 TO 0.93007	0.92532 TO 0.93165	0.92374 TO 0.93323	226000
82	0.92842	+ OR - 0.00161	0.92682 TO 0.93003	0.92521 TO 0.93164	0.92360 TO 0.93325	221000
87	0.92843	+ OR - 0.00161	0.92682 TO 0.93004	0.92522 TO 0.93164	0.92361 TO 0.93325	216000
92	0.92809	+ OR - 0.00163	0.92646 TO 0.92972	0.92483 TO 0.93135	0.92319 TO 0.93298	211000

LWT ANALYSIS; EXXON 15X15(W) ASSEMBLY; NO WATER IN GAP

NO. OF INITIAL GENERATIONS SKIPPED	AVERAGE K-EFFECTIVE	DEVIATION	67 PER CENT CONFIDENCE INTERVAL	95 PER CENT CONFIDENCE INTERVAL	99 PER CENT CONFIDENCE INTERVAL	NUMBER OF HISTORIES
97	0.92769	+ OR - 0.00165	0.92605 TO 0.92934	0.92440 TO 0.93099	0.92276 TO 0.93263	206000
102	0.92772	+ OR - 0.00166	0.92606 TO 0.92938	0.92440 TO 0.93104	0.92274 TO 0.93269	201000
107	0.92787	+ OR - 0.00169	0.92618 TO 0.92955	0.92449 TO 0.93124	0.92281 TO 0.93293	196000
112	0.92802	+ OR - 0.00172	0.92629 TO 0.92974	0.92457 TO 0.93146	0.92285 TO 0.93318	191000
117	0.92805	+ OR - 0.00176	0.92629 TO 0.92982	0.92453 TO 0.93158	0.92277 TO 0.93334	186000
122	0.92804	+ OR - 0.00180	0.92624 TO 0.92984	0.92445 TO 0.93164	0.92265 TO 0.93343	181000
127	0.92809	+ OR - 0.00183	0.92625 TO 0.92992	0.92442 TO 0.93176	0.92258 TO 0.93359	176000
132	0.92779	+ OR - 0.00185	0.92594 TO 0.92965	0.92409 TO 0.93150	0.92223 TO 0.93336	171000
137	0.92784	+ OR - 0.00190	0.92594 TO 0.92974	0.92405 TO 0.93163	0.92215 TO 0.93353	166000
142	0.92776	+ OR - 0.00193	0.92583 TO 0.92969	0.92390 TO 0.93163	0.92197 TO 0.93356	161000
147	0.92793	+ OR - 0.00197	0.92596 TO 0.92990	0.92399 TO 0.93187	0.92202 TO 0.93384	156000
152	0.92851	+ OR - 0.00198	0.92652 TO 0.93049	0.92454 TO 0.93247	0.92256 TO 0.93446	151000
157	0.92780	+ OR - 0.00201	0.92579 TO 0.92980	0.92378 TO 0.93181	0.92177 TO 0.93382	146000
162	0.92815	+ OR - 0.00207	0.92608 TO 0.93022	0.92401 TO 0.93229	0.92194 TO 0.93436	141000
167	0.92767	+ OR - 0.00210	0.92557 TO 0.92978	0.92346 TO 0.93188	0.92136 TO 0.93399	136000
172	0.92714	+ OR - 0.00213	0.92501 TO 0.92927	0.92289 TO 0.93140	0.92076 TO 0.93353	131000
177	0.92805	+ OR - 0.00215	0.92590 TO 0.93021	0.92375 TO 0.93236	0.92160 TO 0.93451	126000
182	0.92818	+ OR - 0.00221	0.92596 TO 0.93039	0.92375 TO 0.93261	0.92153 TO 0.93482	121000
187	0.92911	+ OR - 0.00222	0.92689 TO 0.93133	0.92467 TO 0.93356	0.92244 TO 0.93578	116000
192	0.92895	+ OR - 0.00231	0.92665 TO 0.93126	0.92434 TO 0.93356	0.92204 TO 0.93587	111000
197	0.92931	+ OR - 0.00237	0.92694 TO 0.93168	0.92458 TO 0.93405	0.92221 TO 0.93641	106000
202	0.92917	+ OR - 0.00241	0.92677 TO 0.93158	0.92436 TO 0.93399	0.92196 TO 0.93639	101000
207	0.92947	+ OR - 0.00250	0.92697 TO 0.93197	0.92448 TO 0.93447	0.92198 TO 0.93697	96000
212	0.92883	+ OR - 0.00252	0.92632 TO 0.93135	0.92380 TO 0.93387	0.92129 TO 0.93638	91000
217	0.92870	+ OR - 0.00254	0.92616 TO 0.93124	0.92362 TO 0.93379	0.92108 TO 0.93633	86000
222	0.92848	+ OR - 0.00261	0.92587 TO 0.93109	0.92325 TO 0.93371	0.92064 TO 0.93632	81000
227	0.92890	+ OR - 0.00274	0.92616 TO 0.93164	0.92342 TO 0.93438	0.92068 TO 0.93712	76000

LWT ANALYSIS; EXXON 15X15(W) ASSEMBLY; NO WATER IN GAP

NO. OF INITIAL GENERATIONS SKIPPED	AVERAGE K-EFFECTIVE	DEVIATION	67 PER CENT CONFIDENCE INTERVAL	95 PER CENT CONFIDENCE INTERVAL	99 PER CENT CONFIDENCE INTERVAL	NUMBER OF HISTORIES
232	0.92942	+ OR - 0.00281	0.92661 TO 0.93224	0.92380 TO 0.93505	0.92099 TO 0.93786	71000
237	0.92979	+ OR - 0.00299	0.92681 TO 0.93278	0.92382 TO 0.93577	0.92084 TO 0.93875	66000
242	0.92919	+ OR - 0.00316	0.92604 TO 0.93235	0.92288 TO 0.93551	0.91972 TO 0.93867	61000
247	0.92847	+ OR - 0.00327	0.92519 TO 0.93174	0.92192 TO 0.93502	0.91865 TO 0.93829	56000
252	0.92838	+ OR - 0.00356	0.92481 TO 0.93194	0.92125 TO 0.93550	0.91769 TO 0.93906	51000
257	0.92946	+ OR - 0.00351	0.92594 TO 0.93297	0.92243 TO 0.93648	0.91892 TO 0.94000	46000
262	0.92974	+ OR - 0.00392	0.92582 TO 0.93366	0.92190 TO 0.93759	0.91798 TO 0.94151	41000
267	0.92926	+ OR - 0.00421	0.92505 TO 0.93347	0.92085 TO 0.93767	0.91664 TO 0.94188	36000
272	0.93060	+ OR - 0.00413	0.92647 TO 0.93473	0.92233 TO 0.93886	0.91820 TO 0.94299	31000
277	0.93268	+ OR - 0.00478	0.92790 TO 0.93746	0.92312 TO 0.94224	0.91834 TO 0.94702	26000
282	0.93162	+ OR - 0.00587	0.92575 TO 0.93749	0.91989 TO 0.94335	0.91402 TO 0.94922	21000
287	0.93103	+ OR - 0.00673	0.92430 TO 0.93776	0.91757 TO 0.94450	0.91083 TO 0.95123	16000
292	0.92976	+ OR - 0.00770	0.92205 TO 0.93746	0.91435 TO 0.94516	0.90665 TO 0.95287	11000
297	0.93536	+ OR - 0.00759	0.92777 TO 0.94294	0.92018 TO 0.95053	0.91260 TO 0.95812	6000

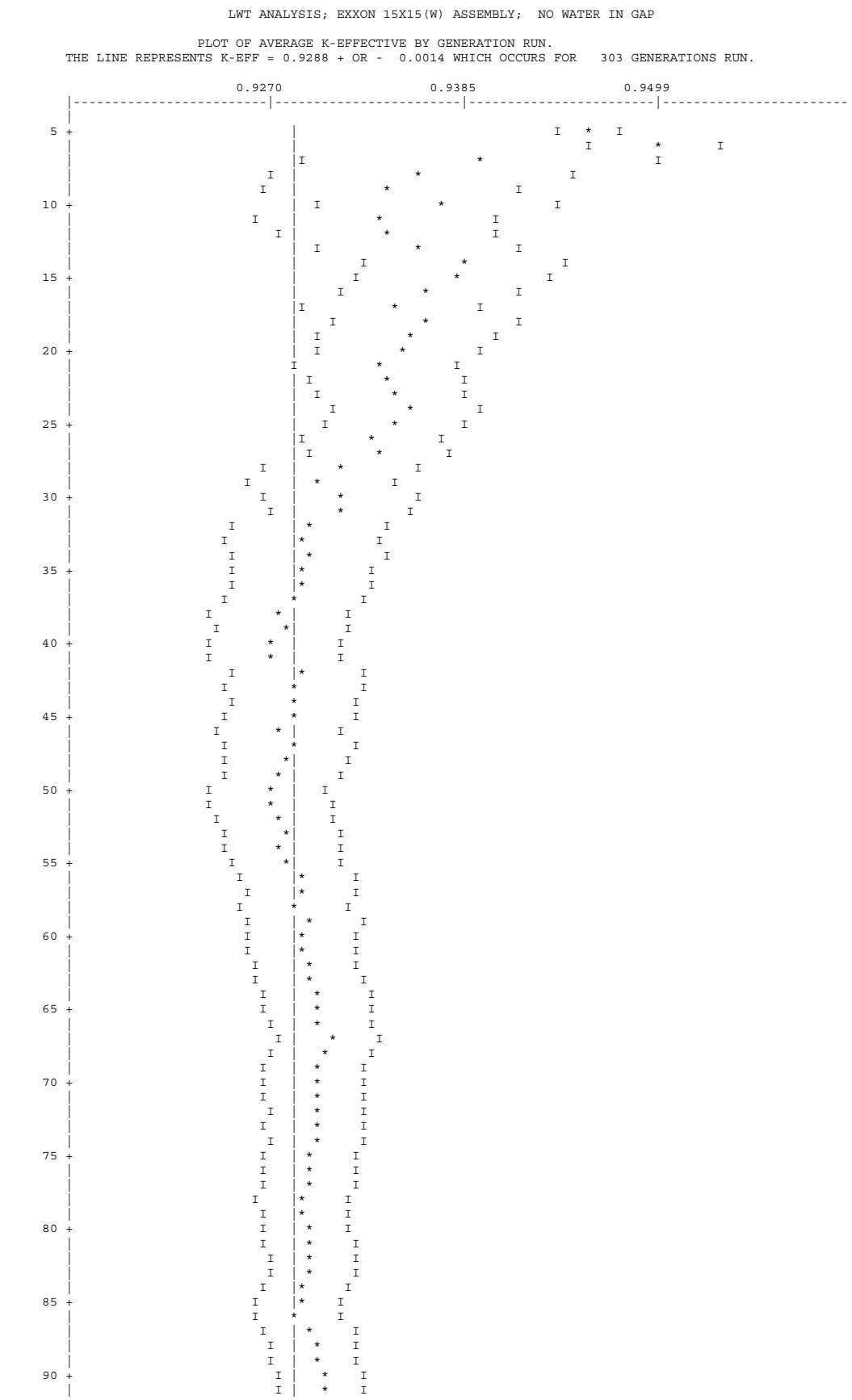
LWT ANALYSIS; EXXON 15X15(W) ASSEMBLY; NO WATER IN GAP
PLOT OF AVERAGE K-EFFECTIVE BY GENERATION RUN.
THE LINE REPRESENTS K-EFF = 0.9288 + OR - 0.0014 WHICH OCCURS FOR 303 GENERATIONS RUN.
0.9270
0.9385
0.9499
5
10
15
20
25
30
35
40
45
50
55
60
65
70
75
80
85
90

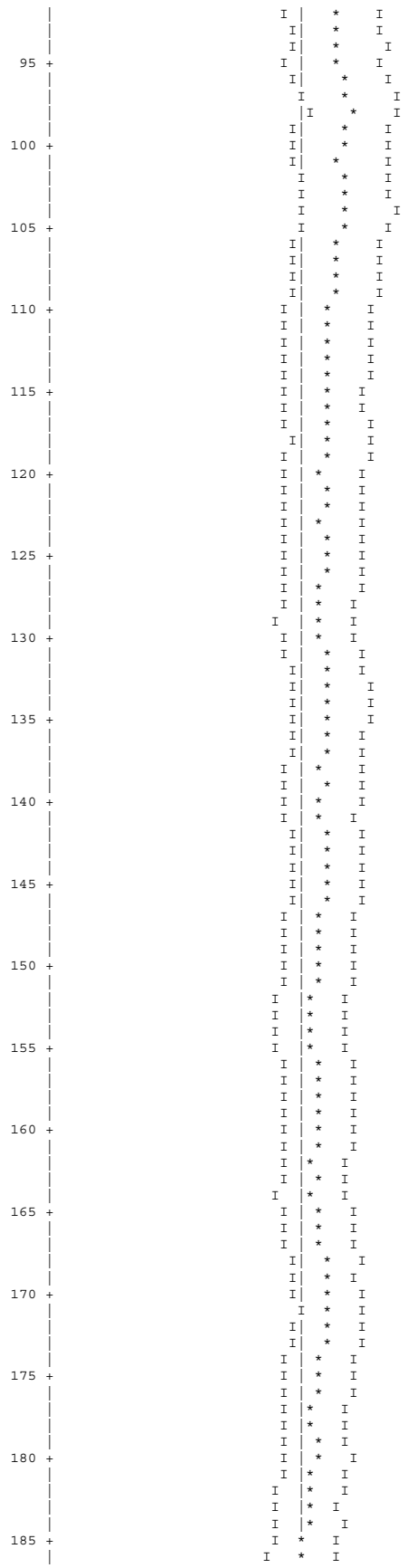

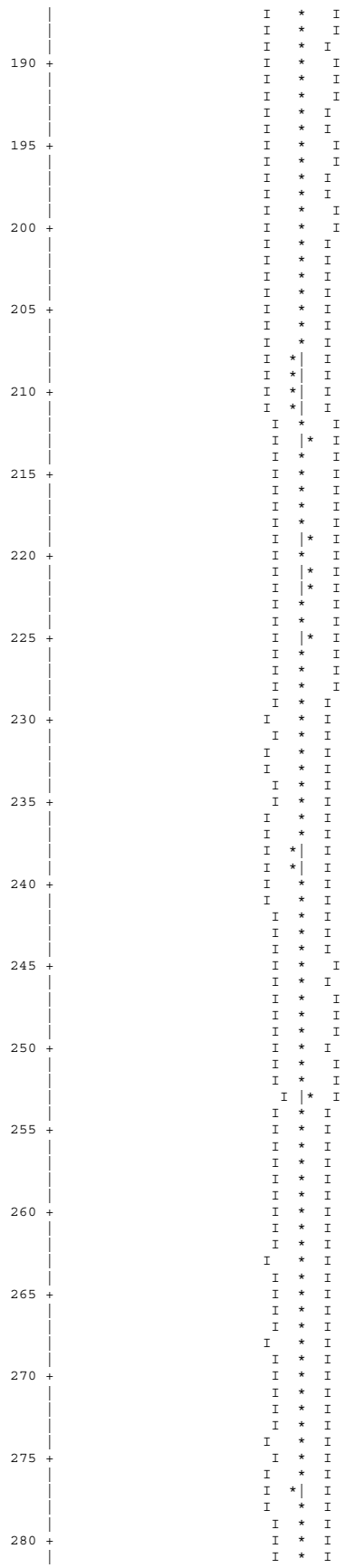

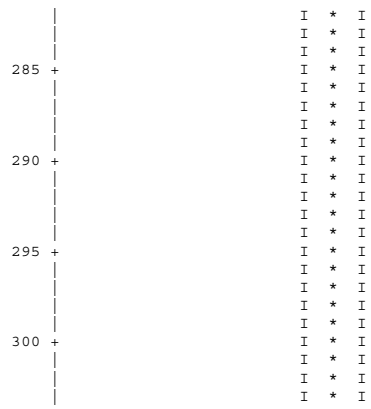
285
290
295
300

LWT ANALYSIS; EXXON 15X15(W) ASSEMBLY; NO WATER IN GAP

SKIPPING 3 GENERATIONS

GROUP	FISSION FRACTION	UNIT	REGION	FISSIONS	PERCENT DEVIATION	ABSORPTIONS	PERCENT DEVIATION	LEAKAGE	PERCENT DEVIATION
1	0.0045			4.13525E-03	2.1624	2.31474E-03	1.6942	1.16131E-04	17.4208
2	0.0184			1.70563E-02	0.6777	8.53945E-03	0.5701	3.24894E-04	9.2849
3	0.0203			1.88901E-02	0.5923	7.85394E-03	0.5710	6.72946E-04	6.9707
4	0.0085			7.89259E-03	0.7446	3.77855E-03	0.7149	3.66621E-04	9.1531
5	0.0027			2.50503E-03	0.5824	2.63470E-03	0.5120	7.00533E-04	7.3109
6	0.0024			2.18471E-03	0.4558	4.37485E-03	0.3727	1.49246E-03	4.9447
7	0.0023			2.16286E-03	0.4659	4.93271E-03	0.3755	1.74377E-03	4.3704
8	0.0023			2.17357E-03	0.5027	7.35496E-03	0.4059	7.33592E-04	6.1702
9	0.0032			2.94449E-03	0.5013	1.14341E-02	0.4011	3.78803E-04	8.7840
10	0.0068			6.27675E-03	0.5048	1.73735E-02	0.4335	3.43542E-04	9.0743
11	0.0142			1.32020E-02	0.4807	2.83683E-02	0.3962	3.93503E-04	8.8978
12	0.0186			1.73191E-02	0.5908	3.00757E-02	0.5258	2.80550E-04	10.6990
13	0.0173			1.60818E-02	0.6608	3.00656E-02	0.5610	2.75200E-04	9.6225
14	0.0136			1.26222E-02	0.6139	4.26237E-02	0.5164	2.48169E-04	11.1716
15	0.0030			2.82311E-03	1.0771	8.92172E-03	0.7964	1.17966E-04	16.4384
16	0.0021			1.90622E-03	1.3681	5.33009E-03	0.8758	6.21348E-05	21.6067
17	0.0031			2.90625E-03	1.8577	3.68193E-03	1.1582	5.40723E-05	23.9178
18	0.0042			3.89564E-03	1.9751	3.87745E-03	1.1947	3.15613E-05	36.6593
19	0.0052			4.80254E-03	1.4571	6.07032E-03	0.8868	3.98236E-05	26.8273
20	0.0218			2.02349E-02	0.7613	2.39932E-02	0.6156	1.81114E-04	12.7240
21	0.0120			1.11287E-02	1.2990	1.05616E-02	0.8876	7.94104E-05	18.5923
22	0.0287			2.66463E-02	0.8876	2.42407E-02	0.6724	1.87182E-04	10.7523
23	0.1052			9.77197E-02	0.4944	9.31371E-02	0.3247	1.46447E-03	3.6272
24	0.2112			1.96132E-01	0.3421	1.86364E-01	0.2154	2.87278E-03	2.4320
25	0.1808			1.67964E-01	0.3689	1.59086E-01	0.2113	1.91103E-03	2.9220
26	0.2176			2.02106E-01	0.3731	1.94026E-01	0.2287	1.55253E-03	2.9482
27	0.0700			6.50546E-02	0.6649	6.47251E-02	0.4115	2.30984E-04	7.4502
SYSTEM TOTAL =				9.28767E-01	0.1468	9.85739E-01	0.0516	1.68558E-02	1.1296

ELAPSED TIME 9.87833 MINUTES

RANDOM NUMBER= 79596BFA0823

```
LWT ANALYSIS; EXXON 15X15(W) ASSEMBLY;  NO WATER IN GAP

                              FREQUENCY FOR GENERATIONS    4 TO  303
0.8560 TO 0.8686     ***
0.8686 TO 0.8813     ****
0.8813 TO 0.8939     **********
0.8939 TO 0.9066     **********************************
0.9066 TO 0.9192     ****************************************************
0.9192 TO 0.9319     ************************************************************
0.9319 TO 0.9445     ********************************************************
0.9445 TO 0.9572     *****************************************
0.9572 TO 0.9698     ********************
0.9698 TO 0.9825     *********
0.9825 TO 0.9951     ***
0.9951 TO 1.0078     *

                              FREQUENCY FOR GENERATIONS   79 TO  303
0.8560 TO 0.8686     ***
0.8686 TO 0.8813     **
0.8813 TO 0.8939     *******
0.8939 TO 0.9066     ***************************
0.9066 TO 0.9192     ****************************************
0.9192 TO 0.9319     ********************************************
0.9319 TO 0.9445     ****************************************
0.9445 TO 0.9572     **********************************
0.9572 TO 0.9698     ***************
0.9698 TO 0.9825     *******
0.9825 TO 0.9951     **
0.9951 TO 1.0078     *

                              FREQUENCY FOR GENERATIONS  154 TO  303
0.8560 TO 0.8686     **
0.8686 TO 0.8813     *
0.8813 TO 0.8939     *******
0.8939 TO 0.9066     ******************
0.9066 TO 0.9192     ******************************
0.9192 TO 0.9319     ****************************
0.9319 TO 0.9445     *************************
0.9445 TO 0.9572     ***********************
0.9572 TO 0.9698     **********
0.9698 TO 0.9825     ******
0.9825 TO 0.9951     *
0.9951 TO 1.0078     *

                              FREQUENCY FOR GENERATIONS  229 TO  303
0.8560 TO 0.8686     **
0.8686 TO 0.8813
0.8813 TO 0.8939     ***
0.8939 TO 0.9066     ********
0.9066 TO 0.9192     ***********
0.9192 TO 0.9319     ******************
0.9319 TO 0.9445     ************
0.9445 TO 0.9572     ************
0.9572 TO 0.9698     *******
0.9698 TO 0.9825     *
0.9825 TO 0.9951     *
0.9951 TO 1.0078


*****************************************************************************************************************************************
*

          CONGRATULATIONS!  YOU HAVE  SUCCESSFULLY TRAVERSED THE PERILOUS PATH THROUGH KENO V IN   9.87833 MINUTES

*****************************************************************************************************************************************
*
```

Figure 6.6.1-2 CSAS Input/Output for NAC-LWT with PWR Fuel – 3.7% Enrichment – Most Reactive Accident Condition Configuration

```
PRIMARY MODULE ACCESS AND INPUT RECORD ( SCALE DRIVER - 95/03/29 - 09:06:37 )
   MODULE CSAS25   WILL BE CALLED
     LWT ANALYSIS; Exxon 15x15(W) ASSEMBLY;  WATER IN GAP
     27GROUPNDF4 LATTICECELL
     UO2  1  0.95 293.0 92235 3.7 92238 96.3 END
     ZR   2  1.0  293.0  END
     H2O  3  1.0  293.0  END
     AL   4  1.0  293.0  END
     SS304 5 1.0  293.0  END
     PB    6 1.0 293.0 END
     H2O   7 1.000 293.0 END
     H2O   8 1.000 293.0 END
     H2O   9 1.0 293.0 END
     END COMP
     SQUAREPITCH  1.4300 0.9056 1 3 1.0770 2 0.9246 9 END
     LWT ANALYSIS; Exxon 15x15(W) ASSEMBLY;  WATER IN GAP
     READ PARAM RUN=YES PLT=NO TME=5000 GEN=303 RND=1D NPG=1000 END PARAM
     READ GEOM
     UNIT  1
     COM='FUEL PIN CELL - WITH H2O'
     CYLINDER  1 1  0.4528   2P182.88
     CYLINDER  9 1  0.4623   2P182.88
     CYLINDER  2 1  0.5385   2P182.88
     CUBOID    3 1  4P0.7150 2P182.88
     UNIT  2
     COM='WATER ROD CELL - WITH H2O'
     CYLINDER  3 1  0.6477   2P182.88
     CYLINDER  2 1  0.6909   2P182.88
     CUBOID    3 1  4P0.7150 2P182.88
     GLOBAL UNIT 9
     ARRAY  1  -10.7250 -10.7250 -182.88
     CUBOID 3 1 4P11.3157 2P182.88
     CYLINDER 4 1 16.891 2P182.88
     CYLINDER 3 1 16.9863 2P182.88
     CYLINDER 5 1 18.8913 2P182.88
     CYLINDER 6 1 33.4963 2P182.88
     CYLINDER 5 1 36.5443 2P182.88
     CYLINDER 7 1 49.2443 2P182.88
     CYLINDER 5 1 49.8539 212.48 -192.16
     CYLINDER 6 1 49.8539 212.48 -199.78
     CYLINDER 5 1 49.8539 212.48 -208.67
     CUBOID 8 1 4P81.0000 243.00 -240.00
     END GEOM
     READ ARRAY
     ARA=1   NUX=15 NUY=15 NUZ=1  FILL
                        30R1
     2R1   2   2R1   2   3R1   2   2R1   2   2R1
                     7R1   2   7R1
               4R1   2   5R1   2   4R1
               2R1   2   9R1   2   2R1
                        15R1
          3R1   2   3R1   2   3R1   2   3R1
                        15R1
               2R1   2   9R1   2   2R1
               4R1   2   5R1   2   4R1
                     7R1   2   7R1
     2R1   2   2R1   2   3R1   2   2R1   2   2R1
                        30R1
     END FILL
     END ARRAY
     READ BOUNDS ZFC=VAC YXF=VAC END BOUNDS
     END DATA

   SECONDARY MODULE O0O008   HAS BEEN CALLED.

   MODULE O0O008   IS FINISHED. COMPLETION CODE     0. CPU TIME USED     0.44 (SECONDS).

   SECONDARY MODULE O0O002   HAS BEEN CALLED.

   MODULE O0O002   IS FINISHED. COMPLETION CODE     0. CPU TIME USED     5.27 (SECONDS).

   SECONDARY MODULE O0O009   HAS BEEN CALLED.

   MODULE O0O009   IS FINISHED. COMPLETION CODE     0. CPU TIME USED   317.91 (SECONDS).

   MODULE CSAS25   IS FINISHED. COMPLETION CODE     0. CPU TIME USED   325.16 (SECONDS).
```

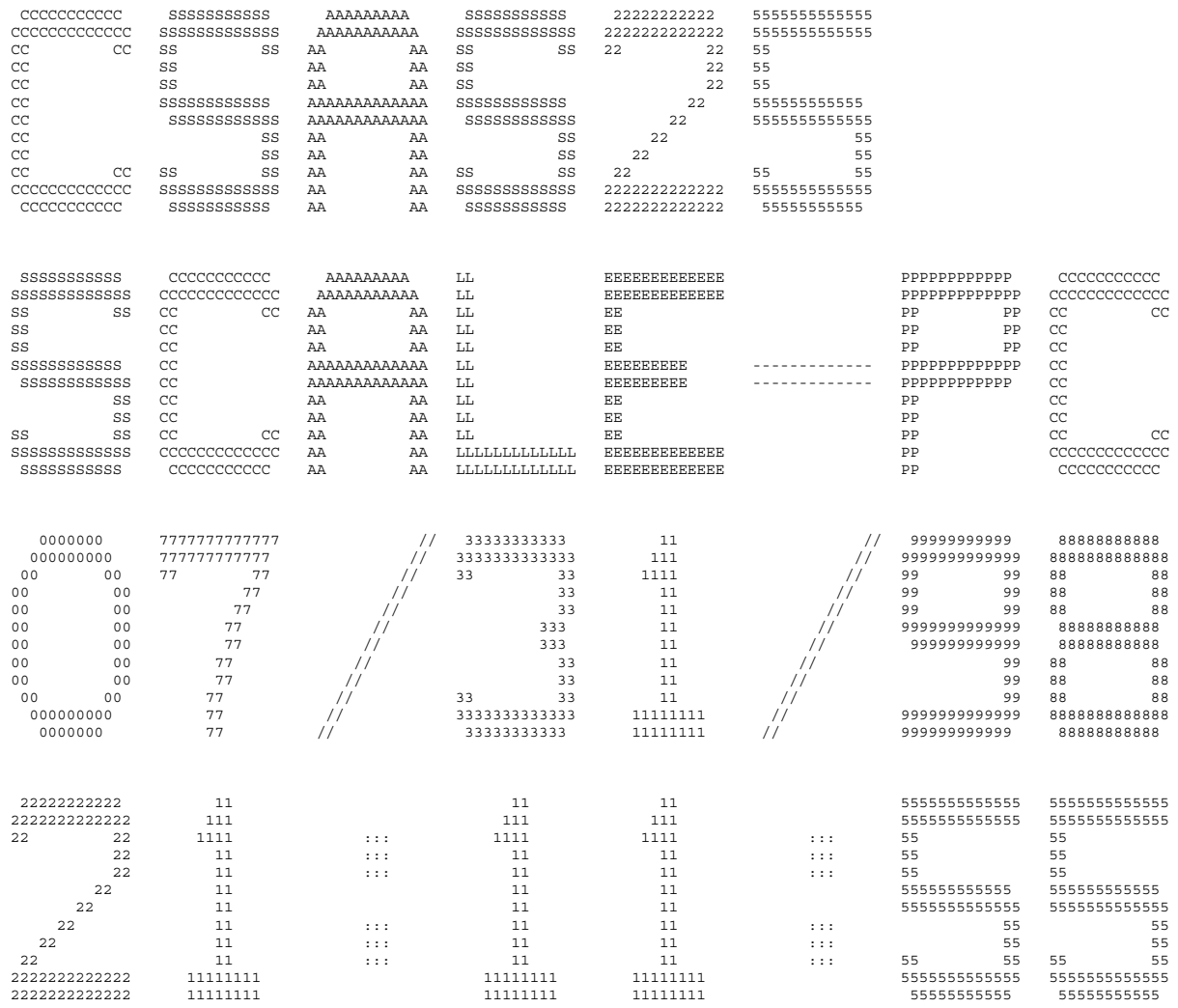

```
 SSSSSSSSSS     CCCCCCCCCC      AAAAAAAAA     LL             EEEEEEEEEEEE                  PPPPPPPPPPP     CCCCCCCCCC
SSSSSSSSSSS   CCCCCCCCCCCC    AAAAAAAAAAA    LL             EEEEEEEEEEEE                  PPPPPPPPPPPP   CCCCCCCCCCCC
SS         SS CC          CC  AA         AA   LL             EE                            PP         PP  CC          CC
SS            CC             AA         AA   LL             EE                            PP         PP  CC
SS            CC             AA         AA   LL             EE                            PP         PP  CC
SSSSSSSSSSS   CC             AAAAAAAAAAAAA   LL             EEEEEEEEE       -------------  PPPPPPPPPPPP  CC
 SSSSSSSSSSS  CC             AAAAAAAAAAAAA   LL             EEEEEEEEE       -------------  PPPPPPPPPPP   CC
          SS  CC             AA         AA   LL             EE                            PP            CC
          SS  CC             AA         AA   LL             EE                            PP            CC
SS        SS  CC          CC  AA         AA   LL             EE                            PP            CC          CC
SSSSSSSSSSS   CCCCCCCCCCCCC   AA         AA   LLLLLLLLLLLLL  EEEEEEEEEEEE                  PP            CCCCCCCCCCCCC
 SSSSSSSSSS    CCCCCCCCCC     AA         AA   LLLLLLLLLLLLL  EEEEEEEEEEEE                  PP             CCCCCCCCCC
```

```
*******************************************************************************
*******************************************************************************
*******************************************************************************
*****                                                                     *****
*****                  PROGRAM VERIFICATION INFORMATION                   *****
*****                                                                     *****
*****                CODE SYSTEM:  SCALE-PC VERSION:  4.3                 *****
*****                                                                     *****
*******************************************************************************
*******************************************************************************
*****                                                                     *****
*****                                                                     *****
*****              PROGRAM:  CSAS                                         *****
*****                                                                     *****
*****        CREATION DATE:  03/08/96                                     *****
*****                                                                     *****
*****              VOLUME:   ENG                                          *****
*****                                                                     *****
*****              LIBRARY:  G:\SCALE43\WIN_NT\EXE                        *****
*****                                                                     *****
*****                                                                     *****
*****      PRODUCTION CODE:  CSAS                                         *****
*****                                                                     *****
*****              VERSION:  3.1                                          *****
*****                                                                     *****
*****              JOBNAME:  SCALE-PC                                     *****
*****                                                                     *****
*****    DATE OF EXECUTION:  07/31/98                                     *****
*****                                                                     *****
*****    TIME OF EXECUTION:  21:11:55                                     *****
*****                                                                     *****
*****                                                                     *****
*******************************************************************************
*******************************************************************************
*******************************************************************************
```

```
LWT ANALYSIS; EXXON 15X15(W) ASSEMBLY;  WATER IN GAP


**** PROBLEM PARAMETERS ****

LIB 27GROUPNDF4  LIBRARY
MXX            9 MIXTURES
MSC            9 COMPOSITION SPECIFICATIONS
IZM            4 MATERIAL ZONES
GE  LATTICECELL  GEOMETRY
MORE           0 0/1 DO NOT READ/READ OPTIONAL PARAMETER DATA
MSLN           0 FUEL SOLUTIONS


**** PROBLEM COMPOSITION DESCRIPTION ****

SC  UO2          STANDARD COMPOSITION
MX             1 MIXTURE NO.
VF        0.9500 VOLUME FRACTION
ROTH     10.9600 THEORETICAL DENSITY
NEL            2 NO. ELEMENTS
ICP            1 0/1 MIXTURE/COMPOUND
TEMP       293.0 DEG KELVIN
           92000      1.00 ATOM/MOLECULE
                           92235     3.700 WT%
                           92238    96.300 WT%
            8016      2.00 ATOMS/MOLECULE
END

SC  ZR           STANDARD COMPOSITION
MX             2 MIXTURE NO.
VF        1.0000 VOLUME FRACTION
ROTH      6.4900 THEORETICAL DENSITY
NEL            1 NO. ELEMENTS
ICP            1 0/1 MIXTURE/COMPOUND
TEMP       293.0 DEG KELVIN
           40000      1.00 ATOM/MOLECULE
END

SC  H2O          STANDARD COMPOSITION
MX             3 MIXTURE NO.
VF        1.0000 VOLUME FRACTION
ROTH      0.9982 THEORETICAL DENSITY
NEL            2 NO. ELEMENTS
ICP            1 0/1 MIXTURE/COMPOUND
TEMP       293.0 DEG KELVIN
            1001      2.00 ATOMS/MOLECULE
            8016      1.00 ATOM/MOLECULE
END

SC  AL           STANDARD COMPOSITION
MX             4 MIXTURE NO.
VF        1.0000 VOLUME FRACTION
ROTH      2.7020 THEORETICAL DENSITY
NEL            1 NO. ELEMENTS
ICP            1 0/1 MIXTURE/COMPOUND
TEMP       293.0 DEG KELVIN
           13027      1.00 ATOM/MOLECULE
END

SC  SS304        STANDARD COMPOSITION
MX             5 MIXTURE NO.
VF        1.0000 VOLUME FRACTION
ROTH      7.9200 THEORETICAL DENSITY
NEL            4 NO. ELEMENTS
ICP            0 0/1 MIXTURE/COMPOUND
TEMP       293.0 DEG KELVIN
           24304    19.000 WT%
           25055     2.000 WT%
           26304    69.500 WT%
           28304     9.500 WT%
END

SC  PB           STANDARD COMPOSITION
MX             6 MIXTURE NO.
VF        1.0000 VOLUME FRACTION
ROTH     11.3440 THEORETICAL DENSITY
NEL            1 NO. ELEMENTS
ICP            1 0/1 MIXTURE/COMPOUND
TEMP       293.0 DEG KELVIN
           82000      1.00 ATOM/MOLECULE
END

SC  H2O          STANDARD COMPOSITION
MX             7 MIXTURE NO.
VF        1.0000 VOLUME FRACTION
ROTH      0.9982 THEORETICAL DENSITY
NEL            2 NO. ELEMENTS
ICP            1 0/1 MIXTURE/COMPOUND
TEMP       293.0 DEG KELVIN
            1001      2.00 ATOMS/MOLECULE
            8016      1.00 ATOM/MOLECULE
END

SC  H2O          STANDARD COMPOSITION
```

```
MX             8 MIXTURE NO.
VF        1.0000 VOLUME FRACTION
ROTH      0.9982 THEORETICAL DENSITY
NEL            2 NO. ELEMENTS
ICP            1 0/1 MIXTURE/COMPOUND
TEMP       293.0 DEG KELVIN
            1001      2.00 ATOMS/MOLECULE
            8016      1.00 ATOM/MOLECULE
END

SC  H2O          STANDARD COMPOSITION
MX             9 MIXTURE NO.
VF        1.0000 VOLUME FRACTION
ROTH      0.9982 THEORETICAL DENSITY
NEL            2 NO. ELEMENTS
ICP            1 0/1 MIXTURE/COMPOUND
TEMP       293.0 DEG KELVIN
            1001      2.00 ATOMS/MOLECULE
            8016      1.00 ATOM/MOLECULE
END


**** PROBLEM GEOMETRY ****

CTP SQUAREPITCH  CELL TYPE
PITCH     1.4300 CM CENTER TO CENTER SPACING
FUELOD    0.9056 CM FUEL DIAMETER OR SLAB THICKNESS
MFUEL          1 MIXTURE NO. OF FUEL
MMOD           3 MIXTURE NO. OF MODERATOR
CLADOD    1.0770 CM CLAD OUTER DIAMETER
MCLAD          2 MIXTURE NO. OF CLAD
GAPOD     0.9246 CM GAP OUTER DIAMETER
MGAP           9 MIXTURE NO. OF GAP


ZONE SPECIFICATIONS FOR LATTICECELL GEOMETRY

               ZONE  1 IS FUEL
               ZONE  2 IS GAP
               ZONE  3 IS CLAD
               ZONE  4 IS MOD
```

```
*****************************************************************************************************************
***                                                                                                           ***
***                            LWT ANALYSIS; EXXON 15X15(W) ASSEMBLY;  WATER IN GAP                           ***
***                                                                                                           ***
*****************************************************************************************************************
*****************************************************************************************************************
***                                                                                                           ***
***                              ********** DATA LIBRARY INFORMATION **********                              ***
***                                                                                                           ***
***          UNIT                                                VOLUME                                       ***
***         NUMBER               DATA SET NAME                   NAME        UNIT FUNCTION                    ***
***         ------               -------------                   ----        -------------                    ***
***                                                                                                           ***
***           89     G:\scale43\DATALIB\FT89F001                              STANDARD COMPOSITION LIBRARY     ***
***                                                                                                           ***
***           82     G:\scale43\DATALIB\FT82F001                              CROSS SECTION LIBRARY            ***
***                                                                                                           ***
***           11     C:\mev-pwr\RERUNS\15HX2MD\FT11F001                       SHORT CROSS SECTION LIBRARY      ***
***                                                                                                           ***
***           90     C:\mev-pwr\RERUNS\15HX2MD\FT90F001                       INPUT DATA DIRECT ACCESS         ***
***                                                                                                           ***
*****************************************************************************************************************
*****************************************************************************************************************
***                                                                                                           ***
***                                                                                                           ***
***                                    STANDARD COMPOSITION LIBRARY DATA                                      ***
***                                    ---------------------------------                                      ***
***                                                                                                           ***
***            UNIT NUMBER  :  89                                                                             ***
***                                                                                                           ***
***            DATASET NAME :  G:\scale43\DATALIB\FT89F001                                                    ***
***                                                                                                           ***
***            LIBRARY TITLE:  SCALE-4 STANDARD COMPOSITION LIBRARY                                           ***
***                            637 STANDARD COMPOSITIONS, 490 NUCLIDES                                        ***
***                            90 ELEMENTS WITH VARIABLE ISOTOPIC DISTRBUTIONS.                               ***
***                                                                                                           ***
***            CREATION DATE:   6/30/95                                                                       ***
***                                                                                                           ***
***                                                                                                           ***
***                                                                                                           ***
***                                      CROSS SECTION LIBRARY DATA                                           ***
***                                      --------------------------                                           ***
***                                                                                                           ***
***            UNIT NUMBER  :  82                                                                             ***
***                                                                                                           ***
***            DATASET NAME :  G:\scale43\DATALIB\FT82F001                                                    ***
***                                                                                                           ***
***            LIBRARY TITLE:  SCALE 4.2 - 27 GROUP NEUTRON GROUP LIBRARY                                     ***
***                               BASED ON ENDF-B VERSION 4 DATA                                              ***
***                                  COMPILED FOR NRC     1/27/89                                             ***
***                                     LAST UPDATED                                          08/12/94  ***
***                                        L.M.PETRIE   -   ORNL                                              ***
***                                                                                                           ***
***                                                                                                           ***
***                                                                                                           ***
***                                                                                                           ***
*****************************************************************************************************************
*****************************************************************************************************************

                        ........    0 IO'S WERE USED BEFORE READING KENO V DATA    ........

                        ........    0 IO'S WERE USED READING THE KENO V PARAMETER DATA    ........


                       *************** DATA READING COMPLETED ***************

                        ........    0 IO'S WERE USED PREPARING THE KENO V INPUT DATA    ........

                        ........    0 IO'S WERE USED LOADING THE KENO V DATA    ........

                        ........    0 IO'S WERE USED LOADING THE DATA    ........

                        ........    0 IO'S WERE USED CHECKING THE KENO V GEOMETRY DATA    ........
                        *****  RESTART DATA HAS BEEN WRITTEN ON UNIT 95  *****

                        ........    0 IO'S WERE USED WRITING THE KENO V - CSAS DATA    ........

                        ........    0 IO'S WERE USED PROCESSING CSAS INPUT DATA    ........

 CONTROL MODULE CSAS25   IS COMPLETE.
```

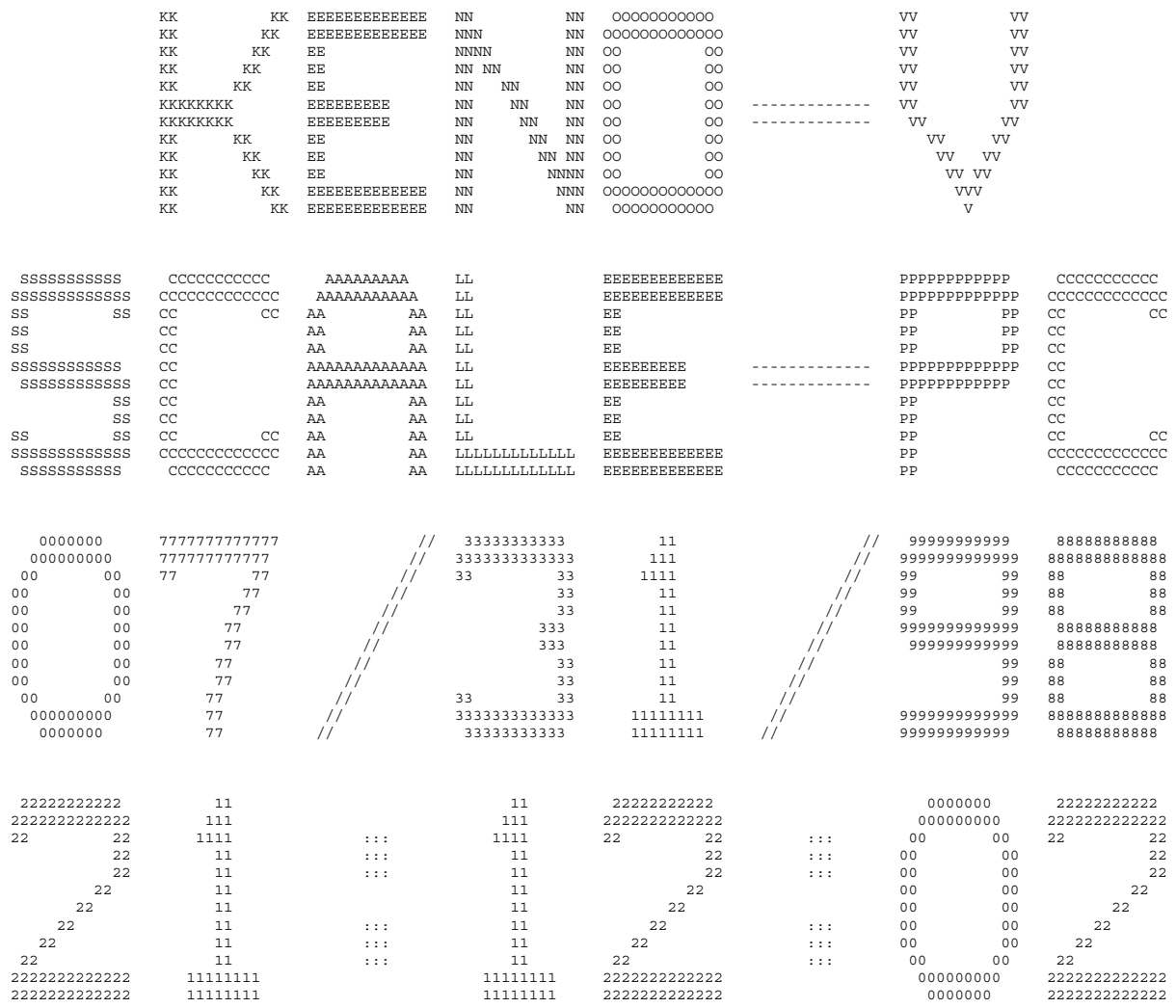
KK KK EEEEEEEEEEEE NN NN OOOOOOOOOO VV VV
KK KK EEEEEEEEEEEE NNN NN OOOOOOOOOOOO VV VV
KK KK EE NNNN NN OO OO VV VV
KK KK EE NN NN NN OO OO VV VV
KK KK EE NN NN NN OO OO VV VV
KKKKKKKK EEEEEEEEE NN NN NN OO OO VV VV
KKKKKKKK EEEEEEEEE NN NN NN OO OO VV VV
KK KK EE NN NN NN OO OO VV VV
KK KK EE NN NN NN OO OO VV VV
KK KK EE NN NNNN OO OO VV VV
KK KK EEEEEEEEEEEE NN NNN OOOOOOOOOOOO VVV
KK KK EEEEEEEEEEEE NN NN OOOOOOOOOO V
SSSSSSSSSS CCCCCCCCCC AAAAAAAAA LL EEEEEEEEEEEE PPPPPPPPPP CCCCCCCCCC
SSSSSSSSSSS CCCCCCCCCCCC AAAAAAAAAA LL EEEEEEEEEEEE PPPPPPPPPPP CCCCCCCCCCCC
SS SS CC CC AA AA LL EE PP PP CC CC
SS CC AA AA LL EE PP PP CC
SS CC AA AA LL EE PP PP CC
SSSSSSSSSSS CC AAAAAAAAAAAAA LL EEEEEEEEE PPPPPPPPPPP CC
SSSSSSSSSS CC AAAAAAAAAAAAA LL EEEEEEEEE PPPPPPPPPP CC
SS CC AA AA LL EE PP CC
SS CC AA AA LL EE PP CC
SS SS CC CC AA AA LL EE PP CC CC
SSSSSSSSSSS CCCCCCCCCCCC AA AA LLLLLLLLLLL EEEEEEEEEEE PP CCCCCCCCCCC
SSSSSSSSSS CCCCCCCCCC AA AA LLLLLLLLLLL EEEEEEEEEEE PP CCCCCCCCCC
0000000 7777777777777 // 33333333333 11 // 99999999999 88888888888
000000000 777777777777 // 3333333333333 111 // 9999999999999 8888888888888
00 00 77 77 // 33 33 1111 // 99 99 88 88
00 00 77 // 33 11 // 99 99 88 88
00 00 77 // 33 11 // 99 99 88 88
00 00 77 // 333 11 // 9999999999999 88888888888
00 00 77 // 333 11 // 999999999999 88888888888
00 00 77 // 33 11 // 99 88 88
00 00 77 // 33 11 // 99 88 88
00 00 77 // 33 33 11 // 99 88 88
000000000 77 // 3333333333333 11111111 // 9999999999999 8888888888888
0000000 77 // 33333333333 11111111 // 999999999999 88888888888
22222222222 11 11 22222222222 0000000 22222222222
2222222222222 111 111 2222222222222 000000000 2222222222222
22 22 1111 ::: 1111 22 22 ::: 00 00 22 22
22 11 ::: 11 22 ::: 00 00 22
22 11 ::: 11 22 ::: 00 00 22
22 11 11 22 00 00 22
22 11 11 22 00 00 22
22 11 ::: 11 22 ::: 00 00 22
22 11 ::: 11 22 ::: 00 00 22
22 11 ::: 11 22 ::: 00 00 22
2222222222222 11111111 11111111 2222222222222 000000000 2222222222222
2222222222222 11111111 11111111 2222222222222 0000000 2222222222222

```
*****************************************************************************************************************
***                                                                                                           ***
***                          LWT ANALYSIS; EXXON 15X15(W) ASSEMBLY;  WATER IN GAP                             ***
***                                                                                                           ***
*****************************************************************************************************************
***                          ******       NUMERIC PARAMETERS       ******                                    ***
***                                                                                                           ***
***                                                                                                           ***
***          TME         MAXIMUM PROBLEM TIME (MIN)                        ******                          ***
***                                                                                                           ***
***          TBA         TIME PER GENERATION (MIN)                           0.50                          ***
***                                                                                                           ***
***          GEN         NUMBER OF GENERATIONS                                303                          ***
***                                                                                                           ***
***          NPG         NUMBER PER GENERATION                               1000                          ***
***                                                                                                           ***
***          NSK         NUMBER OF GENERATIONS TO BE SKIPPED                    3                          ***
***                                                                                                           ***
***          BEG         BEGINNING GENERATION NUMBER                            1                          ***
***                                                                                                           ***
***          RES         GENERATIONS BETWEEN CHECKPOINTS                        0                          ***
***                                                                                                           ***
***          X1D         NUMBER OF EXTRA 1-D CROSS SECTIONS                     1                          ***
***                                                                                                           ***
***          NBK         NEUTRON BANK SIZE                                   1025                          ***
***                                                                                                           ***
***          XNB         EXTRA POSITIONS IN NEUTRON BANK                        0                          ***
***                                                                                                           ***
***          NFB         FISSION BANK SIZE                                   1000                          ***
***                                                                                                           ***
***          XFB         EXTRA POSITIONS IN FISSION BANK                        0                          ***
***                                                                                                           ***
***          WTA         DEFAULT VALUE OF WEIGHT AVERAGE                   0.5000                          ***
***                                                                                                           ***
***          WTH         WEIGHT HIGH FOR SPLITTING                         3.0000                          ***
***                                                                                                           ***
***          WTL         WEIGHT LOW FOR RUSSIAN ROULETTE                   0.3333                          ***
***                                                                                                           ***
***          RND         STARTING RANDOM NUMBER                               1D                           ***
***                                                                                                           ***
***          NB8         NUMBER OF D.A. BLOCKS ON UNIT  8                    200                          ***
***                                                                                                           ***
***          NL8         LENGTH OF D.A. BLOCKS ON UNIT  8                    512                          ***
***                                                                                                           ***
***          ADJ         MODE OF CALCULATION                              FORWARD                          ***
***                                                                                                           ***
***                      INPUT DATA WRITTEN ON RESTART UNIT                    NO                          ***
***                                                                                                           ***
***                      BINARY DATA INTERFACE                                YES                          ***
***                                                                                                           ***
***                                                                                                           ***
*****************************************************************************************************************
*****************************************************************************************************************
```

```
*****************************************************************************************************************
*****************************************************************************************************************
***                                                                                                           ***
***                            LWT ANALYSIS; EXXON 15X15(W) ASSEMBLY;  WATER IN GAP                           ***
***                                                                                                           ***
*****************************************************************************************************************
***                                ******      LOGICAL PARAMETERS        ******                               ***
***                                                                                                           ***
***  RUN  EXECUTE PROBLEM AFTER CHECKING DATA    YES            PLT  PLOT PICTURE MAP(S)                    NO ***
***                                                                                                           ***
***  FLX  COMPUTE FLUX                            NO            FDN  COMPUTE FISSION DENSITIES              NO ***
***                                                                                                           ***
***  SMU  COMPUTE AVG UNIT SELF-MULTIPLICATION    NO            NUB  COMPUTE NU-BAR & AVG FISSION GROUP     YES ***
***                                                                                                           ***
***  MKU  COMPUTE MATRIX K-EFF BY UNIT NUMBER     NO            MKP  COMPUTE MATRIX K-EFF BY UNIT LOCATION  NO ***
***                                                                                                           ***
***  CKU  COMPUTE COFACTOR K-EFF BY UNIT NUMBER   NO            CKP  COMPUTE COFACTOR K-EFF BY UNIT LOCATION NO ***
***                                                                                                           ***
***  FMU  PRINT FISS PROD MATRIX BY UNIT NUMBER   NO            FMP  PRINT FISS PROD MATRIX BY UNIT LOCATION NO ***
***                                                                                                           ***
***  MKH  COMPUTE MATRIX K-EFF BY HOLE NUMBER     NO            MKA  COMPUTE MATRIX K-EFF BY ARRAY NUMBER   NO ***
***                                                                                                           ***
***  CKH  COMPUTE COFACTOR K-EFF BY HOLE NUMBER   NO            CKA  COMPUTE COFACTOR K-EFF BY ARRAY NUMBER NO ***
***                                                                                                           ***
***  FMH  PRINT FISS PROD MATRIX BY HOLE NUMBER   NO            FMA  PRINT FISS PROD MATRIX BY ARRAY NUMBER NO ***
***                                                                                                           ***
***  HHL  COLLECT MATRIX BY HIGHEST HOLE LEVEL    NO            HAL  COLLECT MATRIX BY HIGHEST ARRAY LEVEL  NO ***
***                                                                                                           ***
***  AMX  PRINT ALL MIXED CROSS SECTIONS          NO            FAR  PRINT FIS. AND ABS. BY REGION          NO ***
***                                                                                                           ***
***  XS1  PRINT 1-D MIXTURE X-SECTIONS            NO            GAS  PRINT FAR BY GROUP                     NO ***
***                                                                                                           ***
***  XS2  PRINT 2-D MIXTURE X-SECTIONS            NO            PAX  PRINT XSEC-ALBEDO CORRELATION TABLES   NO ***
***                                                                                                           ***
***  XAP  PRINT MIXTURE ANGLES & PROBABILITIES    NO            PWT  PRINT WEIGHT AVERAGE ARRAY             NO ***
***                                                                                                           ***
***  PKI  PRINT FISSION SPECTRUM                  NO            PGM  PRINT INPUT GEOMETRY                   NO ***
***                                                                                                           ***
***  P1D  PRINT EXTRA 1-D CROSS SECTIONS          NO            BUG  PRINT DEBUG INFORMATION                NO ***
***                                                                                                           ***
***                                                             TRK  PRINT TRACKING INFORMATION             NO ***
***                                                                                                           ***
***                                                                                                           ***
*****************************************************************************************************************
*****************************************************************************************************************
*****************************************************************************************************************
                                  PARAMETER INPUT COMPLETED

                        ........    0 IO'S WERE USED READING THE PARAMETER DATA      ........

                       *************** DATA READING COMPLETED ***************

     *****************************************************************************************************
     ***                                                                                               ***
     ***          LWT ANALYSIS; EXXON 15X15(W) ASSEMBLY;  WATER IN GAP                                 ***
     ***                                                                                               ***
     *****************************************************************************************************
     *****************************************************************************************************
     ***                                                                                               ***
     ***                                ****** ADDITIONAL INFORMATION ******                           ***
     ***                                                                                               ***
     ***  NUMBER OF ENERGY GROUPS              27       USE LATTICE GEOMETRY                    YES  ***
     ***                                                                                               ***
     ***  NO. OF FISSION SPECTRUM SOURCE GROUP  1       GLOBAL ARRAY NUMBER                       1  ***
     ***                                                                                               ***
     ***  NO. OF SCATTERING ANGLES IN XSECS     2       NUMBER OF UNITS IN THE GLOBAL X DIR.     15  ***
     ***                                                                                               ***
     ***  ENTRIES/NEUTRON IN THE NEUTRON BANK  16       NUMBER OF UNITS IN THE GLOBAL Y DIR.     15  ***
     ***                                                                                               ***
     ***  ENTRIES/NEUTRON IN THE FISSION BANK   9       NUMBER OF UNITS IN THE GLOBAL Z DIR.      1  ***
     ***                                                                                               ***
     ***  NUMBER OF MIXTURES USED               9       USE A GLOBAL REFLECTOR                  YES  ***
     ***                                                                                               ***
     ***  NUMBER OF BIAS ID'S USED              1       USE NESTED HOLES                         NO  ***
     ***                                                                                               ***
     ***  NUMBER OF DIFFERENTIAL ALBEDOS USED   0       NUMBER OF HOLES                           0  ***
     ***                                                                                               ***
     ***  TOTAL INPUT GEOMETRY REGIONS         19       MAXIMUM HOLE NESTING LEVEL                0  ***
     ***                                                                                               ***
     ***  NUMBER OF GEOMETRY REGIONS USED      19       USE NESTED ARRAYS                        NO  ***
     ***                                                                                               ***
     ***  LARGEST GEOMETRY UNIT NUMBER          9       NUMBER OF ARRAYS USED                     1  ***
     ***                                                                                               ***
     ***  LARGEST ARRAY NUMBER                  1       MAXIMUM ARRAY NESTING LEVEL               1  ***
     ***                                                                                               ***
     ***                                                                                               ***
     ***  +X BOUNDARY CONDITION               VAC       -X BOUNDARY CONDITION                   VAC  ***
     ***                                                                                               ***
     ***  +Y BOUNDARY CONDITION               VAC       -Y BOUNDARY CONDITION                   VAC  ***
     ***                                                                                               ***
     ***  +Z BOUNDARY CONDITION               VAC       -Z BOUNDARY CONDITION                   VAC  ***
     ***                                                                                               ***
     *****************************************************************************************************
```

```
*******************************************************************************************
***                                                                                     ***
***          LWT ANALYSIS; EXXON 15X15(W) ASSEMBLY;  WATER IN GAP                       ***
***                                                                                     ***
*******************************************************************************************
*******************************************************************************************
***                                                                                     ***
***                    ****** SPACE AND SUPERGROUP INFORMATION ******                   ***
***                                                                                     ***
***       100000 WORDS IS THE TOTAL SPACE AVAILABLE.                                    ***
***                                                                                     ***
***        28389 WORDS WERE USED FOR NON-SUPERGROUP STORAGE.                            ***
***                                                                                     ***
***        71611 WORDS OF STORAGE ARE AVAILABLE FOR SUPERGROUPED DATA.                  ***
***                                                                                     ***
***        99759 WORDS OF STORAGE ARE AVAILABLE FOR CONSTRUCTING THE SUPERGROUPS.       ***
***                                                                                     ***
***        71551 WORDS OF STORAGE ARE AVAILABLE TO EACH SUPERGROUP.                     ***
***                                                                                     ***
***         1172 WORDS ARE NEEDED FOR THE LARGEST GROUP.                                ***
***                                                                                     ***
***        29777 WORDS OF STORAGE IS SUFFICIENT TO RUN THIS PROBLEM.                    ***
***                                                                                     ***
***        41991 WORDS OF STORAGE WILL ALLOW THE PROBLEM TO RUN WITH ONE SUPERGROUP.     ***
***                                                                                     ***
***        42144 WORDS OF STORAGE WILL BE USED TO RUN THIS PROBLEM.                     ***
***                                                                                     ***
*******************************************************************************************
*******************************************************************************************
***                                                                                     ***
***                   STARTING       ENDING        XSEC        ALBEDO       TOTAL       ***
***   SUPERGROUP        GROUP         GROUP       LENGTH       LENGTH       LENGTH       ***
***                                                                                     ***
***                                                                                     ***
***          1            1             27         2697            0        13542       ***
***                                                                                     ***
*******************************************************************************************

            ........    0 IO'S WERE USED IN SUPERGROUPING    ........

            ........    0 IO'S WERE USED LOADING THE DATA    ........
```

```
                                    LWT ANALYSIS; EXXON 15X15(W) ASSEMBLY;  WATER IN GAP

                MEDIA BIAS      GEOMETRY DESCRIPTION FOR THOSE UNITS UTILIZED IN THIS PROBLEM
REGION           NUM   ID

                                                -----   UNIT     1   -----

FUEL PIN CELL - WITH H2O

  1 CYLINDER         1  1  RADIUS = 0.45280     +Z =  182.88     -Z = -182.88     CENTERLINE IS AT  X = 0.00000      Y = 0.00000

  2 CYLINDER         9  1  RADIUS = 0.46230     +Z =  182.88     -Z = -182.88     CENTERLINE IS AT  X = 0.00000      Y = 0.00000

  3 CYLINDER         2  1  RADIUS = 0.53850     +Z =  182.88     -Z = -182.88     CENTERLINE IS AT  X = 0.00000      Y = 0.00000

  4 CUBOID           3  1       +X = 0.71500     -X =-0.71500     +Y = 0.71500     -Y =-0.71500     +Z =  182.88     -Z = -182.88

                                                -----   UNIT     2   -----

WATER ROD CELL - WITH H2O

  1 CYLINDER         3  1  RADIUS = 0.64770     +Z =  182.88     -Z = -182.88     CENTERLINE IS AT  X = 0.00000      Y = 0.00000

  2 CYLINDER         2  1  RADIUS = 0.69090     +Z =  182.88     -Z = -182.88     CENTERLINE IS AT  X = 0.00000      Y = 0.00000

  3 CUBOID           3  1       +X = 0.71500     -X =-0.71500     +Y = 0.71500     -Y =-0.71500     +Z =  182.88     -Z = -182.88

                                            ******************   GLOBAL   ******************
                                            -----   UNIT     9  EXTERNAL TO LATTICE  1   -----

  1 ARRAY NUMBER     1          +X =  10.725     -X = -10.725     +Y =  10.725     -Y = -10.725     +Z =  182.88     -Z = -182.88

  2 CUBOID           3  1       +X =  11.316     -X = -11.316     +Y =  11.316     -Y = -11.316     +Z =  182.88     -Z = -182.88

  3 CYLINDER         4  1  RADIUS =  16.891     +Z =  182.88     -Z = -182.88     CENTERLINE IS AT  X = 0.00000      Y = 0.00000

  4 CYLINDER         3  1  RADIUS =  16.986     +Z =  182.88     -Z = -182.88     CENTERLINE IS AT  X = 0.00000      Y = 0.00000

  5 CYLINDER         5  1  RADIUS =  18.891     +Z =  182.88     -Z = -182.88     CENTERLINE IS AT  X = 0.00000      Y = 0.00000

  6 CYLINDER         6  1  RADIUS =  33.496     +Z =  182.88     -Z = -182.88     CENTERLINE IS AT  X = 0.00000      Y = 0.00000

  7 CYLINDER         5  1  RADIUS =  36.544     +Z =  182.88     -Z = -182.88     CENTERLINE IS AT  X = 0.00000      Y = 0.00000

  8 CYLINDER         7  1  RADIUS =  49.244     +Z =  182.88     -Z = -182.88     CENTERLINE IS AT  X = 0.00000      Y = 0.00000

  9 CYLINDER         5  1  RADIUS =  49.854     +Z =  212.48     -Z = -192.16     CENTERLINE IS AT  X = 0.00000      Y = 0.00000

 10 CYLINDER         6  1  RADIUS =  49.854     +Z =  212.48     -Z = -199.78     CENTERLINE IS AT  X = 0.00000      Y = 0.00000

 11 CYLINDER         5  1  RADIUS =  49.854     +Z =  212.48     -Z = -208.67     CENTERLINE IS AT  X = 0.00000      Y = 0.00000

 12 CUBOID           8  1       +X =  81.000     -X = -81.000     +Y =  81.000     -Y = -81.000     +Z =  243.00     -Z = -240.00

                        LWT ANALYSIS; EXXON 15X15(W) ASSEMBLY;  WATER IN GAP

                  -------  UNIT ORIENTATION DESCRIPTION FOR ARRAY   1        -------

Z LAYER   1, X COLUMN   1 TO  15 LEFT TO RIGHT   Y ROW   1 TO  15  BOTTOM TO TOP

 1 1 1 1 1 1 1 1 1 1 1 1 1 1 1

 1 1 1 1 1 1 1 1 1 1 1 1 1 1 1

 1 1 2 1 1 2 1 1 1 2 1 1 2 1 1

 1 1 1 1 1 1 1 2 1 1 1 1 1 1 1

 1 1 1 1 2 1 1 1 1 1 2 1 1 1 1

 1 1 2 1 1 1 1 1 1 1 1 1 2 1 1

 1 1 1 1 1 1 1 1 1 1 1 1 1 1 1

 1 1 1 2 1 1 1 2 1 1 1 2 1 1 1

 1 1 1 1 1 1 1 1 1 1 1 1 1 1 1

 1 1 2 1 1 1 1 1 1 1 1 1 2 1 1

 1 1 1 1 2 1 1 1 1 1 2 1 1 1 1

 1 1 1 1 1 1 1 2 1 1 1 1 1 1 1

 1 1 2 1 1 2 1 1 1 2 1 1 2 1 1

 1 1 1 1 1 1 1 1 1 1 1 1 1 1 1

 1 1 1 1 1 1 1 1 1 1 1 1 1 1 1
```

LWT ANALYSIS; EXXON 15X15(W) ASSEMBLY; WATER IN GAP
VOLUMES FOR THOSE UNITS UTILIZED IN THIS PROBLEM

UNIT	REGION	GEOMETRY REGION	VOLUME	CUMULATIVE VOLUME
1	1	1	2.35591E+02 CM**3	2.35591E+02 CM**3
	2	2	9.98936E+00 CM**3	2.45581E+02 CM**3
	3	3	8.76291E+01 CM**3	3.33210E+02 CM**3
	4	4	4.14733E+02 CM**3	7.47943E+02 CM**3
2	1	5	4.82052E+02 CM**3	4.82052E+02 CM**3
	2	6	6.64478E+01 CM**3	5.48500E+02 CM**3
	3	7	1.99443E+02 CM**3	7.47943E+02 CM**3
SURROUNDING GEOMETRY VOLUMES -		GEOMETRY REGION	8 IS AN ARRAY PLACEMENT BOUNDARY REGION	
9	1	8	1.68287E+05 CM**3	1.68287E+05 CM**3
	2	9	1.90480E+04 CM**3	1.87335E+05 CM**3
	3	10	1.40501E+05 CM**3	3.27836E+05 CM**3
	4	11	3.70972E+03 CM**3	3.31546E+05 CM**3
	5	12	7.85353E+04 CM**3	4.10081E+05 CM**3
	6	13	8.79177E+05 CM**3	1.28926E+06 CM**3
	7	14	2.45308E+05 CM**3	1.53457E+06 CM**3
	8	15	1.25193E+06 CM**3	2.78649E+06 CM**3
	9	16	3.72996E+05 CM**3	3.15949E+06 CM**3
	10	17	5.94983E+04 CM**3	3.21899E+06 CM**3
	11	18	6.94145E+04 CM**3	3.28840E+06 CM**3
	12	19	9.38745E+06 CM**3	1.26759E+07 CM**3

UNIT	USES	REGION	MIXTURE	TOTAL VOLUME
1	204	1	1	4.80606E+04 CM**3
		2	9	2.03783E+03 CM**3
		3	2	1.78763E+04 CM**3
		4	3	8.46055E+04 CM**3
2	21	1	3	1.01231E+04 CM**3
		2	2	1.39540E+03 CM**3
		3	3	4.18830E+03 CM**3
9	1	1		1.68287E+05 CM**3
		2	3	1.90480E+04 CM**3
		3	4	1.40501E+05 CM**3
		4	3	3.70972E+03 CM**3
		5	5	7.85353E+04 CM**3
		6	6	8.79177E+05 CM**3
		7	5	2.45308E+05 CM**3
		8	7	1.25193E+06 CM**3
		9	5	3.72996E+05 CM**3
		10	6	5.94983E+04 CM**3
		11	5	6.94145E+04 CM**3
		12	8	9.38745E+06 CM**3

TOTAL MIXTURE VOLUMES

MIXTURE	TOTAL VOLUME	MASS(G)
1	4.80606E+04 CM**3	5.00406E+05
2	1.92717E+04 CM**3	1.25074E+05
3	1.21675E+05 CM**3	1.21452E+05
4	1.40501E+05 CM**3	3.79634E+05
5	7.66253E+05 CM**3	6.06873E+06
6	9.38675E+05 CM**3	1.06483E+07
7	1.25193E+06 CM**3	1.24964E+06
8	9.38745E+06 CM**3	9.37028E+06
9	2.03783E+03 CM**3	2.03410E+03

****
***
*** BIASING INFORMATION ***
***
*** A DEFAULT WEIGHT OF 0.500 WILL BE USED FOR ALL BIAS ID'S. ***
***
****

..... 0 IO'S WERE USED IN KENO-V BEFORE TRACKING .....

..... 0.00833 MINUTES WERE USED PROCESSING DATA. .....

VOLUME FRACTION OF FISSILE MATERIAL IN THE CORE= 2.85587E-01

START TYPE 0 WAS USED.

THE NEUTRONS WERE STARTED WITH A FLAT DISTRIBUTION IN A CUBOID DEFINED BY:
+X= 1.07250E+01 -X=-1.07250E+01 +Y= 1.07250E+01 -Y=-1.07250E+01 +Z= 1.82880E+02 -Z=-1.82880E+02
THE FLAG TO START NEUTRONS IN THE REFLECTOR WAS TURNED OFF

0.04883 MINUTES WERE REQUIRED FOR STARTING. TOTAL ELAPSED TIME IS 0.06400 MINUTES.

LWT ANALYSIS; EXXON 15X15(W) ASSEMBLY; WATER IN GAP

GENERATION	GENERATION K-EFFECTIVE	ELAPSED TIME MINUTES	AVERAGE K-EFFECTIVE	AVG K-EFF DEVIATION	MATRIX K-EFFECTIVE	MATRIX K-EFF DEVIATION
1	9.01758E-01	7.60000E-02	1.00000E+00	0.00000E+00	0.00000E+00	0.00000E+00
KENO MESSAGE NUMBER K5-132	WARNING....ONLY	997 INDEPENDENT FISSION POINTS WERE GENERATED				
2	9.43422E-01	9.35000E-02	1.00000E+00	0.00000E+00	0.00000E+00	0.00000E+00
3	9.50011E-01	1.11667E-01	9.50011E-01	0.00000E+00	0.00000E+00	0.00000E+00
4	9.23268E-01	1.29167E-01	9.36639E-01	1.33713E-02	0.00000E+00	0.00000E+00
5	9.41541E-01	1.47500E-01	9.38273E-01	7.89095E-03	0.00000E+00	0.00000E+00
6	9.48674E-01	1.64000E-01	9.40874E-01	6.15584E-03	0.00000E+00	0.00000E+00
7	9.40843E-01	1.80333E-01	9.40867E-01	4.76829E-03	0.00000E+00	0.00000E+00
8	9.73009E-01	1.96833E-01	9.46224E-01	6.62232E-03	0.00000E+00	0.00000E+00
9	9.23107E-01	2.13333E-01	9.42922E-01	6.49858E-03	0.00000E+00	0.00000E+00
10	9.40767E-01	2.30667E-01	9.42653E-01	5.63438E-03	0.00000E+00	0.00000E+00
11	9.89496E-01	2.47167E-01	9.47857E-01	7.19592E-03	0.00000E+00	0.00000E+00
12	9.23595E-01	2.65500E-01	9.45431E-01	6.87834E-03	0.00000E+00	0.00000E+00
13	9.06062E-01	2.83000E-01	9.41852E-01	7.17767E-03	0.00000E+00	0.00000E+00
14	9.44836E-01	2.99333E-01	9.42101E-01	6.55700E-03	0.00000E+00	0.00000E+00
15	9.41754E-01	3.15833E-01	9.42074E-01	6.03162E-03	0.00000E+00	0.00000E+00
16	9.56168E-01	3.33333E-01	9.43081E-01	5.67421E-03	0.00000E+00	0.00000E+00
17	9.41557E-01	3.49833E-01	9.42979E-01	5.28338E-03	0.00000E+00	0.00000E+00
18	9.48574E-01	3.65333E-01	9.43329E-01	4.95450E-03	0.00000E+00	0.00000E+00
19	8.99072E-01	3.82667E-01	9.40726E-01	5.33259E-03	0.00000E+00	0.00000E+00
20	9.79909E-01	4.00167E-01	9.42902E-01	5.47865E-03	0.00000E+00	0.00000E+00
21	9.20847E-01	4.17500E-01	9.41742E-01	5.31070E-03	0.00000E+00	0.00000E+00
22	9.31596E-01	4.34000E-01	9.41234E-01	5.06365E-03	0.00000E+00	0.00000E+00
23	9.03910E-01	4.52333E-01	9.39457E-01	5.13397E-03	0.00000E+00	0.00000E+00
24	9.37084E-01	4.69667E-01	9.39349E-01	4.89624E-03	0.00000E+00	0.00000E+00
25	9.44135E-01	4.86167E-01	9.39557E-01	4.68314E-03	0.00000E+00	0.00000E+00
26	9.19049E-01	5.03500E-01	9.38703E-01	4.56447E-03	0.00000E+00	0.00000E+00
27	9.19408E-01	5.20000E-01	9.37931E-01	4.44559E-03	0.00000E+00	0.00000E+00
28	9.51081E-01	5.36500E-01	9.38437E-01	4.30102E-03	0.00000E+00	0.00000E+00
29	9.50371E-01	5.53833E-01	9.38879E-01	4.16220E-03	0.00000E+00	0.00000E+00
30	9.27492E-01	5.71333E-01	9.38472E-01	4.03136E-03	0.00000E+00	0.00000E+00
31	9.31326E-01	5.87833E-01	9.38226E-01	3.89766E-03	0.00000E+00	0.00000E+00
32	9.40426E-01	6.04167E-01	9.38299E-01	3.76621E-03	0.00000E+00	0.00000E+00
33	9.51578E-01	6.21667E-01	9.38727E-01	3.66780E-03	0.00000E+00	0.00000E+00
34	9.23158E-01	6.38167E-01	9.38241E-01	3.58450E-03	0.00000E+00	0.00000E+00
35	9.28308E-01	6.55500E-01	9.37940E-01	3.48720E-03	0.00000E+00	0.00000E+00
36	9.40023E-01	6.72000E-01	9.38001E-01	3.38364E-03	0.00000E+00	0.00000E+00
37	9.32004E-01	6.89333E-01	9.37830E-01	3.29000E-03	0.00000E+00	0.00000E+00
38	9.15507E-01	7.05833E-01	9.37210E-01	3.25688E-03	0.00000E+00	0.00000E+00
39	8.96861E-01	7.22333E-01	9.36119E-01	3.35009E-03	0.00000E+00	0.00000E+00
40	9.34545E-01	7.39667E-01	9.36078E-01	3.26100E-03	0.00000E+00	0.00000E+00
41	9.73308E-01	7.56167E-01	9.37032E-01	3.31663E-03	0.00000E+00	0.00000E+00
42	9.19912E-01	7.73667E-01	9.36604E-01	3.26087E-03	0.00000E+00	0.00000E+00
43	9.11551E-01	7.90000E-01	9.35993E-01	3.23851E-03	0.00000E+00	0.00000E+00
44	9.79666E-01	8.06500E-01	9.37033E-01	3.32713E-03	0.00000E+00	0.00000E+00
45	9.39856E-01	8.24833E-01	9.37099E-01	3.24949E-03	0.00000E+00	0.00000E+00
46	9.26522E-01	8.42333E-01	9.36858E-01	3.18387E-03	0.00000E+00	0.00000E+00
47	9.81390E-01	8.58667E-01	9.37848E-01	3.26585E-03	0.00000E+00	0.00000E+00
48	9.43632E-01	8.76167E-01	9.37974E-01	3.19654E-03	0.00000E+00	0.00000E+00
49	9.47915E-01	8.91667E-01	9.38185E-01	3.13493E-03	0.00000E+00	0.00000E+00
50	9.04586E-01	9.09000E-01	9.37485E-01	3.14774E-03	0.00000E+00	0.00000E+00
51	9.24459E-01	9.26500E-01	9.37219E-01	3.09427E-03	0.00000E+00	0.00000E+00
52	9.18151E-01	9.43833E-01	9.36838E-01	3.05565E-03	0.00000E+00	0.00000E+00
53	9.48855E-01	9.61333E-01	9.37074E-01	3.00439E-03	0.00000E+00	0.00000E+00
54	9.03575E-01	9.78667E-01	9.36429E-01	3.01565E-03	0.00000E+00	0.00000E+00
55	9.55673E-01	9.96000E-01	9.36792E-01	2.98041E-03	0.00000E+00	0.00000E+00
56	9.17601E-01	1.01250E+00	9.36437E-01	2.94621E-03	0.00000E+00	0.00000E+00
57	9.68348E-01	1.02900E+00	9.37017E-01	2.94977E-03	0.00000E+00	0.00000E+00
58	9.04699E-01	1.04733E+00	9.36440E-01	2.95355E-03	0.00000E+00	0.00000E+00
59	9.35986E-01	1.06383E+00	9.36432E-01	2.90128E-03	0.00000E+00	0.00000E+00
60	9.48324E-01	1.08033E+00	9.36637E-01	2.85818E-03	0.00000E+00	0.00000E+00
61	9.40586E-01	1.09767E+00	9.36704E-01	2.81012E-03	0.00000E+00	0.00000E+00
62	9.24890E-01	1.11417E+00	9.36507E-01	2.76989E-03	0.00000E+00	0.00000E+00
63	9.09367E-01	1.13150E+00	9.36062E-01	2.76020E-03	0.00000E+00	0.00000E+00
64	8.96454E-01	1.14900E+00	9.35423E-01	2.78946E-03	0.00000E+00	0.00000E+00
65	9.22110E-01	1.16633E+00	9.35212E-01	2.75295E-03	0.00000E+00	0.00000E+00
66	9.99260E-01	1.18183E+00	9.36213E-01	2.88849E-03	0.00000E+00	0.00000E+00
67	9.50733E-01	1.19933E+00	9.36436E-01	2.85247E-03	0.00000E+00	0.00000E+00
68	9.22057E-01	1.21567E+00	9.36218E-01	2.81735E-03	0.00000E+00	0.00000E+00
69	9.53002E-01	1.23217E+00	9.36469E-01	2.78627E-03	0.00000E+00	0.00000E+00
70	9.28308E-01	1.24967E+00	9.36349E-01	2.74761E-03	0.00000E+00	0.00000E+00
71	9.15497E-01	1.26700E+00	9.36047E-01	2.72431E-03	0.00000E+00	0.00000E+00
72	9.30934E-01	1.28350E+00	9.35974E-01	2.68610E-03	0.00000E+00	0.00000E+00
73	9.11776E-01	1.30083E+00	9.35633E-01	2.66984E-03	0.00000E+00	0.00000E+00
74	9.38164E-01	1.31733E+00	9.35668E-01	2.63273E-03	0.00000E+00	0.00000E+00
75	9.43395E-01	1.33483E+00	9.35774E-01	2.59857E-03	0.00000E+00	0.00000E+00
76	9.15137E-01	1.35217E+00	9.35495E-01	2.57834E-03	0.00000E+00	0.00000E+00
77	9.59855E-01	1.36950E+00	9.35820E-01	2.56439E-03	0.00000E+00	0.00000E+00
78	9.05825E-01	1.38700E+00	9.35425E-01	2.56101E-03	0.00000E+00	0.00000E+00
79	9.08305E-01	1.40333E+00	9.35073E-01	2.55195E-03	0.00000E+00	0.00000E+00
80	9.29653E-01	1.42083E+00	9.35003E-01	2.51998E-03	0.00000E+00	0.00000E+00
81	9.37316E-01	1.43817E+00	9.35033E-01	2.48805E-03	0.00000E+00	0.00000E+00
82	9.36897E-01	1.45467E+00	9.35056E-01	2.45687E-03	0.00000E+00	0.00000E+00
83	9.28681E-01	1.47200E+00	9.34977E-01	2.42762E-03	0.00000E+00	0.00000E+00
84	9.54221E-01	1.48850E+00	9.35212E-01	2.40929E-03	0.00000E+00	0.00000E+00
85	9.31478E-01	1.50600E+00	9.35167E-01	2.38051E-03	0.00000E+00	0.00000E+00
86	9.29477E-01	1.52333E+00	9.35099E-01	2.35297E-03	0.00000E+00	0.00000E+00
87	9.74410E-01	1.53983E+00	9.35562E-01	2.37068E-03	0.00000E+00	0.00000E+00
88	9.35244E-01	1.55817E+00	9.35558E-01	2.34295E-03	0.00000E+00	0.00000E+00
89	9.23112E-01	1.57467E+00	9.35415E-01	2.32028E-03	0.00000E+00	0.00000E+00
90	9.44556E-01	1.59200E+00	9.35519E-01	2.29611E-03	0.00000E+00	0.00000E+00

91	9.26975E-01	1.60933E+00	9.35423E-01	2.27219E-03	0.00000E+00	0.00000E+00
92	8.84113E-01	1.62683E+00	9.34853E-01	2.31801E-03	0.00000E+00	0.00000E+00
93	9.48189E-01	1.64233E+00	9.34999E-01	2.29707E-03	0.00000E+00	0.00000E+00
94	9.47857E-01	1.65967E+00	9.35139E-01	2.27626E-03	0.00000E+00	0.00000E+00
95	9.29915E-01	1.67717E+00	9.35083E-01	2.25236E-03	0.00000E+00	0.00000E+00
96	9.34510E-01	1.69550E+00	9.35077E-01	2.22827E-03	0.00000E+00	0.00000E+00
97	9.39685E-01	1.71183E+00	9.35125E-01	2.20523E-03	0.00000E+00	0.00000E+00
98	9.19399E-01	1.72933E+00	9.34962E-01	2.18828E-03	0.00000E+00	0.00000E+00
99	9.33830E-01	1.74667E+00	9.34950E-01	2.16563E-03	0.00000E+00	0.00000E+00
100	9.84360E-01	1.76233E+00	9.35454E-01	2.20192E-03	0.00000E+00	0.00000E+00
101	9.20610E-01	1.77967E+00	9.35304E-01	2.18471E-03	0.00000E+00	0.00000E+00
102	9.33212E-01	1.79700E+00	9.35283E-01	2.16286E-03	0.00000E+00	0.00000E+00
103	9.34488E-01	1.81450E+00	9.35275E-01	2.14135E-03	0.00000E+00	0.00000E+00
104	9.40228E-01	1.83083E+00	9.35324E-01	2.12081E-03	0.00000E+00	0.00000E+00
105	9.43811E-01	1.84733E+00	9.35406E-01	2.10173E-03	0.00000E+00	0.00000E+00
106	9.16527E-01	1.86383E+00	9.35225E-01	2.08933E-03	0.00000E+00	0.00000E+00
107	9.06519E-01	1.88133E+00	9.34951E-01	2.08731E-03	0.00000E+00	0.00000E+00
108	9.13204E-01	1.89767E+00	9.34746E-01	2.07768E-03	0.00000E+00	0.00000E+00
109	9.63474E-01	1.91417E+00	9.35015E-01	2.07561E-03	0.00000E+00	0.00000E+00
110	9.54392E-01	1.93167E+00	9.35194E-01	2.06412E-03	0.00000E+00	0.00000E+00
111	9.53435E-01	1.94817E+00	9.35361E-01	2.05193E-03	0.00000E+00	0.00000E+00
112	9.23131E-01	1.96450E+00	9.35250E-01	2.03623E-03	0.00000E+00	0.00000E+00
113	9.75856E-01	1.98100E+00	9.35616E-01	2.05069E-03	0.00000E+00	0.00000E+00
114	9.73856E-01	1.99750E+00	9.35957E-01	2.06078E-03	0.00000E+00	0.00000E+00
115	8.72786E-01	2.01583E+00	9.35398E-01	2.11759E-03	0.00000E+00	0.00000E+00
116	8.97897E-01	2.03317E+00	9.35069E-01	2.12455E-03	0.00000E+00	0.00000E+00
117	9.40812E-01	2.04967E+00	9.35119E-01	2.10659E-03	0.00000E+00	0.00000E+00
118	9.06429E-01	2.06717E+00	9.34872E-01	2.10294E-03	0.00000E+00	0.00000E+00
119	9.14217E-01	2.08450E+00	9.34696E-01	2.09235E-03	0.00000E+00	0.00000E+00
120	9.17762E-01	2.10183E+00	9.34552E-01	2.07950E-03	0.00000E+00	0.00000E+00
121	9.95103E-01	2.11833E+00	9.35061E-01	2.12381E-03	0.00000E+00	0.00000E+00
122	8.92628E-01	2.13483E+00	9.34707E-01	2.13552E-03	0.00000E+00	0.00000E+00
123	9.38176E-01	2.15133E+00	9.34736E-01	2.11799E-03	0.00000E+00	0.00000E+00
124	8.97548E-01	2.16867E+00	9.34431E-01	2.12256E-03	0.00000E+00	0.00000E+00
125	9.13047E-01	2.18617E+00	9.34257E-01	2.11240E-03	0.00000E+00	0.00000E+00
126	9.36527E-01	2.20250E+00	9.34276E-01	2.09537E-03	0.00000E+00	0.00000E+00
127	9.32372E-01	2.21900E+00	9.34260E-01	2.07860E-03	0.00000E+00	0.00000E+00
128	9.08977E-01	2.23650E+00	9.34060E-01	2.07177E-03	0.00000E+00	0.00000E+00
129	9.05814E-01	2.25383E+00	9.33837E-01	2.06739E-03	0.00000E+00	0.00000E+00
130	9.36365E-01	2.27117E+00	9.33857E-01	2.05127E-03	0.00000E+00	0.00000E+00
131	9.69187E-01	2.28867E+00	9.34131E-01	2.05365E-03	0.00000E+00	0.00000E+00
132	9.18397E-01	2.30600E+00	9.34010E-01	2.04139E-03	0.00000E+00	0.00000E+00
133	9.35649E-01	2.32333E+00	9.34022E-01	2.02578E-03	0.00000E+00	0.00000E+00
134	9.05045E-01	2.34083E+00	9.33803E-01	2.02233E-03	0.00000E+00	0.00000E+00
135	9.19642E-01	2.35917E+00	9.33696E-01	2.00989E-03	0.00000E+00	0.00000E+00
136	9.26498E-01	2.37650E+00	9.33643E-01	1.99555E-03	0.00000E+00	0.00000E+00
137	9.15749E-01	2.39383E+00	9.33510E-01	1.98515E-03	0.00000E+00	0.00000E+00
138	9.01954E-01	2.41033E+00	9.33278E-01	1.98411E-03	0.00000E+00	0.00000E+00
139	9.46567E-01	2.42683E+00	9.33375E-01	1.97196E-03	0.00000E+00	0.00000E+00
140	9.19810E-01	2.44417E+00	9.33277E-01	1.96009E-03	0.00000E+00	0.00000E+00
141	9.14692E-01	2.46167E+00	9.33143E-01	1.95052E-03	0.00000E+00	0.00000E+00
142	9.31690E-01	2.47900E+00	9.33133E-01	1.93657E-03	0.00000E+00	0.00000E+00
143	8.87356E-01	2.49733E+00	9.32808E-01	1.95000E-03	0.00000E+00	0.00000E+00
144	9.08196E-01	2.51467E+00	9.32635E-01	1.94396E-03	0.00000E+00	0.00000E+00
145	9.18122E-01	2.53117E+00	9.32533E-01	1.93298E-03	0.00000E+00	0.00000E+00
146	9.17517E-01	2.54767E+00	9.32429E-01	1.92234E-03	0.00000E+00	0.00000E+00
147	9.39000E-01	2.56417E+00	9.32474E-01	1.90958E-03	0.00000E+00	0.00000E+00
148	9.15950E-01	2.58150E+00	9.32361E-01	1.89983E-03	0.00000E+00	0.00000E+00
149	9.45130E-01	2.59800E+00	9.32448E-01	1.88886E-03	0.00000E+00	0.00000E+00
150	9.41785E-01	2.61450E+00	9.32511E-01	1.87711E-03	0.00000E+00	0.00000E+00
151	8.95929E-01	2.63183E+00	9.32266E-01	1.88057E-03	0.00000E+00	0.00000E+00
152	9.44531E-01	2.64933E+00	9.32347E-01	1.86978E-03	0.00000E+00	0.00000E+00
153	9.26586E-01	2.66583E+00	9.32309E-01	1.85775E-03	0.00000E+00	0.00000E+00
154	9.69541E-01	2.68317E+00	9.32554E-01	1.86167E-03	0.00000E+00	0.00000E+00
155	9.20252E-01	2.70050E+00	9.32474E-01	1.85121E-03	0.00000E+00	0.00000E+00
156	9.26564E-01	2.71800E+00	9.32435E-01	1.83955E-03	0.00000E+00	0.00000E+00
157	9.91752E-01	2.73533E+00	9.32818E-01	1.86728E-03	0.00000E+00	0.00000E+00
158	8.83350E-01	2.75267E+00	9.32501E-01	1.88217E-03	0.00000E+00	0.00000E+00
159	9.14138E-01	2.77017E+00	9.32384E-01	1.87380E-03	0.00000E+00	0.00000E+00
160	9.39314E-01	2.78667E+00	9.32428E-01	1.86242E-03	0.00000E+00	0.00000E+00
161	9.38305E-01	2.80400E+00	9.32465E-01	1.85104E-03	0.00000E+00	0.00000E+00
162	9.10987E-01	2.82050E+00	9.32331E-01	1.84432E-03	0.00000E+00	0.00000E+00
163	9.44044E-01	2.83783E+00	9.32403E-01	1.83428E-03	0.00000E+00	0.00000E+00
164	9.28029E-01	2.85433E+00	9.32376E-01	1.82312E-03	0.00000E+00	0.00000E+00
165	9.21940E-01	2.87167E+00	9.32312E-01	1.81303E-03	0.00000E+00	0.00000E+00
166	9.29656E-01	2.88817E+00	9.32296E-01	1.80201E-03	0.00000E+00	0.00000E+00
167	9.23887E-01	2.90467E+00	9.32245E-01	1.79178E-03	0.00000E+00	0.00000E+00
168	9.32727E-01	2.92117E+00	9.32248E-01	1.78096E-03	0.00000E+00	0.00000E+00
169	9.35740E-01	2.93850E+00	9.32269E-01	1.77039E-03	0.00000E+00	0.00000E+00
170	9.18509E-01	2.95600E+00	9.32187E-01	1.76172E-03	0.00000E+00	0.00000E+00
171	9.48287E-01	2.97250E+00	9.32282E-01	1.75386E-03	0.00000E+00	0.00000E+00
172	9.36651E-01	2.98900E+00	9.32308E-01	1.74370E-03	0.00000E+00	0.00000E+00
173	9.41403E-01	3.00533E+00	9.32361E-01	1.73429E-03	0.00000E+00	0.00000E+00
174	9.14841E-01	3.02283E+00	9.32259E-01	1.72718E-03	0.00000E+00	0.00000E+00
175	8.86355E-01	3.04117E+00	9.31994E-01	1.73755E-03	0.00000E+00	0.00000E+00
176	9.04627E-01	3.05850E+00	9.31837E-01	1.73468E-03	0.00000E+00	0.00000E+00
177	9.43446E-01	3.07500E+00	9.31903E-01	1.72601E-03	0.00000E+00	0.00000E+00
178	9.25594E-01	3.09233E+00	9.31867E-01	1.71655E-03	0.00000E+00	0.00000E+00
179	9.77007E-01	3.10800E+00	9.32122E-01	1.72577E-03	0.00000E+00	0.00000E+00
180	9.50983E-01	3.12533E+00	9.32228E-01	1.71932E-03	0.00000E+00	0.00000E+00
181	9.23091E-01	3.14267E+00	9.32177E-01	1.71045E-03	0.00000E+00	0.00000E+00
182	9.16612E-01	3.15917E+00	9.32091E-01	1.70312E-03	0.00000E+00	0.00000E+00
183	9.52241E-01	3.17750E+00	9.32202E-01	1.69734E-03	0.00000E+00	0.00000E+00
184	9.27574E-01	3.19400E+00	9.32177E-01	1.68818E-03	0.00000E+00	0.00000E+00
185	9.09302E-01	3.21233E+00	9.32052E-01	1.68357E-03	0.00000E+00	0.00000E+00

186	9.13016E-01	3.22883E+00	9.31948E-01	1.67759E-03	0.00000E+00	0.00000E+00
187	9.29239E-01	3.24617E+00	9.31933E-01	1.66856E-03	0.00000E+00	0.00000E+00
188	9.30232E-01	3.26267E+00	9.31924E-01	1.65959E-03	0.00000E+00	0.00000E+00
189	9.23889E-01	3.28000E+00	9.31881E-01	1.65125E-03	0.00000E+00	0.00000E+00
190	9.26294E-01	3.29650E+00	9.31852E-01	1.64271E-03	0.00000E+00	0.00000E+00
191	9.25582E-01	3.31483E+00	9.31818E-01	1.63434E-03	0.00000E+00	0.00000E+00
192	9.18807E-01	3.33317E+00	9.31750E-01	1.62715E-03	0.00000E+00	0.00000E+00
193	9.09692E-01	3.34967E+00	9.31634E-01	1.62273E-03	0.00000E+00	0.00000E+00
194	9.16176E-01	3.36600E+00	9.31554E-01	1.61626E-03	0.00000E+00	0.00000E+00
195	9.17106E-01	3.38350E+00	9.31479E-01	1.60960E-03	0.00000E+00	0.00000E+00
196	9.06240E-01	3.40083E+00	9.31349E-01	1.60656E-03	0.00000E+00	0.00000E+00
197	9.31866E-01	3.41833E+00	9.31352E-01	1.59830E-03	0.00000E+00	0.00000E+00
198	8.98806E-01	3.43567E+00	9.31186E-01	1.59877E-03	0.00000E+00	0.00000E+00
199	9.67376E-01	3.45217E+00	9.31369E-01	1.60121E-03	0.00000E+00	0.00000E+00
200	9.21816E-01	3.46950E+00	9.31321E-01	1.59383E-03	0.00000E+00	0.00000E+00
201	9.65537E-01	3.48600E+00	9.31493E-01	1.59510E-03	0.00000E+00	0.00000E+00
202	9.04126E-01	3.50333E+00	9.31356E-01	1.59299E-03	0.00000E+00	0.00000E+00
203	9.42746E-01	3.52083E+00	9.31413E-01	1.58606E-03	0.00000E+00	0.00000E+00
204	9.06986E-01	3.53817E+00	9.31292E-01	1.58281E-03	0.00000E+00	0.00000E+00
205	9.05345E-01	3.55467E+00	9.31164E-01	1.58018E-03	0.00000E+00	0.00000E+00
206	9.33457E-01	3.57117E+00	9.31175E-01	1.57245E-03	0.00000E+00	0.00000E+00
207	9.60506E-01	3.58850E+00	9.31318E-01	1.57129E-03	0.00000E+00	0.00000E+00
208	9.13098E-01	3.60600E+00	9.31230E-01	1.56614E-03	0.00000E+00	0.00000E+00
209	9.03316E-01	3.62417E+00	9.31095E-01	1.56438E-03	0.00000E+00	0.00000E+00
210	8.96795E-01	3.64167E+00	9.30930E-01	1.56555E-03	0.00000E+00	0.00000E+00
211	9.35330E-01	3.65817E+00	9.30951E-01	1.55818E-03	0.00000E+00	0.00000E+00
212	9.01380E-01	3.67633E+00	9.30810E-01	1.55713E-03	0.00000E+00	0.00000E+00
213	9.01621E-01	3.69383E+00	9.30672E-01	1.55589E-03	0.00000E+00	0.00000E+00
214	9.76733E-01	3.72317E+00	9.30889E-01	1.56370E-03	0.00000E+00	0.00000E+00
215	9.31450E-01	3.73950E+00	9.30892E-01	1.55635E-03	0.00000E+00	0.00000E+00
216	9.24359E-01	3.75700E+00	9.30861E-01	1.54936E-03	0.00000E+00	0.00000E+00
217	9.59991E-01	3.77433E+00	9.30997E-01	1.54807E-03	0.00000E+00	0.00000E+00
218	9.34758E-01	3.79350E+00	9.31014E-01	1.54099E-03	0.00000E+00	0.00000E+00
219	9.03956E-01	3.81183E+00	9.30890E-01	1.53893E-03	0.00000E+00	0.00000E+00
220	9.28886E-01	3.82833E+00	9.30880E-01	1.53188E-03	0.00000E+00	0.00000E+00
221	9.28484E-01	3.84667E+00	9.30870E-01	1.52491E-03	0.00000E+00	0.00000E+00
222	9.26410E-01	3.86400E+00	9.30849E-01	1.51810E-03	0.00000E+00	0.00000E+00
223	9.59803E-01	3.88150E+00	9.30980E-01	1.51688E-03	0.00000E+00	0.00000E+00
224	9.54579E-01	3.89983E+00	9.31087E-01	1.51377E-03	0.00000E+00	0.00000E+00
225	9.05585E-01	3.91900E+00	9.30972E-01	1.51130E-03	0.00000E+00	0.00000E+00
226	9.45070E-01	3.93733E+00	9.31035E-01	1.50585E-03	0.00000E+00	0.00000E+00
227	9.37493E-01	3.95383E+00	9.31064E-01	1.49942E-03	0.00000E+00	0.00000E+00
228	9.48382E-01	3.97217E+00	9.31140E-01	1.49474E-03	0.00000E+00	0.00000E+00
229	9.40329E-01	3.98850E+00	9.31181E-01	1.48869E-03	0.00000E+00	0.00000E+00
230	9.48385E-01	4.00683E+00	9.31256E-01	1.48406E-03	0.00000E+00	0.00000E+00
231	8.89040E-01	4.02433E+00	9.31072E-01	1.48903E-03	0.00000E+00	0.00000E+00
232	9.65909E-01	4.04167E+00	9.31224E-01	1.49025E-03	0.00000E+00	0.00000E+00
233	9.74599E-01	4.05900E+00	9.31411E-01	1.49562E-03	0.00000E+00	0.00000E+00
234	9.16760E-01	4.07733E+00	9.31348E-01	1.49050E-03	0.00000E+00	0.00000E+00
235	9.30789E-01	4.09383E+00	9.31346E-01	1.48409E-03	0.00000E+00	0.00000E+00
236	9.20432E-01	4.11117E+00	9.31299E-01	1.47847E-03	0.00000E+00	0.00000E+00
237	9.26650E-01	4.12867E+00	9.31279E-01	1.47230E-03	0.00000E+00	0.00000E+00
238	9.93530E-01	4.14517E+00	9.31543E-01	1.48959E-03	0.00000E+00	0.00000E+00
239	9.42901E-01	4.16333E+00	9.31591E-01	1.48406E-03	0.00000E+00	0.00000E+00
240	9.49539E-01	4.18083E+00	9.31666E-01	1.47974E-03	0.00000E+00	0.00000E+00
241	9.51291E-01	4.19917E+00	9.31749E-01	1.47582E-03	0.00000E+00	0.00000E+00
242	9.35034E-01	4.21650E+00	9.31762E-01	1.46972E-03	0.00000E+00	0.00000E+00
243	9.55411E-01	4.23300E+00	9.31860E-01	1.46690E-03	0.00000E+00	0.00000E+00
244	9.26882E-01	4.25033E+00	9.31840E-01	1.46097E-03	0.00000E+00	0.00000E+00
245	9.25955E-01	4.26783E+00	9.31816E-01	1.45514E-03	0.00000E+00	0.00000E+00
246	9.41014E-01	4.28417E+00	9.31853E-01	1.44966E-03	0.00000E+00	0.00000E+00
247	9.19919E-01	4.30067E+00	9.31805E-01	1.44455E-03	0.00000E+00	0.00000E+00
248	8.96194E-01	4.31900E+00	9.31660E-01	1.44593E-03	0.00000E+00	0.00000E+00
249	9.52413E-01	4.33650E+00	9.31744E-01	1.44251E-03	0.00000E+00	0.00000E+00
250	9.43548E-01	4.35383E+00	9.31791E-01	1.43747E-03	0.00000E+00	0.00000E+00
251	9.10655E-01	4.37300E+00	9.31707E-01	1.43420E-03	0.00000E+00	0.00000E+00
252	9.59810E-01	4.39050E+00	9.31819E-01	1.43287E-03	0.00000E+00	0.00000E+00
253	9.16570E-01	4.40783E+00	9.31758E-01	1.42844E-03	0.00000E+00	0.00000E+00
254	9.18358E-01	4.42517E+00	9.31705E-01	1.42376E-03	0.00000E+00	0.00000E+00
255	9.50095E-01	4.44167E+00	9.31778E-01	1.41998E-03	0.00000E+00	0.00000E+00
256	9.46913E-01	4.45917E+00	9.31837E-01	1.41563E-03	0.00000E+00	0.00000E+00
257	9.48633E-01	4.47833E+00	9.31903E-01	1.41161E-03	0.00000E+00	0.00000E+00
258	9.16091E-01	4.49667E+00	9.31841E-01	1.40744E-03	0.00000E+00	0.00000E+00
259	9.46780E-01	4.51767E+00	9.31900E-01	1.40316E-03	0.00000E+00	0.00000E+00
260	9.01064E-01	4.54233E+00	9.31780E-01	1.40281E-03	0.00000E+00	0.00000E+00
261	9.46954E-01	4.56250E+00	9.31839E-01	1.39861E-03	0.00000E+00	0.00000E+00
262	9.66209E-01	4.58000E+00	9.31971E-01	1.39948E-03	0.00000E+00	0.00000E+00
263	9.09969E-01	4.59817E+00	9.31887E-01	1.39665E-03	0.00000E+00	0.00000E+00
264	9.35793E-01	4.61467E+00	9.31901E-01	1.39139E-03	0.00000E+00	0.00000E+00
265	9.45468E-01	4.63217E+00	9.31953E-01	1.38705E-03	0.00000E+00	0.00000E+00
266	9.62098E-01	4.64950E+00	9.32067E-01	1.38650E-03	0.00000E+00	0.00000E+00
267	9.17831E-01	4.66683E+00	9.32013E-01	1.38230E-03	0.00000E+00	0.00000E+00
268	9.31604E-01	4.68433E+00	9.32012E-01	1.37709E-03	0.00000E+00	0.00000E+00
269	9.39430E-01	4.70350E+00	9.32040E-01	1.37221E-03	0.00000E+00	0.00000E+00
270	9.49882E-01	4.72000E+00	9.32106E-01	1.36870E-03	0.00000E+00	0.00000E+00
271	9.26082E-01	4.73917E+00	9.32084E-01	1.36378E-03	0.00000E+00	0.00000E+00
272	9.22410E-01	4.75667E+00	9.32048E-01	1.35920E-03	0.00000E+00	0.00000E+00
273	9.24674E-01	4.77317E+00	9.32021E-01	1.35444E-03	0.00000E+00	0.00000E+00
274	9.41151E-01	4.79050E+00	9.32054E-01	1.34987E-03	0.00000E+00	0.00000E+00
275	9.58979E-01	4.80700E+00	9.32153E-01	1.34853E-03	0.00000E+00	0.00000E+00
276	9.37074E-01	4.82433E+00	9.32171E-01	1.34372E-03	0.00000E+00	0.00000E+00
277	9.14275E-01	4.84167E+00	9.32106E-01	1.34040E-03	0.00000E+00	0.00000E+00
278	9.58754E-01	4.85733E+00	9.32202E-01	1.33902E-03	0.00000E+00	0.00000E+00
279	9.03889E-01	4.87567E+00	9.32100E-01	1.33809E-03	0.00000E+00	0.00000E+00
280	9.38855E-01	4.89300E+00	9.32125E-01	1.33349E-03	0.00000E+00	0.00000E+00

281	9.43286E-01	4.91217E+00	9.32165E-01	1.32931E-03	0.00000E+00	0.00000E+00
282	9.20021E-01	4.93233E+00	9.32121E-01	1.32526E-03	0.00000E+00	0.00000E+00
283	9.26751E-01	4.95067E+00	9.32102E-01	1.32067E-03	0.00000E+00	0.00000E+00
284	9.00211E-01	4.96900E+00	9.31989E-01	1.32083E-03	0.00000E+00	0.00000E+00
285	9.01443E-01	4.98633E+00	9.31881E-01	1.32057E-03	0.00000E+00	0.00000E+00
286	9.01616E-01	5.00283E+00	9.31774E-01	1.32022E-03	0.00000E+00	0.00000E+00
287	9.41979E-01	5.02033E+00	9.31810E-01	1.31607E-03	0.00000E+00	0.00000E+00
288	9.35863E-01	5.03767E+00	9.31824E-01	1.31154E-03	0.00000E+00	0.00000E+00
289	9.11547E-01	5.05600E+00	9.31754E-01	1.30887E-03	0.00000E+00	0.00000E+00
290	9.29271E-01	5.07250E+00	9.31745E-01	1.30434E-03	0.00000E+00	0.00000E+00
291	9.58920E-01	5.08883E+00	9.31839E-01	1.30322E-03	0.00000E+00	0.00000E+00
292	9.66201E-01	5.10533E+00	9.31958E-01	1.30411E-03	0.00000E+00	0.00000E+00
293	9.26759E-01	5.12367E+00	9.31940E-01	1.29975E-03	0.00000E+00	0.00000E+00
294	9.08628E-01	5.14017E+00	9.31860E-01	1.29774E-03	0.00000E+00	0.00000E+00
295	9.30354E-01	5.15667E+00	9.31855E-01	1.29332E-03	0.00000E+00	0.00000E+00
296	9.45246E-01	5.17400E+00	9.31900E-01	1.28972E-03	0.00000E+00	0.00000E+00
297	8.99599E-01	5.19150E+00	9.31791E-01	1.28999E-03	0.00000E+00	0.00000E+00
298	9.42083E-01	5.20883E+00	9.31826E-01	1.28610E-03	0.00000E+00	0.00000E+00
299	9.31882E-01	5.22533E+00	9.31826E-01	1.28176E-03	0.00000E+00	0.00000E+00
300	9.31684E-01	5.24367E+00	9.31825E-01	1.27745E-03	0.00000E+00	0.00000E+00
301	9.54073E-01	5.26017E+00	9.31900E-01	1.27534E-03	0.00000E+00	0.00000E+00
302	9.46381E-01	5.27833E+00	9.31948E-01	1.27200E-03	0.00000E+00	0.00000E+00
303	9.56835E-01	5.29400E+00	9.32031E-01	1.27046E-03	0.00000E+00	0.00000E+00

KENO MESSAGE NUMBER K5-123 EXECUTION TERMINATED DUE TO COMPLETION OF THE SPECIFIED NUMBER OF GENERATIONS.

LWT ANALYSIS; EXXON 15X15(W) ASSEMBLY; WATER IN GAP

LIFETIME = 1.01160E-04 + OR - 3.16687E-07 GENERATION TIME = 3.72912E-05 + OR - 9.47620E-08
NU BAR = 2.43654E+00 + OR - 9.54075E-05 AVERAGE FISSION GROUP = 2.24639E+01 + OR - 5.71557E-03
ENERGY(EV) OF THE AVERAGE LETHARGY CAUSING FISSION = 1.62849E-01 + OR - 7.87513E-04

NO. OF INITIAL GENERATIONS SKIPPED	AVERAGE K-EFFECTIVE	DEVIATION	67 PER CENT CONFIDENCE INTERVAL	95 PER CENT CONFIDENCE INTERVAL	99 PER CENT CONFIDENCE INTERVAL	NUMBER OF HISTORIES
3	0.93197	+ OR - 0.00127	0.93070 TO 0.93324	0.92942 TO 0.93452	0.92815 TO 0.93579	300000
4	0.93200	+ OR - 0.00128	0.93072 TO 0.93328	0.92945 TO 0.93455	0.92817 TO 0.93583	299000
5	0.93197	+ OR - 0.00128	0.93069 TO 0.93325	0.92941 TO 0.93453	0.92812 TO 0.93581	298000
6	0.93191	+ OR - 0.00128	0.93063 TO 0.93320	0.92934 TO 0.93448	0.92806 TO 0.93576	297000
7	0.93188	+ OR - 0.00129	0.93059 TO 0.93317	0.92931 TO 0.93446	0.92802 TO 0.93575	296000
8	0.93174	+ OR - 0.00128	0.93046 TO 0.93303	0.92917 TO 0.93431	0.92789 TO 0.93560	295000
9	0.93177	+ OR - 0.00129	0.93048 TO 0.93306	0.92919 TO 0.93435	0.92790 TO 0.93564	294000
10	0.93174	+ OR - 0.00129	0.93045 TO 0.93303	0.92915 TO 0.93433	0.92786 TO 0.93562	293000
11	0.93154	+ OR - 0.00128	0.93026 TO 0.93283	0.92898 TO 0.93411	0.92770 TO 0.93539	292000
12	0.93157	+ OR - 0.00129	0.93028 TO 0.93286	0.92900 TO 0.93414	0.92771 TO 0.93543	291000
17	0.93146	+ OR - 0.00130	0.93016 TO 0.93276	0.92885 TO 0.93406	0.92755 TO 0.93536	286000
22	0.93138	+ OR - 0.00131	0.93007 TO 0.93268	0.92876 TO 0.93399	0.92746 TO 0.93529	281000
27	0.93150	+ OR - 0.00132	0.93017 TO 0.93282	0.92885 TO 0.93414	0.92753 TO 0.93547	276000
32	0.93134	+ OR - 0.00134	0.92999 TO 0.93268	0.92865 TO 0.93402	0.92731 TO 0.93537	271000
37	0.93127	+ OR - 0.00137	0.92990 TO 0.93263	0.92854 TO 0.93400	0.92717 TO 0.93537	266000
42	0.93133	+ OR - 0.00137	0.92996 TO 0.93270	0.92858 TO 0.93408	0.92721 TO 0.93545	261000
47	0.93101	+ OR - 0.00137	0.92964 TO 0.93238	0.92826 TO 0.93375	0.92689 TO 0.93512	256000
52	0.93107	+ OR - 0.00139	0.92968 TO 0.93246	0.92829 TO 0.93386	0.92690 TO 0.93525	251000
57	0.93092	+ OR - 0.00140	0.92952 TO 0.93232	0.92811 TO 0.93372	0.92671 TO 0.93512	246000
62	0.93092	+ OR - 0.00142	0.92949 TO 0.93234	0.92807 TO 0.93376	0.92665 TO 0.93518	241000
67	0.93082	+ OR - 0.00141	0.92941 TO 0.93223	0.92800 TO 0.93364	0.92659 TO 0.93505	236000
72	0.93084	+ OR - 0.00144	0.92940 TO 0.93227	0.92796 TO 0.93371	0.92653 TO 0.93514	231000
77	0.93077	+ OR - 0.00146	0.92932 TO 0.93223	0.92786 TO 0.93369	0.92640 TO 0.93514	226000
82	0.93094	+ OR - 0.00148	0.92945 TO 0.93242	0.92797 TO 0.93390	0.92649 TO 0.93538	221000
87	0.93064	+ OR - 0.00150	0.92914 TO 0.93214	0.92765 TO 0.93364	0.92615 TO 0.93513	216000
92	0.93083	+ OR - 0.00151	0.92931 TO 0.93234	0.92780 TO 0.93386	0.92628 TO 0.93537	211000

LWT ANALYSIS; EXXON 15X15(W) ASSEMBLY; WATER IN GAP

NO. OF INITIAL GENERATIONS SKIPPED	AVERAGE K-EFFECTIVE	DEVIATION	67 PER CENT CONFIDENCE INTERVAL	95 PER CENT CONFIDENCE INTERVAL	99 PER CENT CONFIDENCE INTERVAL	NUMBER OF HISTORIES
97	0.93060	+ OR - 0.00155	0.92906 TO 0.93215	0.92751 TO 0.93370	0.92596 TO 0.93524	206000
102	0.93041	+ OR - 0.00156	0.92885 TO 0.93197	0.92729 TO 0.93353	0.92573 TO 0.93509	201000
107	0.93047	+ OR - 0.00159	0.92887 TO 0.93206	0.92728 TO 0.93365	0.92569 TO 0.93524	196000
112	0.93018	+ OR - 0.00161	0.92857 TO 0.93179	0.92695 TO 0.93340	0.92534 TO 0.93501	191000
117	0.93012	+ OR - 0.00158	0.92854 TO 0.93170	0.92696 TO 0.93328	0.92538 TO 0.93486	186000
122	0.93026	+ OR - 0.00156	0.92870 TO 0.93182	0.92714 TO 0.93337	0.92558 TO 0.93493	181000
127	0.93045	+ OR - 0.00159	0.92886 TO 0.93204	0.92727 TO 0.93362	0.92568 TO 0.93521	176000
132	0.93053	+ OR - 0.00161	0.92892 TO 0.93213	0.92731 TO 0.93374	0.92571 TO 0.93534	171000
137	0.93083	+ OR - 0.00164	0.92918 TO 0.93247	0.92754 TO 0.93411	0.92590 TO 0.93576	166000
142	0.93107	+ OR - 0.00168	0.92940 TO 0.93275	0.92772 TO 0.93443	0.92604 TO 0.93610	161000
147	0.93162	+ OR - 0.00170	0.92992 TO 0.93331	0.92823 TO 0.93501	0.92653 TO 0.93671	156000
152	0.93172	+ OR - 0.00173	0.92999 TO 0.93344	0.92826 TO 0.93517	0.92653 TO 0.93690	151000
157	0.93120	+ OR - 0.00172	0.92948 TO 0.93291	0.92776 TO 0.93463	0.92605 TO 0.93634	146000
162	0.93169	+ OR - 0.00173	0.92996 TO 0.93342	0.92823 TO 0.93515	0.92650 TO 0.93689	141000
167	0.93177	+ OR - 0.00179	0.92998 TO 0.93356	0.92819 TO 0.93535	0.92640 TO 0.93714	136000
172	0.93167	+ OR - 0.00185	0.92982 TO 0.93352	0.92797 TO 0.93537	0.92612 TO 0.93722	131000
177	0.93221	+ OR - 0.00187	0.93034 TO 0.93408	0.92847 TO 0.93595	0.92660 TO 0.93782	126000
182	0.93194	+ OR - 0.00190	0.93004 TO 0.93384	0.92815 TO 0.93574	0.92625 TO 0.93763	121000
187	0.93219	+ OR - 0.00195	0.93023 TO 0.93414	0.92828 TO 0.93610	0.92632 TO 0.93805	116000
192	0.93251	+ OR - 0.00204	0.93048 TO 0.93455	0.92844 TO 0.93658	0.92640 TO 0.93862	111000
197	0.93328	+ OR - 0.00210	0.93118 TO 0.93538	0.92909 TO 0.93747	0.92699 TO 0.93957	106000
202	0.93337	+ OR - 0.00210	0.93127 TO 0.93547	0.92917 TO 0.93756	0.92707 TO 0.93966	101000
207	0.93355	+ OR - 0.00215	0.93140 TO 0.93570	0.92925 TO 0.93785	0.92710 TO 0.94000	96000
212	0.93485	+ OR - 0.00216	0.93268 TO 0.93701	0.93052 TO 0.93917	0.92836 TO 0.94133	91000
217	0.93462	+ OR - 0.00218	0.93244 TO 0.93679	0.93026 TO 0.93897	0.92808 TO 0.94115	86000
222	0.93524	+ OR - 0.00228	0.93296 TO 0.93752	0.93069 TO 0.93979	0.92841 TO 0.94207	81000
227	0.93489	+ OR - 0.00235	0.93254 TO 0.93725	0.93018 TO 0.93960	0.92783 TO 0.94196	76000

LWT ANALYSIS; EXXON 15X15(W) ASSEMBLY; WATER IN GAP

NO. OF INITIAL GENERATIONS SKIPPED	AVERAGE K-EFFECTIVE	DEVIATION	67 PER CENT CONFIDENCE INTERVAL	95 PER CENT CONFIDENCE INTERVAL	99 PER CENT CONFIDENCE INTERVAL	NUMBER OF HISTORIES
232	0.93465	+ OR - 0.00238	0.93227 TO 0.93703	0.92989 TO 0.93940	0.92751 TO 0.94178	71000
237	0.93471	+ OR - 0.00246	0.93225 TO 0.93717	0.92979 TO 0.93962	0.92733 TO 0.94208	66000
242	0.93309	+ OR - 0.00244	0.93065 TO 0.93553	0.92821 TO 0.93796	0.92577 TO 0.94040	61000
247	0.93302	+ OR - 0.00261	0.93041 TO 0.93563	0.92781 TO 0.93824	0.92520 TO 0.94084	56000
252	0.93307	+ OR - 0.00265	0.93042 TO 0.93572	0.92777 TO 0.93836	0.92513 TO 0.94101	51000
257	0.93274	+ OR - 0.00284	0.92990 TO 0.93558	0.92706 TO 0.93841	0.92423 TO 0.94125	46000
262	0.93241	+ OR - 0.00291	0.92950 TO 0.93532	0.92660 TO 0.93822	0.92369 TO 0.94113	41000
267	0.93216	+ OR - 0.00310	0.92906 TO 0.93525	0.92597 TO 0.93835	0.92287 TO 0.94144	36000
272	0.93188	+ OR - 0.00353	0.92835 TO 0.93541	0.92483 TO 0.93894	0.92130 TO 0.94246	31000
277	0.93124	+ OR - 0.00399	0.92724 TO 0.93523	0.92325 TO 0.93922	0.91926 TO 0.94321	26000
282	0.93083	+ OR - 0.00450	0.92632 TO 0.93533	0.92182 TO 0.93983	0.91732 TO 0.94433	21000
287	0.93596	+ OR - 0.00470	0.93126 TO 0.94066	0.92656 TO 0.94536	0.92186 TO 0.95005	16000
292	0.93396	+ OR - 0.00537	0.92859 TO 0.93933	0.92322 TO 0.94470	0.91785 TO 0.95007	11000
297	0.94382	+ OR - 0.00437	0.93945 TO 0.94820	0.93508 TO 0.95257	0.93070 TO 0.95694	6000

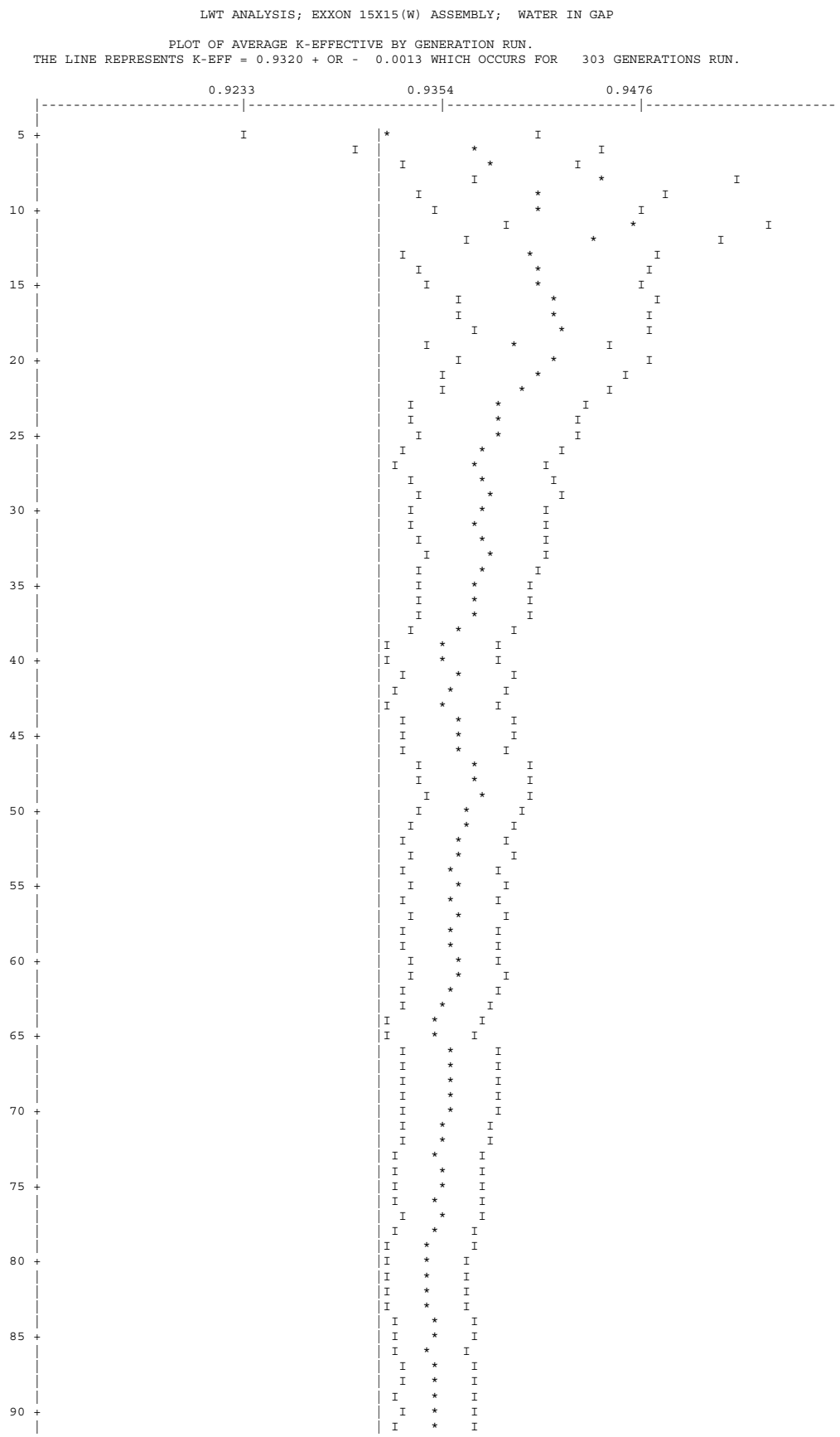
LWT ANALYSIS; EXXON 15X15(W) ASSEMBLY; WATER IN GAP
PLOT OF AVERAGE K-EFFECTIVE BY GENERATION RUN.
THE LINE REPRESENTS K-EFF = 0.9320 + OR - 0.0013 WHICH OCCURS FOR 303 GENERATIONS RUN.
0.9233
0.9354
0.9476
5
10
15
20
25
30
35
40
45
50
55
60
65
70
75
80
85
90

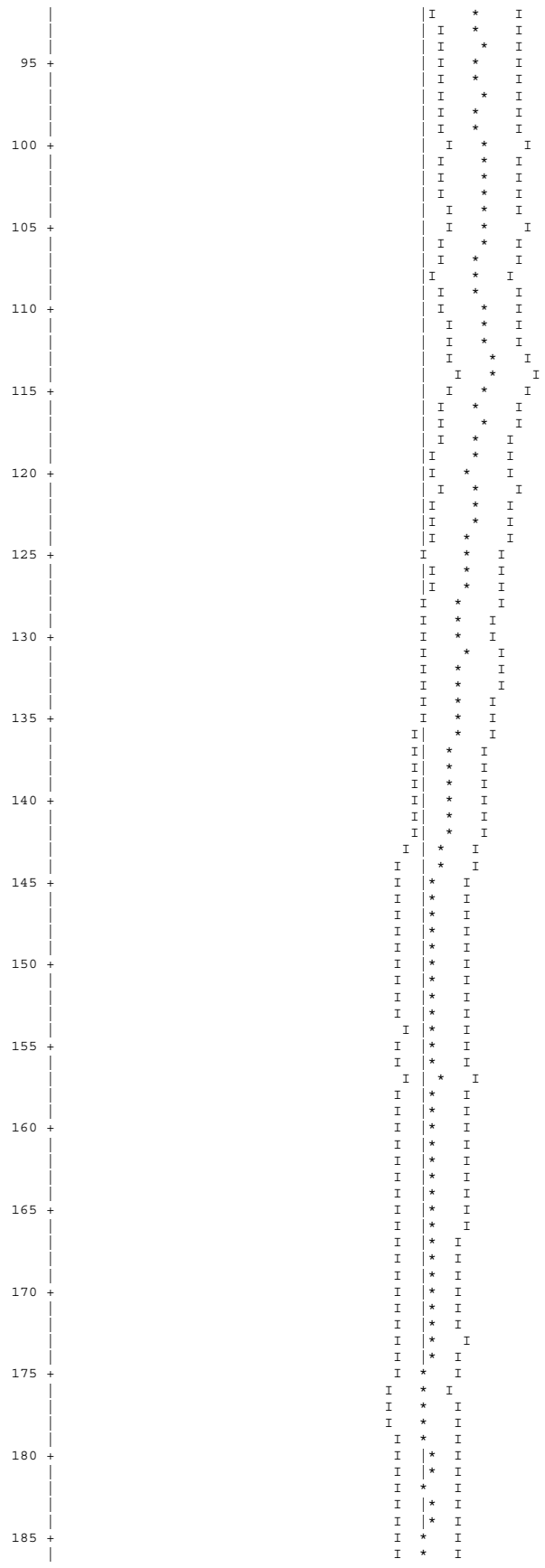

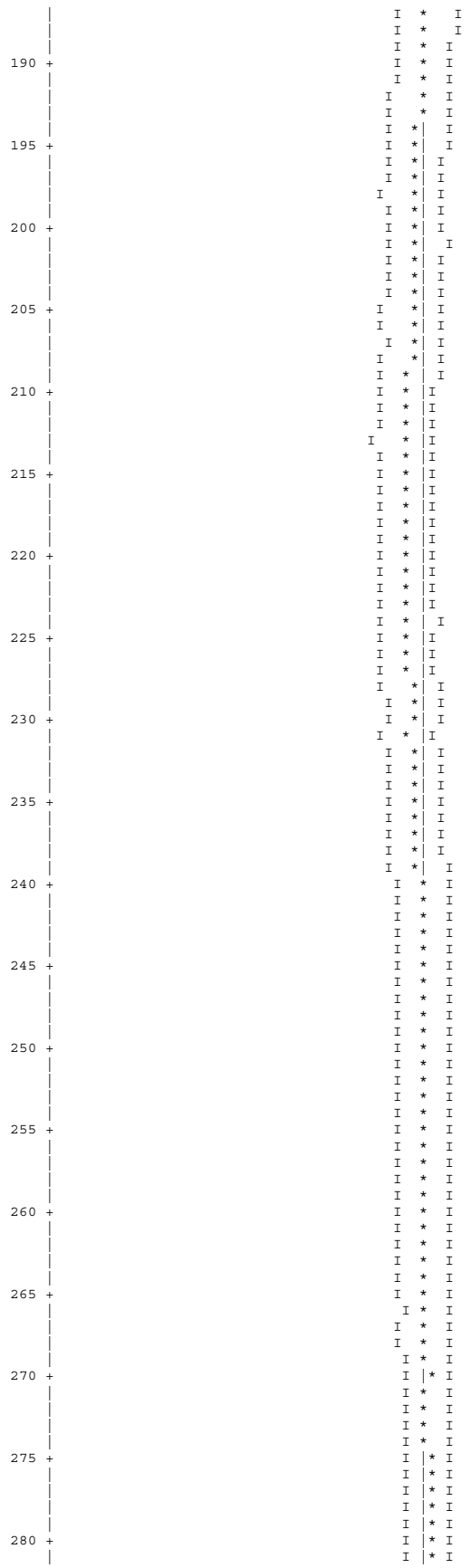

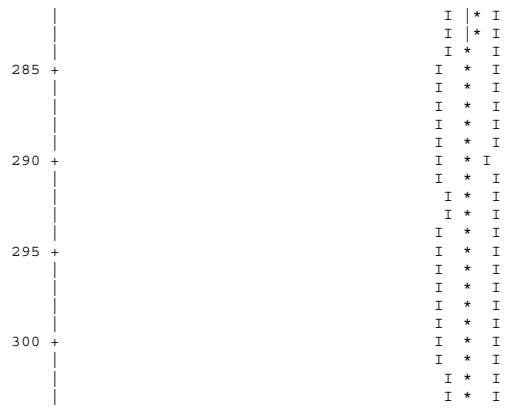

LWT ANALYSIS; EXXON 15X15(W) ASSEMBLY; WATER IN GAP

SKIPPING 3 GENERATIONS

GROUP	FISSION FRACTION	UNIT	REGION	FISSIONS	PERCENT DEVIATION	ABSORPTIONS	PERCENT DEVIATION	LEAKAGE	PERCENT DEVIATION
1	0.0044			4.12382E-03	2.2144	2.31596E-03	1.7429	9.65822E-06	57.6063
2	0.0180			1.67539E-02	0.6733	8.40488E-03	0.5753	0.00000E+00	0.0000
3	0.0200			1.86620E-02	0.5834	7.76219E-03	0.5667	0.00000E+00	0.0000
4	0.0084			7.85246E-03	0.7543	3.75926E-03	0.7213	0.00000E+00	0.0000
5	0.0026			2.42704E-03	0.5530	2.56147E-03	0.4791	0.00000E+00	0.0000
6	0.0023			2.15423E-03	0.4075	4.32427E-03	0.3424	0.00000E+00	0.0000
7	0.0023			2.11604E-03	0.4532	4.86679E-03	0.3862	0.00000E+00	0.0000
8	0.0023			2.14614E-03	0.5016	7.24848E-03	0.4245	0.00000E+00	0.0000
9	0.0031			2.89714E-03	0.5196	1.12585E-02	0.4242	0.00000E+00	0.0000
10	0.0067			6.25759E-03	0.5651	1.73420E-02	0.4456	0.00000E+00	0.0000
11	0.0140			1.30250E-02	0.5315	2.80004E-02	0.4400	0.00000E+00	0.0000
12	0.0184			1.71878E-02	0.6059	2.98291E-02	0.5484	0.00000E+00	0.0000
13	0.0170			1.58165E-02	0.6547	2.97315E-02	0.5618	0.00000E+00	0.0000
14	0.0134			1.25289E-02	0.6097	4.23690E-02	0.5109	0.00000E+00	0.0000
15	0.0030			2.76823E-03	1.0342	8.78912E-03	0.8033	0.00000E+00	0.0000
16	0.0021			1.92938E-03	1.3874	5.29241E-03	0.8411	0.00000E+00	0.0000
17	0.0032			2.97248E-03	1.6548	3.72679E-03	1.1017	0.00000E+00	0.0000
18	0.0042			3.95071E-03	1.9001	3.84560E-03	1.2468	0.00000E+00	0.0000
19	0.0051			4.79233E-03	1.2874	6.01308E-03	0.8243	0.00000E+00	0.0000
20	0.0216			2.01376E-02	0.8603	2.36640E-02	0.5959	0.00000E+00	0.0000
21	0.0119			1.10782E-02	1.2904	1.04705E-02	0.9036	0.00000E+00	0.0000
22	0.0289			2.69181E-02	0.9346	2.43475E-02	0.6607	0.00000E+00	0.0000
23	0.1036			9.65919E-02	0.4601	9.35088E-02	0.3275	0.00000E+00	0.0000
24	0.2115			1.97140E-01	0.3347	1.90608E-01	0.1993	0.00000E+00	0.0000
25	0.1819			1.69493E-01	0.3884	1.63260E-01	0.2228	8.62806E-07	100.0000
26	0.2191			2.04213E-01	0.3709	2.00778E-01	0.2291	1.58655E-06	100.0000
27	0.0709			6.60369E-02	0.6982	6.74562E-02	0.4170	0.00000E+00	0.0000
SYSTEM TOTAL =				9.31971E-01	0.1366	1.00153E+00	0.0446	1.21076E-05	48.1945

ELAPSED TIME 5.29483 MINUTES

RANDOM NUMBER= 9A242D7225

```
LWT ANALYSIS; EXXON 15X15(W) ASSEMBLY;  WATER IN GAP

                              FREQUENCY FOR GENERATIONS    4 TO  303
0.8694 TO 0.8820     *
0.8820 TO 0.8947     ******
0.8947 TO 0.9073     ***********************************
0.9073 TO 0.9200     ************************************************
0.9200 TO 0.9326     ********************************************************************
0.9326 TO 0.9453     ********************************************************************
0.9453 TO 0.9579     ************************************
0.9579 TO 0.9706     ******************
0.9706 TO 0.9832     ***********
0.9832 TO 0.9959     *****
0.9959 TO 1.0085     *

                              FREQUENCY FOR GENERATIONS   79 TO  303
0.8694 TO 0.8820     *
0.8820 TO 0.8947     ******
0.8947 TO 0.9073     ***************************
0.9073 TO 0.9200     ****************************************
0.9200 TO 0.9326     ************************************************
0.9326 TO 0.9453     ************************************************
0.9453 TO 0.9579     *************************
0.9579 TO 0.9706     ****************
0.9706 TO 0.9832     ******
0.9832 TO 0.9959     ****
0.9959 TO 1.0085

                              FREQUENCY FOR GENERATIONS  154 TO  303
0.8694 TO 0.8820
0.8820 TO 0.8947     ***
0.8947 TO 0.9073     ******************
0.9073 TO 0.9200     ***********************
0.9200 TO 0.9326     ************************************
0.9326 TO 0.9453     ****************************
0.9453 TO 0.9579     ********************
0.9579 TO 0.9706     **************
0.9706 TO 0.9832     ***
0.9832 TO 0.9959     **
0.9959 TO 1.0085

                              FREQUENCY FOR GENERATIONS  229 TO  303
0.8694 TO 0.8820
0.8820 TO 0.8947     *
0.8947 TO 0.9073     *******
0.9073 TO 0.9200     ***********
0.9200 TO 0.9326     ****************
0.9326 TO 0.9453     ***************
0.9453 TO 0.9579     ***************
0.9579 TO 0.9706     ********
0.9706 TO 0.9832     *
0.9832 TO 0.9959     *
0.9959 TO 1.0085


*****************************************************************************************************************************************
*

          CONGRATULATIONS!  YOU HAVE  SUCCESSFULLY TRAVERSED THE PERILOUS PATH THROUGH KENO V IN   5.29483 MINUTES

*****************************************************************************************************************************************
*
_
```

Figure 6.6.1-3 CSAS Input/Output for NAC-LWT with PWR Fuel – 3.5% Enrichment – Most Reactive Normal Condition Configuration

```
PRIMARY MODULE ACCESS AND INPUT RECORD ( SCALE DRIVER - 95/03/29 - 09:06:37 )
   MODULE CSAS25   WILL BE CALLED
     LWT ANALYSIS; W17x17 OFA ASSEMBLY;  NO WATER IN GAP
     27GROUPNDF4 LATTICECELL
     UO2  1  0.95 293.0 92235 3.5 92238 96.5 END
     ZR   2  1.0  293.0  END
     H2O   3 1.000 293.0 END
     AL   4  1.0  293.0  END
     SS304 5 1.0  293.0  END
     PB    6 1.0 293.0 END
     H2O 7 1.0 293.0 END
     H2O   8 1.0E-20 293.0 END
     H2O 9 1.0E-20 293.0 END
     END COMP
     SQUAREPITCH  1.2598 0.7844 1 3 0.9144 2 0.8002 9 END
     LWT ANALYSIS; W17x17 OFA ASSEMBLY; NO WATER IN GAP
     READ PARAM RUN=YES PLT=NO TME=5000 GEN=303 RND= NPG=1000 END PARAM
     READ GEOM
     UNIT  1
     COM='FUEL PIN CELL - WITH H2O'
     CYLINDER  1 1  0.3922   2P182.88
     CYLINDER  9 1  0.4001   2P182.88
     CYLINDER  2 1  0.4572   2P182.88
     CUBOID    3 1  4P0.6299 2P182.88
     UNIT  2
     COM='WATER ROD CELL - WITH H2O'
     CYLINDER  3 1  0.5715   2P182.88
     CYLINDER  2 1  0.6121   2P182.88
     CUBOID    3 1  4P0.6299 2P182.88
     GLOBAL UNIT 9
     ARRAY  1  -10.7083 -10.7083 -182.88
     CUBOID 3 1 4P11.2776 2P182.88
     CYLINDER 4 1 16.891 2P182.88
     CYLINDER 3 1 16.9863 2P182.88
     CYLINDER 5 1 18.8913 2P182.88
     CYLINDER 6 1 33.4963 2P182.88
     CYLINDER 5 1 36.5443 2P182.88
     CYLINDER 7 1 49.2443 2P182.88
     CYLINDER 5 1 49.8539 212.48 -192.16
     CYLINDER 6 1 49.8539 212.48 -199.78
     CYLINDER 5 1 49.8539 212.48 -208.67
     CUBOID 8 1 4P81.0000 243.00 -240.00
     END GEOM
     READ ARRAY
     ARA=1   NUX=17 NUY=17 NUZ=1  FILL
                              34R1
               5R1   2   2R1   2   2R1   2   5R1
                    3R1   2   9R1   2   3R1
                              17R1
     2R1   2   2R1   2   2R1   2   2R1   2   2R1   2   2R1
                              34R1
     2R1   2   2R1   2   2R1   2   2R1   2   2R1   2   2R1
                              34R1
     2R1   2   2R1   2   2R1   2   2R1   2   2R1   2   2R1
                              17R1
                    3R1   2   9R1   2   3R1
               5R1   2   2R1   2   2R1   2   5R1
                              34R1
     END FILL
     END ARRAY
     READ BOUNDS ZFC=VAC YXF=VAC END BOUNDS
     END DATA

   SECONDARY MODULE O0O008   HAS BEEN CALLED.

   MODULE O0O008   IS FINISHED. COMPLETION CODE     0. CPU TIME USED     1.26 (SECONDS).

   SECONDARY MODULE O0O002   HAS BEEN CALLED.

   MODULE O0O002   IS FINISHED. COMPLETION CODE     0. CPU TIME USED    13.24 (SECONDS).

   SECONDARY MODULE O0O009   HAS BEEN CALLED.

   MODULE O0O009   IS FINISHED. COMPLETION CODE     0. CPU TIME USED   607.64 (SECONDS).

   MODULE CSAS25   IS FINISHED. COMPLETION CODE     0. CPU TIME USED   626.15 (SECONDS).
```



```
  SSSSSSSSSS     CCCCCCCCCC      AAAAAAAA     LL             EEEEEEEEEEEE                 PPPPPPPPPPP     CCCCCCCCCC
 SSSSSSSSSSSS   CCCCCCCCCCCC    AAAAAAAAAA    LL             EEEEEEEEEEEE                 PPPPPPPPPPPP   CCCCCCCCCCCC
 SS          SS CC          CC  AA          AA  LL             EE                           PP         PP  CC          CC
 SS             CC              AA          AA  LL             EE                           PP         PP  CC
 SS             CC              AA          AA  LL             EE                           PP         PP  CC
 SSSSSSSSSSSS   CC              AAAAAAAAAAAAAA  LL             EEEEEEEEE       -------------PPPPPPPPPPPP  CC
  SSSSSSSSSSSS  CC              AAAAAAAAAAAAAA  LL             EEEEEEEEE       -------------PPPPPPPPPPP   CC
           SS   CC              AA          AA  LL             EE                           PP             CC
           SS   CC              AA          AA  LL             EE                           PP             CC
 SS        SS   CC          CC  AA          AA  LL             EE                           PP             CC          CC
 SSSSSSSSSSSS   CCCCCCCCCCCC    AA          AA  LLLLLLLLLLLL   EEEEEEEEEEEE                 PP             CCCCCCCCCCCC
  SSSSSSSSSS     CCCCCCCCCC     AA          AA  LLLLLLLLLLLL   EEEEEEEEEEEE                 PP              CCCCCCCCCC
```

```
*******************************************************************************
*******************************************************************************
*******************************************************************************
*****                                                                     *****
*****                  PROGRAM VERIFICATION INFORMATION                   *****
*****                                                                     *****
*****                CODE SYSTEM:  SCALE-PC VERSION:  4.3                 *****
*****                                                                     *****
*******************************************************************************
*******************************************************************************
*****                                                                     *****
*****                                                                     *****
*****              PROGRAM:  CSAS                                         *****
*****                                                                     *****
*****        CREATION DATE:  03/08/96                                     *****
*****                                                                     *****
*****              VOLUME:   ENG                                          *****
*****                                                                     *****
*****              LIBRARY:  G:\SCALE43\WIN_NT\EXE                        *****
*****                                                                     *****
*****                                                                     *****
*****      PRODUCTION CODE:  CSAS                                         *****
*****                                                                     *****
*****              VERSION:  3.1                                          *****
*****                                                                     *****
*****              JOBNAME:  SCALE-PC                                     *****
*****                                                                     *****
*****    DATE OF EXECUTION:  07/23/98                                     *****
*****                                                                     *****
*****    TIME OF EXECUTION:  09:27:16                                     *****
*****                                                                     *****
*****                                                                     *****
*******************************************************************************
*******************************************************************************
*******************************************************************************
```

```
LWT ANALYSIS; W17X17 OFA ASSEMBLY;  NO WATER IN GAP


**** PROBLEM PARAMETERS ****

LIB 27GROUPNDF4  LIBRARY
MXX            9 MIXTURES
MSC            9 COMPOSITION SPECIFICATIONS
IZM            4 MATERIAL ZONES
GE  LATTICECELL  GEOMETRY
MORE           0 0/1 DO NOT READ/READ OPTIONAL PARAMETER DATA
MSLN           0 FUEL SOLUTIONS


**** PROBLEM COMPOSITION DESCRIPTION ****

SC  UO2          STANDARD COMPOSITION
MX             1 MIXTURE NO.
VF        0.9500 VOLUME FRACTION
ROTH     10.9600 THEORETICAL DENSITY
NEL            2 NO. ELEMENTS
ICP            1 0/1 MIXTURE/COMPOUND
TEMP       293.0 DEG KELVIN
           92000      1.00 ATOM/MOLECULE
                           92235     3.500 WT%
                           92238    96.500 WT%
            8016      2.00 ATOMS/MOLECULE
END

SC  ZR           STANDARD COMPOSITION
MX             2 MIXTURE NO.
VF        1.0000 VOLUME FRACTION
ROTH      6.4900 THEORETICAL DENSITY
NEL            1 NO. ELEMENTS
ICP            1 0/1 MIXTURE/COMPOUND
TEMP       293.0 DEG KELVIN
           40000      1.00 ATOM/MOLECULE
END

SC  H2O          STANDARD COMPOSITION
MX             3 MIXTURE NO.
VF        1.0000 VOLUME FRACTION
ROTH      0.9982 THEORETICAL DENSITY
NEL            2 NO. ELEMENTS
ICP            1 0/1 MIXTURE/COMPOUND
TEMP       293.0 DEG KELVIN
            1001      2.00 ATOMS/MOLECULE
            8016      1.00 ATOM/MOLECULE
END

SC  AL           STANDARD COMPOSITION
MX             4 MIXTURE NO.
VF        1.0000 VOLUME FRACTION
ROTH      2.7020 THEORETICAL DENSITY
NEL            1 NO. ELEMENTS
ICP            1 0/1 MIXTURE/COMPOUND
TEMP       293.0 DEG KELVIN
           13027      1.00 ATOM/MOLECULE
END

SC  SS304        STANDARD COMPOSITION
MX             5 MIXTURE NO.
VF        1.0000 VOLUME FRACTION
ROTH      7.9200 THEORETICAL DENSITY
NEL            4 NO. ELEMENTS
ICP            0 0/1 MIXTURE/COMPOUND
TEMP       293.0 DEG KELVIN
           24304    19.000 WT%
           25055     2.000 WT%
           26304    69.500 WT%
           28304     9.500 WT%
END

SC  PB           STANDARD COMPOSITION
MX             6 MIXTURE NO.
VF        1.0000 VOLUME FRACTION
ROTH     11.3440 THEORETICAL DENSITY
NEL            1 NO. ELEMENTS
ICP            1 0/1 MIXTURE/COMPOUND
TEMP       293.0 DEG KELVIN
           82000      1.00 ATOM/MOLECULE
END

SC  H2O          STANDARD COMPOSITION
MX             7 MIXTURE NO.
VF        1.0000 VOLUME FRACTION
ROTH      0.9982 THEORETICAL DENSITY
NEL            2 NO. ELEMENTS
ICP            1 0/1 MIXTURE/COMPOUND
TEMP       293.0 DEG KELVIN
            1001      2.00 ATOMS/MOLECULE
            8016      1.00 ATOM/MOLECULE
END

SC  H2O          STANDARD COMPOSITION
```

```
MX             8 MIXTURE NO.
VF        0.0000 VOLUME FRACTION
ROTH      0.9982 THEORETICAL DENSITY
NEL            2 NO. ELEMENTS
ICP            1 0/1 MIXTURE/COMPOUND
TEMP       293.0 DEG KELVIN
            1001      2.00 ATOMS/MOLECULE
            8016      1.00 ATOM/MOLECULE
END

SC  H2O          STANDARD COMPOSITION
MX             9 MIXTURE NO.
VF        0.0000 VOLUME FRACTION
ROTH      0.9982 THEORETICAL DENSITY
NEL            2 NO. ELEMENTS
ICP            1 0/1 MIXTURE/COMPOUND
TEMP       293.0 DEG KELVIN
            1001      2.00 ATOMS/MOLECULE
            8016      1.00 ATOM/MOLECULE
END


**** PROBLEM GEOMETRY ****

CTP SQUAREPITCH  CELL TYPE
PITCH     1.2598 CM CENTER TO CENTER SPACING
FUELOD    0.7844 CM FUEL DIAMETER OR SLAB THICKNESS
MFUEL          1 MIXTURE NO. OF FUEL
MMOD           3 MIXTURE NO. OF MODERATOR
CLADOD    0.9144 CM CLAD OUTER DIAMETER
MCLAD          2 MIXTURE NO. OF CLAD
GAPOD     0.8002 CM GAP OUTER DIAMETER
MGAP           9 MIXTURE NO. OF GAP


ZONE SPECIFICATIONS FOR LATTICECELL GEOMETRY

               ZONE  1 IS FUEL
               ZONE  2 IS GAP
               ZONE  3 IS CLAD
               ZONE  4 IS MOD
```

```
*****************************************************************************************************************
***                                                                                                           ***
***                            LWT ANALYSIS; W17X17 OFA ASSEMBLY;  NO WATER IN GAP                            ***
***                                                                                                           ***
*****************************************************************************************************************
*****************************************************************************************************************
***                                                                                                           ***
***                              ********** DATA LIBRARY INFORMATION **********                              ***
***                                                                                                           ***
***          UNIT                                                VOLUME                                       ***
***         NUMBER               DATA SET NAME                   NAME        UNIT FUNCTION                    ***
***         ------               -------------                   ----        -------------                    ***
***                                                                                                           ***
***           89     G:\scale43\DATALIB\FT89F001                              STANDARD COMPOSITION LIBRARY     ***
***                                                                                                           ***
***           82     G:\scale43\DATALIB\FT82F001                              CROSS SECTION LIBRARY            ***
***                                                                                                           ***
***           11     D:\PROJECTS\BU85-C~1\pwrfin02\17NX1M\FT11F00             SHORT CROSS SECTION LIBRARY      ***
***                                                                                                           ***
***           90     D:\PROJECTS\BU85-C~1\pwrfin02\17NX1M\FT90F00             INPUT DATA DIRECT ACCESS         ***
***                                                                                                           ***
*****************************************************************************************************************
*****************************************************************************************************************
***                                                                                                           ***
***                                                                                                           ***
***                                    STANDARD COMPOSITION LIBRARY DATA                                      ***
***                                    ---------------------------------                                      ***
***                                                                                                           ***
***            UNIT NUMBER  :  89                                                                             ***
***                                                                                                           ***
***            DATASET NAME :  G:\scale43\DATALIB\FT89F001                                                    ***
***                                                                                                           ***
***            LIBRARY TITLE:  SCALE-4 STANDARD COMPOSITION LIBRARY                                           ***
***                            637 STANDARD COMPOSITIONS, 490 NUCLIDES                                        ***
***                            90 ELEMENTS WITH VARIABLE ISOTOPIC DISTRBUTIONS.                               ***
***                                                                                                           ***
***            CREATION DATE:   6/30/95                                                                       ***
***                                                                                                           ***
***                                                                                                           ***
***                                                                                                           ***
***                                      CROSS SECTION LIBRARY DATA                                           ***
***                                     ---------------------------                                           ***
***                                                                                                           ***
***            UNIT NUMBER  :  82                                                                             ***
***                                                                                                           ***
***            DATASET NAME :  G:\scale43\DATALIB\FT82F001                                                    ***
***                                                                                                           ***
***            LIBRARY TITLE:  SCALE 4.2 - 27 GROUP NEUTRON GROUP LIBRARY                                     ***
***                               BASED ON ENDF-B VERSION 4 DATA                                              ***
***                                  COMPILED FOR NRC     1/27/89                                             ***
***                                     LAST UPDATED                                      08/12/94  ***
***                                        L.M.PETRIE   -   ORNL                                              ***
***                                                                                                           ***
***                                                                                                           ***
***                                                                                                           ***
***                                                                                                           ***
*****************************************************************************************************************
*****************************************************************************************************************

                        ........    0 IO'S WERE USED BEFORE READING KENO V DATA    ........

                        ........    0 IO'S WERE USED READING THE KENO V PARAMETER DATA    ........


                       *************** DATA READING COMPLETED ***************

                        ........    0 IO'S WERE USED PREPARING THE KENO V INPUT DATA    ........

                        ........    0 IO'S WERE USED LOADING THE KENO V DATA    ........

                        ........    0 IO'S WERE USED LOADING THE DATA    ........

                        ........    0 IO'S WERE USED CHECKING THE KENO V GEOMETRY DATA    ........
                        *****  RESTART DATA HAS BEEN WRITTEN ON UNIT 95  *****

                        ........    0 IO'S WERE USED WRITING THE KENO V - CSAS DATA    ........

                        ........    0 IO'S WERE USED PROCESSING CSAS INPUT DATA    ........

 CONTROL MODULE CSAS25   IS COMPLETE.
```

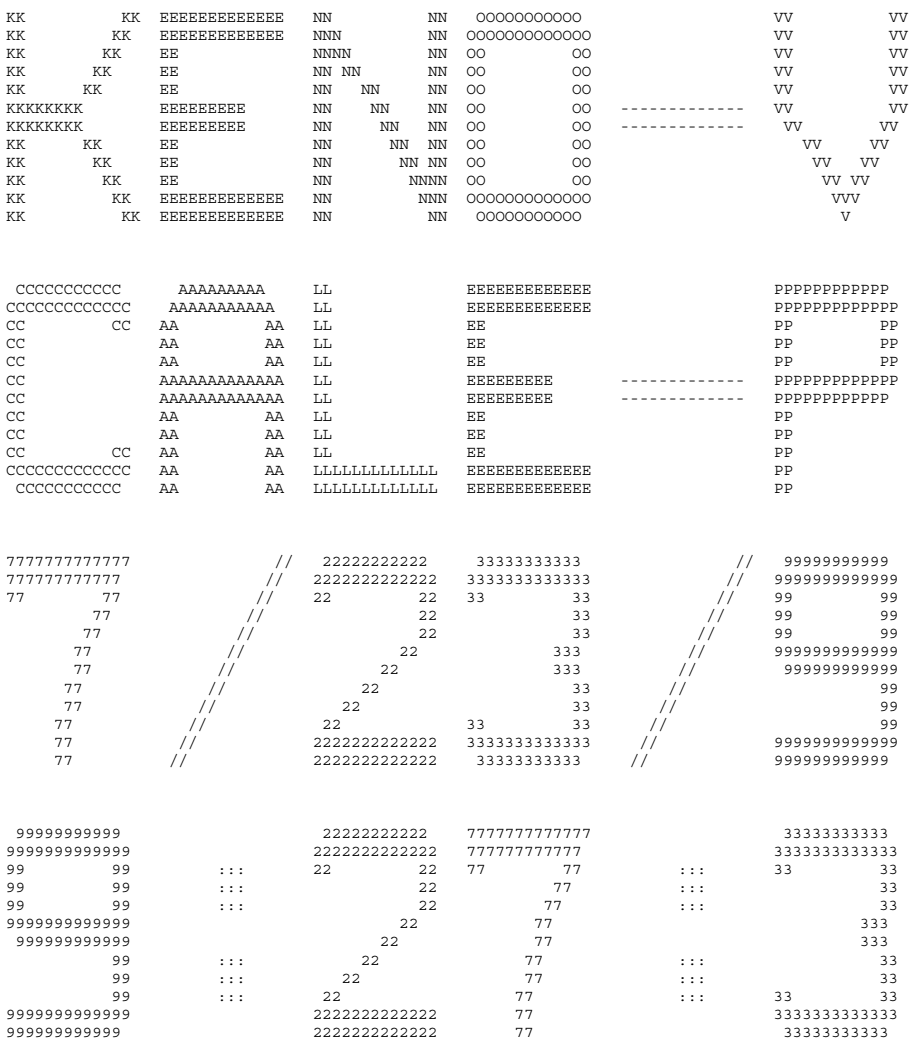
KK KK EEEEEEEEEEEE NN NN OOOOOOOOOO VV VV
KK KK EEEEEEEEEEEE NNN NN OOOOOOOOOOOO VV VV
KK KK EE NNNN NN OO OO VV VV
KK KK EE NN NN NN OO OO VV VV
KK KK EE NN NN NN OO OO VV VV
KKKKKKKK EEEEEEEEE NN NN NN OO OO VV VV
KKKKKKKK EEEEEEEEE NN NN NN OO OO VV VV
KK KK EE NN NN NN OO OO VV VV
KK KK EE NN NN NN OO OO VV VV
KK KK EE NN NNNN OO OO VV VV
KK KK EEEEEEEEEEEE NN NNN OOOOOOOOOOOO VVV
KK KK EEEEEEEEEEEE NN NN OOOOOOOOOO V
SSSSSSSSSS CCCCCCCCCC AAAAAAAAA LL EEEEEEEEEEEE PPPPPPPPPP CCCCCCCCCC
SSSSSSSSSSS CCCCCCCCCCCC AAAAAAAAAA LL EEEEEEEEEEEE PPPPPPPPPPP CCCCCCCCCCCC
SS SS CC CC AA AA LL EE PP PP CC CC
SS CC AA AA LL EE PP PP CC
SS CC AA AA LL EE PP PP CC
SSSSSSSSSSS CC AAAAAAAAAAAAA LL EEEEEEEEE PPPPPPPPPPP CC
SSSSSSSSSS CC AAAAAAAAAAAAA LL EEEEEEEEE PPPPPPPPPP CC
SS CC AA AA LL EE PP CC
SS CC AA AA LL EE PP CC
SS SS CC CC AA AA LL EE PP CC CC
SSSSSSSSSSSS CCCCCCCCCCCCC AA AA LLLLLLLLLLLL EEEEEEEEEEEE PP CCCCCCCCCCCC
SSSSSSSSSS CCCCCCCCCC AA AA LLLLLLLLLLLL EEEEEEEEEEEE PP CCCCCCCCCC
0000000 7777777777777 // 22222222222 33333333333 // 99999999999 88888888888
000000000 777777777777 // 2222222222222 3333333333333 // 9999999999999 8888888888888
00 00 77 77 // 22 22 33 33 // 99 99 88 88
00 00 77 // // 22 33 // 99 99 88 88
00 00 77 // // 22 33 // 99 99 88 88
00 00 77 // 22 333 // 9999999999999 88888888888
00 00 77 // 22 333 // 999999999999 88888888888
00 00 77 // 22 33 // 99 88 88
00 00 77 // 22 33 // 99 88 88
00 00 77 // 22 33 33 // 99 88 88
000000000 77 // 2222222222222 3333333333333 // 9999999999999 8888888888888
0000000 77 // 2222222222222 33333333333 // 999999999999 88888888888
0000000 99999999999 22222222222 7777777777777 33333333333 33333333333
000000000 9999999999999 2222222222222 777777777777 3333333333333 3333333333333
00 00 99 99 ::: 22 22 77 77 ::: 33 33 33 33
00 00 99 99 ::: 22 77 ::: 33 33
00 00 99 99 ::: 22 77 ::: 33 33
00 00 9999999999999 22 77 333 333
00 00 999999999999 22 77 333 333
00 00 99 ::: 22 77 ::: 33 33
00 00 99 ::: 22 77 ::: 33 33
00 00 99 ::: 22 77 ::: 33 33 33 33
000000000 9999999999999 2222222222222 77 3333333333333 3333333333333
0000000 999999999999 2222222222222 77 33333333333 33333333333

```
  SSSSSSSSSS     CCCCCCCCCC      AAAAAAAA     LL             EEEEEEEEEEEE                 PPPPPPPPPPP     CCCCCCCCCC
 SSSSSSSSSSSS   CCCCCCCCCCCC    AAAAAAAAAA    LL             EEEEEEEEEEEE                 PPPPPPPPPPPP   CCCCCCCCCCCC
 SS          SS CC          CC  AA          AA  LL             EE                           PP         PP  CC          CC
 SS             CC              AA          AA  LL             EE                           PP         PP  CC
 SS             CC              AA          AA  LL             EE                           PP         PP  CC
 SSSSSSSSSSSS   CC              AAAAAAAAAAAAAA  LL             EEEEEEEEE       -------------PPPPPPPPPPPP  CC
  SSSSSSSSSSSS  CC              AAAAAAAAAAAAAA  LL             EEEEEEEEE       -------------PPPPPPPPPPP   CC
           SS   CC              AA          AA  LL             EE                           PP             CC
           SS   CC              AA          AA  LL             EE                           PP             CC
 SS        SS   CC          CC  AA          AA  LL             EE                           PP             CC          CC
 SSSSSSSSSSSS   CCCCCCCCCCCC    AA          AA  LLLLLLLLLLLL   EEEEEEEEEEEE                 PP             CCCCCCCCCCCC
  SSSSSSSSSS     CCCCCCCCCC     AA          AA  LLLLLLLLLLLL   EEEEEEEEEEEE                 PP              CCCCCCCCCC
```

```
*******************************************************************************
*******************************************************************************
*******************************************************************************
*****                                                                     *****
*****                  PROGRAM VERIFICATION INFORMATION                   *****
*****                                                                     *****
*****                CODE SYSTEM:  SCALE-PC VERSION:  4.3                 *****
*****                                                                     *****
*******************************************************************************
*******************************************************************************
*****                                                                     *****
*****                                                                     *****
*****              PROGRAM:  O0O009                                       *****
*****                                                                     *****
*****        CREATION DATE:  03/08/96                                     *****
*****                                                                     *****
*****              VOLUME:   ENG                                          *****
*****                                                                     *****
*****              LIBRARY:  G:\SCALE43\WIN_NT\EXE                        *****
*****                                                                     *****
*****                                                                     *****
*****      PRODUCTION CODE:  KENOVA                                       *****
*****                                                                     *****
*****              VERSION:  3.1                                          *****
*****                                                                     *****
*****              JOBNAME:  SCALE-PC                                     *****
*****                                                                     *****
*****    DATE OF EXECUTION:  07/23/98                                     *****
*****                                                                     *****
*****    TIME OF EXECUTION:  09:27:33                                     *****
*****                                                                     *****
*****                                                                     *****
*******************************************************************************
*******************************************************************************
*******************************************************************************
```

```
*****************************************************************************************************************
***                                                                                                           ***
***                            LWT ANALYSIS; W17X17 OFA ASSEMBLY; NO WATER IN GAP                             ***
***                                                                                                           ***
*****************************************************************************************************************
***                              ******       NUMERIC PARAMETERS       ******                                ***
***                                                                                                           ***
***                                                                                                           ***
***                    TME       MAXIMUM PROBLEM TIME (MIN)                        ******                   ***
***                                                                                                           ***
***                    TBA       TIME PER GENERATION (MIN)                           0.50                   ***
***                                                                                                           ***
***                    GEN       NUMBER OF GENERATIONS                                303                   ***
***                                                                                                           ***
***                    NPG       NUMBER PER GENERATION                               1000                   ***
***                                                                                                           ***
***                    NSK       NUMBER OF GENERATIONS TO BE SKIPPED                    3                   ***
***                                                                                                           ***
***                    BEG       BEGINNING GENERATION NUMBER                            1                   ***
***                                                                                                           ***
***                    RES       GENERATIONS BETWEEN CHECKPOINTS                        0                   ***
***                                                                                                           ***
***                    X1D       NUMBER OF EXTRA 1-D CROSS SECTIONS                     1                   ***
***                                                                                                           ***
***                    NBK       NEUTRON BANK SIZE                                   1025                   ***
***                                                                                                           ***
***                    XNB       EXTRA POSITIONS IN NEUTRON BANK                        0                   ***
***                                                                                                           ***
***                    NFB       FISSION BANK SIZE                                   1000                   ***
***                                                                                                           ***
***                    XFB       EXTRA POSITIONS IN FISSION BANK                        0                   ***
***                                                                                                           ***
***                    WTA       DEFAULT VALUE OF WEIGHT AVERAGE                   0.5000                   ***
***                                                                                                           ***
***                    WTH       WEIGHT HIGH FOR SPLITTING                         3.0000                   ***
***                                                                                                           ***
***                    WTL       WEIGHT LOW FOR RUSSIAN ROULETTE                   0.3333                   ***
***                                                                                                           ***
***                    RND       STARTING RANDOM NUMBER                       BB827100001                   ***
***                                                                                                           ***
***                    NB8       NUMBER OF D.A. BLOCKS ON UNIT  8                    200                   ***
***                                                                                                           ***
***                    NL8       LENGTH OF D.A. BLOCKS ON UNIT  8                    512                   ***
***                                                                                                           ***
***                    ADJ       MODE OF CALCULATION                              FORWARD                  ***
***                                                                                                           ***
***                              INPUT DATA WRITTEN ON RESTART UNIT                    NO                   ***
***                                                                                                           ***
***                              BINARY DATA INTERFACE                                 YES                  ***
***                                                                                                           ***
***                                                                                                           ***
*****************************************************************************************************************
*****************************************************************************************************************
```

```
*****************************************************************************************************************
*****************************************************************************************************************
***                                                                                                           ***
***                            LWT ANALYSIS; W17X17 OFA ASSEMBLY; NO WATER IN GAP                             ***
***                                                                                                           ***
*****************************************************************************************************************
***                                ******      LOGICAL PARAMETERS        ******                               ***
***                                                                                                           ***
***  RUN  EXECUTE PROBLEM AFTER CHECKING DATA    YES            PLT  PLOT PICTURE MAP(S)                    NO ***
***                                                                                                           ***
***  FLX  COMPUTE FLUX                            NO            FDN  COMPUTE FISSION DENSITIES              NO ***
***                                                                                                           ***
***  SMU  COMPUTE AVG UNIT SELF-MULTIPLICATION    NO            NUB  COMPUTE NU-BAR & AVG FISSION GROUP     YES ***
***                                                                                                           ***
***  MKU  COMPUTE MATRIX K-EFF BY UNIT NUMBER     NO            MKP  COMPUTE MATRIX K-EFF BY UNIT LOCATION  NO ***
***                                                                                                           ***
***  CKU  COMPUTE COFACTOR K-EFF BY UNIT NUMBER   NO            CKP  COMPUTE COFACTOR K-EFF BY UNIT LOCATION NO ***
***                                                                                                           ***
***  FMU  PRINT FISS PROD MATRIX BY UNIT NUMBER   NO            FMP  PRINT FISS PROD MATRIX BY UNIT LOCATION NO ***
***                                                                                                           ***
***  MKH  COMPUTE MATRIX K-EFF BY HOLE NUMBER     NO            MKA  COMPUTE MATRIX K-EFF BY ARRAY NUMBER   NO ***
***                                                                                                           ***
***  CKH  COMPUTE COFACTOR K-EFF BY HOLE NUMBER   NO            CKA  COMPUTE COFACTOR K-EFF BY ARRAY NUMBER NO ***
***                                                                                                           ***
***  FMH  PRINT FISS PROD MATRIX BY HOLE NUMBER   NO            FMA  PRINT FISS PROD MATRIX BY ARRAY NUMBER NO ***
***                                                                                                           ***
***  HHL  COLLECT MATRIX BY HIGHEST HOLE LEVEL    NO            HAL  COLLECT MATRIX BY HIGHEST ARRAY LEVEL  NO ***
***                                                                                                           ***
***  AMX  PRINT ALL MIXED CROSS SECTIONS          NO            FAR  PRINT FIS. AND ABS. BY REGION          NO ***
***                                                                                                           ***
***  XS1  PRINT 1-D MIXTURE X-SECTIONS            NO            GAS  PRINT FAR BY GROUP                     NO ***
***                                                                                                           ***
***  XS2  PRINT 2-D MIXTURE X-SECTIONS            NO            PAX  PRINT XSEC-ALBEDO CORRELATION TABLES   NO ***
***                                                                                                           ***
***  XAP  PRINT MIXTURE ANGLES & PROBABILITIES    NO            PWT  PRINT WEIGHT AVERAGE ARRAY             NO ***
***                                                                                                           ***
***  PKI  PRINT FISSION SPECTRUM                  NO            PGM  PRINT INPUT GEOMETRY                   NO ***
***                                                                                                           ***
***  P1D  PRINT EXTRA 1-D CROSS SECTIONS          NO            BUG  PRINT DEBUG INFORMATION                NO ***
***                                                                                                           ***
***                                                             TRK  PRINT TRACKING INFORMATION             NO ***
***                                                                                                           ***
***                                                                                                           ***
*****************************************************************************************************************
*****************************************************************************************************************
*****************************************************************************************************************
                                  PARAMETER INPUT COMPLETED

                        .........    0 IO'S WERE USED READING THE PARAMETER DATA      .........

                       ************** DATA READING COMPLETED **************
```

```
*****************************************************************************************************
***                                                                                               ***
***          LWT ANALYSIS; W17X17 OFA ASSEMBLY; NO WATER IN GAP                                   ***
***                                                                                               ***
*****************************************************************************************************
*****************************************************************************************************
***                                                                                               ***
***                              ****** ADDITIONAL INFORMATION ******                             ***
***                                                                                               ***
***  NUMBER OF ENERGY GROUPS              27       USE LATTICE GEOMETRY                    YES  ***
***                                                                                               ***
***  NO. OF FISSION SPECTRUM SOURCE GROUP  1       GLOBAL ARRAY NUMBER                       1  ***
***                                                                                               ***
***  NO. OF SCATTERING ANGLES IN XSECS     2       NUMBER OF UNITS IN THE GLOBAL X DIR.     17  ***
***                                                                                               ***
***  ENTRIES/NEUTRON IN THE NEUTRON BANK  16       NUMBER OF UNITS IN THE GLOBAL Y DIR.     17  ***
***                                                                                               ***
***  ENTRIES/NEUTRON IN THE FISSION BANK   9       NUMBER OF UNITS IN THE GLOBAL Z DIR.      1  ***
***                                                                                               ***
***  NUMBER OF MIXTURES USED               9       USE A GLOBAL REFLECTOR                  YES  ***
***                                                                                               ***
***  NUMBER OF BIAS ID'S USED              1       USE NESTED HOLES                         NO  ***
***                                                                                               ***
***  NUMBER OF DIFFERENTIAL ALBEDOS USED   0       NUMBER OF HOLES                           0  ***
***                                                                                               ***
***  TOTAL INPUT GEOMETRY REGIONS         19       MAXIMUM HOLE NESTING LEVEL                0  ***
***                                                                                               ***
***  NUMBER OF GEOMETRY REGIONS USED      19       USE NESTED ARRAYS                        NO  ***
***                                                                                               ***
***  LARGEST GEOMETRY UNIT NUMBER          9       NUMBER OF ARRAYS USED                     1  ***
***                                                                                               ***
***  LARGEST ARRAY NUMBER                  1       MAXIMUM ARRAY NESTING LEVEL               1  ***
***                                                                                               ***
***                                                                                               ***
***  +X BOUNDARY CONDITION               VAC       -X BOUNDARY CONDITION                   VAC  ***
***                                                                                               ***
***  +Y BOUNDARY CONDITION               VAC       -Y BOUNDARY CONDITION                   VAC  ***
***                                                                                               ***
***  +Z BOUNDARY CONDITION               VAC       -Z BOUNDARY CONDITION                   VAC  ***
***                                                                                               ***
*****************************************************************************************************
```

```
*******************************************************************************************
***                                                                                     ***
***          LWT ANALYSIS; W17X17 OFA ASSEMBLY; NO WATER IN GAP                         ***
***                                                                                     ***
*******************************************************************************************
*******************************************************************************************
***                                                                                     ***
***                    ****** SPACE AND SUPERGROUP INFORMATION ******                   ***
***                                                                                     ***
***       100000 WORDS IS THE TOTAL SPACE AVAILABLE.                                    ***
***                                                                                     ***
***        28457 WORDS WERE USED FOR NON-SUPERGROUP STORAGE.                            ***
***                                                                                     ***
***        71543 WORDS OF STORAGE ARE AVAILABLE FOR SUPERGROUPED DATA.                  ***
***                                                                                     ***
***        99759 WORDS OF STORAGE ARE AVAILABLE FOR CONSTRUCTING THE SUPERGROUPS.       ***
***                                                                                     ***
***        71483 WORDS OF STORAGE ARE AVAILABLE TO EACH SUPERGROUP.                     ***
***                                                                                     ***
***         1172 WORDS ARE NEEDED FOR THE LARGEST GROUP.                                ***
***                                                                                     ***
***        29845 WORDS OF STORAGE IS SUFFICIENT TO RUN THIS PROBLEM.                    ***
***                                                                                     ***
***        42059 WORDS OF STORAGE WILL ALLOW THE PROBLEM TO RUN WITH ONE SUPERGROUP.     ***
***                                                                                     ***
***        42144 WORDS OF STORAGE WILL BE USED TO RUN THIS PROBLEM.                     ***
***                                                                                     ***
*******************************************************************************************
*******************************************************************************************
***                                                                                     ***
***                   STARTING       ENDING        XSEC        ALBEDO       TOTAL       ***
***   SUPERGROUP        GROUP         GROUP       LENGTH       LENGTH       LENGTH       ***
***                                                                                     ***
***                                                                                     ***
***          1            1             27         2697            0        13542       ***
***                                                                                     ***
*******************************************************************************************

            ........    0 IO'S WERE USED IN SUPERGROUPING    ........

            ........    0 IO'S WERE USED LOADING THE DATA    ........
```

LWT ANALYSIS; W17X17 OFA ASSEMBLY; NO WATER IN GAP

REGION		MEDIA NUM	BIAS ID	GEOMETRY DESCRIPTION FOR THOSE UNITS UTILIZED IN THIS PROBLEM					
				----- UNIT 1 -----					
FUEL PIN CELL - WITH H2O									
1	CYLINDER	1	1	RADIUS = 0.39220	+Z = 182.88	-Z = -182.88	CENTERLINE IS AT	X = 0.00000	Y = 0.00000
2	CYLINDER	9	1	RADIUS = 0.40010	+Z = 182.88	-Z = -182.88	CENTERLINE IS AT	X = 0.00000	Y = 0.00000
3	CYLINDER	2	1	RADIUS = 0.45720	+Z = 182.88	-Z = -182.88	CENTERLINE IS AT	X = 0.00000	Y = 0.00000
4	CUBOID	3	1	+X = 0.62990	-X =-0.62990	+Y = 0.62990	-Y =-0.62990	+Z = 182.88	-Z = -182.88
				----- UNIT 2 -----					
WATER ROD CELL - WITH H2O									
1	CYLINDER	3	1	RADIUS = 0.57150	+Z = 182.88	-Z = -182.88	CENTERLINE IS AT	X = 0.00000	Y = 0.00000
2	CYLINDER	2	1	RADIUS = 0.61210	+Z = 182.88	-Z = -182.88	CENTERLINE IS AT	X = 0.00000	Y = 0.00000
3	CUBOID	3	1	+X = 0.62990	-X =-0.62990	+Y = 0.62990	-Y =-0.62990	+Z = 182.88	-Z = -182.88
				********** GLOBAL **********					
				----- UNIT 9 EXTERNAL TO LATTICE 1 -----					
1	ARRAY NUMBER	1		+X = 10.708	-X = -10.708	+Y = 10.708	-Y = -10.708	+Z = 182.88	-Z = -182.88
2	CUBOID	3	1	+X = 11.278	-X = -11.278	+Y = 11.278	-Y = -11.278	+Z = 182.88	-Z = -182.88
3	CYLINDER	4	1	RADIUS = 16.891	+Z = 182.88	-Z = -182.88	CENTERLINE IS AT	X = 0.00000	Y = 0.00000
4	CYLINDER	3	1	RADIUS = 16.986	+Z = 182.88	-Z = -182.88	CENTERLINE IS AT	X = 0.00000	Y = 0.00000
5	CYLINDER	5	1	RADIUS = 18.891	+Z = 182.88	-Z = -182.88	CENTERLINE IS AT	X = 0.00000	Y = 0.00000
6	CYLINDER	6	1	RADIUS = 33.496	+Z = 182.88	-Z = -182.88	CENTERLINE IS AT	X = 0.00000	Y = 0.00000
7	CYLINDER	5	1	RADIUS = 36.544	+Z = 182.88	-Z = -182.88	CENTERLINE IS AT	X = 0.00000	Y = 0.00000
8	CYLINDER	7	1	RADIUS = 49.244	+Z = 182.88	-Z = -182.88	CENTERLINE IS AT	X = 0.00000	Y = 0.00000
9	CYLINDER	5	1	RADIUS = 49.854	+Z = 212.48	-Z = -192.16	CENTERLINE IS AT	X = 0.00000	Y = 0.00000
10	CYLINDER	6	1	RADIUS = 49.854	+Z = 212.48	-Z = -199.78	CENTERLINE IS AT	X = 0.00000	Y = 0.00000
11	CYLINDER	5	1	RADIUS = 49.854	+Z = 212.48	-Z = -208.67	CENTERLINE IS AT	X = 0.00000	Y = 0.00000
12	CUBOID	8	1	+X = 81.000	-X = -81.000	+Y = 81.000	-Y = -81.000	+Z = 243.00	-Z = -240.00

```
                        LWT ANALYSIS; W17X17 OFA ASSEMBLY; NO WATER IN GAP

                  -------  UNIT ORIENTATION DESCRIPTION FOR ARRAY   1         -------

Z LAYER   1, X COLUMN   1 TO  17 LEFT TO RIGHT   Y ROW   1 TO  17  BOTTOM TO TOP

 1 1 1 1 1 1 1 1 1 1 1 1 1 1 1 1 1

 1 1 1 1 1 1 1 1 1 1 1 1 1 1 1 1 1

 1 1 1 1 1 2 1 1 2 1 1 2 1 1 1 1 1

 1 1 1 2 1 1 1 1 1 1 1 1 1 2 1 1 1

 1 1 1 1 1 1 1 1 1 1 1 1 1 1 1 1 1

 1 1 2 1 1 2 1 1 2 1 1 2 1 1 2 1 1

 1 1 1 1 1 1 1 1 1 1 1 1 1 1 1 1 1

 1 1 1 1 1 1 1 1 1 1 1 1 1 1 1 1 1

 1 1 2 1 1 2 1 1 2 1 1 2 1 1 2 1 1

 1 1 1 1 1 1 1 1 1 1 1 1 1 1 1 1 1

 1 1 1 1 1 1 1 1 1 1 1 1 1 1 1 1 1

 1 1 2 1 1 2 1 1 2 1 1 2 1 1 2 1 1

 1 1 1 1 1 1 1 1 1 1 1 1 1 1 1 1 1

 1 1 1 2 1 1 1 1 1 1 1 1 1 2 1 1 1

 1 1 1 1 1 2 1 1 2 1 1 2 1 1 1 1 1

 1 1 1 1 1 1 1 1 1 1 1 1 1 1 1 1 1

 1 1 1 1 1 1 1 1 1 1 1 1 1 1 1 1 1
```

LWT ANALYSIS; W17X17 OFA ASSEMBLY; NO WATER IN GAP
VOLUMES FOR THOSE UNITS UTILIZED IN THIS PROBLEM

UNIT	REGION	GEOMETRY REGION	VOLUME	CUMULATIVE VOLUME
1	1	1	1.76751E+02 CM**3	1.76751E+02 CM**3
	2	2	7.19223E+00 CM**3	1.83943E+02 CM**3
	3	3	5.62490E+01 CM**3	2.40192E+02 CM**3
	4	4	3.40304E+02 CM**3	5.80496E+02 CM**3
2	1	5	3.75300E+02 CM**3	3.75300E+02 CM**3
	2	6	5.52175E+01 CM**3	4.30518E+02 CM**3
	3	7	1.49979E+02 CM**3	5.80496E+02 CM**3
SURROUNDING GEOMETRY VOLUMES -		GEOMETRY REGION	8 IS AN ARRAY PLACEMENT BOUNDARY REGION	
9	1	8	1.67763E+05 CM**3	1.67763E+05 CM**3
	2	9	1.83123E+04 CM**3	1.86076E+05 CM**3
	3	10	1.41760E+05 CM**3	3.27836E+05 CM**3
	4	11	3.70972E+03 CM**3	3.31546E+05 CM**3
	5	12	7.85353E+04 CM**3	4.10081E+05 CM**3
	6	13	8.79177E+05 CM**3	1.28926E+06 CM**3
	7	14	2.45308E+05 CM**3	1.53457E+06 CM**3
	8	15	1.25193E+06 CM**3	2.78649E+06 CM**3
	9	16	3.72996E+05 CM**3	3.15949E+06 CM**3
	10	17	5.94983E+04 CM**3	3.21899E+06 CM**3
	11	18	6.94145E+04 CM**3	3.28840E+06 CM**3
	12	19	9.38745E+06 CM**3	1.26759E+07 CM**3

UNIT	USES	REGION	MIXTURE	TOTAL VOLUME
1	264	1	1	4.66622E+04 CM**3
		2	9	1.89875E+03 CM**3
		3	2	1.48497E+04 CM**3
		4	3	8.98403E+04 CM**3
2	25	1	3	9.38250E+03 CM**3
		2	2	1.38044E+03 CM**3
		3	3	3.74947E+03 CM**3
9	1	1		1.67763E+05 CM**3
		2	3	1.83123E+04 CM**3
		3	4	1.41760E+05 CM**3
		4	3	3.70972E+03 CM**3
		5	5	7.85353E+04 CM**3
		6	6	8.79177E+05 CM**3
		7	5	2.45308E+05 CM**3
		8	7	1.25193E+06 CM**3
		9	5	3.72996E+05 CM**3
		10	6	5.94983E+04 CM**3
		11	5	6.94145E+04 CM**3
		12	8	9.38745E+06 CM**3

TOTAL MIXTURE VOLUMES

MIXTURE	TOTAL VOLUME	MASS(G)
1	4.66622E+04 CM**3	4.85846E+05
2	1.62302E+04 CM**3	1.05334E+05
3	1.24994E+05 CM**3	1.24766E+05
4	1.41760E+05 CM**3	3.83037E+05
5	7.66253E+05 CM**3	6.06873E+06
6	9.38675E+05 CM**3	1.06483E+07
7	1.25193E+06 CM**3	1.24964E+06
8	9.38745E+06 CM**3	9.37028E-14
9	1.89875E+03 CM**3	1.89528E-17

****
***
*** BIASING INFORMATION ***
***
*** A DEFAULT WEIGHT OF 0.500 WILL BE USED FOR ALL BIAS ID'S. ***
***
****

..... 0 IO'S WERE USED IN KENO-V BEFORE TRACKING .....

..... 0.01650 MINUTES WERE USED PROCESSING DATA. .....

VOLUME FRACTION OF FISSILE MATERIAL IN THE CORE= 2.78143E-01

START TYPE 0 WAS USED.

THE NEUTRONS WERE STARTED WITH A FLAT DISTRIBUTION IN A CUBOID DEFINED BY:
+X= 1.07083E+01 -X=-1.07083E+01 +Y= 1.07083E+01 -Y=-1.07083E+01 +Z= 1.82880E+02 -Z=-1.82880E+02
THE FLAG TO START NEUTRONS IN THE REFLECTOR WAS TURNED OFF

0.09217 MINUTES WERE REQUIRED FOR STARTING. TOTAL ELAPSED TIME IS 0.11733 MINUTES.

LWT ANALYSIS; W17X17 OFA ASSEMBLY; NO WATER IN GAP

GENERATION	GENERATION K-EFFECTIVE	ELAPSED TIME MINUTES	AVERAGE K-EFFECTIVE	AVG K-EFF DEVIATION	MATRIX K-EFFECTIVE	MATRIX K-EFF DEVIATION
KENO MESSAGE NUMBER K5-132		WARNING....ONLY	965 INDEPENDENT FISSION POINTS WERE GENERATED			
1	8.85686E-01	1.53833E-01	1.00000E+00	0.00000E+00	0.00000E+00	0.00000E+00
2	9.39214E-01	1.88667E-01	1.00000E+00	0.00000E+00	0.00000E+00	0.00000E+00
KENO MESSAGE NUMBER K5-132		WARNING....ONLY	994 INDEPENDENT FISSION POINTS WERE GENERATED			
3	9.13529E-01	2.21500E-01	9.13529E-01	0.00000E+00	0.00000E+00	0.00000E+00
4	9.01018E-01	2.54500E-01	9.07274E-01	6.25521E-03	0.00000E+00	0.00000E+00
5	9.02144E-01	2.86500E-01	9.05564E-01	3.99573E-03	0.00000E+00	0.00000E+00
6	8.82090E-01	3.20333E-01	8.99695E-01	6.51315E-03	0.00000E+00	0.00000E+00
7	9.06539E-01	3.57000E-01	9.01064E-01	5.22744E-03	0.00000E+00	0.00000E+00
8	9.56216E-01	3.90833E-01	9.10256E-01	1.01345E-02	0.00000E+00	0.00000E+00
9	9.36446E-01	4.30333E-01	9.13997E-01	9.34672E-03	0.00000E+00	0.00000E+00
10	8.87858E-01	4.62333E-01	9.10730E-01	8.72908E-03	0.00000E+00	0.00000E+00
11	8.91353E-01	4.97167E-01	9.08577E-01	7.99371E-03	0.00000E+00	0.00000E+00
12	9.34083E-01	5.35500E-01	9.11128E-01	7.59111E-03	0.00000E+00	0.00000E+00
13	9.54576E-01	5.67500E-01	9.15078E-01	7.92145E-03	0.00000E+00	0.00000E+00
14	8.96471E-01	6.01500E-01	9.13527E-01	7.39563E-03	0.00000E+00	0.00000E+00
15	9.28672E-01	6.34333E-01	9.14692E-01	6.90202E-03	0.00000E+00	0.00000E+00
16	9.41564E-01	6.68333E-01	9.16611E-01	6.67208E-03	0.00000E+00	0.00000E+00
17	9.01900E-01	6.99333E-01	9.15631E-01	6.28831E-03	0.00000E+00	0.00000E+00
18	9.69297E-01	7.32333E-01	9.18985E-01	6.77129E-03	0.00000E+00	0.00000E+00
19	9.56127E-01	7.67167E-01	9.21170E-01	6.72530E-03	0.00000E+00	0.00000E+00
20	9.01176E-01	7.99167E-01	9.20059E-01	6.43723E-03	0.00000E+00	0.00000E+00
21	8.94538E-01	8.32167E-01	9.18716E-01	6.23540E-03	0.00000E+00	0.00000E+00
22	9.29596E-01	8.63333E-01	9.19260E-01	5.94038E-03	0.00000E+00	0.00000E+00
23	9.16368E-01	8.98000E-01	9.19122E-01	5.65211E-03	0.00000E+00	0.00000E+00
24	9.97989E-01	9.29167E-01	9.22707E-01	6.47252E-03	0.00000E+00	0.00000E+00
25	9.36630E-01	9.63000E-01	9.23312E-01	6.21426E-03	0.00000E+00	0.00000E+00
26	9.17401E-01	9.96833E-01	9.23066E-01	5.95480E-03	0.00000E+00	0.00000E+00
27	9.49137E-01	1.02800E+00	9.24109E-01	5.80606E-03	0.00000E+00	0.00000E+00
28	8.87709E-01	1.06183E+00	9.22709E-01	5.75128E-03	0.00000E+00	0.00000E+00
29	9.19245E-01	1.09400E+00	9.22581E-01	5.53565E-03	0.00000E+00	0.00000E+00
30	9.30737E-01	1.12783E+00	9.22872E-01	5.34224E-03	0.00000E+00	0.00000E+00
31	9.54481E-01	1.15983E+00	9.23962E-01	5.26871E-03	0.00000E+00	0.00000E+00
32	9.12407E-01	1.19100E+00	9.23577E-01	5.10461E-03	0.00000E+00	0.00000E+00
33	9.19944E-01	1.22217E+00	9.23459E-01	4.93859E-03	0.00000E+00	0.00000E+00
34	9.27206E-01	1.25500E+00	9.23577E-01	4.78320E-03	0.00000E+00	0.00000E+00
35	9.05590E-01	1.28983E+00	9.23031E-01	4.66792E-03	0.00000E+00	0.00000E+00
36	9.50760E-01	1.32283E+00	9.23847E-01	4.60140E-03	0.00000E+00	0.00000E+00
37	9.34740E-01	1.35583E+00	9.24158E-01	4.47882E-03	0.00000E+00	0.00000E+00
38	9.25213E-01	1.38783E+00	9.24188E-01	4.35273E-03	0.00000E+00	0.00000E+00
39	9.61123E-01	1.41983E+00	9.25186E-01	4.34956E-03	0.00000E+00	0.00000E+00
40	9.42560E-01	1.45367E+00	9.25643E-01	4.25817E-03	0.00000E+00	0.00000E+00
41	8.96787E-01	1.48750E+00	9.24903E-01	4.21302E-03	0.00000E+00	0.00000E+00
42	9.39391E-01	1.51783E+00	9.25265E-01	4.12229E-03	0.00000E+00	0.00000E+00
43	9.50404E-01	1.54883E+00	9.25878E-01	4.06697E-03	0.00000E+00	0.00000E+00
44	9.24725E-01	1.58183E+00	9.25851E-01	3.96906E-03	0.00000E+00	0.00000E+00
45	9.17061E-01	1.61483E+00	9.25647E-01	3.88104E-03	0.00000E+00	0.00000E+00
46	9.32333E-01	1.64683E+00	9.25799E-01	3.79485E-03	0.00000E+00	0.00000E+00
47	9.06479E-01	1.68067E+00	9.25369E-01	3.73433E-03	0.00000E+00	0.00000E+00
48	9.19627E-01	1.71467E+00	9.25244E-01	3.65437E-03	0.00000E+00	0.00000E+00
49	9.41650E-01	1.74750E+00	9.25593E-01	3.59277E-03	0.00000E+00	0.00000E+00
50	9.05315E-01	1.78050E+00	9.25171E-01	3.54241E-03	0.00000E+00	0.00000E+00
51	9.27366E-01	1.81433E+00	9.25216E-01	3.46965E-03	0.00000E+00	0.00000E+00
52	9.08010E-01	1.84550E+00	9.24872E-01	3.41692E-03	0.00000E+00	0.00000E+00
53	9.37532E-01	1.87750E+00	9.25120E-01	3.35844E-03	0.00000E+00	0.00000E+00
54	9.45465E-01	1.90967E+00	9.25511E-01	3.31638E-03	0.00000E+00	0.00000E+00
55	9.10189E-01	1.94350E+00	9.25222E-01	3.26603E-03	0.00000E+00	0.00000E+00
56	9.17433E-01	1.97733E+00	9.25078E-01	3.20822E-03	0.00000E+00	0.00000E+00
KENO MESSAGE NUMBER K5-132		WARNING....ONLY	977 INDEPENDENT FISSION POINTS WERE GENERATED			
57	8.41913E-01	2.01033E+00	9.23566E-01	3.49354E-03	0.00000E+00	0.00000E+00
58	8.95416E-01	2.04417E+00	9.23063E-01	3.46722E-03	0.00000E+00	0.00000E+00
59	9.47738E-01	2.07617E+00	9.23496E-01	3.43325E-03	0.00000E+00	0.00000E+00
60	9.14889E-01	2.10817E+00	9.23348E-01	3.37679E-03	0.00000E+00	0.00000E+00
61	8.97825E-01	2.14117E+00	9.22915E-01	3.34714E-03	0.00000E+00	0.00000E+00
62	9.65730E-01	2.17133E+00	9.23629E-01	3.36736E-03	0.00000E+00	0.00000E+00
63	8.85004E-01	2.20433E+00	9.22995E-01	3.37169E-03	0.00000E+00	0.00000E+00
64	9.52399E-01	2.23817E+00	9.23470E-01	3.35059E-03	0.00000E+00	0.00000E+00
65	9.39262E-01	2.27117E+00	9.23720E-01	3.30649E-03	0.00000E+00	0.00000E+00
66	9.14343E-01	2.30417E+00	9.23574E-01	3.25772E-03	0.00000E+00	0.00000E+00
67	9.17100E-01	2.33717E+00	9.23474E-01	3.20875E-03	0.00000E+00	0.00000E+00
68	9.73007E-01	2.37000E+00	9.24225E-01	3.24766E-03	0.00000E+00	0.00000E+00
69	9.19364E-01	2.40483E+00	9.24152E-01	3.19965E-03	0.00000E+00	0.00000E+00
70	8.97601E-01	2.43600E+00	9.23762E-01	3.17633E-03	0.00000E+00	0.00000E+00
71	8.99201E-01	2.46983E+00	9.23406E-01	3.15014E-03	0.00000E+00	0.00000E+00
72	9.23122E-01	2.50000E+00	9.23402E-01	3.10481E-03	0.00000E+00	0.00000E+00
73	9.11981E-01	2.53200E+00	9.23241E-01	3.06499E-03	0.00000E+00	0.00000E+00
74	8.98014E-01	2.56500E+00	9.22890E-01	3.04237E-03	0.00000E+00	0.00000E+00
75	9.35208E-01	2.59700E+00	9.23059E-01	3.00514E-03	0.00000E+00	0.00000E+00
76	9.23685E-01	2.63100E+00	9.23068E-01	2.96426E-03	0.00000E+00	0.00000E+00
77	9.59360E-01	2.66300E+00	9.23551E-01	2.96424E-03	0.00000E+00	0.00000E+00
78	9.59641E-01	2.69500E+00	9.24026E-01	2.96327E-03	0.00000E+00	0.00000E+00
79	9.56868E-01	2.72617E+00	9.24453E-01	2.95547E-03	0.00000E+00	0.00000E+00
80	9.55849E-01	2.76000E+00	9.24855E-01	2.94497E-03	0.00000E+00	0.00000E+00
81	9.42287E-01	2.79383E+00	9.25076E-01	2.91581E-03	0.00000E+00	0.00000E+00
82	9.36740E-01	2.82417E+00	9.25222E-01	2.88282E-03	0.00000E+00	0.00000E+00
83	8.96816E-01	2.85700E+00	9.24871E-01	2.86853E-03	0.00000E+00	0.00000E+00
84	9.14175E-01	2.89000E+00	9.24741E-01	2.83633E-03	0.00000E+00	0.00000E+00
85	9.53858E-01	2.92200E+00	9.25091E-01	2.82382E-03	0.00000E+00	0.00000E+00
86	9.32691E-01	2.95500E+00	9.25182E-01	2.79147E-03	0.00000E+00	0.00000E+00
87	9.41861E-01	2.98800E+00	9.25378E-01	2.76541E-03	0.00000E+00	0.00000E+00
88	9.17970E-01	3.02083E+00	9.25292E-01	2.73442E-03	0.00000E+00	0.00000E+00

89	9.41289E-01	3.05383E+00	9.25476E-01	2.70905E-03	0.00000E+00	0.00000E+00
90	9.23612E-01	3.08767E+00	9.25455E-01	2.67817E-03	0.00000E+00	0.00000E+00
91	9.08846E-01	3.12067E+00	9.25268E-01	2.65448E-03	0.00000E+00	0.00000E+00
92	9.13348E-01	3.15267E+00	9.25136E-01	2.62816E-03	0.00000E+00	0.00000E+00
93	9.28301E-01	3.18567E+00	9.25170E-01	2.59935E-03	0.00000E+00	0.00000E+00
94	9.60296E-01	3.21867E+00	9.25552E-01	2.59914E-03	0.00000E+00	0.00000E+00
95	9.14216E-01	3.25167E+00	9.25430E-01	2.57392E-03	0.00000E+00	0.00000E+00
96	8.75089E-01	3.28550E+00	9.24895E-01	2.60210E-03	0.00000E+00	0.00000E+00
97	9.35398E-01	3.31850E+00	9.25005E-01	2.57694E-03	0.00000E+00	0.00000E+00
98	9.06488E-01	3.35050E+00	9.24812E-01	2.55724E-03	0.00000E+00	0.00000E+00
99	8.97848E-01	3.38433E+00	9.24534E-01	2.54596E-03	0.00000E+00	0.00000E+00
100	8.98266E-01	3.41733E+00	9.24266E-01	2.53406E-03	0.00000E+00	0.00000E+00
101	8.94082E-01	3.44933E+00	9.23962E-01	2.52680E-03	0.00000E+00	0.00000E+00
102	9.34591E-01	3.48233E+00	9.24068E-01	2.50366E-03	0.00000E+00	0.00000E+00
103	9.31607E-01	3.51433E+00	9.24142E-01	2.47987E-03	0.00000E+00	0.00000E+00
104	9.31387E-01	3.54633E+00	9.24214E-01	2.45647E-03	0.00000E+00	0.00000E+00
105	9.45878E-01	3.57833E+00	9.24424E-01	2.44158E-03	0.00000E+00	0.00000E+00
106	9.24709E-01	3.61133E+00	9.24427E-01	2.41799E-03	0.00000E+00	0.00000E+00
107	9.39009E-01	3.64433E+00	9.24565E-01	2.39887E-03	0.00000E+00	0.00000E+00
108	9.45330E-01	3.67733E+00	9.24761E-01	2.38419E-03	0.00000E+00	0.00000E+00
109	9.65529E-01	3.70933E+00	9.25142E-01	2.39234E-03	0.00000E+00	0.00000E+00
110	9.34481E-01	3.74233E+00	9.25229E-01	2.37166E-03	0.00000E+00	0.00000E+00
111	9.40742E-01	3.77517E+00	9.25371E-01	2.35411E-03	0.00000E+00	0.00000E+00
112	9.68989E-01	3.80817E+00	9.25768E-01	2.36608E-03	0.00000E+00	0.00000E+00
113	9.21929E-01	3.84200E+00	9.25733E-01	2.34492E-03	0.00000E+00	0.00000E+00
114	9.46170E-01	3.87500E+00	9.25916E-01	2.33104E-03	0.00000E+00	0.00000E+00
115	9.22961E-01	3.90883E+00	9.25889E-01	2.31047E-03	0.00000E+00	0.00000E+00
116	9.65666E-01	3.94367E+00	9.26238E-01	2.31654E-03	0.00000E+00	0.00000E+00
117	9.21870E-01	3.97567E+00	9.26200E-01	2.29662E-03	0.00000E+00	0.00000E+00
118	9.01764E-01	4.00767E+00	9.25990E-01	2.28646E-03	0.00000E+00	0.00000E+00
119	9.07249E-01	4.04167E+00	9.25830E-01	2.27249E-03	0.00000E+00	0.00000E+00
120	9.81145E-01	4.07267E+00	9.26298E-01	2.30139E-03	0.00000E+00	0.00000E+00
121	9.44074E-01	4.10383E+00	9.26448E-01	2.28685E-03	0.00000E+00	0.00000E+00
122	9.21559E-01	4.13317E+00	9.26407E-01	2.26808E-03	0.00000E+00	0.00000E+00
123	9.20260E-01	4.16517E+00	9.26356E-01	2.24983E-03	0.00000E+00	0.00000E+00
124	9.19285E-01	4.20000E+00	9.26298E-01	2.23207E-03	0.00000E+00	0.00000E+00
125	9.16275E-01	4.23300E+00	9.26217E-01	2.21535E-03	0.00000E+00	0.00000E+00
126	8.91448E-01	4.26500E+00	9.25936E-01	2.21523E-03	0.00000E+00	0.00000E+00
127	9.26114E-01	4.29983E+00	9.25938E-01	2.19743E-03	0.00000E+00	0.00000E+00
128	9.12693E-01	4.33367E+00	9.25833E-01	2.18246E-03	0.00000E+00	0.00000E+00
129	9.60210E-01	4.36483E+00	9.26103E-01	2.18206E-03	0.00000E+00	0.00000E+00
130	9.29697E-01	4.39767E+00	9.26131E-01	2.16513E-03	0.00000E+00	0.00000E+00
131	9.42543E-01	4.43167E+00	9.26259E-01	2.15204E-03	0.00000E+00	0.00000E+00
132	9.16525E-01	4.46550E+00	9.26184E-01	2.13673E-03	0.00000E+00	0.00000E+00
133	8.96387E-01	4.49833E+00	9.25956E-01	2.13253E-03	0.00000E+00	0.00000E+00
134	9.54271E-01	4.53233E+00	9.26171E-01	2.12715E-03	0.00000E+00	0.00000E+00
135	9.38826E-01	4.56333E+00	9.26266E-01	2.11324E-03	0.00000E+00	0.00000E+00
136	9.33384E-01	4.59633E+00	9.26319E-01	2.09808E-03	0.00000E+00	0.00000E+00
137	9.04157E-01	4.63117E+00	9.26155E-01	2.08894E-03	0.00000E+00	0.00000E+00
138	9.50015E-01	4.66233E+00	9.26330E-01	2.08094E-03	0.00000E+00	0.00000E+00
139	9.66112E-01	4.69433E+00	9.26621E-01	2.08600E-03	0.00000E+00	0.00000E+00
140	9.26934E-01	4.72817E+00	9.26623E-01	2.07083E-03	0.00000E+00	0.00000E+00
141	9.02740E-01	4.76483E+00	9.26451E-01	2.06305E-03	0.00000E+00	0.00000E+00
142	9.24085E-01	4.79867E+00	9.26434E-01	2.04833E-03	0.00000E+00	0.00000E+00
143	9.55953E-01	4.83067E+00	9.26644E-01	2.04450E-03	0.00000E+00	0.00000E+00
144	9.38778E-01	4.86450E+00	9.26729E-01	2.03184E-03	0.00000E+00	0.00000E+00
145	9.28669E-01	4.89850E+00	9.26743E-01	2.01763E-03	0.00000E+00	0.00000E+00
146	9.21329E-01	4.93050E+00	9.26705E-01	2.00392E-03	0.00000E+00	0.00000E+00
147	9.10886E-01	4.96350E+00	9.26596E-01	1.99304E-03	0.00000E+00	0.00000E+00
148	9.24269E-01	4.99633E+00	9.26580E-01	1.97941E-03	0.00000E+00	0.00000E+00
149	9.03222E-01	5.03117E+00	9.26421E-01	1.97231E-03	0.00000E+00	0.00000E+00
150	8.95189E-01	5.06417E+00	9.26210E-01	1.97027E-03	0.00000E+00	0.00000E+00
151	9.48128E-01	5.09717E+00	9.26357E-01	1.96252E-03	0.00000E+00	0.00000E+00
152	9.08228E-01	5.13100E+00	9.26236E-01	1.95314E-03	0.00000E+00	0.00000E+00
153	9.18349E-01	5.16667E+00	9.26184E-01	1.94087E-03	0.00000E+00	0.00000E+00
154	9.52513E-01	5.19783E+00	9.26357E-01	1.93582E-03	0.00000E+00	0.00000E+00
155	9.26765E-01	5.22983E+00	9.26360E-01	1.92313E-03	0.00000E+00	0.00000E+00
156	9.22425E-01	5.26183E+00	9.26334E-01	1.91077E-03	0.00000E+00	0.00000E+00
157	9.50244E-01	5.29383E+00	9.26489E-01	1.90466E-03	0.00000E+00	0.00000E+00
158	9.34982E-01	5.32783E+00	9.26543E-01	1.89319E-03	0.00000E+00	0.00000E+00
159	9.46343E-01	5.36067E+00	9.26669E-01	1.88532E-03	0.00000E+00	0.00000E+00
160	9.24231E-01	5.39467E+00	9.26654E-01	1.87341E-03	0.00000E+00	0.00000E+00
161	9.26075E-01	5.42750E+00	9.26650E-01	1.86160E-03	0.00000E+00	0.00000E+00
162	9.16128E-01	5.46233E+00	9.26584E-01	1.85109E-03	0.00000E+00	0.00000E+00
163	9.29809E-01	5.49433E+00	9.26604E-01	1.83967E-03	0.00000E+00	0.00000E+00
164	9.31262E-01	5.52733E+00	9.26633E-01	1.82850E-03	0.00000E+00	0.00000E+00
165	9.29190E-01	5.56117E+00	9.26649E-01	1.81732E-03	0.00000E+00	0.00000E+00
166	9.36944E-01	5.59417E+00	9.26712E-01	1.80729E-03	0.00000E+00	0.00000E+00
167	9.17540E-01	5.62800E+00	9.26656E-01	1.79717E-03	0.00000E+00	0.00000E+00
168	9.04166E-01	5.66183E+00	9.26521E-01	1.79144E-03	0.00000E+00	0.00000E+00
169	9.59455E-01	5.69483E+00	9.26718E-01	1.79157E-03	0.00000E+00	0.00000E+00
170	9.67619E-01	5.72867E+00	9.26961E-01	1.79743E-03	0.00000E+00	0.00000E+00
171	9.32381E-01	5.75983E+00	9.26993E-01	1.78705E-03	0.00000E+00	0.00000E+00
172	9.39258E-01	5.79100E+00	9.27065E-01	1.77798E-03	0.00000E+00	0.00000E+00
173	8.62756E-01	5.82400E+00	9.26689E-01	1.80711E-03	0.00000E+00	0.00000E+00
174	9.38090E-01	5.85867E+00	9.26756E-01	1.79780E-03	0.00000E+00	0.00000E+00
175	9.00613E-01	5.89267E+00	9.26605E-01	1.79375E-03	0.00000E+00	0.00000E+00
176	9.19542E-01	5.92650E+00	9.26564E-01	1.78388E-03	0.00000E+00	0.00000E+00
177	9.04231E-01	5.96033E+00	9.26436E-01	1.77824E-03	0.00000E+00	0.00000E+00
178	9.17689E-01	5.99333E+00	9.26387E-01	1.76880E-03	0.00000E+00	0.00000E+00
179	9.26085E-01	6.02817E+00	9.26385E-01	1.75878E-03	0.00000E+00	0.00000E+00
180	9.10857E-01	6.06100E+00	9.26298E-01	1.75105E-03	0.00000E+00	0.00000E+00
181	9.43644E-01	6.09483E+00	9.26395E-01	1.74393E-03	0.00000E+00	0.00000E+00

KENO MESSAGE NUMBER K5-132 WARNING....ONLY 997 INDEPENDENT FISSION POINTS WERE GENERATED

182	8.47673E-01	6.13067E+00	9.25957E-01	1.78851E-03	0.00000E+00	0.00000E+00

183	9.38183E-01	6.16350E+00	9.26025E-01	1.77989E-03	0.00000E+00	0.00000E+00
184	8.90668E-01	6.19650E+00	9.25831E-01	1.78071E-03	0.00000E+00	0.00000E+00
185	9.35330E-01	6.22950E+00	9.25882E-01	1.77171E-03	0.00000E+00	0.00000E+00
186	9.26899E-01	6.26333E+00	9.25888E-01	1.76207E-03	0.00000E+00	0.00000E+00
187	9.23684E-01	6.29533E+00	9.25876E-01	1.75256E-03	0.00000E+00	0.00000E+00
188	9.10842E-01	6.32833E+00	9.25795E-01	1.74498E-03	0.00000E+00	0.00000E+00
189	9.37209E-01	6.35950E+00	9.25856E-01	1.73670E-03	0.00000E+00	0.00000E+00
190	9.50270E-01	6.39150E+00	9.25986E-01	1.73231E-03	0.00000E+00	0.00000E+00
191	9.52251E-01	6.42533E+00	9.26125E-01	1.72871E-03	0.00000E+00	0.00000E+00
192	9.25949E-01	6.45833E+00	9.26124E-01	1.71959E-03	0.00000E+00	0.00000E+00
193	9.42037E-01	6.49033E+00	9.26207E-01	1.71259E-03	0.00000E+00	0.00000E+00
194	9.51804E-01	6.52233E+00	9.26341E-01	1.70886E-03	0.00000E+00	0.00000E+00
195	9.25686E-01	6.55633E+00	9.26337E-01	1.69998E-03	0.00000E+00	0.00000E+00
196	9.32754E-01	6.58833E+00	9.26370E-01	1.69152E-03	0.00000E+00	0.00000E+00
197	9.07192E-01	6.62217E+00	9.26272E-01	1.68570E-03	0.00000E+00	0.00000E+00
198	9.25103E-01	6.65600E+00	9.26266E-01	1.67708E-03	0.00000E+00	0.00000E+00
199	9.27047E-01	6.68817E+00	9.26270E-01	1.66855E-03	0.00000E+00	0.00000E+00
200	9.45517E-01	6.71917E+00	9.26367E-01	1.66295E-03	0.00000E+00	0.00000E+00
201	9.42746E-01	6.75400E+00	9.26450E-01	1.65662E-03	0.00000E+00	0.00000E+00
202	9.31617E-01	6.78517E+00	9.26475E-01	1.64852E-03	0.00000E+00	0.00000E+00
203	9.67107E-01	6.82000E+00	9.26678E-01	1.65270E-03	0.00000E+00	0.00000E+00
204	9.59893E-01	6.85200E+00	9.26842E-01	1.65270E-03	0.00000E+00	0.00000E+00
205	9.58868E-01	6.88500E+00	9.27000E-01	1.65209E-03	0.00000E+00	0.00000E+00
206	9.21028E-01	6.91967E+00	9.26971E-01	1.64423E-03	0.00000E+00	0.00000E+00
207	9.17286E-01	6.95267E+00	9.26923E-01	1.63687E-03	0.00000E+00	0.00000E+00
208	8.93367E-01	6.98650E+00	9.26760E-01	1.63703E-03	0.00000E+00	0.00000E+00
209	9.42777E-01	7.02033E+00	9.26838E-01	1.63094E-03	0.00000E+00	0.00000E+00
210	9.26255E-01	7.05433E+00	9.26835E-01	1.62308E-03	0.00000E+00	0.00000E+00
211	9.45864E-01	7.08717E+00	9.26926E-01	1.61786E-03	0.00000E+00	0.00000E+00
212	9.35674E-01	7.11933E+00	9.26968E-01	1.61068E-03	0.00000E+00	0.00000E+00
213	9.47448E-01	7.15217E+00	9.27065E-01	1.60596E-03	0.00000E+00	0.00000E+00
214	9.81191E-01	7.18517E+00	9.27320E-01	1.61863E-03	0.00000E+00	0.00000E+00
215	9.12594E-01	7.22000E+00	9.27251E-01	1.61250E-03	0.00000E+00	0.00000E+00
216	9.36204E-01	7.25017E+00	9.27293E-01	1.60549E-03	0.00000E+00	0.00000E+00
217	9.40146E-01	7.28133E+00	9.27353E-01	1.59912E-03	0.00000E+00	0.00000E+00
218	8.81631E-01	7.31983E+00	9.27141E-01	1.60572E-03	0.00000E+00	0.00000E+00
219	9.11088E-01	7.35267E+00	9.27067E-01	1.60001E-03	0.00000E+00	0.00000E+00
220	9.41373E-01	7.38567E+00	9.27132E-01	1.59401E-03	0.00000E+00	0.00000E+00
221	9.70273E-01	7.41867E+00	9.27329E-01	1.59889E-03	0.00000E+00	0.00000E+00
222	8.98617E-01	7.45250E+00	9.27199E-01	1.59695E-03	0.00000E+00	0.00000E+00
223	9.34582E-01	7.48450E+00	9.27232E-01	1.59006E-03	0.00000E+00	0.00000E+00
224	8.82409E-01	7.51833E+00	9.27030E-01	1.59570E-03	0.00000E+00	0.00000E+00
225	9.25143E-01	7.55233E+00	9.27022E-01	1.58855E-03	0.00000E+00	0.00000E+00
226	9.50005E-01	7.58333E+00	9.27125E-01	1.58477E-03	0.00000E+00	0.00000E+00
227	9.19263E-01	7.61633E+00	9.27090E-01	1.57810E-03	0.00000E+00	0.00000E+00
228	9.81226E-01	7.64833E+00	9.27329E-01	1.58926E-03	0.00000E+00	0.00000E+00
229	9.42088E-01	7.68233E+00	9.27394E-01	1.58358E-03	0.00000E+00	0.00000E+00
230	9.20421E-01	7.71433E+00	9.27364E-01	1.57691E-03	0.00000E+00	0.00000E+00
231	9.10318E-01	7.74733E+00	9.27289E-01	1.57177E-03	0.00000E+00	0.00000E+00
232	9.16055E-01	7.77933E+00	9.27240E-01	1.56569E-03	0.00000E+00	0.00000E+00
233	9.80212E-01	7.81133E+00	9.27470E-01	1.57567E-03	0.00000E+00	0.00000E+00
234	9.62820E-01	7.84333E+00	9.27622E-01	1.57625E-03	0.00000E+00	0.00000E+00
235	9.27678E-01	7.87900E+00	9.27622E-01	1.56947E-03	0.00000E+00	0.00000E+00
236	9.67358E-01	7.91300E+00	9.27792E-01	1.57194E-03	0.00000E+00	0.00000E+00
237	9.01526E-01	7.94583E+00	9.27680E-01	1.56923E-03	0.00000E+00	0.00000E+00
238	9.58282E-01	7.97800E+00	9.27810E-01	1.56793E-03	0.00000E+00	0.00000E+00
239	9.18623E-01	8.01183E+00	9.27771E-01	1.56179E-03	0.00000E+00	0.00000E+00
240	9.52132E-01	8.04200E+00	9.27874E-01	1.55857E-03	0.00000E+00	0.00000E+00
241	9.09282E-01	8.07583E+00	9.27796E-01	1.55399E-03	0.00000E+00	0.00000E+00
242	9.65912E-01	8.10700E+00	9.27955E-01	1.55563E-03	0.00000E+00	0.00000E+00
243	8.83765E-01	8.13900E+00	9.27771E-01	1.55997E-03	0.00000E+00	0.00000E+00
244	9.07330E-01	8.17300E+00	9.27687E-01	1.55581E-03	0.00000E+00	0.00000E+00
245	9.47471E-01	8.20500E+00	9.27768E-01	1.55153E-03	0.00000E+00	0.00000E+00
246	9.34985E-01	8.23700E+00	9.27798E-01	1.54544E-03	0.00000E+00	0.00000E+00
247	9.30121E-01	8.27083E+00	9.27807E-01	1.53915E-03	0.00000E+00	0.00000E+00
248	9.37416E-01	8.30300E+00	9.27846E-01	1.53338E-03	0.00000E+00	0.00000E+00
249	9.22009E-01	8.33583E+00	9.27823E-01	1.52734E-03	0.00000E+00	0.00000E+00
250	9.18967E-01	8.36967E+00	9.27787E-01	1.52159E-03	0.00000E+00	0.00000E+00
251	9.02685E-01	8.40267E+00	9.27686E-01	1.51881E-03	0.00000E+00	0.00000E+00
252	9.26316E-01	8.43467E+00	9.27681E-01	1.51274E-03	0.00000E+00	0.00000E+00
253	9.74284E-01	8.46767E+00	9.27866E-01	1.51809E-03	0.00000E+00	0.00000E+00
254	9.37892E-01	8.49967E+00	9.27906E-01	1.51258E-03	0.00000E+00	0.00000E+00
255	9.47611E-01	8.53183E+00	9.27984E-01	1.50860E-03	0.00000E+00	0.00000E+00
256	9.15238E-01	8.56383E+00	9.27934E-01	1.50349E-03	0.00000E+00	0.00000E+00
257	9.14173E-01	8.59767E+00	9.27880E-01	1.49855E-03	0.00000E+00	0.00000E+00
258	9.56068E-01	8.63067E+00	9.27990E-01	1.49674E-03	0.00000E+00	0.00000E+00
259	9.15185E-01	8.66367E+00	9.27940E-01	1.49174E-03	0.00000E+00	0.00000E+00
260	9.26990E-01	8.69650E+00	9.27936E-01	1.48595E-03	0.00000E+00	0.00000E+00
261	9.43962E-01	8.72950E+00	9.27998E-01	1.48150E-03	0.00000E+00	0.00000E+00
262	9.26172E-01	8.76250E+00	9.27991E-01	1.47580E-03	0.00000E+00	0.00000E+00
263	9.46401E-01	8.79533E+00	9.28062E-01	1.47183E-03	0.00000E+00	0.00000E+00
264	9.55709E-01	8.82933E+00	9.28167E-01	1.46999E-03	0.00000E+00	0.00000E+00
265	9.28681E-01	8.86217E+00	9.28169E-01	1.46439E-03	0.00000E+00	0.00000E+00
266	9.33084E-01	8.89517E+00	9.28188E-01	1.45896E-03	0.00000E+00	0.00000E+00
267	9.04980E-01	8.92900E+00	9.28100E-01	1.45608E-03	0.00000E+00	0.00000E+00
268	9.32353E-01	8.96200E+00	9.28116E-01	1.45068E-03	0.00000E+00	0.00000E+00
269	9.39166E-01	8.99500E+00	9.28158E-01	1.44583E-03	0.00000E+00	0.00000E+00
270	9.32928E-01	9.02617E+00	9.28176E-01	1.44053E-03	0.00000E+00	0.00000E+00
271	8.93832E-01	9.06000E+00	9.28048E-01	1.44084E-03	0.00000E+00	0.00000E+00
272	9.38845E-01	9.09300E+00	9.28088E-01	1.43605E-03	0.00000E+00	0.00000E+00
273	9.41662E-01	9.12500E+00	9.28138E-01	1.43161E-03	0.00000E+00	0.00000E+00
274	8.94413E-01	9.15883E+00	9.28014E-01	1.43172E-03	0.00000E+00	0.00000E+00
275	9.33043E-01	9.19083E+00	9.28032E-01	1.42659E-03	0.00000E+00	0.00000E+00
276	9.65242E-01	9.22200E+00	9.28168E-01	1.42784E-03	0.00000E+00	0.00000E+00
277	9.15540E-01	9.25683E+00	9.28122E-01	1.42338E-03	0.00000E+00	0.00000E+00

278	9.55975E-01	9.28967E+00	9.28223E-01	1.42180E-03	0.00000E+00	0.00000E+00
279	9.17744E-01	9.32267E+00	9.28185E-01	1.41716E-03	0.00000E+00	0.00000E+00
280	8.97664E-01	9.35467E+00	9.28076E-01	1.41632E-03	0.00000E+00	0.00000E+00
281	9.03312E-01	9.38767E+00	9.27987E-01	1.41402E-03	0.00000E+00	0.00000E+00
282	9.23108E-01	9.42067E+00	9.27969E-01	1.40907E-03	0.00000E+00	0.00000E+00
283	9.40724E-01	9.45367E+00	9.28015E-01	1.40478E-03	0.00000E+00	0.00000E+00
284	9.30739E-01	9.48650E+00	9.28024E-01	1.39982E-03	0.00000E+00	0.00000E+00
285	8.82695E-01	9.51950E+00	9.27864E-01	1.40403E-03	0.00000E+00	0.00000E+00
286	9.34289E-01	9.55333E+00	9.27887E-01	1.39926E-03	0.00000E+00	0.00000E+00
287	9.39833E-01	9.58633E+00	9.27929E-01	1.39498E-03	0.00000E+00	0.00000E+00
288	9.81553E-01	9.61833E+00	9.28116E-01	1.40268E-03	0.00000E+00	0.00000E+00
289	8.93769E-01	9.65233E+00	9.27997E-01	1.40290E-03	0.00000E+00	0.00000E+00
290	9.20555E-01	9.68617E+00	9.27971E-01	1.39826E-03	0.00000E+00	0.00000E+00
291	9.42749E-01	9.72000E+00	9.28022E-01	1.39435E-03	0.00000E+00	0.00000E+00
292	8.99384E-01	9.75383E+00	9.27923E-01	1.39303E-03	0.00000E+00	0.00000E+00
293	9.30678E-01	9.78683E+00	9.27933E-01	1.38827E-03	0.00000E+00	0.00000E+00
294	9.11641E-01	9.82067E+00	9.27877E-01	1.38463E-03	0.00000E+00	0.00000E+00
295	9.18919E-01	9.85267E+00	9.27846E-01	1.38024E-03	0.00000E+00	0.00000E+00
296	8.89102E-01	9.88667E+00	9.27714E-01	1.38183E-03	0.00000E+00	0.00000E+00
297	9.07287E-01	9.91767E+00	9.27645E-01	1.37888E-03	0.00000E+00	0.00000E+00
298	9.27070E-01	9.94983E+00	9.27643E-01	1.37422E-03	0.00000E+00	0.00000E+00
299	9.10371E-01	9.98267E+00	9.27585E-01	1.37082E-03	0.00000E+00	0.00000E+00
300	9.32232E-01	1.00167E+01	9.27601E-01	1.36630E-03	0.00000E+00	0.00000E+00
301	9.37152E-01	1.00495E+01	9.27633E-01	1.36209E-03	0.00000E+00	0.00000E+00
302	8.94576E-01	1.00825E+01	9.27522E-01	1.36201E-03	0.00000E+00	0.00000E+00
303	9.23771E-01	1.01163E+01	9.27510E-01	1.35754E-03	0.00000E+00	0.00000E+00

KENO MESSAGE NUMBER K5-123 EXECUTION TERMINATED DUE TO COMPLETION OF THE SPECIFIED NUMBER OF GENERATIONS.

LWT ANALYSIS; W17X17 OFA ASSEMBLY; NO WATER IN GAP

LIFETIME = 9.74486E-05 + OR - 2.73865E-07 GENERATION TIME = 3.83859E-05 + OR - 8.46030E-08
NU BAR = 2.43589E+00 + OR - 9.63558E-05 AVERAGE FISSION GROUP = 2.26257E+01 + OR - 5.66318E-03
ENERGY(EV) OF THE AVERAGE LETHARGY CAUSING FISSION = 1.43638E-01 + OR - 6.80425E-04

NO. OF INITIAL GENERATIONS SKIPPED	AVERAGE K-EFFECTIVE	DEVIATION	67 PER CENT CONFIDENCE INTERVAL	95 PER CENT CONFIDENCE INTERVAL	99 PER CENT CONFIDENCE INTERVAL	NUMBER OF HISTORIES
3	0.92756	+ OR - 0.00136	0.92620 TO 0.92892	0.92483 TO 0.93028	0.92347 TO 0.93164	300000
4	0.92765	+ OR - 0.00136	0.92628 TO 0.92901	0.92492 TO 0.93037	0.92356 TO 0.93173	299000
5	0.92773	+ OR - 0.00136	0.92637 TO 0.92910	0.92500 TO 0.93046	0.92364 TO 0.93183	298000
6	0.92788	+ OR - 0.00136	0.92652 TO 0.92925	0.92516 TO 0.93061	0.92380 TO 0.93197	297000
7	0.92796	+ OR - 0.00136	0.92659 TO 0.92932	0.92523 TO 0.93068	0.92387 TO 0.93205	296000
8	0.92786	+ OR - 0.00136	0.92650 TO 0.92923	0.92513 TO 0.93059	0.92377 TO 0.93195	295000
9	0.92783	+ OR - 0.00137	0.92646 TO 0.92920	0.92509 TO 0.93057	0.92372 TO 0.93194	294000
10	0.92797	+ OR - 0.00137	0.92660 TO 0.92933	0.92523 TO 0.93070	0.92387 TO 0.93207	293000
11	0.92809	+ OR - 0.00137	0.92673 TO 0.92946	0.92536 TO 0.93082	0.92400 TO 0.93219	292000
12	0.92807	+ OR - 0.00137	0.92670 TO 0.92944	0.92533 TO 0.93081	0.92396 TO 0.93218	291000
17	0.92813	+ OR - 0.00138	0.92675 TO 0.92952	0.92537 TO 0.93090	0.92398 TO 0.93228	286000
22	0.92810	+ OR - 0.00139	0.92671 TO 0.92949	0.92532 TO 0.93087	0.92393 TO 0.93226	281000
27	0.92782	+ OR - 0.00139	0.92643 TO 0.92920	0.92505 TO 0.93059	0.92366 TO 0.93198	276000
32	0.92795	+ OR - 0.00140	0.92655 TO 0.92934	0.92515 TO 0.93074	0.92375 TO 0.93214	271000
37	0.92795	+ OR - 0.00142	0.92653 TO 0.92937	0.92511 TO 0.93079	0.92369 TO 0.93221	266000
42	0.92785	+ OR - 0.00143	0.92642 TO 0.92929	0.92498 TO 0.93072	0.92355 TO 0.93216	261000
47	0.92789	+ OR - 0.00146	0.92643 TO 0.92934	0.92497 TO 0.93080	0.92352 TO 0.93226	256000
52	0.92804	+ OR - 0.00148	0.92656 TO 0.92952	0.92508 TO 0.93099	0.92360 TO 0.93247	251000
57	0.92839	+ OR - 0.00146	0.92693 TO 0.92986	0.92546 TO 0.93132	0.92400 TO 0.93278	246000
62	0.92848	+ OR - 0.00147	0.92701 TO 0.92995	0.92553 TO 0.93142	0.92406 TO 0.93289	241000
67	0.92862	+ OR - 0.00148	0.92714 TO 0.93011	0.92565 TO 0.93159	0.92417 TO 0.93308	236000
72	0.92875	+ OR - 0.00149	0.92726 TO 0.93025	0.92577 TO 0.93174	0.92428 TO 0.93323	231000
77	0.92882	+ OR - 0.00151	0.92731 TO 0.93033	0.92580 TO 0.93185	0.92429 TO 0.93336	226000
82	0.92834	+ OR - 0.00153	0.92681 TO 0.92987	0.92528 TO 0.93139	0.92376 TO 0.93292	221000
87	0.92835	+ OR - 0.00155	0.92680 TO 0.92990	0.92525 TO 0.93144	0.92371 TO 0.93299	216000
92	0.92852	+ OR - 0.00158	0.92694 TO 0.93010	0.92537 TO 0.93168	0.92379 TO 0.93326	211000

LWT ANALYSIS; W17X17 OFA ASSEMBLY; NO WATER IN GAP

NO. OF INITIAL GENERATIONS SKIPPED	AVERAGE K-EFFECTIVE	DEVIATION	67 PER CENT CONFIDENCE INTERVAL	95 PER CENT CONFIDENCE INTERVAL	99 PER CENT CONFIDENCE INTERVAL	NUMBER OF HISTORIES
97	0.92867	+ OR - 0.00159	0.92708 TO 0.93025	0.92549 TO 0.93184	0.92391 TO 0.93342	206000
102	0.92922	+ OR - 0.00160	0.92763 TO 0.93082	0.92603 TO 0.93242	0.92443 TO 0.93401	201000
107	0.92909	+ OR - 0.00164	0.92745 TO 0.93072	0.92582 TO 0.93236	0.92418 TO 0.93399	196000
112	0.92851	+ OR - 0.00165	0.92686 TO 0.93016	0.92521 TO 0.93181	0.92356 TO 0.93346	191000
117	0.92832	+ OR - 0.00168	0.92664 TO 0.93000	0.92496 TO 0.93168	0.92328 TO 0.93336	186000
122	0.92824	+ OR - 0.00169	0.92655 TO 0.92993	0.92487 TO 0.93162	0.92318 TO 0.93330	181000
127	0.92863	+ OR - 0.00172	0.92691 TO 0.93035	0.92519 TO 0.93207	0.92347 TO 0.93378	176000
132	0.92852	+ OR - 0.00175	0.92676 TO 0.93027	0.92501 TO 0.93203	0.92326 TO 0.93378	171000
137	0.92861	+ OR - 0.00178	0.92683 TO 0.93039	0.92505 TO 0.93218	0.92326 TO 0.93396	166000
142	0.92845	+ OR - 0.00181	0.92663 TO 0.93026	0.92482 TO 0.93207	0.92301 TO 0.93388	161000
147	0.92836	+ OR - 0.00186	0.92650 TO 0.93022	0.92465 TO 0.93207	0.92279 TO 0.93393	156000
152	0.92878	+ OR - 0.00189	0.92689 TO 0.93066	0.92500 TO 0.93255	0.92311 TO 0.93444	151000
157	0.92859	+ OR - 0.00194	0.92666 TO 0.93053	0.92472 TO 0.93247	0.92278 TO 0.93441	146000
162	0.92856	+ OR - 0.00200	0.92656 TO 0.93056	0.92456 TO 0.93256	0.92256 TO 0.93456	141000
167	0.92855	+ OR - 0.00207	0.92648 TO 0.93062	0.92440 TO 0.93269	0.92233 TO 0.93476	136000
172	0.92809	+ OR - 0.00211	0.92598 TO 0.93019	0.92388 TO 0.93230	0.92177 TO 0.93440	131000
177	0.92900	+ OR - 0.00210	0.92690 TO 0.93110	0.92480 TO 0.93321	0.92269 TO 0.93531	126000
182	0.92982	+ OR - 0.00207	0.92775 TO 0.93189	0.92568 TO 0.93396	0.92361 TO 0.93603	121000
187	0.93012	+ OR - 0.00213	0.92798 TO 0.93225	0.92585 TO 0.93438	0.92372 TO 0.93651	116000
192	0.92988	+ OR - 0.00220	0.92768 TO 0.93208	0.92548 TO 0.93429	0.92327 TO 0.93649	111000
197	0.92979	+ OR - 0.00228	0.92750 TO 0.93207	0.92522 TO 0.93436	0.92293 TO 0.93664	106000
202	0.92956	+ OR - 0.00239	0.92717 TO 0.93195	0.92478 TO 0.93434	0.92239 TO 0.93672	101000
207	0.92876	+ OR - 0.00244	0.92633 TO 0.93120	0.92389 TO 0.93364	0.92145 TO 0.93607	96000
212	0.92876	+ OR - 0.00253	0.92623 TO 0.93129	0.92371 TO 0.93382	0.92118 TO 0.93635	91000
217	0.92790	+ OR - 0.00258	0.92532 TO 0.93049	0.92274 TO 0.93307	0.92016 TO 0.93565	86000
222	0.92835	+ OR - 0.00259	0.92576 TO 0.93094	0.92318 TO 0.93353	0.92059 TO 0.93612	81000
227	0.92875	+ OR - 0.00267	0.92608 TO 0.93143	0.92341 TO 0.93410	0.92073 TO 0.93677	76000

LWT ANALYSIS; W17X17 OFA ASSEMBLY; NO WATER IN GAP

NO. OF INITIAL GENERATIONS SKIPPED	AVERAGE K-EFFECTIVE	DEVIATION	67 PER CENT CONFIDENCE INTERVAL	95 PER CENT CONFIDENCE INTERVAL	99 PER CENT CONFIDENCE INTERVAL	NUMBER OF HISTORIES
232	0.92838	+ OR - 0.00274	0.92565 TO 0.93112	0.92291 TO 0.93386	0.92017 TO 0.93659	71000
237	0.92690	+ OR - 0.00269	0.92422 TO 0.92959	0.92153 TO 0.93228	0.91884 TO 0.93496	66000
242	0.92576	+ OR - 0.00273	0.92303 TO 0.92850	0.92029 TO 0.93123	0.91756 TO 0.93396	61000
247	0.92621	+ OR - 0.00283	0.92338 TO 0.92904	0.92055 TO 0.93187	0.91772 TO 0.93470	56000
252	0.92667	+ OR - 0.00306	0.92361 TO 0.92974	0.92055 TO 0.93280	0.91749 TO 0.93586	51000
257	0.92546	+ OR - 0.00316	0.92229 TO 0.92862	0.91913 TO 0.93179	0.91597 TO 0.93495	46000
262	0.92446	+ OR - 0.00343	0.92103 TO 0.92789	0.91760 TO 0.93132	0.91416 TO 0.93475	41000
267	0.92316	+ OR - 0.00371	0.91946 TO 0.92687	0.91575 TO 0.93058	0.91204 TO 0.93429	36000
272	0.92248	+ OR - 0.00412	0.91836 TO 0.92659	0.91424 TO 0.93071	0.91013 TO 0.93483	31000
277	0.92103	+ OR - 0.00440	0.91664 TO 0.92543	0.91224 TO 0.92983	0.90785 TO 0.93422	26000
282	0.92139	+ OR - 0.00499	0.91639 TO 0.92638	0.91140 TO 0.93137	0.90641 TO 0.93636	21000
287	0.92005	+ OR - 0.00576	0.91429 TO 0.92581	0.90853 TO 0.93157	0.90276 TO 0.93734	16000
292	0.91662	+ OR - 0.00469	0.91193 TO 0.92131	0.90723 TO 0.92600	0.90254 TO 0.93070	11000
297	0.92086	+ OR - 0.00644	0.91443 TO 0.92730	0.90799 TO 0.93373	0.90155 TO 0.94017	6000

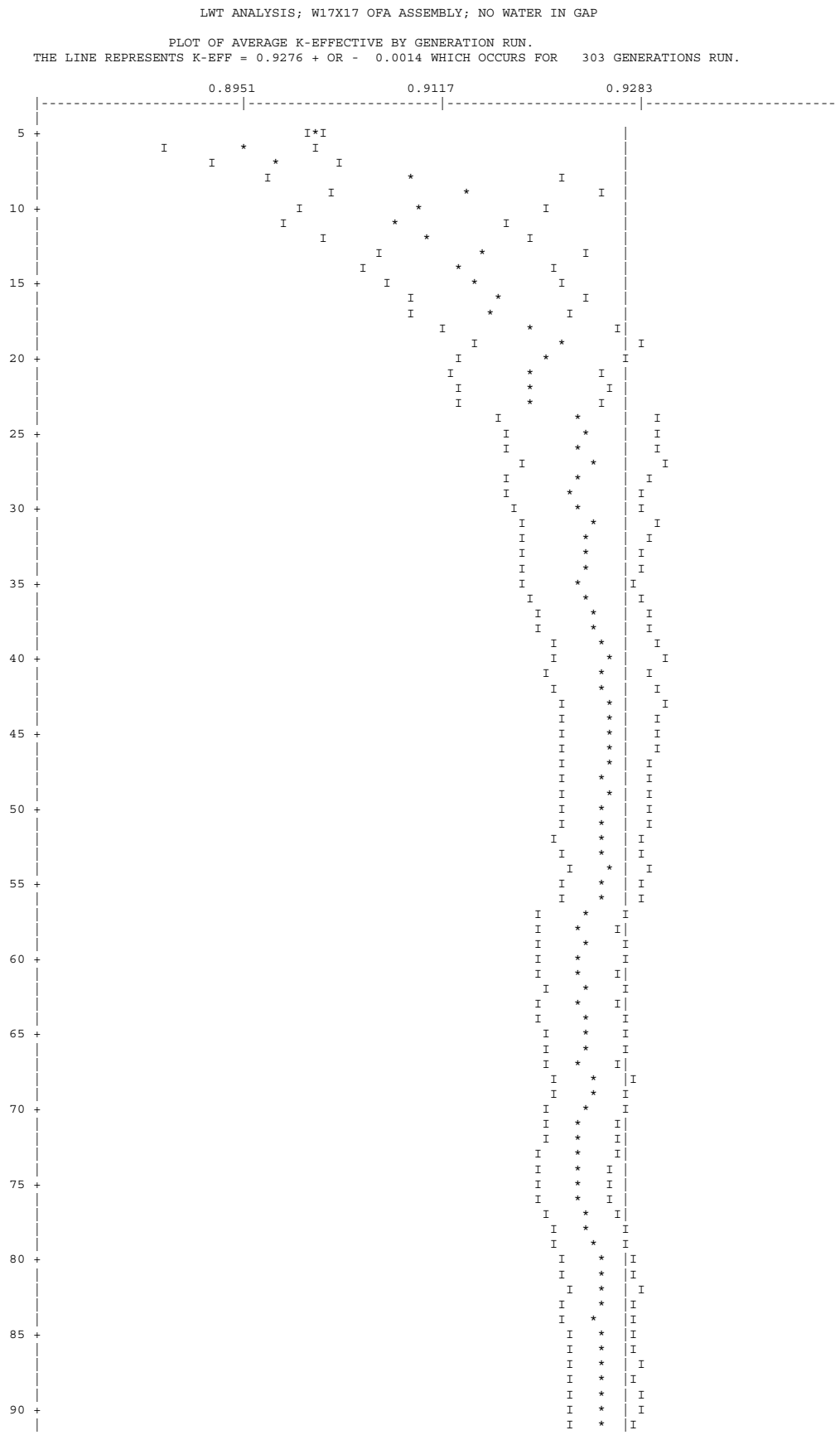
LWT ANALYSIS; W17X17 OFA ASSEMBLY; NO WATER IN GAP
PLOT OF AVERAGE K-EFFECTIVE BY GENERATION RUN.
THE LINE REPRESENTS K-EFF = 0.9276 + OR - 0.0014 WHICH OCCURS FOR 303 GENERATIONS RUN.
0.8951
0.9117
0.9283

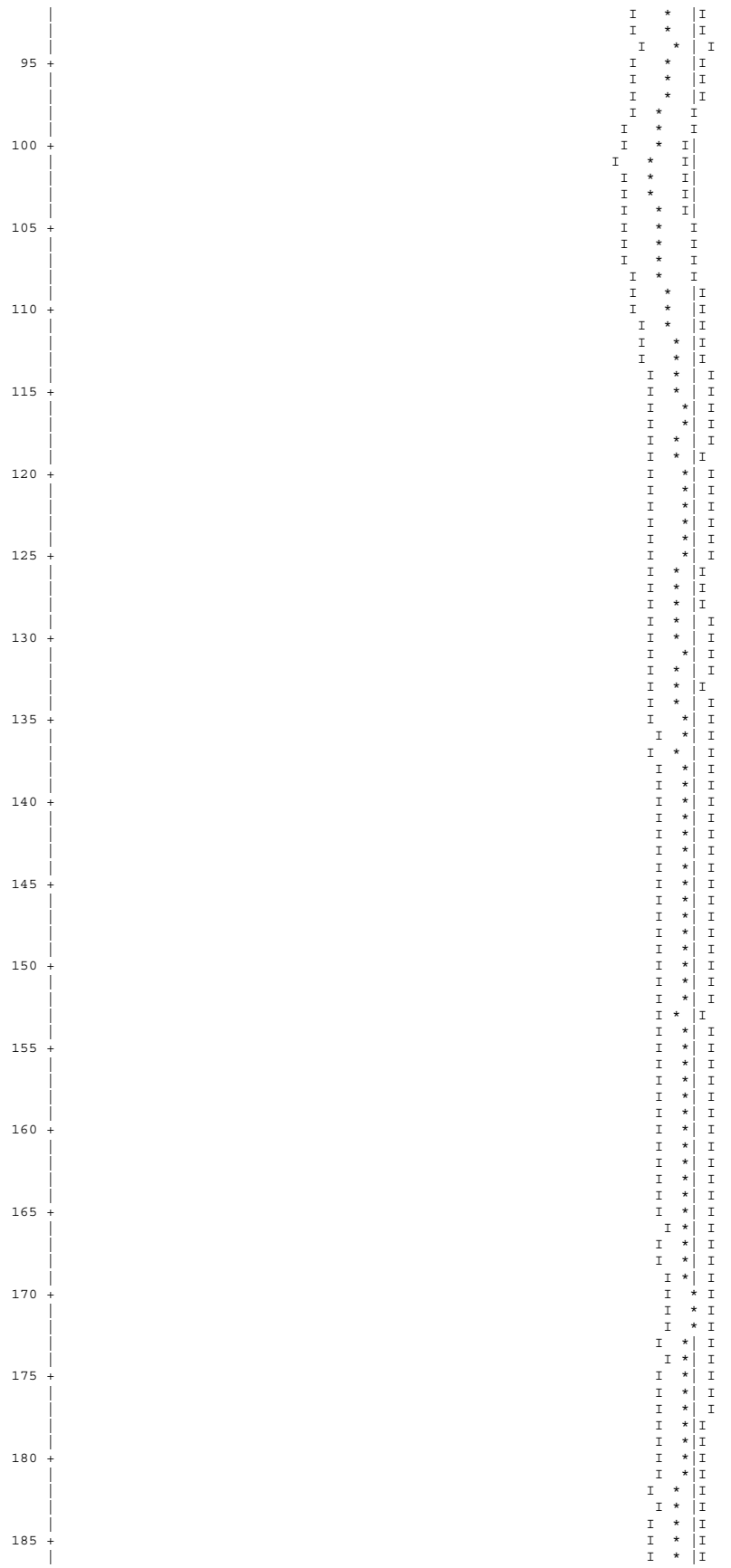

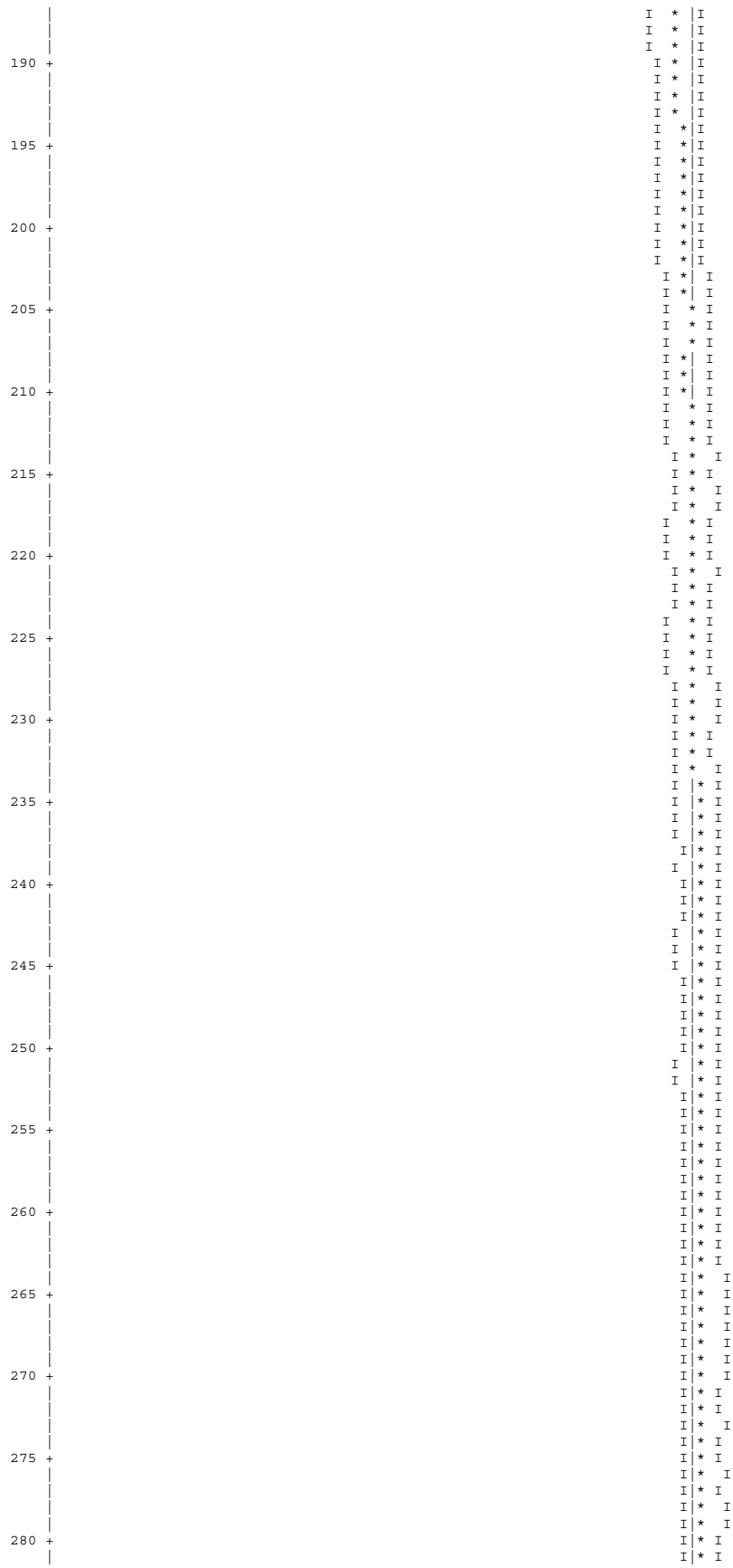


285
290
295
300

LWT ANALYSIS; W17X17 OFA ASSEMBLY; NO WATER IN GAP

SKIPPING 3 GENERATIONS

GROUP	FISSION FRACTION	UNIT	REGION	FISSIONS	PERCENT DEVIATION	ABSORPTIONS	PERCENT DEVIATION	LEAKAGE	PERCENT DEVIATION
1	0.0041			3.82159E-03	2.2285	2.23872E-03	1.6019	1.15365E-04	17.5402
2	0.0176			1.62875E-02	0.6788	8.22928E-03	0.5887	2.90700E-04	10.4431
3	0.0195			1.81087E-02	0.5982	7.53114E-03	0.5755	6.30226E-04	6.7848
4	0.0080			7.43364E-03	0.7828	3.56477E-03	0.7521	3.81020E-04	9.1521
5	0.0025			2.29030E-03	0.5584	2.46799E-03	0.4834	5.72032E-04	7.7086
6	0.0021			1.92991E-03	0.4310	4.08883E-03	0.3825	1.56084E-03	4.7185
7	0.0020			1.89655E-03	0.4214	4.61079E-03	0.3581	1.76478E-03	4.2262
8	0.0021			1.94380E-03	0.5120	6.93673E-03	0.4313	8.11684E-04	6.1129
9	0.0028			2.63948E-03	0.5738	1.08006E-02	0.4894	4.31467E-04	8.9926
10	0.0062			5.70684E-03	0.5540	1.67942E-02	0.4655	4.62936E-04	7.9790
11	0.0129			1.19819E-02	0.5434	2.73418E-02	0.4594	4.15735E-04	8.2827
12	0.0169			1.57150E-02	0.5901	2.90498E-02	0.5221	2.65027E-04	10.9580
13	0.0161			1.49765E-02	0.7211	2.96920E-02	0.6243	2.26158E-04	11.3033
14	0.0127			1.17814E-02	0.6073	4.24296E-02	0.5074	2.55644E-04	11.0784
15	0.0027			2.53721E-03	1.0023	8.66856E-03	0.7845	1.32182E-04	15.6621
16	0.0019			1.75894E-03	1.3997	5.16861E-03	0.9238	6.54276E-05	20.1921
17	0.0029			2.66520E-03	1.8406	3.52185E-03	1.0888	4.77522E-05	24.4371
18	0.0039			3.58287E-03	1.8401	3.66608E-03	1.1653	3.29000E-05	29.7861
19	0.0048			4.46800E-03	1.3701	5.84850E-03	0.8953	5.72788E-05	22.5666
20	0.0202			1.87404E-02	0.8243	2.29555E-02	0.5788	1.84537E-04	12.2584
21	0.0111			1.02892E-02	1.2914	1.00103E-02	0.8827	5.76837E-05	23.1358
22	0.0270			2.50763E-02	0.8781	2.31897E-02	0.6229	1.56659E-04	11.8902
23	0.1015			9.41627E-02	0.4969	9.15781E-02	0.3251	1.41312E-03	3.5432
24	0.2107			1.95465E-01	0.3094	1.86579E-01	0.2124	2.86114E-03	2.3289
25	0.1843			1.70920E-01	0.3838	1.61167E-01	0.2326	1.77367E-03	3.1578
26	0.2272			2.10732E-01	0.3707	1.99426E-01	0.2299	1.38539E-03	3.3467
27	0.0762			7.06463E-02	0.6653	6.77221E-02	0.3877	1.95343E-04	8.6185
SYSTEM TOTAL =				9.27557E-01	0.1468	9.85278E-01	0.0469	1.65467E-02	1.1479

ELAPSED TIME 10.11817 MINUTES

RANDOM NUMBER= 3F140C717467

```
LWT ANALYSIS; W17X17 OFA ASSEMBLY; NO WATER IN GAP

                              FREQUENCY FOR GENERATIONS    4 TO  303
0.8396 TO 0.8523     **
0.8523 TO 0.8649     *
0.8649 TO 0.8776     *
0.8776 TO 0.8902     *********
0.8902 TO 0.9028     *********************************
0.9028 TO 0.9155     ************************************
0.9155 TO 0.9281     ********************************************************************
0.9281 TO 0.9408     ************************************************************
0.9408 TO 0.9534     ****************************************
0.9534 TO 0.9661     ***************************
0.9661 TO 0.9787     *********
0.9787 TO 0.9914     *****
0.9914 TO 1.0040     *

                              FREQUENCY FOR GENERATIONS   79 TO  303
0.8396 TO 0.8523     *
0.8523 TO 0.8649     *
0.8649 TO 0.8776     *
0.8776 TO 0.8902     *****
0.8902 TO 0.9028     ********************
0.9028 TO 0.9155     ****************************
0.9155 TO 0.9281     ******************************************************
0.9281 TO 0.9408     ************************************************
0.9408 TO 0.9534     *********************************
0.9534 TO 0.9661     ********************
0.9661 TO 0.9787     *******
0.9787 TO 0.9914     *****
0.9914 TO 1.0040

                              FREQUENCY FOR GENERATIONS  154 TO  303
0.8396 TO 0.8523     *
0.8523 TO 0.8649     *
0.8649 TO 0.8776
0.8776 TO 0.8902     *****
0.8902 TO 0.9028     ************
0.9028 TO 0.9155     ******************
0.9155 TO 0.9281     ************************************
0.9281 TO 0.9408     *********************************
0.9408 TO 0.9534     ************************
0.9534 TO 0.9661     **********
0.9661 TO 0.9787     *****
0.9787 TO 0.9914     ****
0.9914 TO 1.0040

                              FREQUENCY FOR GENERATIONS  229 TO  303
0.8396 TO 0.8523
0.8523 TO 0.8649
0.8649 TO 0.8776
0.8776 TO 0.8902     ***
0.8902 TO 0.9028     ********
0.9028 TO 0.9155     **********
0.9155 TO 0.9281     ***************
0.9281 TO 0.9408     ******************
0.9408 TO 0.9534     ********
0.9534 TO 0.9661     *******
0.9661 TO 0.9787     **
0.9787 TO 0.9914     **
0.9914 TO 1.0040


*****************************************************************************************************************************************************
*

          CONGRATULATIONS!  YOU HAVE  SUCCESSFULLY TRAVERSED THE PERILOUS PATH THROUGH KENO V IN  10.11817 MINUTES

*****************************************************************************************************************************************************
*
```

Figure 6.6.1-4 CSAS Input/Output for NAC-LWT with PWR Fuel – 3.5% Enrichment – Most Reactive Accident Condition Configuration

```
__           PRIMARY MODULE ACCESS AND INPUT RECORD ( SCALE DRIVER - 95/03/29 - 09:06:37 )
   MODULE CSAS25   WILL BE CALLED
     LWT ANALYSIS; W17x17 OFA ASSEMBLY;  WATER IN GAP
     27GROUPNDF4 LATTICECELL
     UO2  1  0.95 293.0 92235 3.5 92238 96.5 END
     ZR   2  1.0  293.0  END
     H2O  3  1.0  293.0  END
     AL   4  1.0  293.0  END
     SS304 5 1.0  293.0  END
     PB    6 1.0 293.0 END
     H2O   7 1.000 293.0 END
     H2O   8 1.000 293.0 END
     H2O 9 1.0 293.0 END
     END COMP
     SQUAREPITCH  1.2598 0.7844 1 3 0.9144 2 0.8002 9 END
     LWT ANALYSIS; W17x17 OFA ASSEMBLY; WATER IN GAP
     READ PARAM RUN=YES PLT=NO TME=5000 GEN=303 NPG=1000 END PARAM
     READ GEOM
     UNIT  1
     COM='FUEL PIN CELL - WITH H2O'
     CYLINDER  1 1  0.3922   2P182.88
     CYLINDER  9 1  0.4001   2P182.88
     CYLINDER  2 1  0.4572   2P182.88
     CUBOID    3 1  4P0.6299 2P182.88
     UNIT  2
     COM='WATER ROD CELL - WITH H2O'
     CYLINDER  3 1  0.5715   2P182.88
     CYLINDER  2 1  0.6121   2P182.88
     CUBOID    3 1  4P0.6299 2P182.88
     GLOBAL UNIT 9
     ARRAY  1  -10.7083 -10.7083 -182.88
     CUBOID 3 1 4P11.2776 2P182.88
     CYLINDER 4 1 16.891 2P182.88
     CYLINDER 3 1 16.9863 2P182.88
     CYLINDER 5 1 18.8913 2P182.88
     CYLINDER 6 1 33.4963 2P182.88
     CYLINDER 5 1 36.5443 2P182.88
     CYLINDER 7 1 49.2443 2P182.88
     CYLINDER 5 1 49.8539 212.48 -192.16
     CYLINDER 6 1 49.8539 212.48 -199.78
     CYLINDER 5 1 49.8539 212.48 -208.67
     CUBOID 8 1 4P81.0000 243.00 -240.00
     END GEOM
     READ ARRAY
     ARA=1   NUX=17 NUY=17 NUZ=1  FILL
                              34R1
               5R1   2   2R1   2   2R1   2   5R1
                    3R1   2   9R1   2   3R1
                              17R1
     2R1   2   2R1   2   2R1   2   2R1   2   2R1   2   2R1
                              34R1
     2R1   2   2R1   2   2R1   2   2R1   2   2R1   2   2R1
                              34R1
     2R1   2   2R1   2   2R1   2   2R1   2   2R1   2   2R1
                              17R1
                    3R1   2   9R1   2   3R1
               5R1   2   2R1   2   2R1   2   5R1
                              34R1
     END FILL
     END ARRAY
     READ BOUNDS ZFC=VAC YXF=VAC END BOUNDS
     END DATA

   SECONDARY MODULE O0O008   HAS BEEN CALLED.

   MODULE O0O008   IS FINISHED. COMPLETION CODE     0. CPU TIME USED     1.32 (SECONDS).

   SECONDARY MODULE O0O002   HAS BEEN CALLED.

   MODULE O0O002   IS FINISHED. COMPLETION CODE     0. CPU TIME USED    13.07 (SECONDS).

   SECONDARY MODULE O0O009   HAS BEEN CALLED.

   MODULE O0O009   IS FINISHED. COMPLETION CODE     0. CPU TIME USED   622.14 (SECONDS).

   MODULE CSAS25   IS FINISHED. COMPLETION CODE     0. CPU TIME USED   641.09 (SECONDS).
```


CCCCCCCCCC SSSSSSSSSS AAAAAAAAA SSSSSSSSSS 22222222222 5555555555555
CCCCCCCCCCCC SSSSSSSSSSSS AAAAAAAAAAA SSSSSSSSSSSS 2222222222222 5555555555555
CC CC SS SS AA AA SS SS 22 22 55
CC SS AA AA SS 22 55
CC SS AA AA SS 22 55
CC SSSSSSSSSSS AAAAAAAAAAAAA SSSSSSSSSSS 22 555555555555
CC SSSSSSSSSSS AAAAAAAAAAAAA SSSSSSSSSSS 22 5555555555555
CC SS AA AA SS 22 55
CC SS AA AA SS 22 55
CC CC SS SS AA AA SS SS 22 55 55
CCCCCCCCCCCC SSSSSSSSSSSS AA AA SSSSSSSSSSSS 2222222222222 5555555555555
CCCCCCCCCC SSSSSSSSSS AA AA SSSSSSSSSS 2222222222222 55555555555
SSSSSSSSSS CCCCCCCCCC AAAAAAAAA LL EEEEEEEEEEEE PPPPPPPPPPP CCCCCCCCCC
SSSSSSSSSSSS CCCCCCCCCCCC AAAAAAAAAAA LL EEEEEEEEEEEE PPPPPPPPPPPP CCCCCCCCCCCC
SS SS CC CC AA AA LL EE PP PP CC CC
SS CC AA AA LL EE PP PP CC
SS CC AA AA LL EE PP PP CC
SSSSSSSSSSSS CC AAAAAAAAAAAAA LL EEEEEEEEE ------------ PPPPPPPPPPPP CC
SSSSSSSSSSS CC AAAAAAAAAAAAA LL EEEEEEEEE ------------ PPPPPPPPPPP CC
SS CC AA AA LL EE PP CC
SS CC AA AA LL EE PP CC
SS SS CC CC AA AA LL EE PP CC CC
SSSSSSSSSSSS CCCCCCCCCCCC AA AA LLLLLLLLLLLL EEEEEEEEEEEE PP CCCCCCCCCCCC
SSSSSSSSSS CCCCCCCCCC AA AA LLLLLLLLLLLL EEEEEEEEEEEE PP CCCCCCCCCC
0000000 7777777777777 // 22222222222 33333333333 // 99999999999 88888888888
000000000 777777777777 // 2222222222222 3333333333333 // 9999999999999 8888888888888
00 00 77 77 // 22 22 33 33 // 99 99 88 88
00 00 77 // // 22 33 // 99 99 88 88
00 00 77 // // 22 33 // 99 99 88 88
00 00 77 // 22 333 // 9999999999999 88888888888
00 00 77 // 22 333 // 999999999999 88888888888
00 00 77 // 22 33 // 99 88 88
00 00 77 // 22 33 // 99 88 88
00 00 77 // 22 33 33 // 99 88 88
000000000 77 // 2222222222222 3333333333333 // 9999999999999 8888888888888
0000000 77 // 2222222222222 33333333333 // 999999999999 88888888888
0000000 33333333333 11 11 0000000 33333333333
000000000 3333333333333 111 111 000000000 3333333333333
00 00 33 33 ::: 1111 1111 ::: 00 00 33 33
00 00 33 ::: 11 11 ::: 00 00 33
00 00 33 ::: 11 11 ::: 00 00 33
00 00 333 11 11 00 00 333
00 00 333 11 11 00 00 333
00 00 33 ::: 11 11 ::: 00 00 33
00 00 33 ::: 11 11 ::: 00 00 33
00 00 33 33 ::: 11 11 ::: 00 00 33 33
000000000 3333333333333 11111111 11111111 000000000 3333333333333
0000000 33333333333 11111111 11111111 0000000 33333333333

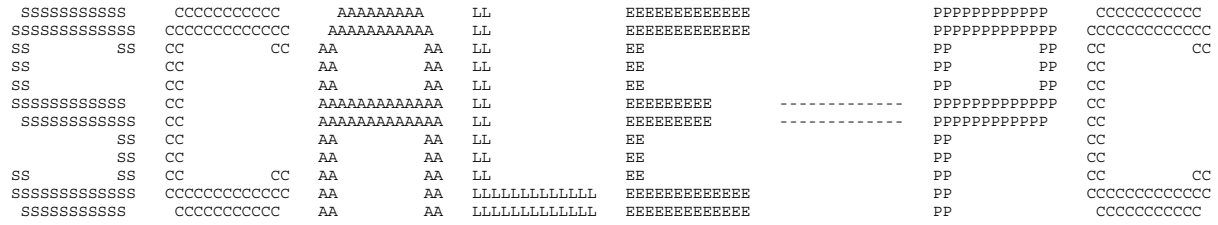


```
*******************************************************************************
*******************************************************************************
*******************************************************************************
*****                                                                     *****
*****                  PROGRAM VERIFICATION INFORMATION                   *****
*****                                                                     *****
*****                CODE SYSTEM:  SCALE-PC VERSION:  4.3                 *****
*****                                                                     *****
*******************************************************************************
*******************************************************************************
*****                                                                     *****
*****                                                                     *****
*****              PROGRAM:  CSAS                                         *****
*****                                                                     *****
*****        CREATION DATE:  03/08/96                                     *****
*****                                                                     *****
*****              VOLUME:   ENG                                          *****
*****                                                                     *****
*****              LIBRARY:  G:\SCALE43\WIN_NT\EXE                        *****
*****                                                                     *****
*****                                                                     *****
*****      PRODUCTION CODE:  CSAS                                         *****
*****                                                                     *****
*****              VERSION:  3.1                                          *****
*****                                                                     *****
*****              JOBNAME:  SCALE-PC                                     *****
*****                                                                     *****
*****    DATE OF EXECUTION:  07/23/98                                     *****
*****                                                                     *****
*****    TIME OF EXECUTION:  03:11:03                                     *****
*****                                                                     *****
*****                                                                     *****
*******************************************************************************
*******************************************************************************
*******************************************************************************
```

```
LWT ANALYSIS; W17X17 OFA ASSEMBLY;  WATER IN GAP


**** PROBLEM PARAMETERS ****

LIB 27GROUPNDF4  LIBRARY
MXX            9 MIXTURES
MSC            9 COMPOSITION SPECIFICATIONS
IZM            4 MATERIAL ZONES
GE  LATTICECELL  GEOMETRY
MORE           0 0/1 DO NOT READ/READ OPTIONAL PARAMETER DATA
MSLN           0 FUEL SOLUTIONS


**** PROBLEM COMPOSITION DESCRIPTION ****

SC  UO2          STANDARD COMPOSITION
MX             1 MIXTURE NO.
VF        0.9500 VOLUME FRACTION
ROTH     10.9600 THEORETICAL DENSITY
NEL            2 NO. ELEMENTS
ICP            1 0/1 MIXTURE/COMPOUND
TEMP       293.0 DEG KELVIN
           92000      1.00 ATOM/MOLECULE
                           92235     3.500 WT%
                           92238    96.500 WT%
            8016      2.00 ATOMS/MOLECULE
END

SC  ZR           STANDARD COMPOSITION
MX             2 MIXTURE NO.
VF        1.0000 VOLUME FRACTION
ROTH      6.4900 THEORETICAL DENSITY
NEL            1 NO. ELEMENTS
ICP            1 0/1 MIXTURE/COMPOUND
TEMP       293.0 DEG KELVIN
           40000      1.00 ATOM/MOLECULE
END

SC  H2O          STANDARD COMPOSITION
MX             3 MIXTURE NO.
VF        1.0000 VOLUME FRACTION
ROTH      0.9982 THEORETICAL DENSITY
NEL            2 NO. ELEMENTS
ICP            1 0/1 MIXTURE/COMPOUND
TEMP       293.0 DEG KELVIN
            1001      2.00 ATOMS/MOLECULE
            8016      1.00 ATOM/MOLECULE
END

SC  AL           STANDARD COMPOSITION
MX             4 MIXTURE NO.
VF        1.0000 VOLUME FRACTION
ROTH      2.7020 THEORETICAL DENSITY
NEL            1 NO. ELEMENTS
ICP            1 0/1 MIXTURE/COMPOUND
TEMP       293.0 DEG KELVIN
           13027      1.00 ATOM/MOLECULE
END

SC  SS304        STANDARD COMPOSITION
MX             5 MIXTURE NO.
VF        1.0000 VOLUME FRACTION
ROTH      7.9200 THEORETICAL DENSITY
NEL            4 NO. ELEMENTS
ICP            0 0/1 MIXTURE/COMPOUND
TEMP       293.0 DEG KELVIN
           24304    19.000 WT%
           25055     2.000 WT%
           26304    69.500 WT%
           28304     9.500 WT%
END

SC  PB           STANDARD COMPOSITION
MX             6 MIXTURE NO.
VF        1.0000 VOLUME FRACTION
ROTH     11.3440 THEORETICAL DENSITY
NEL            1 NO. ELEMENTS
ICP            1 0/1 MIXTURE/COMPOUND
TEMP       293.0 DEG KELVIN
           82000      1.00 ATOM/MOLECULE
END

SC  H2O          STANDARD COMPOSITION
MX             7 MIXTURE NO.
VF        1.0000 VOLUME FRACTION
ROTH      0.9982 THEORETICAL DENSITY
NEL            2 NO. ELEMENTS
ICP            1 0/1 MIXTURE/COMPOUND
TEMP       293.0 DEG KELVIN
            1001      2.00 ATOMS/MOLECULE
            8016      1.00 ATOM/MOLECULE
END

SC  H2O          STANDARD COMPOSITION
```

```
MX             8 MIXTURE NO.
VF        1.0000 VOLUME FRACTION
ROTH      0.9982 THEORETICAL DENSITY
NEL            2 NO. ELEMENTS
ICP            1 0/1 MIXTURE/COMPOUND
TEMP       293.0 DEG KELVIN
            1001      2.00 ATOMS/MOLECULE
            8016      1.00 ATOM/MOLECULE
END

SC  H2O          STANDARD COMPOSITION
MX             9 MIXTURE NO.
VF        1.0000 VOLUME FRACTION
ROTH      0.9982 THEORETICAL DENSITY
NEL            2 NO. ELEMENTS
ICP            1 0/1 MIXTURE/COMPOUND
TEMP       293.0 DEG KELVIN
            1001      2.00 ATOMS/MOLECULE
            8016      1.00 ATOM/MOLECULE
END


**** PROBLEM GEOMETRY ****

CTP SQUAREPITCH  CELL TYPE
PITCH     1.2598 CM CENTER TO CENTER SPACING
FUELOD    0.7844 CM FUEL DIAMETER OR SLAB THICKNESS
MFUEL          1 MIXTURE NO. OF FUEL
MMOD           3 MIXTURE NO. OF MODERATOR
CLADOD    0.9144 CM CLAD OUTER DIAMETER
MCLAD          2 MIXTURE NO. OF CLAD
GAPOD     0.8002 CM GAP OUTER DIAMETER
MGAP           9 MIXTURE NO. OF GAP


ZONE SPECIFICATIONS FOR LATTICECELL GEOMETRY

               ZONE  1 IS FUEL
               ZONE  2 IS GAP
               ZONE  3 IS CLAD
               ZONE  4 IS MOD
```

```
*****************************************************************************************************************
***                                                                                                           ***
***                            LWT ANALYSIS; W17X17 OFA ASSEMBLY;  WATER IN GAP                               ***
***                                                                                                           ***
*****************************************************************************************************************
*****************************************************************************************************************
***                                                                                                           ***
***                              ********** DATA LIBRARY INFORMATION **********                              ***
***                                                                                                           ***
***          UNIT                                                VOLUME                                       ***
***         NUMBER               DATA SET NAME                   NAME        UNIT FUNCTION                    ***
***         ------               -------------                   ----        -------------                    ***
***                                                                                                           ***
***           89     G:\scale43\DATALIB\FT89F001                              STANDARD COMPOSITION LIBRARY     ***
***                                                                                                           ***
***           82     G:\scale43\DATALIB\FT82F001                              CROSS SECTION LIBRARY            ***
***                                                                                                           ***
***           11     D:\PROJECTS\BU85-C~1\pwrfin02\17HX2M\FT11F00             SHORT CROSS SECTION LIBRARY      ***
***                                                                                                           ***
***           90     D:\PROJECTS\BU85-C~1\pwrfin02\17HX2M\FT90F00             INPUT DATA DIRECT ACCESS         ***
***                                                                                                           ***
*****************************************************************************************************************
*****************************************************************************************************************
***                                                                                                           ***
***                                                                                                           ***
***                                    STANDARD COMPOSITION LIBRARY DATA                                      ***
***                                    ---------------------------------                                      ***
***                                                                                                           ***
***            UNIT NUMBER  :  89                                                                             ***
***                                                                                                           ***
***            DATASET NAME :  G:\scale43\DATALIB\FT89F001                                                    ***
***                                                                                                           ***
***            LIBRARY TITLE:  SCALE-4 STANDARD COMPOSITION LIBRARY                                           ***
***                            637 STANDARD COMPOSITIONS, 490 NUCLIDES                                        ***
***                            90 ELEMENTS WITH VARIABLE ISOTOPIC DISTRBUTIONS.                               ***
***                                                                                                           ***
***            CREATION DATE:   6/30/95                                                                       ***
***                                                                                                           ***
***                                                                                                           ***
***                                                                                                           ***
***                                      CROSS SECTION LIBRARY DATA                                           ***
***                                     ---------------------------                                           ***
***                                                                                                           ***
***            UNIT NUMBER  :  82                                                                             ***
***                                                                                                           ***
***            DATASET NAME :  G:\scale43\DATALIB\FT82F001                                                    ***
***                                                                                                           ***
***            LIBRARY TITLE:  SCALE 4.2 - 27 GROUP NEUTRON GROUP LIBRARY                                     ***
***                               BASED ON ENDF-B VERSION 4 DATA                                              ***
***                                  COMPILED FOR NRC     1/27/89                                             ***
***                                     LAST UPDATED                                          08/12/94  ***
***                                        L.M.PETRIE   -   ORNL                                              ***
***                                                                                                           ***
***                                                                                                           ***
***                                                                                                           ***
***                                                                                                           ***
*****************************************************************************************************************
*****************************************************************************************************************

                        ........    0 IO'S WERE USED BEFORE READING KENO V DATA    ........

                        ........    0 IO'S WERE USED READING THE KENO V PARAMETER DATA    ........


                       *************** DATA READING COMPLETED ***************

                        ........    0 IO'S WERE USED PREPARING THE KENO V INPUT DATA    ........

                        ........    0 IO'S WERE USED LOADING THE KENO V DATA    ........

                        ........    0 IO'S WERE USED LOADING THE DATA    ........

                        ........    0 IO'S WERE USED CHECKING THE KENO V GEOMETRY DATA    ........
                        *****  RESTART DATA HAS BEEN WRITTEN ON UNIT 95  *****

                        ........    0 IO'S WERE USED WRITING THE KENO V - CSAS DATA    ........

                        ........    0 IO'S WERE USED PROCESSING CSAS INPUT DATA    ........


 CONTROL MODULE CSAS25   IS COMPLETE.
```

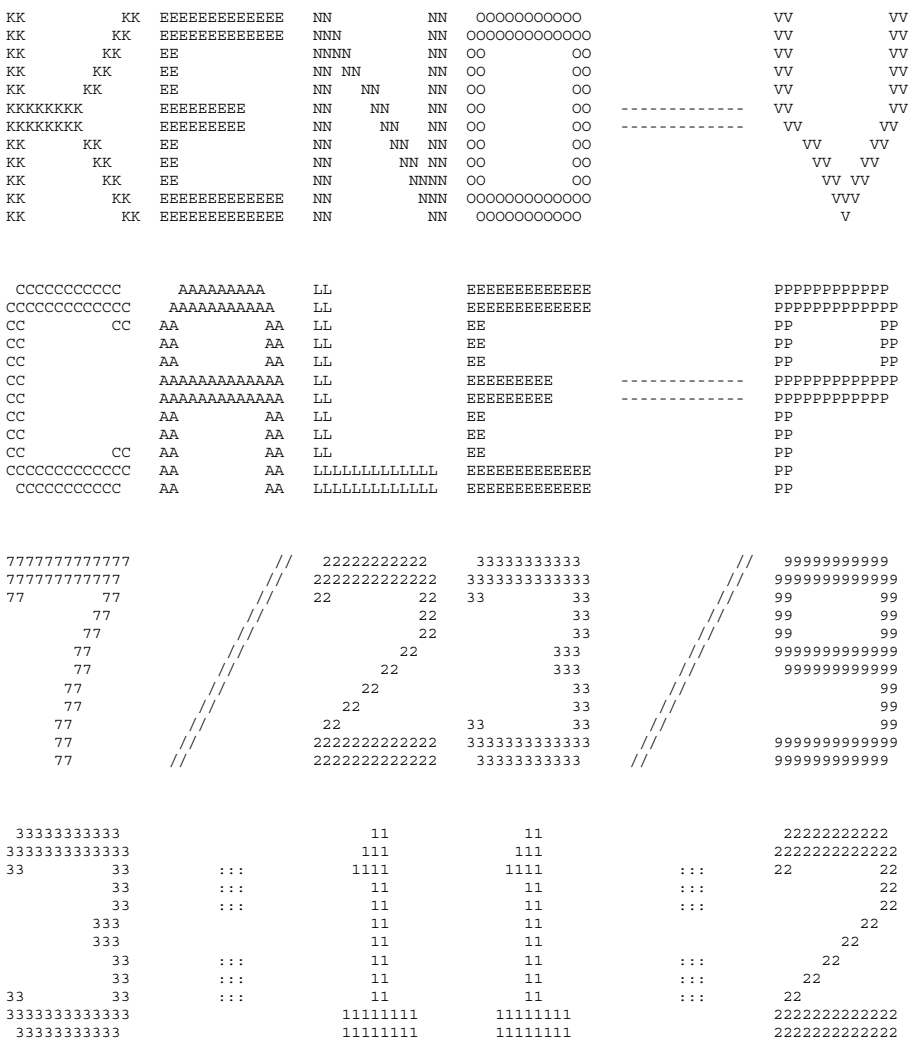
KK KK EEEEEEEEEEEE NN NN OOOOOOOOOO VV VV
KK KK EEEEEEEEEEEE NNN NN OOOOOOOOOOOO VV VV
KK KK EE NNNN NN OO OO VV VV
KK KK EE NN NN NN OO OO VV VV
KK KK EE NN NN NN OO OO VV VV
KKKKKKK EEEEEEEE NN NN NN OO OO VV VV
KKKKKKK EEEEEEEE NN NN NN OO OO VV VV
KK KK EE NN NN NN OO OO VV VV
KK KK EE NN NN NN OO OO VV VV
KK KK EE NN NNNN OO OO VV VV
KK KK EEEEEEEEEEEE NN NNN OOOOOOOOOOOO VVV
KK KK EEEEEEEEEEEE NN NN OOOOOOOOOO V
SSSSSSSSSS CCCCCCCCCC AAAAAAAAA LL EEEEEEEEEEEE PPPPPPPPPP CCCCCCCCCC
SSSSSSSSSSS CCCCCCCCCCCC AAAAAAAAAA LL EEEEEEEEEEEE PPPPPPPPPPP CCCCCCCCCCCC
SS SS CC CC AA AA LL EE PP PP CC CC
SS CC AA AA LL EE PP PP CC
SS CC AA AA LL EE PP PP CC
SSSSSSSSSSS CC AAAAAAAAAAAAA LL EEEEEEEE PPPPPPPPPPP CC
SSSSSSSSSS CC AAAAAAAAAAAAA LL EEEEEEEE PPPPPPPPPP CC
SS CC AA AA LL EE PP CC
SS CC AA AA LL EE PP CC
SS SS CC CC AA AA LL EE PP CC CC
SSSSSSSSSSS CCCCCCCCCCCC AA AA LLLLLLLLLLL EEEEEEEEEEE PP CCCCCCCCCCC
SSSSSSSSSS CCCCCCCCCC AA AA LLLLLLLLLLL EEEEEEEEEEE PP CCCCCCCCCC
0000000 7777777777777 // 22222222222 33333333333 // 99999999999 88888888888
000000000 777777777777 // 2222222222222 3333333333333 // 9999999999999 8888888888888
00 00 77 77 // 22 22 33 33 // 99 99 88 88
00 00 77 // // 22 33 // 99 99 88 88
00 00 77 // // 22 33 // 99 99 88 88
00 00 77 // 22 333 // 9999999999999 88888888888
00 00 77 // 22 333 // 999999999999 88888888888
00 00 77 // 22 33 // 99 88 88
00 00 77 // 22 33 // 99 88 88
00 00 77 // 22 33 33 // 99 88 88
000000000 77 // 2222222222222 3333333333333 // 9999999999999 8888888888888
0000000 77 // 2222222222222 33333333333 // 999999999999 88888888888
0000000 33333333333 11 11 22222222222 11
000000000 3333333333333 111 111 2222222222222 111
00 00 33 33 ::: 1111 1111 ::: 22 22 1111
00 00 33 ::: 11 11 ::: 22 11
00 00 33 ::: 11 11 ::: 22 11
00 00 333 11 11 22 11
00 00 333 11 11 22 11
00 00 33 ::: 11 11 ::: 22 11
00 00 33 ::: 11 11 ::: 22 11
00 00 33 33 ::: 11 11 ::: 22 11
000000000 3333333333333 11111111 11111111 2222222222222 11111111
0000000 33333333333 11111111 11111111 2222222222222 11111111

```
*****************************************************************************************************************
***                                                                                                           ***
***                            LWT ANALYSIS; W17X17 OFA ASSEMBLY; WATER IN GAP                                ***
***                                                                                                           ***
*****************************************************************************************************************
***                              ******       NUMERIC PARAMETERS       ******                                ***
***                                                                                                           ***
***                                                                                                           ***
***                    TME       MAXIMUM PROBLEM TIME (MIN)                        ******                   ***
***                                                                                                           ***
***                    TBA       TIME PER GENERATION (MIN)                           0.50                   ***
***                                                                                                           ***
***                    GEN       NUMBER OF GENERATIONS                                303                   ***
***                                                                                                           ***
***                    NPG       NUMBER PER GENERATION                               1000                   ***
***                                                                                                           ***
***                    NSK       NUMBER OF GENERATIONS TO BE SKIPPED                    3                   ***
***                                                                                                           ***
***                    BEG       BEGINNING GENERATION NUMBER                            1                   ***
***                                                                                                           ***
***                    RES       GENERATIONS BETWEEN CHECKPOINTS                        0                   ***
***                                                                                                           ***
***                    X1D       NUMBER OF EXTRA 1-D CROSS SECTIONS                     1                   ***
***                                                                                                           ***
***                    NBK       NEUTRON BANK SIZE                                   1025                   ***
***                                                                                                           ***
***                    XNB       EXTRA POSITIONS IN NEUTRON BANK                        0                   ***
***                                                                                                           ***
***                    NFB       FISSION BANK SIZE                                   1000                   ***
***                                                                                                           ***
***                    XFB       EXTRA POSITIONS IN FISSION BANK                        0                   ***
***                                                                                                           ***
***                    WTA       DEFAULT VALUE OF WEIGHT AVERAGE                   0.5000                   ***
***                                                                                                           ***
***                    WTH       WEIGHT HIGH FOR SPLITTING                         3.0000                   ***
***                                                                                                           ***
***                    WTL       WEIGHT LOW FOR RUSSIAN ROULETTE                   0.3333                   ***
***                                                                                                           ***
***                    RND       STARTING RANDOM NUMBER                       BB827100001                   ***
***                                                                                                           ***
***                    NB8       NUMBER OF D.A. BLOCKS ON UNIT  8                    200                   ***
***                                                                                                           ***
***                    NL8       LENGTH OF D.A. BLOCKS ON UNIT  8                    512                   ***
***                                                                                                           ***
***                    ADJ       MODE OF CALCULATION                              FORWARD                  ***
***                                                                                                           ***
***                              INPUT DATA WRITTEN ON RESTART UNIT                    NO                   ***
***                                                                                                           ***
***                              BINARY DATA INTERFACE                                YES                   ***
***                                                                                                           ***
***                                                                                                           ***
*****************************************************************************************************************
*****************************************************************************************************************
```

```
*****************************************************************************************************************
*****************************************************************************************************************
***                                                                                                           ***
***                            LWT ANALYSIS; W17X17 OFA ASSEMBLY; WATER IN GAP                                ***
***                                                                                                           ***
*****************************************************************************************************************
***                                ******      LOGICAL PARAMETERS        ******                               ***
***                                                                                                           ***
***  RUN  EXECUTE PROBLEM AFTER CHECKING DATA    YES            PLT  PLOT PICTURE MAP(S)                    NO ***
***                                                                                                           ***
***  FLX  COMPUTE FLUX                            NO            FDN  COMPUTE FISSION DENSITIES              NO ***
***                                                                                                           ***
***  SMU  COMPUTE AVG UNIT SELF-MULTIPLICATION    NO            NUB  COMPUTE NU-BAR & AVG FISSION GROUP     YES ***
***                                                                                                           ***
***  MKU  COMPUTE MATRIX K-EFF BY UNIT NUMBER     NO            MKP  COMPUTE MATRIX K-EFF BY UNIT LOCATION  NO ***
***                                                                                                           ***
***  CKU  COMPUTE COFACTOR K-EFF BY UNIT NUMBER   NO            CKP  COMPUTE COFACTOR K-EFF BY UNIT LOCATION NO ***
***                                                                                                           ***
***  FMU  PRINT FISS PROD MATRIX BY UNIT NUMBER   NO            FMP  PRINT FISS PROD MATRIX BY UNIT LOCATION NO ***
***                                                                                                           ***
***  MKH  COMPUTE MATRIX K-EFF BY HOLE NUMBER     NO            MKA  COMPUTE MATRIX K-EFF BY ARRAY NUMBER   NO ***
***                                                                                                           ***
***  CKH  COMPUTE COFACTOR K-EFF BY HOLE NUMBER   NO            CKA  COMPUTE COFACTOR K-EFF BY ARRAY NUMBER NO ***
***                                                                                                           ***
***  FMH  PRINT FISS PROD MATRIX BY HOLE NUMBER   NO            FMA  PRINT FISS PROD MATRIX BY ARRAY NUMBER NO ***
***                                                                                                           ***
***  HHL  COLLECT MATRIX BY HIGHEST HOLE LEVEL    NO            HAL  COLLECT MATRIX BY HIGHEST ARRAY LEVEL  NO ***
***                                                                                                           ***
***  AMX  PRINT ALL MIXED CROSS SECTIONS          NO            FAR  PRINT FIS. AND ABS. BY REGION          NO ***
***                                                                                                           ***
***  XS1  PRINT 1-D MIXTURE X-SECTIONS            NO            GAS  PRINT FAR BY GROUP                     NO ***
***                                                                                                           ***
***  XS2  PRINT 2-D MIXTURE X-SECTIONS            NO            PAX  PRINT XSEC-ALBEDO CORRELATION TABLES   NO ***
***                                                                                                           ***
***  XAP  PRINT MIXTURE ANGLES & PROBABILITIES    NO            PWT  PRINT WEIGHT AVERAGE ARRAY             NO ***
***                                                                                                           ***
***  PKI  PRINT FISSION SPECTRUM                  NO            PGM  PRINT INPUT GEOMETRY                   NO ***
***                                                                                                           ***
***  P1D  PRINT EXTRA 1-D CROSS SECTIONS          NO            BUG  PRINT DEBUG INFORMATION                NO ***
***                                                                                                           ***
***                                                             TRK  PRINT TRACKING INFORMATION             NO ***
***                                                                                                           ***
***                                                                                                           ***
*****************************************************************************************************************
*****************************************************************************************************************
*****************************************************************************************************************
                                  PARAMETER INPUT COMPLETED

                        .........    0 IO'S WERE USED READING THE PARAMETER DATA      .........

                       ************** DATA READING COMPLETED **************
```

```
*****************************************************************************************************
***                                                                                               ***
***          LWT ANALYSIS; W17X17 OFA ASSEMBLY; WATER IN GAP                                      ***
***                                                                                               ***
*****************************************************************************************************
*****************************************************************************************************
***                                                                                               ***
***                              ****** ADDITIONAL INFORMATION ******                             ***
***                                                                                               ***
***  NUMBER OF ENERGY GROUPS              27       USE LATTICE GEOMETRY                    YES  ***
***                                                                                               ***
***  NO. OF FISSION SPECTRUM SOURCE GROUP  1       GLOBAL ARRAY NUMBER                       1  ***
***                                                                                               ***
***  NO. OF SCATTERING ANGLES IN XSECS     2       NUMBER OF UNITS IN THE GLOBAL X DIR.     17  ***
***                                                                                               ***
***  ENTRIES/NEUTRON IN THE NEUTRON BANK  16       NUMBER OF UNITS IN THE GLOBAL Y DIR.     17  ***
***                                                                                               ***
***  ENTRIES/NEUTRON IN THE FISSION BANK   9       NUMBER OF UNITS IN THE GLOBAL Z DIR.      1  ***
***                                                                                               ***
***  NUMBER OF MIXTURES USED               9       USE A GLOBAL REFLECTOR                  YES  ***
***                                                                                               ***
***  NUMBER OF BIAS ID'S USED              1       USE NESTED HOLES                         NO  ***
***                                                                                               ***
***  NUMBER OF DIFFERENTIAL ALBEDOS USED   0       NUMBER OF HOLES                           0  ***
***                                                                                               ***
***  TOTAL INPUT GEOMETRY REGIONS         19       MAXIMUM HOLE NESTING LEVEL                0  ***
***                                                                                               ***
***  NUMBER OF GEOMETRY REGIONS USED      19       USE NESTED ARRAYS                        NO  ***
***                                                                                               ***
***  LARGEST GEOMETRY UNIT NUMBER          9       NUMBER OF ARRAYS USED                     1  ***
***                                                                                               ***
***  LARGEST ARRAY NUMBER                  1       MAXIMUM ARRAY NESTING LEVEL               1  ***
***                                                                                               ***
***                                                                                               ***
***  +X BOUNDARY CONDITION                VAC      -X BOUNDARY CONDITION                   VAC  ***
***                                                                                               ***
***  +Y BOUNDARY CONDITION                VAC      -Y BOUNDARY CONDITION                   VAC  ***
***                                                                                               ***
***  +Z BOUNDARY CONDITION                VAC      -Z BOUNDARY CONDITION                   VAC  ***
***                                                                                               ***
*****************************************************************************************************
```

```
*******************************************************************************************
***                                                                                     ***
***          LWT ANALYSIS; W17X17 OFA ASSEMBLY; WATER IN GAP                            ***
***                                                                                     ***
*******************************************************************************************
*******************************************************************************************
***                                                                                     ***
***                    ****** SPACE AND SUPERGROUP INFORMATION ******                   ***
***                                                                                     ***
***       100000 WORDS IS THE TOTAL SPACE AVAILABLE.                                    ***
***                                                                                     ***
***        28457 WORDS WERE USED FOR NON-SUPERGROUP STORAGE.                            ***
***                                                                                     ***
***        71543 WORDS OF STORAGE ARE AVAILABLE FOR SUPERGROUPED DATA.                  ***
***                                                                                     ***
***        99759 WORDS OF STORAGE ARE AVAILABLE FOR CONSTRUCTING THE SUPERGROUPS.       ***
***                                                                                     ***
***        71483 WORDS OF STORAGE ARE AVAILABLE TO EACH SUPERGROUP.                     ***
***                                                                                     ***
***         1172 WORDS ARE NEEDED FOR THE LARGEST GROUP.                                ***
***                                                                                     ***
***        29845 WORDS OF STORAGE IS SUFFICIENT TO RUN THIS PROBLEM.                    ***
***                                                                                     ***
***        42059 WORDS OF STORAGE WILL ALLOW THE PROBLEM TO RUN WITH ONE SUPERGROUP.     ***
***                                                                                     ***
***        42144 WORDS OF STORAGE WILL BE USED TO RUN THIS PROBLEM.                     ***
***                                                                                     ***
*******************************************************************************************
*******************************************************************************************
***                                                                                     ***
***                   STARTING      ENDING       XSEC       ALBEDO      TOTAL          ***
***   SUPERGROUP        GROUP        GROUP      LENGTH      LENGTH      LENGTH          ***
***                                                                                     ***
***                                                                                     ***
***          1            1            27         2697           0       13542          ***
***                                                                                     ***
*******************************************************************************************

            ........    0 IO'S WERE USED IN SUPERGROUPING    ........

            ........    0 IO'S WERE USED LOADING THE DATA    ........
```

LWT ANALYSIS; W17X17 OFA ASSEMBLY; WATER IN GAP

REGION		MEDIA NUM	BIAS ID	GEOMETRY DESCRIPTION FOR THOSE UNITS UTILIZED IN THIS PROBLEM					
				----- UNIT 1 -----					
FUEL PIN CELL - WITH H2O									
1	CYLINDER	1	1	RADIUS = 0.39220	+Z = 182.88	-Z = -182.88	CENTERLINE IS AT	X = 0.00000	Y = 0.00000
2	CYLINDER	9	1	RADIUS = 0.40010	+Z = 182.88	-Z = -182.88	CENTERLINE IS AT	X = 0.00000	Y = 0.00000
3	CYLINDER	2	1	RADIUS = 0.45720	+Z = 182.88	-Z = -182.88	CENTERLINE IS AT	X = 0.00000	Y = 0.00000
4	CUBOID	3	1	+X = 0.62990	-X =-0.62990	+Y = 0.62990	-Y =-0.62990	+Z = 182.88	-Z = -182.88
				----- UNIT 2 -----					
WATER ROD CELL - WITH H2O									
1	CYLINDER	3	1	RADIUS = 0.57150	+Z = 182.88	-Z = -182.88	CENTERLINE IS AT	X = 0.00000	Y = 0.00000
2	CYLINDER	2	1	RADIUS = 0.61210	+Z = 182.88	-Z = -182.88	CENTERLINE IS AT	X = 0.00000	Y = 0.00000
3	CUBOID	3	1	+X = 0.62990	-X =-0.62990	+Y = 0.62990	-Y =-0.62990	+Z = 182.88	-Z = -182.88
				********** GLOBAL **********					
				----- UNIT 9 EXTERNAL TO LATTICE 1 -----					
1	ARRAY NUMBER	1		+X = 10.708	-X = -10.708	+Y = 10.708	-Y = -10.708	+Z = 182.88	-Z = -182.88
2	CUBOID	3	1	+X = 11.278	-X = -11.278	+Y = 11.278	-Y = -11.278	+Z = 182.88	-Z = -182.88
3	CYLINDER	4	1	RADIUS = 16.891	+Z = 182.88	-Z = -182.88	CENTERLINE IS AT	X = 0.00000	Y = 0.00000
4	CYLINDER	3	1	RADIUS = 16.986	+Z = 182.88	-Z = -182.88	CENTERLINE IS AT	X = 0.00000	Y = 0.00000
5	CYLINDER	5	1	RADIUS = 18.891	+Z = 182.88	-Z = -182.88	CENTERLINE IS AT	X = 0.00000	Y = 0.00000
6	CYLINDER	6	1	RADIUS = 33.496	+Z = 182.88	-Z = -182.88	CENTERLINE IS AT	X = 0.00000	Y = 0.00000
7	CYLINDER	5	1	RADIUS = 36.544	+Z = 182.88	-Z = -182.88	CENTERLINE IS AT	X = 0.00000	Y = 0.00000
8	CYLINDER	7	1	RADIUS = 49.244	+Z = 182.88	-Z = -182.88	CENTERLINE IS AT	X = 0.00000	Y = 0.00000
9	CYLINDER	5	1	RADIUS = 49.854	+Z = 212.48	-Z = -192.16	CENTERLINE IS AT	X = 0.00000	Y = 0.00000
10	CYLINDER	6	1	RADIUS = 49.854	+Z = 212.48	-Z = -199.78	CENTERLINE IS AT	X = 0.00000	Y = 0.00000
11	CYLINDER	5	1	RADIUS = 49.854	+Z = 212.48	-Z = -208.67	CENTERLINE IS AT	X = 0.00000	Y = 0.00000
12	CUBOID	8	1	+X = 81.000	-X = -81.000	+Y = 81.000	-Y = -81.000	+Z = 243.00	-Z = -240.00

```
                        LWT ANALYSIS; W17X17 OFA ASSEMBLY; WATER IN GAP

                  -------  UNIT ORIENTATION DESCRIPTION FOR ARRAY   1         -------

Z LAYER   1, X COLUMN   1 TO  17 LEFT TO RIGHT   Y ROW   1 TO  17  BOTTOM TO TOP

 1 1 1 1 1 1 1 1 1 1 1 1 1 1 1 1 1

 1 1 1 1 1 1 1 1 1 1 1 1 1 1 1 1 1

 1 1 1 1 1 2 1 1 2 1 1 2 1 1 1 1 1

 1 1 1 2 1 1 1 1 1 1 1 1 1 2 1 1 1

 1 1 1 1 1 1 1 1 1 1 1 1 1 1 1 1 1

 1 1 2 1 1 2 1 1 2 1 1 2 1 1 2 1 1

 1 1 1 1 1 1 1 1 1 1 1 1 1 1 1 1 1

 1 1 1 1 1 1 1 1 1 1 1 1 1 1 1 1 1

 1 1 2 1 1 2 1 1 2 1 1 2 1 1 2 1 1

 1 1 1 1 1 1 1 1 1 1 1 1 1 1 1 1 1

 1 1 1 1 1 1 1 1 1 1 1 1 1 1 1 1 1

 1 1 2 1 1 2 1 1 2 1 1 2 1 1 2 1 1

 1 1 1 1 1 1 1 1 1 1 1 1 1 1 1 1 1

 1 1 1 2 1 1 1 1 1 1 1 1 1 2 1 1 1

 1 1 1 1 1 2 1 1 2 1 1 2 1 1 1 1 1

 1 1 1 1 1 1 1 1 1 1 1 1 1 1 1 1 1

 1 1 1 1 1 1 1 1 1 1 1 1 1 1 1 1 1
```

LWT ANALYSIS; W17X17 OFA ASSEMBLY; WATER IN GAP
VOLUMES FOR THOSE UNITS UTILIZED IN THIS PROBLEM

UNIT	REGION	GEOMETRY REGION	VOLUME	CUMULATIVE VOLUME
1	1	1	1.76751E+02 CM**3	1.76751E+02 CM**3
	2	2	7.19223E+00 CM**3	1.83943E+02 CM**3
	3	3	5.62490E+01 CM**3	2.40192E+02 CM**3
	4	4	3.40304E+02 CM**3	5.80496E+02 CM**3
2	1	5	3.75300E+02 CM**3	3.75300E+02 CM**3
	2	6	5.52175E+01 CM**3	4.30518E+02 CM**3
	3	7	1.49979E+02 CM**3	5.80496E+02 CM**3

SURROUNDING GEOMETRY VOLUMES - GEOMETRY REGION 8 IS AN ARRAY PLACEMENT BOUNDARY REGION

9	1	8	1.67763E+05 CM**3	1.67763E+05 CM**3
	2	9	1.83123E+04 CM**3	1.86076E+05 CM**3
	3	10	1.41760E+05 CM**3	3.27836E+05 CM**3
	4	11	3.70972E+03 CM**3	3.31546E+05 CM**3
	5	12	7.85353E+04 CM**3	4.10081E+05 CM**3
	6	13	8.79177E+05 CM**3	1.28926E+06 CM**3
	7	14	2.45308E+05 CM**3	1.53457E+06 CM**3
	8	15	1.25193E+06 CM**3	2.78649E+06 CM**3
	9	16	3.72996E+05 CM**3	3.15949E+06 CM**3
	10	17	5.94983E+04 CM**3	3.21899E+06 CM**3
	11	18	6.94145E+04 CM**3	3.28840E+06 CM**3
	12	19	9.38745E+06 CM**3	1.26759E+07 CM**3

UNIT	USES	REGION	MIXTURE	TOTAL VOLUME
1	264	1	1	4.66622E+04 CM**3
		2	9	1.89875E+03 CM**3
		3	2	1.48497E+04 CM**3
		4	3	8.98403E+04 CM**3
2	25	1	3	9.38250E+03 CM**3
		2	2	1.38044E+03 CM**3
		3	3	3.74947E+03 CM**3
9	1	1		1.67763E+05 CM**3
		2	3	1.83123E+04 CM**3
		3	4	1.41760E+05 CM**3
		4	3	3.70972E+03 CM**3
		5	5	7.85353E+04 CM**3
		6	6	8.79177E+05 CM**3
		7	5	2.45308E+05 CM**3
		8	7	1.25193E+06 CM**3
		9	5	3.72996E+05 CM**3
		10	6	5.94983E+04 CM**3
		11	5	6.94145E+04 CM**3
		12	8	9.38745E+06 CM**3

TOTAL MIXTURE VOLUMES

MIXTURE	TOTAL VOLUME	MASS(G)
1	4.66622E+04 CM**3	4.85846E+05
2	1.62302E+04 CM**3	1.05334E+05
3	1.24994E+05 CM**3	1.24766E+05
4	1.41760E+05 CM**3	3.83037E+05
5	7.66253E+05 CM**3	6.06873E+06
6	9.38675E+05 CM**3	1.06483E+07
7	1.25193E+06 CM**3	1.24964E+06
8	9.38745E+06 CM**3	9.37028E+06
9	1.89875E+03 CM**3	1.89528E+03

****
***
*** BIASING INFORMATION ***
***
*** A DEFAULT WEIGHT OF 0.500 WILL BE USED FOR ALL BIAS ID'S. ***
***
****

..... 0 IO'S WERE USED IN KENO-V BEFORE TRACKING .....

..... 0.01650 MINUTES WERE USED PROCESSING DATA. .....

VOLUME FRACTION OF FISSILE MATERIAL IN THE CORE= 2.78143E-01

START TYPE 0 WAS USED.

THE NEUTRONS WERE STARTED WITH A FLAT DISTRIBUTION IN A CUBOID DEFINED BY:
+X= 1.07083E+01 -X=-1.07083E+01 +Y= 1.07083E+01 -Y=-1.07083E+01 +Z= 1.82880E+02 -Z=-1.82880E+02
THE FLAG TO START NEUTRONS IN THE REFLECTOR WAS TURNED OFF

0.10317 MINUTES WERE REQUIRED FOR STARTING. TOTAL ELAPSED TIME IS 0.12800 MINUTES.

LWT ANALYSIS; W17X17 OFA ASSEMBLY; WATER IN GAP

GENERATION	GENERATION K-EFFECTIVE	ELAPSED TIME MINUTES	AVERAGE K-EFFECTIVE	AVG K-EFF DEVIATION	MATRIX K-EFFECTIVE	MATRIX K-EFF DEVIATION
1	9.51010E-01	1.56500E-01	1.00000E+00	0.00000E+00	0.00000E+00	0.00000E+00
2	9.40984E-01	1.90500E-01	1.00000E+00	0.00000E+00	0.00000E+00	0.00000E+00
3	9.54190E-01	2.22500E-01	9.54190E-01	0.00000E+00	0.00000E+00	0.00000E+00
4	9.40285E-01	2.57167E-01	9.47237E-01	6.95261E-03	0.00000E+00	0.00000E+00
5	9.16672E-01	2.91167E-01	9.37049E-01	1.09506E-02	0.00000E+00	0.00000E+00
6	9.40452E-01	3.25000E-01	9.37900E-01	7.78983E-03	0.00000E+00	0.00000E+00
7	9.34813E-01	3.58833E-01	9.37282E-01	6.06547E-03	0.00000E+00	0.00000E+00
8	9.30026E-01	3.92667E-01	9.36073E-01	5.09798E-03	0.00000E+00	0.00000E+00
9	9.38348E-01	4.26667E-01	9.36398E-01	4.32082E-03	0.00000E+00	0.00000E+00
10	8.92032E-01	4.62333E-01	9.30852E-01	6.69006E-03	0.00000E+00	0.00000E+00
11	9.11582E-01	4.95333E-01	9.28711E-01	6.27656E-03	0.00000E+00	0.00000E+00
12	9.15588E-01	5.30000E-01	9.27399E-01	5.76527E-03	0.00000E+00	0.00000E+00
13	9.52711E-01	5.63000E-01	9.29700E-01	5.69999E-03	0.00000E+00	0.00000E+00
14	9.35356E-01	5.96833E-01	9.30171E-01	5.22466E-03	0.00000E+00	0.00000E+00
15	9.37142E-01	6.29833E-01	9.30707E-01	4.83580E-03	0.00000E+00	0.00000E+00
16	9.37905E-01	6.64667E-01	9.31222E-01	4.50651E-03	0.00000E+00	0.00000E+00
17	9.29604E-01	6.97500E-01	9.31114E-01	4.19672E-03	0.00000E+00	0.00000E+00
18	9.20469E-01	7.30500E-01	9.30448E-01	3.98165E-03	0.00000E+00	0.00000E+00
19	9.29994E-01	7.63500E-01	9.30422E-01	3.74020E-03	0.00000E+00	0.00000E+00
20	9.46117E-01	7.97333E-01	9.31294E-01	3.63250E-03	0.00000E+00	0.00000E+00
21	9.12522E-01	8.32167E-01	9.30306E-01	3.57523E-03	0.00000E+00	0.00000E+00
22	9.43921E-01	8.66000E-01	9.30986E-01	3.45941E-03	0.00000E+00	0.00000E+00
23	9.57911E-01	8.99833E-01	9.32269E-01	3.53151E-03	0.00000E+00	0.00000E+00
24	8.94522E-01	9.33667E-01	9.30553E-01	3.77910E-03	0.00000E+00	0.00000E+00
25	9.25850E-01	9.69500E-01	9.30348E-01	3.61684E-03	0.00000E+00	0.00000E+00
26	9.11303E-01	1.00333E+00	9.29555E-01	3.55262E-03	0.00000E+00	0.00000E+00
27	9.20195E-01	1.03717E+00	9.29180E-01	3.42806E-03	0.00000E+00	0.00000E+00
28	9.35677E-01	1.07100E+00	9.29430E-01	3.30303E-03	0.00000E+00	0.00000E+00
29	9.32110E-01	1.10583E+00	9.29530E-01	3.17990E-03	0.00000E+00	0.00000E+00
30	9.16956E-01	1.13967E+00	9.29080E-01	3.09695E-03	0.00000E+00	0.00000E+00
31	9.18142E-01	1.17550E+00	9.28703E-01	3.01196E-03	0.00000E+00	0.00000E+00
32	9.52791E-01	1.20933E+00	9.29506E-01	3.01858E-03	0.00000E+00	0.00000E+00
33	9.20900E-01	1.24400E+00	9.29229E-01	2.93275E-03	0.00000E+00	0.00000E+00
34	9.29466E-01	1.27800E+00	9.29236E-01	2.83963E-03	0.00000E+00	0.00000E+00
35	9.66663E-01	1.31267E+00	9.30370E-01	2.97677E-03	0.00000E+00	0.00000E+00
36	9.38891E-01	1.34567E+00	9.30621E-01	2.89874E-03	0.00000E+00	0.00000E+00
37	9.03279E-01	1.37867E+00	9.29840E-01	2.92110E-03	0.00000E+00	0.00000E+00
38	9.28671E-01	1.41250E+00	9.29807E-01	2.83898E-03	0.00000E+00	0.00000E+00
39	9.62627E-01	1.44450E+00	9.30694E-01	2.90017E-03	0.00000E+00	0.00000E+00
40	8.95883E-01	1.48033E+00	9.29778E-01	2.96774E-03	0.00000E+00	0.00000E+00
41	9.06233E-01	1.51500E+00	9.29174E-01	2.95301E-03	0.00000E+00	0.00000E+00
42	9.15541E-01	1.54800E+00	9.28834E-01	2.89835E-03	0.00000E+00	0.00000E+00
43	9.72554E-01	1.58100E+00	9.29900E-01	3.02122E-03	0.00000E+00	0.00000E+00
44	9.38366E-01	1.61667E+00	9.30101E-01	2.95529E-03	0.00000E+00	0.00000E+00
45	9.32599E-01	1.65150E+00	9.30160E-01	2.88633E-03	0.00000E+00	0.00000E+00
46	9.88065E-01	1.68617E+00	9.31476E-01	3.11194E-03	0.00000E+00	0.00000E+00
47	9.33628E-01	1.72100E+00	9.31523E-01	3.04237E-03	0.00000E+00	0.00000E+00
48	9.52331E-01	1.75300E+00	9.31976E-01	3.00969E-03	0.00000E+00	0.00000E+00
49	9.32474E-01	1.78517E+00	9.31986E-01	2.94497E-03	0.00000E+00	0.00000E+00
50	9.19013E-01	1.81900E+00	9.31716E-01	2.89561E-03	0.00000E+00	0.00000E+00
51	9.64448E-01	1.85183E+00	9.32384E-01	2.91351E-03	0.00000E+00	0.00000E+00
52	9.41027E-01	1.88583E+00	9.32557E-01	2.85987E-03	0.00000E+00	0.00000E+00
53	9.11931E-01	1.92050E+00	9.32152E-01	2.83226E-03	0.00000E+00	0.00000E+00
54	9.08637E-01	1.95533E+00	9.31700E-01	2.81384E-03	0.00000E+00	0.00000E+00
55	9.47154E-01	1.98833E+00	9.31992E-01	2.77559E-03	0.00000E+00	0.00000E+00
56	9.20431E-01	2.02033E+00	9.31778E-01	2.73211E-03	0.00000E+00	0.00000E+00
57	9.27528E-01	2.05150E+00	9.31700E-01	2.68309E-03	0.00000E+00	0.00000E+00
58	9.16484E-01	2.08533E+00	9.31429E-01	2.64871E-03	0.00000E+00	0.00000E+00
59	8.88613E-01	2.12017E+00	9.30678E-01	2.70809E-03	0.00000E+00	0.00000E+00
60	9.62017E-01	2.15217E+00	9.31218E-01	2.71529E-03	0.00000E+00	0.00000E+00
61	9.47144E-01	2.18700E+00	9.31488E-01	2.68249E-03	0.00000E+00	0.00000E+00
62	9.04490E-01	2.22167E+00	9.31038E-01	2.67551E-03	0.00000E+00	0.00000E+00
63	9.40984E-01	2.25567E+00	9.31201E-01	2.63633E-03	0.00000E+00	0.00000E+00
64	9.52704E-01	2.28850E+00	9.31548E-01	2.61655E-03	0.00000E+00	0.00000E+00
65	9.07223E-01	2.32250E+00	9.31162E-01	2.60347E-03	0.00000E+00	0.00000E+00
66	9.30334E-01	2.35633E+00	9.31149E-01	2.56250E-03	0.00000E+00	0.00000E+00
67	9.25560E-01	2.39117E+00	9.31063E-01	2.52424E-03	0.00000E+00	0.00000E+00
68	9.66495E-01	2.42583E+00	9.31600E-01	2.54301E-03	0.00000E+00	0.00000E+00
69	9.41208E-01	2.45883E+00	9.31743E-01	2.50887E-03	0.00000E+00	0.00000E+00
70	9.33999E-01	2.49267E+00	9.31776E-01	2.47192E-03	0.00000E+00	0.00000E+00
71	9.71056E-01	2.52383E+00	9.32345E-01	2.50147E-03	0.00000E+00	0.00000E+00
72	8.88156E-01	2.55867E+00	9.31714E-01	2.54501E-03	0.00000E+00	0.00000E+00
73	9.80005E-01	2.59150E+00	9.32394E-01	2.59947E-03	0.00000E+00	0.00000E+00
74	9.13067E-01	2.62550E+00	9.32126E-01	2.57713E-03	0.00000E+00	0.00000E+00
75	9.70327E-01	2.65833E+00	9.32649E-01	2.59489E-03	0.00000E+00	0.00000E+00
76	9.31805E-01	2.69233E+00	9.32638E-01	2.55961E-03	0.00000E+00	0.00000E+00
77	9.52213E-01	2.72517E+00	9.32899E-01	2.53871E-03	0.00000E+00	0.00000E+00
78	9.47160E-01	2.75917E+00	9.33086E-01	2.51210E-03	0.00000E+00	0.00000E+00
79	8.93701E-01	2.79117E+00	9.32575E-01	2.53147E-03	0.00000E+00	0.00000E+00
80	9.47226E-01	2.82233E+00	9.32763E-01	2.50586E-03	0.00000E+00	0.00000E+00
81	9.48589E-01	2.85333E+00	9.32963E-01	2.48203E-03	0.00000E+00	0.00000E+00
82	9.25849E-01	2.88733E+00	9.32874E-01	2.45242E-03	0.00000E+00	0.00000E+00
83	9.01492E-01	2.92117E+00	9.32487E-01	2.45275E-03	0.00000E+00	0.00000E+00
84	9.20041E-01	2.95500E+00	9.32335E-01	2.42740E-03	0.00000E+00	0.00000E+00
85	8.82999E-01	2.98983E+00	9.31741E-01	2.47055E-03	0.00000E+00	0.00000E+00
86	9.23140E-01	3.02450E+00	9.31638E-01	2.44311E-03	0.00000E+00	0.00000E+00
87	9.43337E-01	3.05750E+00	9.31776E-01	2.41812E-03	0.00000E+00	0.00000E+00
88	9.28753E-01	3.09233E+00	9.31741E-01	2.39009E-03	0.00000E+00	0.00000E+00
89	9.25355E-01	3.12533E+00	9.31667E-01	2.36360E-03	0.00000E+00	0.00000E+00
90	9.33163E-01	3.15917E+00	9.31684E-01	2.33665E-03	0.00000E+00	0.00000E+00
91	9.25500E-01	3.19400E+00	9.31615E-01	2.31129E-03	0.00000E+00	0.00000E+00

92	9.17867E-01	3.22867E+00	9.31462E-01	2.29056E-03	0.00000E+00	0.00000E+00
93	9.65543E-01	3.26267E+00	9.31837E-01	2.29600E-03	0.00000E+00	0.00000E+00
94	9.29435E-01	3.29733E+00	9.31810E-01	2.27106E-03	0.00000E+00	0.00000E+00
95	9.05071E-01	3.32933E+00	9.31523E-01	2.26483E-03	0.00000E+00	0.00000E+00
96	9.28498E-01	3.36233E+00	9.31491E-01	2.24084E-03	0.00000E+00	0.00000E+00
97	9.20727E-01	3.39617E+00	9.31377E-01	2.22002E-03	0.00000E+00	0.00000E+00
98	9.03651E-01	3.43017E+00	9.31089E-01	2.21568E-03	0.00000E+00	0.00000E+00
99	9.74784E-01	3.46300E+00	9.31539E-01	2.23851E-03	0.00000E+00	0.00000E+00
100	9.78591E-01	3.49517E+00	9.32019E-01	2.26698E-03	0.00000E+00	0.00000E+00
101	9.62223E-01	3.52900E+00	9.32324E-01	2.26460E-03	0.00000E+00	0.00000E+00
102	9.36007E-01	3.56383E+00	9.32361E-01	2.24215E-03	0.00000E+00	0.00000E+00
103	9.34207E-01	3.59583E+00	9.32379E-01	2.21991E-03	0.00000E+00	0.00000E+00
104	9.19747E-01	3.62883E+00	9.32256E-01	2.20153E-03	0.00000E+00	0.00000E+00
105	9.53358E-01	3.66267E+00	9.32460E-01	2.18965E-03	0.00000E+00	0.00000E+00
106	9.26897E-01	3.69650E+00	9.32407E-01	2.16916E-03	0.00000E+00	0.00000E+00
107	9.08431E-01	3.72950E+00	9.32179E-01	2.16050E-03	0.00000E+00	0.00000E+00
108	8.99971E-01	3.76333E+00	9.31875E-01	2.16148E-03	0.00000E+00	0.00000E+00
109	9.16471E-01	3.79717E+00	9.31731E-01	2.14602E-03	0.00000E+00	0.00000E+00
110	9.29757E-01	3.83200E+00	9.31712E-01	2.12614E-03	0.00000E+00	0.00000E+00
111	9.33557E-01	3.86583E+00	9.31729E-01	2.10661E-03	0.00000E+00	0.00000E+00
112	9.11116E-01	3.90067E+00	9.31542E-01	2.09576E-03	0.00000E+00	0.00000E+00
113	9.66848E-01	3.93550E+00	9.31860E-01	2.10101E-03	0.00000E+00	0.00000E+00
114	9.52387E-01	3.96833E+00	9.32043E-01	2.09022E-03	0.00000E+00	0.00000E+00
115	9.36334E-01	4.00217E+00	9.32081E-01	2.07199E-03	0.00000E+00	0.00000E+00
116	9.24067E-01	4.03617E+00	9.32011E-01	2.05494E-03	0.00000E+00	0.00000E+00
117	9.10967E-01	4.07083E+00	9.31828E-01	2.04519E-03	0.00000E+00	0.00000E+00
118	9.57862E-01	4.10200E+00	9.32052E-01	2.03987E-03	0.00000E+00	0.00000E+00
119	9.24976E-01	4.13317E+00	9.31992E-01	2.02326E-03	0.00000E+00	0.00000E+00
120	9.72013E-01	4.16517E+00	9.32331E-01	2.03451E-03	0.00000E+00	0.00000E+00
121	9.31745E-01	4.19817E+00	9.32326E-01	2.01735E-03	0.00000E+00	0.00000E+00
122	9.64947E-01	4.23300E+00	9.32598E-01	2.01885E-03	0.00000E+00	0.00000E+00
123	9.49515E-01	4.26583E+00	9.32738E-01	2.00697E-03	0.00000E+00	0.00000E+00
124	9.21618E-01	4.30167E+00	9.32647E-01	1.99254E-03	0.00000E+00	0.00000E+00
125	9.35152E-01	4.33550E+00	9.32667E-01	1.97638E-03	0.00000E+00	0.00000E+00
126	9.32698E-01	4.37033E+00	9.32667E-01	1.96038E-03	0.00000E+00	0.00000E+00
127	9.38079E-01	4.40317E+00	9.32711E-01	1.94511E-03	0.00000E+00	0.00000E+00
128	9.67843E-01	4.43617E+00	9.32989E-01	1.94965E-03	0.00000E+00	0.00000E+00
129	9.30624E-01	4.46917E+00	9.32971E-01	1.93433E-03	0.00000E+00	0.00000E+00
130	9.48983E-01	4.50300E+00	9.33096E-01	1.92323E-03	0.00000E+00	0.00000E+00
131	9.73819E-01	4.53500E+00	9.33412E-01	1.93420E-03	0.00000E+00	0.00000E+00
132	9.23245E-01	4.56983E+00	9.33333E-01	1.92086E-03	0.00000E+00	0.00000E+00
133	8.78670E-01	4.60367E+00	9.32916E-01	1.95128E-03	0.00000E+00	0.00000E+00
134	9.46469E-01	4.63667E+00	9.33019E-01	1.93916E-03	0.00000E+00	0.00000E+00
135	9.56328E-01	4.66867E+00	9.33194E-01	1.93249E-03	0.00000E+00	0.00000E+00
136	9.65680E-01	4.69983E+00	9.33437E-01	1.93327E-03	0.00000E+00	0.00000E+00
137	9.39728E-01	4.73367E+00	9.33483E-01	1.91946E-03	0.00000E+00	0.00000E+00
138	9.42256E-01	4.76750E+00	9.33548E-01	1.90639E-03	0.00000E+00	0.00000E+00
139	9.55999E-01	4.80133E+00	9.33711E-01	1.89950E-03	0.00000E+00	0.00000E+00
140	9.20811E-01	4.83533E+00	9.33618E-01	1.88800E-03	0.00000E+00	0.00000E+00
141	9.49597E-01	4.87000E+00	9.33733E-01	1.87789E-03	0.00000E+00	0.00000E+00
142	9.24254E-01	4.90483E+00	9.33665E-01	1.86566E-03	0.00000E+00	0.00000E+00
143	9.63811E-01	4.93500E+00	9.33879E-01	1.86468E-03	0.00000E+00	0.00000E+00
144	9.43771E-01	4.97167E+00	9.33949E-01	1.85281E-03	0.00000E+00	0.00000E+00
145	8.98301E-01	5.00550E+00	9.33699E-01	1.85662E-03	0.00000E+00	0.00000E+00
146	9.22833E-01	5.03950E+00	9.33624E-01	1.84523E-03	0.00000E+00	0.00000E+00
147	9.24198E-01	5.07417E+00	9.33559E-01	1.83361E-03	0.00000E+00	0.00000E+00
148	9.26591E-01	5.10800E+00	9.33511E-01	1.82163E-03	0.00000E+00	0.00000E+00
149	9.14254E-01	5.14283E+00	9.33380E-01	1.81393E-03	0.00000E+00	0.00000E+00
150	8.93634E-01	5.17667E+00	9.33112E-01	1.82154E-03	0.00000E+00	0.00000E+00
151	9.31493E-01	5.21067E+00	9.33101E-01	1.80931E-03	0.00000E+00	0.00000E+00
152	9.41517E-01	5.24450E+00	9.33157E-01	1.79808E-03	0.00000E+00	0.00000E+00
153	9.18224E-01	5.27833E+00	9.33058E-01	1.78887E-03	0.00000E+00	0.00000E+00
154	9.42222E-01	5.31217E+00	9.33118E-01	1.77808E-03	0.00000E+00	0.00000E+00
155	9.02412E-01	5.34617E+00	9.32918E-01	1.77779E-03	0.00000E+00	0.00000E+00
156	9.16376E-01	5.38183E+00	9.32810E-01	1.76947E-03	0.00000E+00	0.00000E+00
157	9.57243E-01	5.41467E+00	9.32968E-01	1.76507E-03	0.00000E+00	0.00000E+00
158	8.95329E-01	5.45050E+00	9.32727E-01	1.77024E-03	0.00000E+00	0.00000E+00
159	9.40781E-01	5.48433E+00	9.32778E-01	1.75967E-03	0.00000E+00	0.00000E+00
160	9.48603E-01	5.51817E+00	9.32878E-01	1.75137E-03	0.00000E+00	0.00000E+00
161	9.90183E-01	5.55200E+00	9.33238E-01	1.77725E-03	0.00000E+00	0.00000E+00
162	9.11692E-01	5.58500E+00	9.33104E-01	1.77123E-03	0.00000E+00	0.00000E+00
163	9.36520E-01	5.61883E+00	9.33125E-01	1.76032E-03	0.00000E+00	0.00000E+00
164	9.47902E-01	5.65100E+00	9.33216E-01	1.75180E-03	0.00000E+00	0.00000E+00
165	9.23662E-01	5.68483E+00	9.33158E-01	1.74200E-03	0.00000E+00	0.00000E+00
166	9.40662E-01	5.71867E+00	9.33203E-01	1.73195E-03	0.00000E+00	0.00000E+00
167	9.12898E-01	5.75250E+00	9.33080E-01	1.72582E-03	0.00000E+00	0.00000E+00
168	9.41259E-01	5.78550E+00	9.33130E-01	1.71610E-03	0.00000E+00	0.00000E+00
169	9.74665E-01	5.81933E+00	9.33378E-01	1.72383E-03	0.00000E+00	0.00000E+00
170	9.36418E-01	5.85417E+00	9.33396E-01	1.71363E-03	0.00000E+00	0.00000E+00
171	9.54401E-01	5.88800E+00	9.33521E-01	1.70799E-03	0.00000E+00	0.00000E+00
172	9.46339E-01	5.91917E+00	9.33596E-01	1.69959E-03	0.00000E+00	0.00000E+00
173	9.44046E-01	5.95300E+00	9.33657E-01	1.69072E-03	0.00000E+00	0.00000E+00
174	9.51695E-01	5.98600E+00	9.33762E-01	1.68413E-03	0.00000E+00	0.00000E+00
175	9.21412E-01	6.01900E+00	9.33691E-01	1.67589E-03	0.00000E+00	0.00000E+00
176	9.24146E-01	6.05283E+00	9.33636E-01	1.66713E-03	0.00000E+00	0.00000E+00
177	9.08439E-01	6.08767E+00	9.33492E-01	1.66382E-03	0.00000E+00	0.00000E+00
178	9.67472E-01	6.11967E+00	9.33685E-01	1.66557E-03	0.00000E+00	0.00000E+00
179	9.40432E-01	6.15433E+00	9.33723E-01	1.65657E-03	0.00000E+00	0.00000E+00
180	9.47099E-01	6.18650E+00	9.33798E-01	1.64895E-03	0.00000E+00	0.00000E+00
181	9.12795E-01	6.22033E+00	9.33681E-01	1.64391E-03	0.00000E+00	0.00000E+00
182	9.35628E-01	6.25517E+00	9.33692E-01	1.63478E-03	0.00000E+00	0.00000E+00
183	9.31479E-01	6.28800E+00	9.33679E-01	1.62577E-03	0.00000E+00	0.00000E+00
184	9.04767E-01	6.32200E+00	9.33521E-01	1.62460E-03	0.00000E+00	0.00000E+00
185	9.63407E-01	6.35583E+00	9.33684E-01	1.62393E-03	0.00000E+00	0.00000E+00
186	9.82646E-01	6.38883E+00	9.33950E-01	1.63686E-03	0.00000E+00	0.00000E+00

187	9.07694E-01	6.42350E+00	9.33808E-01	1.63416E-03	0.00000E+00	0.00000E+00
188	9.34857E-01	6.45650E+00	9.33814E-01	1.62536E-03	0.00000E+00	0.00000E+00
189	9.51836E-01	6.49217E+00	9.33910E-01	1.61952E-03	0.00000E+00	0.00000E+00
190	9.14491E-01	6.52700E+00	9.33807E-01	1.61419E-03	0.00000E+00	0.00000E+00
191	9.31743E-01	6.56083E+00	9.33796E-01	1.60566E-03	0.00000E+00	0.00000E+00
192	9.40107E-01	6.59383E+00	9.33829E-01	1.59753E-03	0.00000E+00	0.00000E+00
193	9.12241E-01	6.62767E+00	9.33716E-01	1.59316E-03	0.00000E+00	0.00000E+00
194	9.48538E-01	6.65883E+00	9.33793E-01	1.58672E-03	0.00000E+00	0.00000E+00
195	9.31343E-01	6.69183E+00	9.33781E-01	1.57853E-03	0.00000E+00	0.00000E+00
196	9.43479E-01	6.72467E+00	9.33831E-01	1.57117E-03	0.00000E+00	0.00000E+00
197	9.58436E-01	6.75950E+00	9.33957E-01	1.56817E-03	0.00000E+00	0.00000E+00
198	9.06278E-01	6.79150E+00	9.33815E-01	1.56653E-03	0.00000E+00	0.00000E+00
199	8.92724E-01	6.82633E+00	9.33607E-01	1.57245E-03	0.00000E+00	0.00000E+00
200	9.34782E-01	6.86117E+00	9.33613E-01	1.56450E-03	0.00000E+00	0.00000E+00
201	9.59515E-01	6.89500E+00	9.33743E-01	1.56205E-03	0.00000E+00	0.00000E+00
202	9.35452E-01	6.92800E+00	9.33752E-01	1.55425E-03	0.00000E+00	0.00000E+00
203	9.13608E-01	6.96000E+00	9.33651E-01	1.54974E-03	0.00000E+00	0.00000E+00
204	9.24135E-01	6.99383E+00	9.33604E-01	1.54277E-03	0.00000E+00	0.00000E+00
205	9.55551E-01	7.02683E+00	9.33712E-01	1.53895E-03	0.00000E+00	0.00000E+00
206	9.06918E-01	7.06067E+00	9.33581E-01	1.53701E-03	0.00000E+00	0.00000E+00
207	9.42248E-01	7.09550E+00	9.33623E-01	1.53008E-03	0.00000E+00	0.00000E+00
208	9.20183E-01	7.12933E+00	9.33558E-01	1.52403E-03	0.00000E+00	0.00000E+00
209	9.43419E-01	7.16233E+00	9.33606E-01	1.51740E-03	0.00000E+00	0.00000E+00
210	9.41051E-01	7.19433E+00	9.33641E-01	1.51051E-03	0.00000E+00	0.00000E+00
211	9.42003E-01	7.22733E+00	9.33681E-01	1.50380E-03	0.00000E+00	0.00000E+00
212	8.90982E-01	7.26200E+00	9.33478E-01	1.51037E-03	0.00000E+00	0.00000E+00
213	9.57178E-01	7.29600E+00	9.33590E-01	1.50738E-03	0.00000E+00	0.00000E+00
214	9.10290E-01	7.33067E+00	9.33481E-01	1.50428E-03	0.00000E+00	0.00000E+00
215	8.84104E-01	7.36650E+00	9.33249E-01	1.51504E-03	0.00000E+00	0.00000E+00
216	9.50654E-01	7.40033E+00	9.33330E-01	1.51013E-03	0.00000E+00	0.00000E+00
217	9.26341E-01	7.43233E+00	9.33298E-01	1.50344E-03	0.00000E+00	0.00000E+00
218	9.29420E-01	7.46617E+00	9.33280E-01	1.49658E-03	0.00000E+00	0.00000E+00
219	9.03187E-01	7.50100E+00	9.33141E-01	1.49610E-03	0.00000E+00	0.00000E+00
220	9.51222E-01	7.53483E+00	9.33224E-01	1.49153E-03	0.00000E+00	0.00000E+00
221	9.23679E-01	7.56967E+00	9.33180E-01	1.48535E-03	0.00000E+00	0.00000E+00
222	9.27250E-01	7.60450E+00	9.33153E-01	1.47882E-03	0.00000E+00	0.00000E+00
223	9.37266E-01	7.63833E+00	9.33172E-01	1.47224E-03	0.00000E+00	0.00000E+00
224	9.58940E-01	7.67133E+00	9.33288E-01	1.47018E-03	0.00000E+00	0.00000E+00
225	9.28442E-01	7.70333E+00	9.33266E-01	1.46373E-03	0.00000E+00	0.00000E+00
226	9.13553E-01	7.73817E+00	9.33178E-01	1.45984E-03	0.00000E+00	0.00000E+00
227	8.91995E-01	7.77200E+00	9.32995E-01	1.46482E-03	0.00000E+00	0.00000E+00
228	9.01803E-01	7.80767E+00	9.32857E-01	1.46484E-03	0.00000E+00	0.00000E+00
229	9.60438E-01	7.84067E+00	9.32979E-01	1.46342E-03	0.00000E+00	0.00000E+00
230	8.93772E-01	7.87533E+00	9.32807E-01	1.46710E-03	0.00000E+00	0.00000E+00
231	9.66852E-01	7.90933E+00	9.32955E-01	1.46823E-03	0.00000E+00	0.00000E+00
232	9.74108E-01	7.94317E+00	9.33134E-01	1.47274E-03	0.00000E+00	0.00000E+00
233	8.89062E-01	7.97800E+00	9.32944E-01	1.47871E-03	0.00000E+00	0.00000E+00
234	9.62702E-01	8.01183E+00	9.33072E-01	1.47790E-03	0.00000E+00	0.00000E+00
235	9.06169E-01	8.04850E+00	9.32956E-01	1.47607E-03	0.00000E+00	0.00000E+00
236	9.11933E-01	8.08317E+00	9.32867E-01	1.47249E-03	0.00000E+00	0.00000E+00
237	9.44068E-01	8.11717E+00	9.32914E-01	1.46698E-03	0.00000E+00	0.00000E+00
238	9.47216E-01	8.15000E+00	9.32975E-01	1.46201E-03	0.00000E+00	0.00000E+00
239	9.23614E-01	8.18383E+00	9.32935E-01	1.45636E-03	0.00000E+00	0.00000E+00
240	9.52147E-01	8.21783E+00	9.33016E-01	1.45248E-03	0.00000E+00	0.00000E+00
241	8.93068E-01	8.25250E+00	9.32849E-01	1.45601E-03	0.00000E+00	0.00000E+00
242	9.16811E-01	8.28650E+00	9.32782E-01	1.45147E-03	0.00000E+00	0.00000E+00
243	9.29697E-01	8.32117E+00	9.32769E-01	1.44549E-03	0.00000E+00	0.00000E+00
244	9.16165E-01	8.35700E+00	9.32701E-01	1.44114E-03	0.00000E+00	0.00000E+00
245	9.04298E-01	8.39267E+00	9.32584E-01	1.43995E-03	0.00000E+00	0.00000E+00
246	9.53972E-01	8.42550E+00	9.32671E-01	1.43671E-03	0.00000E+00	0.00000E+00
247	9.35449E-01	8.45850E+00	9.32683E-01	1.43088E-03	0.00000E+00	0.00000E+00
248	9.66397E-01	8.49233E+00	9.32820E-01	1.43163E-03	0.00000E+00	0.00000E+00
249	9.77602E-01	8.52633E+00	9.33001E-01	1.43730E-03	0.00000E+00	0.00000E+00
250	9.53491E-01	8.56100E+00	9.33084E-01	1.43388E-03	0.00000E+00	0.00000E+00
251	9.53652E-01	8.59317E+00	9.33166E-01	1.43049E-03	0.00000E+00	0.00000E+00
252	9.10631E-01	8.62783E+00	9.33076E-01	1.42761E-03	0.00000E+00	0.00000E+00
253	9.66311E-01	8.66000E+00	9.33209E-01	1.42806E-03	0.00000E+00	0.00000E+00
254	9.30825E-01	8.69467E+00	9.33199E-01	1.42242E-03	0.00000E+00	0.00000E+00
255	9.67891E-01	8.72867E+00	9.33336E-01	1.42340E-03	0.00000E+00	0.00000E+00
256	9.07966E-01	8.76333E+00	9.33236E-01	1.42130E-03	0.00000E+00	0.00000E+00
257	9.23536E-01	8.79717E+00	9.33198E-01	1.41623E-03	0.00000E+00	0.00000E+00
258	9.50763E-01	8.82933E+00	9.33267E-01	1.41235E-03	0.00000E+00	0.00000E+00
259	9.18617E-01	8.86033E+00	9.33210E-01	1.40800E-03	0.00000E+00	0.00000E+00
260	9.42168E-01	8.89333E+00	9.33245E-01	1.40296E-03	0.00000E+00	0.00000E+00
261	9.04953E-01	8.92817E+00	9.33135E-01	1.40180E-03	0.00000E+00	0.00000E+00
262	9.38220E-01	8.96200E+00	9.33155E-01	1.39653E-03	0.00000E+00	0.00000E+00
263	9.04271E-01	8.99683E+00	9.33044E-01	1.39557E-03	0.00000E+00	0.00000E+00
264	8.98266E-01	9.03167E+00	9.32912E-01	1.39655E-03	0.00000E+00	0.00000E+00
265	9.55485E-01	9.06550E+00	9.32997E-01	1.39388E-03	0.00000E+00	0.00000E+00
266	9.33548E-01	9.09850E+00	9.32999E-01	1.38859E-03	0.00000E+00	0.00000E+00
267	9.56080E-01	9.13317E+00	9.33087E-01	1.38608E-03	0.00000E+00	0.00000E+00
268	9.39827E-01	9.16517E+00	9.33112E-01	1.38109E-03	0.00000E+00	0.00000E+00
269	9.21043E-01	9.19817E+00	9.33067E-01	1.37665E-03	0.00000E+00	0.00000E+00
270	9.05240E-01	9.23200E+00	9.32963E-01	1.37543E-03	0.00000E+00	0.00000E+00
271	9.35161E-01	9.26600E+00	9.32971E-01	1.37033E-03	0.00000E+00	0.00000E+00
272	9.58771E-01	9.29883E+00	9.33067E-01	1.36858E-03	0.00000E+00	0.00000E+00
273	9.37723E-01	9.33183E+00	9.33084E-01	1.36363E-03	0.00000E+00	0.00000E+00
274	9.11992E-01	9.36667E+00	9.33006E-01	1.36082E-03	0.00000E+00	0.00000E+00
275	9.03998E-01	9.40333E+00	9.32900E-01	1.35999E-03	0.00000E+00	0.00000E+00
276	9.23672E-01	9.43717E+00	9.32866E-01	1.35543E-03	0.00000E+00	0.00000E+00
277	9.59550E-01	9.47100E+00	9.32963E-01	1.35397E-03	0.00000E+00	0.00000E+00
278	9.42804E-01	9.50400E+00	9.32999E-01	1.34953E-03	0.00000E+00	0.00000E+00
279	9.58298E-01	9.53600E+00	9.33090E-01	1.34775E-03	0.00000E+00	0.00000E+00
280	9.68398E-01	9.56983E+00	9.33217E-01	1.34888E-03	0.00000E+00	0.00000E+00
281	9.54490E-01	9.60183E+00	9.33294E-01	1.34620E-03	0.00000E+00	0.00000E+00

282	9.05657E-01	9.63667E+00	9.33195E-01	1.34501E-03	0.00000E+00	0.00000E+00
283	9.47219E-01	9.67050E+00	9.33245E-01	1.34115E-03	0.00000E+00	0.00000E+00
284	9.51373E-01	9.70450E+00	9.33309E-01	1.33793E-03	0.00000E+00	0.00000E+00
285	9.59679E-01	9.73733E+00	9.33402E-01	1.33644E-03	0.00000E+00	0.00000E+00
286	9.45263E-01	9.77133E+00	9.33444E-01	1.33238E-03	0.00000E+00	0.00000E+00
287	9.77649E-01	9.80417E+00	9.33599E-01	1.33673E-03	0.00000E+00	0.00000E+00
288	8.93935E-01	9.84083E+00	9.33460E-01	1.33925E-03	0.00000E+00	0.00000E+00
289	9.55230E-01	9.87383E+00	9.33536E-01	1.33673E-03	0.00000E+00	0.00000E+00
290	9.40062E-01	9.90767E+00	9.33559E-01	1.33227E-03	0.00000E+00	0.00000E+00
291	9.60614E-01	9.94150E+00	9.33653E-01	1.33095E-03	0.00000E+00	0.00000E+00
292	9.39502E-01	9.97633E+00	9.33673E-01	1.32650E-03	0.00000E+00	0.00000E+00
293	9.03937E-01	1.00112E+01	9.33571E-01	1.32588E-03	0.00000E+00	0.00000E+00
294	9.05696E-01	1.00458E+01	9.33475E-01	1.32478E-03	0.00000E+00	0.00000E+00
295	9.57129E-01	1.00770E+01	9.33556E-01	1.32271E-03	0.00000E+00	0.00000E+00
296	8.99288E-01	1.01118E+01	9.33439E-01	1.32335E-03	0.00000E+00	0.00000E+00
297	8.80477E-01	1.01465E+01	9.33260E-01	1.33102E-03	0.00000E+00	0.00000E+00
298	8.99152E-01	1.01805E+01	9.33145E-01	1.33151E-03	0.00000E+00	0.00000E+00
299	8.93755E-01	1.02162E+01	9.33012E-01	1.33363E-03	0.00000E+00	0.00000E+00
300	9.30119E-01	1.02518E+01	9.33002E-01	1.32918E-03	0.00000E+00	0.00000E+00
301	8.74132E-01	1.02875E+01	9.32805E-01	1.33928E-03	0.00000E+00	0.00000E+00
302	8.94503E-01	1.03215E+01	9.32678E-01	1.34090E-03	0.00000E+00	0.00000E+00
303	9.07105E-01	1.03553E+01	9.32593E-01	1.33914E-03	0.00000E+00	0.00000E+00

KENO MESSAGE NUMBER K5-123 EXECUTION TERMINATED DUE TO COMPLETION OF THE SPECIFIED NUMBER OF GENERATIONS.

LWT ANALYSIS; W17X17 OFA ASSEMBLY; WATER IN GAP

LIFETIME = 1.00988E-04 + OR - 2.94947E-07 GENERATION TIME = 3.85312E-05 + OR - 8.81779E-08
NU BAR = 2.43572E+00 + OR - 9.65096E-05 AVERAGE FISSION GROUP = 2.26571E+01 + OR - 5.04111E-03
ENERGY(EV) OF THE AVERAGE LETHARGY CAUSING FISSION = 1.40077E-01 + OR - 6.25718E-04

NO. OF INITIAL GENERATIONS SKIPPED	AVERAGE K-EFFECTIVE	DEVIATION	67 PER CENT CONFIDENCE INTERVAL	95 PER CENT CONFIDENCE INTERVAL	99 PER CENT CONFIDENCE INTERVAL	NUMBER OF HISTORIES
3	0.93252	+ OR - 0.00134	0.93118 TO 0.93386	0.92984 TO 0.93520	0.92850 TO 0.93655	300000
4	0.93249	+ OR - 0.00135	0.93115 TO 0.93384	0.92980 TO 0.93519	0.92846 TO 0.93653	299000
5	0.93255	+ OR - 0.00135	0.93120 TO 0.93390	0.92985 TO 0.93525	0.92850 TO 0.93660	298000
6	0.93252	+ OR - 0.00135	0.93117 TO 0.93387	0.92981 TO 0.93523	0.92846 TO 0.93658	297000
7	0.93251	+ OR - 0.00136	0.93116 TO 0.93387	0.92980 TO 0.93523	0.92844 TO 0.93659	296000
8	0.93252	+ OR - 0.00136	0.93116 TO 0.93388	0.92980 TO 0.93525	0.92843 TO 0.93661	295000
9	0.93250	+ OR - 0.00137	0.93113 TO 0.93387	0.92977 TO 0.93524	0.92840 TO 0.93660	294000
10	0.93264	+ OR - 0.00136	0.93128 TO 0.93401	0.92991 TO 0.93537	0.92855 TO 0.93674	293000
11	0.93271	+ OR - 0.00137	0.93134 TO 0.93408	0.92998 TO 0.93545	0.92861 TO 0.93682	292000
12	0.93277	+ OR - 0.00137	0.93140 TO 0.93414	0.93003 TO 0.93551	0.92866 TO 0.93688	291000
17	0.93267	+ OR - 0.00139	0.93128 TO 0.93406	0.92988 TO 0.93546	0.92849 TO 0.93685	286000
22	0.93271	+ OR - 0.00141	0.93129 TO 0.93412	0.92988 TO 0.93554	0.92846 TO 0.93695	281000
27	0.93290	+ OR - 0.00143	0.93147 TO 0.93433	0.93005 TO 0.93576	0.92862 TO 0.93718	276000
32	0.93293	+ OR - 0.00145	0.93148 TO 0.93438	0.93004 TO 0.93583	0.92859 TO 0.93728	271000
37	0.93295	+ OR - 0.00147	0.93149 TO 0.93442	0.93002 TO 0.93589	0.92856 TO 0.93735	266000
42	0.93317	+ OR - 0.00148	0.93169 TO 0.93465	0.93021 TO 0.93612	0.92874 TO 0.93760	261000
47	0.93278	+ OR - 0.00148	0.93130 TO 0.93426	0.92981 TO 0.93575	0.92833 TO 0.93723	256000
52	0.93260	+ OR - 0.00150	0.93110 TO 0.93410	0.92959 TO 0.93561	0.92809 TO 0.93711	251000
57	0.93279	+ OR - 0.00153	0.93127 TO 0.93432	0.92974 TO 0.93585	0.92821 TO 0.93737	246000
62	0.93298	+ OR - 0.00154	0.93144 TO 0.93452	0.92991 TO 0.93605	0.92837 TO 0.93759	241000
67	0.93301	+ OR - 0.00156	0.93145 TO 0.93458	0.92989 TO 0.93614	0.92833 TO 0.93770	236000
72	0.93286	+ OR - 0.00157	0.93129 TO 0.93443	0.92972 TO 0.93599	0.92816 TO 0.93756	231000
77	0.93249	+ OR - 0.00158	0.93092 TO 0.93407	0.92934 TO 0.93564	0.92777 TO 0.93722	226000
82	0.93249	+ OR - 0.00160	0.93089 TO 0.93409	0.92930 TO 0.93568	0.92770 TO 0.93728	221000
87	0.93291	+ OR - 0.00161	0.93131 TO 0.93452	0.92970 TO 0.93613	0.92809 TO 0.93774	216000
92	0.93307	+ OR - 0.00164	0.93143 TO 0.93472	0.92979 TO 0.93636	0.92814 TO 0.93801	211000

LWT ANALYSIS; W17X17 OFA ASSEMBLY; WATER IN GAP

NO. OF INITIAL GENERATIONS SKIPPED	AVERAGE K-EFFECTIVE	DEVIATION	67 PER CENT CONFIDENCE INTERVAL	95 PER CENT CONFIDENCE INTERVAL	99 PER CENT CONFIDENCE INTERVAL	NUMBER OF HISTORIES
97	0.93315	+ OR - 0.00167	0.93148 TO 0.93482	0.92981 TO 0.93649	0.92814 TO 0.93816	206000
102	0.93271	+ OR - 0.00167	0.93104 TO 0.93438	0.92937 TO 0.93605	0.92770 TO 0.93772	201000
107	0.93281	+ OR - 0.00170	0.93111 TO 0.93452	0.92941 TO 0.93622	0.92770 TO 0.93793	196000
112	0.93320	+ OR - 0.00173	0.93146 TO 0.93493	0.92973 TO 0.93667	0.92800 TO 0.93840	191000
117	0.93307	+ OR - 0.00176	0.93130 TO 0.93483	0.92954 TO 0.93659	0.92778 TO 0.93836	186000
122	0.93259	+ OR - 0.00178	0.93080 TO 0.93437	0.92902 TO 0.93616	0.92724 TO 0.93794	181000
127	0.93251	+ OR - 0.00183	0.93068 TO 0.93434	0.92885 TO 0.93617	0.92702 TO 0.93800	176000
132	0.93203	+ OR - 0.00185	0.93018 TO 0.93388	0.92832 TO 0.93574	0.92647 TO 0.93759	171000
137	0.93187	+ OR - 0.00186	0.93001 TO 0.93373	0.92814 TO 0.93559	0.92628 TO 0.93746	166000
142	0.93166	+ OR - 0.00191	0.92975 TO 0.93357	0.92784 TO 0.93548	0.92593 TO 0.93739	161000
147	0.93169	+ OR - 0.00194	0.92975 TO 0.93364	0.92780 TO 0.93558	0.92586 TO 0.93753	156000
152	0.93203	+ OR - 0.00199	0.93004 TO 0.93402	0.92805 TO 0.93601	0.92607 TO 0.93800	151000
157	0.93219	+ OR - 0.00203	0.93016 TO 0.93423	0.92813 TO 0.93626	0.92609 TO 0.93829	146000
162	0.93201	+ OR - 0.00204	0.92997 TO 0.93405	0.92794 TO 0.93609	0.92590 TO 0.93813	141000
167	0.93200	+ OR - 0.00210	0.92990 TO 0.93410	0.92779 TO 0.93621	0.92569 TO 0.93831	136000
172	0.93129	+ OR - 0.00215	0.92914 TO 0.93344	0.92700 TO 0.93559	0.92485 TO 0.93773	131000
177	0.93134	+ OR - 0.00222	0.92913 TO 0.93356	0.92691 TO 0.93577	0.92470 TO 0.93799	126000
182	0.93096	+ OR - 0.00228	0.92868 TO 0.93323	0.92640 TO 0.93551	0.92413 TO 0.93779	121000
187	0.93065	+ OR - 0.00230	0.92836 TO 0.93295	0.92606 TO 0.93525	0.92377 TO 0.93754	116000
192	0.93048	+ OR - 0.00239	0.92809 TO 0.93286	0.92570 TO 0.93525	0.92332 TO 0.93763	111000
197	0.93008	+ OR - 0.00247	0.92761 TO 0.93255	0.92514 TO 0.93502	0.92267 TO 0.93749	106000
202	0.93030	+ OR - 0.00254	0.92776 TO 0.93283	0.92522 TO 0.93537	0.92269 TO 0.93791	101000
207	0.93039	+ OR - 0.00264	0.92776 TO 0.93303	0.92512 TO 0.93566	0.92249 TO 0.93830	96000
212	0.93055	+ OR - 0.00274	0.92781 TO 0.93328	0.92508 TO 0.93602	0.92234 TO 0.93875	91000
217	0.93083	+ OR - 0.00281	0.92802 TO 0.93364	0.92522 TO 0.93644	0.92241 TO 0.93925	86000
222	0.93107	+ OR - 0.00295	0.92812 TO 0.93402	0.92517 TO 0.93697	0.92223 TO 0.93991	81000
227	0.93140	+ OR - 0.00307	0.92833 TO 0.93447	0.92527 TO 0.93754	0.92220 TO 0.94060	76000

LWT ANALYSIS; W17X17 OFA ASSEMBLY; WATER IN GAP

NO. OF INITIAL GENERATIONS SKIPPED	AVERAGE K-EFFECTIVE	DEVIATION	67 PER CENT CONFIDENCE INTERVAL	95 PER CENT CONFIDENCE INTERVAL	99 PER CENT CONFIDENCE INTERVAL	NUMBER OF HISTORIES
232	0.93084	+ OR - 0.00309	0.92775 TO 0.93393	0.92466 TO 0.93701	0.92157 TO 0.94010	71000
237	0.93145	+ OR - 0.00318	0.92826 TO 0.93463	0.92508 TO 0.93782	0.92190 TO 0.94100	66000
242	0.93185	+ OR - 0.00335	0.92850 TO 0.93520	0.92515 TO 0.93855	0.92180 TO 0.94189	61000
247	0.93220	+ OR - 0.00358	0.92862 TO 0.93578	0.92503 TO 0.93936	0.92145 TO 0.94295	56000
252	0.93022	+ OR - 0.00369	0.92653 TO 0.93391	0.92284 TO 0.93760	0.91915 TO 0.94129	51000
257	0.92924	+ OR - 0.00390	0.92534 TO 0.93313	0.92144 TO 0.93703	0.91755 TO 0.94092	46000
262	0.92903	+ OR - 0.00428	0.92475 TO 0.93330	0.92047 TO 0.93758	0.91620 TO 0.94186	41000
267	0.92896	+ OR - 0.00463	0.92433 TO 0.93358	0.91970 TO 0.93821	0.91507 TO 0.94284	36000
272	0.92846	+ OR - 0.00522	0.92325 TO 0.93368	0.91803 TO 0.93890	0.91281 TO 0.94411	31000
277	0.92867	+ OR - 0.00600	0.92268 TO 0.93467	0.91668 TO 0.94066	0.91069 TO 0.94666	26000
282	0.92456	+ OR - 0.00675	0.91781 TO 0.93132	0.91106 TO 0.93807	0.90430 TO 0.94482	21000
287	0.91466	+ OR - 0.00703	0.90763 TO 0.92170	0.90060 TO 0.92873	0.89356 TO 0.93577	16000
292	0.90412	+ OR - 0.00688	0.89724 TO 0.91100	0.89036 TO 0.91787	0.88348 TO 0.92475	11000
297	0.89979	+ OR - 0.00752	0.89227 TO 0.90731	0.88475 TO 0.91483	0.87723 TO 0.92235	6000

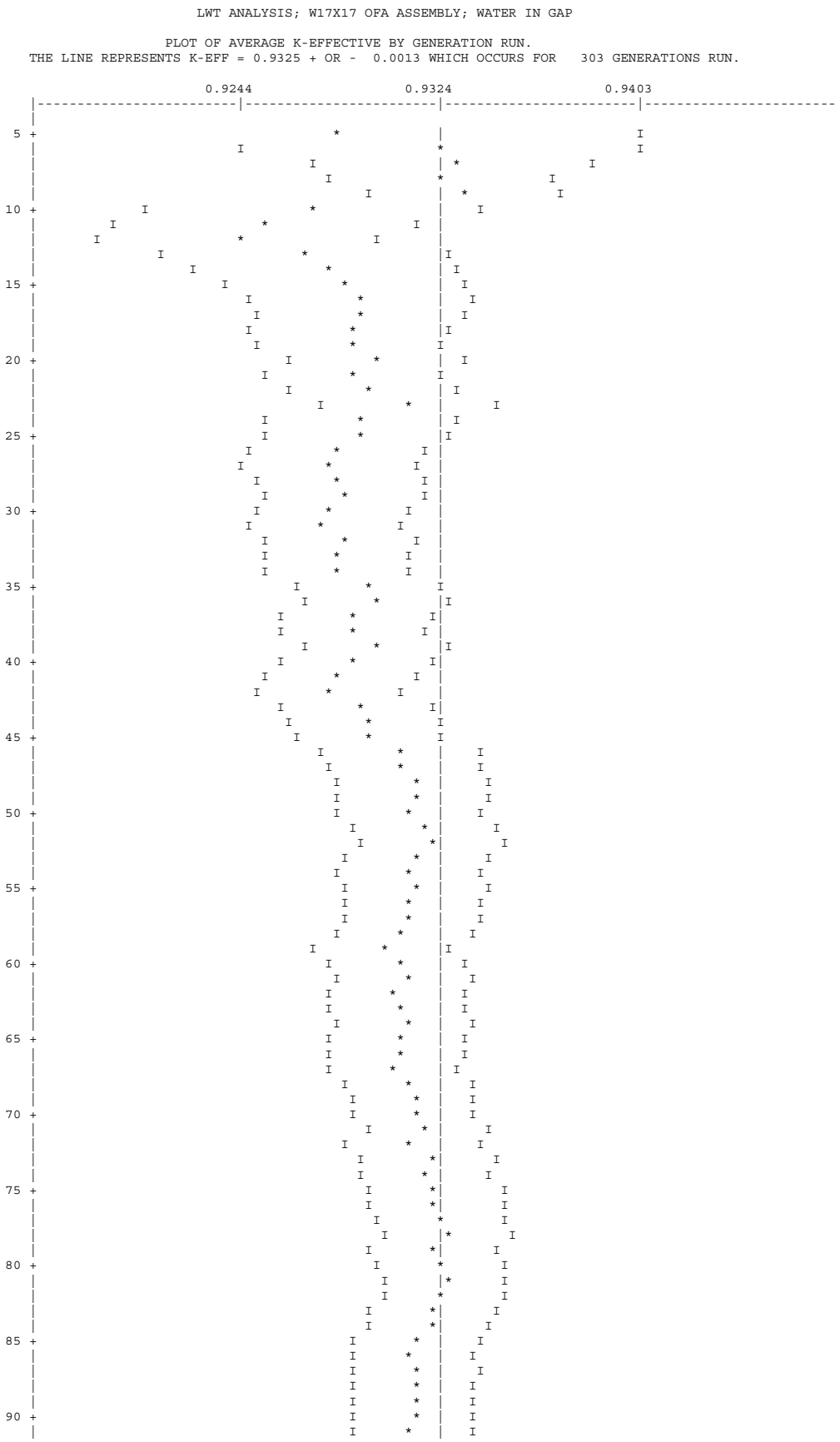
LWT ANALYSIS; W17X17 OFA ASSEMBLY; WATER IN GAP
PLOT OF AVERAGE K-EFFECTIVE BY GENERATION RUN.
THE LINE REPRESENTS K-EFF = 0.9325 + OR - 0.0013 WHICH OCCURS FOR 303 GENERATIONS RUN.
0.9244
0.9324
0.9403
5
10
15
20
25
30
35
40
45
50
55
60
65
70
75
80
85
90

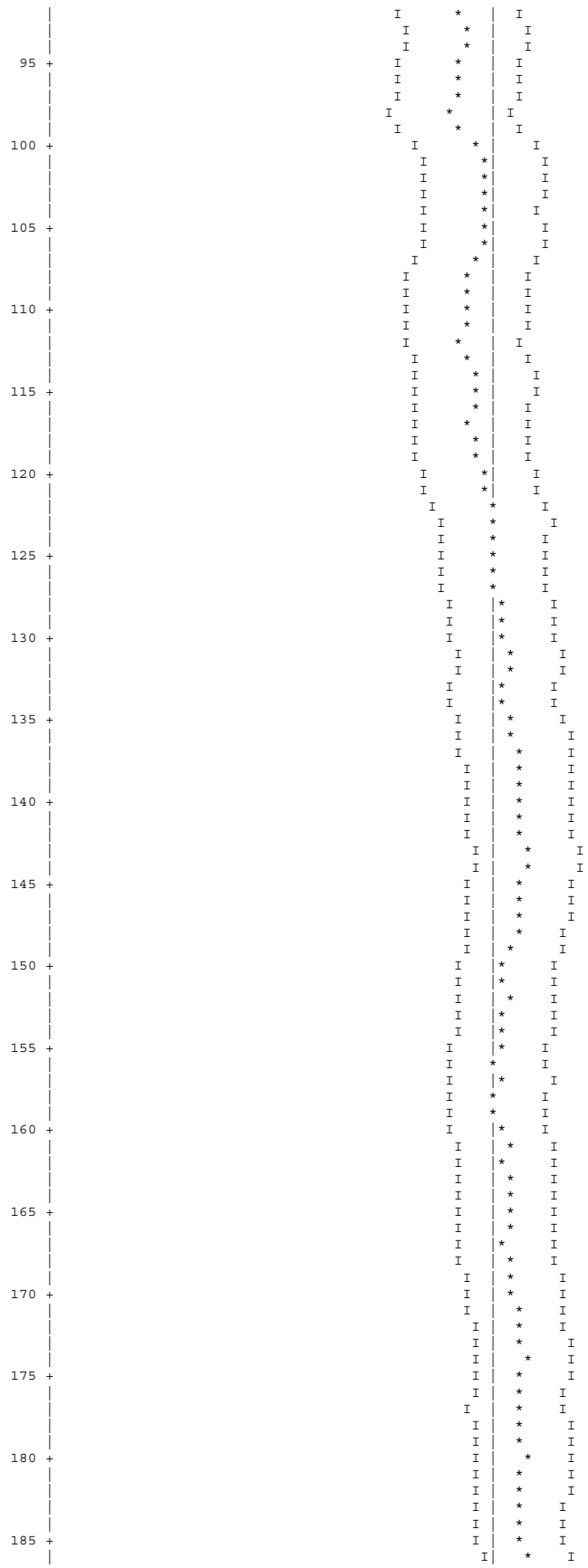

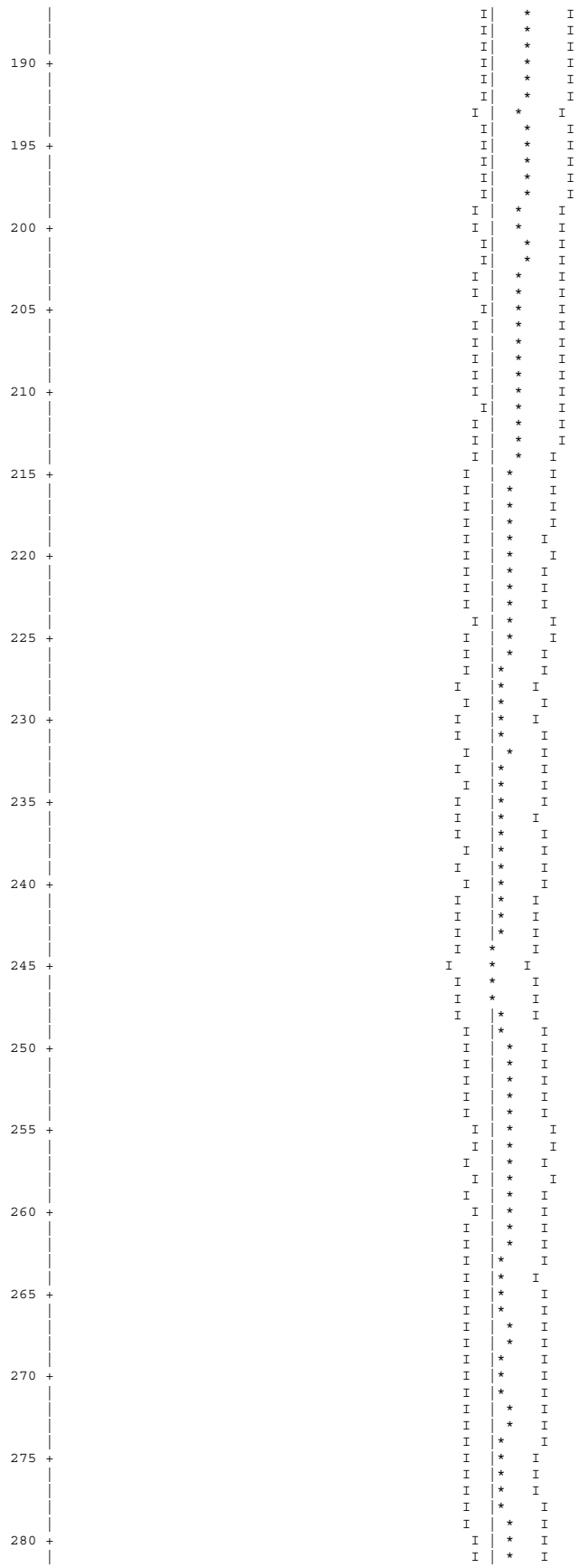

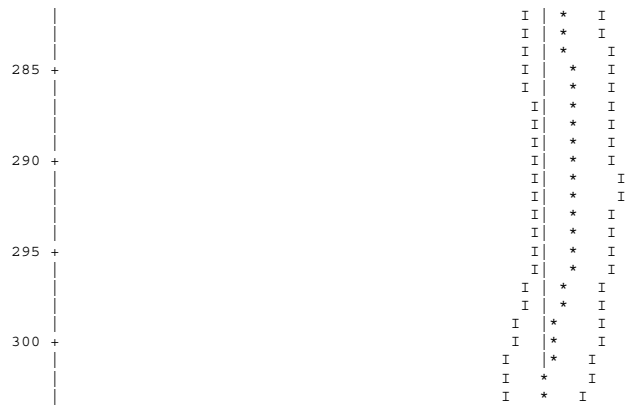

LWT ANALYSIS; W17X17 OFA ASSEMBLY; WATER IN GAP

SKIPPING 3 GENERATIONS

GROUP	FISSION FRACTION	UNIT	REGION	FISSIONS	PERCENT DEVIATION	ABSORPTIONS	PERCENT DEVIATION	LEAKAGE	PERCENT DEVIATION
1	0.0043			3.96333E-03	2.2101	2.32667E-03	1.5738	7.13220E-06	70.5924
2	0.0172			1.60748E-02	0.6729	8.15133E-03	0.5683	6.56993E-06	71.1810
3	0.0191			1.78139E-02	0.5962	7.42025E-03	0.5726	0.00000E+00	0.0000
4	0.0080			7.43939E-03	0.7686	3.56443E-03	0.7418	0.00000E+00	0.0000
5	0.0024			2.25833E-03	0.5724	2.43004E-03	0.5047	3.33836E-06	100.0000
6	0.0020			1.90579E-03	0.4378	4.02480E-03	0.3774	7.64047E-06	71.5891
7	0.0020			1.88267E-03	0.4394	4.57068E-03	0.3857	2.92771E-06	100.0000
8	0.0021			1.93315E-03	0.4678	6.88167E-03	0.3994	0.00000E+00	0.0000
9	0.0028			2.63764E-03	0.5077	1.07470E-02	0.4242	0.00000E+00	0.0000
10	0.0060			5.62159E-03	0.5638	1.65638E-02	0.4683	0.00000E+00	0.0000
11	0.0129			1.20234E-02	0.5301	2.72875E-02	0.4436	0.00000E+00	0.0000
12	0.0170			1.58775E-02	0.5790	2.92963E-02	0.5009	3.27701E-06	100.0000
13	0.0158			1.47503E-02	0.6289	2.92144E-02	0.5315	0.00000E+00	0.0000
14	0.0126			1.17142E-02	0.5393	4.22411E-02	0.4594	0.00000E+00	0.0000
15	0.0027			2.52808E-03	1.0582	8.58507E-03	0.8058	0.00000E+00	0.0000
16	0.0019			1.73386E-03	1.3526	5.11345E-03	0.9908	0.00000E+00	0.0000
17	0.0029			2.67751E-03	1.7290	3.51488E-03	1.0442	0.00000E+00	0.0000
18	0.0040			3.71272E-03	1.8852	3.72257E-03	1.2083	0.00000E+00	0.0000
19	0.0047			4.39970E-03	1.5321	5.76579E-03	0.9257	0.00000E+00	0.0000
20	0.0202			1.88134E-02	0.8208	2.28784E-02	0.6376	3.09353E-06	100.0000
21	0.0110			1.02323E-02	1.2799	1.00350E-02	0.8804	0.00000E+00	0.0000
22	0.0269			2.50706E-02	0.9306	2.32588E-02	0.6493	0.00000E+00	0.0000
23	0.1002			9.34293E-02	0.5043	9.17259E-02	0.3357	8.32955E-07	100.0000
24	0.2103			1.96081E-01	0.3276	1.90202E-01	0.2028	1.56009E-06	71.2983
25	0.1855			1.72976E-01	0.3897	1.65903E-01	0.2460	1.66667E-06	100.0000
26	0.2288			2.13321E-01	0.3454	2.05684E-01	0.2108	2.11603E-06	74.7173
27	0.0768			7.16497E-02	0.6616	7.04055E-02	0.3989	9.96604E-07	100.0000
SYSTEM TOTAL =				9.32521E-01	0.1439	1.00151E+00	0.0436	4.11515E-05	26.6621

ELAPSED TIME 10.35717 MINUTES

RANDOM NUMBER= 1EE413D01710

```
LWT ANALYSIS; W17X17 OFA ASSEMBLY; WATER IN GAP

                              FREQUENCY FOR GENERATIONS    4 TO  303
0.8692 TO 0.8818     ***
0.8818 TO 0.8945     ***************
0.8945 TO 0.9071     ******************************
0.9071 TO 0.9198     ****************************************
0.9198 TO 0.9324     ************************************************************
0.9324 TO 0.9451     ****************************************************************
0.9451 TO 0.9577     ********************************************
0.9577 TO 0.9704     *********************************
0.9704 TO 0.9830     ************
0.9830 TO 0.9957     **

                              FREQUENCY FOR GENERATIONS   79 TO  303
0.8692 TO 0.8818     ***
0.8818 TO 0.8945     ************
0.8945 TO 0.9071     *************************
0.9071 TO 0.9198     *************************
0.9198 TO 0.9324     *******************************************
0.9324 TO 0.9451     *******************************************
0.9451 TO 0.9577     ************************************
0.9577 TO 0.9704     *************************
0.9704 TO 0.9830     *********
0.9830 TO 0.9957     *

                              FREQUENCY FOR GENERATIONS  154 TO  303
0.8692 TO 0.8818     **
0.8818 TO 0.8945     *********
0.8945 TO 0.9071     ***********************
0.9071 TO 0.9198     ******************
0.9198 TO 0.9324     ********************
0.9324 TO 0.9451     *******************************
0.9451 TO 0.9577     ***************************
0.9577 TO 0.9704     ******************
0.9704 TO 0.9830     *****
0.9830 TO 0.9957     *

                              FREQUENCY FOR GENERATIONS  229 TO  303
0.8692 TO 0.8818     **
0.8818 TO 0.8945     *****
0.8945 TO 0.9071     **************
0.9071 TO 0.9198     *******
0.9198 TO 0.9324     *******
0.9324 TO 0.9451     ***********
0.9451 TO 0.9577     ***************
0.9577 TO 0.9704     ************
0.9704 TO 0.9830     ***
0.9830 TO 0.9957


*****************************************************************************************************************************************************
*

          CONGRATULATIONS!  YOU HAVE  SUCCESSFULLY TRAVERSED THE PERILOUS PATH THROUGH KENO V IN  10.35717 MINUTES

*****************************************************************************************************************************************************
*
```

6.6.2 BWR Fuel Assemblies

This section contains abbreviated output files from the most reactive normal condition and accident condition moderator density variation cases.

Figure 6.6.2-1 CSAS Input/Output for NAC-LWT with BWR Fuel Assemblies – Most Reactive Normal Condition Configuration

```
       PRIMARY MODULE ACCESS AND INPUT RECORD ( SCALE DRIVER - 95/03/29 - 09:06:37 )
 MODULE CSAS25   WILL BE CALLED
   NAC-LWT CASK MODEL; Exxon 9x9 - 2 Water Rods  80 MIL CHANNEL
   27GROUPNDF4 LATTICECELL
   UO2   1 0.95 293.0 92235 4.0 92238 96.0 END
   ZIRCALLOY  2 1.0  293.0  END
   H2O   3 1.0  293.0  END
   AL    4 1.0 293.0 END
   SS304 5 1.0 293.0 END
   PB    6 1.0 293.0 END
   H2O   7 1.0 293.0 END
   H2O   8 1.000 293.0 END
   H2O   9 1.0E-20 293.0 END
   END COMP
   SQUAREPITCH  1.4529 0.9055 1 3 1.0770 2 0.9246 9 END
   NAC-LWT CASK MODEL; Exxon 9x9 - 2 Water Rods  80 MIL CHANNEL
   READ PARAM RUN=YES PLT=NO TME=5000 GEN=303 NPG=1000 END PARAM
   READ GEOM
   UNIT  1
   COM='FUEL PIN CELL - WITH H2O'
   CYLINDER  1 1  0.4528   2P10.0
   CYLINDER  9 1  0.4623   2P10.0
   CYLINDER  2 1  0.5385   2P10.0
   CUBOID    3 1  4P0.7264 2P10.0
   UNIT  2
   COM='WATER ROD CELL - WITH H2O'
   CYLINDER  3 1  0.4623   2P10.0
   CYLINDER  2 1  0.5385   2P10.0
   CUBOID    3 1  4P0.7264 2P10.0
   UNIT 3
   ARRAY    1   -6.5376 -6.5376 -10.0
   CUBOID   3 1 4P6.7031   2P10.0
   CUBOID   2 1 4P6.9063   2P10.0
   CUBOID   3 1 4P7.3025   2P10.0
   UNIT 4
   ARRAY    1   -6.5376 -6.5376 -10.0
   CUBOID   3 1 4P6.7031   2P10.0
   CUBOID   2 1 4P6.9063   2P10.0
   CUBOID   3 1 4P7.3025   2P10.0
   UNIT 5
   CYLINDER 4 1 16.8275    2P10.0
   HOLE  3   -7.4613  0.0  0.0
   HOLE  4    7.4613  0.0  0.0
   CYLINDER 3 1 16.9863    2P10.0
   CYLINDER 5 1 18.8913    2P10.0
   CYLINDER 6 1 33.4963    2P10.0
   CYLINDER 5 1 36.5443    2P10.0
   CYLINDER 7 1 49.2443    2P10.0
   CYLINDER 5 1 49.8539    2P10.0
   GLOBAL UNIT 6
   CYLINDER 8 1 696.00   2P10.0
   HOLE 5  00.00    00.00  0.0
   HOLE 5  00.00    243.80  0.0
   HOLE 5  211.17   121.90  0.0
   HOLE 5  211.17  -121.90  0.0
   HOLE 5  00.00   -243.80  0.0
   HOLE 5 -211.17  -121.90  0.0
   HOLE 5 -211.17   121.90  0.0
   HOLE 5    0.0     487.7  0.0
   HOLE 5  211.2    365.8  0.0
   HOLE 5  422.3     243.8  0.0
   HOLE 5  422.3      0.0  0.0
   HOLE 5  422.3    -243.8  0.0
   HOLE 5  211.2   -365.8  0.0
   HOLE 5    0.0    -487.7  0.0
   HOLE 5 -211.2   -365.8  0.0
   HOLE 5 -422.3    -243.88 0.0
   HOLE 5 -422.3      0.0  0.0
   HOLE 5 -422.3     243.8  0.0
   HOLE 5 -211.2    365.8  0.0
   HOLE 5  633.51    121.9 0.0
   CUBOID   8 1 4P696.00   2P10.0
   END GEOM
   READ ARRAY
   ARA=1   NUX=9 NUY=9 NUZ=1  FILL
       36R1
    4R1  2   4R1
    5R1  2   3R1
       27R1
   END FILL
   END ARRAY
   READ BOUNDS ZFC=PER YXF=H2O END BOUNDS
   END DATA

 SECONDARY MODULE O0O008   HAS BEEN CALLED.

 MODULE O0O008   IS FINISHED. COMPLETION CODE     0. CPU TIME USED     0.61 (SECONDS).
```

```
 SECONDARY MODULE O00002   HAS BEEN CALLED.
 MODULE O00002   IS FINISHED. COMPLETION CODE     0. CPU TIME USED     5.88 (SECONDS).
 SECONDARY MODULE O00009   HAS BEEN CALLED.
 MODULE O00009   IS FINISHED. COMPLETION CODE     0. CPU TIME USED   440.77 (SECONDS).
 MODULE CSAS25   IS FINISHED. COMPLETION CODE     0. CPU TIME USED   448.85 (SECONDS).
```



```
 SSSSSSSSSS     CCCCCCCCCC      AAAAAAAAA     LL             EEEEEEEEEEEE                  PPPPPPPPPPP     CCCCCCCCCC
SSSSSSSSSSS   CCCCCCCCCCCC    AAAAAAAAAAA    LL             EEEEEEEEEEEE                  PPPPPPPPPPPP   CCCCCCCCCCCC
SS         SS CC          CC  AA         AA   LL             EE                            PP         PP  CC          CC
SS            CC             AA         AA   LL             EE                            PP         PP  CC
SS            CC             AA         AA   LL             EE                            PP         PP  CC
SSSSSSSSSSS   CC             AAAAAAAAAAAAA   LL             EEEEEEEEE       -------------  PPPPPPPPPPPP  CC
 SSSSSSSSSSS  CC             AAAAAAAAAAAAA   LL             EEEEEEEEE       -------------  PPPPPPPPPPP   CC
          SS  CC             AA         AA   LL             EE                            PP             CC
          SS  CC             AA         AA   LL             EE                            PP             CC
SS        SS  CC          CC  AA         AA   LL             EE                            PP             CC          CC
SSSSSSSSSSS   CCCCCCCCCCCCC   AA         AA   LLLLLLLLLLLLL  EEEEEEEEEEEE                  PP             CCCCCCCCCCCCC
 SSSSSSSSSS    CCCCCCCCCC    AA         AA   LLLLLLLLLLLLL  EEEEEEEEEEEE                  PP              CCCCCCCCCC
```

```
*******************************************************************************
*******************************************************************************
*******************************************************************************
*****                                                                     *****
*****                  PROGRAM VERIFICATION INFORMATION                   *****
*****                                                                     *****
*****                CODE SYSTEM:  SCALE-PC VERSION:  4.3                 *****
*****                                                                     *****
*******************************************************************************
*******************************************************************************
*****                                                                     *****
*****                                                                     *****
*****              PROGRAM:  CSAS                                         *****
*****                                                                     *****
*****        CREATION DATE:  03/08/96                                     *****
*****                                                                     *****
*****              VOLUME:   ENG                                          *****
*****                                                                     *****
*****              LIBRARY:  G:\SCALE43\WIN_NT\EXE                        *****
*****                                                                     *****
*****                                                                     *****
*****      PRODUCTION CODE:  CSAS                                         *****
*****                                                                     *****
*****              VERSION:  3.1                                          *****
*****                                                                     *****
*****              JOBNAME:  SCALE-PC                                     *****
*****                                                                     *****
*****    DATE OF EXECUTION:  07/23/98                                     *****
*****                                                                     *****
*****    TIME OF EXECUTION:  21:12:33                                     *****
*****                                                                     *****
*****                                                                     *****
*******************************************************************************
*******************************************************************************
*******************************************************************************
```

```
NAC-LWT CASK MODEL; EXXON 9X9 - 2 WATER RODS  80 MIL CHANNEL


**** PROBLEM PARAMETERS ****

LIB 27GROUPNDF4  LIBRARY
MXX            9 MIXTURES
MSC            9 COMPOSITION SPECIFICATIONS
IZM            4 MATERIAL ZONES
GE  LATTICECELL  GEOMETRY
MORE           0 0/1 DO NOT READ/READ OPTIONAL PARAMETER DATA
MSLN           0 FUEL SOLUTIONS

**** PROBLEM COMPOSITION DESCRIPTION ****

SC  UO2          STANDARD COMPOSITION
MX             1 MIXTURE NO.
VF        0.9500 VOLUME FRACTION
ROTH     10.9600 THEORETICAL DENSITY
NEL            2 NO. ELEMENTS
ICP            1 0/1 MIXTURE/COMPOUND
TEMP       293.0 DEG KELVIN
           92000      1.00 ATOM/MOLECULE
                           92235     4.000 WT%
                           92238    96.000 WT%
            8016      2.00 ATOMS/MOLECULE
END

SC  ZIRCALLOY    STANDARD COMPOSITION
MX             2 MIXTURE NO.
VF        1.0000 VOLUME FRACTION
ROTH      6.5600 THEORETICAL DENSITY
NEL            1 NO. ELEMENTS
ICP            1 0/1 MIXTURE/COMPOUND
TEMP       293.0 DEG KELVIN
           40302      1.00 ATOM/MOLECULE
END

SC  H2O          STANDARD COMPOSITION
MX             3 MIXTURE NO.
VF        1.0000 VOLUME FRACTION
ROTH      0.9982 THEORETICAL DENSITY
NEL            2 NO. ELEMENTS
ICP            1 0/1 MIXTURE/COMPOUND
TEMP       293.0 DEG KELVIN
            1001      2.00 ATOMS/MOLECULE
            8016      1.00 ATOM/MOLECULE
END

SC  AL           STANDARD COMPOSITION
MX             4 MIXTURE NO.
VF        1.0000 VOLUME FRACTION
ROTH      2.7020 THEORETICAL DENSITY
NEL            1 NO. ELEMENTS
ICP            1 0/1 MIXTURE/COMPOUND
TEMP       293.0 DEG KELVIN
           13027      1.00 ATOM/MOLECULE
END

SC  SS304        STANDARD COMPOSITION
MX             5 MIXTURE NO.
VF        1.0000 VOLUME FRACTION
ROTH      7.9200 THEORETICAL DENSITY
NEL            4 NO. ELEMENTS
ICP            0 0/1 MIXTURE/COMPOUND
TEMP       293.0 DEG KELVIN
           24304    19.000 WT%
           25055     2.000 WT%
           26304    69.500 WT%
           28304     9.500 WT%
END

SC  PB           STANDARD COMPOSITION
MX             6 MIXTURE NO.
VF        1.0000 VOLUME FRACTION
ROTH     11.3440 THEORETICAL DENSITY
NEL            1 NO. ELEMENTS
ICP            1 0/1 MIXTURE/COMPOUND
TEMP       293.0 DEG KELVIN
           82000      1.00 ATOM/MOLECULE
END

SC  H2O          STANDARD COMPOSITION
MX             7 MIXTURE NO.
VF        1.0000 VOLUME FRACTION
ROTH      0.9982 THEORETICAL DENSITY
NEL            2 NO. ELEMENTS
ICP            1 0/1 MIXTURE/COMPOUND
TEMP       293.0 DEG KELVIN
            1001      2.00 ATOMS/MOLECULE
            8016      1.00 ATOM/MOLECULE
END

SC  H2O          STANDARD COMPOSITION
```

```
MX             8 MIXTURE NO.
VF        1.0000 VOLUME FRACTION
ROTH      0.9982 THEORETICAL DENSITY
NEL            2 NO. ELEMENTS
ICP            1 0/1 MIXTURE/COMPOUND
TEMP       293.0 DEG KELVIN
            1001      2.00 ATOMS/MOLECULE
            8016      1.00 ATOM/MOLECULE
END

SC  H2O          STANDARD COMPOSITION
MX             9 MIXTURE NO.
VF        0.0000 VOLUME FRACTION
ROTH      0.9982 THEORETICAL DENSITY
NEL            2 NO. ELEMENTS
ICP            1 0/1 MIXTURE/COMPOUND
TEMP       293.0 DEG KELVIN
            1001      2.00 ATOMS/MOLECULE
            8016      1.00 ATOM/MOLECULE
END


**** PROBLEM GEOMETRY ****

CTP SQUAREPITCH  CELL TYPE
PITCH     1.4529 CM CENTER TO CENTER SPACING
FUELOD    0.9055 CM FUEL DIAMETER OR SLAB THICKNESS
MFUEL          1 MIXTURE NO. OF FUEL
MMOD           3 MIXTURE NO. OF MODERATOR
CLADOD    1.0770 CM CLAD OUTER DIAMETER
MCLAD          2 MIXTURE NO. OF CLAD
GAPOD     0.9246 CM GAP OUTER DIAMETER
MGAP           9 MIXTURE NO. OF GAP


ZONE SPECIFICATIONS FOR LATTICECELL GEOMETRY

               ZONE  1 IS FUEL
               ZONE  2 IS GAP
               ZONE  3 IS CLAD
               ZONE  4 IS MOD
```

```
*********************************************************************************************************************
***                                                                                                               ***
***                            NAC-LWT CASK MODEL; EXXON 9X9 - 2 WATER RODS  80 MIL CHANNEL                       ***
***                                                                                                               ***
*********************************************************************************************************************
*********************************************************************************************************************
***                                                                                                               ***
***                               ********** DATA LIBRARY INFORMATION **********                                 ***
***                                                                                                               ***
***          UNIT                                                VOLUME                                           ***
***         NUMBER               DATA SET NAME                   NAME        UNIT FUNCTION                      ***
***         ------               -------------                   ----        -------------                      ***
***                                                                                                               ***
***           89     G:\scale43\DATALIB\FT89F001                              STANDARD COMPOSITION LIBRARY       ***
***                                                                                                               ***
***           82     G:\scale43\DATALIB\FT82F001                              CROSS SECTION LIBRARY              ***
***                                                                                                               ***
***           11     D:\PROJECTS\BU85-C~1\BWRFIN\19NZ2M\FT11F001              SHORT CROSS SECTION LIBRARY        ***
***                                                                                                               ***
***           90     D:\PROJECTS\BU85-C~1\BWRFIN\19NZ2M\FT90F001              INPUT DATA DIRECT ACCESS           ***
***                                                                                                               ***
*********************************************************************************************************************
*********************************************************************************************************************
***                                                                                                               ***
***                                                                                                               ***
***                                    STANDARD COMPOSITION LIBRARY DATA                                          ***
***                                    ---------------------------------                                          ***
***                                                                                                               ***
***            UNIT NUMBER  :  89                                                                                 ***
***                                                                                                               ***
***            DATASET NAME :  G:\scale43\DATALIB\FT89F001                                                        ***
***                                                                                                               ***
***            LIBRARY TITLE:  SCALE-4 STANDARD COMPOSITION LIBRARY                                               ***
***                            637 STANDARD COMPOSITIONS, 490 NUCLIDES                                            ***
***                            90 ELEMENTS WITH VARIABLE ISOTOPIC DISTRBUTIONS.                                   ***
***                                                                                                               ***
***            CREATION DATE:   6/30/95                                                                           ***
***                                                                                                               ***
***                                                                                                               ***
***                                                                                                               ***
***                                      CROSS SECTION LIBRARY DATA                                               ***
***                                      --------------------------                                               ***
***                                                                                                               ***
***            UNIT NUMBER  :  82                                                                                 ***
***                                                                                                               ***
***            DATASET NAME :  G:\scale43\DATALIB\FT82F001                                                        ***
***                                                                                                               ***
***            LIBRARY TITLE:  SCALE 4.2 - 27 GROUP NEUTRON GROUP LIBRARY                                         ***
***                               BASED ON ENDF-B VERSION 4 DATA                                                  ***
***                                  COMPILED FOR NRC     1/27/89                                               ***
***                                     LAST UPDATED                                          08/12/94  ***
***                                        L.M.PETRIE   -   ORNL                                                  ***
***                                                                                                               ***
***                                                                                                               ***
***                                                                                                               ***
***                                                                                                               ***
*********************************************************************************************************************
*********************************************************************************************************************

                        ........    0 IO'S WERE USED BEFORE READING KENO V DATA    ........

                        ........    0 IO'S WERE USED READING THE KENO V PARAMETER DATA    ........


                       *************** DATA READING COMPLETED ***************

                        ........    0 IO'S WERE USED PREPARING THE KENO V INPUT DATA    ........

                        ........    0 IO'S WERE USED LOADING THE KENO V DATA    ........

                        ........    0 IO'S WERE USED LOADING THE DATA    ........

                        ........    0 IO'S WERE USED CHECKING THE KENO V GEOMETRY DATA    ........
                        *****  RESTART DATA HAS BEEN WRITTEN ON UNIT 95  *****

                        ........    0 IO'S WERE USED WRITING THE KENO V - CSAS DATA    ........

                        ........    0 IO'S WERE USED PROCESSING CSAS INPUT DATA    ........


 CONTROL MODULE CSAS25   IS COMPLETE.
```

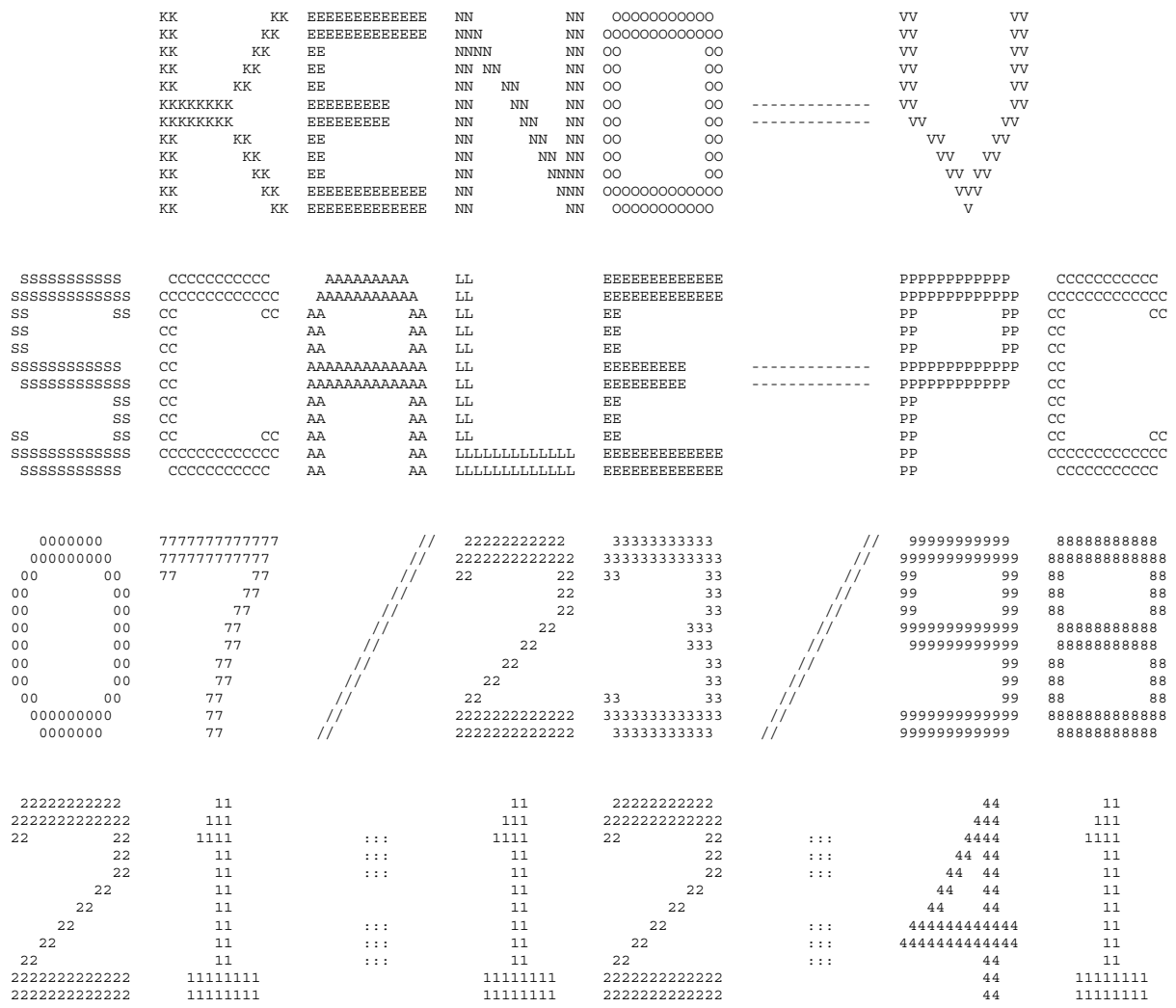

```
*****************************************************************************************************************
***                                                                                                           ***
***                          NAC-LWT CASK MODEL; EXXON 9X9 - 2 WATER RODS  80 MIL CHANNEL                     ***
***                                                                                                           ***
*****************************************************************************************************************
***                          ******       NUMERIC PARAMETERS       ******                                    ***
***                                                                                                           ***
***                                                                                                           ***
***            TME         MAXIMUM PROBLEM TIME (MIN)                        ******                       ***
***                                                                                                           ***
***            TBA         TIME PER GENERATION (MIN)                           0.50                       ***
***                                                                                                           ***
***            GEN         NUMBER OF GENERATIONS                                303                       ***
***                                                                                                           ***
***            NPG         NUMBER PER GENERATION                               1000                       ***
***                                                                                                           ***
***            NSK         NUMBER OF GENERATIONS TO BE SKIPPED                    3                       ***
***                                                                                                           ***
***            BEG         BEGINNING GENERATION NUMBER                            1                       ***
***                                                                                                           ***
***            RES         GENERATIONS BETWEEN CHECKPOINTS                        0                       ***
***                                                                                                           ***
***            X1D         NUMBER OF EXTRA 1-D CROSS SECTIONS                     1                       ***
***                                                                                                           ***
***            NBK         NEUTRON BANK SIZE                                   1025                       ***
***                                                                                                           ***
***            XNB         EXTRA POSITIONS IN NEUTRON BANK                        0                       ***
***                                                                                                           ***
***            NFB         FISSION BANK SIZE                                   1000                       ***
***                                                                                                           ***
***            XFB         EXTRA POSITIONS IN FISSION BANK                        0                       ***
***                                                                                                           ***
***            WTA         DEFAULT VALUE OF WEIGHT AVERAGE                   0.5000                       ***
***                                                                                                           ***
***            WTH         WEIGHT HIGH FOR SPLITTING                         3.0000                       ***
***                                                                                                           ***
***            WTL         WEIGHT LOW FOR RUSSIAN ROULETTE                   0.3333                       ***
***                                                                                                           ***
***            RND         STARTING RANDOM NUMBER                         BB827100001                     ***
***                                                                                                           ***
***            NB8         NUMBER OF D.A. BLOCKS ON UNIT  8                     200                       ***
***                                                                                                           ***
***            NL8         LENGTH OF D.A. BLOCKS ON UNIT  8                     512                       ***
***                                                                                                           ***
***            ADJ         MODE OF CALCULATION                              FORWARD                       ***
***                                                                                                           ***
***                        INPUT DATA WRITTEN ON RESTART UNIT                    NO                       ***
***                                                                                                           ***
***                        BINARY DATA INTERFACE                                 YES                      ***
***                                                                                                           ***
***                                                                                                           ***
*****************************************************************************************************************
*****************************************************************************************************************
```

```
*****************************************************************************************************************
*****************************************************************************************************************
***                                                                                                           ***
***                            NAC-LWT CASK MODEL; EXXON 9X9 - 2 WATER RODS  80 MIL CHANNEL                   ***
***                                                                                                           ***
*****************************************************************************************************************
***                                ******      LOGICAL PARAMETERS        ******                               ***
***                                                                                                           ***
***  RUN  EXECUTE PROBLEM AFTER CHECKING DATA    YES            PLT  PLOT PICTURE MAP(S)                    NO ***
***                                                                                                           ***
***  FLX  COMPUTE FLUX                            NO            FDN  COMPUTE FISSION DENSITIES              NO ***
***                                                                                                           ***
***  SMU  COMPUTE AVG UNIT SELF-MULTIPLICATION    NO            NUB  COMPUTE NU-BAR & AVG FISSION GROUP     YES ***
***                                                                                                           ***
***  MKU  COMPUTE MATRIX K-EFF BY UNIT NUMBER     NO            MKP  COMPUTE MATRIX K-EFF BY UNIT LOCATION  NO ***
***                                                                                                           ***
***  CKU  COMPUTE COFACTOR K-EFF BY UNIT NUMBER   NO            CKP  COMPUTE COFACTOR K-EFF BY UNIT LOCATION NO ***
***                                                                                                           ***
***  FMU  PRINT FISS PROD MATRIX BY UNIT NUMBER   NO            FMP  PRINT FISS PROD MATRIX BY UNIT LOCATION NO ***
***                                                                                                           ***
***  MKH  COMPUTE MATRIX K-EFF BY HOLE NUMBER     NO            MKA  COMPUTE MATRIX K-EFF BY ARRAY NUMBER   NO ***
***                                                                                                           ***
***  CKH  COMPUTE COFACTOR K-EFF BY HOLE NUMBER   NO            CKA  COMPUTE COFACTOR K-EFF BY ARRAY NUMBER NO ***
***                                                                                                           ***
***  FMH  PRINT FISS PROD MATRIX BY HOLE NUMBER   NO            FMA  PRINT FISS PROD MATRIX BY ARRAY NUMBER NO ***
***                                                                                                           ***
***  HHL  COLLECT MATRIX BY HIGHEST HOLE LEVEL    NO            HAL  COLLECT MATRIX BY HIGHEST ARRAY LEVEL  NO ***
***                                                                                                           ***
***  AMX  PRINT ALL MIXED CROSS SECTIONS          NO            FAR  PRINT FIS. AND ABS. BY REGION          NO ***
***                                                                                                           ***
***  XS1  PRINT 1-D MIXTURE X-SECTIONS            NO            GAS  PRINT FAR BY GROUP                     NO ***
***                                                                                                           ***
***  XS2  PRINT 2-D MIXTURE X-SECTIONS            NO            PAX  PRINT XSEC-ALBEDO CORRELATION TABLES   NO ***
***                                                                                                           ***
***  XAP  PRINT MIXTURE ANGLES & PROBABILITIES    NO            PWT  PRINT WEIGHT AVERAGE ARRAY             NO ***
***                                                                                                           ***
***  PKI  PRINT FISSION SPECTRUM                  NO            PGM  PRINT INPUT GEOMETRY                   NO ***
***                                                                                                           ***
***  P1D  PRINT EXTRA 1-D CROSS SECTIONS          NO            BUG  PRINT DEBUG INFORMATION                NO ***
***                                                                                                           ***
***                                                             TRK  PRINT TRACKING INFORMATION             NO ***
***                                                                                                           ***
***                                                                                                           ***
*****************************************************************************************************************
*****************************************************************************************************************
*****************************************************************************************************************
                                  PARAMETER INPUT COMPLETED

                        ........    0 IO'S WERE USED READING THE PARAMETER DATA      ........

                       ************** DATA READING COMPLETED **************
```

```
*********************************************************************************************
***                                                                                       ***
***          NAC-LWT CASK MODEL; EXXON 9X9 - 2 WATER RODS  80 MIL CHANNEL                 ***
***                                                                                       ***
*********************************************************************************************
*********************************************************************************************
***                                                                                       ***
***                              ****** ADDITIONAL INFORMATION ******                     ***
***                                                                                       ***
***  NUMBER OF ENERGY GROUPS              27       USE LATTICE GEOMETRY                YES  ***
***                                                                                       ***
***  NO. OF FISSION SPECTRUM SOURCE GROUP  1       GLOBAL ARRAY NUMBER                   0  ***
***                                                                                       ***
***  NO. OF SCATTERING ANGLES IN XSECS     2       NUMBER OF UNITS IN THE GLOBAL X DIR.  0  ***
***                                                                                       ***
***  ENTRIES/NEUTRON IN THE NEUTRON BANK  19       NUMBER OF UNITS IN THE GLOBAL Y DIR.  0  ***
***                                                                                       ***
***  ENTRIES/NEUTRON IN THE FISSION BANK  12       NUMBER OF UNITS IN THE GLOBAL Z DIR.  0  ***
***                                                                                       ***
***  NUMBER OF MIXTURES USED               9       USE A GLOBAL REFLECTOR              YES  ***
***                                                                                       ***
***  NUMBER OF BIAS ID'S USED              1       USE NESTED HOLES                    YES  ***
***                                                                                       ***
***  NUMBER OF DIFFERENTIAL ALBEDOS USED   1       NUMBER OF HOLES                      22  ***
***                                                                                       ***
***  TOTAL INPUT GEOMETRY REGIONS         24       MAXIMUM HOLE NESTING LEVEL            2  ***
***                                                                                       ***
***  NUMBER OF GEOMETRY REGIONS USED      24       USE NESTED ARRAYS                    NO  ***
***                                                                                       ***
***  LARGEST GEOMETRY UNIT NUMBER          6       NUMBER OF ARRAYS USED                 1  ***
***                                                                                       ***
***  LARGEST ARRAY NUMBER                  1       MAXIMUM ARRAY NESTING LEVEL           1  ***
***                                                                                       ***
***                                                                                       ***
***  +X BOUNDARY CONDITION               H2O       -X BOUNDARY CONDITION               H2O  ***
***                                                                                       ***
***  +Y BOUNDARY CONDITION               H2O       -Y BOUNDARY CONDITION               H2O  ***
***                                                                                       ***
***  +Z BOUNDARY CONDITION               PER       -Z BOUNDARY CONDITION               PER  ***
***                                                                                       ***
*********************************************************************************************
```

```
*********************************************************************************************
***                                                                                       ***
***          NAC-LWT CASK MODEL; EXXON 9X9 - 2 WATER RODS  80 MIL CHANNEL                 ***
***                                                                                       ***
*********************************************************************************************
*********************************************************************************************
***                                                                                       ***
***                    ****** SPACE AND SUPERGROUP INFORMATION ******                     ***
***                                                                                       ***
***       100000 WORDS IS THE TOTAL SPACE AVAILABLE.                                      ***
***                                                                                       ***
***        34647 WORDS WERE USED FOR NON-SUPERGROUP STORAGE.                              ***
***                                                                                       ***
***        65353 WORDS OF STORAGE ARE AVAILABLE FOR SUPERGROUPED DATA.                    ***
***                                                                                       ***
***        99458 WORDS OF STORAGE ARE AVAILABLE FOR CONSTRUCTING THE SUPERGROUPS.         ***
***                                                                                       ***
***        65292 WORDS OF STORAGE ARE AVAILABLE TO EACH SUPERGROUP.                       ***
***                                                                                       ***
***         1576 WORDS ARE NEEDED FOR THE LARGEST GROUP.                                  ***
***                                                                                       ***
***        36466 WORDS OF STORAGE IS SUFFICIENT TO RUN THIS PROBLEM.                      ***
***                                                                                       ***
***        51430 WORDS OF STORAGE WILL ALLOW THE PROBLEM TO RUN WITH ONE SUPERGROUP.       ***
***                                                                                       ***
***        51872 WORDS OF STORAGE WILL BE USED TO RUN THIS PROBLEM.                       ***
***                                                                                       ***
*********************************************************************************************
*********************************************************************************************
***                                                                                       ***
***                   STARTING      ENDING       XSEC       ALBEDO      TOTAL            ***
***   SUPERGROUP        GROUP        GROUP      LENGTH      LENGTH      LENGTH            ***
***                                                                                       ***
***                                                                                       ***
***          1            1           27         2764         544       16854            ***
***                                                                                       ***
*********************************************************************************************

             ........    0 IO'S WERE USED IN SUPERGROUPING    ........

             ........    0 IO'S WERE USED LOADING THE DATA    ........
```

NAC-LWT CASK MODEL; EXXON 9X9 - 2 WATER RODS 80 MIL CHANNEL

REGION | MEDIA NUM | BIAS ID | GEOMETRY DESCRIPTION FOR THOSE UNITS UTILIZED IN THIS PROBLEM

----- UNIT 1 -----

FUEL PIN CELL - WITH H2O

1 CYLINDER	1	1	RADIUS = 0.45280	+Z = 10.000	-Z = -10.000	CENTERLINE IS AT	X = 0.00000	Y = 0.00000				
2 CYLINDER	9	1	RADIUS = 0.46230	+Z = 10.000	-Z = -10.000	CENTERLINE IS AT	X = 0.00000	Y = 0.00000				
3 CYLINDER	2	1	RADIUS = 0.53850	+Z = 10.000	-Z = -10.000	CENTERLINE IS AT	X = 0.00000	Y = 0.00000				
4 CUBOID	3	1	+X = 0.72640	-X = -0.72640	+Y = 0.72640	-Y = -0.72640	+Z = 10.000	-Z = -10.000				

----- UNIT 2 -----

WATER ROD CELL - WITH H2O

1 CYLINDER	3	1	RADIUS = 0.46230	+Z = 10.000	-Z = -10.000	CENTERLINE IS AT	X = 0.00000	Y = 0.00000				
2 CYLINDER	2	1	RADIUS = 0.53850	+Z = 10.000	-Z = -10.000	CENTERLINE IS AT	X = 0.00000	Y = 0.00000				
3 CUBOID	3	1	+X = 0.72640	-X = -0.72640	+Y = 0.72640	-Y = -0.72640	+Z = 10.000	-Z = -10.000				

----- UNIT 3 EXTERNAL TO LATTICE 1 -----

1 ARRAY NUMBER	1		+X = 6.5376	-X = -6.5376	+Y = 6.5376	-Y = -6.5376	+Z = 10.000	-Z = -10.000				
2 CUBOID	3	1	+X = 6.7031	-X = -6.7031	+Y = 6.7031	-Y = -6.7031	+Z = 10.000	-Z = -10.000				
3 CUBOID	2	1	+X = 6.9063	-X = -6.9063	+Y = 6.9063	-Y = -6.9063	+Z = 10.000	-Z = -10.000				
4 CUBOID	3	1	+X = 7.3025	-X = -7.3025	+Y = 7.3025	-Y = -7.3025	+Z = 10.000	-Z = -10.000				

----- UNIT 4 EXTERNAL TO LATTICE 1 -----

1 ARRAY NUMBER	1		+X = 6.5376	-X = -6.5376	+Y = 6.5376	-Y = -6.5376	+Z = 10.000	-Z = -10.000				
2 CUBOID	3	1	+X = 6.7031	-X = -6.7031	+Y = 6.7031	-Y = -6.7031	+Z = 10.000	-Z = -10.000				
3 CUBOID	2	1	+X = 6.9063	-X = -6.9063	+Y = 6.9063	-Y = -6.9063	+Z = 10.000	-Z = -10.000				
4 CUBOID	3	1	+X = 7.3025	-X = -7.3025	+Y = 7.3025	-Y = -7.3025	+Z = 10.000	-Z = -10.000				

NAC-LWT CASK MODEL; EXXON 9X9 - 2 WATER RODS 80 MIL CHANNEL

REGION | MEDIA NUM | BIAS ID | GEOMETRY DESCRIPTION FOR THOSE UNITS UTILIZED IN THIS PROBLEM

----- UNIT 5 -----

1 CYLINDER	4	1	RADIUS = 16.827	+Z = 10.000	-Z = -10.000	CENTERLINE IS AT	X = 0.00000	Y = 0.00000				
HOLE NUMBER	1		AT X = -7.4613	Y = 0.00000	Z = 0.00000	IS UNIT NUMBER	3					
HOLE NUMBER	2		AT X = 7.4613	Y = 0.00000	Z = 0.00000	IS UNIT NUMBER	4					
2 CYLINDER	3	1	RADIUS = 16.986	+Z = 10.000	-Z = -10.000	CENTERLINE IS AT	X = 0.00000	Y = 0.00000				
3 CYLINDER	5	1	RADIUS = 18.891	+Z = 10.000	-Z = -10.000	CENTERLINE IS AT	X = 0.00000	Y = 0.00000				
4 CYLINDER	6	1	RADIUS = 33.496	+Z = 10.000	-Z = -10.000	CENTERLINE IS AT	X = 0.00000	Y = 0.00000				
5 CYLINDER	5	1	RADIUS = 36.544	+Z = 10.000	-Z = -10.000	CENTERLINE IS AT	X = 0.00000	Y = 0.00000				
6 CYLINDER	7	1	RADIUS = 49.244	+Z = 10.000	-Z = -10.000	CENTERLINE IS AT	X = 0.00000	Y = 0.00000				
7 CYLINDER	5	1	RADIUS = 49.854	+Z = 10.000	-Z = -10.000	CENTERLINE IS AT	X = 0.00000	Y = 0.00000				

NAC-LWT CASK MODEL; EXXON 9X9 - 2 WATER RODS 80 MIL CHANNEL

REGION | MEDIA NUM | BIAS ID | GEOMETRY DESCRIPTION FOR THOSE UNITS UTILIZED IN THIS PROBLEM

********** GLOBAL **********

----- UNIT 6 -----

1 CYLINDER	8	1	RADIUS = 696.00	+Z = 10.000	-Z = -10.000	CENTERLINE IS AT	X = 0.00000	Y = 0.00000				
HOLE NUMBER	3		AT X = 0.00000	Y = 0.00000	Z = 0.00000	IS UNIT NUMBER	5					
HOLE NUMBER	4		AT X = 0.00000	Y = 243.80	Z = 0.00000	IS UNIT NUMBER	5					
HOLE NUMBER	5		AT X = 211.17	Y = 121.90	Z = 0.00000	IS UNIT NUMBER	5					

```
    HOLE NUMBER      6       AT X =  211.17      Y = -121.90      Z = 0.00000     IS UNIT NUMBER      5
    HOLE NUMBER      7       AT X = 0.00000      Y = -243.80      Z = 0.00000     IS UNIT NUMBER      5
    HOLE NUMBER      8       AT X = -211.17      Y = -121.90      Z = 0.00000     IS UNIT NUMBER      5
    HOLE NUMBER      9       AT X = -211.17      Y =  121.90      Z = 0.00000     IS UNIT NUMBER      5
    HOLE NUMBER     10       AT X = 0.00000      Y =  487.70      Z = 0.00000     IS UNIT NUMBER      5
    HOLE NUMBER     11       AT X =  211.20      Y =  365.80      Z = 0.00000     IS UNIT NUMBER      5
    HOLE NUMBER     12       AT X =  422.30      Y =  243.80      Z = 0.00000     IS UNIT NUMBER      5
    HOLE NUMBER     13       AT X =  422.30      Y = 0.00000      Z = 0.00000     IS UNIT NUMBER      5
    HOLE NUMBER     14       AT X =  422.30      Y = -243.80      Z = 0.00000     IS UNIT NUMBER      5
    HOLE NUMBER     15       AT X =  211.20      Y = -365.80      Z = 0.00000     IS UNIT NUMBER      5
    HOLE NUMBER     16       AT X = 0.00000      Y = -487.70      Z = 0.00000     IS UNIT NUMBER      5
    HOLE NUMBER     17       AT X = -211.20      Y = -365.80      Z = 0.00000     IS UNIT NUMBER      5
    HOLE NUMBER     18       AT X = -422.30      Y = -243.88      Z = 0.00000     IS UNIT NUMBER      5
    HOLE NUMBER     19       AT X = -422.30      Y = 0.00000      Z = 0.00000     IS UNIT NUMBER      5
    HOLE NUMBER     20       AT X = -422.30      Y =  243.80      Z = 0.00000     IS UNIT NUMBER      5
    HOLE NUMBER     21       AT X = -211.20      Y =  365.80      Z = 0.00000     IS UNIT NUMBER      5
    HOLE NUMBER     22       AT X =  633.51      Y =  121.90      Z = 0.00000     IS UNIT NUMBER      5
  2 CUBOID           8  1      +X =  696.00     -X = -696.00     +Y =  696.00     -Y = -696.00     +Z =  10.000     -Z = -10.000

                          NAC-LWT CASK MODEL; EXXON 9X9 - 2 WATER RODS  80 MIL CHANNEL

                    -------  UNIT ORIENTATION DESCRIPTION FOR ARRAY   1         -------

Z LAYER   1, X COLUMN   1 TO   9 LEFT TO RIGHT   Y ROW   1 TO   9  BOTTOM TO TOP

 1 1 1 1 1 1 1 1 1

 1 1 1 1 1 1 1 1 1

 1 1 1 1 1 1 1 1 1

 1 1 1 1 1 2 1 1 1

 1 1 1 1 2 1 1 1 1

 1 1 1 1 1 1 1 1 1

 1 1 1 1 1 1 1 1 1

 1 1 1 1 1 1 1 1 1

 1 1 1 1 1 1 1 1 1
```

NAC-LWT CASK MODEL; EXXON 9X9 - 2 WATER RODS 80 MIL CHANNEL
VOLUMES FOR THOSE UNITS UTILIZED IN THIS PROBLEM

UNIT	REGION	GEOMETRY REGION	VOLUME	CUMULATIVE VOLUME
1	1	1	1.28823E+01 CM**3	1.28823E+01 CM**3
	2	2	5.46226E-01 CM**3	1.34285E+01 CM**3
	3	3	4.79162E+00 CM**3	1.82201E+01 CM**3
	4	4	2.39924E+01 CM**3	4.22126E+01 CM**3
2	1	5	1.34285E+01 CM**3	1.34285E+01 CM**3
	2	6	4.79162E+00 CM**3	1.82201E+01 CM**3
	3	7	2.39924E+01 CM**3	4.22126E+01 CM**3
SURROUNDING GEOMETRY VOLUMES - GEOMETRY REGION 8 IS AN ARRAY PLACEMENT BOUNDARY REGION				
3	1	8	3.41922E+03 CM**3	3.41922E+03 CM**3
	2	9	1.75307E+02 CM**3	3.59452E+03 CM**3
	3	10	2.21234E+02 CM**3	3.81576E+03 CM**3
	4	11	4.50362E+02 CM**3	4.26612E+03 CM**3
SURROUNDING GEOMETRY VOLUMES - GEOMETRY REGION 12 IS AN ARRAY PLACEMENT BOUNDARY REGION				
4	1	12	3.41922E+03 CM**3	3.41922E+03 CM**3
	2	13	1.75307E+02 CM**3	3.59452E+03 CM**3
	3	14	2.21234E+02 CM**3	3.81576E+03 CM**3
	4	15	4.50362E+02 CM**3	4.26612E+03 CM**3
5	1	16	9.25953E+03 CM**3	1.77918E+04 CM**3
	2	17	3.37383E+02 CM**3	1.81291E+04 CM**3
	3	18	4.29436E+03 CM**3	2.24235E+04 CM**3
	4	19	4.80740E+04 CM**3	7.04975E+04 CM**3
	5	20	1.34136E+04 CM**3	8.39110E+04 CM**3
	6	21	6.84563E+04 CM**3	1.52367E+05 CM**3
	7	22	3.79567E+03 CM**3	1.56163E+05 CM**3
6	1	23	2.73135E+07 CM**3	3.04368E+07 CM**3
	2	24	8.31653E+06 CM**3	3.87533E+07 CM**3

UNIT	USES	REGION	MIXTURE	TOTAL VOLUME
1	3160	1	1	4.07080E+04 CM**3
		2	9	1.72607E+03 CM**3
		3	2	1.51415E+04 CM**3
		4	3	7.58161E+04 CM**3
2	80	1	3	1.07428E+03 CM**3
		2	2	3.83329E+02 CM**3
		3	3	1.91939E+03 CM**3
3	20	1		6.83843E+04 CM**3
		2	3	3.50614E+03 CM**3
		3	2	4.42469E+03 CM**3
		4	3	9.00723E+03 CM**3
4	20	1		6.83843E+04 CM**3
		2	3	3.50614E+03 CM**3
		3	2	4.42469E+03 CM**3
		4	3	9.00723E+03 CM**3
5	20	1	4	1.85191E+05 CM**3
		2	3	6.74766E+03 CM**3
		3	5	8.58872E+04 CM**3
		4	6	9.61479E+05 CM**3
		5	5	2.68272E+05 CM**3
		6	7	1.36913E+06 CM**3
		7	5	7.59134E+04 CM**3
6	1	1	8	2.73135E+07 CM**3
		2	8	8.31653E+06 CM**3

TOTAL MIXTURE VOLUMES

MIXTURE	TOTAL VOLUME	MASS(G)
1	4.07080E+04 CM**3	4.23851E+05
2	2.43742E+04 CM**3	1.59895E+05
3	1.10584E+05 CM**3	1.10382E+05
4	1.85191E+05 CM**3	5.00385E+05
5	4.30072E+05 CM**3	3.40617E+06
6	9.61479E+05 CM**3	1.09070E+07
7	1.36913E+06 CM**3	1.36662E+06
8	3.56300E+07 CM**3	3.55648E+07
9	1.72607E+03 CM**3	1.72292E-17

****
***
*** BIASING INFORMATION ***
***
*** A DEFAULT WEIGHT OF 0.500 WILL BE USED FOR ALL BIAS ID'S. ***
***
****

..... 0 IO'S WERE USED IN KENO-V BEFORE TRACKING .....

..... 0.00717 MINUTES WERE USED PROCESSING DATA. .....

VOLUME FRACTION OF FISSILE MATERIAL IN THE CORE= 1.30338E-02

START TYPE 0 WAS USED.

THE NEUTRONS WERE STARTED WITH A FLAT DISTRIBUTION IN A CUBOID DEFINED BY:
+X= 6.96000E+02 -X=-6.96000E+02 +Y= 6.96000E+02 -Y=-6.96000E+02 +Z= 1.00000E+01 -Z=-1.00000E+01
THE FLAG TO START NEUTRONS IN THE REFLECTOR WAS TURNED OFF

KENO MESSAGE NUMBER K5-105 ***** WARNING, ONLY 24 INDEPENDENT STARTING POSITIONS WERE GENERATED. *****

976 ADDITIONAL STARTING POINTS WERE PICKED FROM THE INITAL DISTRIBUTION.

0.45333 MINUTES WERE REQUIRED FOR STARTING. TOTAL ELAPSED TIME IS 0.46933 MINUTES.
_NAC-LWT CASK MODEL; EXXON 9X9 - 2 WATER RODS 80 MIL CHANNEL

GENERATION	GENERATION K-EFFECTIVE	ELAPSED TIME MINUTES	AVERAGE K-EFFECTIVE	AVG K-EFF DEVIATION	MATRIX K-EFFECTIVE	MATRIX K-EFF DEVIATION
KENO MESSAGE NUMBER K5-132	WARNING....ONLY	874 INDEPENDENT FISSION POINTS WERE GENERATED				
1	8.03015E-01	4.86000E-01	1.00000E+00	0.00000E+00	0.00000E+00	0.00000E+00
KENO MESSAGE NUMBER K5-132	WARNING....ONLY	967 INDEPENDENT FISSION POINTS WERE GENERATED				
2	8.55134E-01	5.08000E-01	1.00000E+00	0.00000E+00	0.00000E+00	0.00000E+00
KENO MESSAGE NUMBER K5-132	WARNING....ONLY	904 INDEPENDENT FISSION POINTS WERE GENERATED				
3	8.61212E-01	5.29000E-01	8.61212E-01	0.00000E+00	0.00000E+00	0.00000E+00
4	8.44058E-01	5.51000E-01	8.52635E-01	8.57702E-03	0.00000E+00	0.00000E+00
5	8.82350E-01	5.73833E-01	8.62540E-01	1.10737E-02	0.00000E+00	0.00000E+00
6	8.47498E-01	5.97667E-01	8.58780E-01	8.68646E-03	0.00000E+00	0.00000E+00
7	8.51571E-01	6.20667E-01	8.57338E-01	6.88123E-03	0.00000E+00	0.00000E+00
8	8.93368E-01	6.41667E-01	8.63343E-01	8.22366E-03	0.00000E+00	0.00000E+00
9	8.33529E-01	6.64500E-01	8.59084E-01	8.15146E-03	0.00000E+00	0.00000E+00
10	8.36796E-01	6.87333E-01	8.56298E-01	7.58924E-03	0.00000E+00	0.00000E+00
11	8.82450E-01	7.09333E-01	8.59204E-01	7.29663E-03	0.00000E+00	0.00000E+00
12	8.44942E-01	7.32333E-01	8.57778E-01	6.68031E-03	0.00000E+00	0.00000E+00
13	8.42681E-01	7.55167E-01	8.56405E-01	6.19646E-03	0.00000E+00	0.00000E+00
14	8.42487E-01	7.78000E-01	8.55245E-01	5.77424E-03	0.00000E+00	0.00000E+00
15	8.27233E-01	8.01000E-01	8.53091E-01	5.73198E-03	0.00000E+00	0.00000E+00
16	8.58392E-01	8.23833E-01	8.53469E-01	5.32028E-03	0.00000E+00	0.00000E+00
17	8.42240E-01	8.45833E-01	8.52721E-01	5.00917E-03	0.00000E+00	0.00000E+00
18	8.33538E-01	8.68667E-01	8.51522E-01	4.83660E-03	0.00000E+00	0.00000E+00
19	8.75942E-01	8.91500E-01	8.52958E-01	4.76489E-03	0.00000E+00	0.00000E+00
20	8.17923E-01	9.15333E-01	8.51012E-01	4.89591E-03	0.00000E+00	0.00000E+00
21	8.49207E-01	9.40000E-01	8.50917E-01	4.63204E-03	0.00000E+00	0.00000E+00
22	8.28669E-01	9.63000E-01	8.49804E-01	4.53294E-03	0.00000E+00	0.00000E+00
23	8.19649E-01	9.85833E-01	8.48368E-01	4.54452E-03	0.00000E+00	0.00000E+00
24	8.72484E-01	1.00867E+00	8.49465E-01	4.46954E-03	0.00000E+00	0.00000E+00
25	8.08727E-01	1.03250E+00	8.47693E-01	4.62351E-03	0.00000E+00	0.00000E+00
26	8.63732E-01	1.05450E+00	8.48362E-01	4.47683E-03	0.00000E+00	0.00000E+00
27	8.27315E-01	1.07650E+00	8.47520E-01	4.37577E-03	0.00000E+00	0.00000E+00
28	8.69706E-01	1.09933E+00	8.48373E-01	4.28983E-03	0.00000E+00	0.00000E+00
29	8.44903E-01	1.12217E+00	8.48245E-01	4.12989E-03	0.00000E+00	0.00000E+00
30	8.33130E-01	1.14417E+00	8.47705E-01	4.01610E-03	0.00000E+00	0.00000E+00
31	8.77643E-01	1.16617E+00	8.48737E-01	4.01030E-03	0.00000E+00	0.00000E+00
32	8.42523E-01	1.18900E+00	8.48530E-01	3.87985E-03	0.00000E+00	0.00000E+00
33	8.60517E-01	1.21100E+00	8.48917E-01	3.77248E-03	0.00000E+00	0.00000E+00
34	8.50583E-01	1.23400E+00	8.48969E-01	3.65306E-03	0.00000E+00	0.00000E+00
35	8.88333E-01	1.25683E+00	8.50162E-01	3.73617E-03	0.00000E+00	0.00000E+00
36	8.28639E-01	1.27967E+00	8.49529E-01	3.67948E-03	0.00000E+00	0.00000E+00
37	8.98219E-01	1.30167E+00	8.50920E-01	3.83409E-03	0.00000E+00	0.00000E+00
38	8.55574E-01	1.32450E+00	8.51049E-01	3.72831E-03	0.00000E+00	0.00000E+00
39	8.64577E-01	1.34833E+00	8.51415E-01	3.64453E-03	0.00000E+00	0.00000E+00
40	8.18400E-01	1.37217E+00	8.50546E-01	3.65217E-03	0.00000E+00	0.00000E+00
41	8.44594E-01	1.39500E+00	8.50393E-01	3.56056E-03	0.00000E+00	0.00000E+00
42	8.25882E-01	1.41800E+00	8.49780E-01	3.52409E-03	0.00000E+00	0.00000E+00
43	8.94276E-01	1.43900E+00	8.50866E-01	3.60433E-03	0.00000E+00	0.00000E+00
44	8.48984E-01	1.46100E+00	8.50821E-01	3.51775E-03	0.00000E+00	0.00000E+00
45	8.38897E-01	1.48283E+00	8.50544E-01	3.44615E-03	0.00000E+00	0.00000E+00
46	8.27345E-01	1.50483E+00	8.50016E-01	3.40795E-03	0.00000E+00	0.00000E+00
47	8.43568E-01	1.52867E+00	8.49873E-01	3.33443E-03	0.00000E+00	0.00000E+00
48	8.34958E-01	1.55067E+00	8.49549E-01	3.27722E-03	0.00000E+00	0.00000E+00
49	8.28192E-01	1.57350E+00	8.49094E-01	3.23877E-03	0.00000E+00	0.00000E+00
50	8.79751E-01	1.59550E+00	8.49733E-01	3.23426E-03	0.00000E+00	0.00000E+00
51	8.30097E-01	1.61833E+00	8.49332E-01	3.19282E-03	0.00000E+00	0.00000E+00
52	8.31352E-01	1.64217E+00	8.48973E-01	3.14891E-03	0.00000E+00	0.00000E+00
53	8.02345E-01	1.66517E+00	8.48058E-01	3.21911E-03	0.00000E+00	0.00000E+00
54	8.39723E-01	1.68700E+00	8.47898E-01	3.16067E-03	0.00000E+00	0.00000E+00
55	8.40903E-01	1.71000E+00	8.47766E-01	3.10326E-03	0.00000E+00	0.00000E+00
56	8.68127E-01	1.73183E+00	8.48143E-01	3.06851E-03	0.00000E+00	0.00000E+00
57	8.55930E-01	1.75483E+00	8.48285E-01	3.01553E-03	0.00000E+00	0.00000E+00
58	8.32171E-01	1.77683E+00	8.47997E-01	2.97514E-03	0.00000E+00	0.00000E+00
59	8.32146E-01	1.79967E+00	8.47719E-01	2.93568E-03	0.00000E+00	0.00000E+00
60	8.61564E-01	1.82250E+00	8.47958E-01	2.89448E-03	0.00000E+00	0.00000E+00
61	8.36321E-01	1.84550E+00	8.47760E-01	2.85182E-03	0.00000E+00	0.00000E+00
62	8.22286E-01	1.87017E+00	8.47336E-01	2.83585E-03	0.00000E+00	0.00000E+00
63	8.05083E-01	1.89300E+00	8.46643E-01	2.87370E-03	0.00000E+00	0.00000E+00
64	8.58331E-01	1.91500E+00	8.46832E-01	2.83325E-03	0.00000E+00	0.00000E+00
65	8.31174E-01	1.93783E+00	8.46583E-01	2.79897E-03	0.00000E+00	0.00000E+00
66	8.26488E-01	1.96083E+00	8.46269E-01	2.77273E-03	0.00000E+00	0.00000E+00
67	8.41472E-01	1.98183E+00	8.46195E-01	2.73073E-03	0.00000E+00	0.00000E+00
68	8.70657E-01	2.00567E+00	8.46566E-01	2.71446E-03	0.00000E+00	0.00000E+00
69	8.59016E-01	2.02850E+00	8.46752E-01	2.68009E-03	0.00000E+00	0.00000E+00
70	8.64105E-01	2.05133E+00	8.47007E-01	2.65269E-03	0.00000E+00	0.00000E+00
71	8.65970E-01	2.07433E+00	8.47282E-01	2.62837E-03	0.00000E+00	0.00000E+00
72	8.45386E-01	2.09717E+00	8.47255E-01	2.59069E-03	0.00000E+00	0.00000E+00
73	8.20063E-01	2.12183E+00	8.46872E-01	2.58249E-03	0.00000E+00	0.00000E+00
74	8.18769E-01	2.14383E+00	8.46482E-01	2.57611E-03	0.00000E+00	0.00000E+00
75	8.28930E-01	2.16667E+00	8.46241E-01	2.55193E-03	0.00000E+00	0.00000E+00

76	8.41596E-01	2.19050E+00	8.46178E-01	2.51799E-03	0.00000E+00	0.00000E+00
77	8.55685E-01	2.21350E+00	8.46305E-01	2.48742E-03	0.00000E+00	0.00000E+00
78	8.53658E-01	2.23633E+00	8.46402E-01	2.45638E-03	0.00000E+00	0.00000E+00
79	8.74212E-01	2.25917E+00	8.46763E-01	2.45103E-03	0.00000E+00	0.00000E+00
80	8.66232E-01	2.28200E+00	8.47013E-01	2.43224E-03	0.00000E+00	0.00000E+00
81	8.25765E-01	2.30500E+00	8.46744E-01	2.41627E-03	0.00000E+00	0.00000E+00
82	8.22817E-01	2.32700E+00	8.46445E-01	2.40455E-03	0.00000E+00	0.00000E+00
83	8.19809E-01	2.35067E+00	8.46116E-01	2.39734E-03	0.00000E+00	0.00000E+00
84	8.41692E-01	2.37367E+00	8.46062E-01	2.36854E-03	0.00000E+00	0.00000E+00
85	8.83550E-01	2.39650E+00	8.46513E-01	2.38302E-03	0.00000E+00	0.00000E+00
86	8.57558E-01	2.41933E+00	8.46645E-01	2.35815E-03	0.00000E+00	0.00000E+00
87	8.91905E-01	2.44133E+00	8.47177E-01	2.39030E-03	0.00000E+00	0.00000E+00
88	8.35818E-01	2.46333E+00	8.47045E-01	2.36603E-03	0.00000E+00	0.00000E+00
89	8.49144E-01	2.48533E+00	8.47069E-01	2.33880E-03	0.00000E+00	0.00000E+00
90	8.47923E-01	2.50917E+00	8.47079E-01	2.31210E-03	0.00000E+00	0.00000E+00
91	8.38329E-01	2.53200E+00	8.46981E-01	2.28808E-03	0.00000E+00	0.00000E+00
92	8.46967E-01	2.55583E+00	8.46981E-01	2.26252E-03	0.00000E+00	0.00000E+00
93	8.22641E-01	2.57867E+00	8.46713E-01	2.25345E-03	0.00000E+00	0.00000E+00
94	8.38773E-01	2.60150E+00	8.46627E-01	2.23049E-03	0.00000E+00	0.00000E+00
95	8.72416E-01	2.62533E+00	8.46904E-01	2.22373E-03	0.00000E+00	0.00000E+00
96	8.42833E-01	2.64733E+00	8.46861E-01	2.20037E-03	0.00000E+00	0.00000E+00
97	8.39828E-01	2.67117E+00	8.46787E-01	2.17835E-03	0.00000E+00	0.00000E+00
98	8.20131E-01	2.69500E+00	8.46509E-01	2.17335E-03	0.00000E+00	0.00000E+00
99	8.27881E-01	2.71783E+00	8.46317E-01	2.15938E-03	0.00000E+00	0.00000E+00
100	8.89356E-01	2.73883E+00	8.46756E-01	2.18189E-03	0.00000E+00	0.00000E+00
101	8.75624E-01	2.76083E+00	8.47048E-01	2.17933E-03	0.00000E+00	0.00000E+00
102	8.58070E-01	2.78283E+00	8.47158E-01	2.16024E-03	0.00000E+00	0.00000E+00
103	8.50854E-01	2.80567E+00	8.47195E-01	2.13906E-03	0.00000E+00	0.00000E+00
104	8.25914E-01	2.82867E+00	8.46986E-01	2.12824E-03	0.00000E+00	0.00000E+00
105	8.30769E-01	2.85150E+00	8.46829E-01	2.11335E-03	0.00000E+00	0.00000E+00
106	8.44415E-01	2.87433E+00	8.46805E-01	2.09305E-03	0.00000E+00	0.00000E+00
107	8.25184E-01	2.89633E+00	8.46599E-01	2.08323E-03	0.00000E+00	0.00000E+00
108	8.37758E-01	2.91917E+00	8.46516E-01	2.06517E-03	0.00000E+00	0.00000E+00
109	8.49844E-01	2.94217E+00	8.46547E-01	2.04601E-03	0.00000E+00	0.00000E+00
110	8.55113E-01	2.96500E+00	8.46626E-01	2.02853E-03	0.00000E+00	0.00000E+00
111	8.46195E-01	2.98700E+00	8.46623E-01	2.00984E-03	0.00000E+00	0.00000E+00
112	8.45141E-01	3.00983E+00	8.46609E-01	1.99153E-03	0.00000E+00	0.00000E+00
113	8.31607E-01	3.03183E+00	8.46474E-01	1.97813E-03	0.00000E+00	0.00000E+00
114	8.24469E-01	3.05467E+00	8.46277E-01	1.97021E-03	0.00000E+00	0.00000E+00
115	8.55939E-01	3.07667E+00	8.46363E-01	1.95456E-03	0.00000E+00	0.00000E+00
116	8.35861E-01	3.09950E+00	8.46271E-01	1.93953E-03	0.00000E+00	0.00000E+00
117	8.89436E-01	3.12150E+00	8.46646E-01	1.95889E-03	0.00000E+00	0.00000E+00
118	8.36781E-01	3.14433E+00	8.46561E-01	1.94379E-03	0.00000E+00	0.00000E+00
119	8.56479E-01	3.16733E+00	8.46646E-01	1.92897E-03	0.00000E+00	0.00000E+00
120	8.31943E-01	3.19117E+00	8.46521E-01	1.91661E-03	0.00000E+00	0.00000E+00
121	8.47051E-01	3.21400E+00	8.46526E-01	1.90044E-03	0.00000E+00	0.00000E+00
122	8.56000E-01	3.23600E+00	8.46605E-01	1.88619E-03	0.00000E+00	0.00000E+00
123	8.66896E-01	3.25983E+00	8.46772E-01	1.87804E-03	0.00000E+00	0.00000E+00
124	8.87945E-01	3.28267E+00	8.47110E-01	1.89290E-03	0.00000E+00	0.00000E+00
125	8.03069E-01	3.30550E+00	8.46752E-01	1.91129E-03	0.00000E+00	0.00000E+00
126	8.28590E-01	3.32833E+00	8.46605E-01	1.90146E-03	0.00000E+00	0.00000E+00
127	8.37357E-01	3.35217E+00	8.46531E-01	1.88764E-03	0.00000E+00	0.00000E+00
128	8.54670E-01	3.37417E+00	8.46596E-01	1.87371E-03	0.00000E+00	0.00000E+00
129	8.34564E-01	3.39700E+00	8.46501E-01	1.86131E-03	0.00000E+00	0.00000E+00
130	8.31266E-01	3.41900E+00	8.46382E-01	1.85055E-03	0.00000E+00	0.00000E+00
131	8.26428E-01	3.44200E+00	8.46227E-01	1.84265E-03	0.00000E+00	0.00000E+00
132	7.89605E-01	3.46483E+00	8.45792E-01	1.87958E-03	0.00000E+00	0.00000E+00
133	8.36767E-01	3.48683E+00	8.45723E-01	1.86645E-03	0.00000E+00	0.00000E+00
134	8.63284E-01	3.51050E+00	8.45856E-01	1.85703E-03	0.00000E+00	0.00000E+00
135	8.58040E-01	3.53167E+00	8.45948E-01	1.84529E-03	0.00000E+00	0.00000E+00
136	8.47175E-01	3.55450E+00	8.45957E-01	1.83149E-03	0.00000E+00	0.00000E+00
137	8.11359E-01	3.57733E+00	8.45701E-01	1.83585E-03	0.00000E+00	0.00000E+00
138	8.36414E-01	3.60033E+00	8.45632E-01	1.82358E-03	0.00000E+00	0.00000E+00
139	8.34532E-01	3.62317E+00	8.45551E-01	1.81203E-03	0.00000E+00	0.00000E+00
140	8.29938E-01	3.64700E+00	8.45438E-01	1.80241E-03	0.00000E+00	0.00000E+00
141	8.32637E-01	3.67083E+00	8.45346E-01	1.79176E-03	0.00000E+00	0.00000E+00
142	8.61959E-01	3.69367E+00	8.45465E-01	1.78287E-03	0.00000E+00	0.00000E+00
143	8.93389E-01	3.71567E+00	8.45805E-01	1.80252E-03	0.00000E+00	0.00000E+00
144	8.40488E-01	3.73950E+00	8.45767E-01	1.79017E-03	0.00000E+00	0.00000E+00
145	8.37730E-01	3.76233E+00	8.45711E-01	1.77849E-03	0.00000E+00	0.00000E+00
146	8.08936E-01	3.78433E+00	8.45456E-01	1.78447E-03	0.00000E+00	0.00000E+00
147	8.51072E-01	3.80633E+00	8.45494E-01	1.77254E-03	0.00000E+00	0.00000E+00
148	8.25831E-01	3.82917E+00	8.45360E-01	1.76550E-03	0.00000E+00	0.00000E+00
149	8.72426E-01	3.85200E+00	8.45544E-01	1.76309E-03	0.00000E+00	0.00000E+00
150	8.48161E-01	3.87400E+00	8.45561E-01	1.75123E-03	0.00000E+00	0.00000E+00
151	8.12393E-01	3.89783E+00	8.45339E-01	1.75362E-03	0.00000E+00	0.00000E+00
152	8.27142E-01	3.91983E+00	8.45218E-01	1.74611E-03	0.00000E+00	0.00000E+00
153	8.56056E-01	3.94267E+00	8.45289E-01	1.73599E-03	0.00000E+00	0.00000E+00
154	8.43779E-01	3.96550E+00	8.45279E-01	1.72456E-03	0.00000E+00	0.00000E+00
155	8.23765E-01	3.98933E+00	8.45139E-01	1.71902E-03	0.00000E+00	0.00000E+00
156	8.62734E-01	4.01133E+00	8.45253E-01	1.71164E-03	0.00000E+00	0.00000E+00
157	8.36394E-01	4.03417E+00	8.45196E-01	1.70152E-03	0.00000E+00	0.00000E+00
158	8.44308E-01	4.05617E+00	8.45190E-01	1.69058E-03	0.00000E+00	0.00000E+00
159	8.62940E-01	4.07900E+00	8.45303E-01	1.68358E-03	0.00000E+00	0.00000E+00
160	8.61780E-01	4.10100E+00	8.45407E-01	1.67614E-03	0.00000E+00	0.00000E+00
161	8.35460E-01	4.12383E+00	8.45345E-01	1.66674E-03	0.00000E+00	0.00000E+00
162	8.25338E-01	4.14683E+00	8.45220E-01	1.66100E-03	0.00000E+00	0.00000E+00
163	8.40146E-01	4.16883E+00	8.45188E-01	1.65095E-03	0.00000E+00	0.00000E+00
164	8.42656E-01	4.19167E+00	8.45173E-01	1.64081E-03	0.00000E+00	0.00000E+00
165	8.39231E-01	4.21450E+00	8.45136E-01	1.63112E-03	0.00000E+00	0.00000E+00
166	8.54434E-01	4.23750E+00	8.45193E-01	1.62213E-03	0.00000E+00	0.00000E+00
167	8.59968E-01	4.26033E+00	8.45283E-01	1.61475E-03	0.00000E+00	0.00000E+00
168	8.44632E-01	4.28317E+00	8.45279E-01	1.60500E-03	0.00000E+00	0.00000E+00
169	8.66339E-01	4.30517E+00	8.45405E-01	1.60034E-03	0.00000E+00	0.00000E+00
170	8.30213E-01	4.32717E+00	8.45314E-01	1.59335E-03	0.00000E+00	0.00000E+00

171	8.53259E-01	4.34917E+00	8.45361E-01	1.58459E-03	0.00000E+00	0.00000E+00
172	8.52991E-01	4.37200E+00	8.45406E-01	1.57588E-03	0.00000E+00	0.00000E+00
173	8.35313E-01	4.39483E+00	8.45347E-01	1.56775E-03	0.00000E+00	0.00000E+00
174	8.39402E-01	4.41867E+00	8.45313E-01	1.55900E-03	0.00000E+00	0.00000E+00
175	8.85390E-01	4.44150E+00	8.45544E-01	1.56717E-03	0.00000E+00	0.00000E+00
176	8.67804E-01	4.46350E+00	8.45672E-01	1.56338E-03	0.00000E+00	0.00000E+00
177	8.90259E-01	4.48650E+00	8.45927E-01	1.57517E-03	0.00000E+00	0.00000E+00
178	8.63545E-01	4.50750E+00	8.46027E-01	1.56939E-03	0.00000E+00	0.00000E+00
179	8.24477E-01	4.53133E+00	8.45905E-01	1.56524E-03	0.00000E+00	0.00000E+00
180	8.48311E-01	4.55317E+00	8.45919E-01	1.55648E-03	0.00000E+00	0.00000E+00
181	8.24968E-01	4.57617E+00	8.45802E-01	1.55218E-03	0.00000E+00	0.00000E+00
182	8.74340E-01	4.59817E+00	8.45960E-01	1.55165E-03	0.00000E+00	0.00000E+00
183	8.43356E-01	4.62100E+00	8.45946E-01	1.54312E-03	0.00000E+00	0.00000E+00
184	7.96098E-01	4.64567E+00	8.45672E-01	1.55887E-03	0.00000E+00	0.00000E+00
185	8.19912E-01	4.66767E+00	8.45531E-01	1.55671E-03	0.00000E+00	0.00000E+00
186	8.50512E-01	4.68867E+00	8.45558E-01	1.54846E-03	0.00000E+00	0.00000E+00
187	8.38616E-01	4.71167E+00	8.45521E-01	1.54052E-03	0.00000E+00	0.00000E+00
188	8.32801E-01	4.73450E+00	8.45452E-01	1.53374E-03	0.00000E+00	0.00000E+00
189	8.18017E-01	4.75733E+00	8.45306E-01	1.53256E-03	0.00000E+00	0.00000E+00
190	8.06131E-01	4.78033E+00	8.45097E-01	1.53856E-03	0.00000E+00	0.00000E+00
191	8.34888E-01	4.80400E+00	8.45043E-01	1.53135E-03	0.00000E+00	0.00000E+00
192	8.40406E-01	4.82700E+00	8.45019E-01	1.52347E-03	0.00000E+00	0.00000E+00
193	8.51144E-01	4.84900E+00	8.45051E-01	1.51581E-03	0.00000E+00	0.00000E+00
194	8.51368E-01	4.87183E+00	8.45084E-01	1.50825E-03	0.00000E+00	0.00000E+00
195	8.53999E-01	4.89567E+00	8.45130E-01	1.50113E-03	0.00000E+00	0.00000E+00
196	8.57997E-01	4.91667E+00	8.45196E-01	1.49484E-03	0.00000E+00	0.00000E+00
197	8.31102E-01	4.93950E+00	8.45124E-01	1.48891E-03	0.00000E+00	0.00000E+00
198	8.60282E-01	4.96250E+00	8.45201E-01	1.48331E-03	0.00000E+00	0.00000E+00
199	8.09193E-01	4.98433E+00	8.45019E-01	1.48704E-03	0.00000E+00	0.00000E+00
200	8.45723E-01	5.00817E+00	8.45022E-01	1.47952E-03	0.00000E+00	0.00000E+00
201	8.47729E-01	5.03017E+00	8.45036E-01	1.47212E-03	0.00000E+00	0.00000E+00
202	8.67544E-01	5.05300E+00	8.45148E-01	1.46906E-03	0.00000E+00	0.00000E+00
203	8.42843E-01	5.07600E+00	8.45137E-01	1.46178E-03	0.00000E+00	0.00000E+00
204	8.50551E-01	5.09883E+00	8.45164E-01	1.45477E-03	0.00000E+00	0.00000E+00
205	8.15964E-01	5.12083E+00	8.45020E-01	1.45472E-03	0.00000E+00	0.00000E+00
206	8.43229E-01	5.14283E+00	8.45011E-01	1.44760E-03	0.00000E+00	0.00000E+00
207	8.66512E-01	5.16483E+00	8.45116E-01	1.44433E-03	0.00000E+00	0.00000E+00
208	8.56123E-01	5.18850E+00	8.45169E-01	1.43829E-03	0.00000E+00	0.00000E+00
209	8.34250E-01	5.21150E+00	8.45117E-01	1.43230E-03	0.00000E+00	0.00000E+00
210	8.24644E-01	5.23517E+00	8.45018E-01	1.42879E-03	0.00000E+00	0.00000E+00
211	8.23410E-01	5.25717E+00	8.44915E-01	1.42569E-03	0.00000E+00	0.00000E+00
212	8.32794E-01	5.28200E+00	8.44857E-01	1.42006E-03	0.00000E+00	0.00000E+00
213	8.65427E-01	5.30483E+00	8.44955E-01	1.41667E-03	0.00000E+00	0.00000E+00
214	8.32568E-01	5.32683E+00	8.44896E-01	1.41119E-03	0.00000E+00	0.00000E+00
215	8.54053E-01	5.34967E+00	8.44939E-01	1.40520E-03	0.00000E+00	0.00000E+00
216	8.71032E-01	5.37067E+00	8.45061E-01	1.40393E-03	0.00000E+00	0.00000E+00
217	8.52064E-01	5.39267E+00	8.45094E-01	1.39776E-03	0.00000E+00	0.00000E+00
218	8.32361E-01	5.41650E+00	8.45035E-01	1.39252E-03	0.00000E+00	0.00000E+00
219	8.69524E-01	5.43750E+00	8.45148E-01	1.39068E-03	0.00000E+00	0.00000E+00
220	8.56193E-01	5.46050E+00	8.45198E-01	1.38521E-03	0.00000E+00	0.00000E+00
221	8.61809E-01	5.48333E+00	8.45274E-01	1.38095E-03	0.00000E+00	0.00000E+00
222	8.63130E-01	5.50433E+00	8.45355E-01	1.37706E-03	0.00000E+00	0.00000E+00
223	8.14770E-01	5.52633E+00	8.45217E-01	1.37778E-03	0.00000E+00	0.00000E+00
224	8.06651E-01	5.55017E+00	8.45043E-01	1.38252E-03	0.00000E+00	0.00000E+00
225	8.61994E-01	5.57300E+00	8.45119E-01	1.37840E-03	0.00000E+00	0.00000E+00
226	8.35567E-01	5.59600E+00	8.45077E-01	1.37290E-03	0.00000E+00	0.00000E+00
227	8.18250E-01	5.61883E+00	8.44957E-01	1.37197E-03	0.00000E+00	0.00000E+00
228	8.50376E-01	5.64267E+00	8.44981E-01	1.36610E-03	0.00000E+00	0.00000E+00
229	8.37106E-01	5.66550E+00	8.44947E-01	1.36051E-03	0.00000E+00	0.00000E+00
230	8.59032E-01	5.68750E+00	8.45008E-01	1.35594E-03	0.00000E+00	0.00000E+00
231	8.38066E-01	5.71033E+00	8.44978E-01	1.35034E-03	0.00000E+00	0.00000E+00
232	8.78583E-01	5.73233E+00	8.45124E-01	1.35238E-03	0.00000E+00	0.00000E+00
233	8.00052E-01	5.75517E+00	8.44929E-01	1.36057E-03	0.00000E+00	0.00000E+00
234	8.38247E-01	5.77900E+00	8.44900E-01	1.35500E-03	0.00000E+00	0.00000E+00
235	8.13711E-01	5.80283E+00	8.44766E-01	1.35580E-03	0.00000E+00	0.00000E+00
236	8.19853E-01	5.82483E+00	8.44660E-01	1.35418E-03	0.00000E+00	0.00000E+00
237	8.59566E-01	5.84850E+00	8.44723E-01	1.34990E-03	0.00000E+00	0.00000E+00
238	8.73399E-01	5.87050E+00	8.44845E-01	1.34965E-03	0.00000E+00	0.00000E+00
239	8.28429E-01	5.89250E+00	8.44776E-01	1.34572E-03	0.00000E+00	0.00000E+00
240	9.03342E-01	5.91450E+00	8.45022E-01	1.36246E-03	0.00000E+00	0.00000E+00
241	8.45582E-01	5.93733E+00	8.45024E-01	1.35675E-03	0.00000E+00	0.00000E+00
242	8.44312E-01	5.96033E+00	8.45021E-01	1.35109E-03	0.00000E+00	0.00000E+00
243	8.31148E-01	5.98400E+00	8.44963E-01	1.34671E-03	0.00000E+00	0.00000E+00
244	8.42377E-01	6.00517E+00	8.44953E-01	1.34117E-03	0.00000E+00	0.00000E+00
245	8.26543E-01	6.02800E+00	8.44877E-01	1.33779E-03	0.00000E+00	0.00000E+00
246	8.69212E-01	6.05000E+00	8.44977E-01	1.33602E-03	0.00000E+00	0.00000E+00
KENO MESSAGE NUMBER K5-132	WARNING....ONLY	962 INDEPENDENT FISSION POINTS WERE GENERATED				
247	7.82290E-01	6.07383E+00	8.44721E-01	1.35493E-03	0.00000E+00	0.00000E+00
248	8.70272E-01	6.09483E+00	8.44825E-01	1.35341E-03	0.00000E+00	0.00000E+00
249	8.66825E-01	6.11767E+00	8.44914E-01	1.35086E-03	0.00000E+00	0.00000E+00
250	8.37830E-01	6.13967E+00	8.44885E-01	1.34570E-03	0.00000E+00	0.00000E+00
251	8.32824E-01	6.16350E+00	8.44837E-01	1.34116E-03	0.00000E+00	0.00000E+00
252	8.86829E-01	6.18550E+00	8.45005E-01	1.34630E-03	0.00000E+00	0.00000E+00
253	8.62470E-01	6.20750E+00	8.45074E-01	1.34273E-03	0.00000E+00	0.00000E+00
254	8.60390E-01	6.22933E+00	8.45135E-01	1.33878E-03	0.00000E+00	0.00000E+00
255	8.26730E-01	6.25233E+00	8.45062E-01	1.33546E-03	0.00000E+00	0.00000E+00
256	8.47655E-01	6.27517E+00	8.45073E-01	1.33023E-03	0.00000E+00	0.00000E+00
257	8.32829E-01	6.29717E+00	8.45025E-01	1.32587E-03	0.00000E+00	0.00000E+00
258	8.41696E-01	6.32000E+00	8.45012E-01	1.32075E-03	0.00000E+00	0.00000E+00
259	8.35759E-01	6.34283E+00	8.44976E-01	1.31609E-03	0.00000E+00	0.00000E+00
260	8.28722E-01	6.36667E+00	8.44913E-01	1.31249E-03	0.00000E+00	0.00000E+00
261	8.24629E-01	6.38867E+00	8.44834E-01	1.30976E-03	0.00000E+00	0.00000E+00
262	8.36084E-01	6.41150E+00	8.44801E-01	1.30514E-03	0.00000E+00	0.00000E+00
263	8.46821E-01	6.43450E+00	8.44808E-01	1.30016E-03	0.00000E+00	0.00000E+00
264	8.46912E-01	6.45650E+00	8.44816E-01	1.29521E-03	0.00000E+00	0.00000E+00

265	8.46996E-01	6.47833E+00	8.44825E-01	1.29030E-03	0.00000E+00	0.00000E+00
266	8.67247E-01	6.50217E+00	8.44910E-01	1.28821E-03	0.00000E+00	0.00000E+00
267	8.66171E-01	6.52500E+00	8.44990E-01	1.28584E-03	0.00000E+00	0.00000E+00
268	8.78363E-01	6.54617E+00	8.45115E-01	1.28713E-03	0.00000E+00	0.00000E+00
269	8.34032E-01	6.57000E+00	8.45074E-01	1.28297E-03	0.00000E+00	0.00000E+00
270	8.74759E-01	6.59283E+00	8.45185E-01	1.28297E-03	0.00000E+00	0.00000E+00
271	8.67916E-01	6.61567E+00	8.45269E-01	1.28098E-03	0.00000E+00	0.00000E+00
272	8.51054E-01	6.63950E+00	8.45290E-01	1.27640E-03	0.00000E+00	0.00000E+00
273	8.31307E-01	6.66150E+00	8.45239E-01	1.27273E-03	0.00000E+00	0.00000E+00
274	8.44673E-01	6.68533E+00	8.45237E-01	1.26805E-03	0.00000E+00	0.00000E+00
275	8.33542E-01	6.70817E+00	8.45194E-01	1.26412E-03	0.00000E+00	0.00000E+00
276	8.59575E-01	6.72917E+00	8.45246E-01	1.26059E-03	0.00000E+00	0.00000E+00
277	8.33866E-01	6.75300E+00	8.45205E-01	1.25668E-03	0.00000E+00	0.00000E+00
278	8.12346E-01	6.77583E+00	8.45086E-01	1.25776E-03	0.00000E+00	0.00000E+00
279	8.89446E-01	6.79783E+00	8.45246E-01	1.26341E-03	0.00000E+00	0.00000E+00
280	7.95746E-01	6.82083E+00	8.45068E-01	1.27138E-03	0.00000E+00	0.00000E+00
281	8.27775E-01	6.84367E+00	8.45006E-01	1.26833E-03	0.00000E+00	0.00000E+00
282	8.66185E-01	6.86467E+00	8.45082E-01	1.26606E-03	0.00000E+00	0.00000E+00
283	8.75302E-01	6.88750E+00	8.45189E-01	1.26612E-03	0.00000E+00	0.00000E+00
284	8.16010E-01	6.91050E+00	8.45086E-01	1.26586E-03	0.00000E+00	0.00000E+00
285	8.63003E-01	6.93333E+00	8.45149E-01	1.26297E-03	0.00000E+00	0.00000E+00
286	8.73404E-01	6.95533E+00	8.45249E-01	1.26244E-03	0.00000E+00	0.00000E+00
287	8.61558E-01	6.97817E+00	8.45306E-01	1.25930E-03	0.00000E+00	0.00000E+00
288	8.57909E-01	7.00200E+00	8.45350E-01	1.25566E-03	0.00000E+00	0.00000E+00
289	8.08852E-01	7.02300E+00	8.45223E-01	1.25773E-03	0.00000E+00	0.00000E+00
290	8.31189E-01	7.04683E+00	8.45174E-01	1.25430E-03	0.00000E+00	0.00000E+00
291	8.34772E-01	7.06883E+00	8.45138E-01	1.25047E-03	0.00000E+00	0.00000E+00
292	8.18060E-01	7.09167E+00	8.45045E-01	1.24964E-03	0.00000E+00	0.00000E+00
293	8.01426E-01	7.11550E+00	8.44895E-01	1.25433E-03	0.00000E+00	0.00000E+00
294	8.35443E-01	7.13750E+00	8.44862E-01	1.25045E-03	0.00000E+00	0.00000E+00
295	8.35251E-01	7.16033E+00	8.44830E-01	1.24660E-03	0.00000E+00	0.00000E+00
296	8.18200E-01	7.18333E+00	8.44739E-01	1.24565E-03	0.00000E+00	0.00000E+00
297	8.00944E-01	7.20700E+00	8.44591E-01	1.25027E-03	0.00000E+00	0.00000E+00
298	8.21223E-01	7.23000E+00	8.44512E-01	1.24853E-03	0.00000E+00	0.00000E+00
299	8.47216E-01	7.25100E+00	8.44521E-01	1.24436E-03	0.00000E+00	0.00000E+00
300	8.60221E-01	7.27300E+00	8.44573E-01	1.24129E-03	0.00000E+00	0.00000E+00
301	8.49427E-01	7.29583E+00	8.44590E-01	1.23724E-03	0.00000E+00	0.00000E+00
302	8.72947E-01	7.31783E+00	8.44684E-01	1.23673E-03	0.00000E+00	0.00000E+00
303	8.51278E-01	7.33983E+00	8.44706E-01	1.23281E-03	0.00000E+00	0.00000E+00

KENO MESSAGE NUMBER K5-123 EXECUTION TERMINATED DUE TO COMPLETION OF THE SPECIFIED NUMBER OF GENERATIONS.

NAC-LWT CASK MODEL; EXXON 9X9 - 2 WATER RODS 80 MIL CHANNEL

LIFETIME = 1.15449E-04 + OR - 3.48275E-07 GENERATION TIME = 3.88784E-05 + OR - 1.17453E-07
NU BAR = 2.43690E+00 + OR - 1.11422E-04 AVERAGE FISSION GROUP = 2.23149E+01 + OR - 6.58134E-03
ENERGY(EV) OF THE AVERAGE LETHARGY CAUSING FISSION = 1.81957E-01 + OR - 1.00812E-03

NO. OF INITIAL GENERATIONS SKIPPED	AVERAGE K-EFFECTIVE	DEVIATION	67 PER CENT CONFIDENCE INTERVAL	95 PER CENT CONFIDENCE INTERVAL	99 PER CENT CONFIDENCE INTERVAL	NUMBER OF HISTORIES
3	0.84465	+ OR - 0.00124	0.84342 TO 0.84589	0.84218 TO 0.84712	0.84094 TO 0.84836	300000
4	0.84465	+ OR - 0.00124	0.84341 TO 0.84589	0.84217 TO 0.84713	0.84093 TO 0.84837	299000
5	0.84453	+ OR - 0.00124	0.84329 TO 0.84576	0.84205 TO 0.84700	0.84081 TO 0.84824	298000
6	0.84452	+ OR - 0.00124	0.84327 TO 0.84576	0.84203 TO 0.84700	0.84079 TO 0.84824	297000
7	0.84449	+ OR - 0.00125	0.84325 TO 0.84574	0.84200 TO 0.84698	0.84076 TO 0.84823	296000
8	0.84433	+ OR - 0.00124	0.84309 TO 0.84557	0.84185 TO 0.84680	0.84061 TO 0.84804	295000
9	0.84436	+ OR - 0.00124	0.84312 TO 0.84561	0.84188 TO 0.84685	0.84064 TO 0.84809	294000
10	0.84439	+ OR - 0.00125	0.84314 TO 0.84564	0.84190 TO 0.84688	0.84065 TO 0.84813	293000
11	0.84426	+ OR - 0.00124	0.84302 TO 0.84550	0.84177 TO 0.84675	0.84053 TO 0.84799	292000
12	0.84426	+ OR - 0.00125	0.84301 TO 0.84550	0.84176 TO 0.84675	0.84051 TO 0.84800	291000
17	0.84429	+ OR - 0.00127	0.84302 TO 0.84555	0.84175 TO 0.84682	0.84048 TO 0.84809	286000
22	0.84434	+ OR - 0.00128	0.84306 TO 0.84562	0.84178 TO 0.84690	0.84050 TO 0.84818	281000
27	0.84445	+ OR - 0.00129	0.84317 TO 0.84574	0.84188 TO 0.84702	0.84059 TO 0.84831	276000
32	0.84428	+ OR - 0.00130	0.84298 TO 0.84558	0.84168 TO 0.84688	0.84038 TO 0.84818	271000
37	0.84389	+ OR - 0.00130	0.84259 TO 0.84518	0.84130 TO 0.84648	0.84000 TO 0.84777	266000
42	0.84393	+ OR - 0.00131	0.84262 TO 0.84524	0.84131 TO 0.84655	0.83999 TO 0.84786	261000
47	0.84380	+ OR - 0.00132	0.84248 TO 0.84512	0.84116 TO 0.84644	0.83984 TO 0.84776	256000
52	0.84386	+ OR - 0.00134	0.84252 TO 0.84519	0.84119 TO 0.84653	0.83985 TO 0.84786	251000
57	0.84391	+ OR - 0.00135	0.84256 TO 0.84525	0.84121 TO 0.84660	0.83986 TO 0.84795	246000
62	0.84405	+ OR - 0.00137	0.84268 TO 0.84542	0.84132 TO 0.84679	0.83995 TO 0.84816	241000
67	0.84430	+ OR - 0.00138	0.84291 TO 0.84568	0.84153 TO 0.84706	0.84015 TO 0.84844	236000
72	0.84393	+ OR - 0.00140	0.84253 TO 0.84533	0.84113 TO 0.84674	0.83973 TO 0.84814	231000
77	0.84418	+ OR - 0.00142	0.84275 TO 0.84560	0.84133 TO 0.84702	0.83991 TO 0.84844	226000
82	0.84408	+ OR - 0.00144	0.84264 TO 0.84551	0.84120 TO 0.84695	0.83977 TO 0.84839	221000
87	0.84373	+ OR - 0.00144	0.84230 TO 0.84517	0.84086 TO 0.84660	0.83943 TO 0.84804	216000
92	0.84374	+ OR - 0.00147	0.84227 TO 0.84520	0.84080 TO 0.84667	0.83933 TO 0.84814	211000

NAC-LWT CASK MODEL; EXXON 9X9 - 2 WATER RODS 80 MIL CHANNEL

NO. OF INITIAL GENERATIONS SKIPPED	AVERAGE K-EFFECTIVE	DEVIATION	67 PER CENT CONFIDENCE INTERVAL	95 PER CENT CONFIDENCE INTERVAL	99 PER CENT CONFIDENCE INTERVAL	NUMBER OF HISTORIES
97	0.84375	+ OR - 0.00149	0.84225 TO 0.84524	0.84076 TO 0.84673	0.83926 TO 0.84823	206000
102	0.84349	+ OR - 0.00150	0.84199 TO 0.84498	0.84049 TO 0.84648	0.83899 TO 0.84798	201000
107	0.84369	+ OR - 0.00153	0.84216 TO 0.84522	0.84064 TO 0.84675	0.83911 TO 0.84828	196000
112	0.84361	+ OR - 0.00157	0.84204 TO 0.84518	0.84048 TO 0.84674	0.83891 TO 0.84831	191000
117	0.84351	+ OR - 0.00158	0.84192 TO 0.84509	0.84034 TO 0.84667	0.83876 TO 0.84826	186000
122	0.84345	+ OR - 0.00162	0.84183 TO 0.84507	0.84020 TO 0.84669	0.83858 TO 0.84831	181000
127	0.84341	+ OR - 0.00162	0.84179 TO 0.84503	0.84016 TO 0.84666	0.83854 TO 0.84828	176000
132	0.84388	+ OR - 0.00164	0.84225 TO 0.84552	0.84061 TO 0.84715	0.83898 TO 0.84879	171000
137	0.84390	+ OR - 0.00167	0.84223 TO 0.84556	0.84057 TO 0.84723	0.83890 TO 0.84890	166000
142	0.84405	+ OR - 0.00171	0.84234 TO 0.84576	0.84063 TO 0.84746	0.83892 TO 0.84917	161000
147	0.84397	+ OR - 0.00172	0.84225 TO 0.84569	0.84054 TO 0.84741	0.83882 TO 0.84913	156000
152	0.84420	+ OR - 0.00175	0.84245 TO 0.84594	0.84071 TO 0.84769	0.83896 TO 0.84943	151000
157	0.84419	+ OR - 0.00179	0.84239 TO 0.84598	0.84060 TO 0.84777	0.83881 TO 0.84956	146000
162	0.84412	+ OR - 0.00184	0.84228 TO 0.84596	0.84044 TO 0.84781	0.83860 TO 0.84965	141000
167	0.84401	+ OR - 0.00190	0.84210 TO 0.84591	0.84020 TO 0.84781	0.83829 TO 0.84972	136000
172	0.84380	+ OR - 0.00196	0.84183 TO 0.84576	0.83987 TO 0.84773	0.83791 TO 0.84969	131000
177	0.84301	+ OR - 0.00197	0.84104 TO 0.84498	0.83907 TO 0.84695	0.83710 TO 0.84892	126000
182	0.84284	+ OR - 0.00202	0.84083 TO 0.84486	0.83881 TO 0.84687	0.83679 TO 0.84889	121000
187	0.84341	+ OR - 0.00205	0.84136 TO 0.84546	0.83930 TO 0.84751	0.83725 TO 0.84956	116000
192	0.84417	+ OR - 0.00210	0.84207 TO 0.84627	0.83997 TO 0.84837	0.83787 TO 0.85047	111000
197	0.84394	+ OR - 0.00219	0.84175 TO 0.84612	0.83956 TO 0.84831	0.83737 TO 0.85050	106000
202	0.84383	+ OR - 0.00225	0.84158 TO 0.84608	0.83933 TO 0.84833	0.83707 TO 0.85059	101000
207	0.84383	+ OR - 0.00234	0.84149 TO 0.84617	0.83915 TO 0.84851	0.83681 TO 0.85085	96000
212	0.84436	+ OR - 0.00244	0.84192 TO 0.84680	0.83948 TO 0.84924	0.83704 TO 0.85167	91000
217	0.84374	+ OR - 0.00254	0.84120 TO 0.84628	0.83865 TO 0.84882	0.83611 TO 0.85136	86000
222	0.84294	+ OR - 0.00265	0.84029 TO 0.84559	0.83764 TO 0.84824	0.83499 TO 0.85090	81000
227	0.84396	+ OR - 0.00272	0.84124 TO 0.84669	0.83851 TO 0.84941	0.83579 TO 0.85214	76000

NAC-LWT CASK MODEL; EXXON 9X9 - 2 WATER RODS 80 MIL CHANNEL

NO. OF INITIAL GENERATIONS SKIPPED	AVERAGE K-EFFECTIVE	DEVIATION	67 PER CENT CONFIDENCE INTERVAL	95 PER CENT CONFIDENCE INTERVAL	99 PER CENT CONFIDENCE INTERVAL	NUMBER OF HISTORIES
232	0.84335	+ OR - 0.00286	0.84049 TO 0.84621	0.83763 TO 0.84908	0.83476 TO 0.85194	71000
237	0.84464	+ OR - 0.00294	0.84171 TO 0.84758	0.83877 TO 0.85052	0.83583 TO 0.85346	66000
242	0.84347	+ OR - 0.00298	0.84049 TO 0.84644	0.83752 TO 0.84942	0.83454 TO 0.85239	61000
247	0.84464	+ OR - 0.00299	0.84165 TO 0.84763	0.83867 TO 0.85062	0.83568 TO 0.85360	56000
252	0.84324	+ OR - 0.00309	0.84016 TO 0.84633	0.83707 TO 0.84941	0.83399 TO 0.85250	51000
257	0.84294	+ OR - 0.00335	0.83959 TO 0.84629	0.83624 TO 0.84964	0.83290 TO 0.85299	46000
262	0.84411	+ OR - 0.00371	0.84040 TO 0.84781	0.83670 TO 0.85152	0.83299 TO 0.85522	41000
267	0.84262	+ OR - 0.00412	0.83850 TO 0.84674	0.83438 TO 0.85086	0.83026 TO 0.85498	36000
272	0.83962	+ OR - 0.00440	0.83521 TO 0.84402	0.83081 TO 0.84842	0.82641 TO 0.85282	31000
277	0.83943	+ OR - 0.00518	0.83425 TO 0.84461	0.82907 TO 0.84979	0.82388 TO 0.85497	26000
282	0.83970	+ OR - 0.00522	0.83447 TO 0.84492	0.82925 TO 0.85014	0.82403 TO 0.85536	21000
287	0.83402	+ OR - 0.00538	0.82864 TO 0.83940	0.82326 TO 0.84479	0.81788 TO 0.85017	16000
292	0.83578	+ OR - 0.00704	0.82874 TO 0.84282	0.82170 TO 0.84986	0.81466 TO 0.85690	11000
297	0.85039	+ OR - 0.00700	0.84339 TO 0.85738	0.83639 TO 0.86438	0.82940 TO 0.87137	6000

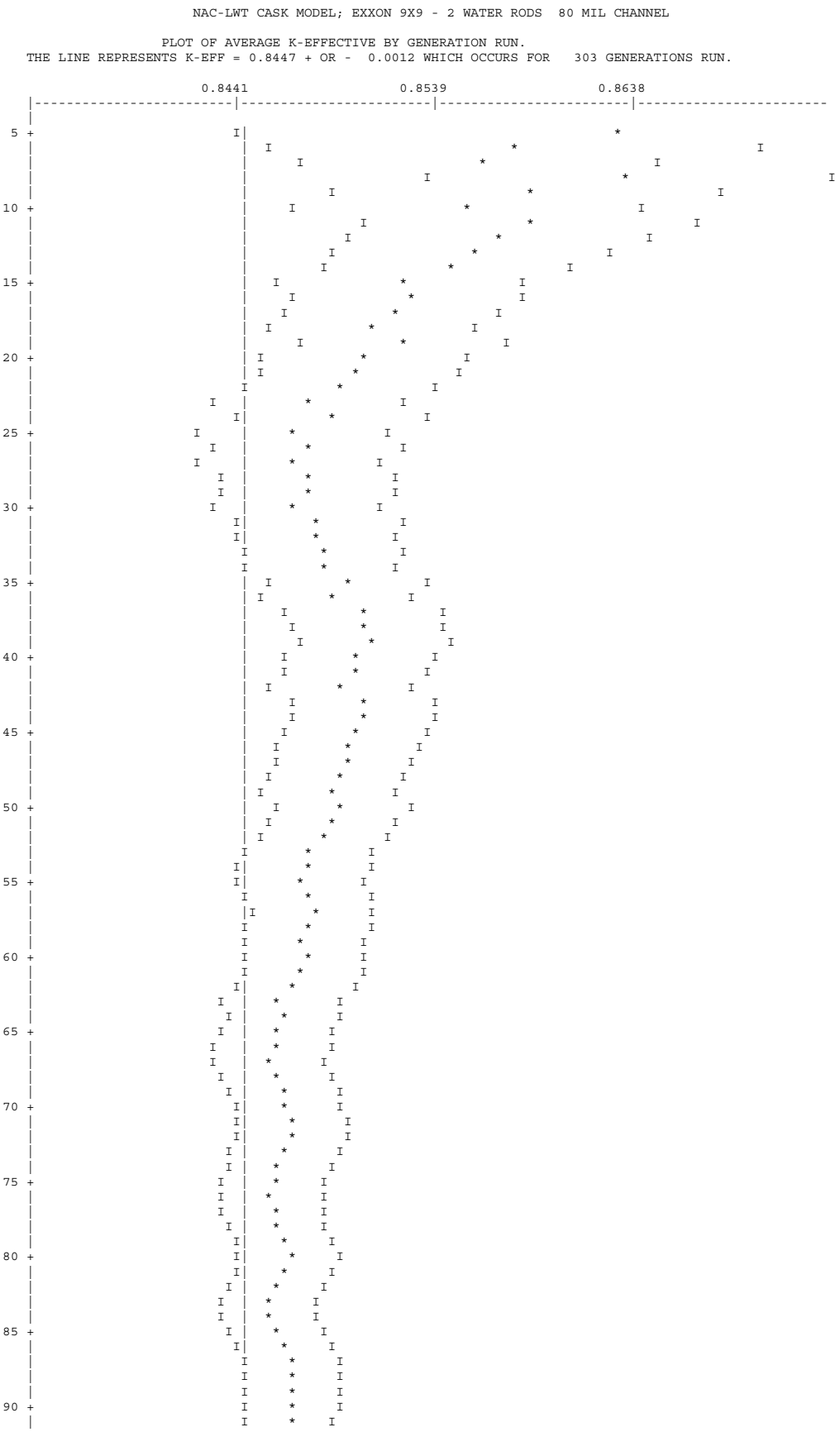
NAC-LWT CASK MODEL; EXXON 9X9 - 2 WATER RODS 80 MIL CHANNEL
PLOT OF AVERAGE K-EFFECTIVE BY GENERATION RUN.
THE LINE REPRESENTS K-EFF = 0.8447 + OR - 0.0012 WHICH OCCURS FOR 303 GENERATIONS RUN.
0.8441
0.8539
0.8638
5
10
15
20
25
30
35
40
45
50
55
60
65
70
75
80
85
90

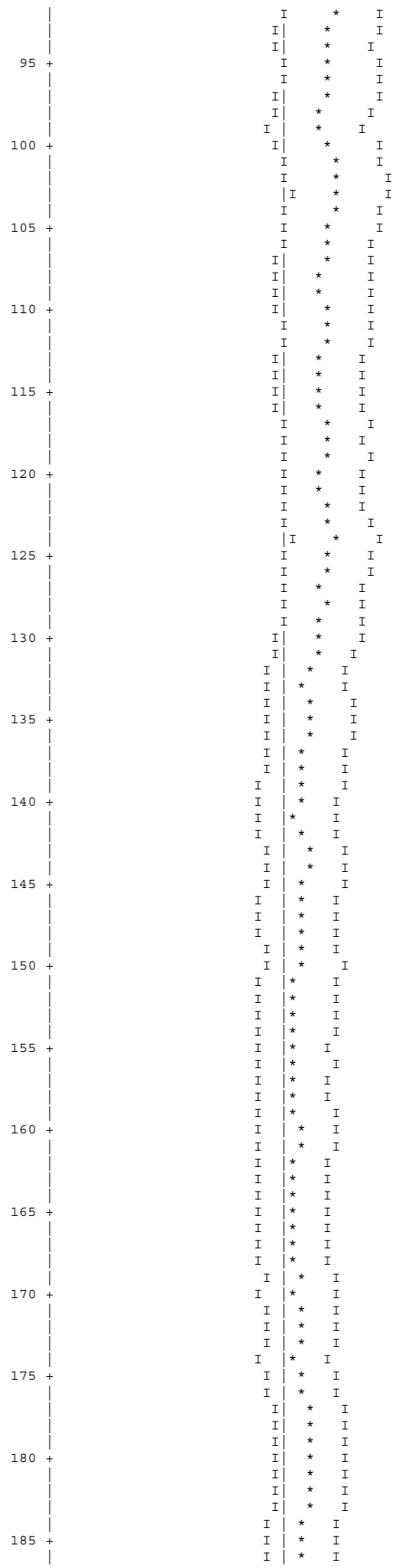

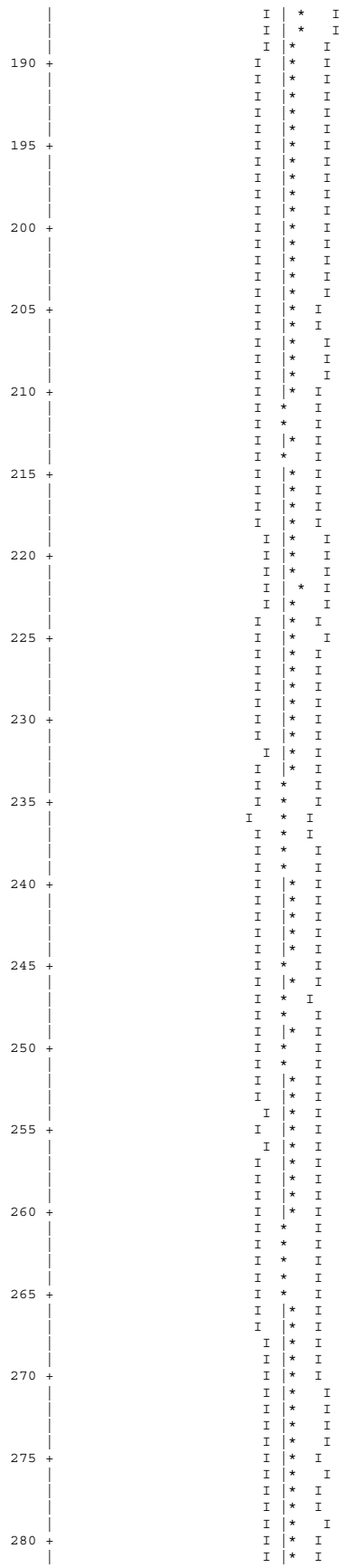

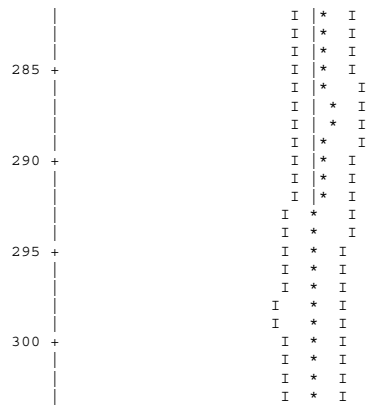
285
290
295
300

NAC-LWT CASK MODEL; EXXON 9X9 - 2 WATER RODS 80 MIL CHANNEL

SKIPPING 3 GENERATIONS

GROUP	FISSION FRACTION	UNIT	REGION	FISSIONS	PERCENT DEVIATION	ABSORPTIONS	PERCENT DEVIATION	LEAKAGE	PERCENT DEVIATION
1	0.0043			3.61777E-03	2.2735	2.18472E-03	1.6447	0.00000E+00	0.0000
2	0.0185			1.56076E-02	0.6937	7.98975E-03	0.5770	0.00000E+00	0.0000
3	0.0206			1.74335E-02	0.6802	7.32774E-03	0.6498	0.00000E+00	0.0000
4	0.0087			7.32810E-03	0.7389	3.57368E-03	0.7003	0.00000E+00	0.0000
5	0.0029			2.41700E-03	0.5573	2.60715E-03	0.4706	0.00000E+00	0.0000
6	0.0026			2.17260E-03	0.4693	4.41687E-03	0.3848	0.00000E+00	0.0000
7	0.0025			2.14659E-03	0.4714	5.01186E-03	0.3688	0.00000E+00	0.0000
8	0.0025			2.11131E-03	0.5189	7.13242E-03	0.4091	0.00000E+00	0.0000
9	0.0034			2.90308E-03	0.5647	1.14886E-02	0.4381	0.00000E+00	0.0000
10	0.0073			6.15712E-03	0.5802	1.69292E-02	0.4601	0.00000E+00	0.0000
11	0.0153			1.29563E-02	0.6108	2.73480E-02	0.4723	0.00000E+00	0.0000
12	0.0197			1.66202E-02	0.6463	2.84516E-02	0.5647	0.00000E+00	0.0000
13	0.0182			1.53687E-02	0.7378	2.89485E-02	0.6118	0.00000E+00	0.0000
14	0.0142			1.19993E-02	0.6820	4.07978E-02	0.5531	0.00000E+00	0.0000
15	0.0032			2.70080E-03	1.0990	9.69814E-03	0.7338	0.00000E+00	0.0000
16	0.0022			1.83704E-03	1.4949	5.76935E-03	0.8555	0.00000E+00	0.0000
17	0.0034			2.89596E-03	1.7804	3.96015E-03	1.0609	0.00000E+00	0.0000
18	0.0044			3.75823E-03	1.9471	4.04526E-03	1.1440	0.00000E+00	0.0000
19	0.0055			4.68498E-03	1.4897	6.51489E-03	0.8758	0.00000E+00	0.0000
20	0.0230			1.94468E-02	0.8207	2.53005E-02	0.5405	0.00000E+00	0.0000
21	0.0121			1.02611E-02	1.2461	1.07616E-02	0.7964	0.00000E+00	0.0000
22	0.0290			2.44663E-02	0.9071	2.45684E-02	0.6055	0.00000E+00	0.0000
23	0.1059			8.94160E-02	0.4903	9.55808E-02	0.3058	0.00000E+00	0.0000
24	0.2106			1.77859E-01	0.3520	1.91926E-01	0.1980	0.00000E+00	0.0000
25	0.1788			1.51066E-01	0.4321	1.63657E-01	0.2162	0.00000E+00	0.0000
26	0.2140			1.80725E-01	0.3744	1.99844E-01	0.2280	0.00000E+00	0.0000
27	0.0671			5.66943E-02	0.7907	6.62470E-02	0.4303	0.00000E+00	0.0000
SYSTEM TOTAL =				8.44651E-01	0.1463	1.00208E+00	0.0498	0.00000E+00	0.0000

THE WEIGHT LOST IN THE ALBEDO PORTION OF THE PROBLEM = 1.2281E-07 + OR - 0.0000

ELAPSED TIME 7.34067 MINUTES

RANDOM NUMBER= 26E447865737

```
NAC-LWT CASK MODEL; EXXON 9X9 - 2 WATER RODS  80 MIL CHANNEL

                              FREQUENCY FOR GENERATIONS    4 TO  303
0.7799 TO 0.7925     **
0.7925 TO 0.8052     ********
0.8052 TO 0.8178     *************
0.8178 TO 0.8305     ************************************************
0.8305 TO 0.8431     ************************************************************************************
0.8431 TO 0.8558     ************************************************************
0.8558 TO 0.8684     ************************************************
0.8684 TO 0.8811     **********************
0.8811 TO 0.8937     **************
0.8937 TO 0.9064     ***

                              FREQUENCY FOR GENERATIONS   79 TO  303
0.7799 TO 0.7925     **
0.7925 TO 0.8052     ******
0.8052 TO 0.8178     ************
0.8178 TO 0.8305     *********************************
0.8305 TO 0.8431     ************************************************************
0.8431 TO 0.8558     *******************************************
0.8558 TO 0.8684     ****************************************
0.8684 TO 0.8811     ****************
0.8811 TO 0.8937     **********
0.8937 TO 0.9064     *

                              FREQUENCY FOR GENERATIONS  154 TO  303
0.7799 TO 0.7925     *
0.7925 TO 0.8052     *****
0.8052 TO 0.8178     *********
0.8178 TO 0.8305     ********************
0.8305 TO 0.8431     ************************************
0.8431 TO 0.8558     ******************************
0.8558 TO 0.8684     *******************************
0.8684 TO 0.8811     ************
0.8811 TO 0.8937     ****
0.8937 TO 0.9064     *

                              FREQUENCY FOR GENERATIONS  229 TO  303
0.7799 TO 0.7925     *
0.7925 TO 0.8052     ****
0.8052 TO 0.8178     ****
0.8178 TO 0.8305     **********
0.8305 TO 0.8431     ******************
0.8431 TO 0.8558     ***********
0.8558 TO 0.8684     **************
0.8684 TO 0.8811     *********
0.8811 TO 0.8937     **
0.8937 TO 0.9064     *


*****************************************************************************************************************************************************
*

          CONGRATULATIONS!  YOU HAVE  SUCCESSFULLY TRAVERSED THE PERILOUS PATH THROUGH KENO V IN   7.34067 MINUTES

*****************************************************************************************************************************************************
*
```

Figure 6.6.2-2 CSAS Input/Output for NAC-LWT with BWR Fuel Assemblies – Most Reactive Accident Condition Configuration

```
       PRIMARY MODULE ACCESS AND INPUT RECORD ( SCALE DRIVER - 95/03/29 - 09:06:37 )
 MODULE CSAS25   WILL BE CALLED
   NAC-LWT CASK MODEL; Exxon 9x9 - 2 Water Rods  80 MIL CHANNEL
   27GROUPNDF4 LATTICECELL
   UO2   1 0.95 293.0 92235 4.0 92238 96.0 END
   ZIRCALLOY  2 1.0  293.0  END
   H2O   3 1.000 293.0 END
   AL    4 1.0 293.0 END
   SS304 5 1.0 293.0 END
   PB    6 1.0 293.0 END
   H2O   7 1.0E-20 293.0 END
   H2O   8 1.0E-20 293.0 END
   H2O   9 1.0 293.0 END
   END COMP
   SQUAREPITCH  1.4529 0.9055 1 3 1.0770 2 0.9246 9 END
   NAC-LWT CASK MODEL; Exxon 9x9 - 2 Water Rods  80 MIL CHANNEL
   READ PARAM RUN=YES PLT=NO TME=5000 GEN=303 NPG=1000 END PARAM
   READ GEOM
   UNIT  1
   COM='FUEL PIN CELL - WITH H2O'
   CYLINDER  1 1  0.4528   2P10.0
   CYLINDER  9 1  0.4623   2P10.0
   CYLINDER  2 1  0.5385   2P10.0
   CUBOID    3 1  4P0.7264 2P10.0
   UNIT  2
   COM='WATER ROD CELL - WITH H2O'
   CYLINDER  3 1  0.4623   2P10.0
   CYLINDER  2 1  0.5385   2P10.0
   CUBOID    3 1  4P0.7264 2P10.0
   UNIT 3
   ARRAY    1   -6.5376 -6.5376 -10.0
   CUBOID   3 1 4P6.7031   2P10.0
   CUBOID   2 1 4P6.9063   2P10.0
   CUBOID   3 1 4P7.3025   2P10.0
   UNIT 4
   ARRAY    1   -6.5376 -6.5376 -10.0
   CUBOID   3 1 4P6.7031   2P10.0
   CUBOID   2 1 4P6.9063   2P10.0
   CUBOID   3 1 4P7.3025   2P10.0
   UNIT 5
   CYLINDER 4 1 16.8275    2P10.0
   HOLE  3   -7.4613  0.0  0.0
   HOLE  4    7.4613  0.0  0.0
   CYLINDER 3 1 16.9863    2P10.0
   CYLINDER 5 1 18.8913    2P10.0
   CYLINDER 6 1 33.4963    2P10.0
   CYLINDER 5 1 36.5443    2P10.0
   CYLINDER 7 1 49.2443    2P10.0
   CYLINDER 5 1 49.8539    2P10.0
   GLOBAL UNIT 6
   CYLINDER 8 1 314.00   2P10.0
   HOLE 5  00.00   00.00  0.0
   HOLE 5  00.00   99.80  0.0
   HOLE 5  86.43   49.90  0.0
   HOLE 5  86.43  -49.90  0.0
   HOLE 5  00.00  -99.80  0.0
   HOLE 5 -86.43  -49.90  0.0
   HOLE 5 -86.43   49.90  0.0
   HOLE 5    0.0     199.6  0.0
   HOLE 5   86.43    149.7  0.0
   HOLE 5  172.85     99.8  0.0
   HOLE 5  172.86      0.0  0.0
   HOLE 5  172.86    -99.8  0.0
   HOLE 5   86.43   -149.7  0.0
   HOLE 5    0.0    -199.6  0.0
   HOLE 5  -86.43   -149.7  0.0
   HOLE 5 -172.86    -99.88 0.0
   HOLE 5 -172.86      0.0  0.0
   HOLE 5 -172.86     99.8  0.0
   HOLE 5  -86.43    149.7  0.0
   HOLE 5   259.29     49.9  0.0
   CUBOID   8 1 4P314.00   2P10.0
   END GEOM
   READ ARRAY
   ARA=1   NUX=9 NUY=9 NUZ=1  FILL
       36R1
    4R1  2   4R1
    5R1  2   3R1
       27R1
   END FILL
   END ARRAY
   READ BOUNDS ZFC=PER YXF=H2O END BOUNDS
   END DATA

 SECONDARY MODULE O0O008   HAS BEEN CALLED.

 MODULE O0O008   IS FINISHED. COMPLETION CODE     0. CPU TIME USED     0.55 (SECONDS).
```

```
 SECONDARY MODULE O00002   HAS BEEN CALLED.
 MODULE O00002   IS FINISHED. COMPLETION CODE     0. CPU TIME USED     5.93 (SECONDS).
 SECONDARY MODULE O00009   HAS BEEN CALLED.
 MODULE O00009   IS FINISHED. COMPLETION CODE     0. CPU TIME USED   438.36 (SECONDS).
 MODULE CSAS25   IS FINISHED. COMPLETION CODE     0. CPU TIME USED   446.44 (SECONDS).
```


CCCCCCCCCC SSSSSSSSSS AAAAAAAAA SSSSSSSSSS 22222222222 5555555555555
CCCCCCCCCCCC SSSSSSSSSSSS AAAAAAAAAAA SSSSSSSSSSSS 2222222222222 5555555555555
CC CC SS SS AA AA SS SS 22 22 55
CC SS AA AA SS 22 55
CC SS AA AA SS 22 55
CC SSSSSSSSSSS AAAAAAAAAAAAA SSSSSSSSSSS 22 555555555555
CC SSSSSSSSSSS AAAAAAAAAAAAA SSSSSSSSSSS 22 5555555555555
CC SS AA AA SS 22 55
CC SS AA AA SS 22 55
CC CC SS SS AA AA SS SS 22 55 55
CCCCCCCCCCCC SSSSSSSSSSSS AA AA SSSSSSSSSSSS 2222222222222 5555555555555
CCCCCCCCCC SSSSSSSSSS AA AA SSSSSSSSSS 2222222222222 55555555555
SSSSSSSSSS CCCCCCCCCC AAAAAAAAA LL EEEEEEEEEEEE PPPPPPPPPPP CCCCCCCCCC
SSSSSSSSSSS CCCCCCCCCCCC AAAAAAAAAAA LL EEEEEEEEEEEE PPPPPPPPPPPP CCCCCCCCCCCC
SS SS CC CC AA AA LL EE PP PP CC CC
SS CC AA AA LL EE PP PP CC
SS CC AA AA LL EE PP PP CC
SSSSSSSSSSS CC AAAAAAAAAAAAA LL EEEEEEEEE ------------ PPPPPPPPPPPP CC
SSSSSSSSSSS CC AAAAAAAAAAAAA LL EEEEEEEEE ------------ PPPPPPPPPPP CC
SS CC AA AA LL EE PP CC
SS CC AA AA LL EE PP CC
SS SS CC CC AA AA LL EE PP CC CC
SSSSSSSSSSSS CCCCCCCCCCCCC AA AA LLLLLLLLLLLL EEEEEEEEEEEE PP CCCCCCCCCCCCC
SSSSSSSSSS CCCCCCCCCC AA AA LLLLLLLLLLLL EEEEEEEEEEEE PP CCCCCCCCCC
0000000 7777777777777 // 22222222222 11 // 99999999999 88888888888
000000000 777777777777 // 2222222222222 111 // 9999999999999 8888888888888
00 00 77 77 // 22 22 1111 // 99 99 88 88
00 00 77 // // 22 11 // 99 99 88 88
00 00 77 // // 22 11 // 99 99 88 88
00 00 77 // 22 11 // 9999999999999 88888888888
00 00 77 // 22 11 // 999999999999 88888888888
00 00 77 // 22 11 // 99 88 88
00 00 77 // 22 11 // 99 88 88
00 00 77 // 22 11 // 99 88 88
000000000 77 // 2222222222222 11111111 // 9999999999999 8888888888888
0000000 77 // 2222222222222 11111111 // 999999999999 88888888888
11 22222222222 22222222222 7777777777777 0000000 33333333333
111 2222222222222 2222222222222 777777777777 000000000 3333333333333
1111 22 22 ::: 22 22 77 77 ::: 00 00 33 33
11 22 ::: 22 77 ::: 00 00 33
11 22 ::: 22 77 ::: 00 00 33
11 22 22 77 00 00 333
11 22 22 77 00 00 333
11 22 ::: 22 77 ::: 00 00 33
11 22 ::: 22 77 ::: 00 00 33
11 22 ::: 22 77 ::: 00 00 33 33
11111111 2222222222222 2222222222222 77 000000000 3333333333333
11111111 2222222222222 2222222222222 77 0000000 33333333333

```
 SSSSSSSSSS     CCCCCCCCCC      AAAAAAAAA     LL             EEEEEEEEEEEE                  PPPPPPPPPPP     CCCCCCCCCC
SSSSSSSSSSS   CCCCCCCCCCCC    AAAAAAAAAAA    LL             EEEEEEEEEEEE                  PPPPPPPPPPPP   CCCCCCCCCCCC
SS         SS CC          CC  AA         AA   LL             EE                            PP         PP  CC          CC
SS            CC             AA         AA   LL             EE                            PP         PP  CC
SS            CC             AA         AA   LL             EE                            PP         PP  CC
SSSSSSSSSSS   CC             AAAAAAAAAAAAA   LL             EEEEEEEEE       -------------  PPPPPPPPPPPP  CC
 SSSSSSSSSSS  CC             AAAAAAAAAAAAA   LL             EEEEEEEEE       -------------  PPPPPPPPPPP   CC
          SS  CC             AA         AA   LL             EE                            PP             CC
          SS  CC             AA         AA   LL             EE                            PP             CC
SS        SS  CC          CC  AA         AA   LL             EE                            PP             CC          CC
SSSSSSSSSSS   CCCCCCCCCCCCC   AA         AA   LLLLLLLLLLLLL  EEEEEEEEEEEE                  PP             CCCCCCCCCCCCC
 SSSSSSSSSS    CCCCCCCCCC    AA         AA   LLLLLLLLLLLLL  EEEEEEEEEEEE                  PP              CCCCCCCCCC
```

```
*******************************************************************************
*******************************************************************************
*******************************************************************************
*****                                                                     *****
*****                  PROGRAM VERIFICATION INFORMATION                   *****
*****                                                                     *****
*****                CODE SYSTEM:  SCALE-PC VERSION:  4.3                 *****
*****                                                                     *****
*******************************************************************************
*******************************************************************************
*****                                                                     *****
*****                                                                     *****
*****              PROGRAM:  CSAS                                         *****
*****                                                                     *****
*****        CREATION DATE:  03/08/96                                     *****
*****                                                                     *****
*****              VOLUME:   ENG                                          *****
*****                                                                     *****
*****              LIBRARY:  G:\SCALE43\WIN_NT\EXE                        *****
*****                                                                     *****
*****                                                                     *****
*****      PRODUCTION CODE:  CSAS                                         *****
*****                                                                     *****
*****              VERSION:  3.1                                          *****
*****                                                                     *****
*****              JOBNAME:  SCALE-PC                                     *****
*****                                                                     *****
*****    DATE OF EXECUTION:  07/21/98                                     *****
*****                                                                     *****
*****    TIME OF EXECUTION:  12:27:03                                     *****
*****                                                                     *****
*****                                                                     *****
*******************************************************************************
*******************************************************************************
*******************************************************************************
```

```
NAC-LWT CASK MODEL; EXXON 9X9 - 2 WATER RODS  80 MIL CHANNEL


**** PROBLEM PARAMETERS ****

LIB 27GROUPNDF4  LIBRARY
MXX            9 MIXTURES
MSC            9 COMPOSITION SPECIFICATIONS
IZM            4 MATERIAL ZONES
GE  LATTICECELL  GEOMETRY
MORE           0 0/1 DO NOT READ/READ OPTIONAL PARAMETER DATA
MSLN           0 FUEL SOLUTIONS


**** PROBLEM COMPOSITION DESCRIPTION ****

SC  UO2          STANDARD COMPOSITION
MX             1 MIXTURE NO.
VF        0.9500 VOLUME FRACTION
ROTH     10.9600 THEORETICAL DENSITY
NEL            2 NO. ELEMENTS
ICP            1 0/1 MIXTURE/COMPOUND
TEMP       293.0 DEG KELVIN
           92000      1.00 ATOM/MOLECULE
                           92235     4.000 WT%
                           92238    96.000 WT%
            8016      2.00 ATOMS/MOLECULE
END

SC  ZIRCALLOY    STANDARD COMPOSITION
MX             2 MIXTURE NO.
VF        1.0000 VOLUME FRACTION
ROTH      6.5600 THEORETICAL DENSITY
NEL            1 NO. ELEMENTS
ICP            1 0/1 MIXTURE/COMPOUND
TEMP       293.0 DEG KELVIN
           40302      1.00 ATOM/MOLECULE
END

SC  H2O          STANDARD COMPOSITION
MX             3 MIXTURE NO.
VF        1.0000 VOLUME FRACTION
ROTH      0.9982 THEORETICAL DENSITY
NEL            2 NO. ELEMENTS
ICP            1 0/1 MIXTURE/COMPOUND
TEMP       293.0 DEG KELVIN
            1001      2.00 ATOMS/MOLECULE
            8016      1.00 ATOM/MOLECULE
END

SC  AL           STANDARD COMPOSITION
MX             4 MIXTURE NO.
VF        1.0000 VOLUME FRACTION
ROTH      2.7020 THEORETICAL DENSITY
NEL            1 NO. ELEMENTS
ICP            1 0/1 MIXTURE/COMPOUND
TEMP       293.0 DEG KELVIN
           13027      1.00 ATOM/MOLECULE
END

SC  SS304        STANDARD COMPOSITION
MX             5 MIXTURE NO.
VF        1.0000 VOLUME FRACTION
ROTH      7.9200 THEORETICAL DENSITY
NEL            4 NO. ELEMENTS
ICP            0 0/1 MIXTURE/COMPOUND
TEMP       293.0 DEG KELVIN
           24304    19.000 WT%
           25055     2.000 WT%
           26304    69.500 WT%
           28304     9.500 WT%
END

SC  PB           STANDARD COMPOSITION
MX             6 MIXTURE NO.
VF        1.0000 VOLUME FRACTION
ROTH     11.3440 THEORETICAL DENSITY
NEL            1 NO. ELEMENTS
ICP            1 0/1 MIXTURE/COMPOUND
TEMP       293.0 DEG KELVIN
           82000      1.00 ATOM/MOLECULE
END

SC  H2O          STANDARD COMPOSITION
MX             7 MIXTURE NO.
VF        0.0000 VOLUME FRACTION
ROTH      0.9982 THEORETICAL DENSITY
NEL            2 NO. ELEMENTS
ICP            1 0/1 MIXTURE/COMPOUND
TEMP       293.0 DEG KELVIN
            1001      2.00 ATOMS/MOLECULE
            8016      1.00 ATOM/MOLECULE
END

SC  H2O          STANDARD COMPOSITION
```

```
MX             8 MIXTURE NO.
VF        0.0000 VOLUME FRACTION
ROTH      0.9982 THEORETICAL DENSITY
NEL            2 NO. ELEMENTS
ICP            1 0/1 MIXTURE/COMPOUND
TEMP       293.0 DEG KELVIN
            1001      2.00 ATOMS/MOLECULE
            8016      1.00 ATOM/MOLECULE
END

SC  H2O          STANDARD COMPOSITION
MX             9 MIXTURE NO.
VF        1.0000 VOLUME FRACTION
ROTH      0.9982 THEORETICAL DENSITY
NEL            2 NO. ELEMENTS
ICP            1 0/1 MIXTURE/COMPOUND
TEMP       293.0 DEG KELVIN
            1001      2.00 ATOMS/MOLECULE
            8016      1.00 ATOM/MOLECULE
END


**** PROBLEM GEOMETRY ****

CTP SQUAREPITCH  CELL TYPE
PITCH     1.4529 CM CENTER TO CENTER SPACING
FUELOD    0.9055 CM FUEL DIAMETER OR SLAB THICKNESS
MFUEL          1 MIXTURE NO. OF FUEL
MMOD           3 MIXTURE NO. OF MODERATOR
CLADOD    1.0770 CM CLAD OUTER DIAMETER
MCLAD          2 MIXTURE NO. OF CLAD
GAPOD     0.9246 CM GAP OUTER DIAMETER
MGAP           9 MIXTURE NO. OF GAP


ZONE SPECIFICATIONS FOR LATTICECELL GEOMETRY

               ZONE  1 IS FUEL
               ZONE  2 IS GAP
               ZONE  3 IS CLAD
               ZONE  4 IS MOD
```

```
*********************************************************************************************************************
***                                                                                                               ***
***                            NAC-LWT CASK MODEL; EXXON 9X9 - 2 WATER RODS  80 MIL CHANNEL                       ***
***                                                                                                               ***
*********************************************************************************************************************
*********************************************************************************************************************
***                                                                                                               ***
***                               ********** DATA LIBRARY INFORMATION **********                                 ***
***                                                                                                               ***
***          UNIT                                                VOLUME                                           ***
***         NUMBER               DATA SET NAME                   NAME        UNIT FUNCTION                      ***
***         ------               -------------                   ----        -------------                      ***
***                                                                                                               ***
***           89     G:\scale43\DATALIB\FT89F001                              STANDARD COMPOSITION LIBRARY       ***
***                                                                                                               ***
***           82     G:\scale43\DATALIB\FT82F001                              CROSS SECTION LIBRARY              ***
***                                                                                                               ***
***           11     D:\PROJECTS\BU85-C~1\BWRFIN\19HX1M\FT11F001              SHORT CROSS SECTION LIBRARY        ***
***                                                                                                               ***
***           90     D:\PROJECTS\BU85-C~1\BWRFIN\19HX1M\FT90F001              INPUT DATA DIRECT ACCESS           ***
***                                                                                                               ***
*********************************************************************************************************************
*********************************************************************************************************************
***                                                                                                               ***
***                                                                                                               ***
***                                    STANDARD COMPOSITION LIBRARY DATA                                          ***
***                                    ---------------------------------                                          ***
***                                                                                                               ***
***            UNIT NUMBER  :  89                                                                                 ***
***                                                                                                               ***
***            DATASET NAME :  G:\scale43\DATALIB\FT89F001                                                        ***
***                                                                                                               ***
***            LIBRARY TITLE:  SCALE-4 STANDARD COMPOSITION LIBRARY                                               ***
***                            637 STANDARD COMPOSITIONS, 490 NUCLIDES                                            ***
***                            90 ELEMENTS WITH VARIABLE ISOTOPIC DISTRBUTIONS.                                   ***
***                                                                                                               ***
***            CREATION DATE:   6/30/95                                                                           ***
***                                                                                                               ***
***                                                                                                               ***
***                                                                                                               ***
***                                      CROSS SECTION LIBRARY DATA                                               ***
***                                      --------------------------                                               ***
***                                                                                                               ***
***            UNIT NUMBER  :  82                                                                                 ***
***                                                                                                               ***
***            DATASET NAME :  G:\scale43\DATALIB\FT82F001                                                        ***
***                                                                                                               ***
***            LIBRARY TITLE:  SCALE 4.2 - 27 GROUP NEUTRON GROUP LIBRARY                                         ***
***                               BASED ON ENDF-B VERSION 4 DATA                                                  ***
***                                  COMPILED FOR NRC     1/27/89                                               ***
***                                     LAST UPDATED                                          08/12/94  ***
***                                        L.M.PETRIE   -   ORNL                                                  ***
***                                                                                                               ***
***                                                                                                               ***
***                                                                                                               ***
***                                                                                                               ***
*********************************************************************************************************************
*********************************************************************************************************************

                        ........    0 IO'S WERE USED BEFORE READING KENO V DATA    ........

                        ........    0 IO'S WERE USED READING THE KENO V PARAMETER DATA    ........


                       *************** DATA READING COMPLETED ***************

                        ........    0 IO'S WERE USED PREPARING THE KENO V INPUT DATA    ........

                        ........    0 IO'S WERE USED LOADING THE KENO V DATA    ........

                        ........    0 IO'S WERE USED LOADING THE DATA    ........

                        ........    0 IO'S WERE USED CHECKING THE KENO V GEOMETRY DATA    ........
                        *****  RESTART DATA HAS BEEN WRITTEN ON UNIT 95  *****

                        ........    0 IO'S WERE USED WRITING THE KENO V - CSAS DATA    ........

                        ........    0 IO'S WERE USED PROCESSING CSAS INPUT DATA    ........

 CONTROL MODULE CSAS25   IS COMPLETE.
```

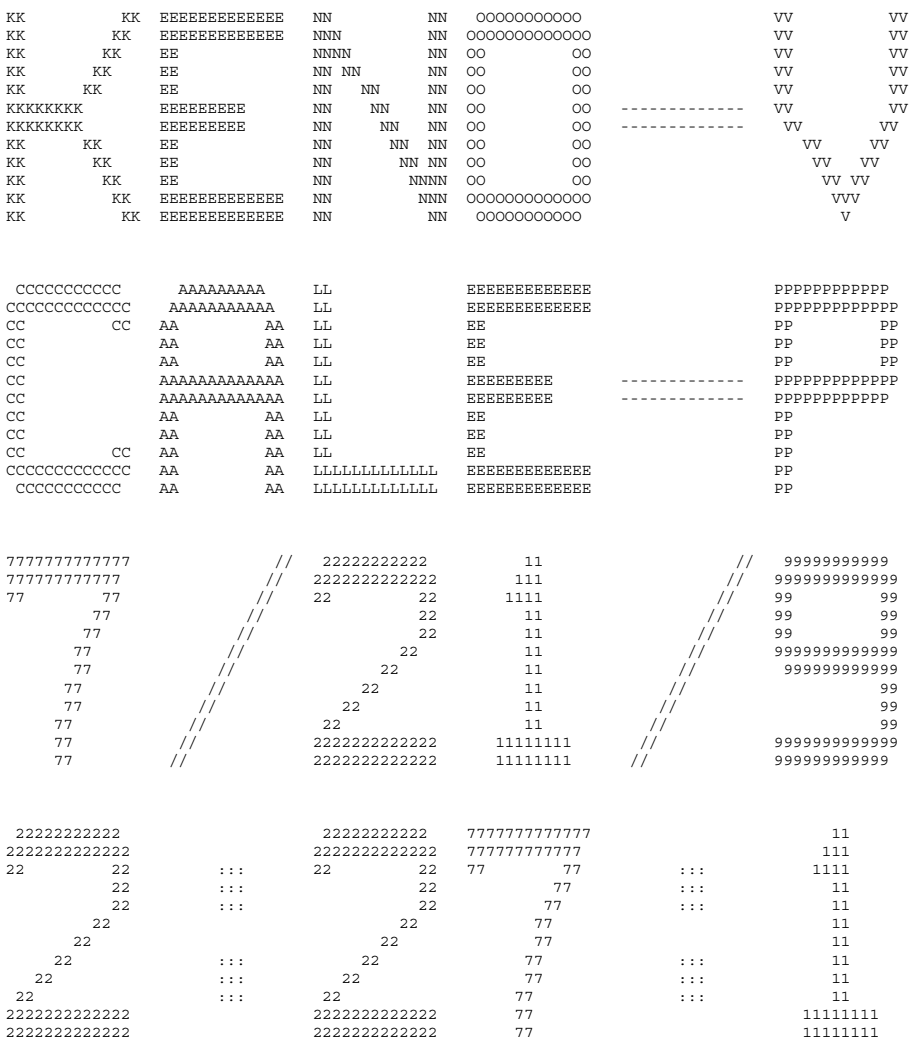
KK KK EEEEEEEEEEEE NN NN OOOOOOOOOO VV VV
KK KK EEEEEEEEEEEE NNN NN OOOOOOOOOOOO VV VV
KK KK EE NNNN NN OO OO VV VV
KK KK EE NN NN NN OO OO VV VV
KK KK EE NN NN NN OO OO VV VV
KKKKKKK EEEEEEEE NN NN NN OO OO VV VV
KKKKKKK EEEEEEEE NN NN NN OO OO VV VV
KK KK EE NN NN NN OO OO VV VV
KK KK EE NN NN NN OO OO VV VV
KK KK EE NN NNNN OO OO VV VV
KK KK EEEEEEEEEEEE NN NNN OOOOOOOOOOOO VVV
KK KK EEEEEEEEEEEE NN NN OOOOOOOOOO V
SSSSSSSSSS CCCCCCCCCC AAAAAAAAA LL EEEEEEEEEEEE PPPPPPPPPP CCCCCCCCCC
SSSSSSSSSSS CCCCCCCCCCCC AAAAAAAAAA LL EEEEEEEEEEEE PPPPPPPPPPP CCCCCCCCCCCC
SS SS CC CC AA AA LL EE PP PP CC CC
SS CC AA AA LL EE PP PP CC
SS CC AA AA LL EE PP PP CC
SSSSSSSSSSS CC AAAAAAAAAAAAA LL EEEEEEEE PPPPPPPPPPP CC
SSSSSSSSSS CC AAAAAAAAAAAAA LL EEEEEEEE PPPPPPPPPP CC
SS CC AA AA LL EE PP CC
SS CC AA AA LL EE PP CC
SS SS CC CC AA AA LL EE PP CC CC
SSSSSSSSSSS CCCCCCCCCCCC AA AA LLLLLLLLLLL EEEEEEEEEEE PP CCCCCCCCCCC
SSSSSSSSSS CCCCCCCCCC AA AA LLLLLLLLLLL EEEEEEEEEEE PP CCCCCCCCCC
0000000 7777777777777 // 22222222222 11 // 99999999999 88888888888
000000000 777777777777 // 2222222222222 111 // 9999999999999 8888888888888
00 00 77 77 // 22 22 1111 // 99 99 88 88
00 00 77 // 22 11 // 99 99 88 88
00 00 77 // 22 11 // 99 99 88 88
00 00 77 // 22 11 // 9999999999999 88888888888
00 00 77 // 22 11 // 999999999999 88888888888
00 00 77 // 22 11 // 99 88 88
00 00 77 // 22 11 // 99 88 88
00 00 77 // 22 11 // 99 88 88
000000000 77 // 2222222222222 11111111 // 9999999999999 8888888888888
0000000 77 // 2222222222222 11111111 // 999999999999 88888888888
11 22222222222 22222222222 7777777777777 11 11
111 2222222222222 2222222222222 777777777777 111 111
1111 22 22 ::: 22 22 77 77 ::: 1111 1111
11 22 ::: 22 77 ::: 11 11
11 22 ::: 22 77 ::: 11 11
11 22 22 77 11 11
11 22 22 77 11 11
11 22 ::: 22 77 ::: 11 11
11 22 ::: 22 77 ::: 11 11
11 22 ::: 22 77 ::: 11 11
11111111 2222222222222 2222222222222 77 11111111 11111111
11111111 2222222222222 2222222222222 77 11111111 11111111

```
*****************************************************************************************************************
***                                                                                                           ***
***                          NAC-LWT CASK MODEL; EXXON 9X9 - 2 WATER RODS  80 MIL CHANNEL                     ***
***                                                                                                           ***
*****************************************************************************************************************
***                            ******       NUMERIC PARAMETERS       ******                                   ***
***                                                                                                           ***
***                                                                                                           ***
***                TME         MAXIMUM PROBLEM TIME (MIN)                        ******                     ***
***                                                                                                           ***
***                TBA         TIME PER GENERATION (MIN)                           0.50                     ***
***                                                                                                           ***
***                GEN         NUMBER OF GENERATIONS                                303                     ***
***                                                                                                           ***
***                NPG         NUMBER PER GENERATION                               1000                     ***
***                                                                                                           ***
***                NSK         NUMBER OF GENERATIONS TO BE SKIPPED                    3                     ***
***                                                                                                           ***
***                BEG         BEGINNING GENERATION NUMBER                            1                     ***
***                                                                                                           ***
***                RES         GENERATIONS BETWEEN CHECKPOINTS                        0                     ***
***                                                                                                           ***
***                X1D         NUMBER OF EXTRA 1-D CROSS SECTIONS                     1                     ***
***                                                                                                           ***
***                NBK         NEUTRON BANK SIZE                                   1025                     ***
***                                                                                                           ***
***                XNB         EXTRA POSITIONS IN NEUTRON BANK                        0                     ***
***                                                                                                           ***
***                NFB         FISSION BANK SIZE                                   1000                     ***
***                                                                                                           ***
***                XFB         EXTRA POSITIONS IN FISSION BANK                        0                     ***
***                                                                                                           ***
***                WTA         DEFAULT VALUE OF WEIGHT AVERAGE                   0.5000                     ***
***                                                                                                           ***
***                WTH         WEIGHT HIGH FOR SPLITTING                         3.0000                     ***
***                                                                                                           ***
***                WTL         WEIGHT LOW FOR RUSSIAN ROULETTE                   0.3333                     ***
***                                                                                                           ***
***                RND         STARTING RANDOM NUMBER                         BB827100001                   ***
***                                                                                                           ***
***                NB8         NUMBER OF D.A. BLOCKS ON UNIT  8                     200                     ***
***                                                                                                           ***
***                NL8         LENGTH OF D.A. BLOCKS ON UNIT  8                     512                     ***
***                                                                                                           ***
***                ADJ         MODE OF CALCULATION                              FORWARD                     ***
***                                                                                                           ***
***                            INPUT DATA WRITTEN ON RESTART UNIT                    NO                     ***
***                                                                                                           ***
***                            BINARY DATA INTERFACE                                 YES                    ***
***                                                                                                           ***
*****************************************************************************************************************
*****************************************************************************************************************
```

```
*****************************************************************************************************************
*****************************************************************************************************************
***                                                                                                           ***
***                            NAC-LWT CASK MODEL; EXXON 9X9 - 2 WATER RODS  80 MIL CHANNEL                   ***
***                                                                                                           ***
*****************************************************************************************************************
***                                ******      LOGICAL PARAMETERS        ******                               ***
***                                                                                                           ***
***  RUN  EXECUTE PROBLEM AFTER CHECKING DATA    YES            PLT  PLOT PICTURE MAP(S)                    NO ***
***                                                                                                           ***
***  FLX  COMPUTE FLUX                            NO            FDN  COMPUTE FISSION DENSITIES              NO ***
***                                                                                                           ***
***  SMU  COMPUTE AVG UNIT SELF-MULTIPLICATION    NO            NUB  COMPUTE NU-BAR & AVG FISSION GROUP     YES ***
***                                                                                                           ***
***  MKU  COMPUTE MATRIX K-EFF BY UNIT NUMBER     NO            MKP  COMPUTE MATRIX K-EFF BY UNIT LOCATION  NO ***
***                                                                                                           ***
***  CKU  COMPUTE COFACTOR K-EFF BY UNIT NUMBER   NO            CKP  COMPUTE COFACTOR K-EFF BY UNIT LOCATION NO ***
***                                                                                                           ***
***  FMU  PRINT FISS PROD MATRIX BY UNIT NUMBER   NO            FMP  PRINT FISS PROD MATRIX BY UNIT LOCATION NO ***
***                                                                                                           ***
***  MKH  COMPUTE MATRIX K-EFF BY HOLE NUMBER     NO            MKA  COMPUTE MATRIX K-EFF BY ARRAY NUMBER   NO ***
***                                                                                                           ***
***  CKH  COMPUTE COFACTOR K-EFF BY HOLE NUMBER   NO            CKA  COMPUTE COFACTOR K-EFF BY ARRAY NUMBER NO ***
***                                                                                                           ***
***  FMH  PRINT FISS PROD MATRIX BY HOLE NUMBER   NO            FMA  PRINT FISS PROD MATRIX BY ARRAY NUMBER NO ***
***                                                                                                           ***
***  HHL  COLLECT MATRIX BY HIGHEST HOLE LEVEL    NO            HAL  COLLECT MATRIX BY HIGHEST ARRAY LEVEL  NO ***
***                                                                                                           ***
***  AMX  PRINT ALL MIXED CROSS SECTIONS          NO            FAR  PRINT FIS. AND ABS. BY REGION          NO ***
***                                                                                                           ***
***  XS1  PRINT 1-D MIXTURE X-SECTIONS            NO            GAS  PRINT FAR BY GROUP                     NO ***
***                                                                                                           ***
***  XS2  PRINT 2-D MIXTURE X-SECTIONS            NO            PAX  PRINT XSEC-ALBEDO CORRELATION TABLES   NO ***
***                                                                                                           ***
***  XAP  PRINT MIXTURE ANGLES & PROBABILITIES    NO            PWT  PRINT WEIGHT AVERAGE ARRAY             NO ***
***                                                                                                           ***
***  PKI  PRINT FISSION SPECTRUM                  NO            PGM  PRINT INPUT GEOMETRY                   NO ***
***                                                                                                           ***
***  P1D  PRINT EXTRA 1-D CROSS SECTIONS          NO            BUG  PRINT DEBUG INFORMATION                NO ***
***                                                                                                           ***
***                                                             TRK  PRINT TRACKING INFORMATION             NO ***
***                                                                                                           ***
***                                                                                                           ***
*****************************************************************************************************************
*****************************************************************************************************************
                                  PARAMETER INPUT COMPLETED

                        ........    0 IO'S WERE USED READING THE PARAMETER DATA      ........

                      *************** DATA READING COMPLETED ***************

     *************************************************************************************************
     ***                                                                                           ***
     ***          NAC-LWT CASK MODEL; EXXON 9X9 - 2 WATER RODS  80 MIL CHANNEL                     ***
     ***                                                                                           ***
     *************************************************************************************************
     *************************************************************************************************
     ***                                                                                           ***
     ***                                ****** ADDITIONAL INFORMATION ******                       ***
     ***                                                                                           ***
     ***  NUMBER OF ENERGY GROUPS              27       USE LATTICE GEOMETRY                   YES  ***
     ***                                                                                           ***
     ***  NO. OF FISSION SPECTRUM SOURCE GROUP  1       GLOBAL ARRAY NUMBER                     0  ***
     ***                                                                                           ***
     ***  NO. OF SCATTERING ANGLES IN XSECS     2       NUMBER OF UNITS IN THE GLOBAL X DIR.    0  ***
     ***                                                                                           ***
     ***  ENTRIES/NEUTRON IN THE NEUTRON BANK  19       NUMBER OF UNITS IN THE GLOBAL Y DIR.    0  ***
     ***                                                                                           ***
     ***  ENTRIES/NEUTRON IN THE FISSION BANK  12       NUMBER OF UNITS IN THE GLOBAL Z DIR.    0  ***
     ***                                                                                           ***
     ***  NUMBER OF MIXTURES USED               9       USE A GLOBAL REFLECTOR                 YES  ***
     ***                                                                                           ***
     ***  NUMBER OF BIAS ID'S USED              1       USE NESTED HOLES                       YES  ***
     ***                                                                                           ***
     ***  NUMBER OF DIFFERENTIAL ALBEDOS USED   1       NUMBER OF HOLES                         22  ***
     ***                                                                                           ***
     ***  TOTAL INPUT GEOMETRY REGIONS         24       MAXIMUM HOLE NESTING LEVEL               2  ***
     ***                                                                                           ***
     ***  NUMBER OF GEOMETRY REGIONS USED      24       USE NESTED ARRAYS                       NO  ***
     ***                                                                                           ***
     ***  LARGEST GEOMETRY UNIT NUMBER          6       NUMBER OF ARRAYS USED                    1  ***
     ***                                                                                           ***
     ***  LARGEST ARRAY NUMBER                  1       MAXIMUM ARRAY NESTING LEVEL              1  ***
     ***                                                                                           ***
     ***                                                                                           ***
     ***  +X BOUNDARY CONDITION               H2O       -X BOUNDARY CONDITION                  H2O  ***
     ***                                                                                           ***
     ***  +Y BOUNDARY CONDITION               H2O       -Y BOUNDARY CONDITION                  H2O  ***
     ***                                                                                           ***
     ***  +Z BOUNDARY CONDITION               PER       -Z BOUNDARY CONDITION                  PER  ***
     ***                                                                                           ***
     *************************************************************************************************
```

```
*******************************************************************************************
***                                                                                     ***
***          NAC-LWT CASK MODEL; EXXON 9X9 - 2 WATER RODS  80 MIL CHANNEL               ***
***                                                                                     ***
*******************************************************************************************
*******************************************************************************************
***                                                                                     ***
***                    ****** SPACE AND SUPERGROUP INFORMATION ******                   ***
***                                                                                     ***
***       100000 WORDS IS THE TOTAL SPACE AVAILABLE.                                    ***
***                                                                                     ***
***        34647 WORDS WERE USED FOR NON-SUPERGROUP STORAGE.                            ***
***                                                                                     ***
***        65353 WORDS OF STORAGE ARE AVAILABLE FOR SUPERGROUPED DATA.                  ***
***                                                                                     ***
***        99458 WORDS OF STORAGE ARE AVAILABLE FOR CONSTRUCTING THE SUPERGROUPS.       ***
***                                                                                     ***
***        65292 WORDS OF STORAGE ARE AVAILABLE TO EACH SUPERGROUP.                     ***
***                                                                                     ***
***         1576 WORDS ARE NEEDED FOR THE LARGEST GROUP.                                ***
***                                                                                     ***
***        36466 WORDS OF STORAGE IS SUFFICIENT TO RUN THIS PROBLEM.                    ***
***                                                                                     ***
***        51430 WORDS OF STORAGE WILL ALLOW THE PROBLEM TO RUN WITH ONE SUPERGROUP.     ***
***                                                                                     ***
***        51872 WORDS OF STORAGE WILL BE USED TO RUN THIS PROBLEM.                     ***
***                                                                                     ***
*******************************************************************************************
*******************************************************************************************
***                                                                                     ***
***                   STARTING       ENDING        XSEC        ALBEDO       TOTAL       ***
***   SUPERGROUP        GROUP         GROUP       LENGTH       LENGTH       LENGTH       ***
***                                                                                     ***
***                                                                                     ***
***          1            1             27          2764          544        16854       ***
***                                                                                     ***
*******************************************************************************************

            ........    0 IO'S WERE USED IN SUPERGROUPING    ........

            ........    0 IO'S WERE USED LOADING THE DATA    ........
```

NAC-LWT CASK MODEL; EXXON 9X9 - 2 WATER RODS 80 MIL CHANNEL

REGION | MEDIA NUM | BIAS ID | GEOMETRY DESCRIPTION FOR THOSE UNITS UTILIZED IN THIS PROBLEM

----- UNIT 1 -----

FUEL PIN CELL - WITH H2O

1 CYLINDER	1	1	RADIUS = 0.45280	+Z = 10.000	-Z = -10.000	CENTERLINE IS AT	X = 0.00000	Y = 0.00000				
2 CYLINDER	9	1	RADIUS = 0.46230	+Z = 10.000	-Z = -10.000	CENTERLINE IS AT	X = 0.00000	Y = 0.00000				
3 CYLINDER	2	1	RADIUS = 0.53850	+Z = 10.000	-Z = -10.000	CENTERLINE IS AT	X = 0.00000	Y = 0.00000				
4 CUBOID	3	1	+X = 0.72640	-X = -0.72640	+Y = 0.72640	-Y = -0.72640	+Z = 10.000	-Z = -10.000				

----- UNIT 2 -----

WATER ROD CELL - WITH H2O

1 CYLINDER	3	1	RADIUS = 0.46230	+Z = 10.000	-Z = -10.000	CENTERLINE IS AT	X = 0.00000	Y = 0.00000				
2 CYLINDER	2	1	RADIUS = 0.53850	+Z = 10.000	-Z = -10.000	CENTERLINE IS AT	X = 0.00000	Y = 0.00000				
3 CUBOID	3	1	+X = 0.72640	-X = -0.72640	+Y = 0.72640	-Y = -0.72640	+Z = 10.000	-Z = -10.000				

----- UNIT 3 EXTERNAL TO LATTICE 1 -----

1 ARRAY NUMBER	1		+X = 6.5376	-X = -6.5376	+Y = 6.5376	-Y = -6.5376	+Z = 10.000	-Z = -10.000				
2 CUBOID	3	1	+X = 6.7031	-X = -6.7031	+Y = 6.7031	-Y = -6.7031	+Z = 10.000	-Z = -10.000				
3 CUBOID	2	1	+X = 6.9063	-X = -6.9063	+Y = 6.9063	-Y = -6.9063	+Z = 10.000	-Z = -10.000				
4 CUBOID	3	1	+X = 7.3025	-X = -7.3025	+Y = 7.3025	-Y = -7.3025	+Z = 10.000	-Z = -10.000				

----- UNIT 4 EXTERNAL TO LATTICE 1 -----

1 ARRAY NUMBER	1		+X = 6.5376	-X = -6.5376	+Y = 6.5376	-Y = -6.5376	+Z = 10.000	-Z = -10.000				
2 CUBOID	3	1	+X = 6.7031	-X = -6.7031	+Y = 6.7031	-Y = -6.7031	+Z = 10.000	-Z = -10.000				
3 CUBOID	2	1	+X = 6.9063	-X = -6.9063	+Y = 6.9063	-Y = -6.9063	+Z = 10.000	-Z = -10.000				
4 CUBOID	3	1	+X = 7.3025	-X = -7.3025	+Y = 7.3025	-Y = -7.3025	+Z = 10.000	-Z = -10.000				

NAC-LWT CASK MODEL; EXXON 9X9 - 2 WATER RODS 80 MIL CHANNEL

REGION | MEDIA NUM | BIAS ID | GEOMETRY DESCRIPTION FOR THOSE UNITS UTILIZED IN THIS PROBLEM

----- UNIT 5 -----

1 CYLINDER	4	1	RADIUS = 16.827	+Z = 10.000	-Z = -10.000	CENTERLINE IS AT	X = 0.00000	Y = 0.00000				
HOLE NUMBER	1		AT X = -7.4613	Y = 0.00000	Z = 0.00000	IS UNIT NUMBER	3					
HOLE NUMBER	2		AT X = 7.4613	Y = 0.00000	Z = 0.00000	IS UNIT NUMBER	4					
2 CYLINDER	3	1	RADIUS = 16.986	+Z = 10.000	-Z = -10.000	CENTERLINE IS AT	X = 0.00000	Y = 0.00000				
3 CYLINDER	5	1	RADIUS = 18.891	+Z = 10.000	-Z = -10.000	CENTERLINE IS AT	X = 0.00000	Y = 0.00000				
4 CYLINDER	6	1	RADIUS = 33.496	+Z = 10.000	-Z = -10.000	CENTERLINE IS AT	X = 0.00000	Y = 0.00000				
5 CYLINDER	5	1	RADIUS = 36.544	+Z = 10.000	-Z = -10.000	CENTERLINE IS AT	X = 0.00000	Y = 0.00000				
6 CYLINDER	7	1	RADIUS = 49.244	+Z = 10.000	-Z = -10.000	CENTERLINE IS AT	X = 0.00000	Y = 0.00000				
7 CYLINDER	5	1	RADIUS = 49.854	+Z = 10.000	-Z = -10.000	CENTERLINE IS AT	X = 0.00000	Y = 0.00000				

NAC-LWT CASK MODEL; EXXON 9X9 - 2 WATER RODS 80 MIL CHANNEL

REGION | MEDIA NUM | BIAS ID | GEOMETRY DESCRIPTION FOR THOSE UNITS UTILIZED IN THIS PROBLEM

********** GLOBAL **********
----- UNIT 6 -----

1 CYLINDER	8	1	RADIUS = 314.00	+Z = 10.000	-Z = -10.000	CENTERLINE IS AT	X = 0.00000	Y = 0.00000				
HOLE NUMBER	3		AT X = 0.00000	Y = 0.00000	Z = 0.00000	IS UNIT NUMBER	5					
HOLE NUMBER	4		AT X = 0.00000	Y = 99.800	Z = 0.00000	IS UNIT NUMBER	5					
HOLE NUMBER	5		AT X = 86.430	Y = 49.900	Z = 0.00000	IS UNIT NUMBER	5					

```
    HOLE NUMBER      6       AT X =  86.430      Y = -49.900      Z = 0.00000     IS UNIT NUMBER      5
    HOLE NUMBER      7       AT X = 0.00000      Y = -99.800      Z = 0.00000     IS UNIT NUMBER      5
    HOLE NUMBER      8       AT X = -86.430      Y = -49.900      Z = 0.00000     IS UNIT NUMBER      5
    HOLE NUMBER      9       AT X = -86.430      Y =  49.900      Z = 0.00000     IS UNIT NUMBER      5
    HOLE NUMBER     10       AT X = 0.00000      Y =  199.60      Z = 0.00000     IS UNIT NUMBER      5
    HOLE NUMBER     11       AT X =  86.430      Y =  149.70      Z = 0.00000     IS UNIT NUMBER      5
    HOLE NUMBER     12       AT X =  172.85      Y =  99.800      Z = 0.00000     IS UNIT NUMBER      5
    HOLE NUMBER     13       AT X =  172.86      Y = 0.00000      Z = 0.00000     IS UNIT NUMBER      5
    HOLE NUMBER     14       AT X =  172.86      Y = -99.800      Z = 0.00000     IS UNIT NUMBER      5
    HOLE NUMBER     15       AT X =  86.430      Y = -149.70      Z = 0.00000     IS UNIT NUMBER      5
    HOLE NUMBER     16       AT X = 0.00000      Y = -199.60      Z = 0.00000     IS UNIT NUMBER      5
    HOLE NUMBER     17       AT X = -86.430      Y = -149.70      Z = 0.00000     IS UNIT NUMBER      5
    HOLE NUMBER     18       AT X = -172.86      Y = -99.880      Z = 0.00000     IS UNIT NUMBER      5
    HOLE NUMBER     19       AT X = -172.86      Y = 0.00000      Z = 0.00000     IS UNIT NUMBER      5
    HOLE NUMBER     20       AT X = -172.86      Y =  99.800      Z = 0.00000     IS UNIT NUMBER      5
    HOLE NUMBER     21       AT X = -86.430      Y =  149.70      Z = 0.00000     IS UNIT NUMBER      5
    HOLE NUMBER     22       AT X =  259.29      Y =  49.900      Z = 0.00000     IS UNIT NUMBER      5
  2 CUBOID           8  1      +X =  314.00     -X = -314.00     +Y =  314.00     -Y = -314.00     +Z =  10.000     -Z = -10.000

                        NAC-LWT CASK MODEL; EXXON 9X9 - 2 WATER RODS  80 MIL CHANNEL

                    -------  UNIT ORIENTATION DESCRIPTION FOR ARRAY   1         -------

Z LAYER   1, X COLUMN   1 TO   9 LEFT TO RIGHT   Y ROW   1 TO   9  BOTTOM TO TOP

 1 1 1 1 1 1 1 1 1

 1 1 1 1 1 1 1 1 1

 1 1 1 1 1 1 1 1 1

 1 1 1 1 1 2 1 1 1

 1 1 1 1 2 1 1 1 1

 1 1 1 1 1 1 1 1 1

 1 1 1 1 1 1 1 1 1

 1 1 1 1 1 1 1 1 1

 1 1 1 1 1 1 1 1 1
```

NAC-LWT CASK MODEL; EXXON 9X9 - 2 WATER RODS 80 MIL CHANNEL
VOLUMES FOR THOSE UNITS UTILIZED IN THIS PROBLEM

UNIT	REGION	GEOMETRY REGION	VOLUME	CUMULATIVE VOLUME
1	1	1	1.28823E+01 CM**3	1.28823E+01 CM**3
	2	2	5.46226E-01 CM**3	1.34285E+01 CM**3
	3	3	4.79162E+00 CM**3	1.82201E+01 CM**3
	4	4	2.39924E+01 CM**3	4.22126E+01 CM**3
2	1	5	1.34285E+01 CM**3	1.34285E+01 CM**3
	2	6	4.79162E+00 CM**3	1.82201E+01 CM**3
	3	7	2.39924E+01 CM**3	4.22126E+01 CM**3
SURROUNDING GEOMETRY VOLUMES - GEOMETRY REGION 8 IS AN ARRAY PLACEMENT BOUNDARY REGION				
3	1	8	3.41922E+03 CM**3	3.41922E+03 CM**3
	2	9	1.75307E+02 CM**3	3.59452E+03 CM**3
	3	10	2.21234E+02 CM**3	3.81576E+03 CM**3
	4	11	4.50362E+02 CM**3	4.26612E+03 CM**3
SURROUNDING GEOMETRY VOLUMES - GEOMETRY REGION 12 IS AN ARRAY PLACEMENT BOUNDARY REGION				
4	1	12	3.41922E+03 CM**3	3.41922E+03 CM**3
	2	13	1.75307E+02 CM**3	3.59452E+03 CM**3
	3	14	2.21234E+02 CM**3	3.81576E+03 CM**3
	4	15	4.50362E+02 CM**3	4.26612E+03 CM**3
5	1	16	9.25953E+03 CM**3	1.77918E+04 CM**3
	2	17	3.37383E+02 CM**3	1.81291E+04 CM**3
	3	18	4.29436E+03 CM**3	2.24235E+04 CM**3
	4	19	4.80740E+04 CM**3	7.04975E+04 CM**3
	5	20	1.34136E+04 CM**3	8.39110E+04 CM**3
	6	21	6.84563E+04 CM**3	1.52367E+05 CM**3
	7	22	3.79567E+03 CM**3	1.56163E+05 CM**3
6	1	23	3.07171E+06 CM**3	6.19497E+06 CM**3
	2	24	1.69271E+06 CM**3	7.88768E+06 CM**3

UNIT	USES	REGION	MIXTURE	TOTAL VOLUME
1	3160	1	1	4.07080E+04 CM**3
		2	9	1.72607E+03 CM**3
		3	2	1.51415E+04 CM**3
		4	3	7.58161E+04 CM**3
2	80	1	3	1.07428E+03 CM**3
		2	2	3.83329E+02 CM**3
		3	3	1.91939E+03 CM**3
3	20	1		6.83843E+04 CM**3
		2	3	3.50614E+03 CM**3
		3	2	4.42469E+03 CM**3
		4	3	9.00723E+03 CM**3
4	20	1		6.83843E+04 CM**3
		2	3	3.50614E+03 CM**3
		3	2	4.42469E+03 CM**3
		4	3	9.00723E+03 CM**3
5	20	1	4	1.85191E+05 CM**3
		2	3	6.74766E+03 CM**3
		3	5	8.58872E+04 CM**3
		4	6	9.61479E+05 CM**3
		5	5	2.68272E+05 CM**3
		6	7	1.36913E+06 CM**3
		7	5	7.59134E+04 CM**3
6	1	1	8	3.07171E+06 CM**3
		2	8	1.69271E+06 CM**3

TOTAL MIXTURE VOLUMES

MIXTURE	TOTAL VOLUME	MASS(G)
1	4.07080E+04 CM**3	4.23851E+05
2	2.43742E+04 CM**3	1.59895E+05
3	1.10584E+05 CM**3	1.10382E+05
4	1.85191E+05 CM**3	5.00385E+05
5	4.30072E+05 CM**3	3.40617E+06
6	9.61479E+05 CM**3	1.09070E+07
7	1.36913E+06 CM**3	1.36662E-14
8	4.76442E+06 CM**3	4.75571E-14
9	1.72607E+03 CM**3	1.72292E+03

****
***
*** BIASING INFORMATION ***
***
*** A DEFAULT WEIGHT OF 0.500 WILL BE USED FOR ALL BIAS ID'S. ***
***
****

```
                                .........    0 IO'S WERE USED IN KENO-V BEFORE TRACKING       .........

                                .........  0.00833 MINUTES WERE USED PROCESSING DATA.        .........

VOLUME FRACTION OF FISSILE MATERIAL IN THE CORE= 1.30338E-02

START TYPE 0 WAS USED.

THE NEUTRONS WERE STARTED WITH A FLAT DISTRIBUTION IN A CUBOID DEFINED BY:
                      +X= 3.14000E+02  -X=-3.14000E+02  +Y= 3.14000E+02  -Y=-3.14000E+02  +Z= 1.00000E+01  -Z=-1.00000E+01
THE FLAG TO START NEUTRONS IN THE REFLECTOR WAS TURNED OFF

KENO MESSAGE NUMBER K5-105     ***** WARNING, ONLY  148 INDEPENDENT STARTING POSITIONS WERE GENERATED.  *****

  852 ADDITIONAL STARTING POINTS WERE PICKED FROM THE INITAL DISTRIBUTION.

0.45350 MINUTES WERE REQUIRED FOR STARTING.   TOTAL ELAPSED TIME IS 0.46933 MINUTES.
```

NAC-LWT CASK MODEL; EXXON 9X9 - 2 WATER RODS 80 MIL CHANNEL

GENERATION	GENERATION K-EFFECTIVE	ELAPSED TIME MINUTES	AVERAGE K-EFFECTIVE	AVG K-EFF DEVIATION	MATRIX K-EFFECTIVE	MATRIX K-EFF DEVIATION
KENO MESSAGE NUMBER K5-132		WARNING....ONLY	976 INDEPENDENT FISSION POINTS WERE GENERATED			
1	9.01189E-01	4.86167E-01	1.00000E+00	0.00000E+00	0.00000E+00	0.00000E+00
2	9.28035E-01	5.07167E-01	1.00000E+00	0.00000E+00	0.00000E+00	0.00000E+00
KENO MESSAGE NUMBER K5-132		WARNING....ONLY	994 INDEPENDENT FISSION POINTS WERE GENERATED			
3	8.92323E-01	5.29167E-01	8.92323E-01	0.00000E+00	0.00000E+00	0.00000E+00
4	9.34444E-01	5.50167E-01	9.13383E-01	2.10603E-02	0.00000E+00	0.00000E+00
5	9.07684E-01	5.73000E-01	9.11483E-01	1.23067E-02	0.00000E+00	0.00000E+00
6	9.48055E-01	5.96000E-01	9.20626E-01	1.26222E-02	0.00000E+00	0.00000E+00
7	8.92456E-01	6.18833E-01	9.14992E-01	1.12843E-02	0.00000E+00	0.00000E+00
8	9.27400E-01	6.39833E-01	9.17060E-01	9.44284E-03	0.00000E+00	0.00000E+00
9	9.27652E-01	6.62833E-01	9.18573E-01	8.12283E-03	0.00000E+00	0.00000E+00
10	9.14856E-01	6.83833E-01	9.18109E-01	7.04991E-03	0.00000E+00	0.00000E+00
11	8.96192E-01	7.06667E-01	9.15673E-01	6.67731E-03	0.00000E+00	0.00000E+00
12	8.97511E-01	7.27833E-01	9.13857E-01	6.24242E-03	0.00000E+00	0.00000E+00
13	9.10384E-01	7.49667E-01	9.13541E-01	5.65531E-03	0.00000E+00	0.00000E+00
14	9.30904E-01	7.72667E-01	9.14988E-01	5.36149E-03	0.00000E+00	0.00000E+00
15	9.47282E-01	7.93667E-01	9.17473E-01	5.52215E-03	0.00000E+00	0.00000E+00
16	9.07252E-01	8.15667E-01	9.16742E-01	5.16438E-03	0.00000E+00	0.00000E+00
17	9.01455E-01	8.37667E-01	9.15723E-01	4.91462E-03	0.00000E+00	0.00000E+00
18	8.88184E-01	8.59667E-01	9.14002E-01	4.90885E-03	0.00000E+00	0.00000E+00
19	8.96816E-01	8.83333E-01	9.12991E-01	4.72059E-03	0.00000E+00	0.00000E+00
20	9.40758E-01	9.07167E-01	9.14534E-01	4.71037E-03	0.00000E+00	0.00000E+00
21	9.02359E-01	9.30167E-01	9.13893E-01	4.50140E-03	0.00000E+00	0.00000E+00
22	9.53151E-01	9.52000E-01	9.15856E-01	4.69994E-03	0.00000E+00	0.00000E+00
23	9.22802E-01	9.75000E-01	9.16187E-01	4.48275E-03	0.00000E+00	0.00000E+00
24	9.32954E-01	9.96833E-01	9.16949E-01	4.34156E-03	0.00000E+00	0.00000E+00
25	9.47618E-01	1.01883E+00	9.18282E-01	4.35754E-03	0.00000E+00	0.00000E+00
26	9.36387E-01	1.04183E+00	9.19037E-01	4.23968E-03	0.00000E+00	0.00000E+00
27	9.64685E-01	1.06367E+00	9.20862E-01	4.45769E-03	0.00000E+00	0.00000E+00
28	9.41832E-01	1.08483E+00	9.21669E-01	4.35809E-03	0.00000E+00	0.00000E+00
29	9.41274E-01	1.10767E+00	9.22395E-01	4.25597E-03	0.00000E+00	0.00000E+00
30	9.43159E-01	1.12967E+00	9.23137E-01	4.16766E-03	0.00000E+00	0.00000E+00
31	9.11565E-01	1.15350E+00	9.22738E-01	4.04113E-03	0.00000E+00	0.00000E+00
32	9.11421E-01	1.17633E+00	9.22360E-01	3.92228E-03	0.00000E+00	0.00000E+00
33	9.11966E-01	1.19917E+00	9.22025E-01	3.80844E-03	0.00000E+00	0.00000E+00
34	9.17329E-01	1.22300E+00	9.21878E-01	3.69042E-03	0.00000E+00	0.00000E+00
35	8.90667E-01	1.24500E+00	9.20933E-01	3.69978E-03	0.00000E+00	0.00000E+00
36	9.29267E-01	1.26783E+00	9.21178E-01	3.59767E-03	0.00000E+00	0.00000E+00
37	9.38488E-01	1.29167E+00	9.21672E-01	3.52820E-03	0.00000E+00	0.00000E+00
38	9.15709E-01	1.31450E+00	9.21507E-01	3.43279E-03	0.00000E+00	0.00000E+00
39	9.11158E-01	1.33933E+00	9.21227E-01	3.35042E-03	0.00000E+00	0.00000E+00
40	8.92236E-01	1.36133E+00	9.20464E-01	3.34912E-03	0.00000E+00	0.00000E+00
41	8.91023E-01	1.38500E+00	9.19709E-01	3.34832E-03	0.00000E+00	0.00000E+00
42	9.11460E-01	1.40700E+00	9.19503E-01	3.27005E-03	0.00000E+00	0.00000E+00
43	8.81758E-01	1.42983E+00	9.18582E-01	3.31950E-03	0.00000E+00	0.00000E+00
44	8.89869E-01	1.45183E+00	9.17899E-01	3.31085E-03	0.00000E+00	0.00000E+00
45	8.88130E-01	1.47567E+00	9.17206E-01	3.30623E-03	0.00000E+00	0.00000E+00
46	9.54337E-01	1.49850E+00	9.18050E-01	3.33863E-03	0.00000E+00	0.00000E+00
47	9.32707E-01	1.52050E+00	9.18376E-01	3.27981E-03	0.00000E+00	0.00000E+00
48	9.25099E-01	1.54350E+00	9.18522E-01	3.21104E-03	0.00000E+00	0.00000E+00
49	9.04156E-01	1.56533E+00	9.18216E-01	3.15681E-03	0.00000E+00	0.00000E+00
50	9.52327E-01	1.58733E+00	9.18927E-01	3.17100E-03	0.00000E+00	0.00000E+00
51	9.26219E-01	1.60933E+00	9.19076E-01	3.10918E-03	0.00000E+00	0.00000E+00
52	9.38677E-01	1.63217E+00	9.19468E-01	3.07148E-03	0.00000E+00	0.00000E+00
53	9.59202E-01	1.65517E+00	9.20247E-01	3.10983E-03	0.00000E+00	0.00000E+00
54	9.34213E-01	1.67700E+00	9.20516E-01	3.06124E-03	0.00000E+00	0.00000E+00
55	9.23051E-01	1.70000E+00	9.20563E-01	3.00331E-03	0.00000E+00	0.00000E+00
56	9.43534E-01	1.72283E+00	9.20989E-01	2.97771E-03	0.00000E+00	0.00000E+00
57	8.99568E-01	1.74667E+00	9.20599E-01	2.94890E-03	0.00000E+00	0.00000E+00
58	9.47481E-01	1.76867E+00	9.21079E-01	2.93528E-03	0.00000E+00	0.00000E+00
59	9.19284E-01	1.79067E+00	9.21048E-01	2.88349E-03	0.00000E+00	0.00000E+00
60	9.33921E-01	1.81350E+00	9.21270E-01	2.84202E-03	0.00000E+00	0.00000E+00
61	9.04019E-01	1.83633E+00	9.20977E-01	2.80870E-03	0.00000E+00	0.00000E+00
62	9.03335E-01	1.85833E+00	9.20683E-01	2.77710E-03	0.00000E+00	0.00000E+00
63	9.43630E-01	1.88117E+00	9.21060E-01	2.75698E-03	0.00000E+00	0.00000E+00
64	9.15463E-01	1.90317E+00	9.20969E-01	2.71365E-03	0.00000E+00	0.00000E+00
65	9.27783E-01	1.92700E+00	9.21077E-01	2.67242E-03	0.00000E+00	0.00000E+00
66	9.64049E-01	1.94900E+00	9.21749E-01	2.71467E-03	0.00000E+00	0.00000E+00
67	9.52222E-01	1.97100E+00	9.22218E-01	2.71339E-03	0.00000E+00	0.00000E+00
68	9.38790E-01	1.99383E+00	9.22469E-01	2.68373E-03	0.00000E+00	0.00000E+00
69	9.39284E-01	2.01583E+00	9.22720E-01	2.65526E-03	0.00000E+00	0.00000E+00
70	9.18021E-01	2.03867E+00	9.22651E-01	2.61683E-03	0.00000E+00	0.00000E+00
71	9.09255E-01	2.06250E+00	9.22457E-01	2.58593E-03	0.00000E+00	0.00000E+00
72	9.85449E-01	2.08350E+00	9.23356E-01	2.70292E-03	0.00000E+00	0.00000E+00
73	8.82877E-01	2.10733E+00	9.22786E-01	2.72489E-03	0.00000E+00	0.00000E+00
74	9.20326E-01	2.13017E+00	9.22752E-01	2.68700E-03	0.00000E+00	0.00000E+00
75	8.82683E-01	2.15217E+00	9.22203E-01	2.70618E-03	0.00000E+00	0.00000E+00
76	9.51438E-01	2.17417E+00	9.22598E-01	2.69844E-03	0.00000E+00	0.00000E+00
77	9.20571E-01	2.19617E+00	9.22571E-01	2.66235E-03	0.00000E+00	0.00000E+00
78	9.38215E-01	2.21900E+00	9.22777E-01	2.63514E-03	0.00000E+00	0.00000E+00
79	9.19033E-01	2.24183E+00	9.22728E-01	2.60115E-03	0.00000E+00	0.00000E+00
80	9.20555E-01	2.26483E+00	9.22701E-01	2.56774E-03	0.00000E+00	0.00000E+00
81	9.21486E-01	2.28667E+00	9.22685E-01	2.53507E-03	0.00000E+00	0.00000E+00
82	9.18215E-01	2.30967E+00	9.22629E-01	2.50381E-03	0.00000E+00	0.00000E+00
83	9.27842E-01	2.33250E+00	9.22694E-01	2.47354E-03	0.00000E+00	0.00000E+00
84	9.11448E-01	2.35450E+00	9.22557E-01	2.44703E-03	0.00000E+00	0.00000E+00
85	9.03452E-01	2.37650E+00	9.22326E-01	2.42830E-03	0.00000E+00	0.00000E+00
86	9.28189E-01	2.39933E+00	9.22396E-01	2.40024E-03	0.00000E+00	0.00000E+00
87	9.32908E-01	2.42217E+00	9.22520E-01	2.37505E-03	0.00000E+00	0.00000E+00
88	9.32844E-01	2.44417E+00	9.22640E-01	2.35034E-03	0.00000E+00	0.00000E+00
89	9.37330E-01	2.46717E+00	9.22809E-01	2.32930E-03	0.00000E+00	0.00000E+00

90	9.35225E-01	2.48900E+00	9.22950E-01	2.30699E-03	0.00000E+00	0.00000E+00
91	9.34490E-01	2.51100E+00	9.23079E-01	2.28461E-03	0.00000E+00	0.00000E+00
92	9.08846E-01	2.53383E+00	9.22921E-01	2.26461E-03	0.00000E+00	0.00000E+00
93	9.17967E-01	2.55500E+00	9.22867E-01	2.24025E-03	0.00000E+00	0.00000E+00
94	8.85436E-01	2.57883E+00	9.22460E-01	2.25281E-03	0.00000E+00	0.00000E+00
95	9.31770E-01	2.60067E+00	9.22560E-01	2.23070E-03	0.00000E+00	0.00000E+00
96	8.86037E-01	2.62367E+00	9.22172E-01	2.24078E-03	0.00000E+00	0.00000E+00
97	9.34995E-01	2.64567E+00	9.22307E-01	2.22118E-03	0.00000E+00	0.00000E+00
98	9.41668E-01	2.66850E+00	9.22508E-01	2.20715E-03	0.00000E+00	0.00000E+00
99	9.32066E-01	2.68950E+00	9.22607E-01	2.18650E-03	0.00000E+00	0.00000E+00
100	9.22857E-01	2.71150E+00	9.22609E-01	2.16407E-03	0.00000E+00	0.00000E+00
101	9.31972E-01	2.73350E+00	9.22704E-01	2.14419E-03	0.00000E+00	0.00000E+00
102	9.09239E-01	2.75733E+00	9.22569E-01	2.12691E-03	0.00000E+00	0.00000E+00
103	8.75690E-01	2.78017E+00	9.22105E-01	2.15629E-03	0.00000E+00	0.00000E+00
104	9.00232E-01	2.80300E+00	9.21891E-01	2.14579E-03	0.00000E+00	0.00000E+00
105	9.03079E-01	2.82600E+00	9.21708E-01	2.13269E-03	0.00000E+00	0.00000E+00
106	9.40959E-01	2.84883E+00	9.21893E-01	2.12018E-03	0.00000E+00	0.00000E+00
107	9.49846E-01	2.87167E+00	9.22159E-01	2.11670E-03	0.00000E+00	0.00000E+00
108	9.39698E-01	2.89467E+00	9.22325E-01	2.10315E-03	0.00000E+00	0.00000E+00
109	9.32212E-01	2.91750E+00	9.22417E-01	2.08545E-03	0.00000E+00	0.00000E+00
110	8.92871E-01	2.94033E+00	9.22144E-01	2.08408E-03	0.00000E+00	0.00000E+00
111	9.28407E-01	2.96233E+00	9.22201E-01	2.06568E-03	0.00000E+00	0.00000E+00
112	9.21416E-01	2.98517E+00	9.22194E-01	2.04682E-03	0.00000E+00	0.00000E+00
113	9.33755E-01	3.00817E+00	9.22298E-01	2.03097E-03	0.00000E+00	0.00000E+00
114	9.35223E-01	3.03100E+00	9.22414E-01	2.01606E-03	0.00000E+00	0.00000E+00
115	9.39859E-01	3.05383E+00	9.22568E-01	2.00410E-03	0.00000E+00	0.00000E+00
116	9.12919E-01	3.07767E+00	9.22483E-01	1.98824E-03	0.00000E+00	0.00000E+00
117	9.31885E-01	3.10050E+00	9.22565E-01	1.97257E-03	0.00000E+00	0.00000E+00
118	9.34053E-01	3.12250E+00	9.22664E-01	1.95800E-03	0.00000E+00	0.00000E+00
119	9.57707E-01	3.14450E+00	9.22964E-01	1.96416E-03	0.00000E+00	0.00000E+00
120	9.38524E-01	3.16650E+00	9.23095E-01	1.95190E-03	0.00000E+00	0.00000E+00
121	9.16934E-01	3.18933E+00	9.23044E-01	1.93612E-03	0.00000E+00	0.00000E+00
122	9.19902E-01	3.21217E+00	9.23018E-01	1.92010E-03	0.00000E+00	0.00000E+00
123	9.04315E-01	3.23333E+00	9.22863E-01	1.91043E-03	0.00000E+00	0.00000E+00
124	8.89191E-01	3.25617E+00	9.22587E-01	1.91470E-03	0.00000E+00	0.00000E+00
125	8.78869E-01	3.27900E+00	9.22232E-01	1.93205E-03	0.00000E+00	0.00000E+00
126	9.21744E-01	3.30100E+00	9.22228E-01	1.91641E-03	0.00000E+00	0.00000E+00
127	9.29411E-01	3.32400E+00	9.22285E-01	1.90188E-03	0.00000E+00	0.00000E+00
128	9.28569E-01	3.34500E+00	9.22335E-01	1.88739E-03	0.00000E+00	0.00000E+00
129	9.54092E-01	3.36700E+00	9.22585E-01	1.88909E-03	0.00000E+00	0.00000E+00
130	9.14894E-01	3.38900E+00	9.22525E-01	1.87523E-03	0.00000E+00	0.00000E+00
131	8.92940E-01	3.41083E+00	9.22296E-01	1.87472E-03	0.00000E+00	0.00000E+00
132	9.15062E-01	3.43283E+00	9.22240E-01	1.86108E-03	0.00000E+00	0.00000E+00
133	9.34626E-01	3.45567E+00	9.22334E-01	1.84924E-03	0.00000E+00	0.00000E+00
134	9.30755E-01	3.47867E+00	9.22398E-01	1.83628E-03	0.00000E+00	0.00000E+00
135	8.84656E-01	3.50067E+00	9.22114E-01	1.84438E-03	0.00000E+00	0.00000E+00
136	8.97894E-01	3.52350E+00	9.21934E-01	1.83947E-03	0.00000E+00	0.00000E+00
137	8.83584E-01	3.54633E+00	9.21650E-01	1.84776E-03	0.00000E+00	0.00000E+00
138	8.90514E-01	3.56933E+00	9.21421E-01	1.84836E-03	0.00000E+00	0.00000E+00
139	9.40755E-01	3.59217E+00	9.21562E-01	1.84023E-03	0.00000E+00	0.00000E+00
140	9.26957E-01	3.61417E+00	9.21601E-01	1.82727E-03	0.00000E+00	0.00000E+00
141	9.41954E-01	3.63517E+00	9.21747E-01	1.81997E-03	0.00000E+00	0.00000E+00
142	8.86837E-01	3.65900E+00	9.21498E-01	1.82405E-03	0.00000E+00	0.00000E+00
143	9.11581E-01	3.68100E+00	9.21428E-01	1.81244E-03	0.00000E+00	0.00000E+00
144	9.59398E-01	3.70283E+00	9.21695E-01	1.81938E-03	0.00000E+00	0.00000E+00
145	9.14863E-01	3.72483E+00	9.21647E-01	1.80725E-03	0.00000E+00	0.00000E+00
146	9.31201E-01	3.74683E+00	9.21714E-01	1.79588E-03	0.00000E+00	0.00000E+00
147	8.92769E-01	3.76883E+00	9.21514E-01	1.79459E-03	0.00000E+00	0.00000E+00
148	9.65823E-01	3.79167E+00	9.21817E-01	1.80791E-03	0.00000E+00	0.00000E+00
149	9.38353E-01	3.81467E+00	9.21930E-01	1.79909E-03	0.00000E+00	0.00000E+00
150	8.90125E-01	3.83750E+00	9.21715E-01	1.79976E-03	0.00000E+00	0.00000E+00
151	9.40850E-01	3.85950E+00	9.21844E-01	1.79225E-03	0.00000E+00	0.00000E+00
152	9.50210E-01	3.88150E+00	9.22033E-01	1.79028E-03	0.00000E+00	0.00000E+00
153	9.10546E-01	3.90333E+00	9.21957E-01	1.78001E-03	0.00000E+00	0.00000E+00
154	9.31720E-01	3.92633E+00	9.22021E-01	1.76943E-03	0.00000E+00	0.00000E+00
155	9.01260E-01	3.94917E+00	9.21885E-01	1.76305E-03	0.00000E+00	0.00000E+00
156	9.42117E-01	3.97117E+00	9.22016E-01	1.75649E-03	0.00000E+00	0.00000E+00
157	9.24665E-01	3.99317E+00	9.22034E-01	1.74520E-03	0.00000E+00	0.00000E+00
158	9.22738E-01	4.01683E+00	9.22038E-01	1.73399E-03	0.00000E+00	0.00000E+00
159	9.32738E-01	4.03800E+00	9.22106E-01	1.72425E-03	0.00000E+00	0.00000E+00
160	8.92679E-01	4.06083E+00	9.21920E-01	1.72340E-03	0.00000E+00	0.00000E+00
161	9.08268E-01	4.08183E+00	9.21834E-01	1.71468E-03	0.00000E+00	0.00000E+00
162	8.95632E-01	4.10483E+00	9.21670E-01	1.71178E-03	0.00000E+00	0.00000E+00
163	9.32096E-01	4.12767E+00	9.21735E-01	1.70234E-03	0.00000E+00	0.00000E+00
164	9.51827E-01	4.14867E+00	9.21921E-01	1.70197E-03	0.00000E+00	0.00000E+00
165	8.85013E-01	4.17067E+00	9.21694E-01	1.70659E-03	0.00000E+00	0.00000E+00
166	9.05424E-01	4.19167E+00	9.21595E-01	1.69905E-03	0.00000E+00	0.00000E+00
167	9.38226E-01	4.21467E+00	9.21696E-01	1.69172E-03	0.00000E+00	0.00000E+00
168	9.18271E-01	4.23750E+00	9.21675E-01	1.68163E-03	0.00000E+00	0.00000E+00
169	9.24393E-01	4.25950E+00	9.21692E-01	1.67161E-03	0.00000E+00	0.00000E+00
170	8.82554E-01	4.28233E+00	9.21459E-01	1.67788E-03	0.00000E+00	0.00000E+00
171	9.18620E-01	4.30350E+00	9.21442E-01	1.66801E-03	0.00000E+00	0.00000E+00
172	9.37974E-01	4.32633E+00	9.21539E-01	1.66101E-03	0.00000E+00	0.00000E+00
173	9.49211E-01	4.34733E+00	9.21701E-01	1.65918E-03	0.00000E+00	0.00000E+00
174	9.12638E-01	4.37117E+00	9.21648E-01	1.65035E-03	0.00000E+00	0.00000E+00
175	9.28413E-01	4.39317E+00	9.21687E-01	1.64125E-03	0.00000E+00	0.00000E+00
176	9.40138E-01	4.41517E+00	9.21793E-01	1.63523E-03	0.00000E+00	0.00000E+00
177	9.25922E-01	4.43700E+00	9.21817E-01	1.62603E-03	0.00000E+00	0.00000E+00
178	9.42747E-01	4.46000E+00	9.21936E-01	1.62113E-03	0.00000E+00	0.00000E+00
179	9.43369E-01	4.48283E+00	9.22057E-01	1.61649E-03	0.00000E+00	0.00000E+00
180	9.64434E-01	4.50483E+00	9.22295E-01	1.62492E-03	0.00000E+00	0.00000E+00
181	9.61077E-01	4.52767E+00	9.22512E-01	1.63027E-03	0.00000E+00	0.00000E+00
182	9.21660E-01	4.55150E+00	9.22507E-01	1.62120E-03	0.00000E+00	0.00000E+00
183	9.06974E-01	4.57533E+00	9.22421E-01	1.61450E-03	0.00000E+00	0.00000E+00
184	8.98888E-01	4.59917E+00	9.22292E-01	1.61080E-03	0.00000E+00	0.00000E+00

185	9.33264E-01	4.62200E+00	9.22352E-01	1.60310E-03	0.00000E+00	0.00000E+00
186	9.04862E-01	4.64483E+00	9.22257E-01	1.59719E-03	0.00000E+00	0.00000E+00
187	9.27530E-01	4.66783E+00	9.22285E-01	1.58879E-03	0.00000E+00	0.00000E+00
188	9.02055E-01	4.69067E+00	9.22177E-01	1.58397E-03	0.00000E+00	0.00000E+00
189	9.67078E-01	4.71167E+00	9.22417E-01	1.59366E-03	0.00000E+00	0.00000E+00
190	9.60754E-01	4.73367E+00	9.22621E-01	1.59823E-03	0.00000E+00	0.00000E+00
191	9.25358E-01	4.75650E+00	9.22635E-01	1.58982E-03	0.00000E+00	0.00000E+00
192	9.82945E-01	4.77950E+00	9.22952E-01	1.61297E-03	0.00000E+00	0.00000E+00
193	9.36432E-01	4.80233E+00	9.23023E-01	1.60605E-03	0.00000E+00	0.00000E+00
194	9.52149E-01	4.82617E+00	9.23175E-01	1.60485E-03	0.00000E+00	0.00000E+00
195	9.50764E-01	4.84900E+00	9.23318E-01	1.60290E-03	0.00000E+00	0.00000E+00
196	9.07413E-01	4.87183E+00	9.23236E-01	1.59672E-03	0.00000E+00	0.00000E+00
197	9.28760E-01	4.89567E+00	9.23264E-01	1.58877E-03	0.00000E+00	0.00000E+00
198	9.07747E-01	4.91767E+00	9.23185E-01	1.58262E-03	0.00000E+00	0.00000E+00
199	9.21906E-01	4.94150E+00	9.23178E-01	1.57458E-03	0.00000E+00	0.00000E+00
200	9.25988E-01	4.96533E+00	9.23193E-01	1.56667E-03	0.00000E+00	0.00000E+00
201	9.29846E-01	4.98733E+00	9.23226E-01	1.55914E-03	0.00000E+00	0.00000E+00
202	9.15257E-01	5.01017E+00	9.23186E-01	1.55183E-03	0.00000E+00	0.00000E+00
203	9.08503E-01	5.03400E+00	9.23113E-01	1.54582E-03	0.00000E+00	0.00000E+00
204	9.08062E-01	5.05683E+00	9.23039E-01	1.53995E-03	0.00000E+00	0.00000E+00
205	9.08777E-01	5.07883E+00	9.22968E-01	1.53396E-03	0.00000E+00	0.00000E+00
206	9.02570E-01	5.10167E+00	9.22868E-01	1.52969E-03	0.00000E+00	0.00000E+00
207	9.23500E-01	5.12367E+00	9.22871E-01	1.52221E-03	0.00000E+00	0.00000E+00
208	8.96954E-01	5.14650E+00	9.22746E-01	1.52002E-03	0.00000E+00	0.00000E+00
209	9.09160E-01	5.16850E+00	9.22680E-01	1.51409E-03	0.00000E+00	0.00000E+00
210	9.25769E-01	5.19050E+00	9.22695E-01	1.50686E-03	0.00000E+00	0.00000E+00
211	9.02445E-01	5.21433E+00	9.22598E-01	1.50276E-03	0.00000E+00	0.00000E+00
212	9.04908E-01	5.23717E+00	9.22514E-01	1.49796E-03	0.00000E+00	0.00000E+00
213	9.10647E-01	5.26000E+00	9.22457E-01	1.49190E-03	0.00000E+00	0.00000E+00
214	8.68898E-01	5.28300E+00	9.22205E-01	1.50619E-03	0.00000E+00	0.00000E+00
215	9.45750E-01	5.30483E+00	9.22315E-01	1.50317E-03	0.00000E+00	0.00000E+00
216	9.32390E-01	5.32600E+00	9.22362E-01	1.49687E-03	0.00000E+00	0.00000E+00
217	9.43201E-01	5.34800E+00	9.22459E-01	1.49304E-03	0.00000E+00	0.00000E+00
218	9.35512E-01	5.37083E+00	9.22520E-01	1.48734E-03	0.00000E+00	0.00000E+00
219	8.85614E-01	5.39367E+00	9.22350E-01	1.49021E-03	0.00000E+00	0.00000E+00
220	9.81417E-01	5.41567E+00	9.22621E-01	1.50790E-03	0.00000E+00	0.00000E+00
221	9.44546E-01	5.43767E+00	9.22721E-01	1.50433E-03	0.00000E+00	0.00000E+00
222	9.39459E-01	5.46150E+00	9.22797E-01	1.49941E-03	0.00000E+00	0.00000E+00
223	9.10404E-01	5.48433E+00	9.22741E-01	1.49366E-03	0.00000E+00	0.00000E+00
224	9.18697E-01	5.50717E+00	9.22723E-01	1.48703E-03	0.00000E+00	0.00000E+00
225	8.84000E-01	5.53100E+00	9.22549E-01	1.49050E-03	0.00000E+00	0.00000E+00
226	9.02204E-01	5.55383E+00	9.22458E-01	1.48661E-03	0.00000E+00	0.00000E+00
227	9.24094E-01	5.57767E+00	9.22465E-01	1.48000E-03	0.00000E+00	0.00000E+00
228	9.02574E-01	5.60067E+00	9.22377E-01	1.47606E-03	0.00000E+00	0.00000E+00
229	9.26655E-01	5.62350E+00	9.22396E-01	1.46967E-03	0.00000E+00	0.00000E+00
230	9.24029E-01	5.64633E+00	9.22403E-01	1.46323E-03	0.00000E+00	0.00000E+00
231	9.20599E-01	5.66917E+00	9.22395E-01	1.45684E-03	0.00000E+00	0.00000E+00
232	9.34938E-01	5.69117E+00	9.22450E-01	1.45152E-03	0.00000E+00	0.00000E+00
233	9.27772E-01	5.71500E+00	9.22473E-01	1.44541E-03	0.00000E+00	0.00000E+00
234	9.26126E-01	5.73783E+00	9.22489E-01	1.43925E-03	0.00000E+00	0.00000E+00
235	8.98642E-01	5.75983E+00	9.22386E-01	1.43671E-03	0.00000E+00	0.00000E+00
236	8.87684E-01	5.78283E+00	9.22238E-01	1.43822E-03	0.00000E+00	0.00000E+00
237	9.32308E-01	5.80567E+00	9.22281E-01	1.43273E-03	0.00000E+00	0.00000E+00
238	8.85845E-01	5.82950E+00	9.22127E-01	1.43498E-03	0.00000E+00	0.00000E+00
239	9.39433E-01	5.85133E+00	9.22200E-01	1.43077E-03	0.00000E+00	0.00000E+00
240	9.06601E-01	5.87433E+00	9.22134E-01	1.42626E-03	0.00000E+00	0.00000E+00
241	9.27072E-01	5.89817E+00	9.22155E-01	1.42043E-03	0.00000E+00	0.00000E+00
242	9.23204E-01	5.92183E+00	9.22159E-01	1.41450E-03	0.00000E+00	0.00000E+00
243	9.58466E-01	5.94383E+00	9.22310E-01	1.41665E-03	0.00000E+00	0.00000E+00
244	9.54488E-01	5.96767E+00	9.22443E-01	1.41704E-03	0.00000E+00	0.00000E+00
245	9.53238E-01	5.98967E+00	9.22569E-01	1.41687E-03	0.00000E+00	0.00000E+00
246	9.40665E-01	6.01167E+00	9.22644E-01	1.41300E-03	0.00000E+00	0.00000E+00
247	8.89099E-01	6.03633E+00	9.22507E-01	1.41387E-03	0.00000E+00	0.00000E+00
248	9.59811E-01	6.05917E+00	9.22658E-01	1.41625E-03	0.00000E+00	0.00000E+00
249	9.36168E-01	6.08033E+00	9.22713E-01	1.41157E-03	0.00000E+00	0.00000E+00
250	9.12594E-01	6.10400E+00	9.22672E-01	1.40646E-03	0.00000E+00	0.00000E+00
251	9.11767E-01	6.12700E+00	9.22628E-01	1.40148E-03	0.00000E+00	0.00000E+00
252	9.12741E-01	6.15083E+00	9.22589E-01	1.39642E-03	0.00000E+00	0.00000E+00
253	8.81522E-01	6.17367E+00	9.22425E-01	1.40044E-03	0.00000E+00	0.00000E+00
254	9.43794E-01	6.19650E+00	9.22510E-01	1.39745E-03	0.00000E+00	0.00000E+00
255	9.35168E-01	6.21933E+00	9.22560E-01	1.39281E-03	0.00000E+00	0.00000E+00
256	9.50770E-01	6.24133E+00	9.22671E-01	1.39175E-03	0.00000E+00	0.00000E+00
257	9.01853E-01	6.26433E+00	9.22590E-01	1.38869E-03	0.00000E+00	0.00000E+00
258	9.25094E-01	6.28617E+00	9.22599E-01	1.38329E-03	0.00000E+00	0.00000E+00
259	8.87971E-01	6.31000E+00	9.22465E-01	1.38447E-03	0.00000E+00	0.00000E+00
260	9.16477E-01	6.33200E+00	9.22441E-01	1.37929E-03	0.00000E+00	0.00000E+00
261	9.24263E-01	6.35583E+00	9.22448E-01	1.37397E-03	0.00000E+00	0.00000E+00
262	8.86397E-01	6.37867E+00	9.22310E-01	1.37568E-03	0.00000E+00	0.00000E+00
263	9.15748E-01	6.40150E+00	9.22285E-01	1.37063E-03	0.00000E+00	0.00000E+00
264	9.21627E-01	6.42350E+00	9.22282E-01	1.36539E-03	0.00000E+00	0.00000E+00
265	9.27530E-01	6.44650E+00	9.22302E-01	1.36033E-03	0.00000E+00	0.00000E+00
266	9.43546E-01	6.46933E+00	9.22383E-01	1.35756E-03	0.00000E+00	0.00000E+00
267	9.60302E-01	6.49133E+00	9.22526E-01	1.35997E-03	0.00000E+00	0.00000E+00
268	9.05761E-01	6.51417E+00	9.22463E-01	1.35632E-03	0.00000E+00	0.00000E+00
269	9.55820E-01	6.53700E+00	9.22588E-01	1.35699E-03	0.00000E+00	0.00000E+00
270	9.09560E-01	6.55900E+00	9.22539E-01	1.35279E-03	0.00000E+00	0.00000E+00
271	9.21786E-01	6.58200E+00	9.22536E-01	1.34776E-03	0.00000E+00	0.00000E+00
272	9.16804E-01	6.60483E+00	9.22515E-01	1.34292E-03	0.00000E+00	0.00000E+00
273	9.07458E-01	6.62867E+00	9.22459E-01	1.33911E-03	0.00000E+00	0.00000E+00
274	9.00971E-01	6.65050E+00	9.22380E-01	1.33652E-03	0.00000E+00	0.00000E+00
275	9.36201E-01	6.67067E+00	9.22431E-01	1.33257E-03	0.00000E+00	0.00000E+00
276	9.20443E-01	6.69367E+00	9.22424E-01	1.32772E-03	0.00000E+00	0.00000E+00
277	9.20281E-01	6.71733E+00	9.22416E-01	1.32291E-03	0.00000E+00	0.00000E+00
278	9.34639E-01	6.74033E+00	9.22460E-01	1.31885E-03	0.00000E+00	0.00000E+00
279	9.61809E-01	6.76233E+00	9.22602E-01	1.32174E-03	0.00000E+00	0.00000E+00

280	9.22592E-01	6.78417E+00	9.22602E-01	1.31697E-03	0.00000E+00	0.00000E+00
281	9.54083E-01	6.80717E+00	9.22715E-01	1.31709E-03	0.00000E+00	0.00000E+00
282	9.53818E-01	6.82917E+00	9.22826E-01	1.31707E-03	0.00000E+00	0.00000E+00
283	8.97614E-01	6.85283E+00	9.22736E-01	1.31543E-03	0.00000E+00	0.00000E+00
284	9.11954E-01	6.87667E+00	9.22698E-01	1.31132E-03	0.00000E+00	0.00000E+00
285	9.21965E-01	6.89867E+00	9.22696E-01	1.30668E-03	0.00000E+00	0.00000E+00
286	9.34111E-01	6.92150E+00	9.22736E-01	1.30269E-03	0.00000E+00	0.00000E+00
287	9.36488E-01	6.94450E+00	9.22784E-01	1.29901E-03	0.00000E+00	0.00000E+00
288	9.22643E-01	6.96633E+00	9.22784E-01	1.29446E-03	0.00000E+00	0.00000E+00
289	9.31979E-01	6.98933E+00	9.22816E-01	1.29034E-03	0.00000E+00	0.00000E+00
290	9.28679E-01	7.01133E+00	9.22836E-01	1.28601E-03	0.00000E+00	0.00000E+00
291	9.46820E-01	7.03317E+00	9.22919E-01	1.28424E-03	0.00000E+00	0.00000E+00
292	9.09605E-01	7.05617E+00	9.22873E-01	1.28062E-03	0.00000E+00	0.00000E+00
293	8.99557E-01	7.07800E+00	9.22793E-01	1.27873E-03	0.00000E+00	0.00000E+00
294	9.32222E-01	7.10100E+00	9.22825E-01	1.27475E-03	0.00000E+00	0.00000E+00
295	9.65427E-01	7.12383E+00	9.22971E-01	1.27869E-03	0.00000E+00	0.00000E+00
296	8.93684E-01	7.14583E+00	9.22871E-01	1.27822E-03	0.00000E+00	0.00000E+00
297	9.39107E-01	7.16867E+00	9.22926E-01	1.27507E-03	0.00000E+00	0.00000E+00
298	9.29070E-01	7.19067E+00	9.22947E-01	1.27092E-03	0.00000E+00	0.00000E+00
299	8.85026E-01	7.21350E+00	9.22819E-01	1.27305E-03	0.00000E+00	0.00000E+00
300	9.44079E-01	7.23550E+00	9.22890E-01	1.27078E-03	0.00000E+00	0.00000E+00
301	9.33244E-01	7.25750E+00	9.22925E-01	1.26699E-03	0.00000E+00	0.00000E+00
302	9.49263E-01	7.28033E+00	9.23013E-01	1.26581E-03	0.00000E+00	0.00000E+00
303	9.34646E-01	7.30150E+00	9.23051E-01	1.26219E-03	0.00000E+00	0.00000E+00

KENO MESSAGE NUMBER K5-123 EXECUTION TERMINATED DUE TO COMPLETION OF THE SPECIFIED NUMBER OF GENERATIONS.

NAC-LWT CASK MODEL; EXXON 9X9 - 2 WATER RODS 80 MIL CHANNEL

LIFETIME = 4.56164E-04 + OR - 4.31099E-06 GENERATION TIME = 4.02381E-05 + OR - 1.18607E-07
NU BAR = 2.43523E+00 + OR - 9.27544E-05 AVERAGE FISSION GROUP = 2.24439E+01 + OR - 5.65727E-03
ENERGY(EV) OF THE AVERAGE LETHARGY CAUSING FISSION = 1.63071E-01 + OR - 7.57220E-04

NO. OF INITIAL GENERATIONS SKIPPED	AVERAGE K-EFFECTIVE	DEVIATION	67 PER CENT CONFIDENCE INTERVAL	95 PER CENT CONFIDENCE INTERVAL	99 PER CENT CONFIDENCE INTERVAL	NUMBER OF HISTORIES
3	0.92315	+ OR - 0.00126	0.92189 TO 0.92442	0.92063 TO 0.92568	0.91937 TO 0.92694	300000
4	0.92312	+ OR - 0.00127	0.92185 TO 0.92438	0.92058 TO 0.92565	0.91932 TO 0.92691	299000
5	0.92317	+ OR - 0.00127	0.92190 TO 0.92444	0.92063 TO 0.92571	0.91936 TO 0.92698	298000
6	0.92308	+ OR - 0.00127	0.92181 TO 0.92435	0.92054 TO 0.92563	0.91927 TO 0.92690	297000
7	0.92319	+ OR - 0.00127	0.92192 TO 0.92446	0.92065 TO 0.92573	0.91938 TO 0.92700	296000
8	0.92317	+ OR - 0.00127	0.92190 TO 0.92445	0.92062 TO 0.92572	0.91935 TO 0.92700	295000
9	0.92316	+ OR - 0.00128	0.92188 TO 0.92444	0.92060 TO 0.92572	0.91932 TO 0.92700	294000
10	0.92319	+ OR - 0.00128	0.92190 TO 0.92447	0.92062 TO 0.92575	0.91934 TO 0.92704	293000
11	0.92328	+ OR - 0.00128	0.92199 TO 0.92456	0.92071 TO 0.92585	0.91943 TO 0.92713	292000
12	0.92337	+ OR - 0.00129	0.92208 TO 0.92465	0.92080 TO 0.92594	0.91951 TO 0.92722	291000
17	0.92344	+ OR - 0.00130	0.92213 TO 0.92474	0.92083 TO 0.92604	0.91953 TO 0.92734	286000
22	0.92356	+ OR - 0.00131	0.92226 TO 0.92487	0.92095 TO 0.92618	0.91964 TO 0.92748	281000
27	0.92325	+ OR - 0.00132	0.92193 TO 0.92457	0.92061 TO 0.92589	0.91930 TO 0.92720	276000
32	0.92313	+ OR - 0.00134	0.92179 TO 0.92446	0.92046 TO 0.92580	0.91912 TO 0.92713	271000
37	0.92323	+ OR - 0.00135	0.92188 TO 0.92459	0.92053 TO 0.92594	0.91918 TO 0.92729	266000
42	0.92360	+ OR - 0.00137	0.92223 TO 0.92496	0.92086 TO 0.92633	0.91950 TO 0.92769	261000
47	0.92387	+ OR - 0.00136	0.92251 TO 0.92524	0.92115 TO 0.92660	0.91978 TO 0.92796	256000
52	0.92377	+ OR - 0.00138	0.92238 TO 0.92515	0.92100 TO 0.92653	0.91962 TO 0.92791	251000
57	0.92360	+ OR - 0.00140	0.92220 TO 0.92500	0.92081 TO 0.92639	0.91941 TO 0.92779	246000
62	0.92364	+ OR - 0.00142	0.92222 TO 0.92506	0.92081 TO 0.92648	0.91939 TO 0.92789	241000
67	0.92328	+ OR - 0.00143	0.92185 TO 0.92471	0.92042 TO 0.92614	0.91900 TO 0.92757	236000
72	0.92296	+ OR - 0.00143	0.92153 TO 0.92439	0.92010 TO 0.92582	0.91867 TO 0.92725	231000
77	0.92321	+ OR - 0.00143	0.92178 TO 0.92464	0.92034 TO 0.92608	0.91891 TO 0.92751	226000
82	0.92320	+ OR - 0.00146	0.92174 TO 0.92467	0.92028 TO 0.92613	0.91881 TO 0.92760	221000
87	0.92326	+ OR - 0.00149	0.92177 TO 0.92475	0.92027 TO 0.92625	0.91878 TO 0.92774	216000
92	0.92311	+ OR - 0.00152	0.92158 TO 0.92463	0.92006 TO 0.92615	0.91854 TO 0.92768	211000

NAC-LWT CASK MODEL; EXXON 9X9 - 2 WATER RODS 80 MIL CHANNEL

NO. OF INITIAL GENERATIONS SKIPPED	AVERAGE K-EFFECTIVE	DEVIATION	67 PER CENT CONFIDENCE INTERVAL	95 PER CENT CONFIDENCE INTERVAL	99 PER CENT CONFIDENCE INTERVAL	NUMBER OF HISTORIES
97	0.92340	+ OR - 0.00154	0.92186 TO 0.92493	0.92032 TO 0.92647	0.91878 TO 0.92801	206000
102	0.92329	+ OR - 0.00157	0.92172 TO 0.92486	0.92015 TO 0.92643	0.91858 TO 0.92800	201000
107	0.92353	+ OR - 0.00157	0.92195 TO 0.92510	0.92038 TO 0.92668	0.91880 TO 0.92825	196000
112	0.92355	+ OR - 0.00161	0.92194 TO 0.92515	0.92034 TO 0.92676	0.91873 TO 0.92836	191000
117	0.92335	+ OR - 0.00164	0.92171 TO 0.92499	0.92007 TO 0.92664	0.91843 TO 0.92828	186000
122	0.92307	+ OR - 0.00167	0.92140 TO 0.92475	0.91973 TO 0.92642	0.91805 TO 0.92809	181000
127	0.92360	+ OR - 0.00169	0.92191 TO 0.92528	0.92022 TO 0.92697	0.91853 TO 0.92866	176000
132	0.92367	+ OR - 0.00172	0.92195 TO 0.92538	0.92024 TO 0.92710	0.91852 TO 0.92882	171000
137	0.92419	+ OR - 0.00173	0.92247 TO 0.92592	0.92074 TO 0.92764	0.91901 TO 0.92937	166000
142	0.92440	+ OR - 0.00175	0.92266 TO 0.92615	0.92091 TO 0.92789	0.91917 TO 0.92964	161000
147	0.92448	+ OR - 0.00177	0.92271 TO 0.92625	0.92094 TO 0.92803	0.91916 TO 0.92980	156000
152	0.92406	+ OR - 0.00178	0.92228 TO 0.92585	0.92050 TO 0.92763	0.91872 TO 0.92941	151000
157	0.92413	+ OR - 0.00183	0.92230 TO 0.92596	0.92047 TO 0.92779	0.91864 TO 0.92962	146000
162	0.92462	+ OR - 0.00187	0.92275 TO 0.92648	0.92089 TO 0.92835	0.91902 TO 0.93021	141000
167	0.92470	+ OR - 0.00189	0.92280 TO 0.92659	0.92091 TO 0.92848	0.91902 TO 0.93037	136000
172	0.92501	+ OR - 0.00193	0.92308 TO 0.92695	0.92115 TO 0.92888	0.91921 TO 0.93082	131000
177	0.92477	+ OR - 0.00200	0.92277 TO 0.92676	0.92078 TO 0.92876	0.91878 TO 0.93075	126000
182	0.92386	+ OR - 0.00202	0.92184 TO 0.92588	0.91983 TO 0.92789	0.91781 TO 0.92991	121000
187	0.92427	+ OR - 0.00208	0.92219 TO 0.92635	0.92012 TO 0.92843	0.91804 TO 0.93051	116000
192	0.92322	+ OR - 0.00203	0.92119 TO 0.92525	0.91916 TO 0.92729	0.91712 TO 0.92932	111000
197	0.92266	+ OR - 0.00208	0.92058 TO 0.92474	0.91849 TO 0.92683	0.91641 TO 0.92891	106000
202	0.92278	+ OR - 0.00218	0.92060 TO 0.92496	0.91842 TO 0.92714	0.91624 TO 0.92933	101000
207	0.92344	+ OR - 0.00227	0.92117 TO 0.92570	0.91890 TO 0.92797	0.91663 TO 0.93024	96000
212	0.92429	+ OR - 0.00235	0.92194 TO 0.92664	0.91960 TO 0.92899	0.91725 TO 0.93134	91000
217	0.92453	+ OR - 0.00237	0.92216 TO 0.92690	0.91979 TO 0.92927	0.91742 TO 0.93164	86000
222	0.92374	+ OR - 0.00234	0.92140 TO 0.92608	0.91906 TO 0.92842	0.91672 TO 0.93076	81000
227	0.92479	+ OR - 0.00241	0.92237 TO 0.92720	0.91996 TO 0.92961	0.91755 TO 0.93202	76000

NAC-LWT CASK MODEL; EXXON 9X9 - 2 WATER RODS 80 MIL CHANNEL

NO. OF INITIAL GENERATIONS SKIPPED	AVERAGE K-EFFECTIVE	DEVIATION	67 PER CENT CONFIDENCE INTERVAL	95 PER CENT CONFIDENCE INTERVAL	99 PER CENT CONFIDENCE INTERVAL	NUMBER OF HISTORIES
232	0.92500	+ OR - 0.00256	0.92244 TO 0.92756	0.91988 TO 0.93012	0.91732 TO 0.93268	71000
237	0.92579	+ OR - 0.00266	0.92314 TO 0.92845	0.92048 TO 0.93111	0.91782 TO 0.93377	66000
242	0.92656	+ OR - 0.00277	0.92379 TO 0.92934	0.92102 TO 0.93211	0.91824 TO 0.93488	61000
247	0.92543	+ OR - 0.00279	0.92265 TO 0.92822	0.91986 TO 0.93101	0.91707 TO 0.93380	56000
252	0.92532	+ OR - 0.00295	0.92237 TO 0.92827	0.91942 TO 0.93121	0.91648 TO 0.93416	51000
257	0.92561	+ OR - 0.00300	0.92261 TO 0.92861	0.91962 TO 0.93161	0.91662 TO 0.93460	46000
262	0.92776	+ OR - 0.00306	0.92469 TO 0.93082	0.92163 TO 0.93388	0.91857 TO 0.93694	41000
267	0.92692	+ OR - 0.00332	0.92361 TO 0.93024	0.92029 TO 0.93355	0.91697 TO 0.93687	36000
272	0.92773	+ OR - 0.00361	0.92412 TO 0.93134	0.92050 TO 0.93495	0.91689 TO 0.93856	31000
277	0.92977	+ OR - 0.00406	0.92572 TO 0.93383	0.92166 TO 0.93789	0.91760 TO 0.94195	26000
282	0.92606	+ OR - 0.00440	0.92165 TO 0.93046	0.91725 TO 0.93486	0.91285 TO 0.93927	21000
287	0.92782	+ OR - 0.00536	0.92246 TO 0.93318	0.91710 TO 0.93854	0.91173 TO 0.94390	16000
292	0.92776	+ OR - 0.00748	0.92027 TO 0.93524	0.91279 TO 0.94272	0.90531 TO 0.95020	11000
297	0.92922	+ OR - 0.00935	0.91987 TO 0.93857	0.91053 TO 0.94792	0.90118 TO 0.95726	6000

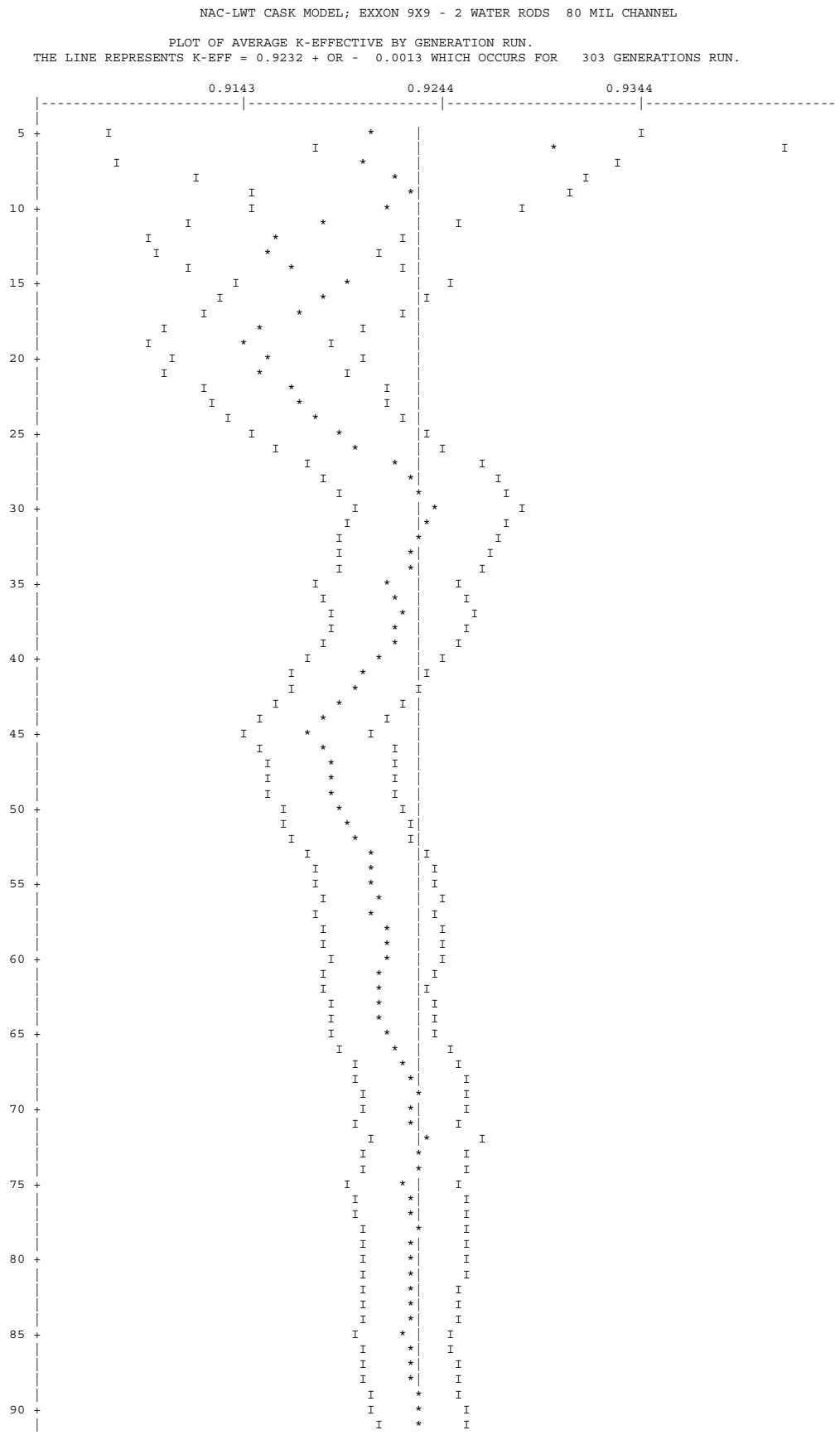
NAC-LWT CASK MODEL; EXXON 9X9 - 2 WATER RODS 80 MIL CHANNEL
PLOT OF AVERAGE K-EFFECTIVE BY GENERATION RUN.
THE LINE REPRESENTS K-EFF = 0.9232 + OR - 0.0013 WHICH OCCURS FOR 303 GENERATIONS RUN.
0.9143
0.9244
0.9344
5
10
15
20
25
30
35
40
45
50
55
60
65
70
75
80
85
90

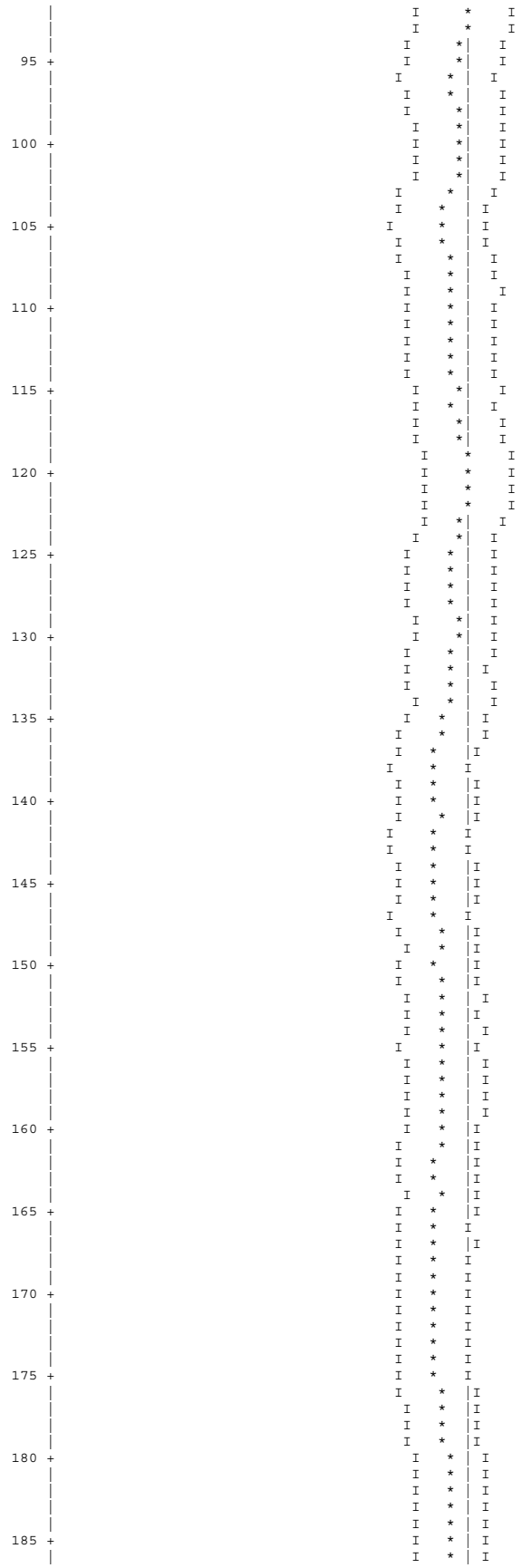

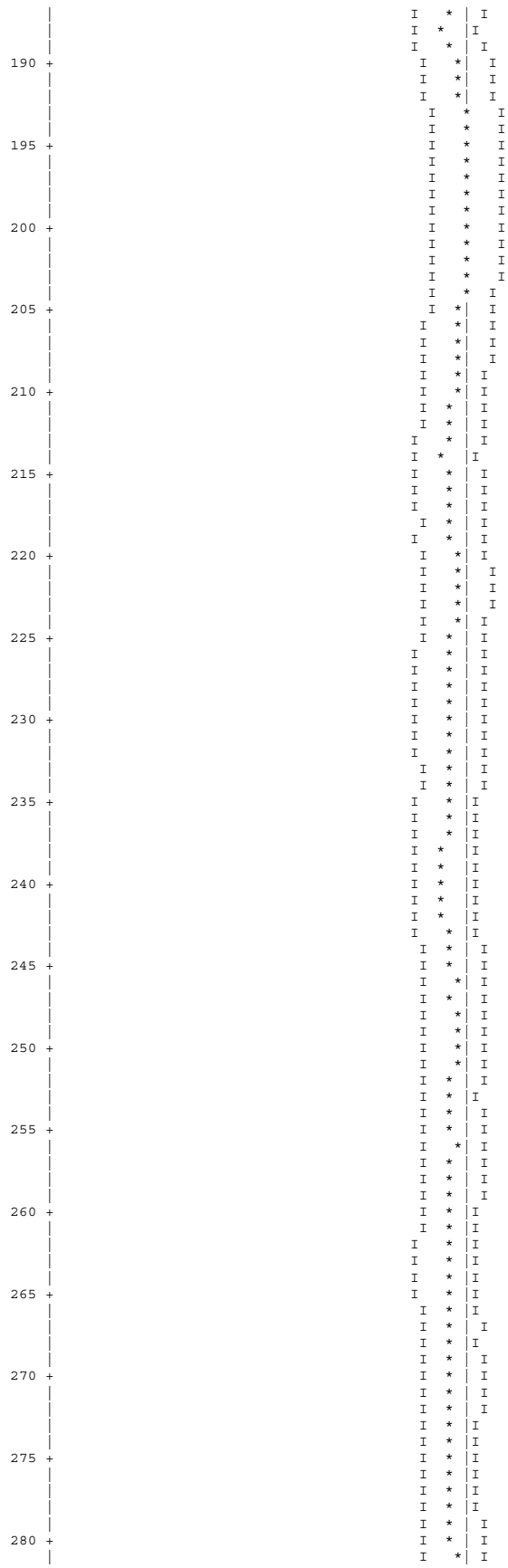


285
290
295
300

NAC-LWT CASK MODEL; EXXON 9X9 - 2 WATER RODS 80 MIL CHANNEL

SKIPPING 3 GENERATIONS

GROUP	FISSION FRACTION	UNIT	REGION	FISSIONS	PERCENT DEVIATION	ABSORPTIONS	PERCENT DEVIATION	LEAKAGE	PERCENT DEVIATION
1	0.0041			3.77954E-03	2.4762	2.27971E-03	1.7625	0.00000E+00	0.0000
2	0.0166			1.53484E-02	0.6823	7.91156E-03	0.5604	0.00000E+00	0.0000
3	0.0185			1.70463E-02	0.6535	7.23633E-03	0.6156	0.00000E+00	0.0000
4	0.0078			7.19320E-03	0.8032	3.55433E-03	0.7494	0.00000E+00	0.0000
5	0.0026			2.36365E-03	0.5822	2.76274E-03	0.4823	0.00000E+00	0.0000
6	0.0024			2.18845E-03	0.4869	5.90695E-03	0.4100	0.00000E+00	0.0000
7	0.0024			2.19241E-03	0.4650	8.30656E-03	0.4008	0.00000E+00	0.0000
8	0.0024			2.23029E-03	0.4971	1.00129E-02	0.3818	0.00000E+00	0.0000
9	0.0033			3.05338E-03	0.5503	1.42582E-02	0.3863	0.00000E+00	0.0000
10	0.0071			6.54045E-03	0.5588	2.39631E-02	0.4360	0.00000E+00	0.0000
11	0.0150			1.38589E-02	0.6088	3.57136E-02	0.4483	0.00000E+00	0.0000
12	0.0191			1.76731E-02	0.6127	3.44911E-02	0.4689	0.00000E+00	0.0000
13	0.0180			1.66595E-02	0.6443	3.67475E-02	0.4907	0.00000E+00	0.0000
14	0.0142			1.31041E-02	0.5990	5.11136E-02	0.4462	0.00000E+00	0.0000
15	0.0031			2.87393E-03	1.0394	1.43410E-02	0.6200	0.00000E+00	0.0000
16	0.0022			2.02285E-03	1.3462	8.24815E-03	0.7862	0.00000E+00	0.0000
17	0.0033			3.08454E-03	1.9387	5.08476E-03	0.9479	0.00000E+00	0.0000
18	0.0045			4.14548E-03	1.7991	5.04738E-03	1.0115	0.00000E+00	0.0000
19	0.0055			5.09696E-03	1.4471	7.99143E-03	0.7852	0.00000E+00	0.0000
20	0.0234			2.15608E-02	0.7556	2.94462E-02	0.5373	0.00000E+00	0.0000
21	0.0122			1.12665E-02	1.3926	1.19914E-02	0.8317	0.00000E+00	0.0000
22	0.0301			2.77517E-02	0.9038	2.66452E-02	0.6349	0.00000E+00	0.0000
23	0.1071			9.88951E-02	0.4773	8.80475E-02	0.3489	0.00000E+00	0.0000
24	0.2116			1.95307E-01	0.3360	1.56040E-01	0.2555	0.00000E+00	0.0000
25	0.1806			1.66702E-01	0.3986	1.28382E-01	0.3147	0.00000E+00	0.0000
26	0.2136			1.97207E-01	0.3631	1.51858E-01	0.2826	0.00000E+00	0.0000
27	0.0693			6.40088E-02	0.7565	5.95539E-02	0.5464	0.00000E+00	0.0000
SYSTEM TOTAL =				9.23154E-01	0.1367	9.36935E-01	0.0630	0.00000E+00	0.0000

THE WEIGHT LOST IN THE ALBEDO PORTION OF THE PROBLEM = 6.5153E-02 + OR - 0.0004

ELAPSED TIME 7.30150 MINUTES

RANDOM NUMBER= 677D583D1706

```
NAC-LWT CASK MODEL; EXXON 9X9 - 2 WATER RODS  80 MIL CHANNEL

                              FREQUENCY FOR GENERATIONS    4 TO  303
0.8597 TO 0.8724     *
0.8724 TO 0.8850     ************
0.8850 TO 0.8977     ****************************
0.8977 TO 0.9103     ******************************************
0.9103 TO 0.9230     ************************************************************
0.9230 TO 0.9356     ****************************************************************************
0.9356 TO 0.9483     **********************************************
0.9483 TO 0.9609     *************************
0.9609 TO 0.9736     ********
0.9736 TO 0.9862     ***

                              FREQUENCY FOR GENERATIONS   79 TO  303
0.8597 TO 0.8724     *
0.8724 TO 0.8850     *********
0.8850 TO 0.8977     ********************
0.8977 TO 0.9103     ***********************************
0.9103 TO 0.9230     ****************************************
0.9230 TO 0.9356     ************************************************************
0.9356 TO 0.9483     *********************************
0.9483 TO 0.9609     ********************
0.9609 TO 0.9736     ******
0.9736 TO 0.9862     **

                              FREQUENCY FOR GENERATIONS  154 TO  303
0.8597 TO 0.8724     *
0.8724 TO 0.8850     *****
0.8850 TO 0.8977     ***********
0.8977 TO 0.9103     ***************************
0.9103 TO 0.9230     ************************
0.9230 TO 0.9356     ************************************
0.9356 TO 0.9483     *********************
0.9483 TO 0.9609     ***************
0.9609 TO 0.9736     *****
0.9736 TO 0.9862     **

                              FREQUENCY FOR GENERATIONS  229 TO  303
0.8597 TO 0.8724
0.8724 TO 0.8850     **
0.8850 TO 0.8977     *******
0.8977 TO 0.9103     *********
0.9103 TO 0.9230     ***************
0.9230 TO 0.9356     ********************
0.9356 TO 0.9483     **********
0.9483 TO 0.9609     **********
0.9609 TO 0.9736     **
0.9736 TO 0.9862


*************************************************************************************************************************************************
*

          CONGRATULATIONS!  YOU HAVE  SUCCESSFULLY TRAVERSED THE PERILOUS PATH THROUGH KENO V IN   7.30233 MINUTES

*************************************************************************************************************************************************
*
_
```

6.6.3 MTR Fuel Elements

This section contains abbreviated output files from the most reactive normal condition and accident condition moderator density variation cases.

Figure 6.6.3-1 CSAS Input/Output for NAC-LWT with Design Basis MTR Fuel - Most Reactive Normal Condition Configuration

```
PRIMARY MODULE ACCESS AND INPUT RECORD ( SCALE DRIVER - 95/03/29 - 09:06:37 )
   MODULE CSAS25   WILL BE CALLED
     LWT HFBR DESIGN U3O8-AL FUEL 93 W/O U235 ELEMENTS IN CLOSE, MIN BASKET PLATES
     27GROUPNDF4  LATTICECELL
     'LINE MATCH
     URANIUM  1 DEN=3.990 0.3000 293 92235 93. 92238 7. END
     O        1 DEN=3.990 0.0542 293 END
     AL       1 DEN=3.990 0.6468 293 END
     AL    2 1.0 293.0 END
     H2O   3 1.000 293.0 END
     AL    4 1.0 293.0 END
     SS304 5 1.0 293.0 END
     PB    6 1.0 293.0 END
     H2O   7 1.000 293.0 END
     H2O   8 1.0 293.0 END
     END COMP
     SYMMSLABCELL 0.3708 0.053 1 3 0.127 2 END

     READ PARAM RUN=YES PLT=YES RND=2 GEN=206 NPG=800 END PARAM
     READ GEOM
     UNIT 1
     COM='AL PLATE CELL'
     CUBOID 2 1 2P3.1250 2P0.127 2P10.0
     CUBOID 3 1 2P3.1250 2P0.254 2P10.0
     UNIT 2
     COM='HFBR FUEL PLATE CELL 1'
     CUBOID 1 1 2P2.8600 2P0.0265 2P10.0
     CUBOID 2 1 2P3.1250 2P0.0635 2P10.0
     CUBOID 3 1 2P3.1250 0.1905 -0.2134 2P10.0
     UNIT 3
     COM='HFBR FUEL PLATE CELL 2'
     CUBOID 1 1 2P2.8600 2P0.0265 2P10.0
     CUBOID 2 1 2P3.1250 2P0.0635 2P10.0
     CUBOID 3 1 2P3.1250 0.2134 -0.2007 2P10.0
     UNIT 4
     COM='HFBR FUEL PLATE CELL 3'
     CUBOID 1 1 2P2.8600 2P0.0265 2P10.0
     CUBOID 2 1 2P3.1250 2P0.0635 2P10.0
     CUBOID 3 1 2P3.1250 0.2007 -0.1854 2P10.0
     UNIT 5
     COM='HFBR FUEL PLATE CELL 4'
     CUBOID 1 1 2P2.8600 2P0.0265 2P10.0
     CUBOID 2 1 2P3.1250 2P0.0635 2P10.0
     CUBOID 3 1 2P3.1250 0.1854 -0.1854 2P10.0
     UNIT 6
     COM='HFBR FUEL PLATE CELL 5'
     CUBOID 1 1 2P2.8600 2P0.0265 2P10.0
     CUBOID 2 1 2P3.1250 2P0.0635 2P10.0
     CUBOID 3 1 2P3.1250 0.1854 -0.2007 2P10.0
     UNIT 7
     COM='HFBR FUEL PLATE CELL 6'
     CUBOID 1 1 2P2.8600 2P0.0265 2P10.0
     CUBOID 2 1 2P3.1250 2P0.0635 2P10.0
     CUBOID 3 1 2P3.1250 0.2007 -0.2134 2P10.0
     UNIT 8
     COM='HFBR FUEL PLATE CELL 7'
     CUBOID 1 1 2P2.8600 2P0.0265 2P10.0
     CUBOID 2 1 2P3.1250 2P0.0635 2P10.0
     CUBOID 3 1 2P3.1250 0.2134 -0.1905 2P10.0
     UNIT 90
     COM='HFBR FUEL ARRAY 20 PLATES IN 5/16 IN. WEB CENTER'
     ARRAY 1 -3.1250 -3.9369 -10.0
     REPLICATE 3 1 2R0.0 2R0.1631 2R0.0 1
     REPLICATE 4 1 2R0.4750 4R0.0 1
     REPLICATE 3 1 2R0.7690 2R0.2688 2R0.0 1
     REPLICATE 5 1 2R0.3556 4R0.0 1
     UNIT 91
     COM='HFBR FUEL ARRAY 20 PLATES IN 5/16 IN. WEB RIGHT'
     ARRAY 1 -3.1250 -3.9369 -10.0
     REPLICATE 3 1 2R0.0 2R0.1631 2R0.0 1
     REPLICATE 4 1 2R0.4750 4R0.0 1
     REPLICATE 3 1 1.5380 0.0 2R0.2688 2R0.0 1
     REPLICATE 5 1 2R0.3556 4R0.0 1
     UNIT 92
     COM='HFBR FUEL ARRAY 20 PLATES IN 5/16 IN. WEB LEFT'
     ARRAY 1 -3.1250 -3.9369 -10.0
     REPLICATE 3 1 2R0.0 2R0.1631 2R0.0 1
     REPLICATE 4 1 2R0.4750 4R0.0 1
     REPLICATE 3 1 0.0 1.5380 2R0.2688 2R0.0 1
     REPLICATE 5 1 2R0.3556 4R0.0 1
     UNIT 10
     COM='HFBR FUEL ARRAY WITH HALF OF 1/4 PLATE ON RIGHT -  TOP STACK'
     ARRAY 1 -3.1250 -3.9369 -10.0
     REPLICATE 3 1 2R0.0 2R0.1631 2R0.0 1
     REPLICATE 4 1 2R0.4750 4R0.0 1
     REPLICATE 3 1 2R0.7690 0.5376 0.0 2R0.0 1
     REPLICATE 5 1 0.3048 5R0.0 1
     UNIT 101
     COM='HFBR FUEL ARRAY WITH HALF OF 1/4 IN. PLATE ON RIGHT -  BOTTOM STACK'
```

```
  ARRAY 1 -3.1250 -3.9369 -10.0
  REPLICATE 3 1 2R0.0 2R0.1631 2R0.0 1
  REPLICATE 4 1 2R0.4750 4R0.0 1
  REPLICATE 3 1 2R0.7690 0.0 0.5376 2R0.0 1
  REPLICATE 5 1 0.3048 5R0.0 1
  UNIT 11
  COM='HFBR FUEL WITH HALF OF 1/4 IN. PLATE ON LEFT  TOP STACK'
  ARRAY 1 -3.1250 -3.9369 -10.0
  REPLICATE 3 1 2R0.0 2R0.1631 2R0.0 1
  REPLICATE 4 1 2R0.4750 4R0.0 1
  REPLICATE 3 1 2R0.7690 0.5376 0.0 2R0.0 1
  REPLICATE 5 1 0.0 0.3048 4R0.0 1
  UNIT 111
  COM='HFBR FUEL ARRAY WITH HALF OF 1/4 IN. PLATE ON LEFT - BOTTOM STACK'
  ARRAY 1 -3.1250 -3.9369 -10.0
  REPLICATE 3 1 2R0.0 2R0.1631 2R0.0 1
  REPLICATE 4 1 2R0.4750 4R0.0 1
  REPLICATE 3 1 2R0.7690 0.0 0.5376 2R0.0 1
  REPLICATE 5 1 0.0 0.3048 4R0.0 1
  UNIT 12
  COM='2 UNIT ARRAY WITH 0.120 IN. PLATE ON TOP AND SIDES'
  ARRAY 2 -9.0428 -4.3688 -10.0
  REPLICATE 5 1 3R0.3048 0.0 2R0.0 1
  UNIT 13
  COM='3 UNIT ARRAY WITH REST OF 5/16 WEB'
  ARRAY 3 -14.1738 -4.3688 -10.0
  REPLICATE 5 1 2R0.3556 2R0.7112 2R0.0 1
  UNIT 14
  COM='2 UNIT ARRAY WITH 0.120 IN. PLATE ON BOTTOM and SIDES'
  ARRAY 4 -9.0428 -4.3688 -10.0
  REPLICATE 5 1 2R0.3048 0.0 0.3048 2R0.0 1
  'LINE MATCH
  'LINE MATCH
  'LINE MATCH
  GLOBAL UNIT 15
  COM='7 HFBR ASSEMBLIES IN THE LWT'
  CYLINDER 3 1 17.0500 2P10.0
  HOLE 12 0.0 +9.4489 0.0
  HOLE 13 0.0 0.0 0.0
  HOLE 14 0.0 -9.4489 0.0
  CYLINDER 5 1 18.8913 2P10.0
  CYLINDER 6 1 33.4963 2P10.0
  CYLINDER 5 1 36.5443 2P10.0
  CYLINDER 8 1 49.2443 2P10.0
  CYLINDER 5 1 80.33900 2P10.0
  CUBOID   7 1 4P80.33900 2P10.0
  END GEOM
  READ ARRAY
  ARA=1 NUX=1 NUY=20 NUZ=1 FILL 1 8 7 6 12R5 4 3 2 1 END FILL
  ARA=2 NUX=2 NUY=1 NUZ=1 FILL 10 11 END FILL
  ARA=3 NUX=3 NUY=1 NUZ=1 FILL 92 90 91 END FILL
  ARA=4 NUX=2 NUY=1 NUZ=1 FILL 101 111 END FILL
  END ARRAY
  READ BOUNDS ALL=MIR END BOUNDS
  READ PLOT
  TTL='X-Y PLOT OF ASSEMBLY'
  NCH=' FCWASPW'
  UAX=1.0 VDN=-1.0 NAX=130
  XUL=-5.0 YUL=5.0 ZUL=0.0
  XLR=5.0 YLR=-5.0 ZLR=0.0 END
  TTL='X-Y PLOT OF CASK'
  UAX=1.0 VDN=-1.0 NAX=130
  XUL=-65.0 YUL=65.0 ZUL=0.0
  XLR=65.0 YLR=-65.0 ZLR=0.0 END
  TTL='X-Y PLOT OF BASKET'
  UAX=1.0 VDN=-1.0 NAX=130
  XUL=-17.0 YUL=17.0 ZUL=0.0
  XLR=17.0 YLR=-17.0 ZLR=0.0 END
  TTL='X-Z PLOT OF BASKET'
  VAX=1.0 WDN=-1.0
  XUL=0.0 YUL=-5.0 ZUL=10.0
  XLR=0.0 YLR=5.0 ZLR=-10.0
  END PLOT
  END DATA

SECONDARY MODULE O0O008   HAS BEEN CALLED.
```


CCCCCCCCCC SSSSSSSSSS AAAAAAAAA SSSSSSSSSS 22222222222 5555555555555
CCCCCCCCCCCC SSSSSSSSSSSS AAAAAAAAAAA SSSSSSSSSSSS 2222222222222 5555555555555
CC CC SS SS AA AA SS SS 22 22 55
CC SS AA AA SS 22 55
CC SS AA AA SS 22 55
CC SSSSSSSSSSS AAAAAAAAAAAAA SSSSSSSSSSS 22 555555555555
CC SSSSSSSSSSS AAAAAAAAAAAAA SSSSSSSSSSS 22 5555555555555
CC SS AA AA SS 22 55
CC SS AA AA SS 22 55
CC CC SS SS AA AA SS SS 22 55 55
CCCCCCCCCCCC SSSSSSSSSSSS AA AA SSSSSSSSSSSS 2222222222222 5555555555555
CCCCCCCCCC SSSSSSSSSS AA AA SSSSSSSSSS 2222222222222 55555555555
SSSSSSSSSS CCCCCCCCCC AAAAAAAAA LL EEEEEEEEEEEE PPPPPPPPPPP CCCCCCCCCC
SSSSSSSSSSS CCCCCCCCCCCC AAAAAAAAAAA LL EEEEEEEEEEEE PPPPPPPPPPPP CCCCCCCCCCCC
SS SS CC CC AA AA LL EE PP PP CC CC
SS CC AA AA LL EE PP PP CC
SS CC AA AA LL EE PP PP CC
SSSSSSSSSSS CC AAAAAAAAAAAAA LL EEEEEEEEE ------------ PPPPPPPPPPPP CC
SSSSSSSSSS CC AAAAAAAAAAAAA LL EEEEEEEEE ------------ PPPPPPPPPPP CC
SS CC AA AA LL EE PP CC
SS CC AA AA LL EE PP CC
SS SS CC CC AA AA LL EE PP CC CC
SSSSSSSSSSSS CCCCCCCCCCCCC AA AA LLLLLLLLLLLL EEEEEEEEEEEE PP CCCCCCCCCCCCC
SSSSSSSSSS CCCCCCCCCC AA AA LLLLLLLLLLLL EEEEEEEEEEEE PP CCCCCCCCCC
0000000 6666666666 // 11 5555555555555 // 99999999999 88888888888
000000000 6666666666666 // 111 5555555555555 // 9999999999999 8888888888888
00 00 66 // 1111 55 // 99 99 88 88
00 00 66 // 11 55 // 99 99 88 88
00 00 66 // 11 55 // 99 99 88 88
00 00 666666666666 // 11 555555555555 // 9999999999999 88888888888
00 00 6666666666666 // 11 5555555555555 // 999999999999 88888888888
00 00 66 66 // 11 55 // 99 88 88
00 00 66 66 // 11 55 // 99 88 88
00 00 66 66 // 11 55 55 // 99 88 88
000000000 6666666666666 // 11111111 5555555555555 // 9999999999999 8888888888888
0000000 66666666666 // 11111111 55555555555 // 999999999999 88888888888
11 44 22222222222 99999999999 0000000 99999999999
111 444 2222222222222 9999999999999 000000000 9999999999999
1111 4444 ::: 22 22 99 99 ::: 00 00 99 99
11 44 44 ::: 22 99 99 ::: 00 00 99 99
11 44 44 ::: 22 99 99 ::: 00 00 99 99
11 44 44 22 9999999999999 00 00 9999999999999
11 44 44 22 999999999999 00 00 999999999999
11 444444444444 ::: 22 99 ::: 00 00 99
11 4444444444444 ::: 22 99 ::: 00 00 99
11 44 ::: 22 99 ::: 00 00 99
11111111 44 2222222222222 9999999999999 000000000 9999999999999
11111111 44 2222222222222 999999999999 0000000 999999999999

```
********************************************************************************
********************************************************************************
********************************************************************************
*****                                                                      *****
*****                  PROGRAM VERIFICATION INFORMATION                    *****
*****                                                                      *****
*****                CODE SYSTEM:  SCALE-PC VERSION:  4.3                  *****
*****                                                                      *****
********************************************************************************
********************************************************************************
*****                                                                      *****
*****                                                                      *****
*****              PROGRAM:  CSAS                                          *****
*****                                                                      *****
*****        CREATION DATE:  03-08-96                                      *****
*****                                                                      *****
*****              VOLUME:   ENG                                           *****
*****                                                                      *****
*****              LIBRARY:  G:\SCALE43\EXE                                *****
*****                                                                      *****
*****                                                                      *****
*****      PRODUCTION CODE:  CSAS                                          *****
*****                                                                      *****
*****              VERSION:  3.1                                           *****
*****                                                                      *****
*****              JOBNAME:  SCALE-PC                                      *****
*****                                                                      *****
*****    DATE OF EXECUTION:  06/15/98                                      *****
*****                                                                      *****
*****    TIME OF EXECUTION:  14:29:09                                      *****
*****                                                                      *****
*****                                                                      *****
********************************************************************************
********************************************************************************
********************************************************************************
```

```
*****************************************************************************************************************
***                                                                                                           ***
***                          LWT HFBR DESIGN U3O8-AL FUEL 93 W/O U235 ELEMENTS IN CLOSE, MIN BASKET PLATES    ***
***                                                                                                           ***
*****************************************************************************************************************
*****************************************************************************************************************
***                                                                                                           ***
***                            ********** DATA LIBRARY INFORMATION **********                                ***
***                                                                                                           ***
***          UNIT                                                VOLUME                                       ***
***         NUMBER               DATA SET NAME                   NAME        UNIT FUNCTION                    ***
***         ------               -------------                   ----        -------------                    ***
***                                                                                                           ***
***           89     G:\scale43\DATALIB\FT89F001                              STANDARD COMPOSITION LIBRARY     ***
***                                                                                                           ***
***           82     G:\scale43\DATALIB\FT82F001                              CROSS SECTION LIBRARY            ***
***                                                                                                           ***
***           11     C:\PROJECTS\bu85-crit\nct\NCTY3M\FT11F001                 SHORT CROSS SECTION LIBRARY      ***
***                                                                                                           ***
***           90     C:\PROJECTS\bu85-crit\nct\NCTY3M\FT90F001                 INPUT DATA DIRECT ACCESS         ***
***                                                                                                           ***
*****************************************************************************************************************
*****************************************************************************************************************
***                                                                                                           ***
***                                                                                                           ***
***                                    STANDARD COMPOSITION LIBRARY DATA                                      ***
***                                    ---------------------------------                                      ***
***                                                                                                           ***
***            UNIT NUMBER  :  89                                                                             ***
***                                                                                                           ***
***            DATASET NAME :  G:\scale43\DATALIB\FT89F001                                                    ***
***                                                                                                           ***
***            LIBRARY TITLE:  SCALE-4 STANDARD COMPOSITION LIBRARY                                           ***
***                            637 STANDARD COMPOSITIONS, 490 NUCLIDES                                        ***
***                            90 ELEMENTS WITH VARIABLE ISOTOPIC DISTRBUTIONS.                               ***
***                                                                                                           ***
***            CREATION DATE:   6/30/95                                                                       ***
***                                                                                                           ***
***                                                                                                           ***
***                                                                                                           ***
***                                      CROSS SECTION LIBRARY DATA                                           ***
***                                     ---------------------------                                           ***
***                                                                                                           ***
***            UNIT NUMBER  :  82                                                                             ***
***                                                                                                           ***
***            DATASET NAME :  G:\scale43\DATALIB\FT82F001                                                    ***
***                                                                                                           ***
***            LIBRARY TITLE:  SCALE 4.2 - 27 GROUP NEUTRON GROUP LIBRARY                                     ***
***                               BASED ON ENDF-B VERSION 4 DATA                                              ***
***                                  COMPILED FOR NRC     1/27/89                                             ***
***                                     LAST UPDATED                                          08/12/94  ***
***                                        L.M.PETRIE   -   ORNL                                              ***
***                                                                                                           ***
***                                                                                                           ***
***                                                                                                           ***
***                                                                                                           ***
*****************************************************************************************************************
*****************************************************************************************************************
```

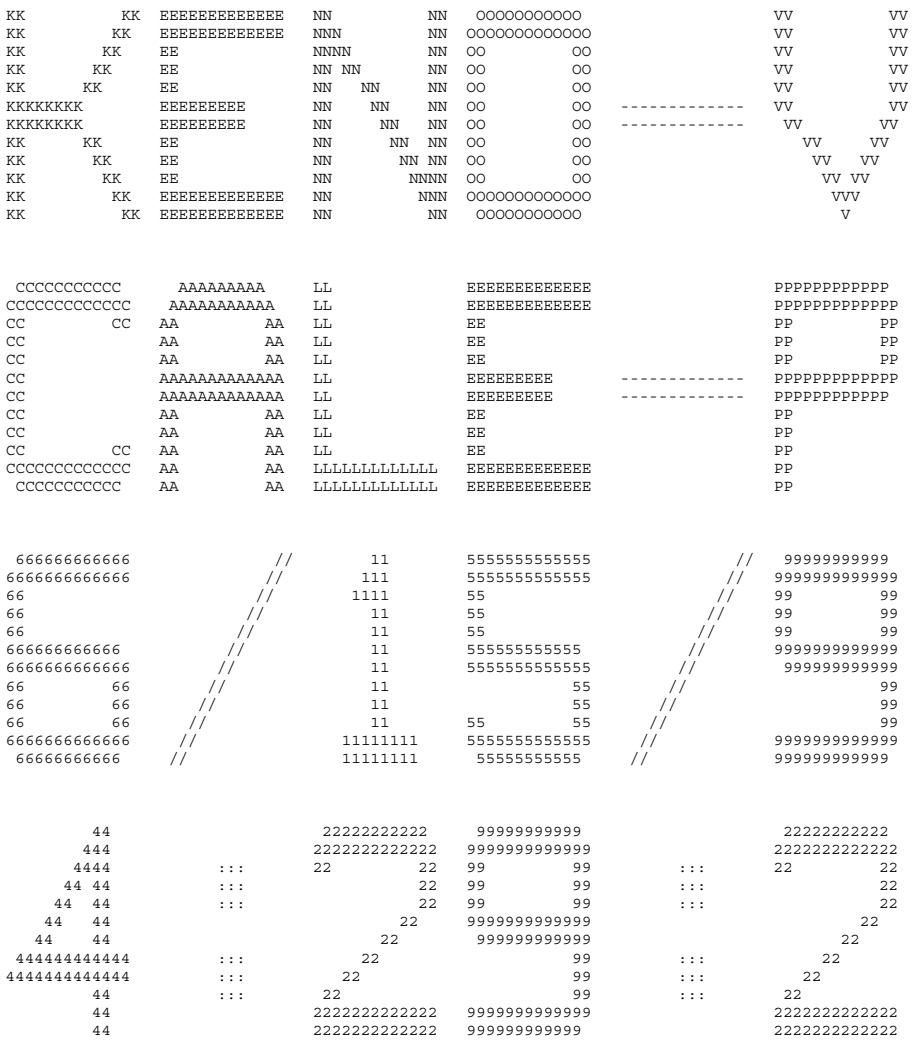
KK KK EEEEEEEEEEEE NN NN OOOOOOOOOO VV VV
KK KK EEEEEEEEEEEE NNN NN OOOOOOOOOOOO VV VV
KK KK EE NNNN NN OO OO VV VV
KK KK EE NN NN NN OO OO VV VV
KK KK EE NN NN NN OO OO VV VV
KKKKKKK EEEEEEEE NN NN NN OO OO VV VV
KKKKKKK EEEEEEEE NN NN NN OO OO VV VV
KK KK EE NN NN NN OO OO VV VV
KK KK EE NN NN NN OO OO VV VV
KK KK EE NN NNNN OO OO VV VV
KK KK EEEEEEEEEEEE NN NNN OOOOOOOOOOOO VVV
KK KK EEEEEEEEEEEE NN NN OOOOOOOOOO V
SSSSSSSSSS CCCCCCCCCC AAAAAAAAA LL EEEEEEEEEEEE PPPPPPPPPP CCCCCCCCCC
SSSSSSSSSSS CCCCCCCCCCCC AAAAAAAAAA LL EEEEEEEEEEEE PPPPPPPPPPP CCCCCCCCCCCC
SS SS CC CC AA AA LL EE PP PP CC CC
SS CC AA AA LL EE PP PP CC
SS CC AA AA LL EE PP PP CC
SSSSSSSSSSS CC AAAAAAAAAAAAA LL EEEEEEEE PPPPPPPPPPP CC
SSSSSSSSSS CC AAAAAAAAAAAAA LL EEEEEEEE PPPPPPPPPP CC
SS CC AA AA LL EE PP CC
SS CC AA AA LL EE PP CC
SS SS CC CC AA AA LL EE PP CC CC
SSSSSSSSSSS CCCCCCCCCCCC AA AA LLLLLLLLLLL EEEEEEEEEEE PP CCCCCCCCCCC
SSSSSSSSSS CCCCCCCCCC AA AA LLLLLLLLLLL EEEEEEEEEEE PP CCCCCCCCCC
0000000 6666666666 // 11 5555555555 // 99999999 88888888
000000000 6666666666 // 111 5555555555 // 9999999999 8888888888
00 00 66 // 1111 55 // 99 99 88 88
00 00 66 // 11 55 // 99 99 88 88
00 00 66 // 11 55 // 99 99 88 88
00 00 666666666 // 11 555555555 // 9999999999 88888888
00 00 6666666666 // 11 5555555555 // 999999999 88888888
00 00 66 66 // 11 55 // 99 88 88
00 00 66 66 // 11 55 // 99 88 88
00 00 66 66 // 11 55 55 // 99 88 88
000000000 6666666666 // 11111111 5555555555 // 9999999999 8888888888
0000000 66666666 // 11111111 55555555 // 999999999 88888888
11 44 22222222 99999999 22222222 11
111 444 2222222222 9999999999 2222222222 111
1111 4444 ::: 22 22 99 99 ::: 22 22 1111
11 44 44 ::: 22 99 99 ::: 22 11
11 44 44 ::: 22 99 99 ::: 22 11
11 44 44 22 9999999999 22 11
11 44 44 22 999999999 22 11
11 444444444444 ::: 22 99 ::: 22 11
11 4444444444444 ::: 22 99 ::: 22 11
11 44 ::: 22 99 ::: 22 11
11111111 44 2222222222222 9999999999999 2222222222222 11111111
11111111 44 2222222222222 999999999999 2222222222222 11111111

```
********************************************************************************
********************************************************************************
********************************************************************************
*****                                                                      *****
*****                  PROGRAM VERIFICATION INFORMATION                    *****
*****                                                                      *****
*****                CODE SYSTEM:  SCALE-PC VERSION:  4.3                  *****
*****                                                                      *****
********************************************************************************
********************************************************************************
*****                                                                      *****
*****                                                                      *****
*****              PROGRAM:  O0O009                                        *****
*****                                                                      *****
*****        CREATION DATE:  03-08-96                                      *****
*****                                                                      *****
*****              VOLUME:   ENG                                           *****
*****                                                                      *****
*****              LIBRARY:  G:\SCALE43\EXE                                *****
*****                                                                      *****
*****                                                                      *****
*****      PRODUCTION CODE:  KENOVA                                        *****
*****                                                                      *****
*****              VERSION:  3.1                                           *****
*****                                                                      *****
*****              JOBNAME:  SCALE-PC                                      *****
*****                                                                      *****
*****    DATE OF EXECUTION:  06/15/98                                      *****
*****                                                                      *****
*****    TIME OF EXECUTION:  14:29:21                                      *****
*****                                                                      *****
*****                                                                      *****
********************************************************************************
********************************************************************************
********************************************************************************
```

```
*****************************************************************************************************************
***                                                                                                           ***
***                                                                                                           ***
***                                                                                                           ***
*****************************************************************************************************************
***                              ******       NUMERIC PARAMETERS       ******                                ***
***                                                                                                           ***
***                                                                                                           ***
***                    TME       MAXIMUM PROBLEM TIME (MIN)                        30.00                    ***
***                                                                                                           ***
***                    TBA       TIME PER GENERATION (MIN)                          0.50                    ***
***                                                                                                           ***
***                    GEN       NUMBER OF GENERATIONS                               206                    ***
***                                                                                                           ***
***                    NPG       NUMBER PER GENERATION                               800                    ***
***                                                                                                           ***
***                    NSK       NUMBER OF GENERATIONS TO BE SKIPPED                   3                    ***
***                                                                                                           ***
***                    BEG       BEGINNING GENERATION NUMBER                           1                    ***
***                                                                                                           ***
***                    RES       GENERATIONS BETWEEN CHECKPOINTS                       0                    ***
***                                                                                                           ***
***                    X1D       NUMBER OF EXTRA 1-D CROSS SECTIONS                    1                    ***
***                                                                                                           ***
***                    NBK       NEUTRON BANK SIZE                                   825                    ***
***                                                                                                           ***
***                    XNB       EXTRA POSITIONS IN NEUTRON BANK                       0                    ***
***                                                                                                           ***
***                    NFB       FISSION BANK SIZE                                   800                    ***
***                                                                                                           ***
***                    XFB       EXTRA POSITIONS IN FISSION BANK                       0                    ***
***                                                                                                           ***
***                    WTA       DEFAULT VALUE OF WEIGHT AVERAGE                  0.5000                    ***
***                                                                                                           ***
***                    WTH       WEIGHT HIGH FOR SPLITTING                        3.0000                    ***
***                                                                                                           ***
***                    WTL       WEIGHT LOW FOR RUSSIAN ROULETTE                  0.3333                    ***
***                                                                                                           ***
***                    RND       STARTING RANDOM NUMBER                                2                    ***
***                                                                                                           ***
***                    NB8       NUMBER OF D.A. BLOCKS ON UNIT  8                    200                    ***
***                                                                                                           ***
***                    NL8       LENGTH OF D.A. BLOCKS ON UNIT  8                    512                    ***
***                                                                                                           ***
***                    ADJ       MODE OF CALCULATION                              FORWARD                   ***
***                                                                                                           ***
***                              INPUT DATA WRITTEN ON RESTART UNIT                    NO                    ***
***                                                                                                           ***
***                              BINARY DATA INTERFACE                                YES                    ***
***                                                                                                           ***
***                                                                                                           ***
*****************************************************************************************************************
*****************************************************************************************************************
```

```
*****************************************************************************************************************
*****************************************************************************************************************
***                                                                                                           ***
***                                                                                                           ***
***                                                                                                           ***
*****************************************************************************************************************
***                              ******      LOGICAL PARAMETERS        ******                                 ***
***                                                                                                           ***
***  RUN  EXECUTE PROBLEM AFTER CHECKING DATA    YES            PLT  PLOT PICTURE MAP(S)                    YES ***
***                                                                                                           ***
***  FLX  COMPUTE FLUX                            NO            FDN  COMPUTE FISSION DENSITIES               NO ***
***                                                                                                           ***
***  SMU  COMPUTE AVG UNIT SELF-MULTIPLICATION    NO            NUB  COMPUTE NU-BAR & AVG FISSION GROUP      YES ***
***                                                                                                           ***
***  MKU  COMPUTE MATRIX K-EFF BY UNIT NUMBER     NO            MKP  COMPUTE MATRIX K-EFF BY UNIT LOCATION    NO ***
***                                                                                                           ***
***  CKU  COMPUTE COFACTOR K-EFF BY UNIT NUMBER   NO            CKP  COMPUTE COFACTOR K-EFF BY UNIT LOCATION  NO ***
***                                                                                                           ***
***  FMU  PRINT FISS PROD MATRIX BY UNIT NUMBER   NO            FMP  PRINT FISS PROD MATRIX BY UNIT LOCATION  NO ***
***                                                                                                           ***
***  MKH  COMPUTE MATRIX K-EFF BY HOLE NUMBER     NO            MKA  COMPUTE MATRIX K-EFF BY ARRAY NUMBER     NO ***
***                                                                                                           ***
***  CKH  COMPUTE COFACTOR K-EFF BY HOLE NUMBER   NO            CKA  COMPUTE COFACTOR K-EFF BY ARRAY NUMBER   NO ***
***                                                                                                           ***
***  FMH  PRINT FISS PROD MATRIX BY HOLE NUMBER   NO            FMA  PRINT FISS PROD MATRIX BY ARRAY NUMBER   NO ***
***                                                                                                           ***
***  HHL  COLLECT MATRIX BY HIGHEST HOLE LEVEL    NO            HAL  COLLECT MATRIX BY HIGHEST ARRAY LEVEL    NO ***
***                                                                                                           ***
***  AMX  PRINT ALL MIXED CROSS SECTIONS          NO            FAR  PRINT FIS. AND ABS. BY REGION           NO ***
***                                                                                                           ***
***  XS1  PRINT 1-D MIXTURE X-SECTIONS            NO            GAS  PRINT FAR BY GROUP                      NO ***
***                                                                                                           ***
***  XS2  PRINT 2-D MIXTURE X-SECTIONS            NO            PAX  PRINT XSEC-ALBEDO CORRELATION TABLES    NO ***
***                                                                                                           ***
***  XAP  PRINT MIXTURE ANGLES & PROBABILITIES    NO            PWT  PRINT WEIGHT AVERAGE ARRAY              NO ***
***                                                                                                           ***
***  PKI  PRINT FISSION SPECTRUM                  NO            PGM  PRINT INPUT GEOMETRY                    NO ***
***                                                                                                           ***
***  P1D  PRINT EXTRA 1-D CROSS SECTIONS          NO            BUG  PRINT DEBUG INFORMATION                 NO ***
***                                                                                                           ***
***                                                             TRK  PRINT TRACKING INFORMATION              NO ***
***                                                                                                           ***
***                                                                                                           ***
*****************************************************************************************************************
*****************************************************************************************************************
*****************************************************************************************************************
                                  PARAMETER INPUT COMPLETED

                        .........    0 IO'S WERE USED READING THE PARAMETER DATA      .........

                      ************** DATA READING COMPLETED **************
```

```
*****************************************************************************************************************************
***                                                                                                                       ***
***                                                                                                                       ***
***                                                                                                                       ***
*****************************************************************************************************************************
*****************************************************************************************************************************
***                                                                                                                       ***
***          UNIT                                                  VOLUME                                                ***
***         NUMBER              DATA SET NAME                      NAME        UNIT FUNCTION                             ***
***         ------              -------------                      ----        -------------                             ***
***                                                                                                                       ***
***      XSC  14     C:\PROJECTS\bu85-crit\nct\NCTY3M\FT14F001                 MIXED CROSS SECTIONS                      ***
***                                                                                                                       ***
***      ALB  79     G:\scale43\DATALIB\FT79F001                               INPUT ALBEDOS                             ***
***                                                                                                                       ***
***      WTS  80     G:\scale43\DATALIB\FT80F001                               INPUT WEIGHTS                             ***
***                                                                                                                       ***
***      SKT  16      UNKNOWN                                                  WRITE SCRATCH DATA                        ***
***                                                                                                                       ***
***      BIN  95     C:\PROJECTS\bu85-crit\nct\NCTY3M\FT95F001                 BINARY INPUT DATA                         ***
***                                                                                                                       ***
***      RST  95     C:\PROJECTS\bu85-crit\nct\NCTY3M\FT95F001                 READ RESTART DATA                         ***
***                                                                                                                       ***
***      LIB   4     C:\PROJECTS\bu85-crit\nct\NCTY3M\FT04F001                 INPUT AMPX WORKING LIBRARY                ***
***                                                                                                                       ***
***            8     C:\PROJECTS\bu85-crit\nct\NCTY3M\FT08F001                 INPUT DATA DIRECT ACCESS                  ***
***                                                                                                                       ***
***            9      UNKNOWN                                                  SUPER GROUPED DIRECT ACCESS               ***
***                                                                                                                       ***
***           10      UNKNOWN                                                  XSEC MIXING DIRECT ACCESS                 ***
***                                                                                                                       ***
*****************************************************************************************************************************
```

MIXING TABLE

NUMBER OF SCATTERING ANGLES = 2
CROSS SECTION MESSAGE THRESHOLD =3.0E-05

MIXTURE = 1 DENSITY(G/CC) = 3.9940

NUCLIDE	ATOM-DENS.	WGT. FRAC.	ZA	AWT	NUCLIDE TITLE		
1008016	8.14438E-03	5.41451E-02	8016	15.9904	OXYGEN-16	ENDF/B-IV MAT 1276	UPDATED 08/12/94
1013027	5.76000E-02	6.46154E-01	13027	26.9818	AL-27 1193 218 GP 040375(5)		UPDATED 08/12/94
1092235	2.85219E-03	2.78722E-01	92235	235.0441	URANIUM-235	ENDF/B-IV MAT 1261	UPDATED 08/12/94
1092238	2.11969E-04	2.09790E-02	92238	238.0510	URANIUM-238	ENDF/B-IV MAT 1262	UPDATED 08/12/94

MIXTURE = 2 DENSITY(G/CC) = 2.7020

NUCLIDE	ATOM-DENS.	WGT. FRAC.	ZA	AWT	NUCLIDE TITLE		
2013027	6.03066E-02	1.00000E+00	13027	26.9818	AL-27 1193 218 GP 040375(5)		UPDATED 08/12/94

MIXTURE = 3 DENSITY(G/CC) = 0.99817

NUCLIDE	ATOM-DENS.	WGT. FRAC.	ZA	AWT	NUCLIDE TITLE		
3001001	6.67692E-02	1.11927E-01	1001	1.0077	HYDROGEN	ENDF/B-IV MAT 1269/THRM1002	UPDATED 08/12/94
3008016	3.33846E-02	8.88074E-01	8016	15.9904	OXYGEN-16	ENDF/B-IV MAT 1276	UPDATED 08/12/94

MIXTURE = 4 DENSITY(G/CC) = 2.7020

NUCLIDE	ATOM-DENS.	WGT. FRAC.	ZA	AWT	NUCLIDE TITLE		
4013027	6.03066E-02	1.00000E+00	13027	26.9818	AL-27 1193 218 GP 040375(5)		UPDATED 08/12/94

MIXTURE = 5 DENSITY(G/CC) = 7.9200

NUCLIDE	ATOM-DENS.	WGT. FRAC.	ZA	AWT	NUCLIDE TITLE		
5024304	1.74286E-02	1.90000E-01	24000	51.9957	CR 1191 WT SS-304(1/EST) P-3 293K SP=5+4(42375)'		UPDATED 08/12/94
5025055	1.73633E-03	1.99999E-02	25055	54.9379	MANGANESE-55	ENDF/B-IV MAT 1197	UPDATED 08/12/94
5026304	5.93579E-02	6.95000E-01	26000	55.8447	FE 1192 WT SS-304(1/EST) P-3 293K SP=5+4(42375)'		UPDATED 08/12/94
5028304	7.72070E-03	9.50001E-02	28000	58.6872	NI 1190 WT SS-304(1/EST) P-3 293K SP=5+4(42375)'		UPDATED 08/12/94

MIXTURE = 6 DENSITY(G/CC) = 11.344

NUCLIDE	ATOM-DENS.	WGT. FRAC.	ZA	AWT	NUCLIDE TITLE		
6082000	3.29690E-02	1.00000E+00	82000	207.2100	PB 1288 218NGP 042375 P-3 293K		UPDATED 08/12/94

MIXTURE = 7 DENSITY(G/CC) = 0.99817

NUCLIDE	ATOM-DENS.	WGT. FRAC.	ZA	AWT	NUCLIDE TITLE		
7001001	6.67692E-02	1.11927E-01	1001	1.0077	HYDROGEN	ENDF/B-IV MAT 1269/THRM1002	UPDATED 08/12/94
7008016	3.33846E-02	8.88074E-01	8016	15.9904	OXYGEN-16	ENDF/B-IV MAT 1276	UPDATED 08/12/94

MIXTURE = 8 DENSITY(G/CC) = 0.99817

NUCLIDE	ATOM-DENS.	WGT. FRAC.	ZA	AWT	NUCLIDE TITLE		
8001001	6.67692E-02	1.11927E-01	1001	1.0077	HYDROGEN	ENDF/B-IV MAT 1269/THRM1002	UPDATED 08/12/94
8008016	3.33846E-02	8.88074E-01	8016	15.9904	OXYGEN-16	ENDF/B-IV MAT 1276	UPDATED 08/12/94

3001001	HYDROGEN	ENDF/B-IV MAT 1269/THRM1002	UPDATED 08/12/94
7001001	HYDROGEN	ENDF/B-IV MAT 1269/THRM1002	UPDATED 08/12/94
8001001	HYDROGEN	ENDF/B-IV MAT 1269/THRM1002	UPDATED 08/12/94
1008016	OXYGEN-16	ENDF/B-IV MAT 1276	UPDATED 08/12/94
3008016	OXYGEN-16	ENDF/B-IV MAT 1276	UPDATED 08/12/94
7008016	OXYGEN-16	ENDF/B-IV MAT 1276	UPDATED 08/12/94
8008016	OXYGEN-16	ENDF/B-IV MAT 1276	UPDATED 08/12/94
1013027	AL-27 1193 218 GP 040375(5)		UPDATED 08/12/94
2013027	AL-27 1193 218 GP 040375(5)		UPDATED 08/12/94
4013027	AL-27 1193 218 GP 040375(5)		UPDATED 08/12/94
5024304	CR 1191 WT SS-304(1/EST) P-3 293K SP=5+4(42375)'		UPDATED 08/12/94
5025055	MANGANESE-55	ENDF/B-IV MAT 1197	UPDATED 08/12/94
5026304	FE 1192 WT SS-304(1/EST) P-3 293K SP=5+4(42375)'		UPDATED 08/12/94
5028304	NI 1190 WT SS-304(1/EST) P-3 293K SP=5+4(42375)'		UPDATED 08/12/94
6082000	PB 1288 218NGP 042375 P-3 293K		UPDATED 08/12/94
1092235	URANIUM-235	ENDF/B-IV MAT 1261	UPDATED 08/12/94
1092238	URANIUM-238	ENDF/B-IV MAT 1262	UPDATED 08/12/94

```
*****************************************************************************************************
***                                                                                               ***
***                                                                                               ***
***                                                                                               ***
*****************************************************************************************************
*****************************************************************************************************
***                                                                                               ***
***                              ****** ADDITIONAL INFORMATION ******                             ***
***                                                                                               ***
***  NUMBER OF ENERGY GROUPS              27       USE LATTICE GEOMETRY                    YES  ***
***                                                                                               ***
***  NO. OF FISSION SPECTRUM SOURCE GROUP  1       GLOBAL ARRAY NUMBER                       0  ***
***                                                                                               ***
***  NO. OF SCATTERING ANGLES IN XSECS     2       NUMBER OF UNITS IN THE GLOBAL X DIR.      0  ***
***                                                                                               ***
***  ENTRIES/NEUTRON IN THE NEUTRON BANK  22       NUMBER OF UNITS IN THE GLOBAL Y DIR.      0  ***
***                                                                                               ***
***  ENTRIES/NEUTRON IN THE FISSION BANK  15       NUMBER OF UNITS IN THE GLOBAL Z DIR.      0  ***
***                                                                                               ***
***  NUMBER OF MIXTURES USED               8       USE A GLOBAL REFLECTOR                  YES  ***
***                                                                                               ***
***  NUMBER OF BIAS ID'S USED              1       USE NESTED HOLES                         NO  ***
***                                                                                               ***
***  NUMBER OF DIFFERENTIAL ALBEDOS USED   0       NUMBER OF HOLES                           3  ***
***                                                                                               ***
***  TOTAL INPUT GEOMETRY REGIONS         71       MAXIMUM HOLE NESTING LEVEL                1  ***
***                                                                                               ***
***  NUMBER OF GEOMETRY REGIONS USED      71       USE NESTED ARRAYS                       YES  ***
***                                                                                               ***
***  LARGEST GEOMETRY UNIT NUMBER        111       NUMBER OF ARRAYS USED                     4  ***
***                                                                                               ***
***  LARGEST ARRAY NUMBER                  4       MAXIMUM ARRAY NESTING LEVEL               2  ***
***                                                                                               ***
***                                                                                               ***
***  +X BOUNDARY CONDITION               MIR       -X BOUNDARY CONDITION                   MIR  ***
***                                                                                               ***
***  +Y BOUNDARY CONDITION               MIR       -Y BOUNDARY CONDITION                   MIR  ***
***                                                                                               ***
***  +Z BOUNDARY CONDITION               MIR       -Z BOUNDARY CONDITION                   MIR  ***
***                                                                                               ***
*****************************************************************************************************
```

```
*********************************************************************************************
***                                                                                       ***
***                                                                                       ***
***                                                                                       ***
*********************************************************************************************
*********************************************************************************************
***                                                                                       ***
***                    ****** SPACE AND SUPERGROUP INFORMATION ******                     ***
***                                                                                       ***
***       100000 WORDS IS THE TOTAL SPACE AVAILABLE.                                      ***
***                                                                                       ***
***        34213 WORDS WERE USED FOR NON-SUPERGROUP STORAGE.                              ***
***                                                                                       ***
***        65787 WORDS OF STORAGE ARE AVAILABLE FOR SUPERGROUPED DATA.                    ***
***                                                                                       ***
***        99721 WORDS OF STORAGE ARE AVAILABLE FOR CONSTRUCTING THE SUPERGROUPS.         ***
***                                                                                       ***
***        65727 WORDS OF STORAGE ARE AVAILABLE TO EACH SUPERGROUP.                       ***
***                                                                                       ***
***         1037 WORDS ARE NEEDED FOR THE LARGEST GROUP.                                  ***
***                                                                                       ***
***        35466 WORDS OF STORAGE IS SUFFICIENT TO RUN THIS PROBLEM.                      ***
***                                                                                       ***
***        45792 WORDS OF STORAGE WILL ALLOW THE PROBLEM TO RUN WITH ONE SUPERGROUP.       ***
***                                                                                       ***
***        46240 WORDS OF STORAGE WILL BE USED TO RUN THIS PROBLEM.                       ***
***                                                                                       ***
*********************************************************************************************
*********************************************************************************************
***                                                                                       ***
***                   STARTING      ENDING       XSEC       ALBEDO      TOTAL            ***
***   SUPERGROUP        GROUP        GROUP      LENGTH      LENGTH      LENGTH            ***
***                                                                                       ***
***                                                                                       ***
***          1            1            27         2252           0       11519            ***
***                                                                                       ***
*********************************************************************************************

            ........    0 IO'S WERE USED IN SUPERGROUPING    ........

          ************************************************************
          **                                                        **
          **   ARRAY      UNITS IN   UNITS IN   UNITS IN   NESTING  **
          **   NUMBER      X DIR.     Y DIR.     Z DIR.     LEVEL   **
          **                                                        **
          **     1            1         20          1          2    **
          **                                                        **
          **     2            2          1          1          1    **
          **                                                        **
          **     3            3          1          1          1    **
          **                                                        **
          **     4            2          1          1          1    **
          **                                                        **
          ************************************************************
```

```
MEDIA BIAS      GEOMETRY DESCRIPTION FOR THOSE UNITS UTILIZED IN THIS PROBLEM
REGION            NUM   ID

                                          -----   UNIT     1   -----

AL PLATE CELL

  1 CUBOID           2  1      +X =  3.1250     -X = -3.1250     +Y = 0.12700     -Y =-0.12700     +Z =  10.000     -Z = -10.000

  2 CUBOID           3  1      +X =  3.1250     -X = -3.1250     +Y = 0.25400     -Y =-0.25400     +Z =  10.000     -Z = -10.000

                                          -----   UNIT     2   -----

HFBR FUEL PLATE CELL 1

  1 CUBOID           1  1      +X =  2.8600     -X = -2.8600     +Y = 2.65000E-02 -Y =-2.65000E-02 +Z =  10.000     -Z = -10.000

  2 CUBOID           2  1      +X =  3.1250     -X = -3.1250     +Y = 6.35000E-02 -Y =-6.35000E-02 +Z =  10.000     -Z = -10.000

  3 CUBOID           3  1      +X =  3.1250     -X = -3.1250     +Y = 0.19050     -Y =-0.21340     +Z =  10.000     -Z = -10.000

                                          -----   UNIT     3   -----

HFBR FUEL PLATE CELL 2

  1 CUBOID           1  1      +X =  2.8600     -X = -2.8600     +Y = 2.65000E-02 -Y =-2.65000E-02 +Z =  10.000     -Z = -10.000

  2 CUBOID           2  1      +X =  3.1250     -X = -3.1250     +Y = 6.35000E-02 -Y =-6.35000E-02 +Z =  10.000     -Z = -10.000

  3 CUBOID           3  1      +X =  3.1250     -X = -3.1250     +Y = 0.21340     -Y =-0.20070     +Z =  10.000     -Z = -10.000

                                          -----   UNIT     4   -----

HFBR FUEL PLATE CELL 3

  1 CUBOID           1  1      +X =  2.8600     -X = -2.8600     +Y = 2.65000E-02 -Y =-2.65000E-02 +Z =  10.000     -Z = -10.000

  2 CUBOID           2  1      +X =  3.1250     -X = -3.1250     +Y = 6.35000E-02 -Y =-6.35000E-02 +Z =  10.000     -Z = -10.000

  3 CUBOID           3  1      +X =  3.1250     -X = -3.1250     +Y = 0.20070     -Y =-0.18540     +Z =  10.000     -Z = -10.000

                                          -----   UNIT     5   -----

HFBR FUEL PLATE CELL 4

  1 CUBOID           1  1      +X =  2.8600     -X = -2.8600     +Y = 2.65000E-02 -Y =-2.65000E-02 +Z =  10.000     -Z = -10.000

  2 CUBOID           2  1      +X =  3.1250     -X = -3.1250     +Y = 6.35000E-02 -Y =-6.35000E-02 +Z =  10.000     -Z = -10.000

  3 CUBOID           3  1      +X =  3.1250     -X = -3.1250     +Y = 0.18540     -Y =-0.18540     +Z =  10.000     -Z = -10.000
```

```
                MEDIA BIAS      GEOMETRY DESCRIPTION FOR THOSE UNITS UTILIZED IN THIS PROBLEM
REGION           NUM   ID

                                                -----   UNIT     6   -----

HFBR FUEL PLATE CELL 5

  1 CUBOID           1  1      +X =  2.8600     -X = -2.8600     +Y = 2.65000E-02 -Y =-2.65000E-02 +Z =  10.000     -Z = -10.000

  2 CUBOID           2  1      +X =  3.1250     -X = -3.1250     +Y = 6.35000E-02 -Y =-6.35000E-02 +Z =  10.000     -Z = -10.000

  3 CUBOID           3  1      +X =  3.1250     -X = -3.1250     +Y = 0.18540     -Y =-0.20070     +Z =  10.000     -Z = -10.000

                                                -----   UNIT     7   -----

HFBR FUEL PLATE CELL 6

  1 CUBOID           1  1      +X =  2.8600     -X = -2.8600     +Y = 2.65000E-02 -Y =-2.65000E-02 +Z =  10.000     -Z = -10.000

  2 CUBOID           2  1      +X =  3.1250     -X = -3.1250     +Y = 6.35000E-02 -Y =-6.35000E-02 +Z =  10.000     -Z = -10.000

  3 CUBOID           3  1      +X =  3.1250     -X = -3.1250     +Y = 0.20070     -Y =-0.21340     +Z =  10.000     -Z = -10.000

                                                -----   UNIT     8   -----

HFBR FUEL PLATE CELL 7

  1 CUBOID           1  1      +X =  2.8600     -X = -2.8600     +Y = 2.65000E-02 -Y =-2.65000E-02 +Z =  10.000     -Z = -10.000

  2 CUBOID           2  1      +X =  3.1250     -X = -3.1250     +Y = 6.35000E-02 -Y =-6.35000E-02 +Z =  10.000     -Z = -10.000

  3 CUBOID           3  1      +X =  3.1250     -X = -3.1250     +Y = 0.21340     -Y =-0.19050     +Z =  10.000     -Z = -10.000

                                           -----   UNIT    10  EXTERNAL TO LATTICE  1   -----

HFBR FUEL ARRAY WITH HALF OF 1/4 PLATE ON RIGHT -  TOP STACK

  1 ARRAY NUMBER     1         +X =  3.1250     -X = -3.1250     +Y =  3.9369     -Y = -3.9369     +Z =  10.000     -Z = -10.000

  2 CUBOID           3  1      +X =  3.1250     -X = -3.1250     +Y =  4.1000     -Y = -4.1000     +Z =  10.000     -Z = -10.000

  3 CUBOID           4  1      +X =  3.6000     -X = -3.6000     +Y =  4.1000     -Y = -4.1000     +Z =  10.000     -Z = -10.000

  4 CUBOID           3  1      +X =  4.3690     -X = -4.3690     +Y =  4.6376     -Y = -4.1000     +Z =  10.000     -Z = -10.000

  5 CUBOID           5  1      +X =  4.6738     -X = -4.3690     +Y =  4.6376     -Y = -4.1000     +Z =  10.000     -Z = -10.000
```

```
                MEDIA BIAS      GEOMETRY DESCRIPTION FOR THOSE UNITS UTILIZED IN THIS PROBLEM
REGION           NUM   ID

                                      -----   UNIT    11  EXTERNAL TO LATTICE  1   -----

HFBR FUEL WITH HALF OF 1/4 IN. PLATE ON LEFT  TOP STACK

  1 ARRAY NUMBER     1         +X =  3.1250     -X = -3.1250     +Y =  3.9369     -Y = -3.9369     +Z =  10.000     -Z = -10.000

  2 CUBOID           3  1      +X =  3.1250     -X = -3.1250     +Y =  4.1000     -Y = -4.1000     +Z =  10.000     -Z = -10.000

  3 CUBOID           4  1      +X =  3.6000     -X = -3.6000     +Y =  4.1000     -Y = -4.1000     +Z =  10.000     -Z = -10.000

  4 CUBOID           3  1      +X =  4.3690     -X = -4.3690     +Y =  4.6376     -Y = -4.1000     +Z =  10.000     -Z = -10.000

  5 CUBOID           5  1      +X =  4.3690     -X = -4.6738     +Y =  4.6376     -Y = -4.1000     +Z =  10.000     -Z = -10.000

                                      -----   UNIT    12  EXTERNAL TO LATTICE  2   -----

2 UNIT ARRAY WITH 0.120 IN. PLATE ON TOP AND SIDES

  1 ARRAY NUMBER     2         +X =  9.0428     -X = -9.0428     +Y =  4.3688     -Y = -4.3688     +Z =  10.000     -Z = -10.000

  2 CUBOID           5  1      +X =  9.3476     -X = -9.3476     +Y =  4.6736     -Y = -4.3688     +Z =  10.000     -Z = -10.000

                                      -----   UNIT    13  EXTERNAL TO LATTICE  3   -----

3 UNIT ARRAY WITH REST OF 5/16 WEB

  1 ARRAY NUMBER     3         +X =  14.174     -X = -14.174     +Y =  4.3688     -Y = -4.3688     +Z =  10.000     -Z = -10.000

  2 CUBOID           5  1      +X =  14.529     -X = -14.529     +Y =  5.0800     -Y = -5.0800     +Z =  10.000     -Z = -10.000

                                      -----   UNIT    14  EXTERNAL TO LATTICE  4   -----

2 UNIT ARRAY WITH 0.120 IN. PLATE ON BOTTOM AND SIDES

  1 ARRAY NUMBER     4         +X =  9.0428     -X = -9.0428     +Y =  4.3688     -Y = -4.3688     +Z =  10.000     -Z = -10.000

  2 CUBOID           5  1      +X =  9.3476     -X = -9.3476     +Y =  4.3688     -Y = -4.6736     +Z =  10.000     -Z = -10.000
```

```
                MEDIA BIAS      GEOMETRY DESCRIPTION FOR THOSE UNITS UTILIZED IN THIS PROBLEM
REGION           NUM   ID

                                    ******************   GLOBAL   ******************
                                                -----   UNIT    15   -----

7 HFBR ASSEMBLIES IN THE LWT

  1 CYLINDER         3  1  RADIUS =  17.050     +Z =  10.000     -Z = -10.000     CENTERLINE IS AT  X = 0.00000      Y = 0.00000

    HOLE NUMBER      1       AT X = 0.00000      Y =  9.4489      Z = 0.00000     IS UNIT NUMBER     12

    HOLE NUMBER      2       AT X = 0.00000      Y = 0.00000      Z = 0.00000     IS UNIT NUMBER     13

    HOLE NUMBER      3       AT X = 0.00000      Y = -9.4489      Z = 0.00000     IS UNIT NUMBER     14

  2 CYLINDER         5  1  RADIUS =  18.891     +Z =  10.000     -Z = -10.000     CENTERLINE IS AT  X = 0.00000      Y = 0.00000

  3 CYLINDER         6  1  RADIUS =  33.496     +Z =  10.000     -Z = -10.000     CENTERLINE IS AT  X = 0.00000      Y = 0.00000

  4 CYLINDER         5  1  RADIUS =  36.544     +Z =  10.000     -Z = -10.000     CENTERLINE IS AT  X = 0.00000      Y = 0.00000

  5 CYLINDER         8  1  RADIUS =  49.244     +Z =  10.000     -Z = -10.000     CENTERLINE IS AT  X = 0.00000      Y = 0.00000

  6 CYLINDER         5  1  RADIUS =  80.339     +Z =  10.000     -Z = -10.000     CENTERLINE IS AT  X = 0.00000      Y = 0.00000

  7 CUBOID           7  1      +X =  80.339     -X = -80.339     +Y =  80.339     -Y = -80.339     +Z =  10.000     -Z = -10.000

                                          -----   UNIT    90  EXTERNAL TO LATTICE  1   -----

HFBR FUEL ARRAY 20 PLATES IN 5/16 IN. WEB CENTER

  1 ARRAY NUMBER     1          +X =  3.1250     -X = -3.1250     +Y =  3.9369     -Y = -3.9369     +Z =  10.000     -Z = -10.000

  2 CUBOID           3  1       +X =  3.1250     -X = -3.1250     +Y =  4.1000     -Y = -4.1000     +Z =  10.000     -Z = -10.000

  3 CUBOID           4  1       +X =  3.6000     -X = -3.6000     +Y =  4.1000     -Y = -4.1000     +Z =  10.000     -Z = -10.000

  4 CUBOID           3  1       +X =  4.3690     -X = -4.3690     +Y =  4.3688     -Y = -4.3688     +Z =  10.000     -Z = -10.000

  5 CUBOID           5  1       +X =  4.7246     -X = -4.7246     +Y =  4.3688     -Y = -4.3688     +Z =  10.000     -Z = -10.000

                                          -----   UNIT    91  EXTERNAL TO LATTICE  1   -----

HFBR FUEL ARRAY 20 PLATES IN 5/16 IN. WEB RIGHT

  1 ARRAY NUMBER     1          +X =  3.1250     -X = -3.1250     +Y =  3.9369     -Y = -3.9369     +Z =  10.000     -Z = -10.000

  2 CUBOID           3  1       +X =  3.1250     -X = -3.1250     +Y =  4.1000     -Y = -4.1000     +Z =  10.000     -Z = -10.000

  3 CUBOID           4  1       +X =  3.6000     -X = -3.6000     +Y =  4.1000     -Y = -4.1000     +Z =  10.000     -Z = -10.000

  4 CUBOID           3  1       +X =  5.1380     -X = -3.6000     +Y =  4.3688     -Y = -4.3688     +Z =  10.000     -Z = -10.000

  5 CUBOID           5  1       +X =  5.4936     -X = -3.9556     +Y =  4.3688     -Y = -4.3688     +Z =  10.000     -Z = -10.000
```

```
                MEDIA BIAS      GEOMETRY DESCRIPTION FOR THOSE UNITS UTILIZED IN THIS PROBLEM
REGION           NUM   ID

                                      -----   UNIT    92  EXTERNAL TO LATTICE  1   -----

HFBR FUEL ARRAY 20 PLATES IN 5/16 IN. WEB LEFT

  1 ARRAY NUMBER     1         +X =  3.1250     -X = -3.1250     +Y =  3.9369     -Y = -3.9369     +Z =  10.000     -Z = -10.000

  2 CUBOID           3  1      +X =  3.1250     -X = -3.1250     +Y =  4.1000     -Y = -4.1000     +Z =  10.000     -Z = -10.000

  3 CUBOID           4  1      +X =  3.6000     -X = -3.6000     +Y =  4.1000     -Y = -4.1000     +Z =  10.000     -Z = -10.000

  4 CUBOID           3  1      +X =  3.6000     -X = -5.1380     +Y =  4.3688     -Y = -4.3688     +Z =  10.000     -Z = -10.000

  5 CUBOID           5  1      +X =  3.9556     -X = -5.4936     +Y =  4.3688     -Y = -4.3688     +Z =  10.000     -Z = -10.000

                                      -----   UNIT   101  EXTERNAL TO LATTICE  1   -----

HFBR FUEL ARRAY WITH HALF OF 1/4 IN. PLATE ON RIGHT -  BOTTOM STACK

  1 ARRAY NUMBER     1         +X =  3.1250     -X = -3.1250     +Y =  3.9369     -Y = -3.9369     +Z =  10.000     -Z = -10.000

  2 CUBOID           3  1      +X =  3.1250     -X = -3.1250     +Y =  4.1000     -Y = -4.1000     +Z =  10.000     -Z = -10.000

  3 CUBOID           4  1      +X =  3.6000     -X = -3.6000     +Y =  4.1000     -Y = -4.1000     +Z =  10.000     -Z = -10.000

  4 CUBOID           3  1      +X =  4.3690     -X = -4.3690     +Y =  4.1000     -Y = -4.6376     +Z =  10.000     -Z = -10.000

  5 CUBOID           5  1      +X =  4.6738     -X = -4.3690     +Y =  4.1000     -Y = -4.6376     +Z =  10.000     -Z = -10.000

                                      -----   UNIT   111  EXTERNAL TO LATTICE  1   -----

HFBR FUEL ARRAY WITH HALF OF 1/4 IN. PLATE ON LEFT - BOTTOM STACK

  1 ARRAY NUMBER     1         +X =  3.1250     -X = -3.1250     +Y =  3.9369     -Y = -3.9369     +Z =  10.000     -Z = -10.000

  2 CUBOID           3  1      +X =  3.1250     -X = -3.1250     +Y =  4.1000     -Y = -4.1000     +Z =  10.000     -Z = -10.000

  3 CUBOID           4  1      +X =  3.6000     -X = -3.6000     +Y =  4.1000     -Y = -4.1000     +Z =  10.000     -Z = -10.000

  4 CUBOID           3  1      +X =  4.3690     -X = -4.3690     +Y =  4.1000     -Y = -4.6376     +Z =  10.000     -Z = -10.000

  5 CUBOID           5  1      +X =  4.3690     -X = -4.6738     +Y =  4.1000     -Y = -4.6376     +Z =  10.000     -Z = -10.000
```

```
                -------  UNIT ORIENTATION DESCRIPTION FOR ARRAY   1         -------
Z LAYER   1, X COLUMN   1 TO   1 LEFT TO RIGHT   Y ROW   1 TO  20  BOTTOM TO TOP
 1
 2
 3
 4
 5
 5
 5
 5
 5
 5
 5
 5
 5
 5
 5
 5
 6
 7
 8
 1
                -------  UNIT ORIENTATION DESCRIPTION FOR ARRAY   2         -------
Z LAYER   1, X COLUMN   1 TO   2 LEFT TO RIGHT   Y ROW   1 TO   1  BOTTOM TO TOP
 10 11
                -------  UNIT ORIENTATION DESCRIPTION FOR ARRAY   3         -------
Z LAYER   1, X COLUMN   1 TO   3 LEFT TO RIGHT   Y ROW   1 TO   1  BOTTOM TO TOP
 92 90 91
                -------  UNIT ORIENTATION DESCRIPTION FOR ARRAY   4         -------
Z LAYER   1, X COLUMN   1 TO   2 LEFT TO RIGHT   Y ROW   1 TO   1  BOTTOM TO TOP
 101 111
```

VOLUMES FOR THOSE UNITS UTILIZED IN THIS PROBLEM

UNIT	REGION	GEOMETRY REGION	VOLUME	CUMULATIVE VOLUME
1	1	1	3.17500E+01 CM**3	3.17500E+01 CM**3
	2	2	3.17500E+01 CM**3	6.35000E+01 CM**3
2	1	3	6.06320E+00 CM**3	6.06320E+00 CM**3
	2	4	9.81180E+00 CM**3	1.58750E+01 CM**3
	3	5	3.46125E+01 CM**3	5.04875E+01 CM**3
3	1	6	6.06320E+00 CM**3	6.06320E+00 CM**3
	2	7	9.81180E+00 CM**3	1.58750E+01 CM**3
	3	8	3.58875E+01 CM**3	5.17625E+01 CM**3
4	1	9	6.06320E+00 CM**3	6.06320E+00 CM**3
	2	10	9.81180E+00 CM**3	1.58750E+01 CM**3
	3	11	3.23875E+01 CM**3	4.82625E+01 CM**3
5	1	12	6.06320E+00 CM**3	6.06320E+00 CM**3
	2	13	9.81180E+00 CM**3	1.58750E+01 CM**3
	3	14	3.04750E+01 CM**3	4.63500E+01 CM**3
6	1	15	6.06320E+00 CM**3	6.06320E+00 CM**3
	2	16	9.81180E+00 CM**3	1.58750E+01 CM**3
	3	17	3.23875E+01 CM**3	4.82625E+01 CM**3
7	1	18	6.06320E+00 CM**3	6.06320E+00 CM**3
	2	19	9.81180E+00 CM**3	1.58750E+01 CM**3
	3	20	3.58875E+01 CM**3	5.17625E+01 CM**3
8	1	21	6.06320E+00 CM**3	6.06320E+00 CM**3
	2	22	9.81180E+00 CM**3	1.58750E+01 CM**3
	3	23	3.46125E+01 CM**3	5.04875E+01 CM**3
SURROUNDING GEOMETRY VOLUMES - GEOMETRY REGION 39 IS AN ARRAY PLACEMENT BOUNDARY REGION				
10	1	39	9.84225E+02 CM**3	9.84225E+02 CM**3
	2	40	4.07750E+01 CM**3	1.02500E+03 CM**3
	3	41	1.55800E+02 CM**3	1.18080E+03 CM**3
	4	42	3.46183E+02 CM**3	1.52698E+03 CM**3
	5	43	5.32644E+01 CM**3	1.58025E+03 CM**3
SURROUNDING GEOMETRY VOLUMES - GEOMETRY REGION 49 IS AN ARRAY PLACEMENT BOUNDARY REGION				
11	1	49	9.84225E+02 CM**3	9.84225E+02 CM**3
	2	50	4.07750E+01 CM**3	1.02500E+03 CM**3
	3	51	1.55800E+02 CM**3	1.18080E+03 CM**3
	4	52	3.46183E+02 CM**3	1.52698E+03 CM**3
	5	53	5.32644E+01 CM**3	1.58025E+03 CM**3
SURROUNDING GEOMETRY VOLUMES - GEOMETRY REGION 59 IS AN ARRAY PLACEMENT BOUNDARY REGION				
12	1	59	3.16049E+03 CM**3	3.16049E+03 CM**3
	2	60	2.20495E+02 CM**3	3.38099E+03 CM**3
SURROUNDING GEOMETRY VOLUMES - GEOMETRY REGION 61 IS AN ARRAY PLACEMENT BOUNDARY REGION				
13	1	61	4.95380E+03 CM**3	4.95380E+03 CM**3
	2	62	9.50948E+02 CM**3	5.90475E+03 CM**3
SURROUNDING GEOMETRY VOLUMES - GEOMETRY REGION 63 IS AN ARRAY PLACEMENT BOUNDARY REGION				
14	1	63	3.16049E+03 CM**3	3.16049E+03 CM**3
	2	64	2.20495E+02 CM**3	3.38099E+03 CM**3
15	1	65	5.59865E+03 CM**3	1.82654E+04 CM**3
	2	66	4.15813E+03 CM**3	2.24235E+04 CM**3
	3	67	4.80740E+04 CM**3	7.04975E+04 CM**3
	4	68	1.34136E+04 CM**3	8.39110E+04 CM**3
	5	69	6.84563E+04 CM**3	1.52367E+05 CM**3
	6	70	2.53172E+05 CM**3	4.05539E+05 CM**3
	7	71	1.10809E+05 CM**3	5.16348E+05 CM**3
SURROUNDING GEOMETRY VOLUMES - GEOMETRY REGION 24 IS AN ARRAY PLACEMENT BOUNDARY REGION				
90	1	24	9.84225E+02 CM**3	9.84225E+02 CM**3
	2	25	4.07750E+01 CM**3	1.02500E+03 CM**3
	3	26	1.55800E+02 CM**3	1.18080E+03 CM**3
	4	27	3.46183E+02 CM**3	1.52698E+03 CM**3
	5	28	1.24284E+02 CM**3	1.65127E+03 CM**3
SURROUNDING GEOMETRY VOLUMES - GEOMETRY REGION 29 IS AN ARRAY PLACEMENT BOUNDARY REGION				
91	1	29	9.84225E+02 CM**3	9.84225E+02 CM**3
	2	30	4.07750E+01 CM**3	1.02500E+03 CM**3
	3	31	1.55800E+02 CM**3	1.18080E+03 CM**3
	4	32	3.46183E+02 CM**3	1.52698E+03 CM**3
	5	33	1.24284E+02 CM**3	1.65127E+03 CM**3
SURROUNDING GEOMETRY VOLUMES - GEOMETRY REGION 34 IS AN ARRAY PLACEMENT BOUNDARY REGION				
92	1	34	9.84225E+02 CM**3	9.84225E+02 CM**3

```
            2        35         4.07750E+01 CM**3         1.02500E+03 CM**3
            3        36         1.55800E+02 CM**3         1.18080E+03 CM**3
            4        37         3.46183E+02 CM**3         1.52698E+03 CM**3
            5        38         1.24284E+02 CM**3         1.65127E+03 CM**3

SURROUNDING GEOMETRY VOLUMES -  GEOMETRY REGION     44 IS AN ARRAY PLACEMENT BOUNDARY REGION

101         1        44         9.84225E+02 CM**3         9.84225E+02 CM**3
            2        45         4.07750E+01 CM**3         1.02500E+03 CM**3
            3        46         1.55800E+02 CM**3         1.18080E+03 CM**3
            4        47         3.46183E+02 CM**3         1.52698E+03 CM**3
            5        48         5.32644E+01 CM**3         1.58025E+03 CM**3

SURROUNDING GEOMETRY VOLUMES -  GEOMETRY REGION     54 IS AN ARRAY PLACEMENT BOUNDARY REGION

111         1        54         9.84225E+02 CM**3         9.84225E+02 CM**3
            2        55         4.07750E+01 CM**3         1.02500E+03 CM**3
            3        56         1.55800E+02 CM**3         1.18080E+03 CM**3
            4        57         3.46183E+02 CM**3         1.52698E+03 CM**3
            5        58         5.32644E+01 CM**3         1.58025E+03 CM**3


                UNIT     USES    REGION     MIXTURE        TOTAL VOLUME

                  1        14         1           2         4.44500E+02 CM**3
                                      2           3         4.44500E+02 CM**3

                  2         7         1           1         4.24424E+01 CM**3
                                      2           2         6.86826E+01 CM**3
                                      3           3         2.42288E+02 CM**3

                  3         7         1           1         4.24424E+01 CM**3
                                      2           2         6.86826E+01 CM**3
                                      3           3         2.51213E+02 CM**3

                  4         7         1           1         4.24424E+01 CM**3
                                      2           2         6.86826E+01 CM**3
                                      3           3         2.26713E+02 CM**3

                  5        84         1           1         5.09309E+02 CM**3
                                      2           2         8.24191E+02 CM**3
                                      3           3         2.55990E+03 CM**3

                  6         7         1           1         4.24424E+01 CM**3
                                      2           2         6.86826E+01 CM**3
                                      3           3         2.26713E+02 CM**3

                  7         7         1           1         4.24424E+01 CM**3
                                      2           2         6.86826E+01 CM**3
                                      3           3         2.51213E+02 CM**3

                  8         7         1           1         4.24424E+01 CM**3
                                      2           2         6.86826E+01 CM**3
                                      3           3         2.42288E+02 CM**3

                 10         1         1                     9.84225E+02 CM**3
                                      2           3         4.07750E+01 CM**3
                                      3           4         1.55800E+02 CM**3
                                      4           3         3.46183E+02 CM**3
                                      5           5         5.32644E+01 CM**3

                 11         1         1                     9.84225E+02 CM**3
                                      2           3         4.07750E+01 CM**3
                                      3           4         1.55800E+02 CM**3
                                      4           3         3.46183E+02 CM**3
                                      5           5         5.32644E+01 CM**3

                 12         1         1                     3.16049E+03 CM**3
                                      2           5         2.20495E+02 CM**3

                 13         1         1                     4.95380E+03 CM**3
                                      2           5         9.50948E+02 CM**3

                 14         1         1                     3.16049E+03 CM**3
                                      2           5         2.20495E+02 CM**3

                 15         1         1           3         5.59865E+03 CM**3
                                      2           5         4.15813E+03 CM**3
                                      3           6         4.80740E+04 CM**3
                                      4           5         1.34136E+04 CM**3
                                      5           8         6.84563E+04 CM**3
                                      6           5         2.53172E+05 CM**3
                                      7           7         1.10809E+05 CM**3

                 90         1         1                     9.84225E+02 CM**3
                                      2           3         4.07750E+01 CM**3
                                      3           4         1.55800E+02 CM**3
                                      4           3         3.46183E+02 CM**3
                                      5           5         1.24284E+02 CM**3

                 91         1         1                     9.84225E+02 CM**3
                                      2           3         4.07750E+01 CM**3
                                      3           4         1.55800E+02 CM**3
                                      4           3         3.46183E+02 CM**3
```

```
                                5          5         1.24284E+02 CM**3

                         92     1          1                   9.84225E+02 CM**3
                                           2          3         4.07750E+01 CM**3
                                           3          4         1.55800E+02 CM**3
                                           4          3         3.46183E+02 CM**3
                                           5          5         1.24284E+02 CM**3

                        101     1          1                   9.84225E+02 CM**3
                                           2          3         4.07750E+01 CM**3
                                           3          4         1.55800E+02 CM**3
                                           4          3         3.46183E+02 CM**3
                                           5          5         5.32644E+01 CM**3

                        111     1          1                   9.84225E+02 CM**3
                                           2          3         4.07750E+01 CM**3
                                           3          4         1.55800E+02 CM**3
                                           4          3         3.46183E+02 CM**3
                                           5          5         5.32644E+01 CM**3


                                    TOTAL MIXTURE VOLUMES
                                 MIXTURE        TOTAL VOLUME              MASS(G)
                                     1         7.63963E+02 CM**3        3.05126E+03
                                     2         1.68079E+03 CM**3        4.54148E+03
                                     3         1.27522E+04 CM**3        1.27289E+04
                                     4         1.09060E+03 CM**3        2.94680E+03
                                     5         2.72721E+05 CM**3        2.15995E+06
                                     6         4.80740E+04 CM**3        5.45351E+05
                                     7         1.10809E+05 CM**3        1.10607E+05
                                     8         6.84563E+04 CM**3        6.83311E+04

*****************************************************************************************************************************
***                                                                                                                       ***
***                                          BIASING INFORMATION                                                          ***
***                                                                                                                       ***
***     A DEFAULT WEIGHT OF    0.500 WILL BE USED FOR ALL BIAS ID'S.                                                      ***
***                                                                                                                       ***
*****************************************************************************************************************************
```

```
........    0 IO'S WERE USED IN KENO-V BEFORE TRACKING       ........

                                ........  0.01750 MINUTES WERE USED PROCESSING DATA.        ........

VOLUME FRACTION OF FISSILE MATERIAL IN THE CORE= 6.03126E-02

START TYPE 0 WAS USED.

THE NEUTRONS WERE STARTED WITH A FLAT DISTRIBUTION IN A CUBOID DEFINED BY:
                     +X= 8.03390E+01  -X=-8.03390E+01  +Y= 8.03390E+01  -Y=-8.03390E+01  +Z= 1.00000E+01  -Z=-1.00000E+01
THE FLAG TO START NEUTRONS IN THE REFLECTOR WAS TURNED OFF

KENO MESSAGE NUMBER K5-105     ***** WARNING, ONLY  336 INDEPENDENT STARTING POSITIONS WERE GENERATED.  *****

  464 ADDITIONAL STARTING POINTS WERE PICKED FROM THE INITAL DISTRIBUTION.

0.45383 MINUTES WERE REQUIRED FOR STARTING.   TOTAL ELAPSED TIME IS 0.48000 MINUTES.
```

GENERATION	GENERATION K-EFFECTIVE	ELAPSED TIME MINUTES	AVERAGE K-EFFECTIVE	AVG K-EFF DEVIATION	MATRIX K-EFFECTIVE	MATRIX K-EFF DEVIATION
KENO MESSAGE NUMBER K5-132	WARNING....ONLY	700 INDEPENDENT FISSION POINTS WERE GENERATED				
1	7.82588E-01	5.06333E-01	1.00000E+00	0.00000E+00	0.00000E+00	0.00000E+00
KENO MESSAGE NUMBER K5-132	WARNING....ONLY	744 INDEPENDENT FISSION POINTS WERE GENERATED				
2	8.20012E-01	5.35500E-01	1.00000E+00	0.00000E+00	0.00000E+00	0.00000E+00
KENO MESSAGE NUMBER K5-132	WARNING....ONLY	741 INDEPENDENT FISSION POINTS WERE GENERATED				
3	8.31350E-01	5.64833E-01	8.31350E-01	0.00000E+00	0.00000E+00	0.00000E+00
4	7.85323E-01	5.95000E-01	8.08337E-01	2.30137E-02	0.00000E+00	0.00000E+00
5	8.23855E-01	6.24333E-01	8.13509E-01	1.42583E-02	0.00000E+00	0.00000E+00
6	7.56112E-01	6.54500E-01	7.99160E-01	1.75371E-02	0.00000E+00	0.00000E+00
7	8.45663E-01	6.84833E-01	8.08461E-01	1.64631E-02	0.00000E+00	0.00000E+00
8	7.80519E-01	7.15000E-01	8.03804E-01	1.42259E-02	0.00000E+00	0.00000E+00
9	7.77308E-01	7.45167E-01	8.00019E-01	1.26048E-02	0.00000E+00	0.00000E+00
10	8.03211E-01	7.75333E-01	8.00418E-01	1.09234E-02	0.00000E+00	0.00000E+00
11	7.61307E-01	8.04667E-01	7.96072E-01	1.05683E-02	0.00000E+00	0.00000E+00
12	8.34185E-01	8.35833E-01	7.99883E-01	1.01920E-02	0.00000E+00	0.00000E+00
13	7.68171E-01	8.66000E-01	7.97000E-01	9.65929E-03	0.00000E+00	0.00000E+00
14	8.61627E-01	8.93500E-01	8.02386E-01	1.03322E-02	0.00000E+00	0.00000E+00
15	8.43867E-01	9.23667E-01	8.05577E-01	1.00256E-02	0.00000E+00	0.00000E+00
16	8.23382E-01	9.53000E-01	8.06849E-01	9.36864E-03	0.00000E+00	0.00000E+00
17	7.80078E-01	9.83167E-01	8.05064E-01	8.90246E-03	0.00000E+00	0.00000E+00
18	8.45103E-01	1.01250E+00	8.07566E-01	8.69537E-03	0.00000E+00	0.00000E+00
19	7.79327E-01	1.04267E+00	8.05905E-01	8.33508E-03	0.00000E+00	0.00000E+00
20	7.67797E-01	1.07300E+00	8.03788E-01	8.13857E-03	0.00000E+00	0.00000E+00
21	8.11431E-01	1.10400E+00	8.04190E-01	7.70882E-03	0.00000E+00	0.00000E+00
22	8.23154E-01	1.13433E+00	8.05138E-01	7.37444E-03	0.00000E+00	0.00000E+00
23	7.58654E-01	1.16450E+00	8.02925E-01	7.35546E-03	0.00000E+00	0.00000E+00
24	8.22415E-01	1.19467E+00	8.03811E-01	7.06889E-03	0.00000E+00	0.00000E+00
25	8.05434E-01	1.22583E+00	8.03881E-01	6.75493E-03	0.00000E+00	0.00000E+00
26	8.03967E-01	1.25600E+00	8.03885E-01	6.46735E-03	0.00000E+00	0.00000E+00
27	7.94770E-01	1.28617E+00	8.03520E-01	6.21397E-03	0.00000E+00	0.00000E+00
28	7.85637E-01	1.31833E+00	8.02833E-01	6.00968E-03	0.00000E+00	0.00000E+00
29	8.06424E-01	1.34850E+00	8.02966E-01	5.78435E-03	0.00000E+00	0.00000E+00
30	8.66667E-01	1.37783E+00	8.05241E-01	6.02035E-03	0.00000E+00	0.00000E+00
31	7.60055E-01	1.40883E+00	8.03683E-01	6.01438E-03	0.00000E+00	0.00000E+00
32	7.38283E-01	1.44100E+00	8.01503E-01	6.20593E-03	0.00000E+00	0.00000E+00
33	7.67211E-01	1.47117E+00	8.00396E-01	6.10348E-03	0.00000E+00	0.00000E+00
34	7.73616E-01	1.50233E+00	7.99559E-01	5.96863E-03	0.00000E+00	0.00000E+00
35	8.51868E-01	1.53150E+00	8.01145E-01	5.99817E-03	0.00000E+00	0.00000E+00
36	8.07863E-01	1.56183E+00	8.01342E-01	5.82243E-03	0.00000E+00	0.00000E+00
37	8.05200E-01	1.59283E+00	8.01452E-01	5.65471E-03	0.00000E+00	0.00000E+00
38	7.85393E-01	1.62317E+00	8.01006E-01	5.51346E-03	0.00000E+00	0.00000E+00
39	7.67882E-01	1.65333E+00	8.00111E-01	5.43660E-03	0.00000E+00	0.00000E+00
40	8.40520E-01	1.68350E+00	8.01174E-01	5.39739E-03	0.00000E+00	0.00000E+00
41	8.53727E-01	1.71283E+00	8.02522E-01	5.42712E-03	0.00000E+00	0.00000E+00
42	8.04652E-01	1.74400E+00	8.02575E-01	5.28997E-03	0.00000E+00	0.00000E+00
43	8.28772E-01	1.77500E+00	8.03214E-01	5.19875E-03	0.00000E+00	0.00000E+00
44	7.84712E-01	1.80717E+00	8.02774E-01	5.09255E-03	0.00000E+00	0.00000E+00
45	7.97866E-01	1.83733E+00	8.02660E-01	4.97401E-03	0.00000E+00	0.00000E+00
46	7.82687E-01	1.86750E+00	8.02206E-01	4.88081E-03	0.00000E+00	0.00000E+00
47	8.10596E-01	1.89683E+00	8.02392E-01	4.77475E-03	0.00000E+00	0.00000E+00
48	8.36581E-01	1.92700E+00	8.03135E-01	4.72858E-03	0.00000E+00	0.00000E+00
49	8.35149E-01	1.95717E+00	8.03816E-01	4.67674E-03	0.00000E+00	0.00000E+00
50	8.07847E-01	1.98650E+00	8.03900E-01	4.57905E-03	0.00000E+00	0.00000E+00
51	7.90965E-01	2.01583E+00	8.03636E-01	4.49239E-03	0.00000E+00	0.00000E+00
52	7.91820E-01	2.04700E+00	8.03400E-01	4.40796E-03	0.00000E+00	0.00000E+00
53	8.58332E-01	2.07617E+00	8.04477E-01	4.45290E-03	0.00000E+00	0.00000E+00
54	7.93312E-01	2.10733E+00	8.04262E-01	4.37170E-03	0.00000E+00	0.00000E+00
55	8.46627E-01	2.13667E+00	8.05062E-01	4.36228E-03	0.00000E+00	0.00000E+00
56	8.50713E-01	2.16783E+00	8.05907E-01	4.36342E-03	0.00000E+00	0.00000E+00
57	7.93341E-01	2.19800E+00	8.05679E-01	4.28944E-03	0.00000E+00	0.00000E+00
58	7.63313E-01	2.22817E+00	8.04922E-01	4.27954E-03	0.00000E+00	0.00000E+00
59	7.77036E-01	2.25833E+00	8.04433E-01	4.23216E-03	0.00000E+00	0.00000E+00
60	7.99289E-01	2.28767E+00	8.04344E-01	4.15950E-03	0.00000E+00	0.00000E+00
61	8.41467E-01	2.31883E+00	8.04973E-01	4.13653E-03	0.00000E+00	0.00000E+00
62	8.13266E-01	2.34900E+00	8.05112E-01	4.06935E-03	0.00000E+00	0.00000E+00
63	8.19781E-01	2.38017E+00	8.05352E-01	4.00930E-03	0.00000E+00	0.00000E+00
64	8.32399E-01	2.41133E+00	8.05788E-01	3.96816E-03	0.00000E+00	0.00000E+00
65	8.11585E-01	2.44150E+00	8.05880E-01	3.90575E-03	0.00000E+00	0.00000E+00
66	8.01330E-01	2.47167E+00	8.05809E-01	3.84489E-03	0.00000E+00	0.00000E+00
67	8.35365E-01	2.50183E+00	8.06264E-01	3.81249E-03	0.00000E+00	0.00000E+00
68	8.14892E-01	2.53117E+00	8.06395E-01	3.75656E-03	0.00000E+00	0.00000E+00
69	7.95587E-01	2.56050E+00	8.06233E-01	3.70358E-03	0.00000E+00	0.00000E+00
70	8.18935E-01	2.59167E+00	8.06420E-01	3.65349E-03	0.00000E+00	0.00000E+00
71	7.74137E-01	2.62367E+00	8.05952E-01	3.63042E-03	0.00000E+00	0.00000E+00
72	8.45016E-01	2.65383E+00	8.06510E-01	3.62144E-03	0.00000E+00	0.00000E+00

73	7.67445E-01	2.68500E+00	8.05960E-01	3.61222E-03	0.00000E+00	0.00000E+00
74	8.70584E-01	2.71433E+00	8.06858E-01	3.67304E-03	0.00000E+00	0.00000E+00
75	8.94342E-01	2.74533E+00	8.08056E-01	3.81547E-03	0.00000E+00	0.00000E+00
76	7.88294E-01	2.77467E+00	8.07789E-01	3.77302E-03	0.00000E+00	0.00000E+00
77	8.07239E-01	2.80483E+00	8.07782E-01	3.72238E-03	0.00000E+00	0.00000E+00
78	8.27989E-01	2.83417E+00	8.08048E-01	3.68269E-03	0.00000E+00	0.00000E+00
79	8.03489E-01	2.86433E+00	8.07988E-01	3.63503E-03	0.00000E+00	0.00000E+00
80	7.63271E-01	2.89467E+00	8.07415E-01	3.63364E-03	0.00000E+00	0.00000E+00
81	7.63581E-01	2.92567E+00	8.06860E-01	3.63000E-03	0.00000E+00	0.00000E+00
82	7.71390E-01	2.95600E+00	8.06417E-01	3.61166E-03	0.00000E+00	0.00000E+00
83	7.87178E-01	2.98617E+00	8.06179E-01	3.57469E-03	0.00000E+00	0.00000E+00
84	7.96479E-01	3.01733E+00	8.06061E-01	3.53281E-03	0.00000E+00	0.00000E+00
85	8.33068E-01	3.04650E+00	8.06386E-01	3.50512E-03	0.00000E+00	0.00000E+00
86	7.88310E-01	3.07683E+00	8.06171E-01	3.46982E-03	0.00000E+00	0.00000E+00
87	7.73423E-01	3.10700E+00	8.05786E-01	3.45034E-03	0.00000E+00	0.00000E+00
88	8.19029E-01	3.13817E+00	8.05940E-01	3.41345E-03	0.00000E+00	0.00000E+00
89	8.08473E-01	3.16917E+00	8.05969E-01	3.37412E-03	0.00000E+00	0.00000E+00
90	8.24039E-01	3.19767E+00	8.06174E-01	3.34187E-03	0.00000E+00	0.00000E+00
91	8.03419E-01	3.22867E+00	8.06143E-01	3.30425E-03	0.00000E+00	0.00000E+00
92	8.31295E-01	3.25900E+00	8.06423E-01	3.27926E-03	0.00000E+00	0.00000E+00
93	8.05054E-01	3.29183E+00	8.06408E-01	3.24306E-03	0.00000E+00	0.00000E+00
94	7.80756E-01	3.32117E+00	8.06129E-01	3.21971E-03	0.00000E+00	0.00000E+00
95	8.21524E-01	3.35233E+00	8.06295E-01	3.18920E-03	0.00000E+00	0.00000E+00
96	7.86701E-01	3.38250E+00	8.06086E-01	3.16197E-03	0.00000E+00	0.00000E+00
97	8.30205E-01	3.41283E+00	8.06340E-01	3.13879E-03	0.00000E+00	0.00000E+00
98	7.78165E-01	3.44300E+00	8.06047E-01	3.11976E-03	0.00000E+00	0.00000E+00
99	8.65698E-01	3.47133E+00	8.06662E-01	3.14808E-03	0.00000E+00	0.00000E+00
100	7.89119E-01	3.50150E+00	8.06483E-01	3.12093E-03	0.00000E+00	0.00000E+00
101	7.71266E-01	3.53267E+00	8.06127E-01	3.10966E-03	0.00000E+00	0.00000E+00
102	7.42795E-01	3.56383E+00	8.05493E-01	3.14287E-03	0.00000E+00	0.00000E+00
103	7.84546E-01	3.59400E+00	8.05286E-01	3.11850E-03	0.00000E+00	0.00000E+00
104	7.83195E-01	3.62517E+00	8.05069E-01	3.09537E-03	0.00000E+00	0.00000E+00
105	8.38004E-01	3.65350E+00	8.05389E-01	3.08180E-03	0.00000E+00	0.00000E+00
106	8.06543E-01	3.68367E+00	8.05400E-01	3.05204E-03	0.00000E+00	0.00000E+00
107	8.19463E-01	3.71400E+00	8.05534E-01	3.02580E-03	0.00000E+00	0.00000E+00
108	8.01206E-01	3.74500E+00	8.05493E-01	2.99740E-03	0.00000E+00	0.00000E+00
109	7.77892E-01	3.77617E+00	8.05235E-01	2.98044E-03	0.00000E+00	0.00000E+00
110	7.64249E-01	3.80633E+00	8.04856E-01	2.97700E-03	0.00000E+00	0.00000E+00
111	7.83489E-01	3.83667E+00	8.04660E-01	2.95607E-03	0.00000E+00	0.00000E+00
112	7.95690E-01	3.86767E+00	8.04578E-01	2.93021E-03	0.00000E+00	0.00000E+00
113	8.34454E-01	3.89800E+00	8.04848E-01	2.91614E-03	0.00000E+00	0.00000E+00
114	8.14258E-01	3.92717E+00	8.04932E-01	2.89120E-03	0.00000E+00	0.00000E+00
115	8.12118E-01	3.95750E+00	8.04995E-01	2.86621E-03	0.00000E+00	0.00000E+00
116	8.12652E-01	3.98767E+00	8.05062E-01	2.84175E-03	0.00000E+00	0.00000E+00
117	8.16646E-01	4.01517E+00	8.05163E-01	2.81873E-03	0.00000E+00	0.00000E+00
118	7.75865E-01	4.04717E+00	8.04910E-01	2.80572E-03	0.00000E+00	0.00000E+00
119	8.03062E-01	4.07733E+00	8.04895E-01	2.78168E-03	0.00000E+00	0.00000E+00
120	8.05484E-01	4.10667E+00	8.04900E-01	2.75801E-03	0.00000E+00	0.00000E+00
121	8.51749E-01	4.13683E+00	8.05293E-01	2.76293E-03	0.00000E+00	0.00000E+00
122	8.49198E-01	4.16617E+00	8.05659E-01	2.76413E-03	0.00000E+00	0.00000E+00
123	8.51824E-01	4.19633E+00	8.06041E-01	2.76761E-03	0.00000E+00	0.00000E+00
124	8.19276E-01	4.22650E+00	8.06149E-01	2.74697E-03	0.00000E+00	0.00000E+00
125	7.72826E-01	4.25683E+00	8.05878E-01	2.73799E-03	0.00000E+00	0.00000E+00
126	7.77407E-01	4.28783E+00	8.05649E-01	2.72550E-03	0.00000E+00	0.00000E+00
127	8.48435E-01	4.31817E+00	8.05991E-01	2.72519E-03	0.00000E+00	0.00000E+00
128	8.14418E-01	4.34833E+00	8.06058E-01	2.70431E-03	0.00000E+00	0.00000E+00
129	7.58884E-01	4.37850E+00	8.05686E-01	2.70852E-03	0.00000E+00	0.00000E+00
130	7.83040E-01	4.40867E+00	8.05510E-01	2.69309E-03	0.00000E+00	0.00000E+00
131	7.73447E-01	4.43983E+00	8.05261E-01	2.68367E-03	0.00000E+00	0.00000E+00
132	8.01253E-01	4.46917E+00	8.05230E-01	2.66312E-03	0.00000E+00	0.00000E+00
133	8.13066E-01	4.49933E+00	8.05290E-01	2.64339E-03	0.00000E+00	0.00000E+00
134	8.24373E-01	4.52950E+00	8.05435E-01	2.62727E-03	0.00000E+00	0.00000E+00
135	8.10658E-01	4.56067E+00	8.05474E-01	2.60774E-03	0.00000E+00	0.00000E+00
136	7.70361E-01	4.59183E+00	8.05212E-01	2.60144E-03	0.00000E+00	0.00000E+00
137	7.79411E-01	4.62300E+00	8.05021E-01	2.58916E-03	0.00000E+00	0.00000E+00
138	8.08704E-01	4.65317E+00	8.05048E-01	2.57019E-03	0.00000E+00	0.00000E+00
139	7.67183E-01	4.68333E+00	8.04771E-01	2.56629E-03	0.00000E+00	0.00000E+00
140	7.80991E-01	4.71450E+00	8.04599E-01	2.55345E-03	0.00000E+00	0.00000E+00
141	8.36822E-01	4.74467E+00	8.04831E-01	2.54559E-03	0.00000E+00	0.00000E+00
142	7.86705E-01	4.77483E+00	8.04701E-01	2.53065E-03	0.00000E+00	0.00000E+00
143	7.81529E-01	4.80517E+00	8.04537E-01	2.51801E-03	0.00000E+00	0.00000E+00
144	7.91742E-01	4.83533E+00	8.04447E-01	2.50184E-03	0.00000E+00	0.00000E+00
145	8.04700E-01	4.86550E+00	8.04449E-01	2.48428E-03	0.00000E+00	0.00000E+00
146	7.93523E-01	4.89567E+00	8.04373E-01	2.46813E-03	0.00000E+00	0.00000E+00
147	7.83499E-01	4.92600E+00	8.04229E-01	2.45528E-03	0.00000E+00	0.00000E+00
148	8.12237E-01	4.95617E+00	8.04284E-01	2.43902E-03	0.00000E+00	0.00000E+00
149	8.40777E-01	4.98733E+00	8.04532E-01	2.43506E-03	0.00000E+00	0.00000E+00
150	8.57578E-01	5.01650E+00	8.04890E-01	2.44496E-03	0.00000E+00	0.00000E+00
151	8.01474E-01	5.04683E+00	8.04867E-01	2.42861E-03	0.00000E+00	0.00000E+00
152	7.89781E-01	5.07700E+00	8.04767E-01	2.41446E-03	0.00000E+00	0.00000E+00
153	8.32128E-01	5.10633E+00	8.04948E-01	2.40525E-03	0.00000E+00	0.00000E+00
154	8.02724E-01	5.13650E+00	8.04933E-01	2.38942E-03	0.00000E+00	0.00000E+00
155	8.62724E-01	5.16583E+00	8.05311E-01	2.40361E-03	0.00000E+00	0.00000E+00
156	8.43748E-01	5.19600E+00	8.05561E-01	2.40096E-03	0.00000E+00	0.00000E+00
157	8.42898E-01	5.22533E+00	8.05802E-01	2.39755E-03	0.00000E+00	0.00000E+00
158	8.27336E-01	5.25467E+00	8.05940E-01	2.38613E-03	0.00000E+00	0.00000E+00
159	8.31212E-01	5.28483E+00	8.06101E-01	2.37634E-03	0.00000E+00	0.00000E+00
160	8.22070E-01	5.31417E+00	8.06202E-01	2.36342E-03	0.00000E+00	0.00000E+00
161	8.47374E-01	5.34333E+00	8.06461E-01	2.36274E-03	0.00000E+00	0.00000E+00
162	7.73563E-01	5.37450E+00	8.06255E-01	2.35691E-03	0.00000E+00	0.00000E+00
163	8.28438E-01	5.40467E+00	8.06393E-01	2.34627E-03	0.00000E+00	0.00000E+00
164	7.84095E-01	5.43500E+00	8.06255E-01	2.33580E-03	0.00000E+00	0.00000E+00
165	7.79844E-01	5.46700E+00	8.06093E-01	2.32708E-03	0.00000E+00	0.00000E+00
166	8.10761E-01	5.49717E+00	8.06122E-01	2.31302E-03	0.00000E+00	0.00000E+00
167	8.59358E-01	5.52650E+00	8.06444E-01	2.32149E-03	0.00000E+00	0.00000E+00

168	8.69515E-01	5.55583E+00	8.06824E-01	2.33853E-03	0.00000E+00	0.00000E+00
169	8.35061E-01	5.58600E+00	8.06993E-01	2.33063E-03	0.00000E+00	0.00000E+00
170	8.07052E-01	5.61617E+00	8.06994E-01	2.31672E-03	0.00000E+00	0.00000E+00
171	7.74453E-01	5.64633E+00	8.06801E-01	2.31100E-03	0.00000E+00	0.00000E+00
172	8.82550E-01	5.67483E+00	8.07247E-01	2.34018E-03	0.00000E+00	0.00000E+00
173	8.16679E-01	5.70500E+00	8.07302E-01	2.32711E-03	0.00000E+00	0.00000E+00
174	8.42197E-01	5.73333E+00	8.07505E-01	2.32242E-03	0.00000E+00	0.00000E+00
175	7.44863E-01	5.76450E+00	8.07143E-01	2.33717E-03	0.00000E+00	0.00000E+00
176	7.76623E-01	5.79567E+00	8.06967E-01	2.33031E-03	0.00000E+00	0.00000E+00
177	8.15792E-01	5.82667E+00	8.07018E-01	2.31751E-03	0.00000E+00	0.00000E+00
178	8.05464E-01	5.85600E+00	8.07009E-01	2.30432E-03	0.00000E+00	0.00000E+00
179	8.04421E-01	5.88617E+00	8.06994E-01	2.29131E-03	0.00000E+00	0.00000E+00
180	8.40447E-01	5.91650E+00	8.07182E-01	2.28614E-03	0.00000E+00	0.00000E+00
181	8.46729E-01	5.94667E+00	8.07403E-01	2.28404E-03	0.00000E+00	0.00000E+00
182	8.06325E-01	5.97683E+00	8.07397E-01	2.27132E-03	0.00000E+00	0.00000E+00
183	8.24680E-01	6.00617E+00	8.07493E-01	2.26076E-03	0.00000E+00	0.00000E+00
184	7.83884E-01	6.03817E+00	8.07363E-01	2.25204E-03	0.00000E+00	0.00000E+00
185	8.08498E-01	6.06833E+00	8.07369E-01	2.23971E-03	0.00000E+00	0.00000E+00
186	8.16651E-01	6.09767E+00	8.07420E-01	2.22808E-03	0.00000E+00	0.00000E+00
187	8.35256E-01	6.12700E+00	8.07570E-01	2.22110E-03	0.00000E+00	0.00000E+00
188	7.99256E-01	6.15717E+00	8.07525E-01	2.20958E-03	0.00000E+00	0.00000E+00
189	7.74893E-01	6.18733E+00	8.07351E-01	2.20465E-03	0.00000E+00	0.00000E+00
190	8.10815E-01	6.21767E+00	8.07369E-01	2.19297E-03	0.00000E+00	0.00000E+00
191	8.38668E-01	6.24683E+00	8.07535E-01	2.18761E-03	0.00000E+00	0.00000E+00
192	7.76145E-01	6.27717E+00	8.07370E-01	2.18233E-03	0.00000E+00	0.00000E+00
193	7.91436E-01	6.30633E+00	8.07286E-01	2.17248E-03	0.00000E+00	0.00000E+00
194	7.71756E-01	6.33567E+00	8.07101E-01	2.16904E-03	0.00000E+00	0.00000E+00
195	7.86135E-01	6.36583E+00	8.06993E-01	2.16050E-03	0.00000E+00	0.00000E+00
196	8.36534E-01	6.39517E+00	8.07145E-01	2.15473E-03	0.00000E+00	0.00000E+00
197	7.78126E-01	6.42633E+00	8.06996E-01	2.14881E-03	0.00000E+00	0.00000E+00
198	8.21092E-01	6.45650E+00	8.07068E-01	2.13903E-03	0.00000E+00	0.00000E+00
199	8.06780E-01	6.48667E+00	8.07066E-01	2.12814E-03	0.00000E+00	0.00000E+00
200	7.93471E-01	6.51783E+00	8.06998E-01	2.11848E-03	0.00000E+00	0.00000E+00
201	8.25068E-01	6.54717E+00	8.07089E-01	2.10976E-03	0.00000E+00	0.00000E+00
202	7.79774E-01	6.57733E+00	8.06952E-01	2.10362E-03	0.00000E+00	0.00000E+00
203	7.99331E-01	6.60750E+00	8.06914E-01	2.09347E-03	0.00000E+00	0.00000E+00
204	8.00386E-01	6.63967E+00	8.06882E-01	2.08334E-03	0.00000E+00	0.00000E+00
205	8.00388E-01	6.66983E+00	8.06850E-01	2.07329E-03	0.00000E+00	0.00000E+00
206	7.93801E-01	6.70100E+00	8.06786E-01	2.06410E-03	0.00000E+00	0.00000E+00

KENO MESSAGE NUMBER K5-123 EXECUTION TERMINATED DUE TO COMPLETION OF THE SPECIFIED NUMBER OF GENERATIONS.

LIFETIME = 9.98934E-05 + OR - 3.46130E-07 GENERATION TIME = 4.27633E-05 + OR - 1.65576E-07
NU BAR = 2.42064E+00 + OR - 2.24711E-05 AVERAGE FISSION GROUP = 2.34293E+01 + OR - 9.34937E-03
ENERGY(EV) OF THE AVERAGE LETHARGY CAUSING FISSION = 7.08986E-02 + OR - 4.92764E-04

NO. OF INITIAL GENERATIONS SKIPPED	AVERAGE K-EFFECTIVE	DEVIATION	67 PER CENT CONFIDENCE INTERVAL	95 PER CENT CONFIDENCE INTERVAL	99 PER CENT CONFIDENCE INTERVAL	NUMBER OF HISTORIES
3	0.80666	+ OR - 0.00207	0.80459 TO 0.80874	0.80252 TO 0.81081	0.80045 TO 0.81288	162400
4	0.80677	+ OR - 0.00208	0.80469 TO 0.80885	0.80261 TO 0.81093	0.80054 TO 0.81301	161600
5	0.80669	+ OR - 0.00209	0.80460 TO 0.80877	0.80251 TO 0.81086	0.80042 TO 0.81295	160800
6	0.80694	+ OR - 0.00208	0.80486 TO 0.80902	0.80277 TO 0.81110	0.80069 TO 0.81318	160000
7	0.80674	+ OR - 0.00208	0.80466 TO 0.80883	0.80258 TO 0.81091	0.80049 TO 0.81299	159200
8	0.80688	+ OR - 0.00209	0.80479 TO 0.80897	0.80270 TO 0.81106	0.80061 TO 0.81314	158400
9	0.80703	+ OR - 0.00209	0.80493 TO 0.80912	0.80284 TO 0.81122	0.80074 TO 0.81331	157600
10	0.80705	+ OR - 0.00211	0.80494 TO 0.80915	0.80283 TO 0.81126	0.80073 TO 0.81336	156800
11	0.80728	+ OR - 0.00210	0.80518 TO 0.80938	0.80307 TO 0.81149	0.80097 TO 0.81359	156000
12	0.80714	+ OR - 0.00211	0.80503 TO 0.80925	0.80292 TO 0.81136	0.80081 TO 0.81347	155200
17	0.80692	+ OR - 0.00212	0.80480 TO 0.80904	0.80268 TO 0.81116	0.80056 TO 0.81328	151200
22	0.80696	+ OR - 0.00215	0.80481 TO 0.80912	0.80266 TO 0.81127	0.80051 TO 0.81342	147200
27	0.80724	+ OR - 0.00219	0.80505 TO 0.80943	0.80286 TO 0.81162	0.80067 TO 0.81382	143200
32	0.80770	+ OR - 0.00217	0.80553 TO 0.80987	0.80335 TO 0.81204	0.80118 TO 0.81421	139200
37	0.80789	+ OR - 0.00220	0.80569 TO 0.81009	0.80349 TO 0.81229	0.80130 TO 0.81448	135200
42	0.80781	+ OR - 0.00222	0.80559 TO 0.81003	0.80337 TO 0.81226	0.80115 TO 0.81448	131200
47	0.80803	+ OR - 0.00228	0.80575 TO 0.81031	0.80348 TO 0.81258	0.80120 TO 0.81486	127200
52	0.80789	+ OR - 0.00233	0.80555 TO 0.81022	0.80322 TO 0.81255	0.80089 TO 0.81488	123200
57	0.80719	+ OR - 0.00235	0.80485 TO 0.80954	0.80250 TO 0.81189	0.80015 TO 0.81424	119200
62	0.80748	+ OR - 0.00239	0.80509 TO 0.80987	0.80270 TO 0.81226	0.80031 TO 0.81465	115200
67	0.80703	+ OR - 0.00246	0.80457 TO 0.80949	0.80211 TO 0.81195	0.79965 TO 0.81441	111200
72	0.80693	+ OR - 0.00252	0.80441 TO 0.80945	0.80189 TO 0.81197	0.79937 TO 0.81449	107200
77	0.80621	+ OR - 0.00245	0.80375 TO 0.80866	0.80130 TO 0.81111	0.79885 TO 0.81357	103200
82	0.80702	+ OR - 0.00248	0.80454 TO 0.80951	0.80206 TO 0.81199	0.79958 TO 0.81447	99200
87	0.80750	+ OR - 0.00255	0.80495 TO 0.81005	0.80240 TO 0.81260	0.79985 TO 0.81515	95200
92	0.80707	+ OR - 0.00265	0.80443 TO 0.80972	0.80178 TO 0.81237	0.79913 TO 0.81501	91200

NO. OF INITIAL GENERATIONS SKIPPED	AVERAGE K-EFFECTIVE	DEVIATION	67 PER CENT CONFIDENCE INTERVAL	95 PER CENT CONFIDENCE INTERVAL	99 PER CENT CONFIDENCE INTERVAL	NUMBER OF HISTORIES
97	0.80717	+ OR - 0.00274	0.80443 TO 0.80991	0.80169 TO 0.81266	0.79895 TO 0.81540	87200
102	0.80803	+ OR - 0.00270	0.80532 TO 0.81073	0.80262 TO 0.81344	0.79992 TO 0.81614	83200
107	0.80811	+ OR - 0.00280	0.80531 TO 0.81091	0.80251 TO 0.81372	0.79971 TO 0.81652	79200
112	0.80937	+ OR - 0.00288	0.80649 TO 0.81225	0.80362 TO 0.81512	0.80074 TO 0.81800	75200
117	0.80888	+ OR - 0.00302	0.80586 TO 0.81191	0.80284 TO 0.81493	0.79981 TO 0.81795	71200
122	0.80840	+ OR - 0.00310	0.80530 TO 0.81149	0.80220 TO 0.81459	0.79910 TO 0.81769	67200
127	0.80804	+ OR - 0.00315	0.80489 TO 0.81119	0.80174 TO 0.81434	0.79860 TO 0.81749	63200
132	0.80952	+ OR - 0.00324	0.80628 TO 0.81276	0.80304 TO 0.81599	0.79981 TO 0.81923	59200
137	0.81024	+ OR - 0.00339	0.80685 TO 0.81363	0.80346 TO 0.81702	0.80007 TO 0.82041	55200
142	0.81135	+ OR - 0.00352	0.80783 TO 0.81486	0.80431 TO 0.81838	0.80079 TO 0.82190	51200
147	0.81307	+ OR - 0.00372	0.80935 TO 0.81679	0.80564 TO 0.82050	0.80192 TO 0.82422	47200
152	0.81239	+ OR - 0.00391	0.80848 TO 0.81631	0.80457 TO 0.82022	0.80065 TO 0.82413	43200
157	0.80990	+ OR - 0.00405	0.80585 TO 0.81395	0.80180 TO 0.81800	0.79775 TO 0.82205	39200
162	0.80872	+ OR - 0.00430	0.80442 TO 0.81301	0.80013 TO 0.81731	0.79583 TO 0.82160	35200
167	0.80823	+ OR - 0.00454	0.80369 TO 0.81277	0.79916 TO 0.81730	0.79462 TO 0.82184	31200
172	0.80448	+ OR - 0.00410	0.80038 TO 0.80858	0.79628 TO 0.81269	0.79217 TO 0.81679	27200
177	0.80539	+ OR - 0.00397	0.80141 TO 0.80936	0.79744 TO 0.81334	0.79346 TO 0.81731	23200
182	0.80220	+ OR - 0.00418	0.79802 TO 0.80638	0.79384 TO 0.81056	0.78966 TO 0.81474	19200
187	0.79915	+ OR - 0.00462	0.79453 TO 0.80377	0.78992 TO 0.80838	0.78530 TO 0.81300	15200
192	0.79886	+ OR - 0.00496	0.79391 TO 0.80382	0.78895 TO 0.80877	0.78400 TO 0.81373	11200
197	0.80223	+ OR - 0.00466	0.79757 TO 0.80690	0.79291 TO 0.81156	0.78824 TO 0.81622	7200
202	0.79848	+ OR - 0.00158	0.79690 TO 0.80005	0.79532 TO 0.80163	0.79374 TO 0.80321	3200

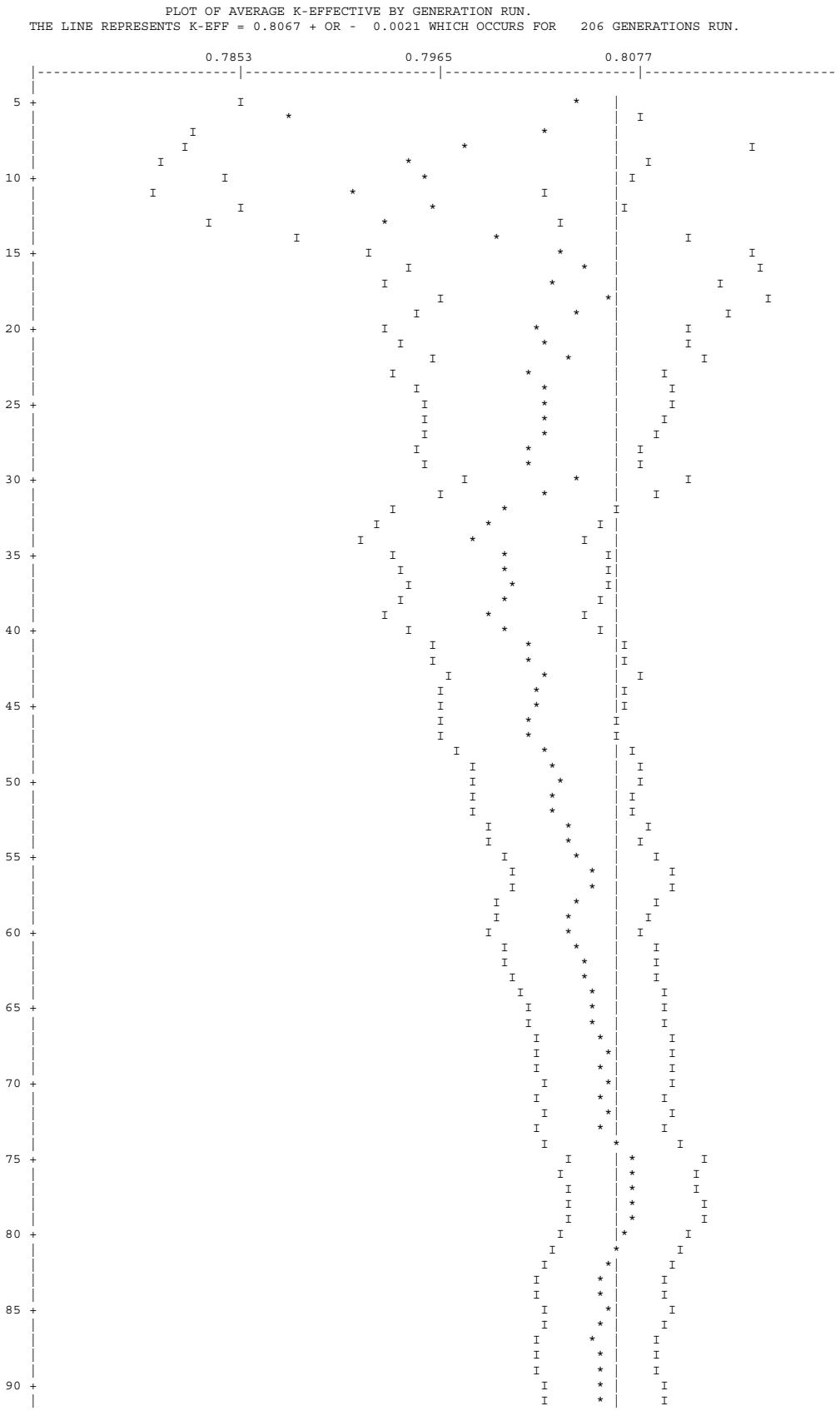
PLOT OF AVERAGE K-EFFECTIVE BY GENERATION RUN.
THE LINE REPRESENTS K-EFF = 0.8067 + OR - 0.0021 WHICH OCCURS FOR 206 GENERATIONS RUN.
0.7853
0.7965
0.8077
5
10
15
20
25
30
35
40
45
50
55
60
65
70
75
80
85
90

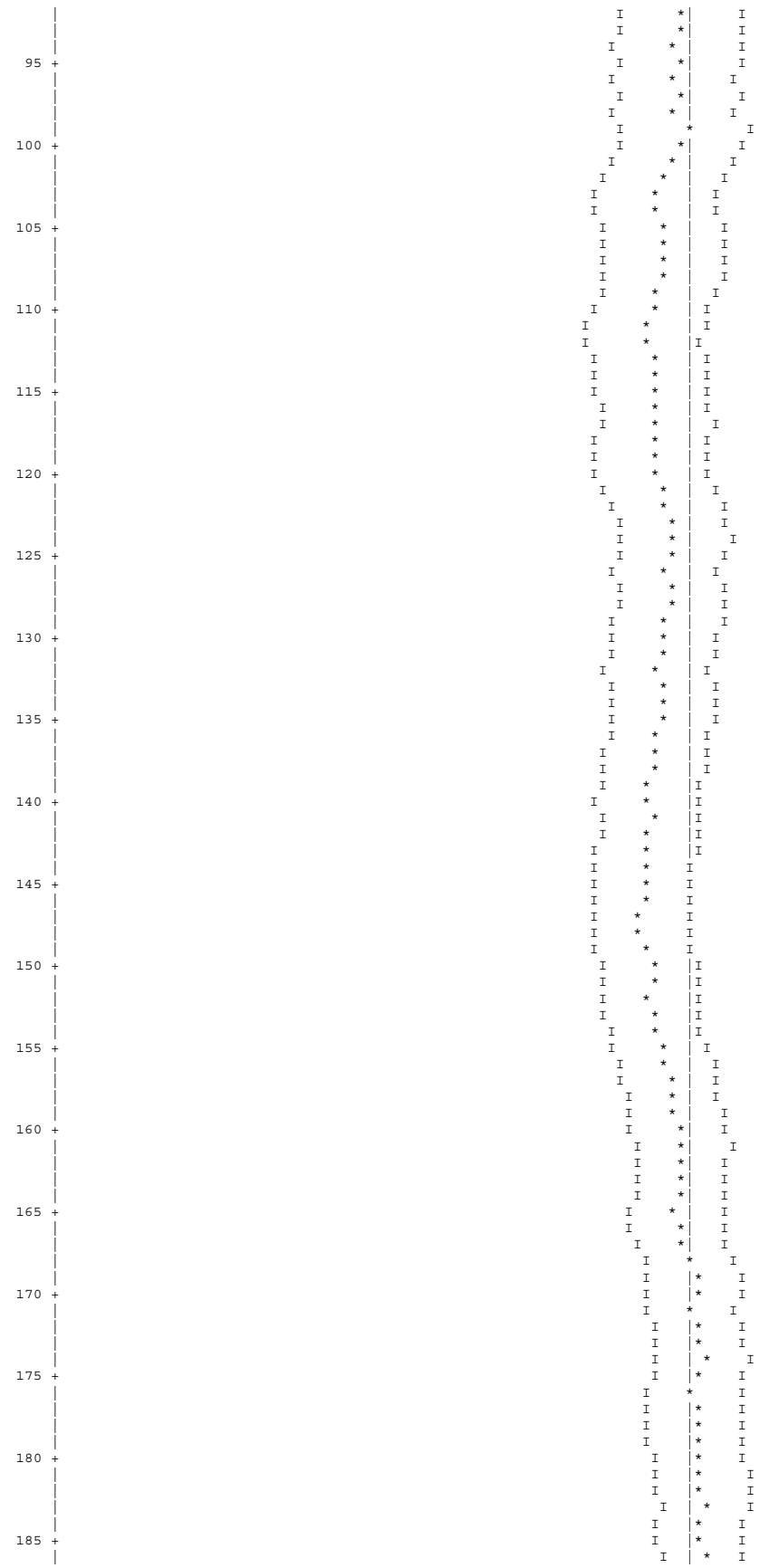


190
195
200
205

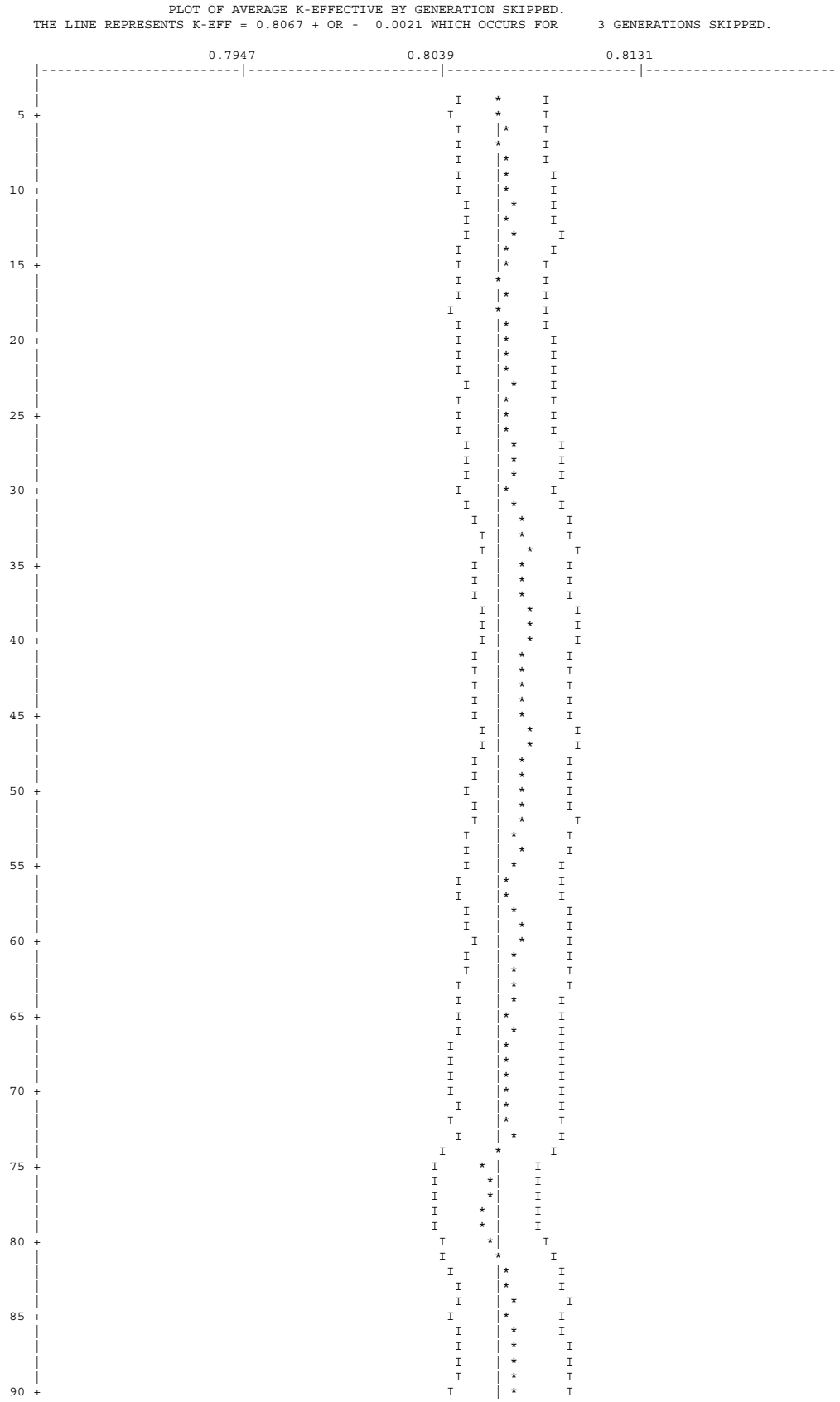
PLOT OF AVERAGE K-EFFECTIVE BY GENERATION SKIPPED.
THE LINE REPRESENTS K-EFF = 0.8067 + OR - 0.0021 WHICH OCCURS FOR 3 GENERATIONS SKIPPED.
0.7947
0.8039
0.8131
5
10
15
20
25
30
35
40
45
50
55
60
65
70
75
80
85
90

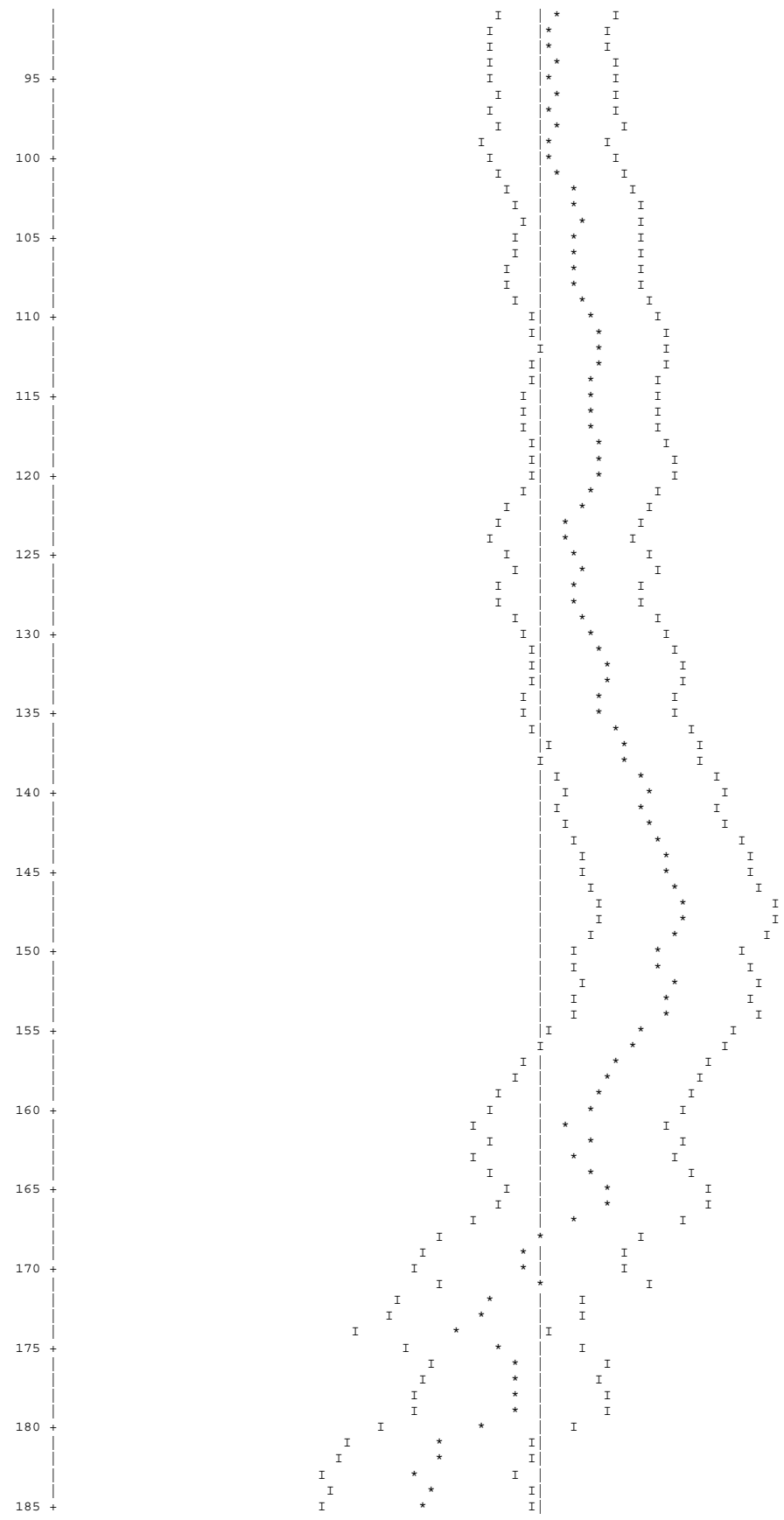

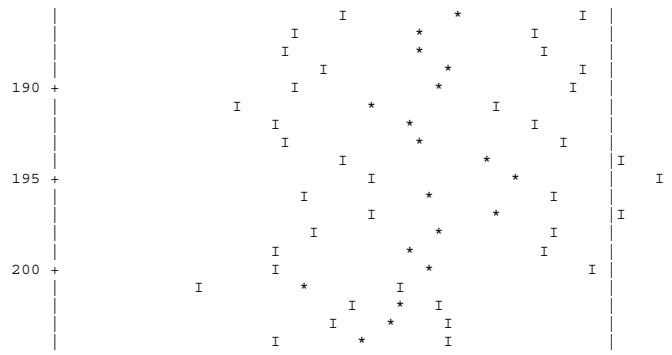
190
195
200

SKIPPING 3 GENERATIONS

GROUP	FISSION FRACTION	UNIT	REGION	FISSIONS	PERCENT DEVIATION	ABSORPTIONS	PERCENT DEVIATION	LEAKAGE	PERCENT DEVIATION
1	0.0004			2.86476E-04	5.6283	1.52136E-03	2.1427	0.00000E+00	0.0000
2	0.0016			1.31520E-03	1.6881	3.28436E-03	0.6898	0.00000E+00	0.0000
3	0.0020			1.65180E-03	1.3890	1.02449E-03	0.9693	0.00000E+00	0.0000
4	0.0012			9.43977E-04	1.6759	5.32299E-04	1.2734	0.00000E+00	0.0000
5	0.0016			1.30055E-03	1.4876	8.62508E-04	1.0596	0.00000E+00	0.0000
6	0.0022			1.73728E-03	1.1993	1.59844E-03	0.8216	0.00000E+00	0.0000
7	0.0022			1.73932E-03	1.2733	1.82219E-03	0.7980	0.00000E+00	0.0000
8	0.0021			1.70173E-03	1.6759	1.95710E-03	1.0360	0.00000E+00	0.0000
9	0.0028			2.29548E-03	2.1818	2.68646E-03	1.1910	0.00000E+00	0.0000
10	0.0062			4.98683E-03	2.0026	5.54078E-03	1.1600	0.00000E+00	0.0000
11	0.0130			1.04472E-02	1.7934	1.01338E-02	1.2292	0.00000E+00	0.0000
12	0.0178			1.43956E-02	1.7857	1.22652E-02	1.3669	0.00000E+00	0.0000
13	0.0173			1.39667E-02	1.8845	1.47971E-02	1.3920	0.00000E+00	0.0000
14	0.0147			1.18675E-02	1.8872	1.70869E-02	1.1396	0.00000E+00	0.0000
15	0.0028			2.27686E-03	3.6085	7.05768E-03	1.3004	0.00000E+00	0.0000
16	0.0019			1.57102E-03	4.9306	4.44604E-03	1.5434	0.00000E+00	0.0000
17	0.0031			2.48854E-03	4.6242	3.13351E-03	2.2078	0.00000E+00	0.0000
18	0.0041			3.32845E-03	5.0847	3.32257E-03	2.6860	0.00000E+00	0.0000
19	0.0048			3.86190E-03	4.1248	5.22856E-03	1.7409	0.00000E+00	0.0000
20	0.0218			1.76250E-02	1.9493	2.19269E-02	1.0219	0.00000E+00	0.0000
21	0.0122			9.81387E-03	2.8332	9.93820E-03	1.4733	0.00000E+00	0.0000
22	0.0293			2.36442E-02	1.8314	2.35717E-02	0.9757	0.00000E+00	0.0000
23	0.1071			8.63764E-02	0.9656	1.02873E-01	0.4780	0.00000E+00	0.0000
24	0.2203			1.77698E-01	0.6344	2.22769E-01	0.3016	0.00000E+00	0.0000
25	0.1876			1.51351E-01	0.6628	1.94392E-01	0.2872	0.00000E+00	0.0000
26	0.2344			1.89104E-01	0.6734	2.42944E-01	0.2717	0.00000E+00	0.0000
27	0.0854			6.88912E-02	1.0923	8.53098E-02	0.5363	0.00000E+00	0.0000
SYSTEM TOTAL =				8.06665E-01	0.2567	1.00203E+00	0.0566	0.00000E+00	0.0000

ELAPSED TIME 6.70283 MINUTES

RANDOM NUMBER= 62803D4620D2

```
                              FREQUENCY FOR GENERATIONS    4 TO  206
0.7335 TO 0.7476     ***
0.7476 TO 0.7617     *****
0.7617 TO 0.7759     **********************
0.7759 TO 0.7900     ************************************
0.7900 TO 0.8042     ****************************
0.8042 TO 0.8183     ************************************
0.8183 TO 0.8324     *************************
0.8324 TO 0.8466     ***********************
0.8466 TO 0.8607     *************
0.8607 TO 0.8749     ******
0.8749 TO 0.8890     *
0.8890 TO 0.9032     *

                              FREQUENCY FOR GENERATIONS   55 TO  206
0.7335 TO 0.7476     **
0.7476 TO 0.7617     *
0.7617 TO 0.7759     ******************
0.7759 TO 0.7900     ****************************
0.7900 TO 0.8042     **********************
0.8042 TO 0.8183     ****************************
0.8183 TO 0.8324     ********************
0.8324 TO 0.8466     ****************
0.8466 TO 0.8607     **********
0.8607 TO 0.8749     ****
0.8749 TO 0.8890     *
0.8890 TO 0.9032     *

                              FREQUENCY FOR GENERATIONS  105 TO  206
0.7335 TO 0.7476     *
0.7476 TO 0.7617     *
0.7617 TO 0.7759     **********
0.7759 TO 0.7900     ******************
0.7900 TO 0.8042     ***************
0.8042 TO 0.8183     ***********************
0.8183 TO 0.8324     ***********
0.8324 TO 0.8466     ************
0.8466 TO 0.8607     ********
0.8607 TO 0.8749     **
0.8749 TO 0.8890     *
0.8890 TO 0.9032

                              FREQUENCY FOR GENERATIONS  156 TO  206
0.7335 TO 0.7476     *
0.7476 TO 0.7617
0.7617 TO 0.7759     ****
0.7759 TO 0.7900     ********
0.7900 TO 0.8042     *******
0.8042 TO 0.8183     ***********
0.8183 TO 0.8324     *******
0.8324 TO 0.8466     ********
0.8466 TO 0.8607     ***
0.8607 TO 0.8749     *
0.8749 TO 0.8890     *
0.8890 TO 0.9032


*****************************************************************************************************************************************
*

          CONGRATULATIONS!  YOU HAVE  SUCCESSFULLY TRAVERSED THE PERILOUS PATH THROUGH KENO V IN   6.70283 MINUTES

*****************************************************************************************************************************************
*
```

Figure 6.6.3-2 CSAS Input/Output for NAC-LWT with Design Basis MTR Fuel - Most Reactive Accident Condition Configuration – 94 wt %, 355 g ^{235}U

```
PRIMARY MODULE ACCESS AND INPUT RECORD ( SCALE DRIVER - 95/03/29 - 09:06:37 )
   MODULE CSAS25   WILL BE CALLED
     LWT HFBR DESIGN U3O8-AL FUEL 93 W/O U235 PLATES IN CLOSE & PLATES @ FULL PITCH
     'MIN BASKET PLATE
     27GROUPNDF4  LATTICECELL
     URANIUM  1 DEN=3.9912 0.3000 293 92235 94. 92238 6. END
     O        1 DEN=3.990  0.0542 293 END
     AL       1 DEN=3.990  0.6468 293 END
     AL    2 1.0 293.0 END
     H2O   3 1.000 293.0 END
     AL    4 1.0 293.0 END
     SS304 5 1.0 293.0 END
     PB    6 1.0 293.0 END
     H2O   7 1.0E-20 293.0 END
     H2O   8 1.0E-20 293.0 END
     END COMP
     SYMMSLABCELL 0.4572 0.053 1 3 0.127 2 END

     READ PARAM RUN=YES PLT=YES RND=2 GEN=206 NPG=800 END PARAM
     READ GEOM
     UNIT 1
     COM='AL PLATE CELL'
     CUBOID 2 1 2P3.1250 2P0.127 2P10.0
     UNIT 2
     COM='HFBR FUEL PLATE CELL 1'
     CUBOID 1 1 2P2.8600 2P0.0265 2P10.0
     CUBOID 2 1 2P3.1250 2P0.0635 2P10.0
     CUBOID 3 1 2P3.1250 2P0.2286 2P10.0
     UNIT 3
     COM='HFBR FUEL PLATE CELL 2'
     CUBOID 1 1 2P2.8600 2P0.0265 2P10.0
     CUBOID 2 1 2P3.1250 2P0.0635 2P10.0
     CUBOID 3 1 2P3.1250 2P0.2286 2P10.0
     UNIT 4
     COM='HFBR FUEL PLATE CELL 3'
     CUBOID 1 1 2P2.8600 2P0.0265 2P10.0
     CUBOID 2 1 2P3.1250 2P0.0635 2P10.0
     CUBOID 3 1 2P3.1250 2P0.2286 2P10.0
     UNIT 5
     COM='HFBR FUEL PLATE CELL 4'
     CUBOID 1 1 2P2.8600 2P0.0265 2P10.0
     CUBOID 2 1 2P3.1250 2P0.0635 2P10.0
     CUBOID 3 1 2P3.1250 2P0.2286 2P10.0
     UNIT 6
     COM='HFBR FUEL PLATE CELL 5'
     CUBOID 1 1 2P2.8600 2P0.0265 2P10.0
     CUBOID 2 1 2P3.1250 2P0.0635 2P10.0
     CUBOID 3 1 2P3.1250 2P0.2286 2P10.0
     UNIT 7
     COM='HFBR FUEL PLATE CELL 6'
     CUBOID 1 1 2P2.8600 2P0.0265 2P10.0
     CUBOID 2 1 2P3.1250 2P0.0635 2P10.0
     CUBOID 3 1 2P3.1250 2P0.2286 2P10.0
     UNIT 8
     COM='HFBR FUEL PLATE CELL 7'
     CUBOID 1 1 2P2.8600 2P0.0265 2P10.0
     CUBOID 2 1 2P3.1250 2P0.0635 2P10.0
     CUBOID 3 1 2P3.1250 2P0.2286 2P10.0
     UNIT 81
     CUBOID 2 1 2P0.2375 2P4.1 2P10.0
     UNIT 83
     CUBOID 2 1 2P0.2375 2P4.1 2P10.0
     UNIT 90
     COM='HFBR FUEL ARRAY 20 PLATES IN 5/16 IN. WEB CENTER'
     ARRAY 1 -3.1250 -4.3688 -10.0
     CUBOID 3 1 2P4.3688 2P4.3688 2P10.0
     HOLE 81 -4.1312 0.0 0.0
     HOLE 83 4.1312 0.0 0.0
     REPLICATE 5 1 2R0.3556 4R0.0 1
     UNIT 91
     COM='HFBR FUEL ARRAY 20 PLATES IN 5/16 IN. WEB RIGHT'
     ARRAY 1 -3.8935 -4.3688 -10.0
     CUBOID 3 1 2P4.3688 2P4.3688 2P10.0
     HOLE 81 -4.1312 0.0 0.0
     HOLE 83 4.1312 0.0 0.0
     REPLICATE 5 1 2R0.3556 4R0.0 1
     UNIT 92
     COM='HFBR FUEL ARRAY 20 PLATES IN 5/16 IN. WEB LEFT'
     ARRAY 1 -2.3565 -4.3688 -10.0
     CUBOID 3 1 2P4.3688 2P4.3688 2P10.0
     HOLE 81 -4.1312 0.0 0.0
     HOLE 83 4.1312 0.0 0.0
     REPLICATE 5 1 2R0.3556 4R0.0 1
     UNIT 10
     COM='HFBR FUEL ARRAY WITH HALF OF 1/4 PLATE ON RIGHT -  TOP STACK'
     ARRAY 1 -2.3565 -4.3688 -10.0
     CUBOID 3 1 2P4.3688 2P4.3688 2P10.0
     HOLE 81 -4.1312 0.0 0.0
     HOLE 83 4.1312 0.0 0.0
```

```
  REPLICATE 5 1 0.3048 5R0.0 1
  UNIT 101
  COM='HFBR FUEL ARRAY WITH HALF OF 1/4 IN. PLATE ON RIGHT -  BOTTOM STACK'
  ARRAY 1 -2.3565 -4.3688 -10.0
  CUBOID 3 1 2P4.3688 2P4.3688 2P10.0
  HOLE 81 -4.1312 0.0 0.0
  HOLE 83 4.1312 0.0 0.0
  REPLICATE 5 1 0.3048 5R0.0 1
  UNIT 11
  COM='HFBR FUEL WITH HALF OF 1/4 IN. PLATE ON LEFT  TOP STACK'
  ARRAY 1 -3.8935 -4.3688 -10.0
  CUBOID 3 1 2P4.3688 2P4.3688 2P10.0
  HOLE 81 -4.1312 0.0 0.0
  HOLE 83 4.1312 0.0 0.0
  REPLICATE 5 1 0.0 0.3048 4R0.0 1
  UNIT 111
  COM='HFBR FUEL ARRAY WITH HALF OF 1/4 IN. PLATE ON LEFT - BOTTOM STACK'
  ARRAY 1 -3.8935 -4.3688 -10.0
  CUBOID 3 1 2P4.3688 2P4.3688 2P10.0
  HOLE 81 -4.1312 0.0 0.0
  HOLE 83 4.1312 0.0 0.0
  REPLICATE 5 1 0.0 0.3048 4R0.0 1
  UNIT 12
  COM='2 UNIT ARRAY WITH 0.120 IN. PLATE ON TOP AND SIDES'
  ARRAY 2 -9.0428 -4.3688 -10.0
  REPLICATE 5 1 3R0.3048 0.0 2R0.0 1
  UNIT 13
  COM='3 UNIT ARRAY WITH REST OF 5/16 WEB'
  ARRAY 3 -14.1738 -4.3688 -10.0
  REPLICATE 5 1 2R0.3556 2R0.7112 2R0.0 1
  UNIT 14
  COM='2 UNIT ARRAY WITH 0.120 IN. PLATE ON BOTTOM and SIDES'
  ARRAY 4 -9.0428 -4.3688 -10.0
  REPLICATE 5 1 2R0.3048 0.0 0.3048 2R0.0 1
  GLOBAL UNIT 15
  COM='7 HFBR ASSEMBLIES IN THE LWT'
  CYLINDER 3 1 17.0500 2P10.0
  HOLE 12 0.0 +9.4489 0.0
  HOLE 13 0.0 0.0 0.0
  HOLE 14 0.0 -9.4489 0.0
  CYLINDER 5 1 18.8913 2P10.0
  CYLINDER 6 1 33.4963 2P10.0
  CYLINDER 5 1 36.5443 2P10.0
  CYLINDER 8 1 49.2443 2P10.0
  CYLINDER 5 1 49.85390 2P10.0
  CUBOID   7 1 4P49.85390 2P10.0
  END GEOM
  READ ARRAY
  ARA=1 NUX=1 NUY=20 NUZ=1 FILL 1 8 7 6 12R5 4 3 2 1 END FILL
  ARA=2 NUX=2 NUY=1 NUZ=1 FILL 10 11 END FILL
  ARA=3 NUX=3 NUY=1 NUZ=1 FILL 92 90 91 END FILL
  ARA=4 NUX=2 NUY=1 NUZ=1 FILL 101 111 END FILL
  END ARRAY
  READ BOUNDS ALL=MIR END BOUNDS
  READ PLOT
  TTL='X-Y PLOT OF ASSEMBLY'
  NCH=' FCWASPW'
  UAX=1.0 VDN=-1.0 NAX=130
  XUL=-5.0 YUL=5.0 ZUL=0.0
  XLR=5.0 YLR=-5.0 ZLR=0.0 END
  TTL='X-Y PLOT OF CASK'
  UAX=1.0 VDN=-1.0 NAX=130
  XUL=-65.0 YUL=65.0 ZUL=0.0
  XLR=65.0 YLR=-65.0 ZLR=0.0 END
  TTL='X-Y PLOT OF BASKET'
  UAX=1.0 VDN=-1.0 NAX=130
  XUL=-17.0 YUL=17.0 ZUL=0.0
  XLR=17.0 YLR=-17.0 ZLR=0.0 END
  TTL='X-Z PLOT OF BASKET'
  VAX=1.0 WDN=-1.0
  XUL=0.0 YUL=-5.0 ZUL=10.0
  XLR=0.0 YLR=5.0 ZLR=-10.0
  END PLOT
  END DATA

SECONDARY MODULE O0O008   HAS BEEN CALLED.
```

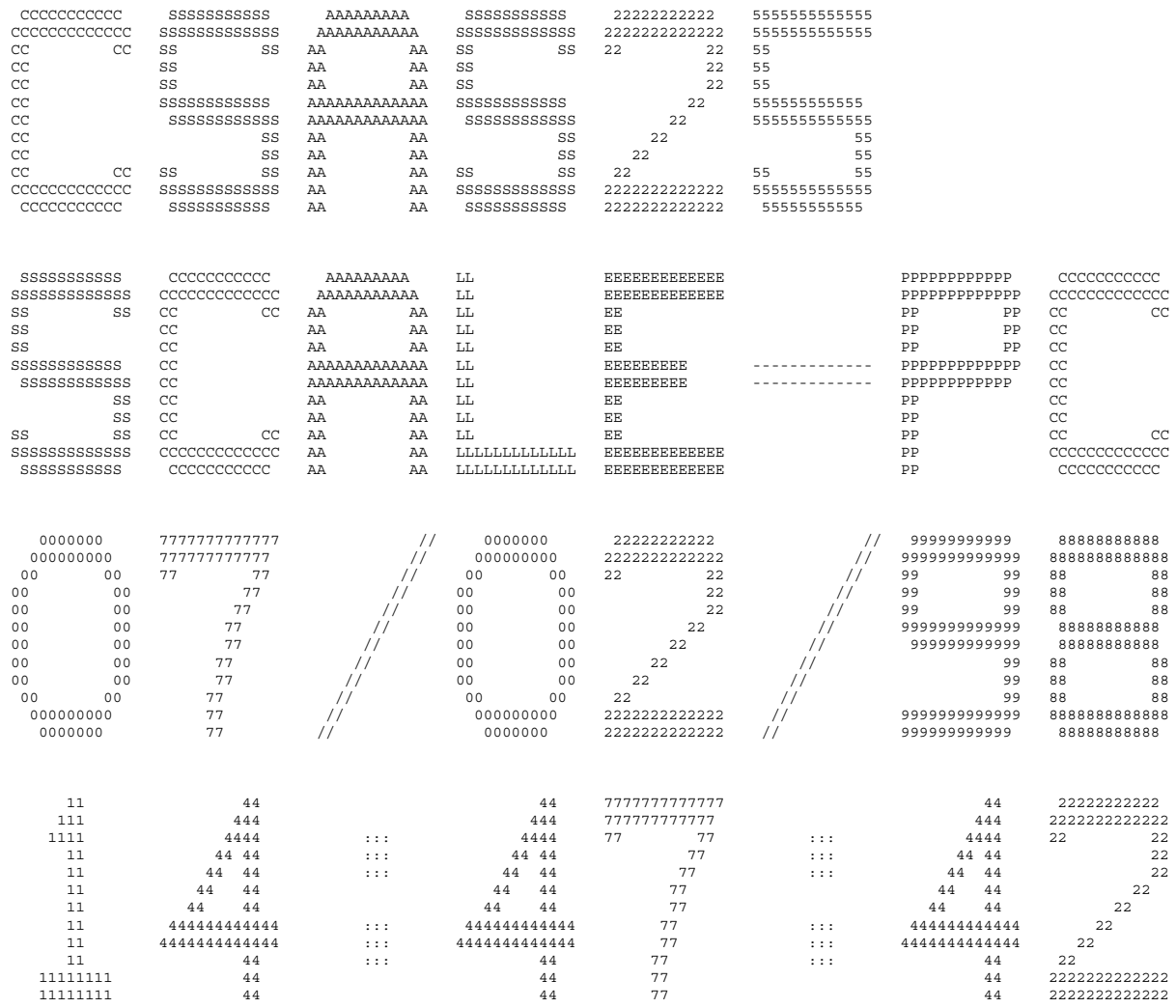

```
********************************************************************************
********************************************************************************
********************************************************************************
*****                                                                      *****
*****                  PROGRAM VERIFICATION INFORMATION                    *****
*****                                                                      *****
*****                 CODE SYSTEM:  SCALE-PC VERSION:  4.3                 *****
*****                                                                      *****
********************************************************************************
********************************************************************************
*****                                                                      *****
*****                                                                      *****
*****              PROGRAM:  CSAS                                          *****
*****                                                                      *****
*****        CREATION DATE:  03-08-96                                      *****
*****                                                                      *****
*****              VOLUME:   ENG                                           *****
*****                                                                      *****
*****              LIBRARY:  G:\SCALE43\EXE                                *****
*****                                                                      *****
*****                                                                      *****
*****      PRODUCTION CODE:  CSAS                                          *****
*****                                                                      *****
*****              VERSION:  3.1                                           *****
*****                                                                      *****
*****              JOBNAME:  SCALE-PC                                      *****
*****                                                                      *****
*****    DATE OF EXECUTION:  07/02/98                                      *****
*****                                                                      *****
*****    TIME OF EXECUTION:  14:47:42                                      *****
*****                                                                      *****
*****                                                                      *****
********************************************************************************
********************************************************************************
********************************************************************************
```

```
LWT HFBR DESIGN U3O8-AL FUEL 93 W/O U235 PLATES IN CLOSE & PLATES @ FULL PITCH


    **** PROBLEM PARAMETERS ****

    LIB 27GROUPNDF4  LIBRARY
    MXX            8 MIXTURES
    MSC           10 COMPOSITION SPECIFICATIONS
    IZM            3 MATERIAL ZONES
    GE  LATTICECELL  GEOMETRY
    MORE           0 0/1 DO NOT READ/READ OPTIONAL PARAMETER DATA
    MSLN           0 FUEL SOLUTIONS


    **** PROBLEM COMPOSITION DESCRIPTION ****

    SC  URANIUM      STANDARD COMPOSITION
    MX             1 MIXTURE NO.
    VF        0.3000 VOLUME FRACTION
    ROTH      3.9912 SPECIFIED DENSITY
    NEL            1 NO. ELEMENTS
    ICP            1 0/1 MIXTURE/COMPOUND
    TEMP       293.0 DEG KELVIN
               92000      1.00 ATOM/MOLECULE
                            92235    94.000 WT%
                            92238     6.000 WT%
    END

    SC  O            STANDARD COMPOSITION
    MX             1 MIXTURE NO.
    VF        0.0542 VOLUME FRACTION
    ROTH      3.9900 SPECIFIED DENSITY
    NEL            1 NO. ELEMENTS
    ICP            1 0/1 MIXTURE/COMPOUND
    TEMP       293.0 DEG KELVIN
                8016      1.00 ATOM/MOLECULE
    END

    SC  AL           STANDARD COMPOSITION
    MX             1 MIXTURE NO.
    VF        0.6468 VOLUME FRACTION
    ROTH      3.9900 SPECIFIED DENSITY
    NEL            1 NO. ELEMENTS
    ICP            1 0/1 MIXTURE/COMPOUND
    TEMP       293.0 DEG KELVIN
               13027      1.00 ATOM/MOLECULE
    END

    SC  AL           STANDARD COMPOSITION
    MX             2 MIXTURE NO.
    VF        1.0000 VOLUME FRACTION
    ROTH      2.7020 THEORETICAL DENSITY
    NEL            1 NO. ELEMENTS
    ICP            1 0/1 MIXTURE/COMPOUND
    TEMP       293.0 DEG KELVIN
               13027      1.00 ATOM/MOLECULE
    END

    SC  H2O          STANDARD COMPOSITION
    MX             3 MIXTURE NO.
    VF        1.0000 VOLUME FRACTION
    ROTH      0.9982 THEORETICAL DENSITY
    NEL            2 NO. ELEMENTS
    ICP            1 0/1 MIXTURE/COMPOUND
    TEMP       293.0 DEG KELVIN
                1001      2.00 ATOMS/MOLECULE
                8016      1.00 ATOM/MOLECULE
    END

    SC  AL           STANDARD COMPOSITION
    MX             4 MIXTURE NO.
    VF        1.0000 VOLUME FRACTION
    ROTH      2.7020 THEORETICAL DENSITY
    NEL            1 NO. ELEMENTS
    ICP            1 0/1 MIXTURE/COMPOUND
    TEMP       293.0 DEG KELVIN
               13027      1.00 ATOM/MOLECULE
    END

    SC  SS304        STANDARD COMPOSITION
    MX             5 MIXTURE NO.
    VF        1.0000 VOLUME FRACTION
    ROTH      7.9200 THEORETICAL DENSITY
    NEL            4 NO. ELEMENTS
    ICP            0 0/1 MIXTURE/COMPOUND
    TEMP       293.0 DEG KELVIN
               24304    19.000 WT%
               25055     2.000 WT%
               26304    69.500 WT%
               28304     9.500 WT%
    END

    SC  PB           STANDARD COMPOSITION
    MX             6 MIXTURE NO.
    VF        1.0000 VOLUME FRACTION
```

```
ROTH     11.3440 THEORETICAL DENSITY
NEL            1 NO. ELEMENTS
ICP            1 0/1 MIXTURE/COMPOUND
TEMP       293.0 DEG KELVIN
           82000      1.00 ATOM/MOLECULE
END

SC  H2O          STANDARD COMPOSITION
MX             7 MIXTURE NO.
VF        0.0000 VOLUME FRACTION
ROTH      0.9982 THEORETICAL DENSITY
NEL            2 NO. ELEMENTS
ICP            1 0/1 MIXTURE/COMPOUND
TEMP       293.0 DEG KELVIN
            1001      2.00 ATOMS/MOLECULE
            8016      1.00 ATOM/MOLECULE
END

SC  H2O          STANDARD COMPOSITION
MX             8 MIXTURE NO.
VF        0.0000 VOLUME FRACTION
ROTH      0.9982 THEORETICAL DENSITY
NEL            2 NO. ELEMENTS
ICP            1 0/1 MIXTURE/COMPOUND
TEMP       293.0 DEG KELVIN
            1001      2.00 ATOMS/MOLECULE
            8016      1.00 ATOM/MOLECULE
END


**** PROBLEM GEOMETRY ****

CTP SYMMSLABCELL CELL TYPE
PITCH     0.4572 CM CENTER TO CENTER SPACING
FUELOD    0.0530 CM FUEL DIAMETER OR SLAB THICKNESS
MFUEL          1 MIXTURE NO. OF FUEL
MMOD           3 MIXTURE NO. OF MODERATOR
CLADOD    0.1270 CM CLAD OUTER DIAMETER
MCLAD          2 MIXTURE NO. OF CLAD


ZONE SPECIFICATIONS FOR LATTICECELL GEOMETRY

               ZONE  1 IS FUEL
               ZONE  2 IS CLAD
               ZONE  3 IS MOD
```

```
*****************************************************************************************************************
***                                                                                                           ***
***                          LWT HFBR DESIGN U3O8-AL FUEL 93 W/O U235 PLATES IN CLOSE & PLATES @ FULL PITCH   ***
***                                                                                                           ***
*****************************************************************************************************************
*****************************************************************************************************************
***                                                                                                           ***
***                            ********** DATA LIBRARY INFORMATION **********                                ***
***                                                                                                           ***
***          UNIT                                                VOLUME                                       ***
***         NUMBER               DATA SET NAME                   NAME        UNIT FUNCTION                    ***
***         ------               -------------                   ----        -------------                    ***
***                                                                                                           ***
***           89     G:\scale43\DATALIB\FT89F001                              STANDARD COMPOSITION LIBRARY     ***
***                                                                                                           ***
***           82     G:\scale43\DATALIB\FT82F001                              CROSS SECTION LIBRARY            ***
***                                                                                                           ***
***           11     G:\SHARED\cxl\mtr35\hacx1m_94_355\FT11F001               SHORT CROSS SECTION LIBRARY      ***
***                                                                                                           ***
***           90     G:\SHARED\cxl\mtr35\hacx1m_94_355\FT90F001               INPUT DATA DIRECT ACCESS         ***
***                                                                                                           ***
*****************************************************************************************************************
*****************************************************************************************************************
***                                                                                                           ***
***                                                                                                           ***
***                                    STANDARD COMPOSITION LIBRARY DATA                                      ***
***                                    ---------------------------------                                      ***
***                                                                                                           ***
***            UNIT NUMBER  :  89                                                                             ***
***                                                                                                           ***
***            DATASET NAME :  G:\scale43\DATALIB\FT89F001                                                    ***
***                                                                                                           ***
***            LIBRARY TITLE:  SCALE-4 STANDARD COMPOSITION LIBRARY                                           ***
***                            637 STANDARD COMPOSITIONS, 490 NUCLIDES                                        ***
***                            90 ELEMENTS WITH VARIABLE ISOTOPIC DISTRBUTIONS.                               ***
***                                                                                                           ***
***            CREATION DATE:   6/30/95                                                                       ***
***                                                                                                           ***
***                                                                                                           ***
***                                                                                                           ***
***                                      CROSS SECTION LIBRARY DATA                                           ***
***                                     ---------------------------                                           ***
***                                                                                                           ***
***            UNIT NUMBER  :  82                                                                             ***
***                                                                                                           ***
***            DATASET NAME :  G:\scale43\DATALIB\FT82F001                                                    ***
***                                                                                                           ***
***            LIBRARY TITLE:  SCALE 4.2 - 27 GROUP NEUTRON GROUP LIBRARY                                     ***
***                               BASED ON ENDF-B VERSION 4 DATA                                              ***
***                                  COMPILED FOR NRC     1/27/89                                             ***
***                                     LAST UPDATED                                          08/12/94       ***
***                                        L.M.PETRIE   -   ORNL                                              ***
***                                                                                                           ***
***                                                                                                           ***
***                                                                                                           ***
***                                                                                                           ***
*****************************************************************************************************************
*****************************************************************************************************************
```

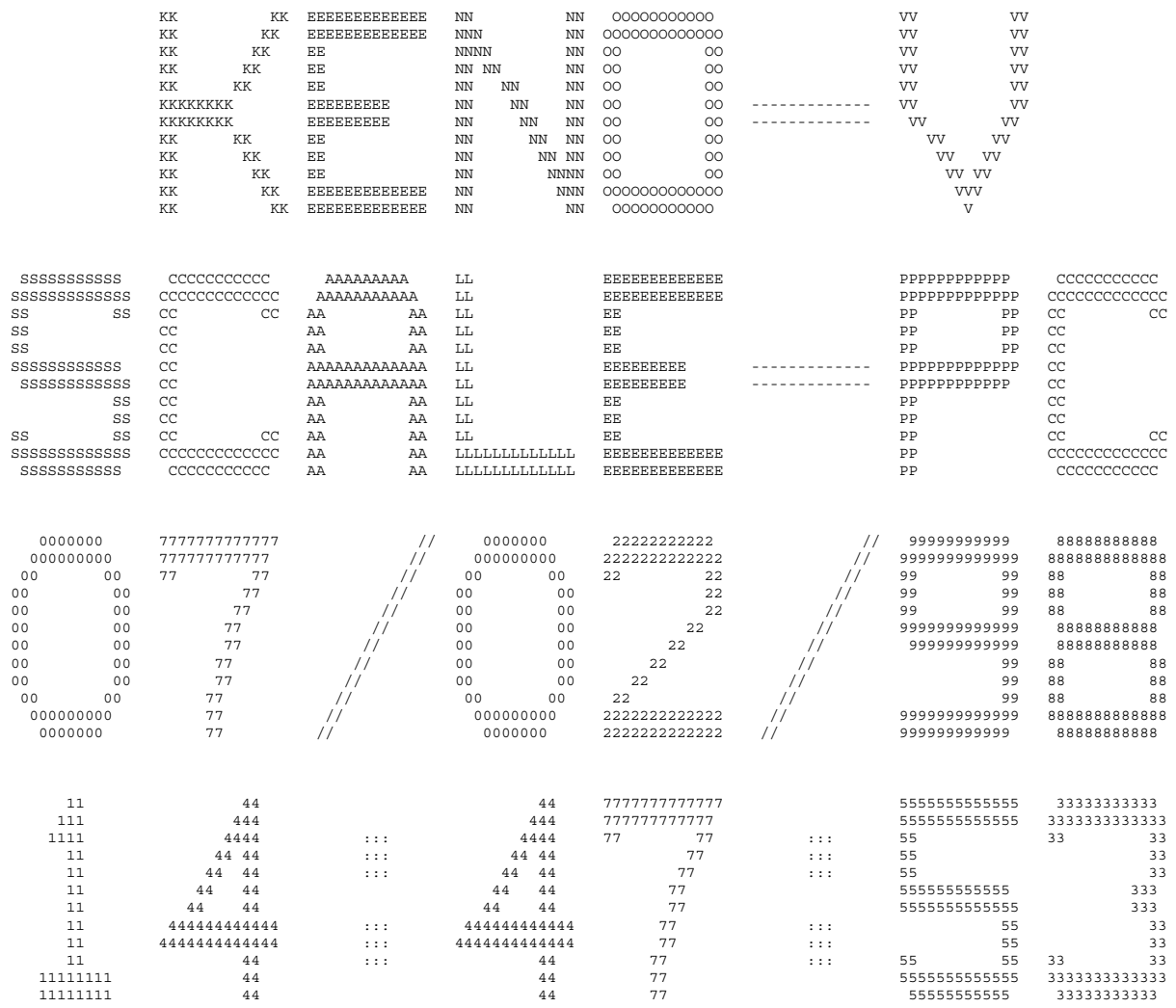
KK KK EEEEEEEEEEEE NN NN OOOOOOOOOO VV VV
KK KK EEEEEEEEEEEE NNN NN OOOOOOOOOOOO VV VV
KK KK EE NNNN NN OO OO VV VV
KK KK EE NN NN NN OO OO VV VV
KK KK EE NN NN NN OO OO VV VV
KKKKKKKK EEEEEEEE NN NN NN OO OO VV VV
KKKKKKKK EEEEEEEE NN NN NN OO OO VV VV
KK KK EE NN NN NN OO OO VV VV
KK KK EE NN NN NN OO OO VV VV
KK KK EE NN NNNN OO OO VV VV
KK KK EEEEEEEEEEEE NN NNN OOOOOOOOOOOO VVV
KK KK EEEEEEEEEEEE NN NN OOOOOOOOOO V
SSSSSSSSSS CCCCCCCCCC AAAAAAAAA LL EEEEEEEEEEEE PPPPPPPPPP CCCCCCCCCC
SSSSSSSSSSS CCCCCCCCCCCC AAAAAAAAAA LL EEEEEEEEEEEE PPPPPPPPPPP CCCCCCCCCCCC
SS SS CC CC AA AA LL EE PP PP CC CC
SS CC AA AA LL EE PP PP CC
SS CC AA AA LL EE PP PP CC
SSSSSSSSSSS CC AAAAAAAAAAAAA LL EEEEEEEE PPPPPPPPPPP CC
SSSSSSSSSS CC AAAAAAAAAAAAA LL EEEEEEEE PPPPPPPPPP CC
SS CC AA AA LL EE PP CC
SS CC AA AA LL EE PP CC
SS SS CC CC AA AA LL EE PP CC CC
SSSSSSSSSSS CCCCCCCCCCCC AA AA LLLLLLLLLLL EEEEEEEEEEE PP CCCCCCCCCCC
SSSSSSSSSS CCCCCCCCCC AA AA LLLLLLLLLLL EEEEEEEEEEE PP CCCCCCCCCC
0000000 7777777777777 // 0000000 22222222222 // 99999999999 88888888888
000000000 777777777777 // 000000000 2222222222222 // 9999999999999 8888888888888
00 00 77 77 // 00 00 22 22 // 99 99 88 88
00 00 77 // 00 00 22 // 99 99 88 88
00 00 77 // 00 00 22 // 99 99 88 88
00 00 77 // 00 00 22 // 9999999999999 88888888888
00 00 77 // 00 00 22 // 999999999999 88888888888
00 00 77 // 00 00 22 // 99 88 88
00 00 77 // 00 00 22 // 99 88 88
00 00 77 // 00 00 22 // 99 88 88
000000000 77 // 000000000 2222222222222 // 9999999999999 8888888888888
0000000 77 // 0000000 2222222222222 // 999999999999 88888888888
11 44 44 7777777777777 5555555555555 33333333333
111 444 444 777777777777 5555555555555 3333333333333
1111 4444 ::: 4444 77 77 ::: 55 33 33
11 44 44 ::: 44 44 77 ::: 55 33
11 44 44 ::: 44 44 77 ::: 55 33
11 44 44 44 44 77 5555555555555 333
11 44 44 44 44 77 5555555555555 333
11 444444444444 ::: 444444444444 77 ::: 55 33
11 4444444444444 ::: 4444444444444 77 ::: 55 33
11 44 ::: 44 77 ::: 55 55 33 33
11111111 44 44 77 5555555555555 3333333333333
11111111 44 44 77 55555555555 33333333333

```
********************************************************************************
********************************************************************************
********************************************************************************
*****                                                                      *****
*****                  PROGRAM VERIFICATION INFORMATION                    *****
*****                                                                      *****
*****                CODE SYSTEM:  SCALE-PC VERSION:  4.3                  *****
*****                                                                      *****
********************************************************************************
********************************************************************************
*****                                                                      *****
*****                                                                      *****
*****              PROGRAM:  O0O009                                        *****
*****                                                                      *****
*****        CREATION DATE:  03-08-96                                      *****
*****                                                                      *****
*****              VOLUME:   ENG                                           *****
*****                                                                      *****
*****              LIBRARY:  G:\SCALE43\EXE                                *****
*****                                                                      *****
*****                                                                      *****
*****      PRODUCTION CODE:  KENOVA                                        *****
*****                                                                      *****
*****              VERSION:  3.1                                           *****
*****                                                                      *****
*****              JOBNAME:  SCALE-PC                                      *****
*****                                                                      *****
*****    DATE OF EXECUTION:  07/02/98                                      *****
*****                                                                      *****
*****    TIME OF EXECUTION:  14:47:53                                      *****
*****                                                                      *****
*****                                                                      *****
********************************************************************************
********************************************************************************
********************************************************************************
```

```
*****************************************************************************************************************
***                                                                                                           ***
***                                                                                                           ***
***                                                                                                           ***
*****************************************************************************************************************
***                              ******       NUMERIC PARAMETERS       ******                                ***
***                                                                                                           ***
***                                                                                                           ***
***                    TME       MAXIMUM PROBLEM TIME (MIN)                        30.00                    ***
***                                                                                                           ***
***                    TBA       TIME PER GENERATION (MIN)                          0.50                    ***
***                                                                                                           ***
***                    GEN       NUMBER OF GENERATIONS                               206                    ***
***                                                                                                           ***
***                    NPG       NUMBER PER GENERATION                               800                    ***
***                                                                                                           ***
***                    NSK       NUMBER OF GENERATIONS TO BE SKIPPED                   3                    ***
***                                                                                                           ***
***                    BEG       BEGINNING GENERATION NUMBER                           1                    ***
***                                                                                                           ***
***                    RES       GENERATIONS BETWEEN CHECKPOINTS                       0                    ***
***                                                                                                           ***
***                    X1D       NUMBER OF EXTRA 1-D CROSS SECTIONS                    1                    ***
***                                                                                                           ***
***                    NBK       NEUTRON BANK SIZE                                   825                    ***
***                                                                                                           ***
***                    XNB       EXTRA POSITIONS IN NEUTRON BANK                       0                    ***
***                                                                                                           ***
***                    NFB       FISSION BANK SIZE                                   800                    ***
***                                                                                                           ***
***                    XFB       EXTRA POSITIONS IN FISSION BANK                       0                    ***
***                                                                                                           ***
***                    WTA       DEFAULT VALUE OF WEIGHT AVERAGE                  0.5000                    ***
***                                                                                                           ***
***                    WTH       WEIGHT HIGH FOR SPLITTING                        3.0000                    ***
***                                                                                                           ***
***                    WTL       WEIGHT LOW FOR RUSSIAN ROULETTE                  0.3333                    ***
***                                                                                                           ***
***                    RND       STARTING RANDOM NUMBER                                2                    ***
***                                                                                                           ***
***                    NB8       NUMBER OF D.A. BLOCKS ON UNIT  8                    200                    ***
***                                                                                                           ***
***                    NL8       LENGTH OF D.A. BLOCKS ON UNIT  8                    512                    ***
***                                                                                                           ***
***                    ADJ       MODE OF CALCULATION                              FORWARD                   ***
***                                                                                                           ***
***                              INPUT DATA WRITTEN ON RESTART UNIT                    NO                    ***
***                                                                                                           ***
***                              BINARY DATA INTERFACE                                YES                    ***
***                                                                                                           ***
***                                                                                                           ***
*****************************************************************************************************************
*****************************************************************************************************************
```

```
*****************************************************************************************************************
*****************************************************************************************************************
***                                                                                                           ***
***                                                                                                           ***
***                                                                                                           ***
*****************************************************************************************************************
***                              ******      LOGICAL PARAMETERS        ******                                 ***
***                                                                                                           ***
***  RUN  EXECUTE PROBLEM AFTER CHECKING DATA    YES            PLT  PLOT PICTURE MAP(S)                    YES ***
***                                                                                                           ***
***  FLX  COMPUTE FLUX                            NO            FDN  COMPUTE FISSION DENSITIES               NO ***
***                                                                                                           ***
***  SMU  COMPUTE AVG UNIT SELF-MULTIPLICATION    NO            NUB  COMPUTE NU-BAR & AVG FISSION GROUP      YES ***
***                                                                                                           ***
***  MKU  COMPUTE MATRIX K-EFF BY UNIT NUMBER     NO            MKP  COMPUTE MATRIX K-EFF BY UNIT LOCATION    NO ***
***                                                                                                           ***
***  CKU  COMPUTE COFACTOR K-EFF BY UNIT NUMBER   NO            CKP  COMPUTE COFACTOR K-EFF BY UNIT LOCATION  NO ***
***                                                                                                           ***
***  FMU  PRINT FISS PROD MATRIX BY UNIT NUMBER   NO            FMP  PRINT FISS PROD MATRIX BY UNIT LOCATION  NO ***
***                                                                                                           ***
***  MKH  COMPUTE MATRIX K-EFF BY HOLE NUMBER     NO            MKA  COMPUTE MATRIX K-EFF BY ARRAY NUMBER     NO ***
***                                                                                                           ***
***  CKH  COMPUTE COFACTOR K-EFF BY HOLE NUMBER   NO            CKA  COMPUTE COFACTOR K-EFF BY ARRAY NUMBER   NO ***
***                                                                                                           ***
***  FMH  PRINT FISS PROD MATRIX BY HOLE NUMBER   NO            FMA  PRINT FISS PROD MATRIX BY ARRAY NUMBER   NO ***
***                                                                                                           ***
***  HHL  COLLECT MATRIX BY HIGHEST HOLE LEVEL    NO            HAL  COLLECT MATRIX BY HIGHEST ARRAY LEVEL    NO ***
***                                                                                                           ***
***  AMX  PRINT ALL MIXED CROSS SECTIONS          NO            FAR  PRINT FIS. AND ABS. BY REGION           NO ***
***                                                                                                           ***
***  XS1  PRINT 1-D MIXTURE X-SECTIONS            NO            GAS  PRINT FAR BY GROUP                      NO ***
***                                                                                                           ***
***  XS2  PRINT 2-D MIXTURE X-SECTIONS            NO            PAX  PRINT XSEC-ALBEDO CORRELATION TABLES    NO ***
***                                                                                                           ***
***  XAP  PRINT MIXTURE ANGLES & PROBABILITIES    NO            PWT  PRINT WEIGHT AVERAGE ARRAY              NO ***
***                                                                                                           ***
***  PKI  PRINT FISSION SPECTRUM                  NO            PGM  PRINT INPUT GEOMETRY                    NO ***
***                                                                                                           ***
***  P1D  PRINT EXTRA 1-D CROSS SECTIONS          NO            BUG  PRINT DEBUG INFORMATION                 NO ***
***                                                                                                           ***
***                                                             TRK  PRINT TRACKING INFORMATION              NO ***
***                                                                                                           ***
***                                                                                                           ***
*****************************************************************************************************************
*****************************************************************************************************************
*****************************************************************************************************************
                                  PARAMETER INPUT COMPLETED

                      ........    0 IO'S WERE USED READING THE PARAMETER DATA      ........

                     ************** DATA READING COMPLETED **************
```

```
*****************************************************************************************************************************
***                                                                                                                       ***
***                                                                                                                       ***
***                                                                                                                       ***
*****************************************************************************************************************************
*****************************************************************************************************************************
***                                                                                                                       ***
***          UNIT                                                    VOLUME                                               ***
***         NUMBER              DATA SET NAME                        NAME        UNIT FUNCTION                            ***
***         ------              -------------                        ----        -------------                            ***
***                                                                                                                       ***
***      XSC  14     G:\SHARED\cxl\mtr35\hacx1m_94_355\FT14F001                 MIXED CROSS SECTIONS                     ***
***                                                                                                                       ***
***      ALB  79     G:\scale43\DATALIB\FT79F001                                INPUT ALBEDOS                            ***
***                                                                                                                       ***
***      WTS  80     G:\scale43\DATALIB\FT80F001                                INPUT WEIGHTS                            ***
***                                                                                                                       ***
***      SKT  16      UNKNOWN                                                   WRITE SCRATCH DATA                       ***
***                                                                                                                       ***
***      BIN  95     G:\SHARED\cxl\mtr35\hacx1m_94_355\FT95F001                 BINARY INPUT DATA                        ***
***                                                                                                                       ***
***      RST  95     G:\SHARED\cxl\mtr35\hacx1m_94_355\FT95F001                 READ RESTART DATA                        ***
***                                                                                                                       ***
***      LIB   4     G:\SHARED\cxl\mtr35\hacx1m_94_355\FT04F001                 INPUT AMPX WORKING LIBRARY               ***
***                                                                                                                       ***
***            8     G:\SHARED\cxl\mtr35\hacx1m_94_355\FT08F001                 INPUT DATA DIRECT ACCESS                 ***
***                                                                                                                       ***
***            9      UNKNOWN                                                   SUPER GROUPED DIRECT ACCESS              ***
***                                                                                                                       ***
***           10      UNKNOWN                                                   XSEC MIXING DIRECT ACCESS                ***
***                                                                                                                       ***
*****************************************************************************************************************************

                        ........    0 IO'S WERE USED PREPARING INPUT DATA    ........


                          CROSS SECTIONS READ FROM THE AMPX WORKING LIBRARY ON UNIT    4
```

```
                                        MIXING TABLE

                                  NUMBER OF SCATTERING ANGLES =  2
                                CROSS SECTION MESSAGE THRESHOLD =3.0E-05

MIXTURE =     1          DENSITY(G/CC) =  3.9943
   NUCLIDE   ATOM-DENS.   WGT. FRAC.     ZA      AWT             NUCLIDE TITLE
   1008016  8.14438E-03  5.41402E-02    8016    15.9904      OXYGEN-16      ENDF/B-IV MAT 1276                      UPDATED
08/12/94
   1013027  5.76000E-02  6.46096E-01   13027    26.9818     AL-27 1193 218 GP 040375(5)                             UPDATED
08/12/94
   1092235  2.88373E-03  2.81778E-01   92235   235.0441      URANIUM-235    ENDF/B-IV MAT 1261                      UPDATED
08/12/94
   1092238  1.81743E-04  1.79858E-02   92238   238.0510      URANIUM-238    ENDF/B-IV MAT 1262                      UPDATED
08/12/94

MIXTURE =     2          DENSITY(G/CC) =  2.7020
   NUCLIDE   ATOM-DENS.   WGT. FRAC.     ZA      AWT             NUCLIDE TITLE
   2013027  6.03066E-02  1.00000E+00   13027    26.9818     AL-27 1193 218 GP 040375(5)                             UPDATED
08/12/94

MIXTURE =     3          DENSITY(G/CC) = 0.99817
   NUCLIDE   ATOM-DENS.   WGT. FRAC.     ZA      AWT             NUCLIDE TITLE
   3001001  6.67692E-02  1.11927E-01    1001     1.0077      HYDROGEN       ENDF/B-IV MAT 1269/THRM1002             UPDATED
08/12/94
   3008016  3.33846E-02  8.88074E-01    8016    15.9904      OXYGEN-16      ENDF/B-IV MAT 1276                      UPDATED
08/12/94

MIXTURE =     4          DENSITY(G/CC) =  2.7020
   NUCLIDE   ATOM-DENS.   WGT. FRAC.     ZA      AWT             NUCLIDE TITLE
   4013027  6.03066E-02  1.00000E+00   13027    26.9818     AL-27 1193 218 GP 040375(5)                             UPDATED
08/12/94

MIXTURE =     5          DENSITY(G/CC) =  7.9200
   NUCLIDE   ATOM-DENS.   WGT. FRAC.     ZA      AWT             NUCLIDE TITLE
   5024304  1.74286E-02  1.90000E-01   24000    51.9957     CR 1191 WT SS-304(1/EST) P-3 293K SP=5+4(42375)'        UPDATED
08/12/94
   5025055  1.73633E-03  1.99999E-02   25055    54.9379      MANGANESE-55   ENDF/B-IV MAT 1197                      UPDATED
08/12/94
   5026304  5.93579E-02  6.95000E-01   26000    55.8447     FE 1192 WT SS-304(1/EST) P-3 293K SP=5+4(42375)'        UPDATED
08/12/94
   5028304  7.72070E-03  9.50001E-02   28000    58.6872     NI 1190 WT SS-304(1/EST) P-3 293K SP=5+4(42375)'        UPDATED
08/12/94

MIXTURE =     6          DENSITY(G/CC) =  11.344
   NUCLIDE   ATOM-DENS.   WGT. FRAC.     ZA      AWT             NUCLIDE TITLE
   6082000  3.29690E-02  1.00000E+00   82000   207.2100     PB   1288 218NGP 042375 P-3 293K                        UPDATED
08/12/94

MIXTURE =     7          DENSITY(G/CC) = 0.99817E-20
   NUCLIDE   ATOM-DENS.   WGT. FRAC.     ZA      AWT             NUCLIDE TITLE
   7001001  6.67692E-22  1.11927E-01    1001     1.0077      HYDROGEN       ENDF/B-IV MAT 1269/THRM1002             UPDATED
08/12/94
   7008016  3.33846E-22  8.88073E-01    8016    15.9904      OXYGEN-16      ENDF/B-IV MAT 1276                      UPDATED
08/12/94

MIXTURE =     8          DENSITY(G/CC) = 0.99817E-20
   NUCLIDE   ATOM-DENS.   WGT. FRAC.     ZA      AWT             NUCLIDE TITLE
   8001001  6.67692E-22  1.11927E-01    1001     1.0077      HYDROGEN       ENDF/B-IV MAT 1269/THRM1002             UPDATED
08/12/94
   8008016  3.33846E-22  8.88073E-01    8016    15.9904      OXYGEN-16      ENDF/B-IV MAT 1276                      UPDATED
08/12/94

                          3001001     HYDROGEN       ENDF/B-IV MAT 1269/THRM1002            UPDATED 08/12/94
                          7001001     HYDROGEN       ENDF/B-IV MAT 1269/THRM1002            UPDATED 08/12/94
                          8001001     HYDROGEN       ENDF/B-IV MAT 1269/THRM1002            UPDATED 08/12/94
                          1008016     OXYGEN-16      ENDF/B-IV MAT 1276                     UPDATED 08/12/94
                          3008016     OXYGEN-16      ENDF/B-IV MAT 1276                     UPDATED 08/12/94
                          7008016     OXYGEN-16      ENDF/B-IV MAT 1276                     UPDATED 08/12/94
                          8008016     OXYGEN-16      ENDF/B-IV MAT 1276                     UPDATED 08/12/94
                          1013027    AL-27 1193 218 GP 040375(5)                            UPDATED 08/12/94
                          2013027    AL-27 1193 218 GP 040375(5)                            UPDATED 08/12/94
                          4013027    AL-27 1193 218 GP 040375(5)                            UPDATED 08/12/94
                          5024304    CR 1191 WT SS-304(1/EST) P-3 293K SP=5+4(42375)'       UPDATED 08/12/94
                          5025055     MANGANESE-55   ENDF/B-IV MAT 1197                     UPDATED 08/12/94
                          5026304    FE 1192 WT SS-304(1/EST) P-3 293K SP=5+4(42375)'       UPDATED 08/12/94
                          5028304    NI 1190 WT SS-304(1/EST) P-3 293K SP=5+4(42375)'       UPDATED 08/12/94
                          6082000    PB   1288 218NGP 042375 P-3 293K                       UPDATED 08/12/94
                          1092235     URANIUM-235    ENDF/B-IV MAT 1261                     UPDATED 08/12/94
                          1092238     URANIUM-238    ENDF/B-IV MAT 1262                     UPDATED 08/12/94

KENO MESSAGE NUMBER K5-222       1 TRANSFERS FOR MIXTURE     3 WERE CORRECTED FOR BAD MOMENTS.

KENO MESSAGE NUMBER K5-222       1 TRANSFERS FOR MIXTURE     7 WERE CORRECTED FOR BAD MOMENTS.

KENO MESSAGE NUMBER K5-222       1 TRANSFERS FOR MIXTURE     8 WERE CORRECTED FOR BAD MOMENTS.

                         ........    0 IO'S WERE USED MIXING CROSS-SECTIONS       ........

                          1-D CROSS SECTION ARRAY ID NUMBERS
                             1  2002  1452    27    18  1018
```

```
*****************************************************************************************************
***                                                                                               ***
***                                                                                               ***
***                                                                                               ***
*****************************************************************************************************
*****************************************************************************************************
***                                                                                               ***
***                              ****** ADDITIONAL INFORMATION ******                             ***
***                                                                                               ***
***  NUMBER OF ENERGY GROUPS              27       USE LATTICE GEOMETRY                    YES  ***
***                                                                                               ***
***  NO. OF FISSION SPECTRUM SOURCE GROUP  1       GLOBAL ARRAY NUMBER                       0  ***
***                                                                                               ***
***  NO. OF SCATTERING ANGLES IN XSECS     2       NUMBER OF UNITS IN THE GLOBAL X DIR.      0  ***
***                                                                                               ***
***  ENTRIES/NEUTRON IN THE NEUTRON BANK  24       NUMBER OF UNITS IN THE GLOBAL Y DIR.      0  ***
***                                                                                               ***
***  ENTRIES/NEUTRON IN THE FISSION BANK  17       NUMBER OF UNITS IN THE GLOBAL Z DIR.      0  ***
***                                                                                               ***
***  NUMBER OF MIXTURES USED               7       USE A GLOBAL REFLECTOR                  YES  ***
***                                                                                               ***
***  NUMBER OF BIAS ID'S USED              1       USE NESTED HOLES                        YES  ***
***                                                                                               ***
***  NUMBER OF DIFFERENTIAL ALBEDOS USED   0       NUMBER OF HOLES                          17  ***
***                                                                                               ***
***  TOTAL INPUT GEOMETRY REGIONS         58       MAXIMUM HOLE NESTING LEVEL                2  ***
***                                                                                               ***
***  NUMBER OF GEOMETRY REGIONS USED      58       USE NESTED ARRAYS                       YES  ***
***                                                                                               ***
***  LARGEST GEOMETRY UNIT NUMBER        111       NUMBER OF ARRAYS USED                     4  ***
***                                                                                               ***
***  LARGEST ARRAY NUMBER                  4       MAXIMUM ARRAY NESTING LEVEL               2  ***
***                                                                                               ***
***                                                                                               ***
***  +X BOUNDARY CONDITION               MIR       -X BOUNDARY CONDITION                   MIR  ***
***                                                                                               ***
***  +Y BOUNDARY CONDITION               MIR       -Y BOUNDARY CONDITION                   MIR  ***
***                                                                                               ***
***  +Z BOUNDARY CONDITION               MIR       -Z BOUNDARY CONDITION                   MIR  ***
***                                                                                               ***
*****************************************************************************************************
```

```
*******************************************************************************************
***                                                                                     ***
***                                                                                     ***
***                                                                                     ***
*******************************************************************************************
*******************************************************************************************
***                                                                                     ***
***                    ****** SPACE AND SUPERGROUP INFORMATION ******                   ***
***                                                                                     ***
***       100000 WORDS IS THE TOTAL SPACE AVAILABLE.                                    ***
***                                                                                     ***
***        37327 WORDS WERE USED FOR NON-SUPERGROUP STORAGE.                            ***
***                                                                                     ***
***        62673 WORDS OF STORAGE ARE AVAILABLE FOR SUPERGROUPED DATA.                  ***
***                                                                                     ***
***        99750 WORDS OF STORAGE ARE AVAILABLE FOR CONSTRUCTING THE SUPERGROUPS.       ***
***                                                                                     ***
***        62613 WORDS OF STORAGE ARE AVAILABLE TO EACH SUPERGROUP.                     ***
***                                                                                     ***
***          958 WORDS ARE NEEDED FOR THE LARGEST GROUP.                                ***
***                                                                                     ***
***        38501 WORDS OF STORAGE IS SUFFICIENT TO RUN THIS PROBLEM.                    ***
***                                                                                     ***
***        48151 WORDS OF STORAGE WILL ALLOW THE PROBLEM TO RUN WITH ONE SUPERGROUP.     ***
***                                                                                     ***
***        48288 WORDS OF STORAGE WILL BE USED TO RUN THIS PROBLEM.                     ***
***                                                                                     ***
*******************************************************************************************
*******************************************************************************************
***                                                                                     ***
***                   STARTING      ENDING       XSEC       ALBEDO      TOTAL          ***
***   SUPERGROUP        GROUP        GROUP      LENGTH      LENGTH      LENGTH          ***
***                                                                                     ***
***                                                                                     ***
***          1            1            27         2124           0       10764          ***
***                                                                                     ***
*******************************************************************************************

            ........    0 IO'S WERE USED IN SUPERGROUPING    ........

          ************************************************************
          **                                                        **
          **   ARRAY      UNITS IN   UNITS IN   UNITS IN   NESTING  **
          **   NUMBER      X DIR.     Y DIR.     Z DIR.     LEVEL   **
          **                                                        **
          **     1            1         20          1          2    **
          **                                                        **
          **     2            2          1          1          1    **
          **                                                        **
          **     3            3          1          1          1    **
          **                                                        **
          **     4            2          1          1          1    **
          **                                                        **
          ************************************************************

            ........    0 IO'S WERE USED LOADING THE DATA    ........
```

```
                MEDIA BIAS      GEOMETRY DESCRIPTION FOR THOSE UNITS UTILIZED IN THIS PROBLEM
REGION           NUM   ID

                                              -----   UNIT     1   -----

AL PLATE CELL

  1 CUBOID           2  1      +X =  3.1250     -X = -3.1250     +Y = 0.12700     -Y =-0.12700     +Z =  10.000     -Z = -10.000

                                              -----   UNIT     2   -----

HFBR FUEL PLATE CELL 1

  1 CUBOID           1  1      +X =  2.8600     -X = -2.8600     +Y = 2.65000E-02 -Y =-2.65000E-02 +Z =  10.000     -Z = -10.000

  2 CUBOID           2  1      +X =  3.1250     -X = -3.1250     +Y = 6.35000E-02 -Y =-6.35000E-02 +Z =  10.000     -Z = -10.000

  3 CUBOID           3  1      +X =  3.1250     -X = -3.1250     +Y = 0.22860     -Y =-0.22860     +Z =  10.000     -Z = -10.000

                                              -----   UNIT     3   -----

HFBR FUEL PLATE CELL 2

  1 CUBOID           1  1      +X =  2.8600     -X = -2.8600     +Y = 2.65000E-02 -Y =-2.65000E-02 +Z =  10.000     -Z = -10.000

  2 CUBOID           2  1      +X =  3.1250     -X = -3.1250     +Y = 6.35000E-02 -Y =-6.35000E-02 +Z =  10.000     -Z = -10.000

  3 CUBOID           3  1      +X =  3.1250     -X = -3.1250     +Y = 0.22860     -Y =-0.22860     +Z =  10.000     -Z = -10.000

                                              -----   UNIT     4   -----

HFBR FUEL PLATE CELL 3

  1 CUBOID           1  1      +X =  2.8600     -X = -2.8600     +Y = 2.65000E-02 -Y =-2.65000E-02 +Z =  10.000     -Z = -10.000

  2 CUBOID           2  1      +X =  3.1250     -X = -3.1250     +Y = 6.35000E-02 -Y =-6.35000E-02 +Z =  10.000     -Z = -10.000

  3 CUBOID           3  1      +X =  3.1250     -X = -3.1250     +Y = 0.22860     -Y =-0.22860     +Z =  10.000     -Z = -10.000

                                              -----   UNIT     5   -----

HFBR FUEL PLATE CELL 4

  1 CUBOID           1  1      +X =  2.8600     -X = -2.8600     +Y = 2.65000E-02 -Y =-2.65000E-02 +Z =  10.000     -Z = -10.000

  2 CUBOID           2  1      +X =  3.1250     -X = -3.1250     +Y = 6.35000E-02 -Y =-6.35000E-02 +Z =  10.000     -Z = -10.000

  3 CUBOID           3  1      +X =  3.1250     -X = -3.1250     +Y = 0.22860     -Y =-0.22860     +Z =  10.000     -Z = -10.000
```

```
                MEDIA BIAS      GEOMETRY DESCRIPTION FOR THOSE UNITS UTILIZED IN THIS PROBLEM
REGION           NUM   ID

                                                -----   UNIT     6   -----

HFBR FUEL PLATE CELL 5

  1 CUBOID           1  1      +X =  2.8600     -X = -2.8600     +Y = 2.65000E-02 -Y =-2.65000E-02 +Z =  10.000     -Z = -10.000

  2 CUBOID           2  1      +X =  3.1250     -X = -3.1250     +Y = 6.35000E-02 -Y =-6.35000E-02 +Z =  10.000     -Z = -10.000

  3 CUBOID           3  1      +X =  3.1250     -X = -3.1250     +Y = 0.22860     -Y =-0.22860     +Z =  10.000     -Z = -10.000

                                                -----   UNIT     7   -----

HFBR FUEL PLATE CELL 6

  1 CUBOID           1  1      +X =  2.8600     -X = -2.8600     +Y = 2.65000E-02 -Y =-2.65000E-02 +Z =  10.000     -Z = -10.000

  2 CUBOID           2  1      +X =  3.1250     -X = -3.1250     +Y = 6.35000E-02 -Y =-6.35000E-02 +Z =  10.000     -Z = -10.000

  3 CUBOID           3  1      +X =  3.1250     -X = -3.1250     +Y = 0.22860     -Y =-0.22860     +Z =  10.000     -Z = -10.000

                                                -----   UNIT     8   -----

HFBR FUEL PLATE CELL 7

  1 CUBOID           1  1      +X =  2.8600     -X = -2.8600     +Y = 2.65000E-02 -Y =-2.65000E-02 +Z =  10.000     -Z = -10.000

  2 CUBOID           2  1      +X =  3.1250     -X = -3.1250     +Y = 6.35000E-02 -Y =-6.35000E-02 +Z =  10.000     -Z = -10.000

  3 CUBOID           3  1      +X =  3.1250     -X = -3.1250     +Y = 0.22860     -Y =-0.22860     +Z =  10.000     -Z = -10.000

                                           -----   UNIT    10  EXTERNAL TO LATTICE  1   -----

HFBR FUEL ARRAY WITH HALF OF 1/4 PLATE ON RIGHT -  TOP STACK

  1 ARRAY NUMBER     1         +X =  3.8935     -X = -2.3565     +Y =  4.3688     -Y = -4.3688     +Z =  10.000     -Z = -10.000

  2 CUBOID           3  1      +X =  4.3688     -X = -4.3688     +Y =  4.3688     -Y = -4.3688     +Z =  10.000     -Z = -10.000

    HOLE NUMBER      7       AT X = -4.1312      Y = 0.00000      Z = 0.00000     IS UNIT NUMBER     81

    HOLE NUMBER      8       AT X =  4.1312      Y = 0.00000      Z = 0.00000     IS UNIT NUMBER     83

  3 CUBOID           5  1      +X =  4.6736     -X = -4.3688     +Y =  4.3688     -Y = -4.3688     +Z =  10.000     -Z = -10.000
```

```
                MEDIA BIAS      GEOMETRY DESCRIPTION FOR THOSE UNITS UTILIZED IN THIS PROBLEM
REGION           NUM   ID

                                      -----   UNIT    11  EXTERNAL TO LATTICE  1   -----

HFBR FUEL WITH HALF OF 1/4 IN. PLATE ON LEFT  TOP STACK

  1 ARRAY NUMBER     1         +X =  2.3565     -X = -3.8935     +Y =  4.3688     -Y = -4.3688     +Z =  10.000     -Z = -10.000

  2 CUBOID           3  1      +X =  4.3688     -X = -4.3688     +Y =  4.3688     -Y = -4.3688     +Z =  10.000     -Z = -10.000

    HOLE NUMBER     11       AT X = -4.1312      Y = 0.00000      Z = 0.00000     IS UNIT NUMBER     81

    HOLE NUMBER     12       AT X =  4.1312      Y = 0.00000      Z = 0.00000     IS UNIT NUMBER     83

  3 CUBOID           5  1      +X =  4.3688     -X = -4.6736     +Y =  4.3688     -Y = -4.3688     +Z =  10.000     -Z = -10.000

                                      -----   UNIT    12  EXTERNAL TO LATTICE  2   -----

2 UNIT ARRAY WITH 0.120 IN. PLATE ON TOP AND SIDES

  1 ARRAY NUMBER     2         +X =  9.0420     -X = -9.0428     +Y =  4.3688     -Y = -4.3688     +Z =  10.000     -Z = -10.000

  2 CUBOID           5  1      +X =  9.3468     -X = -9.3476     +Y =  4.6736     -Y = -4.3688     +Z =  10.000     -Z = -10.000

                                      -----   UNIT    13  EXTERNAL TO LATTICE  3   -----

3 UNIT ARRAY WITH REST OF 5/16 WEB

  1 ARRAY NUMBER     3         +X =  14.173     -X = -14.174     +Y =  4.3688     -Y = -4.3688     +Z =  10.000     -Z = -10.000

  2 CUBOID           5  1      +X =  14.528     -X = -14.529     +Y =  5.0800     -Y = -5.0800     +Z =  10.000     -Z = -10.000

                                      -----   UNIT    14  EXTERNAL TO LATTICE  4   -----

2 UNIT ARRAY WITH 0.120 IN. PLATE ON BOTTOM AND SIDES

  1 ARRAY NUMBER     4         +X =  9.0420     -X = -9.0428     +Y =  4.3688     -Y = -4.3688     +Z =  10.000     -Z = -10.000

  2 CUBOID           5  1      +X =  9.3468     -X = -9.3476     +Y =  4.3688     -Y = -4.6736     +Z =  10.000     -Z = -10.000
```

```
                MEDIA BIAS      GEOMETRY DESCRIPTION FOR THOSE UNITS UTILIZED IN THIS PROBLEM
REGION           NUM   ID

                                    ******************   GLOBAL   ******************
                                                -----   UNIT    15   -----

7 HFBR ASSEMBLIES IN THE LWT

  1 CYLINDER         3  1  RADIUS =  17.050     +Z =  10.000     -Z = -10.000     CENTERLINE IS AT  X = 0.00000      Y = 0.00000

    HOLE NUMBER     15       AT X = 0.00000      Y =  9.4489      Z = 0.00000     IS UNIT NUMBER     12

    HOLE NUMBER     16       AT X = 0.00000      Y = 0.00000      Z = 0.00000     IS UNIT NUMBER     13

    HOLE NUMBER     17       AT X = 0.00000      Y = -9.4489      Z = 0.00000     IS UNIT NUMBER     14

  2 CYLINDER         5  1  RADIUS =  18.891     +Z =  10.000     -Z = -10.000     CENTERLINE IS AT  X = 0.00000      Y = 0.00000

  3 CYLINDER         6  1  RADIUS =  33.496     +Z =  10.000     -Z = -10.000     CENTERLINE IS AT  X = 0.00000      Y = 0.00000

  4 CYLINDER         5  1  RADIUS =  36.544     +Z =  10.000     -Z = -10.000     CENTERLINE IS AT  X = 0.00000      Y = 0.00000

  5 CYLINDER         8  1  RADIUS =  49.244     +Z =  10.000     -Z = -10.000     CENTERLINE IS AT  X = 0.00000      Y = 0.00000

  6 CYLINDER         5  1  RADIUS =  49.854     +Z =  10.000     -Z = -10.000     CENTERLINE IS AT  X = 0.00000      Y = 0.00000

  7 CUBOID           7  1      +X =  49.854     -X = -49.854     +Y =  49.854     -Y = -49.854     +Z =  10.000     -Z = -10.000

                                                -----   UNIT    81   -----

  1 CUBOID           2  1      +X = 0.23750     -X =-0.23750     +Y =  4.1000     -Y = -4.1000     +Z =  10.000     -Z = -10.000

                                                -----   UNIT    83   -----

  1 CUBOID           2  1      +X = 0.23750     -X =-0.23750     +Y =  4.1000     -Y = -4.1000     +Z =  10.000     -Z = -10.000

                                    -----   UNIT    90  EXTERNAL TO LATTICE  1   -----

HFBR FUEL ARRAY 20 PLATES IN 5/16 IN. WEB CENTER

  1 ARRAY NUMBER     1          +X =  3.1250     -X = -3.1250     +Y =  4.3688     -Y = -4.3688     +Z =  10.000     -Z = -10.000

  2 CUBOID           3  1      +X =  4.3688     -X = -4.3688     +Y =  4.3688     -Y = -4.3688     +Z =  10.000     -Z = -10.000

    HOLE NUMBER      1       AT X = -4.1312      Y = 0.00000      Z = 0.00000     IS UNIT NUMBER     81

    HOLE NUMBER      2       AT X =  4.1312      Y = 0.00000      Z = 0.00000     IS UNIT NUMBER     83

  3 CUBOID           5  1      +X =  4.7244     -X = -4.7244     +Y =  4.3688     -Y = -4.3688     +Z =  10.000     -Z = -10.000
```

```
                MEDIA BIAS      GEOMETRY DESCRIPTION FOR THOSE UNITS UTILIZED IN THIS PROBLEM
REGION           NUM   ID

                                      -----   UNIT    91  EXTERNAL TO LATTICE  1   -----

HFBR FUEL ARRAY 20 PLATES IN 5/16 IN. WEB RIGHT

  1 ARRAY NUMBER     1         +X =  2.3565     -X = -3.8935     +Y =  4.3688     -Y = -4.3688     +Z =  10.000     -Z = -10.000

  2 CUBOID           3  1      +X =  4.3688     -X = -4.3688     +Y =  4.3688     -Y = -4.3688     +Z =  10.000     -Z = -10.000

    HOLE NUMBER      3       AT X = -4.1312      Y = 0.00000      Z = 0.00000     IS UNIT NUMBER     81

    HOLE NUMBER      4       AT X =  4.1312      Y = 0.00000      Z = 0.00000     IS UNIT NUMBER     83

  3 CUBOID           5  1      +X =  4.7244     -X = -4.7244     +Y =  4.3688     -Y = -4.3688     +Z =  10.000     -Z = -10.000

                                      -----   UNIT    92  EXTERNAL TO LATTICE  1   -----

HFBR FUEL ARRAY 20 PLATES IN 5/16 IN. WEB LEFT

  1 ARRAY NUMBER     1         +X =  3.8935     -X = -2.3565     +Y =  4.3688     -Y = -4.3688     +Z =  10.000     -Z = -10.000

  2 CUBOID           3  1      +X =  4.3688     -X = -4.3688     +Y =  4.3688     -Y = -4.3688     +Z =  10.000     -Z = -10.000

    HOLE NUMBER      5       AT X = -4.1312      Y = 0.00000      Z = 0.00000     IS UNIT NUMBER     81

    HOLE NUMBER      6       AT X =  4.1312      Y = 0.00000      Z = 0.00000     IS UNIT NUMBER     83

  3 CUBOID           5  1      +X =  4.7244     -X = -4.7244     +Y =  4.3688     -Y = -4.3688     +Z =  10.000     -Z = -10.000

                                      -----   UNIT   101  EXTERNAL TO LATTICE  1   -----

HFBR FUEL ARRAY WITH HALF OF 1/4 IN. PLATE ON RIGHT -  BOTTOM STACK

  1 ARRAY NUMBER     1         +X =  3.8935     -X = -2.3565     +Y =  4.3688     -Y = -4.3688     +Z =  10.000     -Z = -10.000

  2 CUBOID           3  1      +X =  4.3688     -X = -4.3688     +Y =  4.3688     -Y = -4.3688     +Z =  10.000     -Z = -10.000

    HOLE NUMBER      9       AT X = -4.1312      Y = 0.00000      Z = 0.00000     IS UNIT NUMBER     81

    HOLE NUMBER     10       AT X =  4.1312      Y = 0.00000      Z = 0.00000     IS UNIT NUMBER     83

  3 CUBOID           5  1      +X =  4.6736     -X = -4.3688     +Y =  4.3688     -Y = -4.3688     +Z =  10.000     -Z = -10.000

                                      -----   UNIT   111  EXTERNAL TO LATTICE  1   -----

HFBR FUEL ARRAY WITH HALF OF 1/4 IN. PLATE ON LEFT - BOTTOM STACK

  1 ARRAY NUMBER     1         +X =  2.3565     -X = -3.8935     +Y =  4.3688     -Y = -4.3688     +Z =  10.000     -Z = -10.000

  2 CUBOID           3  1      +X =  4.3688     -X = -4.3688     +Y =  4.3688     -Y = -4.3688     +Z =  10.000     -Z = -10.000

    HOLE NUMBER     13       AT X = -4.1312      Y = 0.00000      Z = 0.00000     IS UNIT NUMBER     81

    HOLE NUMBER     14       AT X =  4.1312      Y = 0.00000      Z = 0.00000     IS UNIT NUMBER     83

  3 CUBOID           5  1      +X =  4.3688     -X = -4.6736     +Y =  4.3688     -Y = -4.3688     +Z =  10.000     -Z = -10.000
```

```
                -------  UNIT ORIENTATION DESCRIPTION FOR ARRAY   1         -------
Z LAYER   1, X COLUMN   1 TO   1 LEFT TO RIGHT   Y ROW   1 TO  20  BOTTOM TO TOP
 1
 2
 3
 4
 5
 5
 5
 5
 5
 5
 5
 5
 5
 5
 5
 5
 6
 7
 8
 1
                -------  UNIT ORIENTATION DESCRIPTION FOR ARRAY   2         -------
Z LAYER   1, X COLUMN   1 TO   2 LEFT TO RIGHT   Y ROW   1 TO   1  BOTTOM TO TOP
 10 11
                -------  UNIT ORIENTATION DESCRIPTION FOR ARRAY   3         -------
Z LAYER   1, X COLUMN   1 TO   3 LEFT TO RIGHT   Y ROW   1 TO   1  BOTTOM TO TOP
 92 90 91
                -------  UNIT ORIENTATION DESCRIPTION FOR ARRAY   4         -------
Z LAYER   1, X COLUMN   1 TO   2 LEFT TO RIGHT   Y ROW   1 TO   1  BOTTOM TO TOP
 101 111
```

VOLUMES FOR THOSE UNITS UTILIZED IN THIS PROBLEM

UNIT	REGION	GEOMETRY REGION	VOLUME	CUMULATIVE VOLUME
1	1	1	3.17500E+01 CM**3	3.17500E+01 CM**3
2	1	2	6.06320E+00 CM**3	6.06320E+00 CM**3
	2	3	9.81180E+00 CM**3	1.58750E+01 CM**3
	3	4	4.12750E+01 CM**3	5.71500E+01 CM**3
3	1	5	6.06320E+00 CM**3	6.06320E+00 CM**3
	2	6	9.81180E+00 CM**3	1.58750E+01 CM**3
	3	7	4.12750E+01 CM**3	5.71500E+01 CM**3
4	1	8	6.06320E+00 CM**3	6.06320E+00 CM**3
	2	9	9.81180E+00 CM**3	1.58750E+01 CM**3
	3	10	4.12750E+01 CM**3	5.71500E+01 CM**3
5	1	11	6.06320E+00 CM**3	6.06320E+00 CM**3
	2	12	9.81180E+00 CM**3	1.58750E+01 CM**3
	3	13	4.12750E+01 CM**3	5.71500E+01 CM**3
6	1	14	6.06320E+00 CM**3	6.06320E+00 CM**3
	2	15	9.81180E+00 CM**3	1.58750E+01 CM**3
	3	16	4.12750E+01 CM**3	5.71500E+01 CM**3
7	1	17	6.06320E+00 CM**3	6.06320E+00 CM**3
	2	18	9.81180E+00 CM**3	1.58750E+01 CM**3
	3	19	4.12750E+01 CM**3	5.71500E+01 CM**3
8	1	20	6.06320E+00 CM**3	6.06320E+00 CM**3
	2	21	9.81180E+00 CM**3	1.58750E+01 CM**3
	3	22	4.12750E+01 CM**3	5.71500E+01 CM**3
SURROUNDING GEOMETRY VOLUMES - GEOMETRY REGION 34 IS AN ARRAY PLACEMENT BOUNDARY REGION				
10	1	34	1.09220E+03 CM**3	1.09220E+03 CM**3
	2	35	2.78913E+02 CM**3	1.52691E+03 CM**3
	3	36	5.32644E+01 CM**3	1.58018E+03 CM**3
SURROUNDING GEOMETRY VOLUMES - GEOMETRY REGION 40 IS AN ARRAY PLACEMENT BOUNDARY REGION				
11	1	40	1.09220E+03 CM**3	1.09220E+03 CM**3
	2	41	2.78913E+02 CM**3	1.52691E+03 CM**3
	3	42	5.32644E+01 CM**3	1.58018E+03 CM**3
SURROUNDING GEOMETRY VOLUMES - GEOMETRY REGION 46 IS AN ARRAY PLACEMENT BOUNDARY REGION				
12	1	46	3.16036E+03 CM**3	3.16036E+03 CM**3
	2	47	2.20490E+02 CM**3	3.38085E+03 CM**3
SURROUNDING GEOMETRY VOLUMES - GEOMETRY REGION 48 IS AN ARRAY PLACEMENT BOUNDARY REGION				
13	1	48	4.95359E+03 CM**3	4.95359E+03 CM**3
	2	49	9.50914E+02 CM**3	5.90450E+03 CM**3
SURROUNDING GEOMETRY VOLUMES - GEOMETRY REGION 50 IS AN ARRAY PLACEMENT BOUNDARY REGION				
14	1	50	3.16036E+03 CM**3	3.16036E+03 CM**3
	2	51	2.20490E+02 CM**3	3.38085E+03 CM**3
15	1	52	5.59918E+03 CM**3	1.82654E+04 CM**3
	2	53	4.15813E+03 CM**3	2.24235E+04 CM**3
	3	54	4.80740E+04 CM**3	7.04975E+04 CM**3
	4	55	1.34136E+04 CM**3	8.39110E+04 CM**3
	5	56	6.84563E+04 CM**3	1.52367E+05 CM**3
	6	57	3.79567E+03 CM**3	1.56163E+05 CM**3
	7	58	4.26699E+04 CM**3	1.98833E+05 CM**3
81	1	23	7.79000E+01 CM**3	7.79000E+01 CM**3
83	1	24	7.79000E+01 CM**3	7.79000E+01 CM**3
SURROUNDING GEOMETRY VOLUMES - GEOMETRY REGION 25 IS AN ARRAY PLACEMENT BOUNDARY REGION				
90	1	25	1.09220E+03 CM**3	1.09220E+03 CM**3
	2	26	2.78913E+02 CM**3	1.52691E+03 CM**3
	3	27	1.24284E+02 CM**3	1.65120E+03 CM**3
SURROUNDING GEOMETRY VOLUMES - GEOMETRY REGION 28 IS AN ARRAY PLACEMENT BOUNDARY REGION				
91	1	28	1.09220E+03 CM**3	1.09220E+03 CM**3
	2	29	2.78913E+02 CM**3	1.52691E+03 CM**3
	3	30	1.24284E+02 CM**3	1.65120E+03 CM**3
SURROUNDING GEOMETRY VOLUMES - GEOMETRY REGION 31 IS AN ARRAY PLACEMENT BOUNDARY REGION				
92	1	31	1.09220E+03 CM**3	1.09220E+03 CM**3
	2	32	2.78913E+02 CM**3	1.52691E+03 CM**3
	3	33	1.24284E+02 CM**3	1.65120E+03 CM**3
SURROUNDING GEOMETRY VOLUMES - GEOMETRY REGION 37 IS AN ARRAY PLACEMENT BOUNDARY REGION				

```
101         1        37         1.09220E+03 CM**3         1.09220E+03 CM**3
            2        38         2.78913E+02 CM**3         1.52691E+03 CM**3
            3        39         5.32644E+01 CM**3         1.58018E+03 CM**3

SURROUNDING GEOMETRY VOLUMES -  GEOMETRY REGION     43 IS AN ARRAY PLACEMENT BOUNDARY REGION

111         1        43         1.09220E+03 CM**3         1.09220E+03 CM**3
            2        44         2.78913E+02 CM**3         1.52691E+03 CM**3
            3        45         5.32644E+01 CM**3         1.58018E+03 CM**3
```

UNIT	USES	REGION	MIXTURE	TOTAL VOLUME
1	14	1	2	4.44500E+02 CM**3
2	7	1	1	4.24424E+01 CM**3
		2	2	6.86826E+01 CM**3
		3	3	2.88925E+02 CM**3
3	7	1	1	4.24424E+01 CM**3
		2	2	6.86826E+01 CM**3
		3	3	2.88925E+02 CM**3
4	7	1	1	4.24424E+01 CM**3
		2	2	6.86826E+01 CM**3
		3	3	2.88925E+02 CM**3
5	84	1	1	5.09309E+02 CM**3
		2	2	8.24191E+02 CM**3
		3	3	3.46710E+03 CM**3
6	7	1	1	4.24424E+01 CM**3
		2	2	6.86826E+01 CM**3
		3	3	2.88925E+02 CM**3
7	7	1	1	4.24424E+01 CM**3
		2	2	6.86826E+01 CM**3
		3	3	2.88925E+02 CM**3
8	7	1	1	4.24424E+01 CM**3
		2	2	6.86826E+01 CM**3
		3	3	2.88925E+02 CM**3
10	1	1		1.09220E+03 CM**3
		2	3	2.78913E+02 CM**3
		3	5	5.32644E+01 CM**3
11	1	1		1.09220E+03 CM**3
		2	3	2.78913E+02 CM**3
		3	5	5.32644E+01 CM**3
12	1	1		3.16036E+03 CM**3
		2	5	2.20490E+02 CM**3
13	1	1		4.95359E+03 CM**3
		2	5	9.50914E+02 CM**3
14	1	1		3.16036E+03 CM**3
		2	5	2.20490E+02 CM**3
15	1	1	3	5.59918E+03 CM**3
		2	5	4.15813E+03 CM**3
		3	6	4.80740E+04 CM**3
		4	5	1.34136E+04 CM**3
		5	8	6.84563E+04 CM**3
		6	5	3.79567E+03 CM**3
		7	7	4.26699E+04 CM**3
81	7	1	2	5.45300E+02 CM**3
83	7	1	2	5.45300E+02 CM**3
90	1	1		1.09220E+03 CM**3
		2	3	2.78913E+02 CM**3
		3	5	1.24284E+02 CM**3
91	1	1		1.09220E+03 CM**3
		2	3	2.78913E+02 CM**3
		3	5	1.24284E+02 CM**3
92	1	1		1.09220E+03 CM**3
		2	3	2.78913E+02 CM**3
		3	5	1.24284E+02 CM**3
101	1	1		1.09220E+03 CM**3
		2	3	2.78913E+02 CM**3
		3	5	5.32644E+01 CM**3
111	1	1		1.09220E+03 CM**3
		2	3	2.78913E+02 CM**3
		3	5	5.32644E+01 CM**3

TOTAL MIXTURE VOLUMES

MIXTURE	TOTAL VOLUME	MASS(G)
1	7.63963E+02 CM**3	3.05153E+03
2	2.77139E+03 CM**3	7.48828E+03
3	1.27522E+04 CM**3	1.27289E+04
5	2.33452E+04 CM**3	1.84894E+05
6	4.80740E+04 CM**3	5.45351E+05
7	4.26699E+04 CM**3	4.25919E-16
8	6.84563E+04 CM**3	6.83311E-16

```
*****************************************************************************************************************************
***                                                                                                                       ***
***                                          BIASING INFORMATION                                                          ***
***                                                                                                                       ***
***     A DEFAULT WEIGHT OF    0.500 WILL BE USED FOR ALL BIAS ID'S.                                                      ***
***                                                                                                                       ***
*****************************************************************************************************************************
```

```
........    0 IO'S WERE USED IN KENO-V BEFORE TRACKING       ........

                                ........  0.02017 MINUTES WERE USED PROCESSING DATA.        ........

VOLUME FRACTION OF FISSILE MATERIAL IN THE CORE= 6.03151E-02

START TYPE 0 WAS USED.

THE NEUTRONS WERE STARTED WITH A FLAT DISTRIBUTION IN A CUBOID DEFINED BY:
                    +X= 4.98539E+01  -X=-4.98539E+01  +Y= 4.98539E+01  -Y=-4.98539E+01  +Z= 1.00000E+01  -Z=-1.00000E+01
THE FLAG TO START NEUTRONS IN THE REFLECTOR WAS TURNED OFF

0.38617 MINUTES WERE REQUIRED FOR STARTING.   TOTAL ELAPSED TIME IS 0.40533 MINUTES.
```

GENERATION	GENERATION K-EFFECTIVE	ELAPSED TIME MINUTES	AVERAGE K-EFFECTIVE	AVG K-EFF DEVIATION	MATRIX K-EFFECTIVE	MATRIX K-EFF DEVIATION
KENO MESSAGE NUMBER K5-132	WARNING....ONLY	770 INDEPENDENT FISSION POINTS WERE GENERATED				
1	8.64733E-01	4.39500E-01	1.00000E+00	0.00000E+00	0.00000E+00	0.00000E+00
2	9.07119E-01	4.72500E-01	1.00000E+00	0.00000E+00	0.00000E+00	0.00000E+00
KENO MESSAGE NUMBER K5-132	WARNING....ONLY	773 INDEPENDENT FISSION POINTS WERE GENERATED				
3	8.54140E-01	5.05333E-01	8.54140E-01	0.00000E+00	0.00000E+00	0.00000E+00
4	9.38616E-01	5.37333E-01	8.96378E-01	4.22379E-02	0.00000E+00	0.00000E+00
5	9.22249E-01	5.69500E-01	9.05002E-01	2.58659E-02	0.00000E+00	0.00000E+00
6	8.79528E-01	6.01500E-01	8.98633E-01	1.93669E-02	0.00000E+00	0.00000E+00
7	8.98732E-01	6.34500E-01	8.98653E-01	1.50016E-02	0.00000E+00	0.00000E+00
8	9.11786E-01	6.67333E-01	9.00842E-01	1.24428E-02	0.00000E+00	0.00000E+00
9	8.87381E-01	6.99500E-01	8.98919E-01	1.06904E-02	0.00000E+00	0.00000E+00
10	9.20980E-01	7.30500E-01	9.01676E-01	9.66016E-03	0.00000E+00	0.00000E+00
11	8.91180E-01	7.62667E-01	9.00510E-01	8.59892E-03	0.00000E+00	0.00000E+00
12	9.06228E-01	7.93667E-01	9.01082E-01	7.71233E-03	0.00000E+00	0.00000E+00
13	9.05461E-01	8.25833E-01	9.01480E-01	6.98741E-03	0.00000E+00	0.00000E+00
14	8.42803E-01	8.58667E-01	8.96590E-01	8.03718E-03	0.00000E+00	0.00000E+00
15	9.41479E-01	8.89833E-01	9.00043E-01	8.15975E-03	0.00000E+00	0.00000E+00
16	8.65977E-01	9.21833E-01	8.97610E-01	7.93666E-03	0.00000E+00	0.00000E+00
17	8.83131E-01	9.55833E-01	8.96645E-01	7.45142E-03	0.00000E+00	0.00000E+00
18	8.92163E-01	9.87833E-01	8.96365E-01	6.97579E-03	0.00000E+00	0.00000E+00
19	9.28505E-01	1.01983E+00	8.98255E-01	6.81991E-03	0.00000E+00	0.00000E+00
20	9.26201E-01	1.05283E+00	8.99808E-01	6.61465E-03	0.00000E+00	0.00000E+00
21	8.97280E-01	1.08583E+00	8.99675E-01	6.25825E-03	0.00000E+00	0.00000E+00
22	9.39284E-01	1.11683E+00	9.01655E-01	6.25871E-03	0.00000E+00	0.00000E+00
23	9.00410E-01	1.14900E+00	9.01596E-01	5.95351E-03	0.00000E+00	0.00000E+00
24	9.47855E-01	1.18100E+00	9.03699E-01	6.05338E-03	0.00000E+00	0.00000E+00
25	8.96969E-01	1.21300E+00	9.03406E-01	5.79160E-03	0.00000E+00	0.00000E+00
26	9.50013E-01	1.24500E+00	9.05348E-01	5.87526E-03	0.00000E+00	0.00000E+00
27	8.87597E-01	1.27700E+00	9.04638E-01	5.67990E-03	0.00000E+00	0.00000E+00
28	8.42086E-01	1.31000E+00	9.02232E-01	5.96387E-03	0.00000E+00	0.00000E+00
29	9.09686E-01	1.34017E+00	9.02508E-01	5.74538E-03	0.00000E+00	0.00000E+00
30	9.01398E-01	1.37133E+00	9.02468E-01	5.53653E-03	0.00000E+00	0.00000E+00
31	9.13198E-01	1.40433E+00	9.02838E-01	5.35500E-03	0.00000E+00	0.00000E+00
32	9.38927E-01	1.43633E+00	9.04041E-01	5.31143E-03	0.00000E+00	0.00000E+00
33	8.62382E-01	1.47017E+00	9.02698E-01	5.31010E-03	0.00000E+00	0.00000E+00
34	8.79410E-01	1.50233E+00	9.01970E-01	5.19273E-03	0.00000E+00	0.00000E+00
35	8.92716E-01	1.53433E+00	9.01689E-01	5.04072E-03	0.00000E+00	0.00000E+00
36	8.98063E-01	1.56733E+00	9.01583E-01	4.89138E-03	0.00000E+00	0.00000E+00
37	8.71316E-01	1.60117E+00	9.00718E-01	4.82766E-03	0.00000E+00	0.00000E+00
38	9.11996E-01	1.63317E+00	9.01031E-01	4.70209E-03	0.00000E+00	0.00000E+00
39	9.15148E-01	1.66617E+00	9.01413E-01	4.58913E-03	0.00000E+00	0.00000E+00
40	8.98372E-01	1.69817E+00	9.01333E-01	4.46744E-03	0.00000E+00	0.00000E+00
41	8.70585E-01	1.73017E+00	9.00544E-01	4.42223E-03	0.00000E+00	0.00000E+00
42	9.05086E-01	1.76233E+00	9.00658E-01	4.31175E-03	0.00000E+00	0.00000E+00
43	8.90824E-01	1.79333E+00	9.00418E-01	4.21211E-03	0.00000E+00	0.00000E+00
44	9.25132E-01	1.82633E+00	9.01006E-01	4.15250E-03	0.00000E+00	0.00000E+00
45	8.42242E-01	1.85933E+00	8.99640E-01	4.27889E-03	0.00000E+00	0.00000E+00
46	9.37250E-01	1.88950E+00	9.00495E-01	4.26700E-03	0.00000E+00	0.00000E+00
47	8.61176E-01	1.92250E+00	8.99621E-01	4.26164E-03	0.00000E+00	0.00000E+00
48	9.01697E-01	1.95450E+00	8.99666E-01	4.16821E-03	0.00000E+00	0.00000E+00
49	8.79237E-01	1.98650E+00	8.99231E-01	4.10165E-03	0.00000E+00	0.00000E+00
50	8.96693E-01	2.01850E+00	8.99178E-01	4.01564E-03	0.00000E+00	0.00000E+00
51	8.91902E-01	2.05067E+00	8.99030E-01	3.93564E-03	0.00000E+00	0.00000E+00
52	9.47823E-01	2.08350E+00	9.00006E-01	3.97768E-03	0.00000E+00	0.00000E+00
53	9.14853E-01	2.11567E+00	9.00297E-01	3.90976E-03	0.00000E+00	0.00000E+00
54	9.02976E-01	2.14767E+00	9.00348E-01	3.83419E-03	0.00000E+00	0.00000E+00
55	9.32633E-01	2.18067E+00	9.00958E-01	3.81015E-03	0.00000E+00	0.00000E+00
56	8.62429E-01	2.21350E+00	9.00244E-01	3.80640E-03	0.00000E+00	0.00000E+00
57	8.78213E-01	2.24567E+00	8.99844E-01	3.75796E-03	0.00000E+00	0.00000E+00
58	9.29361E-01	2.27667E+00	9.00371E-01	3.72770E-03	0.00000E+00	0.00000E+00
59	9.52866E-01	2.30700E+00	9.01292E-01	3.77575E-03	0.00000E+00	0.00000E+00
60	9.43472E-01	2.33800E+00	9.02019E-01	3.78069E-03	0.00000E+00	0.00000E+00
61	8.91892E-01	2.37100E+00	9.01847E-01	3.72002E-03	0.00000E+00	0.00000E+00
62	9.24170E-01	2.40300E+00	9.02219E-01	3.67637E-03	0.00000E+00	0.00000E+00
63	8.90868E-01	2.43517E+00	9.02033E-01	3.62038E-03	0.00000E+00	0.00000E+00
64	8.44533E-01	2.46800E+00	9.01106E-01	3.68028E-03	0.00000E+00	0.00000E+00
65	9.19200E-01	2.50017E+00	9.01393E-01	3.63276E-03	0.00000E+00	0.00000E+00
66	8.68369E-01	2.53217E+00	9.00877E-01	3.61259E-03	0.00000E+00	0.00000E+00
67	8.64434E-01	2.56500E+00	9.00316E-01	3.60050E-03	0.00000E+00	0.00000E+00
68	8.77680E-01	2.59800E+00	8.99973E-01	3.56208E-03	0.00000E+00	0.00000E+00
69	9.24317E-01	2.63000E+00	9.00337E-01	3.52727E-03	0.00000E+00	0.00000E+00
70	9.11875E-01	2.66300E+00	9.00506E-01	3.47915E-03	0.00000E+00	0.00000E+00
71	9.00279E-01	2.69417E+00	9.00503E-01	3.42836E-03	0.00000E+00	0.00000E+00
72	9.37083E-01	2.72533E+00	9.01026E-01	3.41920E-03	0.00000E+00	0.00000E+00
73	8.71049E-01	2.75817E+00	9.00603E-01	3.39704E-03	0.00000E+00	0.00000E+00
74	8.95938E-01	2.79033E+00	9.00539E-01	3.35015E-03	0.00000E+00	0.00000E+00
75	8.91734E-01	2.82317E+00	9.00418E-01	3.30614E-03	0.00000E+00	0.00000E+00
76	9.07962E-01	2.85533E+00	9.00520E-01	3.26275E-03	0.00000E+00	0.00000E+00

77	9.00078E-01	2.88817E+00	9.00514E-01	3.21896E-03	0.00000E+00	0.00000E+00
78	9.26636E-01	2.91933E+00	9.00858E-01	3.19486E-03	0.00000E+00	0.00000E+00
79	9.14409E-01	2.95133E+00	9.01034E-01	3.15801E-03	0.00000E+00	0.00000E+00
80	8.93065E-01	2.98250E+00	9.00932E-01	3.11893E-03	0.00000E+00	0.00000E+00
81	9.39654E-01	3.01550E+00	9.01422E-01	3.11796E-03	0.00000E+00	0.00000E+00
82	8.68000E-01	3.04933E+00	9.01004E-01	3.10696E-03	0.00000E+00	0.00000E+00
83	8.77484E-01	3.08233E+00	9.00714E-01	3.08207E-03	0.00000E+00	0.00000E+00
84	9.09180E-01	3.11433E+00	9.00817E-01	3.04600E-03	0.00000E+00	0.00000E+00
85	8.63521E-01	3.14733E+00	9.00368E-01	3.04244E-03	0.00000E+00	0.00000E+00
86	9.10772E-01	3.18017E+00	9.00491E-01	3.00856E-03	0.00000E+00	0.00000E+00
87	8.64429E-01	3.21233E+00	9.00067E-01	3.00307E-03	0.00000E+00	0.00000E+00
88	9.44313E-01	3.24333E+00	9.00582E-01	3.01221E-03	0.00000E+00	0.00000E+00
89	9.37499E-01	3.27450E+00	9.01006E-01	3.00747E-03	0.00000E+00	0.00000E+00
90	8.76265E-01	3.30650E+00	9.00725E-01	2.98636E-03	0.00000E+00	0.00000E+00
91	8.53479E-01	3.33767E+00	9.00194E-01	2.99996E-03	0.00000E+00	0.00000E+00
92	8.75077E-01	3.36883E+00	8.99915E-01	2.97954E-03	0.00000E+00	0.00000E+00
93	9.21511E-01	3.40083E+00	9.00152E-01	2.95616E-03	0.00000E+00	0.00000E+00
94	8.75884E-01	3.43383E+00	8.99888E-01	2.93572E-03	0.00000E+00	0.00000E+00
95	9.73236E-01	3.46500E+00	9.00677E-01	3.00918E-03	0.00000E+00	0.00000E+00
96	8.90701E-01	3.49783E+00	9.00571E-01	2.97888E-03	0.00000E+00	0.00000E+00
97	8.76098E-01	3.53000E+00	9.00313E-01	2.95860E-03	0.00000E+00	0.00000E+00
98	9.14973E-01	3.56283E+00	9.00466E-01	2.93160E-03	0.00000E+00	0.00000E+00
99	8.94076E-01	3.59500E+00	9.00400E-01	2.90196E-03	0.00000E+00	0.00000E+00
100	8.91300E-01	3.62700E+00	9.00307E-01	2.87370E-03	0.00000E+00	0.00000E+00
101	9.34534E-01	3.65900E+00	9.00653E-01	2.86546E-03	0.00000E+00	0.00000E+00
102	9.36717E-01	3.69017E+00	9.01014E-01	2.85949E-03	0.00000E+00	0.00000E+00
103	8.92327E-01	3.72317E+00	9.00928E-01	2.83234E-03	0.00000E+00	0.00000E+00
104	8.66639E-01	3.75600E+00	9.00592E-01	2.82451E-03	0.00000E+00	0.00000E+00
105	9.69759E-01	3.78817E+00	9.01263E-01	2.87644E-03	0.00000E+00	0.00000E+00
106	9.43452E-01	3.81833E+00	9.01669E-01	2.87739E-03	0.00000E+00	0.00000E+00
107	8.76250E-01	3.85133E+00	9.01427E-01	2.86012E-03	0.00000E+00	0.00000E+00
108	9.13006E-01	3.88417E+00	9.01536E-01	2.83511E-03	0.00000E+00	0.00000E+00
109	8.85045E-01	3.91617E+00	9.01382E-01	2.81272E-03	0.00000E+00	0.00000E+00
110	8.93914E-01	3.94917E+00	9.01313E-01	2.78741E-03	0.00000E+00	0.00000E+00
111	9.25573E-01	3.98117E+00	9.01535E-01	2.77067E-03	0.00000E+00	0.00000E+00
112	8.95593E-01	4.01333E+00	9.01481E-01	2.74590E-03	0.00000E+00	0.00000E+00
113	8.69591E-01	4.04617E+00	9.01194E-01	2.73617E-03	0.00000E+00	0.00000E+00
114	8.97932E-01	4.07833E+00	9.01165E-01	2.71179E-03	0.00000E+00	0.00000E+00
115	8.74422E-01	4.11217E+00	9.00928E-01	2.69808E-03	0.00000E+00	0.00000E+00
116	8.98152E-01	4.14417E+00	9.00904E-01	2.67442E-03	0.00000E+00	0.00000E+00
117	8.69339E-01	4.17717E+00	9.00629E-01	2.66524E-03	0.00000E+00	0.00000E+00
118	9.22756E-01	4.20733E+00	9.00820E-01	2.64904E-03	0.00000E+00	0.00000E+00
119	9.30999E-01	4.23850E+00	9.01078E-01	2.63893E-03	0.00000E+00	0.00000E+00
120	9.49007E-01	4.26967E+00	9.01484E-01	2.64781E-03	0.00000E+00	0.00000E+00
121	9.04560E-01	4.30167E+00	9.01510E-01	2.62560E-03	0.00000E+00	0.00000E+00
122	9.66280E-01	4.33183E+00	9.02050E-01	2.65898E-03	0.00000E+00	0.00000E+00
123	8.53077E-01	4.36383E+00	9.01645E-01	2.66780E-03	0.00000E+00	0.00000E+00
124	9.58663E-01	4.39500E+00	9.02112E-01	2.68680E-03	0.00000E+00	0.00000E+00
125	8.70734E-01	4.42700E+00	9.01857E-01	2.67705E-03	0.00000E+00	0.00000E+00
126	9.45178E-01	4.45817E+00	9.02207E-01	2.67826E-03	0.00000E+00	0.00000E+00
127	9.16217E-01	4.49017E+00	9.02319E-01	2.65911E-03	0.00000E+00	0.00000E+00
128	9.42022E-01	4.52133E+00	9.02634E-01	2.65667E-03	0.00000E+00	0.00000E+00
129	9.05724E-01	4.55433E+00	9.02658E-01	2.63578E-03	0.00000E+00	0.00000E+00
130	8.73590E-01	4.58550E+00	9.02431E-01	2.62495E-03	0.00000E+00	0.00000E+00
131	9.25854E-01	4.61650E+00	9.02613E-01	2.61084E-03	0.00000E+00	0.00000E+00
132	8.99176E-01	4.64950E+00	9.02586E-01	2.59082E-03	0.00000E+00	0.00000E+00
133	9.47677E-01	4.68150E+00	9.02930E-01	2.59390E-03	0.00000E+00	0.00000E+00
134	8.65875E-01	4.71367E+00	9.02650E-01	2.58944E-03	0.00000E+00	0.00000E+00
135	8.83745E-01	4.74650E+00	9.02507E-01	2.57382E-03	0.00000E+00	0.00000E+00
136	8.93197E-01	4.77950E+00	9.02438E-01	2.55549E-03	0.00000E+00	0.00000E+00
137	8.86474E-01	4.81150E+00	9.02320E-01	2.53924E-03	0.00000E+00	0.00000E+00
138	9.50594E-01	4.84167E+00	9.02675E-01	2.54538E-03	0.00000E+00	0.00000E+00
139	9.30560E-01	4.87200E+00	9.02878E-01	2.53491E-03	0.00000E+00	0.00000E+00
140	9.10665E-01	4.90483E+00	9.02935E-01	2.51711E-03	0.00000E+00	0.00000E+00
141	8.51616E-01	4.93783E+00	9.02565E-01	2.52606E-03	0.00000E+00	0.00000E+00
142	8.82287E-01	4.97083E+00	9.02421E-01	2.51213E-03	0.00000E+00	0.00000E+00
143	9.37502E-01	5.00283E+00	9.02669E-01	2.50663E-03	0.00000E+00	0.00000E+00
144	9.22123E-01	5.03400E+00	9.02806E-01	2.49268E-03	0.00000E+00	0.00000E+00
145	9.65204E-01	5.06700E+00	9.03243E-01	2.51336E-03	0.00000E+00	0.00000E+00
146	8.92216E-01	5.09983E+00	9.03166E-01	2.49702E-03	0.00000E+00	0.00000E+00
147	8.90569E-01	5.13200E+00	9.03079E-01	2.48126E-03	0.00000E+00	0.00000E+00
148	8.94205E-01	5.16400E+00	9.03019E-01	2.46495E-03	0.00000E+00	0.00000E+00
149	9.01752E-01	5.19600E+00	9.03010E-01	2.44814E-03	0.00000E+00	0.00000E+00
150	8.96245E-01	5.22900E+00	9.02964E-01	2.43198E-03	0.00000E+00	0.00000E+00
151	9.03029E-01	5.26017E+00	9.02965E-01	2.41560E-03	0.00000E+00	0.00000E+00
152	9.25901E-01	5.29300E+00	9.03118E-01	2.40431E-03	0.00000E+00	0.00000E+00
153	9.19935E-01	5.32517E+00	9.03229E-01	2.39093E-03	0.00000E+00	0.00000E+00
154	9.25819E-01	5.35617E+00	9.03378E-01	2.37979E-03	0.00000E+00	0.00000E+00
155	9.06503E-01	5.38833E+00	9.03398E-01	2.36427E-03	0.00000E+00	0.00000E+00
156	8.54453E-01	5.42117E+00	9.03080E-01	2.37028E-03	0.00000E+00	0.00000E+00
157	9.18177E-01	5.45317E+00	9.03178E-01	2.35695E-03	0.00000E+00	0.00000E+00
158	8.97244E-01	5.48433E+00	9.03140E-01	2.34210E-03	0.00000E+00	0.00000E+00
159	8.88518E-01	5.51633E+00	9.03046E-01	2.32900E-03	0.00000E+00	0.00000E+00
160	9.01194E-01	5.54933E+00	9.03035E-01	2.31424E-03	0.00000E+00	0.00000E+00
161	8.86233E-01	5.58133E+00	9.02929E-01	2.30206E-03	0.00000E+00	0.00000E+00
162	8.50360E-01	5.61350E+00	9.02600E-01	2.31110E-03	0.00000E+00	0.00000E+00
163	8.91927E-01	5.64633E+00	9.02534E-01	2.29766E-03	0.00000E+00	0.00000E+00
164	8.84833E-01	5.67850E+00	9.02425E-01	2.28605E-03	0.00000E+00	0.00000E+00
165	9.40537E-01	5.70867E+00	9.02659E-01	2.28398E-03	0.00000E+00	0.00000E+00
166	9.42814E-01	5.73983E+00	9.02904E-01	2.28318E-03	0.00000E+00	0.00000E+00
167	8.92170E-01	5.77267E+00	9.02838E-01	2.27023E-03	0.00000E+00	0.00000E+00
168	8.82412E-01	5.80567E+00	9.02715E-01	2.25986E-03	0.00000E+00	0.00000E+00
169	8.92368E-01	5.83767E+00	9.02653E-01	2.24715E-03	0.00000E+00	0.00000E+00
170	9.25805E-01	5.86983E+00	9.02791E-01	2.23798E-03	0.00000E+00	0.00000E+00
171	9.07353E-01	5.90267E+00	9.02818E-01	2.22486E-03	0.00000E+00	0.00000E+00

172	8.51698E-01	5.93483E+00	9.02518E-01	2.23208E-03	0.00000E+00	0.00000E+00
173	8.89087E-01	5.96583E+00	9.02439E-01	2.22038E-03	0.00000E+00	0.00000E+00
174	9.33412E-01	5.99883E+00	9.02619E-01	2.21476E-03	0.00000E+00	0.00000E+00
175	8.92776E-01	6.03183E+00	9.02562E-01	2.20266E-03	0.00000E+00	0.00000E+00
176	9.06610E-01	6.06300E+00	9.02585E-01	2.19009E-03	0.00000E+00	0.00000E+00
177	9.14163E-01	6.09583E+00	9.02652E-01	2.17854E-03	0.00000E+00	0.00000E+00
178	8.62825E-01	6.12783E+00	9.02425E-01	2.17792E-03	0.00000E+00	0.00000E+00
179	9.10867E-01	6.15900E+00	9.02473E-01	2.16610E-03	0.00000E+00	0.00000E+00
180	9.67527E-01	6.19017E+00	9.02839E-01	2.18469E-03	0.00000E+00	0.00000E+00
181	9.26899E-01	6.22133E+00	9.02973E-01	2.17660E-03	0.00000E+00	0.00000E+00
182	9.44357E-01	6.25417E+00	9.03203E-01	2.17665E-03	0.00000E+00	0.00000E+00
183	9.04451E-01	6.28533E+00	9.03210E-01	2.16460E-03	0.00000E+00	0.00000E+00
184	8.61304E-01	6.31917E+00	9.02979E-01	2.16496E-03	0.00000E+00	0.00000E+00
185	8.58905E-01	6.35133E+00	9.02739E-01	2.16652E-03	0.00000E+00	0.00000E+00
186	8.43845E-01	6.38333E+00	9.02419E-01	2.17836E-03	0.00000E+00	0.00000E+00
187	9.00057E-01	6.41533E+00	9.02406E-01	2.16659E-03	0.00000E+00	0.00000E+00
188	8.91287E-01	6.44650E+00	9.02346E-01	2.15574E-03	0.00000E+00	0.00000E+00
189	8.87537E-01	6.48033E+00	9.02267E-01	2.14564E-03	0.00000E+00	0.00000E+00
190	8.77943E-01	6.51150E+00	9.02137E-01	2.13811E-03	0.00000E+00	0.00000E+00
191	8.85705E-01	6.54167E+00	9.02051E-01	2.12855E-03	0.00000E+00	0.00000E+00
192	9.03397E-01	6.57367E+00	9.02058E-01	2.11733E-03	0.00000E+00	0.00000E+00
193	8.93692E-01	6.60583E+00	9.02014E-01	2.10667E-03	0.00000E+00	0.00000E+00
194	9.00854E-01	6.63967E+00	9.02008E-01	2.09568E-03	0.00000E+00	0.00000E+00
195	8.96094E-01	6.67167E+00	9.01977E-01	2.08501E-03	0.00000E+00	0.00000E+00
196	8.86010E-01	6.70367E+00	9.01895E-01	2.07587E-03	0.00000E+00	0.00000E+00
197	8.92024E-01	6.73483E+00	9.01844E-01	2.06582E-03	0.00000E+00	0.00000E+00
198	8.68306E-01	6.76600E+00	9.01673E-01	2.06236E-03	0.00000E+00	0.00000E+00
199	9.07466E-01	6.79800E+00	9.01702E-01	2.05208E-03	0.00000E+00	0.00000E+00
200	9.32423E-01	6.82917E+00	9.01858E-01	2.04757E-03	0.00000E+00	0.00000E+00
201	9.20243E-01	6.86217E+00	9.01950E-01	2.03935E-03	0.00000E+00	0.00000E+00
202	8.43967E-01	6.89500E+00	9.01660E-01	2.04974E-03	0.00000E+00	0.00000E+00
203	9.18508E-01	6.92617E+00	9.01744E-01	2.04124E-03	0.00000E+00	0.00000E+00
204	9.21690E-01	6.95917E+00	9.01843E-01	2.03350E-03	0.00000E+00	0.00000E+00
205	8.85344E-01	6.99200E+00	9.01761E-01	2.02509E-03	0.00000E+00	0.00000E+00
206	9.25774E-01	7.02317E+00	9.01879E-01	2.01858E-03	0.00000E+00	0.00000E+00

KENO MESSAGE NUMBER K5-123 EXECUTION TERMINATED DUE TO COMPLETION OF THE SPECIFIED NUMBER OF GENERATIONS.

LIFETIME = 8.34755E-05 + OR - 2.90697E-07 GENERATION TIME = 4.14031E-05 + OR - 1.44102E-07
NU BAR = 2.42026E+00 + OR - 1.85916E-05 AVERAGE FISSION GROUP = 2.35537E+01 + OR - 8.36356E-03
ENERGY(EV) OF THE AVERAGE LETHARGY CAUSING FISSION = 6.47922E-02 + OR - 4.37889E-04

NO. OF INITIAL GENERATIONS SKIPPED	AVERAGE K-EFFECTIVE	DEVIATION	67 PER CENT CONFIDENCE INTERVAL	95 PER CENT CONFIDENCE INTERVAL	99 PER CENT CONFIDENCE INTERVAL	NUMBER OF HISTORIES
3	0.90211	+ OR - 0.00201	0.90010 TO 0.90413	0.89808 TO 0.90614	0.89607 TO 0.90816	162400
4	0.90193	+ OR - 0.00202	0.89992 TO 0.90395	0.89790 TO 0.90597	0.89588 TO 0.90798	161600
5	0.90183	+ OR - 0.00202	0.89981 TO 0.90386	0.89778 TO 0.90588	0.89576 TO 0.90790	160800
6	0.90194	+ OR - 0.00203	0.89991 TO 0.90398	0.89788 TO 0.90601	0.89585 TO 0.90804	160000
7	0.90196	+ OR - 0.00204	0.89992 TO 0.90400	0.89788 TO 0.90604	0.89584 TO 0.90808	159200
8	0.90191	+ OR - 0.00205	0.89986 TO 0.90396	0.89781 TO 0.90601	0.89576 TO 0.90806	158400
9	0.90198	+ OR - 0.00206	0.89992 TO 0.90404	0.89786 TO 0.90610	0.89580 TO 0.90816	157600
10	0.90189	+ OR - 0.00207	0.89982 TO 0.90396	0.89775 TO 0.90602	0.89568 TO 0.90809	156800
11	0.90194	+ OR - 0.00208	0.89986 TO 0.90402	0.89779 TO 0.90610	0.89571 TO 0.90818	156000
12	0.90192	+ OR - 0.00209	0.89983 TO 0.90401	0.89774 TO 0.90610	0.89565 TO 0.90819	155200
17	0.90229	+ OR - 0.00210	0.90019 TO 0.90439	0.89810 TO 0.90649	0.89600 TO 0.90859	151200
22	0.90190	+ OR - 0.00214	0.89977 TO 0.90404	0.89763 TO 0.90618	0.89549 TO 0.90832	147200
27	0.90149	+ OR - 0.00216	0.89933 TO 0.90366	0.89717 TO 0.90582	0.89500 TO 0.90798	143200
32	0.90151	+ OR - 0.00219	0.89932 TO 0.90369	0.89713 TO 0.90588	0.89494 TO 0.90807	139200
37	0.90212	+ OR - 0.00223	0.89989 TO 0.90435	0.89766 TO 0.90658	0.89544 TO 0.90880	135200
42	0.90218	+ OR - 0.00229	0.89989 TO 0.90446	0.89761 TO 0.90675	0.89532 TO 0.90903	131200
47	0.90252	+ OR - 0.00230	0.90022 TO 0.90481	0.89793 TO 0.90711	0.89563 TO 0.90941	127200
52	0.90249	+ OR - 0.00235	0.90014 TO 0.90483	0.89779 TO 0.90718	0.89545 TO 0.90953	123200
57	0.90263	+ OR - 0.00239	0.90024 TO 0.90503	0.89784 TO 0.90742	0.89545 TO 0.90982	119200
62	0.90174	+ OR - 0.00242	0.89931 TO 0.90416	0.89689 TO 0.90658	0.89447 TO 0.90901	115200
67	0.90261	+ OR - 0.00244	0.90017 TO 0.90505	0.89772 TO 0.90750	0.89528 TO 0.90994	111200
72	0.90232	+ OR - 0.00251	0.89982 TO 0.90483	0.89731 TO 0.90734	0.89480 TO 0.90985	107200
77	0.90267	+ OR - 0.00259	0.90008 TO 0.90527	0.89749 TO 0.90786	0.89489 TO 0.91045	103200
82	0.90244	+ OR - 0.00266	0.89979 TO 0.90510	0.89713 TO 0.90776	0.89447 TO 0.91041	99200
87	0.90317	+ OR - 0.00272	0.90045 TO 0.90589	0.89773 TO 0.90861	0.89501 TO 0.91133	95200
92	0.90343	+ OR - 0.00274	0.90069 TO 0.90617	0.89794 TO 0.90892	0.89520 TO 0.91166	91200

NO. OF INITIAL GENERATIONS SKIPPED	AVERAGE K-EFFECTIVE	DEVIATION	67 PER CENT CONFIDENCE INTERVAL	95 PER CENT CONFIDENCE INTERVAL	99 PER CENT CONFIDENCE INTERVAL	NUMBER OF HISTORIES
97	0.90324	+ OR - 0.00277	0.90048 TO 0.90601	0.89771 TO 0.90878	0.89494 TO 0.91155	87200
102	0.90271	+ OR - 0.00286	0.89985 TO 0.90557	0.89699 TO 0.90843	0.89413 TO 0.91129	83200
107	0.90236	+ OR - 0.00286	0.89950 TO 0.90522	0.89664 TO 0.90808	0.89378 TO 0.91094	79200
112	0.90234	+ OR - 0.00299	0.89935 TO 0.90534	0.89636 TO 0.90833	0.89337 TO 0.91132	75200
117	0.90349	+ OR - 0.00310	0.90040 TO 0.90659	0.89730 TO 0.90969	0.89420 TO 0.91279	71200
122	0.90164	+ OR - 0.00312	0.89852 TO 0.90475	0.89540 TO 0.90787	0.89228 TO 0.91099	67200
127	0.90118	+ OR - 0.00310	0.89809 TO 0.90428	0.89499 TO 0.90738	0.89189 TO 0.91047	63200
132	0.90064	+ OR - 0.00322	0.89742 TO 0.90386	0.89420 TO 0.90708	0.89098 TO 0.91030	59200
137	0.90102	+ OR - 0.00333	0.89769 TO 0.90435	0.89436 TO 0.90768	0.89103 TO 0.91101	55200
142	0.90069	+ OR - 0.00337	0.89732 TO 0.90406	0.89395 TO 0.90744	0.89058 TO 0.91081	51200
147	0.89893	+ OR - 0.00340	0.89553 TO 0.90233	0.89214 TO 0.90572	0.88874 TO 0.90912	47200
152	0.89844	+ OR - 0.00368	0.89476 TO 0.90211	0.89109 TO 0.90579	0.88741 TO 0.90947	43200
157	0.89777	+ OR - 0.00386	0.89391 TO 0.90163	0.89005 TO 0.90549	0.88619 TO 0.90935	39200
162	0.89926	+ OR - 0.00414	0.89511 TO 0.90340	0.89097 TO 0.90754	0.88683 TO 0.91168	35200
167	0.89782	+ OR - 0.00438	0.89344 TO 0.90220	0.88905 TO 0.90659	0.88467 TO 0.91097	31200
172	0.89869	+ OR - 0.00474	0.89395 TO 0.90342	0.88921 TO 0.90816	0.88447 TO 0.91290	27200
177	0.89722	+ OR - 0.00538	0.89184 TO 0.90260	0.88646 TO 0.90797	0.88108 TO 0.91335	23200
182	0.89195	+ OR - 0.00493	0.88702 TO 0.89688	0.88209 TO 0.90181	0.87717 TO 0.90674	19200
187	0.89675	+ OR - 0.00496	0.89179 TO 0.90171	0.88684 TO 0.90666	0.88188 TO 0.91162	15200
192	0.89946	+ OR - 0.00649	0.89297 TO 0.90595	0.88648 TO 0.91244	0.87999 TO 0.91892	11200
197	0.90264	+ OR - 0.01006	0.89257 TO 0.91270	0.88251 TO 0.92276	0.87245 TO 0.93282	7200
202	0.91283	+ OR - 0.00928	0.90355 TO 0.92211	0.89427 TO 0.93139	0.88498 TO 0.94067	3200

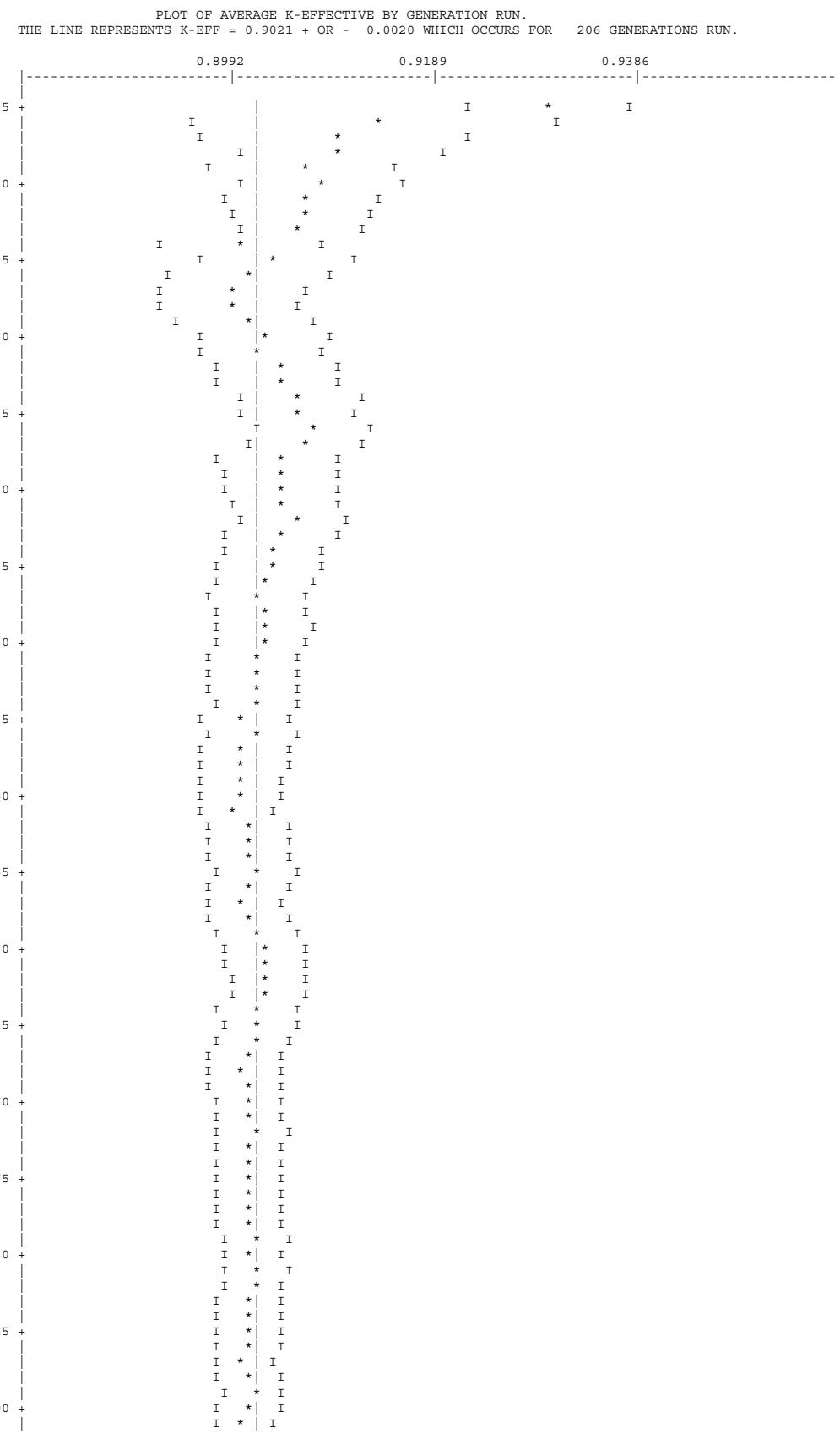
PLOT OF AVERAGE K-EFFECTIVE BY GENERATION RUN.
THE LINE REPRESENTS K-EFF = 0.9021 + OR - 0.0020 WHICH OCCURS FOR 206 GENERATIONS RUN.
0.8992
0.9189
0.9386
5
10
15
20
25
30
35
40
45
50
55
60
65
70
75
80
85
90

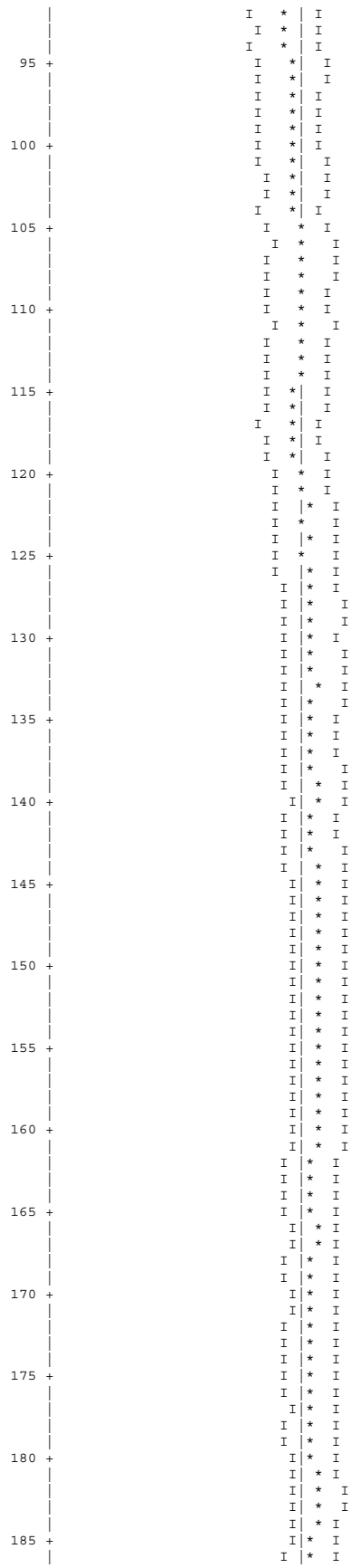

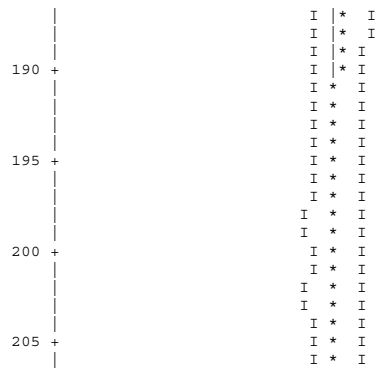
190
195
200
205

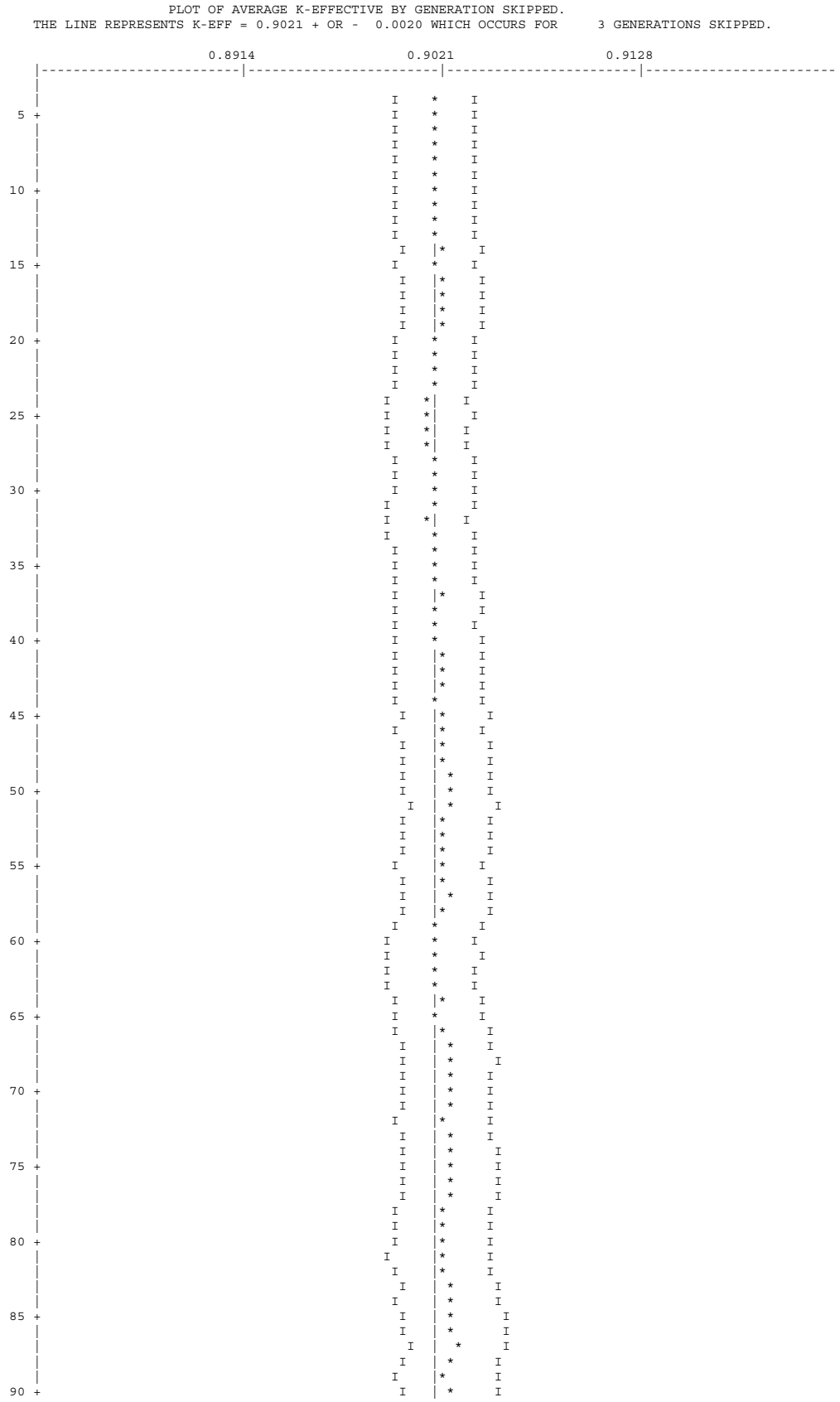
PLOT OF AVERAGE K-EFFECTIVE BY GENERATION SKIPPED.
THE LINE REPRESENTS K-EFF = 0.9021 + OR - 0.0020 WHICH OCCURS FOR 3 GENERATIONS SKIPPED.
0.8914
0.9021
0.9128
5
10
15
20
25
30
35
40
45
50
55
60
65
70
75
80
85
90

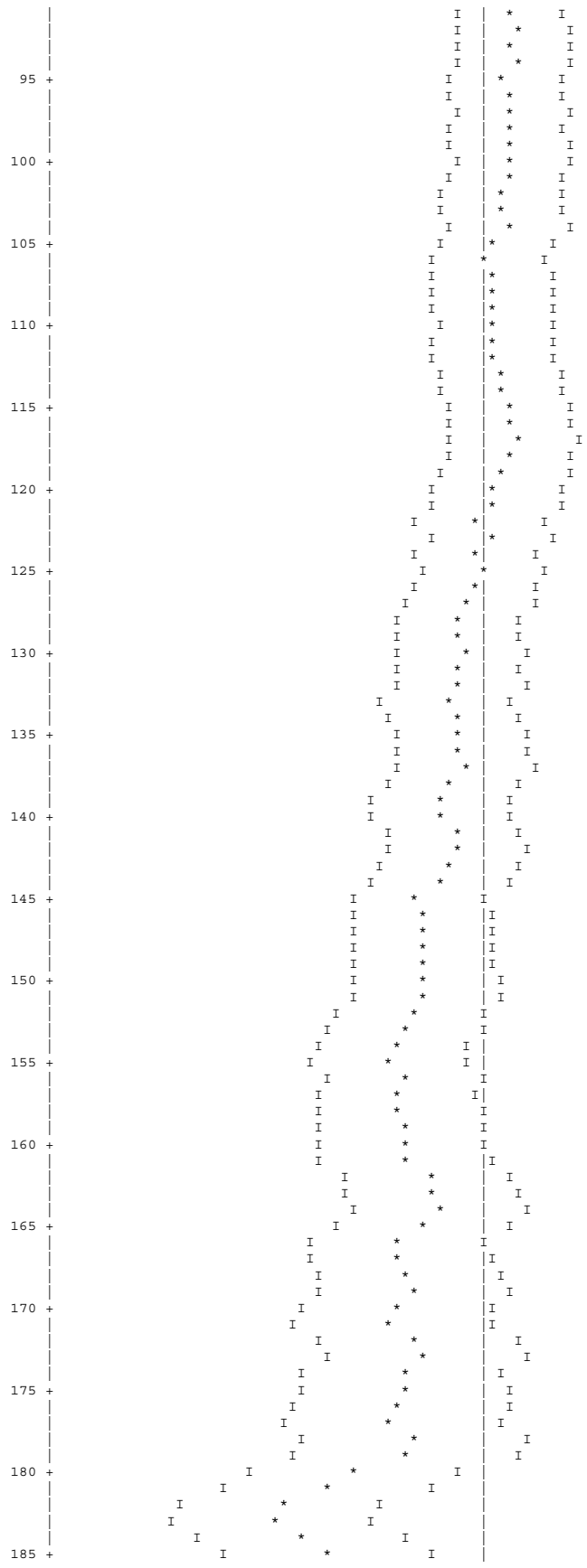

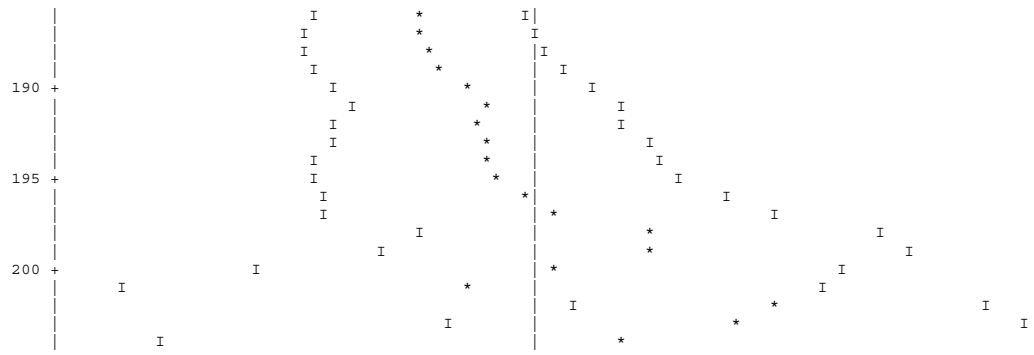
190
195
200

SKIPPING 3 GENERATIONS

GROUP	FISSION FRACTION	UNIT	REGION	FISSIONS	PERCENT DEVIATION	ABSORPTIONS	PERCENT DEVIATION	LEAKAGE	PERCENT DEVIATION
1	0.0003			2.56035E-04	5.4573	1.50773E-03	2.1757	0.00000E+00	0.0000
2	0.0013			1.19711E-03	1.7824	3.23043E-03	0.6837	0.00000E+00	0.0000
3	0.0017			1.52498E-03	1.4960	1.03787E-03	1.0080	0.00000E+00	0.0000
4	0.0010			9.21900E-04	1.7058	5.67407E-04	1.2742	0.00000E+00	0.0000
5	0.0014			1.25991E-03	1.4508	1.02450E-03	0.9580	0.00000E+00	0.0000
6	0.0018			1.65059E-03	1.1540	2.63366E-03	0.8416	0.00000E+00	0.0000
7	0.0019			1.70295E-03	1.1907	4.22649E-03	0.8983	0.00000E+00	0.0000
8	0.0020			1.79592E-03	1.8803	3.80393E-03	1.0126	0.00000E+00	0.0000
9	0.0027			2.41033E-03	1.9931	4.26692E-03	1.0242	0.00000E+00	0.0000
10	0.0058			5.23952E-03	1.9873	9.84187E-03	1.0582	0.00000E+00	0.0000
11	0.0122			1.10506E-02	1.7951	1.50933E-02	1.0254	0.00000E+00	0.0000
12	0.0166			1.49499E-02	1.8439	1.56324E-02	1.2484	0.00000E+00	0.0000
13	0.0162			1.46159E-02	1.7701	1.92808E-02	1.0976	0.00000E+00	0.0000
14	0.0137			1.23654E-02	1.8835	2.24392E-02	1.0243	0.00000E+00	0.0000
15	0.0027			2.41279E-03	3.3935	1.01851E-02	1.1256	0.00000E+00	0.0000
16	0.0019			1.67969E-03	4.3603	6.19063E-03	1.3070	0.00000E+00	0.0000
17	0.0029			2.65759E-03	4.7425	3.98055E-03	2.0496	0.00000E+00	0.0000
18	0.0041			3.68149E-03	4.6778	4.09399E-03	2.2997	0.00000E+00	0.0000
19	0.0049			4.46071E-03	3.9852	6.55610E-03	1.5972	0.00000E+00	0.0000
20	0.0208			1.87417E-02	1.8909	2.46814E-02	0.9581	0.00000E+00	0.0000
21	0.0115			1.03529E-02	2.7066	1.06895E-02	1.4122	0.00000E+00	0.0000
22	0.0277			2.49519E-02	1.9069	2.45621E-02	1.1086	0.00000E+00	0.0000
23	0.1056			9.52794E-02	0.9464	1.01529E-01	0.5113	0.00000E+00	0.0000
24	0.2186			1.97206E-01	0.6778	2.12961E-01	0.3258	0.00000E+00	0.0000
25	0.1915			1.72761E-01	0.6087	1.83980E-01	0.3180	0.00000E+00	0.0000
26	0.2416			2.17928E-01	0.5720	2.28888E-01	0.3164	0.00000E+00	0.0000
27	0.0876			7.90606E-02	1.0865	7.84555E-02	0.6611	0.00000E+00	0.0000
SYSTEM TOTAL =				9.02114E-01	0.2233	1.00134E+00	0.0542	0.00000E+00	0.0000

ELAPSED TIME 7.02500 MINUTES

RANDOM NUMBER= 791A56DD44CA

```
                              FREQUENCY FOR GENERATIONS    4 TO  206
0.8419 TO 0.8561     ************
0.8561 TO 0.8702     ******************
0.8702 TO 0.8843     **********************
0.8843 TO 0.8985     ************************************************
0.8985 TO 0.9126     *********************************
0.9126 TO 0.9268     ******************************
0.9268 TO 0.9409     ******************
0.9409 TO 0.9551     ***************
0.9551 TO 0.9692     ****
0.9692 TO 0.9833     **

                              FREQUENCY FOR GENERATIONS   55 TO  206
0.8419 TO 0.8561     *********
0.8561 TO 0.8702     **************
0.8702 TO 0.8843     ****************
0.8843 TO 0.8985     ************************************
0.8985 TO 0.9126     **********************
0.9126 TO 0.9268     ************************
0.9268 TO 0.9409     **************
0.9409 TO 0.9551     ***********
0.9551 TO 0.9692     ****
0.9692 TO 0.9833     **

                              FREQUENCY FOR GENERATIONS  105 TO  206
0.8419 TO 0.8561     *******
0.8561 TO 0.8702     *******
0.8702 TO 0.8843     ********
0.8843 TO 0.8985     ****************************
0.8985 TO 0.9126     ****************
0.9126 TO 0.9268     ****************
0.9268 TO 0.9409     *******
0.9409 TO 0.9551     ********
0.9551 TO 0.9692     ****
0.9692 TO 0.9833     *

                              FREQUENCY FOR GENERATIONS  156 TO  206
0.8419 TO 0.8561     *****
0.8561 TO 0.8702     ****
0.8702 TO 0.8843     **
0.8843 TO 0.8985     ******************
0.8985 TO 0.9126     *********
0.9126 TO 0.9268     *******
0.9268 TO 0.9409     ****
0.9409 TO 0.9551     **
0.9551 TO 0.9692     *
0.9692 TO 0.9833


*****************************************************************************************************************************************************
*

          CONGRATULATIONS!  YOU HAVE  SUCCESSFULLY TRAVERSED THE PERILOUS PATH THROUGH KENO V IN   7.02500 MINUTES

*****************************************************************************************************************************************************
*
```

6.6.4 Intact PWR and BWR Fuel Rods in a Rod Holder or Fuel Assembly Lattice

This section contains abbreviated output files from the most reactive normal condition and accident condition moderator density variation cases.

Figure 6.6.4-1 CSAS Input/Output for NAC-LWT with 25 PWR Rods – Most Reactive Normal Condition Configuration

```
_          PRIMARY MODULE ACCESS AND INPUT RECORD ( SCALE DRIVER - 95/03/29 - 09:06:37 )
   MODULE CSAS25   WILL BE CALLED
     PWR RODS, NO BASKET, VOID EXTERIOR, GAP VOID
     27GROUPNDF4    LATTICECELL
     UO2       1    0.95  293.0  92235  5.0  92238   95.0  END
     ZIRCALLOY 2    1.0           293.0     END
     H2O   3 1.000 293.0 END
     AL        4    1.0           293.0     END
     SS304     5    1.0           293.0     END
     PB        6    1.0           293.0     END
     H2O       7    1.0           293.0     END
     H2O   8 1.000 293.0 END
     H2O       9    1.0E-20       293.0     END
     END COMP
     TRIANGPITCH   2.92169   0.9564  1  3  1.1175 2 0.9753 9 END
     "LWT CASK, 25 PWR RODS, NO PWR BASKET, 5 W/O U235 VARIABLE PITCH"
     READ PARAM RUN=YES PLT=NO  GEN=103 NPG=400 END PARAM
     READ GEOM
     UNIT 1
     COM="PWR FUEL ROD"
     CYLINDER     1  1  0.4781    2P10.0
     CYLINDER     9  1  0.4876    2P10.0
     CYLINDER     2  1  0.5588    2P10.0
     GLOBAL UNIT 2
     CYLINDER    3   1   16.9863  2P10.0
     HOLE    1    .0000    .0000    .0000
     HOLE    1    .0000   2.9216    .0000
     HOLE    1   2.5301   1.4608    .0000
     HOLE    1   2.5301  -1.4608    .0000
     HOLE    1    .0000  -2.9216    .0000
     HOLE    1  -2.5301  -1.4608    .0000
     HOLE    1  -2.5301   1.4608    .0000
     HOLE    1  -2.5301   4.3825    .0000
     HOLE    1    .0000   5.8433    .0000
     HOLE    1   2.5301   4.3825    .0000
     HOLE    1   5.0603   2.9216    .0000
     HOLE    1   5.0603    .0000    .0000
     HOLE    1   5.0603  -2.9216    .0000
     HOLE    1   2.5301  -4.3825    .0000
     HOLE    1    .0000  -5.8433    .0000
     HOLE    1  -2.5301  -4.3825    .0000
     HOLE    1  -5.0603  -2.9216    .0000
     HOLE    1  -5.0603    .0000    .0000
     HOLE    1  -5.0603   2.9216    .0000
     HOLE    1  -5.0603   5.8433    .0000
     HOLE    1   2.5301   7.3041    .0000
     HOLE    1   7.5904   1.4608    .0000
     HOLE    1   5.0603  -5.8433    .0000
     HOLE    1  -2.5301  -7.3041    .0000
     HOLE    1  -7.5904  -1.4608    .0000
     CYLINDER    5   1    18.8913  2P10.0
     CYLINDER    6   1    33.4963  2P10.0
     CYLINDER    5   1    36.5443  2P10.0
     CYLINDER    7   1    49.2443  2P10.0
     CYLINDER    5   1    49.8539  2P10.0
     CUBOID   8 1 4P49.8539  2P10.0
     END GEOM
     READ BOUNDS  ALL=MIR     END BOUNDS
     END DATA

   SECONDARY MODULE O0O008   HAS BEEN CALLED.

   MODULE O0O008   IS FINISHED. COMPLETION CODE     0. CPU TIME USED     0.60 (SECONDS).

   SECONDARY MODULE O0O002   HAS BEEN CALLED.

   MODULE O0O002   IS FINISHED. COMPLETION CODE     0. CPU TIME USED     5.93 (SECONDS).

   SECONDARY MODULE O0O009   HAS BEEN CALLED.

   MODULE O0O009   IS FINISHED. COMPLETION CODE     0. CPU TIME USED   262.93 (SECONDS).

   MODULE CSAS25   IS FINISHED. COMPLETION CODE     0. CPU TIME USED   271.12 (SECONDS).
```



```
 SSSSSSSSSS     CCCCCCCCCC      AAAAAAAAA     LL             EEEEEEEEEEEE                  PPPPPPPPPPP     CCCCCCCCCC
SSSSSSSSSSS   CCCCCCCCCCCC    AAAAAAAAAAA    LL             EEEEEEEEEEEE                  PPPPPPPPPPPP   CCCCCCCCCCCC
SS         SS CC          CC  AA         AA   LL             EE                            PP         PP  CC          CC
SS            CC             AA         AA   LL             EE                            PP         PP  CC
SS            CC             AA         AA   LL             EE                            PP         PP  CC
SSSSSSSSSSS   CC             AAAAAAAAAAAAA   LL             EEEEEEEEE       -------------  PPPPPPPPPPPP  CC
 SSSSSSSSSSS  CC             AAAAAAAAAAAAA   LL             EEEEEEEEE       -------------  PPPPPPPPPPP   CC
          SS  CC             AA         AA   LL             EE                            PP             CC
          SS  CC             AA         AA   LL             EE                            PP             CC
SS        SS  CC          CC  AA         AA   LL             EE                            PP             CC          CC
SSSSSSSSSSS   CCCCCCCCCCCCC   AA         AA   LLLLLLLLLLLLL  EEEEEEEEEEEE                  PP             CCCCCCCCCCCCC
 SSSSSSSSSS    CCCCCCCCCC    AA         AA   LLLLLLLLLLLLL  EEEEEEEEEEEE                  PP              CCCCCCCCCC
```

```
*******************************************************************************
*******************************************************************************
*******************************************************************************
*****                                                                     *****
*****                  PROGRAM VERIFICATION INFORMATION                   *****
*****                                                                     *****
*****                CODE SYSTEM:  SCALE-PC VERSION:  4.3                 *****
*****                                                                     *****
*******************************************************************************
*******************************************************************************
*****                                                                     *****
*****                                                                     *****
*****              PROGRAM:  CSAS                                         *****
*****                                                                     *****
*****        CREATION DATE:  03/08/96                                     *****
*****                                                                     *****
*****              VOLUME:   ENG                                          *****
*****                                                                     *****
*****              LIBRARY:  G:\SCALE43\WIN_NT\EXE                        *****
*****                                                                     *****
*****                                                                     *****
*****      PRODUCTION CODE:  CSAS                                         *****
*****                                                                     *****
*****              VERSION:  3.1                                          *****
*****                                                                     *****
*****              JOBNAME:  SCALE-PC                                     *****
*****                                                                     *****
*****    DATE OF EXECUTION:  08/05/98                                     *****
*****                                                                     *****
*****    TIME OF EXECUTION:  08:10:44                                     *****
*****                                                                     *****
*****                                                                     *****
*******************************************************************************
*******************************************************************************
*******************************************************************************
```

```
PWR RODS, NO BASKET, VOID EXTERIOR, GAP VOID

**** PROBLEM PARAMETERS ****

LIB 27GROUPNDF4  LIBRARY
MXX            9 MIXTURES
MSC            9 COMPOSITION SPECIFICATIONS
IZM            4 MATERIAL ZONES
GE  LATTICECELL  GEOMETRY
MORE           0 0/1 DO NOT READ/READ OPTIONAL PARAMETER DATA
MSLN           0 FUEL SOLUTIONS


**** PROBLEM COMPOSITION DESCRIPTION ****

SC  UO2          STANDARD COMPOSITION
MX             1 MIXTURE NO.
VF        0.9500 VOLUME FRACTION
ROTH     10.9600 THEORETICAL DENSITY
NEL            2 NO. ELEMENTS
ICP            1 0/1 MIXTURE/COMPOUND
TEMP       293.0 DEG KELVIN
           92000      1.00 ATOM/MOLECULE
                         92235     5.000 WT%
                         92238    95.000 WT%
            8016      2.00 ATOMS/MOLECULE
END

SC  ZIRCALLOY    STANDARD COMPOSITION
MX             2 MIXTURE NO.
VF        1.0000 VOLUME FRACTION
ROTH      6.5600 THEORETICAL DENSITY
NEL            1 NO. ELEMENTS
ICP            1 0/1 MIXTURE/COMPOUND
TEMP       293.0 DEG KELVIN
           40302      1.00 ATOM/MOLECULE
END

SC  H2O          STANDARD COMPOSITION
MX             3 MIXTURE NO.
VF        1.0000 VOLUME FRACTION
ROTH      0.9982 THEORETICAL DENSITY
NEL            2 NO. ELEMENTS
ICP            1 0/1 MIXTURE/COMPOUND
TEMP       293.0 DEG KELVIN
            1001      2.00 ATOMS/MOLECULE
            8016      1.00 ATOM/MOLECULE
END

SC  AL           STANDARD COMPOSITION
MX             4 MIXTURE NO.
VF        1.0000 VOLUME FRACTION
ROTH      2.7020 THEORETICAL DENSITY
NEL            1 NO. ELEMENTS
ICP            1 0/1 MIXTURE/COMPOUND
TEMP       293.0 DEG KELVIN
           13027      1.00 ATOM/MOLECULE
END

SC  SS304        STANDARD COMPOSITION
MX             5 MIXTURE NO.
VF        1.0000 VOLUME FRACTION
ROTH      7.9200 THEORETICAL DENSITY
NEL            4 NO. ELEMENTS
ICP            0 0/1 MIXTURE/COMPOUND
TEMP       293.0 DEG KELVIN
           24304    19.000 WT%
           25055     2.000 WT%
           26304    69.500 WT%
           28304     9.500 WT%
END

SC  PB           STANDARD COMPOSITION
MX             6 MIXTURE NO.
VF        1.0000 VOLUME FRACTION
ROTH     11.3440 THEORETICAL DENSITY
NEL            1 NO. ELEMENTS
ICP            1 0/1 MIXTURE/COMPOUND
TEMP       293.0 DEG KELVIN
           82000      1.00 ATOM/MOLECULE
END

SC  H2O          STANDARD COMPOSITION
MX             7 MIXTURE NO.
VF        1.0000 VOLUME FRACTION
ROTH      0.9982 THEORETICAL DENSITY
NEL            2 NO. ELEMENTS
ICP            1 0/1 MIXTURE/COMPOUND
TEMP       293.0 DEG KELVIN
            1001      2.00 ATOMS/MOLECULE
            8016      1.00 ATOM/MOLECULE
END

SC  H2O          STANDARD COMPOSITION
```

```
MX             8 MIXTURE NO.
VF        1.0000 VOLUME FRACTION
ROTH      0.9982 THEORETICAL DENSITY
NEL            2 NO. ELEMENTS
ICP            1 0/1 MIXTURE/COMPOUND
TEMP       293.0 DEG KELVIN
            1001      2.00 ATOMS/MOLECULE
            8016      1.00 ATOM/MOLECULE
END

SC  H2O          STANDARD COMPOSITION
MX             9 MIXTURE NO.
VF        0.0000 VOLUME FRACTION
ROTH      0.9982 THEORETICAL DENSITY
NEL            2 NO. ELEMENTS
ICP            1 0/1 MIXTURE/COMPOUND
TEMP       293.0 DEG KELVIN
            1001      2.00 ATOMS/MOLECULE
            8016      1.00 ATOM/MOLECULE
END


**** PROBLEM GEOMETRY ****

CTP TRIANGPITCH  CELL TYPE
PITCH     2.9217 CM CENTER TO CENTER SPACING
FUELOD    0.9564 CM FUEL DIAMETER OR SLAB THICKNESS
MFUEL          1 MIXTURE NO. OF FUEL
MMOD           3 MIXTURE NO. OF MODERATOR
CLADOD    1.1175 CM CLAD OUTER DIAMETER
MCLAD          2 MIXTURE NO. OF CLAD
GAPOD     0.9753 CM GAP OUTER DIAMETER
MGAP           9 MIXTURE NO. OF GAP


ZONE SPECIFICATIONS FOR LATTICECELL GEOMETRY

               ZONE  1 IS FUEL
               ZONE  2 IS GAP
               ZONE  3 IS CLAD
               ZONE  4 IS MOD
```

```
*****************************************************************************************************************
***                                                                                                           ***
***                            PWR RODS, NO BASKET, VOID EXTERIOR, GAP VOID                                   ***
***                                                                                                           ***
*****************************************************************************************************************
*****************************************************************************************************************
***                                                                                                           ***
***                              ********** DATA LIBRARY INFORMATION **********                              ***
***                                                                                                           ***
***          UNIT                                                VOLUME                                       ***
***         NUMBER               DATA SET NAME                   NAME        UNIT FUNCTION                   ***
***         ------               -------------                   ----        -------------                   ***
***                                                                                                           ***
***           89     G:\scale43\DATALIB\FT89F001                              STANDARD COMPOSITION LIBRARY    ***
***                                                                                                           ***
***           82     G:\scale43\DATALIB\FT82F001                              CROSS SECTION LIBRARY           ***
***                                                                                                           ***
***           11     D:\PROJECTS\BU85-C~1\rods9\RONX3M\FT11F001               SHORT CROSS SECTION LIBRARY     ***
***                                                                                                           ***
***           90     D:\PROJECTS\BU85-C~1\rods9\RONX3M\FT90F001               INPUT DATA DIRECT ACCESS        ***
***                                                                                                           ***
*****************************************************************************************************************
*****************************************************************************************************************
***                                                                                                           ***
***                                                                                                           ***
***                                    STANDARD COMPOSITION LIBRARY DATA                                      ***
***                                    ---------------------------------                                      ***
***                                                                                                           ***
***            UNIT NUMBER  :  89                                                                             ***
***                                                                                                           ***
***            DATASET NAME :  G:\scale43\DATALIB\FT89F001                                                    ***
***                                                                                                           ***
***            LIBRARY TITLE:  SCALE-4 STANDARD COMPOSITION LIBRARY                                           ***
***                            637 STANDARD COMPOSITIONS, 490 NUCLIDES                                        ***
***                            90 ELEMENTS WITH VARIABLE ISOTOPIC DISTRBUTIONS.                               ***
***                                                                                                           ***
***            CREATION DATE:   6/30/95                                                                       ***
***                                                                                                           ***
***                                                                                                           ***
***                                                                                                           ***
***                                      CROSS SECTION LIBRARY DATA                                           ***
***                                     ---------------------------                                           ***
***                                                                                                           ***
***            UNIT NUMBER  :  82                                                                             ***
***                                                                                                           ***
***            DATASET NAME :  G:\scale43\DATALIB\FT82F001                                                    ***
***                                                                                                           ***
***            LIBRARY TITLE:  SCALE 4.2 - 27 GROUP NEUTRON GROUP LIBRARY                                     ***
***                               BASED ON ENDF-B VERSION 4 DATA                                              ***
***                                  COMPILED FOR NRC     1/27/89                                             ***
***                                     LAST UPDATED                                          08/12/94  ***
***                                        L.M.PETRIE   -   ORNL                                              ***
***                                                                                                           ***
***                                                                                                           ***
***                                                                                                           ***
***                                                                                                           ***
*****************************************************************************************************************
*****************************************************************************************************************

                        ........    0 IO'S WERE USED BEFORE READING KENO V DATA    ........

                        ........    0 IO'S WERE USED READING THE KENO V PARAMETER DATA    ........


                       *************** DATA READING COMPLETED ***************

                        ........    0 IO'S WERE USED PREPARING THE KENO V INPUT DATA    ........

                        ........    0 IO'S WERE USED LOADING THE KENO V DATA    ........

                        ........    0 IO'S WERE USED LOADING THE DATA    ........

                        ........    0 IO'S WERE USED CHECKING THE KENO V GEOMETRY DATA    ........
                        *****  RESTART DATA HAS BEEN WRITTEN ON UNIT 95  *****

                        ........    0 IO'S WERE USED WRITING THE KENO V - CSAS DATA    ........

                        ........    0 IO'S WERE USED PROCESSING CSAS INPUT DATA    ........


 CONTROL MODULE CSAS25   IS COMPLETE.
```

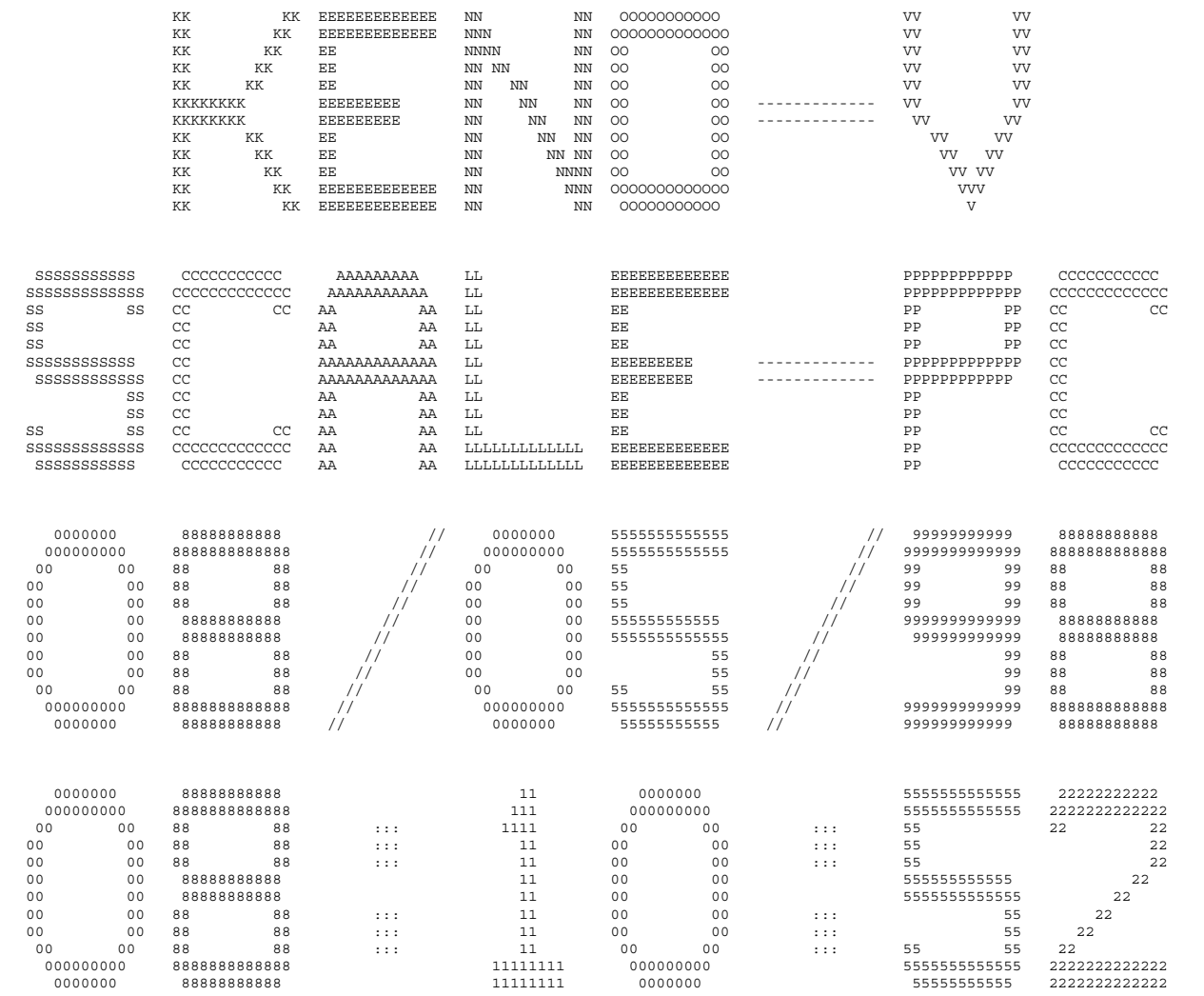

```
*****************************************************************************************************************
***                                                                                                           ***
***                          "LWT CASK, 25 PWR RODS, NO PWR BASKET, 5 W/O U235 VARIABLE PITCH"                ***
***                                                                                                           ***
*****************************************************************************************************************
***                          ******       NUMERIC PARAMETERS       ******                                    ***
***                                                                                                           ***
***                                                                                                           ***
***          TME         MAXIMUM PROBLEM TIME (MIN)                          30.00                        ***
***                                                                                                           ***
***          TBA         TIME PER GENERATION (MIN)                            0.50                        ***
***                                                                                                           ***
***          GEN         NUMBER OF GENERATIONS                                 103                        ***
***                                                                                                           ***
***          NPG         NUMBER PER GENERATION                                 400                        ***
***                                                                                                           ***
***          NSK         NUMBER OF GENERATIONS TO BE SKIPPED                     3                        ***
***                                                                                                           ***
***          BEG         BEGINNING GENERATION NUMBER                             1                        ***
***                                                                                                           ***
***          RES         GENERATIONS BETWEEN CHECKPOINTS                         0                        ***
***                                                                                                           ***
***          X1D         NUMBER OF EXTRA 1-D CROSS SECTIONS                      1                        ***
***                                                                                                           ***
***          NBK         NEUTRON BANK SIZE                                     425                        ***
***                                                                                                           ***
***          XNB         EXTRA POSITIONS IN NEUTRON BANK                         0                        ***
***                                                                                                           ***
***          NFB         FISSION BANK SIZE                                     400                        ***
***                                                                                                           ***
***          XFB         EXTRA POSITIONS IN FISSION BANK                         0                        ***
***                                                                                                           ***
***          WTA         DEFAULT VALUE OF WEIGHT AVERAGE                    0.5000                        ***
***                                                                                                           ***
***          WTH         WEIGHT HIGH FOR SPLITTING                          3.0000                        ***
***                                                                                                           ***
***          WTL         WEIGHT LOW FOR RUSSIAN ROULETTE                    0.3333                        ***
***                                                                                                           ***
***          RND         STARTING RANDOM NUMBER                        BB827100001                        ***
***                                                                                                           ***
***          NB8         NUMBER OF D.A. BLOCKS ON UNIT  8                      200                        ***
***                                                                                                           ***
***          NL8         LENGTH OF D.A. BLOCKS ON UNIT  8                      512                        ***
***                                                                                                           ***
***          ADJ         MODE OF CALCULATION                                FORWARD                       ***
***                                                                                                           ***
***                      INPUT DATA WRITTEN ON RESTART UNIT                      NO                        ***
***                                                                                                           ***
***                      BINARY DATA INTERFACE                                  YES                        ***
***                                                                                                           ***
***                                                                                                           ***
*****************************************************************************************************************
*****************************************************************************************************************
```

```
*****************************************************************************************************************
*****************************************************************************************************************
***                                                                                                           ***
***                            "LWT CASK, 25 PWR RODS, NO PWR BASKET, 5 W/O U235 VARIABLE PITCH"              ***
***                                                                                                           ***
*****************************************************************************************************************
***                                ******      LOGICAL PARAMETERS        ******                               ***
***                                                                                                           ***
***  RUN  EXECUTE PROBLEM AFTER CHECKING DATA    YES            PLT  PLOT PICTURE MAP(S)                    NO ***
***                                                                                                           ***
***  FLX  COMPUTE FLUX                            NO            FDN  COMPUTE FISSION DENSITIES              NO ***
***                                                                                                           ***
***  SMU  COMPUTE AVG UNIT SELF-MULTIPLICATION    NO            NUB  COMPUTE NU-BAR & AVG FISSION GROUP     YES ***
***                                                                                                           ***
***  MKU  COMPUTE MATRIX K-EFF BY UNIT NUMBER     NO            MKP  COMPUTE MATRIX K-EFF BY UNIT LOCATION  NO ***
***                                                                                                           ***
***  CKU  COMPUTE COFACTOR K-EFF BY UNIT NUMBER   NO            CKP  COMPUTE COFACTOR K-EFF BY UNIT LOCATION NO ***
***                                                                                                           ***
***  FMU  PRINT FISS PROD MATRIX BY UNIT NUMBER   NO            FMP  PRINT FISS PROD MATRIX BY UNIT LOCATION NO ***
***                                                                                                           ***
***  MKH  COMPUTE MATRIX K-EFF BY HOLE NUMBER     NO            MKA  COMPUTE MATRIX K-EFF BY ARRAY NUMBER   NO ***
***                                                                                                           ***
***  CKH  COMPUTE COFACTOR K-EFF BY HOLE NUMBER   NO            CKA  COMPUTE COFACTOR K-EFF BY ARRAY NUMBER NO ***
***                                                                                                           ***
***  FMH  PRINT FISS PROD MATRIX BY HOLE NUMBER   NO            FMA  PRINT FISS PROD MATRIX BY ARRAY NUMBER NO ***
***                                                                                                           ***
***  HHL  COLLECT MATRIX BY HIGHEST HOLE LEVEL    NO            HAL  COLLECT MATRIX BY HIGHEST ARRAY LEVEL  NO ***
***                                                                                                           ***
***  AMX  PRINT ALL MIXED CROSS SECTIONS          NO            FAR  PRINT FIS. AND ABS. BY REGION          NO ***
***                                                                                                           ***
***  XS1  PRINT 1-D MIXTURE X-SECTIONS            NO            GAS  PRINT FAR BY GROUP                     NO ***
***                                                                                                           ***
***  XS2  PRINT 2-D MIXTURE X-SECTIONS            NO            PAX  PRINT XSEC-ALBEDO CORRELATION TABLES   NO ***
***                                                                                                           ***
***  XAP  PRINT MIXTURE ANGLES & PROBABILITIES    NO            PWT  PRINT WEIGHT AVERAGE ARRAY             NO ***
***                                                                                                           ***
***  PKI  PRINT FISSION SPECTRUM                  NO            PGM  PRINT INPUT GEOMETRY                   NO ***
***                                                                                                           ***
***  P1D  PRINT EXTRA 1-D CROSS SECTIONS          NO            BUG  PRINT DEBUG INFORMATION                NO ***
***                                                                                                           ***
***                                                             TRK  PRINT TRACKING INFORMATION             NO ***
***                                                                                                           ***
***                                                                                                           ***
*****************************************************************************************************************
*****************************************************************************************************************
*****************************************************************************************************************
                                  PARAMETER INPUT COMPLETED

                        ........    0 IO'S WERE USED READING THE PARAMETER DATA      ........

                       ************** DATA READING COMPLETED **************
```

```
*****************************************************************************************************
***                                                                                               ***
***          "LWT CASK, 25 PWR RODS, NO PWR BASKET, 5 W/O U235 VARIABLE PITCH"                    ***
***                                                                                               ***
*****************************************************************************************************
*****************************************************************************************************
***                                                                                               ***
***                              ****** ADDITIONAL INFORMATION ******                             ***
***                                                                                               ***
***  NUMBER OF ENERGY GROUPS              27       USE LATTICE GEOMETRY                     NO   ***
***                                                                                               ***
***  NO. OF FISSION SPECTRUM SOURCE GROUP  1       GLOBAL ARRAY NUMBER                       0   ***
***                                                                                               ***
***  NO. OF SCATTERING ANGLES IN XSECS     2       NUMBER OF UNITS IN THE GLOBAL X DIR.      0   ***
***                                                                                               ***
***  ENTRIES/NEUTRON IN THE NEUTRON BANK  17       NUMBER OF UNITS IN THE GLOBAL Y DIR.      0   ***
***                                                                                               ***
***  ENTRIES/NEUTRON IN THE FISSION BANK  10       NUMBER OF UNITS IN THE GLOBAL Z DIR.      0   ***
***                                                                                               ***
***  NUMBER OF MIXTURES USED               8       USE A GLOBAL REFLECTOR                   YES   ***
***                                                                                               ***
***  NUMBER OF BIAS ID'S USED              1       USE NESTED HOLES                          NO   ***
***                                                                                               ***
***  NUMBER OF DIFFERENTIAL ALBEDOS USED   0       NUMBER OF HOLES                           25   ***
***                                                                                               ***
***  TOTAL INPUT GEOMETRY REGIONS         10       MAXIMUM HOLE NESTING LEVEL                 1   ***
***                                                                                               ***
***  NUMBER OF GEOMETRY REGIONS USED      10       USE NESTED ARRAYS                         NO   ***
***                                                                                               ***
***  LARGEST GEOMETRY UNIT NUMBER          2       NUMBER OF ARRAYS USED                     0   ***
***                                                                                               ***
***  LARGEST ARRAY NUMBER                  1       MAXIMUM ARRAY NESTING LEVEL               0   ***
***                                                                                               ***
***                                                                                               ***
***  +X BOUNDARY CONDITION               MIR       -X BOUNDARY CONDITION                    MIR   ***
***                                                                                               ***
***  +Y BOUNDARY CONDITION               MIR       -Y BOUNDARY CONDITION                    MIR   ***
***                                                                                               ***
***  +Z BOUNDARY CONDITION               MIR       -Z BOUNDARY CONDITION                    MIR   ***
***                                                                                               ***
*****************************************************************************************************
```

"LWT CASK, 25 PWR RODS, NO PWR BASKET, 5 W/O U235 VARIABLE PITCH"

REGION | MEDIA NUM | BIAS ID | GEOMETRY DESCRIPTION FOR THOSE UNITS UTILIZED IN THIS PROBLEM

----- UNIT 1 -----

PWR FUEL ROD

1	CYLINDER	1	1	RADIUS = 0.47810	+Z = 10.000	-Z = -10.000	CENTERLINE IS AT	X = 0.00000	Y = 0.00000	
2	CYLINDER	9	1	RADIUS = 0.48760	+Z = 10.000	-Z = -10.000	CENTERLINE IS AT	X = 0.00000	Y = 0.00000	
3	CYLINDER	2	1	RADIUS = 0.55880	+Z = 10.000	-Z = -10.000	CENTERLINE IS AT	X = 0.00000	Y = 0.00000	

"LWT CASK, 25 PWR RODS, NO PWR BASKET, 5 W/O U235 VARIABLE PITCH"

REGION | MEDIA NUM | BIAS ID | GEOMETRY DESCRIPTION FOR THOSE UNITS UTILIZED IN THIS PROBLEM

********** GLOBAL **********

----- UNIT 2 -----

1	CYLINDER	3	1	RADIUS = 16.986	+Z = 10.000	-Z = -10.000	CENTERLINE IS AT	X = 0.00000	Y = 0.00000	
	HOLE NUMBER	1		AT X = 0.00000	Y = 0.00000	Z = 0.00000	IS UNIT NUMBER	1		
	HOLE NUMBER	2		AT X = 0.00000	Y = 2.9216	Z = 0.00000	IS UNIT NUMBER	1		
	HOLE NUMBER	3		AT X = 2.5301	Y = 1.4608	Z = 0.00000	IS UNIT NUMBER	1		
	HOLE NUMBER	4		AT X = 2.5301	Y = -1.4608	Z = 0.00000	IS UNIT NUMBER	1		
	HOLE NUMBER	5		AT X = 0.00000	Y = -2.9216	Z = 0.00000	IS UNIT NUMBER	1		
	HOLE NUMBER	6		AT X = -2.5301	Y = -1.4608	Z = 0.00000	IS UNIT NUMBER	1		
	HOLE NUMBER	7		AT X = -2.5301	Y = 1.4608	Z = 0.00000	IS UNIT NUMBER	1		
	HOLE NUMBER	8		AT X = -2.5301	Y = 4.3825	Z = 0.00000	IS UNIT NUMBER	1		
	HOLE NUMBER	9		AT X = 0.00000	Y = 5.8433	Z = 0.00000	IS UNIT NUMBER	1		
	HOLE NUMBER	10		AT X = 2.5301	Y = 4.3825	Z = 0.00000	IS UNIT NUMBER	1		
	HOLE NUMBER	11		AT X = 5.0603	Y = 2.9216	Z = 0.00000	IS UNIT NUMBER	1		
	HOLE NUMBER	12		AT X = 5.0603	Y = 0.00000	Z = 0.00000	IS UNIT NUMBER	1		
	HOLE NUMBER	13		AT X = 5.0603	Y = -2.9216	Z = 0.00000	IS UNIT NUMBER	1		
	HOLE NUMBER	14		AT X = 2.5301	Y = -4.3825	Z = 0.00000	IS UNIT NUMBER	1		
	HOLE NUMBER	15		AT X = 0.00000	Y = -5.8433	Z = 0.00000	IS UNIT NUMBER	1		
	HOLE NUMBER	16		AT X = -2.5301	Y = -4.3825	Z = 0.00000	IS UNIT NUMBER	1		
	HOLE NUMBER	17		AT X = -5.0603	Y = -2.9216	Z = 0.00000	IS UNIT NUMBER	1		
	HOLE NUMBER	18		AT X = -5.0603	Y = 0.00000	Z = 0.00000	IS UNIT NUMBER	1		
	HOLE NUMBER	19		AT X = -5.0603	Y = 2.9216	Z = 0.00000	IS UNIT NUMBER	1		
	HOLE NUMBER	20		AT X = -5.0603	Y = 5.8433	Z = 0.00000	IS UNIT NUMBER	1		
	HOLE NUMBER	21		AT X = 2.5301	Y = 7.3041	Z = 0.00000	IS UNIT NUMBER	1		
	HOLE NUMBER	22		AT X = 7.5904	Y = 1.4608	Z = 0.00000	IS UNIT NUMBER	1		
	HOLE NUMBER	23		AT X = 5.0603	Y = -5.8433	Z = 0.00000	IS UNIT NUMBER	1		
	HOLE NUMBER	24		AT X = -2.5301	Y = -7.3041	Z = 0.00000	IS UNIT NUMBER	1		
	HOLE NUMBER	25		AT X = -7.5904	Y = -1.4608	Z = 0.00000	IS UNIT NUMBER	1		
2	CYLINDER	5	1	RADIUS = 18.891	+Z = 10.000	-Z = -10.000	CENTERLINE IS AT	X = 0.00000	Y = 0.00000	
3	CYLINDER	6	1	RADIUS = 33.496	+Z = 10.000	-Z = -10.000	CENTERLINE IS AT	X = 0.00000	Y = 0.00000	
4	CYLINDER	5	1	RADIUS = 36.544	+Z = 10.000	-Z = -10.000	CENTERLINE IS AT	X = 0.00000	Y = 0.00000	
5	CYLINDER	7	1	RADIUS = 49.244	+Z = 10.000	-Z = -10.000	CENTERLINE IS AT	X = 0.00000	Y = 0.00000	
6	CYLINDER	5	1	RADIUS = 49.854	+Z = 10.000	-Z = -10.000	CENTERLINE IS AT	X = 0.00000	Y = 0.00000	
7	CUBOID	8	1	+X = 49.854	-X = -49.854	+Y = 49.854	-Y = -49.854	+Z = 10.000	-Z = -10.000	

"LWT CASK, 25 PWR RODS, NO PWR BASKET, 5 W/O U235 VARIABLE PITCH"
VOLUMES FOR THOSE UNITS UTILIZED IN THIS PROBLEM

UNIT	REGION	GEOMETRY REGION	VOLUME	CUMULATIVE VOLUME
1	1	1	1.43621E+01 CM**3	1.43621E+01 CM**3
	2	2	5.76429E-01 CM**3	1.49385E+01 CM**3
	3	3	4.68120E+00 CM**3	1.96197E+01 CM**3
2	1	4	1.76387E+04 CM**3	1.81291E+04 CM**3
	2	5	4.29436E+03 CM**3	2.24235E+04 CM**3
	3	6	4.80740E+04 CM**3	7.04975E+04 CM**3
	4	7	1.34136E+04 CM**3	8.39110E+04 CM**3
	5	8	6.84563E+04 CM**3	1.52367E+05 CM**3
	6	9	3.79567E+03 CM**3	1.56163E+05 CM**3
	7	10	4.26699E+04 CM**3	1.98833E+05 CM**3

UNIT	USES	REGION	MIXTURE	TOTAL VOLUME
1	25	1	1	3.59052E+02 CM**3
		2	9	1.44107E+01 CM**3
		3	2	1.17030E+02 CM**3
2	1	1	3	1.76387E+04 CM**3
		2	5	4.29436E+03 CM**3
		3	6	4.80740E+04 CM**3
		4	5	1.34136E+04 CM**3
		5	7	6.84563E+04 CM**3
		6	5	3.79567E+03 CM**3
		7	8	4.26699E+04 CM**3

TOTAL MIXTURE VOLUMES

MIXTURE	TOTAL VOLUME	MASS(G)
1	3.59052E+02 CM**3	3.73844E+03
2	1.17030E+02 CM**3	7.67717E+02
3	1.76387E+04 CM**3	1.76064E+04
5	2.15036E+04 CM**3	1.70309E+05
6	4.80740E+04 CM**3	5.45351E+05
7	6.84563E+04 CM**3	6.83311E+04
8	4.26699E+04 CM**3	4.25919E+04
9	1.44107E+01 CM**3	1.43844E-19

```
*****************************************************************************************************************
***                                                                                                           ***
***                                        BIASING INFORMATION                                                ***
***                                                                                                           ***
***     A DEFAULT WEIGHT OF    0.500 WILL BE USED FOR ALL BIAS ID'S.                                          ***
***                                                                                                           ***
*****************************************************************************************************************

                        ........    0 IO'S WERE USED IN KENO-V BEFORE TRACKING       ........

                        ........  0.00733 MINUTES WERE USED PROCESSING DATA.        ........

VOLUME FRACTION OF FISSILE MATERIAL IN THE CORE= 1.80580E-03

START TYPE 0 WAS USED.

THE NEUTRONS WERE STARTED UNIFORMLY THROUGHOUT THE ENTIRE VOLUME DEFINED BY THE OUTERMOST GEOMETRY CARD.
THE FLAG TO START NEUTRONS IN THE REFLECTOR WAS TURNED OFF

KENO MESSAGE NUMBER K5-105     ***** WARNING, ONLY   49 INDEPENDENT STARTING POSITIONS WERE GENERATED.  *****

  351 ADDITIONAL STARTING POINTS WERE PICKED FROM THE INITAL DISTRIBUTION.

0.45350 MINUTES WERE REQUIRED FOR STARTING.   TOTAL ELAPSED TIME IS 0.46933 MINUTES.
```

"LWT CASK, 25 PWR RODS, NO PWR BASKET, 5 W/O U235 VARIABLE PITCH"

GENERATION	GENERATION K-EFFECTIVE	ELAPSED TIME MINUTES	AVERAGE K-EFFECTIVE	AVG K-EFF DEVIATION	MATRIX K-EFFECTIVE	MATRIX K-EFF DEVIATION
KENO MESSAGE NUMBER K5-132	WARNING....ONLY	292 INDEPENDENT FISSION POINTS WERE GENERATED				
1	6.50062E-01	5.01667E-01	1.00000E+00	0.00000E+00	0.00000E+00	0.00000E+00
KENO MESSAGE NUMBER K5-132	WARNING....ONLY	279 INDEPENDENT FISSION POINTS WERE GENERATED				
2	5.88790E-01	5.39167E-01	1.00000E+00	0.00000E+00	0.00000E+00	0.00000E+00
KENO MESSAGE NUMBER K5-132	WARNING....ONLY	274 INDEPENDENT FISSION POINTS WERE GENERATED				
3	5.83844E-01	5.75833E-01	5.83844E-01	0.00000E+00	0.00000E+00	0.00000E+00
4	6.88844E-01	6.13333E-01	6.36344E-01	5.25002E-02	0.00000E+00	0.00000E+00
5	6.44585E-01	6.51667E-01	6.39091E-01	3.04352E-02	0.00000E+00	0.00000E+00
6	5.62068E-01	6.91167E-01	6.19835E-01	2.88780E-02	0.00000E+00	0.00000E+00
7	5.91573E-01	7.29500E-01	6.14183E-01	2.30719E-02	0.00000E+00	0.00000E+00
8	6.00952E-01	7.66167E-01	6.11978E-01	1.89668E-02	0.00000E+00	0.00000E+00
9	5.94883E-01	8.05500E-01	6.09535E-01	1.62148E-02	0.00000E+00	0.00000E+00
10	5.68206E-01	8.43000E-01	6.04369E-01	1.49626E-02	0.00000E+00	0.00000E+00
11	5.68268E-01	8.81500E-01	6.00358E-01	1.37919E-02	0.00000E+00	0.00000E+00
12	6.39110E-01	9.18167E-01	6.04233E-01	1.29303E-02	0.00000E+00	0.00000E+00
13	6.16368E-01	9.56667E-01	6.05336E-01	1.17478E-02	0.00000E+00	0.00000E+00
14	6.31496E-01	9.95000E-01	6.07516E-01	1.09435E-02	0.00000E+00	0.00000E+00
15	6.40650E-01	1.03167E+00	6.10065E-01	1.03842E-02	0.00000E+00	0.00000E+00
16	6.11881E-01	1.07100E+00	6.10195E-01	9.61479E-03	0.00000E+00	0.00000E+00
17	5.87702E-01	1.11033E+00	6.08695E-01	9.07561E-03	0.00000E+00	0.00000E+00
18	6.06461E-01	1.14783E+00	6.08556E-01	8.49061E-03	0.00000E+00	0.00000E+00
19	6.06772E-01	1.18550E+00	6.08451E-01	7.97623E-03	0.00000E+00	0.00000E+00
20	6.11538E-01	1.22383E+00	6.08622E-01	7.52201E-03	0.00000E+00	0.00000E+00
21	6.15649E-01	1.26333E+00	6.08992E-01	7.12472E-03	0.00000E+00	0.00000E+00
22	5.94314E-01	1.29983E+00	6.08258E-01	6.79883E-03	0.00000E+00	0.00000E+00
23	6.27934E-01	1.33733E+00	6.09195E-01	6.53450E-03	0.00000E+00	0.00000E+00
24	6.25886E-01	1.37683E+00	6.09954E-01	6.27642E-03	0.00000E+00	0.00000E+00
25	6.02958E-01	1.41433E+00	6.09650E-01	6.00503E-03	0.00000E+00	0.00000E+00
26	6.47925E-01	1.45450E+00	6.11245E-01	5.96648E-03	0.00000E+00	0.00000E+00
27	5.22236E-01	1.49400E+00	6.07684E-01	6.73995E-03	0.00000E+00	0.00000E+00
28	5.79080E-01	1.53333E+00	6.06584E-01	6.56832E-03	0.00000E+00	0.00000E+00
29	6.35278E-01	1.56900E+00	6.07647E-01	6.40910E-03	0.00000E+00	0.00000E+00
30	6.28571E-01	1.60750E+00	6.08394E-01	6.22101E-03	0.00000E+00	0.00000E+00
31	6.10947E-01	1.64500E+00	6.08482E-01	6.00330E-03	0.00000E+00	0.00000E+00
32	6.08800E-01	1.68067E+00	6.08493E-01	5.79975E-03	0.00000E+00	0.00000E+00
33	6.17914E-01	1.71917E+00	6.08797E-01	5.61777E-03	0.00000E+00	0.00000E+00
KENO MESSAGE NUMBER K5-132	WARNING....ONLY	396 INDEPENDENT FISSION POINTS WERE GENERATED				
34	5.28187E-01	1.75750E+00	6.06278E-01	5.99438E-03	0.00000E+00	0.00000E+00
35	5.88405E-01	1.79700E+00	6.05736E-01	5.83508E-03	0.00000E+00	0.00000E+00
36	5.79583E-01	1.83633E+00	6.04967E-01	5.71288E-03	0.00000E+00	0.00000E+00
37	6.11891E-01	1.87483E+00	6.05165E-01	5.55078E-03	0.00000E+00	0.00000E+00
38	5.52803E-01	1.91317E+00	6.03710E-01	5.58703E-03	0.00000E+00	0.00000E+00
39	6.43414E-01	1.95067E+00	6.04783E-01	5.53887E-03	0.00000E+00	0.00000E+00
40	6.75353E-01	1.98650E+00	6.06640E-01	5.70204E-03	0.00000E+00	0.00000E+00
41	6.05556E-01	2.02483E+00	6.06612E-01	5.55398E-03	0.00000E+00	0.00000E+00
42	6.21874E-01	2.06333E+00	6.06994E-01	5.42678E-03	0.00000E+00	0.00000E+00
43	6.17653E-01	2.10083E+00	6.07254E-01	5.29914E-03	0.00000E+00	0.00000E+00
44	5.88315E-01	2.14117E+00	6.06803E-01	5.19106E-03	0.00000E+00	0.00000E+00
45	6.10426E-01	2.17867E+00	6.06887E-01	5.06960E-03	0.00000E+00	0.00000E+00
46	6.11801E-01	2.21717E+00	6.06999E-01	4.95430E-03	0.00000E+00	0.00000E+00
47	6.77640E-01	2.25183E+00	6.08569E-01	5.09102E-03	0.00000E+00	0.00000E+00
48	5.29465E-01	2.29133E+00	6.06849E-01	5.26771E-03	0.00000E+00	0.00000E+00
49	5.89260E-01	2.32883E+00	6.06475E-01	5.16798E-03	0.00000E+00	0.00000E+00
50	6.09912E-01	2.36817E+00	6.06547E-01	5.05967E-03	0.00000E+00	0.00000E+00
51	6.27383E-01	2.40483E+00	6.06972E-01	4.97355E-03	0.00000E+00	0.00000E+00
52	6.12326E-01	2.44233E+00	6.07079E-01	4.87424E-03	0.00000E+00	0.00000E+00
53	5.84348E-01	2.47983E+00	6.06633E-01	4.79846E-03	0.00000E+00	0.00000E+00
54	5.59227E-01	2.51917E+00	6.05721E-01	4.79278E-03	0.00000E+00	0.00000E+00
55	5.75477E-01	2.55850E+00	6.05151E-01	4.73598E-03	0.00000E+00	0.00000E+00
56	5.74859E-01	2.59883E+00	6.04590E-01	4.68119E-03	0.00000E+00	0.00000E+00
57	5.67444E-01	2.63817E+00	6.03914E-01	4.64465E-03	0.00000E+00	0.00000E+00
58	6.45415E-01	2.67583E+00	6.04656E-01	4.62077E-03	0.00000E+00	0.00000E+00
59	5.95972E-01	2.71517E+00	6.04503E-01	4.54154E-03	0.00000E+00	0.00000E+00
60	6.03708E-01	2.75533E+00	6.04490E-01	4.46257E-03	0.00000E+00	0.00000E+00
61	5.57989E-01	2.79483E+00	6.03701E-01	4.45653E-03	0.00000E+00	0.00000E+00
62	6.24697E-01	2.83317E+00	6.04051E-01	4.39557E-03	0.00000E+00	0.00000E+00
63	6.29967E-01	2.87167E+00	6.04476E-01	4.34374E-03	0.00000E+00	0.00000E+00
64	6.46987E-01	2.90733E+00	6.05162E-01	4.32777E-03	0.00000E+00	0.00000E+00
65	6.05749E-01	2.94400E+00	6.05171E-01	4.25853E-03	0.00000E+00	0.00000E+00
66	6.35054E-01	2.98250E+00	6.05638E-01	4.21739E-03	0.00000E+00	0.00000E+00
67	7.15795E-01	3.01817E+00	6.07333E-01	4.48455E-03	0.00000E+00	0.00000E+00
68	5.59694E-01	3.05750E+00	6.06611E-01	4.47468E-03	0.00000E+00	0.00000E+00
69	5.57212E-01	3.09683E+00	6.05874E-01	4.46863E-03	0.00000E+00	0.00000E+00
70	6.06197E-01	3.13350E+00	6.05878E-01	4.40243E-03	0.00000E+00	0.00000E+00
71	6.20951E-01	3.17100E+00	6.06097E-01	4.34365E-03	0.00000E+00	0.00000E+00
72	5.86138E-01	3.20850E+00	6.05812E-01	4.29064E-03	0.00000E+00	0.00000E+00
73	6.15314E-01	3.24600E+00	6.05946E-01	4.23189E-03	0.00000E+00	0.00000E+00
74	6.49943E-01	3.28450E+00	6.06557E-01	4.21721E-03	0.00000E+00	0.00000E+00
75	6.17206E-01	3.32383E+00	6.06703E-01	4.16159E-03	0.00000E+00	0.00000E+00
76	6.31617E-01	3.35950E+00	6.07039E-01	4.11875E-03	0.00000E+00	0.00000E+00
77	5.38890E-01	3.39800E+00	6.06131E-01	4.16382E-03	0.00000E+00	0.00000E+00
78	6.39127E-01	3.43467E+00	6.06565E-01	4.13154E-03	0.00000E+00	0.00000E+00
79	6.26966E-01	3.47217E+00	6.06830E-01	4.08613E-03	0.00000E+00	0.00000E+00
80	5.73296E-01	3.50967E+00	6.06400E-01	4.05625E-03	0.00000E+00	0.00000E+00
81	6.21337E-01	3.54633E+00	6.06589E-01	4.00904E-03	0.00000E+00	0.00000E+00
82	5.88458E-01	3.58300E+00	6.06362E-01	3.96509E-03	0.00000E+00	0.00000E+00
83	6.20492E-01	3.62050E+00	6.06537E-01	3.91972E-03	0.00000E+00	0.00000E+00
84	5.68290E-01	3.65800E+00	6.06070E-01	3.89962E-03	0.00000E+00	0.00000E+00
85	6.35831E-01	3.69467E+00	6.06429E-01	3.86900E-03	0.00000E+00	0.00000E+00
86	5.45458E-01	3.73483E+00	6.05703E-01	3.89096E-03	0.00000E+00	0.00000E+00
87	6.36212E-01	3.77250E+00	6.06062E-01	3.86163E-03	0.00000E+00	0.00000E+00

88	5.97694E-01	3.80900E+00	6.05965E-01	3.81770E-03	0.00000E+00	0.00000E+00
89	6.40220E-01	3.84650E+00	6.06358E-01	3.79405E-03	0.00000E+00	0.00000E+00
90	5.96305E-01	3.88600E+00	6.06244E-01	3.75243E-03	0.00000E+00	0.00000E+00
91	6.06641E-01	3.92350E+00	6.06249E-01	3.71003E-03	0.00000E+00	0.00000E+00
92	5.96472E-01	3.96100E+00	6.06140E-01	3.67019E-03	0.00000E+00	0.00000E+00
93	6.39682E-01	4.00033E+00	6.06508E-01	3.64830E-03	0.00000E+00	0.00000E+00
94	6.01010E-01	4.03883E+00	6.06449E-01	3.60892E-03	0.00000E+00	0.00000E+00
95	6.31734E-01	4.07733E+00	6.06721E-01	3.58024E-03	0.00000E+00	0.00000E+00
96	6.48617E-01	4.11383E+00	6.07166E-01	3.56988E-03	0.00000E+00	0.00000E+00
97	6.37762E-01	4.15150E+00	6.07488E-01	3.54676E-03	0.00000E+00	0.00000E+00
98	6.23961E-01	4.18983E+00	6.07660E-01	3.51381E-03	0.00000E+00	0.00000E+00
99	5.81891E-01	4.22733E+00	6.07394E-01	3.48753E-03	0.00000E+00	0.00000E+00
100	6.24901E-01	4.26583E+00	6.07573E-01	3.45638E-03	0.00000E+00	0.00000E+00
101	6.07566E-01	4.30333E+00	6.07573E-01	3.42129E-03	0.00000E+00	0.00000E+00
102	6.08627E-01	4.34000E+00	6.07583E-01	3.38692E-03	0.00000E+00	0.00000E+00
103	6.08048E-01	4.37667E+00	6.07588E-01	3.35322E-03	0.00000E+00	0.00000E+00

KENO MESSAGE NUMBER K5-123 EXECUTION TERMINATED DUE TO COMPLETION OF THE SPECIFIED NUMBER OF GENERATIONS.

"LWT CASK, 25 PWR RODS, NO PWR BASKET, 5 W/O U235 VARIABLE PITCH"

LIFETIME = 2.21135E-04 + OR - 1.12274E-06 GENERATION TIME = 1.16931E-04 + OR - 8.33192E-07
NU BAR = 2.42948E+00 + OR - 2.62739E-04 AVERAGE FISSION GROUP = 2.38394E+01 + OR - 1.55874E-02
ENERGY(EV) OF THE AVERAGE LETHARGY CAUSING FISSION = 6.34530E-02 + OR - 9.03504E-04

NO. OF INITIAL GENERATIONS SKIPPED	AVERAGE K-EFFECTIVE	DEVIATION	67 PER CENT CONFIDENCE INTERVAL	95 PER CENT CONFIDENCE INTERVAL	99 PER CENT CONFIDENCE INTERVAL	NUMBER OF HISTORIES
3	0.60783	+ OR - 0.00338	0.60445 TO 0.61120	0.60107 TO 0.61458	0.59769 TO 0.61796	40000
4	0.60701	+ OR - 0.00331	0.60370 TO 0.61032	0.60038 TO 0.61363	0.59707 TO 0.61694	39600
5	0.60662	+ OR - 0.00332	0.60330 TO 0.60995	0.59998 TO 0.61327	0.59666 TO 0.61659	39200
6	0.60708	+ OR - 0.00332	0.60376 TO 0.61041	0.60043 TO 0.61373	0.59711 TO 0.61706	38800
7	0.60724	+ OR - 0.00336	0.60389 TO 0.61060	0.60053 TO 0.61396	0.59718 TO 0.61731	38400
8	0.60731	+ OR - 0.00339	0.60392 TO 0.61070	0.60053 TO 0.61409	0.59714 TO 0.61748	38000
9	0.60744	+ OR - 0.00342	0.60402 TO 0.61087	0.60059 TO 0.61429	0.59717 TO 0.61772	37600
10	0.60786	+ OR - 0.00343	0.60443 TO 0.61130	0.60100 TO 0.61473	0.59756 TO 0.61817	37200
11	0.60830	+ OR - 0.00344	0.60485 TO 0.61174	0.60141 TO 0.61519	0.59796 TO 0.61863	36800
12	0.60796	+ OR - 0.00347	0.60449 TO 0.61142	0.60102 TO 0.61489	0.59756 TO 0.61835	36400
17	0.60739	+ OR - 0.00363	0.60377 TO 0.61102	0.60014 TO 0.61465	0.59651 TO 0.61828	34400
22	0.60742	+ OR - 0.00385	0.60357 TO 0.61127	0.59972 TO 0.61512	0.59588 TO 0.61897	32400
27	0.60756	+ OR - 0.00389	0.60367 TO 0.61145	0.59977 TO 0.61534	0.59588 TO 0.61923	30400
32	0.60721	+ OR - 0.00412	0.60309 TO 0.61132	0.59897 TO 0.61544	0.59485 TO 0.61956	28400
37	0.60887	+ OR - 0.00423	0.60465 TO 0.61310	0.60042 TO 0.61732	0.59620 TO 0.62155	26400
42	0.60798	+ OR - 0.00430	0.60368 TO 0.61228	0.59938 TO 0.61657	0.59508 TO 0.62087	24400
47	0.60680	+ OR - 0.00449	0.60231 TO 0.61129	0.59781 TO 0.61579	0.59332 TO 0.62028	22400
52	0.60809	+ OR - 0.00466	0.60343 TO 0.61275	0.59877 TO 0.61740	0.59411 TO 0.62206	20400
57	0.61198	+ OR - 0.00481	0.60717 TO 0.61679	0.60236 TO 0.62160	0.59755 TO 0.62641	18400
62	0.61276	+ OR - 0.00514	0.60762 TO 0.61790	0.60248 TO 0.62304	0.59735 TO 0.62818	16400
67	0.60805	+ OR - 0.00487	0.60318 TO 0.61292	0.59831 TO 0.61779	0.59344 TO 0.62266	14400
72	0.61160	+ OR - 0.00507	0.60653 TO 0.61667	0.60145 TO 0.62174	0.59638 TO 0.62682	12400
77	0.61179	+ OR - 0.00507	0.60672 TO 0.61686	0.60165 TO 0.62194	0.59658 TO 0.62701	10400
82	0.61226	+ OR - 0.00570	0.60656 TO 0.61795	0.60087 TO 0.62365	0.59517 TO 0.62934	8400
87	0.61570	+ OR - 0.00493	0.61076 TO 0.62063	0.60583 TO 0.62556	0.60089 TO 0.63050	6400
92	0.61944	+ OR - 0.00598	0.61345 TO 0.62542	0.60747 TO 0.63140	0.60149 TO 0.63738	4400
97	0.60917	+ OR - 0.00636	0.60280 TO 0.61553	0.59644 TO 0.62189	0.59008 TO 0.62825	2400

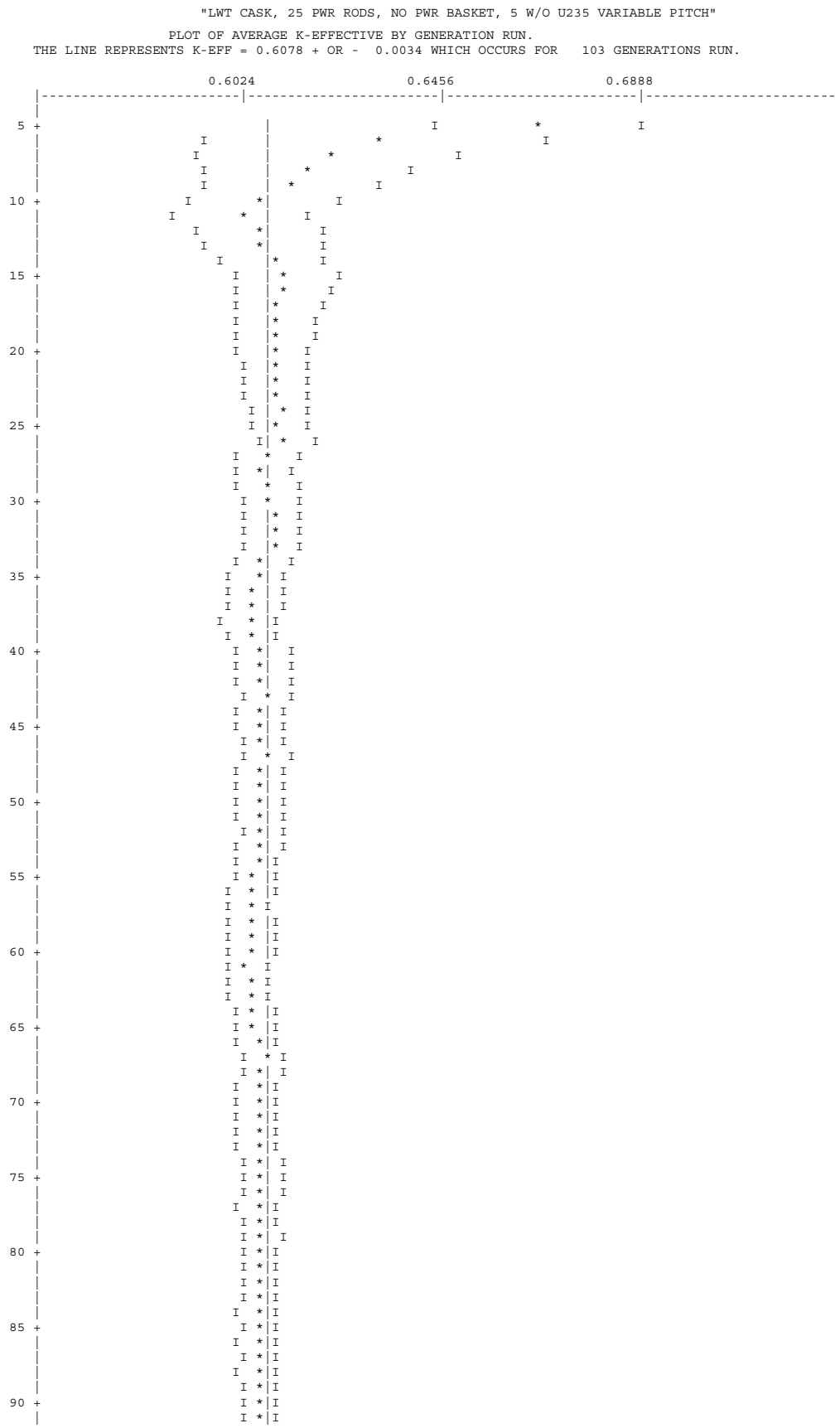
"LWT CASK, 25 PWR RODS, NO PWR BASKET, 5 W/O U235 VARIABLE PITCH"
PLOT OF AVERAGE K-EFFECTIVE BY GENERATION RUN.
THE LINE REPRESENTS K-EFF = 0.6078 + OR - 0.0034 WHICH OCCURS FOR 103 GENERATIONS RUN.
0.6024
0.6456
0.6888


95
100

"LWT CASK, 25 PWR RODS, NO PWR BASKET, 5 W/O U235 VARIABLE PITCH"

SKIPPING 3 GENERATIONS

GROUP	FISSION FRACTION	UNIT	REGION	FISSIONS	PERCENT DEVIATION	ABSORPTIONS	PERCENT DEVIATION	LEAKAGE	PERCENT DEVIATION
1	0.0026			1.57985E-03	8.7976	1.46109E-03	4.6127	0.00000E+00	0.0000
2	0.0115			7.00679E-03	2.7598	4.70633E-03	1.7867	0.00000E+00	0.0000
3	0.0117			7.09670E-03	2.4508	2.94741E-03	2.3817	0.00000E+00	0.0000
4	0.0050			3.04076E-03	2.7124	1.44708E-03	2.5780	0.00000E+00	0.0000
5	0.0017			1.05042E-03	2.2811	9.71530E-04	2.0226	0.00000E+00	0.0000
6	0.0013			8.01924E-04	1.8786	1.27437E-03	1.5946	0.00000E+00	0.0000
7	0.0011			6.58599E-04	2.2485	1.13115E-03	1.8620	0.00000E+00	0.0000
8	0.0009			5.46337E-04	2.7318	1.38799E-03	2.3369	0.00000E+00	0.0000
9	0.0011			6.88145E-04	3.2905	2.04965E-03	2.8429	0.00000E+00	0.0000
10	0.0023			1.37228E-03	4.0690	3.08278E-03	3.1438	0.00000E+00	0.0000
11	0.0050			3.01285E-03	3.2726	5.58792E-03	2.7255	0.00000E+00	0.0000
12	0.0068			4.14269E-03	4.1673	6.55793E-03	3.5414	0.00000E+00	0.0000
13	0.0061			3.70803E-03	4.2331	6.66073E-03	3.2560	0.00000E+00	0.0000
14	0.0052			3.14150E-03	3.9860	1.00693E-02	2.9291	0.00000E+00	0.0000
15	0.0010			5.92258E-04	6.9217	2.66806E-03	3.6113	0.00000E+00	0.0000
16	0.0008			4.92749E-04	8.2799	1.72052E-03	4.2351	0.00000E+00	0.0000
17	0.0011			6.58539E-04	11.8002	1.10648E-03	5.0772	0.00000E+00	0.0000
18	0.0015			9.35353E-04	13.1549	1.20556E-03	5.5875	0.00000E+00	0.0000
19	0.0020			1.22599E-03	9.2968	2.04936E-03	3.7905	0.00000E+00	0.0000
20	0.0084			5.09529E-03	5.8262	8.23197E-03	2.6286	0.00000E+00	0.0000
21	0.0050			3.03201E-03	7.8495	3.81663E-03	4.1344	0.00000E+00	0.0000
22	0.0132			8.02532E-03	4.6382	9.93741E-03	2.4315	0.00000E+00	0.0000
23	0.0855			5.19793E-02	2.0678	7.77471E-02	0.8462	0.00000E+00	0.0000
24	0.2422			1.47194E-01	1.2481	2.28032E-01	0.4439	0.00000E+00	0.0000
25	0.2248			1.36621E-01	1.1692	2.18870E-01	0.4151	0.00000E+00	0.0000
26	0.2717			1.65140E-01	1.0707	2.89862E-01	0.3604	0.00000E+00	0.0000
27	0.0806			4.89865E-02	2.5235	1.07785E-01	0.6253	0.00000E+00	0.0000
SYSTEM TOTAL =				6.07825E-01	0.5558	1.00237E+00	0.1147	0.00000E+00	0.0000

ELAPSED TIME 4.37750 MINUTES

RANDOM NUMBER= 141C1CDC4912

```
"LWT CASK, 25 PWR RODS, NO PWR BASKET, 5 W/O U235 VARIABLE PITCH"

                              FREQUENCY FOR GENERATIONS    4 TO  103
0.5183 TO 0.5383     ***
0.5383 TO 0.5583     *****
0.5583 TO 0.5783     **********
0.5783 TO 0.5983     ****************
0.5983 TO 0.6183     ****************************
0.6183 TO 0.6383     ********************
0.6383 TO 0.6583     ************
0.6583 TO 0.6783     **
0.6783 TO 0.6983     *
0.6983 TO 0.7183     *

                              FREQUENCY FOR GENERATIONS   29 TO  103
0.5183 TO 0.5383     **
0.5383 TO 0.5583     *****
0.5583 TO 0.5783     *******
0.5783 TO 0.5983     ************
0.5983 TO 0.6183     ********************
0.6183 TO 0.6383     ******************
0.6383 TO 0.6583     ********
0.6583 TO 0.6783     **
0.6783 TO 0.6983
0.6983 TO 0.7183     *

                              FREQUENCY FOR GENERATIONS   54 TO  103
0.5183 TO 0.5383
0.5383 TO 0.5583     ****
0.5583 TO 0.5783     *******
0.5783 TO 0.5983     *******
0.5983 TO 0.6183     **********
0.6183 TO 0.6383     **************
0.6383 TO 0.6583     *******
0.6583 TO 0.6783
0.6783 TO 0.6983
0.6983 TO 0.7183     *

                              FREQUENCY FOR GENERATIONS   79 TO  103
0.5183 TO 0.5383
0.5383 TO 0.5583     *
0.5583 TO 0.5783     **
0.5783 TO 0.5983     *****
0.5983 TO 0.6183     *****
0.6183 TO 0.6383     *********
0.6383 TO 0.6583     ***
0.6583 TO 0.6783
0.6783 TO 0.6983
0.6983 TO 0.7183


*****************************************************************************************************************************************
*

          CONGRATULATIONS!  YOU HAVE  SUCCESSFULLY TRAVERSED THE PERILOUS PATH THROUGH KENO V IN   4.37750 MINUTES

*****************************************************************************************************************************************
*
_
```

Figure 6.6.4-2 CSAS Input/Output for NAC-LWT with 25 PWR Rods – Most Reactive Accident Condition Configuration

```
PRIMARY MODULE ACCESS AND INPUT RECORD ( SCALE DRIVER - 95/03/29 - 09:06:37 )
   MODULE CSAS25   WILL BE CALLED
     PWR RODS, NO BASKET, VOID EXTERIOR, GAP FULL
     27GROUPNDF4    LATTICECELL
     UO2       1    0.95  293.0  92235  5.0  92238   95.0  END
     ZIRCALLOY 2    1.0           293.0     END
     H2O   3 1.000 293.0 END
     AL        4    1.0           293.0     END
     SS304     5    1.0           293.0     END
     PB        6    1.0           293.0     END
     H2O   7 1.000 293.0 END
     H2O   8 1.000 293.0 END
     H2O       9    1.0           293.0     END
     END COMP
     TRIANGPITCH   2.92169   0.9564  1  3  1.1175 2 0.9753 9 END
     "LWT CASK, 25 PWR RODS, NO PWR BASKET, 5 W/O U235 VARIABLE PITCH"
     READ PARAM RUN=YES PLT=NO  GEN=103 NPG=400 END PARAM
     READ GEOM
     UNIT 1
     COM="PWR FUEL ROD"
     CYLINDER     1  1  0.4781    2P10.0
     CYLINDER     9  1  0.4876    2P10.0
     CYLINDER     2  1  0.5588    2P10.0
     GLOBAL UNIT 2
     CYLINDER    3   1   16.9863  2P10.0
     HOLE    1    .0000    .0000    .0000
     HOLE    1    .0000   2.9216    .0000
     HOLE    1   2.5301   1.4608    .0000
     HOLE    1   2.5301  -1.4608    .0000
     HOLE    1    .0000  -2.9216    .0000
     HOLE    1  -2.5301  -1.4608    .0000
     HOLE    1  -2.5301   1.4608    .0000
     HOLE    1  -2.5301   4.3825    .0000
     HOLE    1    .0000   5.8433    .0000
     HOLE    1   2.5301   4.3825    .0000
     HOLE    1   5.0603   2.9216    .0000
     HOLE    1   5.0603    .0000    .0000
     HOLE    1   5.0603  -2.9216    .0000
     HOLE    1   2.5301  -4.3825    .0000
     HOLE    1    .0000  -5.8433    .0000
     HOLE    1  -2.5301  -4.3825    .0000
     HOLE    1  -5.0603  -2.9216    .0000
     HOLE    1  -5.0603    .0000    .0000
     HOLE    1  -5.0603   2.9216    .0000
     HOLE    1  -5.0603   5.8433    .0000
     HOLE    1   2.5301   7.3041    .0000
     HOLE    1   7.5904   1.4608    .0000
     HOLE    1   5.0603  -5.8433    .0000
     HOLE    1  -2.5301  -7.3041    .0000
     HOLE    1  -7.5904  -1.4608    .0000
     CYLINDER    5   1    18.8913  2P10.0
     CYLINDER    6   1    33.4963  2P10.0
     CYLINDER    5   1    36.5443  2P10.0
     CYLINDER    7   1    49.2443  2P10.0
     CYLINDER    5   1    49.8539  2P10.0
     CUBOID   8 1 4P49.8539  2P10.0
     END GEOM
     READ BOUNDS  ALL=MIR     END BOUNDS
     END DATA

   SECONDARY MODULE O0O008   HAS BEEN CALLED.

   MODULE O0O008   IS FINISHED. COMPLETION CODE     0. CPU TIME USED     1.04 (SECONDS).

   SECONDARY MODULE O0O002   HAS BEEN CALLED.

   MODULE O0O002   IS FINISHED. COMPLETION CODE     0. CPU TIME USED    11.48 (SECONDS).

   SECONDARY MODULE O0O009   HAS BEEN CALLED.

   MODULE O0O009   IS FINISHED. COMPLETION CODE     0. CPU TIME USED   472.53 (SECONDS).

   MODULE CSAS25   IS FINISHED. COMPLETION CODE     0. CPU TIME USED   488.18 (SECONDS).
```



```
 SSSSSSSSSS     CCCCCCCCCC      AAAAAAAAA     LL             EEEEEEEEEEEE                  PPPPPPPPPPP     CCCCCCCCCC
SSSSSSSSSSS   CCCCCCCCCCCC    AAAAAAAAAAA    LL             EEEEEEEEEEEE                  PPPPPPPPPPPP   CCCCCCCCCCCC
SS         SS CC          CC  AA         AA   LL             EE                            PP         PP  CC          CC
SS            CC             AA         AA   LL             EE                            PP         PP  CC
SS            CC             AA         AA   LL             EE                            PP         PP  CC
SSSSSSSSSSS   CC             AAAAAAAAAAAAA   LL             EEEEEEEEE       -------------  PPPPPPPPPPPP  CC
 SSSSSSSSSSS  CC             AAAAAAAAAAAAA   LL             EEEEEEEEE       -------------  PPPPPPPPPPP   CC
          SS  CC             AA         AA   LL             EE                            PP             CC
          SS  CC             AA         AA   LL             EE                            PP             CC
SS        SS  CC          CC  AA         AA   LL             EE                            PP             CC          CC
SSSSSSSSSSS   CCCCCCCCCCCCC   AA         AA   LLLLLLLLLLLLL  EEEEEEEEEEEE                  PP             CCCCCCCCCCCCC
 SSSSSSSSSS    CCCCCCCCCC    AA         AA   LLLLLLLLLLLLL  EEEEEEEEEEEE                  PP              CCCCCCCCCC
```

```
*******************************************************************************
*******************************************************************************
*******************************************************************************
*****                                                                     *****
*****                  PROGRAM VERIFICATION INFORMATION                   *****
*****                                                                     *****
*****                CODE SYSTEM:  SCALE-PC VERSION:  4.3                 *****
*****                                                                     *****
*******************************************************************************
*******************************************************************************
*****                                                                     *****
*****                                                                     *****
*****              PROGRAM:  CSAS                                         *****
*****                                                                     *****
*****        CREATION DATE:  03/08/96                                     *****
*****                                                                     *****
*****              VOLUME:   ENG                                          *****
*****                                                                     *****
*****              LIBRARY:  G:\SCALE43\WIN_NT\EXE                        *****
*****                                                                     *****
*****                                                                     *****
*****      PRODUCTION CODE:  CSAS                                         *****
*****                                                                     *****
*****              VERSION:  3.1                                          *****
*****                                                                     *****
*****              JOBNAME:  SCALE-PC                                     *****
*****                                                                     *****
*****    DATE OF EXECUTION:  07/30/98                                     *****
*****                                                                     *****
*****    TIME OF EXECUTION:  19:14:57                                     *****
*****                                                                     *****
*****                                                                     *****
*******************************************************************************
*******************************************************************************
*******************************************************************************
```

```
PWR RODS, NO BASKET, VOID EXTERIOR, GAP FULL

**** PROBLEM PARAMETERS ****

LIB 27GROUPNDF4  LIBRARY
MXX            9 MIXTURES
MSC            9 COMPOSITION SPECIFICATIONS
IZM            4 MATERIAL ZONES
GE  LATTICECELL  GEOMETRY
MORE           0 0/1 DO NOT READ/READ OPTIONAL PARAMETER DATA
MSLN           0 FUEL SOLUTIONS


**** PROBLEM COMPOSITION DESCRIPTION ****

SC  UO2          STANDARD COMPOSITION
MX             1 MIXTURE NO.
VF        0.9500 VOLUME FRACTION
ROTH     10.9600 THEORETICAL DENSITY
NEL            2 NO. ELEMENTS
ICP            1 0/1 MIXTURE/COMPOUND
TEMP       293.0 DEG KELVIN
           92000      1.00 ATOM/MOLECULE
                         92235     5.000 WT%
                         92238    95.000 WT%
            8016      2.00 ATOMS/MOLECULE
END

SC  ZIRCALLOY    STANDARD COMPOSITION
MX             2 MIXTURE NO.
VF        1.0000 VOLUME FRACTION
ROTH      6.5600 THEORETICAL DENSITY
NEL            1 NO. ELEMENTS
ICP            1 0/1 MIXTURE/COMPOUND
TEMP       293.0 DEG KELVIN
           40302      1.00 ATOM/MOLECULE
END

SC  H2O          STANDARD COMPOSITION
MX             3 MIXTURE NO.
VF        1.0000 VOLUME FRACTION
ROTH      0.9982 THEORETICAL DENSITY
NEL            2 NO. ELEMENTS
ICP            1 0/1 MIXTURE/COMPOUND
TEMP       293.0 DEG KELVIN
            1001      2.00 ATOMS/MOLECULE
            8016      1.00 ATOM/MOLECULE
END

SC  AL           STANDARD COMPOSITION
MX             4 MIXTURE NO.
VF        1.0000 VOLUME FRACTION
ROTH      2.7020 THEORETICAL DENSITY
NEL            1 NO. ELEMENTS
ICP            1 0/1 MIXTURE/COMPOUND
TEMP       293.0 DEG KELVIN
           13027      1.00 ATOM/MOLECULE
END

SC  SS304        STANDARD COMPOSITION
MX             5 MIXTURE NO.
VF        1.0000 VOLUME FRACTION
ROTH      7.9200 THEORETICAL DENSITY
NEL            4 NO. ELEMENTS
ICP            0 0/1 MIXTURE/COMPOUND
TEMP       293.0 DEG KELVIN
           24304    19.000 WT%
           25055     2.000 WT%
           26304    69.500 WT%
           28304     9.500 WT%
END

SC  PB           STANDARD COMPOSITION
MX             6 MIXTURE NO.
VF        1.0000 VOLUME FRACTION
ROTH     11.3440 THEORETICAL DENSITY
NEL            1 NO. ELEMENTS
ICP            1 0/1 MIXTURE/COMPOUND
TEMP       293.0 DEG KELVIN
           82000      1.00 ATOM/MOLECULE
END

SC  H2O          STANDARD COMPOSITION
MX             7 MIXTURE NO.
VF        1.0000 VOLUME FRACTION
ROTH      0.9982 THEORETICAL DENSITY
NEL            2 NO. ELEMENTS
ICP            1 0/1 MIXTURE/COMPOUND
TEMP       293.0 DEG KELVIN
            1001      2.00 ATOMS/MOLECULE
            8016      1.00 ATOM/MOLECULE
END

SC  H2O          STANDARD COMPOSITION
```

```
MX             8 MIXTURE NO.
VF        1.0000 VOLUME FRACTION
ROTH      0.9982 THEORETICAL DENSITY
NEL            2 NO. ELEMENTS
ICP            1 0/1 MIXTURE/COMPOUND
TEMP       293.0 DEG KELVIN
            1001      2.00 ATOMS/MOLECULE
            8016      1.00 ATOM/MOLECULE
END

SC  H2O          STANDARD COMPOSITION
MX             9 MIXTURE NO.
VF        1.0000 VOLUME FRACTION
ROTH      0.9982 THEORETICAL DENSITY
NEL            2 NO. ELEMENTS
ICP            1 0/1 MIXTURE/COMPOUND
TEMP       293.0 DEG KELVIN
            1001      2.00 ATOMS/MOLECULE
            8016      1.00 ATOM/MOLECULE
END


**** PROBLEM GEOMETRY ****

CTP TRIANGPITCH  CELL TYPE
PITCH     2.9217 CM CENTER TO CENTER SPACING
FUELOD    0.9564 CM FUEL DIAMETER OR SLAB THICKNESS
MFUEL          1 MIXTURE NO. OF FUEL
MMOD           3 MIXTURE NO. OF MODERATOR
CLADOD    1.1175 CM CLAD OUTER DIAMETER
MCLAD          2 MIXTURE NO. OF CLAD
GAPOD     0.9753 CM GAP OUTER DIAMETER
MGAP           9 MIXTURE NO. OF GAP


ZONE SPECIFICATIONS FOR LATTICECELL GEOMETRY

               ZONE  1 IS FUEL
               ZONE  2 IS GAP
               ZONE  3 IS CLAD
               ZONE  4 IS MOD
```

```
*********************************************************************************************************************
***                                                                                                               ***
***                              PWR RODS, NO BASKET, VOID EXTERIOR, GAP FULL                                     ***
***                                                                                                               ***
*********************************************************************************************************************
*********************************************************************************************************************
***                                                                                                               ***
***                                 ********** DATA LIBRARY INFORMATION **********                               ***
***                                                                                                               ***
***          UNIT                                                VOLUME                                           ***
***         NUMBER                DATA SET NAME                  NAME        UNIT FUNCTION                      ***
***         ------                -------------                  ----        -------------                      ***
***                                                                                                               ***
***           89     G:\scale43\DATALIB\FT89F001                                STANDARD COMPOSITION LIBRARY     ***
***                                                                                                               ***
***           82     G:\scale43\DATALIB\FT82F001                                CROSS SECTION LIBRARY            ***
***                                                                                                               ***
***           11     D:\PROJECTS\BU85-C~1\rods8\ROHX3M\FT11F001                 SHORT CROSS SECTION LIBRARY      ***
***                                                                                                               ***
***           90     D:\PROJECTS\BU85-C~1\rods8\ROHX3M\FT90F001                 INPUT DATA DIRECT ACCESS         ***
***                                                                                                               ***
*********************************************************************************************************************
*********************************************************************************************************************
***                                                                                                               ***
***                                                                                                               ***
***                                    STANDARD COMPOSITION LIBRARY DATA                                          ***
***                                    ---------------------------------                                          ***
***                                                                                                               ***
***            UNIT NUMBER  :  89                                                                                 ***
***                                                                                                               ***
***            DATASET NAME :  G:\scale43\DATALIB\FT89F001                                                        ***
***                                                                                                               ***
***            LIBRARY TITLE:  SCALE-4 STANDARD COMPOSITION LIBRARY                                               ***
***                            637 STANDARD COMPOSITIONS, 490 NUCLIDES                                            ***
***                            90 ELEMENTS WITH VARIABLE ISOTOPIC DISTRBUTIONS.                                   ***
***                                                                                                               ***
***            CREATION DATE:   6/30/95                                                                           ***
***                                                                                                               ***
***                                                                                                               ***
***                                                                                                               ***
***                                      CROSS SECTION LIBRARY DATA                                               ***
***                                     ---------------------------                                               ***
***                                                                                                               ***
***            UNIT NUMBER  :  82                                                                                 ***
***                                                                                                               ***
***            DATASET NAME :  G:\scale43\DATALIB\FT82F001                                                        ***
***                                                                                                               ***
***            LIBRARY TITLE:  SCALE 4.2 - 27 GROUP NEUTRON GROUP LIBRARY                                         ***
***                               BASED ON ENDF-B VERSION 4 DATA                                                  ***
***                                  COMPILED FOR NRC     1/27/89                                               ***
***                                     LAST UPDATED                                          08/12/94  ***
***                                        L.M.PETRIE   -   ORNL                                                  ***
***                                                                                                               ***
***                                                                                                               ***
***                                                                                                               ***
***                                                                                                               ***
*********************************************************************************************************************
*********************************************************************************************************************

                        ........    0 IO'S WERE USED BEFORE READING KENO V DATA    ........

                        ........    0 IO'S WERE USED READING THE KENO V PARAMETER DATA    ........


                       *************** DATA READING COMPLETED ***************

                        ........    0 IO'S WERE USED PREPARING THE KENO V INPUT DATA    ........

                        ........    0 IO'S WERE USED LOADING THE KENO V DATA    ........

                        ........    0 IO'S WERE USED LOADING THE DATA    ........

                        ........    0 IO'S WERE USED CHECKING THE KENO V GEOMETRY DATA    ........
                        *****  RESTART DATA HAS BEEN WRITTEN ON UNIT 95  *****

                        ........    0 IO'S WERE USED WRITING THE KENO V - CSAS DATA    ........

                        ........    0 IO'S WERE USED PROCESSING CSAS INPUT DATA    ........


 CONTROL MODULE CSAS25   IS COMPLETE.
```

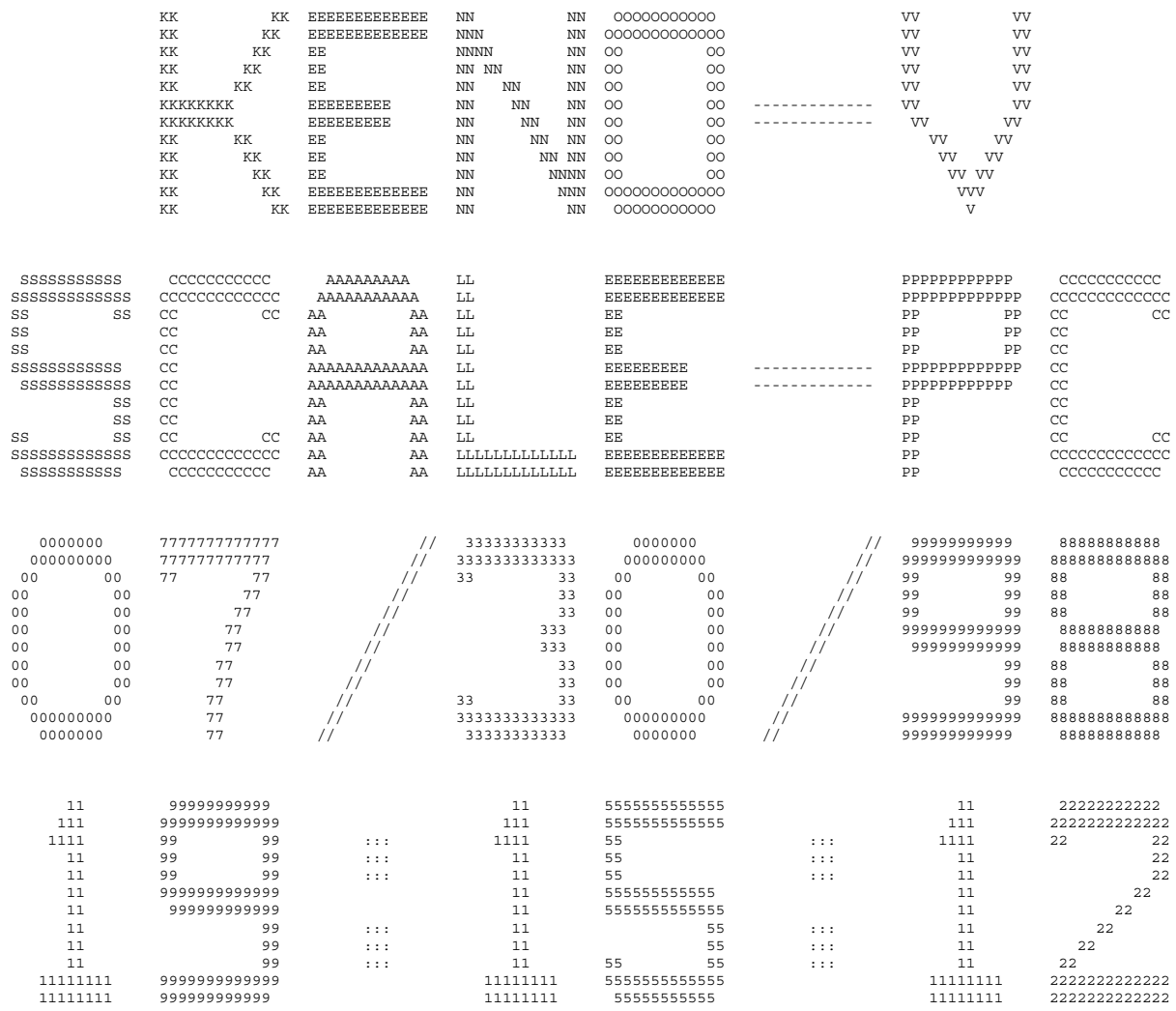
KKEEENNNOOOVVV
KKEEENNNOOOVVV
KKEENNNOOVV
KKEENNNOOVV
KKEENNNOOVV
KKKKKEENNNOOVV
KKKKKEENNNOOVV
KKEENNNOOVV
KKEENNNOOVV
KKEENNNOOVV
KKEENNNOOV
SSCCAALLEEPPCC
SSCCAALLEEPPCC
SSCCAALLEEPPCC
SSCCAALLEEPPCC
SSCCAALLEEPPCC
SSCCAALLEEPPCC
SSCCAALLEEPPCC
SSCCAALLEEPPCC
SSCCAALLEEPPCC
SSCCAALLEEPPCC
0077733003377
0077733003377
0077733003377
0077733003377
0077733003377
0077733003377
0077733003377
0077733003377
0077733003377
0077733003377
0077733003377
1199551199
1199551199
1199551199
1199551199
1199551199
1199551199
1199551199
1199551199
1199551199
1199551199
1199551199

"LWT CASK, 25 PWR RODS, NO PWR BASKET, 5 W/O U235 VARIABLE PITCH"

****** NUMERIC PARAMETERS ******

TME	MAXIMUM PROBLEM TIME (MIN)	30.00	
TBA	TIME PER GENERATION (MIN)	0.50	
GEN	NUMBER OF GENERATIONS	103	
NPG	NUMBER PER GENERATION	400	
NSK	NUMBER OF GENERATIONS TO BE SKIPPED	3	
BEG	BEGINNING GENERATION NUMBER	1	
RES	GENERATIONS BETWEEN CHECKPOINTS	0	
X1D	NUMBER OF EXTRA 1-D CROSS SECTIONS	1	
NBK	NEUTRON BANK SIZE	425	
XNB	EXTRA POSITIONS IN NEUTRON BANK	0	
NFB	FISSION BANK SIZE	400	
XFB	EXTRA POSITIONS IN FISSION BANK	0	
WTA	DEFAULT VALUE OF WEIGHT AVERAGE	0.5000	
WTH	WEIGHT HIGH FOR SPLITTING	3.0000	
WTL	WEIGHT LOW FOR RUSSIAN ROULETTE	0.3333	
RND	STARTING RANDOM NUMBER	BB827100001	
NB8	NUMBER OF D.A. BLOCKS ON UNIT 8	200	
NL8	LENGTH OF D.A. BLOCKS ON UNIT 8	512	
ADJ	MODE OF CALCULATION	FORWARD	
	INPUT DATA WRITTEN ON RESTART UNIT	NO	
	BINARY DATA INTERFACE	YES	

```
*****************************************************************************************************************
*****************************************************************************************************************
***                                                                                                           ***
***                            "LWT CASK, 25 PWR RODS, NO PWR BASKET, 5 W/O U235 VARIABLE PITCH"              ***
***                                                                                                           ***
*****************************************************************************************************************
***                                ******      LOGICAL PARAMETERS        ******                               ***
***                                                                                                           ***
***  RUN  EXECUTE PROBLEM AFTER CHECKING DATA    YES            PLT  PLOT PICTURE MAP(S)                    NO ***
***                                                                                                           ***
***  FLX  COMPUTE FLUX                            NO            FDN  COMPUTE FISSION DENSITIES              NO ***
***                                                                                                           ***
***  SMU  COMPUTE AVG UNIT SELF-MULTIPLICATION    NO            NUB  COMPUTE NU-BAR & AVG FISSION GROUP     YES ***
***                                                                                                           ***
***  MKU  COMPUTE MATRIX K-EFF BY UNIT NUMBER     NO            MKP  COMPUTE MATRIX K-EFF BY UNIT LOCATION  NO ***
***                                                                                                           ***
***  CKU  COMPUTE COFACTOR K-EFF BY UNIT NUMBER   NO            CKP  COMPUTE COFACTOR K-EFF BY UNIT LOCATION NO ***
***                                                                                                           ***
***  FMU  PRINT FISS PROD MATRIX BY UNIT NUMBER   NO            FMP  PRINT FISS PROD MATRIX BY UNIT LOCATION NO ***
***                                                                                                           ***
***  MKH  COMPUTE MATRIX K-EFF BY HOLE NUMBER     NO            MKA  COMPUTE MATRIX K-EFF BY ARRAY NUMBER   NO ***
***                                                                                                           ***
***  CKH  COMPUTE COFACTOR K-EFF BY HOLE NUMBER   NO            CKA  COMPUTE COFACTOR K-EFF BY ARRAY NUMBER NO ***
***                                                                                                           ***
***  FMH  PRINT FISS PROD MATRIX BY HOLE NUMBER   NO            FMA  PRINT FISS PROD MATRIX BY ARRAY NUMBER NO ***
***                                                                                                           ***
***  HHL  COLLECT MATRIX BY HIGHEST HOLE LEVEL    NO            HAL  COLLECT MATRIX BY HIGHEST ARRAY LEVEL  NO ***
***                                                                                                           ***
***  AMX  PRINT ALL MIXED CROSS SECTIONS          NO            FAR  PRINT FIS. AND ABS. BY REGION          NO ***
***                                                                                                           ***
***  XS1  PRINT 1-D MIXTURE X-SECTIONS            NO            GAS  PRINT FAR BY GROUP                     NO ***
***                                                                                                           ***
***  XS2  PRINT 2-D MIXTURE X-SECTIONS            NO            PAX  PRINT XSEC-ALBEDO CORRELATION TABLES   NO ***
***                                                                                                           ***
***  XAP  PRINT MIXTURE ANGLES & PROBABILITIES    NO            PWT  PRINT WEIGHT AVERAGE ARRAY             NO ***
***                                                                                                           ***
***  PKI  PRINT FISSION SPECTRUM                  NO            PGM  PRINT INPUT GEOMETRY                   NO ***
***                                                                                                           ***
***  P1D  PRINT EXTRA 1-D CROSS SECTIONS          NO            BUG  PRINT DEBUG INFORMATION                NO ***
***                                                                                                           ***
***                                                             TRK  PRINT TRACKING INFORMATION             NO ***
***                                                                                                           ***
***                                                                                                           ***
*****************************************************************************************************************
*****************************************************************************************************************
*****************************************************************************************************************
                                   PARAMETER INPUT COMPLETED

                        ........    0 IO'S WERE USED READING THE PARAMETER DATA      ........

                      ************** DATA READING COMPLETED **************
```

```
*******************************************************************************************
***                                                                                     ***
***          "LWT CASK, 25 PWR RODS, NO PWR BASKET, 5 W/O U235 VARIABLE PITCH"          ***
***                                                                                     ***
*******************************************************************************************
*******************************************************************************************
***                                                                                     ***
***                              ****** ADDITIONAL INFORMATION ******                   ***
***                                                                                     ***
***  NUMBER OF ENERGY GROUPS              27       USE LATTICE GEOMETRY                NO  ***
***                                                                                     ***
***  NO. OF FISSION SPECTRUM SOURCE GROUP  1       GLOBAL ARRAY NUMBER                  0  ***
***                                                                                     ***
***  NO. OF SCATTERING ANGLES IN XSECS     2       NUMBER OF UNITS IN THE GLOBAL X DIR.    0  ***
***                                                                                     ***
***  ENTRIES/NEUTRON IN THE NEUTRON BANK  17       NUMBER OF UNITS IN THE GLOBAL Y DIR.    0  ***
***                                                                                     ***
***  ENTRIES/NEUTRON IN THE FISSION BANK  10       NUMBER OF UNITS IN THE GLOBAL Z DIR.    0  ***
***                                                                                     ***
***  NUMBER OF MIXTURES USED               8       USE A GLOBAL REFLECTOR              YES  ***
***                                                                                     ***
***  NUMBER OF BIAS ID'S USED              1       USE NESTED HOLES                    NO  ***
***                                                                                     ***
***  NUMBER OF DIFFERENTIAL ALBEDOS USED   0       NUMBER OF HOLES                     25  ***
***                                                                                     ***
***  TOTAL INPUT GEOMETRY REGIONS         10       MAXIMUM HOLE NESTING LEVEL           1  ***
***                                                                                     ***
***  NUMBER OF GEOMETRY REGIONS USED      10       USE NESTED ARRAYS                   NO  ***
***                                                                                     ***
***  LARGEST GEOMETRY UNIT NUMBER          2       NUMBER OF ARRAYS USED                0  ***
***                                                                                     ***
***  LARGEST ARRAY NUMBER                  1       MAXIMUM ARRAY NESTING LEVEL          0  ***
***                                                                                     ***
***                                                                                     ***
***  +X BOUNDARY CONDITION               MIR       -X BOUNDARY CONDITION               MIR  ***
***                                                                                     ***
***  +Y BOUNDARY CONDITION               MIR       -Y BOUNDARY CONDITION               MIR  ***
***                                                                                     ***
***  +Z BOUNDARY CONDITION               MIR       -Z BOUNDARY CONDITION               MIR  ***
***                                                                                     ***
*******************************************************************************************
```

```
*******************************************************************************************
***                                                                                     ***
***          "LWT CASK, 25 PWR RODS, NO PWR BASKET, 5 W/O U235 VARIABLE PITCH"          ***
***                                                                                     ***
*******************************************************************************************
*******************************************************************************************
***                                                                                     ***
***                    ****** SPACE AND SUPERGROUP INFORMATION ******                   ***
***                                                                                     ***
***       100000 WORDS IS THE TOTAL SPACE AVAILABLE.                                    ***
***                                                                                     ***
***        12479 WORDS WERE USED FOR NON-SUPERGROUP STORAGE.                            ***
***                                                                                     ***
***        87521 WORDS OF STORAGE ARE AVAILABLE FOR SUPERGROUPED DATA.                  ***
***                                                                                     ***
***        99784 WORDS OF STORAGE ARE AVAILABLE FOR CONSTRUCTING THE SUPERGROUPS.       ***
***                                                                                     ***
***        87461 WORDS OF STORAGE ARE AVAILABLE TO EACH SUPERGROUP.                     ***
***                                                                                     ***
***         1165 WORDS ARE NEEDED FOR THE LARGEST GROUP.                                ***
***                                                                                     ***
***        13860 WORDS OF STORAGE IS SUFFICIENT TO RUN THIS PROBLEM.                    ***
***                                                                                     ***
***        25594 WORDS OF STORAGE WILL ALLOW THE PROBLEM TO RUN WITH ONE SUPERGROUP.     ***
***                                                                                     ***
***        25760 WORDS OF STORAGE WILL BE USED TO RUN THIS PROBLEM.                     ***
***                                                                                     ***
*******************************************************************************************
*******************************************************************************************
***                                                                                     ***
***                    STARTING      ENDING       XSEC       ALBEDO      TOTAL         ***
***   SUPERGROUP         GROUP        GROUP      LENGTH      LENGTH      LENGTH         ***
***                                                                                     ***
***                                                                                     ***
***          1            1            27         2636           0       13055         ***
***                                                                                     ***
*******************************************************************************************

             ........    0 IO'S WERE USED IN SUPERGROUPING    ........

             ........    0 IO'S WERE USED LOADING THE DATA    ........
```

"LWT CASK, 25 PWR RODS, NO PWR BASKET, 5 W/O U235 VARIABLE PITCH"

REGION | MEDIA NUM | BIAS ID | GEOMETRY DESCRIPTION FOR THOSE UNITS UTILIZED IN THIS PROBLEM

----- UNIT 1 -----

PWR FUEL ROD

1	CYLINDER	1	1	RADIUS = 0.47810	+Z = 10.000	-Z = -10.000	CENTERLINE IS AT	X = 0.00000	Y = 0.00000	
2	CYLINDER	9	1	RADIUS = 0.48760	+Z = 10.000	-Z = -10.000	CENTERLINE IS AT	X = 0.00000	Y = 0.00000	
3	CYLINDER	2	1	RADIUS = 0.55880	+Z = 10.000	-Z = -10.000	CENTERLINE IS AT	X = 0.00000	Y = 0.00000	

"LWT CASK, 25 PWR RODS, NO PWR BASKET, 5 W/O U235 VARIABLE PITCH"

REGION | MEDIA NUM | BIAS ID | GEOMETRY DESCRIPTION FOR THOSE UNITS UTILIZED IN THIS PROBLEM

********** GLOBAL **********

----- UNIT 2 -----

1	CYLINDER	3	1	RADIUS = 16.986	+Z = 10.000	-Z = -10.000	CENTERLINE IS AT	X = 0.00000	Y = 0.00000	
	HOLE NUMBER	1		AT X = 0.00000	Y = 0.00000	Z = 0.00000	IS UNIT NUMBER	1		
	HOLE NUMBER	2		AT X = 0.00000	Y = 2.9216	Z = 0.00000	IS UNIT NUMBER	1		
	HOLE NUMBER	3		AT X = 2.5301	Y = 1.4608	Z = 0.00000	IS UNIT NUMBER	1		
	HOLE NUMBER	4		AT X = 2.5301	Y = -1.4608	Z = 0.00000	IS UNIT NUMBER	1		
	HOLE NUMBER	5		AT X = 0.00000	Y = -2.9216	Z = 0.00000	IS UNIT NUMBER	1		
	HOLE NUMBER	6		AT X = -2.5301	Y = -1.4608	Z = 0.00000	IS UNIT NUMBER	1		
	HOLE NUMBER	7		AT X = -2.5301	Y = 1.4608	Z = 0.00000	IS UNIT NUMBER	1		
	HOLE NUMBER	8		AT X = -2.5301	Y = 4.3825	Z = 0.00000	IS UNIT NUMBER	1		
	HOLE NUMBER	9		AT X = 0.00000	Y = 5.8433	Z = 0.00000	IS UNIT NUMBER	1		
	HOLE NUMBER	10		AT X = 2.5301	Y = 4.3825	Z = 0.00000	IS UNIT NUMBER	1		
	HOLE NUMBER	11		AT X = 5.0603	Y = 2.9216	Z = 0.00000	IS UNIT NUMBER	1		
	HOLE NUMBER	12		AT X = 5.0603	Y = 0.00000	Z = 0.00000	IS UNIT NUMBER	1		
	HOLE NUMBER	13		AT X = 5.0603	Y = -2.9216	Z = 0.00000	IS UNIT NUMBER	1		
	HOLE NUMBER	14		AT X = 2.5301	Y = -4.3825	Z = 0.00000	IS UNIT NUMBER	1		
	HOLE NUMBER	15		AT X = 0.00000	Y = -5.8433	Z = 0.00000	IS UNIT NUMBER	1		
	HOLE NUMBER	16		AT X = -2.5301	Y = -4.3825	Z = 0.00000	IS UNIT NUMBER	1		
	HOLE NUMBER	17		AT X = -5.0603	Y = -2.9216	Z = 0.00000	IS UNIT NUMBER	1		
	HOLE NUMBER	18		AT X = -5.0603	Y = 0.00000	Z = 0.00000	IS UNIT NUMBER	1		
	HOLE NUMBER	19		AT X = -5.0603	Y = 2.9216	Z = 0.00000	IS UNIT NUMBER	1		
	HOLE NUMBER	20		AT X = -5.0603	Y = 5.8433	Z = 0.00000	IS UNIT NUMBER	1		
	HOLE NUMBER	21		AT X = 2.5301	Y = 7.3041	Z = 0.00000	IS UNIT NUMBER	1		
	HOLE NUMBER	22		AT X = 7.5904	Y = 1.4608	Z = 0.00000	IS UNIT NUMBER	1		
	HOLE NUMBER	23		AT X = 5.0603	Y = -5.8433	Z = 0.00000	IS UNIT NUMBER	1		
	HOLE NUMBER	24		AT X = -2.5301	Y = -7.3041	Z = 0.00000	IS UNIT NUMBER	1		
	HOLE NUMBER	25		AT X = -7.5904	Y = -1.4608	Z = 0.00000	IS UNIT NUMBER	1		
2	CYLINDER	5	1	RADIUS = 18.891	+Z = 10.000	-Z = -10.000	CENTERLINE IS AT	X = 0.00000	Y = 0.00000	
3	CYLINDER	6	1	RADIUS = 33.496	+Z = 10.000	-Z = -10.000	CENTERLINE IS AT	X = 0.00000	Y = 0.00000	
4	CYLINDER	5	1	RADIUS = 36.544	+Z = 10.000	-Z = -10.000	CENTERLINE IS AT	X = 0.00000	Y = 0.00000	
5	CYLINDER	7	1	RADIUS = 49.244	+Z = 10.000	-Z = -10.000	CENTERLINE IS AT	X = 0.00000	Y = 0.00000	
6	CYLINDER	5	1	RADIUS = 49.854	+Z = 10.000	-Z = -10.000	CENTERLINE IS AT	X = 0.00000	Y = 0.00000	
7	CUBOID	8	1	+X = 49.854	-X = -49.854	+Y = 49.854	-Y = -49.854	+Z = 10.000	-Z = -10.000	

"LWT CASK, 25 PWR RODS, NO PWR BASKET, 5 W/O U235 VARIABLE PITCH"
VOLUMES FOR THOSE UNITS UTILIZED IN THIS PROBLEM

UNIT	REGION	GEOMETRY REGION	VOLUME	CUMULATIVE VOLUME
1	1	1	1.43621E+01 CM**3	1.43621E+01 CM**3
	2	2	5.76429E-01 CM**3	1.49385E+01 CM**3
	3	3	4.68120E+00 CM**3	1.96197E+01 CM**3
2	1	4	1.76387E+04 CM**3	1.81291E+04 CM**3
	2	5	4.29436E+03 CM**3	2.24235E+04 CM**3
	3	6	4.80740E+04 CM**3	7.04975E+04 CM**3
	4	7	1.34136E+04 CM**3	8.39110E+04 CM**3
	5	8	6.84563E+04 CM**3	1.52367E+05 CM**3
	6	9	3.79567E+03 CM**3	1.56163E+05 CM**3
	7	10	4.26699E+04 CM**3	1.98833E+05 CM**3

UNIT	USES	REGION	MIXTURE	TOTAL VOLUME
1	25	1	1	3.59052E+02 CM**3
		2	9	1.44107E+01 CM**3
		3	2	1.17030E+02 CM**3
2	1	1	3	1.76387E+04 CM**3
		2	5	4.29436E+03 CM**3
		3	6	4.80740E+04 CM**3
		4	5	1.34136E+04 CM**3
		5	7	6.84563E+04 CM**3
		6	5	3.79567E+03 CM**3
		7	8	4.26699E+04 CM**3

TOTAL MIXTURE VOLUMES

MIXTURE	TOTAL VOLUME	MASS(G)
1	3.59052E+02 CM**3	3.73844E+03
2	1.17030E+02 CM**3	7.67717E+02
3	1.76387E+04 CM**3	1.76064E+04
5	2.15036E+04 CM**3	1.70309E+05
6	4.80740E+04 CM**3	5.45351E+05
7	6.84563E+04 CM**3	6.83311E+04
8	4.26699E+04 CM**3	4.25919E+04
9	1.44107E+01 CM**3	1.43844E+01

```
*****************************************************************************************************************
***                                                                                                           ***
***                                        BIASING INFORMATION                                                ***
***                                                                                                           ***
***     A DEFAULT WEIGHT OF    0.500 WILL BE USED FOR ALL BIAS ID'S.                                          ***
***                                                                                                           ***
*****************************************************************************************************************

                        ........    0 IO'S WERE USED IN KENO-V BEFORE TRACKING       ........

                        ........  0.01550 MINUTES WERE USED PROCESSING DATA.        ........

VOLUME FRACTION OF FISSILE MATERIAL IN THE CORE= 1.80580E-03

START TYPE 0 WAS USED.

THE NEUTRONS WERE STARTED UNIFORMLY THROUGHOUT THE ENTIRE VOLUME DEFINED BY THE OUTERMOST GEOMETRY CARD.
THE FLAG TO START NEUTRONS IN THE REFLECTOR WAS TURNED OFF

KENO MESSAGE NUMBER K5-105     ***** WARNING, ONLY   26 INDEPENDENT STARTING POSITIONS WERE GENERATED.  *****

  374 ADDITIONAL STARTING POINTS WERE PICKED FROM THE INITAL DISTRIBUTION.

0.45333 MINUTES WERE REQUIRED FOR STARTING.   TOTAL ELAPSED TIME IS 0.46933 MINUTES.
```

"LWT CASK, 25 PWR RODS, NO PWR BASKET, 5 W/O U235 VARIABLE PITCH"

GENERATION	GENERATION K-EFFECTIVE	ELAPSED TIME MINUTES	AVERAGE K-EFFECTIVE	AVG K-EFF DEVIATION	MATRIX K-EFFECTIVE	MATRIX K-EFF DEVIATION
KENO MESSAGE NUMBER K5-132		WARNING....ONLY	307 INDEPENDENT FISSION POINTS WERE GENERATED			
1	6.17738E-01	5.35500E-01	1.00000E+00	0.00000E+00	0.00000E+00	0.00000E+00
KENO MESSAGE NUMBER K5-132		WARNING....ONLY	281 INDEPENDENT FISSION POINTS WERE GENERATED			
2	5.93025E-01	6.09667E-01	1.00000E+00	0.00000E+00	0.00000E+00	0.00000E+00
KENO MESSAGE NUMBER K5-132		WARNING....ONLY	282 INDEPENDENT FISSION POINTS WERE GENERATED			
3	5.90939E-01	6.82000E-01	5.90939E-01	0.00000E+00	0.00000E+00	0.00000E+00
4	5.62855E-01	7.58833E-01	5.76897E-01	1.40421E-02	0.00000E+00	0.00000E+00
5	6.03062E-01	8.32000E-01	5.85619E-01	1.19079E-02	0.00000E+00	0.00000E+00
6	6.08147E-01	9.02500E-01	5.91251E-01	1.01301E-02	0.00000E+00	0.00000E+00
7	5.88029E-01	9.74833E-01	5.90606E-01	7.87316E-03	0.00000E+00	0.00000E+00
8	5.65290E-01	1.05083E+00	5.86387E-01	7.68943E-03	0.00000E+00	0.00000E+00
9	6.54057E-01	1.11767E+00	5.96054E-01	1.16484E-02	0.00000E+00	0.00000E+00
10	6.16964E-01	1.19467E+00	5.98668E-01	1.04209E-02	0.00000E+00	0.00000E+00
11	6.46536E-01	1.26600E+00	6.03987E-01	1.06185E-02	0.00000E+00	0.00000E+00
12	6.84139E-01	1.33917E+00	6.12002E-01	1.24276E-02	0.00000E+00	0.00000E+00
13	6.15014E-01	1.41333E+00	6.12276E-01	1.12445E-02	0.00000E+00	0.00000E+00
14	6.19643E-01	1.48383E+00	6.12890E-01	1.02831E-02	0.00000E+00	0.00000E+00
15	6.40168E-01	1.55250E+00	6.14988E-01	9.68907E-03	0.00000E+00	0.00000E+00
16	6.32312E-01	1.62033E+00	6.16225E-01	9.05528E-03	0.00000E+00	0.00000E+00
17	5.78563E-01	1.69800E+00	6.13715E-01	8.79599E-03	0.00000E+00	0.00000E+00
18	5.70044E-01	1.77317E+00	6.10985E-01	8.66878E-03	0.00000E+00	0.00000E+00
19	6.15171E-01	1.84183E+00	6.11231E-01	8.14663E-03	0.00000E+00	0.00000E+00
20	6.43942E-01	1.91050E+00	6.13049E-01	7.89277E-03	0.00000E+00	0.00000E+00
21	6.52849E-01	1.98100E+00	6.15143E-01	7.75412E-03	0.00000E+00	0.00000E+00
22	6.00828E-01	2.04967E+00	6.14428E-01	7.39094E-03	0.00000E+00	0.00000E+00
23	6.41552E-01	2.12183E+00	6.15719E-01	7.14786E-03	0.00000E+00	0.00000E+00
24	6.32890E-01	2.19050E+00	6.16500E-01	6.85976E-03	0.00000E+00	0.00000E+00
25	6.27317E-01	2.26467E+00	6.16970E-01	6.57158E-03	0.00000E+00	0.00000E+00
26	6.23046E-01	2.33617E+00	6.17223E-01	6.29690E-03	0.00000E+00	0.00000E+00
27	5.82499E-01	2.40850E+00	6.15834E-01	6.19743E-03	0.00000E+00	0.00000E+00
28	6.21451E-01	2.48167E+00	6.16050E-01	5.95821E-03	0.00000E+00	0.00000E+00
29	6.11586E-01	2.55667E+00	6.15885E-01	5.73568E-03	0.00000E+00	0.00000E+00
30	5.99803E-01	2.62717E+00	6.15311E-01	5.55680E-03	0.00000E+00	0.00000E+00
31	5.79691E-01	2.70050E+00	6.14082E-01	5.50065E-03	0.00000E+00	0.00000E+00
32	5.81116E-01	2.77183E+00	6.12984E-01	5.42656E-03	0.00000E+00	0.00000E+00
33	5.97332E-01	2.84233E+00	6.12479E-01	5.27282E-03	0.00000E+00	0.00000E+00
34	5.84740E-01	2.91467E+00	6.11612E-01	5.17845E-03	0.00000E+00	0.00000E+00
35	6.17649E-01	2.98333E+00	6.11795E-01	5.02241E-03	0.00000E+00	0.00000E+00
36	5.60931E-01	3.05933E+00	6.10299E-01	5.09693E-03	0.00000E+00	0.00000E+00
37	5.93069E-01	3.12983E+00	6.09806E-01	4.97359E-03	0.00000E+00	0.00000E+00
38	5.93479E-01	3.20400E+00	6.09353E-01	4.85469E-03	0.00000E+00	0.00000E+00
39	6.36434E-01	3.27633E+00	6.10085E-01	4.77805E-03	0.00000E+00	0.00000E+00
40	6.22092E-01	3.34583E+00	6.10401E-01	4.66134E-03	0.00000E+00	0.00000E+00
41	6.21971E-01	3.41717E+00	6.10698E-01	4.54993E-03	0.00000E+00	0.00000E+00
42	6.35092E-01	3.48400E+00	6.11307E-01	4.47646E-03	0.00000E+00	0.00000E+00
43	6.37146E-01	3.55450E+00	6.11938E-01	4.41116E-03	0.00000E+00	0.00000E+00
44	5.55148E-01	3.63233E+00	6.10585E-01	4.51220E-03	0.00000E+00	0.00000E+00
45	6.02323E-01	3.70650E+00	6.10393E-01	4.41021E-03	0.00000E+00	0.00000E+00
46	5.85122E-01	3.77967E+00	6.09819E-01	4.34692E-03	0.00000E+00	0.00000E+00
47	6.17823E-01	3.85567E+00	6.09997E-01	4.25294E-03	0.00000E+00	0.00000E+00
48	6.50272E-01	3.92717E+00	6.10872E-01	4.25061E-03	0.00000E+00	0.00000E+00
49	6.48568E-01	3.99583E+00	6.11674E-01	4.23581E-03	0.00000E+00	0.00000E+00
50	6.21761E-01	4.06633E+00	6.11885E-01	4.15195E-03	0.00000E+00	0.00000E+00
51	6.32914E-01	4.13867E+00	6.12314E-01	4.08892E-03	0.00000E+00	0.00000E+00
52	5.92216E-01	4.21000E+00	6.11912E-01	4.02642E-03	0.00000E+00	0.00000E+00
53	5.74569E-01	4.28133E+00	6.11180E-01	4.01403E-03	0.00000E+00	0.00000E+00
54	6.21663E-01	4.35000E+00	6.11381E-01	3.94124E-03	0.00000E+00	0.00000E+00
55	6.18352E-01	4.41967E+00	6.11513E-01	3.86840E-03	0.00000E+00	0.00000E+00
56	6.14087E-01	4.49567E+00	6.11560E-01	3.79638E-03	0.00000E+00	0.00000E+00
57	6.45562E-01	4.56883E+00	6.12179E-01	3.77765E-03	0.00000E+00	0.00000E+00
58	6.83629E-01	4.63483E+00	6.13454E-01	3.92286E-03	0.00000E+00	0.00000E+00
59	5.84007E-01	4.70983E+00	6.12938E-01	3.88790E-03	0.00000E+00	0.00000E+00
60	6.02552E-01	4.78033E+00	6.12759E-01	3.82448E-03	0.00000E+00	0.00000E+00
61	6.55602E-01	4.85167E+00	6.13485E-01	3.82859E-03	0.00000E+00	0.00000E+00
62	5.56112E-01	4.92317E+00	6.12529E-01	3.88379E-03	0.00000E+00	0.00000E+00
63	6.06527E-01	4.99550E+00	6.12430E-01	3.82086E-03	0.00000E+00	0.00000E+00
64	6.12000E-01	5.06683E+00	6.12423E-01	3.75873E-03	0.00000E+00	0.00000E+00
65	6.24962E-01	5.14000E+00	6.12622E-01	3.70394E-03	0.00000E+00	0.00000E+00
66	5.48012E-01	5.21700E+00	6.11613E-01	3.78281E-03	0.00000E+00	0.00000E+00
67	5.62255E-01	5.28933E+00	6.10854E-01	3.80078E-03	0.00000E+00	0.00000E+00
68	5.93111E-01	5.36167E+00	6.10585E-01	3.75239E-03	0.00000E+00	0.00000E+00
69	5.80987E-01	5.43117E+00	6.10143E-01	3.72227E-03	0.00000E+00	0.00000E+00
70	6.00007E-01	5.50533E+00	6.09994E-01	3.67015E-03	0.00000E+00	0.00000E+00
71	6.45326E-01	5.57300E+00	6.10506E-01	3.65264E-03	0.00000E+00	0.00000E+00
72	6.32962E-01	5.64267E+00	6.10827E-01	3.61435E-03	0.00000E+00	0.00000E+00
73	5.79951E-01	5.71217E+00	6.10392E-01	3.58952E-03	0.00000E+00	0.00000E+00
74	5.69347E-01	5.78267E+00	6.09822E-01	3.58493E-03	0.00000E+00	0.00000E+00
75	6.21438E-01	5.85233E+00	6.09981E-01	3.53905E-03	0.00000E+00	0.00000E+00
76	5.52810E-01	5.93000E+00	6.09208E-01	3.57537E-03	0.00000E+00	0.00000E+00
77	5.94347E-01	5.99967E+00	6.09010E-01	3.53294E-03	0.00000E+00	0.00000E+00
78	6.16649E-01	6.07283E+00	6.09111E-01	3.48759E-03	0.00000E+00	0.00000E+00
79	6.16676E-01	6.14517E+00	6.09209E-01	3.44340E-03	0.00000E+00	0.00000E+00
80	5.91369E-01	6.21750E+00	6.08980E-01	3.40665E-03	0.00000E+00	0.00000E+00
81	5.93922E-01	6.29167E+00	6.08790E-01	3.36865E-03	0.00000E+00	0.00000E+00
82	6.17036E-01	6.36400E+00	6.08893E-01	3.32787E-03	0.00000E+00	0.00000E+00
83	5.64033E-01	6.44083E+00	6.08339E-01	3.33287E-03	0.00000E+00	0.00000E+00
84	6.18586E-01	6.51317E+00	6.08464E-01	3.29434E-03	0.00000E+00	0.00000E+00
85	5.97377E-01	6.58833E+00	6.08330E-01	3.25715E-03	0.00000E+00	0.00000E+00
86	6.07878E-01	6.66417E+00	6.08325E-01	3.21815E-03	0.00000E+00	0.00000E+00
87	6.82650E-01	6.73100E+00	6.09199E-01	3.29809E-03	0.00000E+00	0.00000E+00
88	6.42184E-01	6.79783E+00	6.09583E-01	3.28200E-03	0.00000E+00	0.00000E+00

89	5.55622E-01	6.87567E+00	6.08963E-01	3.30282E-03	0.00000E+00	0.00000E+00
90	6.06546E-01	6.94617E+00	6.08935E-01	3.26518E-03	0.00000E+00	0.00000E+00
91	5.78821E-01	7.02133E+00	6.08597E-01	3.24597E-03	0.00000E+00	0.00000E+00
92	5.66679E-01	7.09083E+00	6.08131E-01	3.24332E-03	0.00000E+00	0.00000E+00
93	6.20164E-01	7.16500E+00	6.08263E-01	3.21020E-03	0.00000E+00	0.00000E+00
94	6.06480E-01	7.23550E+00	6.08244E-01	3.17518E-03	0.00000E+00	0.00000E+00
95	5.78361E-01	7.30233E+00	6.07923E-01	3.15724E-03	0.00000E+00	0.00000E+00
96	5.98211E-01	7.37650E+00	6.07819E-01	3.12518E-03	0.00000E+00	0.00000E+00
97	5.80272E-01	7.44783E+00	6.07529E-01	3.10568E-03	0.00000E+00	0.00000E+00
98	6.13701E-01	7.51750E+00	6.07594E-01	3.07383E-03	0.00000E+00	0.00000E+00
99	6.02988E-01	7.58700E+00	6.07546E-01	3.04235E-03	0.00000E+00	0.00000E+00
100	6.10898E-01	7.65383E+00	6.07580E-01	3.01134E-03	0.00000E+00	0.00000E+00
101	5.52344E-01	7.72700E+00	6.07022E-01	3.03253E-03	0.00000E+00	0.00000E+00
102	6.13199E-01	7.79567E+00	6.07084E-01	3.00269E-03	0.00000E+00	0.00000E+00
103	6.08742E-01	7.86433E+00	6.07101E-01	2.97286E-03	0.00000E+00	0.00000E+00

KENO MESSAGE NUMBER K5-123 EXECUTION TERMINATED DUE TO COMPLETION OF THE SPECIFIED NUMBER OF GENERATIONS.

"LWT CASK, 25 PWR RODS, NO PWR BASKET, 5 W/O U235 VARIABLE PITCH"

LIFETIME = 2.18556E-04 + OR - 1.10041E-06 GENERATION TIME = 1.16144E-04 + OR - 8.15332E-07
NU BAR = 2.42957E+00 + OR - 2.50942E-04 AVERAGE FISSION GROUP = 2.38494E+01 + OR - 1.41599E-02
ENERGY(EV) OF THE AVERAGE LETHARGY CAUSING FISSION = 6.26896E-02 + OR - 8.45492E-04

NO. OF INITIAL GENERATIONS SKIPPED	AVERAGE K-EFFECTIVE	DEVIATION	67 PER CENT CONFIDENCE INTERVAL	95 PER CENT CONFIDENCE INTERVAL	99 PER CENT CONFIDENCE INTERVAL	NUMBER OF HISTORIES
3	0.60726	+ OR - 0.00300	0.60426 TO 0.61026	0.60127 TO 0.61326	0.59827 TO 0.61626	40000
4	0.60771	+ OR - 0.00299	0.60472 TO 0.61071	0.60172 TO 0.61370	0.59873 TO 0.61669	39600
5	0.60776	+ OR - 0.00302	0.60473 TO 0.61078	0.60171 TO 0.61381	0.59868 TO 0.61683	39200
6	0.60775	+ OR - 0.00306	0.60470 TO 0.61081	0.60164 TO 0.61387	0.59859 TO 0.61692	38800
7	0.60796	+ OR - 0.00308	0.60488 TO 0.61104	0.60180 TO 0.61412	0.59872 TO 0.61720	38400
8	0.60841	+ OR - 0.00308	0.60533 TO 0.61149	0.60225 TO 0.61457	0.59917 TO 0.61765	38000
9	0.60792	+ OR - 0.00307	0.60485 TO 0.61100	0.60177 TO 0.61407	0.59870 TO 0.61715	37600
10	0.60783	+ OR - 0.00311	0.60472 TO 0.61093	0.60161 TO 0.61404	0.59851 TO 0.61715	37200
11	0.60741	+ OR - 0.00311	0.60429 TO 0.61052	0.60118 TO 0.61363	0.59807 TO 0.61674	36800
12	0.60656	+ OR - 0.00303	0.60353 TO 0.60959	0.60051 TO 0.61262	0.59748 TO 0.61565	36400
17	0.60595	+ OR - 0.00314	0.60280 TO 0.60909	0.59966 TO 0.61223	0.59652 TO 0.61538	34400
22	0.60529	+ OR - 0.00322	0.60207 TO 0.60851	0.59885 TO 0.61173	0.59563 TO 0.61495	32400
27	0.60423	+ OR - 0.00334	0.60089 TO 0.60757	0.59754 TO 0.61091	0.59420 TO 0.61426	30400
32	0.60461	+ OR - 0.00354	0.60108 TO 0.60815	0.59754 TO 0.61169	0.59400 TO 0.61522	28400
37	0.60567	+ OR - 0.00372	0.60194 TO 0.60939	0.59822 TO 0.61311	0.59450 TO 0.61683	26400
42	0.60434	+ OR - 0.00394	0.60040 TO 0.60828	0.59646 TO 0.61222	0.59252 TO 0.61616	24400
47	0.60477	+ OR - 0.00414	0.60063 TO 0.60891	0.59649 TO 0.61305	0.59236 TO 0.61719	22400
52	0.60238	+ OR - 0.00430	0.59808 TO 0.60669	0.59377 TO 0.61099	0.58947 TO 0.61530	20400
57	0.60103	+ OR - 0.00460	0.59643 TO 0.60563	0.59183 TO 0.61023	0.58723 TO 0.61482	18400
62	0.59916	+ OR - 0.00438	0.59477 TO 0.60354	0.59039 TO 0.60792	0.58601 TO 0.61231	16400
67	0.60032	+ OR - 0.00459	0.59573 TO 0.60492	0.59114 TO 0.60951	0.58654 TO 0.61411	14400
72	0.59869	+ OR - 0.00497	0.59371 TO 0.60366	0.58874 TO 0.60863	0.58377 TO 0.61361	12400
77	0.60159	+ OR - 0.00540	0.59620 TO 0.60699	0.59080 TO 0.61238	0.58540 TO 0.61778	10400
82	0.60027	+ OR - 0.00655	0.59372 TO 0.60683	0.58717 TO 0.61338	0.58061 TO 0.61993	8400
87	0.59595	+ OR - 0.00620	0.58975 TO 0.60215	0.58354 TO 0.60836	0.57734 TO 0.61456	6400
92	0.59867	+ OR - 0.00613	0.59254 TO 0.60479	0.58642 TO 0.61092	0.58029 TO 0.61704	4400
97	0.60031	+ OR - 0.00972	0.59059 TO 0.61004	0.58086 TO 0.61976	0.57114 TO 0.62948	2400

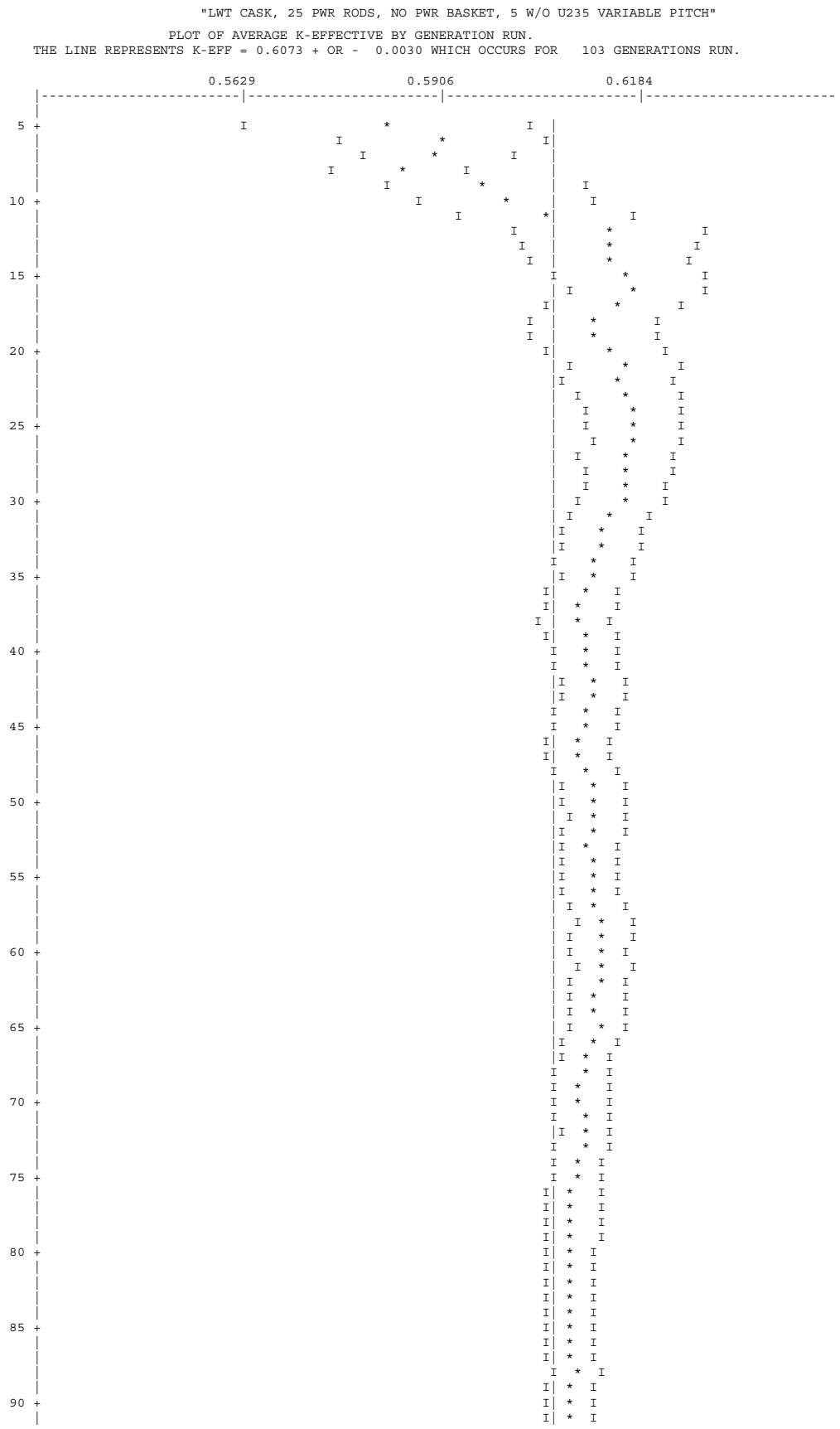
"LWT CASK, 25 PWR RODS, NO PWR BASKET, 5 W/O U235 VARIABLE PITCH"
PLOT OF AVERAGE K-EFFECTIVE BY GENERATION RUN.
THE LINE REPRESENTS K-EFF = 0.6073 + OR - 0.0030 WHICH OCCURS FOR 103 GENERATIONS RUN.
0.5629
0.5906
0.6184
5
10
15
20
25
30
35
40
45
50
55
60
65
70
75
80
85
90


95
100

"LWT CASK, 25 PWR RODS, NO PWR BASKET, 5 W/O U235 VARIABLE PITCH"

SKIPPING 3 GENERATIONS

GROUP	FISSION FRACTION	UNIT	REGION	FISSIONS	PERCENT DEVIATION	ABSORPTIONS	PERCENT DEVIATION	LEAKAGE	PERCENT DEVIATION
1	0.0026			1.58113E-03	8.8616	1.46856E-03	4.5943	0.00000E+00	0.0000
2	0.0115			7.01126E-03	2.7409	4.68199E-03	1.7423	0.00000E+00	0.0000
3	0.0117			7.11948E-03	2.6033	2.96074E-03	2.5228	0.00000E+00	0.0000
4	0.0047			2.82935E-03	3.1388	1.34864E-03	3.0296	0.00000E+00	0.0000
5	0.0017			1.01685E-03	2.3549	9.47995E-04	2.0780	0.00000E+00	0.0000
6	0.0013			7.72662E-04	1.9853	1.22786E-03	1.6528	0.00000E+00	0.0000
7	0.0010			6.27492E-04	2.3255	1.08055E-03	1.9573	0.00000E+00	0.0000
8	0.0009			5.24207E-04	3.1331	1.32918E-03	2.5888	0.00000E+00	0.0000
9	0.0011			6.47597E-04	3.4079	1.99941E-03	2.8600	0.00000E+00	0.0000
10	0.0024			1.44552E-03	3.5593	3.33204E-03	2.9680	0.00000E+00	0.0000
11	0.0051			3.11237E-03	3.6134	5.75020E-03	3.0300	0.00000E+00	0.0000
12	0.0062			3.75062E-03	4.0647	6.04935E-03	3.3493	0.00000E+00	0.0000
13	0.0063			3.84031E-03	4.3839	6.85260E-03	3.4473	0.00000E+00	0.0000
14	0.0052			3.15665E-03	4.1710	1.01914E-02	3.0251	0.00000E+00	0.0000
15	0.0010			5.91114E-04	7.7815	2.56756E-03	3.7314	0.00000E+00	0.0000
16	0.0009			5.41851E-04	8.1764	1.74955E-03	3.8844	0.00000E+00	0.0000
17	0.0013			8.03768E-04	11.7890	1.25184E-03	6.1496	0.00000E+00	0.0000
18	0.0015			9.01252E-04	13.2285	1.15433E-03	6.4656	0.00000E+00	0.0000
19	0.0020			1.22418E-03	10.4069	1.99020E-03	4.6794	0.00000E+00	0.0000
20	0.0081			4.88855E-03	5.3486	8.15507E-03	2.6046	0.00000E+00	0.0000
21	0.0049			2.95337E-03	7.9215	3.74379E-03	3.8325	0.00000E+00	0.0000
22	0.0133			8.08212E-03	5.1373	9.89744E-03	2.5451	0.00000E+00	0.0000
23	0.0851			5.16556E-02	1.6624	7.75125E-02	0.7161	0.00000E+00	0.0000
24	0.2434			1.47805E-01	1.0804	2.28168E-01	0.4195	0.00000E+00	0.0000
25	0.2251			1.36676E-01	1.0379	2.18079E-01	0.3868	0.00000E+00	0.0000
26	0.2699			1.63912E-01	1.2141	2.88964E-01	0.4041	0.00000E+00	0.0000
27	0.0820			4.97920E-02	2.2488	1.07512E-01	0.6855	0.00000E+00	0.0000
SYSTEM TOTAL =				6.07262E-01	0.4937	9.99966E-01	0.1233	0.00000E+00	0.0000

ELAPSED TIME 7.86533 MINUTES

RANDOM NUMBER= 16DE4F176D87

```
"LWT CASK, 25 PWR RODS, NO PWR BASKET, 5 W/O U235 VARIABLE PITCH"

                              FREQUENCY FOR GENERATIONS    4 TO  103
0.5410 TO 0.5610     *******
0.5610 TO 0.5810     **************
0.5810 TO 0.6010     ********************
0.6010 TO 0.6210     ****************************
0.6210 TO 0.6410     ******************
0.6410 TO 0.6610     ***********
0.6610 TO 0.6810
0.6810 TO 0.7010     ***

                              FREQUENCY FOR GENERATIONS   29 TO  103
0.5410 TO 0.5610     *******
0.5610 TO 0.5810     **********
0.5810 TO 0.6010     ******************
0.6010 TO 0.6210     ***********************
0.6210 TO 0.6410     ***********
0.6410 TO 0.6610     ******
0.6610 TO 0.6810
0.6810 TO 0.7010     **

                              FREQUENCY FOR GENERATIONS   54 TO  103
0.5410 TO 0.5610     *****
0.5610 TO 0.5810     ********
0.5810 TO 0.6010     *********
0.6010 TO 0.6210     ******************
0.6210 TO 0.6410     ****
0.6410 TO 0.6610     ****
0.6610 TO 0.6810
0.6810 TO 0.7010     **

                              FREQUENCY FOR GENERATIONS   79 TO  103
0.5410 TO 0.5610     **
0.5610 TO 0.5810     *****
0.5810 TO 0.6010     ****
0.6010 TO 0.6210     ************
0.6210 TO 0.6410
0.6410 TO 0.6610     *
0.6610 TO 0.6810
0.6810 TO 0.7010     *


*****************************************************************************************************************************************************
*

          CONGRATULATIONS!  YOU HAVE  SUCCESSFULLY TRAVERSED THE PERILOUS PATH THROUGH KENO V IN   7.86533 MINUTES

*****************************************************************************************************************************************************
*
```

Figure 6.6.4-3 CSAS Input/Output for NAC-LWT with 25 BWR Rods – Most Reactive Normal Condition Configuration

```
_          PRIMARY MODULE ACCESS AND INPUT RECORD ( SCALE DRIVER - 95/03/29 - 09:06:37 )
   MODULE CSAS25   WILL BE CALLED
     BWR RODS, NO BASKET, VOID EXTERIOR, GAP VOID
     27GROUPNDF4    LATTICECELL
     UO2       1    0.95  293.0  92235  5.0  92238   95.0  END
     ZIRCALLOY 2    1.0           293.0     END
     H2O       3    1.0           293.0     END
     AL        4    1.0           293.0     END
     SS304     5    1.0           293.0     END
     PB        6    1.0           293.0     END
     H2O       7    1.0           293.0     END
     H2O   8 0.025 293.0 END
     H2O       9    1.0E-20       293.0     END
     END COMP
     TRIANGPITCH   3.69059   1.2446  1  3  1.4478 2 1.2650 9 END
     "LWT CASK, 25 BWR RODS, NO BWR BASKET, 5 W/O U235 VARIABLE PITCH"
     READ PARAM RUN=YES PLT=NO  GEN=103 NPG=400 END PARAM
     READ GEOM
     UNIT 1
     COM="BWR FUEL ROD"
     CYLINDER     1  1  0.62230    2P10.0
     CYLINDER     9  1  0.63250    2P10.0
     CYLINDER     2  1  0.72390    2P10.0
     GLOBAL UNIT 2
     CYLINDER    3   1   16.9863  2P10.0
     HOLE    1    .0000    .0000    .0000
     HOLE    1    .0000   3.6905    .0000
     HOLE    1   3.1960   1.8453    .0000
     HOLE    1   3.1960  -1.8453    .0000
     HOLE    1    .0000  -3.6905    .0000
     HOLE    1  -3.1960  -1.8453    .0000
     HOLE    1  -3.1960   1.8453    .0000
     HOLE    1  -3.1960   5.5358    .0000
     HOLE    1    .0000   7.3810    .0000
     HOLE    1   3.1960   5.5358    .0000
     HOLE    1   6.3920   3.6905    .0000
     HOLE    1   6.3920    .0000    .0000
     HOLE    1   6.3920  -3.6905    .0000
     HOLE    1   3.1960  -5.5358    .0000
     HOLE    1    .0000  -7.3810    .0000
     HOLE    1  -3.1960  -5.5358    .0000
     HOLE    1  -6.3920  -3.6905    .0000
     HOLE    1  -6.3920    .0000    .0000
     HOLE    1  -6.3920   3.6905    .0000
     HOLE    1  -6.3920   7.3810    .0000
     HOLE    1   3.1960   9.2263    .0000
     HOLE    1   9.5879   1.8453    .0000
     HOLE    1   6.3920  -7.3810    .0000
     HOLE    1  -3.1960  -9.2263    .0000
     HOLE    1  -9.5879  -1.8453    .0000
     CYLINDER    5   1    18.8913  2P10.0
     CYLINDER    6   1    33.4963  2P10.0
     CYLINDER    5   1    36.5443  2P10.0
     CYLINDER    7   1    49.2443  2P10.0
     CYLINDER    5   1    49.8539  2P10.0
     CUBOID   8 1 4P121.92   2P10.0
     END GEOM
     READ BOUNDS  ALL=MIR     END BOUNDS
     END DATA

   SECONDARY MODULE O0O008   HAS BEEN CALLED.

   MODULE O0O008   IS FINISHED. COMPLETION CODE     0. CPU TIME USED     0.71 (SECONDS).

   SECONDARY MODULE O0O002   HAS BEEN CALLED.

   MODULE O0O002   IS FINISHED. COMPLETION CODE     0. CPU TIME USED     7.03 (SECONDS).

   SECONDARY MODULE O0O009   HAS BEEN CALLED.

   MODULE O0O009   IS FINISHED. COMPLETION CODE     0. CPU TIME USED   231.51 (SECONDS).

   MODULE CSAS25   IS FINISHED. COMPLETION CODE     0. CPU TIME USED   242.27 (SECONDS).
```

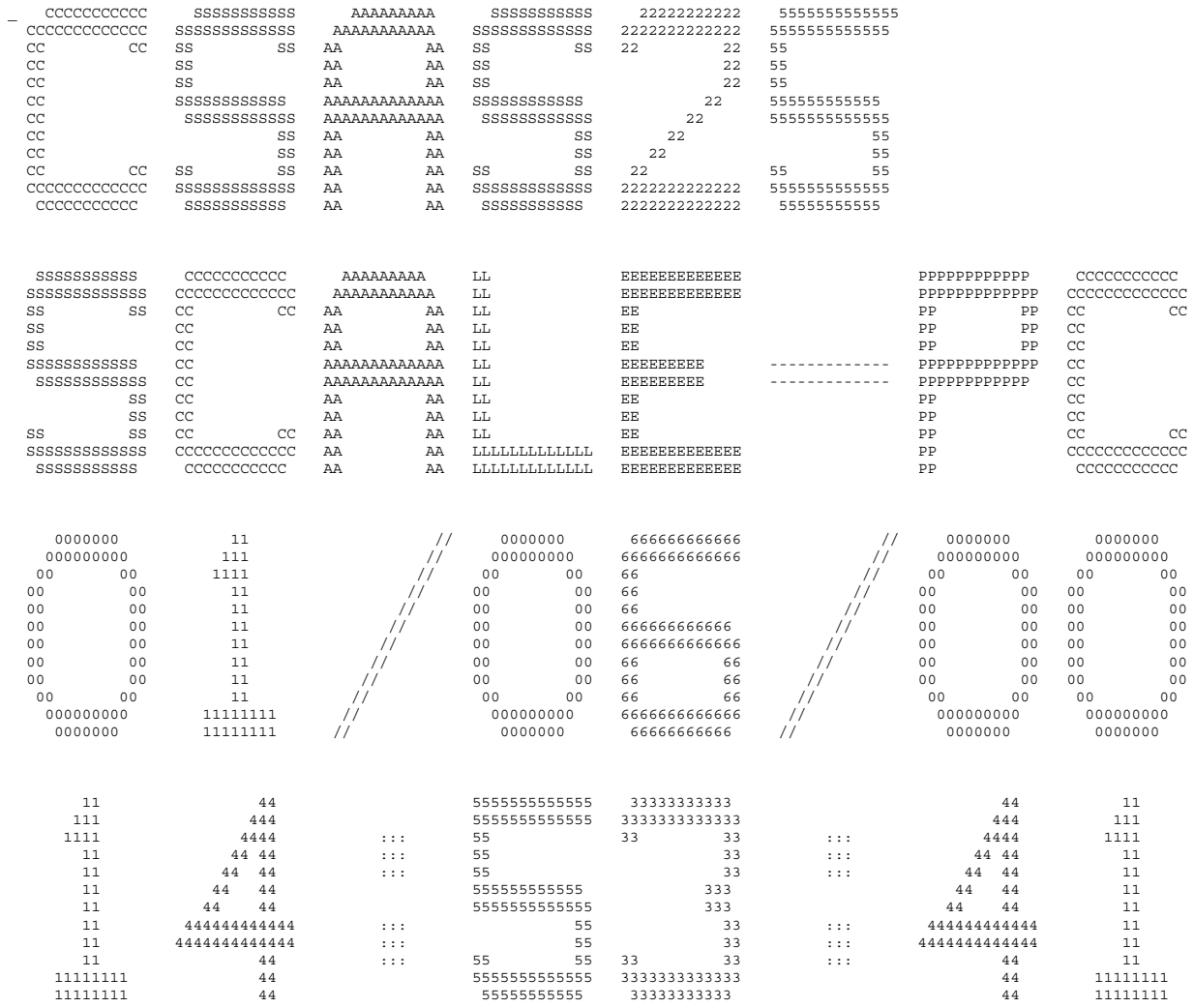

```
  SSSSSSSSSS     CCCCCCCCCC      AAAAAAAAA     LL             EEEEEEEEEEEE                  PPPPPPPPPPP     CCCCCCCCCC
 SSSSSSSSSSS   CCCCCCCCCCCC    AAAAAAAAAAA    LL             EEEEEEEEEEEE                  PPPPPPPPPPPP   CCCCCCCCCCCC
 SS         SS CC          CC  AA         AA   LL             EE                            PP         PP  CC          CC
 SS            CC            AA         AA   LL             EE                            PP         PP  CC
 SS            CC            AA         AA   LL             EE                            PP         PP  CC
 SSSSSSSSSSS   CC            AAAAAAAAAAAAA   LL             EEEEEEEEE       -------------PPPPPPPPPPPP  CC
  SSSSSSSSSSS  CC            AAAAAAAAAAAAA   LL             EEEEEEEEE       -------------PPPPPPPPPPP   CC
           SS  CC            AA         AA   LL             EE                            PP             CC
           SS  CC            AA         AA   LL             EE                            PP             CC
 SS        SS  CC          CC  AA         AA   LL             EE                            PP             CC          CC
 SSSSSSSSSSS   CCCCCCCCCCCCC   AA         AA   LLLLLLLLLLLLL  EEEEEEEEEEEE                  PP             CCCCCCCCCCCCC
  SSSSSSSSSS    CCCCCCCCCC     AA         AA   LLLLLLLLLLLLL  EEEEEEEEEEEE                  PP              CCCCCCCCCC
```

```
*******************************************************************************
*******************************************************************************
*******************************************************************************
*****                                                                     *****
*****                  PROGRAM VERIFICATION INFORMATION                   *****
*****                                                                     *****
*****                CODE SYSTEM:  SCALE-PC VERSION:  4.3                 *****
*****                                                                     *****
*******************************************************************************
*******************************************************************************
*****                                                                     *****
*****                                                                     *****
*****              PROGRAM:  CSAS                                         *****
*****                                                                     *****
*****        CREATION DATE:  03/08/96                                     *****
*****                                                                     *****
*****              VOLUME:   ENG                                          *****
*****                                                                     *****
*****              LIBRARY:  G:\SCALE43\WIN_NT\EXE                        *****
*****                                                                     *****
*****                                                                     *****
*****      PRODUCTION CODE:  CSAS                                         *****
*****                                                                     *****
*****              VERSION:  3.1                                          *****
*****                                                                     *****
*****              JOBNAME:  SCALE-PC                                     *****
*****                                                                     *****
*****    DATE OF EXECUTION:  01/06/00                                     *****
*****                                                                     *****
*****    TIME OF EXECUTION:  14:53:41                                     *****
*****                                                                     *****
*****                                                                     *****
*******************************************************************************
*******************************************************************************
*******************************************************************************
```

```
BWR RODS, NO BASKET, VOID EXTERIOR, GAP VOID

**** PROBLEM PARAMETERS ****

LIB 27GROUPNDF4  LIBRARY
MXX             9 MIXTURES
MSC             9 COMPOSITION SPECIFICATIONS
IZM             4 MATERIAL ZONES
GE  LATTICECELL  GEOMETRY
MORE            0 0/1 DO NOT READ/READ OPTIONAL PARAMETER DATA
MSLN            0 FUEL SOLUTIONS


**** PROBLEM COMPOSITION DESCRIPTION ****

SC  UO2           STANDARD COMPOSITION
MX              1 MIXTURE NO.
VF         0.9500 VOLUME FRACTION
ROTH      10.9600 THEORETICAL DENSITY
NEL             2 NO. ELEMENTS
ICP             1 0/1 MIXTURE/COMPOUND
TEMP        293.0 DEG KELVIN
            92000      1.00 ATOM/MOLECULE
                         92235     5.000 WT%
                         92238    95.000 WT%
             8016      2.00 ATOMS/MOLECULE
END

SC  ZIRCALLOY    STANDARD COMPOSITION
MX              2 MIXTURE NO.
VF         1.0000 VOLUME FRACTION
ROTH       6.5600 THEORETICAL DENSITY
NEL             1 NO. ELEMENTS
ICP             1 0/1 MIXTURE/COMPOUND
TEMP        293.0 DEG KELVIN
            40302      1.00 ATOM/MOLECULE
END

SC  H2O           STANDARD COMPOSITION
MX              3 MIXTURE NO.
VF         1.0000 VOLUME FRACTION
ROTH       0.9982 THEORETICAL DENSITY
NEL             2 NO. ELEMENTS
ICP             1 0/1 MIXTURE/COMPOUND
TEMP        293.0 DEG KELVIN
             1001      2.00 ATOMS/MOLECULE
             8016      1.00 ATOM/MOLECULE
END

SC  AL            STANDARD COMPOSITION
MX              4 MIXTURE NO.
VF         1.0000 VOLUME FRACTION
ROTH       2.7020 THEORETICAL DENSITY
NEL             1 NO. ELEMENTS
ICP             1 0/1 MIXTURE/COMPOUND
TEMP        293.0 DEG KELVIN
            13027      1.00 ATOM/MOLECULE
END

SC  SS304         STANDARD COMPOSITION
MX              5 MIXTURE NO.
VF         1.0000 VOLUME FRACTION
ROTH       7.9200 THEORETICAL DENSITY
NEL             4 NO. ELEMENTS
ICP             0 0/1 MIXTURE/COMPOUND
TEMP        293.0 DEG KELVIN
            24304    19.000 WT%
            25055     2.000 WT%
            26304    69.500 WT%
            28304     9.500 WT%
END

SC  PB            STANDARD COMPOSITION
MX              6 MIXTURE NO.
VF         1.0000 VOLUME FRACTION
ROTH      11.3440 THEORETICAL DENSITY
NEL             1 NO. ELEMENTS
ICP             1 0/1 MIXTURE/COMPOUND
TEMP        293.0 DEG KELVIN
            82000      1.00 ATOM/MOLECULE
END

SC  H2O           STANDARD COMPOSITION
MX              7 MIXTURE NO.
VF         1.0000 VOLUME FRACTION
ROTH       0.9982 THEORETICAL DENSITY
NEL             2 NO. ELEMENTS
ICP             1 0/1 MIXTURE/COMPOUND
TEMP        293.0 DEG KELVIN
             1001      2.00 ATOMS/MOLECULE
             8016      1.00 ATOM/MOLECULE
END

SC  H2O           STANDARD COMPOSITION
```

```
MX             8 MIXTURE NO.
VF        0.0250 VOLUME FRACTION
ROTH      0.9982 THEORETICAL DENSITY
NEL            2 NO. ELEMENTS
ICP            1 0/1 MIXTURE/COMPOUND
TEMP       293.0 DEG KELVIN
            1001      2.00 ATOMS/MOLECULE
            8016      1.00 ATOM/MOLECULE
END

SC  H2O          STANDARD COMPOSITION
MX             9 MIXTURE NO.
VF        0.0000 VOLUME FRACTION
ROTH      0.9982 THEORETICAL DENSITY
NEL            2 NO. ELEMENTS
ICP            1 0/1 MIXTURE/COMPOUND
TEMP       293.0 DEG KELVIN
            1001      2.00 ATOMS/MOLECULE
            8016      1.00 ATOM/MOLECULE
END


**** PROBLEM GEOMETRY ****

CTP TRIANGPITCH  CELL TYPE
PITCH     3.6906 CM CENTER TO CENTER SPACING
FUELOD    1.2446 CM FUEL DIAMETER OR SLAB THICKNESS
MFUEL          1 MIXTURE NO. OF FUEL
MMOD           3 MIXTURE NO. OF MODERATOR
CLADOD    1.4478 CM CLAD OUTER DIAMETER
MCLAD          2 MIXTURE NO. OF CLAD
GAPOD     1.2650 CM GAP OUTER DIAMETER
MGAP           9 MIXTURE NO. OF GAP


ZONE SPECIFICATIONS FOR LATTICECELL GEOMETRY

               ZONE  1 IS FUEL
               ZONE  2 IS GAP
               ZONE  3 IS CLAD
               ZONE  4 IS MOD
```

```
_       ********************************************************************************************************************
        ***                                                                                                              ***
        ***                            BWR RODS, NO BASKET, VOID EXTERIOR, GAP VOID                                      ***
        ***                                                                                                              ***
        ********************************************************************************************************************
        ********************************************************************************************************************
        ***                                                                                                              ***
        ***                              ********** DATA LIBRARY INFORMATION **********                                 ***
        ***                                                                                                              ***
        ***          UNIT                                                VOLUME                                          ***
        ***         NUMBER               DATA SET NAME                   NAME        UNIT FUNCTION                       ***
        ***         ------               -------------                   ----        -------------                       ***
        ***                                                                                                              ***
        ***           89     G:\scale43\DATALIB\FT89F001                                STANDARD COMPOSITION LIBRARY     ***
        ***                                                                                                              ***
        ***           82     G:\scale43\DATALIB\FT82F001                                CROSS SECTION LIBRARY            ***
        ***                                                                                                              ***
        ***           11     D:\dcn\326023~1.3_R\BRONZ2D\FT11F001                       SHORT CROSS SECTION LIBRARY      ***
        ***                                                                                                              ***
        ***           90     D:\dcn\326023~1.3_R\BRONZ2D\FT90F001                       INPUT DATA DIRECT ACCESS         ***
        ***                                                                                                              ***
        ********************************************************************************************************************
        ********************************************************************************************************************
        ***                                                                                                              ***
        ***                                                                                                              ***
        ***                                    STANDARD COMPOSITION LIBRARY DATA                                         ***
        ***                                    ---------------------------------                                         ***
        ***                                                                                                              ***
        ***            UNIT NUMBER  :  89                                                                                ***
        ***                                                                                                              ***
        ***            DATASET NAME :  G:\scale43\DATALIB\FT89F001                                                        ***
        ***                                                                                                              ***
        ***            LIBRARY TITLE:  SCALE-4 STANDARD COMPOSITION LIBRARY                                              ***
        ***                            637 STANDARD COMPOSITIONS, 490 NUCLIDES                                           ***
        ***                            90 ELEMENTS WITH VARIABLE ISOTOPIC DISTRBUTIONS.                                  ***
        ***                                                                                                              ***
        ***            CREATION DATE:   6/30/95                                                                          ***
        ***                                                                                                              ***
        ***                                                                                                              ***
        ***                                                                                                              ***
        ***                                     CROSS SECTION LIBRARY DATA                                               ***
        ***                                    ---------------------------                                               ***
        ***                                                                                                              ***
        ***            UNIT NUMBER  :  82                                                                                ***
        ***                                                                                                              ***
        ***            DATASET NAME :  G:\scale43\DATALIB\FT82F001                                                        ***
        ***                                                                                                              ***
        ***            LIBRARY TITLE:  SCALE 4.2 - 27 GROUP NEUTRON GROUP LIBRARY                                        ***
        ***                               BASED ON ENDF-B VERSION 4 DATA                                                 ***
        ***                                  COMPILED FOR NRC     1/27/89                                              ***
        ***                                     LAST UPDATED                                          08/12/94  ***
        ***                                        L.M.PETRIE   -   ORNL                                                 ***
        ***                                                                                                              ***
        ***                                                                                                              ***
        ***                                                                                                              ***
        ***                                                                                                              ***
        ********************************************************************************************************************
        ********************************************************************************************************************

                              ........    0 IO'S WERE USED BEFORE READING KENO V DATA    ........

                              ........    0 IO'S WERE USED READING THE KENO V PARAMETER DATA    ........

                             *************** DATA READING COMPLETED ***************

                              ........    0 IO'S WERE USED PREPARING THE KENO V INPUT DATA    ........

                              ........    0 IO'S WERE USED LOADING THE KENO V DATA    ........

                              ........    0 IO'S WERE USED LOADING THE DATA    ........

                              ........    0 IO'S WERE USED CHECKING THE KENO V GEOMETRY DATA    ........
                              *****  RESTART DATA HAS BEEN WRITTEN ON UNIT 95  *****

                              ........    0 IO'S WERE USED WRITING THE KENO V - CSAS DATA    ........

                              ........    0 IO'S WERE USED PROCESSING CSAS INPUT DATA    ........

 CONTROL MODULE CSAS25   IS COMPLETE.
```

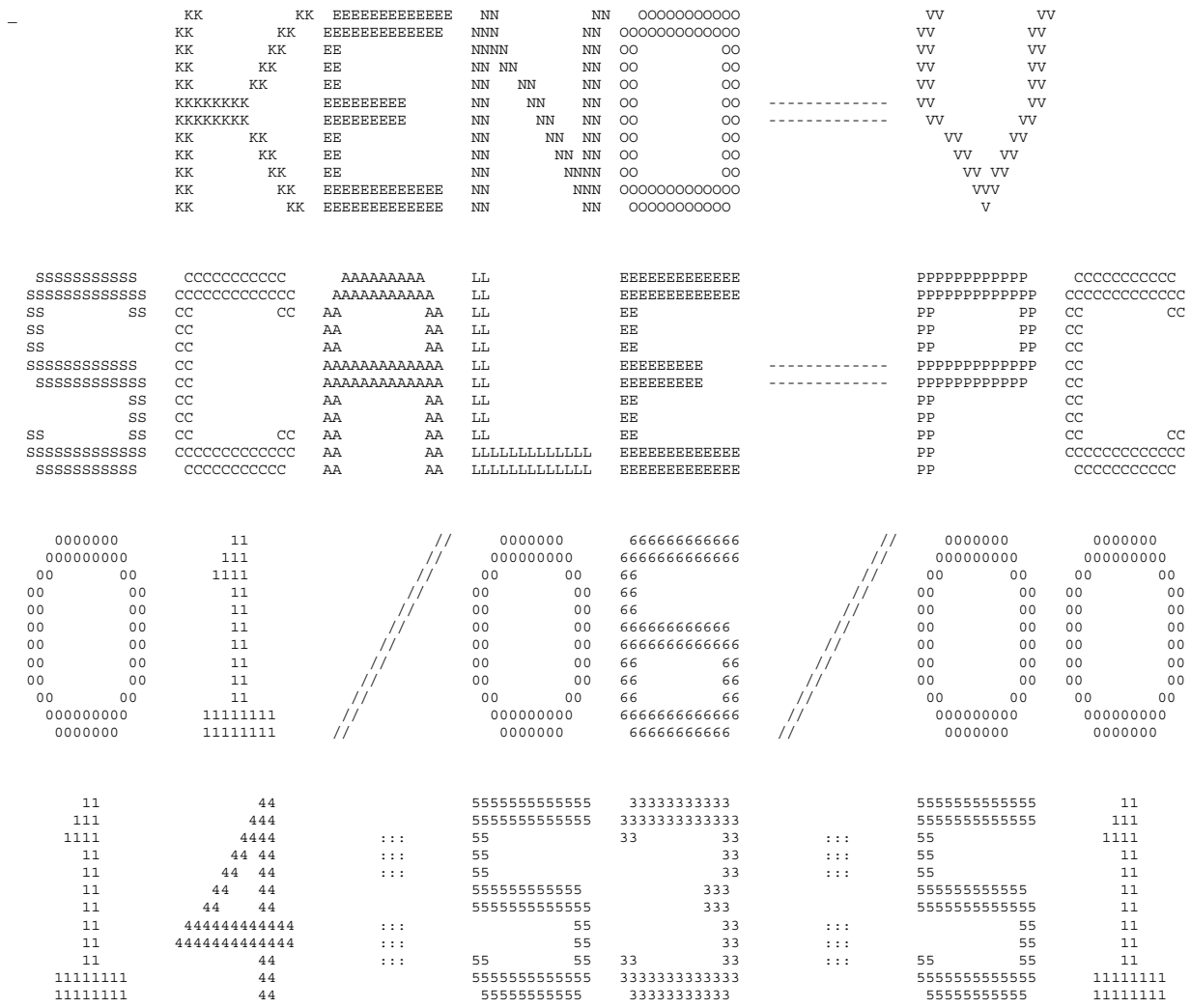

"LWT CASK, 25 BWR RODS, NO BWR BASKET, 5 W/O U235 VARIABLE PITCH"

****** NUMERIC PARAMETERS ******

TME	MAXIMUM PROBLEM TIME (MIN)	30.00	
TBA	TIME PER GENERATION (MIN)	0.50	
GEN	NUMBER OF GENERATIONS	103	
NPG	NUMBER PER GENERATION	400	
NSK	NUMBER OF GENERATIONS TO BE SKIPPED	3	
BEG	BEGINNING GENERATION NUMBER	1	
RES	GENERATIONS BETWEEN CHECKPOINTS	0	
X1D	NUMBER OF EXTRA 1-D CROSS SECTIONS	1	
NBK	NEUTRON BANK SIZE	425	
XNB	EXTRA POSITIONS IN NEUTRON BANK	0	
NFB	FISSION BANK SIZE	400	
XFB	EXTRA POSITIONS IN FISSION BANK	0	
WTA	DEFAULT VALUE OF WEIGHT AVERAGE	0.5000	
WTH	WEIGHT HIGH FOR SPLITTING	3.0000	
WTL	WEIGHT LOW FOR RUSSIAN ROULETTE	0.3333	
RND	STARTING RANDOM NUMBER	BB827100001	
NB8	NUMBER OF D.A. BLOCKS ON UNIT 8	200	
NL8	LENGTH OF D.A. BLOCKS ON UNIT 8	512	
ADJ	MODE OF CALCULATION	FORWARD	
	INPUT DATA WRITTEN ON RESTART UNIT	NO	
	BINARY DATA INTERFACE	YES	

```
_       ********************************************************************************************************************
        ********************************************************************************************************************
        ***                                                                                                              ***
        ***                              "LWT CASK, 25 BWR RODS, NO BWR BASKET, 5 W/O U235 VARIABLE PITCH"               ***
        ***                                                                                                              ***
        ********************************************************************************************************************
        ***                                  ******      LOGICAL PARAMETERS        ******                                ***
        ***                                                                                                              ***
        ***  RUN  EXECUTE PROBLEM AFTER CHECKING DATA    YES            PLT  PLOT PICTURE MAP(S)                      NO ***
        ***                                                                                                              ***
        ***  FLX  COMPUTE FLUX                            NO            FDN  COMPUTE FISSION DENSITIES                NO ***
        ***                                                                                                              ***
        ***  SMU  COMPUTE AVG UNIT SELF-MULTIPLICATION    NO            NUB  COMPUTE NU-BAR & AVG FISSION GROUP      YES ***
        ***                                                                                                              ***
        ***  MKU  COMPUTE MATRIX K-EFF BY UNIT NUMBER     NO            MKP  COMPUTE MATRIX K-EFF BY UNIT LOCATION    NO ***
        ***                                                                                                              ***
        ***  CKU  COMPUTE COFACTOR K-EFF BY UNIT NUMBER   NO            CKP  COMPUTE COFACTOR K-EFF BY UNIT LOCATION  NO ***
        ***                                                                                                              ***
        ***  FMU  PRINT FISS PROD MATRIX BY UNIT NUMBER   NO            FMP  PRINT FISS PROD MATRIX BY UNIT LOCATION  NO ***
        ***                                                                                                              ***
        ***  MKH  COMPUTE MATRIX K-EFF BY HOLE NUMBER     NO            MKA  COMPUTE MATRIX K-EFF BY ARRAY NUMBER     NO ***
        ***                                                                                                              ***
        ***  CKH  COMPUTE COFACTOR K-EFF BY HOLE NUMBER   NO            CKA  COMPUTE COFACTOR K-EFF BY ARRAY NUMBER   NO ***
        ***                                                                                                              ***
        ***  FMH  PRINT FISS PROD MATRIX BY HOLE NUMBER   NO            FMA  PRINT FISS PROD MATRIX BY ARRAY NUMBER   NO ***
        ***                                                                                                              ***
        ***  HHL  COLLECT MATRIX BY HIGHEST HOLE LEVEL    NO            HAL  COLLECT MATRIX BY HIGHEST ARRAY LEVEL    NO ***
        ***                                                                                                              ***
        ***  AMX  PRINT ALL MIXED CROSS SECTIONS          NO            FAR  PRINT FIS. AND ABS. BY REGION            NO ***
        ***                                                                                                              ***
        ***  XS1  PRINT 1-D MIXTURE X-SECTIONS            NO            GAS  PRINT FAR BY GROUP                       NO ***
        ***                                                                                                              ***
        ***  XS2  PRINT 2-D MIXTURE X-SECTIONS            NO            PAX  PRINT XSEC-ALBEDO CORRELATION TABLES     NO ***
        ***                                                                                                              ***
        ***  XAP  PRINT MIXTURE ANGLES & PROBABILITIES    NO            PWT  PRINT WEIGHT AVERAGE ARRAY               NO ***
        ***                                                                                                              ***
        ***  PKI  PRINT FISSION SPECTRUM                  NO            PGM  PRINT INPUT GEOMETRY                     NO ***
        ***                                                                                                              ***
        ***  P1D  PRINT EXTRA 1-D CROSS SECTIONS          NO            BUG  PRINT DEBUG INFORMATION                  NO ***
        ***                                                                                                              ***
        ***                                                             TRK  PRINT TRACKING INFORMATION               NO ***
        ***                                                                                                              ***
        ***                                                                                                              ***
        ********************************************************************************************************************
        ********************************************************************************************************************
        ********************************************************************************************************************
                                          PARAMETER INPUT COMPLETED

                                .........    0 IO'S WERE USED READING THE PARAMETER DATA      .........

                              ************** DATA READING COMPLETED **************
```

```
 ********************************************************************************************
***                                                                                          ***
***          "LWT CASK, 25 BWR RODS, NO BWR BASKET, 5 W/O U235 VARIABLE PITCH"               ***
***                                                                                          ***
********************************************************************************************
********************************************************************************************
***                                                                                          ***
***                              ****** ADDITIONAL INFORMATION ******                        ***
***                                                                                          ***
***  NUMBER OF ENERGY GROUPS              27       USE LATTICE GEOMETRY                  NO  ***
***                                                                                          ***
***  NO. OF FISSION SPECTRUM SOURCE GROUP  1       GLOBAL ARRAY NUMBER                    0  ***
***                                                                                          ***
***  NO. OF SCATTERING ANGLES IN XSECS     2       NUMBER OF UNITS IN THE GLOBAL X DIR.   0  ***
***                                                                                          ***
***  ENTRIES/NEUTRON IN THE NEUTRON BANK  17       NUMBER OF UNITS IN THE GLOBAL Y DIR.   0  ***
***                                                                                          ***
***  ENTRIES/NEUTRON IN THE FISSION BANK  10       NUMBER OF UNITS IN THE GLOBAL Z DIR.   0  ***
***                                                                                          ***
***  NUMBER OF MIXTURES USED               8       USE A GLOBAL REFLECTOR                YES  ***
***                                                                                          ***
***  NUMBER OF BIAS ID'S USED              1       USE NESTED HOLES                       NO  ***
***                                                                                          ***
***  NUMBER OF DIFFERENTIAL ALBEDOS USED   0       NUMBER OF HOLES                        25  ***
***                                                                                          ***
***  TOTAL INPUT GEOMETRY REGIONS         10       MAXIMUM HOLE NESTING LEVEL              1  ***
***                                                                                          ***
***  NUMBER OF GEOMETRY REGIONS USED      10       USE NESTED ARRAYS                      NO  ***
***                                                                                          ***
***  LARGEST GEOMETRY UNIT NUMBER          2       NUMBER OF ARRAYS USED                  0  ***
***                                                                                          ***
***  LARGEST ARRAY NUMBER                  1       MAXIMUM ARRAY NESTING LEVEL            0  ***
***                                                                                          ***
***                                                                                          ***
***  +X BOUNDARY CONDITION               MIR       -X BOUNDARY CONDITION                 MIR  ***
***                                                                                          ***
***  +Y BOUNDARY CONDITION               MIR       -Y BOUNDARY CONDITION                 MIR  ***
***                                                                                          ***
***  +Z BOUNDARY CONDITION               MIR       -Z BOUNDARY CONDITION                 MIR  ***
***                                                                                          ***
********************************************************************************************
 ********************************************************************************************
***                                                                                          ***
***          "LWT CASK, 25 BWR RODS, NO BWR BASKET, 5 W/O U235 VARIABLE PITCH"               ***
***                                                                                          ***
********************************************************************************************
********************************************************************************************
***                                                                                          ***
***                    ****** SPACE AND SUPERGROUP INFORMATION ******                        ***
***                                                                                          ***
***       100000 WORDS IS THE TOTAL SPACE AVAILABLE.                                         ***
***                                                                                          ***
***        12479 WORDS WERE USED FOR NON-SUPERGROUP STORAGE.                                 ***
***                                                                                          ***
***        87521 WORDS OF STORAGE ARE AVAILABLE FOR SUPERGROUPED DATA.                       ***
***                                                                                          ***
***        99784 WORDS OF STORAGE ARE AVAILABLE FOR CONSTRUCTING THE SUPERGROUPS.            ***
***                                                                                          ***
***        87461 WORDS OF STORAGE ARE AVAILABLE TO EACH SUPERGROUP.                          ***
***                                                                                          ***
***         1165 WORDS ARE NEEDED FOR THE LARGEST GROUP.                                     ***
***                                                                                          ***
***        13860 WORDS OF STORAGE IS SUFFICIENT TO RUN THIS PROBLEM.                         ***
***                                                                                          ***
***        25594 WORDS OF STORAGE WILL ALLOW THE PROBLEM TO RUN WITH ONE SUPERGROUP.         ***
***                                                                                          ***
***        25760 WORDS OF STORAGE WILL BE USED TO RUN THIS PROBLEM.                          ***
***                                                                                          ***
********************************************************************************************
********************************************************************************************
***                                                                                          ***
***                    STARTING      ENDING       XSEC       ALBEDO      TOTAL             ***
***   SUPERGROUP         GROUP        GROUP      LENGTH      LENGTH      LENGTH             ***
***                                                                                          ***
***                                                                                          ***
***          1            1            27         2636           0       13055             ***
***                                                                                          ***
********************************************************************************************

             ........    0 IO'S WERE USED IN SUPERGROUPING    ........

             ........    0 IO'S WERE USED LOADING THE DATA    ........
```

```
_                                    "LWT CASK, 25 BWR RODS, NO BWR BASKET, 5 W/O U235 VARIABLE PITCH"

                MEDIA BIAS      GEOMETRY DESCRIPTION FOR THOSE UNITS UTILIZED IN THIS PROBLEM
REGION           NUM   ID


                                                -----   UNIT     1   -----

BWR FUEL ROD

  1 CYLINDER         1  1  RADIUS = 0.62230     +Z =  10.000     -Z = -10.000     CENTERLINE IS AT  X = 0.00000      Y = 0.00000

  2 CYLINDER         9  1  RADIUS = 0.63250     +Z =  10.000     -Z = -10.000     CENTERLINE IS AT  X = 0.00000      Y = 0.00000

  3 CYLINDER         2  1  RADIUS = 0.72390     +Z =  10.000     -Z = -10.000     CENTERLINE IS AT  X = 0.00000      Y = 0.00000
_                                    "LWT CASK, 25 BWR RODS, NO BWR BASKET, 5 W/O U235 VARIABLE PITCH"

                MEDIA BIAS      GEOMETRY DESCRIPTION FOR THOSE UNITS UTILIZED IN THIS PROBLEM
REGION           NUM   ID


                                          ******************   GLOBAL   ******************
                                                -----   UNIT     2   -----

  1 CYLINDER         3  1  RADIUS =  16.986     +Z =  10.000     -Z = -10.000     CENTERLINE IS AT  X = 0.00000      Y = 0.00000

    HOLE NUMBER      1       AT X = 0.00000      Y = 0.00000      Z = 0.00000     IS UNIT NUMBER      1

    HOLE NUMBER      2       AT X = 0.00000      Y =  3.6905      Z = 0.00000     IS UNIT NUMBER      1

    HOLE NUMBER      3       AT X =  3.1960      Y =  1.8453      Z = 0.00000     IS UNIT NUMBER      1

    HOLE NUMBER      4       AT X =  3.1960      Y = -1.8453      Z = 0.00000     IS UNIT NUMBER      1

    HOLE NUMBER      5       AT X = 0.00000      Y = -3.6905      Z = 0.00000     IS UNIT NUMBER      1

    HOLE NUMBER      6       AT X = -3.1960      Y = -1.8453      Z = 0.00000     IS UNIT NUMBER      1

    HOLE NUMBER      7       AT X = -3.1960      Y =  1.8453      Z = 0.00000     IS UNIT NUMBER      1

    HOLE NUMBER      8       AT X = -3.1960      Y =  5.5358      Z = 0.00000     IS UNIT NUMBER      1

    HOLE NUMBER      9       AT X = 0.00000      Y =  7.3810      Z = 0.00000     IS UNIT NUMBER      1

    HOLE NUMBER     10       AT X =  3.1960      Y =  5.5358      Z = 0.00000     IS UNIT NUMBER      1

    HOLE NUMBER     11       AT X =  6.3920      Y =  3.6905      Z = 0.00000     IS UNIT NUMBER      1

    HOLE NUMBER     12       AT X =  6.3920      Y = 0.00000      Z = 0.00000     IS UNIT NUMBER      1

    HOLE NUMBER     13       AT X =  6.3920      Y = -3.6905      Z = 0.00000     IS UNIT NUMBER      1

    HOLE NUMBER     14       AT X =  3.1960      Y = -5.5358      Z = 0.00000     IS UNIT NUMBER      1

    HOLE NUMBER     15       AT X = 0.00000      Y = -7.3810      Z = 0.00000     IS UNIT NUMBER      1

    HOLE NUMBER     16       AT X = -3.1960      Y = -5.5358      Z = 0.00000     IS UNIT NUMBER      1

    HOLE NUMBER     17       AT X = -6.3920      Y = -3.6905      Z = 0.00000     IS UNIT NUMBER      1

    HOLE NUMBER     18       AT X = -6.3920      Y = 0.00000      Z = 0.00000     IS UNIT NUMBER      1

    HOLE NUMBER     19       AT X = -6.3920      Y =  3.6905      Z = 0.00000     IS UNIT NUMBER      1

    HOLE NUMBER     20       AT X = -6.3920      Y =  7.3810      Z = 0.00000     IS UNIT NUMBER      1

    HOLE NUMBER     21       AT X =  3.1960      Y =  9.2263      Z = 0.00000     IS UNIT NUMBER      1

    HOLE NUMBER     22       AT X =  9.5879      Y =  1.8453      Z = 0.00000     IS UNIT NUMBER      1

    HOLE NUMBER     23       AT X =  6.3920      Y = -7.3810      Z = 0.00000     IS UNIT NUMBER      1

    HOLE NUMBER     24       AT X = -3.1960      Y = -9.2263      Z = 0.00000     IS UNIT NUMBER      1

    HOLE NUMBER     25       AT X = -9.5879      Y = -1.8453      Z = 0.00000     IS UNIT NUMBER      1

  2 CYLINDER         5  1  RADIUS =  18.891     +Z =  10.000     -Z = -10.000     CENTERLINE IS AT  X = 0.00000      Y = 0.00000

  3 CYLINDER         6  1  RADIUS =  33.496     +Z =  10.000     -Z = -10.000     CENTERLINE IS AT  X = 0.00000      Y = 0.00000

  4 CYLINDER         5  1  RADIUS =  36.544     +Z =  10.000     -Z = -10.000     CENTERLINE IS AT  X = 0.00000      Y = 0.00000

  5 CYLINDER         7  1  RADIUS =  49.244     +Z =  10.000     -Z = -10.000     CENTERLINE IS AT  X = 0.00000      Y = 0.00000

  6 CYLINDER         5  1  RADIUS =  49.854     +Z =  10.000     -Z = -10.000     CENTERLINE IS AT  X = 0.00000      Y = 0.00000

  7 CUBOID           8  1      +X =  121.92     -X = -121.92     +Y =  121.92     -Y = -121.92     +Z =  10.000     -Z = -10.000
```

_ "LWT CASK, 25 BWR RODS, NO BWR BASKET, 5 W/O U235 VARIABLE PITCH"
VOLUMES FOR THOSE UNITS UTILIZED IN THIS PROBLEM

UNIT	REGION	GEOMETRY REGION	VOLUME	CUMULATIVE VOLUME
1	1	1	2.43321E+01 CM**3	2.43321E+01 CM**3
	2	2	8.04178E-01 CM**3	2.51363E+01 CM**3
	3	3	7.78958E+00 CM**3	3.29259E+01 CM**3
2	1	4	1.73060E+04 CM**3	1.81291E+04 CM**3
	2	5	4.29436E+03 CM**3	2.24235E+04 CM**3
	3	6	4.80740E+04 CM**3	7.04975E+04 CM**3
	4	7	1.34136E+04 CM**3	8.39110E+04 CM**3
	5	8	6.84563E+04 CM**3	1.52367E+05 CM**3
	6	9	3.79567E+03 CM**3	1.56163E+05 CM**3
	7	10	1.03300E+06 CM**3	1.18916E+06 CM**3

UNIT	USES	REGION	MIXTURE	TOTAL VOLUME
1	25	1	1	6.08302E+02 CM**3
		2	9	2.01045E+01 CM**3
		3	2	1.94739E+02 CM**3
2	1	1	3	1.73060E+04 CM**3
		2	5	4.29436E+03 CM**3
		3	6	4.80740E+04 CM**3
		4	5	1.34136E+04 CM**3
		5	7	6.84563E+04 CM**3
		6	5	3.79567E+03 CM**3
		7	8	1.03300E+06 CM**3

TOTAL MIXTURE VOLUMES

MIXTURE	TOTAL VOLUME	MASS(G)
1	6.08302E+02 CM**3	6.33363E+03
2	1.94739E+02 CM**3	1.27749E+03
3	1.73060E+04 CM**3	1.72744E+04
5	2.15036E+04 CM**3	1.70309E+05
6	4.80740E+04 CM**3	5.45351E+05
7	6.84563E+04 CM**3	6.83311E+04
8	1.03300E+06 CM**3	2.57777E+04
9	2.01045E+01 CM**3	2.00677E-19

```
*****************************************************************************************************************
***                                                                                                           ***
***                                        BIASING INFORMATION                                                ***
***                                                                                                           ***
***     A DEFAULT WEIGHT OF    0.500 WILL BE USED FOR ALL BIAS ID'S.                                          ***
***                                                                                                           ***
*****************************************************************************************************************

                        ........    0 IO'S WERE USED IN KENO-V BEFORE TRACKING       ........

                        ........  0.00917 MINUTES WERE USED PROCESSING DATA.        ........

VOLUME FRACTION OF FISSILE MATERIAL IN THE CORE= 5.11540E-04

START TYPE 0 WAS USED.

THE NEUTRONS WERE STARTED UNIFORMLY THROUGHOUT THE ENTIRE VOLUME DEFINED BY THE OUTERMOST GEOMETRY CARD.
THE FLAG TO START NEUTRONS IN THE REFLECTOR WAS TURNED OFF

KENO MESSAGE NUMBER K5-105     ***** WARNING, ONLY   15 INDEPENDENT STARTING POSITIONS WERE GENERATED.  *****

  385 ADDITIONAL STARTING POINTS WERE PICKED FROM THE INITAL DISTRIBUTION.

0.45350 MINUTES WERE REQUIRED FOR STARTING.   TOTAL ELAPSED TIME IS 0.46933 MINUTES.
```

_"LWT CASK, 25 BWR RODS, NO BWR BASKET, 5 W/O U235 VARIABLE PITCH"

GENERATION	GENERATION K-EFFECTIVE	ELAPSED TIME MINUTES	AVERAGE K-EFFECTIVE	AVG K-EFF DEVIATION	MATRIX K-EFFECTIVE	MATRIX K-EFF DEVIATION
KENO MESSAGE NUMBER K5-132		WARNING....ONLY	361 INDEPENDENT FISSION POINTS WERE GENERATED			
1	7.65516E-01	4.96167E-01	1.00000E+00	0.00000E+00	0.00000E+00	0.00000E+00
KENO MESSAGE NUMBER K5-132		WARNING....ONLY	361 INDEPENDENT FISSION POINTS WERE GENERATED			
2	7.64413E-01	5.28167E-01	1.00000E+00	0.00000E+00	0.00000E+00	0.00000E+00
KENO MESSAGE NUMBER K5-132		WARNING....ONLY	290 INDEPENDENT FISSION POINTS WERE GENERATED			
3	6.19918E-01	5.62000E-01	6.19918E-01	0.00000E+00	0.00000E+00	0.00000E+00
4	6.88459E-01	5.94000E-01	6.54189E-01	3.42704E-02	0.00000E+00	0.00000E+00
5	6.93179E-01	6.26167E-01	6.67185E-01	2.36729E-02	0.00000E+00	0.00000E+00
6	7.10288E-01	6.59000E-01	6.77961E-01	1.99077E-02	0.00000E+00	0.00000E+00
7	7.07097E-01	6.93000E-01	6.83788E-01	1.64848E-02	0.00000E+00	0.00000E+00
8	7.15380E-01	7.25000E-01	6.89054E-01	1.44529E-02	0.00000E+00	0.00000E+00
9	6.58122E-01	7.58000E-01	6.84635E-01	1.29896E-02	0.00000E+00	0.00000E+00
10	6.93095E-01	7.90833E-01	6.85692E-01	1.12990E-02	0.00000E+00	0.00000E+00
11	7.03366E-01	8.23000E-01	6.87656E-01	1.01564E-02	0.00000E+00	0.00000E+00
12	6.93030E-01	8.55833E-01	6.88194E-01	9.10004E-03	0.00000E+00	0.00000E+00
13	7.18064E-01	8.88000E-01	6.90909E-01	8.66765E-03	0.00000E+00	0.00000E+00
14	7.91370E-01	9.20000E-01	6.99281E-01	1.15193E-02	0.00000E+00	0.00000E+00
15	7.11343E-01	9.52000E-01	7.00209E-01	1.06367E-02	0.00000E+00	0.00000E+00
16	7.52201E-01	9.83167E-01	7.03922E-01	1.05247E-02	0.00000E+00	0.00000E+00
17	6.89461E-01	1.01700E+00	7.02958E-01	9.84525E-03	0.00000E+00	0.00000E+00
18	6.37132E-01	1.05083E+00	6.98844E-01	1.00866E-02	0.00000E+00	0.00000E+00
19	6.94222E-01	1.08383E+00	6.98572E-01	9.47858E-03	0.00000E+00	0.00000E+00
20	7.51433E-01	1.11500E+00	7.01509E-01	9.40665E-03	0.00000E+00	0.00000E+00
21	7.68996E-01	1.14517E+00	7.05061E-01	9.58056E-03	0.00000E+00	0.00000E+00
22	7.12882E-01	1.17717E+00	7.05452E-01	9.09732E-03	0.00000E+00	0.00000E+00
23	6.30991E-01	1.20917E+00	7.01906E-01	9.35157E-03	0.00000E+00	0.00000E+00
24	7.22451E-01	1.24217E+00	7.02840E-01	8.96514E-03	0.00000E+00	0.00000E+00
25	7.50445E-01	1.27517E+00	7.04910E-01	8.81299E-03	0.00000E+00	0.00000E+00
26	6.81428E-01	1.30900E+00	7.03931E-01	8.49433E-03	0.00000E+00	0.00000E+00
27	7.14582E-01	1.34383E+00	7.04357E-01	8.15861E-03	0.00000E+00	0.00000E+00
28	6.40212E-01	1.37950E+00	7.01890E-01	8.21762E-03	0.00000E+00	0.00000E+00
29	6.65960E-01	1.41250E+00	7.00560E-01	8.01861E-03	0.00000E+00	0.00000E+00
30	6.91062E-01	1.44450E+00	7.00220E-01	7.73437E-03	0.00000E+00	0.00000E+00
31	7.57552E-01	1.47833E+00	7.02197E-01	7.72032E-03	0.00000E+00	0.00000E+00
32	6.91203E-01	1.51400E+00	7.01831E-01	7.46753E-03	0.00000E+00	0.00000E+00
33	7.04664E-01	1.54617E+00	7.01922E-01	7.22321E-03	0.00000E+00	0.00000E+00
34	6.88342E-01	1.58000E+00	7.01498E-01	7.00670E-03	0.00000E+00	0.00000E+00
35	6.85905E-01	1.61300E+00	7.01025E-01	6.80748E-03	0.00000E+00	0.00000E+00
36	6.66605E-01	1.64583E+00	7.00013E-01	6.68137E-03	0.00000E+00	0.00000E+00
37	6.80386E-01	1.67700E+00	6.99452E-01	6.51185E-03	0.00000E+00	0.00000E+00
38	7.23576E-01	1.70900E+00	7.00122E-01	6.36376E-03	0.00000E+00	0.00000E+00
39	7.15526E-01	1.74300E+00	7.00539E-01	6.20336E-03	0.00000E+00	0.00000E+00
40	6.23193E-01	1.77583E+00	6.98503E-01	6.37175E-03	0.00000E+00	0.00000E+00
41	6.95180E-01	1.80883E+00	6.98418E-01	6.20681E-03	0.00000E+00	0.00000E+00
42	6.69420E-01	1.84450E+00	6.97693E-01	6.09293E-03	0.00000E+00	0.00000E+00
43	6.81143E-01	1.87850E+00	6.97289E-01	5.95616E-03	0.00000E+00	0.00000E+00
44	6.79605E-01	1.91233E+00	6.96868E-01	5.82785E-03	0.00000E+00	0.00000E+00
45	7.20777E-01	1.94250E+00	6.97424E-01	5.71780E-03	0.00000E+00	0.00000E+00
46	6.89621E-01	1.97633E+00	6.97247E-01	5.58915E-03	0.00000E+00	0.00000E+00
47	6.36373E-01	2.01117E+00	6.95894E-01	5.62851E-03	0.00000E+00	0.00000E+00
48	6.90145E-01	2.04417E+00	6.95769E-01	5.50621E-03	0.00000E+00	0.00000E+00
49	6.55189E-01	2.07800E+00	6.94906E-01	5.45653E-03	0.00000E+00	0.00000E+00
50	6.78749E-01	2.11283E+00	6.94569E-01	5.35224E-03	0.00000E+00	0.00000E+00
51	7.12716E-01	2.14483E+00	6.94940E-01	5.25494E-03	0.00000E+00	0.00000E+00
52	7.09477E-01	2.17783E+00	6.95230E-01	5.15697E-03	0.00000E+00	0.00000E+00
53	7.09112E-01	2.21167E+00	6.95503E-01	5.06216E-03	0.00000E+00	0.00000E+00
54	6.80390E-01	2.24467E+00	6.95212E-01	4.97236E-03	0.00000E+00	0.00000E+00
55	6.96364E-01	2.27667E+00	6.95234E-01	4.87769E-03	0.00000E+00	0.00000E+00
56	7.48925E-01	2.31050E+00	6.96228E-01	4.88869E-03	0.00000E+00	0.00000E+00
57	7.63567E-01	2.34167E+00	6.97452E-01	4.95270E-03	0.00000E+00	0.00000E+00
58	6.97674E-01	2.37550E+00	6.97456E-01	4.86345E-03	0.00000E+00	0.00000E+00
59	6.98240E-01	2.40850E+00	6.97470E-01	4.77739E-03	0.00000E+00	0.00000E+00
60	7.03477E-01	2.44233E+00	6.97574E-01	4.69544E-03	0.00000E+00	0.00000E+00
61	7.40246E-01	2.47533E+00	6.98297E-01	4.67150E-03	0.00000E+00	0.00000E+00
62	6.67840E-01	2.50733E+00	6.97789E-01	4.62095E-03	0.00000E+00	0.00000E+00
63	6.53727E-01	2.54117E+00	6.97067E-01	4.60161E-03	0.00000E+00	0.00000E+00
64	7.02464E-01	2.57417E+00	6.97154E-01	4.52762E-03	0.00000E+00	0.00000E+00
65	7.40766E-01	2.60533E+00	6.97846E-01	4.50863E-03	0.00000E+00	0.00000E+00
66	6.94688E-01	2.63917E+00	6.97797E-01	4.43790E-03	0.00000E+00	0.00000E+00
67	7.11041E-01	2.67217E+00	6.98001E-01	4.37384E-03	0.00000E+00	0.00000E+00
68	7.03696E-01	2.70417E+00	6.98087E-01	4.30793E-03	0.00000E+00	0.00000E+00
69	7.20287E-01	2.73617E+00	6.98418E-01	4.25606E-03	0.00000E+00	0.00000E+00
70	7.02888E-01	2.76917E+00	6.98484E-01	4.19352E-03	0.00000E+00	0.00000E+00
71	6.33670E-01	2.80300E+00	6.97545E-01	4.23771E-03	0.00000E+00	0.00000E+00
72	7.50994E-01	2.83417E+00	6.98308E-01	4.24596E-03	0.00000E+00	0.00000E+00
73	6.74181E-01	2.86700E+00	6.97968E-01	4.19950E-03	0.00000E+00	0.00000E+00
74	6.83273E-01	2.90000E+00	6.97764E-01	4.14579E-03	0.00000E+00	0.00000E+00
75	7.35040E-01	2.93383E+00	6.98275E-01	4.12037E-03	0.00000E+00	0.00000E+00
76	6.78234E-01	2.96683E+00	6.98004E-01	4.07332E-03	0.00000E+00	0.00000E+00
77	7.31130E-01	2.99800E+00	6.98446E-01	4.04284E-03	0.00000E+00	0.00000E+00
78	7.11384E-01	3.03000E+00	6.98616E-01	3.99292E-03	0.00000E+00	0.00000E+00
79	7.94480E-01	3.06200E+00	6.99861E-01	4.13271E-03	0.00000E+00	0.00000E+00
80	7.94998E-01	3.09233E+00	7.01081E-01	4.25782E-03	0.00000E+00	0.00000E+00
81	7.51317E-01	3.12250E+00	7.01717E-01	4.25140E-03	0.00000E+00	0.00000E+00
82	7.39398E-01	3.15550E+00	7.02188E-01	4.22426E-03	0.00000E+00	0.00000E+00
83	6.90066E-01	3.18833E+00	7.02038E-01	4.17447E-03	0.00000E+00	0.00000E+00
84	7.08567E-01	3.22317E+00	7.02118E-01	4.12402E-03	0.00000E+00	0.00000E+00
85	6.84831E-01	3.25700E+00	7.01909E-01	4.07935E-03	0.00000E+00	0.00000E+00
86	6.71388E-01	3.29000E+00	7.01546E-01	4.04684E-03	0.00000E+00	0.00000E+00
87	7.77551E-01	3.32200E+00	7.02440E-01	4.09769E-03	0.00000E+00	0.00000E+00
88	6.72849E-01	3.35417E+00	7.02096E-01	4.06436E-03	0.00000E+00	0.00000E+00

89	7.24210E-01	3.38617E+00	7.02350E-01	4.02540E-03	0.00000E+00	0.00000E+00
90	7.44614E-01	3.42000E+00	7.02830E-01	4.00827E-03	0.00000E+00	0.00000E+00
91	7.96997E-01	3.45383E+00	7.03889E-01	4.10179E-03	0.00000E+00	0.00000E+00
92	6.49206E-01	3.48767E+00	7.03281E-01	4.10121E-03	0.00000E+00	0.00000E+00
93	6.91987E-01	3.51983E+00	7.03157E-01	4.05779E-03	0.00000E+00	0.00000E+00
94	6.71316E-01	3.55267E+00	7.02811E-01	4.02834E-03	0.00000E+00	0.00000E+00
95	6.77878E-01	3.58667E+00	7.02543E-01	3.99380E-03	0.00000E+00	0.00000E+00
96	7.22040E-01	3.61867E+00	7.02750E-01	3.95652E-03	0.00000E+00	0.00000E+00
97	6.94216E-01	3.65067E+00	7.02660E-01	3.91568E-03	0.00000E+00	0.00000E+00
98	6.89477E-01	3.68450E+00	7.02523E-01	3.87711E-03	0.00000E+00	0.00000E+00
99	6.54985E-01	3.71667E+00	7.02033E-01	3.86811E-03	0.00000E+00	0.00000E+00
100	7.30407E-01	3.74683E+00	7.02322E-01	3.83936E-03	0.00000E+00	0.00000E+00
101	7.01445E-01	3.77800E+00	7.02314E-01	3.80040E-03	0.00000E+00	0.00000E+00
102	7.58112E-01	3.80900E+00	7.02872E-01	3.80335E-03	0.00000E+00	0.00000E+00
103	7.90971E-01	3.84117E+00	7.03744E-01	3.86522E-03	0.00000E+00	0.00000E+00

KENO MESSAGE NUMBER K5-123 EXECUTION TERMINATED DUE TO COMPLETION OF THE SPECIFIED NUMBER OF GENERATIONS.

_ "LWT CASK, 25 BWR RODS, NO BWR BASKET, 5 W/O U235 VARIABLE PITCH"

LIFETIME = 2.30278E-04 + OR - 4.37502E-06 GENERATION TIME = 1.11547E-04 + OR - 7.28438E-07
NU BAR = 2.43036E+00 + OR - 2.66918E-04 AVERAGE FISSION GROUP = 2.37161E+01 + OR - 1.32587E-02
ENERGY(EV) OF THE AVERAGE LETHARGY CAUSING FISSION = 7.18706E-02 + OR - 8.84026E-04

NO. OF INITIAL GENERATIONS SKIPPED	AVERAGE K-EFFECTIVE	DEVIATION	67 PER CENT CONFIDENCE INTERVAL	95 PER CENT CONFIDENCE INTERVAL	99 PER CENT CONFIDENCE INTERVAL	NUMBER OF HISTORIES
3	0.70458	+ OR - 0.00381	0.70077 TO 0.70839	0.69696 TO 0.71220	0.69315 TO 0.71602	40000
4	0.70474	+ OR - 0.00385	0.70090 TO 0.70859	0.69705 TO 0.71244	0.69321 TO 0.71628	39600
5	0.70486	+ OR - 0.00388	0.70098 TO 0.70875	0.69710 TO 0.71263	0.69321 TO 0.71651	39200
6	0.70481	+ OR - 0.00392	0.70088 TO 0.70873	0.69696 TO 0.71265	0.69304 TO 0.71658	38800
7	0.70478	+ OR - 0.00396	0.70082 TO 0.70875	0.69685 TO 0.71271	0.69289 TO 0.71668	38400
8	0.70467	+ OR - 0.00401	0.70067 TO 0.70868	0.69666 TO 0.71268	0.69266 TO 0.71669	38000
9	0.70517	+ OR - 0.00402	0.70115 TO 0.70918	0.69713 TO 0.71320	0.69312 TO 0.71722	37600
10	0.70530	+ OR - 0.00406	0.70124 TO 0.70935	0.69718 TO 0.71341	0.69312 TO 0.71747	37200
11	0.70532	+ OR - 0.00410	0.70122 TO 0.70942	0.69711 TO 0.71352	0.69301 TO 0.71763	36800
12	0.70545	+ OR - 0.00415	0.70131 TO 0.70960	0.69716 TO 0.71374	0.69302 TO 0.71789	36400
17	0.70388	+ OR - 0.00423	0.69966 TO 0.70811	0.69543 TO 0.71233	0.69120 TO 0.71656	34400
22	0.70332	+ OR - 0.00429	0.69903 TO 0.70761	0.69474 TO 0.71191	0.69045 TO 0.71620	32400
27	0.70354	+ OR - 0.00441	0.69913 TO 0.70795	0.69472 TO 0.71237	0.69031 TO 0.71678	30400
32	0.70455	+ OR - 0.00454	0.70002 TO 0.70909	0.69548 TO 0.71362	0.69095 TO 0.71816	28400
37	0.70602	+ OR - 0.00481	0.70120 TO 0.71083	0.69639 TO 0.71565	0.69158 TO 0.72046	26400
42	0.70771	+ OR - 0.00497	0.70274 TO 0.71269	0.69776 TO 0.71766	0.69279 TO 0.72263	24400
47	0.71005	+ OR - 0.00520	0.70486 TO 0.71525	0.69966 TO 0.72044	0.69446 TO 0.72564	22400
52	0.71209	+ OR - 0.00555	0.70654 TO 0.71764	0.70099 TO 0.72319	0.69544 TO 0.72874	20400
57	0.71127	+ OR - 0.00595	0.70532 TO 0.71722	0.69937 TO 0.72316	0.69342 TO 0.72911	18400
62	0.71246	+ OR - 0.00654	0.70592 TO 0.71899	0.69939 TO 0.72553	0.69285 TO 0.73207	16400
67	0.71411	+ OR - 0.00720	0.70691 TO 0.72131	0.69972 TO 0.72851	0.69252 TO 0.73571	14400
72	0.71602	+ OR - 0.00783	0.70818 TO 0.72385	0.70035 TO 0.73169	0.69251 TO 0.73952	12400
77	0.71903	+ OR - 0.00894	0.71008 TO 0.72797	0.70114 TO 0.73692	0.69219 TO 0.74586	10400
82	0.70967	+ OR - 0.00941	0.70026 TO 0.71908	0.69085 TO 0.72849	0.68144 TO 0.73790	8400
87	0.71067	+ OR - 0.01120	0.69947 TO 0.72187	0.68827 TO 0.73306	0.67708 TO 0.74426	6400
92	0.70753	+ OR - 0.01206	0.69547 TO 0.71959	0.68342 TO 0.73164	0.67136 TO 0.74370	4400

_ "LWT CASK, 25 BWR RODS, NO BWR BASKET, 5 W/O U235 VARIABLE PITCH"

NO. OF INITIAL GENERATIONS SKIPPED	AVERAGE K-EFFECTIVE	DEVIATION	67 PER CENT CONFIDENCE INTERVAL	95 PER CENT CONFIDENCE INTERVAL	99 PER CENT CONFIDENCE INTERVAL	NUMBER OF HISTORIES
97	0.72090	+ OR - 0.02008	0.70082 TO 0.74098	0.68074 TO 0.76106	0.66066 TO 0.78114	2400

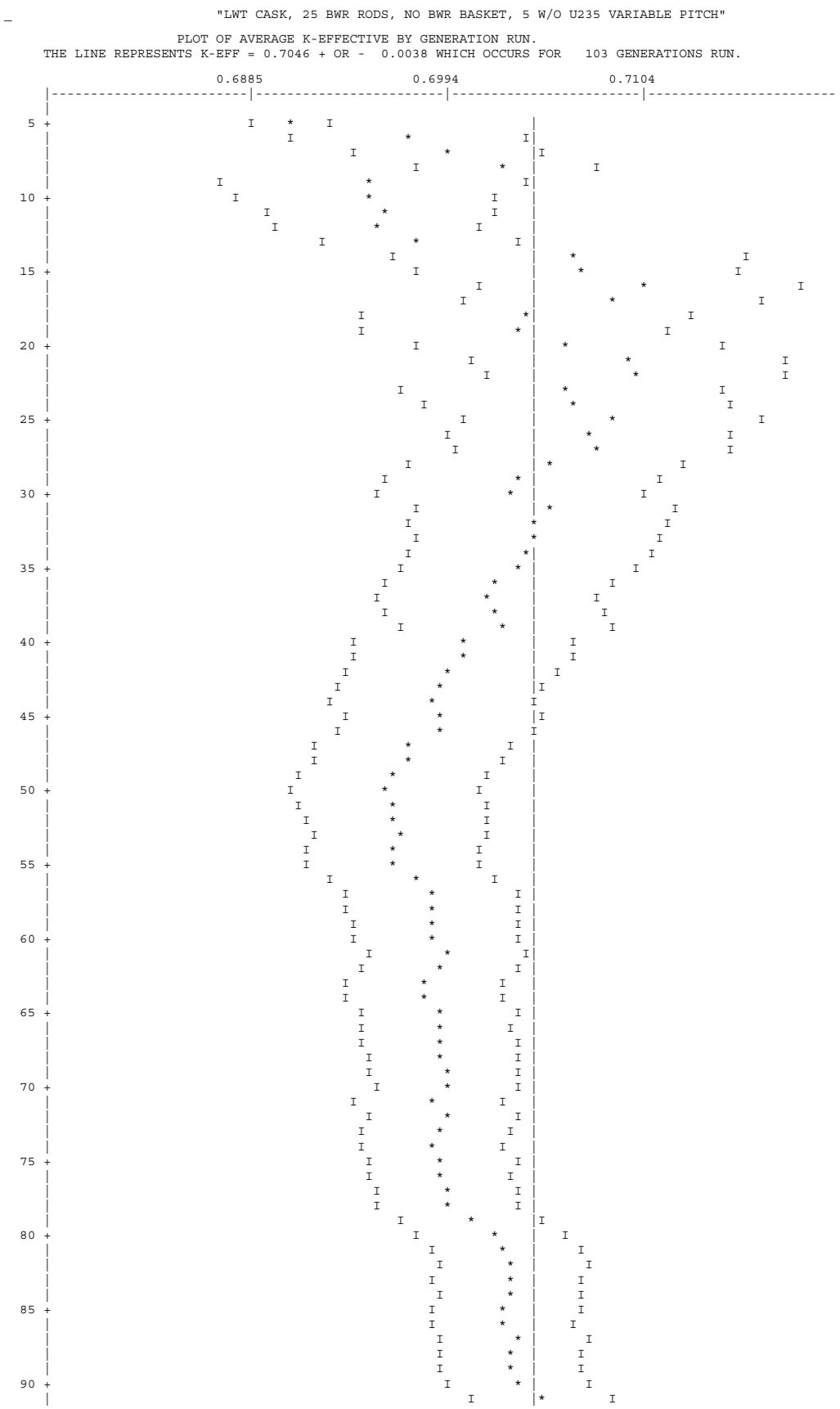
"LWT CASK, 25 BWR RODS, NO BWR BASKET, 5 W/O U235 VARIABLE PITCH"
PLOT OF AVERAGE K-EFFECTIVE BY GENERATION RUN.
THE LINE REPRESENTS K-EFF = 0.7046 + OR - 0.0038 WHICH OCCURS FOR 103 GENERATIONS RUN.
0.6885
0.6994
0.7104
5
10
15
20
25
30
35
40
45
50
55
60
65
70
75
80
85
90


95
100

_ "LWT CASK, 25 BWR RODS, NO BWR BASKET, 5 W/O U235 VARIABLE PITCH"

SKIPPING 3 GENERATIONS

GROUP	FISSION FRACTION	UNIT	REGION	FISSIONS	PERCENT DEVIATION	ABSORPTIONS	PERCENT DEVIATION	LEAKAGE	PERCENT DEVIATION
1	0.0032			2.25095E-03	7.8999	1.69980E-03	4.5846	0.00000E+00	0.0000
2	0.0117			8.26592E-03	2.6166	5.12285E-03	1.8582	0.00000E+00	0.0000
3	0.0133			9.37768E-03	2.2716	3.87435E-03	2.1804	0.00000E+00	0.0000
4	0.0053			3.70092E-03	2.7681	1.76169E-03	2.6427	0.00000E+00	0.0000
5	0.0017			1.21374E-03	2.1824	1.13160E-03	1.9162	0.00000E+00	0.0000
6	0.0014			1.01081E-03	1.6627	1.54773E-03	1.3194	0.00000E+00	0.0000
7	0.0012			8.22068E-04	2.2097	1.39633E-03	1.8199	0.00000E+00	0.0000
8	0.0010			6.71540E-04	2.8381	1.69331E-03	2.3480	0.00000E+00	0.0000
9	0.0012			8.56593E-04	2.9293	2.54030E-03	2.5375	0.00000E+00	0.0000
10	0.0024			1.66103E-03	3.2172	3.64944E-03	2.5647	0.00000E+00	0.0000
11	0.0050			3.52613E-03	3.1318	6.32132E-03	2.5665	0.00000E+00	0.0000
12	0.0071			5.00778E-03	3.8527	7.57670E-03	3.3871	0.00000E+00	0.0000
13	0.0066			4.62519E-03	3.9332	7.92726E-03	3.0584	0.00000E+00	0.0000
14	0.0050			3.54103E-03	3.7969	1.09799E-02	2.8209	0.00000E+00	0.0000
15	0.0012			8.75754E-04	6.3603	3.16548E-03	3.1721	0.00000E+00	0.0000
16	0.0009			5.99919E-04	7.4684	1.91457E-03	4.0471	0.00000E+00	0.0000
17	0.0013			8.93173E-04	10.4906	1.30725E-03	5.0843	0.00000E+00	0.0000
18	0.0019			1.32780E-03	10.3387	1.42220E-03	5.9406	0.00000E+00	0.0000
19	0.0020			1.41318E-03	8.8499	2.19704E-03	4.2113	0.00000E+00	0.0000
20	0.0096			6.75531E-03	4.9862	9.53559E-03	2.6179	0.00000E+00	0.0000
21	0.0052			3.65163E-03	7.6738	4.17396E-03	3.9216	0.00000E+00	0.0000
22	0.0131			9.23177E-03	5.0220	1.09786E-02	2.5974	0.00000E+00	0.0000
23	0.0905			6.37689E-02	1.8699	8.17951E-02	0.8746	0.00000E+00	0.0000
24	0.2506			1.76576E-01	1.0931	2.33370E-01	0.5061	0.00000E+00	0.0000
25	0.2238			1.57684E-01	1.1584	2.16982E-01	0.4441	0.00000E+00	0.0000
26	0.2640			1.86030E-01	1.1510	2.80289E-01	0.4053	0.00000E+00	0.0000
27	0.0699			4.92422E-02	2.4599	9.82105E-02	0.7319	0.00000E+00	0.0000
SYSTEM TOTAL =				7.04582E-01	0.5409	1.00256E+00	0.1192	0.00000E+00	0.0000

ELAPSED TIME 3.84117 MINUTES

RANDOM NUMBER= 12FB24B34616

```
_"LWT CASK, 25 BWR RODS, NO BWR BASKET, 5 W/O U235 VARIABLE PITCH"

                              FREQUENCY FOR GENERATIONS    4 TO  103
0.6045 TO 0.6245     *
0.6245 TO 0.6445     *****
0.6445 TO 0.6645     *****
0.6645 TO 0.6845     *****************
0.6845 TO 0.7045     ****************************
0.7045 TO 0.7245     ********************
0.7245 TO 0.7445     ******
0.7445 TO 0.7645     **********
0.7645 TO 0.7845     **
0.7845 TO 0.8045     *****

                              FREQUENCY FOR GENERATIONS   29 TO  103
0.6045 TO 0.6245     *
0.6245 TO 0.6445     **
0.6445 TO 0.6645     ****
0.6645 TO 0.6845     *****************
0.6845 TO 0.7045     ********************
0.7045 TO 0.7245     *************
0.7245 TO 0.7445     ******
0.7445 TO 0.7645     *******
0.7645 TO 0.7845     *
0.7845 TO 0.8045     ****

                              FREQUENCY FOR GENERATIONS   54 TO  103
0.6045 TO 0.6245
0.6245 TO 0.6445     *
0.6445 TO 0.6645     ***
0.6645 TO 0.6845     *********
0.6845 TO 0.7045     **************
0.7045 TO 0.7245     ******
0.7245 TO 0.7445     ******
0.7445 TO 0.7645     ******
0.7645 TO 0.7845     *
0.7845 TO 0.8045     ****

                              FREQUENCY FOR GENERATIONS   79 TO  103
0.6045 TO 0.6245
0.6245 TO 0.6445
0.6445 TO 0.6645     **
0.6645 TO 0.6845     ****
0.6845 TO 0.7045     ******
0.7045 TO 0.7245     ***
0.7245 TO 0.7445     **
0.7445 TO 0.7645     ***
0.7645 TO 0.7845     *
0.7845 TO 0.8045     ****


*****************************************************************************************************************************************
*

          CONGRATULATIONS!  YOU HAVE  SUCCESSFULLY TRAVERSED THE PERILOUS PATH THROUGH KENO V IN   3.84117 MINUTES

*****************************************************************************************************************************************
*
_
```

Figure 6.6.4-4 CSAS Input/Output for NAC-LWT with 25 BWR Rods – Most Reactive Accident Condition Configuration

```
_          PRIMARY MODULE ACCESS AND INPUT RECORD ( SCALE DRIVER - 95/03/29 - 09:06:37 )
   MODULE CSAS25   WILL BE CALLED
     BWR RODS, NO BASKET, VOID EXTERIOR, GAP FULL
     27GROUPNDF4    LATTICECELL
     UO2       1    0.95  293.0  92235  5.0  92238   95.0  END
     ZIRCALLOY 2    1.0           293.0     END
     H2O       3    1.0           293.0     END
     AL        4    1.0           293.0     END
     SS304     5    1.0           293.0     END
     PB        6    1.0           293.0     END
     H2O   7 1E-20 293.0 END
     H2O   8 1E-20 293.0 END
     H2O       9    1.0           293.0     END
     END COMP
     TRIANGPITCH   3.69059   1.2446  1  3  1.4478 2 1.2650 9 END
     "LWT CASK, 25 BWR RODS, NO BWR BASKET, 5 W/O U235 VARIABLE PITCH"
     READ PARAM RUN=YES PLT=NO  GEN=103 NPG=400 END PARAM
     READ GEOM
     UNIT 1
     COM="BWR FUEL ROD"
     CYLINDER     1  1  0.62230    2P10.0
     CYLINDER     9  1  0.63250    2P10.0
     CYLINDER     2  1  0.72390    2P10.0
     GLOBAL UNIT 2
     CYLINDER    3   1   16.9863  2P10.0
     HOLE    1    .0000    .0000    .0000
     HOLE    1    .0000   3.6905    .0000
     HOLE    1   3.1960   1.8453    .0000
     HOLE    1   3.1960  -1.8453    .0000
     HOLE    1    .0000  -3.6905    .0000
     HOLE    1  -3.1960  -1.8453    .0000
     HOLE    1  -3.1960   1.8453    .0000
     HOLE    1  -3.1960   5.5358    .0000
     HOLE    1    .0000   7.3810    .0000
     HOLE    1   3.1960   5.5358    .0000
     HOLE    1   6.3920   3.6905    .0000
     HOLE    1   6.3920    .0000    .0000
     HOLE    1   6.3920  -3.6905    .0000
     HOLE    1   3.1960  -5.5358    .0000
     HOLE    1    .0000  -7.3810    .0000
     HOLE    1  -3.1960  -5.5358    .0000
     HOLE    1  -6.3920  -3.6905    .0000
     HOLE    1  -6.3920    .0000    .0000
     HOLE    1  -6.3920   3.6905    .0000
     HOLE    1  -6.3920   7.3810    .0000
     HOLE    1   3.1960   9.2263    .0000
     HOLE    1   9.5879   1.8453    .0000
     HOLE    1   6.3920  -7.3810    .0000
     HOLE    1  -3.1960  -9.2263    .0000
     HOLE    1  -9.5879  -1.8453    .0000
     CYLINDER    5   1    18.8913  2P10.0
     CYLINDER    6   1    33.4963  2P10.0
     CYLINDER    5   1    36.5443  2P10.0
     CYLINDER    7   1    49.2443  2P10.0
     CYLINDER    5   1    49.8539  2P10.0
     CUBOID   8 1 4P121.92   2P10.0
     END GEOM
     READ BOUNDS  ALL=MIR     END BOUNDS
     END DATA

   SECONDARY MODULE O0O008   HAS BEEN CALLED.

   MODULE O0O008   IS FINISHED. COMPLETION CODE     0. CPU TIME USED     0.44 (SECONDS).

   SECONDARY MODULE O0O002   HAS BEEN CALLED.

   MODULE O0O002   IS FINISHED. COMPLETION CODE     0. CPU TIME USED     6.37 (SECONDS).

   SECONDARY MODULE O0O009   HAS BEEN CALLED.

   MODULE O0O009   IS FINISHED. COMPLETION CODE     0. CPU TIME USED   238.65 (SECONDS).

   MODULE CSAS25   IS FINISHED. COMPLETION CODE     0. CPU TIME USED   247.05 (SECONDS).
```

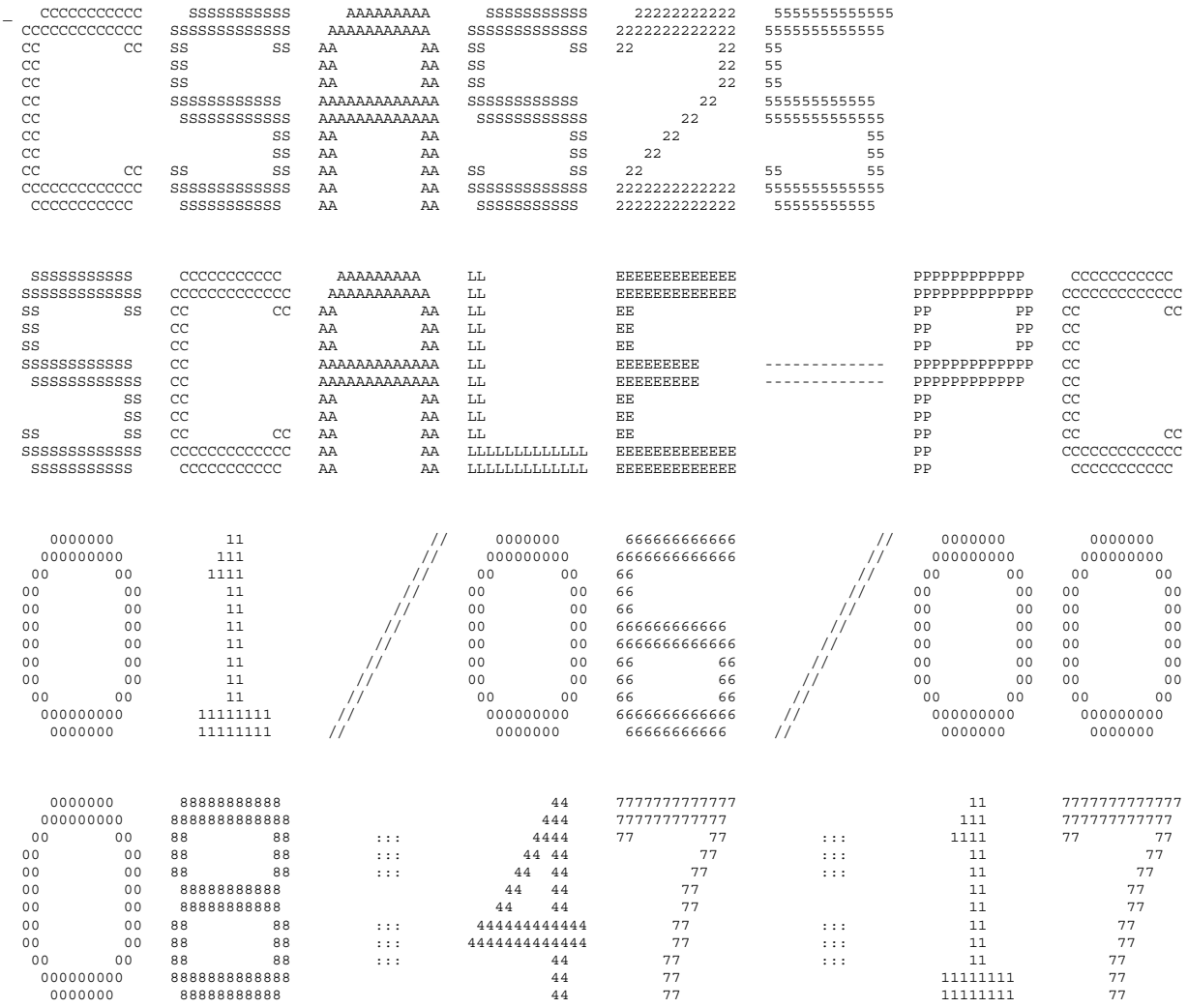

```
_
   SSSSSSSSSS     CCCCCCCCCC      AAAAAAAA     LL             EEEEEEEEEEEE                  PPPPPPPPPPP     CCCCCCCCCC
  SSSSSSSSSSSS   CCCCCCCCCCCC    AAAAAAAAAA    LL             EEEEEEEEEEEE                  PPPPPPPPPPPP   CCCCCCCCCCCC
  SS          SS CC          CC   AA          AA   LL             EE                            PP          PP   CC          CC
  SS             CC               AA          AA   LL             EE                            PP          PP   CC
  SS             CC               AA          AA   LL             EE                            PP          PP   CC
  SSSSSSSSSSSS   CC               AAAAAAAAAAAAAA   LL             EEEEEEEEE       -------------   PPPPPPPPPPPP   CC
   SSSSSSSSSSSS  CC               AAAAAAAAAAAAAA   LL             EEEEEEEEE       -------------   PPPPPPPPPPP    CC
            SS   CC               AA          AA   LL             EE                            PP             CC
            SS   CC               AA          AA   LL             EE                            PP             CC
  SS        SS   CC          CC   AA          AA   LL             EE                            PP             CC          CC
  SSSSSSSSSSSS   CCCCCCCCCCCCCC   AA          AA   LLLLLLLLLLLL   EEEEEEEEEEEE                  PP             CCCCCCCCCCCCCC
   SSSSSSSSSS     CCCCCCCCCC     AA          AA   LLLLLLLLLLLL   EEEEEEEEEEEE                  PP              CCCCCCCCCC
```

```
*******************************************************************************
*******************************************************************************
*******************************************************************************
*****                                                                     *****
*****                  PROGRAM VERIFICATION INFORMATION                   *****
*****                                                                     *****
*****                 CODE SYSTEM:  SCALE-PC VERSION:  4.3                *****
*****                                                                     *****
*******************************************************************************
*******************************************************************************
*****                                                                     *****
*****                                                                     *****
*****              PROGRAM:  CSAS                                         *****
*****                                                                     *****
*****        CREATION DATE:  03/08/96                                     *****
*****                                                                     *****
*****              VOLUME:   ENG                                          *****
*****                                                                     *****
*****              LIBRARY:  G:\SCALE43\WIN_NT\EXE                        *****
*****                                                                     *****
*****                                                                     *****
*****      PRODUCTION CODE:  CSAS                                         *****
*****                                                                     *****
*****              VERSION:  3.1                                          *****
*****                                                                     *****
*****              JOBNAME:  SCALE-PC                                     *****
*****                                                                     *****
*****    DATE OF EXECUTION:  01/06/00                                     *****
*****                                                                     *****
*****    TIME OF EXECUTION:  08:47:17                                     *****
*****                                                                     *****
*****                                                                     *****
*******************************************************************************
*******************************************************************************
*******************************************************************************
```

_

```
BWR RODS, NO BASKET, VOID EXTERIOR, GAP FULL

**** PROBLEM PARAMETERS ****

LIB 27GROUPNDF4  LIBRARY
MXX            9 MIXTURES
MSC            9 COMPOSITION SPECIFICATIONS
IZM            4 MATERIAL ZONES
GE  LATTICECELL  GEOMETRY
MORE           0 0/1 DO NOT READ/READ OPTIONAL PARAMETER DATA
MSLN           0 FUEL SOLUTIONS


**** PROBLEM COMPOSITION DESCRIPTION ****

SC  UO2          STANDARD COMPOSITION
MX             1 MIXTURE NO.
VF        0.9500 VOLUME FRACTION
ROTH     10.9600 THEORETICAL DENSITY
NEL            2 NO. ELEMENTS
ICP            1 0/1 MIXTURE/COMPOUND
TEMP       293.0 DEG KELVIN
           92000      1.00 ATOM/MOLECULE
                           92235     5.000 WT%
                           92238    95.000 WT%
            8016      2.00 ATOMS/MOLECULE
END

SC  ZIRCALLOY    STANDARD COMPOSITION
MX             2 MIXTURE NO.
VF        1.0000 VOLUME FRACTION
ROTH      6.5600 THEORETICAL DENSITY
NEL            1 NO. ELEMENTS
ICP            1 0/1 MIXTURE/COMPOUND
TEMP       293.0 DEG KELVIN
           40302      1.00 ATOM/MOLECULE
END

SC  H2O          STANDARD COMPOSITION
MX             3 MIXTURE NO.
VF        1.0000 VOLUME FRACTION
ROTH      0.9982 THEORETICAL DENSITY
NEL            2 NO. ELEMENTS
ICP            1 0/1 MIXTURE/COMPOUND
TEMP       293.0 DEG KELVIN
            1001      2.00 ATOMS/MOLECULE
            8016      1.00 ATOM/MOLECULE
END

SC  AL           STANDARD COMPOSITION
MX             4 MIXTURE NO.
VF        1.0000 VOLUME FRACTION
ROTH      2.7020 THEORETICAL DENSITY
NEL            1 NO. ELEMENTS
ICP            1 0/1 MIXTURE/COMPOUND
TEMP       293.0 DEG KELVIN
           13027      1.00 ATOM/MOLECULE
END

SC  SS304        STANDARD COMPOSITION
MX             5 MIXTURE NO.
VF        1.0000 VOLUME FRACTION
ROTH      7.9200 THEORETICAL DENSITY
NEL            4 NO. ELEMENTS
ICP            0 0/1 MIXTURE/COMPOUND
TEMP       293.0 DEG KELVIN
           24304    19.000 WT%
           25055     2.000 WT%
           26304    69.500 WT%
           28304     9.500 WT%
END

SC  PB           STANDARD COMPOSITION
MX             6 MIXTURE NO.
VF        1.0000 VOLUME FRACTION
ROTH     11.3440 THEORETICAL DENSITY
NEL            1 NO. ELEMENTS
ICP            1 0/1 MIXTURE/COMPOUND
TEMP       293.0 DEG KELVIN
           82000      1.00 ATOM/MOLECULE
END

SC  H2O          STANDARD COMPOSITION
MX             7 MIXTURE NO.
VF        0.0000 VOLUME FRACTION
ROTH      0.9982 THEORETICAL DENSITY
NEL            2 NO. ELEMENTS
ICP            1 0/1 MIXTURE/COMPOUND
TEMP       293.0 DEG KELVIN
            1001      2.00 ATOMS/MOLECULE
            8016      1.00 ATOM/MOLECULE
END

SC  H2O          STANDARD COMPOSITION
```

```
MX             8 MIXTURE NO.
VF        0.0000 VOLUME FRACTION
ROTH      0.9982 THEORETICAL DENSITY
NEL            2 NO. ELEMENTS
ICP            1 0/1 MIXTURE/COMPOUND
TEMP       293.0 DEG KELVIN
            1001      2.00 ATOMS/MOLECULE
            8016      1.00 ATOM/MOLECULE
END

SC  H2O          STANDARD COMPOSITION
MX             9 MIXTURE NO.
VF        1.0000 VOLUME FRACTION
ROTH      0.9982 THEORETICAL DENSITY
NEL            2 NO. ELEMENTS
ICP            1 0/1 MIXTURE/COMPOUND
TEMP       293.0 DEG KELVIN
            1001      2.00 ATOMS/MOLECULE
            8016      1.00 ATOM/MOLECULE
END


**** PROBLEM GEOMETRY ****

CTP TRIANGPITCH  CELL TYPE
PITCH     3.6906 CM CENTER TO CENTER SPACING
FUELOD    1.2446 CM FUEL DIAMETER OR SLAB THICKNESS
MFUEL          1 MIXTURE NO. OF FUEL
MMOD           3 MIXTURE NO. OF MODERATOR
CLADOD    1.4478 CM CLAD OUTER DIAMETER
MCLAD          2 MIXTURE NO. OF CLAD
GAPOD     1.2650 CM GAP OUTER DIAMETER
MGAP           9 MIXTURE NO. OF GAP


ZONE SPECIFICATIONS FOR LATTICECELL GEOMETRY

               ZONE  1 IS FUEL
               ZONE  2 IS GAP
               ZONE  3 IS CLAD
               ZONE  4 IS MOD
```

```
_
      ***********************************************************************************************************************
      ***                                                                                                                 ***
      ***                              BWR RODS, NO BASKET, VOID EXTERIOR, GAP FULL                                       ***
      ***                                                                                                                 ***
      ***********************************************************************************************************************
      ***********************************************************************************************************************
      ***                                                                                                                 ***
      ***                                 ********** DATA LIBRARY INFORMATION **********                                ***
      ***                                                                                                                 ***
      ***          UNIT                                                VOLUME                                             ***
      ***         NUMBER               DATA SET NAME                   NAME        UNIT FUNCTION                          ***
      ***         ------               -------------                   ----        -------------                          ***
      ***                                                                                                                 ***
      ***           89     G:\scale43\DATALIB\FT89F001                                STANDARD COMPOSITION LIBRARY      ***
      ***                                                                                                                 ***
      ***           82     G:\scale43\DATALIB\FT82F001                                CROSS SECTION LIBRARY             ***
      ***                                                                                                                 ***
      ***           11     D:\dcn\326023~1.3_R\BROHZ2A\FT11F001                       SHORT CROSS SECTION LIBRARY       ***
      ***                                                                                                                 ***
      ***           90     D:\dcn\326023~1.3_R\BROHZ2A\FT90F001                       INPUT DATA DIRECT ACCESS          ***
      ***                                                                                                                 ***
      ***********************************************************************************************************************
      ***********************************************************************************************************************
      ***                                                                                                                 ***
      ***                                                                                                                 ***
      ***                                    STANDARD COMPOSITION LIBRARY DATA                                            ***
      ***                                    ---------------------------------                                            ***
      ***                                                                                                                 ***
      ***            UNIT NUMBER  :  89                                                                                   ***
      ***                                                                                                                 ***
      ***            DATASET NAME :  G:\scale43\DATALIB\FT89F001                                                           ***
      ***                                                                                                                 ***
      ***            LIBRARY TITLE:  SCALE-4 STANDARD COMPOSITION LIBRARY                                                 ***
      ***                            637 STANDARD COMPOSITIONS, 490 NUCLIDES                                              ***
      ***                            90 ELEMENTS WITH VARIABLE ISOTOPIC DISTRBUTIONS.                                     ***
      ***                                                                                                                 ***
      ***            CREATION DATE:   6/30/95                                                                             ***
      ***                                                                                                                 ***
      ***                                                                                                                 ***
      ***                                                                                                                 ***
      ***                                     CROSS SECTION LIBRARY DATA                                                  ***
      ***                                    ---------------------------                                                  ***
      ***                                                                                                                 ***
      ***            UNIT NUMBER  :  82                                                                                   ***
      ***                                                                                                                 ***
      ***            DATASET NAME :  G:\scale43\DATALIB\FT82F001                                                           ***
      ***                                                                                                                 ***
      ***            LIBRARY TITLE:  SCALE 4.2 - 27 GROUP NEUTRON GROUP LIBRARY                                           ***
      ***                               BASED ON ENDF-B VERSION 4 DATA                                                    ***
      ***                                  COMPILED FOR NRC     1/27/89                                                   ***
      ***                                     LAST UPDATED                                          08/12/94  ***
      ***                                        L.M.PETRIE   -   ORNL                                                    ***
      ***                                                                                                                 ***
      ***                                                                                                                 ***
      ***                                                                                                                 ***
      ***                                                                                                                 ***
      ***********************************************************************************************************************
      ***********************************************************************************************************************

                           ........    0 IO'S WERE USED BEFORE READING KENO V DATA    ........

                           ........    0 IO'S WERE USED READING THE KENO V PARAMETER DATA    ........


                          *************** DATA READING COMPLETED ***************

                           ........    0 IO'S WERE USED PREPARING THE KENO V INPUT DATA    ........

                           ........    0 IO'S WERE USED LOADING THE KENO V DATA    ........

                           ........    0 IO'S WERE USED LOADING THE DATA    ........

                           ........    0 IO'S WERE USED CHECKING THE KENO V GEOMETRY DATA    ........
                           *****  RESTART DATA HAS BEEN WRITTEN ON UNIT 95  *****

                           ........    0 IO'S WERE USED WRITING THE KENO V - CSAS DATA    ........

                           ........    0 IO'S WERE USED PROCESSING CSAS INPUT DATA    ........


 CONTROL MODULE CSAS25   IS COMPLETE.
```

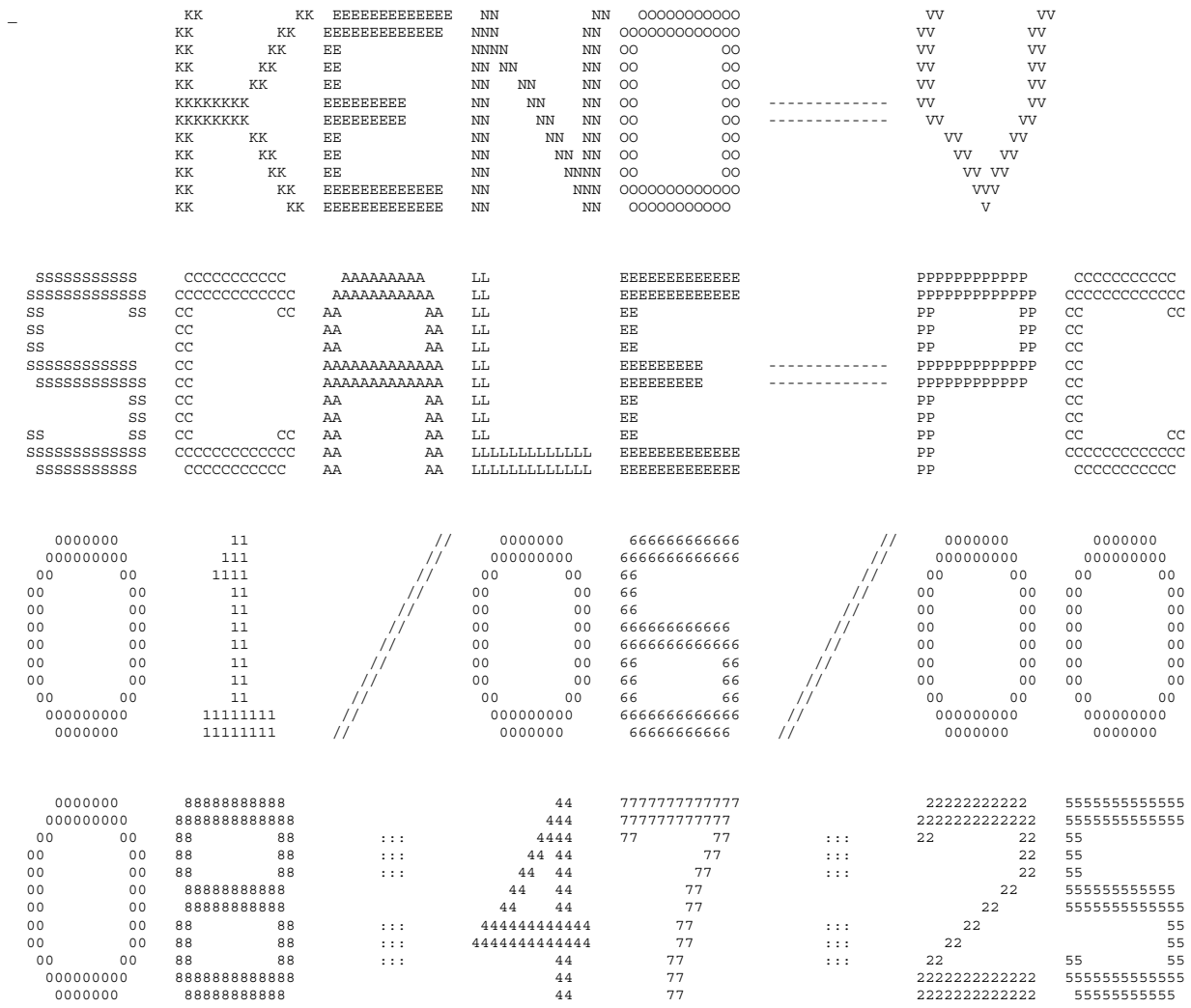

"LWT CASK, 25 BWR RODS, NO BWR BASKET, 5 W/O U235 VARIABLE PITCH"

****** NUMERIC PARAMETERS ******

TME	MAXIMUM PROBLEM TIME (MIN)	30.00	
TBA	TIME PER GENERATION (MIN)	0.50	
GEN	NUMBER OF GENERATIONS	103	
NPG	NUMBER PER GENERATION	400	
NSK	NUMBER OF GENERATIONS TO BE SKIPPED	3	
BEG	BEGINNING GENERATION NUMBER	1	
RES	GENERATIONS BETWEEN CHECKPOINTS	0	
X1D	NUMBER OF EXTRA 1-D CROSS SECTIONS	1	
NBK	NEUTRON BANK SIZE	425	
XNB	EXTRA POSITIONS IN NEUTRON BANK	0	
NFB	FISSION BANK SIZE	400	
XFB	EXTRA POSITIONS IN FISSION BANK	0	
WTA	DEFAULT VALUE OF WEIGHT AVERAGE	0.5000	
WTH	WEIGHT HIGH FOR SPLITTING	3.0000	
WTL	WEIGHT LOW FOR RUSSIAN ROULETTE	0.3333	
RND	STARTING RANDOM NUMBER	BB827100001	
NB8	NUMBER OF D.A. BLOCKS ON UNIT 8	200	
NL8	LENGTH OF D.A. BLOCKS ON UNIT 8	512	
ADJ	MODE OF CALCULATION	FORWARD	
	INPUT DATA WRITTEN ON RESTART UNIT	NO	
	BINARY DATA INTERFACE	YES	

```
*****************************************************************************************************************
*****************************************************************************************************************
***                                                                                                           ***
***                            "LWT CASK, 25 BWR RODS, NO BWR BASKET, 5 W/O U235 VARIABLE PITCH"              ***
***                                                                                                           ***
*****************************************************************************************************************
***                                ******      LOGICAL PARAMETERS        ******                               ***
***                                                                                                           ***
***  RUN  EXECUTE PROBLEM AFTER CHECKING DATA    YES            PLT  PLOT PICTURE MAP(S)                    NO ***
***                                                                                                           ***
***  FLX  COMPUTE FLUX                            NO            FDN  COMPUTE FISSION DENSITIES              NO ***
***                                                                                                           ***
***  SMU  COMPUTE AVG UNIT SELF-MULTIPLICATION    NO            NUB  COMPUTE NU-BAR & AVG FISSION GROUP     YES ***
***                                                                                                           ***
***  MKU  COMPUTE MATRIX K-EFF BY UNIT NUMBER     NO            MKP  COMPUTE MATRIX K-EFF BY UNIT LOCATION  NO ***
***                                                                                                           ***
***  CKU  COMPUTE COFACTOR K-EFF BY UNIT NUMBER   NO            CKP  COMPUTE COFACTOR K-EFF BY UNIT LOCATION NO ***
***                                                                                                           ***
***  FMU  PRINT FISS PROD MATRIX BY UNIT NUMBER   NO            FMP  PRINT FISS PROD MATRIX BY UNIT LOCATION NO ***
***                                                                                                           ***
***  MKH  COMPUTE MATRIX K-EFF BY HOLE NUMBER     NO            MKA  COMPUTE MATRIX K-EFF BY ARRAY NUMBER   NO ***
***                                                                                                           ***
***  CKH  COMPUTE COFACTOR K-EFF BY HOLE NUMBER   NO            CKA  COMPUTE COFACTOR K-EFF BY ARRAY NUMBER NO ***
***                                                                                                           ***
***  FMH  PRINT FISS PROD MATRIX BY HOLE NUMBER   NO            FMA  PRINT FISS PROD MATRIX BY ARRAY NUMBER NO ***
***                                                                                                           ***
***  HHL  COLLECT MATRIX BY HIGHEST HOLE LEVEL    NO            HAL  COLLECT MATRIX BY HIGHEST ARRAY LEVEL  NO ***
***                                                                                                           ***
***  AMX  PRINT ALL MIXED CROSS SECTIONS          NO            FAR  PRINT FIS. AND ABS. BY REGION          NO ***
***                                                                                                           ***
***  XS1  PRINT 1-D MIXTURE X-SECTIONS            NO            GAS  PRINT FAR BY GROUP                     NO ***
***                                                                                                           ***
***  XS2  PRINT 2-D MIXTURE X-SECTIONS            NO            PAX  PRINT XSEC-ALBEDO CORRELATION TABLES   NO ***
***                                                                                                           ***
***  XAP  PRINT MIXTURE ANGLES & PROBABILITIES    NO            PWT  PRINT WEIGHT AVERAGE ARRAY             NO ***
***                                                                                                           ***
***  PKI  PRINT FISSION SPECTRUM                  NO            PGM  PRINT INPUT GEOMETRY                   NO ***
***                                                                                                           ***
***  P1D  PRINT EXTRA 1-D CROSS SECTIONS          NO            BUG  PRINT DEBUG INFORMATION                NO ***
***                                                                                                           ***
***                                                             TRK  PRINT TRACKING INFORMATION             NO ***
***                                                                                                           ***
***                                                                                                           ***
*****************************************************************************************************************
*****************************************************************************************************************
*****************************************************************************************************************
                                    PARAMETER INPUT COMPLETED

                          .........    0 IO'S WERE USED READING THE PARAMETER DATA      .........

                         ************** DATA READING COMPLETED **************
_
```

```
 ********************************************************************************************
***                                                                                          ***
***          "LWT CASK, 25 BWR RODS, NO BWR BASKET, 5 W/O U235 VARIABLE PITCH"               ***
***                                                                                          ***
********************************************************************************************
********************************************************************************************
***                                                                                          ***
***                              ****** ADDITIONAL INFORMATION ******                        ***
***                                                                                          ***
***  NUMBER OF ENERGY GROUPS              27       USE LATTICE GEOMETRY                  NO  ***
***                                                                                          ***
***  NO. OF FISSION SPECTRUM SOURCE GROUP  1       GLOBAL ARRAY NUMBER                    0  ***
***                                                                                          ***
***  NO. OF SCATTERING ANGLES IN XSECS     2       NUMBER OF UNITS IN THE GLOBAL X DIR.   0  ***
***                                                                                          ***
***  ENTRIES/NEUTRON IN THE NEUTRON BANK  17       NUMBER OF UNITS IN THE GLOBAL Y DIR.   0  ***
***                                                                                          ***
***  ENTRIES/NEUTRON IN THE FISSION BANK  10       NUMBER OF UNITS IN THE GLOBAL Z DIR.   0  ***
***                                                                                          ***
***  NUMBER OF MIXTURES USED               8       USE A GLOBAL REFLECTOR                YES  ***
***                                                                                          ***
***  NUMBER OF BIAS ID'S USED              1       USE NESTED HOLES                       NO  ***
***                                                                                          ***
***  NUMBER OF DIFFERENTIAL ALBEDOS USED   0       NUMBER OF HOLES                        25  ***
***                                                                                          ***
***  TOTAL INPUT GEOMETRY REGIONS         10       MAXIMUM HOLE NESTING LEVEL              1  ***
***                                                                                          ***
***  NUMBER OF GEOMETRY REGIONS USED      10       USE NESTED ARRAYS                      NO  ***
***                                                                                          ***
***  LARGEST GEOMETRY UNIT NUMBER          2       NUMBER OF ARRAYS USED                  0  ***
***                                                                                          ***
***  LARGEST ARRAY NUMBER                  1       MAXIMUM ARRAY NESTING LEVEL            0  ***
***                                                                                          ***
***                                                                                          ***
***  +X BOUNDARY CONDITION               MIR       -X BOUNDARY CONDITION                 MIR  ***
***                                                                                          ***
***  +Y BOUNDARY CONDITION               MIR       -Y BOUNDARY CONDITION                 MIR  ***
***                                                                                          ***
***  +Z BOUNDARY CONDITION               MIR       -Z BOUNDARY CONDITION                 MIR  ***
***                                                                                          ***
********************************************************************************************


    ********************************************************************************************
    ***                                                                                          ***
    ***          "LWT CASK, 25 BWR RODS, NO BWR BASKET, 5 W/O U235 VARIABLE PITCH"               ***
    ***                                                                                          ***
    ********************************************************************************************
    ********************************************************************************************
    ***                                                                                          ***
    ***                    ****** SPACE AND SUPERGROUP INFORMATION ******                        ***
    ***                                                                                          ***
    ***       100000 WORDS IS THE TOTAL SPACE AVAILABLE.                                         ***
    ***                                                                                          ***
    ***        12479 WORDS WERE USED FOR NON-SUPERGROUP STORAGE.                                 ***
    ***                                                                                          ***
    ***        87521 WORDS OF STORAGE ARE AVAILABLE FOR SUPERGROUPED DATA.                       ***
    ***                                                                                          ***
    ***        99784 WORDS OF STORAGE ARE AVAILABLE FOR CONSTRUCTING THE SUPERGROUPS.            ***
    ***                                                                                          ***
    ***        87461 WORDS OF STORAGE ARE AVAILABLE TO EACH SUPERGROUP.                          ***
    ***                                                                                          ***
    ***         1165 WORDS ARE NEEDED FOR THE LARGEST GROUP.                                     ***
    ***                                                                                          ***
    ***        13860 WORDS OF STORAGE IS SUFFICIENT TO RUN THIS PROBLEM.                         ***
    ***                                                                                          ***
    ***        25594 WORDS OF STORAGE WILL ALLOW THE PROBLEM TO RUN WITH ONE SUPERGROUP.          ***
    ***                                                                                          ***
    ***        25760 WORDS OF STORAGE WILL BE USED TO RUN THIS PROBLEM.                          ***
    ***                                                                                          ***
    ********************************************************************************************
    ********************************************************************************************
    ***                                                                                          ***
    ***                    STARTING      ENDING       XSEC       ALBEDO      TOTAL             ***
    ***   SUPERGROUP         GROUP        GROUP      LENGTH      LENGTH      LENGTH             ***
    ***                                                                                          ***
    ***                                                                                          ***
    ***          1            1            27         2636           0       13055             ***
    ***                                                                                          ***
    ********************************************************************************************

                .........    0 IO'S WERE USED IN SUPERGROUPING    .........

                .........    0 IO'S WERE USED LOADING THE DATA    .........
```

```
                                    "LWT CASK, 25 BWR RODS, NO BWR BASKET, 5 W/O U235 VARIABLE PITCH"

                MEDIA BIAS      GEOMETRY DESCRIPTION FOR THOSE UNITS UTILIZED IN THIS PROBLEM
REGION           NUM   ID


                                              -----   UNIT     1   -----

BWR FUEL ROD

  1 CYLINDER         1  1  RADIUS = 0.62230     +Z =  10.000     -Z = -10.000     CENTERLINE IS AT  X = 0.00000      Y = 0.00000

  2 CYLINDER         9  1  RADIUS = 0.63250     +Z =  10.000     -Z = -10.000     CENTERLINE IS AT  X = 0.00000      Y = 0.00000

  3 CYLINDER         2  1  RADIUS = 0.72390     +Z =  10.000     -Z = -10.000     CENTERLINE IS AT  X = 0.00000      Y = 0.00000
_                                   "LWT CASK, 25 BWR RODS, NO BWR BASKET, 5 W/O U235 VARIABLE PITCH"

                MEDIA BIAS      GEOMETRY DESCRIPTION FOR THOSE UNITS UTILIZED IN THIS PROBLEM
REGION           NUM   ID


                                       ******************   GLOBAL   ******************
                                              -----   UNIT     2   -----

  1 CYLINDER         3  1  RADIUS =  16.986     +Z =  10.000     -Z = -10.000     CENTERLINE IS AT  X = 0.00000      Y = 0.00000

    HOLE NUMBER      1       AT X = 0.00000      Y = 0.00000      Z = 0.00000     IS UNIT NUMBER      1

    HOLE NUMBER      2       AT X = 0.00000      Y =  3.6905      Z = 0.00000     IS UNIT NUMBER      1

    HOLE NUMBER      3       AT X =  3.1960      Y =  1.8453      Z = 0.00000     IS UNIT NUMBER      1

    HOLE NUMBER      4       AT X =  3.1960      Y = -1.8453      Z = 0.00000     IS UNIT NUMBER      1

    HOLE NUMBER      5       AT X = 0.00000      Y = -3.6905      Z = 0.00000     IS UNIT NUMBER      1

    HOLE NUMBER      6       AT X = -3.1960      Y = -1.8453      Z = 0.00000     IS UNIT NUMBER      1

    HOLE NUMBER      7       AT X = -3.1960      Y =  1.8453      Z = 0.00000     IS UNIT NUMBER      1

    HOLE NUMBER      8       AT X = -3.1960      Y =  5.5358      Z = 0.00000     IS UNIT NUMBER      1

    HOLE NUMBER      9       AT X = 0.00000      Y =  7.3810      Z = 0.00000     IS UNIT NUMBER      1

    HOLE NUMBER     10       AT X =  3.1960      Y =  5.5358      Z = 0.00000     IS UNIT NUMBER      1

    HOLE NUMBER     11       AT X =  6.3920      Y =  3.6905      Z = 0.00000     IS UNIT NUMBER      1

    HOLE NUMBER     12       AT X =  6.3920      Y = 0.00000      Z = 0.00000     IS UNIT NUMBER      1

    HOLE NUMBER     13       AT X =  6.3920      Y = -3.6905      Z = 0.00000     IS UNIT NUMBER      1

    HOLE NUMBER     14       AT X =  3.1960      Y = -5.5358      Z = 0.00000     IS UNIT NUMBER      1

    HOLE NUMBER     15       AT X = 0.00000      Y = -7.3810      Z = 0.00000     IS UNIT NUMBER      1

    HOLE NUMBER     16       AT X = -3.1960      Y = -5.5358      Z = 0.00000     IS UNIT NUMBER      1

    HOLE NUMBER     17       AT X = -6.3920      Y = -3.6905      Z = 0.00000     IS UNIT NUMBER      1

    HOLE NUMBER     18       AT X = -6.3920      Y = 0.00000      Z = 0.00000     IS UNIT NUMBER      1

    HOLE NUMBER     19       AT X = -6.3920      Y =  3.6905      Z = 0.00000     IS UNIT NUMBER      1

    HOLE NUMBER     20       AT X = -6.3920      Y =  7.3810      Z = 0.00000     IS UNIT NUMBER      1

    HOLE NUMBER     21       AT X =  3.1960      Y =  9.2263      Z = 0.00000     IS UNIT NUMBER      1

    HOLE NUMBER     22       AT X =  9.5879      Y =  1.8453      Z = 0.00000     IS UNIT NUMBER      1

    HOLE NUMBER     23       AT X =  6.3920      Y = -7.3810      Z = 0.00000     IS UNIT NUMBER      1

    HOLE NUMBER     24       AT X = -3.1960      Y = -9.2263      Z = 0.00000     IS UNIT NUMBER      1

    HOLE NUMBER     25       AT X = -9.5879      Y = -1.8453      Z = 0.00000     IS UNIT NUMBER      1

  2 CYLINDER         5  1  RADIUS =  18.891     +Z =  10.000     -Z = -10.000     CENTERLINE IS AT  X = 0.00000      Y = 0.00000

  3 CYLINDER         6  1  RADIUS =  33.496     +Z =  10.000     -Z = -10.000     CENTERLINE IS AT  X = 0.00000      Y = 0.00000

  4 CYLINDER         5  1  RADIUS =  36.544     +Z =  10.000     -Z = -10.000     CENTERLINE IS AT  X = 0.00000      Y = 0.00000

  5 CYLINDER         7  1  RADIUS =  49.244     +Z =  10.000     -Z = -10.000     CENTERLINE IS AT  X = 0.00000      Y = 0.00000

  6 CYLINDER         5  1  RADIUS =  49.854     +Z =  10.000     -Z = -10.000     CENTERLINE IS AT  X = 0.00000      Y = 0.00000

  7 CUBOID           8  1      +X =  121.92     -X = -121.92     +Y =  121.92     -Y = -121.92     +Z =  10.000     -Z = -10.000
_
```

"LWT CASK, 25 BWR RODS, NO BWR BASKET, 5 W/O U235 VARIABLE PITCH"
VOLUMES FOR THOSE UNITS UTILIZED IN THIS PROBLEM

UNIT	REGION	GEOMETRY REGION	VOLUME	CUMULATIVE VOLUME
1	1	1	2.43321E+01 CM**3	2.43321E+01 CM**3
	2	2	8.04178E-01 CM**3	2.51363E+01 CM**3
	3	3	7.78958E+00 CM**3	3.29259E+01 CM**3
2	1	4	1.73060E+04 CM**3	1.81291E+04 CM**3
	2	5	4.29436E+03 CM**3	2.24235E+04 CM**3
	3	6	4.80740E+04 CM**3	7.04975E+04 CM**3
	4	7	1.34136E+04 CM**3	8.39110E+04 CM**3
	5	8	6.84563E+04 CM**3	1.52367E+05 CM**3
	6	9	3.79567E+03 CM**3	1.56163E+05 CM**3
	7	10	1.03300E+06 CM**3	1.18916E+06 CM**3

UNIT	USES	REGION	MIXTURE	TOTAL VOLUME
1	25	1	1	6.08302E+02 CM**3
		2	9	2.01045E+01 CM**3
		3	2	1.94739E+02 CM**3
2	1	1	3	1.73060E+04 CM**3
		2	5	4.29436E+03 CM**3
		3	6	4.80740E+04 CM**3
		4	5	1.34136E+04 CM**3
		5	7	6.84563E+04 CM**3
		6	5	3.79567E+03 CM**3
		7	8	1.03300E+06 CM**3

TOTAL MIXTURE VOLUMES

MIXTURE	TOTAL VOLUME	MASS(G)
1	6.08302E+02 CM**3	6.33363E+03
2	1.94739E+02 CM**3	1.27749E+03
3	1.73060E+04 CM**3	1.72744E+04
5	2.15036E+04 CM**3	1.70309E+05
6	4.80740E+04 CM**3	5.45351E+05
7	6.84563E+04 CM**3	6.83311E-16
8	1.03300E+06 CM**3	1.03111E-14
9	2.01045E+01 CM**3	2.00677E+01

```
**********************************************************************************************************************
***                                                                                                                    ***
***                                        BIASING INFORMATION                                                         ***
***                                                                                                                    ***
***     A DEFAULT WEIGHT OF    0.500 WILL BE USED FOR ALL BIAS ID'S.                                                   ***
***                                                                                                                    ***
**********************************************************************************************************************

                        ........    0 IO'S WERE USED IN KENO-V BEFORE TRACKING       ........

                        ........  0.00917 MINUTES WERE USED PROCESSING DATA.        ........

VOLUME FRACTION OF FISSILE MATERIAL IN THE CORE= 5.11540E-04

START TYPE 0 WAS USED.

THE NEUTRONS WERE STARTED UNIFORMLY THROUGHOUT THE ENTIRE VOLUME DEFINED BY THE OUTERMOST GEOMETRY CARD.
THE FLAG TO START NEUTRONS IN THE REFLECTOR WAS TURNED OFF

KENO MESSAGE NUMBER K5-105     ***** WARNING, ONLY   14 INDEPENDENT STARTING POSITIONS WERE GENERATED.  *****

  386 ADDITIONAL STARTING POINTS WERE PICKED FROM THE INITAL DISTRIBUTION.

0.45333 MINUTES WERE REQUIRED FOR STARTING.   TOTAL ELAPSED TIME IS 0.46933 MINUTES.
_
```

"LWT CASK, 25 BWR RODS, NO BWR BASKET, 5 W/O U235 VARIABLE PITCH"

GENERATION	GENERATION K-EFFECTIVE	ELAPSED TIME MINUTES	AVERAGE K-EFFECTIVE	AVG K-EFF DEVIATION	MATRIX K-EFFECTIVE	MATRIX K-EFF DEVIATION
KENO MESSAGE NUMBER K5-132	WARNING....ONLY	355 INDEPENDENT FISSION POINTS WERE GENERATED				
1	7.36934E-01	4.97000E-01	1.00000E+00	0.00000E+00	0.00000E+00	0.00000E+00
KENO MESSAGE NUMBER K5-132	WARNING....ONLY	322 INDEPENDENT FISSION POINTS WERE GENERATED				
2	7.00540E-01	5.31833E-01	1.00000E+00	0.00000E+00	0.00000E+00	0.00000E+00
KENO MESSAGE NUMBER K5-132	WARNING....ONLY	326 INDEPENDENT FISSION POINTS WERE GENERATED				
3	6.71687E-01	5.67500E-01	6.71687E-01	0.00000E+00	0.00000E+00	0.00000E+00
4	6.83887E-01	5.99500E-01	6.77787E-01	6.10024E-03	0.00000E+00	0.00000E+00
5	7.44438E-01	6.33500E-01	7.00004E-01	2.24944E-02	0.00000E+00	0.00000E+00
6	7.18158E-01	6.66333E-01	7.04543E-01	1.65408E-02	0.00000E+00	0.00000E+00
7	6.78785E-01	7.01167E-01	6.99391E-01	1.38093E-02	0.00000E+00	0.00000E+00
8	6.94194E-01	7.35000E-01	6.98525E-01	1.13085E-02	0.00000E+00	0.00000E+00
9	7.72562E-01	7.67167E-01	7.09102E-01	1.42552E-02	0.00000E+00	0.00000E+00
10	7.21756E-01	8.02833E-01	7.10683E-01	1.24463E-02	0.00000E+00	0.00000E+00
11	6.98534E-01	8.38500E-01	7.09333E-01	1.10593E-02	0.00000E+00	0.00000E+00
12	7.61200E-01	8.70500E-01	7.14520E-01	1.11691E-02	0.00000E+00	0.00000E+00
13	7.20594E-01	9.06167E-01	7.15072E-01	1.01179E-02	0.00000E+00	0.00000E+00
14	6.57647E-01	9.39167E-01	7.10287E-01	1.04024E-02	0.00000E+00	0.00000E+00
15	7.81967E-01	9.73000E-01	7.15801E-01	1.10437E-02	0.00000E+00	0.00000E+00
16	7.31759E-01	1.00600E+00	7.16941E-01	1.02879E-02	0.00000E+00	0.00000E+00
17	6.52070E-01	1.03983E+00	7.12616E-01	1.05086E-02	0.00000E+00	0.00000E+00
18	7.26461E-01	1.07467E+00	7.13481E-01	9.86793E-03	0.00000E+00	0.00000E+00
19	7.31605E-01	1.10767E+00	7.14547E-01	9.33041E-03	0.00000E+00	0.00000E+00
20	6.64178E-01	1.14150E+00	7.11749E-01	9.23114E-03	0.00000E+00	0.00000E+00
21	6.96133E-01	1.17633E+00	7.10927E-01	8.77038E-03	0.00000E+00	0.00000E+00
22	7.46534E-01	1.21017E+00	7.12708E-01	8.50866E-03	0.00000E+00	0.00000E+00
23	6.33256E-01	1.24500E+00	7.08924E-01	8.93400E-03	0.00000E+00	0.00000E+00
24	6.99280E-01	1.27883E+00	7.08486E-01	8.52951E-03	0.00000E+00	0.00000E+00
25	7.17385E-01	1.31183E+00	7.08873E-01	8.15941E-03	0.00000E+00	0.00000E+00
26	6.87181E-01	1.34650E+00	7.07969E-01	7.86415E-03	0.00000E+00	0.00000E+00
27	6.91288E-01	1.38233E+00	7.07302E-01	7.57248E-03	0.00000E+00	0.00000E+00
28	7.17809E-01	1.41700E+00	7.07706E-01	7.28662E-03	0.00000E+00	0.00000E+00
29	7.78800E-01	1.45000E+00	7.10339E-01	7.48967E-03	0.00000E+00	0.00000E+00
30	7.21974E-01	1.48567E+00	7.10754E-01	7.22918E-03	0.00000E+00	0.00000E+00
31	7.46391E-01	1.51867E+00	7.11983E-01	7.08286E-03	0.00000E+00	0.00000E+00
32	7.20315E-01	1.55250E+00	7.12261E-01	6.84832E-03	0.00000E+00	0.00000E+00
33	6.85997E-01	1.58633E+00	7.11414E-01	6.67769E-03	0.00000E+00	0.00000E+00
34	7.05263E-01	1.62033E+00	7.11222E-01	6.46850E-03	0.00000E+00	0.00000E+00
35	7.53469E-01	1.65600E+00	7.12502E-01	6.39880E-03	0.00000E+00	0.00000E+00
36	7.05465E-01	1.68983E+00	7.12295E-01	6.21119E-03	0.00000E+00	0.00000E+00
37	7.46440E-01	1.72367E+00	7.13270E-01	6.10951E-03	0.00000E+00	0.00000E+00
38	7.07186E-01	1.75750E+00	7.13101E-01	5.93978E-03	0.00000E+00	0.00000E+00
39	7.02359E-01	1.79050E+00	7.12811E-01	5.78431E-03	0.00000E+00	0.00000E+00
40	7.12597E-01	1.82433E+00	7.12805E-01	5.63004E-03	0.00000E+00	0.00000E+00
41	6.97974E-01	1.85917E+00	7.12425E-01	5.49695E-03	0.00000E+00	0.00000E+00
42	6.89038E-01	1.89300E+00	7.11840E-01	5.38957E-03	0.00000E+00	0.00000E+00
43	6.76648E-01	1.92700E+00	7.10982E-01	5.32610E-03	0.00000E+00	0.00000E+00
44	7.06919E-01	1.95983E+00	7.10885E-01	5.19864E-03	0.00000E+00	0.00000E+00
45	6.80629E-01	1.99467E+00	7.10182E-01	5.12483E-03	0.00000E+00	0.00000E+00
46	7.02685E-01	2.02767E+00	7.10011E-01	5.00990E-03	0.00000E+00	0.00000E+00
47	6.90168E-01	2.06233E+00	7.09570E-01	4.91712E-03	0.00000E+00	0.00000E+00
48	7.12393E-01	2.09533E+00	7.09632E-01	4.80943E-03	0.00000E+00	0.00000E+00
49	7.41267E-01	2.13017E+00	7.10305E-01	4.75388E-03	0.00000E+00	0.00000E+00
50	7.25287E-01	2.16400E+00	7.10617E-01	4.66424E-03	0.00000E+00	0.00000E+00
51	6.44596E-01	2.19783E+00	7.09270E-01	4.76262E-03	0.00000E+00	0.00000E+00
52	6.86745E-01	2.23367E+00	7.08819E-01	4.68809E-03	0.00000E+00	0.00000E+00
53	6.87129E-01	2.26750E+00	7.08394E-01	4.61489E-03	0.00000E+00	0.00000E+00
54	7.71959E-01	2.30133E+00	7.09616E-01	4.68747E-03	0.00000E+00	0.00000E+00
55	7.77561E-01	2.33433E+00	7.10898E-01	4.77354E-03	0.00000E+00	0.00000E+00
56	7.34540E-01	2.36817E+00	7.11336E-01	4.70472E-03	0.00000E+00	0.00000E+00
57	7.52295E-01	2.40200E+00	7.12081E-01	4.67805E-03	0.00000E+00	0.00000E+00
58	7.29056E-01	2.43583E+00	7.12384E-01	4.60374E-03	0.00000E+00	0.00000E+00
59	7.02691E-01	2.46983E+00	7.12214E-01	4.52545E-03	0.00000E+00	0.00000E+00
60	7.22378E-01	2.50183E+00	7.12389E-01	4.45019E-03	0.00000E+00	0.00000E+00
61	7.43714E-01	2.53567E+00	7.12920E-01	4.40622E-03	0.00000E+00	0.00000E+00
62	7.04102E-01	2.56950E+00	7.12773E-01	4.33465E-03	0.00000E+00	0.00000E+00
63	7.19153E-01	2.60433E+00	7.12878E-01	4.26428E-03	0.00000E+00	0.00000E+00
64	7.64399E-01	2.63817E+00	7.13709E-01	4.27645E-03	0.00000E+00	0.00000E+00
65	7.45281E-01	2.67217E+00	7.14210E-01	4.23776E-03	0.00000E+00	0.00000E+00
66	6.90775E-01	2.70683E+00	7.13844E-01	4.18707E-03	0.00000E+00	0.00000E+00
67	6.98713E-01	2.74067E+00	7.13611E-01	4.12871E-03	0.00000E+00	0.00000E+00
68	7.40004E-01	2.77367E+00	7.14011E-01	4.08529E-03	0.00000E+00	0.00000E+00
69	7.17451E-01	2.80850E+00	7.14062E-01	4.02419E-03	0.00000E+00	0.00000E+00
70	7.25053E-01	2.84233E+00	7.14224E-01	3.96786E-03	0.00000E+00	0.00000E+00
71	6.98406E-01	2.87533E+00	7.13994E-01	3.91665E-03	0.00000E+00	0.00000E+00
72	7.36907E-01	2.90833E+00	7.14322E-01	3.87414E-03	0.00000E+00	0.00000E+00
73	6.98716E-01	2.94217E+00	7.14102E-01	3.82550E-03	0.00000E+00	0.00000E+00
74	7.11126E-01	2.97600E+00	7.14061E-01	3.77222E-03	0.00000E+00	0.00000E+00
75	7.61261E-01	3.01167E+00	7.14707E-01	3.77596E-03	0.00000E+00	0.00000E+00
76	7.15602E-01	3.04833E+00	7.14719E-01	3.72461E-03	0.00000E+00	0.00000E+00
77	7.38835E-01	3.08133E+00	7.15041E-01	3.68865E-03	0.00000E+00	0.00000E+00
78	7.37002E-01	3.11417E+00	7.15330E-01	3.65125E-03	0.00000E+00	0.00000E+00
79	6.91165E-01	3.14900E+00	7.15016E-01	3.61715E-03	0.00000E+00	0.00000E+00
80	7.01831E-01	3.18567E+00	7.14847E-01	3.57448E-03	0.00000E+00	0.00000E+00
81	6.91587E-01	3.22050E+00	7.14552E-01	3.54120E-03	0.00000E+00	0.00000E+00
82	6.72616E-01	3.25333E+00	7.14028E-01	3.53573E-03	0.00000E+00	0.00000E+00
83	7.49505E-01	3.28817E+00	7.14466E-01	3.51917E-03	0.00000E+00	0.00000E+00
84	7.09137E-01	3.32383E+00	7.14401E-01	3.47660E-03	0.00000E+00	0.00000E+00
85	7.07948E-01	3.35767E+00	7.14324E-01	3.43533E-03	0.00000E+00	0.00000E+00
86	6.94416E-01	3.39250E+00	7.14087E-01	3.40245E-03	0.00000E+00	0.00000E+00
87	7.80753E-01	3.42817E+00	7.14871E-01	3.45246E-03	0.00000E+00	0.00000E+00
88	7.16176E-01	3.46217E+00	7.14886E-01	3.41211E-03	0.00000E+00	0.00000E+00

```
        89       6.91396E-01      3.49600E+00      7.14616E-01      3.38345E-03      0.00000E+00      0.00000E+00
        90       7.56111E-01      3.52800E+00      7.15088E-01      3.37786E-03      0.00000E+00      0.00000E+00
        91       6.92488E-01      3.56283E+00      7.14834E-01      3.34933E-03      0.00000E+00      0.00000E+00
        92       6.77406E-01      3.59850E+00      7.14418E-01      3.33791E-03      0.00000E+00      0.00000E+00
        93       6.75274E-01      3.63150E+00      7.13988E-01      3.32893E-03      0.00000E+00      0.00000E+00
        94       7.41337E-01      3.66433E+00      7.14285E-01      3.30594E-03      0.00000E+00      0.00000E+00
        95       6.86783E-01      3.69733E+00      7.13989E-01      3.28355E-03      0.00000E+00      0.00000E+00
        96       7.19390E-01      3.73217E+00      7.14047E-01      3.24894E-03      0.00000E+00      0.00000E+00
        97       6.80724E-01      3.76783E+00      7.13696E-01      3.23363E-03      0.00000E+00      0.00000E+00
KENO MESSAGE NUMBER K5-132     WARNING....ONLY  386 INDEPENDENT FISSION POINTS WERE GENERATED
        98       6.20195E-01      3.80167E+00      7.12722E-01      3.34472E-03      0.00000E+00      0.00000E+00
        99       6.48745E-01      3.83833E+00      7.12062E-01      3.37513E-03      0.00000E+00      0.00000E+00
       100       7.70577E-01      3.86950E+00      7.12659E-01      3.39346E-03      0.00000E+00      0.00000E+00
       101       7.08621E-01      3.90417E+00      7.12619E-01      3.35925E-03      0.00000E+00      0.00000E+00
       102       7.17891E-01      3.93717E+00      7.12671E-01      3.32591E-03      0.00000E+00      0.00000E+00
       103       7.57292E-01      3.97200E+00      7.13113E-01      3.32232E-03      0.00000E+00      0.00000E+00

KENO MESSAGE NUMBER K5-123          EXECUTION TERMINATED DUE TO COMPLETION OF THE SPECIFIED NUMBER OF GENERATIONS.
_
```

"LWT CASK, 25 BWR RODS, NO BWR BASKET, 5 W/O U235 VARIABLE PITCH"

LIFETIME = 2.16183E-04 + OR - 2.12662E-06 GENERATION TIME = 1.13659E-04 + OR - 8.29443E-07
NU BAR = 2.42979E+00 + OR - 2.35841E-04 AVERAGE FISSION GROUP = 2.37499E+01 + OR - 1.33856E-02
ENERGY(EV) OF THE AVERAGE LETHARGY CAUSING FISSION = 6.89807E-02 + OR - 8.35504E-04

NO. OF INITIAL GENERATIONS SKIPPED	AVERAGE K-EFFECTIVE	DEVIATION	67 PER CENT CONFIDENCE INTERVAL	95 PER CENT CONFIDENCE INTERVAL	99 PER CENT CONFIDENCE INTERVAL	NUMBER OF HISTORIES
3	0.71353	+ OR - 0.00333	0.71020 TO 0.71686	0.70687 TO 0.72019	0.70354 TO 0.72352	40000
4	0.71383	+ OR - 0.00335	0.71048 TO 0.71718	0.70713 TO 0.72053	0.70378 TO 0.72388	39600
5	0.71351	+ OR - 0.00337	0.71015 TO 0.71688	0.70678 TO 0.72025	0.70341 TO 0.72362	39200
6	0.71347	+ OR - 0.00340	0.71006 TO 0.71687	0.70666 TO 0.72027	0.70325 TO 0.72368	38800
7	0.71383	+ OR - 0.00342	0.71041 TO 0.71725	0.70699 TO 0.72067	0.70357 TO 0.72409	38400
8	0.71403	+ OR - 0.00345	0.71058 TO 0.71748	0.70713 TO 0.72093	0.70368 TO 0.72438	38000
9	0.71341	+ OR - 0.00343	0.70998 TO 0.71684	0.70655 TO 0.72027	0.70312 TO 0.72370	37600
10	0.71332	+ OR - 0.00347	0.70986 TO 0.71679	0.70639 TO 0.72025	0.70293 TO 0.72372	37200
11	0.71348	+ OR - 0.00350	0.70998 TO 0.71698	0.70648 TO 0.72048	0.70298 TO 0.72398	36800
12	0.71296	+ OR - 0.00350	0.70946 TO 0.71646	0.70596 TO 0.71996	0.70246 TO 0.72345	36400
17	0.71320	+ OR - 0.00348	0.70972 TO 0.71668	0.70625 TO 0.72015	0.70277 TO 0.72363	34400
22	0.71321	+ OR - 0.00360	0.70961 TO 0.71681	0.70601 TO 0.72041	0.70241 TO 0.72401	32400
27	0.71502	+ OR - 0.00365	0.71137 TO 0.71868	0.70772 TO 0.72233	0.70407 TO 0.72598	30400
32	0.71347	+ OR - 0.00377	0.70970 TO 0.71724	0.70593 TO 0.72101	0.70216 TO 0.72478	28400
37	0.71303	+ OR - 0.00395	0.70908 TO 0.71698	0.70512 TO 0.72094	0.70117 TO 0.72489	26400
42	0.71395	+ OR - 0.00425	0.70970 TO 0.71820	0.70545 TO 0.72244	0.70120 TO 0.72669	24400
47	0.71596	+ OR - 0.00451	0.71145 TO 0.72047	0.70694 TO 0.72498	0.70244 TO 0.72948	22400
52	0.71732	+ OR - 0.00468	0.71264 TO 0.72200	0.70797 TO 0.72668	0.70329 TO 0.73136	20400
57	0.71435	+ OR - 0.00473	0.70962 TO 0.71908	0.70488 TO 0.72381	0.70015 TO 0.72854	18400
62	0.71361	+ OR - 0.00524	0.70838 TO 0.71885	0.70314 TO 0.72408	0.69790 TO 0.72932	16400
67	0.71221	+ OR - 0.00567	0.70654 TO 0.71789	0.70087 TO 0.72356	0.69520 TO 0.72923	14400
72	0.71038	+ OR - 0.00645	0.70394 TO 0.71683	0.69749 TO 0.72328	0.69104 TO 0.72973	12400
77	0.70755	+ OR - 0.00733	0.70023 TO 0.71488	0.69290 TO 0.72220	0.68557 TO 0.72953	10400
82	0.70963	+ OR - 0.00875	0.70088 TO 0.71838	0.69213 TO 0.72713	0.68338 TO 0.73587	8400
87	0.70378	+ OR - 0.01015	0.69363 TO 0.71392	0.68348 TO 0.72407	0.67333 TO 0.73422	6400
92	0.70244	+ OR - 0.01376	0.68868 TO 0.71620	0.67492 TO 0.72996	0.66116 TO 0.74372	4400

"LWT CASK, 25 BWR RODS, NO BWR BASKET, 5 W/O U235 VARIABLE PITCH"

NO. OF INITIAL GENERATIONS SKIPPED	AVERAGE K-EFFECTIVE	DEVIATION	67 PER CENT CONFIDENCE INTERVAL	95 PER CENT CONFIDENCE INTERVAL	99 PER CENT CONFIDENCE INTERVAL	NUMBER OF HISTORIES
97	0.70389	+ OR - 0.02420	0.67969 TO 0.72808	0.65549 TO 0.75228	0.63130 TO 0.77647	2400

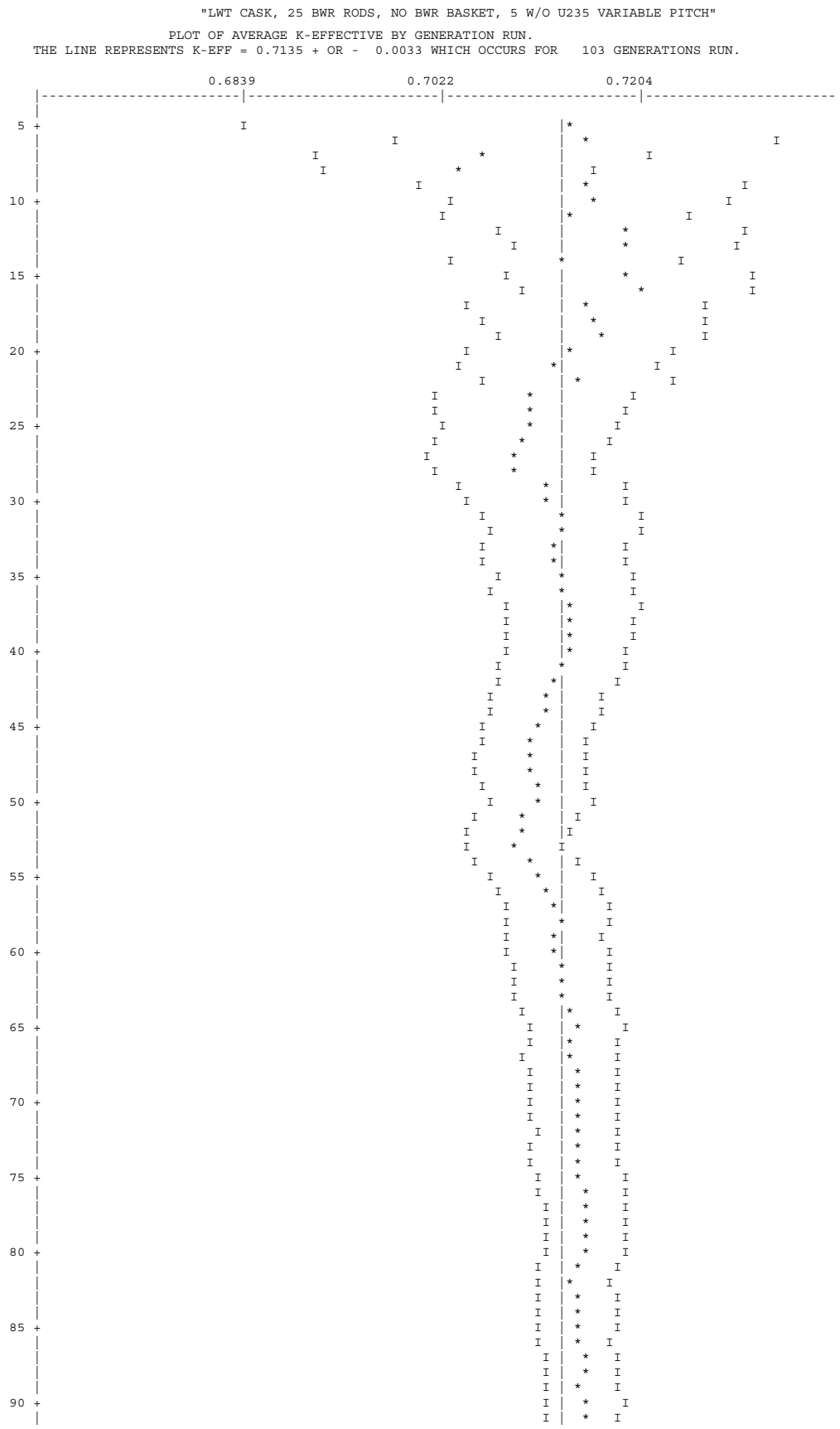
"LWT CASK, 25 BWR RODS, NO BWR BASKET, 5 W/O U235 VARIABLE PITCH"
PLOT OF AVERAGE K-EFFECTIVE BY GENERATION RUN.
THE LINE REPRESENTS K-EFF = 0.7135 + OR - 0.0033 WHICH OCCURS FOR 103 GENERATIONS RUN.
0.6839
0.7022
0.7204
5
10
15
20
25
30
35
40
45
50
55
60
65
70
75
80
85
90


95
100

"LWT CASK, 25 BWR RODS, NO BWR BASKET, 5 W/O U235 VARIABLE PITCH"

SKIPPING 3 GENERATIONS

GROUP	FISSION FRACTION	UNIT	REGION	FISSIONS	PERCENT DEVIATION	ABSORPTIONS	PERCENT DEVIATION	LEAKAGE	PERCENT DEVIATION
1	0.0027			1.92049E-03	7.9551	1.55933E-03	4.6801	0.00000E+00	0.0000
2	0.0119			8.47839E-03	2.3095	5.24441E-03	1.6315	0.00000E+00	0.0000
3	0.0124			8.87829E-03	2.4641	3.70982E-03	2.3483	0.00000E+00	0.0000
4	0.0051			3.61159E-03	3.2896	1.73888E-03	3.1541	0.00000E+00	0.0000
5	0.0017			1.24621E-03	1.8610	1.25950E-03	1.6420	0.00000E+00	0.0000
6	0.0014			1.00221E-03	1.6885	2.17782E-03	1.6503	0.00000E+00	0.0000
7	0.0012			8.32696E-04	2.1601	2.77279E-03	1.9339	0.00000E+00	0.0000
8	0.0009			6.32962E-04	2.3808	2.54617E-03	2.1997	0.00000E+00	0.0000
9	0.0011			8.12195E-04	3.1579	3.22371E-03	2.3339	0.00000E+00	0.0000
10	0.0024			1.71284E-03	3.3921	5.74338E-03	2.3470	0.00000E+00	0.0000
11	0.0052			3.71633E-03	2.9123	8.87449E-03	2.1449	0.00000E+00	0.0000
12	0.0066			4.74161E-03	3.6874	8.82059E-03	2.7710	0.00000E+00	0.0000
13	0.0063			4.51110E-03	4.4318	9.69352E-03	2.7547	0.00000E+00	0.0000
14	0.0052			3.72684E-03	3.9334	1.36092E-02	2.5871	0.00000E+00	0.0000
15	0.0013			9.07042E-04	6.3377	4.51955E-03	3.1016	0.00000E+00	0.0000
16	0.0008			5.46759E-04	7.0791	2.57548E-03	3.9213	0.00000E+00	0.0000
17	0.0012			8.73620E-04	11.1197	1.64378E-03	5.2113	0.00000E+00	0.0000
18	0.0018			1.28315E-03	10.7961	1.66254E-03	5.4296	0.00000E+00	0.0000
19	0.0023			1.65015E-03	8.1758	2.73285E-03	3.5998	0.00000E+00	0.0000
20	0.0096			6.86870E-03	4.2910	1.04665E-02	2.3819	0.00000E+00	0.0000
21	0.0053			3.76837E-03	7.3940	4.49843E-03	3.9745	0.00000E+00	0.0000
22	0.0137			9.74644E-03	4.5119	1.12421E-02	2.5474	0.00000E+00	0.0000
23	0.0891			6.35829E-02	1.7811	8.04947E-02	0.8691	0.00000E+00	0.0000
24	0.2522			1.79948E-01	1.0626	2.28908E-01	0.5136	0.00000E+00	0.0000
25	0.2261			1.61345E-01	1.0192	2.13349E-01	0.4255	0.00000E+00	0.0000
26	0.2579			1.84035E-01	0.8679	2.71962E-01	0.4119	0.00000E+00	0.0000
27	0.0745			5.31486E-02	2.3429	9.70387E-02	0.6775	0.00000E+00	0.0000
SYSTEM TOTAL =				7.13527E-01	0.4666	1.00207E+00	0.1233	0.00000E+00	0.0000

ELAPSED TIME 3.97283 MINUTES

RANDOM NUMBER= 6ECC71283DC6

_

```
"LWT CASK, 25 BWR RODS, NO BWR BASKET, 5 W/O U235 VARIABLE PITCH"

                              FREQUENCY FOR GENERATIONS    4 TO  103
0.6076 TO 0.6276     *
0.6276 TO 0.6476     **
0.6476 TO 0.6676     ****
0.6676 TO 0.6876     ************
0.6876 TO 0.7076     *************************
0.7076 TO 0.7276     ***********************
0.7276 TO 0.7476     ****************
0.7476 TO 0.7676     ********
0.7676 TO 0.7876     *******

                              FREQUENCY FOR GENERATIONS   29 TO  103
0.6076 TO 0.6276     *
0.6276 TO 0.6476     *
0.6476 TO 0.6676     *
0.6676 TO 0.6876     **********
0.6876 TO 0.7076     ********************
0.7076 TO 0.7276     *****************
0.7276 TO 0.7476     ************
0.7476 TO 0.7676     *******
0.7676 TO 0.7876     *****

                              FREQUENCY FOR GENERATIONS   54 TO  103
0.6076 TO 0.6276     *
0.6276 TO 0.6476
0.6476 TO 0.6676     *
0.6676 TO 0.6876     *****
0.6876 TO 0.7076     ************
0.7076 TO 0.7276     ************
0.7276 TO 0.7476     *********
0.7476 TO 0.7676     ******
0.7676 TO 0.7876     ****

                              FREQUENCY FOR GENERATIONS   79 TO  103
0.6076 TO 0.6276     *
0.6276 TO 0.6476
0.6476 TO 0.6676     *
0.6676 TO 0.6876     *****
0.6876 TO 0.7076     ******
0.7076 TO 0.7276     ******
0.7276 TO 0.7476     *
0.7476 TO 0.7676     ***
0.7676 TO 0.7876     **


*****************************************************************************************************************************************
*
          CONGRATULATIONS!  YOU HAVE  SUCCESSFULLY TRAVERSED THE PERILOUS PATH THROUGH KENO V IN   3.97283 MINUTES

*****************************************************************************************************************************************
```

6.6.5 TRIGA Fuel Elements

This section contains abbreviated output files from the most reactive non-poisoned and poisoned basket configurations for TRIGA fuel elements, and a sample benchmark case for TRIGA fuel.

Figure 6.6.5-1 Summary of CSAS Input/Output for NAC-LWT with TRIGA Fuel Elements - Most Reactive Nonpoisoned Basket Configuration

```
PRIMARY MODULE ACCESS AND INPUT RECORD ( SCALE DRIVER - 95/03/29 - 09:06:37 )
   MODULE CSAS25   WILL BE CALLED
     TRIGA - PREF. FLOOD CANISTER  - 2 ROD FILLING CANISTER + TOLERANCE
     27GROUPNDF4  INFHOMMEDIUM
     'FUEL
     U-235   1 0.0 2.3049E-04 END
     U-238   1 0.0 9.8008E-05 END
     ZR      1 0.0 8.7748E-03 END
     H       1 0.0 1.4040E-02 END
     H2O     1 0.7454 293.0 END
     'CLAD, BASKET, AND CASK
     SS304   2 1.0 293.0 END
     'CANISTER INTERNAL MODERATOR
     H2O     3 1.0 293.0 END
     'ZIRCONIUM ROD
     ZR      4 1.0 293.0 END
     'GRAPHITE REFLETOR
     C       5 1.0 293.0 END
     'LEAD SHIELD
     PB      6 1.0 293.0 END
     'NEUTRON SHIELD
     H2O     7 1.0E-20 293.0 END
     'CASK EXTERNAL MATERIAL
     H2O     8 1.0E-20 293.0 END
     'END FITTING FOR FUEL ELEMENT
     SS304   9 0.337137 293.0 END
     H2O     9 0.662863 293.0 END
     'SECOND FUEL MATERIAL FOR UN-CANISTERED
     U-235   10 0.0 9.052980E-4 END
     U-238   10 0.0 3.849480E-4 END
     ZR      10 0.0 3.446510E-2 END
     H       10 0.0 5.514420E-2 END
     'SECOND END-FITTING MATERIAL FOR UN-CANISTERED FUEL
     SS304   11 0.337137 293.0 END
     H2O     11 DEN=0.662863 1.0E-20 293.0 END
     'CASK INTERIOR MODERATOR MATERIAL
     H2O  12 1.0E-20 293.0 END
     END COMP
     MORE DATA
     RES=10  CYLINDER 1.8224 DAN(10)=8.52196E-01
     END MORE
     TRIGA - PREF. FLOOD CANISTER  - 2 ROD FILLING CANISTER + TOLERANCE
     READ PARAM TME=170.0 GEN=403 NPG=1000 RUN=YES PLT=NO
     TBA=2.0 END PARAM
     READ GEOM
     UNIT 1
     COM='TRIGA FUEL (SMEARED)'
     CYLINDER 1 1 3.9877 60.959 0.001
     UNIT 5
     COM='3.38 in Width / 0.28 in Thickness DIVIDER CENTER STACK (SEALED)'
     CUBOID   2 1 2P4.2926 0.7112 0.0 +74.29 -8.255
     UNIT 6
     COM='3.38 in Width / 0.24 in Thickness DIVIDER OUTSIDE STACK (SEALED)'
     CUBOID   2 1 2P4.2926 0.6096 0.0 +74.29 -8.255
     UNIT 7
     COM='SEALED CANISTER'
     CYLINDER 12 1 3.9878 +60.96 0.0
     HOLE      1  0.0 0.0 0.0
     CYLINDER  2 1 4.1529 +63.50 -1.27
     CYLINDER 12 1 4.1529 +74.29 -8.255
     UNIT 10
     COM='TRIGA ELEMENTS IN Top of 3.38 in x 3.38 in OPENING (SEALED)'
     CUBOID    12 1 2P4.2926 2P4.2926 +74.29 -8.255
     HOLE 7    0.0 0.1396 0.0
     UNIT 11
     COM='TRIGA ELEMENTS IN Bottom of 3.38 in x 3.38 in OPENING (SEALED)'
     CUBOID    12 1 2P4.2926 2P4.2926 +74.29 -8.255
     HOLE 7    0.0 -0.1396 0.0
     UNIT 12
     COM='TRIGA ELEMENTS IN Bottom Right of 3.38 in x 3.38 in OPENING (SEALED)'
     CUBOID    12 1 2P4.2926 2P4.2926 +74.29 -8.255
     HOLE 7    +0.1396 -0.1396 0.0
     UNIT 13
     COM='TRIGA ELEMENTS IN Top Right of 3.38 in x 3.38 in OPENING (SEALED)'
     CUBOID    12 1 2P4.2926 2P4.2926 +74.29 -8.255
     HOLE 7    +0.1396 +0.1396 0.0
     UNIT 14
     COM='TRIGA ELEMENTS IN Bottom Left of 3.38 in x 3.38 in OPENING (SEALED)'
     CUBOID    12 1 2P4.2926 2P4.2926 +74.29 -8.255
     HOLE 7    -0.1396 -0.1396 0.0
     UNIT 15
     COM='TRIGA ELEMENTS IN Top Left of 3.38 in x 3.38 in OPENING (SEALED)'
     CUBOID    12 1 2P4.2926 2P4.2926 +74.29 -8.255
     HOLE 7    -0.1396 +0.1396 0.0
     UNIT 16
     COM='TRIGA BASKET 3.38 in x 3.38 in CENTER OPENING (SEALED)'
     CUBOID    12 1 2P4.2926 2P4.2926 +74.29 -8.255
     UNIT 20
```

```
COM='CENTER COLUMN OF THREE OPENINGS w/ 0.28 in plate (SEALED)'
ARRAY 1  -4.2926 -13.589 -8.255
REPLICATE 2 1 4R0.7112 2R0.0 1
UNIT 21
COM='LEFT OUTSIDE COLUMN OF TWO OPENINGS w/ 0.12 in plate (SEALED)'
ARRAY 2  -4.2926 -8.89 -8.255
REPLICATE 2 1 0.0 0.3048 2R0.3048 2R0.0 1
UNIT 22
COM='RIGHT OUTSIDE COLUMN OF TWO OPENINGS w/ 0.12 in plate (SEALED)'
ARRAY 3  -4.2926 -8.89 -8.255
REPLICATE 2 1 0.3048 0.0 2R0.3048 2R0.0 1
UNIT 30
COM='NAC-LWT TRIGA BASKET (SEALED)'
CYLINDER 12  1 17.1 +74.29 -8.255
HOLE 20   0.0    0.0 0.0
HOLE 21  -9.2974 0.0 0.0
HOLE 22  +9.2974 0.0 0.0
CYLINDER 2  1 18.9103 +74.93 -8.890
CYLINDER 6  1 33.4645 +74.93 -8.890
CYLINDER 2  1 36.5188 +74.93 -8.890
CYLINDER 7  1 49.2227 +74.93 -8.890
CYLINDER 2  1 49.8221 +74.93 -8.890
CUBOID   8  1 4P49.8221 +74.93 -8.890
UNIT 41
COM='TRIGA FUEL ELEMENT'
CYLINDER 4  1 0.2858 2P19.05
CYLINDER 10 1 1.8224 2P19.05
CYLINDER 5  1 1.8224 2P27.7368
CYLINDER 2  1 1.8771 2P27.7368
CYLINDER 11 1 1.8771 2P36.703
UNIT 45
COM='3.38 in Width / 0.28 in Thickness DIVIDER CENTER STACK'
CUBOID   2 1 2P4.2926 0.7112 0.0 2P36.703
UNIT 46
COM='3.38 in Width / 0.24 in Thickness DIVIDER OUTSIDE STACK'
CUBOID   2 1 2P4.2926 0.6096 0.0 2P36.703
UNIT 50
COM='TRIGA FUEL ELEMENTS IN Top of 3.38 in x 3.38 in OPENING'
CUBOID    12 1 2P4.2926 2P4.2926 2P36.703
HOLE      41  +1.8772 +2.4154 0.0
HOLE      41  -1.8772 +2.4154 0.0
HOLE      41  -1.8772 -1.3389 0.0
HOLE      41  +1.8772 -1.3389 0.0
UNIT 51
COM='TRIGA FUEL ELEMENTS IN Bottom of 3.38 in x 3.38 in OPENING'
CUBOID    12 1 2P4.2926 2P4.2926 2P36.703
HOLE      41  +1.8772 -2.4154 0.0
HOLE      41  -1.8772 -2.4154 0.0
HOLE      41  -1.8772 +1.3389 0.0
HOLE      41  +1.8772 +1.3389 0.0
UNIT 52
COM='TRIGA FUEL ELEMENTS IN Bottom Right of 3.38 in x 3.38 in OPENING'
CUBOID    12 1 2P4.2926 2P4.2926 2P36.703
HOLE      41  +2.4154 -2.4154  0.0
HOLE      41  +2.4154 +1.3389  0.0
HOLE      41  -1.3389 -2.4154  0.0
HOLE      41  -1.3389 +1.3389  0.0
UNIT 53
COM='TRIGA FUEL ELEMENTS IN Top Right of 3.38 in x 3.38 in OPENING'
CUBOID    12 1 2P4.2926 2P4.2926 2P36.703
HOLE      41 +2.4154 +2.4154  0.0
HOLE      41 +2.4154 -1.3389  0.0
HOLE      41 -1.3389 +2.4154  0.0
HOLE      41 -1.3389 -1.3389  0.0
UNIT 54
COM='TRIGA FUEL ELEMENTS IN Bottom Left of 3.38 in x 3.38 in OPENING'
CUBOID    12 1 2P4.2926 2P4.2926 2P36.703
HOLE      41  -2.4154 -2.4154  0.0
HOLE      41  -2.4154 +1.3389  0.0
HOLE      41  +1.3389 -2.4154  0.0
HOLE      41  +1.3389 +1.3389  0.0
UNIT 55
COM='TRIGA FUEL ELEMENTS IN Top Left of 3.38 in x 3.38 in OPENING'
CUBOID    12 1 2P4.2926 2P4.2926 2P36.703
HOLE      41  -2.4154 +2.4154  0.0
HOLE      41  -2.4154 -1.3389  0.0
HOLE      41  +1.3389 +2.4154  0.0
HOLE      41  +1.3389 -1.3389  0.0
UNIT 56
COM='TRIGA BASKET 3.38 in x 3.38 in CENTER OPENING'
CUBOID    12 1 2P4.2926 2P4.2926 2P36.703
UNIT 60
COM='CENTER COLUMN OF THREE OPENINGS w/ 0.28 in plate'
ARRAY 11  -4.2926 -13.589 -36.703
REPLICATE 2 1 4R0.7112 2R0.0 1
UNIT 61
COM='LEFT OUTSIDE COLUMN OF TWO OPENINGS w/ 0.12 in plate'
ARRAY 12  -4.2926 -8.89 -36.703
REPLICATE 2 1 0.0 0.3048 2R0.3048 2R0.0 1
UNIT 62
COM='RIGHT OUTSIDE COLUMN OF TWO OPENINGS w/ 0.12 in plate'
ARRAY 13  -4.2926 -8.89 -36.703
REPLICATE 2 1 0.3048 0.0 2R0.3048 2R0.0 1
UNIT 70
COM='NAC-LWT TRIGA BASKET'
```

```
  CYLINDER 12  1 17.1 2P36.703
  HOLE 60   0.0    0.0 0.0
  HOLE 61  -9.2974 0.0 0.0
  HOLE 62  +9.2974 0.0 0.0
  CYLINDER 2  1 18.9103 2P37.338
  CYLINDER 6  1 33.4645 2P37.338
  CYLINDER 2  1 36.5188 2P37.338
  CYLINDER 7  1 49.2227 2P37.338
  CYLINDER 2  1 49.8221 2P37.338
  CUBOID   8  1 4P49.8221 2P37.338
  UNIT 80
  COM='SIMPLIFIED LID STRUCTURE NAC-LWT'
  CYLINDER 2 1 36.5188 2P14.1351
  CYLINDER 8 1 49.8221 2P14.1351
  CUBOID   8 1 4P49.8221 2P14.1351
  UNIT 81
  COM='SIMPLIFIED CASK BOTTOM STRUCTURE NAC-LWT'
  CYLINDER 6 1 26.3525 2P3.81
  CYLINDER 2 1 36.6188 +13.97 -12.7
  CYLINDER 8 1 49.8221 +13.97 -12.7
  CUBOID   8 1 4P49.8221 +13.97 -12.7
  GLOBAL UNIT 82
  COM='STACK OF 5 BASKETS IN CASK'
  ARRAY  20  -49.8221 -49.8221 -221.3
  END GEOM
  READ ARRAY
  ARA=1 NUX=1 NUY=5 NUZ=1 FILL 10 5 16 5 11 END FILL
  ARA=2 NUX=1 NUY=3 NUZ=1 FILL 13 6 12 END FILL
  ARA=3 NUX=1 NUY=3 NUZ=1 FILL 15 6 14 END FILL
  ARA=11 NUX=1 NUY=5 NUZ=1 FILL 50 45 56 45 51 END FILL
  ARA=12 NUX=1 NUY=3 NUZ=1 FILL 53 46 52 END FILL
  ARA=13 NUX=1 NUY=3 NUZ=1 FILL 55 46 54 END FILL
  ARA=20 NUX=1 NUY=1 NUZ=7 FILL 81 30 3R70 30 80 END FILL
  END ARRAY
  READ BOUNDS ALL=MIR END BOUNDS
  READ PLOT
  TTL='X-Y PLOT OF CASK (CANISTER ELEVATION)'
  SCR=YES PIC=MAT LPI=10
  UAX=1.0 VDN=-1.0 NAX=800
  XUL=-50.0 YUL=50.0 ZUL=149.352
  XLR=50.0 YLR=-50.0 ZLR=149.352 END
  TTL='X-Y PLOT OF BASKET (CANISTER ELEVATION)'
  SCR=YES PIC=MAT LPI=10
  UAX=1.0 VDN=-1.0 NAX=800
  XUL=-17.2 YUL=17.2 ZUL=149.352
  XLR=17.2 YLR=-17.2 ZLR=149.352 END
  TTL='X-Y PLOT OF BASKET (CAVITY MID PLANE)'
  SCR=YES PIC=MAT LPI=10
  UAX=1.0 VDN=-1.0 NAX=800
  XUL=-17.2 YUL=17.2 ZUL=0.0
  XLR=17.2 YLR=-17.2 ZLR=0.0 END
  TTL='X-Y PLOT OF CENTER OPENING (CANISTER ELEVATION)'
  SCR=YES PIC=MAT LPI=10
  UAX=1.0 VDN=-1.0 NAX=800
  XUL=-7.0 YUL=7.0 ZUL=149.352
  XLR=7.0 YLR=-7.0 ZLR=149.352 END
  TTL='X-Y PLOT OF PERIPHERAL OPENING (CANISTER ELEVATION)'
  SCR=YES PIC=MAT LPI=10
  UAX=1.0 VDN=-1.0 NAX=800
  XUL=-7.0 YUL=16.0 ZUL=149.352
  XLR=7.0  YLR=4.0 ZLR=149.352 END
  TTL='Y-Z PLOT OF BASKET (CENTER OF FUEL ELEMENTS,CANISTER ELEVATION)'
  SCR=YES PIC=MAT LPI=10
  VAX=1.0 WDN=-1.0 NAX=800
  XUL=2.12 YUL=-14.0 ZUL=186.69
  XLR=2.12 YLR=-4.5 ZLR=112.014 END
  TTL='Y-Z PLOT OF BASKET (CASK)'
  SCR=YES PIC=MAT LPI=10
  VAX=1.0 WDN=-1.0 NAX=800
  XUL=2.12 YUL=-51 ZUL=250
  XLR=2.12 YLR=+51 ZLR=-250
  END PLOT
  END DATA

SECONDARY MODULE O0O008   HAS BEEN CALLED.

MODULE O0O008   IS FINISHED. COMPLETION CODE     0. CPU TIME USED     0.88 (SECONDS).

SECONDARY MODULE O0O002   HAS BEEN CALLED.

MODULE O0O002   IS FINISHED. COMPLETION CODE     0. CPU TIME USED     9.72 (SECONDS).

SECONDARY MODULE O0O009   HAS BEEN CALLED.

MODULE O0O009   IS FINISHED. COMPLETION CODE     0. CPU TIME USED   718.10 (SECONDS).

MODULE CSAS25   IS FINISHED. COMPLETION CODE     0. CPU TIME USED   729.96 (SECONDS).
```



```
 SSSSSSSSSS     CCCCCCCCCC      AAAAAAAAA     LL              EEEEEEEEEEEE                    PPPPPPPPPPP     CCCCCCCCCC
SSSSSSSSSSS   CCCCCCCCCCCC    AAAAAAAAAAA    LL              EEEEEEEEEEEE                    PPPPPPPPPPPPP   CCCCCCCCCCCC
SS         SS CC          CC  AA         AA   LL              EE                              PP         PP   CC          CC
SS            CC             AA         AA   LL              EE                              PP         PP   CC
SS            CC             AA         AA   LL              EE                              PP         PP   CC
SSSSSSSSSSS   CC             AAAAAAAAAAAAA   LL              EEEEEEEEE       -------------   PPPPPPPPPPPPP   CC
 SSSSSSSSSSS  CC             AAAAAAAAAAAAA   LL              EEEEEEEEE       -------------   PPPPPPPPPPP    CC
          SS  CC             AA         AA   LL              EE                              PP             CC
          SS  CC             AA         AA   LL              EE                              PP             CC
SS        SS  CC          CC  AA         AA   LL              EE                              PP             CC          CC
SSSSSSSSSSS   CCCCCCCCCCCCC   AA         AA   LLLLLLLLLLLLL   EEEEEEEEEEEE                    PP             CCCCCCCCCCCC
 SSSSSSSSSS    CCCCCCCCCC    AA         AA   LLLLLLLLLLLLL   EEEEEEEEEEEE                    PP              CCCCCCCCCC

                    **********************************************************************************
                    **********************************************************************************
                    **********************************************************************************
                    *****                                                                        *****
                    *****                  PROGRAM VERIFICATION INFORMATION                      *****
                    *****                                                                        *****
                    *****                CODE SYSTEM:  SCALE-PC VERSION:  4.3                    *****
                    *****                                                                        *****
                    **********************************************************************************
                    **********************************************************************************
                    *****                                                                        *****
                    *****                                                                        *****
                    *****              PROGRAM:  CSAS                                            *****
                    *****                                                                        *****
                    *****        CREATION DATE:  03/08/96                                        *****
                    *****                                                                        *****
                    *****              VOLUME:   ENG                                             *****
                    *****                                                                        *****
                    *****              LIBRARY:  G:\SCALE43\WIN_NT\EXE                           *****
                    *****                                                                        *****
                    *****                                                                        *****
                    *****      PRODUCTION CODE:  CSAS                                            *****
                    *****                                                                        *****
                    *****              VERSION:  3.1                                             *****
                    *****                                                                        *****
                    *****              JOBNAME:  SCALE-PC                                        *****
                    *****                                                                        *****
                    *****    DATE OF EXECUTION:  12/30/98                                        *****
                    *****                                                                        *****
                    *****    TIME OF EXECUTION:  05:33:58                                        *****
                    *****                                                                        *****
                    *****                                                                        *****
                    **********************************************************************************
                    **********************************************************************************
                    **********************************************************************************

TRIGA - PREF. FLOOD CANISTER  - 2 ROD FILLING CANISTER + TOLERANCE


**** PROBLEM PARAMETERS ****

LIB 27GROUPNDF4  LIBRARY
MXX           12 MIXTURES
MSC           21 COMPOSITION SPECIFICATIONS
IZM            1 MATERIAL ZONES
GE  INFHOMMEDIUM GEOMETRY
MORE           1 0/1 DO NOT READ/READ OPTIONAL PARAMETER DATA
MSLN           0 FUEL SOLUTIONS

**** PROBLEM GEOMETRY ****

**** INFINITE HOMOGENEOUS MEDIUM ****
MFUEL          1 MIXTURE NO. OF THE INFINITE HOMOGENEOUS MEDIUM

**** SPECIAL PARAMETERS ****

ISN            8 ORDER OF ANGULAR QUADRATURE
IIM           20 INNER ITERATION MAXIMUM
ICM           25 OUTER ITERATION MAXIMUM
SZF  1.00000E+00 SIZE FACTOR FOR SPATIAL MESH
EPS  1.00000E-04 OVERALL PROBLEM CONVERGENCE
PTC  1.00000E-04 SCALAR FLUX CONVERGENCE
BKL  1.42089E+00 BUCKLING FACTOR
IUS            0 THERMAL UPSCATTER SCALING
BAL         FINE BALANCE TABLE PRINT FLAG
DY   0.00000E+00 BUCKLING HEIGHT
DZ   0.00000E+00 BUCKLING DEPTH
IPN            0 DIFFUSION COEFFICIENT OPTION
FRD            0 LOGICAL UNIT NUMBER TO READ FLUX GUESS
FWR           -1 LOGICAL UNIT NUMBER TO WRITE FLUX GUESS
MSH         2001 NUMBER OF INTERVALS FOR RES. INTGRTNS
MLV            2 MAX LVALUE FOR RES. INTGRTNS
AXS            0 LOGICAL UNIT NUMBER TO WRITE ANISN LIB
RES           10 MIXTURE WITH SPECIAL RESONANCE CORRECTION
 *      CYLINDER GEOMETRY FOR SPECIAL RESONANCE CORRECTION
 *   1.82240E+00 DIMENSION (LBAR) FOR SPECIAL RESONANCE CORRECTION

DANCOFF FACTOR SPECIFICATION
MIXTURE     FACTOR
     10    0.85220
```

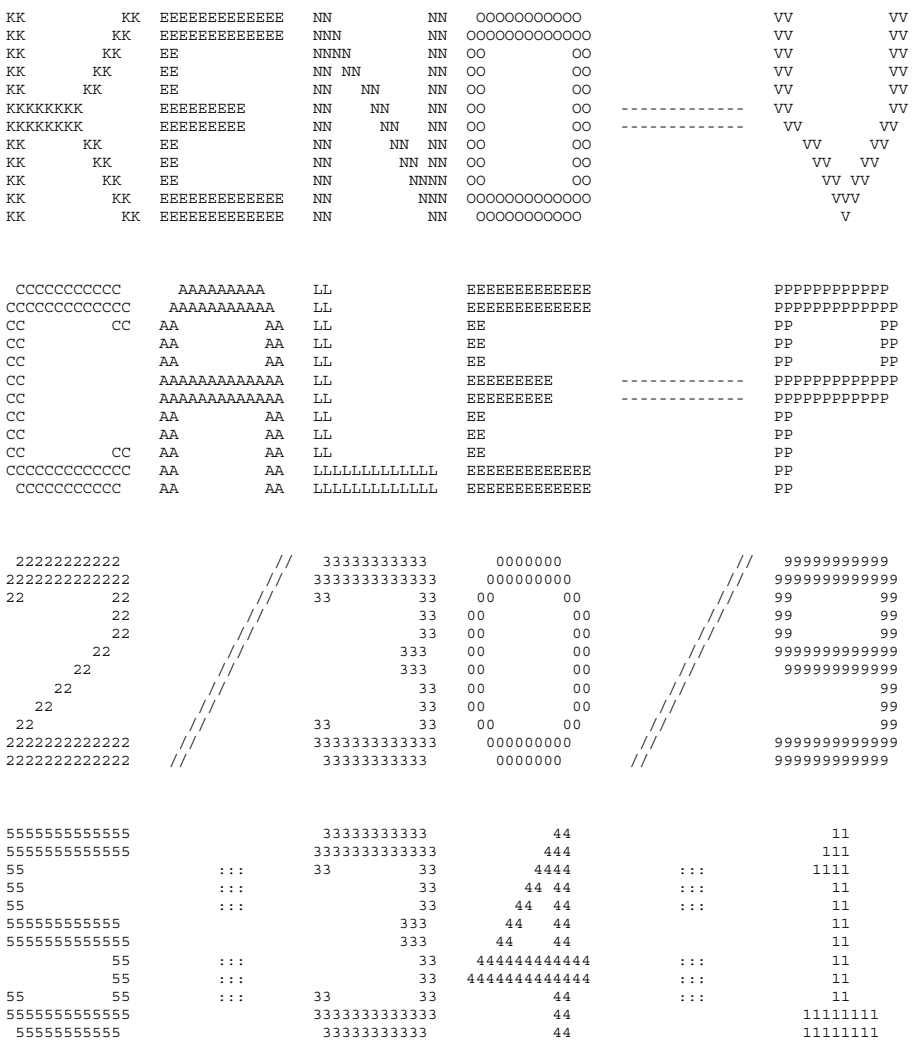

```
  SSSSSSSSSS     CCCCCCCCCC      AAAAAAAAA     LL             EEEEEEEEEEEE                  PPPPPPPPPPP     CCCCCCCCCC
 SSSSSSSSSSS   CCCCCCCCCCCC    AAAAAAAAAAA    LL             EEEEEEEEEEEE                  PPPPPPPPPPPP   CCCCCCCCCCCC
 SS         SS CC          CC  AA         AA   LL             EE                            PP         PP  CC          CC
 SS            CC             AA         AA   LL             EE                            PP         PP  CC
 SS            CC             AA         AA   LL             EE                            PP         PP  CC
 SSSSSSSSSSS   CC             AAAAAAAAAAAAA   LL             EEEEEEEEE       -------------  PPPPPPPPPPPP  CC
  SSSSSSSSSSS  CC             AAAAAAAAAAAAA   LL             EEEEEEEEE       -------------  PPPPPPPPPPP   CC
           SS  CC             AA         AA   LL             EE                            PP             CC
           SS  CC             AA         AA   LL             EE                            PP             CC
 SS         SS CC          CC  AA         AA   LL             EE                            PP             CC          CC
 SSSSSSSSSSS   CCCCCCCCCCCC    AA         AA   LLLLLLLLLLLL   EEEEEEEEEEEE                  PP             CCCCCCCCCCCC
  SSSSSSSSSS     CCCCCCCCCC    AA         AA   LLLLLLLLLLLL   EEEEEEEEEEEE                  PP              CCCCCCCCCC
```

```
*******************************************************************************
*******************************************************************************
*******************************************************************************
*****                                                                     *****
*****                  PROGRAM VERIFICATION INFORMATION                   *****
*****                                                                     *****
*****                CODE SYSTEM:  SCALE-PC VERSION:  4.3                 *****
*****                                                                     *****
*******************************************************************************
*******************************************************************************
*****                                                                     *****
*****                                                                     *****
*****              PROGRAM:  O0O009                                       *****
*****                                                                     *****
*****        CREATION DATE:  03/08/96                                     *****
*****                                                                     *****
*****              VOLUME:   ENG                                          *****
*****                                                                     *****
*****              LIBRARY:  G:\SCALE43\WIN_NT\EXE                        *****
*****                                                                     *****
*****                                                                     *****
*****      PRODUCTION CODE:  KENOVA                                       *****
*****                                                                     *****
*****              VERSION:  3.1                                          *****
*****                                                                     *****
*****              JOBNAME:  SCALE-PC                                     *****
*****                                                                     *****
*****    DATE OF EXECUTION:  12/30/98                                     *****
*****                                                                     *****
*****    TIME OF EXECUTION:  05:34:10                                     *****
*****                                                                     *****
*****                                                                     *****
*******************************************************************************
*******************************************************************************
*******************************************************************************
```

TRIGA - PREF. FLOOD CANISTER - 2 ROD FILLING CANISTER + TOLERANCE

****** NUMERIC PARAMETERS ******

TME	MAXIMUM PROBLEM TIME (MIN)	170.00	
TBA	TIME PER GENERATION (MIN)	2.00	
GEN	NUMBER OF GENERATIONS	403	
NPG	NUMBER PER GENERATION	1000	
NSK	NUMBER OF GENERATIONS TO BE SKIPPED	3	
BEG	BEGINNING GENERATION NUMBER	1	
RES	GENERATIONS BETWEEN CHECKPOINTS	0	
X1D	NUMBER OF EXTRA 1-D CROSS SECTIONS	1	
NBK	NEUTRON BANK SIZE	1025	
XNB	EXTRA POSITIONS IN NEUTRON BANK	0	
NFB	FISSION BANK SIZE	1000	
XFB	EXTRA POSITIONS IN FISSION BANK	0	
WTA	DEFAULT VALUE OF WEIGHT AVERAGE	0.5000	
WTH	WEIGHT HIGH FOR SPLITTING	3.0000	
WTL	WEIGHT LOW FOR RUSSIAN ROULETTE	0.3333	
RND	STARTING RANDOM NUMBER	BB827100001	
NB8	NUMBER OF D.A. BLOCKS ON UNIT 8	200	
NL8	LENGTH OF D.A. BLOCKS ON UNIT 8	512	
ADJ	MODE OF CALCULATION	FORWARD	
	INPUT DATA WRITTEN ON RESTART UNIT	NO	
	BINARY DATA INTERFACE	YES	

```
*********************************************************************************************************************
*********************************************************************************************************************
***                                                                                                               ***
***                              TRIGA - PREF. FLOOD CANISTER  - 2 ROD FILLING CANISTER + TOLERANCE               ***
***                                                                                                               ***
*********************************************************************************************************************
***                                  ******      LOGICAL PARAMETERS        ******                                 ***
***                                                                                                               ***
***  RUN  EXECUTE PROBLEM AFTER CHECKING DATA    YES            PLT  PLOT PICTURE MAP(S)                      NO ***
***                                                                                                               ***
***  FLX  COMPUTE FLUX                            NO            FDN  COMPUTE FISSION DENSITIES                NO ***
***                                                                                                               ***
***  SMU  COMPUTE AVG UNIT SELF-MULTIPLICATION    NO            NUB  COMPUTE NU-BAR & AVG FISSION GROUP       YES ***
***                                                                                                               ***
***  MKU  COMPUTE MATRIX K-EFF BY UNIT NUMBER     NO            MKP  COMPUTE MATRIX K-EFF BY UNIT LOCATION    NO ***
***                                                                                                               ***
***  CKU  COMPUTE COFACTOR K-EFF BY UNIT NUMBER   NO            CKP  COMPUTE COFACTOR K-EFF BY UNIT LOCATION  NO ***
***                                                                                                               ***
***  FMU  PRINT FISS PROD MATRIX BY UNIT NUMBER   NO            FMP  PRINT FISS PROD MATRIX BY UNIT LOCATION  NO ***
***                                                                                                               ***
***  MKH  COMPUTE MATRIX K-EFF BY HOLE NUMBER     NO            MKA  COMPUTE MATRIX K-EFF BY ARRAY NUMBER     NO ***
***                                                                                                               ***
***  CKH  COMPUTE COFACTOR K-EFF BY HOLE NUMBER   NO            CKA  COMPUTE COFACTOR K-EFF BY ARRAY NUMBER   NO ***
***                                                                                                               ***
***  FMH  PRINT FISS PROD MATRIX BY HOLE NUMBER   NO            FMA  PRINT FISS PROD MATRIX BY ARRAY NUMBER   NO ***
***                                                                                                               ***
***  HHL  COLLECT MATRIX BY HIGHEST HOLE LEVEL    NO            HAL  COLLECT MATRIX BY HIGHEST ARRAY LEVEL    NO ***
***                                                                                                               ***
***  AMX  PRINT ALL MIXED CROSS SECTIONS          NO            FAR  PRINT FIS. AND ABS. BY REGION            NO ***
***                                                                                                               ***
***  XS1  PRINT 1-D MIXTURE X-SECTIONS            NO            GAS  PRINT FAR BY GROUP                       NO ***
***                                                                                                               ***
***  XS2  PRINT 2-D MIXTURE X-SECTIONS            NO            PAX  PRINT XSEC-ALBEDO CORRELATION TABLES     NO ***
***                                                                                                               ***
***  XAP  PRINT MIXTURE ANGLES & PROBABILITIES    NO            PWT  PRINT WEIGHT AVERAGE ARRAY               NO ***
***                                                                                                               ***
***  PKI  PRINT FISSION SPECTRUM                  NO            PGM  PRINT INPUT GEOMETRY                     NO ***
***                                                                                                               ***
***  P1D  PRINT EXTRA 1-D CROSS SECTIONS          NO            BUG  PRINT DEBUG INFORMATION                  NO ***
***                                                                                                               ***
***                                                             TRK  PRINT TRACKING INFORMATION               NO ***
***                                                                                                               ***
***                                                                                                               ***
*********************************************************************************************************************
*********************************************************************************************************************
*********************************************************************************************************************
                                   PARAMETER INPUT COMPLETED

                        ........    0 IO'S WERE USED READING THE PARAMETER DATA      ........

                      ************** DATA READING COMPLETED **************

     ***************************************************************************************************
     ***                                                                                             ***
     ***          TRIGA - PREF. FLOOD CANISTER  - 2 ROD FILLING CANISTER + TOLERANCE                 ***
     ***                                                                                             ***
     ***************************************************************************************************
     ***************************************************************************************************
     ***                                                                                             ***
     ***                                ****** ADDITIONAL INFORMATION ******                         ***
     ***                                                                                             ***
     ***  NUMBER OF ENERGY GROUPS              27       USE LATTICE GEOMETRY                    YES  ***
     ***                                                                                             ***
     ***  NO. OF FISSION SPECTRUM SOURCE GROUP  1       GLOBAL ARRAY NUMBER                      20  ***
     ***                                                                                             ***
     ***  NO. OF SCATTERING ANGLES IN XSECS     2       NUMBER OF UNITS IN THE GLOBAL X DIR.      1  ***
     ***                                                                                             ***
     ***  ENTRIES/NEUTRON IN THE NEUTRON BANK  25       NUMBER OF UNITS IN THE GLOBAL Y DIR.      1  ***
     ***                                                                                             ***
     ***  ENTRIES/NEUTRON IN THE FISSION BANK  18       NUMBER OF UNITS IN THE GLOBAL Z DIR.      7  ***
     ***                                                                                             ***
     ***  NUMBER OF MIXTURES USED              10       USE A GLOBAL REFLECTOR                  YES  ***
     ***                                                                                             ***
     ***  NUMBER OF BIAS ID'S USED              1       USE NESTED HOLES                        YES  ***
     ***                                                                                             ***
     ***  NUMBER OF DIFFERENTIAL ALBEDOS USED   0       NUMBER OF HOLES                          37  ***
     ***                                                                                             ***
     ***  TOTAL INPUT GEOMETRY REGIONS         61       MAXIMUM HOLE NESTING LEVEL               3  ***
     ***                                                                                             ***
     ***  NUMBER OF GEOMETRY REGIONS USED      61       USE NESTED ARRAYS                       YES  ***
     ***                                                                                             ***
     ***  LARGEST GEOMETRY UNIT NUMBER         82       NUMBER OF ARRAYS USED                    7  ***
     ***                                                                                             ***
     ***  LARGEST ARRAY NUMBER                 20       MAXIMUM ARRAY NESTING LEVEL              2  ***
     ***                                                                                             ***
     ***                                                                                             ***
     ***  +X BOUNDARY CONDITION               MIR       -X BOUNDARY CONDITION                   MIR  ***
     ***                                                                                             ***
     ***  +Y BOUNDARY CONDITION               MIR       -Y BOUNDARY CONDITION                   MIR  ***
     ***                                                                                             ***
     ***  +Z BOUNDARY CONDITION               MIR       -Z BOUNDARY CONDITION                   MIR  ***
     ***                                                                                             ***
     ***************************************************************************************************
```

```
*******************************************************************************************
***                                                                                     ***
***          TRIGA - PREF. FLOOD CANISTER  - 2 ROD FILLING CANISTER + TOLERANCE         ***
***                                                                                     ***
*******************************************************************************************
*******************************************************************************************
***                                                                                     ***
***                    ****** SPACE AND SUPERGROUP INFORMATION ******                   ***
***                                                                                     ***
***       100000 WORDS IS THE TOTAL SPACE AVAILABLE.                                    ***
***                                                                                     ***
***        48807 WORDS WERE USED FOR NON-SUPERGROUP STORAGE.                            ***
***                                                                                     ***
***        51193 WORDS OF STORAGE ARE AVAILABLE FOR SUPERGROUPED DATA.                  ***
***                                                                                     ***
***        99679 WORDS OF STORAGE ARE AVAILABLE FOR CONSTRUCTING THE SUPERGROUPS.       ***
***                                                                                     ***
***        51133 WORDS OF STORAGE ARE AVAILABLE TO EACH SUPERGROUP.                     ***
***                                                                                     ***
***         1315 WORDS ARE NEEDED FOR THE LARGEST GROUP.                                ***
***                                                                                     ***
***        50338 WORDS OF STORAGE IS SUFFICIENT TO RUN THIS PROBLEM.                    ***
***                                                                                     ***
***        65200 WORDS OF STORAGE WILL ALLOW THE PROBLEM TO RUN WITH ONE SUPERGROUP.     ***
***                                                                                     ***
***        65696 WORDS OF STORAGE WILL BE USED TO RUN THIS PROBLEM.                     ***
***                                                                                     ***
*******************************************************************************************
*******************************************************************************************
***                                                                                     ***
***                   STARTING      ENDING       XSEC       ALBEDO      TOTAL          ***
***   SUPERGROUP        GROUP        GROUP      LENGTH      LENGTH      LENGTH          ***
***                                                                                     ***
***                                                                                     ***
***          1            1            27         3334           0       16333          ***
***                                                                                     ***
*******************************************************************************************

            ........    0 IO'S WERE USED IN SUPERGROUPING    ........

           ************************************************************
           **                                                        **
           **   ARRAY      UNITS IN   UNITS IN   UNITS IN   NESTING  **
           **   NUMBER      X DIR.     Y DIR.     Z DIR.     LEVEL   **
           **                                                        **
           **     1            1          5          1          2    **
           **                                                        **
           **     2            1          3          1          2    **
           **                                                        **
           **     3            1          3          1          2    **
           **                                                        **
           **    11            1          5          1          2    **
           **                                                        **
           **    12            1          3          1          2    **
           **                                                        **
           **    13            1          3          1          2    **
           **                                                        **
           **    20 GLOBAL     1          1          7          1    **
           **                                                        **
           ************************************************************

           ........    0 IO'S WERE USED LOADING THE DATA    ........

                    TRIGA - PREF. FLOOD CANISTER  - 2 ROD FILLING CANISTER + TOLERANCE

                MEDIA BIAS      GEOMETRY DESCRIPTION FOR THOSE UNITS UTILIZED IN THIS PROBLEM
REGION           NUM   ID


                                          -----   UNIT     1   -----

TRIGA FUEL (SMEARED)

  1 CYLINDER         1  1  RADIUS =  3.9877     +Z =  60.959     -Z = 1.00000E-03 CENTERLINE IS AT  X = 0.00000      Y = 0.00000


                                          -----   UNIT     5   -----

3.38 IN WIDTH / 0.28 IN THICKNESS DIVIDER CENTER STACK (SEALED)

  1 CUBOID           2  1      +X =  4.2926     -X = -4.2926     +Y = 0.71120     -Y = 0.00000     +Z =  74.290     -Z = -8.2550


                                          -----   UNIT     6   -----

3.38 IN WIDTH / 0.24 IN THICKNESS DIVIDER OUTSIDE STACK (SEALED)

  1 CUBOID           2  1      +X =  4.2926     -X = -4.2926     +Y = 0.60960     -Y = 0.00000     +Z =  74.290     -Z = -8.2550


                                          -----   UNIT     7   -----

SEALED CANISTER

  1 CYLINDER        12  1  RADIUS =  3.9878     +Z =  60.960     -Z = 0.00000     CENTERLINE IS AT  X = 0.00000      Y = 0.00000
```

```
    HOLE NUMBER      1       AT X = 0.00000      Y = 0.00000      Z = 0.00000     IS UNIT NUMBER      1

  2 CYLINDER         2  1  RADIUS =  4.1529     +Z =  63.500     -Z = -1.2700     CENTERLINE IS AT  X = 0.00000      Y = 0.00000

  3 CYLINDER        12  1  RADIUS =  4.1529     +Z =  74.290     -Z = -8.2550     CENTERLINE IS AT  X = 0.00000      Y = 0.00000


                                              -----   UNIT    10   -----

TRIGA ELEMENTS IN TOP OF 3.38 IN X 3.38 IN OPENING (SEALED)

  1 CUBOID          12  1      +X =  4.2926     -X = -4.2926     +Y =  4.2926     -Y = -4.2926     +Z =  74.290     -Z = -8.2550

    HOLE NUMBER      2       AT X = 0.00000      Y = 0.13960      Z = 0.00000     IS UNIT NUMBER      7


                                              -----   UNIT    11   -----

TRIGA ELEMENTS IN BOTTOM OF 3.38 IN X 3.38 IN OPENING (SEALED)

  1 CUBOID          12  1      +X =  4.2926     -X = -4.2926     +Y =  4.2926     -Y = -4.2926     +Z =  74.290     -Z = -8.2550

    HOLE NUMBER      3       AT X = 0.00000      Y =-0.13960      Z = 0.00000     IS UNIT NUMBER      7
_                                       TRIGA - PREF. FLOOD CANISTER  - 2 ROD FILLING CANISTER + TOLERANCE

                MEDIA BIAS      GEOMETRY DESCRIPTION FOR THOSE UNITS UTILIZED IN THIS PROBLEM
REGION           NUM   ID


                                              -----   UNIT    12   -----

TRIGA ELEMENTS IN BOTTOM RIGHT OF 3.38 IN X 3.38 IN OPENING (SEALED)

  1 CUBOID          12  1      +X =  4.2926     -X = -4.2926     +Y =  4.2926     -Y = -4.2926     +Z =  74.290     -Z = -8.2550

    HOLE NUMBER      4       AT X = 0.13960      Y =-0.13960      Z = 0.00000     IS UNIT NUMBER      7


                                              -----   UNIT    13   -----

TRIGA ELEMENTS IN TOP RIGHT OF 3.38 IN X 3.38 IN OPENING (SEALED)

  1 CUBOID          12  1      +X =  4.2926     -X = -4.2926     +Y =  4.2926     -Y = -4.2926     +Z =  74.290     -Z = -8.2550

    HOLE NUMBER      5       AT X = 0.13960      Y = 0.13960      Z = 0.00000     IS UNIT NUMBER      7


                                              -----   UNIT    14   -----

TRIGA ELEMENTS IN BOTTOM LEFT OF 3.38 IN X 3.38 IN OPENING (SEALED)

  1 CUBOID          12  1      +X =  4.2926     -X = -4.2926     +Y =  4.2926     -Y = -4.2926     +Z =  74.290     -Z = -8.2550

    HOLE NUMBER      6       AT X =-0.13960      Y =-0.13960      Z = 0.00000     IS UNIT NUMBER      7


                                              -----   UNIT    15   -----

TRIGA ELEMENTS IN TOP LEFT OF 3.38 IN X 3.38 IN OPENING (SEALED)

  1 CUBOID          12  1      +X =  4.2926     -X = -4.2926     +Y =  4.2926     -Y = -4.2926     +Z =  74.290     -Z = -8.2550

    HOLE NUMBER      7       AT X =-0.13960      Y = 0.13960      Z = 0.00000     IS UNIT NUMBER      7


                                              -----   UNIT    16   -----

TRIGA BASKET 3.38 IN X 3.38 IN CENTER OPENING (SEALED)

  1 CUBOID          12  1      +X =  4.2926     -X = -4.2926     +Y =  4.2926     -Y = -4.2926     +Z =  74.290     -Z = -8.2550


                                        -----   UNIT    20  EXTERNAL TO LATTICE  1   -----

CENTER COLUMN OF THREE OPENINGS W/ 0.28 IN PLATE (SEALED)

  1 ARRAY NUMBER     1         +X =  4.2926     -X = -4.2926     +Y =  13.589     -Y = -13.589     +Z =  74.290     -Z = -8.2550

  2 CUBOID           2  1      +X =  5.0038     -X = -5.0038     +Y =  14.300     -Y = -14.300     +Z =  74.290     -Z = -8.2550
_                                       TRIGA - PREF. FLOOD CANISTER  - 2 ROD FILLING CANISTER + TOLERANCE

                MEDIA BIAS      GEOMETRY DESCRIPTION FOR THOSE UNITS UTILIZED IN THIS PROBLEM
REGION           NUM   ID


                                        -----   UNIT    21  EXTERNAL TO LATTICE  2   -----

LEFT OUTSIDE COLUMN OF TWO OPENINGS W/ 0.12 IN PLATE (SEALED)

  1 ARRAY NUMBER     2         +X =  4.2926     -X = -4.2926     +Y =  8.8900     -Y = -8.8900     +Z =  74.290     -Z = -8.2550

  2 CUBOID           2  1      +X =  4.2926     -X = -4.5974     +Y =  9.1948     -Y = -9.1948     +Z =  74.290     -Z = -8.2550
```

```
                                        -----   UNIT    22  EXTERNAL TO LATTICE  3   -----

RIGHT OUTSIDE COLUMN OF TWO OPENINGS W/ 0.12 IN PLATE (SEALED)

  1 ARRAY NUMBER     3         +X =  4.2926     -X = -4.2926     +Y =  8.8900     -Y = -8.8900     +Z =  74.290     -Z = -8.2550

  2 CUBOID           2  1      +X =  4.5974     -X = -4.2926     +Y =  9.1948     -Y = -9.1948     +Z =  74.290     -Z = -8.2550

                                              -----   UNIT    30   -----

NAC-LWT TRIGA BASKET (SEALED)

  1 CYLINDER        12  1  RADIUS =  17.100     +Z =  74.290     -Z = -8.2550     CENTERLINE IS AT  X = 0.00000      Y = 0.00000

    HOLE NUMBER      8       AT X = 0.00000      Y = 0.00000      Z = 0.00000     IS UNIT NUMBER     20

    HOLE NUMBER      9       AT X = -9.2974      Y = 0.00000      Z = 0.00000     IS UNIT NUMBER     21

    HOLE NUMBER     10       AT X =  9.2974      Y = 0.00000      Z = 0.00000     IS UNIT NUMBER     22

  2 CYLINDER         2  1  RADIUS =  18.910     +Z =  74.930     -Z = -8.8900     CENTERLINE IS AT  X = 0.00000      Y = 0.00000

  3 CYLINDER         6  1  RADIUS =  33.465     +Z =  74.930     -Z = -8.8900     CENTERLINE IS AT  X = 0.00000      Y = 0.00000

  4 CYLINDER         2  1  RADIUS =  36.519     +Z =  74.930     -Z = -8.8900     CENTERLINE IS AT  X = 0.00000      Y = 0.00000

  5 CYLINDER         7  1  RADIUS =  49.223     +Z =  74.930     -Z = -8.8900     CENTERLINE IS AT  X = 0.00000      Y = 0.00000

  6 CYLINDER         2  1  RADIUS =  49.822     +Z =  74.930     -Z = -8.8900     CENTERLINE IS AT  X = 0.00000      Y = 0.00000

  7 CUBOID           8  1      +X =  49.822     -X = -49.822     +Y =  49.822     -Y = -49.822     +Z =  74.930     -Z = -8.8900
_                                       TRIGA - PREF. FLOOD CANISTER  - 2 ROD FILLING CANISTER + TOLERANCE

                MEDIA BIAS      GEOMETRY DESCRIPTION FOR THOSE UNITS UTILIZED IN THIS PROBLEM
REGION           NUM   ID

                                              -----   UNIT    41   -----

TRIGA FUEL ELEMENT

  1 CYLINDER         4  1  RADIUS = 0.28580     +Z =  19.050     -Z = -19.050     CENTERLINE IS AT  X = 0.00000      Y = 0.00000

  2 CYLINDER        10  1  RADIUS =  1.8224     +Z =  19.050     -Z = -19.050     CENTERLINE IS AT  X = 0.00000      Y = 0.00000

  3 CYLINDER         5  1  RADIUS =  1.8224     +Z =  27.737     -Z = -27.737     CENTERLINE IS AT  X = 0.00000      Y = 0.00000

  4 CYLINDER         2  1  RADIUS =  1.8771     +Z =  27.737     -Z = -27.737     CENTERLINE IS AT  X = 0.00000      Y = 0.00000

  5 CYLINDER        11  1  RADIUS =  1.8771     +Z =  36.703     -Z = -36.703     CENTERLINE IS AT  X = 0.00000      Y = 0.00000

                                              -----   UNIT    45   -----

3.38 IN WIDTH / 0.28 IN THICKNESS DIVIDER CENTER STACK

  1 CUBOID           2  1      +X =  4.2926     -X = -4.2926     +Y = 0.71120     -Y = 0.00000     +Z =  36.703     -Z = -36.703

                                              -----   UNIT    46   -----

3.38 IN WIDTH / 0.24 IN THICKNESS DIVIDER OUTSIDE STACK

  1 CUBOID           2  1      +X =  4.2926     -X = -4.2926     +Y = 0.60960     -Y = 0.00000     +Z =  36.703     -Z = -36.703

                                              -----   UNIT    50   -----

TRIGA FUEL ELEMENTS IN TOP OF 3.38 IN X 3.38 IN OPENING

  1 CUBOID          12  1      +X =  4.2926     -X = -4.2926     +Y =  4.2926     -Y = -4.2926     +Z =  36.703     -Z = -36.703

    HOLE NUMBER     11       AT X =  1.8772      Y =  2.4154      Z = 0.00000     IS UNIT NUMBER     41

    HOLE NUMBER     12       AT X = -1.8772      Y =  2.4154      Z = 0.00000     IS UNIT NUMBER     41

    HOLE NUMBER     13       AT X = -1.8772      Y = -1.3389      Z = 0.00000     IS UNIT NUMBER     41

    HOLE NUMBER     14       AT X =  1.8772      Y = -1.3389      Z = 0.00000     IS UNIT NUMBER     41
_                                       TRIGA - PREF. FLOOD CANISTER  - 2 ROD FILLING CANISTER + TOLERANCE

                MEDIA BIAS      GEOMETRY DESCRIPTION FOR THOSE UNITS UTILIZED IN THIS PROBLEM
REGION           NUM   ID

                                              -----   UNIT    51   -----

TRIGA FUEL ELEMENTS IN BOTTOM OF 3.38 IN X 3.38 IN OPENING

  1 CUBOID          12  1      +X =  4.2926     -X = -4.2926     +Y =  4.2926     -Y = -4.2926     +Z =  36.703     -Z = -36.703

    HOLE NUMBER     15       AT X =  1.8772      Y = -2.4154      Z = 0.00000     IS UNIT NUMBER     41

    HOLE NUMBER     16       AT X = -1.8772      Y = -2.4154      Z = 0.00000     IS UNIT NUMBER     41
```

```
    HOLE NUMBER     17       AT X = -1.8772      Y =  1.3389      Z = 0.00000     IS UNIT NUMBER     41

    HOLE NUMBER     18       AT X =  1.8772      Y =  1.3389      Z = 0.00000     IS UNIT NUMBER     41

                                                -----   UNIT    52   -----

TRIGA FUEL ELEMENTS IN BOTTOM RIGHT OF 3.38 IN X 3.38 IN OPENING

  1 CUBOID          12  1      +X =  4.2926     -X = -4.2926     +Y =  4.2926     -Y = -4.2926     +Z =  36.703     -Z = -36.703

    HOLE NUMBER     19       AT X =  2.4154      Y = -2.4154      Z = 0.00000     IS UNIT NUMBER     41

    HOLE NUMBER     20       AT X =  2.4154      Y =  1.3389      Z = 0.00000     IS UNIT NUMBER     41

    HOLE NUMBER     21       AT X = -1.3389      Y = -2.4154      Z = 0.00000     IS UNIT NUMBER     41

    HOLE NUMBER     22       AT X = -1.3389      Y =  1.3389      Z = 0.00000     IS UNIT NUMBER     41

                                                -----   UNIT    53   -----

TRIGA FUEL ELEMENTS IN TOP RIGHT OF 3.38 IN X 3.38 IN OPENING

  1 CUBOID          12  1      +X =  4.2926     -X = -4.2926     +Y =  4.2926     -Y = -4.2926     +Z =  36.703     -Z = -36.703

    HOLE NUMBER     23       AT X =  2.4154      Y =  2.4154      Z = 0.00000     IS UNIT NUMBER     41

    HOLE NUMBER     24       AT X =  2.4154      Y = -1.3389      Z = 0.00000     IS UNIT NUMBER     41

    HOLE NUMBER     25       AT X = -1.3389      Y =  2.4154      Z = 0.00000     IS UNIT NUMBER     41

    HOLE NUMBER     26       AT X = -1.3389      Y = -1.3389      Z = 0.00000     IS UNIT NUMBER     41
_                                       TRIGA - PREF. FLOOD CANISTER  - 2 ROD FILLING CANISTER + TOLERANCE

                MEDIA BIAS      GEOMETRY DESCRIPTION FOR THOSE UNITS UTILIZED IN THIS PROBLEM
REGION           NUM   ID

                                                -----   UNIT    54   -----

TRIGA FUEL ELEMENTS IN BOTTOM LEFT OF 3.38 IN X 3.38 IN OPENING

  1 CUBOID          12  1      +X =  4.2926     -X = -4.2926     +Y =  4.2926     -Y = -4.2926     +Z =  36.703     -Z = -36.703

    HOLE NUMBER     27       AT X = -2.4154      Y = -2.4154      Z = 0.00000     IS UNIT NUMBER     41

    HOLE NUMBER     28       AT X = -2.4154      Y =  1.3389      Z = 0.00000     IS UNIT NUMBER     41

    HOLE NUMBER     29       AT X =  1.3389      Y = -2.4154      Z = 0.00000     IS UNIT NUMBER     41

    HOLE NUMBER     30       AT X =  1.3389      Y =  1.3389      Z = 0.00000     IS UNIT NUMBER     41

                                                -----   UNIT    55   -----

TRIGA FUEL ELEMENTS IN TOP LEFT OF 3.38 IN X 3.38 IN OPENING

  1 CUBOID          12  1      +X =  4.2926     -X = -4.2926     +Y =  4.2926     -Y = -4.2926     +Z =  36.703     -Z = -36.703

    HOLE NUMBER     31       AT X = -2.4154      Y =  2.4154      Z = 0.00000     IS UNIT NUMBER     41

    HOLE NUMBER     32       AT X = -2.4154      Y = -1.3389      Z = 0.00000     IS UNIT NUMBER     41

    HOLE NUMBER     33       AT X =  1.3389      Y =  2.4154      Z = 0.00000     IS UNIT NUMBER     41

    HOLE NUMBER     34       AT X =  1.3389      Y = -1.3389      Z = 0.00000     IS UNIT NUMBER     41

                                                -----   UNIT    56   -----
TRIGA BASKET 3.38 IN X 3.38 IN CENTER OPENING

  1 CUBOID          12  1      +X =  4.2926     -X = -4.2926     +Y =  4.2926     -Y = -4.2926     +Z =  36.703     -Z = -36.703

                                        -----   UNIT    60  EXTERNAL TO LATTICE 11   -----

CENTER COLUMN OF THREE OPENINGS W/ 0.28 IN PLATE

  1 ARRAY NUMBER    11         +X =  4.2926     -X = -4.2926     +Y =  13.589     -Y = -13.589     +Z =  36.703     -Z = -36.703

  2 CUBOID           2  1      +X =  5.0038     -X = -5.0038     +Y =  14.300     -Y = -14.300     +Z =  36.703     -Z = -36.703

                                        -----   UNIT    61  EXTERNAL TO LATTICE 12   -----

LEFT OUTSIDE COLUMN OF TWO OPENINGS W/ 0.12 IN PLATE

  1 ARRAY NUMBER    12         +X =  4.2926     -X = -4.2926     +Y =  8.8900     -Y = -8.8900     +Z =  36.703     -Z = -36.703

  2 CUBOID           2  1      +X =  4.2926     -X = -4.5974     +Y =  9.1948     -Y = -9.1948     +Z =  36.703     -Z = -36.703
_                                       TRIGA - PREF. FLOOD CANISTER  - 2 ROD FILLING CANISTER + TOLERANCE

                MEDIA BIAS      GEOMETRY DESCRIPTION FOR THOSE UNITS UTILIZED IN THIS PROBLEM
REGION           NUM   ID


                                        -----   UNIT    62  EXTERNAL TO LATTICE 13   -----

RIGHT OUTSIDE COLUMN OF TWO OPENINGS W/ 0.12 IN PLATE
```

```
  1 ARRAY NUMBER    13         +X =  4.2926     -X = -4.2926     +Y =  8.8900     -Y = -8.8900     +Z =  36.703     -Z = -36.703

  2 CUBOID           2  1      +X =  4.5974     -X = -4.2926     +Y =  9.1948     -Y = -9.1948     +Z =  36.703     -Z = -36.703

                                          -----   UNIT    70   -----
NAC-LWT TRIGA BASKET

  1 CYLINDER        12  1  RADIUS =  17.100     +Z =  36.703     -Z = -36.703     CENTERLINE IS AT  X = 0.00000      Y = 0.00000

    HOLE NUMBER     35       AT X = 0.00000      Y = 0.00000      Z = 0.00000     IS UNIT NUMBER     60

    HOLE NUMBER     36       AT X = -9.2974      Y = 0.00000      Z = 0.00000     IS UNIT NUMBER     61

    HOLE NUMBER     37       AT X =  9.2974      Y = 0.00000      Z = 0.00000     IS UNIT NUMBER     62

  2 CYLINDER         2  1  RADIUS =  18.910     +Z =  37.338     -Z = -37.338     CENTERLINE IS AT  X = 0.00000      Y = 0.00000

  3 CYLINDER         6  1  RADIUS =  33.465     +Z =  37.338     -Z = -37.338     CENTERLINE IS AT  X = 0.00000      Y = 0.00000

  4 CYLINDER         2  1  RADIUS =  36.519     +Z =  37.338     -Z = -37.338     CENTERLINE IS AT  X = 0.00000      Y = 0.00000

  5 CYLINDER         7  1  RADIUS =  49.223     +Z =  37.338     -Z = -37.338     CENTERLINE IS AT  X = 0.00000      Y = 0.00000

  6 CYLINDER         2  1  RADIUS =  49.822     +Z =  37.338     -Z = -37.338     CENTERLINE IS AT  X = 0.00000      Y = 0.00000

  7 CUBOID           8  1      +X =  49.822     -X = -49.822     +Y =  49.822     -Y = -49.822     +Z =  37.338     -Z = -37.338

                                          -----   UNIT    80   -----
SIMPLIFIED LID STRUCTURE NAC-LWT

  1 CYLINDER         2  1  RADIUS =  36.519     +Z =  14.135     -Z = -14.135     CENTERLINE IS AT  X = 0.00000      Y = 0.00000

  2 CYLINDER         8  1  RADIUS =  49.822     +Z =  14.135     -Z = -14.135     CENTERLINE IS AT  X = 0.00000      Y = 0.00000

  3 CUBOID           8  1      +X =  49.822     -X = -49.822     +Y =  49.822     -Y = -49.822     +Z =  14.135     -Z = -14.135
_                                    TRIGA - PREF. FLOOD CANISTER  - 2 ROD FILLING CANISTER + TOLERANCE

                MEDIA BIAS      GEOMETRY DESCRIPTION FOR THOSE UNITS UTILIZED IN THIS PROBLEM
REGION           NUM   ID

                                          -----   UNIT    81   -----
SIMPLIFIED CASK BOTTOM STRUCTURE NAC-LWT

  1 CYLINDER         6  1  RADIUS =  26.353     +Z =  3.8100     -Z = -3.8100     CENTERLINE IS AT  X = 0.00000      Y = 0.00000

  2 CYLINDER         2  1  RADIUS =  36.619     +Z =  13.970     -Z = -12.700     CENTERLINE IS AT  X = 0.00000      Y = 0.00000

  3 CYLINDER         8  1  RADIUS =  49.822     +Z =  13.970     -Z = -12.700     CENTERLINE IS AT  X = 0.00000      Y = 0.00000

  4 CUBOID           8  1      +X =  49.822     -X = -49.822     +Y =  49.822     -Y = -49.822     +Z =  13.970     -Z = -12.700

                                    ******************   GLOBAL   ******************
                                    -----   UNIT    82  EXTERNAL TO LATTICE 20   -----
STACK OF 5 BASKETS IN CASK

  1 ARRAY NUMBER    20         +X =  49.822     -X = -49.822     +Y =  49.822     -Y = -49.822     +Z =  225.31     -Z = -221.30
_                          TRIGA - PREF. FLOOD CANISTER  - 2 ROD FILLING CANISTER + TOLERANCE

                -------  UNIT ORIENTATION DESCRIPTION FOR ARRAY   1         -------

Z LAYER   1, X COLUMN   1 TO   1 LEFT TO RIGHT   Y ROW   1 TO   5  BOTTOM TO TOP

 11

  5

 16

  5

 10

                -------  UNIT ORIENTATION DESCRIPTION FOR ARRAY   2         -------

Z LAYER   1, X COLUMN   1 TO   1 LEFT TO RIGHT   Y ROW   1 TO   3  BOTTOM TO TOP

 12

  6

 13

                -------  UNIT ORIENTATION DESCRIPTION FOR ARRAY   3         -------

Z LAYER   1, X COLUMN   1 TO   1 LEFT TO RIGHT   Y ROW   1 TO   3  BOTTOM TO TOP

 14

  6

 15

                -------  UNIT ORIENTATION DESCRIPTION FOR ARRAY  11         -------
```

```
Z LAYER   1, X COLUMN   1 TO   1 LEFT TO RIGHT   Y ROW   1 TO   5  BOTTOM TO TOP

 51

 45

 56

 45

 50
                -------  UNIT ORIENTATION DESCRIPTION FOR ARRAY  12         -------

Z LAYER   1, X COLUMN   1 TO   1 LEFT TO RIGHT   Y ROW   1 TO   3  BOTTOM TO TOP

 52

 46

 53
_                       TRIGA - PREF. FLOOD CANISTER  - 2 ROD FILLING CANISTER + TOLERANCE
                -------  UNIT ORIENTATION DESCRIPTION FOR ARRAY  13         -------

Z LAYER   1, X COLUMN   1 TO   1 LEFT TO RIGHT   Y ROW   1 TO   3  BOTTOM TO TOP

 54

 46

 55
                -------  UNIT ORIENTATION DESCRIPTION FOR ARRAY  20         -------

Z LAYER   1, X COLUMN   1 TO   1 LEFT TO RIGHT   Y ROW   1 TO   1  BOTTOM TO TOP

 81
Z LAYER   2, X COLUMN   1 TO   1 LEFT TO RIGHT   Y ROW   1 TO   1  BOTTOM TO TOP

 30
Z LAYER   3, X COLUMN   1 TO   1 LEFT TO RIGHT   Y ROW   1 TO   1  BOTTOM TO TOP

 70
Z LAYER   4, X COLUMN   1 TO   1 LEFT TO RIGHT   Y ROW   1 TO   1  BOTTOM TO TOP

 70
Z LAYER   5, X COLUMN   1 TO   1 LEFT TO RIGHT   Y ROW   1 TO   1  BOTTOM TO TOP

 70
Z LAYER   6, X COLUMN   1 TO   1 LEFT TO RIGHT   Y ROW   1 TO   1  BOTTOM TO TOP

 30
Z LAYER   7, X COLUMN   1 TO   1 LEFT TO RIGHT   Y ROW   1 TO   1  BOTTOM TO TOP

 80
_                                    TRIGA - PREF. FLOOD CANISTER  - 2 ROD FILLING CANISTER + TOLERANCE
                                   VOLUMES FOR THOSE UNITS UTILIZED IN  THIS PROBLEM

                                      GEOMETRY                                  CUMULATIVE
                     UNIT    REGION     REGION            VOLUME                  VOLUME

                       1         1         1         3.04527E+03 CM**3         3.04527E+03 CM**3

                       5         1         2         5.04003E+02 CM**3         5.04003E+02 CM**3

                       6         1         3         4.32002E+02 CM**3         4.32002E+02 CM**3

                       7         1         4         2.52441E-01 CM**3         3.04552E+03 CM**3
                                 2         5         4.63830E+02 CM**3         3.50935E+03 CM**3
                                 3         6         9.63081E+02 CM**3         4.47243E+03 CM**3

                      10         1         7         1.61160E+03 CM**3         6.08403E+03 CM**3

                      11         1         8         1.61160E+03 CM**3         6.08403E+03 CM**3

                      12         1         9         1.61160E+03 CM**3         6.08403E+03 CM**3

                      13         1        10         1.61160E+03 CM**3         6.08403E+03 CM**3

                      14         1        11         1.61160E+03 CM**3         6.08403E+03 CM**3

                      15         1        12         1.61160E+03 CM**3         6.08403E+03 CM**3

                      16         1        13         6.08403E+03 CM**3         6.08403E+03 CM**3

                     SURROUNDING GEOMETRY VOLUMES -  GEOMETRY REGION     14 IS AN ARRAY PLACEMENT BOUNDARY REGION

                      20         1        14         1.92601E+04 CM**3         1.92601E+04 CM**3
                                 2        15         4.36604E+03 CM**3         2.36261E+04 CM**3

                     SURROUNDING GEOMETRY VOLUMES -  GEOMETRY REGION     16 IS AN ARRAY PLACEMENT BOUNDARY REGION

                      21         1        16         1.26001E+04 CM**3         1.26001E+04 CM**3
                                 2        17         8.94680E+02 CM**3         1.34948E+04 CM**3

                     SURROUNDING GEOMETRY VOLUMES -  GEOMETRY REGION     18 IS AN ARRAY PLACEMENT BOUNDARY REGION

                      22         1        18         1.26001E+04 CM**3         1.26001E+04 CM**3
                                 2        19         8.94680E+02 CM**3         1.34948E+04 CM**3
```

30	1	20	2.52129E+04 CM**3	7.58286E+04 CM**3
	2	21	1.83375E+04 CM**3	9.41660E+04 CM**3
	3	22	2.00728E+05 CM**3	2.94894E+05 CM**3
	4	23	5.62864E+04 CM**3	3.51181E+05 CM**3
	5	24	2.86831E+05 CM**3	6.38011E+05 CM**3
	6	25	1.56332E+04 CM**3	6.53645E+05 CM**3
	7	26	1.78602E+05 CM**3	8.32246E+05 CM**3
41	1	27	9.77686E+00 CM**3	9.77686E+00 CM**3
	2	28	3.87746E+02 CM**3	3.97523E+02 CM**3
	3	29	1.81270E+02 CM**3	5.78793E+02 CM**3
	4	30	3.52668E+01 CM**3	6.14060E+02 CM**3
	5	31	1.98501E+02 CM**3	8.12561E+02 CM**3
45	1	32	4.48202E+02 CM**3	4.48202E+02 CM**3
46	1	33	3.84173E+02 CM**3	3.84173E+02 CM**3
50	1	34	2.16019E+03 CM**3	5.41044E+03 CM**3
51	1	35	2.16019E+03 CM**3	5.41044E+03 CM**3
52	1	36	2.16019E+03 CM**3	5.41044E+03 CM**3
53	1	37	2.16019E+03 CM**3	5.41044E+03 CM**3
54	1	38	2.16019E+03 CM**3	5.41044E+03 CM**3
55	1	39	2.16019E+03 CM**3	5.41044E+03 CM**3
56	1	40	5.41044E+03 CM**3	5.41044E+03 CM**3

SURROUNDING GEOMETRY VOLUMES - GEOMETRY REGION 41 IS AN ARRAY PLACEMENT BOUNDARY REGION

60	1	41	1.71277E+04 CM**3	1.71277E+04 CM**3
	2	42	3.88265E+03 CM**3	2.10104E+04 CM**3

SURROUNDING GEOMETRY VOLUMES - GEOMETRY REGION 43 IS AN ARRAY PLACEMENT BOUNDARY REGION

61	1	43	1.12050E+04 CM**3	1.12050E+04 CM**3
	2	44	7.95625E+02 CM**3	1.20007E+04 CM**3

SURROUNDING GEOMETRY VOLUMES - GEOMETRY REGION 45 IS AN ARRAY PLACEMENT BOUNDARY REGION

62	1	45	1.12050E+04 CM**3	1.12050E+04 CM**3
	2	46	7.95625E+02 CM**3	1.20007E+04 CM**3
70	1	47	2.24215E+04 CM**3	6.74332E+04 CM**3
	2	48	1.64602E+04 CM**3	8.38934E+04 CM**3
	3	49	1.78831E+05 CM**3	2.62724E+05 CM**3
	4	50	5.01461E+04 CM**3	3.12870E+05 CM**3
	5	51	2.55540E+05 CM**3	5.68410E+05 CM**3
	6	52	1.39278E+04 CM**3	5.82338E+05 CM**3
	7	53	1.59118E+05 CM**3	7.41456E+05 CM**3
80	1	54	1.18444E+05 CM**3	1.18444E+05 CM**3
	2	55	1.02013E+05 CM**3	2.20456E+05 CM**3
	3	56	6.02374E+04 CM**3	2.80694E+05 CM**3
81	1	57	1.66245E+04 CM**3	1.66245E+04 CM**3
	2	58	9.57276E+04 CM**3	1.12352E+05 CM**3
	3	59	9.56257E+04 CM**3	2.07978E+05 CM**3
	4	60	5.68278E+04 CM**3	2.64806E+05 CM**3

SURROUNDING GEOMETRY VOLUMES - GEOMETRY REGION 61 IS AN ARRAY PLACEMENT BOUNDARY REGION

82	1	61	4.43436E+06 CM**3	4.43436E+06 CM**3

UNIT	USES	REGION	MIXTURE	TOTAL VOLUME
1	12	1	1	3.65432E+04 CM**3
5	4	1	2	2.01601E+03 CM**3
6	4	1	2	1.72801E+03 CM**3
7	12	1	12	3.02930E+00 CM**3
		2	2	5.56596E+03 CM**3
		3	12	1.15570E+04 CM**3
10	2	1	12	3.22321E+03 CM**3
11	2	1	12	3.22321E+03 CM**3
12	2	1	12	3.22321E+03 CM**3
13	2	1	12	3.22321E+03 CM**3
14	2	1	12	3.22321E+03 CM**3
15	2	1	12	3.22321E+03 CM**3
16	2	1	12	1.21681E+04 CM**3
20	2	1		3.85202E+04 CM**3
		2	2	8.73207E+03 CM**3
21	2	1		2.52001E+04 CM**3
		2	2	1.78936E+03 CM**3
22	2	1		2.52001E+04 CM**3

```
                                        2          2         1.78936E+03 CM**3

                                30          2       1         12         5.04259E+04 CM**3
                                                    2          2         3.66750E+04 CM**3
                                                    3          6         4.01456E+05 CM**3
                                                    4          2         1.12573E+05 CM**3
                                                    5          7         5.73661E+05 CM**3
                                                    6          2         3.12664E+04 CM**3
                                                    7          8         3.57203E+05 CM**3

                                41         72       1          4         7.03934E+02 CM**3
                                                    2         10         2.79177E+04 CM**3
                                                    3          5         1.30515E+04 CM**3
                                                    4          2         2.53921E+03 CM**3
                                                    5         11         1.42921E+04 CM**3

                                45          6       1          2         2.68921E+03 CM**3

                                46          6       1          2         2.30504E+03 CM**3

                                50          3       1         12         6.48058E+03 CM**3

                                51          3       1         12         6.48058E+03 CM**3

                                52          3       1         12         6.48058E+03 CM**3

                                53          3       1         12         6.48058E+03 CM**3

                                54          3       1         12         6.48058E+03 CM**3

                                55          3       1         12         6.48058E+03 CM**3

                                56          3       1         12         1.62313E+04 CM**3

                                60          3       1                    5.13832E+04 CM**3
                                                    2          2         1.16479E+04 CM**3

                                61          3       1                    3.36151E+04 CM**3
                                                    2          2         2.38688E+03 CM**3

                                62          3       1                    3.36151E+04 CM**3
                                                    2          2         2.38688E+03 CM**3

                                70          3       1         12         6.72644E+04 CM**3
                                                    2          2         4.93806E+04 CM**3
                                                    3          6         5.36492E+05 CM**3
                                                    4          2         1.50438E+05 CM**3
                                                    5          7         7.66620E+05 CM**3
                                                    6          2         4.17833E+04 CM**3
                                                    7          8         4.77353E+05 CM**3

                                80          1       1          2         1.18444E+05 CM**3
                                                    2          8         1.02013E+05 CM**3
                                                    3          8         6.02374E+04 CM**3

                                81          1       1          6         1.66245E+04 CM**3
                                                    2          2         9.57276E+04 CM**3
                                                    3          8         9.56257E+04 CM**3
                                                    4          8         5.68278E+04 CM**3

                                82          1       1                    4.43436E+06 CM**3

                                        TOTAL MIXTURE VOLUMES
                                    MIXTURE        TOTAL VOLUME              MASS(G)
                                        1         3.65432E+04 CM**3        8.13227E+04
                                        2         6.81863E+05 CM**3        5.40036E+06
                                        4         7.03934E+02 CM**3        4.56853E+03
                                        5         1.30515E+04 CM**3        2.74083E+04
                                        6         9.54572E+05 CM**3        1.08287E+07
                                        7         1.34028E+06 CM**3        1.33783E-14
                                        8         1.14926E+06 CM**3        1.14716E-14
                                       10         2.79177E+04 CM**3        1.62435E+05
                                       11         1.42921E+04 CM**3        3.81617E+04
                                       12         2.15872E+05 CM**3        2.15478E-15
      ********************************************************************************************************************************
      ***                                                                                                                          ***
      ***                                        BIASING INFORMATION                                                               ***
      ***                                                                                                                          ***
      ***     A DEFAULT WEIGHT OF    0.500 WILL BE USED FOR ALL BIAS ID'S.                                                         ***
      ***                                                                                                                          ***
      ********************************************************************************************************************************
                              ........    0 IO'S WERE USED IN KENO-V BEFORE TRACKING       ........

                              ........  0.01183 MINUTES WERE USED PROCESSING DATA.        ........

VOLUME FRACTION OF FISSILE MATERIAL IN THE CORE= 1.45367E-02

START TYPE 0 WAS USED.

THE NEUTRONS WERE STARTED WITH A FLAT DISTRIBUTION IN A CUBOID DEFINED BY:
                     +X= 4.98221E+01  -X=-4.98221E+01  +Y= 4.98221E+01  -Y=-4.98221E+01  +Z= 2.25308E+02  -Z=-2.21300E+02
THE FLAG TO START NEUTRONS IN THE REFLECTOR WAS TURNED OFF

1.31200 MINUTES WERE REQUIRED FOR STARTING.   TOTAL ELAPSED TIME IS 1.32267 MINUTES.
```

TRIGA - PREF. FLOOD CANISTER - 2 ROD FILLING CANISTER + TOLERANCE

GENERATION	GENERATION K-EFFECTIVE	ELAPSED TIME MINUTES	AVERAGE K-EFFECTIVE	AVG K-EFF DEVIATION	MATRIX K-EFFECTIVE	MATRIX K-EFF DEVIATION
KENO MESSAGE NUMBER K5-132		WARNING....ONLY	972 INDEPENDENT FISSION POINTS WERE GENERATED			
1	8.86573E-01	1.34833E+00	1.00000E+00	0.00000E+00	0.00000E+00	0.00000E+00
KENO MESSAGE NUMBER K5-132		WARNING....ONLY	895 INDEPENDENT FISSION POINTS WERE GENERATED			
2	8.96575E-01	1.37500E+00	1.00000E+00	0.00000E+00	0.00000E+00	0.00000E+00
3	9.46605E-01	1.39967E+00	9.46605E-01	0.00000E+00	0.00000E+00	0.00000E+00
4	9.05069E-01	1.42717E+00	9.25837E-01	2.07680E-02	0.00000E+00	0.00000E+00
5	8.93514E-01	1.45367E+00	9.15062E-01	1.61200E-02	0.00000E+00	0.00000E+00
6	8.87426E-01	1.48017E+00	9.08153E-01	1.33291E-02	0.00000E+00	0.00000E+00
7	9.05121E-01	1.50583E+00	9.07547E-01	1.03424E-02	0.00000E+00	0.00000E+00
8	9.14380E-01	1.53333E+00	9.08686E-01	8.52102E-03	0.00000E+00	0.00000E+00
9	9.27548E-01	1.55900E+00	9.11380E-01	7.68918E-03	0.00000E+00	0.00000E+00
10	9.33538E-01	1.58633E+00	9.14150E-01	7.21207E-03	0.00000E+00	0.00000E+00
11	8.75479E-01	1.61300E+00	9.09853E-01	7.67580E-03	0.00000E+00	0.00000E+00
12	8.89903E-01	1.63950E+00	9.07858E-01	7.14943E-03	0.00000E+00	0.00000E+00
13	9.05310E-01	1.66417E+00	9.07626E-01	6.47105E-03	0.00000E+00	0.00000E+00
14	8.99313E-01	1.69067E+00	9.06934E-01	5.94772E-03	0.00000E+00	0.00000E+00
15	8.67635E-01	1.71817E+00	9.03911E-01	6.25069E-03	0.00000E+00	0.00000E+00
16	9.18474E-01	1.74383E+00	9.04951E-01	5.87977E-03	0.00000E+00	0.00000E+00
17	9.18015E-01	1.76950E+00	9.05822E-01	5.54263E-03	0.00000E+00	0.00000E+00
18	9.55121E-01	1.79600E+00	9.08903E-01	6.03113E-03	0.00000E+00	0.00000E+00
19	9.27495E-01	1.82167E+00	9.09997E-01	5.76985E-03	0.00000E+00	0.00000E+00
20	9.13119E-01	1.84733E+00	9.10170E-01	5.44263E-03	0.00000E+00	0.00000E+00
21	8.83728E-01	1.87383E+00	9.08779E-01	5.33300E-03	0.00000E+00	0.00000E+00
22	9.23650E-01	1.90133E+00	9.09522E-01	5.11368E-03	0.00000E+00	0.00000E+00
23	8.81713E-01	1.92883E+00	9.08198E-01	5.04112E-03	0.00000E+00	0.00000E+00
24	9.26039E-01	1.95533E+00	9.09009E-01	4.87445E-03	0.00000E+00	0.00000E+00
25	9.26088E-01	1.98367E+00	9.09751E-01	4.71653E-03	0.00000E+00	0.00000E+00
26	9.40076E-01	2.01017E+00	9.11015E-01	4.68917E-03	0.00000E+00	0.00000E+00
27	9.06228E-01	2.03767E+00	9.10823E-01	4.50177E-03	0.00000E+00	0.00000E+00
28	9.22137E-01	2.06417E+00	9.11259E-01	4.34699E-03	0.00000E+00	0.00000E+00
29	9.33598E-01	2.08983E+00	9.12086E-01	4.26394E-03	0.00000E+00	0.00000E+00
30	9.09525E-01	2.11550E+00	9.11994E-01	4.10985E-03	0.00000E+00	0.00000E+00
31	9.31245E-01	2.14200E+00	9.12658E-01	4.02077E-03	0.00000E+00	0.00000E+00
32	8.68747E-01	2.17050E+00	9.11195E-01	4.15106E-03	0.00000E+00	0.00000E+00
33	8.96693E-01	2.19700E+00	9.10727E-01	4.04209E-03	0.00000E+00	0.00000E+00
34	8.63080E-01	2.22450E+00	9.09238E-01	4.18740E-03	0.00000E+00	0.00000E+00
35	9.20550E-01	2.25100E+00	9.09581E-01	4.07298E-03	0.00000E+00	0.00000E+00
36	8.80113E-01	2.27750E+00	9.08714E-01	4.04530E-03	0.00000E+00	0.00000E+00
37	8.68839E-01	2.30500E+00	9.07575E-01	4.08990E-03	0.00000E+00	0.00000E+00
38	9.81777E-01	2.32967E+00	9.09636E-01	4.47733E-03	0.00000E+00	0.00000E+00
39	9.02998E-01	2.35633E+00	9.09456E-01	4.35833E-03	0.00000E+00	0.00000E+00
40	9.21249E-01	2.38367E+00	9.09767E-01	4.25343E-03	0.00000E+00	0.00000E+00
41	8.98955E-01	2.40933E+00	9.09490E-01	4.15219E-03	0.00000E+00	0.00000E+00
42	9.16342E-01	2.43583E+00	9.09661E-01	4.05068E-03	0.00000E+00	0.00000E+00
43	8.94618E-01	2.46250E+00	9.09294E-01	3.96765E-03	0.00000E+00	0.00000E+00
44	9.19541E-01	2.48983E+00	9.09538E-01	3.87971E-03	0.00000E+00	0.00000E+00
45	9.10338E-01	2.51650E+00	9.09557E-01	3.78845E-03	0.00000E+00	0.00000E+00
46	9.27432E-01	2.54383E+00	9.09963E-01	3.72358E-03	0.00000E+00	0.00000E+00
47	9.54938E-01	2.56950E+00	9.10962E-01	3.77462E-03	0.00000E+00	0.00000E+00
48	9.21564E-01	2.59617E+00	9.11193E-01	3.69884E-03	0.00000E+00	0.00000E+00
49	9.21195E-01	2.62267E+00	9.11406E-01	3.62554E-03	0.00000E+00	0.00000E+00
50	9.37939E-01	2.64833E+00	9.11958E-01	3.59199E-03	0.00000E+00	0.00000E+00
51	9.44721E-01	2.67483E+00	9.12627E-01	3.58090E-03	0.00000E+00	0.00000E+00
52	9.43395E-01	2.70050E+00	9.13242E-01	3.56210E-03	0.00000E+00	0.00000E+00
53	9.03409E-01	2.72617E+00	9.13049E-01	3.49688E-03	0.00000E+00	0.00000E+00
54	9.79075E-01	2.75167E+00	9.14319E-01	3.65651E-03	0.00000E+00	0.00000E+00
55	8.69570E-01	2.77917E+00	9.13475E-01	3.68489E-03	0.00000E+00	0.00000E+00
56	8.82250E-01	2.80567E+00	9.12897E-01	3.66195E-03	0.00000E+00	0.00000E+00
57	9.28974E-01	2.83133E+00	9.13189E-01	3.60662E-03	0.00000E+00	0.00000E+00
58	9.19140E-01	2.85783E+00	9.13295E-01	3.54322E-03	0.00000E+00	0.00000E+00
59	8.95242E-01	2.88450E+00	9.12978E-01	3.49489E-03	0.00000E+00	0.00000E+00
60	8.93794E-01	2.91100E+00	9.12648E-01	3.45000E-03	0.00000E+00	0.00000E+00
61	9.13418E-01	2.93750E+00	9.12661E-01	3.39104E-03	0.00000E+00	0.00000E+00
62	9.32754E-01	2.96417E+00	9.12996E-01	3.35082E-03	0.00000E+00	0.00000E+00
63	9.23592E-01	2.98967E+00	9.13169E-01	3.30001E-03	0.00000E+00	0.00000E+00
64	9.12051E-01	3.01717E+00	9.13151E-01	3.24640E-03	0.00000E+00	0.00000E+00
65	8.73464E-01	3.04367E+00	9.12521E-01	3.25597E-03	0.00000E+00	0.00000E+00
66	9.17888E-01	3.07033E+00	9.12605E-01	3.20579E-03	0.00000E+00	0.00000E+00
67	9.13136E-01	3.09683E+00	9.12613E-01	3.15610E-03	0.00000E+00	0.00000E+00
68	9.40430E-01	3.12250E+00	9.13035E-01	3.13636E-03	0.00000E+00	0.00000E+00
69	9.45408E-01	3.14817E+00	9.13518E-01	3.12675E-03	0.00000E+00	0.00000E+00
70	9.46323E-01	3.17367E+00	9.14000E-01	3.11797E-03	0.00000E+00	0.00000E+00
71	8.77874E-01	3.20033E+00	9.13477E-01	3.11674E-03	0.00000E+00	0.00000E+00
72	8.92626E-01	3.22767E+00	9.13179E-01	3.08630E-03	0.00000E+00	0.00000E+00
73	9.20170E-01	3.25333E+00	9.13277E-01	3.04412E-03	0.00000E+00	0.00000E+00
74	9.25709E-01	3.28000E+00	9.13450E-01	3.00650E-03	0.00000E+00	0.00000E+00
75	8.96801E-01	3.30550E+00	9.13222E-01	2.97379E-03	0.00000E+00	0.00000E+00
76	9.03788E-01	3.33217E+00	9.13095E-01	2.93610E-03	0.00000E+00	0.00000E+00
77	8.98111E-01	3.35867E+00	9.12895E-01	2.90357E-03	0.00000E+00	0.00000E+00
78	9.10537E-01	3.38517E+00	9.12864E-01	2.86527E-03	0.00000E+00	0.00000E+00
79	9.14309E-01	3.41083E+00	9.12883E-01	2.82788E-03	0.00000E+00	0.00000E+00
80	9.21505E-01	3.43733E+00	9.12993E-01	2.79358E-03	0.00000E+00	0.00000E+00
81	8.66482E-01	3.46400E+00	9.12404E-01	2.82013E-03	0.00000E+00	0.00000E+00
82	9.07877E-01	3.48950E+00	9.12348E-01	2.78523E-03	0.00000E+00	0.00000E+00
83	9.29570E-01	3.51517E+00	9.12560E-01	2.75883E-03	0.00000E+00	0.00000E+00
84	8.91949E-01	3.54167E+00	9.12309E-01	2.73655E-03	0.00000E+00	0.00000E+00
85	9.08112E-01	3.56733E+00	9.12258E-01	2.70385E-03	0.00000E+00	0.00000E+00
86	9.32694E-01	3.59300E+00	9.12502E-01	2.68252E-03	0.00000E+00	0.00000E+00
87	8.81980E-01	3.62050E+00	9.12143E-01	2.67499E-03	0.00000E+00	0.00000E+00
88	8.89171E-01	3.64700E+00	9.11876E-01	2.65716E-03	0.00000E+00	0.00000E+00
89	9.37304E-01	3.67267E+00	9.12168E-01	2.64265E-03	0.00000E+00	0.00000E+00

90	8.86836E-01	3.70017E+00	9.11880E-01	2.62826E-03	0.00000E+00	0.00000E+00
91	8.99199E-01	3.72567E+00	9.11737E-01	2.60247E-03	0.00000E+00	0.00000E+00
92	9.18743E-01	3.75233E+00	9.11815E-01	2.57456E-03	0.00000E+00	0.00000E+00
93	9.79235E-01	3.77967E+00	9.12556E-01	2.65172E-03	0.00000E+00	0.00000E+00
94	9.00994E-01	3.80633E+00	9.12431E-01	2.62574E-03	0.00000E+00	0.00000E+00
95	9.02452E-01	3.83200E+00	9.12323E-01	2.59957E-03	0.00000E+00	0.00000E+00
96	9.38238E-01	3.85933E+00	9.12599E-01	2.58650E-03	0.00000E+00	0.00000E+00
97	8.91607E-01	3.88600E+00	9.12378E-01	2.56865E-03	0.00000E+00	0.00000E+00
98	9.14741E-01	3.91250E+00	9.12403E-01	2.54188E-03	0.00000E+00	0.00000E+00
99	8.69482E-01	3.94000E+00	9.11960E-01	2.55415E-03	0.00000E+00	0.00000E+00
100	9.42607E-01	3.96650E+00	9.12273E-01	2.54723E-03	0.00000E+00	0.00000E+00
101	9.18963E-01	3.99217E+00	9.12340E-01	2.52227E-03	0.00000E+00	0.00000E+00
102	9.11021E-01	4.01950E+00	9.12327E-01	2.49696E-03	0.00000E+00	0.00000E+00
103	9.31676E-01	4.04617E+00	9.12519E-01	2.47952E-03	0.00000E+00	0.00000E+00
104	9.31187E-01	4.07183E+00	9.12702E-01	2.46190E-03	0.00000E+00	0.00000E+00
105	9.12106E-01	4.09833E+00	9.12696E-01	2.43789E-03	0.00000E+00	0.00000E+00
106	9.14433E-01	4.12583E+00	9.12713E-01	2.41439E-03	0.00000E+00	0.00000E+00
107	8.97115E-01	4.15233E+00	9.12564E-01	2.39590E-03	0.00000E+00	0.00000E+00
108	9.29588E-01	4.17800E+00	9.12725E-01	2.37862E-03	0.00000E+00	0.00000E+00
109	8.96594E-01	4.20533E+00	9.12574E-01	2.36110E-03	0.00000E+00	0.00000E+00
110	9.43979E-01	4.23200E+00	9.12865E-01	2.35714E-03	0.00000E+00	0.00000E+00
111	8.75353E-01	4.26033E+00	9.12521E-01	2.36064E-03	0.00000E+00	0.00000E+00
112	8.94002E-01	4.28783E+00	9.12352E-01	2.34513E-03	0.00000E+00	0.00000E+00
113	9.47321E-01	4.31350E+00	9.12667E-01	2.34516E-03	0.00000E+00	0.00000E+00
114	9.31552E-01	4.33900E+00	9.12836E-01	2.33024E-03	0.00000E+00	0.00000E+00
115	8.85036E-01	4.36650E+00	9.12590E-01	2.32259E-03	0.00000E+00	0.00000E+00
116	9.39129E-01	4.39217E+00	9.12823E-01	2.31387E-03	0.00000E+00	0.00000E+00
117	9.07775E-01	4.41867E+00	9.12779E-01	2.29408E-03	0.00000E+00	0.00000E+00
118	9.20362E-01	4.44433E+00	9.12844E-01	2.27515E-03	0.00000E+00	0.00000E+00
119	8.87089E-01	4.47083E+00	9.12624E-01	2.26634E-03	0.00000E+00	0.00000E+00
120	9.39109E-01	4.49650E+00	9.12849E-01	2.25823E-03	0.00000E+00	0.00000E+00
121	9.33180E-01	4.52300E+00	9.13019E-01	2.24568E-03	0.00000E+00	0.00000E+00
122	8.98252E-01	4.54967E+00	9.12896E-01	2.23029E-03	0.00000E+00	0.00000E+00
123	9.04215E-01	4.57617E+00	9.12825E-01	2.21294E-03	0.00000E+00	0.00000E+00
124	9.11441E-01	4.60183E+00	9.12813E-01	2.19476E-03	0.00000E+00	0.00000E+00
125	9.37687E-01	4.62750E+00	9.13015E-01	2.18622E-03	0.00000E+00	0.00000E+00
126	9.12857E-01	4.65400E+00	9.13014E-01	2.16851E-03	0.00000E+00	0.00000E+00
127	9.26716E-01	4.67967E+00	9.13124E-01	2.15389E-03	0.00000E+00	0.00000E+00
128	9.14491E-01	4.70617E+00	9.13135E-01	2.13675E-03	0.00000E+00	0.00000E+00
129	9.17151E-01	4.73183E+00	9.13166E-01	2.12010E-03	0.00000E+00	0.00000E+00
130	9.20122E-01	4.75733E+00	9.13221E-01	2.10417E-03	0.00000E+00	0.00000E+00
131	9.54932E-01	4.78400E+00	9.13544E-01	2.11269E-03	0.00000E+00	0.00000E+00
132	9.15704E-01	4.81050E+00	9.13561E-01	2.09644E-03	0.00000E+00	0.00000E+00
133	8.87318E-01	4.83883E+00	9.13360E-01	2.08999E-03	0.00000E+00	0.00000E+00
134	9.15454E-01	4.86550E+00	9.13376E-01	2.07416E-03	0.00000E+00	0.00000E+00
135	8.66668E-01	4.89200E+00	9.13025E-01	2.08825E-03	0.00000E+00	0.00000E+00

KENO MESSAGE NUMBER K5-132 WARNING....ONLY 992 INDEPENDENT FISSION POINTS WERE GENERATED

136	8.88865E-01	4.91850E+00	9.12845E-01	2.08043E-03	0.00000E+00	0.00000E+00
137	8.96141E-01	4.94500E+00	9.12721E-01	2.06867E-03	0.00000E+00	0.00000E+00
138	9.07659E-01	4.97167E+00	9.12684E-01	2.05374E-03	0.00000E+00	0.00000E+00
139	9.31430E-01	4.99633E+00	9.12821E-01	2.04328E-03	0.00000E+00	0.00000E+00
140	9.09886E-01	5.02283E+00	9.12799E-01	2.02853E-03	0.00000E+00	0.00000E+00
141	8.91672E-01	5.04950E+00	9.12647E-01	2.01961E-03	0.00000E+00	0.00000E+00
142	9.51248E-01	5.07500E+00	9.12923E-01	2.02400E-03	0.00000E+00	0.00000E+00
143	9.01526E-01	5.10350E+00	9.12842E-01	2.01122E-03	0.00000E+00	0.00000E+00
144	9.32889E-01	5.12900E+00	9.12983E-01	2.00199E-03	0.00000E+00	0.00000E+00
145	8.96369E-01	5.15567E+00	9.12867E-01	1.99133E-03	0.00000E+00	0.00000E+00
146	8.94883E-01	5.18217E+00	9.12742E-01	1.98140E-03	0.00000E+00	0.00000E+00
147	9.34025E-01	5.20867E+00	9.12889E-01	1.97315E-03	0.00000E+00	0.00000E+00
148	9.40990E-01	5.23433E+00	9.13081E-01	1.96902E-03	0.00000E+00	0.00000E+00
149	9.23585E-01	5.26083E+00	9.13153E-01	1.95688E-03	0.00000E+00	0.00000E+00
150	9.19423E-01	5.28650E+00	9.13195E-01	1.94408E-03	0.00000E+00	0.00000E+00
151	9.47482E-01	5.31217E+00	9.13425E-01	1.94465E-03	0.00000E+00	0.00000E+00
152	9.08613E-01	5.33783E+00	9.13393E-01	1.93191E-03	0.00000E+00	0.00000E+00
153	8.95331E-01	5.36533E+00	9.13274E-01	1.92280E-03	0.00000E+00	0.00000E+00
154	9.44444E-01	5.39183E+00	9.13479E-01	1.92108E-03	0.00000E+00	0.00000E+00
155	8.93390E-01	5.41933E+00	9.13347E-01	1.91299E-03	0.00000E+00	0.00000E+00
156	8.92057E-01	5.44483E+00	9.13209E-01	1.90555E-03	0.00000E+00	0.00000E+00
157	9.03251E-01	5.47233E+00	9.13145E-01	1.89431E-03	0.00000E+00	0.00000E+00
158	8.97884E-01	5.49883E+00	9.13047E-01	1.88467E-03	0.00000E+00	0.00000E+00
159	8.64900E-01	5.52633E+00	9.12740E-01	1.89757E-03	0.00000E+00	0.00000E+00
160	8.97223E-01	5.55383E+00	9.12642E-01	1.88808E-03	0.00000E+00	0.00000E+00
161	9.18827E-01	5.57950E+00	9.12681E-01	1.87657E-03	0.00000E+00	0.00000E+00
162	9.24453E-01	5.60600E+00	9.12755E-01	1.86625E-03	0.00000E+00	0.00000E+00
163	8.87075E-01	5.63350E+00	9.12595E-01	1.86147E-03	0.00000E+00	0.00000E+00
164	9.46600E-01	5.65817E+00	9.12805E-01	1.86182E-03	0.00000E+00	0.00000E+00
165	9.22187E-01	5.68383E+00	9.12863E-01	1.85125E-03	0.00000E+00	0.00000E+00
166	9.36622E-01	5.70850E+00	9.13008E-01	1.84563E-03	0.00000E+00	0.00000E+00
167	9.53502E-01	5.73417E+00	9.13253E-01	1.85075E-03	0.00000E+00	0.00000E+00
168	9.17649E-01	5.75983E+00	9.13279E-01	1.83976E-03	0.00000E+00	0.00000E+00
169	9.23258E-01	5.78550E+00	9.13339E-01	1.82968E-03	0.00000E+00	0.00000E+00
170	9.26120E-01	5.81100E+00	9.13415E-01	1.82035E-03	0.00000E+00	0.00000E+00
171	9.26614E-01	5.83583E+00	9.13493E-01	1.81123E-03	0.00000E+00	0.00000E+00
172	9.08422E-01	5.86317E+00	9.13464E-01	1.80079E-03	0.00000E+00	0.00000E+00
173	9.02981E-01	5.88983E+00	9.13402E-01	1.79128E-03	0.00000E+00	0.00000E+00
174	9.18104E-01	5.91550E+00	9.13430E-01	1.78105E-03	0.00000E+00	0.00000E+00
175	8.91059E-01	5.94100E+00	9.13300E-01	1.77544E-03	0.00000E+00	0.00000E+00
176	8.95988E-01	5.96850E+00	9.13201E-01	1.76800E-03	0.00000E+00	0.00000E+00
177	9.03157E-01	5.99500E+00	9.13143E-01	1.75881E-03	0.00000E+00	0.00000E+00
178	9.30350E-01	6.02067E+00	9.13241E-01	1.75152E-03	0.00000E+00	0.00000E+00
179	9.01541E-01	6.04633E+00	9.13175E-01	1.74285E-03	0.00000E+00	0.00000E+00
180	9.35730E-01	6.07200E+00	9.13302E-01	1.73766E-03	0.00000E+00	0.00000E+00
181	9.59340E-01	6.09767E+00	9.13559E-01	1.74696E-03	0.00000E+00	0.00000E+00
182	9.24043E-01	6.12417E+00	9.13617E-01	1.73820E-03	0.00000E+00	0.00000E+00
183	9.16527E-01	6.15067E+00	9.13633E-01	1.72865E-03	0.00000E+00	0.00000E+00

184	8.97510E-01	6.17717E+00	9.13545E-01	1.72140E-03	0.00000E+00	0.00000E+00
185	9.26277E-01	6.20283E+00	9.13614E-01	1.71338E-03	0.00000E+00	0.00000E+00
186	9.05086E-01	6.22850E+00	9.13568E-01	1.70468E-03	0.00000E+00	0.00000E+00
187	8.84514E-01	6.25600E+00	9.13411E-01	1.70269E-03	0.00000E+00	0.00000E+00
188	9.23112E-01	6.28167E+00	9.13463E-01	1.69432E-03	0.00000E+00	0.00000E+00
189	9.13747E-01	6.30817E+00	9.13465E-01	1.68523E-03	0.00000E+00	0.00000E+00
190	9.20376E-01	6.33383E+00	9.13501E-01	1.67665E-03	0.00000E+00	0.00000E+00
191	8.83891E-01	6.36117E+00	9.13345E-01	1.67510E-03	0.00000E+00	0.00000E+00
192	9.27817E-01	6.38683E+00	9.13421E-01	1.66800E-03	0.00000E+00	0.00000E+00
193	9.44874E-01	6.41350E+00	9.13586E-01	1.66739E-03	0.00000E+00	0.00000E+00
194	9.09017E-01	6.43900E+00	9.13562E-01	1.65886E-03	0.00000E+00	0.00000E+00
195	8.94144E-01	6.46650E+00	9.13461E-01	1.65330E-03	0.00000E+00	0.00000E+00
196	8.72850E-01	6.49300E+00	9.13252E-01	1.65803E-03	0.00000E+00	0.00000E+00
197	8.64799E-01	6.52150E+00	9.13003E-01	1.66811E-03	0.00000E+00	0.00000E+00
198	9.19588E-01	6.54433E+00	9.13037E-01	1.65992E-03	0.00000E+00	0.00000E+00
199	8.81152E-01	6.57183E+00	9.12875E-01	1.65939E-03	0.00000E+00	0.00000E+00
200	9.45768E-01	6.59650E+00	9.13041E-01	1.65932E-03	0.00000E+00	0.00000E+00
201	9.35985E-01	6.62217E+00	9.13156E-01	1.65498E-03	0.00000E+00	0.00000E+00
202	9.29791E-01	6.64783E+00	9.13240E-01	1.64878E-03	0.00000E+00	0.00000E+00
203	8.99879E-01	6.67433E+00	9.13173E-01	1.64191E-03	0.00000E+00	0.00000E+00
204	8.93893E-01	6.70083E+00	9.13078E-01	1.63654E-03	0.00000E+00	0.00000E+00
205	9.12423E-01	6.72733E+00	9.13074E-01	1.62847E-03	0.00000E+00	0.00000E+00
206	8.95375E-01	6.75400E+00	9.12988E-01	1.62278E-03	0.00000E+00	0.00000E+00
207	9.06899E-01	6.78050E+00	9.12958E-01	1.61512E-03	0.00000E+00	0.00000E+00
208	9.11243E-01	6.80700E+00	9.12950E-01	1.60728E-03	0.00000E+00	0.00000E+00
209	9.54339E-01	6.83183E+00	9.13150E-01	1.61195E-03	0.00000E+00	0.00000E+00
210	9.39832E-01	6.85733E+00	9.13278E-01	1.60930E-03	0.00000E+00	0.00000E+00
211	9.24160E-01	6.88400E+00	9.13330E-01	1.60243E-03	0.00000E+00	0.00000E+00
212	9.33426E-01	6.91050E+00	9.13426E-01	1.59765E-03	0.00000E+00	0.00000E+00
213	9.55546E-01	6.93517E+00	9.13625E-01	1.60254E-03	0.00000E+00	0.00000E+00
214	9.40680E-01	6.96183E+00	9.13753E-01	1.60006E-03	0.00000E+00	0.00000E+00
215	8.73982E-01	6.98833E+00	9.13566E-01	1.60344E-03	0.00000E+00	0.00000E+00
216	8.77587E-01	7.01583E+00	9.13398E-01	1.60476E-03	0.00000E+00	0.00000E+00
217	9.07999E-01	7.04133E+00	9.13373E-01	1.59748E-03	0.00000E+00	0.00000E+00
218	8.72392E-01	7.06800E+00	9.13183E-01	1.60134E-03	0.00000E+00	0.00000E+00
219	9.17626E-01	7.09450E+00	9.13204E-01	1.59408E-03	0.00000E+00	0.00000E+00
220	8.90346E-01	7.12100E+00	9.13099E-01	1.59021E-03	0.00000E+00	0.00000E+00
221	9.30152E-01	7.14850E+00	9.13177E-01	1.58485E-03	0.00000E+00	0.00000E+00
222	9.30915E-01	7.17600E+00	9.13257E-01	1.57968E-03	0.00000E+00	0.00000E+00
223	8.98220E-01	7.20350E+00	9.13189E-01	1.57399E-03	0.00000E+00	0.00000E+00
224	9.16913E-01	7.23083E+00	9.13206E-01	1.56698E-03	0.00000E+00	0.00000E+00
225	9.36257E-01	7.25833E+00	9.13309E-01	1.56335E-03	0.00000E+00	0.00000E+00
226	8.86142E-01	7.28400E+00	9.13188E-01	1.56108E-03	0.00000E+00	0.00000E+00
227	9.18733E-01	7.31150E+00	9.13213E-01	1.55432E-03	0.00000E+00	0.00000E+00
228	9.04503E-01	7.33883E+00	9.13174E-01	1.54791E-03	0.00000E+00	0.00000E+00
229	9.11392E-01	7.36550E+00	9.13166E-01	1.54109E-03	0.00000E+00	0.00000E+00
230	8.62658E-01	7.39300E+00	9.12945E-01	1.55023E-03	0.00000E+00	0.00000E+00
231	9.13911E-01	7.41950E+00	9.12949E-01	1.54345E-03	0.00000E+00	0.00000E+00
232	9.02364E-01	7.44700E+00	9.12903E-01	1.53741E-03	0.00000E+00	0.00000E+00
233	9.47530E-01	7.47250E+00	9.13053E-01	1.53807E-03	0.00000E+00	0.00000E+00
234	9.44243E-01	7.49817E+00	9.13187E-01	1.53731E-03	0.00000E+00	0.00000E+00
235	8.88140E-01	7.52650E+00	9.13080E-01	1.53447E-03	0.00000E+00	0.00000E+00
236	9.19263E-01	7.55217E+00	9.13106E-01	1.52813E-03	0.00000E+00	0.00000E+00
237	9.23997E-01	7.57883E+00	9.13153E-01	1.52231E-03	0.00000E+00	0.00000E+00
238	9.23856E-01	7.60433E+00	9.13198E-01	1.51653E-03	0.00000E+00	0.00000E+00
239	9.03672E-01	7.63000E+00	9.13158E-01	1.51065E-03	0.00000E+00	0.00000E+00
240	9.25109E-01	7.65467E+00	9.13208E-01	1.50513E-03	0.00000E+00	0.00000E+00
241	8.93009E-01	7.68133E+00	9.13124E-01	1.50120E-03	0.00000E+00	0.00000E+00
242	9.33327E-01	7.70783E+00	9.13208E-01	1.49730E-03	0.00000E+00	0.00000E+00
243	9.48267E-01	7.73350E+00	9.13353E-01	1.49815E-03	0.00000E+00	0.00000E+00
244	9.19141E-01	7.76000E+00	9.13377E-01	1.49214E-03	0.00000E+00	0.00000E+00
245	9.44672E-01	7.78467E+00	9.13506E-01	1.49156E-03	0.00000E+00	0.00000E+00
246	9.15887E-01	7.81033E+00	9.13516E-01	1.48546E-03	0.00000E+00	0.00000E+00
247	9.30912E-01	7.83600E+00	9.13587E-01	1.48109E-03	0.00000E+00	0.00000E+00
248	9.59002E-01	7.86067E+00	9.13771E-01	1.48657E-03	0.00000E+00	0.00000E+00
249	9.00273E-01	7.88633E+00	9.13717E-01	1.48154E-03	0.00000E+00	0.00000E+00
250	9.28078E-01	7.91383E+00	9.13775E-01	1.47669E-03	0.00000E+00	0.00000E+00
251	9.42718E-01	7.94033E+00	9.13891E-01	1.47534E-03	0.00000E+00	0.00000E+00
252	9.55589E-01	7.96600E+00	9.14058E-01	1.47886E-03	0.00000E+00	0.00000E+00
253	9.23685E-01	7.99167E+00	9.14096E-01	1.47346E-03	0.00000E+00	0.00000E+00
254	8.78260E-01	8.01817E+00	9.13954E-01	1.47447E-03	0.00000E+00	0.00000E+00
255	9.35734E-01	8.04567E+00	9.14040E-01	1.47115E-03	0.00000E+00	0.00000E+00
256	9.04964E-01	8.07217E+00	9.14004E-01	1.46579E-03	0.00000E+00	0.00000E+00
257	9.42663E-01	8.09783E+00	9.14116E-01	1.46435E-03	0.00000E+00	0.00000E+00
258	9.44797E-01	8.12350E+00	9.14236E-01	1.46353E-03	0.00000E+00	0.00000E+00
259	8.97386E-01	8.15000E+00	9.14171E-01	1.45930E-03	0.00000E+00	0.00000E+00
260	8.94212E-01	8.17750E+00	9.14093E-01	1.45569E-03	0.00000E+00	0.00000E+00
261	8.93854E-01	8.20483E+00	9.14015E-01	1.45216E-03	0.00000E+00	0.00000E+00
262	8.80088E-01	8.23233E+00	9.13885E-01	1.45244E-03	0.00000E+00	0.00000E+00
263	8.94366E-01	8.25883E+00	9.13810E-01	1.44879E-03	0.00000E+00	0.00000E+00
264	9.26458E-01	8.28550E+00	9.13858E-01	1.44406E-03	0.00000E+00	0.00000E+00
265	9.03500E-01	8.31300E+00	9.13819E-01	1.43910E-03	0.00000E+00	0.00000E+00
266	9.05842E-01	8.33950E+00	9.13789E-01	1.43395E-03	0.00000E+00	0.00000E+00
267	9.05741E-01	8.36600E+00	9.13758E-01	1.42886E-03	0.00000E+00	0.00000E+00
268	9.14516E-01	8.39250E+00	9.13761E-01	1.42348E-03	0.00000E+00	0.00000E+00
269	8.92759E-01	8.41917E+00	9.13682E-01	1.42032E-03	0.00000E+00	0.00000E+00
270	8.90366E-01	8.44650E+00	9.13595E-01	1.41768E-03	0.00000E+00	0.00000E+00
271	9.10508E-01	8.47317E+00	9.13584E-01	1.41244E-03	0.00000E+00	0.00000E+00
272	9.19783E-01	8.49967E+00	9.13607E-01	1.40739E-03	0.00000E+00	0.00000E+00
273	9.00867E-01	8.52533E+00	9.13560E-01	1.40298E-03	0.00000E+00	0.00000E+00
274	9.13967E-01	8.55367E+00	9.13561E-01	1.39781E-03	0.00000E+00	0.00000E+00
275	8.84983E-01	8.57933E+00	9.13457E-01	1.39661E-03	0.00000E+00	0.00000E+00
276	9.45233E-01	8.60583E+00	9.13573E-01	1.39633E-03	0.00000E+00	0.00000E+00
277	9.36732E-01	8.63233E+00	9.13657E-01	1.39379E-03	0.00000E+00	0.00000E+00
278	9.33689E-01	8.65800E+00	9.13730E-01	1.39062E-03	0.00000E+00	0.00000E+00

279	9.08970E-01	8.68550E+00	9.13712E-01	1.38570E-03	0.00000E+00	0.00000E+00
280	8.76328E-01	8.71300E+00	9.13578E-01	1.38724E-03	0.00000E+00	0.00000E+00
281	9.64515E-01	8.73867E+00	9.13760E-01	1.39426E-03	0.00000E+00	0.00000E+00
282	8.95538E-01	8.76417E+00	9.13695E-01	1.39080E-03	0.00000E+00	0.00000E+00
283	9.38120E-01	8.78983E+00	9.13782E-01	1.38856E-03	0.00000E+00	0.00000E+00
284	8.98166E-01	8.81917E+00	9.13727E-01	1.38474E-03	0.00000E+00	0.00000E+00
285	9.30993E-01	8.84567E+00	9.13788E-01	1.38118E-03	0.00000E+00	0.00000E+00
286	9.28540E-01	8.87217E+00	9.13840E-01	1.37729E-03	0.00000E+00	0.00000E+00
287	8.83832E-01	8.89967E+00	9.13735E-01	1.37648E-03	0.00000E+00	0.00000E+00
288	9.06707E-01	8.92633E+00	9.13710E-01	1.37188E-03	0.00000E+00	0.00000E+00
289	8.98009E-01	8.95367E+00	9.13655E-01	1.36819E-03	0.00000E+00	0.00000E+00
290	9.10563E-01	8.97933E+00	9.13645E-01	1.36347E-03	0.00000E+00	0.00000E+00
291	9.35439E-01	9.00583E+00	9.13720E-01	1.36084E-03	0.00000E+00	0.00000E+00
292	9.24570E-01	9.03250E+00	9.13757E-01	1.35665E-03	0.00000E+00	0.00000E+00
293	9.02256E-01	9.05983E+00	9.13718E-01	1.35256E-03	0.00000E+00	0.00000E+00
294	9.50070E-01	9.08550E+00	9.13842E-01	1.35366E-03	0.00000E+00	0.00000E+00
295	9.16326E-01	9.11033E+00	9.13851E-01	1.34905E-03	0.00000E+00	0.00000E+00
296	9.43632E-01	9.13583E+00	9.13952E-01	1.34827E-03	0.00000E+00	0.00000E+00
297	8.79052E-01	9.16250E+00	9.13834E-01	1.34889E-03	0.00000E+00	0.00000E+00
298	9.54132E-01	9.18800E+00	9.13970E-01	1.35120E-03	0.00000E+00	0.00000E+00
299	9.25572E-01	9.21283E+00	9.14009E-01	1.34721E-03	0.00000E+00	0.00000E+00
300	9.56927E-01	9.23933E+00	9.14153E-01	1.35038E-03	0.00000E+00	0.00000E+00
301	9.02724E-01	9.26500E+00	9.14115E-01	1.34640E-03	0.00000E+00	0.00000E+00
302	9.44560E-01	9.29067E+00	9.14216E-01	1.34574E-03	0.00000E+00	0.00000E+00
303	8.79787E-01	9.31800E+00	9.14102E-01	1.34613E-03	0.00000E+00	0.00000E+00
304	8.69867E-01	9.34550E+00	9.13955E-01	1.34964E-03	0.00000E+00	0.00000E+00
305	9.33420E-01	9.37117E+00	9.14020E-01	1.34671E-03	0.00000E+00	0.00000E+00
306	9.01636E-01	9.39767E+00	9.13979E-01	1.34289E-03	0.00000E+00	0.00000E+00
307	8.83105E-01	9.42417E+00	9.13878E-01	1.34230E-03	0.00000E+00	0.00000E+00
308	9.42584E-01	9.44983E+00	9.13972E-01	1.34119E-03	0.00000E+00	0.00000E+00
309	9.69021E-01	9.47650E+00	9.14151E-01	1.34879E-03	0.00000E+00	0.00000E+00
310	8.88058E-01	9.50300E+00	9.14066E-01	1.34707E-03	0.00000E+00	0.00000E+00
311	8.87527E-01	9.53050E+00	9.13980E-01	1.34545E-03	0.00000E+00	0.00000E+00
312	8.72847E-01	9.55883E+00	9.13848E-01	1.34765E-03	0.00000E+00	0.00000E+00
313	9.14955E-01	9.58633E+00	9.13851E-01	1.34331E-03	0.00000E+00	0.00000E+00
314	9.26581E-01	9.61283E+00	9.13892E-01	1.33962E-03	0.00000E+00	0.00000E+00
315	8.93774E-01	9.63933E+00	9.13828E-01	1.33688E-03	0.00000E+00	0.00000E+00
316	9.04703E-01	9.66683E+00	9.13799E-01	1.33293E-03	0.00000E+00	0.00000E+00
317	8.73971E-01	9.69517E+00	9.13672E-01	1.33470E-03	0.00000E+00	0.00000E+00
318	9.87092E-01	9.72000E+00	9.13905E-01	1.35060E-03	0.00000E+00	0.00000E+00
319	9.36953E-01	9.74650E+00	9.13977E-01	1.34829E-03	0.00000E+00	0.00000E+00
320	9.02684E-01	9.77400E+00	9.13942E-01	1.34452E-03	0.00000E+00	0.00000E+00
321	8.99100E-01	9.80050E+00	9.13895E-01	1.34110E-03	0.00000E+00	0.00000E+00
322	9.17986E-01	9.82617E+00	9.13908E-01	1.33697E-03	0.00000E+00	0.00000E+00
323	8.83328E-01	9.85533E+00	9.13813E-01	1.33620E-03	0.00000E+00	0.00000E+00
324	9.00061E-01	9.88200E+00	9.13770E-01	1.33272E-03	0.00000E+00	0.00000E+00
325	9.01044E-01	9.90767E+00	9.13731E-01	1.32918E-03	0.00000E+00	0.00000E+00
326	9.46564E-01	9.93317E+00	9.13832E-01	1.32894E-03	0.00000E+00	0.00000E+00
327	9.22457E-01	9.95983E+00	9.13858E-01	1.32511E-03	0.00000E+00	0.00000E+00
328	9.33945E-01	9.98633E+00	9.13920E-01	1.32247E-03	0.00000E+00	0.00000E+00
329	9.20471E-01	1.00128E+01	9.13940E-01	1.31857E-03	0.00000E+00	0.00000E+00
330	9.06509E-01	1.00403E+01	9.13917E-01	1.31474E-03	0.00000E+00	0.00000E+00
331	8.96690E-01	1.00668E+01	9.13865E-01	1.31179E-03	0.00000E+00	0.00000E+00
332	9.09415E-01	1.00935E+01	9.13852E-01	1.30787E-03	0.00000E+00	0.00000E+00
333	8.96729E-01	1.01218E+01	9.13800E-01	1.30494E-03	0.00000E+00	0.00000E+00
334	9.65757E-01	1.01475E+01	9.13956E-01	1.31038E-03	0.00000E+00	0.00000E+00
335	9.35715E-01	1.01740E+01	9.14022E-01	1.30808E-03	0.00000E+00	0.00000E+00
336	9.30031E-01	1.01997E+01	9.14070E-01	1.30503E-03	0.00000E+00	0.00000E+00
337	9.10459E-01	1.02252E+01	9.14059E-01	1.30118E-03	0.00000E+00	0.00000E+00
338	8.99454E-01	1.02518E+01	9.14015E-01	1.29803E-03	0.00000E+00	0.00000E+00
339	9.40123E-01	1.02765E+01	9.14093E-01	1.29649E-03	0.00000E+00	0.00000E+00
340	9.48688E-01	1.03030E+01	9.14195E-01	1.29669E-03	0.00000E+00	0.00000E+00
341	8.91158E-01	1.03315E+01	9.14127E-01	1.29465E-03	0.00000E+00	0.00000E+00
342	9.27387E-01	1.03570E+01	9.14166E-01	1.29142E-03	0.00000E+00	0.00000E+00
343	9.12735E-01	1.03837E+01	9.14162E-01	1.28763E-03	0.00000E+00	0.00000E+00
344	8.78610E-01	1.04110E+01	9.14058E-01	1.28807E-03	0.00000E+00	0.00000E+00
345	8.89034E-01	1.04377E+01	9.13985E-01	1.28638E-03	0.00000E+00	0.00000E+00
346	9.47418E-01	1.04652E+01	9.14082E-01	1.28631E-03	0.00000E+00	0.00000E+00
347	8.94473E-01	1.04907E+01	9.14026E-01	1.28383E-03	0.00000E+00	0.00000E+00
348	9.11660E-01	1.05182E+01	9.14019E-01	1.28014E-03	0.00000E+00	0.00000E+00
349	9.23040E-01	1.05438E+01	9.14045E-01	1.27671E-03	0.00000E+00	0.00000E+00
350	9.02013E-01	1.05703E+01	9.14010E-01	1.27350E-03	0.00000E+00	0.00000E+00
351	9.06768E-01	1.05978E+01	9.13989E-01	1.27002E-03	0.00000E+00	0.00000E+00
352	9.40376E-01	1.06225E+01	9.14065E-01	1.26862E-03	0.00000E+00	0.00000E+00
353	9.00742E-01	1.06492E+01	9.14027E-01	1.26557E-03	0.00000E+00	0.00000E+00
354	9.36849E-01	1.06765E+01	9.14092E-01	1.26364E-03	0.00000E+00	0.00000E+00
355	9.24388E-01	1.07032E+01	9.14121E-01	1.26039E-03	0.00000E+00	0.00000E+00
356	9.14130E-01	1.07278E+01	9.14121E-01	1.25683E-03	0.00000E+00	0.00000E+00
357	8.95041E-01	1.07535E+01	9.14067E-01	1.25443E-03	0.00000E+00	0.00000E+00
358	9.66788E-01	1.07782E+01	9.14215E-01	1.25964E-03	0.00000E+00	0.00000E+00
359	9.09260E-01	1.08038E+01	9.14201E-01	1.25618E-03	0.00000E+00	0.00000E+00
360	9.30507E-01	1.08303E+01	9.14247E-01	1.25350E-03	0.00000E+00	0.00000E+00
361	9.16986E-01	1.08560E+01	9.14254E-01	1.25002E-03	0.00000E+00	0.00000E+00
362	8.91497E-01	1.08817E+01	9.14191E-01	1.24815E-03	0.00000E+00	0.00000E+00
363	8.78586E-01	1.09090E+01	9.14093E-01	1.24859E-03	0.00000E+00	0.00000E+00
364	9.01561E-01	1.09347E+01	9.14058E-01	1.24561E-03	0.00000E+00	0.00000E+00
365	8.76975E-01	1.09612E+01	9.13956E-01	1.24637E-03	0.00000E+00	0.00000E+00
366	8.76950E-01	1.09868E+01	9.13854E-01	1.24709E-03	0.00000E+00	0.00000E+00
367	9.13162E-01	1.10125E+01	9.13852E-01	1.24367E-03	0.00000E+00	0.00000E+00
368	9.09250E-01	1.10382E+01	9.13840E-01	1.24033E-03	0.00000E+00	0.00000E+00
369	9.06512E-01	1.10647E+01	9.13820E-01	1.23711E-03	0.00000E+00	0.00000E+00
370	8.96960E-01	1.10922E+01	9.13774E-01	1.23460E-03	0.00000E+00	0.00000E+00
371	9.11398E-01	1.11178E+01	9.13767E-01	1.23126E-03	0.00000E+00	0.00000E+00
372	9.56847E-01	1.11435E+01	9.13884E-01	1.23344E-03	0.00000E+00	0.00000E+00
373	8.99059E-01	1.11700E+01	9.13844E-01	1.23076E-03	0.00000E+00	0.00000E+00

374	8.99473E-01	1.11975E+01	9.13805E-01	1.22805E-03	0.00000E+00	0.00000E+00
375	9.23804E-01	1.12222E+01	9.13832E-01	1.22505E-03	0.00000E+00	0.00000E+00
376	9.49284E-01	1.12468E+01	9.13927E-01	1.22544E-03	0.00000E+00	0.00000E+00
377	9.07115E-01	1.12733E+01	9.13909E-01	1.22230E-03	0.00000E+00	0.00000E+00
378	8.89644E-01	1.13000E+01	9.13844E-01	1.22076E-03	0.00000E+00	0.00000E+00
379	8.62222E-01	1.13265E+01	9.13707E-01	1.22519E-03	0.00000E+00	0.00000E+00
380	9.08018E-01	1.13530E+01	9.13692E-01	1.22204E-03	0.00000E+00	0.00000E+00
381	9.29187E-01	1.13787E+01	9.13733E-01	1.21949E-03	0.00000E+00	0.00000E+00
382	8.74807E-01	1.14043E+01	9.13631E-01	1.22059E-03	0.00000E+00	0.00000E+00
383	9.10426E-01	1.14308E+01	9.13622E-01	1.21741E-03	0.00000E+00	0.00000E+00
384	9.22945E-01	1.14583E+01	9.13647E-01	1.21446E-03	0.00000E+00	0.00000E+00
385	8.96199E-01	1.14840E+01	9.13601E-01	1.21214E-03	0.00000E+00	0.00000E+00
386	8.96304E-01	1.15105E+01	9.13556E-01	1.20982E-03	0.00000E+00	0.00000E+00
387	9.07288E-01	1.15370E+01	9.13540E-01	1.20678E-03	0.00000E+00	0.00000E+00
388	8.81735E-01	1.15645E+01	9.13457E-01	1.20647E-03	0.00000E+00	0.00000E+00
389	8.87880E-01	1.15902E+01	9.13391E-01	1.20516E-03	0.00000E+00	0.00000E+00
390	9.27316E-01	1.16177E+01	9.13427E-01	1.20259E-03	0.00000E+00	0.00000E+00
391	9.83680E-01	1.16423E+01	9.13608E-01	1.21301E-03	0.00000E+00	0.00000E+00
392	9.33104E-01	1.16680E+01	9.13658E-01	1.21093E-03	0.00000E+00	0.00000E+00
393	9.12553E-01	1.16945E+01	9.13655E-01	1.20783E-03	0.00000E+00	0.00000E+00
394	8.88733E-01	1.17220E+01	9.13591E-01	1.20642E-03	0.00000E+00	0.00000E+00
395	9.20633E-01	1.17485E+01	9.13609E-01	1.20348E-03	0.00000E+00	0.00000E+00
396	9.19766E-01	1.17760E+01	9.13625E-01	1.20053E-03	0.00000E+00	0.00000E+00
397	9.32565E-01	1.18025E+01	9.13673E-01	1.19844E-03	0.00000E+00	0.00000E+00
398	8.96231E-01	1.18290E+01	9.13629E-01	1.19622E-03	0.00000E+00	0.00000E+00
399	9.16973E-01	1.18557E+01	9.13637E-01	1.19324E-03	0.00000E+00	0.00000E+00
400	9.29953E-01	1.18822E+01	9.13678E-01	1.19094E-03	0.00000E+00	0.00000E+00
401	9.16368E-01	1.19068E+01	9.13685E-01	1.18797E-03	0.00000E+00	0.00000E+00
402	9.38027E-01	1.19335E+01	9.13746E-01	1.18656E-03	0.00000E+00	0.00000E+00
403	8.68354E-01	1.19600E+01	9.13633E-01	1.18900E-03	0.00000E+00	0.00000E+00

KENO MESSAGE NUMBER K5-123 EXECUTION TERMINATED DUE TO COMPLETION OF THE SPECIFIED NUMBER OF GENERATIONS.

TRIGA - PREF. FLOOD CANISTER - 2 ROD FILLING CANISTER + TOLERANCE

LIFETIME = 6.65183E-05 + OR - 1.55342E-07 GENERATION TIME = 2.66454E-05 + OR - 6.91541E-08
NU BAR = 2.42127E+00 + OR - 9.95371E-06 AVERAGE FISSION GROUP = 2.22457E+01 + OR - 5.44642E-03
ENERGY(EV) OF THE AVERAGE LETHARGY CAUSING FISSION = 1.48733E-01 + OR - 5.78070E-04

NO. OF INITIAL GENERATIONS SKIPPED	AVERAGE K-EFFECTIVE	DEVIATION	67 PER CENT CONFIDENCE INTERVAL	95 PER CENT CONFIDENCE INTERVAL	99 PER CENT CONFIDENCE INTERVAL	NUMBER OF HISTORIES
3	0.91355	+ OR - 0.00119	0.91236 TO 0.91474	0.91117 TO 0.91593	0.90998 TO 0.91712	400000
4	0.91357	+ OR - 0.00119	0.91238 TO 0.91476	0.91119 TO 0.91596	0.91000 TO 0.91715	399000
5	0.91362	+ OR - 0.00119	0.91243 TO 0.91482	0.91123 TO 0.91601	0.91004 TO 0.91720	398000
6	0.91369	+ OR - 0.00120	0.91249 TO 0.91488	0.91130 TO 0.91608	0.91010 TO 0.91727	397000
7	0.91371	+ OR - 0.00120	0.91251 TO 0.91491	0.91131 TO 0.91611	0.91012 TO 0.91730	396000
8	0.91371	+ OR - 0.00120	0.91251 TO 0.91491	0.91131 TO 0.91611	0.91011 TO 0.91731	395000
9	0.91367	+ OR - 0.00120	0.91247 TO 0.91488	0.91127 TO 0.91608	0.91006 TO 0.91728	394000
10	0.91362	+ OR - 0.00121	0.91242 TO 0.91483	0.91121 TO 0.91603	0.91001 TO 0.91724	393000
11	0.91372	+ OR - 0.00120	0.91251 TO 0.91492	0.91131 TO 0.91613	0.91011 TO 0.91733	392000
12	0.91378	+ OR - 0.00121	0.91257 TO 0.91499	0.91137 TO 0.91619	0.91016 TO 0.91740	391000
17	0.91394	+ OR - 0.00121	0.91272 TO 0.91515	0.91151 TO 0.91637	0.91029 TO 0.91758	386000
22	0.91385	+ OR - 0.00122	0.91263 TO 0.91507	0.91140 TO 0.91629	0.91018 TO 0.91752	381000
27	0.91382	+ OR - 0.00123	0.91259 TO 0.91505	0.91135 TO 0.91629	0.91012 TO 0.91752	376000
32	0.91383	+ OR - 0.00124	0.91259 TO 0.91507	0.91135 TO 0.91631	0.91011 TO 0.91755	371000
37	0.91421	+ OR - 0.00124	0.91297 TO 0.91545	0.91173 TO 0.91669	0.91049 TO 0.91793	366000
42	0.91407	+ OR - 0.00124	0.91283 TO 0.91531	0.91159 TO 0.91656	0.91035 TO 0.91780	361000
47	0.91397	+ OR - 0.00125	0.91272 TO 0.91522	0.91147 TO 0.91647	0.91021 TO 0.91773	356000
52	0.91369	+ OR - 0.00126	0.91243 TO 0.91495	0.91116 TO 0.91621	0.90990 TO 0.91747	351000
57	0.91370	+ OR - 0.00126	0.91245 TO 0.91496	0.91119 TO 0.91621	0.90994 TO 0.91747	346000
62	0.91374	+ OR - 0.00127	0.91247 TO 0.91501	0.91120 TO 0.91628	0.90993 TO 0.91755	341000
67	0.91383	+ OR - 0.00128	0.91255 TO 0.91511	0.91126 TO 0.91640	0.90998 TO 0.91768	336000
72	0.91373	+ OR - 0.00129	0.91244 TO 0.91501	0.91116 TO 0.91630	0.90987 TO 0.91759	331000
77	0.91380	+ OR - 0.00130	0.91250 TO 0.91511	0.91120 TO 0.91641	0.90989 TO 0.91771	326000
82	0.91395	+ OR - 0.00131	0.91264 TO 0.91527	0.91132 TO 0.91658	0.91001 TO 0.91790	321000
87	0.91403	+ OR - 0.00133	0.91271 TO 0.91536	0.91138 TO 0.91669	0.91005 TO 0.91802	316000
92	0.91416	+ OR - 0.00134	0.91282 TO 0.91550	0.91148 TO 0.91684	0.91014 TO 0.91818	311000
97	0.91402	+ OR - 0.00134	0.91268 TO 0.91536	0.91134 TO 0.91670	0.91000 TO 0.91804	306000
102	0.91407	+ OR - 0.00135	0.91272 TO 0.91542	0.91136 TO 0.91677	0.91001 TO 0.91812	301000
107	0.91401	+ OR - 0.00137	0.91264 TO 0.91538	0.91127 TO 0.91675	0.90990 TO 0.91812	296000
112	0.91412	+ OR - 0.00138	0.91274 TO 0.91550	0.91136 TO 0.91688	0.90998 TO 0.91825	291000
117	0.91398	+ OR - 0.00139	0.91259 TO 0.91537	0.91119 TO 0.91676	0.90980 TO 0.91815	286000
122	0.91395	+ OR - 0.00141	0.91254 TO 0.91535	0.91113 TO 0.91676	0.90973 TO 0.91817	281000
127	0.91386	+ OR - 0.00143	0.91243 TO 0.91529	0.91101 TO 0.91672	0.90958 TO 0.91815	276000
132	0.91367	+ OR - 0.00145	0.91222 TO 0.91511	0.91077 TO 0.91656	0.90933 TO 0.91801	271000
137	0.91410	+ OR - 0.00145	0.91264 TO 0.91555	0.91119 TO 0.91700	0.90973 TO 0.91846	266000
142	0.91401	+ OR - 0.00147	0.91254 TO 0.91548	0.91107 TO 0.91696	0.90960 TO 0.91843	261000
147	0.91405	+ OR - 0.00149	0.91256 TO 0.91555	0.91107 TO 0.91704	0.90958 TO 0.91853	256000
152	0.91378	+ OR - 0.00151	0.91226 TO 0.91529	0.91075 TO 0.91680	0.90924 TO 0.91831	251000
157	0.91394	+ OR - 0.00153	0.91241 TO 0.91547	0.91088 TO 0.91700	0.90935 TO 0.91853	246000
162	0.91422	+ OR - 0.00154	0.91267 TO 0.91576	0.91113 TO 0.91730	0.90958 TO 0.91885	241000
167	0.91390	+ OR - 0.00155	0.91234 TO 0.91545	0.91079 TO 0.91701	0.90923 TO 0.91856	236000
172	0.91376	+ OR - 0.00159	0.91217 TO 0.91534	0.91059 TO 0.91693	0.90900 TO 0.91851	231000
177	0.91401	+ OR - 0.00161	0.91240 TO 0.91563	0.91078 TO 0.91724	0.90917 TO 0.91885	226000
182	0.91365	+ OR - 0.00163	0.91201 TO 0.91528	0.91038 TO 0.91691	0.90875 TO 0.91854	221000
187	0.91382	+ OR - 0.00166	0.91216 TO 0.91548	0.91050 TO 0.91714	0.90884 TO 0.91880	216000
192	0.91382	+ OR - 0.00169	0.91213 TO 0.91552	0.91044 TO 0.91721	0.90875 TO 0.91890	211000
197	0.91423	+ OR - 0.00170	0.91253 TO 0.91592	0.91084 TO 0.91762	0.90914 TO 0.91931	206000
202	0.91402	+ OR - 0.00172	0.91231 TO 0.91574	0.91059 TO 0.91746	0.90887 TO 0.91917	201000
207	0.91434	+ OR - 0.00175	0.91259 TO 0.91609	0.91083 TO 0.91784	0.90908 TO 0.91960	196000
212	0.91386	+ OR - 0.00178	0.91208 TO 0.91564	0.91030 TO 0.91742	0.90853 TO 0.91919	191000
217	0.91393	+ OR - 0.00178	0.91215 TO 0.91572	0.91037 TO 0.91750	0.90859 TO 0.91928	186000
222	0.91409	+ OR - 0.00181	0.91228 TO 0.91590	0.91047 TO 0.91770	0.90867 TO 0.91951	181000
227	0.91417	+ OR - 0.00185	0.91232 TO 0.91601	0.91048 TO 0.91786	0.90863 TO 0.91971	176000
232	0.91461	+ OR - 0.00187	0.91274 TO 0.91649	0.91087 TO 0.91836	0.90899 TO 0.92023	171000
237	0.91431	+ OR - 0.00190	0.91241 TO 0.91622	0.91051 TO 0.91812	0.90860 TO 0.92002	166000
242	0.91427	+ OR - 0.00195	0.91232 TO 0.91622	0.91036 TO 0.91817	0.90841 TO 0.92012	161000
247	0.91370	+ OR - 0.00199	0.91172 TO 0.91569	0.90973 TO 0.91768	0.90774 TO 0.91967	156000
252	0.91293	+ OR - 0.00200	0.91093 TO 0.91493	0.90893 TO 0.91693	0.90693 TO 0.91893	151000
257	0.91279	+ OR - 0.00204	0.91075 TO 0.91482	0.90872 TO 0.91686	0.90668 TO 0.91889	146000
262	0.91317	+ OR - 0.00207	0.91110 TO 0.91524	0.90903 TO 0.91731	0.90696 TO 0.91938	141000
267	0.91339	+ OR - 0.00214	0.91125 TO 0.91553	0.90911 TO 0.91766	0.90697 TO 0.91980	136000
272	0.91369	+ OR - 0.00221	0.91148 TO 0.91589	0.90927 TO 0.91810	0.90707 TO 0.92030	131000
277	0.91358	+ OR - 0.00226	0.91132 TO 0.91584	0.90906 TO 0.91810	0.90680 TO 0.92036	126000
282	0.91349	+ OR - 0.00228	0.91121 TO 0.91577	0.90892 TO 0.91805	0.90664 TO 0.92034	121000
287	0.91338	+ OR - 0.00235	0.91104 TO 0.91573	0.90869 TO 0.91807	0.90635 TO 0.92042	116000
292	0.91331	+ OR - 0.00244	0.91087 TO 0.91574	0.90843 TO 0.91818	0.90600 TO 0.92062	111000
297	0.91307	+ OR - 0.00249	0.91058 TO 0.91556	0.90810 TO 0.91805	0.90561 TO 0.92054	106000
302	0.91190	+ OR - 0.00252	0.90938 TO 0.91441	0.90687 TO 0.91693	0.90435 TO 0.91945	101000
307	0.91285	+ OR - 0.00256	0.91030 TO 0.91541	0.90774 TO 0.91797	0.90518 TO 0.92052	96000
312	0.91290	+ OR - 0.00254	0.91036 TO 0.91544	0.90783 TO 0.91798	0.90529 TO 0.92051	91000
317	0.91349	+ OR - 0.00263	0.91086 TO 0.91612	0.90823 TO 0.91875	0.90560 TO 0.92138	86000
322	0.91255	+ OR - 0.00261	0.90993 TO 0.91516	0.90732 TO 0.91777	0.90471 TO 0.92038	81000
327	0.91267	+ OR - 0.00271	0.90996 TO 0.91537	0.90725 TO 0.91808	0.90455 TO 0.92079	76000
332	0.91261	+ OR - 0.00287	0.90974 TO 0.91549	0.90687 TO 0.91836	0.90400 TO 0.92123	71000
337	0.91147	+ OR - 0.00293	0.90853 TO 0.91440	0.90560 TO 0.91734	0.90266 TO 0.92027	66000
342	0.91066	+ OR - 0.00304	0.90762 TO 0.91370	0.90457 TO 0.91674	0.90153 TO 0.91979	61000
347	0.91121	+ OR - 0.00316	0.90805 TO 0.91437	0.90489 TO 0.91753	0.90173 TO 0.92069	56000
352	0.91067	+ OR - 0.00341	0.90726 TO 0.91408	0.90385 TO 0.91749	0.90044 TO 0.92090	51000
357	0.91028	+ OR - 0.00371	0.90657 TO 0.91399	0.90287 TO 0.91769	0.89916 TO 0.92140	46000
362	0.90873	+ OR - 0.00385	0.90488 TO 0.91258	0.90103 TO 0.91643	0.89718 TO 0.92028	41000
367	0.91141	+ OR - 0.00409	0.90732 TO 0.91549	0.90323 TO 0.91958	0.89914 TO 0.92367	36000
372	0.91063	+ OR - 0.00449	0.90614 TO 0.91512	0.90165 TO 0.91961	0.89717 TO 0.92410	31000
377	0.90965	+ OR - 0.00508	0.90457 TO 0.91473	0.89949 TO 0.91981	0.89441 TO 0.92489	26000
382	0.91367	+ OR - 0.00539	0.90828 TO 0.91906	0.90289 TO 0.92444	0.89750 TO 0.92983	21000
387	0.91587	+ OR - 0.00688	0.90898 TO 0.92275	0.90210 TO 0.92963	0.89522 TO 0.93652	16000
392	0.91274	+ OR - 0.00625	0.90650 TO 0.91899	0.90025 TO 0.92523	0.89401 TO 0.93148	11000
397	0.91098	+ OR - 0.01031	0.90067 TO 0.92130	0.89036 TO 0.93161	0.88004 TO 0.94192	6000

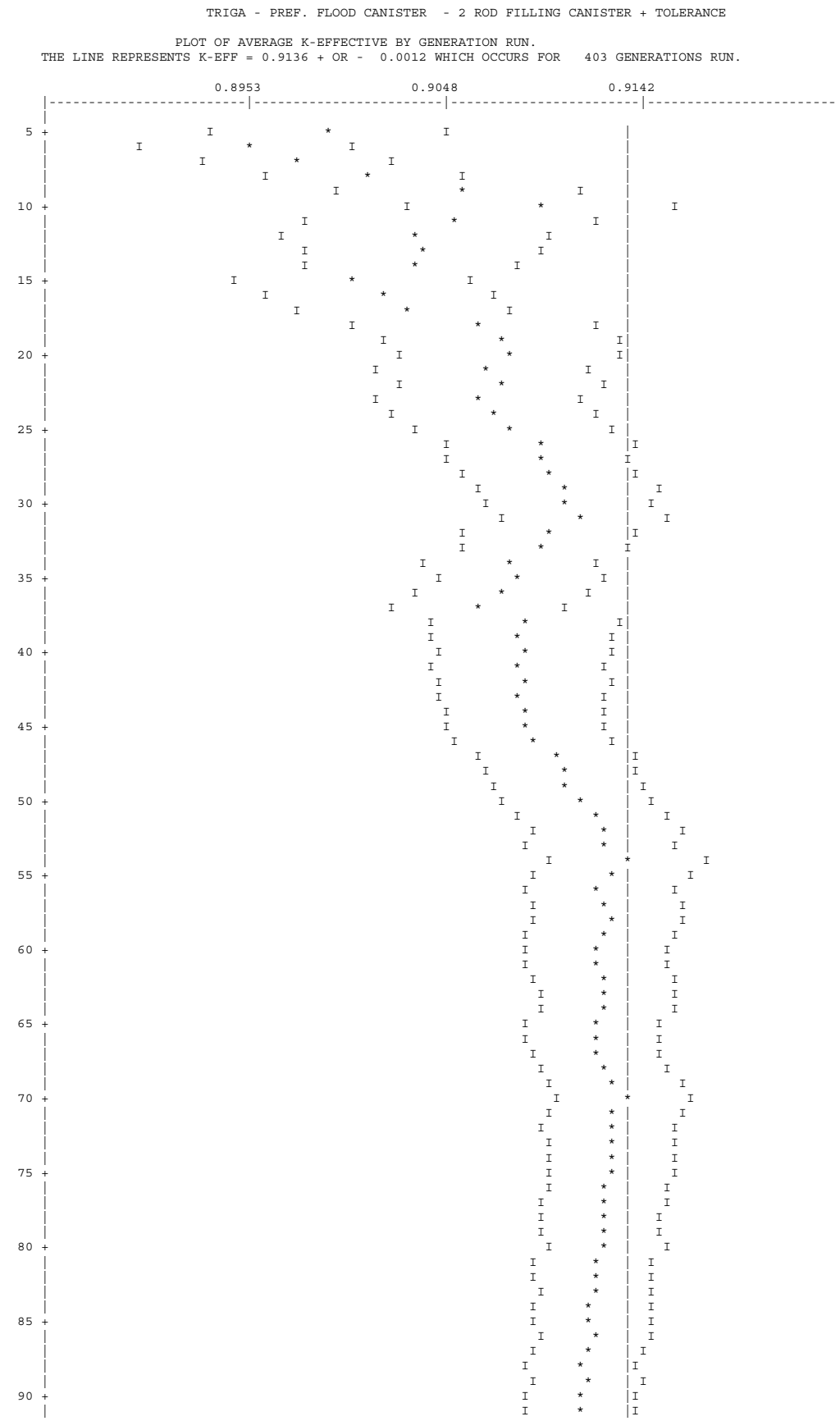
TRIGA - PREF. FLOOD CANISTER - 2 ROD FILLING CANISTER + TOLERANCE
PLOT OF AVERAGE K-EFFECTIVE BY GENERATION RUN.
THE LINE REPRESENTS K-EFF = 0.9136 + OR - 0.0012 WHICH OCCURS FOR 403 GENERATIONS RUN.
0.8953
0.9048
0.9142
5
10
15
20
25
30
35
40
45
50
55
60
65
70
75
80
85
90

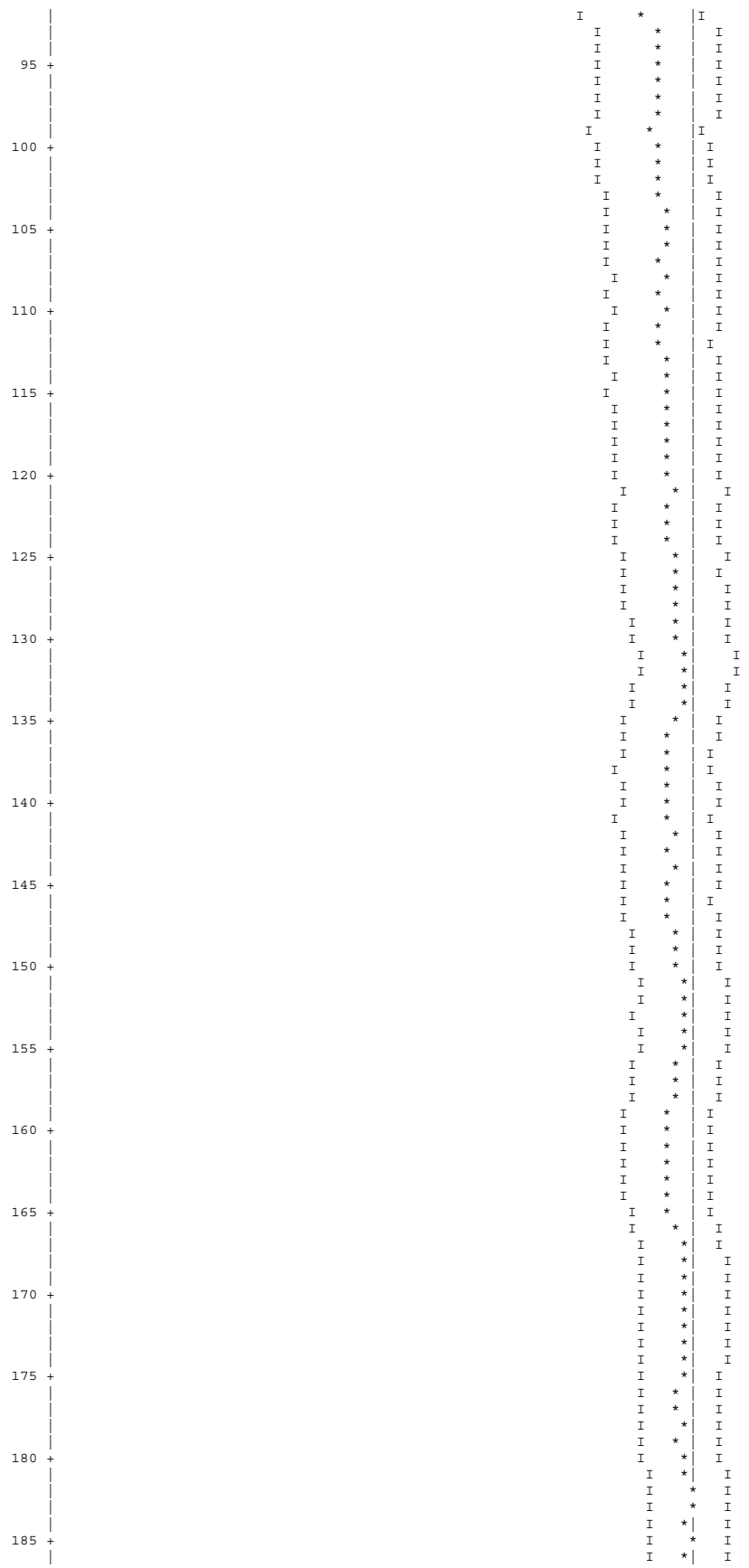

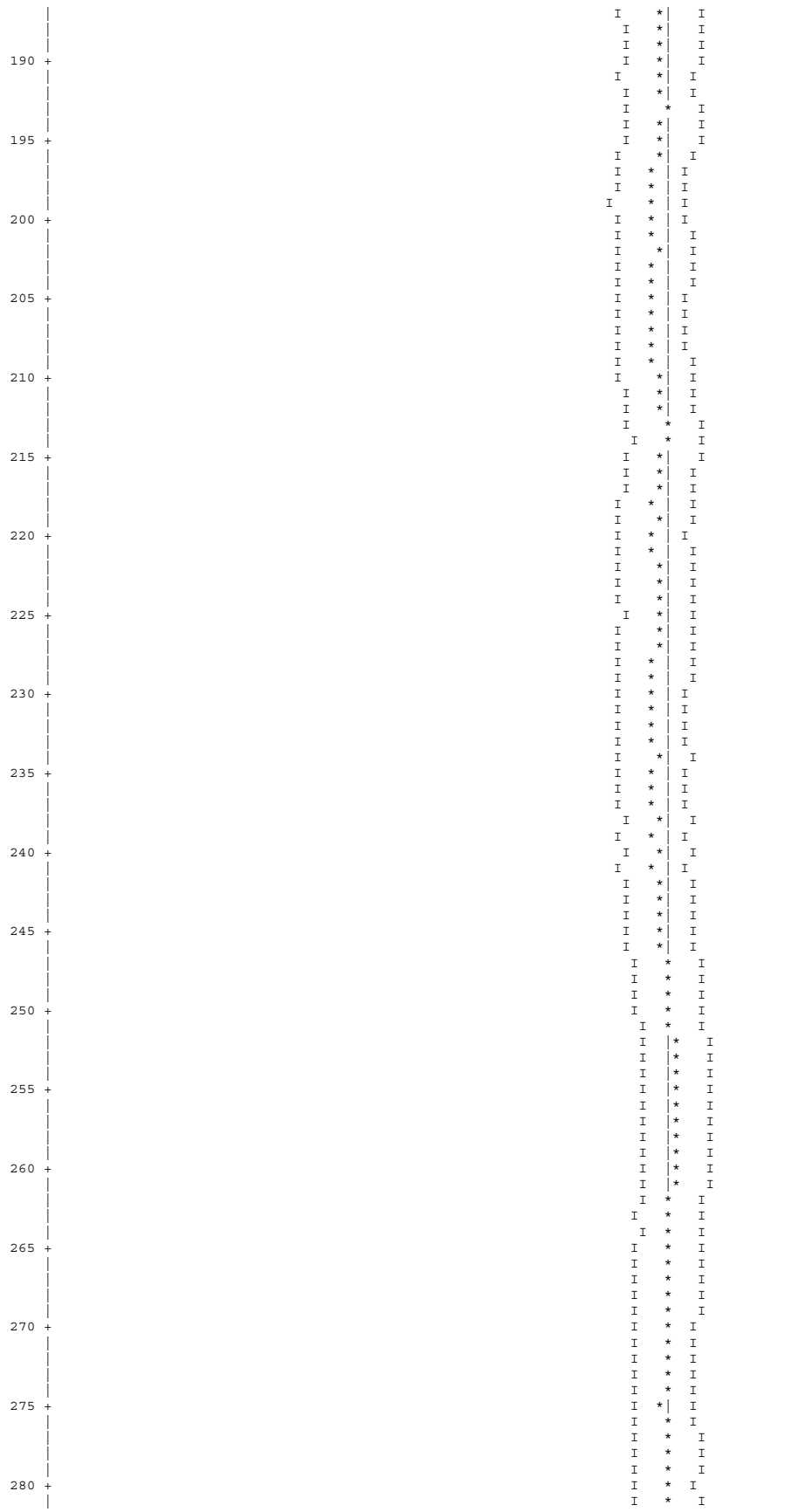

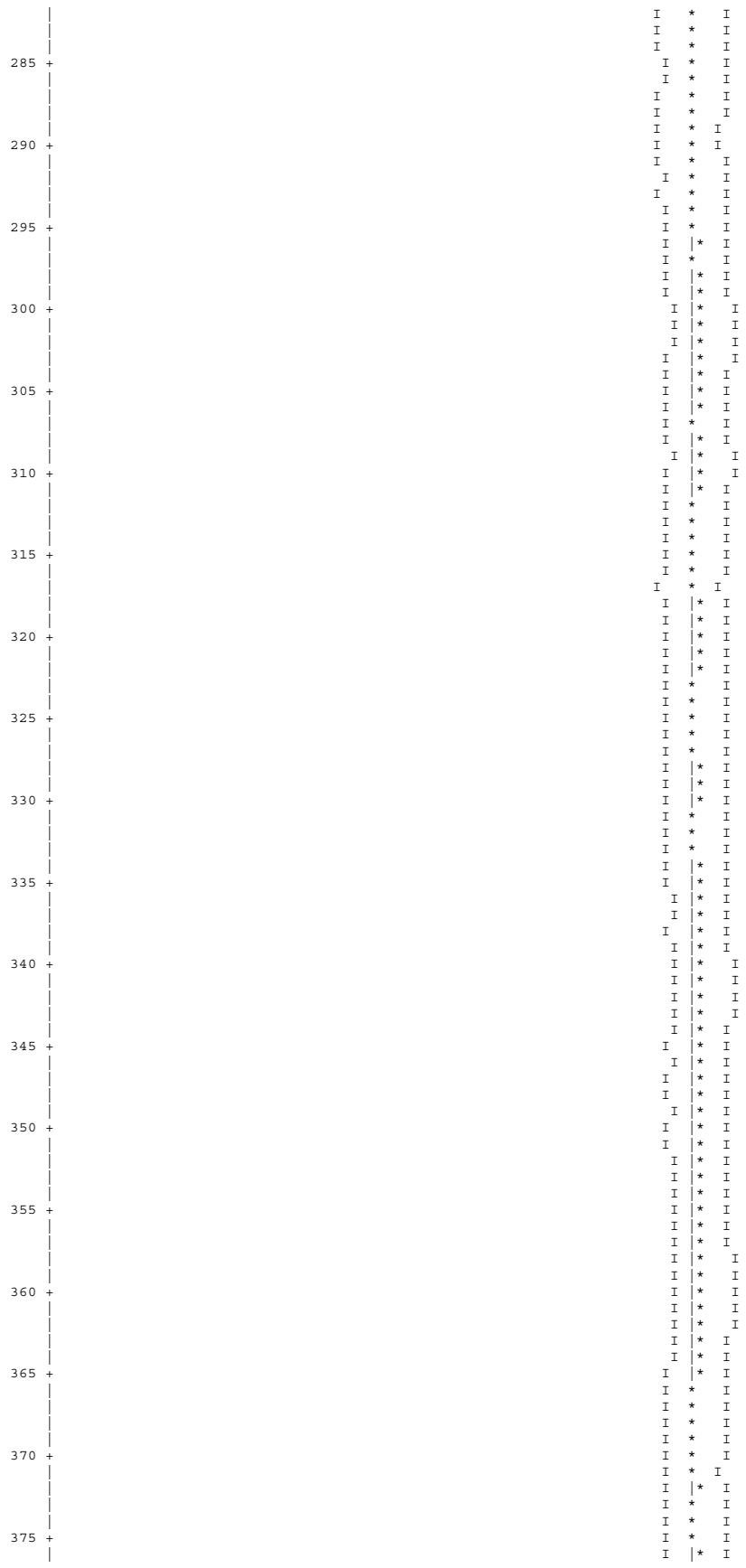


380
385
390
395
400

TRIGA - PREF. FLOOD CANISTER - 2 ROD FILLING CANISTER + TOLERANCE

PLOT OF AVERAGE K-EFFECTIVE BY GENERATION SKIPPED.
THE LINE REPRESENTS K-EFF = 0.9136 + OR - 0.0012 WHICH OCCURS FOR 3 GENERATIONS SKIPPED.

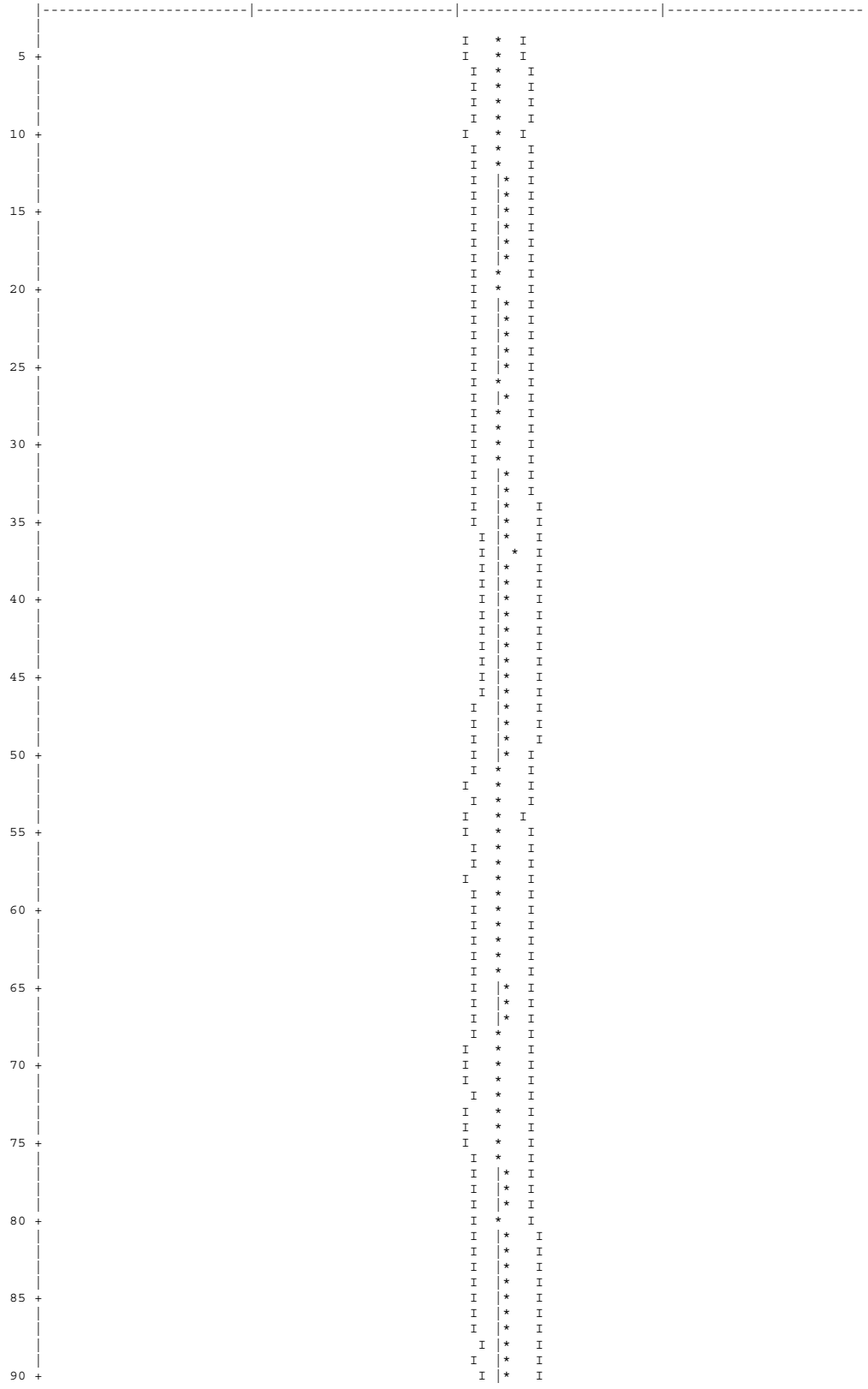

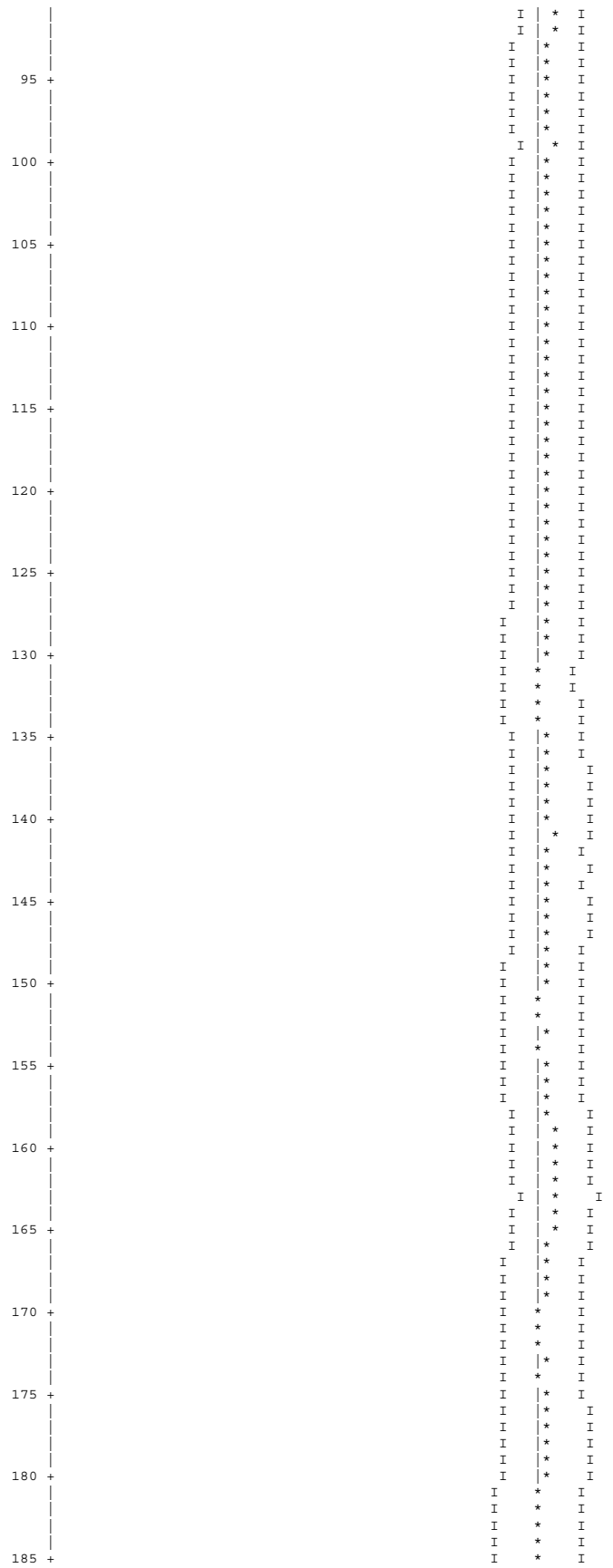

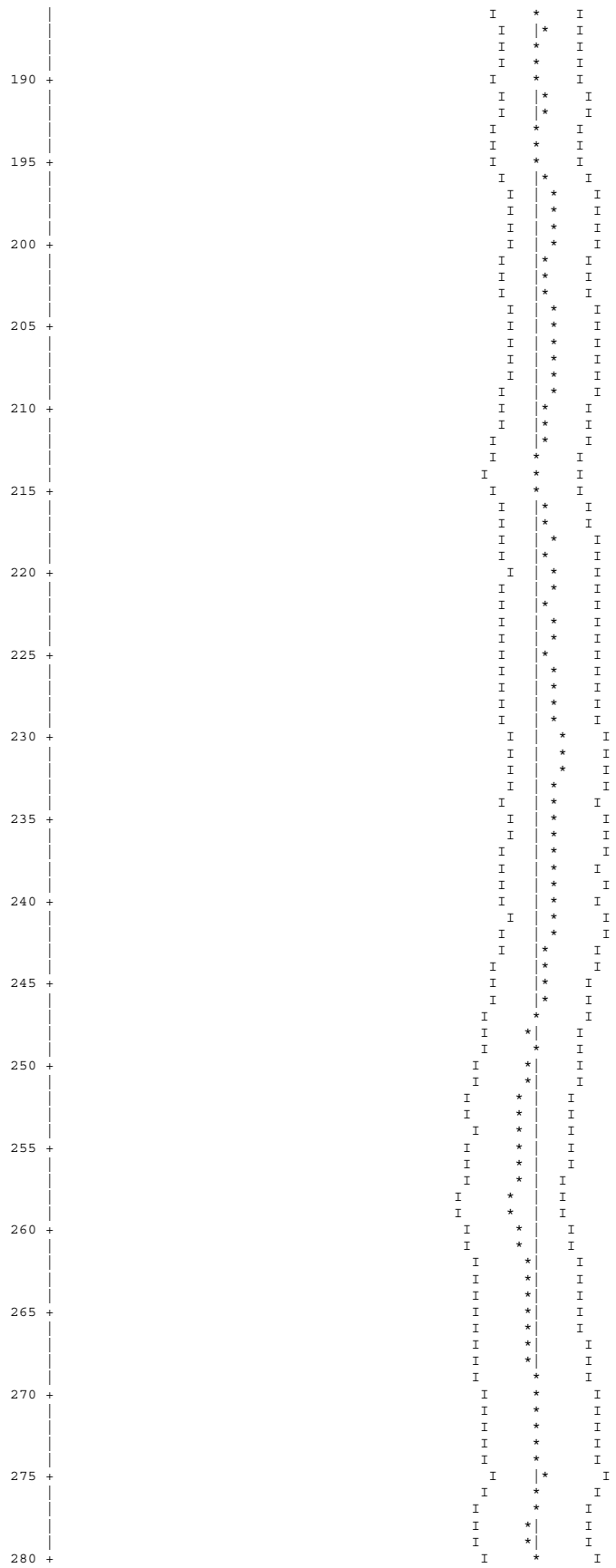

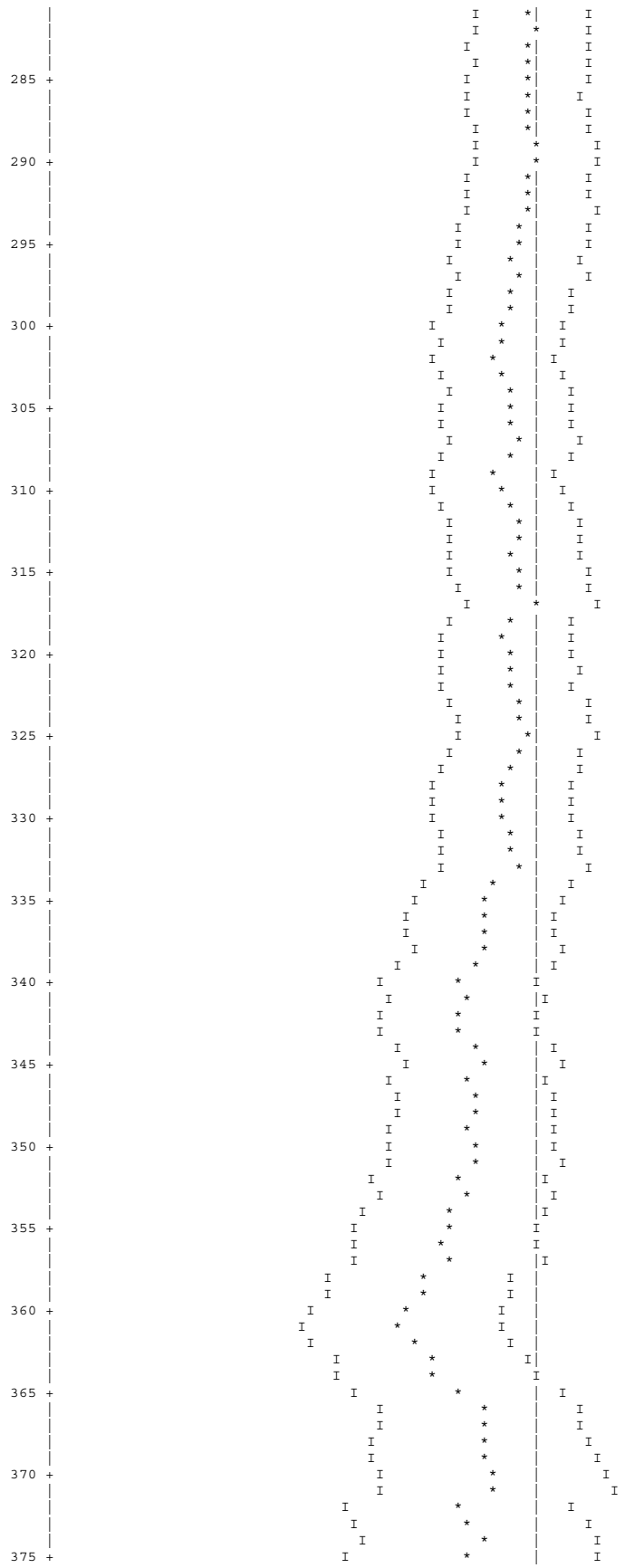

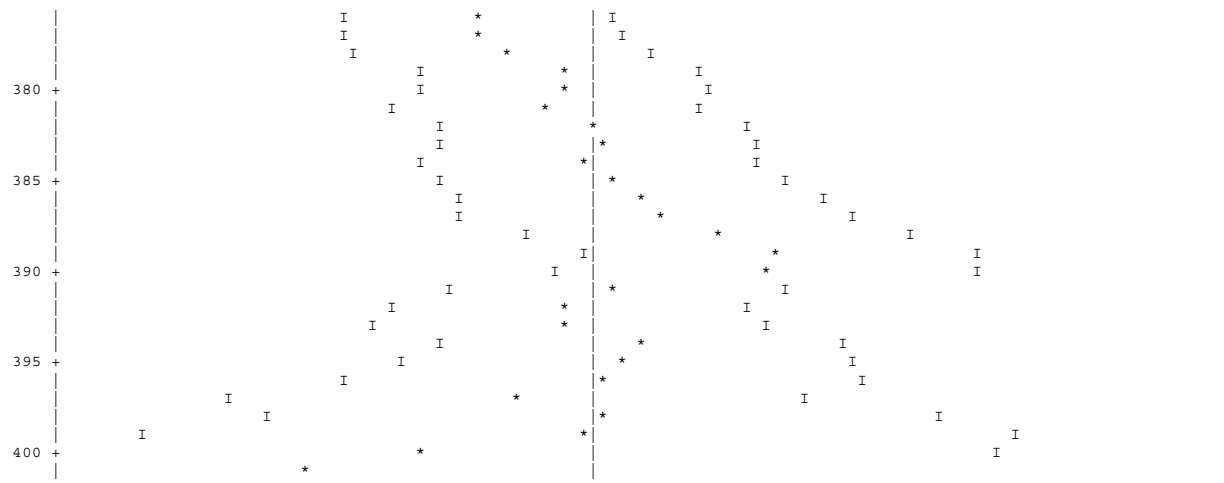

TRIGA - PREF. FLOOD CANISTER - 2 ROD FILLING CANISTER + TOLERANCE

SKIPPING 3 GENERATIONS

GROUP	FISSION FRACTION	UNIT	REGION	FISSIONS	PERCENT DEVIATION	ABSORPTIONS	PERCENT DEVIATION	LEAKAGE	PERCENT DEVIATION
1	0.0004			3.78261E-04	1.7107	1.15095E-03	1.5661	0.00000E+00	0.0000
2	0.0019			1.75837E-03	0.5591	3.10796E-03	0.4703	0.00000E+00	0.0000
3	0.0025			2.28749E-03	0.5099	1.94752E-03	0.3999	0.00000E+00	0.0000
4	0.0015			1.37908E-03	0.5231	1.10253E-03	0.4127	0.00000E+00	0.0000
5	0.0021			1.94967E-03	0.4578	2.41958E-03	0.3640	0.00000E+00	0.0000
6	0.0032			2.93131E-03	0.3491	8.91355E-03	0.3460	0.00000E+00	0.0000
7	0.0039			3.60175E-03	0.2838	1.93545E-02	0.3332	0.00000E+00	0.0000
8	0.0041			3.76576E-03	0.2765	1.66521E-02	0.3506	0.00000E+00	0.0000
9	0.0057			5.16621E-03	0.2941	1.80498E-02	0.2826	0.00000E+00	0.0000
10	0.0121			1.10499E-02	0.2832	4.36278E-02	0.2806	0.00000E+00	0.0000
11	0.0257			2.35064E-02	0.2820	6.14684E-02	0.2361	0.00000E+00	0.0000
12	0.0344			3.14157E-02	0.2790	4.92024E-02	0.2293	0.00000E+00	0.0000
13	0.0313			2.85808E-02	0.2936	5.76898E-02	0.2103	0.00000E+00	0.0000
14	0.0255			2.32593E-02	0.2715	6.87534E-02	0.2560	0.00000E+00	0.0000
15	0.0050			4.54822E-03	0.3571	3.02211E-02	0.3717	0.00000E+00	0.0000
16	0.0034			3.09197E-03	0.4445	1.65618E-02	0.4372	0.00000E+00	0.0000
17	0.0052			4.73398E-03	0.6335	9.52084E-03	0.4348	0.00000E+00	0.0000
18	0.0068			6.25696E-03	0.6007	8.97307E-03	0.4118	0.00000E+00	0.0000
19	0.0084			7.65993E-03	0.5298	1.40545E-02	0.4171	0.00000E+00	0.0000
20	0.0338			3.08651E-02	0.3441	4.44361E-02	0.3445	0.00000E+00	0.0000
21	0.0177			1.61492E-02	0.4988	1.70573E-02	0.4152	0.00000E+00	0.0000
22	0.0403			3.67780E-02	0.3622	3.38568E-02	0.3256	0.00000E+00	0.0000
23	0.1157			1.05719E-01	0.2352	8.93478E-02	0.2345	0.00000E+00	0.0000
24	0.1882			1.71967E-01	0.2075	1.29114E-01	0.1984	0.00000E+00	0.0000
25	0.1537			1.40418E-01	0.2359	9.90052E-02	0.2247	0.00000E+00	0.0000
26	0.1909			1.74441E-01	0.2514	1.15238E-01	0.2552	0.00000E+00	0.0000
27	0.0765			6.98923E-02	0.3710	4.14854E-02	0.3860	0.00000E+00	0.0000
SYSTEM TOTAL =				9.13550E-01	0.1302	1.00231E+00	0.0445	0.00000E+00	0.0000

ELAPSED TIME 11.96183 MINUTES

RANDOM NUMBER= 1B2D06BC15BF

```
TRIGA - PREF. FLOOD CANISTER  - 2 ROD FILLING CANISTER + TOLERANCE

                              FREQUENCY FOR GENERATIONS    4 TO  403
0.8577 TO 0.8660     *****
0.8660 TO 0.8743     ***************
0.8743 TO 0.8825     ********************
0.8825 TO 0.8908     *************************
0.8908 TO 0.8991     **************************************************
0.8991 TO 0.9073     ************************************************
0.9073 TO 0.9156     ************************************************
0.9156 TO 0.9239     ********************************************************
0.9239 TO 0.9321     ******************************************
0.9321 TO 0.9404     ************************************
0.9404 TO 0.9487     ****************************
0.9487 TO 0.9569     **************
0.9569 TO 0.9652     ***
0.9652 TO 0.9735     ***
0.9735 TO 0.9817     **
0.9817 TO 0.9900     ***

                              FREQUENCY FOR GENERATIONS  104 TO  403
0.8577 TO 0.8660     ****
0.8660 TO 0.8743     ********
0.8743 TO 0.8825     **************
0.8825 TO 0.8908     ********************
0.8908 TO 0.8991     ****************************************
0.8991 TO 0.9073     ************************************
0.9073 TO 0.9156     ***********************************
0.9156 TO 0.9239     ************************************
0.9239 TO 0.9321     ********************************
0.9321 TO 0.9404     ****************************
0.9404 TO 0.9487     ***********************
0.9487 TO 0.9569     ************
0.9569 TO 0.9652     ***
0.9652 TO 0.9735     ***
0.9735 TO 0.9817
0.9817 TO 0.9900     **

                              FREQUENCY FOR GENERATIONS  204 TO  403
0.8577 TO 0.8660     **
0.8660 TO 0.8743     ******
0.8743 TO 0.8825     ************
0.8825 TO 0.8908     **************
0.8908 TO 0.8991     ***********************
0.8991 TO 0.9073     *******************************
0.9073 TO 0.9156     ***********************
0.9156 TO 0.9239     ********************
0.9239 TO 0.9321     ********************
0.9321 TO 0.9404     ******************
0.9404 TO 0.9487     **************
0.9487 TO 0.9569     *********
0.9569 TO 0.9652     **
0.9652 TO 0.9735     ***
0.9735 TO 0.9817
0.9817 TO 0.9900     **
_TRIGA - PREF. FLOOD CANISTER  - 2 ROD FILLING CANISTER + TOLERANCE

                              FREQUENCY FOR GENERATIONS  304 TO  403
0.8577 TO 0.8660     *
0.8660 TO 0.8743     ****
0.8743 TO 0.8825     ******
0.8825 TO 0.8908     ********
0.8908 TO 0.8991     ***********
0.8991 TO 0.9073     *****************
0.9073 TO 0.9156     *************
0.9156 TO 0.9239     ***********
0.9239 TO 0.9321     ********
0.9321 TO 0.9404     **********
0.9404 TO 0.9487     ***
0.9487 TO 0.9569     ***
0.9569 TO 0.9652
0.9652 TO 0.9735     ***
0.9735 TO 0.9817
0.9817 TO 0.9900     **


*****************************************************************************************************************************************
*

          CONGRATULATIONS!  YOU HAVE  SUCCESSFULLY TRAVERSED THE PERILOUS PATH THROUGH KENO V IN  11.96183 MINUTES

*****************************************************************************************************************************************
*
_
```

Figure 6.6.5-2 Summary of CSAS25 Input/Output for NAC-LWT with TRIGA Fuel Elements – Most Reactive Poisoned Basket Configuration

```
PRIMARY MODULE ACCESS AND INPUT RECORD ( SCALE DRIVER - 95/03/29 - 09:06:37 )
   MODULE CSAS25   WILL BE CALLED
     TRIGA - PREF. FLOOD CANISTER
     27GROUPNDF4  LATTICECELL
     'FUEL
     U-235   1 0.0 9.052980E-4 END
     U-238   1 0.0 3.849480E-4 END
     ZR      1 0.0 3.446510E-2 END
     H       1 0.0 5.514420E-2 END
     'CLAD, BASKET, AND CASK
     SS304   2 1.0 293.0 END
     'CANISTER INTERNAL MODERATOR
     H2O     3 1.0 293.0 END
     'ZIRCONIUM ROD
     ZR      4 1.0 293.0 END
     'GRAPHITE REFLETOR
     C       5 1.0 293.0 END
     'LEAD SHIELD
     PB      6 1.0 293.0 END
     'NEUTRON SHIELD
     H2O     7 1.0 293.0 END
     'CASK EXTERNAL MATERIAL
     H2O     8 1E-20 293.0 END
     'END FITTING FOR FUEL ELEMENT
     SS304   9 0.337137 293.0 END
     H2O     9 0.662863 293.0 END
     'SECOND FUEL MATERIAL FOR UN-CANISTERED
     U-235   10 0.0 9.052980E-4 END
     U-238   10 0.0 3.849480E-4 END
     ZR      10 0.0 3.446510E-2 END
     H       10 0.0 5.514420E-2 END
     'SECOND END-FITTING MATERIAL FOR UN-CANISTERED FUEL
     SS304   11 0.337137 293.0 END
     H2O     11 1.0E-20 293.0 END
     'CASK INTERIOR MODERATOR MATERIAL
     H2O     12 1.0E-20 293.0 END
     'NEUTRON ABSORBER PLATE WITH BORON
     FE     13 DEN=7.76 0.6717 293.0 END
     C      13 DEN=7.76 0.0001 293.0 END
     SI     13 DEN=7.76 0.0033 293.0 END
     MN     13 DEN=7.76 0.0060 293.0 END
     P      13 DEN=7.75 0.0001 293.0 END
     CR     13 DEN=7.76 0.1849 293.0 END
     NI     13 DEN=7.76 0.1233 293.0 END
     B-10   13 DEN=7.76 0.0073 293.0 END
     B-11   13 DEN=7.76 0.0007 293.0 END
     N      13 DEN=7.76 0.0017 293.0 END
     'NEUTRON ABSORBER PLATE WITHOUT BORON
     FE     14 DEN=7.76 0.6717 293.0 END
     C      14 DEN=7.76 0.0001 293.0 END
     SI     14 DEN=7.76 0.0033 293.0 END
     MN     14 DEN=7.76 0.0060 293.0 END
     P      14 DEN=7.75 0.0001 293.0 END
     CR     14 DEN=7.76 0.1849 293.0 END
     NI     14 DEN=7.76 0.1233 293.0 END
     N      14 DEN=7.76 0.0017 293.0 END
     END COMP
     SQUAREPITCH 4.2992 3.6449 1 3 3.7541 2 END
     MORE DATA
     RES=10  CYLINDER 1.8224 DAN(10)=8.52196E-01
     END MORE
     TRIGA - PREF. FLOOD CANISTER
     READ PARAM TME=170.0 GEN=403 NPG=1000 RUN=YES PLT=NO
     TBA=2.0 END PARAM
     READ GEOM
     UNIT 1
     COM='TRIGA FUEL ELEMENT (SCREENED)'
     CYLINDER 4 1 0.2858 2P19.05
     CYLINDER 1 1 1.8224 2P19.05
     CYLINDER 5 1 1.8224 2P27.7368
     CYLINDER 2 1 1.8771 2P27.7368
     CYLINDER 9 1 1.8771 2P36.703
     UNIT 5
     COM='3.38 in Width / 0.28 in Thickness DIVIDER CENTER STACK (SCREENED)'
     CUBOID   2 1 2P4.2926 0.7112 0.0 2P36.703
     UNIT 6
     COM='3.38 in Width / 0.24 in Thickness DIVIDER OUTSIDE STACK (SCREENED)'
     CUBOID   2 1 2P4.2926 0.6096 0.0 2P36.703
     UNIT 10
     COM='TRIGA ELEMENTS IN Top of 3.38 in x 3.38 in OPENING (SCREENED)'
     CUBOID    3 1 2P4.0267 +4.1029 -3.9505 2P36.703
     HOLE      1  +2.1495 +2.2257 0.0
     HOLE      1  -2.1495 +2.2257 0.0
     HOLE      1  -2.1495 -2.0733 0.0
     HOLE      1  +2.1495 -2.0733 0.0
     CUBOID    2 1 2P4.2164 +4.2926 -4.1402 2P36.703
     CUBOID    12 1 2P4.2926 2P4.2926 2P36.703
     UNIT 11
```

```
COM='TRIGA ELEMENTS IN Bottom of 3.38 in x 3.38 in OPENING (SCREENED)'
CUBOID    3 1 2P4.0267 +3.9505 -4.1029 2P36.703
HOLE      1  +2.1495 -2.2257 0.0
HOLE      1  -2.1495 -2.2257 0.0
HOLE      1  -2.1495 +2.0733 0.0
HOLE      1  +2.1495 +2.0733 0.0
CUBOID    2 1 2P4.2164 +4.1402 -4.2926 2P36.703
CUBOID    12 1 2P4.2926 2P4.2926 2P36.703
UNIT 12
COM='TRIGA ELEMENTS IN Bottom Right of 3.38 in x 3.38 in OPENING (SCREENED)'
CUBOID    3 1 +4.1029 -3.9505 +3.9505 -4.1029 2P36.703
HOLE      1  +2.2257 -2.2257  0.0
HOLE      1  +2.2257 +2.0733  0.0
HOLE      1  -2.0733 -2.2257  0.0
HOLE      1  -2.0733 +2.0733  0.0
CUBOID    2 1 +4.2926 -4.1402 +4.1402 -4.2926 2P36.703
CUBOID    12 1 2P4.2926 2P4.2926 2P36.703
UNIT 13
COM='TRIGA ELEMENTS IN Top Right of 3.38 in x 3.38 in OPENING (SCREENED)'
CUBOID    3 1 +4.1029 -3.9505 +4.1029 -3.9505 2P36.703
HOLE      1  +2.2257 +2.2257  0.0
HOLE      1  +2.2257 -2.0733  0.0
HOLE      1  -2.0733 +2.2257  0.0
HOLE      1  -2.0733 -2.0733  0.0
CUBOID    2 1 +4.2926 -4.1402 +4.2926 -4.1402 2P36.703
CUBOID    12 1 2P4.2926 2P4.2926 2P36.703
UNIT 14
COM='TRIGA ELEMENTS IN Bottom Left of 3.38 in x 3.38 in OPENING (SCREENED)'
CUBOID    3 1 +3.9505 -4.1029 +3.9505 -4.1029 2P36.703
HOLE      1  -2.2257 -2.2257  0.0
HOLE      1  -2.2257 +2.0733  0.0
HOLE      1  +2.0733 -2.2257  0.0
HOLE      1  +2.0733 +2.0733  0.0
CUBOID    2 1 +4.1402 -4.2926 +4.1402 -4.2926 2P36.703
CUBOID    12 1 2P4.2926 2P4.2926 2P36.703
UNIT 15
COM='TRIGA ELEMENTS IN Top Left of 3.38 in x 3.38 in OPENING (SCREENED)'
CUBOID    3 1 +3.9505 -4.1029 +4.1029 -3.9505 2P36.703
HOLE      1  -2.2257 +2.2257  0.0
HOLE      1  -2.2257 -2.0733  0.0
HOLE      1  +2.0733 +2.2257  0.0
HOLE      1  +2.0733 -2.0733  0.0
CUBOID    2 1 +4.1402 -4.2926 +4.2926 -4.1402 2P36.703
CUBOID    12 1 2P4.2926 2P4.2926 2P36.703
UNIT 16
COM='TRIGA BASKET 3.38 in x 3.38 in CENTER OPENING (SCREENED)'
CUBOID    3 1 2P4.0267 2P4.0267 2P36.703
HOLE      1  -2.1495 +2.1495  0.0
HOLE      1  -2.1495 -2.1495  0.0
HOLE      1  +2.1495 +2.1495  0.0
HOLE      1  +2.1495 -2.1495  0.0
CUBOID    2  1 2P4.2164 2P4.2164 2P36.703
CUBOID    12 1 2P4.2926 2P4.2926 2P36.703
UNIT 17
COM='HORIZONTAL X-X POISON SHEET + WATER'
CUBOID  13 1 2P3.8227 0.3175 0.0 2P34.163
CUBOID  14 1 2P4.1402 0.3175 0.0 2P34.163
CUBOID   12 1 2P4.2926 0.3175 0.0 2P36.703
UNIT 20
COM='CENTER COLUMN OF THREE OPENINGS w/ 0.28 in plate (SCREENED)'
ARRAY 1  -4.2926 -13.9065 -36.703
REPLICATE 2 1 4R0.7112 2R0.0 1
UNIT 21
COM='LEFT OUTSIDE COLUMN OF TWO OPENINGS w/ 0.12 in plate (SCREENED)'
ARRAY 2  -4.2926 -9.0488 -36.703
REPLICATE 2 1 0.0 0.3048 2R0.3048 2R0.0 1
UNIT 22
COM='RIGHT OUTSIDE COLUMN OF TWO OPENINGS w/ 0.12 in plate (SCREENED)'
ARRAY 3  -4.2926 -9.0488 -36.703
REPLICATE 2 1 0.3048 0.0 2R0.3048 2R0.0 1
UNIT 30
COM='NAC-LWT TRIGA BASKET (SCREENED)'
CYLINDER 12  1 17.1500 2P36.703
HOLE 20   0.0    0.0 0.0
HOLE 21  -9.2974 0.0 0.0
HOLE 22  +9.2974 0.0 0.0
CYLINDER 2  1 18.9103 2P37.338
CYLINDER 6  1 33.4645 2P37.338
CYLINDER 2  1 36.5188 2P37.338
CYLINDER 8  1 49.2227 2P37.338
CYLINDER 2  1 49.8221 2P37.338
CUBOID   8  1 4P49.8221 2P37.338
UNIT 41
COM='TRIGA FUEL ELEMENT'
CYLINDER 4  1 0.2858 2P19.05
CYLINDER 10 1 1.8224 2P19.05
CYLINDER 5  1 1.8224 2P27.7368
CYLINDER 2  1 1.8771 2P27.7368
CYLINDER 11 1 1.8771 2P36.703
UNIT 45
COM='3.38 in Width / 0.28 in Thickness DIVIDER CENTER STACK'
CUBOID   2 1 2P4.2926 0.7112 0.0 2P36.703
UNIT 46
COM='3.38 in Width / 0.24 in Thickness DIVIDER OUTSIDE STACK'
CUBOID   2 1 2P4.2926 0.6096 0.0 2P36.703
```

```
UNIT 50
COM='TRIGA FUEL ELEMENTS IN Top of 3.38 in x 3.38 in OPENING'
CUBOID    12 1 2P4.2926 2P4.2926 2P36.703
HOLE      41  +2.1495 +2.4154 0.0
HOLE      41  -2.1495 +2.4154 0.0
HOLE      41  -2.1495 -1.3389 0.0
HOLE      41  +2.1495 -1.3389 0.0
UNIT 51
COM='TRIGA FUEL ELEMENTS IN Bottom of 3.38 in x 3.38 in OPENING'
CUBOID    12 1 2P4.2926 2P4.2926 2P36.703
HOLE      41  +2.1495 -2.4154 0.0
HOLE      41  -2.1495 -2.4154 0.0
HOLE      41  -2.1495 +1.3389 0.0
HOLE      41  +2.1495 +1.3389 0.0
UNIT 52
COM='TRIGA FUEL ELEMENTS IN Bottom Right of 3.38 in x 3.38 in OPENING'
CUBOID    12 1 2P4.2926 2P4.2926 2P36.703
HOLE      41  +2.4154 -2.4154  0.0
HOLE      41  +2.4154 +1.3389  0.0
HOLE      41  -1.3389 -2.4154  0.0
HOLE      41  -1.3389 +1.3389  0.0
UNIT 53
COM='TRIGA FUEL ELEMENTS IN Top Right of 3.38 in x 3.38 in OPENING'
CUBOID    12 1 2P4.2926 2P4.2926 2P36.703
HOLE      41 +2.4154 +2.4154  0.0
HOLE      41 +2.4154 -1.3389  0.0
HOLE      41 -1.3389 +2.4154  0.0
HOLE      41 -1.3389 -1.3389  0.0
UNIT 54
COM='TRIGA FUEL ELEMENTS IN Bottom Left of 3.38 in x 3.38 in OPENING'
CUBOID    12 1 2P4.2926 2P4.2926 2P36.703
HOLE      41  -2.4154 -2.4154  0.0
HOLE      41  -2.4154 +1.3389  0.0
HOLE      41  +1.3389 -2.4154  0.0
HOLE      41  +1.3389 +1.3389  0.0
UNIT 55
COM='TRIGA FUEL ELEMENTS IN Top Left of 3.38 in x 3.38 in OPENING'
CUBOID    12 1 2P4.2926 2P4.2926 2P36.703
HOLE      41  -2.4154 +2.4154  0.0
HOLE      41  -2.4154 -1.3389  0.0
HOLE      41  +1.3389 +2.4154  0.0
HOLE      41  +1.3389 -1.3389  0.0
UNIT 56
COM='TRIGA BASKET 3.38 in x 3.38 in CENTER OPENING'
CUBOID    12 1 2P4.2926 2P4.2926 2P36.703
HOLE      41 +2.1495 -2.1495 0.0
HOLE      41 -2.1495 +2.1495 0.0
HOLE      41 -2.1495 -2.1495 0.0
HOLE      41 +2.1495 +2.1495 0.0
CUBOID    12 1 2P4.2926 2P4.2926 2P36.703
UNIT 60
COM='CENTER COLUMN OF THREE OPENINGS w/ 0.28 in plate'
ARRAY 11  -4.2926 -13.9065 -36.703
REPLICATE 2 1 4R0.7112 2R0.0 1
UNIT 61
COM='LEFT OUTSIDE COLUMN OF TWO OPENINGS w/ 0.12 in plate'
ARRAY 12  -4.2926 -9.0488 -36.703
REPLICATE 2 1 0.0 0.3048 2R0.3048 2R0.0 1
UNIT 62
COM='RIGHT OUTSIDE COLUMN OF TWO OPENINGS w/ 0.12 in plate'
ARRAY 13  -4.2926 -9.0488 -36.703
REPLICATE 2 1 0.3048 0.0 2R0.3048 2R0.0 1
UNIT 70
COM='NAC-LWT TRIGA BASKET'
CYLINDER 12  1 17.1500 2P36.703
HOLE 60   0.0    0.0 0.0
HOLE 61  -9.2974 0.0 0.0
HOLE 62  +9.2974 0.0 0.0
CYLINDER 2  1 18.9103 2P37.338
CYLINDER 6  1 33.4645 2P37.338
CYLINDER 2  1 36.5188 2P37.338
CYLINDER 8  1 49.2227 2P37.338
CYLINDER 2  1 49.8221 2P37.338
CUBOID   8  1 4P49.8221 2P37.338
UNIT 80
COM='SIMPLIFIED LID STRUCTURE NAC-LWT'
CYLINDER 2 1 36.5188 2P14.1351
CYLINDER 8 1 49.8221 2P14.1351
CUBOID   8 1 4P49.8221 2P14.1351
UNIT 81
COM='SIMPLIFIED CASK BOTTOM STRUCTURE NAC-LWT'
CYLINDER 6 1 26.3525 2P3.81
CYLINDER 2 1 36.6188 +13.97 -12.7
CYLINDER 8 1 49.8221 +13.97 -12.7
CUBOID   8 1 4P49.8221 +13.97 -12.7
GLOBAL UNIT 82
COM='STACK OF 5 BASKETS IN CASK'
ARRAY  20  -49.8221 -49.8221 -213.36
END GEOM
READ ARRAY
ARA=1 NUX=1 NUY=7 NUZ=1 FILL 10 5 17 16 17 5 11 END FILL
ARA=2 NUX=1 NUY=4 NUZ=1 FILL 13 17 6 12 END FILL
ARA=3 NUX=1 NUY=4 NUZ=1 FILL 15 17 6 14 END FILL
ARA=11 NUX=1 NUY=7 NUZ=1 FILL 50 45 17 56 17 45 51 END FILL
ARA=12 NUX=1 NUY=4 NUZ=1 FILL 53 17 46 52 END FILL
```

```
  ARA=13 NUX=1 NUY=4 NUZ=1 FILL 55 17 46 54 END FILL
  ARA=20 NUX=1 NUY=1 NUZ=7 FILL 81 30 3R70 30 80 END FILL
  END ARRAY
  READ BOUNDS ALL=MIR END BOUNDS
  END DATA



SECONDARY MODULE O0O008   HAS BEEN CALLED.

MODULE O0O008   IS FINISHED. COMPLETION CODE     0. CPU TIME USED     1.87 (SECONDS).

SECONDARY MODULE O0O002   HAS BEEN CALLED.

MODULE O0O002   IS FINISHED. COMPLETION CODE     0. CPU TIME USED    20.60 (SECONDS).

SECONDARY MODULE O0O009   HAS BEEN CALLED.

MODULE O0O009   IS FINISHED. COMPLETION CODE     0. CPU TIME USED  1087.30 (SECONDS).

MODULE CSAS25   IS FINISHED. COMPLETION CODE     0. CPU TIME USED  1112.90 (SECONDS).
```



```
 SSSSSSSSSS     CCCCCCCCCC      AAAAAAAAA     LL              EEEEEEEEEEEE                    PPPPPPPPPPP     CCCCCCCCCC
SSSSSSSSSSS   CCCCCCCCCCCC    AAAAAAAAAA    LL              EEEEEEEEEEEE                    PPPPPPPPPPPP   CCCCCCCCCCCC
SS         SS   CC         CC   AA         AA   LL              EE                              PP         PP   CC         CC
SS              CC              AA         AA   LL              EE                              PP         PP   CC
SS              CC              AA         AA   LL              EE                              PP         PP   CC
SSSSSSSSSSS     CC              AAAAAAAAAAAAA   LL              EEEEEEEEE       -------------   PPPPPPPPPPPP   CC
 SSSSSSSSSSS    CC              AAAAAAAAAAAAA   LL              EEEEEEEEE       -------------   PPPPPPPPPPP    CC
          SS    CC              AA         AA   LL              EE                              PP             CC
          SS    CC              AA         AA   LL              EE                              PP             CC
SS        SS    CC         CC   AA         AA   LL              EE                              PP             CC         CC
SSSSSSSSSSS     CCCCCCCCCCCC    AA         AA   LLLLLLLLLLLLL   EEEEEEEEEEEE                    PP             CCCCCCCCCCCC
 SSSSSSSSSS      CCCCCCCCCC     AA         AA   LLLLLLLLLLLLL   EEEEEEEEEEEE                    PP              CCCCCCCCCC
```

```
*******************************************************************************
*******************************************************************************
*****                                                                     *****
*****                  PROGRAM VERIFICATION INFORMATION                   *****
*****                                                                     *****
*****                CODE SYSTEM:  SCALE-PC VERSION:  4.3                 *****
*****                                                                     *****
*******************************************************************************
*******************************************************************************
*****                                                                     *****
*****              PROGRAM:  CSAS                                         *****
*****                                                                     *****
*****        CREATION DATE:  03/08/96                                     *****
*****                                                                     *****
*****              VOLUME:   ENG                                          *****
*****                                                                     *****
*****              LIBRARY:  G:\SCALE43\WIN_NT\EXE                        *****
*****                                                                     *****
*****                                                                     *****
*****      PRODUCTION CODE:  CSAS                                         *****
*****                                                                     *****
*****              VERSION:  3.1                                          *****
*****                                                                     *****
*****              JOBNAME:  SCALE-PC                                     *****
*****                                                                     *****
*****    DATE OF EXECUTION:  12/15/98                                     *****
*****                                                                     *****
*****    TIME OF EXECUTION:  06:26:07                                     *****
*****                                                                     *****
*******************************************************************************
*******************************************************************************
```

```
**** PROBLEM PARAMETERS ****

LIB 27GROUPNDF4  LIBRARY
MXX           14 MIXTURES
MSC           38 COMPOSITION SPECIFICATIONS
IZM            3 MATERIAL ZONES
GE  LATTICECELL  GEOMETRY
MORE           1 0/1 DO NOT READ/READ OPTIONAL PARAMETER DATA
MSLN           0 FUEL SOLUTIONS

**** PROBLEM GEOMETRY ****

CTP SQUAREPITCH  CELL TYPE
PITCH     4.2992 CM CENTER TO CENTER SPACING
FUELOD    3.6449 CM FUEL DIAMETER OR SLAB THICKNESS
MFUEL          1 MIXTURE NO. OF FUEL
MMOD           3 MIXTURE NO. OF MODERATOR
CLADOD    3.7541 CM CLAD OUTER DIAMETER
MCLAD          2 MIXTURE NO. OF CLAD

**** SPECIAL PARAMETERS ****

ISN            8 ORDER OF ANGULAR QUADRATURE
IIM           20 INNER ITERATION MAXIMUM
ICM           25 OUTER ITERATION MAXIMUM
SZF  1.00000E+00 SIZE FACTOR FOR SPATIAL MESH
EPS  1.00000E-04 OVERALL PROBLEM CONVERGENCE
PTC  1.00000E-04 SCALAR FLUX CONVERGENCE
BKL  1.42089E+00 BUCKLING FACTOR
IUS            0 THERMAL UPSCATTER SCALING
BAL         FINE BALANCE TABLE PRINT FLAG
DY   0.00000E+00 BUCKLING HEIGHT
DZ   0.00000E+00 BUCKLING DEPTH
IPN            0 DIFFUSION COEFFICIENT OPTION
FRD            0 LOGICAL UNIT NUMBER TO READ FLUX GUESS
FWR           -1 LOGICAL UNIT NUMBER TO WRITE FLUX GUESS
MSH         2001 NUMBER OF INTERVALS FOR RES. INTGRTNS
MLV            2 MAX LVALUE FOR RES. INTGRTNS
AXS            0 LOGICAL UNIT NUMBER TO WRITE ANISN LIB
RES           10 MIXTURE WITH SPECIAL RESONANCE CORRECTION
 *      CYLINDER GEOMETRY FOR SPECIAL RESONANCE CORRECTION
 *   1.82240E+00 DIMENSION (LBAR) FOR SPECIAL RESONANCE CORRECTION

DANCOFF FACTOR SPECIFICATION
MIXTURE     FACTOR
     10    0.85220

ZONE SPECIFICATIONS FOR LATTICECELL GEOMETRY

               ZONE  1 IS FUEL
               ZONE  2 IS CLAD
               ZONE  3 IS MOD
```

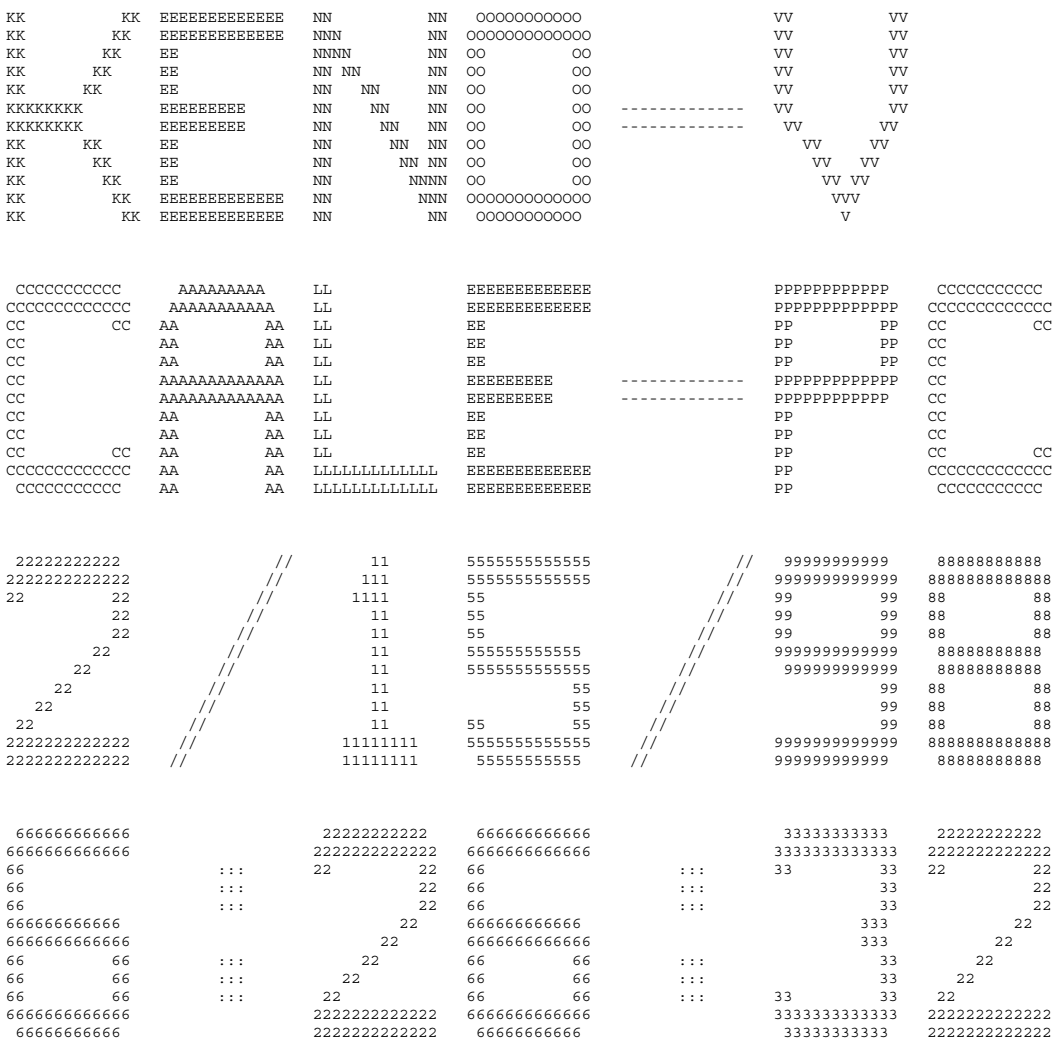
KK KK EEEEEEEEEEEEE NN NN OOOOOOOOOOO VV VV
KK KK EEEEEEEEEEEEE NNN NN OOOOOOOOOOOOO VV VV
KK KK EE NNNN NN OO OO VV VV
KK KK EE NN NN NN OO OO VV VV
KK KK EE NN NN NN OO OO VV VV
KKKKKKKK EEEEEEEEE NN NN NN OO OO VV VV
KKKKKKKK EEEEEEEEE NN NN NN OO OO VV VV
KK KK EE NN NN NN OO OO VV VV
KK KK EE NN NN NN OO OO VV VV
KK KK EE NN NNNN OO OO VV VV
KK KK EEEEEEEEEEEEE NN NNN OOOOOOOOOOOOO VVV
KK KK EEEEEEEEEEEEE NN NN OOOOOOOOOOO V
SSSSSSSSSS CCCCCCCCCC AAAAAAAAA LL EEEEEEEEEEEEE PPPPPPPPPPP CCCCCCCCCC
SSSSSSSSSSSS CCCCCCCCCCCC AAAAAAAAAAA LL EEEEEEEEEEEEE PPPPPPPPPPPP CCCCCCCCCCCC
SS SS CC CC AA AA LL EE PP PP CC CC
SS CC AA AA LL EE PP PP CC
SS CC AA AA LL EE PP PP CC
SSSSSSSSSSSS CC AAAAAAAAAAAAA LL EEEEEEEEE PPPPPPPPPPPP CC
SSSSSSSSSSS CC AAAAAAAAAAAAA LL EEEEEEEEE PPPPPPPPPPP CC
SS CC AA AA LL EE PP CC
SS CC AA AA LL EE PP CC
SS SS CC CC AA AA LL EE PP CC CC
SSSSSSSSSSSS CCCCCCCCCCCCC AA AA LLLLLLLLLLLL EEEEEEEEEEEEE PP CCCCCCCCCCCCC
SSSSSSSSSS CCCCCCCCCC AA AA LLLLLLLLLLLL EEEEEEEEEEEEE PP CCCCCCCCCC
11 22222222222 // 11 5555555555555 // 99999999999 88888888888
111 2222222222222 // 111 5555555555555 // 9999999999999 8888888888888
1111 22 22 // 1111 55 // 99 99 88 88
11 22 // 11 55 // 99 99 88 88
11 22 // 11 55 // 99 99 88 88
11 22 // 11 555555555555 // 9999999999999 88888888888
11 22 // 11 5555555555555 // 999999999999 88888888888
11 22 // 11 55 // 99 88 88
11 22 // 11 55 // 99 88 88
11 22 // 11 55 55 // 99 88 88
11111111 2222222222222 // 11111111 5555555555555 // 9999999999999 8888888888888
11111111 2222222222222 // 11111111 55555555555 // 999999999999 88888888888
0000000 666666666666 22222222222 666666666666 33333333333 22222222222
000000000 6666666666666 2222222222222 6666666666666 3333333333333 2222222222222
00 00 66 ::: 22 22 66 ::: 33 33 22 22
00 00 66 ::: 22 66 ::: 33 22
00 00 66 ::: 22 66 ::: 33 22
00 00 666666666666 22 666666666666 333 22
00 00 6666666666666 22 6666666666666 333 22
00 00 66 66 ::: 22 66 66 ::: 33 22
00 00 66 66 ::: 22 66 66 ::: 33 22
00 00 66 66 ::: 22 66 66 ::: 33 33 22
000000000 6666666666666 2222222222222 6666666666666 3333333333333 2222222222222
0000000 66666666666 2222222222222 66666666666 33333333333 2222222222222

```
  SSSSSSSSSS     CCCCCCCCCC      AAAAAAAAA     LL             EEEEEEEEEEEE                  PPPPPPPPPPP     CCCCCCCCCC
 SSSSSSSSSSS   CCCCCCCCCCCC    AAAAAAAAAAA    LL             EEEEEEEEEEEE                  PPPPPPPPPPPP   CCCCCCCCCCCC
 SS         SS CC          CC  AA         AA   LL             EE                            PP         PP  CC          CC
 SS            CC            AA         AA   LL             EE                            PP         PP  CC
 SS            CC            AA         AA   LL             EE                            PP         PP  CC
 SSSSSSSSSSS   CC            AAAAAAAAAAAAA   LL             EEEEEEEEE       -------------PPPPPPPPPPPP  CC
  SSSSSSSSSSS  CC            AAAAAAAAAAAAA   LL             EEEEEEEEE       -------------PPPPPPPPPPP   CC
           SS  CC            AA         AA   LL             EE                            PP             CC
           SS  CC            AA         AA   LL             EE                            PP             CC
 SS         SS CC          CC  AA         AA   LL             EE                            PP             CC          CC
 SSSSSSSSSSS   CCCCCCCCCCCC    AA         AA   LLLLLLLLLLLLL  EEEEEEEEEEEE                  PP             CCCCCCCCCCCC
  SSSSSSSSSS     CCCCCCCCCC    AA         AA   LLLLLLLLLLLLL  EEEEEEEEEEEE                  PP              CCCCCCCCCC
```

```
*******************************************************************************
*******************************************************************************
*******************************************************************************
*****                                                                     *****
*****                  PROGRAM VERIFICATION INFORMATION                   *****
*****                                                                     *****
*****                CODE SYSTEM:  SCALE-PC VERSION:  4.3                 *****
*****                                                                     *****
*******************************************************************************
*******************************************************************************
*****                                                                     *****
*****                                                                     *****
*****              PROGRAM:  O0O009                                       *****
*****                                                                     *****
*****        CREATION DATE:  03/08/96                                     *****
*****                                                                     *****
*****              VOLUME:   ENG                                          *****
*****                                                                     *****
*****              LIBRARY:  G:\SCALE43\WIN_NT\EXE                        *****
*****                                                                     *****
*****                                                                     *****
*****      PRODUCTION CODE:  KENOVA                                       *****
*****                                                                     *****
*****              VERSION:  3.1                                          *****
*****                                                                     *****
*****              JOBNAME:  SCALE-PC                                     *****
*****                                                                     *****
*****    DATE OF EXECUTION:  12/15/98                                     *****
*****                                                                     *****
*****    TIME OF EXECUTION:  06:26:32                                     *****
*****                                                                     *****
*****                                                                     *****
*******************************************************************************
*******************************************************************************
*******************************************************************************
```

```
*****************************************************************************************************************
***                                                                                                           ***
***                              TRIGA - PREF. FLOOD CANISTER                                                 ***
***                                                                                                           ***
*****************************************************************************************************************
***                                ******       NUMERIC PARAMETERS       ******                               ***
***                                                                                                           ***
***                                                                                                           ***
***                    TME         MAXIMUM PROBLEM TIME (MIN)                        170.00                   ***
***                                                                                                           ***
***                    TBA         TIME PER GENERATION (MIN)                           2.00                   ***
***                                                                                                           ***
***                    GEN         NUMBER OF GENERATIONS                                403                   ***
***                                                                                                           ***
***                    NPG         NUMBER PER GENERATION                               1000                   ***
***                                                                                                           ***
***                    NSK         NUMBER OF GENERATIONS TO BE SKIPPED                    3                   ***
***                                                                                                           ***
***                    BEG         BEGINNING GENERATION NUMBER                            1                   ***
***                                                                                                           ***
***                    RES         GENERATIONS BETWEEN CHECKPOINTS                        0                   ***
***                                                                                                           ***
***                    X1D         NUMBER OF EXTRA 1-D CROSS SECTIONS                     1                   ***
***                                                                                                           ***
***                    NBK         NEUTRON BANK SIZE                                   1025                   ***
***                                                                                                           ***
***                    XNB         EXTRA POSITIONS IN NEUTRON BANK                        0                   ***
***                                                                                                           ***
***                    NFB         FISSION BANK SIZE                                   1000                   ***
***                                                                                                           ***
***                    XFB         EXTRA POSITIONS IN FISSION BANK                        0                   ***
***                                                                                                           ***
***                    WTA         DEFAULT VALUE OF WEIGHT AVERAGE                   0.5000                   ***
***                                                                                                           ***
***                    WTH         WEIGHT HIGH FOR SPLITTING                         3.0000                   ***
***                                                                                                           ***
***                    WTL         WEIGHT LOW FOR RUSSIAN ROULETTE                   0.3333                   ***
***                                                                                                           ***
***                    RND         STARTING RANDOM NUMBER                        BB827100001                  ***
***                                                                                                           ***
***                    NB8         NUMBER OF D.A. BLOCKS ON UNIT  8                    200                   ***
***                                                                                                           ***
***                    NL8         LENGTH OF D.A. BLOCKS ON UNIT  8                    512                   ***
***                                                                                                           ***
***                    ADJ         MODE OF CALCULATION                             FORWARD                   ***
***                                                                                                           ***
***                                INPUT DATA WRITTEN ON RESTART UNIT                   NO                   ***
***                                                                                                           ***
***                                BINARY DATA INTERFACE                               YES                   ***
***                                                                                                           ***
***                                                                                                           ***
*****************************************************************************************************************
*****************************************************************************************************************
```

```
*****************************************************************************************************************
*****************************************************************************************************************
***                                                                                                           ***
***                              TRIGA - PREF. FLOOD CANISTER                                                 ***
***                                                                                                           ***
*****************************************************************************************************************
***                                  ******      LOGICAL PARAMETERS        ******                             ***
***                                                                                                           ***
***  RUN  EXECUTE PROBLEM AFTER CHECKING DATA    YES            PLT  PLOT PICTURE MAP(S)                    NO ***
***                                                                                                           ***
***  FLX  COMPUTE FLUX                            NO            FDN  COMPUTE FISSION DENSITIES              NO ***
***                                                                                                           ***
***  SMU  COMPUTE AVG UNIT SELF-MULTIPLICATION    NO            NUB  COMPUTE NU-BAR & AVG FISSION GROUP     YES ***
***                                                                                                           ***
***  MKU  COMPUTE MATRIX K-EFF BY UNIT NUMBER     NO            MKP  COMPUTE MATRIX K-EFF BY UNIT LOCATION  NO ***
***                                                                                                           ***
***  CKU  COMPUTE COFACTOR K-EFF BY UNIT NUMBER   NO            CKP  COMPUTE COFACTOR K-EFF BY UNIT LOCATION NO ***
***                                                                                                           ***
***  FMU  PRINT FISS PROD MATRIX BY UNIT NUMBER   NO            FMP  PRINT FISS PROD MATRIX BY UNIT LOCATION NO ***
***                                                                                                           ***
***  MKH  COMPUTE MATRIX K-EFF BY HOLE NUMBER     NO            MKA  COMPUTE MATRIX K-EFF BY ARRAY NUMBER   NO ***
***                                                                                                           ***
***  CKH  COMPUTE COFACTOR K-EFF BY HOLE NUMBER   NO            CKA  COMPUTE COFACTOR K-EFF BY ARRAY NUMBER NO ***
***                                                                                                           ***
***  FMH  PRINT FISS PROD MATRIX BY HOLE NUMBER   NO            FMA  PRINT FISS PROD MATRIX BY ARRAY NUMBER NO ***
***                                                                                                           ***
***  HHL  COLLECT MATRIX BY HIGHEST HOLE LEVEL    NO            HAL  COLLECT MATRIX BY HIGHEST ARRAY LEVEL  NO ***
***                                                                                                           ***
***  AMX  PRINT ALL MIXED CROSS SECTIONS          NO            FAR  PRINT FIS. AND ABS. BY REGION          NO ***
***                                                                                                           ***
***  XS1  PRINT 1-D MIXTURE X-SECTIONS            NO            GAS  PRINT FAR BY GROUP                     NO ***
***                                                                                                           ***
***  XS2  PRINT 2-D MIXTURE X-SECTIONS            NO            PAX  PRINT XSEC-ALBEDO CORRELATION TABLES   NO ***
***                                                                                                           ***
***  XAP  PRINT MIXTURE ANGLES & PROBABILITIES    NO            PWT  PRINT WEIGHT AVERAGE ARRAY             NO ***
***                                                                                                           ***
***  PKI  PRINT FISSION SPECTRUM                  NO            PGM  PRINT INPUT GEOMETRY                   NO ***
***                                                                                                           ***
***  P1D  PRINT EXTRA 1-D CROSS SECTIONS          NO            BUG  PRINT DEBUG INFORMATION                NO ***
***                                                                                                           ***
***                                                             TRK  PRINT TRACKING INFORMATION             NO ***
***                                                                                                           ***
***                                                                                                           ***
*****************************************************************************************************************
*****************************************************************************************************************
*****************************************************************************************************************
                                    PARAMETER INPUT COMPLETED

                         .........    0 IO'S WERE USED READING THE PARAMETER DATA      .........

                       ************** DATA READING COMPLETED **************
```

```
*****************************************************************************************************
***                                                                                               ***
***          TRIGA - PREF. FLOOD CANISTER                                                         ***
***                                                                                               ***
*****************************************************************************************************
*****************************************************************************************************
***                                                                                               ***
***                              ****** ADDITIONAL INFORMATION ******                             ***
***                                                                                               ***
***  NUMBER OF ENERGY GROUPS              27       USE LATTICE GEOMETRY                    YES  ***
***                                                                                               ***
***  NO. OF FISSION SPECTRUM SOURCE GROUP  1       GLOBAL ARRAY NUMBER                      20  ***
***                                                                                               ***
***  NO. OF SCATTERING ANGLES IN XSECS     2       NUMBER OF UNITS IN THE GLOBAL X DIR.      1  ***
***                                                                                               ***
***  ENTRIES/NEUTRON IN THE NEUTRON BANK  24       NUMBER OF UNITS IN THE GLOBAL Y DIR.      1  ***
***                                                                                               ***
***  ENTRIES/NEUTRON IN THE FISSION BANK  17       NUMBER OF UNITS IN THE GLOBAL Z DIR.      7  ***
***                                                                                               ***
***  NUMBER OF MIXTURES USED              13       USE A GLOBAL REFLECTOR                  YES  ***
***                                                                                               ***
***  NUMBER OF BIAS ID'S USED              1       USE NESTED HOLES                        YES  ***
***                                                                                               ***
***  NUMBER OF DIFFERENTIAL ALBEDOS USED   0       NUMBER OF HOLES                          62  ***
***                                                                                               ***
***  TOTAL INPUT GEOMETRY REGIONS         80       MAXIMUM HOLE NESTING LEVEL               2  ***
***                                                                                               ***
***  NUMBER OF GEOMETRY REGIONS USED      80       USE NESTED ARRAYS                       YES  ***
***                                                                                               ***
***  LARGEST GEOMETRY UNIT NUMBER         82       NUMBER OF ARRAYS USED                    7  ***
***                                                                                               ***
***  LARGEST ARRAY NUMBER                 20       MAXIMUM ARRAY NESTING LEVEL              2  ***
***                                                                                               ***
***                                                                                               ***
***  +X BOUNDARY CONDITION               MIR       -X BOUNDARY CONDITION                   MIR  ***
***                                                                                               ***
***  +Y BOUNDARY CONDITION               MIR       -Y BOUNDARY CONDITION                   MIR  ***
***                                                                                               ***
***  +Z BOUNDARY CONDITION               MIR       -Z BOUNDARY CONDITION                   MIR  ***
***                                                                                               ***
*****************************************************************************************************
```

ARRAY NUMBER	UNITS IN X DIR.	UNITS IN Y DIR.	UNITS IN Z DIR.	NESTING LEVEL
1	1	7	1	2
2	1	4	1	2
3	1	4	1	2
11	1	7	1	2
12	1	4	1	2
13	1	4	1	2
20 GLOBAL	1	1	7	1

```
 ........    0 IO'S WERE USED LOADING THE DATA    ........
                      TRIGA - PREF. FLOOD CANISTER
_

               MEDIA BIAS      GEOMETRY DESCRIPTION FOR THOSE UNITS UTILIZED IN THIS PROBLEM
REGION          NUM   ID

                                          -----   UNIT     1   -----

TRIGA FUEL ELEMENT (SCREENED)

  1 CYLINDER         4  1  RADIUS = 0.28580     +Z =  19.050     -Z = -19.050     CENTERLINE IS AT  X = 0.00000      Y = 0.00000

  2 CYLINDER         1  1  RADIUS =  1.8224     +Z =  19.050     -Z = -19.050     CENTERLINE IS AT  X = 0.00000      Y = 0.00000

  3 CYLINDER         5  1  RADIUS =  1.8224     +Z =  27.737     -Z = -27.737     CENTERLINE IS AT  X = 0.00000      Y = 0.00000

  4 CYLINDER         2  1  RADIUS =  1.8771     +Z =  27.737     -Z = -27.737     CENTERLINE IS AT  X = 0.00000      Y = 0.00000

  5 CYLINDER         9  1  RADIUS =  1.8771     +Z =  36.703     -Z = -36.703     CENTERLINE IS AT  X = 0.00000      Y = 0.00000

                                          -----   UNIT     5   -----

3.38 IN WIDTH / 0.28 IN THICKNESS DIVIDER CENTER STACK (SCREENED)

  1 CUBOID           2  1      +X =  4.2926     -X = -4.2926     +Y = 0.71120     -Y = 0.00000     +Z =  36.703     -Z = -36.703

                                          -----   UNIT     6   -----
```

```
3.38 IN WIDTH / 0.24 IN THICKNESS DIVIDER OUTSIDE STACK (SCREENED)

  1 CUBOID           2  1      +X =  4.2926     -X = -4.2926     +Y = 0.60960     -Y = 0.00000     +Z =  36.703     -Z = -36.703

                                                -----   UNIT    10   -----

TRIGA ELEMENTS IN TOP OF 3.38 IN X 3.38 IN OPENING (SCREENED)

  1 CUBOID           3  1      +X =  4.0267     -X = -4.0267     +Y =  4.1029     -Y = -3.9505     +Z =  36.703     -Z = -36.703

    HOLE NUMBER      1       AT X =  2.1495      Y =  2.2257      Z = 0.00000     IS UNIT NUMBER      1

    HOLE NUMBER      2       AT X = -2.1495      Y =  2.2257      Z = 0.00000     IS UNIT NUMBER      1

    HOLE NUMBER      3       AT X = -2.1495      Y = -2.0733      Z = 0.00000     IS UNIT NUMBER      1

    HOLE NUMBER      4       AT X =  2.1495      Y = -2.0733      Z = 0.00000     IS UNIT NUMBER      1

  2 CUBOID           2  1      +X =  4.2164     -X = -4.2164     +Y =  4.2926     -Y = -4.1402     +Z =  36.703     -Z = -36.703

  3 CUBOID          12  1      +X =  4.2926     -X = -4.2926     +Y =  4.2926     -Y = -4.2926     +Z =  36.703     -Z = -36.703
_                                       TRIGA - PREF. FLOOD CANISTER

                MEDIA BIAS      GEOMETRY DESCRIPTION FOR THOSE UNITS UTILIZED IN THIS PROBLEM
REGION           NUM   ID

                                                -----   UNIT    11   -----

TRIGA ELEMENTS IN BOTTOM OF 3.38 IN X 3.38 IN OPENING (SCREENED)

  1 CUBOID           3  1      +X =  4.0267     -X = -4.0267     +Y =  3.9505     -Y = -4.1029     +Z =  36.703     -Z = -36.703

    HOLE NUMBER      5       AT X =  2.1495      Y = -2.2257      Z = 0.00000     IS UNIT NUMBER      1

    HOLE NUMBER      6       AT X = -2.1495      Y = -2.2257      Z = 0.00000     IS UNIT NUMBER      1

    HOLE NUMBER      7       AT X = -2.1495      Y =  2.0733      Z = 0.00000     IS UNIT NUMBER      1

    HOLE NUMBER      8       AT X =  2.1495      Y =  2.0733      Z = 0.00000     IS UNIT NUMBER      1

  2 CUBOID           2  1      +X =  4.2164     -X = -4.2164     +Y =  4.1402     -Y = -4.2926     +Z =  36.703     -Z = -36.703

  3 CUBOID          12  1      +X =  4.2926     -X = -4.2926     +Y =  4.2926     -Y = -4.2926     +Z =  36.703     -Z = -36.703

                                                -----   UNIT    12   -----

TRIGA ELEMENTS IN BOTTOM RIGHT OF 3.38 IN X 3.38 IN OPENING (SCREENED)

  1 CUBOID           3  1      +X =  4.1029     -X = -3.9505     +Y =  3.9505     -Y = -4.1029     +Z =  36.703     -Z = -36.703

    HOLE NUMBER      9       AT X =  2.2257      Y = -2.2257      Z = 0.00000     IS UNIT NUMBER      1

    HOLE NUMBER     10       AT X =  2.2257      Y =  2.0733      Z = 0.00000     IS UNIT NUMBER      1

    HOLE NUMBER     11       AT X = -2.0733      Y = -2.2257      Z = 0.00000     IS UNIT NUMBER      1

    HOLE NUMBER     12       AT X = -2.0733      Y =  2.0733      Z = 0.00000     IS UNIT NUMBER      1

  2 CUBOID           2  1      +X =  4.2926     -X = -4.1402     +Y =  4.1402     -Y = -4.2926     +Z =  36.703     -Z = -36.703

  3 CUBOID          12  1      +X =  4.2926     -X = -4.2926     +Y =  4.2926     -Y = -4.2926     +Z =  36.703     -Z = -36.703

                                                -----   UNIT    13   -----

TRIGA ELEMENTS IN TOP RIGHT OF 3.38 IN X 3.38 IN OPENING (SCREENED)

  1 CUBOID           3  1      +X =  4.1029     -X = -3.9505     +Y =  4.1029     -Y = -3.9505     +Z =  36.703     -Z = -36.703

    HOLE NUMBER     13       AT X =  2.2257      Y =  2.2257      Z = 0.00000     IS UNIT NUMBER      1

    HOLE NUMBER     14       AT X =  2.2257      Y = -2.0733      Z = 0.00000     IS UNIT NUMBER      1

    HOLE NUMBER     15       AT X = -2.0733      Y =  2.2257      Z = 0.00000     IS UNIT NUMBER      1

    HOLE NUMBER     16       AT X = -2.0733      Y = -2.0733      Z = 0.00000     IS UNIT NUMBER      1

  2 CUBOID           2  1      +X =  4.2926     -X = -4.1402     +Y =  4.2926     -Y = -4.1402     +Z =  36.703     -Z = -36.703

  3 CUBOID          12  1      +X =  4.2926     -X = -4.2926     +Y =  4.2926     -Y = -4.2926     +Z =  36.703     -Z = -36.703
_                                       TRIGA - PREF. FLOOD CANISTER

                MEDIA BIAS      GEOMETRY DESCRIPTION FOR THOSE UNITS UTILIZED IN THIS PROBLEM
REGION           NUM   ID

                                                -----   UNIT    14   -----

TRIGA ELEMENTS IN BOTTOM LEFT OF 3.38 IN X 3.38 IN OPENING (SCREENED)

  1 CUBOID           3  1      +X =  3.9505     -X = -4.1029     +Y =  3.9505     -Y = -4.1029     +Z =  36.703     -Z = -36.703
```

```
    HOLE NUMBER     17       AT X = -2.2257      Y = -2.2257      Z = 0.00000     IS UNIT NUMBER      1

    HOLE NUMBER     18       AT X = -2.2257      Y =  2.0733      Z = 0.00000     IS UNIT NUMBER      1

    HOLE NUMBER     19       AT X =  2.0733      Y = -2.2257      Z = 0.00000     IS UNIT NUMBER      1

    HOLE NUMBER     20       AT X =  2.0733      Y =  2.0733      Z = 0.00000     IS UNIT NUMBER      1

  2 CUBOID           2  1      +X =  4.1402     -X = -4.2926     +Y =  4.1402     -Y = -4.2926     +Z =  36.703     -Z = -36.703

  3 CUBOID          12  1      +X =  4.2926     -X = -4.2926     +Y =  4.2926     -Y = -4.2926     +Z =  36.703     -Z = -36.703

                                                -----   UNIT    15   -----

TRIGA ELEMENTS IN TOP LEFT OF 3.38 IN X 3.38 IN OPENING (SCREENED)

  1 CUBOID           3  1      +X =  3.9505     -X = -4.1029     +Y =  4.1029     -Y = -3.9505     +Z =  36.703     -Z = -36.703

    HOLE NUMBER     21       AT X = -2.2257      Y =  2.2257      Z = 0.00000     IS UNIT NUMBER      1

    HOLE NUMBER     22       AT X = -2.2257      Y = -2.0733      Z = 0.00000     IS UNIT NUMBER      1

    HOLE NUMBER     23       AT X =  2.0733      Y =  2.2257      Z = 0.00000     IS UNIT NUMBER      1

    HOLE NUMBER     24       AT X =  2.0733      Y = -2.0733      Z = 0.00000     IS UNIT NUMBER      1

  2 CUBOID           2  1      +X =  4.1402     -X = -4.2926     +Y =  4.2926     -Y = -4.1402     +Z =  36.703     -Z = -36.703

  3 CUBOID          12  1      +X =  4.2926     -X = -4.2926     +Y =  4.2926     -Y = -4.2926     +Z =  36.703     -Z = -36.703

                                                -----   UNIT    16   -----

TRIGA BASKET 3.38 IN X 3.38 IN CENTER OPENING (SCREENED)

  1 CUBOID           3  1      +X =  4.0267     -X = -4.0267     +Y =  4.0267     -Y = -4.0267     +Z =  36.703     -Z = -36.703

    HOLE NUMBER     25       AT X = -2.1495      Y =  2.1495      Z = 0.00000     IS UNIT NUMBER      1

    HOLE NUMBER     26       AT X = -2.1495      Y = -2.1495      Z = 0.00000     IS UNIT NUMBER      1

    HOLE NUMBER     27       AT X =  2.1495      Y =  2.1495      Z = 0.00000     IS UNIT NUMBER      1

    HOLE NUMBER     28       AT X =  2.1495      Y = -2.1495      Z = 0.00000     IS UNIT NUMBER      1

  2 CUBOID           2  1      +X =  4.2164     -X = -4.2164     +Y =  4.2164     -Y = -4.2164     +Z =  36.703     -Z = -36.703

  3 CUBOID          12  1      +X =  4.2926     -X = -4.2926     +Y =  4.2926     -Y = -4.2926     +Z =  36.703     -Z = -36.703
_                                       TRIGA - PREF. FLOOD CANISTER

                MEDIA BIAS      GEOMETRY DESCRIPTION FOR THOSE UNITS UTILIZED IN THIS PROBLEM
REGION           NUM   ID

                                                -----   UNIT    17   -----

HORIZONTAL X-X POISON SHEET + WATER

  1 CUBOID          13  1      +X =  3.8227     -X = -3.8227     +Y = 0.31750     -Y = 0.00000     +Z =  34.163     -Z = -34.163

  2 CUBOID          14  1      +X =  4.1402     -X = -4.1402     +Y = 0.31750     -Y = 0.00000     +Z =  34.163     -Z = -34.163

  3 CUBOID          12  1      +X =  4.2926     -X = -4.2926     +Y = 0.31750     -Y = 0.00000     +Z =  36.703     -Z = -36.703

                                        -----   UNIT    20  EXTERNAL TO LATTICE  1   -----

CENTER COLUMN OF THREE OPENINGS W/ 0.28 IN PLATE (SCREENED)

  1 ARRAY NUMBER     1          +X =  4.2926     -X = -4.2926     +Y =  13.907     -Y = -13.906     +Z =  36.703     -Z = -36.703

  2 CUBOID           2  1      +X =  5.0038     -X = -5.0038     +Y =  14.618     -Y = -14.618     +Z =  36.703     -Z = -36.703

                                        -----   UNIT    21  EXTERNAL TO LATTICE  2   -----

LEFT OUTSIDE COLUMN OF TWO OPENINGS W/ 0.12 IN PLATE (SCREENED)

  1 ARRAY NUMBER     2          +X =  4.2926     -X = -4.2926     +Y =  9.0487     -Y = -9.0488     +Z =  36.703     -Z = -36.703

  2 CUBOID           2  1      +X =  4.2926     -X = -4.5974     +Y =  9.3535     -Y = -9.3536     +Z =  36.703     -Z = -36.703

                                        -----   UNIT    22  EXTERNAL TO LATTICE  3   -----

RIGHT OUTSIDE COLUMN OF TWO OPENINGS W/ 0.12 IN PLATE (SCREENED)

  1 ARRAY NUMBER     3          +X =  4.2926     -X = -4.2926     +Y =  9.0487     -Y = -9.0488     +Z =  36.703     -Z = -36.703

  2 CUBOID           2  1      +X =  4.5974     -X = -4.2926     +Y =  9.3535     -Y = -9.3536     +Z =  36.703     -Z = -36.703
_                                       TRIGA - PREF. FLOOD CANISTER

                MEDIA BIAS      GEOMETRY DESCRIPTION FOR THOSE UNITS UTILIZED IN THIS PROBLEM
```

```
REGION            NUM   ID

                                                -----   UNIT    30   -----

NAC-LWT TRIGA BASKET (SCREENED)

  1 CYLINDER        12  1  RADIUS =  17.150     +Z =  36.703     -Z = -36.703     CENTERLINE IS AT  X = 0.00000      Y = 0.00000

    HOLE NUMBER     29       AT X = 0.00000      Y = 0.00000      Z = 0.00000     IS UNIT NUMBER     20

    HOLE NUMBER     30       AT X = -9.2974      Y = 0.00000      Z = 0.00000     IS UNIT NUMBER     21

    HOLE NUMBER     31       AT X =  9.2974      Y = 0.00000      Z = 0.00000     IS UNIT NUMBER     22

  2 CYLINDER         2  1  RADIUS =  18.910     +Z =  37.338     -Z = -37.338     CENTERLINE IS AT  X = 0.00000      Y = 0.00000

  3 CYLINDER         6  1  RADIUS =  33.465     +Z =  37.338     -Z = -37.338     CENTERLINE IS AT  X = 0.00000      Y = 0.00000

  4 CYLINDER         2  1  RADIUS =  36.519     +Z =  37.338     -Z = -37.338     CENTERLINE IS AT  X = 0.00000      Y = 0.00000

  5 CYLINDER         8  1  RADIUS =  49.223     +Z =  37.338     -Z = -37.338     CENTERLINE IS AT  X = 0.00000      Y = 0.00000

  6 CYLINDER         2  1  RADIUS =  49.822     +Z =  37.338     -Z = -37.338     CENTERLINE IS AT  X = 0.00000      Y = 0.00000

  7 CUBOID           8  1      +X =  49.822     -X = -49.822     +Y =  49.822     -Y = -49.822     +Z =  37.338     -Z = -37.338

                                                -----   UNIT    41   -----

TRIGA FUEL ELEMENT

  1 CYLINDER         4  1  RADIUS = 0.28580     +Z =  19.050     -Z = -19.050     CENTERLINE IS AT  X = 0.00000      Y = 0.00000

  2 CYLINDER        10  1  RADIUS =  1.8224     +Z =  19.050     -Z = -19.050     CENTERLINE IS AT  X = 0.00000      Y = 0.00000

  3 CYLINDER         5  1  RADIUS =  1.8224     +Z =  27.737     -Z = -27.737     CENTERLINE IS AT  X = 0.00000      Y = 0.00000

  4 CYLINDER         2  1  RADIUS =  1.8771     +Z =  27.737     -Z = -27.737     CENTERLINE IS AT  X = 0.00000      Y = 0.00000

  5 CYLINDER        11  1  RADIUS =  1.8771     +Z =  36.703     -Z = -36.703     CENTERLINE IS AT  X = 0.00000      Y = 0.00000

                                                -----   UNIT    45   -----

3.38 IN WIDTH / 0.28 IN THICKNESS DIVIDER CENTER STACK

  1 CUBOID           2  1      +X =  4.2926     -X = -4.2926     +Y = 0.71120     -Y = 0.00000     +Z =  36.703     -Z = -36.703

                                                -----   UNIT    46   -----

3.38 IN WIDTH / 0.24 IN THICKNESS DIVIDER OUTSIDE STACK

  1 CUBOID           2  1      +X =  4.2926     -X = -4.2926     +Y = 0.60960     -Y = 0.00000     +Z =  36.703     -Z = -36.703
_                                       TRIGA - PREF. FLOOD CANISTER

                  MEDIA BIAS      GEOMETRY DESCRIPTION FOR THOSE UNITS UTILIZED IN THIS PROBLEM
REGION             NUM   ID

                                                -----   UNIT    50   -----

TRIGA FUEL ELEMENTS IN TOP OF 3.38 IN X 3.38 IN OPENING

  1 CUBOID          12  1      +X =  4.2926     -X = -4.2926     +Y =  4.2926     -Y = -4.2926     +Z =  36.703     -Z = -36.703

    HOLE NUMBER     32       AT X =  2.1495      Y =  2.4154      Z = 0.00000     IS UNIT NUMBER     41

    HOLE NUMBER     33       AT X = -2.1495      Y =  2.4154      Z = 0.00000     IS UNIT NUMBER     41

    HOLE NUMBER     34       AT X = -2.1495      Y = -1.3389      Z = 0.00000     IS UNIT NUMBER     41

    HOLE NUMBER     35       AT X =  2.1495      Y = -1.3389      Z = 0.00000     IS UNIT NUMBER     41

                                                -----   UNIT    51   -----

TRIGA FUEL ELEMENTS IN BOTTOM OF 3.38 IN X 3.38 IN OPENING

  1 CUBOID          12  1      +X =  4.2926     -X = -4.2926     +Y =  4.2926     -Y = -4.2926     +Z =  36.703     -Z = -36.703

    HOLE NUMBER     36       AT X =  2.1495      Y = -2.4154      Z = 0.00000     IS UNIT NUMBER     41

    HOLE NUMBER     37       AT X = -2.1495      Y = -2.4154      Z = 0.00000     IS UNIT NUMBER     41

    HOLE NUMBER     38       AT X = -2.1495      Y =  1.3389      Z = 0.00000     IS UNIT NUMBER     41

    HOLE NUMBER     39       AT X =  2.1495      Y =  1.3389      Z = 0.00000     IS UNIT NUMBER     41

                                                -----   UNIT    52   -----

TRIGA FUEL ELEMENTS IN BOTTOM RIGHT OF 3.38 IN X 3.38 IN OPENING
```

```
  1 CUBOID          12  1      +X =  4.2926     -X = -4.2926     +Y =  4.2926     -Y = -4.2926     +Z =  36.703     -Z = -36.703

    HOLE NUMBER     40       AT X =  2.4154      Y = -2.4154      Z = 0.00000     IS UNIT NUMBER     41

    HOLE NUMBER     41       AT X =  2.4154      Y =  1.3389      Z = 0.00000     IS UNIT NUMBER     41

    HOLE NUMBER     42       AT X = -1.3389      Y = -2.4154      Z = 0.00000     IS UNIT NUMBER     41

    HOLE NUMBER     43       AT X = -1.3389      Y =  1.3389      Z = 0.00000     IS UNIT NUMBER     41
_                                      TRIGA - PREF. FLOOD CANISTER

                MEDIA BIAS      GEOMETRY DESCRIPTION FOR THOSE UNITS UTILIZED IN THIS PROBLEM
REGION           NUM   ID

                                                -----   UNIT    53   -----

TRIGA FUEL ELEMENTS IN TOP RIGHT OF 3.38 IN X 3.38 IN OPENING

  1 CUBOID          12  1      +X =  4.2926     -X = -4.2926     +Y =  4.2926     -Y = -4.2926     +Z =  36.703     -Z = -36.703

    HOLE NUMBER     44       AT X =  2.4154      Y =  2.4154      Z = 0.00000     IS UNIT NUMBER     41

    HOLE NUMBER     45       AT X =  2.4154      Y = -1.3389      Z = 0.00000     IS UNIT NUMBER     41

    HOLE NUMBER     46       AT X = -1.3389      Y =  2.4154      Z = 0.00000     IS UNIT NUMBER     41

    HOLE NUMBER     47       AT X = -1.3389      Y = -1.3389      Z = 0.00000     IS UNIT NUMBER     41

                                                -----   UNIT    54   -----

TRIGA FUEL ELEMENTS IN BOTTOM LEFT OF 3.38 IN X 3.38 IN OPENING

  1 CUBOID          12  1      +X =  4.2926     -X = -4.2926     +Y =  4.2926     -Y = -4.2926     +Z =  36.703     -Z = -36.703

    HOLE NUMBER     48       AT X = -2.4154      Y = -2.4154      Z = 0.00000     IS UNIT NUMBER     41

    HOLE NUMBER     49       AT X = -2.4154      Y =  1.3389      Z = 0.00000     IS UNIT NUMBER     41

    HOLE NUMBER     50       AT X =  1.3389      Y = -2.4154      Z = 0.00000     IS UNIT NUMBER     41

    HOLE NUMBER     51       AT X =  1.3389      Y =  1.3389      Z = 0.00000     IS UNIT NUMBER     41

                                                -----   UNIT    55   -----

TRIGA FUEL ELEMENTS IN TOP LEFT OF 3.38 IN X 3.38 IN OPENING

  1 CUBOID          12  1      +X =  4.2926     -X = -4.2926     +Y =  4.2926     -Y = -4.2926     +Z =  36.703     -Z = -36.703

    HOLE NUMBER     52       AT X = -2.4154      Y =  2.4154      Z = 0.00000     IS UNIT NUMBER     41

    HOLE NUMBER     53       AT X = -2.4154      Y = -1.3389      Z = 0.00000     IS UNIT NUMBER     41

    HOLE NUMBER     54       AT X =  1.3389      Y =  2.4154      Z = 0.00000     IS UNIT NUMBER     41

    HOLE NUMBER     55       AT X =  1.3389      Y = -1.3389      Z = 0.00000     IS UNIT NUMBER     41
_                                      TRIGA - PREF. FLOOD CANISTER

                MEDIA BIAS      GEOMETRY DESCRIPTION FOR THOSE UNITS UTILIZED IN THIS PROBLEM
REGION           NUM   ID

                                                -----   UNIT    56   -----

TRIGA BASKET 3.38 IN X 3.38 IN CENTER OPENING

  1 CUBOID          12  1      +X =  4.2926     -X = -4.2926     +Y =  4.2926     -Y = -4.2926     +Z =  36.703     -Z = -36.703

    HOLE NUMBER     56       AT X =  2.1495      Y = -2.1495      Z = 0.00000     IS UNIT NUMBER     41

    HOLE NUMBER     57       AT X = -2.1495      Y =  2.1495      Z = 0.00000     IS UNIT NUMBER     41

    HOLE NUMBER     58       AT X = -2.1495      Y = -2.1495      Z = 0.00000     IS UNIT NUMBER     41

    HOLE NUMBER     59       AT X =  2.1495      Y =  2.1495      Z = 0.00000     IS UNIT NUMBER     41

  2 CUBOID          12  1      +X =  4.2926     -X = -4.2926     +Y =  4.2926     -Y = -4.2926     +Z =  36.703     -Z = -36.703

                                        -----   UNIT    60  EXTERNAL TO LATTICE 11   -----

CENTER COLUMN OF THREE OPENINGS W/ 0.28 IN PLATE

  1 ARRAY NUMBER    11          +X =  4.2926     -X = -4.2926     +Y =  13.907     -Y = -13.906     +Z =  36.703     -Z = -36.703

  2 CUBOID           2  1      +X =  5.0038     -X = -5.0038     +Y =  14.618     -Y = -14.618     +Z =  36.703     -Z = -36.703

                                        -----   UNIT    61  EXTERNAL TO LATTICE 12   -----

LEFT OUTSIDE COLUMN OF TWO OPENINGS W/ 0.12 IN PLATE

  1 ARRAY NUMBER    12          +X =  4.2926     -X = -4.2926     +Y =  9.0487     -Y = -9.0488     +Z =  36.703     -Z = -36.703
```

```
  2 CUBOID           2  1      +X =  4.2926     -X = -4.5974     +Y =  9.3535     -Y = -9.3536     +Z =  36.703     -Z = -36.703

                                      -----   UNIT    62  EXTERNAL TO LATTICE 13   -----

RIGHT OUTSIDE COLUMN OF TWO OPENINGS W/ 0.12 IN PLATE

  1 ARRAY NUMBER    13         +X =  4.2926     -X = -4.2926     +Y =  9.0487     -Y = -9.0488     +Z =  36.703     -Z = -36.703

  2 CUBOID           2  1      +X =  4.5974     -X = -4.2926     +Y =  9.3535     -Y = -9.3536     +Z =  36.703     -Z = -36.703
_                                   TRIGA - PREF. FLOOD CANISTER

                MEDIA BIAS      GEOMETRY DESCRIPTION FOR THOSE UNITS UTILIZED IN THIS PROBLEM
REGION           NUM   ID

                                                -----   UNIT    70   -----

NAC-LWT TRIGA BASKET

  1 CYLINDER        12  1  RADIUS =  17.150     +Z =  36.703     -Z = -36.703     CENTERLINE IS AT  X = 0.00000      Y = 0.00000

    HOLE NUMBER     60       AT X = 0.00000      Y = 0.00000      Z = 0.00000     IS UNIT NUMBER     60

    HOLE NUMBER     61       AT X = -9.2974      Y = 0.00000      Z = 0.00000     IS UNIT NUMBER     61

    HOLE NUMBER     62       AT X =  9.2974      Y = 0.00000      Z = 0.00000     IS UNIT NUMBER     62

  2 CYLINDER         2  1  RADIUS =  18.910     +Z =  37.338     -Z = -37.338     CENTERLINE IS AT  X = 0.00000      Y = 0.00000

  3 CYLINDER         6  1  RADIUS =  33.465     +Z =  37.338     -Z = -37.338     CENTERLINE IS AT  X = 0.00000      Y = 0.00000

  4 CYLINDER         2  1  RADIUS =  36.519     +Z =  37.338     -Z = -37.338     CENTERLINE IS AT  X = 0.00000      Y = 0.00000

  5 CYLINDER         8  1  RADIUS =  49.223     +Z =  37.338     -Z = -37.338     CENTERLINE IS AT  X = 0.00000      Y = 0.00000

  6 CYLINDER         2  1  RADIUS =  49.822     +Z =  37.338     -Z = -37.338     CENTERLINE IS AT  X = 0.00000      Y = 0.00000

  7 CUBOID           8  1      +X =  49.822     -X = -49.822     +Y =  49.822     -Y = -49.822     +Z =  37.338     -Z = -37.338

                                                -----   UNIT    80   -----

SIMPLIFIED LID STRUCTURE NAC-LWT

  1 CYLINDER         2  1  RADIUS =  36.519     +Z =  14.135     -Z = -14.135     CENTERLINE IS AT  X = 0.00000      Y = 0.00000

  2 CYLINDER         8  1  RADIUS =  49.822     +Z =  14.135     -Z = -14.135     CENTERLINE IS AT  X = 0.00000      Y = 0.00000

  3 CUBOID           8  1      +X =  49.822     -X = -49.822     +Y =  49.822     -Y = -49.822     +Z =  14.135     -Z = -14.135

                                                -----   UNIT    81   -----

SIMPLIFIED CASK BOTTOM STRUCTURE NAC-LWT

  1 CYLINDER         6  1  RADIUS =  26.353     +Z =  3.8100     -Z = -3.8100     CENTERLINE IS AT  X = 0.00000      Y = 0.00000

  2 CYLINDER         2  1  RADIUS =  36.619     +Z =  13.970     -Z = -12.700     CENTERLINE IS AT  X = 0.00000      Y = 0.00000

  3 CYLINDER         8  1  RADIUS =  49.822     +Z =  13.970     -Z = -12.700     CENTERLINE IS AT  X = 0.00000      Y = 0.00000

  4 CUBOID           8  1      +X =  49.822     -X = -49.822     +Y =  49.822     -Y = -49.822     +Z =  13.970     -Z = -12.700
_                                   TRIGA - PREF. FLOOD CANISTER

                MEDIA BIAS      GEOMETRY DESCRIPTION FOR THOSE UNITS UTILIZED IN THIS PROBLEM
REGION           NUM   ID

                                      ******************   GLOBAL   ******************
                                      -----   UNIT    82  EXTERNAL TO LATTICE 20   -----

STACK OF 5 BASKETS IN CASK

  1 ARRAY NUMBER    20         +X =  49.822     -X = -49.822     +Y =  49.822     -Y = -49.822     +Z =  214.96     -Z = -213.36
_                         TRIGA - PREF. FLOOD CANISTER

                -------  UNIT ORIENTATION DESCRIPTION FOR ARRAY   1         -------

Z LAYER   1, X COLUMN   1 TO   1 LEFT TO RIGHT   Y ROW   1 TO   7  BOTTOM TO TOP

 11

  5

 17

 16

 17

  5

 10
```

```
                 -------  UNIT ORIENTATION DESCRIPTION FOR ARRAY   2         -------
Z LAYER   1, X COLUMN   1 TO   1 LEFT TO RIGHT   Y ROW   1 TO   4  BOTTOM TO TOP
 12
  6
 17
 13
                 -------  UNIT ORIENTATION DESCRIPTION FOR ARRAY   3         -------
Z LAYER   1, X COLUMN   1 TO   1 LEFT TO RIGHT   Y ROW   1 TO   4  BOTTOM TO TOP
 14
  6
 17
 15
1                        TRIGA - PREF. FLOOD CANISTER
                 -------  UNIT ORIENTATION DESCRIPTION FOR ARRAY  11         -------
Z LAYER   1, X COLUMN   1 TO   1 LEFT TO RIGHT   Y ROW   1 TO   7  BOTTOM TO TOP
 51
 45
 17
 56
 17
 45
 50
                 -------  UNIT ORIENTATION DESCRIPTION FOR ARRAY  12         -------
Z LAYER   1, X COLUMN   1 TO   1 LEFT TO RIGHT   Y ROW   1 TO   4  BOTTOM TO TOP
 52
 46
 17
 53
                 -------  UNIT ORIENTATION DESCRIPTION FOR ARRAY  13         -------
Z LAYER   1, X COLUMN   1 TO   1 LEFT TO RIGHT   Y ROW   1 TO   4  BOTTOM TO TOP
 54
 46
 17
 55
1                        TRIGA - PREF. FLOOD CANISTER
                 -------  UNIT ORIENTATION DESCRIPTION FOR ARRAY  20         -------
Z LAYER   1, X COLUMN   1 TO   1 LEFT TO RIGHT   Y ROW   1 TO   1  BOTTOM TO TOP
 81
Z LAYER   2, X COLUMN   1 TO   1 LEFT TO RIGHT   Y ROW   1 TO   1  BOTTOM TO TOP
 30
Z LAYER   3, X COLUMN   1 TO   1 LEFT TO RIGHT   Y ROW   1 TO   1  BOTTOM TO TOP
 70
Z LAYER   4, X COLUMN   1 TO   1 LEFT TO RIGHT   Y ROW   1 TO   1  BOTTOM TO TOP
 70
Z LAYER   5, X COLUMN   1 TO   1 LEFT TO RIGHT   Y ROW   1 TO   1  BOTTOM TO TOP
 70
Z LAYER   6, X COLUMN   1 TO   1 LEFT TO RIGHT   Y ROW   1 TO   1  BOTTOM TO TOP
 30
Z LAYER   7, X COLUMN   1 TO   1 LEFT TO RIGHT   Y ROW   1 TO   1  BOTTOM TO TOP
 80
1                                  TRIGA - PREF. FLOOD CANISTER
                                  VOLUMES FOR THOSE UNITS UTILIZED IN  THIS PROBLEM

                                    GEOMETRY                                CUMULATIVE
                    UNIT    REGION    REGION          VOLUME                  VOLUME

                      1         1         1       9.77686E+00 CM**3       9.77686E+00 CM**3
                                  2         2       3.87746E+02 CM**3       3.97523E+02 CM**3
```

```
            3         3         1.81270E+02 CM**3         5.78793E+02 CM**3
            4         4         3.52668E+01 CM**3         6.14060E+02 CM**3
            5         5         1.98501E+02 CM**3         8.12561E+02 CM**3

 5          1         6         4.48202E+02 CM**3         4.48202E+02 CM**3

 6          1         7         3.84173E+02 CM**3         3.84173E+02 CM**3

 10         1         8         1.51067E+03 CM**3         4.76091E+03 CM**3
            2         9         4.59145E+02 CM**3         5.22006E+03 CM**3
            3        10         1.90382E+02 CM**3         5.41044E+03 CM**3

 11         1        11         1.51067E+03 CM**3         4.76091E+03 CM**3
            2        12         4.59145E+02 CM**3         5.22006E+03 CM**3
            3        13         1.90382E+02 CM**3         5.41044E+03 CM**3

 12         1        14         1.51067E+03 CM**3         4.76091E+03 CM**3
            2        15         4.59145E+02 CM**3         5.22006E+03 CM**3
            3        16         1.90382E+02 CM**3         5.41044E+03 CM**3

 13         1        17         1.51067E+03 CM**3         4.76091E+03 CM**3
            2        18         4.59145E+02 CM**3         5.22006E+03 CM**3
            3        19         1.90382E+02 CM**3         5.41044E+03 CM**3

 14         1        20         1.51067E+03 CM**3         4.76091E+03 CM**3
            2        21         4.59145E+02 CM**3         5.22006E+03 CM**3
            3        22         1.90382E+02 CM**3         5.41044E+03 CM**3

 15         1        23         1.51067E+03 CM**3         4.76091E+03 CM**3
            2        24         4.59145E+02 CM**3         5.22006E+03 CM**3
            3        25         1.90382E+02 CM**3         5.41044E+03 CM**3

 16         1        26         1.51067E+03 CM**3         4.76091E+03 CM**3
            2        27         4.59145E+02 CM**3         5.22006E+03 CM**3
            3        28         1.90382E+02 CM**3         5.41044E+03 CM**3

 17         1        29         1.65856E+02 CM**3         1.65856E+02 CM**3
            2        30         1.37754E+01 CM**3         1.79631E+02 CM**3
            3        31         2.04593E+01 CM**3         2.00090E+02 CM**3

SURROUNDING GEOMETRY VOLUMES -  GEOMETRY REGION     32 IS AN ARRAY PLACEMENT BOUNDARY REGION

 20         1        32         1.75279E+04 CM**3         1.75279E+04 CM**3
            2        33         3.94895E+03 CM**3         2.14768E+04 CM**3

SURROUNDING GEOMETRY VOLUMES -  GEOMETRY REGION     34 IS AN ARRAY PLACEMENT BOUNDARY REGION

 21         1        34         1.14051E+04 CM**3         1.14051E+04 CM**3
            2        35         8.02729E+02 CM**3         1.22079E+04 CM**3

SURROUNDING GEOMETRY VOLUMES -  GEOMETRY REGION     36 IS AN ARRAY PLACEMENT BOUNDARY REGION

 22         1        36         1.14051E+04 CM**3         1.14051E+04 CM**3
            2        37         8.02729E+02 CM**3         1.22079E+04 CM**3

 30         1        38         2.19355E+04 CM**3         6.78281E+04 CM**3
            2        39         1.60653E+04 CM**3         8.38934E+04 CM**3
            3        40         1.78831E+05 CM**3         2.62724E+05 CM**3
            4        41         5.01461E+04 CM**3         3.12870E+05 CM**3
            5        42         2.55540E+05 CM**3         5.68410E+05 CM**3
            6        43         1.39278E+04 CM**3         5.82338E+05 CM**3
            7        44         1.59118E+05 CM**3         7.41456E+05 CM**3

 41         1        45         9.77686E+00 CM**3         9.77686E+00 CM**3
            2        46         3.87746E+02 CM**3         3.97523E+02 CM**3
            3        47         1.81270E+02 CM**3         5.78793E+02 CM**3
            4        48         3.52668E+01 CM**3         6.14060E+02 CM**3
            5        49         1.98501E+02 CM**3         8.12561E+02 CM**3

 45         1        50         4.48202E+02 CM**3         4.48202E+02 CM**3

 46         1        51         3.84173E+02 CM**3         3.84173E+02 CM**3

 50         1        52         2.16019E+03 CM**3         5.41044E+03 CM**3

 51         1        53         2.16019E+03 CM**3         5.41044E+03 CM**3

 52         1        54         2.16019E+03 CM**3         5.41044E+03 CM**3

 53         1        55         2.16019E+03 CM**3         5.41044E+03 CM**3

 54         1        56         2.16019E+03 CM**3         5.41044E+03 CM**3

 55         1        57         2.16019E+03 CM**3         5.41044E+03 CM**3

 56         1        58         2.16019E+03 CM**3         5.41044E+03 CM**3
            2        59         0.00000E+00 CM**3         5.41044E+03 CM**3

SURROUNDING GEOMETRY VOLUMES -  GEOMETRY REGION     60 IS AN ARRAY PLACEMENT BOUNDARY REGION

 60         1        60         1.75279E+04 CM**3         1.75279E+04 CM**3
            2        61         3.94895E+03 CM**3         2.14768E+04 CM**3

SURROUNDING GEOMETRY VOLUMES -  GEOMETRY REGION     62 IS AN ARRAY PLACEMENT BOUNDARY REGION

 61         1        62         1.14051E+04 CM**3         1.14051E+04 CM**3
            2        63         8.02729E+02 CM**3         1.22079E+04 CM**3

SURROUNDING GEOMETRY VOLUMES -  GEOMETRY REGION     64 IS AN ARRAY PLACEMENT BOUNDARY REGION
```

62	1	64	1.14051E+04 CM**3	1.14051E+04 CM**3
	2	65	8.02729E+02 CM**3	1.22079E+04 CM**3
70	1	66	2.19355E+04 CM**3	6.78281E+04 CM**3
	2	67	1.60653E+04 CM**3	8.38934E+04 CM**3
	3	68	1.78831E+05 CM**3	2.62724E+05 CM**3
	4	69	5.01461E+04 CM**3	3.12870E+05 CM**3
	5	70	2.55540E+05 CM**3	5.68410E+05 CM**3
	6	71	1.39278E+04 CM**3	5.82338E+05 CM**3
	7	72	1.59118E+05 CM**3	7.41456E+05 CM**3
80	1	73	1.18444E+05 CM**3	1.18444E+05 CM**3
	2	74	1.02013E+05 CM**3	2.20456E+05 CM**3
	3	75	6.02374E+04 CM**3	2.80694E+05 CM**3
81	1	76	1.66245E+04 CM**3	1.66245E+04 CM**3
	2	77	9.57276E+04 CM**3	1.12352E+05 CM**3
	3	78	9.56257E+04 CM**3	2.07978E+05 CM**3
	4	79	5.68278E+04 CM**3	2.64806E+05 CM**3

SURROUNDING GEOMETRY VOLUMES - GEOMETRY REGION 80 IS AN ARRAY PLACEMENT BOUNDARY REGION

82	1	80	4.25278E+06 CM**3	4.25278E+06 CM**3

UNIT	USES	REGION	MIXTURE	TOTAL VOLUME
1	56	1	4	5.47504E+02 CM**3
		2	1	2.17138E+04 CM**3
		3	5	1.01511E+04 CM**3
		4	2	1.97494E+03 CM**3
		5	9	1.11161E+04 CM**3
5	4	1	2	1.79281E+03 CM**3
6	4	1	2	1.53669E+03 CM**3
10	2	1	3	3.02133E+03 CM**3
		2	2	9.18290E+02 CM**3
		3	12	3.80764E+02 CM**3
11	2	1	3	3.02133E+03 CM**3
		2	2	9.18290E+02 CM**3
		3	12	3.80764E+02 CM**3
12	2	1	3	3.02133E+03 CM**3
		2	2	9.18290E+02 CM**3
		3	12	3.80764E+02 CM**3
13	2	1	3	3.02133E+03 CM**3
		2	2	9.18290E+02 CM**3
		3	12	3.80764E+02 CM**3
14	2	1	3	3.02133E+03 CM**3
		2	2	9.18290E+02 CM**3
		3	12	3.80764E+02 CM**3
15	2	1	3	3.02133E+03 CM**3
		2	2	9.18290E+02 CM**3
		3	12	3.80764E+02 CM**3
16	2	1	3	3.02133E+03 CM**3
		2	2	9.18290E+02 CM**3
		3	12	3.80764E+02 CM**3
17	20	1	13	3.31711E+03 CM**3
		2	14	2.75508E+02 CM**3
		3	12	4.09185E+02 CM**3
20	2	1		3.50558E+04 CM**3
		2	2	7.89790E+03 CM**3
21	2	1		2.28103E+04 CM**3
		2	2	1.60546E+03 CM**3
22	2	1		2.28103E+04 CM**3
		2	2	1.60546E+03 CM**3
30	2	1	12	4.38710E+04 CM**3
		2	2	3.21306E+04 CM**3
		3	6	3.57661E+05 CM**3
		4	2	1.00292E+05 CM**3
		5	8	5.11080E+05 CM**3
		6	2	2.78555E+04 CM**3
		7	8	3.18236E+05 CM**3
41	84	1	4	8.21256E+02 CM**3
		2	10	3.25707E+04 CM**3
		3	5	1.52267E+04 CM**3
		4	2	2.96242E+03 CM**3
		5	11	1.66741E+04 CM**3
45	6	1	2	2.68921E+03 CM**3
46	6	1	2	2.30504E+03 CM**3
50	3	1	12	6.48058E+03 CM**3
51	3	1	12	6.48058E+03 CM**3

```
                                    52         3       1         12         6.48058E+03 CM**3

                                    53         3       1         12         6.48058E+03 CM**3

                                    54         3       1         12         6.48058E+03 CM**3

                                    55         3       1         12         6.48058E+03 CM**3

                                    56         3       1         12         6.48058E+03 CM**3
                                                       2         12         0.00000E+00 CM**3

                                    60         3       1                    5.25837E+04 CM**3
                                                       2          2         1.18469E+04 CM**3

                                    61         3       1                    3.42154E+04 CM**3
                                                       2          2         2.40819E+03 CM**3

                                    62         3       1                    3.42154E+04 CM**3
                                                       2          2         2.40819E+03 CM**3

                                    70         3       1         12         6.58065E+04 CM**3
                                                       2          2         4.81959E+04 CM**3
                                                       3          6         5.36492E+05 CM**3
                                                       4          2         1.50438E+05 CM**3
                                                       5          8         7.66620E+05 CM**3
                                                       6          2         4.17833E+04 CM**3
                                                       7          8         4.77353E+05 CM**3

                                    80         1       1          2         1.18444E+05 CM**3
                                                       2          8         1.02013E+05 CM**3
                                                       3          8         6.02374E+04 CM**3

                                    81         1       1          6         1.66245E+04 CM**3
                                                       2          2         9.57276E+04 CM**3
                                                       3          8         9.56257E+04 CM**3
                                                       4          8         5.68278E+04 CM**3

                                    82         1       1                    4.25278E+06 CM**3


                                                TOTAL MIXTURE VOLUMES
                                              MIXTURE        TOTAL VOLUME              MASS(G)
                                                  1         2.17138E+04 CM**3        1.26338E+05
                                                  2         6.62328E+05 CM**3        5.24564E+06
                                                  3         2.11493E+04 CM**3        2.11106E+04
                                                  4         1.36876E+03 CM**3        8.88326E+03
                                                  5         2.53779E+04 CM**3        5.32939E+04
                                                  6         9.10777E+05 CM**3        1.03319E+07
                                                  8         2.38799E+06 CM**3        2.38363E-14
                                                  9         1.11161E+04 CM**3        3.70362E+04
                                                 10         3.25707E+04 CM**3        1.89507E+05
                                                 11         1.66741E+04 CM**3        4.45219E+04
                                                 12         1.58116E+05 CM**3        1.57827E-15
                                                 13         3.31711E+03 CM**3        2.57176E+04
                                                 14         2.75508E+02 CM**3        2.11891E+03

      ********************************************************************************************************************************
      ***                                                                                                                          ***
      ***                                        BIASING INFORMATION                                                               ***
      ***                                                                                                                          ***
      ***     A DEFAULT WEIGHT OF    0.500 WILL BE USED FOR ALL BIAS ID'S.                                                         ***
      ***                                                                                                                          ***
      ********************************************************************************************************************************

                               ........    0 IO'S WERE USED IN KENO-V BEFORE TRACKING       ........

                               ........  0.03200 MINUTES WERE USED PROCESSING DATA.        ........

VOLUME FRACTION OF FISSILE MATERIAL IN THE CORE= 1.27645E-02

START TYPE 0 WAS USED.

THE NEUTRONS WERE STARTED WITH A FLAT DISTRIBUTION IN A CUBOID DEFINED BY:
                     +X= 4.98221E+01  -X=-4.98221E+01  +Y= 4.98221E+01  -Y=-4.98221E+01  +Z= 2.14960E+02  -Z=-2.13360E+02
THE FLAG TO START NEUTRONS IN THE REFLECTOR WAS TURNED OFF

KENO MESSAGE NUMBER K5-105     ***** WARNING, ONLY  777 INDEPENDENT STARTING POSITIONS WERE GENERATED.  *****

  223 ADDITIONAL STARTING POINTS WERE PICKED FROM THE INITAL DISTRIBUTION.

1.79800 MINUTES WERE REQUIRED FOR STARTING.   TOTAL ELAPSED TIME IS 1.83467 MINUTES.
```

TRIGA - PREF. FLOOD CANISTER

GENERATION	GENERATION K-EFFECTIVE	ELAPSED TIME MINUTES	AVERAGE K-EFFECTIVE	AVG K-EFF DEVIATION	MATRIX K-EFFECTIVE	MATRIX K-EFF DEVIATION
1	9.04076E-01	1.87017E+00	1.00000E+00	0.00000E+00	0.00000E+00	0.00000E+00
2	8.72359E-01	1.91683E+00	1.00000E+00	0.00000E+00	0.00000E+00	0.00000E+00
KENO MESSAGE NUMBER K5-132		WARNING....ONLY	973 INDEPENDENT FISSION POINTS WERE GENERATED			
3	8.77401E-01	1.96083E+00	8.77401E-01	0.00000E+00	0.00000E+00	0.00000E+00
4	8.96040E-01	2.00200E+00	8.86720E-01	9.31981E-03	0.00000E+00	0.00000E+00
5	8.93147E-01	2.04417E+00	8.88862E-01	5.79149E-03	0.00000E+00	0.00000E+00
6	8.75129E-01	2.08800E+00	8.85429E-01	5.34401E-03	0.00000E+00	0.00000E+00
7	9.12265E-01	2.12750E+00	8.90796E-01	6.77804E-03	0.00000E+00	0.00000E+00
8	9.07510E-01	2.16950E+00	8.93582E-01	6.19574E-03	0.00000E+00	0.00000E+00
9	8.90479E-01	2.21167E+00	8.93139E-01	5.25508E-03	0.00000E+00	0.00000E+00
10	9.09255E-01	2.25383E+00	8.95153E-01	4.97700E-03	0.00000E+00	0.00000E+00
11	9.08515E-01	2.29500E+00	8.96638E-01	4.63359E-03	0.00000E+00	0.00000E+00
12	8.92590E-01	2.33800E+00	8.96233E-01	4.16413E-03	0.00000E+00	0.00000E+00
13	8.79348E-01	2.37917E+00	8.94698E-01	4.06737E-03	0.00000E+00	0.00000E+00
14	8.80056E-01	2.42133E+00	8.93478E-01	3.90833E-03	0.00000E+00	0.00000E+00
15	8.85894E-01	2.46250E+00	8.92895E-01	3.64216E-03	0.00000E+00	0.00000E+00
16	9.18410E-01	2.50283E+00	8.94717E-01	3.83301E-03	0.00000E+00	0.00000E+00
17	8.84402E-01	2.54033E+00	8.94029E-01	3.63401E-03	0.00000E+00	0.00000E+00
18	8.85021E-01	2.58150E+00	8.93466E-01	3.44562E-03	0.00000E+00	0.00000E+00
19	9.74563E-01	2.61900E+00	8.98237E-01	5.76472E-03	0.00000E+00	0.00000E+00
20	9.41390E-01	2.65750E+00	9.00634E-01	5.94029E-03	0.00000E+00	0.00000E+00
21	8.89588E-01	2.69950E+00	9.00053E-01	5.64894E-03	0.00000E+00	0.00000E+00
22	8.85700E-01	2.74083E+00	8.99335E-01	5.40690E-03	0.00000E+00	0.00000E+00
23	8.81833E-01	2.78283E+00	8.98502E-01	5.21007E-03	0.00000E+00	0.00000E+00
24	8.74236E-01	2.82400E+00	8.97399E-01	5.08859E-03	0.00000E+00	0.00000E+00
25	9.22286E-01	2.86167E+00	8.98481E-01	4.98126E-03	0.00000E+00	0.00000E+00
26	8.85436E-01	2.90367E+00	8.97937E-01	4.80006E-03	0.00000E+00	0.00000E+00
27	8.89771E-01	2.94400E+00	8.97611E-01	4.61563E-03	0.00000E+00	0.00000E+00
28	9.00682E-01	2.98333E+00	8.97729E-01	4.43613E-03	0.00000E+00	0.00000E+00
29	8.93443E-01	3.02450E+00	8.97570E-01	4.27162E-03	0.00000E+00	0.00000E+00
30	8.87394E-01	3.06483E+00	8.97207E-01	4.13225E-03	0.00000E+00	0.00000E+00
31	9.42163E-01	3.10417E+00	8.98757E-01	4.27797E-03	0.00000E+00	0.00000E+00
32	9.44103E-01	3.14450E+00	9.00268E-01	4.40065E-03	0.00000E+00	0.00000E+00
33	8.96528E-01	3.18300E+00	9.00148E-01	4.25804E-03	0.00000E+00	0.00000E+00
34	9.04464E-01	3.22233E+00	9.00282E-01	4.12503E-03	0.00000E+00	0.00000E+00
35	8.62652E-01	3.26250E+00	8.99142E-01	4.15752E-03	0.00000E+00	0.00000E+00
36	8.98804E-01	3.30283E+00	8.99132E-01	4.03340E-03	0.00000E+00	0.00000E+00
37	8.91865E-01	3.34033E+00	8.98925E-01	3.92196E-03	0.00000E+00	0.00000E+00
38	9.29874E-01	3.37967E+00	8.99784E-01	3.90722E-03	0.00000E+00	0.00000E+00
39	9.12129E-01	3.41917E+00	9.00118E-01	3.81477E-03	0.00000E+00	0.00000E+00
40	8.95307E-01	3.45850E+00	8.99991E-01	3.71518E-03	0.00000E+00	0.00000E+00
41	8.84003E-01	3.49967E+00	8.99581E-01	3.64181E-03	0.00000E+00	0.00000E+00
42	9.10453E-01	3.54000E+00	8.99853E-01	3.55999E-03	0.00000E+00	0.00000E+00
43	8.98455E-01	3.57933E+00	8.99819E-01	3.47224E-03	0.00000E+00	0.00000E+00
44	9.07561E-01	3.62050E+00	9.00003E-01	3.39357E-03	0.00000E+00	0.00000E+00
45	8.94583E-01	3.65900E+00	8.99877E-01	3.31611E-03	0.00000E+00	0.00000E+00
46	8.81784E-01	3.69917E+00	8.99466E-01	3.26586E-03	0.00000E+00	0.00000E+00
47	8.53810E-01	3.74050E+00	8.98452E-01	3.34980E-03	0.00000E+00	0.00000E+00
48	9.24237E-01	3.77883E+00	8.99012E-01	3.32378E-03	0.00000E+00	0.00000E+00
49	8.84761E-01	3.82000E+00	8.98709E-01	3.26640E-03	0.00000E+00	0.00000E+00
50	9.05456E-01	3.86133E+00	8.98849E-01	3.20071E-03	0.00000E+00	0.00000E+00
51	9.03071E-01	3.90067E+00	8.98936E-01	3.13589E-03	0.00000E+00	0.00000E+00
52	8.59549E-01	3.94267E+00	8.98148E-01	3.17191E-03	0.00000E+00	0.00000E+00
53	8.88460E-01	3.98667E+00	8.97958E-01	3.11489E-03	0.00000E+00	0.00000E+00
54	8.44593E-01	4.02783E+00	8.96932E-01	3.22220E-03	0.00000E+00	0.00000E+00
55	9.15333E-01	4.06633E+00	8.97279E-01	3.17983E-03	0.00000E+00	0.00000E+00
56	8.91137E-01	4.10667E+00	8.97165E-01	3.12246E-03	0.00000E+00	0.00000E+00
57	8.94424E-01	4.14783E+00	8.97115E-01	3.06556E-03	0.00000E+00	0.00000E+00
58	9.17595E-01	4.18717E+00	8.97481E-01	3.03246E-03	0.00000E+00	0.00000E+00
59	9.14172E-01	4.22750E+00	8.97774E-01	2.99314E-03	0.00000E+00	0.00000E+00
60	9.49548E-01	4.26683E+00	8.98666E-01	3.07356E-03	0.00000E+00	0.00000E+00
61	9.66389E-01	4.30433E+00	8.99814E-01	3.23173E-03	0.00000E+00	0.00000E+00
62	9.04482E-01	4.34550E+00	8.99892E-01	3.17837E-03	0.00000E+00	0.00000E+00
63	8.86045E-01	4.38767E+00	8.99665E-01	3.13406E-03	0.00000E+00	0.00000E+00
64	9.08881E-01	4.42883E+00	8.99814E-01	3.08668E-03	0.00000E+00	0.00000E+00
65	8.84092E-01	4.47100E+00	8.99564E-01	3.04752E-03	0.00000E+00	0.00000E+00
66	9.07861E-01	4.51117E+00	8.99694E-01	3.00233E-03	0.00000E+00	0.00000E+00
67	8.81999E-01	4.55233E+00	8.99422E-01	2.96829E-03	0.00000E+00	0.00000E+00
68	9.59277E-01	4.59367E+00	9.00328E-01	3.06042E-03	0.00000E+00	0.00000E+00
69	9.03907E-01	4.63300E+00	9.00382E-01	3.01487E-03	0.00000E+00	0.00000E+00
70	8.89708E-01	4.67500E+00	9.00225E-01	2.97435E-03	0.00000E+00	0.00000E+00
71	9.28087E-01	4.71533E+00	9.00629E-01	2.95861E-03	0.00000E+00	0.00000E+00
72	9.12438E-01	4.75567E+00	9.00797E-01	2.92091E-03	0.00000E+00	0.00000E+00
73	9.21470E-01	4.79500E+00	9.01089E-01	2.89416E-03	0.00000E+00	0.00000E+00
KENO MESSAGE NUMBER K5-132		WARNING....ONLY	999 INDEPENDENT FISSION POINTS WERE GENERATED			
74	8.95459E-01	4.83433E+00	9.01010E-01	2.85476E-03	0.00000E+00	0.00000E+00
75	8.78585E-01	4.87467E+00	9.00703E-01	2.83209E-03	0.00000E+00	0.00000E+00
76	9.28678E-01	4.91483E+00	9.01081E-01	2.81902E-03	0.00000E+00	0.00000E+00
77	9.39995E-01	4.95333E+00	9.01600E-01	2.82916E-03	0.00000E+00	0.00000E+00
78	9.44460E-01	4.99000E+00	9.02164E-01	2.84808E-03	0.00000E+00	0.00000E+00
79	9.28185E-01	5.02750E+00	9.02502E-01	2.83109E-03	0.00000E+00	0.00000E+00
80	9.24221E-01	5.06683E+00	9.02780E-01	2.80839E-03	0.00000E+00	0.00000E+00
81	9.03422E-01	5.10533E+00	9.02789E-01	2.77263E-03	0.00000E+00	0.00000E+00
82	8.94376E-01	5.14283E+00	9.02683E-01	2.73977E-03	0.00000E+00	0.00000E+00
83	9.04437E-01	5.18217E+00	9.02705E-01	2.70582E-03	0.00000E+00	0.00000E+00
84	9.30003E-01	5.22250E+00	9.03038E-01	2.69327E-03	0.00000E+00	0.00000E+00
85	8.81359E-01	5.26183E+00	9.02777E-01	2.67342E-03	0.00000E+00	0.00000E+00
86	8.86321E-01	5.30300E+00	9.02581E-01	2.64865E-03	0.00000E+00	0.00000E+00
87	8.88946E-01	5.34417E+00	9.02420E-01	2.62222E-03	0.00000E+00	0.00000E+00
88	8.74919E-01	5.38267E+00	9.02101E-01	2.61120E-03	0.00000E+00	0.00000E+00
89	8.84182E-01	5.42383E+00	9.01895E-01	2.58922E-03	0.00000E+00	0.00000E+00

90	9.51887E-01	5.46417E+00	9.02463E-01	2.62191E-03	0.00000E+00	0.00000E+00
91	9.10704E-01	5.50350E+00	9.02555E-01	2.59394E-03	0.00000E+00	0.00000E+00
92	9.55197E-01	5.54283E+00	9.03140E-01	2.63080E-03	0.00000E+00	0.00000E+00
93	9.04253E-01	5.58317E+00	9.03153E-01	2.60176E-03	0.00000E+00	0.00000E+00
94	9.29614E-01	5.62167E+00	9.03440E-01	2.58935E-03	0.00000E+00	0.00000E+00
95	9.23929E-01	5.66183E+00	9.03660E-01	2.57081E-03	0.00000E+00	0.00000E+00
96	9.16325E-01	5.70217E+00	9.03795E-01	2.54688E-03	0.00000E+00	0.00000E+00
97	8.97809E-01	5.74250E+00	9.03732E-01	2.52072E-03	0.00000E+00	0.00000E+00
98	9.07023E-01	5.78267E+00	9.03766E-01	2.49456E-03	0.00000E+00	0.00000E+00
99	9.01865E-01	5.82217E+00	9.03747E-01	2.46878E-03	0.00000E+00	0.00000E+00
100	9.05907E-01	5.86150E+00	9.03769E-01	2.44356E-03	0.00000E+00	0.00000E+00
101	8.99187E-01	5.90083E+00	9.03723E-01	2.41920E-03	0.00000E+00	0.00000E+00
102	9.36295E-01	5.93933E+00	9.04048E-01	2.41693E-03	0.00000E+00	0.00000E+00
103	9.48025E-01	5.97767E+00	9.04484E-01	2.43217E-03	0.00000E+00	0.00000E+00
104	8.99526E-01	6.01800E+00	9.04435E-01	2.40870E-03	0.00000E+00	0.00000E+00
105	9.20268E-01	6.05733E+00	9.04589E-01	2.39015E-03	0.00000E+00	0.00000E+00
106	9.20011E-01	6.09667E+00	9.04737E-01	2.37170E-03	0.00000E+00	0.00000E+00
107	9.18232E-01	6.13617E+00	9.04866E-01	2.35251E-03	0.00000E+00	0.00000E+00
108	9.29778E-01	6.17550E+00	9.05101E-01	2.34204E-03	0.00000E+00	0.00000E+00
109	8.60972E-01	6.21567E+00	9.04688E-01	2.35641E-03	0.00000E+00	0.00000E+00
110	8.66153E-01	6.25883E+00	9.04331E-01	2.36160E-03	0.00000E+00	0.00000E+00
111	8.82695E-01	6.29900E+00	9.04133E-01	2.34824E-03	0.00000E+00	0.00000E+00
112	8.96748E-01	6.33833E+00	9.04066E-01	2.32777E-03	0.00000E+00	0.00000E+00
113	9.15508E-01	6.37967E+00	9.04169E-01	2.30900E-03	0.00000E+00	0.00000E+00
114	8.74156E-01	6.41983E+00	9.03901E-01	2.30393E-03	0.00000E+00	0.00000E+00
115	8.57220E-01	6.46383E+00	9.03488E-01	2.32052E-03	0.00000E+00	0.00000E+00
116	8.94261E-01	6.50417E+00	9.03407E-01	2.30150E-03	0.00000E+00	0.00000E+00
117	9.12838E-01	6.54167E+00	9.03489E-01	2.28287E-03	0.00000E+00	0.00000E+00
118	8.82770E-01	6.58183E+00	9.03310E-01	2.27014E-03	0.00000E+00	0.00000E+00
119	9.12993E-01	6.62217E+00	9.03393E-01	2.25217E-03	0.00000E+00	0.00000E+00
120	8.95400E-01	6.66150E+00	9.03325E-01	2.23403E-03	0.00000E+00	0.00000E+00
121	8.37777E-01	6.70267E+00	9.02774E-01	2.28264E-03	0.00000E+00	0.00000E+00
122	9.12525E-01	6.74300E+00	9.02856E-01	2.26499E-03	0.00000E+00	0.00000E+00
123	8.57572E-01	6.78417E+00	9.02481E-01	2.27716E-03	0.00000E+00	0.00000E+00
124	8.84956E-01	6.82717E+00	9.02338E-01	2.26298E-03	0.00000E+00	0.00000E+00
125	8.87165E-01	6.86933E+00	9.02214E-01	2.24790E-03	0.00000E+00	0.00000E+00
126	9.30569E-01	6.91050E+00	9.02443E-01	2.24139E-03	0.00000E+00	0.00000E+00
127	9.09475E-01	6.94983E+00	9.02499E-01	2.22410E-03	0.00000E+00	0.00000E+00
128	9.20301E-01	6.98833E+00	9.02641E-01	2.21089E-03	0.00000E+00	0.00000E+00
129	9.28321E-01	7.02867E+00	9.02843E-01	2.20272E-03	0.00000E+00	0.00000E+00
130	9.33353E-01	7.06800E+00	9.03081E-01	2.19840E-03	0.00000E+00	0.00000E+00
131	8.91192E-01	7.10917E+00	9.02989E-01	2.18324E-03	0.00000E+00	0.00000E+00
132	9.13478E-01	7.15033E+00	9.03070E-01	2.16788E-03	0.00000E+00	0.00000E+00
133	8.89571E-01	7.18967E+00	9.02967E-01	2.15373E-03	0.00000E+00	0.00000E+00
134	9.04478E-01	7.23000E+00	9.02978E-01	2.13739E-03	0.00000E+00	0.00000E+00
135	9.36960E-01	7.27217E+00	9.03234E-01	2.13659E-03	0.00000E+00	0.00000E+00
136	9.11904E-01	7.31233E+00	9.03298E-01	2.12157E-03	0.00000E+00	0.00000E+00
137	9.24856E-01	7.35267E+00	9.03458E-01	2.11184E-03	0.00000E+00	0.00000E+00
138	9.33102E-01	7.39200E+00	9.03676E-01	2.10756E-03	0.00000E+00	0.00000E+00
139	8.96111E-01	7.43233E+00	9.03621E-01	2.09285E-03	0.00000E+00	0.00000E+00
140	8.78600E-01	7.47267E+00	9.03440E-01	2.08552E-03	0.00000E+00	0.00000E+00
141	8.82909E-01	7.51467E+00	9.03292E-01	2.07573E-03	0.00000E+00	0.00000E+00
142	8.85458E-01	7.55583E+00	9.03164E-01	2.06478E-03	0.00000E+00	0.00000E+00
143	8.82365E-01	7.59800E+00	9.03017E-01	2.05538E-03	0.00000E+00	0.00000E+00
144	8.84668E-01	7.63650E+00	9.02888E-01	2.04494E-03	0.00000E+00	0.00000E+00
145	8.92455E-01	7.67583E+00	9.02815E-01	2.03190E-03	0.00000E+00	0.00000E+00
146	9.09940E-01	7.71700E+00	9.02864E-01	2.01835E-03	0.00000E+00	0.00000E+00
147	8.78237E-01	7.75733E+00	9.02694E-01	2.01157E-03	0.00000E+00	0.00000E+00
148	8.81926E-01	7.79850E+00	9.02552E-01	2.00280E-03	0.00000E+00	0.00000E+00
149	9.21255E-01	7.83883E+00	9.02679E-01	1.99319E-03	0.00000E+00	0.00000E+00
150	8.79603E-01	7.87817E+00	9.02523E-01	1.98581E-03	0.00000E+00	0.00000E+00
151	9.06244E-01	7.91933E+00	9.02548E-01	1.97259E-03	0.00000E+00	0.00000E+00
152	8.61998E-01	7.96050E+00	9.02278E-01	1.97796E-03	0.00000E+00	0.00000E+00
153	8.99009E-01	8.00083E+00	9.02256E-01	1.96494E-03	0.00000E+00	0.00000E+00
154	9.16344E-01	8.04383E+00	9.02349E-01	1.95417E-03	0.00000E+00	0.00000E+00
155	9.16876E-01	8.08417E+00	9.02444E-01	1.94367E-03	0.00000E+00	0.00000E+00
156	9.04525E-01	8.12533E+00	9.02458E-01	1.93106E-03	0.00000E+00	0.00000E+00
157	8.60196E-01	8.16650E+00	9.02185E-01	1.93784E-03	0.00000E+00	0.00000E+00
158	8.74514E-01	8.20583E+00	9.02008E-01	1.93353E-03	0.00000E+00	0.00000E+00
159	8.54413E-01	8.24517E+00	9.01704E-01	1.94494E-03	0.00000E+00	0.00000E+00
160	8.67244E-01	8.28917E+00	9.01486E-01	1.94486E-03	0.00000E+00	0.00000E+00
161	8.78436E-01	8.33033E+00	9.01341E-01	1.93802E-03	0.00000E+00	0.00000E+00
162	8.86632E-01	8.37433E+00	9.01249E-01	1.92806E-03	0.00000E+00	0.00000E+00
163	9.49903E-01	8.41450E+00	9.01552E-01	1.93973E-03	0.00000E+00	0.00000E+00
164	8.98499E-01	8.45667E+00	9.01533E-01	1.92782E-03	0.00000E+00	0.00000E+00
165	8.89727E-01	8.49517E+00	9.01460E-01	1.91732E-03	0.00000E+00	0.00000E+00
166	8.67233E-01	8.53533E+00	9.01252E-01	1.91699E-03	0.00000E+00	0.00000E+00
167	8.77772E-01	8.57750E+00	9.01109E-01	1.91064E-03	0.00000E+00	0.00000E+00
168	8.76178E-01	8.61867E+00	9.00959E-01	1.90503E-03	0.00000E+00	0.00000E+00
169	8.58492E-01	8.66083E+00	9.00705E-01	1.91058E-03	0.00000E+00	0.00000E+00
170	9.16818E-01	8.70017E+00	9.00801E-01	1.90160E-03	0.00000E+00	0.00000E+00
171	8.91225E-01	8.74133E+00	9.00744E-01	1.89116E-03	0.00000E+00	0.00000E+00
172	8.88805E-01	8.78167E+00	9.00674E-01	1.88131E-03	0.00000E+00	0.00000E+00
173	9.07403E-01	8.82100E+00	9.00713E-01	1.87069E-03	0.00000E+00	0.00000E+00
174	9.09396E-01	8.85850E+00	9.00764E-01	1.86047E-03	0.00000E+00	0.00000E+00
175	9.37713E-01	8.89883E+00	9.00977E-01	1.86198E-03	0.00000E+00	0.00000E+00
176	9.37022E-01	8.93917E+00	9.01184E-01	1.86280E-03	0.00000E+00	0.00000E+00
177	8.90419E-01	8.97933E+00	9.01123E-01	1.85314E-03	0.00000E+00	0.00000E+00
178	9.48373E-01	9.01783E+00	9.01391E-01	1.86204E-03	0.00000E+00	0.00000E+00
179	9.81307E-01	9.05533E+00	9.01843E-01	1.90575E-03	0.00000E+00	0.00000E+00
180	9.23410E-01	9.09467E+00	9.01964E-01	1.89888E-03	0.00000E+00	0.00000E+00
181	8.68850E-01	9.13683E+00	9.01779E-01	1.89728E-03	0.00000E+00	0.00000E+00
182	9.32886E-01	9.17983E+00	9.01952E-01	1.89461E-03	0.00000E+00	0.00000E+00
183	8.48080E-01	9.22200E+00	9.01654E-01	1.90748E-03	0.00000E+00	0.00000E+00
184	9.23443E-01	9.26050E+00	9.01774E-01	1.90074E-03	0.00000E+00	0.00000E+00

185	8.79917E-01	9.30067E+00	9.01654E-01	1.89410E-03	0.00000E+00	0.00000E+00
186	9.41142E-01	9.34100E+00	9.01869E-01	1.89596E-03	0.00000E+00	0.00000E+00
187	8.74248E-01	9.38217E+00	9.01720E-01	1.89158E-03	0.00000E+00	0.00000E+00
188	8.97478E-01	9.42250E+00	9.01697E-01	1.88152E-03	0.00000E+00	0.00000E+00
189	9.45809E-01	9.46183E+00	9.01933E-01	1.88624E-03	0.00000E+00	0.00000E+00
190	8.97201E-01	9.50300E+00	9.01908E-01	1.87635E-03	0.00000E+00	0.00000E+00
191	8.72023E-01	9.54417E+00	9.01750E-01	1.87309E-03	0.00000E+00	0.00000E+00
192	9.11518E-01	9.58350E+00	9.01801E-01	1.86391E-03	0.00000E+00	0.00000E+00
193	9.17643E-01	9.62483E+00	9.01884E-01	1.85598E-03	0.00000E+00	0.00000E+00
194	8.98645E-01	9.66500E+00	9.01867E-01	1.84637E-03	0.00000E+00	0.00000E+00
195	9.12174E-01	9.70617E+00	9.01920E-01	1.83755E-03	0.00000E+00	0.00000E+00
196	9.17972E-01	9.74650E+00	9.02003E-01	1.82992E-03	0.00000E+00	0.00000E+00
197	9.04652E-01	9.78583E+00	9.02017E-01	1.82057E-03	0.00000E+00	0.00000E+00
198	9.30746E-01	9.82617E+00	9.02163E-01	1.81718E-03	0.00000E+00	0.00000E+00
199	9.36365E-01	9.86467E+00	9.02337E-01	1.81625E-03	0.00000E+00	0.00000E+00
200	9.11116E-01	9.90400E+00	9.02381E-01	1.80759E-03	0.00000E+00	0.00000E+00
201	9.02267E-01	9.94333E+00	9.02381E-01	1.79849E-03	0.00000E+00	0.00000E+00
202	8.97385E-01	9.98367E+00	9.02356E-01	1.78965E-03	0.00000E+00	0.00000E+00
203	9.01324E-01	1.00238E+01	9.02351E-01	1.78073E-03	0.00000E+00	0.00000E+00
204	9.35640E-01	1.00623E+01	9.02515E-01	1.77954E-03	0.00000E+00	0.00000E+00
205	9.11747E-01	1.01027E+01	9.02561E-01	1.77133E-03	0.00000E+00	0.00000E+00
206	9.28577E-01	1.01420E+01	9.02688E-01	1.76724E-03	0.00000E+00	0.00000E+00
207	8.86183E-01	1.01823E+01	9.02608E-01	1.76044E-03	0.00000E+00	0.00000E+00
208	9.13975E-01	1.02217E+01	9.02663E-01	1.75274E-03	0.00000E+00	0.00000E+00
209	9.10363E-01	1.02618E+01	9.02700E-01	1.74465E-03	0.00000E+00	0.00000E+00
210	8.70834E-01	1.03022E+01	9.02547E-01	1.74299E-03	0.00000E+00	0.00000E+00
211	8.99743E-01	1.03415E+01	9.02534E-01	1.73468E-03	0.00000E+00	0.00000E+00
212	9.01309E-01	1.03818E+01	9.02528E-01	1.72641E-03	0.00000E+00	0.00000E+00
213	9.15588E-01	1.04222E+01	9.02590E-01	1.71932E-03	0.00000E+00	0.00000E+00
214	9.01142E-01	1.04623E+01	9.02583E-01	1.71121E-03	0.00000E+00	0.00000E+00
215	9.31863E-01	1.05008E+01	9.02720E-01	1.70869E-03	0.00000E+00	0.00000E+00
216	8.80298E-01	1.05420E+01	9.02616E-01	1.70391E-03	0.00000E+00	0.00000E+00
217	8.97514E-01	1.05795E+01	9.02592E-01	1.69613E-03	0.00000E+00	0.00000E+00
218	8.67453E-01	1.06198E+01	9.02429E-01	1.69608E-03	0.00000E+00	0.00000E+00
219	9.02086E-01	1.06610E+01	9.02428E-01	1.68825E-03	0.00000E+00	0.00000E+00
220	8.76765E-01	1.07013E+01	9.02310E-01	1.68461E-03	0.00000E+00	0.00000E+00
221	8.61957E-01	1.07443E+01	9.02126E-01	1.68699E-03	0.00000E+00	0.00000E+00
222	8.85954E-01	1.07847E+01	9.02052E-01	1.68091E-03	0.00000E+00	0.00000E+00
223	9.30038E-01	1.08258E+01	9.02179E-01	1.67807E-03	0.00000E+00	0.00000E+00
224	8.59055E-01	1.08670E+01	9.01985E-01	1.68175E-03	0.00000E+00	0.00000E+00
225	8.90887E-01	1.09073E+01	9.01935E-01	1.67493E-03	0.00000E+00	0.00000E+00
226	8.67557E-01	1.09493E+01	9.01781E-01	1.67449E-03	0.00000E+00	0.00000E+00
227	8.92607E-01	1.09897E+01	9.01741E-01	1.66753E-03	0.00000E+00	0.00000E+00
228	9.04082E-01	1.10300E+01	9.01751E-01	1.66017E-03	0.00000E+00	0.00000E+00
229	9.13059E-01	1.10665E+01	9.01801E-01	1.65359E-03	0.00000E+00	0.00000E+00
230	8.44714E-01	1.11068E+01	9.01550E-01	1.66525E-03	0.00000E+00	0.00000E+00
231	9.18847E-01	1.11443E+01	9.01626E-01	1.65968E-03	0.00000E+00	0.00000E+00
232	9.20580E-01	1.11847E+01	9.01708E-01	1.65450E-03	0.00000E+00	0.00000E+00
233	9.03397E-01	1.12250E+01	9.01716E-01	1.64734E-03	0.00000E+00	0.00000E+00
234	9.25214E-01	1.12633E+01	9.01817E-01	1.64335E-03	0.00000E+00	0.00000E+00
235	9.09047E-01	1.13027E+01	9.01848E-01	1.63658E-03	0.00000E+00	0.00000E+00
236	9.03164E-01	1.13430E+01	9.01853E-01	1.62958E-03	0.00000E+00	0.00000E+00
237	8.91437E-01	1.13823E+01	9.01809E-01	1.62323E-03	0.00000E+00	0.00000E+00
238	8.98044E-01	1.14227E+01	9.01793E-01	1.61642E-03	0.00000E+00	0.00000E+00
239	8.93984E-01	1.14648E+01	9.01760E-01	1.60992E-03	0.00000E+00	0.00000E+00
240	9.03580E-01	1.15050E+01	9.01768E-01	1.60316E-03	0.00000E+00	0.00000E+00
241	8.77447E-01	1.15472E+01	9.01666E-01	1.59968E-03	0.00000E+00	0.00000E+00
242	8.90656E-01	1.15865E+01	9.01620E-01	1.59366E-03	0.00000E+00	0.00000E+00
243	9.31421E-01	1.16240E+01	9.01744E-01	1.59184E-03	0.00000E+00	0.00000E+00
244	9.15134E-01	1.16625E+01	9.01799E-01	1.58622E-03	0.00000E+00	0.00000E+00
245	9.18443E-01	1.17010E+01	9.01868E-01	1.58116E-03	0.00000E+00	0.00000E+00
246	9.12851E-01	1.17403E+01	9.01913E-01	1.57531E-03	0.00000E+00	0.00000E+00
247	8.73823E-01	1.17807E+01	9.01798E-01	1.57305E-03	0.00000E+00	0.00000E+00
248	8.83525E-01	1.18218E+01	9.01724E-01	1.56840E-03	0.00000E+00	0.00000E+00
249	9.02901E-01	1.18612E+01	9.01729E-01	1.56205E-03	0.00000E+00	0.00000E+00
250	9.14466E-01	1.19005E+01	9.01780E-01	1.55658E-03	0.00000E+00	0.00000E+00
251	8.69192E-01	1.19417E+01	9.01649E-01	1.55583E-03	0.00000E+00	0.00000E+00
252	9.56482E-01	1.19810E+01	9.01868E-01	1.56504E-03	0.00000E+00	0.00000E+00
253	9.21722E-01	1.20213E+01	9.01948E-01	1.56080E-03	0.00000E+00	0.00000E+00
254	8.89467E-01	1.20617E+01	9.01898E-01	1.55538E-03	0.00000E+00	0.00000E+00
255	8.68811E-01	1.21010E+01	9.01767E-01	1.55473E-03	0.00000E+00	0.00000E+00
256	8.66813E-01	1.21440E+01	9.01630E-01	1.55470E-03	0.00000E+00	0.00000E+00
257	8.45242E-01	1.21852E+01	9.01408E-01	1.56430E-03	0.00000E+00	0.00000E+00
258	8.81422E-01	1.22263E+01	9.01330E-01	1.56014E-03	0.00000E+00	0.00000E+00
259	8.72048E-01	1.22695E+01	9.01216E-01	1.55822E-03	0.00000E+00	0.00000E+00
260	8.94444E-01	1.23097E+01	9.01190E-01	1.55239E-03	0.00000E+00	0.00000E+00
261	8.96433E-01	1.23518E+01	9.01172E-01	1.54650E-03	0.00000E+00	0.00000E+00
262	9.00041E-01	1.23922E+01	9.01167E-01	1.54055E-03	0.00000E+00	0.00000E+00
263	9.28054E-01	1.24315E+01	9.01270E-01	1.53808E-03	0.00000E+00	0.00000E+00
264	9.04845E-01	1.24745E+01	9.01284E-01	1.53226E-03	0.00000E+00	0.00000E+00
265	8.92530E-01	1.25157E+01	9.01251E-01	1.52679E-03	0.00000E+00	0.00000E+00
266	9.23130E-01	1.25560E+01	9.01334E-01	1.52325E-03	0.00000E+00	0.00000E+00
267	9.35102E-01	1.25943E+01	9.01461E-01	1.52283E-03	0.00000E+00	0.00000E+00
268	9.23878E-01	1.26338E+01	9.01545E-01	1.51944E-03	0.00000E+00	0.00000E+00
269	9.38841E-01	1.26722E+01	9.01685E-01	1.52017E-03	0.00000E+00	0.00000E+00
270	8.77446E-01	1.27133E+01	9.01595E-01	1.51718E-03	0.00000E+00	0.00000E+00
271	8.60170E-01	1.27555E+01	9.01441E-01	1.51935E-03	0.00000E+00	0.00000E+00
272	9.26670E-01	1.27948E+01	9.01534E-01	1.51660E-03	0.00000E+00	0.00000E+00
273	9.05651E-01	1.28352E+01	9.01549E-01	1.51107E-03	0.00000E+00	0.00000E+00
274	9.26331E-01	1.28745E+01	9.01640E-01	1.50826E-03	0.00000E+00	0.00000E+00
275	9.44616E-01	1.29148E+01	9.01798E-01	1.51095E-03	0.00000E+00	0.00000E+00
276	8.99085E-01	1.29542E+01	9.01788E-01	1.50545E-03	0.00000E+00	0.00000E+00
277	9.17390E-01	1.29927E+01	9.01845E-01	1.50104E-03	0.00000E+00	0.00000E+00
278	9.07392E-01	1.30328E+01	9.01865E-01	1.49573E-03	0.00000E+00	0.00000E+00
279	8.77619E-01	1.30723E+01	9.01777E-01	1.49289E-03	0.00000E+00	0.00000E+00

280	8.80491E-01	1.31117E+01	9.01701E-01	1.48948E-03	0.00000E+00	0.00000E+00
281	8.86274E-01	1.31555E+01	9.01645E-01	1.48516E-03	0.00000E+00	0.00000E+00
282	8.87369E-01	1.31950E+01	9.01594E-01	1.48072E-03	0.00000E+00	0.00000E+00
283	8.76059E-01	1.32352E+01	9.01504E-01	1.47824E-03	0.00000E+00	0.00000E+00
284	9.24297E-01	1.32745E+01	9.01584E-01	1.47520E-03	0.00000E+00	0.00000E+00
285	8.76306E-01	1.33158E+01	9.01495E-01	1.47269E-03	0.00000E+00	0.00000E+00
286	8.99561E-01	1.33570E+01	9.01488E-01	1.46751E-03	0.00000E+00	0.00000E+00
287	9.48609E-01	1.33972E+01	9.01654E-01	1.47167E-03	0.00000E+00	0.00000E+00
288	8.96657E-01	1.34393E+01	9.01636E-01	1.46662E-03	0.00000E+00	0.00000E+00
289	8.63808E-01	1.34805E+01	9.01504E-01	1.46743E-03	0.00000E+00	0.00000E+00
290	9.33175E-01	1.35208E+01	9.01614E-01	1.46646E-03	0.00000E+00	0.00000E+00
291	9.15746E-01	1.35612E+01	9.01663E-01	1.46219E-03	0.00000E+00	0.00000E+00
292	9.05808E-01	1.36023E+01	9.01677E-01	1.45721E-03	0.00000E+00	0.00000E+00
293	8.98464E-01	1.36435E+01	9.01666E-01	1.45224E-03	0.00000E+00	0.00000E+00
294	9.04152E-01	1.36810E+01	9.01675E-01	1.44728E-03	0.00000E+00	0.00000E+00
295	9.36498E-01	1.37222E+01	9.01794E-01	1.44722E-03	0.00000E+00	0.00000E+00
296	9.24006E-01	1.37625E+01	9.01869E-01	1.44427E-03	0.00000E+00	0.00000E+00
297	8.90428E-01	1.38018E+01	9.01831E-01	1.43989E-03	0.00000E+00	0.00000E+00
298	9.25237E-01	1.38448E+01	9.01910E-01	1.43719E-03	0.00000E+00	0.00000E+00
299	9.20910E-01	1.38842E+01	9.01974E-01	1.43377E-03	0.00000E+00	0.00000E+00
300	9.56676E-01	1.39255E+01	9.02157E-01	1.44070E-03	0.00000E+00	0.00000E+00
301	8.73738E-01	1.39675E+01	9.02062E-01	1.43901E-03	0.00000E+00	0.00000E+00
302	9.09099E-01	1.40060E+01	9.02086E-01	1.43440E-03	0.00000E+00	0.00000E+00
303	9.39367E-01	1.40463E+01	9.02209E-01	1.43498E-03	0.00000E+00	0.00000E+00
304	9.32934E-01	1.40857E+01	9.02311E-01	1.43383E-03	0.00000E+00	0.00000E+00
305	8.48076E-01	1.41268E+01	9.02132E-01	1.44026E-03	0.00000E+00	0.00000E+00
306	8.96296E-01	1.41690E+01	9.02113E-01	1.43564E-03	0.00000E+00	0.00000E+00
307	9.16037E-01	1.42073E+01	9.02159E-01	1.43166E-03	0.00000E+00	0.00000E+00
308	8.97034E-01	1.42468E+01	9.02142E-01	1.42707E-03	0.00000E+00	0.00000E+00
309	9.40162E-01	1.42888E+01	9.02266E-01	1.42779E-03	0.00000E+00	0.00000E+00
310	8.89183E-01	1.43282E+01	9.02223E-01	1.42378E-03	0.00000E+00	0.00000E+00
311	8.97302E-01	1.43695E+01	9.02207E-01	1.41926E-03	0.00000E+00	0.00000E+00
312	9.31583E-01	1.44088E+01	9.02302E-01	1.41784E-03	0.00000E+00	0.00000E+00
313	9.08951E-01	1.44490E+01	9.02323E-01	1.41344E-03	0.00000E+00	0.00000E+00
314	8.84113E-01	1.44922E+01	9.02265E-01	1.41011E-03	0.00000E+00	0.00000E+00
315	8.77123E-01	1.45323E+01	9.02185E-01	1.40789E-03	0.00000E+00	0.00000E+00
316	8.66591E-01	1.45745E+01	9.02071E-01	1.40797E-03	0.00000E+00	0.00000E+00
317	9.04364E-01	1.46138E+01	9.02079E-01	1.40351E-03	0.00000E+00	0.00000E+00
318	9.05676E-01	1.46550E+01	9.02090E-01	1.39911E-03	0.00000E+00	0.00000E+00
319	9.12467E-01	1.46962E+01	9.02123E-01	1.39507E-03	0.00000E+00	0.00000E+00
320	8.99628E-01	1.47357E+01	9.02115E-01	1.39070E-03	0.00000E+00	0.00000E+00
321	9.33467E-01	1.47758E+01	9.02213E-01	1.38981E-03	0.00000E+00	0.00000E+00
322	9.08438E-01	1.48152E+01	9.02233E-01	1.38560E-03	0.00000E+00	0.00000E+00
323	9.03057E-01	1.48547E+01	9.02235E-01	1.38128E-03	0.00000E+00	0.00000E+00
324	9.38377E-01	1.48930E+01	9.02347E-01	1.38155E-03	0.00000E+00	0.00000E+00
325	8.81011E-01	1.49360E+01	9.02281E-01	1.37885E-03	0.00000E+00	0.00000E+00
326	9.22087E-01	1.49755E+01	9.02343E-01	1.37595E-03	0.00000E+00	0.00000E+00
327	9.07395E-01	1.50167E+01	9.02358E-01	1.37179E-03	0.00000E+00	0.00000E+00
328	9.16492E-01	1.50578E+01	9.02401E-01	1.36827E-03	0.00000E+00	0.00000E+00
329	9.17257E-01	1.50972E+01	9.02447E-01	1.36483E-03	0.00000E+00	0.00000E+00
330	8.62294E-01	1.51393E+01	9.02324E-01	1.36616E-03	0.00000E+00	0.00000E+00
331	8.74989E-01	1.51832E+01	9.02241E-01	1.36453E-03	0.00000E+00	0.00000E+00
332	8.43565E-01	1.52263E+01	9.02064E-01	1.37196E-03	0.00000E+00	0.00000E+00
333	9.46004E-01	1.52675E+01	9.02196E-01	1.37424E-03	0.00000E+00	0.00000E+00
334	8.56627E-01	1.53095E+01	9.02059E-01	1.37695E-03	0.00000E+00	0.00000E+00
335	8.65279E-01	1.53508E+01	9.01949E-01	1.37725E-03	0.00000E+00	0.00000E+00
336	9.19088E-01	1.53928E+01	9.02000E-01	1.37408E-03	0.00000E+00	0.00000E+00
337	9.03546E-01	1.54322E+01	9.02005E-01	1.36998E-03	0.00000E+00	0.00000E+00
338	8.79064E-01	1.54743E+01	9.01936E-01	1.36760E-03	0.00000E+00	0.00000E+00
339	9.18345E-01	1.55137E+01	9.01985E-01	1.36440E-03	0.00000E+00	0.00000E+00
340	9.14703E-01	1.55530E+01	9.02023E-01	1.36088E-03	0.00000E+00	0.00000E+00
341	8.97884E-01	1.55952E+01	9.02010E-01	1.35691E-03	0.00000E+00	0.00000E+00
342	9.05251E-01	1.56355E+01	9.02020E-01	1.35295E-03	0.00000E+00	0.00000E+00
343	8.85792E-01	1.56757E+01	9.01972E-01	1.34982E-03	0.00000E+00	0.00000E+00
344	8.99656E-01	1.57152E+01	9.01966E-01	1.34588E-03	0.00000E+00	0.00000E+00
345	8.89882E-01	1.57563E+01	9.01930E-01	1.34241E-03	0.00000E+00	0.00000E+00
346	9.40461E-01	1.57993E+01	9.02042E-01	1.34318E-03	0.00000E+00	0.00000E+00
347	8.69895E-01	1.58442E+01	9.01949E-01	1.34252E-03	0.00000E+00	0.00000E+00
348	9.42478E-01	1.58835E+01	9.02066E-01	1.34375E-03	0.00000E+00	0.00000E+00
349	8.88683E-01	1.59247E+01	9.02028E-01	1.34043E-03	0.00000E+00	0.00000E+00
350	9.15809E-01	1.59632E+01	9.02067E-01	1.33716E-03	0.00000E+00	0.00000E+00
351	9.45735E-01	1.60035E+01	9.02192E-01	1.33918E-03	0.00000E+00	0.00000E+00
352	9.06980E-01	1.60428E+01	9.02206E-01	1.33542E-03	0.00000E+00	0.00000E+00
353	8.83981E-01	1.60813E+01	9.02154E-01	1.33262E-03	0.00000E+00	0.00000E+00
354	9.45833E-01	1.61233E+01	9.02278E-01	1.33461E-03	0.00000E+00	0.00000E+00
355	9.06550E-01	1.61637E+01	9.02290E-01	1.33088E-03	0.00000E+00	0.00000E+00
356	8.55788E-01	1.62040E+01	9.02159E-01	1.33360E-03	0.00000E+00	0.00000E+00
357	8.62284E-01	1.62442E+01	9.02047E-01	1.33457E-03	0.00000E+00	0.00000E+00
358	9.13265E-01	1.62835E+01	9.02078E-01	1.33119E-03	0.00000E+00	0.00000E+00
359	9.16733E-01	1.63220E+01	9.02119E-01	1.32809E-03	0.00000E+00	0.00000E+00
360	9.34686E-01	1.63613E+01	9.02210E-01	1.32750E-03	0.00000E+00	0.00000E+00
361	9.04736E-01	1.64035E+01	9.02217E-01	1.32381E-03	0.00000E+00	0.00000E+00
362	9.54986E-01	1.64410E+01	9.02364E-01	1.32824E-03	0.00000E+00	0.00000E+00
363	8.83360E-01	1.64822E+01	9.02311E-01	1.32561E-03	0.00000E+00	0.00000E+00
364	9.04672E-01	1.65233E+01	9.02318E-01	1.32195E-03	0.00000E+00	0.00000E+00
365	8.88081E-01	1.65618E+01	9.02279E-01	1.31889E-03	0.00000E+00	0.00000E+00
366	8.85611E-01	1.66040E+01	9.02233E-01	1.31606E-03	0.00000E+00	0.00000E+00
367	9.29325E-01	1.66433E+01	9.02307E-01	1.31455E-03	0.00000E+00	0.00000E+00
368	8.68192E-01	1.66845E+01	9.02214E-01	1.31426E-03	0.00000E+00	0.00000E+00
369	9.28952E-01	1.67267E+01	9.02287E-01	1.31270E-03	0.00000E+00	0.00000E+00
370	8.92545E-01	1.67668E+01	9.02260E-01	1.30939E-03	0.00000E+00	0.00000E+00
371	9.59783E-01	1.68072E+01	9.02416E-01	1.31511E-03	0.00000E+00	0.00000E+00
372	9.17828E-01	1.68465E+01	9.02458E-01	1.31221E-03	0.00000E+00	0.00000E+00
373	9.11716E-01	1.68850E+01	9.02483E-01	1.30891E-03	0.00000E+00	0.00000E+00
374	8.58140E-01	1.69235E+01	9.02363E-01	1.31082E-03	0.00000E+00	0.00000E+00

375	9.07467E-01	1.69673E+01	9.02377E-01	1.30737E-03	0.00000E+00	0.00000E+00
376	9.07179E-01	1.70077E+01	9.02390E-01	1.30393E-03	0.00000E+00	0.00000E+00
377	8.93386E-01	1.70498E+01	9.02366E-01	1.30067E-03	0.00000E+00	0.00000E+00
378	8.78099E-01	1.70900E+01	9.02301E-01	1.29881E-03	0.00000E+00	0.00000E+00
379	8.96291E-01	1.71313E+01	9.02285E-01	1.29546E-03	0.00000E+00	0.00000E+00
380	8.96982E-01	1.71715E+01	9.02271E-01	1.29211E-03	0.00000E+00	0.00000E+00
381	8.96383E-01	1.72118E+01	9.02256E-01	1.28879E-03	0.00000E+00	0.00000E+00
382	8.83649E-01	1.72512E+01	9.02207E-01	1.28632E-03	0.00000E+00	0.00000E+00
383	8.60988E-01	1.72952E+01	9.02099E-01	1.28749E-03	0.00000E+00	0.00000E+00
384	9.19223E-01	1.73372E+01	9.02144E-01	1.28490E-03	0.00000E+00	0.00000E+00
385	9.26637E-01	1.73803E+01	9.02208E-01	1.28314E-03	0.00000E+00	0.00000E+00
386	9.09613E-01	1.74197E+01	9.02227E-01	1.27994E-03	0.00000E+00	0.00000E+00
387	9.04452E-01	1.74598E+01	9.02233E-01	1.27662E-03	0.00000E+00	0.00000E+00
388	8.78504E-01	1.74993E+01	9.02171E-01	1.27479E-03	0.00000E+00	0.00000E+00
389	8.86236E-01	1.75405E+01	9.02130E-01	1.27216E-03	0.00000E+00	0.00000E+00
390	8.85948E-01	1.75817E+01	9.02088E-01	1.26956E-03	0.00000E+00	0.00000E+00
391	8.79488E-01	1.76238E+01	9.02030E-01	1.26763E-03	0.00000E+00	0.00000E+00
392	8.81480E-01	1.76632E+01	9.01977E-01	1.26547E-03	0.00000E+00	0.00000E+00
393	8.79957E-01	1.77025E+01	9.01921E-01	1.26349E-03	0.00000E+00	0.00000E+00
394	9.56408E-01	1.77418E+01	9.02060E-01	1.26790E-03	0.00000E+00	0.00000E+00
395	8.58242E-01	1.77840E+01	9.01949E-01	1.26958E-03	0.00000E+00	0.00000E+00
396	8.88563E-01	1.78242E+01	9.01915E-01	1.26680E-03	0.00000E+00	0.00000E+00
397	8.52183E-01	1.78655E+01	9.01789E-01	1.26985E-03	0.00000E+00	0.00000E+00
398	9.47417E-01	1.79057E+01	9.01904E-01	1.27187E-03	0.00000E+00	0.00000E+00
399	9.14630E-01	1.79468E+01	9.01936E-01	1.26907E-03	0.00000E+00	0.00000E+00
400	9.09073E-01	1.79882E+01	9.01954E-01	1.26600E-03	0.00000E+00	0.00000E+00
401	9.52264E-01	1.80312E+01	9.02080E-01	1.26910E-03	0.00000E+00	0.00000E+00
402	8.98030E-01	1.80713E+01	9.02070E-01	1.26597E-03	0.00000E+00	0.00000E+00
403	9.12665E-01	1.81108E+01	9.02096E-01	1.26308E-03	0.00000E+00	0.00000E+00

KENO MESSAGE NUMBER K5-123 EXECUTION TERMINATED DUE TO COMPLETION OF THE SPECIFIED NUMBER OF GENERATIONS.

TRIGA - PREF. FLOOD CANISTER

LIFETIME = 4.68411E-05 + OR - 1.44136E-07 GENERATION TIME = 1.71707E-05 + OR - 5.28871E-08
NU BAR = 2.42239E+00 + OR - 1.20609E-05 AVERAGE FISSION GROUP = 2.15384E+01 + OR - 5.20178E-03
ENERGY(EV) OF THE AVERAGE LETHARGY CAUSING FISSION = 2.49898E-01 + OR - 9.08878E-04

NO. OF INITIAL GENERATIONS SKIPPED	AVERAGE K-EFFECTIVE	DEVIATION	67 PER CENT CONFIDENCE INTERVAL	95 PER CENT CONFIDENCE INTERVAL	99 PER CENT CONFIDENCE INTERVAL	NUMBER OF HISTORIES
3	0.90216	+ OR - 0.00126	0.90089 TO 0.90342	0.89963 TO 0.90469	0.89836 TO 0.90595	400000
4	0.90217	+ OR - 0.00127	0.90091 TO 0.90344	0.89964 TO 0.90471	0.89837 TO 0.90598	399000
5	0.90220	+ OR - 0.00127	0.90093 TO 0.90347	0.89965 TO 0.90474	0.89838 TO 0.90601	398000
6	0.90226	+ OR - 0.00127	0.90099 TO 0.90354	0.89972 TO 0.90481	0.89845 TO 0.90608	397000
7	0.90224	+ OR - 0.00128	0.90096 TO 0.90351	0.89969 TO 0.90479	0.89841 TO 0.90606	396000
8	0.90223	+ OR - 0.00128	0.90095 TO 0.90350	0.89967 TO 0.90478	0.89839 TO 0.90606	395000
9	0.90226	+ OR - 0.00128	0.90097 TO 0.90354	0.89969 TO 0.90482	0.89841 TO 0.90610	394000
10	0.90224	+ OR - 0.00128	0.90095 TO 0.90352	0.89967 TO 0.90481	0.89838 TO 0.90609	393000
11	0.90222	+ OR - 0.00129	0.90093 TO 0.90351	0.89965 TO 0.90480	0.89836 TO 0.90608	392000
12	0.90225	+ OR - 0.00129	0.90096 TO 0.90354	0.89967 TO 0.90483	0.89837 TO 0.90612	391000
17	0.90241	+ OR - 0.00130	0.90111 TO 0.90371	0.89980 TO 0.90501	0.89850 TO 0.90632	386000
22	0.90224	+ OR - 0.00130	0.90094 TO 0.90354	0.89964 TO 0.90484	0.89834 TO 0.90614	381000
27	0.90239	+ OR - 0.00131	0.90108 TO 0.90371	0.89977 TO 0.90502	0.89846 TO 0.90633	376000
32	0.90224	+ OR - 0.00132	0.90092 TO 0.90356	0.89961 TO 0.90488	0.89829 TO 0.90620	371000
37	0.90240	+ OR - 0.00133	0.90107 TO 0.90373	0.89973 TO 0.90506	0.89840 TO 0.90640	366000
42	0.90234	+ OR - 0.00135	0.90100 TO 0.90369	0.89965 TO 0.90504	0.89830 TO 0.90639	361000
47	0.90256	+ OR - 0.00136	0.90120 TO 0.90391	0.89984 TO 0.90527	0.89848 TO 0.90663	356000
52	0.90266	+ OR - 0.00137	0.90129 TO 0.90403	0.89992 TO 0.90540	0.89855 TO 0.90677	351000
57	0.90289	+ OR - 0.00138	0.90151 TO 0.90427	0.90013 TO 0.90564	0.89876 TO 0.90702	346000
62	0.90248	+ OR - 0.00138	0.90111 TO 0.90386	0.89973 TO 0.90524	0.89835 TO 0.90661	341000
67	0.90261	+ OR - 0.00139	0.90122 TO 0.90401	0.89983 TO 0.90540	0.89843 TO 0.90680	336000
72	0.90237	+ OR - 0.00140	0.90097 TO 0.90377	0.89957 TO 0.90517	0.89817 TO 0.90658	331000
77	0.90221	+ OR - 0.00141	0.90080 TO 0.90362	0.89939 TO 0.90504	0.89797 TO 0.90645	326000
82	0.90195	+ OR - 0.00142	0.90053 TO 0.90337	0.89910 TO 0.90480	0.89768 TO 0.90622	321000
87	0.90201	+ OR - 0.00144	0.90057 TO 0.90345	0.89913 TO 0.90489	0.89769 TO 0.90633	316000
92	0.90179	+ OR - 0.00144	0.90035 TO 0.90324	0.89891 TO 0.90468	0.89747 TO 0.90612	311000
97	0.90159	+ OR - 0.00146	0.90013 TO 0.90305	0.89867 TO 0.90451	0.89721 TO 0.90597	306000
102	0.90145	+ OR - 0.00148	0.89997 TO 0.90293	0.89849 TO 0.90441	0.89701 TO 0.90589	301000
107	0.90111	+ OR - 0.00149	0.89962 TO 0.90261	0.89813 TO 0.90410	0.89664 TO 0.90559	296000
112	0.90135	+ OR - 0.00150	0.89985 TO 0.90285	0.89835 TO 0.90436	0.89685 TO 0.90586	291000
117	0.90154	+ OR - 0.00152	0.90002 TO 0.90305	0.89850 TO 0.90457	0.89699 TO 0.90608	286000
122	0.90177	+ OR - 0.00152	0.90025 TO 0.90330	0.89873 TO 0.90482	0.89720 TO 0.90634	281000
127	0.90191	+ OR - 0.00154	0.90038 TO 0.90345	0.89884 TO 0.90499	0.89730 TO 0.90652	276000
132	0.90163	+ OR - 0.00155	0.90007 TO 0.90318	0.89852 TO 0.90474	0.89696 TO 0.90629	271000
137	0.90141	+ OR - 0.00157	0.89983 TO 0.90298	0.89826 TO 0.90456	0.89668 TO 0.90613	266000
142	0.90152	+ OR - 0.00160	0.89993 TO 0.90312	0.89833 TO 0.90471	0.89674 TO 0.90631	261000
147	0.90176	+ OR - 0.00162	0.90014 TO 0.90338	0.89852 TO 0.90500	0.89690 TO 0.90662	256000
152	0.90199	+ OR - 0.00164	0.90035 TO 0.90363	0.89871 TO 0.90526	0.89707 TO 0.90690	251000
157	0.90204	+ OR - 0.00166	0.90038 TO 0.90370	0.89872 TO 0.90536	0.89706 TO 0.90702	246000
162	0.90266	+ OR - 0.00167	0.90099 TO 0.90433	0.89932 TO 0.90600	0.89765 TO 0.90767	241000
167	0.90279	+ OR - 0.00168	0.90110 TO 0.90447	0.89942 TO 0.90615	0.89774 TO 0.90783	236000
172	0.90314	+ OR - 0.00170	0.90144 TO 0.90484	0.89974 TO 0.90654	0.89804 TO 0.90824	231000
177	0.90285	+ OR - 0.00172	0.90113 TO 0.90457	0.89940 TO 0.90630	0.89768 TO 0.90802	226000
182	0.90221	+ OR - 0.00170	0.90052 TO 0.90391	0.89882 TO 0.90561	0.89712 TO 0.90731	221000
187	0.90242	+ OR - 0.00170	0.90072 TO 0.90412	0.89902 TO 0.90582	0.89732 TO 0.90752	216000
192	0.90236	+ OR - 0.00172	0.90064 TO 0.90408	0.89892 TO 0.90580	0.89720 TO 0.90752	211000
197	0.90217	+ OR - 0.00176	0.90041 TO 0.90393	0.89866 TO 0.90569	0.89690 TO 0.90745	206000
202	0.90184	+ OR - 0.00179	0.90005 TO 0.90363	0.89826 TO 0.90541	0.89648 TO 0.90720	201000
207	0.90156	+ OR - 0.00182	0.89974 TO 0.90338	0.89793 TO 0.90520	0.89611 TO 0.90701	196000
212	0.90162	+ OR - 0.00186	0.89977 TO 0.90348	0.89791 TO 0.90533	0.89605 TO 0.90719	191000
217	0.90152	+ OR - 0.00189	0.89963 TO 0.90342	0.89774 TO 0.90531	0.89584 TO 0.90721	186000
222	0.90215	+ OR - 0.00192	0.90023 TO 0.90407	0.89832 TO 0.90598	0.89640 TO 0.90790	181000
227	0.90255	+ OR - 0.00194	0.90061 TO 0.90449	0.89868 TO 0.90643	0.89674 TO 0.90837	176000
232	0.90262	+ OR - 0.00196	0.90066 TO 0.90458	0.89870 TO 0.90654	0.89674 TO 0.90850	171000
237	0.90250	+ OR - 0.00201	0.90049 TO 0.90452	0.89848 TO 0.90653	0.89646 TO 0.90854	166000
242	0.90281	+ OR - 0.00207	0.90074 TO 0.90487	0.89867 TO 0.90694	0.89660 TO 0.90901	161000
247	0.90256	+ OR - 0.00211	0.90045 TO 0.90468	0.89834 TO 0.90679	0.89623 TO 0.90890	156000
252	0.90247	+ OR - 0.00214	0.90034 TO 0.90461	0.89820 TO 0.90675	0.89606 TO 0.90888	151000
257	0.90330	+ OR - 0.00214	0.90116 TO 0.90544	0.89902 TO 0.90758	0.89687 TO 0.90972	146000
262	0.90381	+ OR - 0.00220	0.90161 TO 0.90601	0.89941 TO 0.90821	0.89721 TO 0.91041	141000
267	0.90333	+ OR - 0.00225	0.90108 TO 0.90559	0.89882 TO 0.90784	0.89657 TO 0.91010	136000
272	0.90326	+ OR - 0.00228	0.90097 TO 0.90554	0.89869 TO 0.90782	0.89641 TO 0.91010	131000
277	0.90265	+ OR - 0.00234	0.90031 TO 0.90498	0.89797 TO 0.90732	0.89563 TO 0.90966	126000
282	0.90326	+ OR - 0.00241	0.90085 TO 0.90567	0.89844 TO 0.90808	0.89603 TO 0.91049	121000
287	0.90318	+ OR - 0.00246	0.90073 TO 0.90564	0.89827 TO 0.90809	0.89582 TO 0.91055	116000
292	0.90319	+ OR - 0.00252	0.90067 TO 0.90571	0.89814 TO 0.90824	0.89562 TO 0.91076	111000
297	0.90284	+ OR - 0.00261	0.90022 TO 0.90545	0.89761 TO 0.90806	0.89500 TO 0.91068	106000
302	0.90213	+ OR - 0.00266	0.89947 TO 0.90479	0.89681 TO 0.90744	0.89416 TO 0.91010	101000
307	0.90190	+ OR - 0.00269	0.89921 TO 0.90459	0.89652 TO 0.90727	0.89384 TO 0.90996	96000
312	0.90140	+ OR - 0.00278	0.89862 TO 0.90418	0.89584 TO 0.90695	0.89306 TO 0.90973	91000
317	0.90216	+ OR - 0.00289	0.89927 TO 0.90505	0.89638 TO 0.90794	0.89349 TO 0.91083	86000
322	0.90156	+ OR - 0.00304	0.89852 TO 0.90460	0.89548 TO 0.90764	0.89244 TO 0.91068	81000
327	0.90098	+ OR - 0.00318	0.89780 TO 0.90416	0.89462 TO 0.90734	0.89144 TO 0.91052	76000
332	0.90225	+ OR - 0.00322	0.89903 TO 0.90547	0.89581 TO 0.90869	0.89259 TO 0.91191	71000
337	0.90256	+ OR - 0.00327	0.89929 TO 0.90583	0.89602 TO 0.90910	0.89275 TO 0.91237	66000
342	0.90252	+ OR - 0.00350	0.89902 TO 0.90603	0.89552 TO 0.90953	0.89201 TO 0.91303	61000
347	0.90300	+ OR - 0.00369	0.89931 TO 0.90669	0.89562 TO 0.91038	0.89193 TO 0.91407	56000
352	0.90134	+ OR - 0.00386	0.89748 TO 0.90520	0.89362 TO 0.90907	0.88976 TO 0.91293	51000
357	0.90248	+ OR - 0.00394	0.89854 TO 0.90641	0.89461 TO 0.91035	0.89067 TO 0.91429	46000
362	0.89975	+ OR - 0.00411	0.89564 TO 0.90385	0.89154 TO 0.90796	0.88743 TO 0.91206	41000
367	0.89996	+ OR - 0.00455	0.89541 TO 0.90452	0.89085 TO 0.90907	0.88630 TO 0.91362	36000
372	0.89778	+ OR - 0.00466	0.89313 TO 0.90244	0.88847 TO 0.90710	0.88381 TO 0.91176	31000
377	0.89821	+ OR - 0.00529	0.89292 TO 0.90350	0.88762 TO 0.90879	0.88233 TO 0.91409	26000
382	0.90010	+ OR - 0.00646	0.89364 TO 0.90655	0.88718 TO 0.91301	0.88072 TO 0.91947	21000
387	0.89882	+ OR - 0.00785	0.89097 TO 0.90666	0.88313 TO 0.91451	0.87528 TO 0.92236	16000
392	0.90631	+ OR - 0.01076	0.89555 TO 0.91708	0.88478 TO 0.92784	0.87402 TO 0.93861	11000
397	0.92235	+ OR - 0.00903	0.91332 TO 0.93137	0.90429 TO 0.94040	0.89527 TO 0.94943	6000

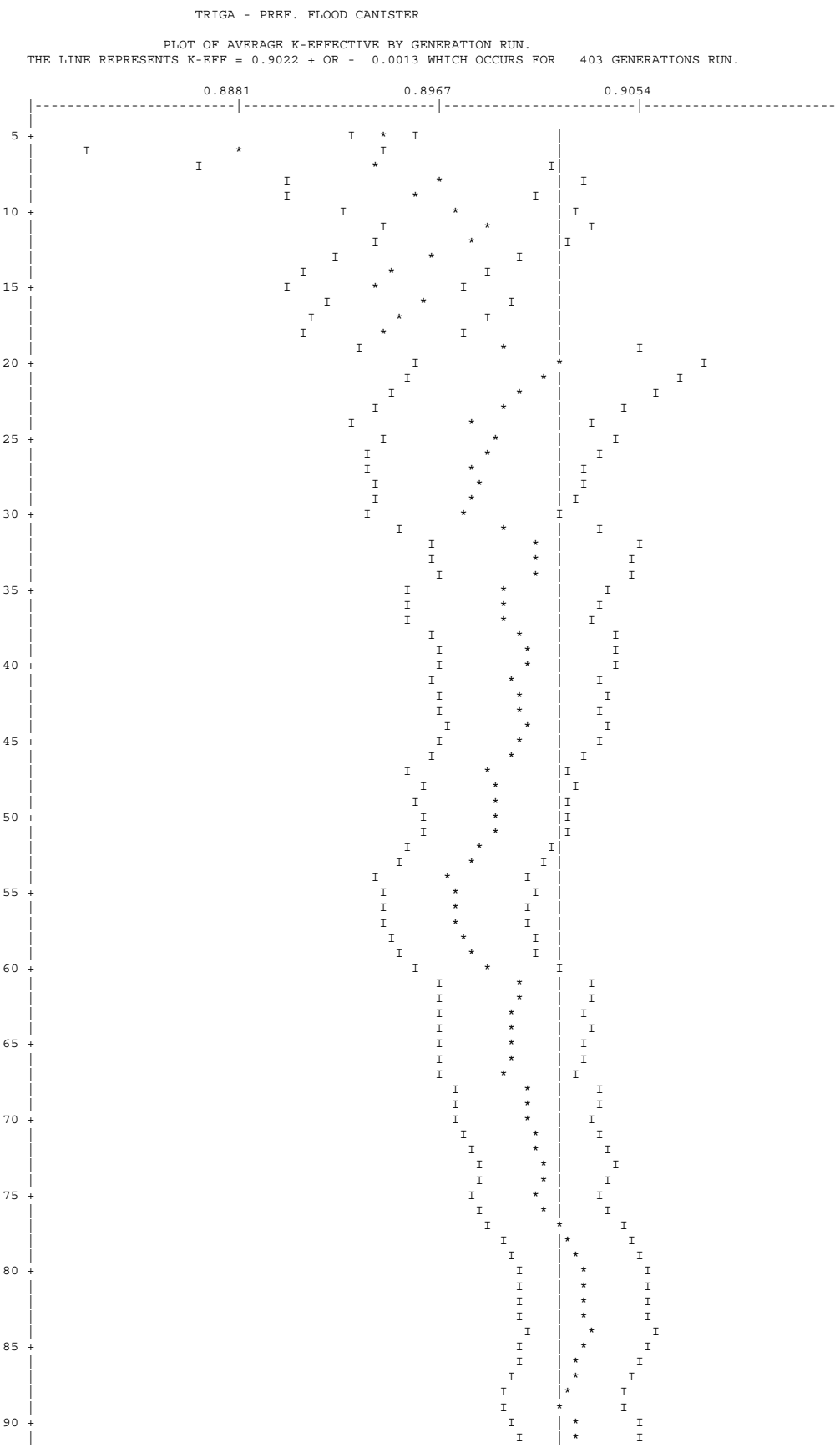
TRIGA - PREF. FLOOD CANISTER
PLOT OF AVERAGE K-EFFECTIVE BY GENERATION RUN.
THE LINE REPRESENTS K-EFF = 0.9022 + OR - 0.0013 WHICH OCCURS FOR 403 GENERATIONS RUN.
0.8881
0.8967
0.9054
5
10
15
20
25
30
35
40
45
50
55
60
65
70
75
80
85
90

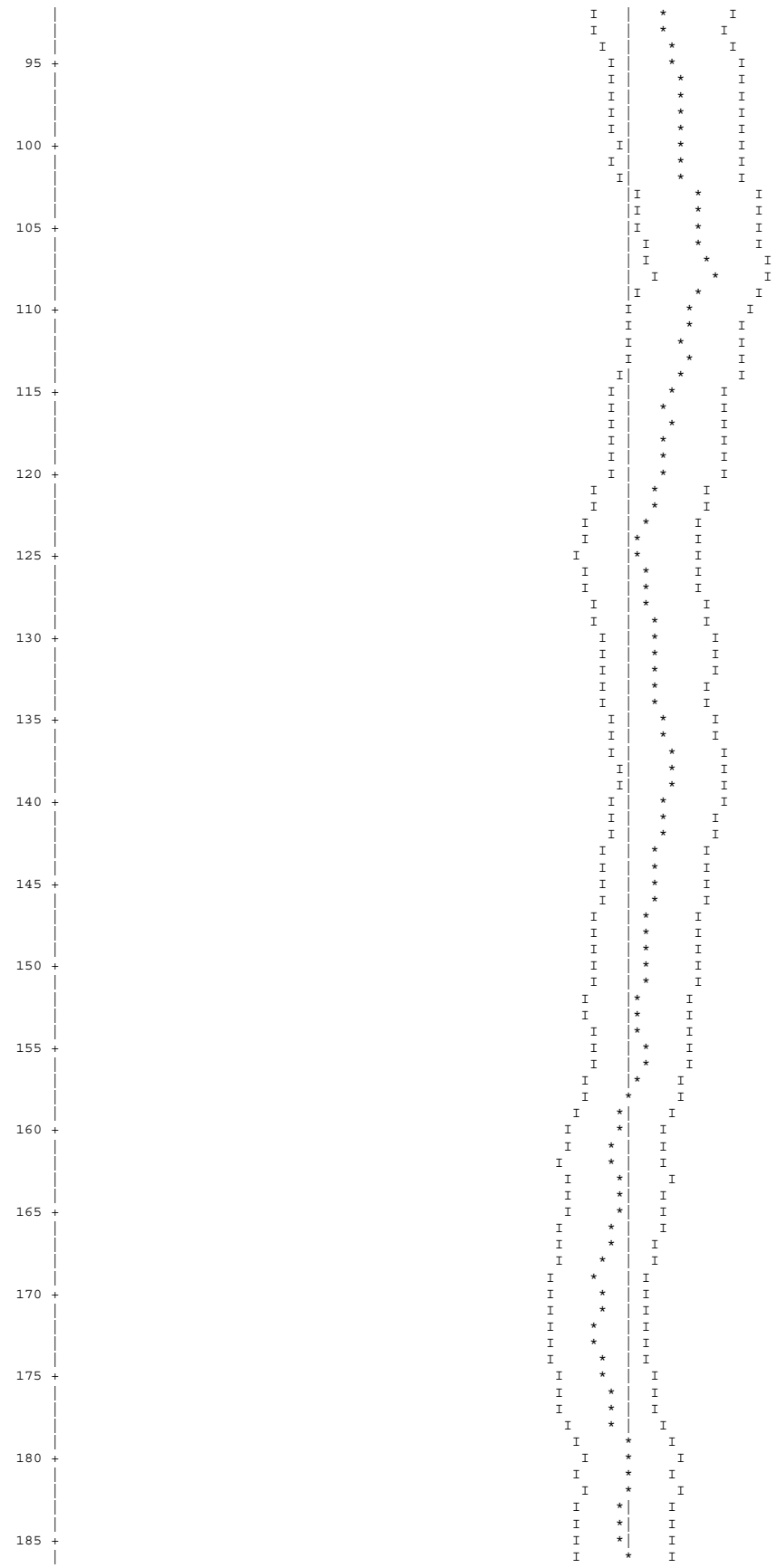

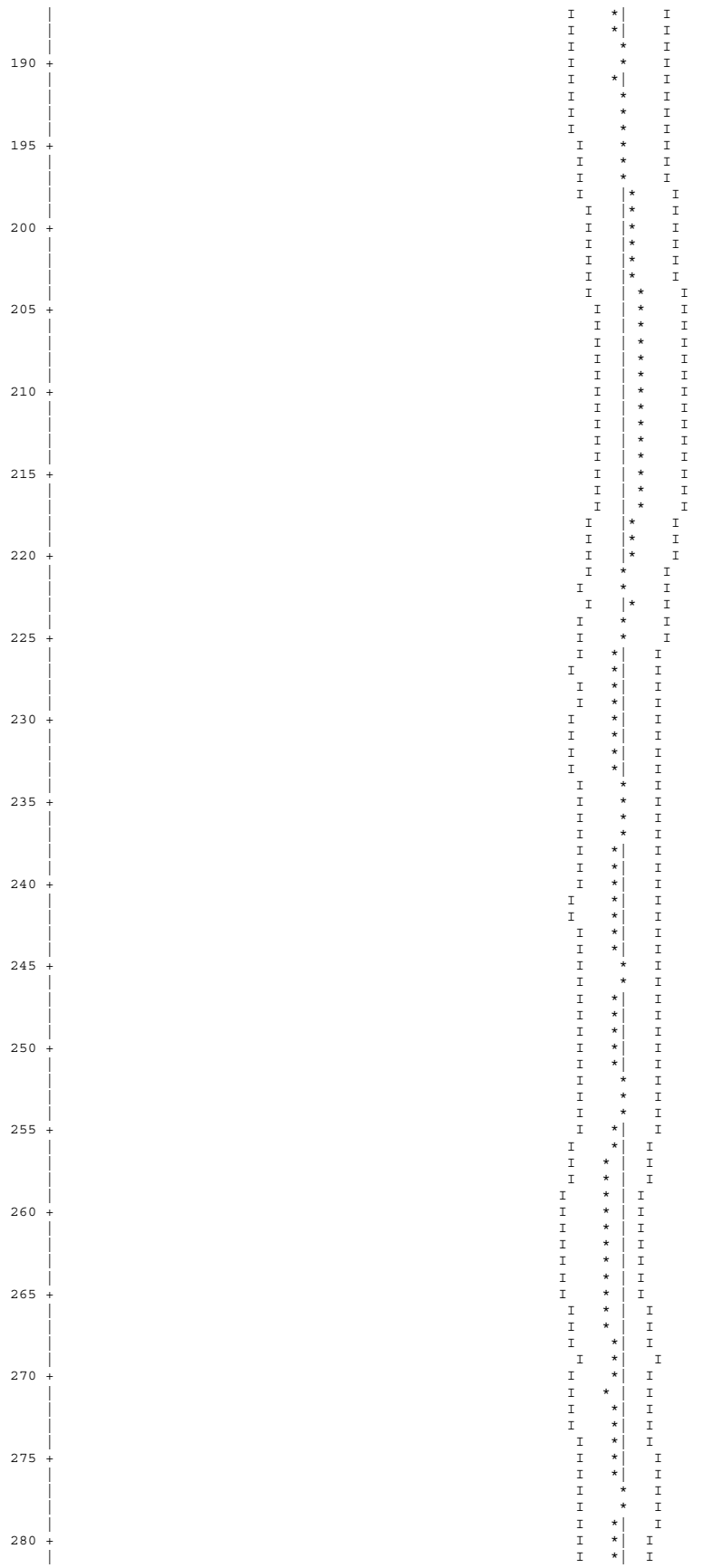

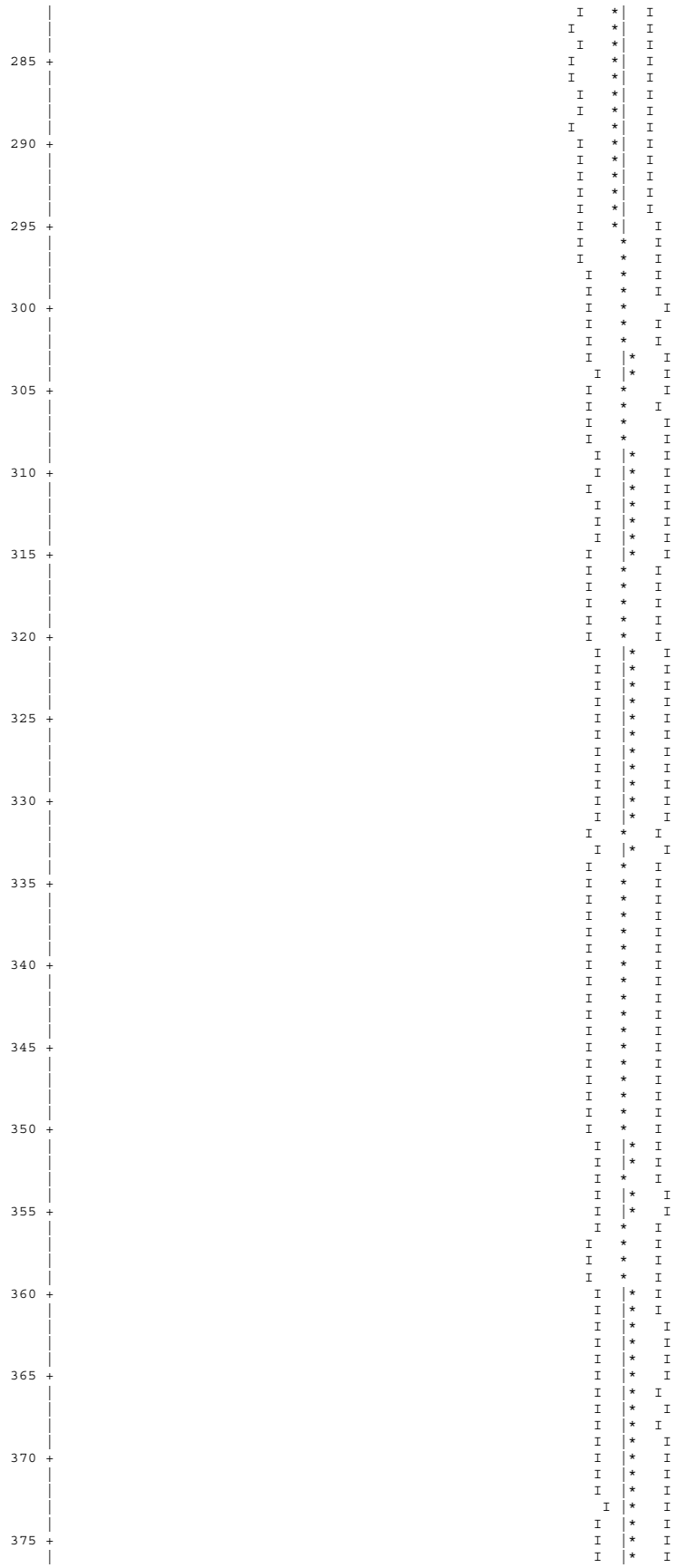



TRIGA - PREF. FLOOD CANISTER

PLOT OF AVERAGE K-EFFECTIVE BY GENERATION SKIPPED.
THE LINE REPRESENTS K-EFF = 0.9022 + OR - 0.0013 WHICH OCCURS FOR 3 GENERATIONS SKIPPED.



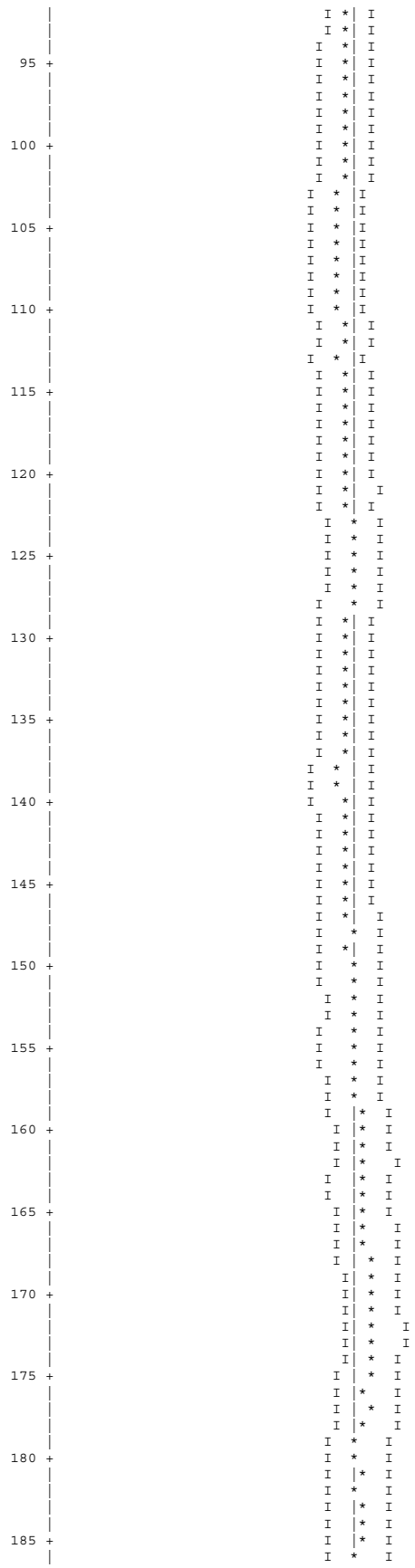

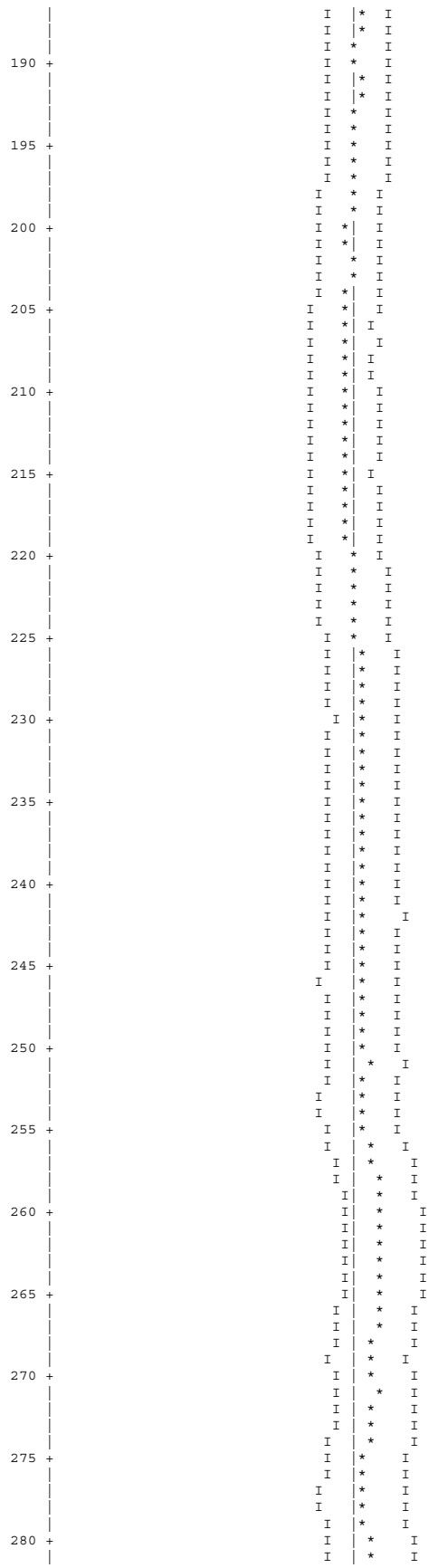

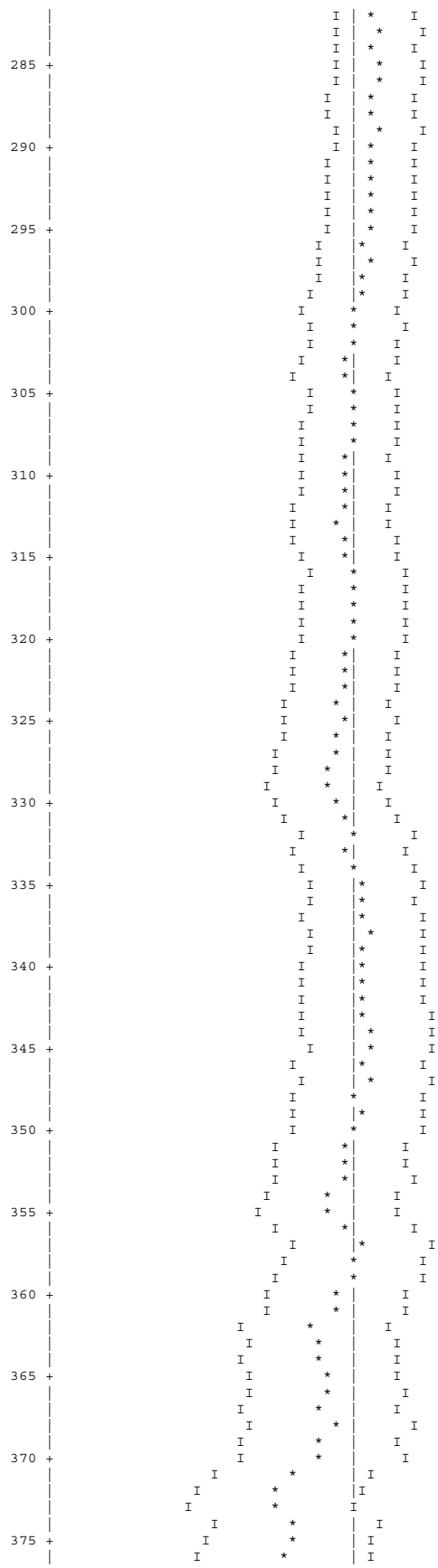

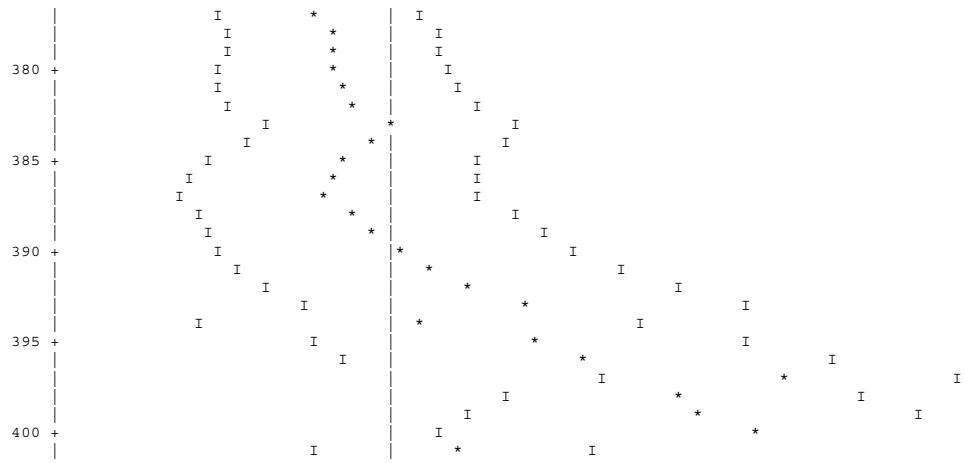

TRIGA - PREF. FLOOD CANISTER

SKIPPING 3 GENERATIONS

GROUP	FISSION FRACTION	UNIT	REGION	FISSIONS	PERCENT DEVIATION	ABSORPTIONS	PERCENT DEVIATION	LEAKAGE	PERCENT DEVIATION
1	0.0006			5.25117E-04	1.6403	1.09426E-03	1.6064	0.00000E+00	0.0000
2	0.0027			2.44675E-03	0.4783	3.09180E-03	0.4792	0.00000E+00	0.0000
3	0.0035			3.19630E-03	0.4015	2.24915E-03	0.3565	0.00000E+00	0.0000
4	0.0021			1.92481E-03	0.4747	1.29146E-03	0.4038	0.00000E+00	0.0000
5	0.0030			2.69630E-03	0.3626	2.48810E-03	0.3219	0.00000E+00	0.0000
6	0.0043			3.83930E-03	0.2702	7.50637E-03	0.3222	0.00000E+00	0.0000
7	0.0050			4.47319E-03	0.2301	1.51095E-02	0.3541	0.00000E+00	0.0000
8	0.0051			4.63561E-03	0.2304	1.37660E-02	0.3414	0.00000E+00	0.0000
9	0.0071			6.41831E-03	0.2365	1.66960E-02	0.2673	0.00000E+00	0.0000
10	0.0151			1.35898E-02	0.2296	4.04688E-02	0.2976	0.00000E+00	0.0000
11	0.0319			2.87714E-02	0.2356	7.29025E-02	0.2655	0.00000E+00	0.0000
12	0.0418			3.77037E-02	0.2483	4.99995E-02	0.2607	0.00000E+00	0.0000
13	0.0374			3.37502E-02	0.2645	5.75641E-02	0.2679	0.00000E+00	0.0000
14	0.0302			2.72559E-02	0.2485	6.73208E-02	0.2565	0.00000E+00	0.0000
15	0.0060			5.41042E-03	0.3577	2.80413E-02	0.4811	0.00000E+00	0.0000
16	0.0041			3.66578E-03	0.4459	1.58181E-02	0.5886	0.00000E+00	0.0000
17	0.0061			5.52764E-03	0.6393	9.31682E-03	0.6235	0.00000E+00	0.0000
18	0.0082			7.42696E-03	0.6274	9.20261E-03	0.6153	0.00000E+00	0.0000
19	0.0100			8.99048E-03	0.4909	1.44742E-02	0.6135	0.00000E+00	0.0000
20	0.0399			3.59549E-02	0.3201	4.76949E-02	0.3671	0.00000E+00	0.0000
21	0.0206			1.86152E-02	0.4835	1.85951E-02	0.4952	0.00000E+00	0.0000
22	0.0468			4.22116E-02	0.4027	3.79346E-02	0.4197	0.00000E+00	0.0000
23	0.1284			1.15860E-01	0.2645	9.92098E-02	0.2428	0.00000E+00	0.0000
24	0.1877			1.69342E-01	0.2533	1.33525E-01	0.2296	0.00000E+00	0.0000
25	0.1396			1.25961E-01	0.2961	9.58818E-02	0.2492	0.00000E+00	0.0000
26	0.1566			1.41266E-01	0.3219	1.04837E-01	0.2740	0.00000E+00	0.0000
27	0.0562			5.06990E-02	0.5058	3.50944E-02	0.4716	0.00000E+00	0.0000
SYSTEM TOTAL =				9.02158E-01	0.1402	1.00117E+00	0.0449	0.00000E+00	0.0000

ELAPSED TIME 18.11267 MINUTES

RANDOM NUMBER= 676267006D12

```
TRIGA - PREF. FLOOD CANISTER

                              FREQUENCY FOR GENERATIONS    4 TO  403
0.8363 TO 0.8444     **
0.8444 TO 0.8525     ******
0.8525 TO 0.8607     *************
0.8607 TO 0.8688     *****************
0.8688 TO 0.8769     ********************
0.8769 TO 0.8850     ********************************************
0.8850 TO 0.8932     ************************************************
0.8932 TO 0.9013     ********************************************************
0.9013 TO 0.9094     ************************************************************
0.9094 TO 0.9175     ********************************************
0.9175 TO 0.9257     *********************************
0.9257 TO 0.9338     ***************************
0.9338 TO 0.9419     ******************
0.9419 TO 0.9500     ***************
0.9500 TO 0.9582     *******
0.9582 TO 0.9663     **
0.9663 TO 0.9744     *
0.9744 TO 0.9825     **

                              FREQUENCY FOR GENERATIONS  104 TO  403
0.8363 TO 0.8444     **
0.8444 TO 0.8525     *****
0.8525 TO 0.8607     ***********
0.8607 TO 0.8688     ***************
0.8688 TO 0.8769     *****************
0.8769 TO 0.8850     *********************************
0.8850 TO 0.8932     ******************************
0.8932 TO 0.9013     ***********************************
0.9013 TO 0.9094     ************************************
0.9094 TO 0.9175     ***************************************
0.9175 TO 0.9257     *************************
0.9257 TO 0.9338     ********************
0.9338 TO 0.9419     **************
0.9419 TO 0.9500     **********
0.9500 TO 0.9582     *****
0.9582 TO 0.9663     *
0.9663 TO 0.9744
0.9744 TO 0.9825     *

                              FREQUENCY FOR GENERATIONS  204 TO  403
0.8363 TO 0.8444     *
0.8444 TO 0.8525     ****
0.8525 TO 0.8607     ******
0.8607 TO 0.8688     ***********
0.8688 TO 0.8769     ***********
0.8769 TO 0.8850     ******************
0.8850 TO 0.8932     ********************
0.8932 TO 0.9013     ***********************
0.9013 TO 0.9094     ******************************
0.9094 TO 0.9175     ***********************
0.9175 TO 0.9257     ***************
0.9257 TO 0.9338     **************
0.9338 TO 0.9419     *********
0.9419 TO 0.9500     *******
0.9500 TO 0.9582     *****
0.9582 TO 0.9663     *
0.9663 TO 0.9744
0.9744 TO 0.9825
_TRIGA - PREF. FLOOD CANISTER

                              FREQUENCY FOR GENERATIONS  304 TO  403
0.8363 TO 0.8444     *
0.8444 TO 0.8525     **
0.8525 TO 0.8607     ****
0.8607 TO 0.8688     ******
0.8688 TO 0.8769     **
0.8769 TO 0.8850     ************
0.8850 TO 0.8932     **********
0.8932 TO 0.9013     ***********
0.9013 TO 0.9094     ****************
0.9094 TO 0.9175     ************
0.9175 TO 0.9257     *****
0.9257 TO 0.9338     ******
0.9338 TO 0.9419     ****
0.9419 TO 0.9500     *****
0.9500 TO 0.9582     ***
0.9582 TO 0.9663     *
0.9663 TO 0.9744
0.9744 TO 0.9825


*****************************************************************************************************************************************
*
          CONGRATULATIONS!  YOU HAVE  SUCCESSFULLY TRAVERSED THE PERILOUS PATH THROUGH KENO V IN  18.11350 MINUTES
*****************************************************************************************************************************************
*
_
```

Figure 6.6.5-3 Summary of CSAS Input/Output for TRIGA Benchmark Core 132

```
PRIMARY MODULE ACCESS AND INPUT RECORD ( SCALE DRIVER - 95/03/29 - 09:06:37 )
   MODULE CSAS25   WILL BE CALLED
     TRIGA BENCHMARK CORE 132
     27GROUPNDF4  LATTICECELL
     'FUEL ELEMENT - FUEL
     U-235   1 0.0 3.682E-4 297. END
     U-238   1 0.0 1.463E-3 297. END
     ZR      1 0.0 3.502E-2 297. END
     H       1 0.0 5.778E-2 297. END
     'FUEL ELEMENT / FOLLOWER - CLAD, FUEL FOLLOWER SEPERATOR
     SS304   2 1.0 297.0 END
     'MODERATOR
     H2O     3 1.0 297.0 END
     'CORE REFLECTOR GRAPHITE SHELL, GRID PLATES, TRANSIENT TUBE, SOURCE CLAD
     AL      4 1.0 297.0 END
     'CENTER ROD
     ZR      5 1.0 297.0 END
     'GRAPHITE CORE REFLECTOR, FUEL ELEMENT REFLECTORS
     C       6 DEN=1.6 1.0 297.0 END
     'FUEL FOLLOWER - FUEL
     U-235   7 0.0 3.758E-4 297. END
     U-238   7 0.0 1.494E-3 297. END
     ZR      7 0.0 3.492E-2 297. END
     H       7 0.0 5.762E-2 297. END
     'POISON IN FUEL FOLLOWER AND AIR FOLLOWER
     B4C     8 DEN=2.48 1.0 297. END
     'MATERIAL FOR PELLET - CLAD GAP, VOID AND TRANSIENT AIR ROD
     H2O     9 DEN=1.0E-20 1.0 297. END
     'MATERIAL FOR TIPS OF STEEL FUEL ELEMENT
     H2O    10 1.0 297. END
     'MATERIAL FOR TIPS OF SOURCE ELEMENT
     H2O    11 1.0 297. END
     END COMP
     'LATTICE CELL CARD IGNORES ZIRC ROD IN MIDDLE - SUBSTITUTES FUEL MATRIX
     TRIANGPITCH 3.9775 3.6449 1 3 3.75412 2 3.65252 9 END
     MORE DATA
     RES=7 CYLINDER 1.69545 DAN(7)=5.57216E-01
     END MORE
     TRIGA BENCHMARK CORE 132
     READ PARAM TME=170.0 GEN=403 NPG=1000 RUN=YES PLT=NO
     END PARAM
     READ GEOM
     UNIT 1
     COM='TRIGA FUEL ELEMENT'
     CYLINDER  5 1 0.3175 2P19.05
     CYLINDER  1 1 1.8225 2P19.05
     CYLINDER  6 1 1.8225 +27.888 -27.864
     CYLINDER  9 1 1.8263 +27.888 -27.864
     CYLINDER  2 1 1.8771 2P30.64
     CYLINDER 10 1 1.8771 2P36.03
     UNIT 2
     COM='TRIGA FUEL FOLLOWER'
     CYLINDER  5 1 0.3175 2P19.05
     CYLINDER  7 1 1.6650 2P19.05
     CYLINDER  9 1 1.6650 +19.6850 -19.0500
     CYLINDER  2 1 1.6650 +20.9550 -21.5900
     CYLINDER  8 1 1.6650 +59.0550 -21.5900
     CYLINDER  9 1 1.6650 +59.3725 -21.5900
     CYLINDER  2 1 1.6650 +60.6424 -21.5900
     CYLINDER  9 1 1.6955 +69.1250 -36.8300
     CYLINDER  2 1 1.7463 +73.0250 -38.1000
     UNIT 3
     COM='TRIGA TRANSIENT AIR ROD + TUBE'
     CYLINDER  9 1 1.5164 2P19.05
     CYLINDER  9 1 1.5164 +19.6850 -19.0500
     CYLINDER  4 1 1.5164 +20.9550 -21.5900
     CYLINDER  8 1 1.5164 +59.0550 -21.5900
     CYLINDER  9 1 1.5164 +59.3725 -21.5900
     CYLINDER  4 1 1.5164 +60.6424 -21.5900
     CYLINDER  9 1 1.5164 +69.1250 -36.8300
     CYLINDER  4 1 1.5875 +73.0250 -38.1000
     CYLINDER  3 1 1.6000 +73.0250 -38.1000
     CYLINDER  4 1 1.9000 +73.0250 -38.1000
     UNIT 4
     COM='SOURCE ROD'
     CYLINDER  9 1 1.8263 +27.888 -27.864
     CYLINDER  4 1 1.8771 2P30.64
     CYLINDER 11 1 1.8771 2P36.03
     UNIT 5
     COM='WATER FOR EMPTY LOCATIONS'
     CYLINDER  3 1 1.8771 2P36.03
     GLOBAL UNIT 10
     COM='ACTIVE CORE CONFIGURATION'
     CYLINDER  3 1 22.06 73.025 -38.10
     'RING A
     HOLE   1    0.0000    0.0000   0.0000
     ' RING B
     HOLE   1    3.5109    2.0270   0.0000
     HOLE   1    0.0000    4.0540   0.0000
     HOLE   1   -3.5109    2.0270   0.0000
     HOLE   1   -3.5109   -2.0270   0.0000
```

```
HOLE   1    0.0000   -4.0540   0.0000
HOLE   1    3.5109   -2.0270   0.0000
' RING C
HOLE   2    7.9810    0.0000   0.0000
HOLE   1    6.9117    3.9905   0.0000
HOLE   1    3.9905    6.9117   0.0000
HOLE   1    0.0000    7.9810   0.0000
HOLE   1   -3.9905    6.9117   0.0000
HOLE   1   -6.9117    3.9905   0.0000
HOLE   3   -7.9810    0.0000   0.0000
HOLE   1   -6.9117   -3.9905   0.0000
HOLE   1   -3.9905   -6.9117   0.0000
HOLE   1    0.0000   -7.9810   0.0000
HOLE   1    3.9905   -6.9117   0.0000
HOLE   1    6.9117   -3.9905   0.0000
' RING D
HOLE   1   11.7566    2.0730   0.0000
HOLE   1   10.3386    5.9690   0.0000
HOLE   1    7.6736    9.1450   0.0000
HOLE   1    4.0830   11.2181   0.0000
HOLE   2    0.0000   11.9380   0.0000
HOLE   1   -4.0830   11.2181   0.0000
HOLE   1   -7.6736    9.1450   0.0000
HOLE   1  -10.3386    5.9690   0.0000
HOLE   1  -11.7566    2.0730   0.0000
HOLE   1  -11.7566   -2.0730   0.0000
HOLE   1  -10.3386   -5.9690   0.0000
HOLE   1   -7.6736   -9.1450   0.0000
HOLE   1   -4.0830  -11.2181   0.0000
HOLE   2    0.0000  -11.9380   0.0000
HOLE   1    4.0830  -11.2181   0.0000
HOLE   1    7.6736   -9.1450   0.0000
HOLE   1   10.3386   -5.9690   0.0000
HOLE   1   11.7566   -2.0730   0.0000
' RING E
HOLE   5   15.9160    0.0000   0.0000
HOLE   5   15.3737    4.1194   0.0000
HOLE   5   13.7837    7.9580   0.0000
HOLE   5   11.2543   11.2543   0.0000
HOLE   5    7.9580   13.7837   0.0000
HOLE   5    4.1194   15.3737   0.0000
HOLE   5    0.0000   15.9160   0.0000
HOLE   4   -4.1194   15.3737   0.0000
HOLE   5   -7.9580   13.7837   0.0000
HOLE   1  -11.2543   11.2543   0.0000
HOLE   1  -13.7837    7.9580   0.0000
HOLE   1  -15.3737    4.1194   0.0000
HOLE   1  -15.9160    0.0000   0.0000
HOLE   1  -15.3737   -4.1194   0.0000
HOLE   1  -13.7837   -7.9580   0.0000
HOLE   1  -11.2543  -11.2543   0.0000
HOLE   5   -7.9580  -13.7837   0.0000
HOLE   5   -4.1194  -15.3737   0.0000
HOLE   5    0.0000  -15.9160   0.0000
HOLE   5    4.1194  -15.3737   0.0000
HOLE   5    7.9580  -13.7837   0.0000
HOLE   5   11.2543  -11.2543   0.0000
HOLE   5   13.7837   -7.9580   0.0000
HOLE   5   15.3737   -4.1194   0.0000
' RADIAL REFLECTORS EXTENDED BEYOND FUEL FOLLOWER HEIGHT
CYLINDER 4 1 22.66 73.025 -38.10
CYLINDER 6 1 53.23 73.025 -38.10
CYLINDER 4 1 54.50 73.025 -38.10
CUBOID   3 1 4P100.0 +200.00 -100.00
END GEOM
READ BOUNDS ALL=VOID END BOUNDS
READ PLOT
TTL='X-Y PLOT OF CORE CENTER'
SCR=YES PIC=MAT LPI=10
UAX=1.0 VDN=-1.0 NAX=300
XUL=-5.0 YUL=5.0 ZUL=0.0
XLR=5.0 YLR=-5.0 ZLR=0.0 END
TTL='X-Y PLOT OF ACTIVE CORE'
SCR=YES PIC=MAT LPI=10
UAX=1.0 VDN=-1.0 NAX=300
XUL=-20.0 YUL=20.0 ZUL=0.0
XLR=20.0 YLR=-20.0 ZLR=0.0 END
TTL='X-Y PLOT OF CORE'
SCR=YES PIC=MAT LPI=10
UAX=1.0 VDN=-1.0 NAX=300
XUL=-55.0 YUL=55.0 ZUL=0.0
XLR=55.0 YLR=-55.0 ZLR=0.0 END
TTL='Y-Z PLOT OF CORE'
SCR=YES PIC=MAT LPI=10
VAX=1.0 WDN=-1.0
XUL=0.0 YUL=-20.0 ZUL=30.0
XLR=0.0 YLR=+20.0 ZLR=-30.0 END
TTL='Y-Z PLOT OF CORE (INCLUDING FOLLOWER)'
SCR=YES PIC=MAT LPI=10
VAX=1.0 WDN=-1.0
XUL=0.0 YUL=-30.0 ZUL=80.0
XLR=0.0 YLR=+30.0 ZLR=-40.0 END
TTL='X-Z PLOT OF CORE'
SCR=YES PIC=MAT LPI=10
UAX=1.0 WDN=-1.0
```

```
  XUL=-20.0  YUL=0.0 ZUL=30.0
  XLR=+20.0 YLR=0.0 ZLR=-30.0
  END PLOT
  END DATA

SECONDARY MODULE O0O008   HAS BEEN CALLED.

MODULE O0O008   IS FINISHED. COMPLETION CODE     0. CPU TIME USED     1.59 (SECONDS).

SECONDARY MODULE O0O002   HAS BEEN CALLED.

MODULE O0O002   IS FINISHED. COMPLETION CODE     0. CPU TIME USED    18.62 (SECONDS).

SECONDARY MODULE O0O009   HAS BEEN CALLED.

MODULE O0O009   IS FINISHED. COMPLETION CODE     0. CPU TIME USED  4709.75 (SECONDS).

MODULE CSAS25   IS FINISHED. COMPLETION CODE     0. CPU TIME USED  4732.60 (SECONDS).
```

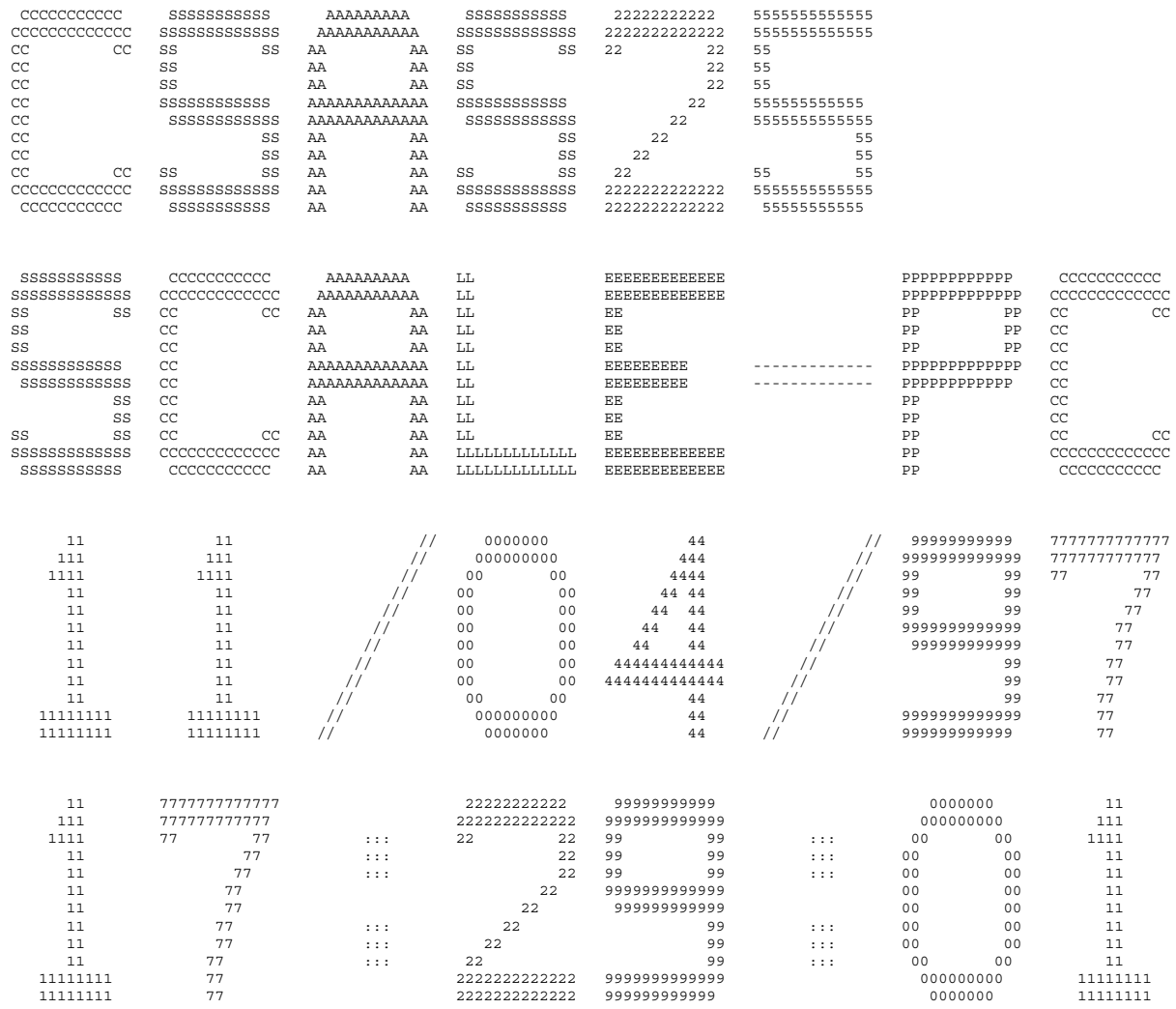
CCCCCCCCCC SSSSSSSSSS AAAAAAAAA SSSSSSSSSS 22222222222 5555555555555
CCCCCCCCCCCC SSSSSSSSSSSS AAAAAAAAAAA SSSSSSSSSSSS 2222222222222 5555555555555
CC CC SS SS AA AA SS SS 22 22 55
CC SS AA AA SS 22 55
CC SS AA AA SS 22 55
CC SSSSSSSSSSS AAAAAAAAAAAAA SSSSSSSSSSS 22 555555555555
CC SSSSSSSSSSS AAAAAAAAAAAAA SSSSSSSSSSS 22 5555555555555
CC SS AA AA SS 22 55
CC SS AA AA SS 22 55
CC CC SS SS AA AA SS SS 22 55 55
CCCCCCCCCCCC SSSSSSSSSSSS AA AA SSSSSSSSSSSS 2222222222222 5555555555555
CCCCCCCCCC SSSSSSSSSS AA AA SSSSSSSSSS 2222222222222 55555555555
SSSSSSSSSS CCCCCCCCCC AAAAAAAAA LL EEEEEEEEEEEEE PPPPPPPPPPP CCCCCCCCCC
SSSSSSSSSSSS CCCCCCCCCCCC AAAAAAAAAAA LL EEEEEEEEEEEEE PPPPPPPPPPPP CCCCCCCCCCCC
SS SS CC CC AA AA LL EE PP PP CC CC
SS CC AA AA LL EE PP PP CC
SS CC AA AA LL EE PP PP CC
SSSSSSSSSSS CC AAAAAAAAAAAAA LL EEEEEEEEE ------------- PPPPPPPPPPPP CC
SSSSSSSSSSS CC AAAAAAAAAAAAA LL EEEEEEEEE ------------- PPPPPPPPPPP CC
SS CC AA AA LL EE PP CC
SS CC AA AA LL EE PP CC
SS SS CC CC AA AA LL EE PP CC CC
SSSSSSSSSSSS CCCCCCCCCCCC AA AA LLLLLLLLLLLL EEEEEEEEEEEEE PP CCCCCCCCCCCC
SSSSSSSSSS CCCCCCCCCC AA AA LLLLLLLLLLLL EEEEEEEEEEEEE PP CCCCCCCCCC
11 11 // 0000000 44 // 99999999999 7777777777777
111 111 // 000000000 444 // 9999999999999 777777777777
1111 1111 // 00 00 4444 // 99 99 77 77
11 11 // 00 00 44 44 // 99 99 77
11 11 // 00 00 44 44 // 99 99 77
11 11 // 00 00 44 44 // 9999999999999 77
11 11 // 00 00 44 44 // 999999999999 77
11 11 // 00 00 444444444444 // 99 77
11 11 // 00 00 4444444444444 // 99 77
11 11 // 00 00 44 // 99 77
11111111 11111111 // 000000000 44 // 9999999999999 77
11111111 11111111 // 0000000 44 // 999999999999 77
11 7777777777777 22222222222 99999999999 0000000 11
111 777777777777 2222222222222 9999999999999 000000000 111
1111 77 77 ::: 22 22 99 99 ::: 00 00 1111
11 77 ::: 22 99 99 ::: 00 00 11
11 77 ::: 22 99 99 ::: 00 00 11
11 77 22 9999999999999 00 00 11
11 77 22 999999999999 00 00 11
11 77 ::: 22 99 ::: 00 00 11
11 77 ::: 22 99 ::: 00 00 11
11 77 ::: 22 99 ::: 00 00 11
11111111 77 2222222222222 9999999999999 000000000 11111111
11111111 77 2222222222222 999999999999 0000000 11111111

```
  SSSSSSSSSS     CCCCCCCCCC      AAAAAAAA     LL             EEEEEEEEEEEE                 PPPPPPPPPPP     CCCCCCCCCC
 SSSSSSSSSSSS   CCCCCCCCCCCC    AAAAAAAAAA    LL             EEEEEEEEEEEE                 PPPPPPPPPPPP   CCCCCCCCCCCC
 SS          SS CC          CC  AA          AA  LL             EE                           PP         PP  CC          CC
 SS             CC              AA          AA  LL             EE                           PP         PP  CC
 SS             CC              AA          AA  LL             EE                           PP         PP  CC
 SSSSSSSSSSSS   CC              AAAAAAAAAAAAAA  LL             EEEEEEEEE       -------------PPPPPPPPPPPP  CC
  SSSSSSSSSSSS  CC              AAAAAAAAAAAAAA  LL             EEEEEEEEE       -------------PPPPPPPPPPP   CC
           SS   CC              AA          AA  LL             EE                           PP             CC
           SS   CC              AA          AA  LL             EE                           PP             CC
 SS        SS   CC          CC  AA          AA  LL             EE                           PP             CC          CC
 SSSSSSSSSSSS   CCCCCCCCCCCC    AA          AA  LLLLLLLLLLLL   EEEEEEEEEEEE                 PP             CCCCCCCCCCCC
  SSSSSSSSSS     CCCCCCCCCC     AA          AA  LLLLLLLLLLLL   EEEEEEEEEEEE                 PP              CCCCCCCCCC
```

```
*******************************************************************************
*******************************************************************************
*******************************************************************************
*****                                                                     *****
*****                  PROGRAM VERIFICATION INFORMATION                   *****
*****                                                                     *****
*****                CODE SYSTEM:  SCALE-PC VERSION:  4.3                 *****
*****                                                                     *****
*******************************************************************************
*******************************************************************************
*****                                                                     *****
*****                                                                     *****
*****              PROGRAM:  CSAS                                         *****
*****                                                                     *****
*****        CREATION DATE:  03-08-96                                     *****
*****                                                                     *****
*****              VOLUME:   ENG                                          *****
*****                                                                     *****
*****              LIBRARY:  G:\SCALE43\EXE                               *****
*****                                                                     *****
*****                                                                     *****
*****      PRODUCTION CODE:  CSAS                                         *****
*****                                                                     *****
*****              VERSION:  3.1                                          *****
*****                                                                     *****
*****              JOBNAME:  SCALE-PC                                     *****
*****                                                                     *****
*****    DATE OF EXECUTION:  11/04/97                                     *****
*****                                                                     *****
*****    TIME OF EXECUTION:  17:29:01                                     *****
*****                                                                     *****
*****                                                                     *****
*******************************************************************************
*******************************************************************************
*******************************************************************************
```

```
'FUEL ELEMENT - FUEL

'FUEL ELEMENT / FOLLOWER - CLAD, FUEL FOLLOWER SEPERATOR

'MODERATOR

'CORE REFLECTOR GRAPHITE SHELL, GRID PLATES, TRANSIENT TUBE, SOURCE CLAD

'CENTER ROD

'GRAPHITE CORE REFLECTOR, FUEL ELEMENT REFLECTORS

'FUEL FOLLOWER - FUEL

'POISON IN FUEL FOLLOWER AND AIR FOLLOWER

'MATERIAL FOR PELLET - CLAD GAP, VOID AND TRANSIENT AIR ROD

'MATERIAL FOR TIPS OF STEEL FUEL ELEMENT

'MATERIAL FOR TIPS OF SOURCE ELEMENT

'LATTICE CELL CARD IGNORES ZIRC ROD IN MIDDLE - SUBSTITUTES FUEL MATRIX

'FUEL ELEMENT - FUEL
    TRIGA BENCHMARK CORE 132

    **** PROBLEM PARAMETERS ****

    LIB 27GROUPNDF4  LIBRARY
    MXX           11 MIXTURES
    MSC           17 COMPOSITION SPECIFICATIONS
    IZM            4 MATERIAL ZONES
    GE  LATTICECELL  GEOMETRY
    MORE           1 0/1 DO NOT READ/READ OPTIONAL PARAMETER DATA
    MSLN           0 FUEL SOLUTIONS

    **** PROBLEM COMPOSITION DESCRIPTION ****

    SC  U-235        STANDARD COMPOSITION
    MX             1 MIXTURE NO.
    DEN   3.6820E-04 ATOMIC DENSITY
    ROTH      1.0000 THEORETICAL DENSITY
    NEL            1 NO. ELEMENTS
    ICP            1 0/1 MIXTURE/COMPOUND
    TEMP       297.0 DEG KELVIN
               92235      1.00 ATOM/MOLECULE
    END

    SC  U-238        STANDARD COMPOSITION
    MX             1 MIXTURE NO.
    DEN   1.4630E-03 ATOMIC DENSITY
    ROTH      1.0000 THEORETICAL DENSITY
    NEL            1 NO. ELEMENTS
    ICP            1 0/1 MIXTURE/COMPOUND
    TEMP       297.0 DEG KELVIN
               92238      1.00 ATOM/MOLECULE
    END

    SC  ZR           STANDARD COMPOSITION
    MX             1 MIXTURE NO.
    DEN   3.5020E-02 ATOMIC DENSITY
    ROTH      6.4900 THEORETICAL DENSITY
    NEL            1 NO. ELEMENTS
    ICP            1 0/1 MIXTURE/COMPOUND
    TEMP       297.0 DEG KELVIN
               40000      1.00 ATOM/MOLECULE
    END

    SC  H            STANDARD COMPOSITION
    MX             1 MIXTURE NO.
    DEN   5.7780E-02 ATOMIC DENSITY
    ROTH      1.0000 THEORETICAL DENSITY
    NEL            1 NO. ELEMENTS
    ICP            1 0/1 MIXTURE/COMPOUND
    TEMP       297.0 DEG KELVIN
                1001      1.00 ATOM/MOLECULE

'FUEL ELEMENT / FOLLOWER - CLAD, FUEL FOLLOWER SEPERATOR
    END

    SC  SS304        STANDARD COMPOSITION
    MX             2 MIXTURE NO.
    VF        1.0000 VOLUME FRACTION
    ROTH      7.9200 THEORETICAL DENSITY
    NEL            4 NO. ELEMENTS
    ICP            0 0/1 MIXTURE/COMPOUND
    TEMP       297.0 DEG KELVIN
               24304    19.000 WT%
               25055     2.000 WT%
               26304    69.500 WT%
               28304     9.500 WT%

'MODERATOR
    END
```

```
    SC  H2O           STANDARD COMPOSITION
    MX              3 MIXTURE NO.
    VF         1.0000 VOLUME FRACTION
    ROTH       0.9982 THEORETICAL DENSITY
    NEL             2 NO. ELEMENTS
    ICP             1 0/1 MIXTURE/COMPOUND
    TEMP        297.0 DEG KELVIN
                 1001      2.00 ATOMS/MOLECULE
                 8016      1.00 ATOM/MOLECULE

'CORE REFLECTOR GRAPHITE SHELL, GRID PLATES, TRANSIENT TUBE, SOURCE CLAD
    END

    SC  AL            STANDARD COMPOSITION
    MX              4 MIXTURE NO.
    VF         1.0000 VOLUME FRACTION
    ROTH       2.7020 THEORETICAL DENSITY
    NEL             1 NO. ELEMENTS
    ICP             1 0/1 MIXTURE/COMPOUND
    TEMP        297.0 DEG KELVIN
                13027      1.00 ATOM/MOLECULE

'CENTER ROD
    END

    SC  ZR            STANDARD COMPOSITION
    MX              5 MIXTURE NO.
    VF         1.0000 VOLUME FRACTION
    ROTH       6.4900 THEORETICAL DENSITY
    NEL             1 NO. ELEMENTS
    ICP             1 0/1 MIXTURE/COMPOUND
    TEMP        297.0 DEG KELVIN
                40000      1.00 ATOM/MOLECULE

'GRAPHITE CORE REFLECTOR, FUEL ELEMENT REFLECTORS
    END

    SC  C             STANDARD COMPOSITION
    MX              6 MIXTURE NO.
    VF         1.0000 VOLUME FRACTION
    ROTH       1.6000 SPECIFIED DENSITY
    NEL             1 NO. ELEMENTS
    ICP             1 0/1 MIXTURE/COMPOUND
    TEMP        297.0 DEG KELVIN
                 6012      1.00 ATOM/MOLECULE

'FUEL FOLLOWER - FUEL
    END

    SC  U-235         STANDARD COMPOSITION
    MX              7 MIXTURE NO.
    DEN    3.7580E-04 ATOMIC DENSITY
    ROTH       1.0000 THEORETICAL DENSITY
    NEL             1 NO. ELEMENTS
    ICP             1 0/1 MIXTURE/COMPOUND
    TEMP        297.0 DEG KELVIN
                92235      1.00 ATOM/MOLECULE
    END

    SC  U-238         STANDARD COMPOSITION
    MX              7 MIXTURE NO.
    DEN    1.4940E-03 ATOMIC DENSITY
    ROTH       1.0000 THEORETICAL DENSITY
    NEL             1 NO. ELEMENTS
    ICP             1 0/1 MIXTURE/COMPOUND
    TEMP        297.0 DEG KELVIN
                92238      1.00 ATOM/MOLECULE
    END

    SC  ZR            STANDARD COMPOSITION
    MX              7 MIXTURE NO.
    DEN    3.4920E-02 ATOMIC DENSITY
    ROTH       6.4900 THEORETICAL DENSITY
    NEL             1 NO. ELEMENTS
    ICP             1 0/1 MIXTURE/COMPOUND
    TEMP        297.0 DEG KELVIN
                40000      1.00 ATOM/MOLECULE
    END

    SC  H             STANDARD COMPOSITION
    MX              7 MIXTURE NO.
    DEN    5.7620E-02 ATOMIC DENSITY
    ROTH       1.0000 THEORETICAL DENSITY
    NEL             1 NO. ELEMENTS
    ICP             1 0/1 MIXTURE/COMPOUND
    TEMP        297.0 DEG KELVIN
                 1001      1.00 ATOM/MOLECULE

'POISON IN FUEL FOLLOWER AND AIR FOLLOWER
    END

    SC  B4C           STANDARD COMPOSITION
    MX              8 MIXTURE NO.
    VF         1.0000 VOLUME FRACTION
    ROTH       2.4800 SPECIFIED DENSITY
```

```
    NEL            2 NO. ELEMENTS
    ICP            1 0/1 MIXTURE/COMPOUND
    TEMP       297.0 DEG KELVIN
                5000      4.00 ATOMS/MOLECULE
                                5010    18.431 WT%
                                5011    81.569 WT%
                6012      1.00 ATOM/MOLECULE

'MATERIAL FOR PELLET - CLAD GAP, VOID AND TRANSIENT AIR ROD
    END

    SC  H2O           STANDARD COMPOSITION
    MX             9 MIXTURE NO.
    VF        1.0000 VOLUME FRACTION
    ROTH      0.0000 SPECIFIED DENSITY
    NEL            2 NO. ELEMENTS
    ICP            1 0/1 MIXTURE/COMPOUND
    TEMP       297.0 DEG KELVIN
                1001      2.00 ATOMS/MOLECULE
                8016      1.00 ATOM/MOLECULE

'MATERIAL FOR TIPS OF STEEL FUEL ELEMENT
    END

    SC  H2O           STANDARD COMPOSITION
    MX            10 MIXTURE NO.
    VF        1.0000 VOLUME FRACTION
    ROTH      0.9982 THEORETICAL DENSITY
    NEL            2 NO. ELEMENTS
    ICP            1 0/1 MIXTURE/COMPOUND
    TEMP       297.0 DEG KELVIN
                1001      2.00 ATOMS/MOLECULE
                8016      1.00 ATOM/MOLECULE

'MATERIAL FOR TIPS OF SOURCE ELEMENT
    END

    SC  H2O           STANDARD COMPOSITION
    MX            11 MIXTURE NO.
    VF        1.0000 VOLUME FRACTION
    ROTH      0.9982 THEORETICAL DENSITY
    NEL            2 NO. ELEMENTS
    ICP            1 0/1 MIXTURE/COMPOUND
    TEMP       297.0 DEG KELVIN
                1001      2.00 ATOMS/MOLECULE
                8016      1.00 ATOM/MOLECULE
    END


    **** PROBLEM GEOMETRY ****

'LATTICE CELL CARD IGNORES ZIRC ROD IN MIDDLE - SUBSTITUTES FUEL MATRIX
    CTP TRIANGPITCH  CELL TYPE
    PITCH     3.9775 CM CENTER TO CENTER SPACING
    FUELOD    3.6449 CM FUEL DIAMETER OR SLAB THICKNESS
    MFUEL          1 MIXTURE NO. OF FUEL
    MMOD           3 MIXTURE NO. OF MODERATOR
    CLADOD    3.7541 CM CLAD OUTER DIAMETER
    MCLAD          2 MIXTURE NO. OF CLAD
    GAPOD     3.6525 CM GAP OUTER DIAMETER
    MGAP           9 MIXTURE NO. OF GAP

    **** SPECIAL PARAMETERS ****

    ISN            8 ORDER OF ANGULAR QUADRATURE
    IIM           20 INNER ITERATION MAXIMUM
    ICM           25 OUTER ITERATION MAXIMUM
    SZF  1.00000E+00 SIZE FACTOR FOR SPATIAL MESH
    EPS  1.00000E-04 OVERALL PROBLEM CONVERGENCE
    PTC  1.00000E-04 SCALAR FLUX CONVERGENCE
    BKL  1.42089E+00 BUCKLING FACTOR
    IUS            0 THERMAL UPSCATTER SCALING
    BAL         FINE BALANCE TABLE PRINT FLAG
    DY   0.00000E+00 BUCKLING HEIGHT
    DZ   0.00000E+00 BUCKLING DEPTH
    IPN            0 DIFFUSION COEFFICIENT OPTION
    FRD            0 LOGICAL UNIT NUMBER TO READ FLUX GUESS
    FWR           -1 LOGICAL UNIT NUMBER TO WRITE FLUX GUESS
    MSH         2001 NUMBER OF INTERVALS FOR RES. INTGRTNS
    MLV            2 MAX LVALUE FOR RES. INTGRTNS
    AXS            0 LOGICAL UNIT NUMBER TO WRITE ANISN LIB
    RES            7 MIXTURE WITH SPECIAL RESONANCE CORRECTION
     *      CYLINDER GEOMETRY FOR SPECIAL RESONANCE CORRECTION
     *   1.69545E+00 DIMENSION (LBAR) FOR SPECIAL RESONANCE CORRECTION

    DANCOFF FACTOR SPECIFICATION
    MIXTURE     FACTOR
          7    0.55722

    ZONE SPECIFICATIONS FOR LATTICECELL GEOMETRY

                   ZONE  1 IS FUEL
                   ZONE  2 IS GAP
                   ZONE  3 IS CLAD
                   ZONE  4 IS MOD
```

```
*****************************************************************************************************************
***                                                                                                           ***
***                              TRIGA BENCHMARK CORE 132                                                     ***
***                                                                                                           ***
*****************************************************************************************************************
*****************************************************************************************************************
***                                                                                                           ***
***                                 ********** DATA LIBRARY INFORMATION **********                           ***
***                                                                                                           ***
***          UNIT                                                VOLUME                                       ***
***         NUMBER               DATA SET NAME                   NAME        UNIT FUNCTION                   ***
***         ------               -------------                   ----        -------------                   ***
***                                                                                                           ***
***           89     G:\scale43\DATALIB\FT89F001                              STANDARD COMPOSITION LIBRARY    ***
***                                                                                                           ***
***           82     G:\scale43\DATALIB\FT82F001                              CROSS SECTION LIBRARY           ***
***                                                                                                           ***
***           11     C:\PROJECTS\triga\sg61102.13.5.2\core132b\FT              SHORT CROSS SECTION LIBRARY     ***
***                                                                                                           ***
***           90     C:\PROJECTS\triga\sg61102.13.5.2\core132b\FT              INPUT DATA DIRECT ACCESS        ***
***                                                                                                           ***
*****************************************************************************************************************
*****************************************************************************************************************
***                                                                                                           ***
***                                                                                                           ***
***                                    STANDARD COMPOSITION LIBRARY DATA                                      ***
***                                    ---------------------------------                                      ***
***                                                                                                           ***
***            UNIT NUMBER  :  89                                                                             ***
***                                                                                                           ***
***            DATASET NAME :  G:\scale43\DATALIB\FT89F001                                                    ***
***                                                                                                           ***
***            LIBRARY TITLE:  SCALE-4 STANDARD COMPOSITION LIBRARY                                           ***
***                            637 STANDARD COMPOSITIONS, 490 NUCLIDES                                        ***
***                            90 ELEMENTS WITH VARIABLE ISOTOPIC DISTRBUTIONS.                               ***
***                                                                                                           ***
***            CREATION DATE:   6/30/95                                                                       ***
***                                                                                                           ***
***                                                                                                           ***
***                                                                                                           ***
***                                      CROSS SECTION LIBRARY DATA                                           ***
***                                     ---------------------------                                           ***
***                                                                                                           ***
***            UNIT NUMBER  :  82                                                                             ***
***                                                                                                           ***
***            DATASET NAME :  G:\scale43\DATALIB\FT82F001                                                    ***
***                                                                                                           ***
***            LIBRARY TITLE:  SCALE 4.2 - 27 GROUP NEUTRON GROUP LIBRARY                                     ***
***                               BASED ON ENDF-B VERSION 4 DATA                                              ***
***                                  COMPILED FOR NRC     1/27/89                                           ***
***                                     LAST UPDATED                                    08/12/94  ***
***                                        L.M.PETRIE   -   ORNL                                              ***
***                                                                                                           ***
***                                                                                                           ***
***                                                                                                           ***
***                                                                                                           ***
*****************************************************************************************************************
*****************************************************************************************************************

                          ........    0 IO'S WERE USED BEFORE READING KENO V DATA    ........

                          ........    0 IO'S WERE USED READING THE KENO V PARAMETER DATA    ........

'RING A

' RING B

' RING C

' RING D

' RING E

' RADIAL REFLECTORS EXTENDED BEYOND FUEL FOLLOWER HEIGHT


                         *************** DATA READING COMPLETED ***************

                          ........    0 IO'S WERE USED PREPARING THE KENO V INPUT DATA    ........

                          ........    0 IO'S WERE USED LOADING THE KENO V DATA    ........

                          ........    0 IO'S WERE USED LOADING THE DATA    ........

                          ........    0 IO'S WERE USED CHECKING THE KENO V GEOMETRY DATA    ........
                          *****  RESTART DATA HAS BEEN WRITTEN ON UNIT 95  *****

                          ........    0 IO'S WERE USED WRITING THE KENO V - CSAS DATA    ........

                          ........    0 IO'S WERE USED PROCESSING CSAS INPUT DATA    ........


 CONTROL MODULE CSAS25   IS COMPLETE.
```

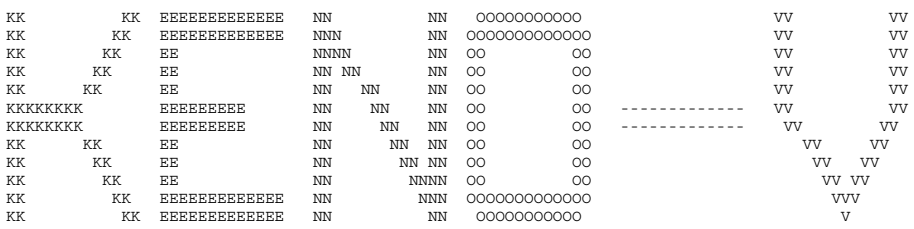
KK KK EEEEEEEEEEEE NN NN OOOOOOOOOO VV VV
KK KK EEEEEEEEEEEE NNN NN OOOOOOOOOOOO VV VV
KK KK EE NNNN NN OO OO VV VV
KK KK EE NN NN NN OO OO VV VV
KK KK EE NN NN NN OO OO VV VV
KKKKKKKK EEEEEEEE NN NN NN OO OO VV VV
KKKKKKKK EEEEEEEE NN NN NN OO OO VV VV
KK KK EE NN NN NN OO OO VV VV
KK KK EE NN NN NN OO OO VV VV
KK KK EE NN NNNN OO OO VV VV
KK KK EEEEEEEEEEEE NN NNN OOOOOOOOOOOO VVV
KK KK EEEEEEEEEEEE NN NN OOOOOOOOOO V

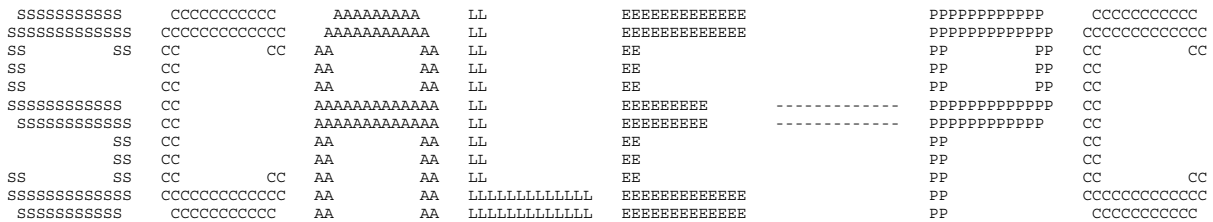
SSSSSSSSSS CCCCCCCCCC AAAAAAAAA LL EEEEEEEEEEEE PPPPPPPPPPP CCCCCCCCCC
SSSSSSSSSSS CCCCCCCCCCCC AAAAAAAAAA LL EEEEEEEEEEEE PPPPPPPPPPPP CCCCCCCCCCCC
SS SS CC CC AA AA LL EE PP PP CC CC
SS CC AA AA LL EE PP PP CC
SS CC AA AA LL EE PP PP CC
SSSSSSSSSSS CC AAAAAAAAAAAAA LL EEEEEEEEE PPPPPPPPPPPP CC
SSSSSSSSSS CC AAAAAAAAAAAAA LL EEEEEEEEE PPPPPPPPPPP CC
SS CC AA AA LL EE PP CC
SS CC AA AA LL EE PP CC
SS SS CC CC AA AA LL EE PP CC CC
SSSSSSSSSSSS CCCCCCCCCCCCC AA AA LLLLLLLLLLLL EEEEEEEEEEEE PP CCCCCCCCCCCC
SSSSSSSSSS CCCCCCCCCC AA AA LLLLLLLLLLLL EEEEEEEEEEEE PP CCCCCCCCCC

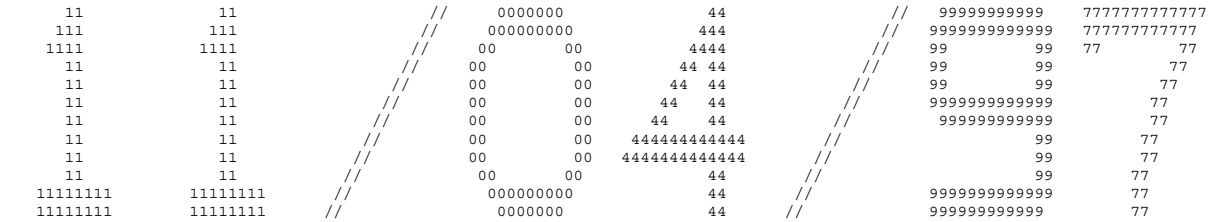
11 11 // 0000000 44 // 99999999999 7777777777777
111 111 // 000000000 444 // 9999999999999 777777777777
1111 1111 // 00 00 4444 // 99 99 77 77
11 11 // 00 00 44 44 // 99 99 77
11 11 // 00 00 44 44 // 99 99 77
11 11 // 00 00 44 44 // 9999999999999 77
11 11 // 00 00 44 44 // 999999999999 77
11 11 // 00 00 444444444444 // 99 77
11 11 // 00 00 4444444444444 // 99 77
11 11 // 00 00 44 // 99 77
11111111 11111111 // 000000000 44 // 9999999999999 77
11111111 11111111 // 0000000 44 // 999999999999 77

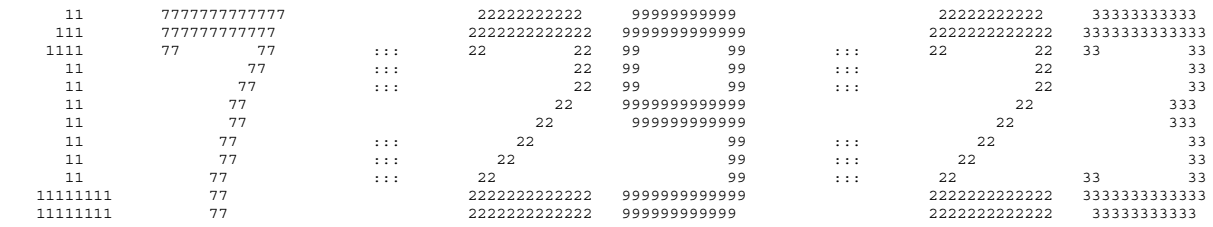
11 7777777777777 22222222222 99999999999 22222222222 33333333333
111 777777777777 2222222222222 9999999999999 2222222222222 3333333333333
1111 77 77 ::: 22 22 99 99 ::: 22 22 33 33
11 77 ::: 22 99 99 ::: 22 33
11 77 ::: 22 99 99 ::: 22 33
11 77 22 9999999999999 22 333
11 77 22 999999999999 22 333
11 77 ::: 22 99 ::: 22 33
11 77 ::: 22 99 ::: 22 33
11 77 ::: 22 99 ::: 22 33 33
11111111 77 2222222222222 9999999999999 2222222222222 3333333333333
11111111 77 2222222222222 999999999999 2222222222222 33333333333

```
  SSSSSSSSSS     CCCCCCCCCC      AAAAAAAA     LL             EEEEEEEEEEEE                 PPPPPPPPPPP     CCCCCCCCCC
 SSSSSSSSSSSS   CCCCCCCCCCCC    AAAAAAAAAA    LL             EEEEEEEEEEEE                 PPPPPPPPPPPP   CCCCCCCCCCCC
 SS          SS CC          CC  AA          AA  LL             EE                           PP         PP  CC          CC
 SS             CC              AA          AA  LL             EE                           PP         PP  CC
 SS             CC              AA          AA  LL             EE                           PP         PP  CC
 SSSSSSSSSSSS   CC              AAAAAAAAAAAAAA  LL             EEEEEEEEE       -------------PPPPPPPPPPPP  CC
  SSSSSSSSSSSS  CC              AAAAAAAAAAAAAA  LL             EEEEEEEEE       -------------PPPPPPPPPPP   CC
           SS   CC              AA          AA  LL             EE                           PP             CC
           SS   CC              AA          AA  LL             EE                           PP             CC
 SS        SS   CC          CC  AA          AA  LL             EE                           PP             CC          CC
 SSSSSSSSSSSS   CCCCCCCCCCCC    AA          AA  LLLLLLLLLLLL   EEEEEEEEEEEE                 PP             CCCCCCCCCCCC
  SSSSSSSSSS     CCCCCCCCCC     AA          AA  LLLLLLLLLLLL   EEEEEEEEEEEE                 PP              CCCCCCCCCC
```

```
*******************************************************************************
*******************************************************************************
*******************************************************************************
*****                                                                     *****
*****                  PROGRAM VERIFICATION INFORMATION                   *****
*****                                                                     *****
*****                CODE SYSTEM:  SCALE-PC VERSION:  4.3                 *****
*****                                                                     *****
*******************************************************************************
*******************************************************************************
*****                                                                     *****
*****                                                                     *****
*****              PROGRAM:  O0O009                                       *****
*****                                                                     *****
*****        CREATION DATE:  03-08-96                                     *****
*****                                                                     *****
*****              VOLUME:   ENG                                          *****
*****                                                                     *****
*****              LIBRARY:  G:\SCALE43\EXE                               *****
*****                                                                     *****
*****                                                                     *****
*****      PRODUCTION CODE:  KENOVA                                       *****
*****                                                                     *****
*****              VERSION:  3.1                                          *****
*****                                                                     *****
*****              JOBNAME:  SCALE-PC                                     *****
*****                                                                     *****
*****    DATE OF EXECUTION:  11/04/97                                     *****
*****                                                                     *****
*****    TIME OF EXECUTION:  17:29:23                                     *****
*****                                                                     *****
*****                                                                     *****
*******************************************************************************
*******************************************************************************
*******************************************************************************
```

```
*****************************************************************************************************************
***                                                                                                           ***
***                              TRIGA BENCHMARK CORE 132                                                     ***
***                                                                                                           ***
*****************************************************************************************************************
***                              ******       NUMERIC PARAMETERS       ******                                 ***
***                                                                                                           ***
***                                                                                                           ***
***                    TME       MAXIMUM PROBLEM TIME (MIN)                        170.00                   ***
***                                                                                                           ***
***                    TBA       TIME PER GENERATION (MIN)                           0.50                   ***
***                                                                                                           ***
***                    GEN       NUMBER OF GENERATIONS                               403                    ***
***                                                                                                           ***
***                    NPG       NUMBER PER GENERATION                              1000                    ***
***                                                                                                           ***
***                    NSK       NUMBER OF GENERATIONS TO BE SKIPPED                   3                    ***
***                                                                                                           ***
***                    BEG       BEGINNING GENERATION NUMBER                           1                    ***
***                                                                                                           ***
***                    RES       GENERATIONS BETWEEN CHECKPOINTS                       0                    ***
***                                                                                                           ***
***                    X1D       NUMBER OF EXTRA 1-D CROSS SECTIONS                    1                    ***
***                                                                                                           ***
***                    NBK       NEUTRON BANK SIZE                                  1025                    ***
***                                                                                                           ***
***                    XNB       EXTRA POSITIONS IN NEUTRON BANK                       0                    ***
***                                                                                                           ***
***                    NFB       FISSION BANK SIZE                                  1000                    ***
***                                                                                                           ***
***                    XFB       EXTRA POSITIONS IN FISSION BANK                       0                    ***
***                                                                                                           ***
***                    WTA       DEFAULT VALUE OF WEIGHT AVERAGE                  0.5000                   ***
***                                                                                                           ***
***                    WTH       WEIGHT HIGH FOR SPLITTING                        3.0000                   ***
***                                                                                                           ***
***                    WTL       WEIGHT LOW FOR RUSSIAN ROULETTE                  0.3333                   ***
***                                                                                                           ***
***                    RND       STARTING RANDOM NUMBER                       BB827100001                  ***
***                                                                                                           ***
***                    NB8       NUMBER OF D.A. BLOCKS ON UNIT  8                    200                    ***
***                                                                                                           ***
***                    NL8       LENGTH OF D.A. BLOCKS ON UNIT  8                    512                    ***
***                                                                                                           ***
***                    ADJ       MODE OF CALCULATION                              FORWARD                   ***
***                                                                                                           ***
***                              INPUT DATA WRITTEN ON RESTART UNIT                    NO                     ***
***                                                                                                           ***
***                              BINARY DATA INTERFACE                                YES                     ***
***                                                                                                           ***
***                                                                                                           ***
*****************************************************************************************************************
*****************************************************************************************************************
```

```
*****************************************************************************************************************************
*****************************************************************************************************************************
***                                                                                                                       ***
***                                TRIGA BENCHMARK CORE 132                                                               ***
***                                                                                                                       ***
*****************************************************************************************************************************
***                                  ******      LOGICAL PARAMETERS        ******                                       ***
***                                                                                                                       ***
***  RUN  EXECUTE PROBLEM AFTER CHECKING DATA    YES            PLT  PLOT PICTURE MAP(S)                          NO  ***
***                                                                                                                       ***
***  FLX  COMPUTE FLUX                            NO            FDN  COMPUTE FISSION DENSITIES                    NO  ***
***                                                                                                                       ***
***  SMU  COMPUTE AVG UNIT SELF-MULTIPLICATION    NO            NUB  COMPUTE NU-BAR & AVG FISSION GROUP           YES  ***
***                                                                                                                       ***
***  MKU  COMPUTE MATRIX K-EFF BY UNIT NUMBER     NO            MKP  COMPUTE MATRIX K-EFF BY UNIT LOCATION        NO  ***
***                                                                                                                       ***
***  CKU  COMPUTE COFACTOR K-EFF BY UNIT NUMBER   NO            CKP  COMPUTE COFACTOR K-EFF BY UNIT LOCATION      NO  ***
***                                                                                                                       ***
***  FMU  PRINT FISS PROD MATRIX BY UNIT NUMBER   NO            FMP  PRINT FISS PROD MATRIX BY UNIT LOCATION      NO  ***
***                                                                                                                       ***
***  MKH  COMPUTE MATRIX K-EFF BY HOLE NUMBER     NO            MKA  COMPUTE MATRIX K-EFF BY ARRAY NUMBER         NO  ***
***                                                                                                                       ***
***  CKH  COMPUTE COFACTOR K-EFF BY HOLE NUMBER   NO            CKA  COMPUTE COFACTOR K-EFF BY ARRAY NUMBER       NO  ***
***                                                                                                                       ***
***  FMH  PRINT FISS PROD MATRIX BY HOLE NUMBER   NO            FMA  PRINT FISS PROD MATRIX BY ARRAY NUMBER       NO  ***
***                                                                                                                       ***
***  HHL  COLLECT MATRIX BY HIGHEST HOLE LEVEL    NO            HAL  COLLECT MATRIX BY HIGHEST ARRAY LEVEL        NO  ***
***                                                                                                                       ***
***  AMX  PRINT ALL MIXED CROSS SECTIONS          NO            FAR  PRINT FIS. AND ABS. BY REGION                NO  ***
***                                                                                                                       ***
***  XS1  PRINT 1-D MIXTURE X-SECTIONS            NO            GAS  PRINT FAR BY GROUP                           NO  ***
***                                                                                                                       ***
***  XS2  PRINT 2-D MIXTURE X-SECTIONS            NO            PAX  PRINT XSEC-ALBEDO CORRELATION TABLES         NO  ***
***                                                                                                                       ***
***  XAP  PRINT MIXTURE ANGLES & PROBABILITIES    NO            PWT  PRINT WEIGHT AVERAGE ARRAY                   NO  ***
***                                                                                                                       ***
***  PKI  PRINT FISSION SPECTRUM                  NO            PGM  PRINT INPUT GEOMETRY                         NO  ***
***                                                                                                                       ***
***  P1D  PRINT EXTRA 1-D CROSS SECTIONS          NO            BUG  PRINT DEBUG INFORMATION                      NO  ***
***                                                                                                                       ***
***                                                             TRK  PRINT TRACKING INFORMATION                   NO  ***
***                                                                                                                       ***
***                                                                                                                       ***
*****************************************************************************************************************************
*****************************************************************************************************************************
*****************************************************************************************************************************
                                    PARAMETER INPUT COMPLETED

                         .........    0 IO'S WERE USED READING THE PARAMETER DATA      .........

                       ************** DATA READING COMPLETED **************
```

```
*********************************************************************************************************************************
***                                                                                                                           ***
***                              TRIGA BENCHMARK CORE 132                                                                     ***
***                                                                                                                           ***
*********************************************************************************************************************************
*********************************************************************************************************************************
***                                                                                                                           ***
***          UNIT                                                  VOLUME                                                     ***
***         NUMBER               DATA SET NAME                     NAME        UNIT FUNCTION                                ***
***         ------               -------------                     ----        -------------                                ***
***                                                                                                                           ***
***      XSC  14     C:\PROJECTS\triga\sg61102.13.5.2\core132b\FT              MIXED CROSS SECTIONS                         ***
***                                                                                                                           ***
***      ALB  79     G:\scale43\DATALIB\FT79F001                               INPUT ALBEDOS                                ***
***                                                                                                                           ***
***      WTS  80     G:\scale43\DATALIB\FT80F001                               INPUT WEIGHTS                                ***
***                                                                                                                           ***
***      SKT  16      UNKNOWN                                                  WRITE SCRATCH DATA                           ***
***                                                                                                                           ***
***      BIN  95     C:\PROJECTS\triga\sg61102.13.5.2\core132b\FT              BINARY INPUT DATA                            ***
***                                                                                                                           ***
***      RST  95     C:\PROJECTS\triga\sg61102.13.5.2\core132b\FT              READ RESTART DATA                            ***
***                                                                                                                           ***
***      LIB   4     C:\PROJECTS\triga\sg61102.13.5.2\core132b\FT              INPUT AMPX WORKING LIBRARY                   ***
***                                                                                                                           ***
***             8     C:\PROJECTS\triga\sg61102.13.5.2\core132b\FT              INPUT DATA DIRECT ACCESS                     ***
***                                                                                                                           ***
***             9      UNKNOWN                                                  SUPER GROUPED DIRECT ACCESS                  ***
***                                                                                                                           ***
***            10      UNKNOWN                                                  XSEC MIXING DIRECT ACCESS                    ***
***                                                                                                                           ***
*********************************************************************************************************************************

                        ........    0 IO'S WERE USED PREPARING INPUT DATA    ........


                          CROSS SECTIONS READ FROM THE AMPX WORKING LIBRARY ON UNIT    4
```

TRIGA BENCHMARK CORE 132

MIXING TABLE

NUMBER OF SCATTERING ANGLES = 2
CROSS SECTION MESSAGE THRESHOLD =3.0E-05

MIXTURE = 1 DENSITY(G/CC) = 6.1233

NUCLIDE	ATOM-DENS.	WGT. FRAC.	ZA	AWT	NUCLIDE TITLE		
1001001	5.77800E-02	1.57889E-02	1001	1.0077	HYDROGEN	ENDF/B-IV MAT 1269/THRM1002	UPDATED 08/12/94
1040000	3.50200E-02	8.66297E-01	40000	91.2196	ZIRCONIUM	ENDF/B-IV MAT 7141	UPDATED 08/12/94
1092235	3.68200E-04	2.34691E-02	92235	235.0441	URANIUM-235	ENDF/B-IV MAT 1261	UPDATED 08/12/94
1092238	1.46300E-03	9.44446E-02	92238	238.0510	URANIUM-238	ENDF/B-IV MAT 1262	UPDATED 08/12/94

MIXTURE = 2 DENSITY(G/CC) = 7.9200

NUCLIDE	ATOM-DENS.	WGT. FRAC.	ZA	AWT	NUCLIDE TITLE		
2024304	1.74286E-02	1.90000E-01	24000	51.9957	CR 1191 WT SS-304(1/EST) P-3 293K SP=5+4(42375)'		UPDATED 08/12/94
2025055	1.73633E-03	1.99999E-02	25055	54.9379	MANGANESE-55	ENDF/B-IV MAT 1197	UPDATED 08/12/94
2026304	5.93579E-02	6.95000E-01	26000	55.8447	FE 1192 WT SS-304(1/EST) P-3 293K SP=5+4(42375)'		UPDATED 08/12/94
2028304	7.72070E-03	9.50001E-02	28000	58.6872	NI 1190 WT SS-304(1/EST) P-3 293K SP=5+4(42375)'		UPDATED 08/12/94

MIXTURE = 3 DENSITY(G/CC) = 0.99817

NUCLIDE	ATOM-DENS.	WGT. FRAC.	ZA	AWT	NUCLIDE TITLE		
3001001	6.67692E-02	1.11927E-01	1001	1.0077	HYDROGEN	ENDF/B-IV MAT 1269/THRM1002	UPDATED 08/12/94
3008016	3.33846E-02	8.88074E-01	8016	15.9904	OXYGEN-16	ENDF/B-IV MAT 1276	UPDATED 08/12/94

MIXTURE = 4 DENSITY(G/CC) = 2.7020

NUCLIDE	ATOM-DENS.	WGT. FRAC.	ZA	AWT	NUCLIDE TITLE		
4013027	6.03066E-02	1.00000E+00	13027	26.9818	AL-27 1193 218 GP 040375(5)		UPDATED 08/12/94

MIXTURE = 5 DENSITY(G/CC) = 6.4900

NUCLIDE	ATOM-DENS.	WGT. FRAC.	ZA	AWT	NUCLIDE TITLE		
5040000	4.28457E-02	1.00000E+00	40000	91.2196	ZIRCONIUM	ENDF/B-IV MAT 7141	UPDATED 08/12/94

MIXTURE = 6 DENSITY(G/CC) = 1.6000

NUCLIDE	ATOM-DENS.	WGT. FRAC.	ZA	AWT	NUCLIDE TITLE		
6006012	8.02952E-02	1.00000E+00	6000	12.0001	CARBON-12	ENDF/B-IV MAT 1274/THRM1065	UPDATED 08/12/94

MIXTURE = 7 DENSITY(G/CC) = 6.1231

NUCLIDE	ATOM-DENS.	WGT. FRAC.	ZA	AWT	NUCLIDE TITLE		
7001001	5.76200E-02	1.57457E-02	1001	1.0077	HYDROGEN	ENDF/B-IV MAT 1269/THRM1002	UPDATED 08/12/94
7040000	3.49200E-02	8.63851E-01	40000	91.2196	ZIRCONIUM	ENDF/B-IV MAT 7141	UPDATED 08/12/94
7092235	3.75800E-04	2.39543E-02	92235	235.0441	URANIUM-235	ENDF/B-IV MAT 1261	UPDATED 08/12/94
7092238	1.49400E-03	9.64488E-02	92238	238.0510	URANIUM-238	ENDF/B-IV MAT 1262	UPDATED 08/12/94

MIXTURE = 8 DENSITY(G/CC) = 2.4800

NUCLIDE	ATOM-DENS.	WGT. FRAC.	ZA	AWT	NUCLIDE TITLE		
8005010	2.15194E-02	1.44273E-01	5010	10.0130	B-10 1273 218NGP 042375 P-3 293K		UPDATED 08/12/94
8005011	8.66182E-02	6.38512E-01	5011	11.0096	BORON-11	ENDF/B-IV MAT 1160	UPDATED 08/12/94
8006012	2.70344E-02	2.17215E-01	6000	12.0001	CARBON-12	ENDF/B-IV MAT 1274/THRM1065	UPDATED 08/12/94

MIXTURE = 9 DENSITY(G/CC) = 0.99997E-20

NUCLIDE	ATOM-DENS.	WGT. FRAC.	ZA	AWT	NUCLIDE TITLE		
9001001	6.68896E-22	1.11927E-01	1001	1.0077	HYDROGEN	ENDF/B-IV MAT 1269/THRM1002	UPDATED 08/12/94
9008016	3.34448E-22	8.88074E-01	8016	15.9904	OXYGEN-16	ENDF/B-IV MAT 1276	UPDATED 08/12/94

MIXTURE = 10 DENSITY(G/CC) = 0.99817

NUCLIDE	ATOM-DENS.	WGT. FRAC.	ZA	AWT	NUCLIDE TITLE		
10001001	6.67692E-02	1.11927E-01	1001	1.0077	HYDROGEN	ENDF/B-IV MAT 1269/THRM1002	UPDATED 08/12/94
10008016	3.33846E-02	8.88074E-01	8016	15.9904	OXYGEN-16	ENDF/B-IV MAT 1276	UPDATED 08/12/94

MIXTURE = 11 DENSITY(G/CC) = 0.99817

NUCLIDE	ATOM-DENS.	WGT. FRAC.	ZA	AWT	NUCLIDE TITLE		
11001001	6.67692E-02	1.11927E-01	1001	1.0077	HYDROGEN	ENDF/B-IV MAT 1269/THRM1002	UPDATED 08/12/94
11008016	3.33846E-02	8.88074E-01	8016	15.9904	OXYGEN-16	ENDF/B-IV MAT 1276	UPDATED 08/12/94

```
                          1001001     HYDROGEN       ENDF/B-IV MAT 1269/THRM1002            UPDATED 08/12/94
                          3001001     HYDROGEN       ENDF/B-IV MAT 1269/THRM1002            UPDATED 08/12/94
                          7001001     HYDROGEN       ENDF/B-IV MAT 1269/THRM1002            UPDATED 08/12/94
                          9001001     HYDROGEN       ENDF/B-IV MAT 1269/THRM1002            UPDATED 08/12/94
                         10001001     HYDROGEN       ENDF/B-IV MAT 1269/THRM1002            UPDATED 08/12/94
                         11001001     HYDROGEN       ENDF/B-IV MAT 1269/THRM1002            UPDATED 08/12/94
                          8005010    B-10 1273 218NGP 042375 P-3 293K                       UPDATED 08/12/94
                          8005011     BORON-11       ENDF/B-IV MAT 1160                     UPDATED 08/12/94
                          6006012     CARBON-12      ENDF/B-IV MAT 1274/THRM1065            UPDATED 08/12/94
                          8006012     CARBON-12      ENDF/B-IV MAT 1274/THRM1065            UPDATED 08/12/94
                          3008016     OXYGEN-16      ENDF/B-IV MAT 1276                     UPDATED 08/12/94
                          9008016     OXYGEN-16      ENDF/B-IV MAT 1276                     UPDATED 08/12/94
                         10008016     OXYGEN-16      ENDF/B-IV MAT 1276                     UPDATED 08/12/94
                         11008016     OXYGEN-16      ENDF/B-IV MAT 1276                     UPDATED 08/12/94
                          4013027    AL-27 1193 218 GP 040375(5)                            UPDATED 08/12/94
                          2024304    CR 1191 WT SS-304(1/EST) P-3 293K SP=5+4(42375)'       UPDATED 08/12/94
                          2025055     MANGANESE-55   ENDF/B-IV MAT 1197                     UPDATED 08/12/94
                          2026304    FE 1192 WT SS-304(1/EST) P-3 293K SP=5+4(42375)'       UPDATED 08/12/94
                          2028304    NI 1190 WT SS-304(1/EST) P-3 293K SP=5+4(42375)'       UPDATED 08/12/94
                          1040000     ZIRCONIUM      ENDF/B-IV MAT 7141                     UPDATED 08/12/94
                          5040000     ZIRCONIUM      ENDF/B-IV MAT 7141                     UPDATED 08/12/94
                          7040000     ZIRCONIUM      ENDF/B-IV MAT 7141                     UPDATED 08/12/94
                          1092235     URANIUM-235    ENDF/B-IV MAT 1261                     UPDATED 08/12/94
                          7092235     URANIUM-235    ENDF/B-IV MAT 1261                     UPDATED 08/12/94
                          1092238     URANIUM-238    ENDF/B-IV MAT 1262                     UPDATED 08/12/94
                          7092238     URANIUM-238    ENDF/B-IV MAT 1262                     UPDATED 08/12/94

KENO MESSAGE NUMBER K5-222       1 TRANSFERS FOR MIXTURE     1 WERE CORRECTED FOR BAD MOMENTS.

KENO MESSAGE NUMBER K5-222       1 TRANSFERS FOR MIXTURE     7 WERE CORRECTED FOR BAD MOMENTS.

KENO MESSAGE NUMBER K5-222       1 TRANSFERS FOR MIXTURE     3 WERE CORRECTED FOR BAD MOMENTS.

KENO MESSAGE NUMBER K5-222       1 TRANSFERS FOR MIXTURE     9 WERE CORRECTED FOR BAD MOMENTS.

KENO MESSAGE NUMBER K5-222       1 TRANSFERS FOR MIXTURE    10 WERE CORRECTED FOR BAD MOMENTS.

KENO MESSAGE NUMBER K5-222       1 TRANSFERS FOR MIXTURE    11 WERE CORRECTED FOR BAD MOMENTS.

                         ........    0 IO'S WERE USED MIXING CROSS-SECTIONS       ........

                          1-D CROSS SECTION ARRAY ID NUMBERS
                             1  2002  1452    27    18  1018

                         ........    0 IO'S WERE USED PREPARING THE CROSS SECTIONS    ........
```

```
*****************************************************************************************************
***                                                                                               ***
***          TRIGA BENCHMARK CORE 132                                                             ***
***                                                                                               ***
*****************************************************************************************************
*****************************************************************************************************
***                                                                                               ***
***                              ****** ADDITIONAL INFORMATION ******                             ***
***                                                                                               ***
***  NUMBER OF ENERGY GROUPS              27       USE LATTICE GEOMETRY                     NO   ***
***                                                                                               ***
***  NO. OF FISSION SPECTRUM SOURCE GROUP  1       GLOBAL ARRAY NUMBER                       0   ***
***                                                                                               ***
***  NO. OF SCATTERING ANGLES IN XSECS     2       NUMBER OF UNITS IN THE GLOBAL X DIR.      0   ***
***                                                                                               ***
***  ENTRIES/NEUTRON IN THE NEUTRON BANK  17       NUMBER OF UNITS IN THE GLOBAL Y DIR.      0   ***
***                                                                                               ***
***  ENTRIES/NEUTRON IN THE FISSION BANK  10       NUMBER OF UNITS IN THE GLOBAL Z DIR.      0   ***
***                                                                                               ***
***  NUMBER OF MIXTURES USED              11       USE A GLOBAL REFLECTOR                   YES   ***
***                                                                                               ***
***  NUMBER OF BIAS ID'S USED              1       USE NESTED HOLES                          NO   ***
***                                                                                               ***
***  NUMBER OF DIFFERENTIAL ALBEDOS USED   0       NUMBER OF HOLES                          61   ***
***                                                                                               ***
***  TOTAL INPUT GEOMETRY REGIONS         34       MAXIMUM HOLE NESTING LEVEL                1   ***
***                                                                                               ***
***  NUMBER OF GEOMETRY REGIONS USED      34       USE NESTED ARRAYS                         NO   ***
***                                                                                               ***
***  LARGEST GEOMETRY UNIT NUMBER         10       NUMBER OF ARRAYS USED                     0   ***
***                                                                                               ***
***  LARGEST ARRAY NUMBER                  1       MAXIMUM ARRAY NESTING LEVEL               0   ***
***                                                                                               ***
***                                                                                               ***
***  +X BOUNDARY CONDITION              VOID       -X BOUNDARY CONDITION                   VOID   ***
***                                                                                               ***
***  +Y BOUNDARY CONDITION              VOID       -Y BOUNDARY CONDITION                   VOID   ***
***                                                                                               ***
***  +Z BOUNDARY CONDITION              VOID       -Z BOUNDARY CONDITION                   VOID   ***
***                                                                                               ***
*****************************************************************************************************
```

```
*******************************************************************************************
***                                                                                     ***
***          TRIGA BENCHMARK CORE 132                                                   ***
***                                                                                     ***
*******************************************************************************************
*******************************************************************************************
***                                                                                     ***
***                    ****** SPACE AND SUPERGROUP INFORMATION ******                   ***
***                                                                                     ***
***       100000 WORDS IS THE TOTAL SPACE AVAILABLE.                                    ***
***                                                                                     ***
***        30933 WORDS WERE USED FOR NON-SUPERGROUP STORAGE.                            ***
***                                                                                     ***
***        69067 WORDS OF STORAGE ARE AVAILABLE FOR SUPERGROUPED DATA.                  ***
***                                                                                     ***
***        99710 WORDS OF STORAGE ARE AVAILABLE FOR CONSTRUCTING THE SUPERGROUPS.       ***
***                                                                                     ***
***        69007 WORDS OF STORAGE ARE AVAILABLE TO EACH SUPERGROUP.                     ***
***                                                                                     ***
***         1330 WORDS ARE NEEDED FOR THE LARGEST GROUP.                                ***
***                                                                                     ***
***        32479 WORDS OF STORAGE IS SUFFICIENT TO RUN THIS PROBLEM.                    ***
***                                                                                     ***
***        48281 WORDS OF STORAGE WILL ALLOW THE PROBLEM TO RUN WITH ONE SUPERGROUP.     ***
***                                                                                     ***
***        48288 WORDS OF STORAGE WILL BE USED TO RUN THIS PROBLEM.                     ***
***                                                                                     ***
*******************************************************************************************
*******************************************************************************************
***                                                                                     ***
***                   STARTING      ENDING       XSEC       ALBEDO      TOTAL          ***
***   SUPERGROUP        GROUP        GROUP      LENGTH      LENGTH      LENGTH          ***
***                                                                                     ***
***                                                                                     ***
***          1            1            27         3512           0       17288          ***
***                                                                                     ***
*******************************************************************************************

            ........    0 IO'S WERE USED IN SUPERGROUPING    ........

            ........    0 IO'S WERE USED LOADING THE DATA    ........
```

TRIGA BENCHMARK CORE 132

REGION		MEDIA NUM	BIAS ID	GEOMETRY DESCRIPTION FOR THOSE UNITS UTILIZED IN THIS PROBLEM					
				----- UNIT 1 -----					
TRIGA FUEL ELEMENT									
1	CYLINDER	5	1	RADIUS = 0.31750	+Z = 19.050	-Z = -19.050	CENTERLINE IS AT	X = 0.00000	Y = 0.00000
2	CYLINDER	1	1	RADIUS = 1.8225	+Z = 19.050	-Z = -19.050	CENTERLINE IS AT	X = 0.00000	Y = 0.00000
3	CYLINDER	6	1	RADIUS = 1.8225	+Z = 27.888	-Z = -27.864	CENTERLINE IS AT	X = 0.00000	Y = 0.00000
4	CYLINDER	9	1	RADIUS = 1.8263	+Z = 27.888	-Z = -27.864	CENTERLINE IS AT	X = 0.00000	Y = 0.00000
5	CYLINDER	2	1	RADIUS = 1.8771	+Z = 30.640	-Z = -30.640	CENTERLINE IS AT	X = 0.00000	Y = 0.00000
6	CYLINDER	10	1	RADIUS = 1.8771	+Z = 36.030	-Z = -36.030	CENTERLINE IS AT	X = 0.00000	Y = 0.00000
				----- UNIT 2 -----					
TRIGA FUEL FOLLOWER									
1	CYLINDER	5	1	RADIUS = 0.31750	+Z = 19.050	-Z = -19.050	CENTERLINE IS AT	X = 0.00000	Y = 0.00000
2	CYLINDER	7	1	RADIUS = 1.6650	+Z = 19.050	-Z = -19.050	CENTERLINE IS AT	X = 0.00000	Y = 0.00000
3	CYLINDER	9	1	RADIUS = 1.6650	+Z = 19.685	-Z = -19.050	CENTERLINE IS AT	X = 0.00000	Y = 0.00000
4	CYLINDER	2	1	RADIUS = 1.6650	+Z = 20.955	-Z = -21.590	CENTERLINE IS AT	X = 0.00000	Y = 0.00000
5	CYLINDER	8	1	RADIUS = 1.6650	+Z = 59.055	-Z = -21.590	CENTERLINE IS AT	X = 0.00000	Y = 0.00000
6	CYLINDER	9	1	RADIUS = 1.6650	+Z = 59.373	-Z = -21.590	CENTERLINE IS AT	X = 0.00000	Y = 0.00000
7	CYLINDER	2	1	RADIUS = 1.6650	+Z = 60.642	-Z = -21.590	CENTERLINE IS AT	X = 0.00000	Y = 0.00000
8	CYLINDER	9	1	RADIUS = 1.6955	+Z = 69.125	-Z = -36.830	CENTERLINE IS AT	X = 0.00000	Y = 0.00000
9	CYLINDER	2	1	RADIUS = 1.7463	+Z = 73.025	-Z = -38.100	CENTERLINE IS AT	X = 0.00000	Y = 0.00000

TRIGA BENCHMARK CORE 132

REGION		MEDIA NUM	BIAS ID	GEOMETRY DESCRIPTION FOR THOSE UNITS UTILIZED IN THIS PROBLEM						
				----- UNIT 3 -----						
TRIGA TRANSIENT AIR ROD + TUBE										
1	CYLINDER	9	1	RADIUS = 1.5164	+Z = 19.050	-Z = -19.050	CENTERLINE IS AT	X = 0.00000	Y = 0.00000	
2	CYLINDER	9	1	RADIUS = 1.5164	+Z = 19.685	-Z = -19.050	CENTERLINE IS AT	X = 0.00000	Y = 0.00000	
3	CYLINDER	4	1	RADIUS = 1.5164	+Z = 20.955	-Z = -21.590	CENTERLINE IS AT	X = 0.00000	Y = 0.00000	
4	CYLINDER	8	1	RADIUS = 1.5164	+Z = 59.055	-Z = -21.590	CENTERLINE IS AT	X = 0.00000	Y = 0.00000	
5	CYLINDER	9	1	RADIUS = 1.5164	+Z = 59.373	-Z = -21.590	CENTERLINE IS AT	X = 0.00000	Y = 0.00000	
6	CYLINDER	4	1	RADIUS = 1.5164	+Z = 60.642	-Z = -21.590	CENTERLINE IS AT	X = 0.00000	Y = 0.00000	
7	CYLINDER	9	1	RADIUS = 1.5164	+Z = 69.125	-Z = -36.830	CENTERLINE IS AT	X = 0.00000	Y = 0.00000	
8	CYLINDER	4	1	RADIUS = 1.5875	+Z = 73.025	-Z = -38.100	CENTERLINE IS AT	X = 0.00000	Y = 0.00000	
9	CYLINDER	3	1	RADIUS = 1.6000	+Z = 73.025	-Z = -38.100	CENTERLINE IS AT	X = 0.00000	Y = 0.00000	
10	CYLINDER	4	1	RADIUS = 1.9000	+Z = 73.025	-Z = -38.100	CENTERLINE IS AT	X = 0.00000	Y = 0.00000	
				----- UNIT 4 -----						
SOURCE ROD										
1	CYLINDER	9	1	RADIUS = 1.8263	+Z = 27.888	-Z = -27.864	CENTERLINE IS AT	X = 0.00000	Y = 0.00000	
2	CYLINDER	4	1	RADIUS = 1.8771	+Z = 30.640	-Z = -30.640	CENTERLINE IS AT	X = 0.00000	Y = 0.00000	
3	CYLINDER	11	1	RADIUS = 1.8771	+Z = 36.030	-Z = -36.030	CENTERLINE IS AT	X = 0.00000	Y = 0.00000	
				----- UNIT 5 -----						
WATER FOR EMPTY LOCATIONS										
1	CYLINDER	3	1	RADIUS = 1.8771	+Z = 36.030	-Z = -36.030	CENTERLINE IS AT	X = 0.00000	Y = 0.00000	

TRIGA BENCHMARK CORE 132

REGION	MEDIA NUM	BIAS ID	GEOMETRY DESCRIPTION FOR THOSE UNITS UTILIZED IN THIS PROBLEM

********** GLOBAL **********
----- UNIT 10 -----

ACTIVE CORE CONFIGURATION

1 CYLINDER	3	1	RADIUS = 22.060	+Z = 73.025	-Z = -38.100	CENTERLINE IS AT	X = 0.00000	Y = 0.00000			
HOLE NUMBER	1		AT X = 0.00000	Y = 0.00000	Z = 0.00000	IS UNIT NUMBER	1				
HOLE NUMBER	2		AT X = 3.5109	Y = 2.0270	Z = 0.00000	IS UNIT NUMBER	1				
HOLE NUMBER	3		AT X = 0.00000	Y = 4.0540	Z = 0.00000	IS UNIT NUMBER	1				
HOLE NUMBER	4		AT X = -3.5109	Y = 2.0270	Z = 0.00000	IS UNIT NUMBER	1				
HOLE NUMBER	5		AT X = -3.5109	Y = -2.0270	Z = 0.00000	IS UNIT NUMBER	1				
HOLE NUMBER	6		AT X = 0.00000	Y = -4.0540	Z = 0.00000	IS UNIT NUMBER	1				
HOLE NUMBER	7		AT X = 3.5109	Y = -2.0270	Z = 0.00000	IS UNIT NUMBER	1				
HOLE NUMBER	8		AT X = 7.9810	Y = 0.00000	Z = 0.00000	IS UNIT NUMBER	2				
HOLE NUMBER	9		AT X = 6.9117	Y = 3.9905	Z = 0.00000	IS UNIT NUMBER	1				
HOLE NUMBER	10		AT X = 3.9905	Y = 6.9117	Z = 0.00000	IS UNIT NUMBER	1				
HOLE NUMBER	11		AT X = 0.00000	Y = 7.9810	Z = 0.00000	IS UNIT NUMBER	1				
HOLE NUMBER	12		AT X = -3.9905	Y = 6.9117	Z = 0.00000	IS UNIT NUMBER	1				
HOLE NUMBER	13		AT X = -6.9117	Y = 3.9905	Z = 0.00000	IS UNIT NUMBER	1				
HOLE NUMBER	14		AT X = -7.9810	Y = 0.00000	Z = 0.00000	IS UNIT NUMBER	3				
HOLE NUMBER	15		AT X = -6.9117	Y = -3.9905	Z = 0.00000	IS UNIT NUMBER	1				
HOLE NUMBER	16		AT X = -3.9905	Y = -6.9117	Z = 0.00000	IS UNIT NUMBER	1				
HOLE NUMBER	17		AT X = 0.00000	Y = -7.9810	Z = 0.00000	IS UNIT NUMBER	1				
HOLE NUMBER	18		AT X = 3.9905	Y = -6.9117	Z = 0.00000	IS UNIT NUMBER	1				
HOLE NUMBER	19		AT X = 6.9117	Y = -3.9905	Z = 0.00000	IS UNIT NUMBER	1				
HOLE NUMBER	20		AT X = 11.757	Y = 2.0730	Z = 0.00000	IS UNIT NUMBER	1				
HOLE NUMBER	21		AT X = 10.339	Y = 5.9690	Z = 0.00000	IS UNIT NUMBER	1				
HOLE NUMBER	22		AT X = 7.6736	Y = 9.1450	Z = 0.00000	IS UNIT NUMBER	1				
HOLE NUMBER	23		AT X = 4.0830	Y = 11.218	Z = 0.00000	IS UNIT NUMBER	1				
HOLE NUMBER	24		AT X = 0.00000	Y = 11.938	Z = 0.00000	IS UNIT NUMBER	2				
HOLE NUMBER	25		AT X = -4.0830	Y = 11.218	Z = 0.00000	IS UNIT NUMBER	1				
HOLE NUMBER	26		AT X = -7.6736	Y = 9.1450	Z = 0.00000	IS UNIT NUMBER	1				
HOLE NUMBER	27		AT X = -10.339	Y = 5.9690	Z = 0.00000	IS UNIT NUMBER	1				
HOLE NUMBER	28		AT X = -11.757	Y = 2.0730	Z = 0.00000	IS UNIT NUMBER	1				
HOLE NUMBER	29		AT X = -11.757	Y = -2.0730	Z = 0.00000	IS UNIT NUMBER	1				
HOLE NUMBER	30		AT X = -10.339	Y = -5.9690	Z = 0.00000	IS UNIT NUMBER	1				
HOLE NUMBER	31		AT X = -7.6736	Y = -9.1450	Z = 0.00000	IS UNIT NUMBER	1				
HOLE NUMBER	32		AT X = -4.0830	Y = -11.218	Z = 0.00000	IS UNIT NUMBER	1				
HOLE NUMBER	33		AT X = 0.00000	Y = -11.938	Z = 0.00000	IS UNIT NUMBER	2				
HOLE NUMBER	34		AT X = 4.0830	Y = -11.218	Z = 0.00000	IS UNIT NUMBER	1				
HOLE NUMBER	35		AT X = 7.6736	Y = -9.1450	Z = 0.00000	IS UNIT NUMBER	1				
HOLE NUMBER	36		AT X = 10.339	Y = -5.9690	Z = 0.00000	IS UNIT NUMBER	1				
HOLE NUMBER	37		AT X = 11.757	Y = -2.0730	Z = 0.00000	IS UNIT NUMBER	1				
HOLE NUMBER	38		AT X = 15.916	Y = 0.00000	Z = 0.00000	IS UNIT NUMBER	5				
HOLE NUMBER	39		AT X = 15.374	Y = 4.1194	Z = 0.00000	IS UNIT NUMBER	5				
HOLE NUMBER	40		AT X = 13.784	Y = 7.9580	Z = 0.00000	IS UNIT NUMBER	5				
HOLE NUMBER	41		AT X = 11.254	Y = 11.254	Z = 0.00000	IS UNIT NUMBER	5				

```
   HOLE NUMBER     42       AT X =  7.9580      Y =  13.784      Z = 0.00000     IS UNIT NUMBER      5
   HOLE NUMBER     43       AT X =  4.1194      Y =  15.374      Z = 0.00000     IS UNIT NUMBER      5
   HOLE NUMBER     44       AT X = 0.00000      Y =  15.916      Z = 0.00000     IS UNIT NUMBER      5
   HOLE NUMBER     45       AT X = -4.1194      Y =  15.374      Z = 0.00000     IS UNIT NUMBER      4
   HOLE NUMBER     46       AT X = -7.9580      Y =  13.784      Z = 0.00000     IS UNIT NUMBER      5
   HOLE NUMBER     47       AT X = -11.254      Y =  11.254      Z = 0.00000     IS UNIT NUMBER      1
   HOLE NUMBER     48       AT X = -13.784      Y =  7.9580      Z = 0.00000     IS UNIT NUMBER      1
   HOLE NUMBER     49       AT X = -15.374      Y =  4.1194      Z = 0.00000     IS UNIT NUMBER      1
   HOLE NUMBER     50       AT X = -15.916      Y = 0.00000      Z = 0.00000     IS UNIT NUMBER      1
   HOLE NUMBER     51       AT X = -15.374      Y = -4.1194      Z = 0.00000     IS UNIT NUMBER      1
   HOLE NUMBER     52       AT X = -13.784      Y = -7.9580      Z = 0.00000     IS UNIT NUMBER      1
   HOLE NUMBER     53       AT X = -11.254      Y = -11.254      Z = 0.00000     IS UNIT NUMBER      1
   HOLE NUMBER     54       AT X = -7.9580      Y = -13.784      Z = 0.00000     IS UNIT NUMBER      5
   HOLE NUMBER     55       AT X = -4.1194      Y = -15.374      Z = 0.00000     IS UNIT NUMBER      5
   HOLE NUMBER     56       AT X = 0.00000      Y = -15.916      Z = 0.00000     IS UNIT NUMBER      5
   HOLE NUMBER     57       AT X =  4.1194      Y = -15.374      Z = 0.00000     IS UNIT NUMBER      5
   HOLE NUMBER     58       AT X =  7.9580      Y = -13.784      Z = 0.00000     IS UNIT NUMBER      5
   HOLE NUMBER     59       AT X =  11.254      Y = -11.254      Z = 0.00000     IS UNIT NUMBER      5
   HOLE NUMBER     60       AT X =  13.784      Y = -7.9580      Z = 0.00000     IS UNIT NUMBER      5
   HOLE NUMBER     61       AT X =  15.374      Y = -4.1194      Z = 0.00000     IS UNIT NUMBER      5
 2 CYLINDER         4  1  RADIUS =  22.660     +Z =  73.025     -Z = -38.100     CENTERLINE IS AT  X = 0.00000      Y = 0.00000
 3 CYLINDER         6  1  RADIUS =  53.230     +Z =  73.025     -Z = -38.100     CENTERLINE IS AT  X = 0.00000      Y = 0.00000
 4 CYLINDER         4  1  RADIUS =  54.500     +Z =  73.025     -Z = -38.100     CENTERLINE IS AT  X = 0.00000      Y = 0.00000
 5 CUBOID           3  1      +X =  100.00     -X = -100.00     +Y =  100.00     -Y = -100.00     +Z =  200.00     -Z = -100.00
```

TRIGA BENCHMARK CORE 132
VOLUMES FOR THOSE UNITS UTILIZED IN THIS PROBLEM

UNIT	REGION	GEOMETRY REGION	VOLUME	CUMULATIVE VOLUME
1	1	1	1.20660E+01 CM**3	1.20660E+01 CM**3
	2	2	3.85501E+02 CM**3	3.97567E+02 CM**3
	3	3	1.84195E+02 CM**3	5.81762E+02 CM**3
	4	4	2.42853E+00 CM**3	5.84191E+02 CM**3
	5	5	9.41431E+01 CM**3	6.78334E+02 CM**3
	6	6	1.19328E+02 CM**3	7.97662E+02 CM**3
2	1	7	1.20660E+01 CM**3	1.20660E+01 CM**3
	2	8	3.19755E+02 CM**3	3.31821E+02 CM**3
	3	9	5.53033E+00 CM**3	3.37351E+02 CM**3
	4	10	3.31821E+01 CM**3	3.70533E+02 CM**3
	5	11	3.31821E+02 CM**3	7.02354E+02 CM**3
	6	12	2.76514E+00 CM**3	7.05119E+02 CM**3
	7	13	1.10598E+01 CM**3	7.16179E+02 CM**3
	8	14	2.40722E+02 CM**3	9.56901E+02 CM**3
	9	15	1.07731E+02 CM**3	1.06463E+03 CM**3
3	1	16	2.75234E+02 CM**3	2.75234E+02 CM**3
	2	17	4.58725E+00 CM**3	2.79821E+02 CM**3
	3	18	2.75234E+01 CM**3	3.07345E+02 CM**3
	4	19	2.75234E+02 CM**3	5.82579E+02 CM**3
	5	20	2.29358E+00 CM**3	5.84873E+02 CM**3
	6	21	9.17377E+00 CM**3	5.94046E+02 CM**3
	7	22	1.71372E+02 CM**3	7.65418E+02 CM**3
	8	23	1.14392E+02 CM**3	8.79810E+02 CM**3
	9	24	1.39099E+01 CM**3	8.93720E+02 CM**3
	10	25	3.66565E+02 CM**3	1.26029E+03 CM**3
4	1	26	5.84191E+02 CM**3	5.84191E+02 CM**3
	2	27	9.41431E+01 CM**3	6.78334E+02 CM**3
	3	28	1.19328E+02 CM**3	7.97662E+02 CM**3
5	1	29	7.97662E+02 CM**3	7.97662E+02 CM**3
10	1	30	1.19971E+05 CM**3	1.69892E+05 CM**3
	2	31	9.36731E+03 CM**3	1.79259E+05 CM**3
	3	32	8.09919E+05 CM**3	9.89178E+05 CM**3
	4	33	4.77641E+04 CM**3	1.03694E+06 CM**3
	5	34	1.09631E+07 CM**3	1.20000E+07 CM**3

UNIT	USES	REGION	MIXTURE	TOTAL VOLUME
1	40	1	5	4.82639E+02 CM**3
		2	1	1.54200E+04 CM**3
		3	6	7.36782E+03 CM**3
		4	9	9.71411E+01 CM**3
		5	2	3.76573E+03 CM**3
		6	10	4.77313E+03 CM**3
2	3	1	5	3.61979E+01 CM**3
		2	7	9.59264E+02 CM**3
		3	9	1.65910E+01 CM**3
		4	2	9.95462E+01 CM**3
		5	8	9.95462E+02 CM**3
		6	9	8.29541E+00 CM**3
		7	2	3.31794E+01 CM**3
		8	9	7.22167E+02 CM**3
		9	2	3.23192E+02 CM**3
3	1	1	9	2.75234E+02 CM**3
		2	9	4.58725E+00 CM**3
		3	4	2.75234E+01 CM**3
		4	8	2.75234E+02 CM**3
		5	9	2.29358E+00 CM**3
		6	4	9.17377E+00 CM**3
		7	9	1.71372E+02 CM**3
		8	4	1.14392E+02 CM**3
		9	3	1.39099E+01 CM**3
		10	4	3.66565E+02 CM**3
4	1	1	9	5.84191E+02 CM**3
		2	4	9.41431E+01 CM**3
		3	11	1.19328E+02 CM**3
5	16	1	3	1.27626E+04 CM**3
10	1	1	3	1.19971E+05 CM**3
		2	4	9.36731E+03 CM**3
		3	6	8.09919E+05 CM**3
		4	4	4.77641E+04 CM**3
		5	3	1.09631E+07 CM**3

TOTAL MIXTURE VOLUMES

MIXTURE	TOTAL VOLUME	MASS(G)
1	1.54200E+04 CM**3	9.44217E+04

2	4.22164E+03 CM**3	3.34354E+04
3	1.10958E+07 CM**3	1.10755E+07
4	5.77432E+04 CM**3	1.56022E+05
5	5.18837E+02 CM**3	3.36725E+03
6	8.17287E+05 CM**3	1.30767E+06
7	9.59264E+02 CM**3	5.87369E+03
8	1.27070E+03 CM**3	3.15139E+03
9	1.88187E+03 CM**3	1.88182E-17
10	4.77313E+03 CM**3	4.76440E+03
11	1.19328E+02 CM**3	1.19110E+02

```
      ********************************************************************************************************************************
      ***                                                                                                                          ***
      ***                                        BIASING INFORMATION                                                               ***
      ***                                                                                                                          ***
      ***     A DEFAULT WEIGHT OF    0.500 WILL BE USED FOR ALL BIAS ID'S.                                                         ***
      ***                                                                                                                          ***
      ********************************************************************************************************************************

                           ........    0 IO'S WERE USED IN KENO-V BEFORE TRACKING       ........

                           ........  0.01917 MINUTES WERE USED PROCESSING DATA.        ........

VOLUME FRACTION OF FISSILE MATERIAL IN THE CORE= 1.36494E-03

START TYPE 0 WAS USED.

THE NEUTRONS WERE STARTED UNIFORMLY THROUGHOUT THE ENTIRE VOLUME DEFINED BY THE OUTERMOST GEOMETRY CARD.
THE FLAG TO START NEUTRONS IN THE REFLECTOR WAS TURNED OFF

KENO MESSAGE NUMBER K5-105     ***** WARNING, ONLY  286 INDEPENDENT STARTING POSITIONS WERE GENERATED.  *****

  714 ADDITIONAL STARTING POINTS WERE PICKED FROM THE INITAL DISTRIBUTION.

0.45383 MINUTES WERE REQUIRED FOR STARTING.   TOTAL ELAPSED TIME IS 0.48000 MINUTES.
```

TRIGA BENCHMARK CORE 132

GENERATION	GENERATION K-EFFECTIVE	ELAPSED TIME MINUTES	AVERAGE K-EFFECTIVE	AVG K-EFF DEVIATION	MATRIX K-EFFECTIVE	MATRIX K-EFF DEVIATION
1	9.90066E-01	6.69167E-01	1.00000E+00	0.00000E+00	0.00000E+00	0.00000E+00
2	9.54729E-01	8.73333E-01	1.00000E+00	0.00000E+00	0.00000E+00	0.00000E+00
3	1.01630E+00	1.06100E+00	1.01630E+00	0.00000E+00	0.00000E+00	0.00000E+00
4	1.02972E+00	1.25133E+00	1.02301E+00	6.71005E-03	0.00000E+00	0.00000E+00
5	1.00278E+00	1.43900E+00	1.01627E+00	7.77803E-03	0.00000E+00	0.00000E+00
6	1.01937E+00	1.64600E+00	1.01704E+00	5.55454E-03	0.00000E+00	0.00000E+00
7	1.03377E+00	1.87667E+00	1.02039E+00	5.44954E-03	0.00000E+00	0.00000E+00
8	1.00198E+00	2.09817E+00	1.01732E+00	5.40470E-03	0.00000E+00	0.00000E+00
9	1.01694E+00	2.31883E+00	1.01726E+00	4.56813E-03	0.00000E+00	0.00000E+00
10	1.01818E+00	2.57600E+00	1.01738E+00	3.95778E-03	0.00000E+00	0.00000E+00
11	1.00697E+00	2.77367E+00	1.01622E+00	3.67718E-03	0.00000E+00	0.00000E+00
12	9.96509E-01	2.97333E+00	1.01425E+00	3.83451E-03	0.00000E+00	0.00000E+00
13	1.00385E+00	3.17100E+00	1.01331E+00	3.59514E-03	0.00000E+00	0.00000E+00
14	9.81735E-01	3.38517E+00	1.01067E+00	4.20624E-03	0.00000E+00	0.00000E+00
15	1.00748E+00	3.56650E+00	1.01043E+00	3.87695E-03	0.00000E+00	0.00000E+00
16	1.03674E+00	3.75050E+00	1.01231E+00	4.05174E-03	0.00000E+00	0.00000E+00
17	1.03622E+00	3.93633E+00	1.01390E+00	4.09493E-03	0.00000E+00	0.00000E+00
18	1.03617E+00	4.15150E+00	1.01529E+00	4.07554E-03	0.00000E+00	0.00000E+00
19	1.06124E+00	4.36833E+00	1.01800E+00	4.68619E-03	0.00000E+00	0.00000E+00
20	1.05429E+00	4.57250E+00	1.02001E+00	4.85647E-03	0.00000E+00	0.00000E+00
21	1.04751E+00	4.77033E+00	1.02146E+00	4.81638E-03	0.00000E+00	0.00000E+00
22	1.01609E+00	4.98817E+00	1.02119E+00	4.57711E-03	0.00000E+00	0.00000E+00
KENO MESSAGE NUMBER K5-132	WARNING....ONLY	998 INDEPENDENT FISSION POINTS WERE GENERATED				
23	9.92956E-01	5.20050E+00	1.01985E+00	4.55660E-03	0.00000E+00	0.00000E+00
24	1.00897E+00	5.42200E+00	1.01935E+00	4.37258E-03	0.00000E+00	0.00000E+00
25	1.00615E+00	5.64183E+00	1.01878E+00	4.21738E-03	0.00000E+00	0.00000E+00
26	1.01045E+00	5.86050E+00	1.01843E+00	4.05272E-03	0.00000E+00	0.00000E+00
27	1.03570E+00	6.07017E+00	1.01912E+00	3.94811E-03	0.00000E+00	0.00000E+00
28	1.02711E+00	6.34667E+00	1.01943E+00	3.80563E-03	0.00000E+00	0.00000E+00
29	1.00323E+00	6.53800E+00	1.01883E+00	3.71080E-03	0.00000E+00	0.00000E+00
30	1.01250E+00	6.72100E+00	1.01860E+00	3.58296E-03	0.00000E+00	0.00000E+00
31	1.03971E+00	6.93800E+00	1.01933E+00	3.53295E-03	0.00000E+00	0.00000E+00
32	1.05112E+00	7.13933E+00	1.02039E+00	3.57380E-03	0.00000E+00	0.00000E+00
33	1.05016E+00	7.34167E+00	1.02135E+00	3.58750E-03	0.00000E+00	0.00000E+00
34	1.03762E+00	7.58800E+00	1.02186E+00	3.51056E-03	0.00000E+00	0.00000E+00
35	1.03970E+00	7.77833E+00	1.02240E+00	3.44521E-03	0.00000E+00	0.00000E+00
36	1.02001E+00	7.96517E+00	1.02233E+00	3.34309E-03	0.00000E+00	0.00000E+00
37	9.98559E-01	8.16650E+00	1.02165E+00	3.31645E-03	0.00000E+00	0.00000E+00
38	1.04102E+00	8.35317E+00	1.02219E+00	3.26760E-03	0.00000E+00	0.00000E+00
39	9.90868E-01	8.54633E+00	1.02134E+00	3.28887E-03	0.00000E+00	0.00000E+00
40	1.02550E+00	8.73400E+00	1.02145E+00	3.20302E-03	0.00000E+00	0.00000E+00
41	1.02549E+00	8.94733E+00	1.02156E+00	3.12152E-03	0.00000E+00	0.00000E+00
42	1.06222E+00	9.14967E+00	1.02257E+00	3.20781E-03	0.00000E+00	0.00000E+00
43	1.04336E+00	9.34550E+00	1.02308E+00	3.16942E-03	0.00000E+00	0.00000E+00
44	1.04717E+00	9.55617E+00	1.02365E+00	3.14577E-03	0.00000E+00	0.00000E+00
45	1.00780E+00	9.80050E+00	1.02328E+00	3.09379E-03	0.00000E+00	0.00000E+00
46	9.73152E-01	1.00128E+01	1.02214E+00	3.23026E-03	0.00000E+00	0.00000E+00
47	1.04382E+00	1.01942E+01	1.02263E+00	3.19419E-03	0.00000E+00	0.00000E+00
48	1.00242E+00	1.03955E+01	1.02219E+00	3.15471E-03	0.00000E+00	0.00000E+00
49	1.00848E+00	1.06143E+01	1.02190E+00	3.10061E-03	0.00000E+00	0.00000E+00
50	1.05426E+00	1.07983E+01	1.02257E+00	3.10931E-03	0.00000E+00	0.00000E+00
.						
.						
.						
375	1.04806E+00	7.31462E+01	1.01963E+00	1.31907E-03	0.00000E+00	0.00000E+00
376	1.02214E+00	7.33393E+01	1.01963E+00	1.31555E-03	0.00000E+00	0.00000E+00
377	1.03756E+00	7.35197E+01	1.01968E+00	1.31291E-03	0.00000E+00	0.00000E+00
378	1.01067E+00	7.37118E+01	1.01966E+00	1.30963E-03	0.00000E+00	0.00000E+00
379	1.01200E+00	7.38940E+01	1.01964E+00	1.30631E-03	0.00000E+00	0.00000E+00
380	9.67656E-01	7.40917E+01	1.01950E+00	1.31009E-03	0.00000E+00	0.00000E+00
381	9.71851E-01	7.43490E+01	1.01937E+00	1.31266E-03	0.00000E+00	0.00000E+00
382	1.01611E+00	7.45367E+01	1.01936E+00	1.30923E-03	0.00000E+00	0.00000E+00
383	1.04389E+00	7.47280E+01	1.01943E+00	1.30738E-03	0.00000E+00	0.00000E+00
384	1.04429E+00	7.49065E+01	1.01949E+00	1.30557E-03	0.00000E+00	0.00000E+00
385	1.02223E+00	7.50905E+01	1.01950E+00	1.30218E-03	0.00000E+00	0.00000E+00
386	1.01190E+00	7.52808E+01	1.01948E+00	1.29893E-03	0.00000E+00	0.00000E+00
387	9.76853E-01	7.54722E+01	1.01937E+00	1.30028E-03	0.00000E+00	0.00000E+00
388	9.80079E-01	7.56598E+01	1.01927E+00	1.30089E-03	0.00000E+00	0.00000E+00
389	9.99331E-01	7.58558E+01	1.01922E+00	1.29855E-03	0.00000E+00	0.00000E+00
390	1.01031E+00	7.60362E+01	1.01919E+00	1.29540E-03	0.00000E+00	0.00000E+00
391	1.00446E+00	7.62275E+01	1.01916E+00	1.29262E-03	0.00000E+00	0.00000E+00
392	1.01847E+00	7.64097E+01	1.01915E+00	1.28931E-03	0.00000E+00	0.00000E+00
393	1.02785E+00	7.66055E+01	1.01918E+00	1.28620E-03	0.00000E+00	0.00000E+00
394	1.00712E+00	7.67867E+01	1.01915E+00	1.28328E-03	0.00000E+00	0.00000E+00
395	1.00600E+00	7.69817E+01	1.01911E+00	1.28045E-03	0.00000E+00	0.00000E+00
396	1.00266E+00	7.71675E+01	1.01907E+00	1.27788E-03	0.00000E+00	0.00000E+00
397	1.03346E+00	7.73497E+01	1.01911E+00	1.27516E-03	0.00000E+00	0.00000E+00
398	9.94492E-01	7.75383E+01	1.01904E+00	1.27345E-03	0.00000E+00	0.00000E+00
399	1.00279E+00	7.77268E+01	1.01900E+00	1.27090E-03	0.00000E+00	0.00000E+00
400	9.95518E-01	7.79228E+01	1.01895E+00	1.26907E-03	0.00000E+00	0.00000E+00
401	1.00146E+00	7.81105E+01	1.01890E+00	1.26665E-03	0.00000E+00	0.00000E+00
402	1.01212E+00	7.83008E+01	1.01888E+00	1.26359E-03	0.00000E+00	0.00000E+00
403	1.03095E+00	7.84848E+01	1.01891E+00	1.26080E-03	0.00000E+00	0.00000E+00

KENO MESSAGE NUMBER K5-123 EXECUTION TERMINATED DUE TO COMPLETION OF THE SPECIFIED NUMBER OF GENERATIONS.

TRIGA BENCHMARK CORE 132

LIFETIME = 3.94638E-04 + OR - 1.93196E-06 GENERATION TIME = 5.91769E-05 + OR - 2.84702E-07
NU BAR = 2.42133E+00 + OR - 1.07360E-05 AVERAGE FISSION GROUP = 2.39237E+01 + OR - 1.86297E-03
ENERGY(EV) OF THE AVERAGE LETHARGY CAUSING FISSION = 4.92227E-02 + OR - 8.38504E-05

NO. OF INITIAL GENERATIONS SKIPPED	AVERAGE K-EFFECTIVE	DEVIATION	67 PER CENT CONFIDENCE INTERVAL	95 PER CENT CONFIDENCE INTERVAL	99 PER CENT CONFIDENCE INTERVAL	NUMBER OF HISTORIES
3	1.01892	+ OR - 0.00126	1.01766 TO 1.02018	1.01639 TO 1.02145	1.01513 TO 1.02271	400000
4	1.01889	+ OR - 0.00127	1.01763 TO 1.02016	1.01636 TO 1.02143	1.01509 TO 1.02269	399000
5	1.01893	+ OR - 0.00127	1.01766 TO 1.02020	1.01640 TO 1.02147	1.01513 TO 1.02274	398000
6	1.01893	+ OR - 0.00127	1.01766 TO 1.02021	1.01639 TO 1.02148	1.01512 TO 1.02275	397000
7	1.01890	+ OR - 0.00128	1.01762 TO 1.02017	1.01635 TO 1.02145	1.01507 TO 1.02272	396000
8	1.01894	+ OR - 0.00128	1.01766 TO 1.02022	1.01638 TO 1.02149	1.01511 TO 1.02277	395000
9	1.01894	+ OR - 0.00128	1.01766 TO 1.02022	1.01638 TO 1.02151	1.01510 TO 1.02279	394000
10	1.01895	+ OR - 0.00128	1.01766 TO 1.02023	1.01638 TO 1.02151	1.01509 TO 1.02280	393000
11	1.01898	+ OR - 0.00129	1.01769 TO 1.02026	1.01640 TO 1.02155	1.01511 TO 1.02284	392000
12	1.01903	+ OR - 0.00129	1.01774 TO 1.02032	1.01646 TO 1.02161	1.01517 TO 1.02290	391000
17	1.01911	+ OR - 0.00130	1.01781 TO 1.02041	1.01651 TO 1.02171	1.01521 TO 1.02301	386000
22	1.01879	+ OR - 0.00131	1.01749 TO 1.02010	1.01618 TO 1.02141	1.01488 TO 1.02271	381000
27	1.01890	+ OR - 0.00132	1.01758 TO 1.02022	1.01626 TO 1.02154	1.01494 TO 1.02286	376000
32	1.01879	+ OR - 0.00133	1.01746 TO 1.02013	1.01613 TO 1.02146	1.01480 TO 1.02279	371000
37	1.01865	+ OR - 0.00134	1.01731 TO 1.02000	1.01596 TO 1.02134	1.01462 TO 1.02269	366000
42	1.01851	+ OR - 0.00135	1.01715 TO 1.01986	1.01580 TO 1.02122	1.01445 TO 1.02257	361000
47	1.01845	+ OR - 0.00136	1.01708 TO 1.01981	1.01572 TO 1.02117	1.01436 TO 1.02253	356000
52	1.01826	+ OR - 0.00137	1.01689 TO 1.01962	1.01552 TO 1.02099	1.01415 TO 1.02236	351000
57	1.01844	+ OR - 0.00138	1.01706 TO 1.01981	1.01568 TO 1.02119	1.01430 TO 1.02257	346000
62	1.01859	+ OR - 0.00139	1.01720 TO 1.01998	1.01582 TO 1.02136	1.01443 TO 1.02275	341000
67	1.01838	+ OR - 0.00139	1.01699 TO 1.01977	1.01559 TO 1.02117	1.01420 TO 1.02256	336000
72	1.01831	+ OR - 0.00138	1.01692 TO 1.01969	1.01554 TO 1.02108	1.01415 TO 1.02246	331000
77	1.01810	+ OR - 0.00139	1.01671 TO 1.01949	1.01531 TO 1.02089	1.01392 TO 1.02228	326000
82	1.01786	+ OR - 0.00141	1.01645 TO 1.01927	1.01504 TO 1.02068	1.01363 TO 1.02209	321000
87	1.01782	+ OR - 0.00142	1.01639 TO 1.01924	1.01497 TO 1.02066	1.01355 TO 1.02209	316000
92	1.01811	+ OR - 0.00142	1.01669 TO 1.01952	1.01528 TO 1.02094	1.01386 TO 1.02235	311000

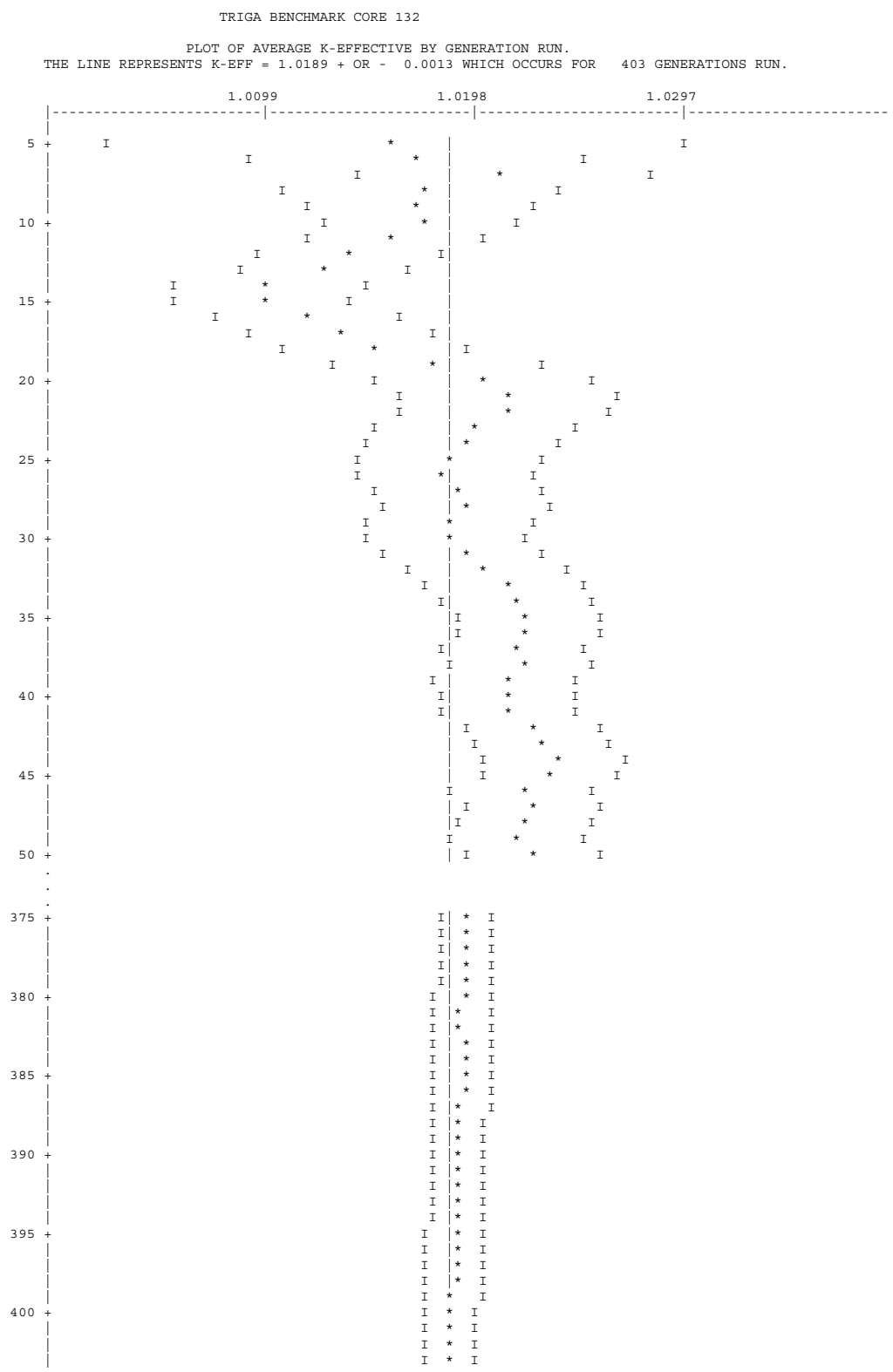
TRIGA BENCHMARK CORE 132
PLOT OF AVERAGE K-EFFECTIVE BY GENERATION RUN.
THE LINE REPRESENTS K-EFF = 1.0189 + OR - 0.0013 WHICH OCCURS FOR 403 GENERATIONS RUN.
1.0099
1.0198
1.0297
5
10
15
20
25
30
35
40
45
50
375
380
385
390
395
400

TRIGA BENCHMARK CORE 132

SKIPPING 3 GENERATIONS

GROUP	FISSION FRACTION	UNIT	REGION	FISSIONS	PERCENT DEVIATION	ABSORPTIONS	PERCENT DEVIATION	LEAKAGE	PERCENT DEVIATION
1	0.0007			6.81725E-04	1.4853	1.04545E-03	1.4928	1.99488E-06	100.0000
2	0.0026			2.67107E-03	0.4956	2.13243E-03	0.4103	0.00000E+00	0.0000
3	0.0029			2.98939E-03	0.3705	1.42941E-03	0.3850	4.14554E-06	70.9381
4	0.0014			1.43671E-03	0.4812	7.46236E-04	0.4800	0.00000E+00	0.0000
5	0.0011			1.08995E-03	0.3473	7.63441E-04	0.3447	0.00000E+00	0.0000
6	0.0013			1.31336E-03	0.2603	1.14364E-03	0.3140	4.51767E-06	70.8510
7	0.0014			1.37623E-03	0.2504	1.31768E-03	0.5203	2.16748E-06	100.0000
8	0.0014			1.42902E-03	0.2662	2.03957E-03	0.5155	0.00000E+00	0.0000
9	0.0020			1.99323E-03	0.2647	4.33175E-03	0.4412	0.00000E+00	0.0000
10	0.0042			4.23199E-03	0.2603	7.67783E-03	0.4133	0.00000E+00	0.0000
11	0.0089			9.10698E-03	0.2651	1.78049E-02	0.3152	0.00000E+00	0.0000
12	0.0125			1.27480E-02	0.3194	1.62040E-02	0.3492	0.00000E+00	0.0000
13	0.0123			1.24965E-02	0.3095	1.77071E-02	0.3515	0.00000E+00	0.0000
14	0.0103			1.04777E-02	0.2955	2.39434E-02	0.2961	0.00000E+00	0.0000
15	0.0020			1.99127E-03	0.3974	2.93190E-03	0.7563	0.00000E+00	0.0000
16	0.0013			1.36728E-03	0.4905	1.80865E-03	0.8180	0.00000E+00	0.0000
17	0.0021			2.15716E-03	0.7060	1.76437E-03	0.8976	0.00000E+00	0.0000
18	0.0029			2.93392E-03	0.7810	1.98813E-03	0.8501	0.00000E+00	0.0000
19	0.0035			3.57281E-03	0.5512	2.71908E-03	0.7157	0.00000E+00	0.0000
20	0.0150			1.52983E-02	0.3606	1.14311E-02	0.3683	0.00000E+00	0.0000
21	0.0084			8.59775E-03	0.5722	5.91742E-03	0.5320	0.00000E+00	0.0000
22	0.0218			2.21960E-02	0.4063	1.56538E-02	0.3761	0.00000E+00	0.0000
23	0.0934			9.51206E-02	0.2289	8.12793E-02	0.1547	0.00000E+00	0.0000
24	0.2190			2.23163E-01	0.1811	2.08073E-01	0.1064	1.08861E-06	100.0000
25	0.1994			2.03202E-01	0.1732	1.94962E-01	0.0978	1.34462E-06	100.0000
26	0.2626			2.67571E-01	0.1754	2.64169E-01	0.0991	0.00000E+00	0.0000
27	0.1057			1.07708E-01	0.2645	1.09243E-01	0.1501	0.00000E+00	0.0000
SYSTEM TOTAL =				1.01892E+00	0.1240	1.00023E+00	0.0424	1.52588E-05	35.9576

ELAPSED TIME 78.48766 MINUTES

RANDOM NUMBER= 88142D71A0C

```
TRIGA BENCHMARK CORE 132

                              FREQUENCY FOR GENERATIONS    4 TO  403
0.9284 TO 0.9365     *
0.9365 TO 0.9446
0.9446 TO 0.9527
0.9527 TO 0.9608     ****
0.9608 TO 0.9689     *******
0.9689 TO 0.9770     ******
0.9770 TO 0.9851     ******************
0.9851 TO 0.9932     ************************
0.9932 TO 1.0013     *********************************
1.0013 TO 1.0094     ******************************************************
1.0094 TO 1.0175     ******************************************************
1.0175 TO 1.0256     *********************************************
1.0256 TO 1.0337     ****************************************
1.0337 TO 1.0418     ***********************************************
1.0418 TO 1.0499     ******************************
1.0499 TO 1.0580     ******************
1.0580 TO 1.0661     *******
1.0661 TO 1.0742     *******
1.0742 TO 1.0823     ****
1.0823 TO 1.0904     *
1.0904 TO 1.0985     *
1.0985 TO 1.1066     *

                              FREQUENCY FOR GENERATIONS  104 TO  403
0.9284 TO 0.9365
0.9365 TO 0.9446
0.9446 TO 0.9527
0.9527 TO 0.9608     ****
0.9608 TO 0.9689     ******
0.9689 TO 0.9770     *****
0.9770 TO 0.9851     **************
0.9851 TO 0.9932     ******************
0.9932 TO 1.0013     ****************************
1.0013 TO 1.0094     ************************************
1.0094 TO 1.0175     ****************************************
1.0175 TO 1.0256     ***********************************
1.0256 TO 1.0337     ******************************
1.0337 TO 1.0418     ******************************
1.0418 TO 1.0499     ************************
1.0499 TO 1.0580     *************
1.0580 TO 1.0661     *****
1.0661 TO 1.0742     ****
1.0742 TO 1.0823     ****
1.0823 TO 1.0904     *
1.0904 TO 1.0985     *
1.0985 TO 1.1066

                              FREQUENCY FOR GENERATIONS  204 TO  403
0.9284 TO 0.9365
0.9365 TO 0.9446
0.9446 TO 0.9527
0.9527 TO 0.9608     ***
0.9608 TO 0.9689     *****
0.9689 TO 0.9770     ****
0.9770 TO 0.9851     ********
0.9851 TO 0.9932     *************
0.9932 TO 1.0013     ***************
1.0013 TO 1.0094     ****************************
1.0094 TO 1.0175     *************************
1.0175 TO 1.0256     ************************
1.0256 TO 1.0337     ********************
1.0337 TO 1.0418     ******************
1.0418 TO 1.0499     ******************
1.0499 TO 1.0580     ***********
1.0580 TO 1.0661     **
1.0661 TO 1.0742     ***
1.0742 TO 1.0823     ***
1.0823 TO 1.0904
1.0904 TO 1.0985     *
1.0985 TO 1.1066


*****************************************************************************************************************************************
*
          CONGRATULATIONS!  YOU HAVE  SUCCESSFULLY TRAVERSED THE PERILOUS PATH THROUGH KENO V IN  78.48766 MINUTES

*****************************************************************************************************************************************
*
```

6.6.6 TRIGA Fuel Cluster Rods

This section contains abbreviated output files from the most reactive nonpoisoned and poisoned basket configurations for TRIGA fuel cluster rods as determined in Section 6.4.6. Also included are maximum reactivity LEU, Figure 6.6.6-3, and revised HEU fuel mass and H/Zr ratio files, Figure 6.6.6-4, used to generate the results in Section 6.4.6.5

Figure 6.6.6-1 TRIGA Fuel Cluster Rods – Base Fuel Configuration - Nonpoisoned Basket

```
PRIMARY MODULE ACCESS AND INPUT RECORD ( SCALE DRIVER - 95/03/29 - 09:06:37 )
   MODULE CSAS25   WILL BE CALLED
     TRIGA - PREF. FLOOD CANISTER
     27GROUPNDF4  INFHOMMEDIUM
     'FUEL
     U-235   1 0.0 2.3348E-04 END
     U-238   1 0.0 1.6469E-05 END
     ZR      1 0.0 5.4438E-03 END
     H       1 0.0 8.5589E-03 END
     H2O     1 0.8402 293.0 END
     'CLAD, BASKET, AND CASK
     SS304   2 1.0 293.0 END
     'CANISTER INTERNAL MODERATOR
     H2O     3 1.0 293.0 END
     'ZIRCONIUM ROD
     ZR      4 1.0 293.0 END
     'GRAPHITE REFLETOR
     C       5 1.0 293.0 END
     'LEAD SHIELD
     PB      6 1.0 293.0 END
     'NEUTRON SHIELD
     H2O     7 1E-20 293.0 END
     'CASK EXTERNAL MATERIAL
     H2O     8 1E-20 293.0 END
     'END FITTING FOR FUEL ELEMENT
     SS304   9 0.337137 293.0 END
     H2O     9 1E-20 293.0 END
     'SECOND FUEL MATERIAL FOR UN-CANISTERED
     U-235   10 0.0 9.052980E-4 END
     U-238   10 0.0 3.849480E-4 END
     ZR      10 0.0 3.446510E-2 END
     H       10 0.0 5.514420E-2 END
     'SECOND END-FITTING MATERIAL FOR UN-CANISTERED FUEL
     SS304   11 0.337137 293.0 END
     H2O     11 1E-20 293.0 END
     'CASK INTERIOR MODERATOR MATERIAL
     H2O  12 1.0E-20 293.0 END
     'NEUTRON ABSORBER PLATE WITH BORON
     FE     13 DEN=7.76 0.6717 293.0 END
     C      13 DEN=7.76 0.0001 293.0 END
     SI     13 DEN=7.76 0.0033 293.0 END
     MN     13 DEN=7.76 0.0060 293.0 END
     P      13 DEN=7.75 0.0001 293.0 END
     CR     13 DEN=7.76 0.1849 293.0 END
     NI     13 DEN=7.76 0.1233 293.0 END
     B-10   13 DEN=7.76 0.0073 293.0 END
     B-11   13 DEN=7.76 0.0007 293.0 END
     N      13 DEN=7.76 0.0017 293.0 END
     'NEUTRON ABSORBER PLATE WITHOUT BORON
     FE     14 DEN=7.76 0.6717 293.0 END
     C      14 DEN=7.76 0.0001 293.0 END
     SI     14 DEN=7.76 0.0033 293.0 END
     MN     14 DEN=7.76 0.0060 293.0 END
     P      14 DEN=7.75 0.0001 293.0 END
     CR     14 DEN=7.76 0.1849 293.0 END
     NI     14 DEN=7.76 0.1233 293.0 END
     N      14 DEN=7.76 0.0017 293.0 END
     'FUEL FOR RODS
     U-235   21 0.0 1.46137E-03 END
     U-238   21 0.0 1.03065E-04 END
     ZR      21 0.0 3.40686E-02 END
     H       21 0.0 5.35638E-02 END
     'CLAD INCOLOY
     NI              22       0 0.028516 END
     FE              22       0 0.033820 END
     CR              22       0 0.021151 END
     C               22       0 0.000399 END
     MN              22       0 0.001306 END
     S               22       0 0.000022 END
     SI              22       0 0.001703 END
     CU              22       0 0.000560 END
     AL              22       0 0.000266 END
     TI              22       0 0.000150 END
     'CASK INTERNAL MODERATOR
     H2O  23 1.0E-20 293.0 END
     'LEAD SHIELD
     PB      26 1.0 293.0 END
     'NEUTRON SHIELD
     H2O     27 1E-20 293.0 END
     'CASK EXTERNAL MATERIAL
     H2O     28 1E-20 293.0 END
     'END FITTING FOR FUEL ELEMENT
     SS304  29 .4968 293.0 END
     H2O     29 DEN=.5031 1.0E-20 293.0 END
     ' BASKET, AND CASK NEED TO LOOK AT HOW THIS IS USED
     'AL FUEL HOLDER
     AL 30 1.0 293.0 END
```

```
END COMP
MORE DATA
RES=21  CYLINDER 0.6477 DAN(21)=.38879
END MORE
TRIGA - PREF. FLOOD CANISTER
READ PARAM TME=170.0 GEN=203 NPG=500 RUN=YES PLT=NO
TBA=2.0 END PARAM
READ GEOM
UNIT 1
COM='TRIGA FUEL (SMEARED)'
CYLINDER 1 1 3.9623 60.959 0.001
UNIT 5
COM='3.38 in Width / 0.28 in Thickness DIVIDER CENTER STACK (SEALED)'
CUBOID   2 1 2P4.2672 0.7112 0.0 +74.29 -8.255
UNIT 6
COM='3.38 in Width / 0.24 in Thickness DIVIDER OUTSIDE STACK (SEALED)'
CUBOID   2 1 2P4.2672 0.6096 0.0 +74.29 -8.255
UNIT 7
COM='SEALED CANISTER'
CYLINDER  3 1 3.9624 +60.96 0.0
HOLE      1  0.0 0.0 0.0
CYLINDER  2 1 4.1275 +63.50 -1.27
CYLINDER 12 1 4.1275 +74.29 -8.255
UNIT 10
COM='TRIGA ELEMENTS IN Top of 3.38 in x 3.38 in OPENING (SEALED)'
CUBOID    12 1 2P4.2672 2P4.2672 +74.29 -8.255
HOLE 7    0.0 0.1397 0.0
UNIT 11
COM='TRIGA ELEMENTS IN Bottom of 3.38 in x 3.38 in OPENING (SEALED)'
CUBOID    12 1 2P4.2672 2P4.2672 +74.29 -8.255
HOLE 7    0.0 -0.1397 0.0
UNIT 12
COM='TRIGA ELEMENTS IN Bottom Right of 3.38 in x 3.38 in OPENING (SEALED)'
CUBOID    12 1 2P4.2672 2P4.2672 +74.29 -8.255
HOLE 7    +0.1397 -0.1397 0.0
UNIT 13
COM='TRIGA ELEMENTS IN Top Right of 3.38 in x 3.38 in OPENING (SEALED)'
CUBOID    12 1 2P4.2672 2P4.2672 +74.29 -8.255
HOLE 7    +0.1397 +0.1397 0.0
UNIT 14
COM='TRIGA ELEMENTS IN Bottom Left of 3.38 in x 3.38 in OPENING (SEALED)'
CUBOID    12 1 2P4.2672 2P4.2672 +74.29 -8.255
HOLE 7    -0.1397 -0.1397 0.0
UNIT 15
COM='TRIGA ELEMENTS IN Top Left of 3.38 in x 3.38 in OPENING (SEALED)'
CUBOID    12 1 2P4.2672 2P4.2672 +74.29 -8.255
HOLE 7    -0.1397 +0.1397 0.0
UNIT 16
COM='TRIGA BASKET 3.38 in x 3.38 in CENTER OPENING (SEALED)'
CUBOID    12 1 2P4.2672 2P4.2672 +74.29 -8.255
UNIT 17
COM='HORIZONTAL X-X POISON SHEET + WATER'
CUBOID  13 1 2P3.8227 0.3175 0.0 +73.02 -6.985
CUBOID  14 1 2P4.1402 0.3175 0.0 +73.02 -6.985
CUBOID  12 1 2P4.2672 0.3175 0.0 +74.29 -8.255
UNIT 18
COM='HORIZONTAL X-X POISON SHEET + WATER'
CUBOID  13 1 2P3.8227 0.3175 0.0 2P34.163
CUBOID  14 1 2P4.1402 0.3175 0.0 2P34.163
CUBOID  12 1 2P4.2672 0.3175 0.0 2P36.703
UNIT 20
COM='CENTER COLUMN OF THREE OPENINGS w/ 0.28 in plate (SEALED)'
ARRAY 1  -4.2672 -13.5128 -8.255
REPLICATE 2 1 4R0.7112 2R0.0 1
UNIT 21
COM='LEFT OUTSIDE COLUMN OF TWO OPENINGS w/ 0.12 in plate (SEALED)'
ARRAY 2  -4.2672 -8.8392 -8.255
REPLICATE 2 1 0.0 0.3048 2R0.3048 2R0.0 1
UNIT 22
COM='RIGHT OUTSIDE COLUMN OF TWO OPENINGS w/ 0.12 in plate (SEALED)'
ARRAY 3  -4.2672 -8.8392 -8.255
REPLICATE 2 1 0.3048 0.0 2R0.3048 2R0.0 1
UNIT 30
COM='NAC-LWT TRIGA BASKET (SEALED)'
CYLINDER 12  1 17.1 +74.29 -8.255
HOLE 20 0.0 0.0 0.0
HOLE 21  -9.2457 0.0 0.0
HOLE 22  +9.2457 0.0 0.0
CYLINDER 2  1 18.9103 +74.93 -8.890
CYLINDER 6  1 33.4645 +74.93 -8.890
CYLINDER 2  1 36.5188 +74.93 -8.890
CYLINDER 7   1 49.2227 +74.93 -8.890
CYLINDER 2  1 49.8221 +74.93 -8.890
CUBOID   8  1 4P121.92 +74.93 -8.890
UNIT 41
COM='TRIGA FUEL ELEMENT'
CYLINDER  21 1 0.6477 2P27.94
CYLINDER  22 1 0.68834 2P27.94
CYLINDER  29 1 0.68834 43.48 -33.04
UNIT 42
COM='HORIZONTAL X-X POISON SHEET + WATER'
CUBOID   13 1 2P3.8227 0.3175 0.0 39.38 -28.94
CUBOID   14 1 2P4.1402 0.3175 0.0 39.38 -28.94
CUBOID   23  1 2P4.2672 0.3175 0.0 43.48 -33.04
UNIT 45
```

```
COM='DIVIDER CENTER STACK'
CUBOID   2 1 2P4.2672 0.7112 0.0 43.48 -33.04
UNIT 46
COM='DIVIDER OUTSIDE STACK'
CUBOID   2 1 2P4.2672 0.6096 0.0 43.48 -33.04
UNIT 410
COM='TRIGA FUEL ELEMENTS IN AL TUBE, CENTERED'
CYLINDER 23 1  0.80518  43.48 -33.04
HOLE  41  0.0 0.0 0.0
CYLINDER 30 1 0.9525  43.48 -33.04
UNIT 411
COM='TRIGA FUEL ELEMENTS IN AL TUBE, RIGHT'
CYLINDER 23 1  0.80518  43.48 -33.04
HOLE  41   0.1167  0.0 0.0
CYLINDER 30 1 0.9525  43.48 -33.04
UNIT 412
COM='TRIGA FUEL ELEMENTS IN AL TUBE, LEFT'
CYLINDER 23 1  0.80518  43.48 -33.04
HOLE  41  -0.1167  0.0 0.0
CYLINDER 30 1 0.9525  43.48 -33.04
UNIT 413
COM='TRIGA FUEL ELEMENTS IN AL TUBE, TOP'
CYLINDER 23 1  0.80518  43.48 -33.04
HOLE  41  0.0 0.1167 0.0
CYLINDER 30 1 0.9525  43.48 -33.04
UNIT 414
COM='TRIGA FUEL ELEMENTS IN AL TUBE, BOTTOM'
CYLINDER 23 1  0.80518  43.48 -33.04
HOLE  41  0.0 -0.1167 0.0
CYLINDER 30 1 0.9525  43.48 -33.04
UNIT 415
COM='TRIGA FUEL ELEMENTS IN AL TUBE, TOP RIGHT'
CYLINDER 23 1  0.80518  43.48 -33.04
HOLE  41  0.0826  0.0826 0.0
CYLINDER 30 1 0.9525  43.48 -33.04
UNIT 416
COM='TRIGA FUEL ELEMENTS IN AL TUBE, TOP LEFT'
CYLINDER 23 1  0.80518  43.48 -33.04
HOLE  41  -0.0826 0.0826 0.0
CYLINDER 30 1 0.95250  43.48 -33.04
UNIT 417
COM='TRIGA FUEL ELEMENTS IN AL TUBE, BOTTOM RIGHT'
CYLINDER 23 1  0.80518  43.48 -33.04
HOLE  41  0.0826  -0.0826 0.0
CYLINDER 30 1 0.95250  43.48 -33.04
UNIT 418
COM='TRIGA FUEL ELEMENTS IN AL TUBE, BOTTOM LEFT'
CYLINDER 23 1  0.80518  43.48 -33.04
HOLE  41  -0.0826 -0.0826 0.0
CYLINDER 30 1 0.95250  43.48 -33.04

UNIT 420
COM='AL TUBES WITH TRIGA FUEL, IN FUEL INSERT, CENTER OPENING'
CUBOID    23 1 4P4.1529 43.48 -33.04
HOLE           415  -2.8576 -2.8576       0
HOLE           413  -0.9525 -2.8576       0
HOLE           413   0.9525 -2.8576       0
HOLE           416   2.8576 -2.8576       0
HOLE           411  -2.8576 -0.9525      0
HOLE           415  -0.9525 -0.9525      0
HOLE           416   0.9525 -0.9525      0
HOLE           412   2.8576 -0.9525      0
HOLE           411  -2.8576  0.9525      0
HOLE           417  -0.9525 0.9525      0
HOLE           418   0.9525 0.9525      0
HOLE           412   2.8576  0.9525      0
HOLE           417  -2.8576  2.8576       0
HOLE           414  -0.9525 2.8576       0
HOLE           414   0.9525 2.8576       0
HOLE           418   2.8576  2.8576       0
CUBOID    23 1 4P4.1529 43.48 -33.04
' CHECK 4.1 CM ABOVE*********************
UNIT 421
COM='AL TUBES WITH TRIGA FUEL, IN FUEL INSERT, BOTTOM OPENING'
CUBOID    23 1 4P4.1529 43.48 -33.04
HOLE           415  -2.8576 -2.8576       0
HOLE           413  -0.9525 -2.8576       0
HOLE           413   0.9525 -2.8576       0
HOLE           416   2.8576 -2.8576       0
HOLE           411  -2.8576 -0.9525      0
HOLE           415  -0.9525 -0.9525      0
HOLE           416   0.9525 -0.9525      0
HOLE           412   2.8576 -0.9525      0
HOLE           411  -2.8576  0.9525      0
HOLE           417  -0.9525 0.9525      0
HOLE           418   0.9525 0.9525      0
HOLE           412   2.8576  0.9525      0
HOLE           417  -2.8576  2.8576       0
HOLE           414  -0.9525 2.8576       0
HOLE           414   0.9525 2.8576       0
HOLE           418   2.8576  2.8576       0
CUBOID    23 1 4P4.1529 43.48 -33.04
' CHECK 4.1 CM ABOVE*********************
UNIT 422
COM='AL TUBES WITH TRIGA FUEL, IN FUEL INSERT, TOP OPENING'
```

```
CUBOID    23 1 4P4.1529 43.48 -33.04
HOLE           415  -2.8576 -2.8576       0
HOLE           413  -0.9525 -2.8576       0
HOLE           413   0.9525 -2.8576       0
HOLE           416   2.8576 -2.8576       0
HOLE           411  -2.8576 -0.9525      0
HOLE           415  -0.9525 -0.9525      0
HOLE           416   0.9525 -0.9525      0
HOLE           412   2.8576 -0.9525      0
HOLE           411  -2.8576  0.9525      0
HOLE           417  -0.9525 0.9525      0
HOLE           418   0.9525 0.9525      0
HOLE           412   2.8576  0.9525      0
HOLE           417  -2.8576  2.8576       0
HOLE           414  -0.9525 2.8576       0
HOLE           414   0.9525 2.8576       0
HOLE           418   2.8576  2.8576       0
CUBOID    23 1 4P4.1529 43.48 -33.04
' CHECK 4.1 CM ABOVE*********************
UNIT 423
COM='AL TUBES WITH TRIGA FUEL, IN FUEL INSERT, BOTTOM LEFT OPENING'
CUBOID    23 1 4P4.1529 43.48 -33.04
HOLE           415  -2.8576 -2.8576       0
HOLE           413  -0.9525 -2.8576       0
HOLE           413   0.9525 -2.8576       0
HOLE           416   2.8576 -2.8576       0
HOLE           411  -2.8576 -0.9525      0
HOLE           415  -0.9525 -0.9525      0
HOLE           416   0.9525 -0.9525      0
HOLE           412   2.8576 -0.9525      0
HOLE           411  -2.8576  0.9525      0
HOLE           417  -0.9525 0.9525      0
HOLE           418   0.9525 0.9525      0
HOLE           412   2.8576  0.9525      0
HOLE           417  -2.8576  2.8576       0
HOLE           414  -0.9525 2.8576       0
HOLE           414   0.9525 2.8576       0
HOLE           418   2.8576  2.8576       0
CUBOID    23 1 4P4.1529 43.48 -33.04
' CHECK 4.1 CM ABOVE*********************
UNIT 424
COM='AL TUBES WITH TRIGA FUEL, IN FUEL INSERT, TOP LEFT OPENING'
CUBOID    23 1 4P4.1529 43.48 -33.04
HOLE           415  -2.8576 -2.8576       0
HOLE           413  -0.9525 -2.8576       0
HOLE           413   0.9525 -2.8576       0
HOLE           416   2.8576 -2.8576       0
HOLE           411  -2.8576 -0.9525      0
HOLE           415  -0.9525 -0.9525      0
HOLE           416   0.9525 -0.9525      0
HOLE           412   2.8576 -0.9525      0
HOLE           411  -2.8576  0.9525      0
HOLE           417  -0.9525 0.9525      0
HOLE           418   0.9525 0.9525      0
HOLE           412   2.8576  0.9525      0
HOLE           417  -2.8576  2.8576       0
HOLE           414  -0.9525 2.8576       0
HOLE           414   0.9525 2.8576       0
HOLE           418   2.8576  2.8576       0
CUBOID    23 1 4P4.1529 43.48 -33.04
' CHECK 4.1 CM ABOVE*********************
UNIT 425
COM='AL TUBES WITH TRIGA FUEL, IN FUEL INSERT, BOTTOM RIGHT OPENING'
CUBOID    23 1 4P4.1529 43.48 -33.04
HOLE           415  -2.8576 -2.8576       0
HOLE           413  -0.9525 -2.8576       0
HOLE           413   0.9525 -2.8576       0
HOLE           416   2.8576 -2.8576       0
HOLE           411  -2.8576 -0.9525      0
HOLE           415  -0.9525 -0.9525      0
HOLE           416   0.9525 -0.9525      0
HOLE           412   2.8576 -0.9525      0
HOLE           411  -2.8576  0.9525      0
HOLE           417  -0.9525 0.9525      0
HOLE           418   0.9525 0.9525      0
HOLE           412   2.8576  0.9525      0
HOLE           417  -2.8576  2.8576       0
HOLE           414  -0.9525 2.8576       0
HOLE           414   0.9525 2.8576       0
HOLE           418   2.8576  2.8576       0
CUBOID    23 1 4P4.1529 43.48 -33.04
' CHECK 4.1 CM ABOVE*********************
UNIT 426
COM='AL TUBES WITH TRIGA FUEL, IN FUEL INSERT, TOP RIGHT OPENING'
CUBOID    23 1 4P4.1529 43.48 -33.04
HOLE           415  -2.8576 -2.8576       0
HOLE           413  -0.9525 -2.8576       0
HOLE           413   0.9525 -2.8576       0
HOLE           416   2.8576 -2.8576       0
HOLE           411  -2.8576 -0.9525      0
HOLE           415  -0.9525 -0.9525      0
HOLE           416   0.9525 -0.9525      0
HOLE           412   2.8576 -0.9525      0
HOLE           411  -2.8576  0.9525      0
HOLE           417  -0.9525 0.9525      0
```

```
HOLE           418   0.9525 0.9525      0
HOLE           412   2.8576  0.9525      0
HOLE           417  -2.8576  2.8576       0
HOLE           414  -0.9525 2.8576       0
HOLE           414   0.9525 2.8576       0
HOLE           418   2.8576  2.8576       0
CUBOID    23 1 4P4.1529 43.48 -33.04
UNIT 430
COM='FUEL INSERT IN, CENTER OPENING'
CUBOID    23 1 4P4.2672 43.48 -33.04
UNIT 431
COM='FUEL INSERT IN, BOTTOM OPENING'
CUBOID    23 1 4P4.2672 43.48 -33.04
HOLE 421   0.0 -0.1143 0.0
UNIT 432
COM='FUEL INSERT IN, TOP OPENING'
CUBOID    23 1 4P4.2672 43.48 -33.04
HOLE 422   0.0 0.1143 0.0
UNIT 433
COM='FUEL INSERT IN, BOTTOM LEFT OPENING'
CUBOID    23 1 4P4.2672 43.48 -33.04
HOLE 423   -0.1143 -0.1143 0.0
UNIT 434
COM='FUEL INSERT IN, TOP LEFT OPENING'
CUBOID    23 1 4P4.2672 43.48 -33.04
HOLE 424   -0.1143 0.1143 0.0
UNIT 435
COM='FUEL INSERT IN, BOTOM RIGHT OPENING'
CUBOID    23 1 4P4.2672 43.48 -33.04
HOLE 425   0.1143 -0.1143 0.0
UNIT 436
COM='FUEL INSERT IN, TOP RIGHT OPENING'
CUBOID    23 1 4P4.2672 43.48 -33.04
HOLE 426   0.1143 0.1143 0.0
UNIT 440
COM='CENTER COLUMN OF THREE OPENINGS'
ARRAY 41  -4.2672 -13.5128 -33.04
REPLICATE 2 1 4R0.7112 2R0.0 1
UNIT 441
COM='LEFT OUTSIDE COLUMN OF TWO OPENINGS'
ARRAY 42  -4.2672 -8.8392 -33.04
REPLICATE 2 1 0.0 0.3408 2R0.3408 2R0.0 1
UNIT 442
COM='RIGHT OUTSIDE COLUMN OF TWO OPENINGS'
ARRAY 43  -4.2672 -8.8392 -33.04
REPLICATE 2 1 0.3408 0.0 2R0.3408 2R0.0 1
UNIT 450
COM='28 TRIGA FUEL ELEMENTS IN EACH LWT BASKET'
CYLINDER 23  1 17.1500 43.485 -33.045
HOLE 440   0.0    0.0 0.0
HOLE 441  -9.2457 0.0 0.0
HOLE 442  +9.2457 0.0 0.0
CYLINDER 2  1 18.9103 43.485 -33.045
CYLINDER 26   1 33.4645 43.485 -33.045
CYLINDER 2  1 36.5188 43.485 -33.045
CYLINDER 27   1 49.2227 43.485 -33.045
CYLINDER 2  1 49.8221 43.485 -33.045
CUBOID   28   1 4P121.92 43.485 -33.045
UNIT 80
COM='SIMPLIFIED LID STRUCTURE NAC-LWT'
CYLINDER 2 1 36.5188 2P14.1351
CYLINDER 8 1 49.8221 2P14.1351
CUBOID   8 1 4P121.92 2P14.1351
UNIT 81
COM='SIMPLIFIED CASK BOTTOM STRUCTURE NAC-LWT'
CYLINDER 6 1 26.3525 2P3.81
CYLINDER 2 1 36.6188 +13.97 -12.7
CYLINDER 8 1 49.8221 +13.97 -12.7
CUBOID   8 1 4P121.92 +13.97 -12.7
GLOBAL UNIT 82
COM='STACK OF 5 BASKETS IN CASK'
ARRAY  20  -121.92 -121.92 -221.3
END GEOM
READ ARRAY
ARA=1 NUX=1 NUY=5 NUZ=1 FILL 10 5 16 5 11 END FILL
ARA=2 NUX=1 NUY=3 NUZ=1 FILL 13 6 12 END FILL
ARA=3 NUX=1 NUY=3 NUZ=1 FILL 15 6 14 END FILL
ARA=41 NUX=1 NUY=5 NUZ=1 FILL 432 45 430 45 431 END FILL
ARA=42 NUX=1 NUY=3 NUZ=1 FILL 436 46 435 END FILL
ARA=43 NUX=1 NUY=3 NUZ=1 FILL 434 46 433 END FILL
ARA=20 NUX=1 NUY=1 NUZ=7 FILL 81 30 3R450 30 80 END FILL
END ARRAY
READ BOUNDS ALL=MIR END BOUNDS
READ PLOT
TTL='X-Y PLOT OF CASK (CANISTER ELEVATION)'
SCR=YES PIC=MAT LPI=10
UAX=1.0 VDN=-1.0 NAX=800
XUL=-50.0 YUL=50.0 ZUL=149.352
XLR=50.0 YLR=-50.0 ZLR=149.352 END
TTL='X-Y PLOT OF BASKET (CANISTER ELEVATION)'
SCR=YES PIC=MAT LPI=10
UAX=1.0 VDN=-1.0 NAX=800
XUL=-17.2 YUL=17.2 ZUL=149.352
XLR=17.2 YLR=-17.2 ZLR=149.352 END
TTL='X-Y PLOT OF BASKET (CAVITY MID PLANE)'
```

```
   SCR=YES PIC=MAT LPI=10
   UAX=1.0 VDN=-1.0 NAX=800
   XUL=-17.2 YUL=17.2 ZUL=0.0
   XLR=17.2 YLR=-17.2 ZLR=0.0 END
   TTL='X-Y PLOT OF CENTER OPENING (CANISTER ELEVATION)'
   SCR=YES PIC=MAT LPI=10
   UAX=1.0 VDN=-1.0 NAX=800
   XUL=-7.0 YUL=7.0 ZUL=149.352
   XLR=7.0 YLR=-7.0 ZLR=149.352 END
   TTL='X-Y PLOT OF PERIPHERAL OPENING (CANISTER ELEVATION)'
   SCR=YES PIC=MAT LPI=10
   UAX=1.0 VDN=-1.0 NAX=800
   XUL=-7.0 YUL=16.0 ZUL=149.352
   XLR=7.0  YLR=4.0 ZLR=149.352 END
   TTL='Y-Z PLOT OF BASKET (CENTER OF FUEL ELEMENTS,CANISTER ELEVATION)'
   SCR=YES PIC=MAT LPI=10
   VAX=1.0 WDN=-1.0 NAX=800
   XUL=2.12 YUL=-14.0 ZUL=186.69
   XLR=2.12 YLR=-4.5 ZLR=112.014 END
   TTL='Y-Z PLOT OF BASKET (CASK)'
   SCR=YES PIC=MAT LPI=10
   VAX=1.0 WDN=-1.0 NAX=800
   XUL=2.12 YUL=-51 ZUL=220.0
   XLR=2.12 YLR=+51 ZLR=-220.0
   END PLOT
   END DATA

 SECONDARY MODULE O0O008   HAS BEEN CALLED.

 MODULE O0O008   IS FINISHED. COMPLETION CODE     0. CPU TIME USED     1.38 (SECONDS).

 SECONDARY MODULE O0O002   HAS BEEN CALLED.

 MODULE O0O002   IS FINISHED. COMPLETION CODE     0. CPU TIME USED    15.38 (SECONDS).

 SECONDARY MODULE O0O009   HAS BEEN CALLED.

 MODULE O0O009   IS FINISHED. COMPLETION CODE     0. CPU TIME USED   309.67 (SECONDS).

 MODULE CSAS25   IS FINISHED. COMPLETION CODE     0. CPU TIME USED   327.58 (SECONDS).
```

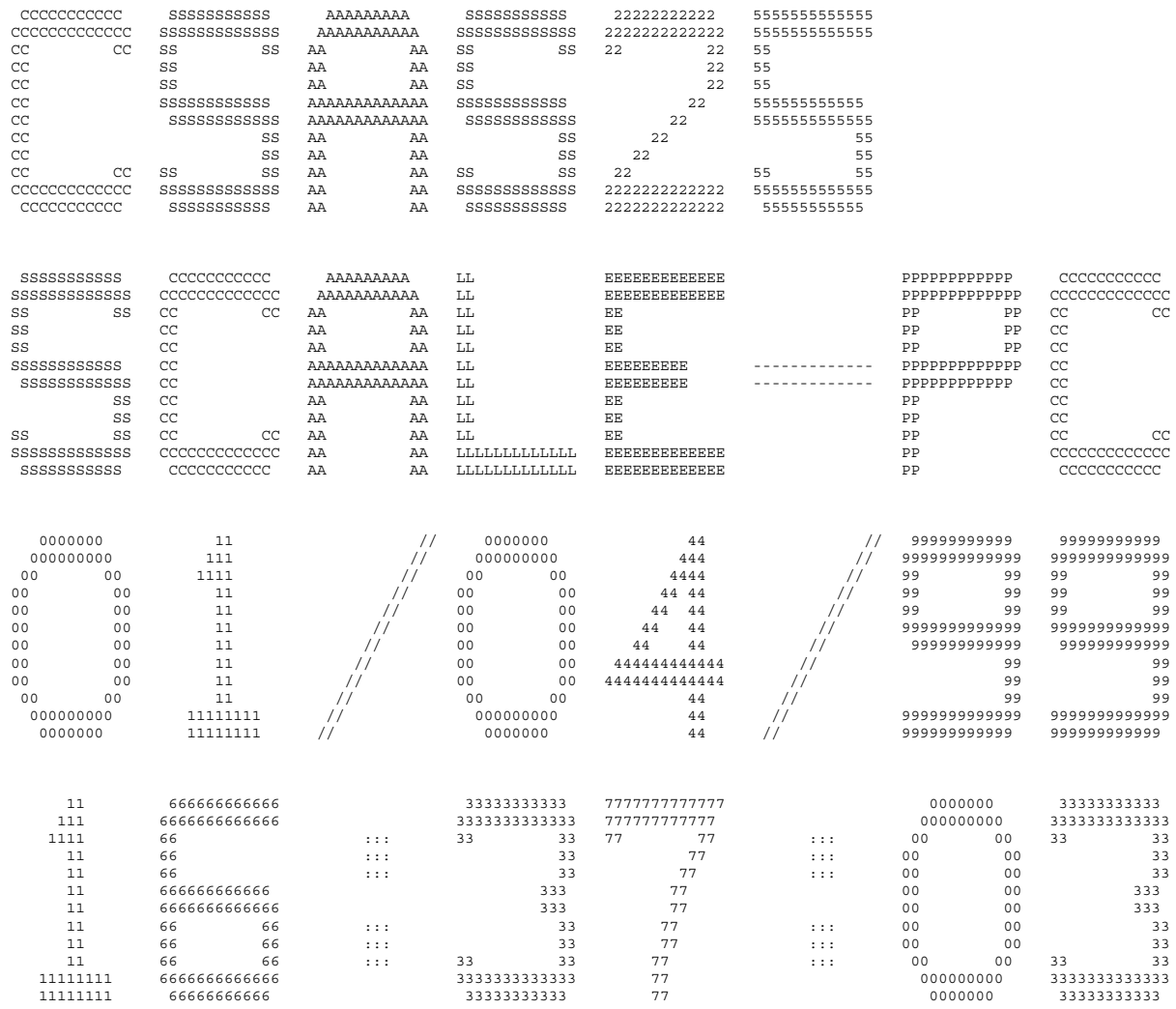
CCCCCCCCCC SSSSSSSSSS AAAAAAAAA SSSSSSSSSS 22222222222 5555555555555
CCCCCCCCCCCC SSSSSSSSSSSS AAAAAAAAAAA SSSSSSSSSSSS 2222222222222 5555555555555
CC CC SS SS AA AA SS SS 22 22 55
CC SS AA AA SS 22 55
CC SS AA AA SS 22 55
CC SSSSSSSSSSS AAAAAAAAAAAAA SSSSSSSSSSS 22 555555555555
CC SSSSSSSSSSS AAAAAAAAAAAAA SSSSSSSSSSS 22 5555555555555
CC SS AA AA SS 22 55
CC SS AA AA SS 22 55
CC CC SS SS AA AA SS SS 22 55 55
CCCCCCCCCCCC SSSSSSSSSSSS AA AA SSSSSSSSSSSS 2222222222222 5555555555555
CCCCCCCCCC SSSSSSSSSS AA AA SSSSSSSSSS 2222222222222 55555555555
SSSSSSSSSS CCCCCCCCCC AAAAAAAAA LL EEEEEEEEEEEE PPPPPPPPPPP CCCCCCCCCC
SSSSSSSSSSS CCCCCCCCCCCC AAAAAAAAAAA LL EEEEEEEEEEEE PPPPPPPPPPPP CCCCCCCCCCCC
SS SS CC CC AA AA LL EE PP PP CC CC
SS CC AA AA LL EE PP PP CC
SS CC AA AA LL EE PP PP CC
SSSSSSSSSSS CC AAAAAAAAAAAAA LL EEEEEEEEE ------------ PPPPPPPPPPPP CC
SSSSSSSSSSS CC AAAAAAAAAAAAA LL EEEEEEEEE ------------ PPPPPPPPPPP CC
SS CC AA AA LL EE PP CC
SS CC AA AA LL EE PP CC
SS SS CC CC AA AA LL EE PP CC CC
SSSSSSSSSSSS CCCCCCCCCCCC AA AA LLLLLLLLLLLL EEEEEEEEEEEE PP CCCCCCCCCCCC
SSSSSSSSSS CCCCCCCCCC AA AA LLLLLLLLLLLL EEEEEEEEEEEE PP CCCCCCCCCC
0000000 11 // 0000000 44 // 99999999999 99999999999
000000000 111 // 000000000 444 // 9999999999999 9999999999999
00 00 1111 // 00 00 4444 // 99 99 99 99
00 00 11 // 00 00 44 44 // 99 99 99 99
00 00 11 // 00 00 44 44 // 99 99 99 99
00 00 11 // 00 00 44 44 // 9999999999999 9999999999999
00 00 11 // 00 00 44 44 // 999999999999 999999999999
00 00 11 // 00 00 444444444444 // 99 99
00 00 11 // 00 00 4444444444444 // 99 99
00 00 11 // 00 00 44 // 99 99
000000000 11111111 // 000000000 44 // 9999999999999 9999999999999
0000000 11111111 // 0000000 44 // 999999999999 999999999999
11 666666666666 33333333333 7777777777777 0000000 33333333333
111 6666666666666 3333333333333 777777777777 000000000 3333333333333
1111 66 ::: 33 33 77 77 ::: 00 00 33 33
11 66 ::: 33 77 ::: 00 00 33
11 66 ::: 33 77 ::: 00 00 33
11 666666666666 333 77 00 00 333
11 6666666666666 333 77 00 00 333
11 66 66 ::: 33 77 ::: 00 00 33
11 66 66 ::: 33 77 ::: 00 00 33
11 66 66 ::: 33 33 77 ::: 00 00 33 33
11111111 6666666666666 3333333333333 77 000000000 3333333333333
11111111 66666666666 33333333333 77 0000000 33333333333

```
 SSSSSSSSSS     CCCCCCCCCC      AAAAAAAAA     LL             EEEEEEEEEEEE                  PPPPPPPPPPP     CCCCCCCCCC
SSSSSSSSSSS   CCCCCCCCCCCC    AAAAAAAAAAA    LL             EEEEEEEEEEEE                  PPPPPPPPPPPP   CCCCCCCCCCCC
SS         SS CC          CC  AA         AA   LL             EE                            PP         PP  CC          CC
SS            CC             AA         AA   LL             EE                            PP         PP  CC
SS            CC             AA         AA   LL             EE                            PP         PP  CC
SSSSSSSSSSS   CC             AAAAAAAAAAAAA   LL             EEEEEEEEE       -------------  PPPPPPPPPPPP  CC
 SSSSSSSSSSS  CC             AAAAAAAAAAAAA   LL             EEEEEEEEE       -------------  PPPPPPPPPPP   CC
          SS  CC             AA         AA   LL             EE                            PP             CC
          SS  CC             AA         AA   LL             EE                            PP             CC
SS        SS  CC          CC  AA         AA   LL             EE                            PP             CC          CC
SSSSSSSSSSS   CCCCCCCCCCCCC   AA         AA   LLLLLLLLLLLLL  EEEEEEEEEEEE                  PP             CCCCCCCCCCCCC
 SSSSSSSSSS    CCCCCCCCCC    AA         AA   LLLLLLLLLLLLL  EEEEEEEEEEEE                  PP              CCCCCCCCCC
```

```
*******************************************************************************
*******************************************************************************
*******************************************************************************
*****                                                                     *****
*****                  PROGRAM VERIFICATION INFORMATION                   *****
*****                                                                     *****
*****                CODE SYSTEM:  SCALE-PC VERSION:  4.3                 *****
*****                                                                     *****
*******************************************************************************
*******************************************************************************
*****                                                                     *****
*****                                                                     *****
*****              PROGRAM:  CSAS                                         *****
*****                                                                     *****
*****        CREATION DATE:  03/08/96                                     *****
*****                                                                     *****
*****              VOLUME:   ENG                                          *****
*****                                                                     *****
*****              LIBRARY:  G:\SCALE43\WIN_NT\EXE                        *****
*****                                                                     *****
*****                                                                     *****
*****      PRODUCTION CODE:  CSAS                                         *****
*****                                                                     *****
*****              VERSION:  3.1                                          *****
*****                                                                     *****
*****              JOBNAME:  SCALE-PC                                     *****
*****                                                                     *****
*****    DATE OF EXECUTION:  01/04/99                                     *****
*****                                                                     *****
*****    TIME OF EXECUTION:  16:37:03                                     *****
*****                                                                     *****
*****                                                                     *****
*******************************************************************************
*******************************************************************************
*******************************************************************************
```

```
**** PROBLEM GEOMETRY ****


**** INFINITE HOMOGENEOUS MEDIUM ****
MFUEL          1 MIXTURE NO. OF THE INFINITE HOMOGENEOUS MEDIUM

**** SPECIAL PARAMETERS ****

ISN            8 ORDER OF ANGULAR QUADRATURE
IIM           20 INNER ITERATION MAXIMUM
ICM           25 OUTER ITERATION MAXIMUM
SZF  1.00000E+00 SIZE FACTOR FOR SPATIAL MESH
EPS  1.00000E-04 OVERALL PROBLEM CONVERGENCE
PTC  1.00000E-04 SCALAR FLUX CONVERGENCE
BKL  1.42089E+00 BUCKLING FACTOR
IUS            0 THERMAL UPSCATTER SCALING
BAL         FINE BALANCE TABLE PRINT FLAG
DY   0.00000E+00 BUCKLING HEIGHT
DZ   0.00000E+00 BUCKLING DEPTH
IPN            0 DIFFUSION COEFFICIENT OPTION
FRD            0 LOGICAL UNIT NUMBER TO READ FLUX GUESS
FWR           -1 LOGICAL UNIT NUMBER TO WRITE FLUX GUESS
MSH         2001 NUMBER OF INTERVALS FOR RES. INTGRTNS
MLV            2 MAX LVALUE FOR RES. INTGRTNS
AXS            0 LOGICAL UNIT NUMBER TO WRITE ANISN LIB
RES           21 MIXTURE WITH SPECIAL RESONANCE CORRECTION
 *      CYLINDER GEOMETRY FOR SPECIAL RESONANCE CORRECTION
 *   6.47700E-01 DIMENSION (LBAR) FOR SPECIAL RESONANCE CORRECTION


DANCOFF FACTOR SPECIFICATION
MIXTURE     FACTOR
     21    0.38879
```

```
*****************************************************************************************************************
***                                                                                                           ***
***                              TRIGA - PREF. FLOOD CANISTER                                                 ***
***                                                                                                           ***
*****************************************************************************************************************
*****************************************************************************************************************
***                                                                                                           ***
***                                 ********** DATA LIBRARY INFORMATION **********                           ***
***                                                                                                           ***
***          UNIT                                                VOLUME                                       ***
***         NUMBER               DATA SET NAME                   NAME        UNIT FUNCTION                   ***
***         ------               -------------                   ----        -------------                   ***
***                                                                                                           ***
***           89     G:\scale43\DATALIB\FT89F001                              STANDARD COMPOSITION LIBRARY    ***
***                                                                                                           ***
***           82     G:\scale43\DATALIB\FT82F001                              CROSS SECTION LIBRARY           ***
***                                                                                                           ***
***           11     D:\projects\triga\mev\moddensk\fixu_8_a1a\FT              SHORT CROSS SECTION LIBRARY     ***
***                                                                                                           ***
***           90     D:\projects\triga\mev\moddensk\fixu_8_a1a\FT              INPUT DATA DIRECT ACCESS        ***
***                                                                                                           ***
*****************************************************************************************************************
*****************************************************************************************************************
***                                                                                                           ***
***                                                                                                           ***
***                                    STANDARD COMPOSITION LIBRARY DATA                                      ***
***                                    ---------------------------------                                      ***
***                                                                                                           ***
***            UNIT NUMBER  :  89                                                                             ***
***                                                                                                           ***
***            DATASET NAME :  G:\scale43\DATALIB\FT89F001                                                    ***
***                                                                                                           ***
***            LIBRARY TITLE:  SCALE-4 STANDARD COMPOSITION LIBRARY                                           ***
***                            637 STANDARD COMPOSITIONS, 490 NUCLIDES                                        ***
***                            90 ELEMENTS WITH VARIABLE ISOTOPIC DISTRBUTIONS.                               ***
***                                                                                                           ***
***            CREATION DATE:   6/30/95                                                                       ***
***                                                                                                           ***
***                                                                                                           ***
***                                                                                                           ***
***                                      CROSS SECTION LIBRARY DATA                                           ***
***                                     ---------------------------                                           ***
***                                                                                                           ***
***            UNIT NUMBER  :  82                                                                             ***
***                                                                                                           ***
***            DATASET NAME :  G:\scale43\DATALIB\FT82F001                                                    ***
***                                                                                                           ***
***            LIBRARY TITLE:  SCALE 4.2 - 27 GROUP NEUTRON GROUP LIBRARY                                     ***
***                               BASED ON ENDF-B VERSION 4 DATA                                              ***
***                                  COMPILED FOR NRC     1/27/89                                           ***
***                                     LAST UPDATED                                          08/12/94  ***
***                                        L.M.PETRIE   -   ORNL                                              ***
***                                                                                                           ***
***                                                                                                           ***
***                                                                                                           ***
***                                                                                                           ***
*****************************************************************************************************************
*****************************************************************************************************************

                        ........    0 IO'S WERE USED BEFORE READING KENO V DATA    ........

                        ........    0 IO'S WERE USED READING THE KENO V PARAMETER DATA    ........

                       *************** DATA READING COMPLETED ***************

                        ........    0 IO'S WERE USED PREPARING THE KENO V INPUT DATA    ........

                        ........    0 IO'S WERE USED LOADING THE KENO V DATA    ........

                        ........    0 IO'S WERE USED LOADING THE DATA    ........

                        ........    0 IO'S WERE USED CHECKING THE KENO V GEOMETRY DATA    ........
                        *****  RESTART DATA HAS BEEN WRITTEN ON UNIT 95  *****

                        ........    0 IO'S WERE USED WRITING THE KENO V - CSAS DATA    ........

                        ........    0 IO'S WERE USED PROCESSING CSAS INPUT DATA    ........
```

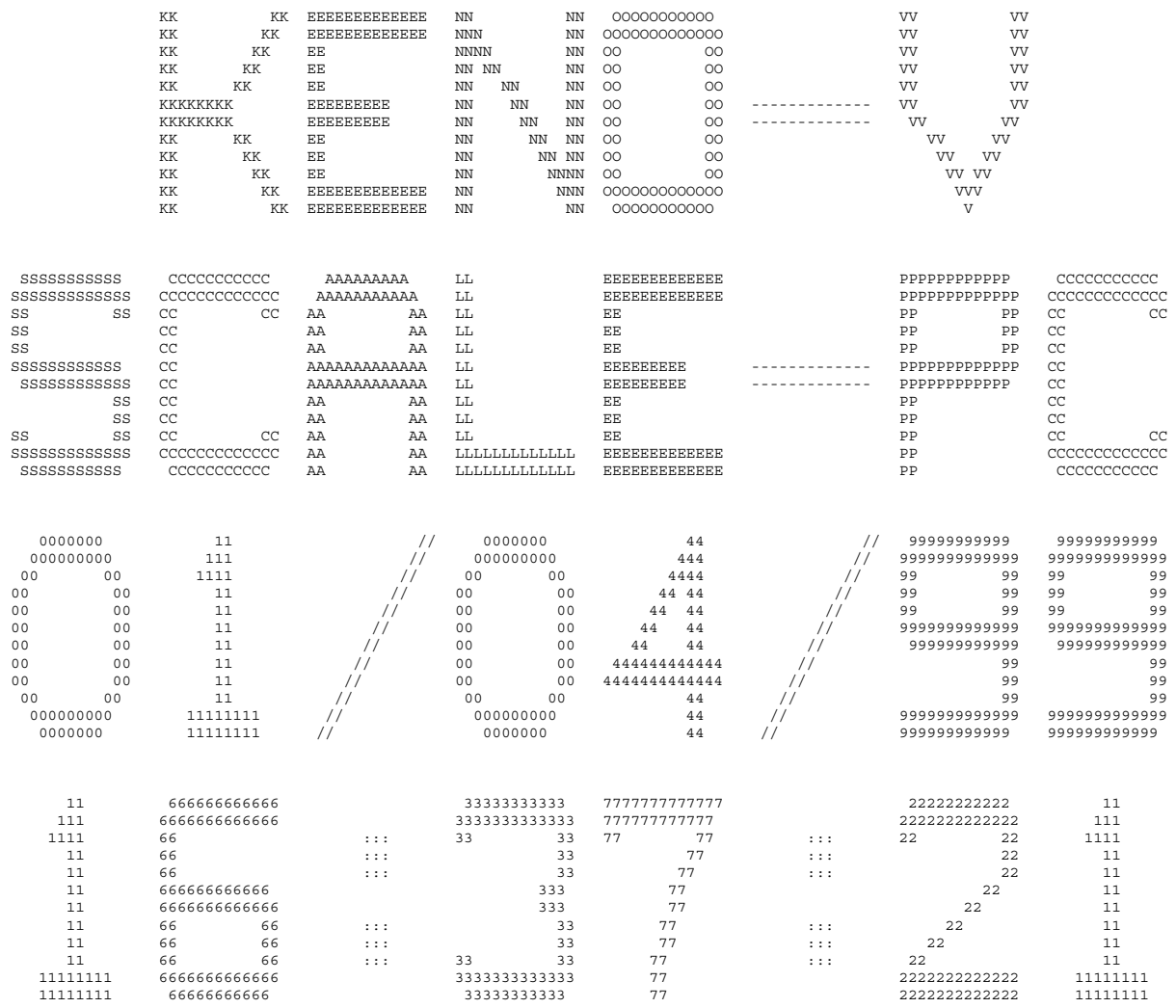
KK KK EEEEEEEEEEEE NN NN OOOOOOOOOO VV VV
KK KK EEEEEEEEEEEE NNN NN OOOOOOOOOOOO VV VV
KK KK EE NNNN NN OO OO VV VV
KK KK EE NN NN NN OO OO VV VV
KK KK EE NN NN NN OO OO VV VV
KKKKKKK EEEEEEEE NN NN NN OO OO VV VV
KKKKKKK EEEEEEEE NN NN NN OO OO VV VV
KK KK EE NN NN NN OO OO VV VV
KK KK EE NN NN NN OO OO VV VV
KK KK EE NN NNNN OO OO VV VV
KK KK EEEEEEEEEEEE NN NNN OOOOOOOOOOOO VVV
KK KK EEEEEEEEEEEE NN NN OOOOOOOOOO V
SSSSSSSSSS CCCCCCCCCC AAAAAAAAA LL EEEEEEEEEEEE PPPPPPPPPP CCCCCCCCCC
SSSSSSSSSSS CCCCCCCCCCCC AAAAAAAAAA LL EEEEEEEEEEEE PPPPPPPPPPP CCCCCCCCCCCC
SS SS CC CC AA AA LL EE PP PP CC CC
SS CC AA AA LL EE PP PP CC
SS CC AA AA LL EE PP PP CC
SSSSSSSSSSS CC AAAAAAAAAAAAA LL EEEEEEEE PPPPPPPPPPP CC
SSSSSSSSSS CC AAAAAAAAAAAAA LL EEEEEEEE PPPPPPPPPP CC
SS CC AA AA LL EE PP CC
SS CC AA AA LL EE PP CC
SS SS CC CC AA AA LL EE PP CC CC
SSSSSSSSSSS CCCCCCCCCCCC AA AA LLLLLLLLLLL EEEEEEEEEEE PP CCCCCCCCCCC
SSSSSSSSSS CCCCCCCCCC AA AA LLLLLLLLLLL EEEEEEEEEEE PP CCCCCCCCCC
0000000 11 // 0000000 44 // 99999999999 99999999999
000000000 111 // 000000000 444 // 9999999999999 9999999999999
00 00 1111 // 00 00 4444 // 99 99 99 99
00 00 11 // 00 00 44 44 // 99 99 99 99
00 00 11 // 00 00 44 44 // 99 99 99 99
00 00 11 // 00 00 44 44 // 9999999999999 9999999999999
00 00 11 // 00 00 44 44 // 999999999999 999999999999
00 00 11 // 00 00 444444444444 // 99 99
00 00 11 // 00 00 4444444444444 // 99 99
00 00 11 // 00 00 44 // 99 99
000000000 11111111 // 000000000 44 // 9999999999999 9999999999999
0000000 11111111 // 0000000 44 // 999999999999 999999999999
11 666666666666 33333333333 7777777777777 22222222222 11
111 6666666666666 3333333333333 777777777777 2222222222222 111
1111 66 ::: 33 33 77 77 ::: 22 22 1111
11 66 ::: 33 77 ::: 22 11
11 66 ::: 33 77 ::: 22 11
11 666666666666 333 77 22 11
11 6666666666666 333 77 22 11
11 66 66 ::: 33 77 ::: 22 11
11 66 66 ::: 33 77 ::: 22 11
11 66 66 ::: 33 33 77 ::: 22 11
11111111 6666666666666 3333333333333 77 2222222222222 11111111
11111111 66666666666 33333333333 77 2222222222222 11111111

```
  SSSSSSSSSS     CCCCCCCCCC      AAAAAAAAA     LL             EEEEEEEEEEEE                  PPPPPPPPPPP     CCCCCCCCCC
 SSSSSSSSSSS   CCCCCCCCCCCC    AAAAAAAAAAA    LL             EEEEEEEEEEEE                  PPPPPPPPPPPP   CCCCCCCCCCCC
 SS         SS CC          CC  AA         AA   LL             EE                            PP         PP  CC          CC
 SS            CC              AA         AA   LL             EE                            PP         PP  CC
 SS            CC              AA         AA   LL             EE                            PP         PP  CC
 SSSSSSSSSSS   CC              AAAAAAAAAAAAA   LL             EEEEEEEEE       -------------  PPPPPPPPPPPP  CC
  SSSSSSSSSSS  CC              AAAAAAAAAAAAA   LL             EEEEEEEEE       -------------  PPPPPPPPPPP   CC
           SS  CC              AA         AA   LL             EE                            PP             CC
           SS  CC              AA         AA   LL             EE                            PP             CC
 SS         SS CC          CC  AA         AA   LL             EE                            PP             CC          CC
 SSSSSSSSSSS   CCCCCCCCCCCC    AA         AA   LLLLLLLLLLLL   EEEEEEEEEEEE                  PP             CCCCCCCCCCCC
  SSSSSSSSSS     CCCCCCCCCC    AA         AA   LLLLLLLLLLLL   EEEEEEEEEEEE                  PP              CCCCCCCCCC
```

```
*******************************************************************************
*******************************************************************************
*******************************************************************************
*****                                                                     *****
*****                  PROGRAM VERIFICATION INFORMATION                   *****
*****                                                                     *****
*****                CODE SYSTEM:  SCALE-PC VERSION:  4.3                 *****
*****                                                                     *****
*******************************************************************************
*******************************************************************************
*****                                                                     *****
*****                                                                     *****
*****              PROGRAM:  O0O009                                       *****
*****                                                                     *****
*****        CREATION DATE:  03/08/96                                     *****
*****                                                                     *****
*****              VOLUME:   ENG                                          *****
*****                                                                     *****
*****              LIBRARY:  G:\SCALE43\WIN_NT\EXE                        *****
*****                                                                     *****
*****                                                                     *****
*****      PRODUCTION CODE:  KENOVA                                       *****
*****                                                                     *****
*****              VERSION:  3.1                                          *****
*****                                                                     *****
*****              JOBNAME:  SCALE-PC                                     *****
*****                                                                     *****
*****    DATE OF EXECUTION:  01/04/99                                     *****
*****                                                                     *****
*****    TIME OF EXECUTION:  16:37:21                                     *****
*****                                                                     *****
*****                                                                     *****
*******************************************************************************
*******************************************************************************
*******************************************************************************
```

```
*****************************************************************************************************************
***                                                                                                           ***
***                              TRIGA - PREF. FLOOD CANISTER                                                 ***
***                                                                                                           ***
*****************************************************************************************************************
***                                ******       NUMERIC PARAMETERS       ******                               ***
***                                                                                                           ***
***                                                                                                           ***
***                    TME         MAXIMUM PROBLEM TIME (MIN)                        170.00                   ***
***                                                                                                           ***
***                    TBA         TIME PER GENERATION (MIN)                           2.00                   ***
***                                                                                                           ***
***                    GEN         NUMBER OF GENERATIONS                                203                   ***
***                                                                                                           ***
***                    NPG         NUMBER PER GENERATION                                500                   ***
***                                                                                                           ***
***                    NSK         NUMBER OF GENERATIONS TO BE SKIPPED                    3                   ***
***                                                                                                           ***
***                    BEG         BEGINNING GENERATION NUMBER                            1                   ***
***                                                                                                           ***
***                    RES         GENERATIONS BETWEEN CHECKPOINTS                        0                   ***
***                                                                                                           ***
***                    X1D         NUMBER OF EXTRA 1-D CROSS SECTIONS                     1                   ***
***                                                                                                           ***
***                    NBK         NEUTRON BANK SIZE                                    525                   ***
***                                                                                                           ***
***                    XNB         EXTRA POSITIONS IN NEUTRON BANK                        0                   ***
***                                                                                                           ***
***                    NFB         FISSION BANK SIZE                                    500                   ***
***                                                                                                           ***
***                    XFB         EXTRA POSITIONS IN FISSION BANK                        0                   ***
***                                                                                                           ***
***                    WTA         DEFAULT VALUE OF WEIGHT AVERAGE                   0.5000                   ***
***                                                                                                           ***
***                    WTH         WEIGHT HIGH FOR SPLITTING                         3.0000                   ***
***                                                                                                           ***
***                    WTL         WEIGHT LOW FOR RUSSIAN ROULETTE                   0.3333                   ***
***                                                                                                           ***
***                    RND         STARTING RANDOM NUMBER                        BB827100001                  ***
***                                                                                                           ***
***                    NB8         NUMBER OF D.A. BLOCKS ON UNIT  8                     200                   ***
***                                                                                                           ***
***                    NL8         LENGTH OF D.A. BLOCKS ON UNIT  8                     512                   ***
***                                                                                                           ***
***                    ADJ         MODE OF CALCULATION                              FORWARD                  ***
***                                                                                                           ***
***                                INPUT DATA WRITTEN ON RESTART UNIT                    NO                   ***
***                                                                                                           ***
***                                BINARY DATA INTERFACE                                YES                  ***
***                                                                                                           ***
***                                                                                                           ***
*****************************************************************************************************************
*****************************************************************************************************************
```

```
*****************************************************************************************************************
*****************************************************************************************************************
***                                                                                                           ***
***                              TRIGA - PREF. FLOOD CANISTER                                                 ***
***                                                                                                           ***
*****************************************************************************************************************
***                                  ******      LOGICAL PARAMETERS        ******                             ***
***                                                                                                           ***
***  RUN  EXECUTE PROBLEM AFTER CHECKING DATA    YES            PLT  PLOT PICTURE MAP(S)                    NO ***
***                                                                                                           ***
***  FLX  COMPUTE FLUX                            NO            FDN  COMPUTE FISSION DENSITIES              NO ***
***                                                                                                           ***
***  SMU  COMPUTE AVG UNIT SELF-MULTIPLICATION    NO            NUB  COMPUTE NU-BAR & AVG FISSION GROUP     YES ***
***                                                                                                           ***
***  MKU  COMPUTE MATRIX K-EFF BY UNIT NUMBER     NO            MKP  COMPUTE MATRIX K-EFF BY UNIT LOCATION  NO ***
***                                                                                                           ***
***  CKU  COMPUTE COFACTOR K-EFF BY UNIT NUMBER   NO            CKP  COMPUTE COFACTOR K-EFF BY UNIT LOCATION NO ***
***                                                                                                           ***
***  FMU  PRINT FISS PROD MATRIX BY UNIT NUMBER   NO            FMP  PRINT FISS PROD MATRIX BY UNIT LOCATION NO ***
***                                                                                                           ***
***  MKH  COMPUTE MATRIX K-EFF BY HOLE NUMBER     NO            MKA  COMPUTE MATRIX K-EFF BY ARRAY NUMBER   NO ***
***                                                                                                           ***
***  CKH  COMPUTE COFACTOR K-EFF BY HOLE NUMBER   NO            CKA  COMPUTE COFACTOR K-EFF BY ARRAY NUMBER NO ***
***                                                                                                           ***
***  FMH  PRINT FISS PROD MATRIX BY HOLE NUMBER   NO            FMA  PRINT FISS PROD MATRIX BY ARRAY NUMBER NO ***
***                                                                                                           ***
***  HHL  COLLECT MATRIX BY HIGHEST HOLE LEVEL    NO            HAL  COLLECT MATRIX BY HIGHEST ARRAY LEVEL  NO ***
***                                                                                                           ***
***  AMX  PRINT ALL MIXED CROSS SECTIONS          NO            FAR  PRINT FIS. AND ABS. BY REGION          NO ***
***                                                                                                           ***
***  XS1  PRINT 1-D MIXTURE X-SECTIONS            NO            GAS  PRINT FAR BY GROUP                     NO ***
***                                                                                                           ***
***  XS2  PRINT 2-D MIXTURE X-SECTIONS            NO            PAX  PRINT XSEC-ALBEDO CORRELATION TABLES   NO ***
***                                                                                                           ***
***  XAP  PRINT MIXTURE ANGLES & PROBABILITIES    NO            PWT  PRINT WEIGHT AVERAGE ARRAY             NO ***
***                                                                                                           ***
***  PKI  PRINT FISSION SPECTRUM                  NO            PGM  PRINT INPUT GEOMETRY                   NO ***
***                                                                                                           ***
***  P1D  PRINT EXTRA 1-D CROSS SECTIONS          NO            BUG  PRINT DEBUG INFORMATION                NO ***
***                                                                                                           ***
***                                                             TRK  PRINT TRACKING INFORMATION             NO ***
***                                                                                                           ***
***                                                                                                           ***
*****************************************************************************************************************
*****************************************************************************************************************
*****************************************************************************************************************
                                    PARAMETER INPUT COMPLETED

                         .........    0 IO'S WERE USED READING THE PARAMETER DATA      .........

                       ************** DATA READING COMPLETED **************
```

```
*****************************************************************************************************
***                                                                                               ***
***          TRIGA - PREF. FLOOD CANISTER                                                         ***
***                                                                                               ***
*****************************************************************************************************
*****************************************************************************************************
***                                                                                               ***
***                              ****** ADDITIONAL INFORMATION ******                             ***
***                                                                                               ***
***  NUMBER OF ENERGY GROUPS              27       USE LATTICE GEOMETRY                    YES  ***
***                                                                                               ***
***  NO. OF FISSION SPECTRUM SOURCE GROUP  1       GLOBAL ARRAY NUMBER                      20  ***
***                                                                                               ***
***  NO. OF SCATTERING ANGLES IN XSECS     2       NUMBER OF UNITS IN THE GLOBAL X DIR.      1  ***
***                                                                                               ***
***  ENTRIES/NEUTRON IN THE NEUTRON BANK  26       NUMBER OF UNITS IN THE GLOBAL Y DIR.      1  ***
***                                                                                               ***
***  ENTRIES/NEUTRON IN THE FISSION BANK  19       NUMBER OF UNITS IN THE GLOBAL Z DIR.      7  ***
***                                                                                               ***
***  NUMBER OF MIXTURES USED              15       USE A GLOBAL REFLECTOR                  YES  ***
***                                                                                               ***
***  NUMBER OF BIAS ID'S USED              1       USE NESTED HOLES                        YES  ***
***                                                                                               ***
***  NUMBER OF DIFFERENTIAL ALBEDOS USED   0       NUMBER OF HOLES                         140  ***
***                                                                                               ***
***  TOTAL INPUT GEOMETRY REGIONS        100       MAXIMUM HOLE NESTING LEVEL                4  ***
***                                                                                               ***
***  NUMBER OF GEOMETRY REGIONS USED      87       USE NESTED ARRAYS                       YES  ***
***                                                                                               ***
***  LARGEST GEOMETRY UNIT NUMBER        450       NUMBER OF ARRAYS USED                     7  ***
***                                                                                               ***
***  LARGEST ARRAY NUMBER                 43       MAXIMUM ARRAY NESTING LEVEL               2  ***
***                                                                                               ***
***                                                                                               ***
***  +X BOUNDARY CONDITION               MIR       -X BOUNDARY CONDITION                   MIR  ***
***                                                                                               ***
***  +Y BOUNDARY CONDITION               MIR       -Y BOUNDARY CONDITION                   MIR  ***
***                                                                                               ***
***  +Z BOUNDARY CONDITION               MIR       -Z BOUNDARY CONDITION                   MIR  ***
***                                                                                               ***
*****************************************************************************************************
```

ARRAY NUMBER	UNITS IN X DIR.	UNITS IN Y DIR.	UNITS IN Z DIR.	NESTING LEVEL
1	1	5	1	2
2	1	3	1	2
3	1	3	1	2
20 GLOBAL	1	1	7	1
41	1	5	1	2
42	1	3	1	2
43	1	3	1	2

```
 ........    0 IO'S WERE USED LOADING THE DATA    ........
```

```
                                    TRIGA - PREF. FLOOD CANISTER

                MEDIA BIAS      GEOMETRY DESCRIPTION FOR THOSE UNITS UTILIZED IN THIS PROBLEM
REGION           NUM   ID

                                                -----   UNIT     1   -----

TRIGA FUEL (SMEARED)

  1 CYLINDER         1  1  RADIUS =  3.9623     +Z =  60.959     -Z = 1.00000E-03 CENTERLINE IS AT  X = 0.00000      Y = 0.00000

                                                -----   UNIT     5   -----

3.38 IN WIDTH / 0.28 IN THICKNESS DIVIDER CENTER STACK (SEALED)

  1 CUBOID           2  1      +X =  4.2672     -X = -4.2672     +Y = 0.71120     -Y = 0.00000     +Z =  74.290     -Z = -8.2550

                                                -----   UNIT     6   -----

3.38 IN WIDTH / 0.24 IN THICKNESS DIVIDER OUTSIDE STACK (SEALED)

  1 CUBOID           2  1      +X =  4.2672     -X = -4.2672     +Y = 0.60960     -Y = 0.00000     +Z =  74.290     -Z = -8.2550

                                                -----   UNIT     7   -----

SEALED CANISTER

  1 CYLINDER         3  1  RADIUS =  3.9624     +Z =  60.960     -Z = 0.00000     CENTERLINE IS AT  X = 0.00000      Y = 0.00000

    HOLE NUMBER      1       AT X = 0.00000      Y = 0.00000      Z = 0.00000     IS UNIT NUMBER      1

  2 CYLINDER         2  1  RADIUS =  4.1275     +Z =  63.500     -Z = -1.2700     CENTERLINE IS AT  X = 0.00000      Y = 0.00000

  3 CYLINDER        12  1  RADIUS =  4.1275     +Z =  74.290     -Z = -8.2550     CENTERLINE IS AT  X = 0.00000      Y = 0.00000

                                                -----   UNIT    10   -----

TRIGA ELEMENTS IN TOP OF 3.38 IN X 3.38 IN OPENING (SEALED)

  1 CUBOID          12  1      +X =  4.2672     -X = -4.2672     +Y =  4.2672     -Y = -4.2672     +Z =  74.290     -Z = -8.2550

    HOLE NUMBER      2       AT X = 0.00000      Y = 0.13970      Z = 0.00000     IS UNIT NUMBER      7

                                                -----   UNIT    11   -----

TRIGA ELEMENTS IN BOTTOM OF 3.38 IN X 3.38 IN OPENING (SEALED)

  1 CUBOID          12  1      +X =  4.2672     -X = -4.2672     +Y =  4.2672     -Y = -4.2672     +Z =  74.290     -Z = -8.2550

    HOLE NUMBER      3       AT X = 0.00000      Y =-0.13970      Z = 0.00000     IS UNIT NUMBER      7
_                                   TRIGA - PREF. FLOOD CANISTER

                MEDIA BIAS      GEOMETRY DESCRIPTION FOR THOSE UNITS UTILIZED IN THIS PROBLEM
REGION           NUM   ID

                                                -----   UNIT    12   -----

TRIGA ELEMENTS IN BOTTOM RIGHT OF 3.38 IN X 3.38 IN OPENING (SEALED)

  1 CUBOID          12  1      +X =  4.2672     -X = -4.2672     +Y =  4.2672     -Y = -4.2672     +Z =  74.290     -Z = -8.2550

    HOLE NUMBER      4       AT X = 0.13970      Y =-0.13970      Z = 0.00000     IS UNIT NUMBER      7

                                                -----   UNIT    13   -----

TRIGA ELEMENTS IN TOP RIGHT OF 3.38 IN X 3.38 IN OPENING (SEALED)

  1 CUBOID          12  1      +X =  4.2672     -X = -4.2672     +Y =  4.2672     -Y = -4.2672     +Z =  74.290     -Z = -8.2550

    HOLE NUMBER      5       AT X = 0.13970      Y = 0.13970      Z = 0.00000     IS UNIT NUMBER      7

                                                -----   UNIT    14   -----

TRIGA ELEMENTS IN BOTTOM LEFT OF 3.38 IN X 3.38 IN OPENING (SEALED)

  1 CUBOID          12  1      +X =  4.2672     -X = -4.2672     +Y =  4.2672     -Y = -4.2672     +Z =  74.290     -Z = -8.2550

    HOLE NUMBER      6       AT X =-0.13970      Y =-0.13970      Z = 0.00000     IS UNIT NUMBER      7

                                                -----   UNIT    15   -----

TRIGA ELEMENTS IN TOP LEFT OF 3.38 IN X 3.38 IN OPENING (SEALED)

  1 CUBOID          12  1      +X =  4.2672     -X = -4.2672     +Y =  4.2672     -Y = -4.2672     +Z =  74.290     -Z = -8.2550
```

```
    HOLE NUMBER      7       AT X =-0.13970      Y = 0.13970      Z = 0.00000     IS UNIT NUMBER      7

                                                -----   UNIT    16   -----

TRIGA BASKET 3.38 IN X 3.38 IN CENTER OPENING (SEALED)

  1 CUBOID          12  1      +X =  4.2672     -X = -4.2672     +Y =  4.2672     -Y = -4.2672     +Z =  74.290     -Z = -8.2550

                                          -----   UNIT    20  EXTERNAL TO LATTICE  1   -----

CENTER COLUMN OF THREE OPENINGS W/ 0.28 IN PLATE (SEALED)

  1 ARRAY NUMBER     1         +X =  4.2672     -X = -4.2672     +Y =  13.513     -Y = -13.513     +Z =  74.290     -Z = -8.2550

  2 CUBOID           2  1      +X =  4.9784     -X = -4.9784     +Y =  14.224     -Y = -14.224     +Z =  74.290     -Z = -8.2550
_                                       TRIGA - PREF. FLOOD CANISTER

                MEDIA BIAS      GEOMETRY DESCRIPTION FOR THOSE UNITS UTILIZED IN THIS PROBLEM
REGION           NUM   ID

                                          -----   UNIT    21  EXTERNAL TO LATTICE  2   -----

LEFT OUTSIDE COLUMN OF TWO OPENINGS W/ 0.12 IN PLATE (SEALED)

  1 ARRAY NUMBER     2         +X =  4.2672     -X = -4.2672     +Y =  8.8392     -Y = -8.8392     +Z =  74.290     -Z = -8.2550

  2 CUBOID           2  1      +X =  4.2672     -X = -4.5720     +Y =  9.1440     -Y = -9.1440     +Z =  74.290     -Z = -8.2550

                                          -----   UNIT    22  EXTERNAL TO LATTICE  3   -----

RIGHT OUTSIDE COLUMN OF TWO OPENINGS W/ 0.12 IN PLATE (SEALED)

  1 ARRAY NUMBER     3         +X =  4.2672     -X = -4.2672     +Y =  8.8392     -Y = -8.8392     +Z =  74.290     -Z = -8.2550

  2 CUBOID           2  1      +X =  4.5720     -X = -4.2672     +Y =  9.1440     -Y = -9.1440     +Z =  74.290     -Z = -8.2550

                                               -----   UNIT    30   -----

NAC-LWT TRIGA BASKET (SEALED)

  1 CYLINDER        12  1  RADIUS =  17.100     +Z =  74.290     -Z = -8.2550     CENTERLINE IS AT  X = 0.00000      Y = 0.00000

    HOLE NUMBER      8       AT X = 0.00000      Y = 0.00000      Z = 0.00000     IS UNIT NUMBER     20

    HOLE NUMBER      9       AT X = -9.2457      Y = 0.00000      Z = 0.00000     IS UNIT NUMBER     21

    HOLE NUMBER     10       AT X =  9.2457      Y = 0.00000      Z = 0.00000     IS UNIT NUMBER     22

  2 CYLINDER         2  1  RADIUS =  18.910     +Z =  74.930     -Z = -8.8900     CENTERLINE IS AT  X = 0.00000      Y = 0.00000

  3 CYLINDER         6  1  RADIUS =  33.465     +Z =  74.930     -Z = -8.8900     CENTERLINE IS AT  X = 0.00000      Y = 0.00000

  4 CYLINDER         2  1  RADIUS =  36.519     +Z =  74.930     -Z = -8.8900     CENTERLINE IS AT  X = 0.00000      Y = 0.00000

  5 CYLINDER         7  1  RADIUS =  49.223     +Z =  74.930     -Z = -8.8900     CENTERLINE IS AT  X = 0.00000      Y = 0.00000

  6 CYLINDER         2  1  RADIUS =  49.822     +Z =  74.930     -Z = -8.8900     CENTERLINE IS AT  X = 0.00000      Y = 0.00000

  7 CUBOID           8  1      +X =  121.92     -X = -121.92     +Y =  121.92     -Y = -121.92     +Z =  74.930     -Z = -8.8900

                                               -----   UNIT    41   -----

TRIGA FUEL ELEMENT

  1 CYLINDER        21  1  RADIUS = 0.64770     +Z =  27.940     -Z = -27.940     CENTERLINE IS AT  X = 0.00000      Y = 0.00000

  2 CYLINDER        22  1  RADIUS = 0.68834     +Z =  27.940     -Z = -27.940     CENTERLINE IS AT  X = 0.00000      Y = 0.00000

  3 CYLINDER        29  1  RADIUS = 0.68834     +Z =  43.480     -Z = -33.040     CENTERLINE IS AT  X = 0.00000      Y = 0.00000
_                                       TRIGA - PREF. FLOOD CANISTER

                MEDIA BIAS      GEOMETRY DESCRIPTION FOR THOSE UNITS UTILIZED IN THIS PROBLEM
REGION           NUM   ID

                                               -----   UNIT    45   -----

DIVIDER CENTER STACK

  1 CUBOID           2  1      +X =  4.2672     -X = -4.2672     +Y = 0.71120     -Y = 0.00000     +Z =  43.480     -Z = -33.040

                                               -----   UNIT    46   -----

DIVIDER OUTSIDE STACK

  1 CUBOID           2  1      +X =  4.2672     -X = -4.2672     +Y = 0.60960     -Y = 0.00000     +Z =  43.480     -Z = -33.040
```

```
                                          -----   UNIT    80   -----

SIMPLIFIED LID STRUCTURE NAC-LWT

  1 CYLINDER         2  1  RADIUS =  36.519     +Z =  14.135     -Z = -14.135     CENTERLINE IS AT  X = 0.00000      Y = 0.00000

  2 CYLINDER         8  1  RADIUS =  49.822     +Z =  14.135     -Z = -14.135     CENTERLINE IS AT  X = 0.00000      Y = 0.00000

  3 CUBOID           8  1      +X =  121.92     -X = -121.92     +Y =  121.92     -Y = -121.92     +Z =  14.135     -Z = -14.135

                                          -----   UNIT    81   -----

SIMPLIFIED CASK BOTTOM STRUCTURE NAC-LWT

  1 CYLINDER         6  1  RADIUS =  26.353     +Z =  3.8100     -Z = -3.8100     CENTERLINE IS AT  X = 0.00000      Y = 0.00000

  2 CYLINDER         2  1  RADIUS =  36.619     +Z =  13.970     -Z = -12.700     CENTERLINE IS AT  X = 0.00000      Y = 0.00000

  3 CYLINDER         8  1  RADIUS =  49.822     +Z =  13.970     -Z = -12.700     CENTERLINE IS AT  X = 0.00000      Y = 0.00000

  4 CUBOID           8  1      +X =  121.92     -X = -121.92     +Y =  121.92     -Y = -121.92     +Z =  13.970     -Z = -12.700

                                    ******************   GLOBAL   ******************
                                    -----   UNIT    82  EXTERNAL TO LATTICE 20   -----

STACK OF 5 BASKETS IN CASK

  1 ARRAY NUMBER    20         +X =  121.92     -X = -121.92     +Y =  121.92     -Y = -121.92     +Z =  230.87     -Z = -221.30

                                          -----   UNIT   411   -----

TRIGA FUEL ELEMENTS IN AL TUBE, RIGHT

  1 CYLINDER        23  1  RADIUS = 0.80518     +Z =  43.480     -Z = -33.040     CENTERLINE IS AT  X = 0.00000      Y = 0.00000

    HOLE NUMBER     12       AT X = 0.11670      Y = 0.00000      Z = 0.00000     IS UNIT NUMBER     41

  2 CYLINDER        30  1  RADIUS = 0.95250     +Z =  43.480     -Z = -33.040     CENTERLINE IS AT  X = 0.00000      Y = 0.00000
_                                   TRIGA - PREF. FLOOD CANISTER

               MEDIA BIAS      GEOMETRY DESCRIPTION FOR THOSE UNITS UTILIZED IN THIS PROBLEM
REGION          NUM   ID

                                          -----   UNIT   412   -----

TRIGA FUEL ELEMENTS IN AL TUBE, LEFT

  1 CYLINDER        23  1  RADIUS = 0.80518     +Z =  43.480     -Z = -33.040     CENTERLINE IS AT  X = 0.00000      Y = 0.00000

    HOLE NUMBER     13       AT X =-0.11670      Y = 0.00000      Z = 0.00000     IS UNIT NUMBER     41

  2 CYLINDER        30  1  RADIUS = 0.95250     +Z =  43.480     -Z = -33.040     CENTERLINE IS AT  X = 0.00000      Y = 0.00000

                                          -----   UNIT   413   -----

TRIGA FUEL ELEMENTS IN AL TUBE, TOP

  1 CYLINDER        23  1  RADIUS = 0.80518     +Z =  43.480     -Z = -33.040     CENTERLINE IS AT  X = 0.00000      Y = 0.00000

    HOLE NUMBER     14       AT X = 0.00000      Y = 0.11670      Z = 0.00000     IS UNIT NUMBER     41

  2 CYLINDER        30  1  RADIUS = 0.95250     +Z =  43.480     -Z = -33.040     CENTERLINE IS AT  X = 0.00000      Y = 0.00000

                                          -----   UNIT   414   -----

TRIGA FUEL ELEMENTS IN AL TUBE, BOTTOM

  1 CYLINDER        23  1  RADIUS = 0.80518     +Z =  43.480     -Z = -33.040     CENTERLINE IS AT  X = 0.00000      Y = 0.00000

    HOLE NUMBER     15       AT X = 0.00000      Y =-0.11670      Z = 0.00000     IS UNIT NUMBER     41

  2 CYLINDER        30  1  RADIUS = 0.95250     +Z =  43.480     -Z = -33.040     CENTERLINE IS AT  X = 0.00000      Y = 0.00000

                                          -----   UNIT   415   -----

TRIGA FUEL ELEMENTS IN AL TUBE, TOP RIGHT

  1 CYLINDER        23  1  RADIUS = 0.80518     +Z =  43.480     -Z = -33.040     CENTERLINE IS AT  X = 0.00000      Y = 0.00000

    HOLE NUMBER     16       AT X = 8.26000E-02  Y = 8.26000E-02  Z = 0.00000     IS UNIT NUMBER     41

  2 CYLINDER        30  1  RADIUS = 0.95250     +Z =  43.480     -Z = -33.040     CENTERLINE IS AT  X = 0.00000      Y = 0.00000

                                          -----   UNIT   416   -----

TRIGA FUEL ELEMENTS IN AL TUBE, TOP LEFT
```

```
  1 CYLINDER        23  1  RADIUS = 0.80518     +Z =  43.480     -Z = -33.040     CENTERLINE IS AT  X = 0.00000      Y = 0.00000

    HOLE NUMBER     17       AT X =-8.26000E-02  Y = 8.26000E-02  Z = 0.00000     IS UNIT NUMBER     41

  2 CYLINDER        30  1  RADIUS = 0.95250     +Z =  43.480     -Z = -33.040     CENTERLINE IS AT  X = 0.00000      Y = 0.00000
_                                    TRIGA - PREF. FLOOD CANISTER

                MEDIA BIAS      GEOMETRY DESCRIPTION FOR THOSE UNITS UTILIZED IN THIS PROBLEM
REGION           NUM   ID


                                                -----   UNIT   417   -----

TRIGA FUEL ELEMENTS IN AL TUBE, BOTTOM RIGHT

  1 CYLINDER        23  1  RADIUS = 0.80518     +Z =  43.480     -Z = -33.040     CENTERLINE IS AT  X = 0.00000      Y = 0.00000

    HOLE NUMBER     18       AT X = 8.26000E-02  Y =-8.26000E-02  Z = 0.00000     IS UNIT NUMBER     41

  2 CYLINDER        30  1  RADIUS = 0.95250     +Z =  43.480     -Z = -33.040     CENTERLINE IS AT  X = 0.00000      Y = 0.00000


                                                -----   UNIT   418   -----

TRIGA FUEL ELEMENTS IN AL TUBE, BOTTOM LEFT

  1 CYLINDER        23  1  RADIUS = 0.80518     +Z =  43.480     -Z = -33.040     CENTERLINE IS AT  X = 0.00000      Y = 0.00000

    HOLE NUMBER     19       AT X =-8.26000E-02  Y =-8.26000E-02  Z = 0.00000     IS UNIT NUMBER     41

  2 CYLINDER        30  1  RADIUS = 0.95250     +Z =  43.480     -Z = -33.040     CENTERLINE IS AT  X = 0.00000      Y = 0.00000
_                                    TRIGA - PREF. FLOOD CANISTER

                MEDIA BIAS      GEOMETRY DESCRIPTION FOR THOSE UNITS UTILIZED IN THIS PROBLEM
REGION           NUM   ID


                                                -----   UNIT   421   -----

AL TUBES WITH TRIGA FUEL, IN FUEL INSERT, BOTTOM OPENING

  1 CUBOID          23  1      +X =  4.1529     -X = -4.1529     +Y =  4.1529     -Y = -4.1529     +Z =  43.480     -Z = -33.040

    HOLE NUMBER     36       AT X = -2.8576      Y = -2.8576      Z = 0.00000     IS UNIT NUMBER    415

    HOLE NUMBER     37       AT X =-0.95250      Y = -2.8576      Z = 0.00000     IS UNIT NUMBER    413

    HOLE NUMBER     38       AT X = 0.95250      Y = -2.8576      Z = 0.00000     IS UNIT NUMBER    413

    HOLE NUMBER     39       AT X =  2.8576      Y = -2.8576      Z = 0.00000     IS UNIT NUMBER    416

    HOLE NUMBER     40       AT X = -2.8576      Y =-0.95250      Z = 0.00000     IS UNIT NUMBER    411

    HOLE NUMBER     41       AT X =-0.95250      Y =-0.95250      Z = 0.00000     IS UNIT NUMBER    415

    HOLE NUMBER     42       AT X = 0.95250      Y =-0.95250      Z = 0.00000     IS UNIT NUMBER    416

    HOLE NUMBER     43       AT X =  2.8576      Y =-0.95250      Z = 0.00000     IS UNIT NUMBER    412

    HOLE NUMBER     44       AT X = -2.8576      Y = 0.95250      Z = 0.00000     IS UNIT NUMBER    411

    HOLE NUMBER     45       AT X =-0.95250      Y = 0.95250      Z = 0.00000     IS UNIT NUMBER    417

    HOLE NUMBER     46       AT X = 0.95250      Y = 0.95250      Z = 0.00000     IS UNIT NUMBER    418

    HOLE NUMBER     47       AT X =  2.8576      Y = 0.95250      Z = 0.00000     IS UNIT NUMBER    412

    HOLE NUMBER     48       AT X = -2.8576      Y =  2.8576      Z = 0.00000     IS UNIT NUMBER    417

    HOLE NUMBER     49       AT X =-0.95250      Y =  2.8576      Z = 0.00000     IS UNIT NUMBER    414

    HOLE NUMBER     50       AT X = 0.95250      Y =  2.8576      Z = 0.00000     IS UNIT NUMBER    414

    HOLE NUMBER     51       AT X =  2.8576      Y =  2.8576      Z = 0.00000     IS UNIT NUMBER    418

  2 CUBOID          23  1      +X =  4.1529     -X = -4.1529     +Y =  4.1529     -Y = -4.1529     +Z =  43.480     -Z = -33.040
_                                    TRIGA - PREF. FLOOD CANISTER

                MEDIA BIAS      GEOMETRY DESCRIPTION FOR THOSE UNITS UTILIZED IN THIS PROBLEM
REGION           NUM   ID


                                                -----   UNIT   422   -----

AL TUBES WITH TRIGA FUEL, IN FUEL INSERT, TOP OPENING

  1 CUBOID          23  1      +X =  4.1529     -X = -4.1529     +Y =  4.1529     -Y = -4.1529     +Z =  43.480     -Z = -33.040

    HOLE NUMBER     52       AT X = -2.8576      Y = -2.8576      Z = 0.00000     IS UNIT NUMBER    415

    HOLE NUMBER     53       AT X =-0.95250      Y = -2.8576      Z = 0.00000     IS UNIT NUMBER    413

    HOLE NUMBER     54       AT X = 0.95250      Y = -2.8576      Z = 0.00000     IS UNIT NUMBER    413

    HOLE NUMBER     55       AT X =  2.8576      Y = -2.8576      Z = 0.00000     IS UNIT NUMBER    416
```

```
    HOLE NUMBER     56       AT X = -2.8576      Y =-0.95250      Z = 0.00000     IS UNIT NUMBER    411

    HOLE NUMBER     57       AT X =-0.95250      Y =-0.95250      Z = 0.00000     IS UNIT NUMBER    415

    HOLE NUMBER     58       AT X = 0.95250      Y =-0.95250      Z = 0.00000     IS UNIT NUMBER    416

    HOLE NUMBER     59       AT X =  2.8576      Y =-0.95250      Z = 0.00000     IS UNIT NUMBER    412

    HOLE NUMBER     60       AT X = -2.8576      Y = 0.95250      Z = 0.00000     IS UNIT NUMBER    411

    HOLE NUMBER     61       AT X =-0.95250      Y = 0.95250      Z = 0.00000     IS UNIT NUMBER    417

    HOLE NUMBER     62       AT X = 0.95250      Y = 0.95250      Z = 0.00000     IS UNIT NUMBER    418

    HOLE NUMBER     63       AT X =  2.8576      Y = 0.95250      Z = 0.00000     IS UNIT NUMBER    412

    HOLE NUMBER     64       AT X = -2.8576      Y =  2.8576      Z = 0.00000     IS UNIT NUMBER    417

    HOLE NUMBER     65       AT X =-0.95250      Y =  2.8576      Z = 0.00000     IS UNIT NUMBER    414

    HOLE NUMBER     66       AT X = 0.95250      Y =  2.8576      Z = 0.00000     IS UNIT NUMBER    414

    HOLE NUMBER     67       AT X =  2.8576      Y =  2.8576      Z = 0.00000     IS UNIT NUMBER    418

  2 CUBOID          23  1      +X =  4.1529     -X = -4.1529     +Y =  4.1529     -Y = -4.1529     +Z =  43.480     -Z = -33.040
_                                        TRIGA - PREF. FLOOD CANISTER

                MEDIA BIAS      GEOMETRY DESCRIPTION FOR THOSE UNITS UTILIZED IN THIS PROBLEM
REGION           NUM   ID


                                                -----   UNIT   423   -----

AL TUBES WITH TRIGA FUEL, IN FUEL INSERT, BOTTOM LEFT OPENING

  1 CUBOID          23  1      +X =  4.1529     -X = -4.1529     +Y =  4.1529     -Y = -4.1529     +Z =  43.480     -Z = -33.040

    HOLE NUMBER     68       AT X = -2.8576      Y = -2.8576      Z = 0.00000     IS UNIT NUMBER    415

    HOLE NUMBER     69       AT X =-0.95250      Y = -2.8576      Z = 0.00000     IS UNIT NUMBER    413

    HOLE NUMBER     70       AT X = 0.95250      Y = -2.8576      Z = 0.00000     IS UNIT NUMBER    413

    HOLE NUMBER     71       AT X =  2.8576      Y = -2.8576      Z = 0.00000     IS UNIT NUMBER    416

    HOLE NUMBER     72       AT X = -2.8576      Y =-0.95250      Z = 0.00000     IS UNIT NUMBER    411

    HOLE NUMBER     73       AT X =-0.95250      Y =-0.95250      Z = 0.00000     IS UNIT NUMBER    415

    HOLE NUMBER     74       AT X = 0.95250      Y =-0.95250      Z = 0.00000     IS UNIT NUMBER    416

    HOLE NUMBER     75       AT X =  2.8576      Y =-0.95250      Z = 0.00000     IS UNIT NUMBER    412

    HOLE NUMBER     76       AT X = -2.8576      Y = 0.95250      Z = 0.00000     IS UNIT NUMBER    411

    HOLE NUMBER     77       AT X =-0.95250      Y = 0.95250      Z = 0.00000     IS UNIT NUMBER    417

    HOLE NUMBER     78       AT X = 0.95250      Y = 0.95250      Z = 0.00000     IS UNIT NUMBER    418

    HOLE NUMBER     79       AT X =  2.8576      Y = 0.95250      Z = 0.00000     IS UNIT NUMBER    412

    HOLE NUMBER     80       AT X = -2.8576      Y =  2.8576      Z = 0.00000     IS UNIT NUMBER    417

    HOLE NUMBER     81       AT X =-0.95250      Y =  2.8576      Z = 0.00000     IS UNIT NUMBER    414

    HOLE NUMBER     82       AT X = 0.95250      Y =  2.8576      Z = 0.00000     IS UNIT NUMBER    414

    HOLE NUMBER     83       AT X =  2.8576      Y =  2.8576      Z = 0.00000     IS UNIT NUMBER    418

  2 CUBOID          23  1      +X =  4.1529     -X = -4.1529     +Y =  4.1529     -Y = -4.1529     +Z =  43.480     -Z = -33.040
_                                        TRIGA - PREF. FLOOD CANISTER

                MEDIA BIAS      GEOMETRY DESCRIPTION FOR THOSE UNITS UTILIZED IN THIS PROBLEM
REGION           NUM   ID


                                                -----   UNIT   424   -----

AL TUBES WITH TRIGA FUEL, IN FUEL INSERT, TOP LEFT OPENING

  1 CUBOID          23  1      +X =  4.1529     -X = -4.1529     +Y =  4.1529     -Y = -4.1529     +Z =  43.480     -Z = -33.040

    HOLE NUMBER     84       AT X = -2.8576      Y = -2.8576      Z = 0.00000     IS UNIT NUMBER    415

    HOLE NUMBER     85       AT X =-0.95250      Y = -2.8576      Z = 0.00000     IS UNIT NUMBER    413

    HOLE NUMBER     86       AT X = 0.95250      Y = -2.8576      Z = 0.00000     IS UNIT NUMBER    413

    HOLE NUMBER     87       AT X =  2.8576      Y = -2.8576      Z = 0.00000     IS UNIT NUMBER    416

    HOLE NUMBER     88       AT X = -2.8576      Y =-0.95250      Z = 0.00000     IS UNIT NUMBER    411

    HOLE NUMBER     89       AT X =-0.95250      Y =-0.95250      Z = 0.00000     IS UNIT NUMBER    415
```

```
    HOLE NUMBER     90       AT X = 0.95250      Y =-0.95250      Z = 0.00000     IS UNIT NUMBER    416

    HOLE NUMBER     91       AT X =  2.8576      Y =-0.95250      Z = 0.00000     IS UNIT NUMBER    412

    HOLE NUMBER     92       AT X = -2.8576      Y = 0.95250      Z = 0.00000     IS UNIT NUMBER    411

    HOLE NUMBER     93       AT X =-0.95250      Y = 0.95250      Z = 0.00000     IS UNIT NUMBER    417

    HOLE NUMBER     94       AT X = 0.95250      Y = 0.95250      Z = 0.00000     IS UNIT NUMBER    418

    HOLE NUMBER     95       AT X =  2.8576      Y = 0.95250      Z = 0.00000     IS UNIT NUMBER    412

    HOLE NUMBER     96       AT X = -2.8576      Y =  2.8576      Z = 0.00000     IS UNIT NUMBER    417

    HOLE NUMBER     97       AT X =-0.95250      Y =  2.8576      Z = 0.00000     IS UNIT NUMBER    414

    HOLE NUMBER     98       AT X = 0.95250      Y =  2.8576      Z = 0.00000     IS UNIT NUMBER    414

    HOLE NUMBER     99       AT X =  2.8576      Y =  2.8576      Z = 0.00000     IS UNIT NUMBER    418

  2 CUBOID          23  1      +X =  4.1529     -X = -4.1529     +Y =  4.1529     -Y = -4.1529     +Z =  43.480     -Z = -33.040
_                                        TRIGA - PREF. FLOOD CANISTER

                MEDIA BIAS      GEOMETRY DESCRIPTION FOR THOSE UNITS UTILIZED IN THIS PROBLEM
REGION           NUM   ID


                                                -----   UNIT   425   -----

AL TUBES WITH TRIGA FUEL, IN FUEL INSERT, BOTTOM RIGHT OPENING

  1 CUBOID          23  1      +X =  4.1529     -X = -4.1529     +Y =  4.1529     -Y = -4.1529     +Z =  43.480     -Z = -33.040

    HOLE NUMBER    100       AT X = -2.8576      Y = -2.8576      Z = 0.00000     IS UNIT NUMBER    415

    HOLE NUMBER    101       AT X =-0.95250      Y = -2.8576      Z = 0.00000     IS UNIT NUMBER    413

    HOLE NUMBER    102       AT X = 0.95250      Y = -2.8576      Z = 0.00000     IS UNIT NUMBER    413

    HOLE NUMBER    103       AT X =  2.8576      Y = -2.8576      Z = 0.00000     IS UNIT NUMBER    416

    HOLE NUMBER    104       AT X = -2.8576      Y =-0.95250      Z = 0.00000     IS UNIT NUMBER    411

    HOLE NUMBER    105       AT X =-0.95250      Y =-0.95250      Z = 0.00000     IS UNIT NUMBER    415

    HOLE NUMBER    106       AT X = 0.95250      Y =-0.95250      Z = 0.00000     IS UNIT NUMBER    416

    HOLE NUMBER    107       AT X =  2.8576      Y =-0.95250      Z = 0.00000     IS UNIT NUMBER    412

    HOLE NUMBER    108       AT X = -2.8576      Y = 0.95250      Z = 0.00000     IS UNIT NUMBER    411

    HOLE NUMBER    109       AT X =-0.95250      Y = 0.95250      Z = 0.00000     IS UNIT NUMBER    417

    HOLE NUMBER    110       AT X = 0.95250      Y = 0.95250      Z = 0.00000     IS UNIT NUMBER    418

    HOLE NUMBER    111       AT X =  2.8576      Y = 0.95250      Z = 0.00000     IS UNIT NUMBER    412

    HOLE NUMBER    112       AT X = -2.8576      Y =  2.8576      Z = 0.00000     IS UNIT NUMBER    417

    HOLE NUMBER    113       AT X =-0.95250      Y =  2.8576      Z = 0.00000     IS UNIT NUMBER    414

    HOLE NUMBER    114       AT X = 0.95250      Y =  2.8576      Z = 0.00000     IS UNIT NUMBER    414

    HOLE NUMBER    115       AT X =  2.8576      Y =  2.8576      Z = 0.00000     IS UNIT NUMBER    418

  2 CUBOID          23  1      +X =  4.1529     -X = -4.1529     +Y =  4.1529     -Y = -4.1529     +Z =  43.480     -Z = -33.040
_                                        TRIGA - PREF. FLOOD CANISTER

                MEDIA BIAS      GEOMETRY DESCRIPTION FOR THOSE UNITS UTILIZED IN THIS PROBLEM
REGION           NUM   ID


                                                -----   UNIT   426   -----

AL TUBES WITH TRIGA FUEL, IN FUEL INSERT, TOP RIGHT OPENING

  1 CUBOID          23  1      +X =  4.1529     -X = -4.1529     +Y =  4.1529     -Y = -4.1529     +Z =  43.480     -Z = -33.040

    HOLE NUMBER    116       AT X = -2.8576      Y = -2.8576      Z = 0.00000     IS UNIT NUMBER    415

    HOLE NUMBER    117       AT X =-0.95250      Y = -2.8576      Z = 0.00000     IS UNIT NUMBER    413

    HOLE NUMBER    118       AT X = 0.95250      Y = -2.8576      Z = 0.00000     IS UNIT NUMBER    413

    HOLE NUMBER    119       AT X =  2.8576      Y = -2.8576      Z = 0.00000     IS UNIT NUMBER    416

    HOLE NUMBER    120       AT X = -2.8576      Y =-0.95250      Z = 0.00000     IS UNIT NUMBER    411

    HOLE NUMBER    121       AT X =-0.95250      Y =-0.95250      Z = 0.00000     IS UNIT NUMBER    415

    HOLE NUMBER    122       AT X = 0.95250      Y =-0.95250      Z = 0.00000     IS UNIT NUMBER    416

    HOLE NUMBER    123       AT X =  2.8576      Y =-0.95250      Z = 0.00000     IS UNIT NUMBER    412

    HOLE NUMBER    124       AT X = -2.8576      Y = 0.95250      Z = 0.00000     IS UNIT NUMBER    411
```

```
    HOLE NUMBER    125       AT X =-0.95250      Y = 0.95250      Z = 0.00000     IS UNIT NUMBER    417

    HOLE NUMBER    126       AT X = 0.95250      Y = 0.95250      Z = 0.00000     IS UNIT NUMBER    418

    HOLE NUMBER    127       AT X =  2.8576      Y = 0.95250      Z = 0.00000     IS UNIT NUMBER    412

    HOLE NUMBER    128       AT X = -2.8576      Y =  2.8576      Z = 0.00000     IS UNIT NUMBER    417

    HOLE NUMBER    129       AT X =-0.95250      Y =  2.8576      Z = 0.00000     IS UNIT NUMBER    414

    HOLE NUMBER    130       AT X = 0.95250      Y =  2.8576      Z = 0.00000     IS UNIT NUMBER    414

    HOLE NUMBER    131       AT X =  2.8576      Y =  2.8576      Z = 0.00000     IS UNIT NUMBER    418

  2 CUBOID          23  1     +X =  4.1529     -X = -4.1529     +Y =  4.1529     -Y = -4.1529     +Z =  43.480     -Z = -33.040

                                              -----   UNIT   430   -----

FUEL INSERT IN, CENTER OPENING

  1 CUBOID          23  1     +X =  4.2672     -X = -4.2672     +Y =  4.2672     -Y = -4.2672     +Z =  43.480     -Z = -33.040

                                              -----   UNIT   431   -----

FUEL INSERT IN, BOTTOM OPENING

  1 CUBOID          23  1     +X =  4.2672     -X = -4.2672     +Y =  4.2672     -Y = -4.2672     +Z =  43.480     -Z = -33.040

    HOLE NUMBER    132       AT X = 0.00000      Y =-0.11430      Z = 0.00000     IS UNIT NUMBER    421
_                                        TRIGA - PREF. FLOOD CANISTER

                MEDIA BIAS      GEOMETRY DESCRIPTION FOR THOSE UNITS UTILIZED IN THIS PROBLEM
REGION           NUM   ID

                                              -----   UNIT   432   -----

FUEL INSERT IN, TOP OPENING

  1 CUBOID          23  1     +X =  4.2672     -X = -4.2672     +Y =  4.2672     -Y = -4.2672     +Z =  43.480     -Z = -33.040

    HOLE NUMBER    133       AT X = 0.00000      Y = 0.11430      Z = 0.00000     IS UNIT NUMBER    42

                                              -----   UNIT   433   -----

FUEL INSERT IN, BOTTOM LEFT OPENING

  1 CUBOID          23  1     +X =  4.2672     -X = -4.2672     +Y =  4.2672     -Y = -4.2672     +Z =  43.480     -Z = -33.040

    HOLE NUMBER    134       AT X =-0.11430      Y =-0.11430      Z = 0.00000     IS UNIT NUMBER    423

                                              -----   UNIT   434   -----

FUEL INSERT IN, TOP LEFT OPENING

  1 CUBOID          23  1     +X =  4.2672     -X = -4.2672     +Y =  4.2672     -Y = -4.2672     +Z =  43.480     -Z = -33.040

    HOLE NUMBER    135       AT X =-0.11430      Y = 0.11430      Z = 0.00000     IS UNIT NUMBER    424

                                              -----   UNIT   435   -----

FUEL INSERT IN, BOTOM RIGHT OPENING

  1 CUBOID          23  1     +X =  4.2672     -X = -4.2672     +Y =  4.2672     -Y = -4.2672     +Z =  43.480     -Z = -33.040

    HOLE NUMBER    136       AT X = 0.11430      Y =-0.11430      Z = 0.00000     IS UNIT NUMBER    425

                                              -----   UNIT   436   -----

FUEL INSERT IN, TOP RIGHT OPENING

  1 CUBOID          23  1     +X =  4.2672     -X = -4.2672     +Y =  4.2672     -Y = -4.2672     +Z =  43.480     -Z = -33.040

    HOLE NUMBER    137       AT X = 0.11430      Y = 0.11430      Z = 0.00000     IS UNIT NUMBER    426

                                          -----   UNIT   440  EXTERNAL TO LATTICE 41   -----

CENTER COLUMN OF THREE OPENINGS

  1 ARRAY NUMBER    41         +X =  4.2672     -X = -4.2672     +Y =  13.513     -Y = -13.513     +Z =  43.480     -Z = -33.040

  2 CUBOID           2  1     +X =  4.9784     -X = -4.9784     +Y =  14.224     -Y = -14.224     +Z =  43.480     -Z = -33.040
_                                        TRIGA - PREF. FLOOD CANISTER

                MEDIA BIAS      GEOMETRY DESCRIPTION FOR THOSE UNITS UTILIZED IN THIS PROBLEM
REGION           NUM   ID

                                          -----   UNIT   441  EXTERNAL TO LATTICE 42   -----

LEFT OUTSIDE COLUMN OF TWO OPENINGS
```

```
  1 ARRAY NUMBER    42         +X =  4.2672     -X = -4.2672     +Y =  8.8392     -Y = -8.8392     +Z =  43.480     -Z = -33.040

  2 CUBOID           2  1      +X =  4.2672     -X = -4.6080     +Y =  9.1800     -Y = -9.1800     +Z =  43.480     -Z = -33.040

                                        -----   UNIT   442  EXTERNAL TO LATTICE 43   -----
RIGHT OUTSIDE COLUMN OF TWO OPENINGS

  1 ARRAY NUMBER    43         +X =  4.2672     -X = -4.2672     +Y =  8.8392     -Y = -8.8392     +Z =  43.480     -Z = -33.040

  2 CUBOID           2  1      +X =  4.6080     -X = -4.2672     +Y =  9.1800     -Y = -9.1800     +Z =  43.480     -Z = -33.040

                                           -----   UNIT   450   -----
28 TRIGA FUEL ELEMENTS IN EACH LWT BASKET

  1 CYLINDER        23  1  RADIUS =  17.150     +Z =  43.485     -Z = -33.045     CENTERLINE IS AT  X = 0.00000      Y = 0.00000

    HOLE NUMBER    138       AT X = 0.00000      Y = 0.00000      Z = 0.00000     IS UNIT NUMBER    440

    HOLE NUMBER    139       AT X = -9.2457      Y = 0.00000      Z = 0.00000     IS UNIT NUMBER    441

    HOLE NUMBER    140       AT X =  9.2457      Y = 0.00000      Z = 0.00000     IS UNIT NUMBER    442

  2 CYLINDER         2  1  RADIUS =  18.910     +Z =  43.485     -Z = -33.045     CENTERLINE IS AT  X = 0.00000      Y = 0.00000

  3 CYLINDER        26  1  RADIUS =  33.465     +Z =  43.485     -Z = -33.045     CENTERLINE IS AT  X = 0.00000      Y = 0.00000

  4 CYLINDER         2  1  RADIUS =  36.519     +Z =  43.485     -Z = -33.045     CENTERLINE IS AT  X = 0.00000      Y = 0.00000

  5 CYLINDER        27  1  RADIUS =  49.223     +Z =  43.485     -Z = -33.045     CENTERLINE IS AT  X = 0.00000      Y = 0.00000

  6 CYLINDER         2  1  RADIUS =  49.822     +Z =  43.485     -Z = -33.045     CENTERLINE IS AT  X = 0.00000      Y = 0.00000

  7 CUBOID          28  1      +X =  121.92     -X = -121.92     +Y =  121.92     -Y = -121.92     +Z =  43.485     -Z = -33.045
_                        TRIGA - PREF. FLOOD CANISTER

                  -------  UNIT ORIENTATION DESCRIPTION FOR ARRAY   1         -------

Z LAYER   1, X COLUMN   1 TO   1 LEFT TO RIGHT   Y ROW   1 TO   5  BOTTOM TO TOP

 11

  5

 16

  5

 10

                  -------  UNIT ORIENTATION DESCRIPTION FOR ARRAY   2         -------

Z LAYER   1, X COLUMN   1 TO   1 LEFT TO RIGHT   Y ROW   1 TO   3  BOTTOM TO TOP

 12

  6

 13

                  -------  UNIT ORIENTATION DESCRIPTION FOR ARRAY   3         -------

Z LAYER   1, X COLUMN   1 TO   1 LEFT TO RIGHT   Y ROW   1 TO   3  BOTTOM TO TOP

 14

  6

 15
_                        TRIGA - PREF. FLOOD CANISTER

                  -------  UNIT ORIENTATION DESCRIPTION FOR ARRAY  20         -------

Z LAYER   1, X COLUMN   1 TO   1 LEFT TO RIGHT   Y ROW   1 TO   1  BOTTOM TO TOP

  81
Z LAYER   2, X COLUMN   1 TO   1 LEFT TO RIGHT   Y ROW   1 TO   1  BOTTOM TO TOP

  30
Z LAYER   3, X COLUMN   1 TO   1 LEFT TO RIGHT   Y ROW   1 TO   1  BOTTOM TO TOP

 450
Z LAYER   4, X COLUMN   1 TO   1 LEFT TO RIGHT   Y ROW   1 TO   1  BOTTOM TO TOP

 450
Z LAYER   5, X COLUMN   1 TO   1 LEFT TO RIGHT   Y ROW   1 TO   1  BOTTOM TO TOP

 450
Z LAYER   6, X COLUMN   1 TO   1 LEFT TO RIGHT   Y ROW   1 TO   1  BOTTOM TO TOP

  30
Z LAYER   7, X COLUMN   1 TO   1 LEFT TO RIGHT   Y ROW   1 TO   1  BOTTOM TO TOP

  80
                  -------  UNIT ORIENTATION DESCRIPTION FOR ARRAY  41         -------
```

```
Z LAYER   1, X COLUMN   1 TO   1 LEFT TO RIGHT   Y ROW   1 TO   5  BOTTOM TO TOP

 431

  45

 430

  45

 432
_                        TRIGA - PREF. FLOOD CANISTER

                 -------  UNIT ORIENTATION DESCRIPTION FOR ARRAY  42         -------
Z LAYER   1, X COLUMN   1 TO   1 LEFT TO RIGHT   Y ROW   1 TO   3  BOTTOM TO TOP

 435

  46

 436

                 -------  UNIT ORIENTATION DESCRIPTION FOR ARRAY  43         -------
Z LAYER   1, X COLUMN   1 TO   1 LEFT TO RIGHT   Y ROW   1 TO   3  BOTTOM TO TOP

 433

  46

 434
_                                    TRIGA - PREF. FLOOD CANISTER
                                  VOLUMES FOR THOSE UNITS UTILIZED IN  THIS PROBLEM

                                      GEOMETRY                                CUMULATIVE
                      UNIT    REGION    REGION          VOLUME                 VOLUME

                        1         1         1         3.00660E+03 CM**3         3.00660E+03 CM**3

                        5         1         2         5.01021E+02 CM**3         5.01021E+02 CM**3

                        6         1         3         4.29446E+02 CM**3         4.29446E+02 CM**3

                        7         1         4         2.50244E-01 CM**3         3.00685E+03 CM**3
                                  2         5         4.59706E+02 CM**3         3.46655E+03 CM**3
                                  3         6         9.51335E+02 CM**3         4.41789E+03 CM**3

                       10         1         7         1.59436E+03 CM**3         6.01225E+03 CM**3

                       11         1         8         1.59436E+03 CM**3         6.01225E+03 CM**3

                       12         1         9         1.59436E+03 CM**3         6.01225E+03 CM**3

                       13         1        10         1.59436E+03 CM**3         6.01225E+03 CM**3

                       14         1        11         1.59436E+03 CM**3         6.01225E+03 CM**3

                       15         1        12         1.59436E+03 CM**3         6.01225E+03 CM**3

                       16         1        13         6.01225E+03 CM**3         6.01225E+03 CM**3
                      SURROUNDING GEOMETRY VOLUMES -  GEOMETRY REGION     20 IS AN ARRAY PLACEMENT BOUNDARY REGION

                       20         1        20         1.90388E+04 CM**3         1.90388E+04 CM**3
                                  2        21         4.34218E+03 CM**3         2.33810E+04 CM**3
                      SURROUNDING GEOMETRY VOLUMES -  GEOMETRY REGION     22 IS AN ARRAY PLACEMENT BOUNDARY REGION

                       21         1        22         1.24539E+04 CM**3         1.24539E+04 CM**3
                                  2        23         8.89567E+02 CM**3         1.33435E+04 CM**3
                      SURROUNDING GEOMETRY VOLUMES -  GEOMETRY REGION     24 IS AN ARRAY PLACEMENT BOUNDARY REGION

                       22         1        24         1.24539E+04 CM**3         1.24539E+04 CM**3
                                  2        25         8.89567E+02 CM**3         1.33435E+04 CM**3

                       30         1        26         2.57606E+04 CM**3         7.58286E+04 CM**3
                                  2        27         1.83375E+04 CM**3         9.41660E+04 CM**3
                                  3        28         2.00728E+05 CM**3         2.94894E+05 CM**3
                                  4        29         5.62864E+04 CM**3         3.51181E+05 CM**3
                                  5        30         2.86831E+05 CM**3         6.38011E+05 CM**3
                                  6        31         1.56332E+04 CM**3         6.53645E+05 CM**3
                                  7        32         4.33012E+06 CM**3         4.98377E+06 CM**3

                       41         1        33         7.36468E+01 CM**3         7.36468E+01 CM**3
                                  2        34         9.53190E+00 CM**3         8.31787E+01 CM**3
                                  3        35         3.07231E+01 CM**3         1.13902E+02 CM**3

                       45         1        39         4.64451E+02 CM**3         4.64451E+02 CM**3

                       46         1        40         3.98101E+02 CM**3         3.98101E+02 CM**3

                       80         1        93         1.18444E+05 CM**3         1.18444E+05 CM**3
                                  2        94         1.02013E+05 CM**3         2.20456E+05 CM**3
                                  3        95         1.46043E+06 CM**3         1.68089E+06 CM**3

                       81         1        96         1.66245E+04 CM**3         1.66245E+04 CM**3
                                  2        97         9.57276E+04 CM**3         1.12352E+05 CM**3
                                  3        98         9.56257E+04 CM**3         2.07978E+05 CM**3
                                  4        99         1.37777E+06 CM**3         1.58574E+06 CM**3
```

```
SURROUNDING GEOMETRY VOLUMES -  GEOMETRY REGION    100 IS AN ARRAY PLACEMENT BOUNDARY REGION

 82         1       100         2.68851E+07 CM**3         2.68851E+07 CM**3

411         1        43         4.19496E+01 CM**3         1.55851E+02 CM**3
            2        44         6.22481E+01 CM**3         2.18100E+02 CM**3

412         1        45         4.19496E+01 CM**3         1.55851E+02 CM**3
            2        46         6.22481E+01 CM**3         2.18100E+02 CM**3

413         1        47         4.19496E+01 CM**3         1.55851E+02 CM**3
            2        48         6.22481E+01 CM**3         2.18100E+02 CM**3

414         1        49         4.19496E+01 CM**3         1.55851E+02 CM**3
            2        50         6.22481E+01 CM**3         2.18100E+02 CM**3

415         1        51         4.19496E+01 CM**3         1.55851E+02 CM**3
            2        52         6.22481E+01 CM**3         2.18100E+02 CM**3

416         1        53         4.19496E+01 CM**3         1.55851E+02 CM**3
            2        54         6.22481E+01 CM**3         2.18100E+02 CM**3

417         1        55         4.19496E+01 CM**3         1.55851E+02 CM**3
            2        56         6.22481E+01 CM**3         2.18100E+02 CM**3

418         1        57         4.19496E+01 CM**3         1.55851E+02 CM**3
            2        58         6.22481E+01 CM**3         2.18100E+02 CM**3

421         1        61         1.78924E+03 CM**3         5.27883E+03 CM**3
            2        62         0.00000E+00 CM**3         5.27883E+03 CM**3

422         1        63         1.78924E+03 CM**3         5.27883E+03 CM**3
            2        64         0.00000E+00 CM**3         5.27883E+03 CM**3

423         1        65         1.78924E+03 CM**3         5.27883E+03 CM**3
            2        66         0.00000E+00 CM**3         5.27883E+03 CM**3

424         1        67         1.78924E+03 CM**3         5.27883E+03 CM**3
            2        68         0.00000E+00 CM**3         5.27883E+03 CM**3

425         1        69         1.78924E+03 CM**3         5.27883E+03 CM**3
            2        70         0.00000E+00 CM**3         5.27883E+03 CM**3

426         1        71         1.78924E+03 CM**3         5.27883E+03 CM**3
            2        72         0.00000E+00 CM**3         5.27883E+03 CM**3

430         1        73         5.57341E+03 CM**3         5.57341E+03 CM**3

431         1        74         2.94576E+02 CM**3         5.57341E+03 CM**3

432         1        75         2.94576E+02 CM**3         5.57341E+03 CM**3

433         1        76         2.94576E+02 CM**3         5.57341E+03 CM**3

434         1        77         2.94576E+02 CM**3         5.57341E+03 CM**3

435         1        78         2.94576E+02 CM**3         5.57341E+03 CM**3

436         1        79         2.94576E+02 CM**3         5.57341E+03 CM**3

SURROUNDING GEOMETRY VOLUMES -  GEOMETRY REGION     80 IS AN ARRAY PLACEMENT BOUNDARY REGION

440         1        80         1.76491E+04 CM**3         1.76491E+04 CM**3
            2        81         4.02524E+03 CM**3         2.16744E+04 CM**3

SURROUNDING GEOMETRY VOLUMES -  GEOMETRY REGION     82 IS AN ARRAY PLACEMENT BOUNDARY REGION

441         1        82         1.15449E+04 CM**3         1.15449E+04 CM**3
            2        83         9.23913E+02 CM**3         1.24688E+04 CM**3
SURROUNDING GEOMETRY VOLUMES -  GEOMETRY REGION     84 IS AN ARRAY PLACEMENT BOUNDARY REGION
442         1        84         1.15449E+04 CM**3         1.15449E+04 CM**3
            2        85         9.23913E+02 CM**3         1.24688E+04 CM**3

450         1        86         2.41027E+04 CM**3         7.07147E+04 CM**3
            2        87         1.52615E+04 CM**3         8.59762E+04 CM**3
            3        88         1.83270E+05 CM**3         2.69247E+05 CM**3
            4        89         5.13911E+04 CM**3         3.20638E+05 CM**3
            5        90         2.61884E+05 CM**3         5.82522E+05 CM**3
            6        91         1.42735E+04 CM**3         5.96796E+05 CM**3
            7        92         3.95352E+06 CM**3         4.55032E+06 CM**3

                 UNIT     USES    REGION     MIXTURE        TOTAL VOLUME

                   1        12         1           1         3.60792E+04 CM**3

                   5         4         1           2         2.00408E+03 CM**3

                   6         4         1           2         1.71778E+03 CM**3

                   7        12         1           3         3.00293E+00 CM**3
                                       2           2         5.51647E+03 CM**3
                                       3          12         1.14160E+04 CM**3

                  10         2         1          12         3.18871E+03 CM**3
```

11	2	1	12	3.18871E+03 CM**3
12	2	1	12	3.18871E+03 CM**3
13	2	1	12	3.18871E+03 CM**3
14	2	1	12	3.18871E+03 CM**3
15	2	1	12	3.18871E+03 CM**3
16	2	1	12	1.20245E+04 CM**3
20	2	1		3.80776E+04 CM**3
		2	2	8.68436E+03 CM**3
21	2	1		2.49079E+04 CM**3
		2	2	1.77913E+03 CM**3
22	2	1		2.49079E+04 CM**3
		2	2	1.77913E+03 CM**3
30	2	1	12	5.15212E+04 CM**3
		2	2	3.66750E+04 CM**3
		3	6	4.01456E+05 CM**3
		4	2	1.12573E+05 CM**3
		5	7	5.73661E+05 CM**3
		6	2	3.12664E+04 CM**3
		7	8	8.66024E+06 CM**3
41	288	1	21	2.12103E+04 CM**3
		2	22	2.74519E+03 CM**3
		3	29	8.84826E+03 CM**3
45	6	1	2	2.78670E+03 CM**3
46	6	1	2	2.38860E+03 CM**3
80	1	1	2	1.18444E+05 CM**3
		2	8	1.02013E+05 CM**3
		3	8	1.46043E+06 CM**3
81	1	1	6	1.66245E+04 CM**3
		2	2	9.57276E+04 CM**3
		3	8	9.56257E+04 CM**3
		4	8	1.37777E+06 CM**3
82	1	1		2.68851E+07 CM**3
411	36	1	23	1.51018E+03 CM**3
		2	30	2.24093E+03 CM**3
412	36	1	23	1.51018E+03 CM**3
		2	30	2.24093E+03 CM**3
413	36	1	23	1.51018E+03 CM**3
		2	30	2.24093E+03 CM**3
414	36	1	23	1.51018E+03 CM**3
		2	30	2.24093E+03 CM**3
415	36	1	23	1.51018E+03 CM**3
		2	30	2.24093E+03 CM**3
416	36	1	23	1.51018E+03 CM**3
		2	30	2.24093E+03 CM**3
417	36	1	23	1.51018E+03 CM**3
		2	30	2.24093E+03 CM**3
418	36	1	23	1.51018E+03 CM**3
		2	30	2.24093E+03 CM**3
421	3	1	23	5.36772E+03 CM**3
		2	23	0.00000E+00 CM**3
422	3	1	23	5.36772E+03 CM**3
		2	23	0.00000E+00 CM**3
423	3	1	23	5.36772E+03 CM**3
		2	23	0.00000E+00 CM**3
424	3	1	23	5.36772E+03 CM**3
		2	23	0.00000E+00 CM**3
425	3	1	23	5.36772E+03 CM**3
		2	23	0.00000E+00 CM**3
426	3	1	23	5.36772E+03 CM**3
		2	23	0.00000E+00 CM**3
430	3	1	23	1.67202E+04 CM**3
431	3	1	23	8.83729E+02 CM**3
432	3	1	23	8.83729E+02 CM**3
433	3	1	23	8.83729E+02 CM**3

434	3	1	23	8.83729E+02 CM**3
435	3	1	23	8.83729E+02 CM**3
436	3	1	23	8.83729E+02 CM**3
440	3	1		5.29474E+04 CM**3
		2	2	1.20757E+04 CM**3
441	3	1		3.46348E+04 CM**3
		2	2	2.77174E+03 CM**3
442	3	1		3.46348E+04 CM**3
		2	2	2.77174E+03 CM**3
450	3	1	23	7.23080E+04 CM**3
		2	2	4.57845E+04 CM**3
		3	26	5.49811E+05 CM**3
		4	2	1.54173E+05 CM**3
		5	27	7.85653E+05 CM**3
		6	2	4.28205E+04 CM**3
		7	28	1.18606E+07 CM**3

TOTAL MIXTURE VOLUMES

MIXTURE	TOTAL VOLUME	MASS(G)
1	3.60792E+04 CM**3	6.40483E+04
2	6.81739E+05 CM**3	5.39938E+06
3	3.00293E+00 CM**3	2.99744E+00
6	4.18081E+05 CM**3	4.74271E+06
7	5.73661E+05 CM**3	5.72612E-15
8	1.16961E+07 CM**3	1.16747E-13
12	9.40940E+04 CM**3	9.39219E-16
21	2.12103E+04 CM**3	1.24319E+05
22	2.74519E+03 CM**3	2.20507E+04
23	1.38618E+05 CM**3	1.38365E-15
26	5.49811E+05 CM**3	6.23706E+06
27	7.85653E+05 CM**3	7.84216E-15
28	1.18606E+07 CM**3	1.18389E-13
29	8.84826E+03 CM**3	3.48149E+04
30	1.79275E+04 CM**3	4.84400E+04

```
*****************************************************************************************************************
***                                                                                                           ***
***                                        BIASING INFORMATION                                                ***
***                                                                                                           ***
***     A DEFAULT WEIGHT OF    0.500 WILL BE USED FOR ALL BIAS ID'S.                                          ***
***                                                                                                           ***
*****************************************************************************************************************

                        ........    0 IO'S WERE USED IN KENO-V BEFORE TRACKING       ........

                        ........  0.02367 MINUTES WERE USED PROCESSING DATA.        ........

VOLUME FRACTION OF FISSILE MATERIAL IN THE CORE= 2.13090E-03

START TYPE 0 WAS USED.

THE NEUTRONS WERE STARTED WITH A FLAT DISTRIBUTION IN A CUBOID DEFINED BY:
                    +X= 1.21920E+02  -X=-1.21920E+02  +Y= 1.21920E+02  -Y=-1.21920E+02  +Z= 2.30870E+02  -Z=-2.21300E+02
THE FLAG TO START NEUTRONS IN THE REFLECTOR WAS TURNED OFF

KENO MESSAGE NUMBER K5-105     ***** WARNING, ONLY  218 INDEPENDENT STARTING POSITIONS WERE GENERATED.  *****

  282 ADDITIONAL STARTING POINTS WERE PICKED FROM THE INITAL DISTRIBUTION.

1.79750 MINUTES WERE REQUIRED FOR STARTING.   TOTAL ELAPSED TIME IS 1.82400 MINUTES.
```

TRIGA - PREF. FLOOD CANISTER

GENERATION	GENERATION K-EFFECTIVE	ELAPSED TIME MINUTES	AVERAGE K-EFFECTIVE	AVG K-EFF DEVIATION	MATRIX K-EFFECTIVE	MATRIX K-EFF DEVIATION
1	8.58385E-01	1.83533E+00	1.00000E+00	0.00000E+00	0.00000E+00	0.00000E+00
KENO MESSAGE NUMBER K5-132	WARNING....ONLY	469 INDEPENDENT FISSION POINTS WERE GENERATED				
2	8.20013E-01	1.85267E+00	1.00000E+00	0.00000E+00	0.00000E+00	0.00000E+00
3	8.93171E-01	1.86833E+00	8.93171E-01	0.00000E+00	0.00000E+00	0.00000E+00
4	8.51732E-01	1.88383E+00	8.72452E-01	2.07195E-02	0.00000E+00	0.00000E+00
5	9.56889E-01	1.89950E+00	9.00597E-01	3.05823E-02	0.00000E+00	0.00000E+00
6	8.56755E-01	1.91683E+00	8.89637E-01	2.42441E-02	0.00000E+00	0.00000E+00
7	8.99010E-01	1.93233E+00	8.91512E-01	1.88727E-02	0.00000E+00	0.00000E+00
8	8.55045E-01	1.94983E+00	8.85434E-01	1.65648E-02	0.00000E+00	0.00000E+00
9	8.17044E-01	1.96717E+00	8.75664E-01	1.70718E-02	0.00000E+00	0.00000E+00
10	8.89217E-01	1.98367E+00	8.77358E-01	1.48814E-02	0.00000E+00	0.00000E+00
11	8.79461E-01	2.00200E+00	8.77592E-01	1.31262E-02	0.00000E+00	0.00000E+00
12	8.57589E-01	2.01850E+00	8.75591E-01	1.19096E-02	0.00000E+00	0.00000E+00
13	8.97931E-01	2.03483E+00	8.77622E-01	1.09624E-02	0.00000E+00	0.00000E+00
14	8.95053E-01	2.05133E+00	8.79075E-01	1.01122E-02	0.00000E+00	0.00000E+00
15	8.46539E-01	2.06783E+00	8.76572E-01	9.63264E-03	0.00000E+00	0.00000E+00
16	8.58684E-01	2.08533E+00	8.75294E-01	9.00916E-03	0.00000E+00	0.00000E+00
17	8.95472E-01	2.10083E+00	8.76639E-01	8.49427E-03	0.00000E+00	0.00000E+00
18	8.72854E-01	2.11633E+00	8.76403E-01	7.94918E-03	0.00000E+00	0.00000E+00
19	9.02891E-01	2.13200E+00	8.77961E-01	7.62778E-03	0.00000E+00	0.00000E+00
20	8.69112E-01	2.14850E+00	8.77469E-01	7.20833E-03	0.00000E+00	0.00000E+00
21	8.67503E-01	2.16483E+00	8.76945E-01	6.83854E-03	0.00000E+00	0.00000E+00
22	8.92655E-01	2.18133E+00	8.77730E-01	6.53499E-03	0.00000E+00	0.00000E+00
23	8.57401E-01	2.19883E+00	8.76762E-01	6.29095E-03	0.00000E+00	0.00000E+00
24	8.51490E-01	2.21517E+00	8.75614E-01	6.10719E-03	0.00000E+00	0.00000E+00
25	8.34943E-01	2.23267E+00	8.73845E-01	6.09765E-03	0.00000E+00	0.00000E+00
26	8.67554E-01	2.24917E+00	8.73583E-01	5.84394E-03	0.00000E+00	0.00000E+00
27	8.79591E-01	2.26567E+00	8.73824E-01	5.61046E-03	0.00000E+00	0.00000E+00
28	9.12288E-01	2.28017E+00	8.75303E-01	5.58968E-03	0.00000E+00	0.00000E+00
29	8.77621E-01	2.29667E+00	8.75389E-01	5.37936E-03	0.00000E+00	0.00000E+00
30	8.77030E-01	2.31317E+00	8.75447E-01	5.18401E-03	0.00000E+00	0.00000E+00
31	8.76863E-01	2.32967E+00	8.75496E-01	5.00230E-03	0.00000E+00	0.00000E+00
32	8.07900E-01	2.34617E+00	8.73243E-01	5.33213E-03	0.00000E+00	0.00000E+00
33	7.94050E-01	2.36350E+00	8.70688E-01	5.75529E-03	0.00000E+00	0.00000E+00
34	9.13671E-01	2.38100E+00	8.72032E-01	5.73213E-03	0.00000E+00	0.00000E+00
35	9.09756E-01	2.39650E+00	8.73175E-01	5.67211E-03	0.00000E+00	0.00000E+00
36	8.66713E-01	2.41300E+00	8.72985E-01	5.50604E-03	0.00000E+00	0.00000E+00
37	8.91592E-01	2.43033E+00	8.73516E-01	5.37278E-03	0.00000E+00	0.00000E+00
38	8.89052E-01	2.44683E+00	8.73948E-01	5.23920E-03	0.00000E+00	0.00000E+00
39	8.53232E-01	2.46417E+00	8.73388E-01	5.12630E-03	0.00000E+00	0.00000E+00
40	8.47542E-01	2.48167E+00	8.72708E-01	5.03572E-03	0.00000E+00	0.00000E+00
41	8.32282E-01	2.49817E+00	8.71671E-01	5.01323E-03	0.00000E+00	0.00000E+00
42	8.80644E-01	2.51550E+00	8.71896E-01	4.89144E-03	0.00000E+00	0.00000E+00
43	8.46160E-01	2.53383E+00	8.71268E-01	4.81176E-03	0.00000E+00	0.00000E+00
44	8.17915E-01	2.55033E+00	8.69998E-01	4.86459E-03	0.00000E+00	0.00000E+00
45	8.47782E-01	2.56767E+00	8.69481E-01	4.77812E-03	0.00000E+00	0.00000E+00
46	8.87202E-01	2.58417E+00	8.69884E-01	4.68561E-03	0.00000E+00	0.00000E+00
47	8.98788E-01	2.60067E+00	8.70526E-01	4.62512E-03	0.00000E+00	0.00000E+00
48	8.66389E-01	2.61717E+00	8.70436E-01	4.52435E-03	0.00000E+00	0.00000E+00
49	8.62631E-01	2.63367E+00	8.70270E-01	4.43015E-03	0.00000E+00	0.00000E+00
50	9.25740E-01	2.65000E+00	8.71426E-01	4.48820E-03	0.00000E+00	0.00000E+00
51	8.58742E-01	2.66750E+00	8.71167E-01	4.40327E-03	0.00000E+00	0.00000E+00
52	8.46811E-01	2.68483E+00	8.70680E-01	4.34172E-03	0.00000E+00	0.00000E+00
53	8.82070E-01	2.70050E+00	8.70903E-01	4.26159E-03	0.00000E+00	0.00000E+00
54	9.29469E-01	2.71600E+00	8.72029E-01	4.32794E-03	0.00000E+00	0.00000E+00
55	9.03982E-01	2.73067E+00	8.72632E-01	4.28809E-03	0.00000E+00	0.00000E+00
56	8.92219E-01	2.74617E+00	8.72995E-01	4.22354E-03	0.00000E+00	0.00000E+00
57	8.80188E-01	2.76267E+00	8.73126E-01	4.14810E-03	0.00000E+00	0.00000E+00
58	8.89059E-01	2.77917E+00	8.73410E-01	4.08328E-03	0.00000E+00	0.00000E+00
59	8.53596E-01	2.79567E+00	8.73063E-01	4.02603E-03	0.00000E+00	0.00000E+00
60	9.09480E-01	2.81117E+00	8.73690E-01	4.00553E-03	0.00000E+00	0.00000E+00
61	8.90852E-01	2.82767E+00	8.73981E-01	3.94778E-03	0.00000E+00	0.00000E+00
62	8.50242E-01	2.84500E+00	8.73586E-01	3.90154E-03	0.00000E+00	0.00000E+00
63	8.97337E-01	2.86150E+00	8.73975E-01	3.85676E-03	0.00000E+00	0.00000E+00
64	8.65665E-01	2.87800E+00	8.73841E-01	3.79641E-03	0.00000E+00	0.00000E+00
65	8.43750E-01	2.89533E+00	8.73363E-01	3.76607E-03	0.00000E+00	0.00000E+00
66	8.94593E-01	2.91183E+00	8.73695E-01	3.72157E-03	0.00000E+00	0.00000E+00
67	8.51098E-01	2.92750E+00	8.73347E-01	3.68033E-03	0.00000E+00	0.00000E+00
68	8.94945E-01	2.94400E+00	8.73675E-01	3.63888E-03	0.00000E+00	0.00000E+00
69	8.58716E-01	2.96033E+00	8.73451E-01	3.59110E-03	0.00000E+00	0.00000E+00
70	9.39102E-01	2.97600E+00	8.74417E-01	3.66726E-03	0.00000E+00	0.00000E+00
71	9.04811E-01	2.99250E+00	8.74857E-01	3.64047E-03	0.00000E+00	0.00000E+00
72	8.88414E-01	3.00800E+00	8.75051E-01	3.59331E-03	0.00000E+00	0.00000E+00
73	8.60679E-01	3.02350E+00	8.74849E-01	3.54812E-03	0.00000E+00	0.00000E+00
74	9.05985E-01	3.04100E+00	8.75281E-01	3.52512E-03	0.00000E+00	0.00000E+00
75	8.47041E-01	3.05750E+00	8.74894E-01	3.49795E-03	0.00000E+00	0.00000E+00
76	8.70802E-01	3.07567E+00	8.74839E-01	3.45080E-03	0.00000E+00	0.00000E+00
77	9.12350E-01	3.09133E+00	8.75339E-01	3.44102E-03	0.00000E+00	0.00000E+00
78	8.84373E-01	3.10783E+00	8.75458E-01	3.39752E-03	0.00000E+00	0.00000E+00
79	8.15890E-01	3.12333E+00	8.74684E-01	3.44119E-03	0.00000E+00	0.00000E+00
80	8.72068E-01	3.13983E+00	8.74651E-01	3.39695E-03	0.00000E+00	0.00000E+00
81	9.60401E-01	3.15633E+00	8.75736E-01	3.52496E-03	0.00000E+00	0.00000E+00
82	8.57043E-01	3.17283E+00	8.75503E-01	3.48845E-03	0.00000E+00	0.00000E+00
83	8.97911E-01	3.18933E+00	8.75779E-01	3.45621E-03	0.00000E+00	0.00000E+00
84	8.23655E-01	3.20567E+00	8.75144E-01	3.47248E-03	0.00000E+00	0.00000E+00
85	9.14504E-01	3.22133E+00	8.75618E-01	3.46301E-03	0.00000E+00	0.00000E+00
86	8.98812E-01	3.23783E+00	8.75894E-01	3.43265E-03	0.00000E+00	0.00000E+00
87	8.83572E-01	3.25433E+00	8.75984E-01	3.39323E-03	0.00000E+00	0.00000E+00
88	8.62041E-01	3.26983E+00	8.75822E-01	3.35746E-03	0.00000E+00	0.00000E+00
89	9.12080E-01	3.28717E+00	8.76239E-01	3.34471E-03	0.00000E+00	0.00000E+00
90	9.35211E-01	3.30367E+00	8.76909E-01	3.37371E-03	0.00000E+00	0.00000E+00

```
        91       9.22995E-01      3.31933E+00      8.77427E-01      3.37554E-03      0.00000E+00      0.00000E+00
        92       8.88973E-01      3.33667E+00      8.77555E-01      3.34029E-03      0.00000E+00      0.00000E+00
        93       8.77943E-01      3.35317E+00      8.77559E-01      3.30338E-03      0.00000E+00      0.00000E+00
KENO MESSAGE NUMBER K5-132     WARNING....ONLY  489 INDEPENDENT FISSION POINTS WERE GENERATED
        94       8.30893E-01      3.36967E+00      8.77052E-01      3.30642E-03      0.00000E+00      0.00000E+00
        95       9.14119E-01      3.38600E+00      8.77451E-01      3.29487E-03      0.00000E+00      0.00000E+00
        96       9.23056E-01      3.40250E+00      8.77936E-01      3.29554E-03      0.00000E+00      0.00000E+00
        97       8.83169E-01      3.42000E+00      8.77991E-01      3.26113E-03      0.00000E+00      0.00000E+00
        98       9.13851E-01      3.43550E+00      8.78364E-01      3.24853E-03      0.00000E+00      0.00000E+00
        99       8.95378E-01      3.45100E+00      8.78540E-01      3.21965E-03      0.00000E+00      0.00000E+00
       100       9.08199E-01      3.46667E+00      8.78843E-01      3.20096E-03      0.00000E+00      0.00000E+00
       101       8.96026E-01      3.48217E+00      8.79016E-01      3.17321E-03      0.00000E+00      0.00000E+00
       102       8.34000E-01      3.49867E+00      8.78566E-01      3.17341E-03      0.00000E+00      0.00000E+00
       103       8.47904E-01      3.51517E+00      8.78262E-01      3.15647E-03      0.00000E+00      0.00000E+00
       104       7.96188E-01      3.53250E+00      8.77458E-01      3.22729E-03      0.00000E+00      0.00000E+00
       105       8.78224E-01      3.55000E+00      8.77465E-01      3.19581E-03      0.00000E+00      0.00000E+00
       106       8.60681E-01      3.56633E+00      8.77304E-01      3.16905E-03      0.00000E+00      0.00000E+00
       107       9.01017E-01      3.58100E+00      8.77530E-01      3.14683E-03      0.00000E+00      0.00000E+00
       108       8.32264E-01      3.59850E+00      8.77103E-01      3.14612E-03      0.00000E+00      0.00000E+00
       109       8.84434E-01      3.61500E+00      8.77171E-01      3.11733E-03      0.00000E+00      0.00000E+00
       110       8.87295E-01      3.63050E+00      8.77265E-01      3.08976E-03      0.00000E+00      0.00000E+00
       111       8.71837E-01      3.64883E+00      8.77215E-01      3.06168E-03      0.00000E+00      0.00000E+00
KENO MESSAGE NUMBER K5-132     WARNING....ONLY  479 INDEPENDENT FISSION POINTS WERE GENERATED
       112       8.13694E-01      3.66617E+00      8.76638E-01      3.08819E-03      0.00000E+00      0.00000E+00
       113       8.78333E-01      3.68267E+00      8.76653E-01      3.06028E-03      0.00000E+00      0.00000E+00
       114       9.43140E-01      3.69917E+00      8.77246E-01      3.09039E-03      0.00000E+00      0.00000E+00
       115       9.10904E-01      3.71567E+00      8.77544E-01      3.07736E-03      0.00000E+00      0.00000E+00
       116       8.57323E-01      3.73217E+00      8.77367E-01      3.05540E-03      0.00000E+00      0.00000E+00
       117       9.55281E-01      3.74767E+00      8.78044E-01      3.10357E-03      0.00000E+00      0.00000E+00
KENO MESSAGE NUMBER K5-132     WARNING....ONLY  495 INDEPENDENT FISSION POINTS WERE GENERATED
       118       8.45758E-01      3.76417E+00      8.77766E-01      3.08926E-03      0.00000E+00      0.00000E+00
       119       9.02391E-01      3.78067E+00      8.77977E-01      3.06997E-03      0.00000E+00      0.00000E+00
       120       8.45014E-01      3.79800E+00      8.77697E-01      3.05663E-03      0.00000E+00      0.00000E+00
       121       8.56319E-01      3.81533E+00      8.77518E-01      3.03616E-03      0.00000E+00      0.00000E+00
       122       8.19759E-01      3.83467E+00      8.77036E-01      3.04898E-03      0.00000E+00      0.00000E+00
       123       8.31123E-01      3.85117E+00      8.76657E-01      3.04739E-03      0.00000E+00      0.00000E+00
       124       8.42923E-01      3.86850E+00      8.76380E-01      3.03493E-03      0.00000E+00      0.00000E+00
       125       8.39454E-01      3.88583E+00      8.76080E-01      3.02509E-03      0.00000E+00      0.00000E+00
       126       8.43608E-01      3.90233E+00      8.75818E-01      3.01200E-03      0.00000E+00      0.00000E+00
       127       8.52193E-01      3.91883E+00      8.75629E-01      2.99378E-03      0.00000E+00      0.00000E+00
       128       8.68966E-01      3.93533E+00      8.75576E-01      2.97040E-03      0.00000E+00      0.00000E+00
       129       8.54054E-01      3.95083E+00      8.75407E-01      2.95178E-03      0.00000E+00      0.00000E+00
       130       8.49799E-01      3.96733E+00      8.75207E-01      2.93546E-03      0.00000E+00      0.00000E+00
       131       8.41240E-01      3.98567E+00      8.74944E-01      2.92449E-03      0.00000E+00      0.00000E+00
       132       8.81364E-01      4.00217E+00      8.74993E-01      2.90233E-03      0.00000E+00      0.00000E+00
       133       8.72153E-01      4.01767E+00      8.74971E-01      2.88017E-03      0.00000E+00      0.00000E+00
       134       8.74716E-01      4.03417E+00      8.74969E-01      2.85827E-03      0.00000E+00      0.00000E+00
       135       8.81139E-01      4.05067E+00      8.75016E-01      2.83707E-03      0.00000E+00      0.00000E+00
       136       9.26320E-01      4.06617E+00      8.75399E-01      2.84173E-03      0.00000E+00      0.00000E+00
       137       8.59309E-01      4.08183E+00      8.75279E-01      2.82312E-03      0.00000E+00      0.00000E+00
       138       8.90454E-01      4.09733E+00      8.75391E-01      2.80451E-03      0.00000E+00      0.00000E+00
       139       8.37620E-01      4.11383E+00      8.75115E-01      2.79758E-03      0.00000E+00      0.00000E+00
       140       8.97867E-01      4.12933E+00      8.75280E-01      2.78212E-03      0.00000E+00      0.00000E+00
       141       9.24712E-01      4.14583E+00      8.75636E-01      2.78483E-03      0.00000E+00      0.00000E+00
       142       8.98803E-01      4.16233E+00      8.75801E-01      2.76982E-03      0.00000E+00      0.00000E+00
       143       9.30603E-01      4.17700E+00      8.76190E-01      2.77743E-03      0.00000E+00      0.00000E+00
       144       8.13329E-01      4.19350E+00      8.75747E-01      2.79311E-03      0.00000E+00      0.00000E+00
       145       8.83161E-01      4.21083E+00      8.75799E-01      2.77399E-03      0.00000E+00      0.00000E+00
       146       8.00468E-01      4.22733E+00      8.75276E-01      2.80389E-03      0.00000E+00      0.00000E+00
       147       8.75398E-01      4.24383E+00      8.75277E-01      2.78449E-03      0.00000E+00      0.00000E+00
       148       8.69677E-01      4.26033E+00      8.75238E-01      2.76562E-03      0.00000E+00      0.00000E+00
       149       8.83526E-01      4.27767E+00      8.75295E-01      2.74732E-03      0.00000E+00      0.00000E+00
       150       8.46287E-01      4.29417E+00      8.75099E-01      2.73572E-03      0.00000E+00      0.00000E+00
       151       8.92387E-01      4.31150E+00      8.75215E-01      2.71978E-03      0.00000E+00      0.00000E+00
       152       8.48212E-01      4.32800E+00      8.75035E-01      2.70758E-03      0.00000E+00      0.00000E+00
       153       9.22360E-01      4.34267E+00      8.75348E-01      2.70778E-03      0.00000E+00      0.00000E+00
       154       9.11516E-01      4.35917E+00      8.75586E-01      2.70041E-03      0.00000E+00      0.00000E+00
       155       9.15952E-01      4.37467E+00      8.75850E-01      2.69565E-03      0.00000E+00      0.00000E+00
       156       8.97890E-01      4.39117E+00      8.75993E-01      2.68191E-03      0.00000E+00      0.00000E+00
       157       8.44649E-01      4.40767E+00      8.75791E-01      2.67221E-03      0.00000E+00      0.00000E+00
       158       8.66426E-01      4.42333E+00      8.75731E-01      2.65571E-03      0.00000E+00      0.00000E+00
       159       8.25915E-01      4.43967E+00      8.75414E-01      2.65774E-03      0.00000E+00      0.00000E+00
       160       9.05299E-01      4.45617E+00      8.75603E-01      2.64763E-03      0.00000E+00      0.00000E+00
       161       8.78218E-01      4.47267E+00      8.75619E-01      2.63098E-03      0.00000E+00      0.00000E+00
       162       9.11280E-01      4.48917E+00      8.75842E-01      2.62397E-03      0.00000E+00      0.00000E+00
       163       9.09611E-01      4.50567E+00      8.76052E-01      2.61604E-03      0.00000E+00      0.00000E+00
       164       8.83771E-01      4.52117E+00      8.76099E-01      2.60028E-03      0.00000E+00      0.00000E+00
       165       8.53787E-01      4.53867E+00      8.75963E-01      2.58790E-03      0.00000E+00      0.00000E+00
       166       8.73819E-01      4.55500E+00      8.75949E-01      2.57211E-03      0.00000E+00      0.00000E+00
       167       9.13407E-01      4.57067E+00      8.76176E-01      2.56653E-03      0.00000E+00      0.00000E+00
       168       9.40557E-01      4.58533E+00      8.76564E-01      2.58033E-03      0.00000E+00      0.00000E+00
       169       8.76389E-01      4.60183E+00      8.76563E-01      2.56484E-03      0.00000E+00      0.00000E+00
       170       8.93145E-01      4.61733E+00      8.76662E-01      2.55143E-03      0.00000E+00      0.00000E+00
       171       8.87750E-01      4.63383E+00      8.76728E-01      2.53714E-03      0.00000E+00      0.00000E+00
       172       8.90461E-01      4.64933E+00      8.76808E-01      2.52347E-03      0.00000E+00      0.00000E+00
       173       9.18830E-01      4.66500E+00      8.77054E-01      2.52067E-03      0.00000E+00      0.00000E+00
       174       9.09051E-01      4.68050E+00      8.77240E-01      2.51287E-03      0.00000E+00      0.00000E+00
       175       8.86993E-01      4.69700E+00      8.77297E-01      2.49894E-03      0.00000E+00      0.00000E+00
       176       8.60004E-01      4.71167E+00      8.77197E-01      2.48652E-03      0.00000E+00      0.00000E+00
       177       8.62551E-01      4.72717E+00      8.77113E-01      2.47369E-03      0.00000E+00      0.00000E+00
       178       8.22895E-01      4.74267E+00      8.76805E-01      2.47881E-03      0.00000E+00      0.00000E+00
       179       8.87612E-01      4.75917E+00      8.76866E-01      2.46552E-03      0.00000E+00      0.00000E+00
       180       8.77614E-01      4.77483E+00      8.76871E-01      2.45163E-03      0.00000E+00      0.00000E+00
       181       9.00075E-01      4.79133E+00      8.77000E-01      2.44134E-03      0.00000E+00      0.00000E+00
       182       9.02042E-01      4.80683E+00      8.77139E-01      2.43173E-03      0.00000E+00      0.00000E+00
```

183	8.18851E-01	4.82417E+00	8.76817E-01	2.43960E-03	0.00000E+00	0.00000E+00
184	8.93587E-01	4.84067E+00	8.76909E-01	2.42791E-03	0.00000E+00	0.00000E+00
185	8.64996E-01	4.85617E+00	8.76844E-01	2.41548E-03	0.00000E+00	0.00000E+00
186	8.82922E-01	4.87267E+00	8.76877E-01	2.40255E-03	0.00000E+00	0.00000E+00
187	9.09855E-01	4.88833E+00	8.77056E-01	2.39617E-03	0.00000E+00	0.00000E+00
188	8.59406E-01	4.90483E+00	8.76961E-01	2.38514E-03	0.00000E+00	0.00000E+00
189	8.93490E-01	4.92117E+00	8.77049E-01	2.37399E-03	0.00000E+00	0.00000E+00
190	9.06273E-01	4.93867E+00	8.77205E-01	2.36644E-03	0.00000E+00	0.00000E+00
191	8.69597E-01	4.95417E+00	8.77164E-01	2.35423E-03	0.00000E+00	0.00000E+00
192	8.66903E-01	4.97167E+00	8.77110E-01	2.34243E-03	0.00000E+00	0.00000E+00
193	8.32013E-01	4.98983E+00	8.76874E-01	2.34207E-03	0.00000E+00	0.00000E+00
194	8.05299E-01	5.00733E+00	8.76501E-01	2.35947E-03	0.00000E+00	0.00000E+00
195	8.87950E-01	5.02383E+00	8.76561E-01	2.34797E-03	0.00000E+00	0.00000E+00
196	8.62069E-01	5.04033E+00	8.76486E-01	2.33703E-03	0.00000E+00	0.00000E+00
197	8.19291E-01	5.05667E+00	8.76193E-01	2.34344E-03	0.00000E+00	0.00000E+00
198	8.54419E-01	5.07417E+00	8.76082E-01	2.33410E-03	0.00000E+00	0.00000E+00
199	8.75956E-01	5.09067E+00	8.76081E-01	2.32222E-03	0.00000E+00	0.00000E+00
200	8.45077E-01	5.10700E+00	8.75924E-01	2.31576E-03	0.00000E+00	0.00000E+00
201	8.59187E-01	5.12350E+00	8.75840E-01	2.30563E-03	0.00000E+00	0.00000E+00
202	8.66802E-01	5.14100E+00	8.75795E-01	2.29452E-03	0.00000E+00	0.00000E+00
203	9.14057E-01	5.15750E+00	8.75986E-01	2.29099E-03	0.00000E+00	0.00000E+00

KENO MESSAGE NUMBER K5-123 EXECUTION TERMINATED DUE TO COMPLETION OF THE SPECIFIED NUMBER OF GENERATIONS.

TRIGA - PREF. FLOOD CANISTER

LIFETIME = 2.48937E-04 + OR - 2.49939E-06 GENERATION TIME = 4.88200E-05 + OR - 4.78127E-07
NU BAR = 2.42071E+00 + OR - 1.83810E-05 AVERAGE FISSION GROUP = 2.23328E+01 + OR - 1.33962E-02
ENERGY(EV) OF THE AVERAGE LETHARGY CAUSING FISSION = 1.36279E-01 + OR - 1.30059E-03

NO. OF INITIAL GENERATIONS SKIPPED	AVERAGE K-EFFECTIVE	DEVIATION	67 PER CENT CONFIDENCE INTERVAL	95 PER CENT CONFIDENCE INTERVAL	99 PER CENT CONFIDENCE INTERVAL	NUMBER OF HISTORIES
3	0.87590	+ OR - 0.00230	0.87360 TO 0.87820	0.87130 TO 0.88050	0.86900 TO 0.88280	100000
4	0.87602	+ OR - 0.00231	0.87371 TO 0.87833	0.87140 TO 0.88064	0.86909 TO 0.88295	99500
5	0.87561	+ OR - 0.00228	0.87333 TO 0.87790	0.87104 TO 0.88018	0.86876 TO 0.88247	99000
6	0.87571	+ OR - 0.00229	0.87341 TO 0.87800	0.87112 TO 0.88030	0.86883 TO 0.88259	98500
7	0.87559	+ OR - 0.00230	0.87329 TO 0.87789	0.87098 TO 0.88019	0.86868 TO 0.88250	98000
8	0.87569	+ OR - 0.00231	0.87338 TO 0.87801	0.87107 TO 0.88032	0.86876 TO 0.88263	97500
9	0.87600	+ OR - 0.00230	0.87369 TO 0.87830	0.87139 TO 0.88061	0.86909 TO 0.88291	97000
10	0.87593	+ OR - 0.00231	0.87361 TO 0.87824	0.87130 TO 0.88056	0.86898 TO 0.88287	96500
11	0.87591	+ OR - 0.00233	0.87358 TO 0.87824	0.87126 TO 0.88056	0.86893 TO 0.88289	96000
12	0.87601	+ OR - 0.00234	0.87367 TO 0.87834	0.87133 TO 0.88068	0.86899 TO 0.88302	95500
17	0.87593	+ OR - 0.00239	0.87355 TO 0.87832	0.87116 TO 0.88070	0.86878 TO 0.88309	93000
22	0.87579	+ OR - 0.00244	0.87335 TO 0.87824	0.87090 TO 0.88068	0.86846 TO 0.88313	90500
27	0.87629	+ OR - 0.00250	0.87380 TO 0.87879	0.87130 TO 0.88129	0.86880 TO 0.88378	88000
32	0.87647	+ OR - 0.00253	0.87394 TO 0.87900	0.87141 TO 0.88153	0.86888 TO 0.88406	85500
37	0.87651	+ OR - 0.00254	0.87397 TO 0.87904	0.87143 TO 0.88158	0.86889 TO 0.88412	83000
42	0.87700	+ OR - 0.00259	0.87441 TO 0.87959	0.87182 TO 0.88218	0.86923 TO 0.88477	80500
47	0.87756	+ OR - 0.00263	0.87493 TO 0.88019	0.87231 TO 0.88282	0.86968 TO 0.88544	78000
52	0.87774	+ OR - 0.00268	0.87506 TO 0.88042	0.87238 TO 0.88311	0.86970 TO 0.88579	75500
57	0.87706	+ OR - 0.00274	0.87432 TO 0.87981	0.87158 TO 0.88255	0.86883 TO 0.88529	73000
62	0.87701	+ OR - 0.00282	0.87419 TO 0.87982	0.87137 TO 0.88264	0.86856 TO 0.88546	70500
67	0.87725	+ OR - 0.00290	0.87435 TO 0.88014	0.87145 TO 0.88304	0.86856 TO 0.88593	68000
72	0.87648	+ OR - 0.00295	0.87353 TO 0.87944	0.87058 TO 0.88239	0.86762 TO 0.88534	65500
77	0.87637	+ OR - 0.00304	0.87333 TO 0.87941	0.87030 TO 0.88244	0.86726 TO 0.88548	63000
82	0.87630	+ OR - 0.00304	0.87327 TO 0.87934	0.87023 TO 0.88238	0.86719 TO 0.88542	60500
87	0.87599	+ OR - 0.00311	0.87288 TO 0.87909	0.86977 TO 0.88220	0.86667 TO 0.88531	58000
92	0.87471	+ OR - 0.00315	0.87156 TO 0.87786	0.86841 TO 0.88101	0.86526 TO 0.88417	55500
97	0.87419	+ OR - 0.00322	0.87097 TO 0.87741	0.86775 TO 0.88063	0.86453 TO 0.88384	53000
102	0.87343	+ OR - 0.00330	0.87013 TO 0.87673	0.86683 TO 0.88003	0.86353 TO 0.88333	50500
107	0.87430	+ OR - 0.00335	0.87095 TO 0.87765	0.86760 TO 0.88100	0.86425 TO 0.88435	48000
112	0.87520	+ OR - 0.00343	0.87176 TO 0.87863	0.86833 TO 0.88206	0.86490 TO 0.88550	45500
117	0.87323	+ OR - 0.00338	0.86985 TO 0.87661	0.86647 TO 0.87999	0.86309 TO 0.88338	43000
122	0.87443	+ OR - 0.00347	0.87096 TO 0.87790	0.86749 TO 0.88136	0.86403 TO 0.88483	40500
127	0.87657	+ OR - 0.00355	0.87302 TO 0.88013	0.86946 TO 0.88368	0.86591 TO 0.88724	38000
132	0.87780	+ OR - 0.00374	0.87407 TO 0.88154	0.87033 TO 0.88528	0.86659 TO 0.88901	35500
137	0.87743	+ OR - 0.00394	0.87349 TO 0.88137	0.86955 TO 0.88531	0.86561 TO 0.88925	33000
142	0.87641	+ OR - 0.00411	0.87230 TO 0.88051	0.86820 TO 0.88462	0.86409 TO 0.88872	30500
147	0.87782	+ OR - 0.00398	0.87384 TO 0.88180	0.86986 TO 0.88579	0.86587 TO 0.88977	28000
152	0.87878	+ OR - 0.00428	0.87451 TO 0.88306	0.87023 TO 0.88733	0.86596 TO 0.89161	25500
157	0.87664	+ OR - 0.00442	0.87222 TO 0.88107	0.86779 TO 0.88549	0.86337 TO 0.88991	23000
162	0.87655	+ OR - 0.00467	0.87187 TO 0.88122	0.86720 TO 0.88589	0.86253 TO 0.89057	20500
167	0.87511	+ OR - 0.00510	0.87001 TO 0.88021	0.86492 TO 0.88530	0.85982 TO 0.89040	18000
172	0.87147	+ OR - 0.00542	0.86606 TO 0.87689	0.86064 TO 0.88231	0.85522 TO 0.88773	15500
177	0.86839	+ OR - 0.00594	0.86245 TO 0.87434	0.85651 TO 0.88028	0.85057 TO 0.88622	13000
182	0.86610	+ OR - 0.00658	0.85952 TO 0.87267	0.85294 TO 0.87925	0.84636 TO 0.88583	10500
187	0.86361	+ OR - 0.00733	0.85628 TO 0.87094	0.84895 TO 0.87827	0.84163 TO 0.88560	8000
192	0.85656	+ OR - 0.00933	0.84723 TO 0.86588	0.83791 TO 0.87521	0.82858 TO 0.88453	5500
197	0.86925	+ OR - 0.00994	0.85931 TO 0.87919	0.84937 TO 0.88913	0.83943 TO 0.89907	3000

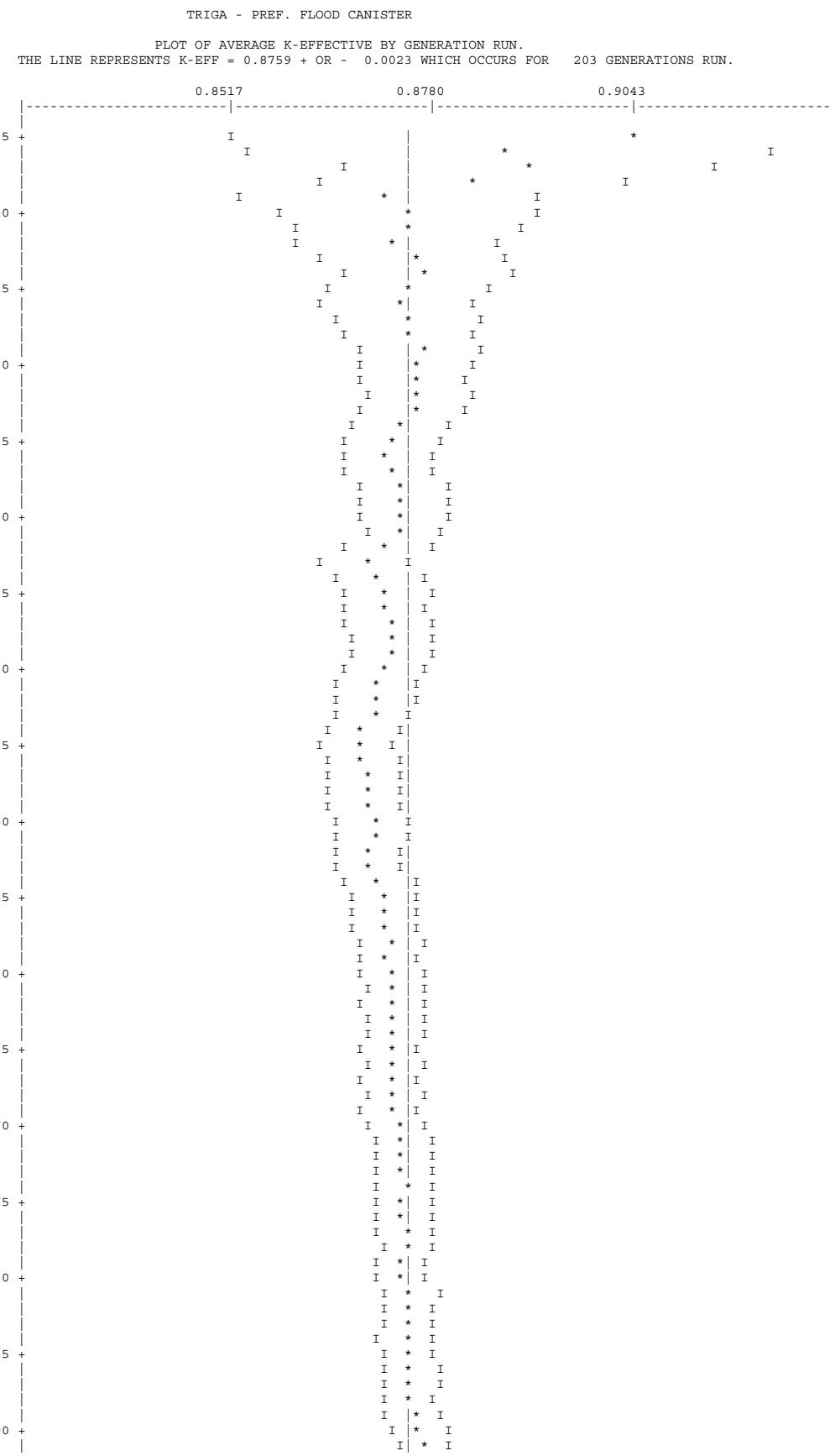
TRIGA - PREF. FLOOD CANISTER
PLOT OF AVERAGE K-EFFECTIVE BY GENERATION RUN.
THE LINE REPRESENTS K-EFF = 0.8759 + OR - 0.0023 WHICH OCCURS FOR 203 GENERATIONS RUN.
0.8517
0.8780
0.9043
5
10
15
20
25
30
35
40
45
50
55
60
65
70
75
80
85
90

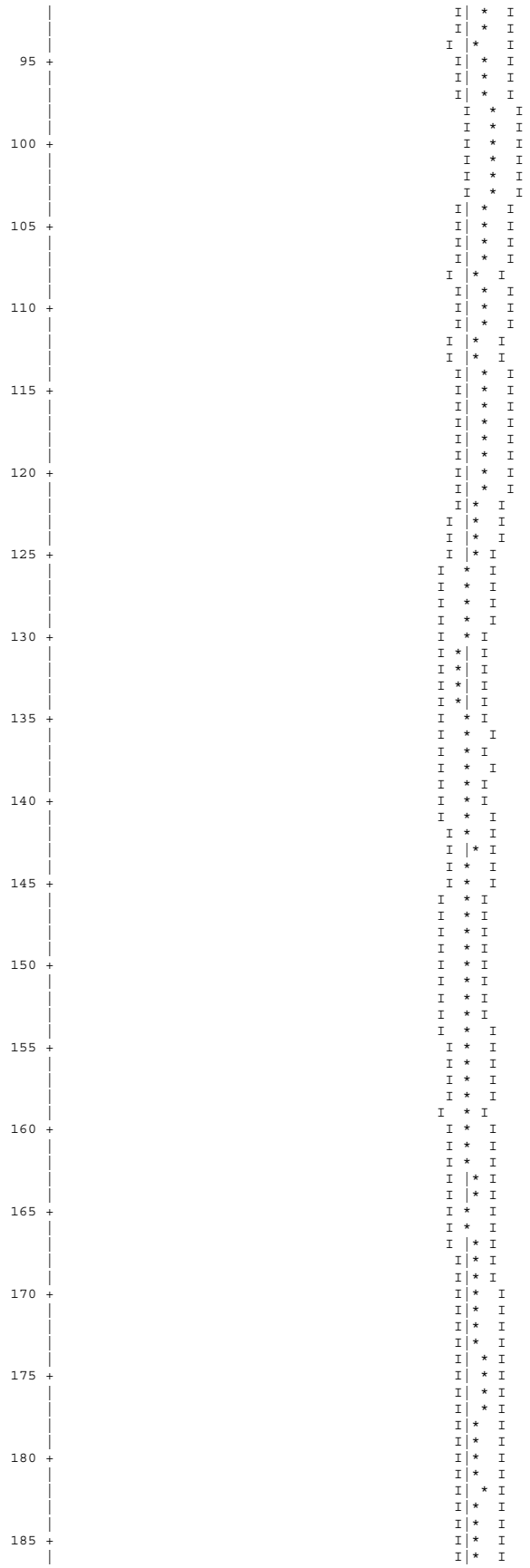


190
195
200

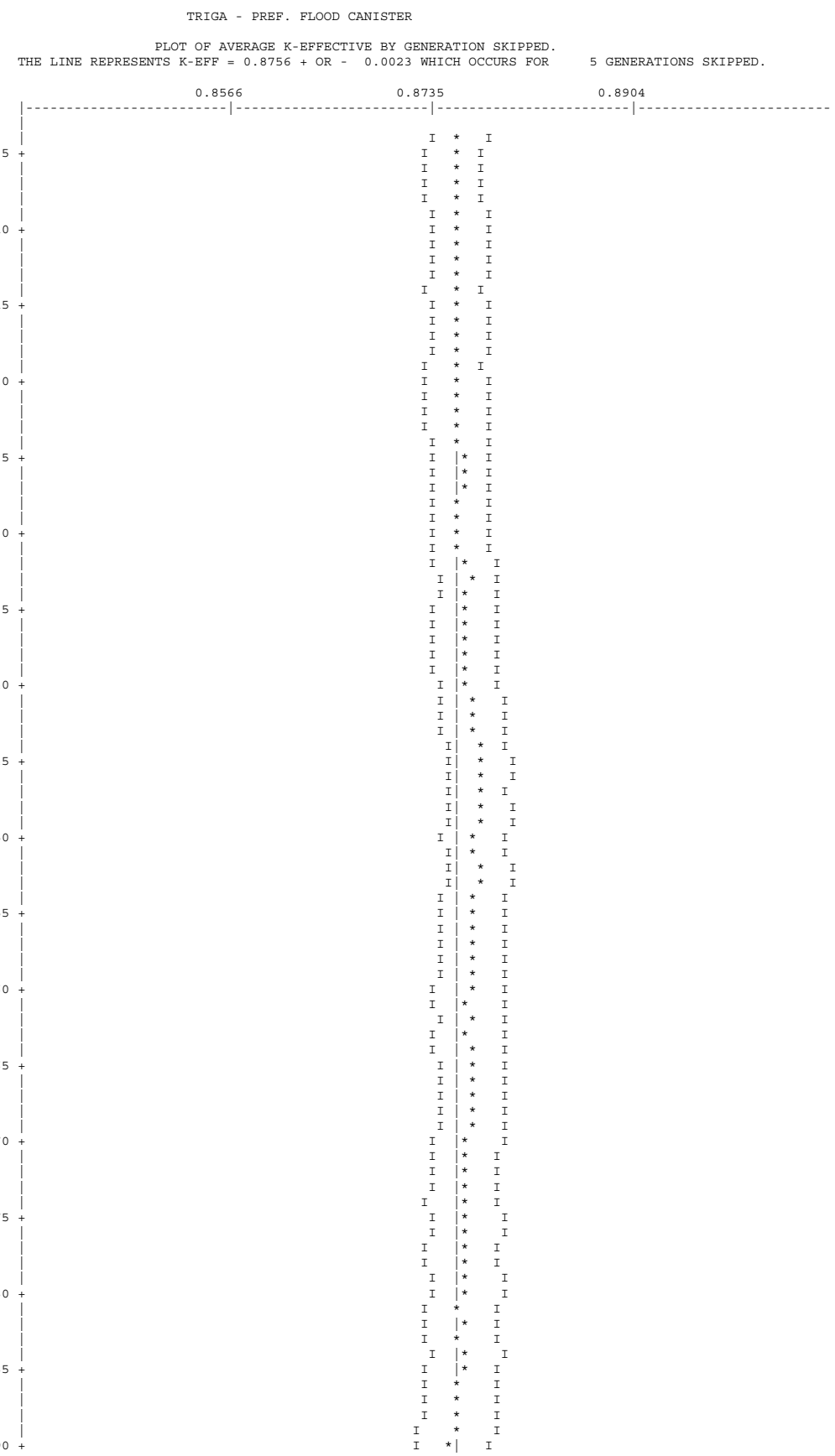
TRIGA - PREF. FLOOD CANISTER
PLOT OF AVERAGE K-EFFECTIVE BY GENERATION SKIPPED.
THE LINE REPRESENTS K-EFF = 0.8756 + OR - 0.0023 WHICH OCCURS FOR 5 GENERATIONS SKIPPED.
0.8566
0.8735
0.8904

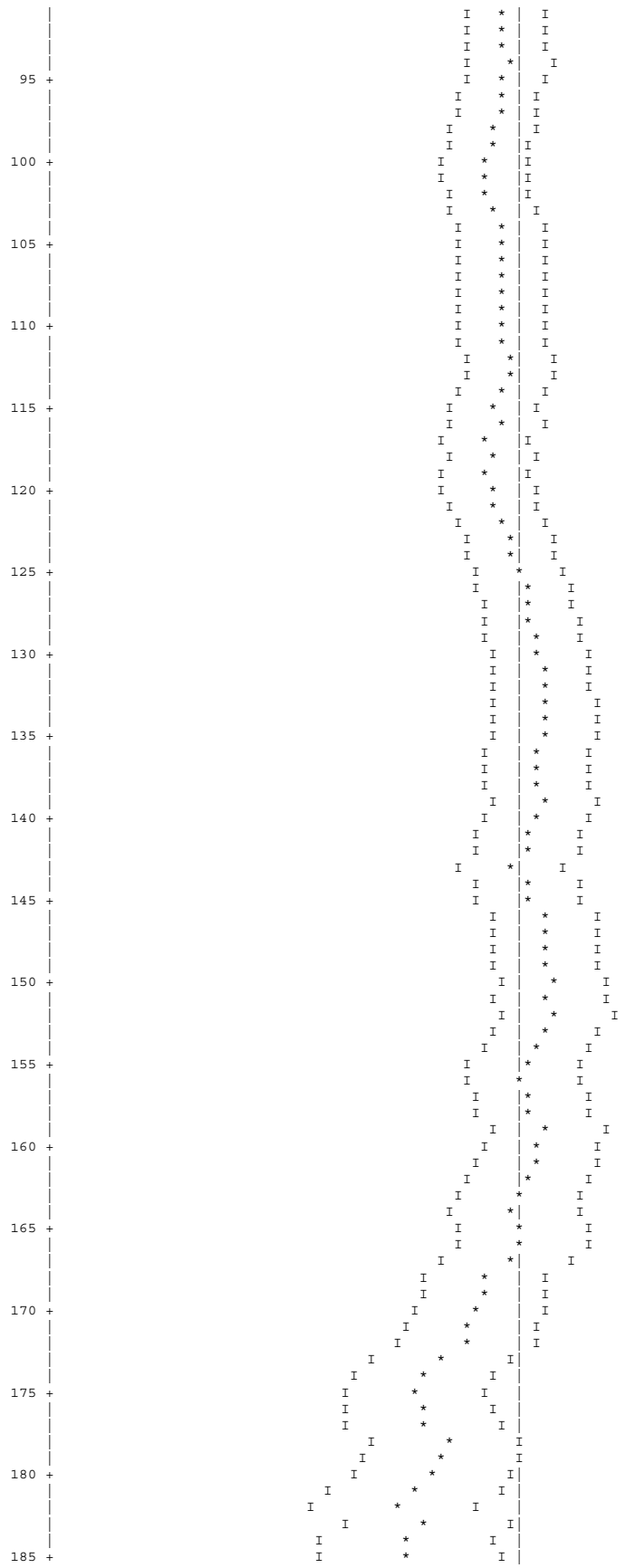

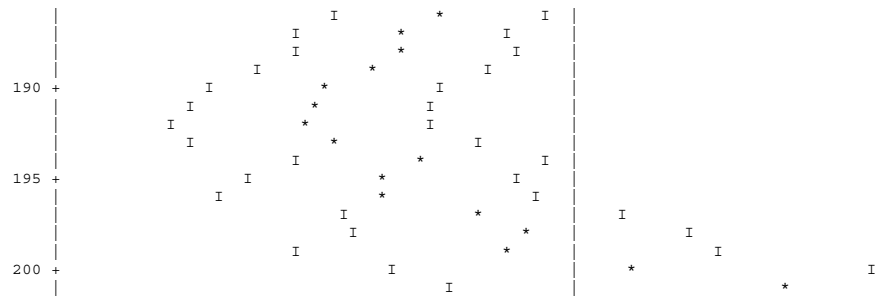

TRIGA - PREF. FLOOD CANISTER

SKIPPING 3 GENERATIONS

GROUP	FISSION FRACTION	UNIT	REGION	FISSIONS	PERCENT DEVIATION	ABSORPTIONS	PERCENT DEVIATION	LEAKAGE	PERCENT DEVIATION
1	0.0003			2.56018E-04	3.8496	1.25699E-03	3.1723	0.00000E+00	0.0000
2	0.0014			1.22398E-03	1.4507	3.43821E-03	0.9921	0.00000E+00	0.0000
3	0.0018			1.61485E-03	1.0573	1.72678E-03	0.7770	0.00000E+00	0.0000
4	0.0012			1.06025E-03	1.3116	9.63316E-04	0.9001	0.00000E+00	0.0000
5	0.0020			1.71122E-03	1.1056	2.36902E-03	0.7948	0.00000E+00	0.0000
6	0.0032			2.76174E-03	0.7774	9.11862E-03	0.7192	0.00000E+00	0.0000
7	0.0043			3.77211E-03	0.6579	2.04285E-02	0.6548	0.00000E+00	0.0000
8	0.0044			3.87077E-03	0.6914	1.71484E-02	0.6295	0.00000E+00	0.0000
9	0.0059			5.18781E-03	0.6946	1.76786E-02	0.5515	0.00000E+00	0.0000
10	0.0129			1.13315E-02	0.7029	4.47269E-02	0.5519	0.00000E+00	0.0000
11	0.0270			2.36314E-02	0.6591	5.84033E-02	0.5306	0.00000E+00	0.0000
12	0.0351			3.07643E-02	0.6089	4.62759E-02	0.5061	0.00000E+00	0.0000
13	0.0313			2.73796E-02	0.6250	5.51179E-02	0.4853	0.00000E+00	0.0000
14	0.0251			2.20157E-02	0.5789	6.43131E-02	0.5476	0.00000E+00	0.0000
15	0.0049			4.26451E-03	0.7710	3.08925E-02	0.8220	0.00000E+00	0.0000
16	0.0032			2.80705E-03	1.0406	1.72502E-02	0.8815	0.00000E+00	0.0000
17	0.0049			4.27848E-03	1.3408	9.67304E-03	0.8741	0.00000E+00	0.0000
18	0.0065			5.67280E-03	1.2992	8.93018E-03	0.8323	0.00000E+00	0.0000
19	0.0077			6.75195E-03	1.1157	1.43218E-02	0.7983	0.00000E+00	0.0000
20	0.0306			2.68092E-02	0.6428	4.39716E-02	0.6909	0.00000E+00	0.0000
21	0.0157			1.37874E-02	1.0465	1.62441E-02	0.8753	0.00000E+00	0.0000
22	0.0358			3.13575E-02	0.7425	3.18522E-02	0.7699	0.00000E+00	0.0000
23	0.1040			9.10929E-02	0.4225	8.49914E-02	0.4693	0.00000E+00	0.0000
24	0.1842			1.61359E-01	0.4232	1.29973E-01	0.4082	0.00000E+00	0.0000
25	0.1569			1.37437E-01	0.4836	1.02516E-01	0.4616	0.00000E+00	0.0000
26	0.2046			1.79249E-01	0.4884	1.23471E-01	0.5002	0.00000E+00	0.0000
27	0.0850			7.44517E-02	0.7552	4.55169E-02	0.7639	0.00000E+00	0.0000
SYSTEM TOTAL =				8.75900E-01	0.2627	1.00257E+00	0.0915	0.00000E+00	0.0000

ELAPSED TIME 5.15750 MINUTES

RANDOM NUMBER= 464866E647B1

```
TRIGA - PREF. FLOOD CANISTER

                              FREQUENCY FOR GENERATIONS    4 TO  203
0.7920 TO 0.8099     *****
0.8099 TO 0.8278     ***********
0.8278 TO 0.8457     ****************
0.8457 TO 0.8636     ****************************************
0.8636 TO 0.8815     ************************************
0.8815 TO 0.8994     ********************************************
0.8994 TO 0.9173     ****************************
0.9173 TO 0.9352     *********
0.9352 TO 0.9530     ****
0.9530 TO 0.9709     ***

                              FREQUENCY FOR GENERATIONS   54 TO  203
0.7920 TO 0.8099     ***
0.8099 TO 0.8278     *********
0.8278 TO 0.8457     **************
0.8457 TO 0.8636     **************************
0.8636 TO 0.8815     ************************
0.8815 TO 0.8994     *********************************
0.8994 TO 0.9173     *************************
0.9173 TO 0.9352     ********
0.9352 TO 0.9530     ****
0.9530 TO 0.9709     **

                              FREQUENCY FOR GENERATIONS  104 TO  203
0.7920 TO 0.8099     ***
0.8099 TO 0.8278     *******
0.8278 TO 0.8457     ***********
0.8457 TO 0.8636     ******************
0.8636 TO 0.8815     ********************
0.8815 TO 0.8994     ******************
0.8994 TO 0.9173     ***************
0.9173 TO 0.9352     *****
0.9352 TO 0.9530     **
0.9530 TO 0.9709     *

                              FREQUENCY FOR GENERATIONS  154 TO  203
0.7920 TO 0.8099     *
0.8099 TO 0.8278     ****
0.8278 TO 0.8457     ***
0.8457 TO 0.8636     *******
0.8636 TO 0.8815     **********
0.8815 TO 0.8994     ***********
0.8994 TO 0.9173     ************
0.9173 TO 0.9352     *
0.9352 TO 0.9530     *
0.9530 TO 0.9709


*************************************************************************************************************************************************
*

          CONGRATULATIONS!  YOU HAVE  SUCCESSFULLY TRAVERSED THE PERILOUS PATH THROUGH KENO V IN   5.15750 MINUTES

*************************************************************************************************************************************************
*
```

Figure 6.6.6-2 TRIGA Fuel Cluster Rods – Base Fuel Configuration - Poisoned Basket

```
       PRIMARY MODULE ACCESS AND INPUT RECORD ( SCALE DRIVER - 95/03/29 - 09:06:37 )
MODULE CSAS25   WILL BE CALLED
  TRIGA - PREF. FLOOD CANISTER
  27GROUPNDF4  INFHOMMEDIUM
  'FUEL
  U-235   1 0.0 2.30596E-04 END
  U-238   1 0.0 1.62631E-05 END
  ZR      1 0.0 5.37586E-03 END
  H       1 0.0 8.45211E-03 END
  H2O     1 0.84220 293.0 END
  'CLAD, BASKET, AND CASK
  SS304   2 1.0 293.0 END
  'CANISTER INTERNAL MODERATOR
  H2O    3 1.0 293.0 END
  'ZIRCONIUM ROD
  ZR      4 1.0 293.0 END
  'GRAPHITE REFLETOR
  C       5 1.0 293.0 END
  'LEAD SHIELD
  PB      6 1.0 293.0 END
  'NEUTRON SHIELD
  H2O     7 1E-20 293.0 END
  'CASK EXTERNAL MATERIAL
  H2O     8 1E-20 293.0 END
  'END FITTING FOR FUEL ELEMENT
  SS304   9 0.337137 293.0 END
  H2O     9 1E-20 293.0 END
  'SECOND FUEL MATERIAL FOR UN-CANISTERED
  U-235   10 0.0 9.052980E-4 END
  U-238   10 0.0 3.849480E-4 END
  ZR      10 0.0 3.446510E-2 END
  H       10 0.0 5.514420E-2 END
  'SECOND END-FITTING MATERIAL FOR UN-CANISTERED FUEL
  SS304   11 0.337137 293.0 END
  H2O     11 DEN=0.662863 1.00E-3 293.0 END
  'CASK INTERIOR MODERATOR MATERIAL
  H2O  12 1.00E-3 293.0 END
  'NEUTRON ABSORBER PLATE WITH BORON
  FE     13 DEN=7.76 0.6717 293.0 END
  C      13 DEN=7.76 0.0001 293.0 END
  SI     13 DEN=7.76 0.0033 293.0 END
  MN     13 DEN=7.76 0.0060 293.0 END
  P      13 DEN=7.75 0.0001 293.0 END
  CR     13 DEN=7.76 0.1849 293.0 END
  NI     13 DEN=7.76 0.1233 293.0 END
  B-10   13 DEN=7.76 0.0073 293.0 END
  B-11   13 DEN=7.76 0.0007 293.0 END
  N      13 DEN=7.76 0.0017 293.0 END
  'NEUTRON ABSORBER PLATE WITHOUT BORON
  FE     14 DEN=7.76 0.6717 293.0 END
  C      14 DEN=7.76 0.0001 293.0 END
  SI     14 DEN=7.76 0.0033 293.0 END
  MN     14 DEN=7.76 0.0060 293.0 END
  P      14 DEN=7.75 0.0001 293.0 END
  CR     14 DEN=7.76 0.1849 293.0 END
  NI     14 DEN=7.76 0.1233 293.0 END
  N      14 DEN=7.76 0.0017 293.0 END
  'FUEL FOR RODS
  U-235   21 0.0 1.46137E-03 END
  U-238   21 0.0 1.03065E-04 END
  ZR      21 0.0 3.40686E-02 END
  H       21 0.0 5.35638E-02 END
  'CLAD INCOLOY
  NI              22       0 0.028516 END
  FE              22       0 0.033820 END
  CR              22       0 0.021151 END
  C               22       0 0.000399 END
  MN              22       0 0.001306 END
  S               22       0 0.000022 END
  SI              22       0 0.001703 END
  CU              22       0 0.000560 END
  AL              22       0 0.000266 END
  TI              22       0 0.000150 END
  'CASK INTERNAL MODERATOR
  H2O  23 1.00E-3 293.0 END
  'LEAD SHIELD
  PB      26 1.0 293.0 END
  'NEUTRON SHIELD
  H2O     27 1E-20 293.0 END
  'CASK EXTERNAL MATERIAL
  H2O     28 1E-20 293.0 END
  'END FITTING FOR FUEL ELEMENT
  SS304  29 .4968 293.0 END
  H2O     29 DEN=.5031 1.00E-3 293.0 END
  ' BASKET, AND CASK NEED TO LOOK AT HOW THIS IS USED
  SS304   212 1.0 293.0 END
  'NEUTRON ABSORBER PLATE WITH BORON
  FE     210 DEN=7.76 0.6717 293.0 END
  C      210 DEN=7.76 0.0001 293.0 END
```

```
SI      210 DEN=7.76 0.0033 293.0 END
MN      210 DEN=7.76 0.0060 293.0 END
P       210 DEN=7.75 0.0001 293.0 END
CR      210 DEN=7.76 0.1849 293.0 END
NI      210 DEN=7.76 0.1233 293.0 END
B-10    210 DEN=7.76 0.0073 293.0 END
B-11    210 DEN=7.76 0.0007 293.0 END
N       210 DEN=7.76 0.0017 293.0 END
'NEUTRON ABSORBER PLATE WITHOUT BORON
FE      211 DEN=7.76 0.6717 293.0 END
C       211 DEN=7.76 0.0001 293.0 END
SI      211 DEN=7.76 0.0033 293.0 END
MN      211 DEN=7.76 0.0060 293.0 END
P       211 DEN=7.75 0.0001 293.0 END
CR      211 DEN=7.76 0.1849 293.0 END
NI      211 DEN=7.76 0.1233 293.0 END
N       211 DEN=7.76 0.0017 293.0 END
'AL FUEL HOLDER
AL 215 1.0 293.0 END
END COMP
MORE DATA
RES=21  CYLINDER 0.6477 DAN(21)=.38879
END MORE
TRIGA - PREF. FLOOD CANISTER
READ PARAM TME=170.0 GEN=203 NPG=500 RUN=YES PLT=NO
TBA=2.0 END PARAM
READ GEOM
UNIT 1
COM='TRIGA FUEL (SMEARED)'
CYLINDER 1 1 3.9877 60.959 0.001
UNIT 5
COM='3.38 in Width / 0.28 in Thickness DIVIDER CENTER STACK (SEALED)'
CUBOID   2 1 2P4.2672 0.7112 0.0 +74.29 -8.255
UNIT 6
COM='3.38 in Width / 0.24 in Thickness DIVIDER OUTSIDE STACK (SEALED)'
CUBOID   2 1 2P4.2672 0.6096 0.0 +74.29 -8.255
UNIT 7
COM='SEALED CANISTER'
CYLINDER  3 1 3.9878 +60.96 0.0
HOLE      1  0.0 0.0 0.0
CYLINDER  2 1 4.1529 +63.50 -1.27
CYLINDER 12 1 4.1529 +74.29 -8.255
UNIT 10
COM='TRIGA ELEMENTS IN Top of 3.38 in x 3.38 in OPENING (SEALED)'
CUBOID    12 1 2P4.2672 2P4.2672 +74.29 -8.255
HOLE 7    0.0 0.1142 0.0
UNIT 11
COM='TRIGA ELEMENTS IN Bottom of 3.38 in x 3.38 in OPENING (SEALED)'
CUBOID    12 1 2P4.2672 2P4.2672 +74.29 -8.255
HOLE 7    0.0 -0.1142 0.0
UNIT 12
COM='TRIGA ELEMENTS IN Bottom Right of 3.38 in x 3.38 in OPENING (SEALED)'
CUBOID    12 1 2P4.2672 2P4.2672 +74.29 -8.255
HOLE 7    +0.1142 -0.1142 0.0
UNIT 13
COM='TRIGA ELEMENTS IN Top Right of 3.38 in x 3.38 in OPENING (SEALED)'
CUBOID    12 1 2P4.2672 2P4.2672 +74.29 -8.255
HOLE 7    +0.1142 +0.1142 0.0
UNIT 14
COM='TRIGA ELEMENTS IN Bottom Left of 3.38 in x 3.38 in OPENING (SEALED)'
CUBOID    12 1 2P4.2672 2P4.2672 +74.29 -8.255
HOLE 7    -0.1142 -0.1142 0.0
UNIT 15
COM='TRIGA ELEMENTS IN Top Left of 3.38 in x 3.38 in OPENING (SEALED)'
CUBOID    12 1 2P4.2672 2P4.2672 +74.29 -8.255
HOLE 7    -0.1142 +0.1142 0.0
UNIT 16
COM='TRIGA BASKET 3.38 in x 3.38 in CENTER OPENING (SEALED)'
CUBOID    12 1 2P4.2672 2P4.2672 +74.29 -8.255
HOLE       7  0.0  0.0  0.0
UNIT 17
COM='HORIZONTAL X-X POISON SHEET + WATER'
CUBOID  13 1 2P3.8227 0.3175 0.0 +73.02 -6.985
CUBOID  14 1 2P4.1402 0.3175 0.0 +73.02 -6.985
CUBOID  12 1 2P4.2672 0.3175 0.0 +74.29 -8.255
UNIT 18
COM='HORIZONTAL X-X POISON SHEET + WATER'
CUBOID  13 1 2P3.8227 0.3175 0.0 2P34.163
CUBOID  14 1 2P4.1402 0.3175 0.0 2P34.163
CUBOID  12 1 2P4.2672 0.3175 0.0 2P36.703
UNIT 20
COM='CENTER COLUMN OF THREE OPENINGS w/ 0.28 in plate (SEALED)'
ARRAY 1  -4.2672 -13.8303 -8.255
REPLICATE 2 1 4R0.7112 2R0.0 1
UNIT 21
COM='LEFT OUTSIDE COLUMN OF TWO OPENINGS w/ 0.12 in plate (SEALED)'
ARRAY 2  -4.2672 -8.9979 -8.255
REPLICATE 2 1 0.0 0.3048 2R0.3048 2R0.0 1
UNIT 22
COM='RIGHT OUTSIDE COLUMN OF TWO OPENINGS w/ 0.12 in plate (SEALED)'
ARRAY 3  -4.2672 -8.9979 -8.255
REPLICATE 2 1 0.3048 0.0 2R0.3048 2R0.0 1
UNIT 30
COM='NAC-LWT TRIGA BASKET (SEALED)'
CYLINDER 12  1 17.1 +74.29 -8.255
```

```
HOLE 20   0.0    0.0 0.0
HOLE 21  -9.2457 0.0 0.0
HOLE 22  +9.2457 0.0 0.0
CYLINDER 2  1 18.9103 +74.93 -8.890
CYLINDER 6  1 33.4645 +74.93 -8.890
CYLINDER 2  1 36.5188 +74.93 -8.890
CYLINDER 7   1 49.2227 +74.93 -8.890
CYLINDER 2  1 49.8221 +74.93 -8.890
CUBOID   8  1 4P49.8221 +74.93 -8.890
UNIT 41
COM='TRIGA FUEL ELEMENT'
CYLINDER  21 1 0.6477 2P27.94
CYLINDER  22 1 0.68834 2P27.94
CYLINDER  29 1 0.68834 43.48 -33.04
UNIT 42
COM='HORIZONTAL X-X POISON SHEET + WATER'
CUBOID   210 1 2P3.8227 0.3175 0.0 39.38 -28.94
CUBOID   211 1 2P4.1402 0.3175 0.0 39.38 -28.94
CUBOID   23  1 2P4.2672 0.3175 0.0 43.48 -33.04
UNIT 45
COM='DIVIDER CENTER STACK'
CUBOID   212 1 2P4.2672 0.7112 0.0 43.48 -33.04
UNIT 46
COM='DIVIDER OUTSIDE STACK'
CUBOID   212 1 2P4.2672 0.6096 0.0 43.48 -33.04
UNIT 410
COM='TRIGA FUEL ELEMENTS IN AL TUBE, CENTERED'
CYLINDER 23 1  0.809625  43.48 -33.04
HOLE  41  0.0 0.0 0.0
CYLINDER 215 1 0.94805  43.48 -33.04
UNIT 411
COM='TRIGA FUEL ELEMENTS IN AL TUBE, RIGHT'
CYLINDER 23 1  0.809625  43.48 -33.04
HOLE  41   0.12127  0.0 0.0
CYLINDER 215 1 0.94805  43.48 -33.04
UNIT 412
COM='TRIGA FUEL ELEMENTS IN AL TUBE, LEFT'
CYLINDER 23 1  0.809625  43.48 -33.04
HOLE  41  -0.12127  0.0 0.0
CYLINDER 215 1 0.94805  43.48 -33.04
UNIT 413
COM='TRIGA FUEL ELEMENTS IN AL TUBE, TOP'
CYLINDER 23 1  0.809625  43.48 -33.04
HOLE  41  0.0 0.12127 0.0
CYLINDER 215 1 0.94805  43.48 -33.04
UNIT 414
COM='TRIGA FUEL ELEMENTS IN AL TUBE, BOTTOM'
CYLINDER 23 1  0.809625  43.48 -33.04
HOLE  41  0.0 -0.12127 0.0
CYLINDER 215 1 0.94805  43.48 -33.04
UNIT 415
COM='TRIGA FUEL ELEMENTS IN AL TUBE, TOP RIGHT'
CYLINDER 23 1  0.809625  43.48 -33.04
HOLE  41  0.08574  0.08574 0.0
CYLINDER 215 1 0.94805  43.48 -33.04
UNIT 416
COM='TRIGA FUEL ELEMENTS IN AL TUBE, TOP LEFT'
CYLINDER 23 1  0.809625  43.48 -33.04
HOLE  41  -0.08574 0.08574 0.0
CYLINDER 215 1 0.94805  43.48 -33.04
UNIT 417
COM='TRIGA FUEL ELEMENTS IN AL TUBE, BOTTOM RIGHT'
CYLINDER 23 1  0.809625  43.48 -33.04
HOLE  41  0.08574  -0.08574 0.0
CYLINDER 215 1 0.94805  43.48 -33.04
UNIT 418
COM='TRIGA FUEL ELEMENTS IN AL TUBE, BOTTOM LEFT'
CYLINDER 23 1  0.809625  43.48 -33.04
HOLE  41  -0.08574 -0.08574 0.0
CYLINDER 215 1 0.94805  43.48 -33.04
UNIT 420
COM='AL TUBES WITH TRIGA FUEL, IN FUEL INSERT, CENTER OPENING'
CUBOID    23 1 4P4.1529 43.48 -33.04
HOLE           415  -2.8443 -2.8443       0
HOLE           413  -0.94810 -2.8443       0
HOLE           413   0.94810 -2.8443       0
HOLE           416   2.8443 -2.8443       0
HOLE           411  -2.8443 -0.94810      0
HOLE           415  -0.94810 -0.94810      0
HOLE           416   0.94810 -0.94810      0
HOLE           412   2.8443 -0.94810      0
HOLE           411  -2.8443  0.94810      0
HOLE           417  -0.94810 0.94810      0
HOLE           418   0.94810 0.94810      0
HOLE           412   2.8443  0.94810      0
HOLE           417  -2.8443  2.8443       0
HOLE           414  -0.94810 2.8443       0
HOLE           414   0.94810 2.8443       0
HOLE           418   2.8443  2.8443       0
CUBOID    23 1 4P4.1529 43.48 -33.04
' CHECK 4.1 CM ABOVE*********************
UNIT 421
COM='AL TUBES WITH TRIGA FUEL, IN FUEL INSERT, BOTTOM OPENING'
CUBOID    23 1 4P4.1529 43.48 -33.04
HOLE           415  -2.8443 -2.8443       0
```

```
HOLE           413  -0.94810 -2.8443       0
HOLE           413   0.94810 -2.8443       0
HOLE           416   2.8443 -2.8443       0
HOLE           411  -2.8443 -0.94810      0
HOLE           415  -0.94810 -0.94810      0
HOLE           416   0.94810 -0.94810      0
HOLE           412   2.8443 -0.94810      0
HOLE           411  -2.8443  0.94810      0
HOLE           417  -0.94810 0.94810      0
HOLE           418   0.94810 0.94810      0
HOLE           412   2.8443  0.94810      0
HOLE           417  -2.8443  2.8443       0
HOLE           414  -0.94810 2.8443       0
HOLE           414   0.94810 2.8443       0
HOLE           418   2.8443  2.8443       0
CUBOID    23 1 4P4.1529 43.48 -33.04
' CHECK 4.1 CM ABOVE*********************
UNIT 422
COM='AL TUBES WITH TRIGA FUEL, IN FUEL INSERT, TOP OPENING'
CUBOID    23 1 4P4.1529 43.48 -33.04
HOLE           415  -2.8443 -2.8443       0
HOLE           413  -0.94810 -2.8443       0
HOLE           413   0.94810 -2.8443       0
HOLE           416   2.8443 -2.8443       0
HOLE           411  -2.8443 -0.94810      0
HOLE           415  -0.94810 -0.94810      0
HOLE           416   0.94810 -0.94810      0
HOLE           412   2.8443 -0.94810      0
HOLE           411  -2.8443  0.94810      0
HOLE           417  -0.94810 0.94810      0
HOLE           418   0.94810 0.94810      0
HOLE           412   2.8443  0.94810      0
HOLE           417  -2.8443  2.8443       0
HOLE           414  -0.94810 2.8443       0
HOLE           414   0.94810 2.8443       0
HOLE           418   2.8443  2.8443       0
CUBOID    23 1 4P4.1529 43.48 -33.04
' CHECK 4.1 CM ABOVE*********************
UNIT 423
COM='AL TUBES WITH TRIGA FUEL, IN FUEL INSERT, BOTTOM LEFT OPENING'
CUBOID    23 1 4P4.1529 43.48 -33.04
HOLE           415  -2.8443 -2.8443       0
HOLE           413  -0.94810 -2.8443       0
HOLE           413   0.94810 -2.8443       0
HOLE           416   2.8443 -2.8443       0
HOLE           411  -2.8443 -0.94810      0
HOLE           415  -0.94810 -0.94810      0
HOLE           416   0.94810 -0.94810      0
HOLE           412   2.8443 -0.94810      0
HOLE           411  -2.8443  0.94810      0
HOLE           417  -0.94810 0.94810      0
HOLE           418   0.94810 0.94810      0
HOLE           412   2.8443  0.94810      0
HOLE           417  -2.8443  2.8443       0
HOLE           414  -0.94810 2.8443       0
HOLE           414   0.94810 2.8443       0
HOLE           418   2.8443  2.8443       0
CUBOID    23 1 4P4.1529 43.48 -33.04
' CHECK 4.1 CM ABOVE*********************
UNIT 424
COM='AL TUBES WITH TRIGA FUEL, IN FUEL INSERT, TOP LEFT OPENING'
CUBOID    23 1 4P4.1529 43.48 -33.04
HOLE           415  -2.8443 -2.8443       0
HOLE           413  -0.94810 -2.8443       0
HOLE           413   0.94810 -2.8443       0
HOLE           416   2.8443 -2.8443       0
HOLE           411  -2.8443 -0.94810      0
HOLE           415  -0.94810 -0.94810      0
HOLE           416   0.94810 -0.94810      0
HOLE           412   2.8443 -0.94810      0
HOLE           411  -2.8443  0.94810      0
HOLE           417  -0.94810 0.94810      0
HOLE           418   0.94810 0.94810      0
HOLE           412   2.8443  0.94810      0
HOLE           417  -2.8443  2.8443       0
HOLE           414  -0.94810 2.8443       0
HOLE           414   0.94810 2.8443       0
HOLE           418   2.8443  2.8443       0
CUBOID    23 1 4P4.1529 43.48 -33.04
' CHECK 4.1 CM ABOVE*********************
UNIT 425
COM='AL TUBES WITH TRIGA FUEL, IN FUEL INSERT, BOTTOM RIGHT OPENING'
CUBOID    23 1 4P4.1529 43.48 -33.04
HOLE           415  -2.8443 -2.8443       0
HOLE           413  -0.94810 -2.8443       0
HOLE           413   0.94810 -2.8443       0
HOLE           416   2.8443 -2.8443       0
HOLE           411  -2.8443 -0.94810      0
HOLE           415  -0.94810 -0.94810      0
HOLE           416   0.94810 -0.94810      0
HOLE           412   2.8443 -0.94810      0
HOLE           411  -2.8443  0.94810      0
HOLE           417  -0.94810 0.94810      0
HOLE           418   0.94810 0.94810      0
HOLE           412   2.8443  0.94810      0
```

```
HOLE           417  -2.8443  2.8443       0
HOLE           414  -0.94810 2.8443       0
HOLE           414   0.94810 2.8443       0
HOLE           418   2.8443  2.8443       0
CUBOID    23 1 4P4.1529 43.48 -33.04
' CHECK 4.1 CM ABOVE*********************
UNIT 426
COM='AL TUBES WITH TRIGA FUEL, IN FUEL INSERT, TOP RIGHT OPENING'
CUBOID    23 1 4P4.1529 43.48 -33.04
HOLE           415  -2.8443 -2.8443       0
HOLE           413  -0.94810 -2.8443       0
HOLE           413   0.94810 -2.8443       0
HOLE           416   2.8443 -2.8443       0
HOLE           411  -2.8443 -0.94810      0
HOLE           415  -0.94810 -0.94810      0
HOLE           416   0.94810 -0.94810      0
HOLE           412   2.8443 -0.94810      0
HOLE           411  -2.8443  0.94810      0
HOLE           417  -0.94810 0.94810      0
HOLE           418   0.94810 0.94810      0
HOLE           412   2.8443  0.94810      0
HOLE           417  -2.8443  2.8443       0
HOLE           414  -0.94810 2.8443       0
HOLE           414   0.94810 2.8443       0
HOLE           418   2.8443  2.8443       0
CUBOID    23 1 4P4.1529 43.48 -33.04
UNIT 430
COM='FUEL INSERT IN, CENTER OPENING'
CUBOID    23 1 4P4.2672 43.48 -33.04
HOLE 420   0.0 0.0 0.0
UNIT 431
COM='FUEL INSERT IN, BOTTOM OPENING'
CUBOID    23 1 4P4.2672 43.48 -33.04
HOLE 421   0.0 -0.1143 0.0
UNIT 432
COM='FUEL INSERT IN, TOP OPENING'
CUBOID    23 1 4P4.2672 43.48 -33.04
HOLE 422   0.0 0.1143 0.0
UNIT 433
COM='FUEL INSERT IN, BOTTOM LEFT OPENING'
CUBOID    23 1 4P4.2672 43.48 -33.04
HOLE 423   -0.1143 -0.1143 0.0
UNIT 434
COM='FUEL INSERT IN, TOP LEFT OPENING'
CUBOID    23 1 4P4.2672 43.48 -33.04
HOLE 424   -0.1143 0.1143 0.0
UNIT 435
COM='FUEL INSERT IN, BOTOM RIGHT OPENING'
CUBOID    23 1 4P4.2672 43.48 -33.04
HOLE 425   0.1143 -0.1143 0.0
UNIT 436
COM='FUEL INSERT IN, TOP RIGHT OPENING'
CUBOID    23 1 4P4.2672 43.48 -33.04
HOLE 426   0.1143 0.1143 0.0
UNIT 440
COM='CENTER COLUMN OF THREE OPENINGS'
ARRAY 41  -4.2672 -13.8303 -33.04
REPLICATE 212 1 4R0.7112 2R0.0 1
UNIT 441
COM='LEFT OUTSIDE COLUMN OF TWO OPENINGS'
ARRAY 42  -4.2672 -8.9979 -33.04
REPLICATE 212 1 0.0 0.3408 2R0.3408 2R0.0 1
UNIT 442
COM='RIGHT OUTSIDE COLUMN OF TWO OPENINGS'
ARRAY 43  -4.2672 -8.9979 -33.04
REPLICATE 212 1 0.3408 0.0 2R0.3408 2R0.0 1
UNIT 450
COM='28 TRIGA FUEL ELEMENTS IN EACH LWT BASKET'
CYLINDER 23  1 17.1500 43.485 -33.045
HOLE 440   0.0    0.0 0.0
HOLE 441  -9.2457 0.0 0.0
HOLE 442  +9.2457 0.0 0.0
CYLINDER 212  1 18.9103 43.485 -33.045
CYLINDER 26   1 33.4645 43.485 -33.045
CYLINDER 212  1 36.5188 43.485 -33.045
CYLINDER 27   1 49.2227 43.485 -33.045
CYLINDER 212  1 49.8221 43.485 -33.045
CUBOID   28   1 4P49.8221 43.485 -33.045
UNIT 80
COM='SIMPLIFIED LID STRUCTURE NAC-LWT'
CYLINDER 2 1 36.5188 2P14.1351
CYLINDER 8 1 49.8221 2P14.1351
CUBOID   8 1 4P49.8221 2P14.1351
UNIT 81
COM='SIMPLIFIED CASK BOTTOM STRUCTURE NAC-LWT'
CYLINDER 6 1 26.3525 2P3.81
CYLINDER 2 1 36.6188 +13.97 -12.7
CYLINDER 8 1 49.8221 +13.97 -12.7
CUBOID   8 1 4P49.8221 +13.97 -12.7
GLOBAL UNIT 82
COM='STACK OF 5 BASKETS IN CASK'
ARRAY  20  -49.8221 -49.8221 -221.3
END GEOM
READ ARRAY
ARA=1 NUX=1 NUY=7 NUZ=1 FILL 10 5 17 16 17 5 11 END FILL
```

```
  ARA=2 NUX=1 NUY=4 NUZ=1 FILL 13 17 6 12 END FILL
  ARA=3 NUX=1 NUY=4 NUZ=1 FILL 15 17 6 14 END FILL
  ARA=41 NUX=1 NUY=7 NUZ=1 FILL 432 45 42 430 42 45 431 END FILL
  ARA=42 NUX=1 NUY=4 NUZ=1 FILL 436 46 42 435 END FILL
  ARA=43 NUX=1 NUY=4 NUZ=1 FILL 434 46 42 433 END FILL
  ARA=20 NUX=1 NUY=1 NUZ=7 FILL 81 30 3R450 30 80 END FILL
  END ARRAY
  READ BOUNDS ALL=MIR END BOUNDS
  READ PLOT
  TTL='X-Y PLOT OF CASK (CANISTER ELEVATION)'
  SCR=YES PIC=MAT LPI=10
  UAX=1.0 VDN=-1.0 NAX=800
  XUL=-50.0 YUL=50.0 ZUL=149.352
  XLR=50.0 YLR=-50.0 ZLR=149.352 END
  TTL='X-Y PLOT OF BASKET (CANISTER ELEVATION)'
  SCR=YES PIC=MAT LPI=10
  UAX=1.0 VDN=-1.0 NAX=800
  XUL=-17.2 YUL=17.2 ZUL=149.352
  XLR=17.2 YLR=-17.2 ZLR=149.352 END
  TTL='X-Y PLOT OF BASKET (CAVITY MID PLANE)'
  SCR=YES PIC=MAT LPI=10
  UAX=1.0 VDN=-1.0 NAX=800
  XUL=-17.2 YUL=17.2 ZUL=0.0
  XLR=17.2 YLR=-17.2 ZLR=0.0 END
  TTL='X-Y PLOT OF CENTER OPENING (CANISTER ELEVATION)'
  SCR=YES PIC=MAT LPI=10
  UAX=1.0 VDN=-1.0 NAX=800
  XUL=-7.0 YUL=7.0 ZUL=149.352
  XLR=7.0 YLR=-7.0 ZLR=149.352 END
  TTL='X-Y PLOT OF PERIPHERAL OPENING (CANISTER ELEVATION)'
  SCR=YES PIC=MAT LPI=10
  UAX=1.0 VDN=-1.0 NAX=800
  XUL=-7.0 YUL=16.0 ZUL=149.352
  XLR=7.0  YLR=4.0 ZLR=149.352 END
  TTL='Y-Z PLOT OF BASKET (CENTER OF FUEL ELEMENTS,CANISTER ELEVATION)'
  SCR=YES PIC=MAT LPI=10
  VAX=1.0 WDN=-1.0 NAX=800
  XUL=2.12 YUL=-14.0 ZUL=186.69
  XLR=2.12 YLR=-4.5 ZLR=112.014 END
  TTL='Y-Z PLOT OF BASKET (CASK)'
  SCR=YES PIC=MAT LPI=10
  VAX=1.0 WDN=-1.0 NAX=800
  XUL=2.12 YUL=-51 ZUL=220.0
  XLR=2.12 YLR=+51 ZLR=-220.0
  END PLOT
  END DATA

SECONDARY MODULE O0O008   HAS BEEN CALLED.

MODULE O0O008   IS FINISHED. COMPLETION CODE     0. CPU TIME USED     1.59 (SECONDS).

SECONDARY MODULE O0O002   HAS BEEN CALLED.

MODULE O0O002   IS FINISHED. COMPLETION CODE     0. CPU TIME USED    15.55 (SECONDS).

SECONDARY MODULE O0O009   HAS BEEN CALLED.

MODULE O0O009   IS FINISHED. COMPLETION CODE     0. CPU TIME USED   202.62 (SECONDS).

MODULE CSAS25   IS FINISHED. COMPLETION CODE     0. CPU TIME USED   220.91 (SECONDS).
```

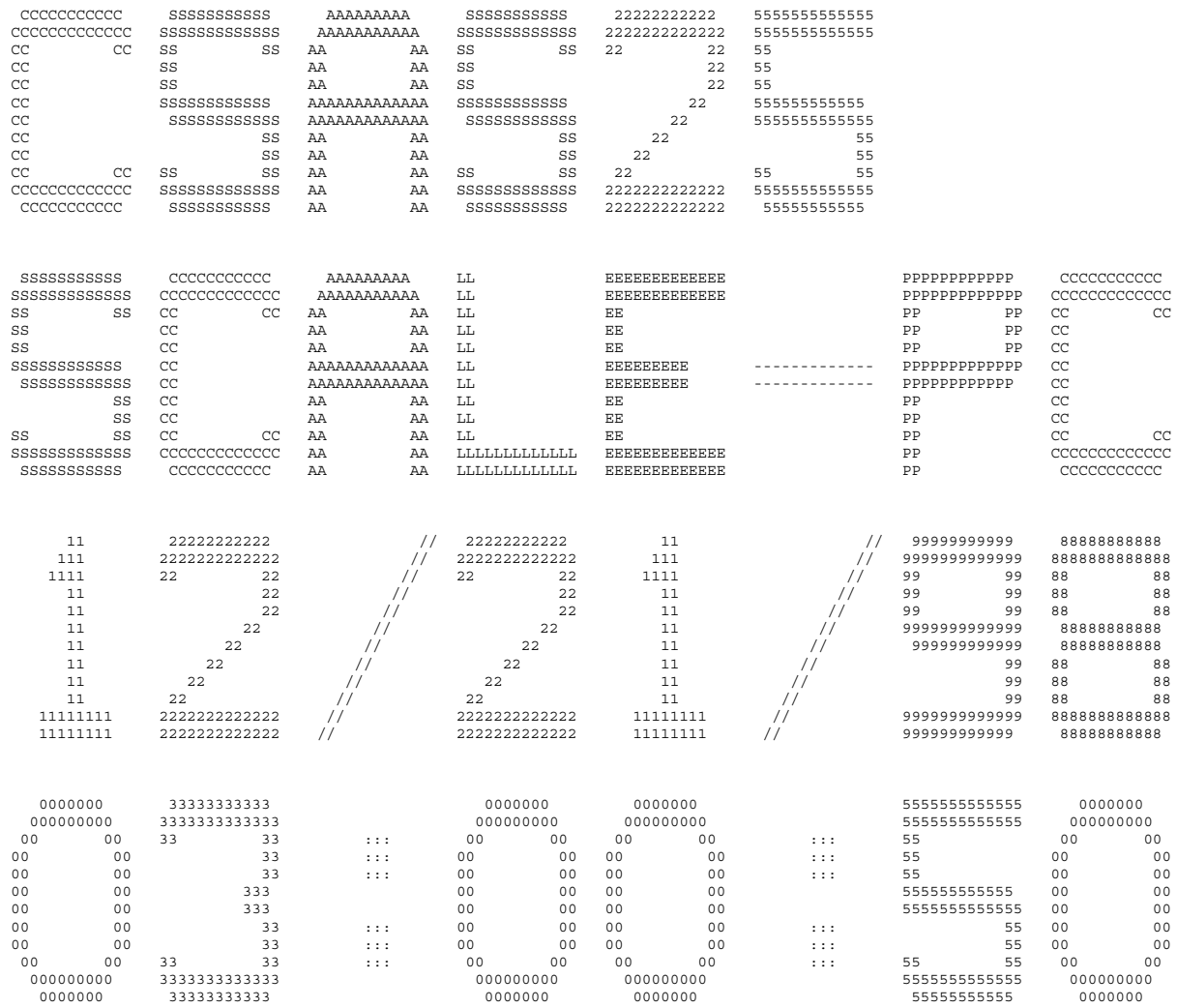
CCCCCCCCCC SSSSSSSSSS AAAAAAAAA SSSSSSSSSS 22222222222 5555555555555
CCCCCCCCCCCC SSSSSSSSSSSS AAAAAAAAAAA SSSSSSSSSSSS 2222222222222 5555555555555
CC CC SS SS AA AA SS SS 22 22 55
CC SS AA AA SS 22 55
CC SS AA AA SS 22 55
CC SSSSSSSSSSS AAAAAAAAAAAAA SSSSSSSSSSS 22 555555555555
CC SSSSSSSSSSS AAAAAAAAAAAAA SSSSSSSSSSS 22 5555555555555
CC SS AA AA SS 22 55
CC SS AA AA SS 22 55
CC CC SS SS AA AA SS SS 22 55 55
CCCCCCCCCCCC SSSSSSSSSSSS AA AA SSSSSSSSSSSS 2222222222222 5555555555555
CCCCCCCCCC SSSSSSSSSS AA AA SSSSSSSSSS 2222222222222 55555555555
SSSSSSSSSS CCCCCCCCCC AAAAAAAAA LL EEEEEEEEEEEE PPPPPPPPPPP CCCCCCCCCC
SSSSSSSSSSS CCCCCCCCCCCC AAAAAAAAAAA LL EEEEEEEEEEEE PPPPPPPPPPPP CCCCCCCCCCCC
SS SS CC CC AA AA LL EE PP PP CC CC
SS CC AA AA LL EE PP PP CC
SS CC AA AA LL EE PP PP CC
SSSSSSSSSSS CC AAAAAAAAAAAAA LL EEEEEEEEE ------------ PPPPPPPPPPPP CC
SSSSSSSSSSS CC AAAAAAAAAAAAA LL EEEEEEEEE ------------ PPPPPPPPPPP CC
SS CC AA AA LL EE PP CC
SS CC AA AA LL EE PP CC
SS SS CC CC AA AA LL EE PP CC CC
SSSSSSSSSSSS CCCCCCCCCCCCC AA AA LLLLLLLLLLLL EEEEEEEEEEEE PP CCCCCCCCCCCC
SSSSSSSSSS CCCCCCCCCC AA AA LLLLLLLLLLLL EEEEEEEEEEEE PP CCCCCCCCCC
11 22222222222 // 22222222222 11 // 99999999999 88888888888
111 2222222222222 // 2222222222222 111 // 9999999999999 8888888888888
1111 22 22 // 22 22 1111 // 99 99 88 88
11 22 // 22 11 // 99 99 88 88
11 22 // 22 11 // 99 99 88 88
11 22 // 22 11 // 9999999999999 88888888888
11 22 // 22 11 // 999999999999 88888888888
11 22 // 22 11 // 99 88 88
11 22 // 22 11 // 99 88 88
11 22 // 22 11 // 99 88 88
11111111 2222222222222 // 2222222222222 11111111 // 9999999999999 8888888888888
11111111 2222222222222 // 2222222222222 11111111 // 999999999999 88888888888
0000000 33333333333 0000000 0000000 5555555555555 0000000
000000000 3333333333333 000000000 000000000 5555555555555 000000000
00 00 33 33 ::: 00 00 00 00 ::: 55 00 00
00 00 33 ::: 00 00 00 00 ::: 55 00 00
00 00 33 ::: 00 00 00 00 ::: 55 00 00
00 00 333 00 00 00 00 5555555555555 00 00
00 00 333 00 00 00 00 5555555555555 00 00
00 00 33 ::: 00 00 00 00 ::: 55 00 00
00 00 33 ::: 00 00 00 00 ::: 55 00 00
00 00 33 33 ::: 00 00 00 00 ::: 55 55 00 00
000000000 3333333333333 000000000 000000000 5555555555555 000000000
0000000 33333333333 0000000 0000000 55555555555 0000000

```
  SSSSSSSSSS     CCCCCCCCCC      AAAAAAAAA     LL              EEEEEEEEEEEE                    PPPPPPPPPPP     CCCCCCCCCC
 SSSSSSSSSSS   CCCCCCCCCCCC    AAAAAAAAAAA    LL              EEEEEEEEEEEE                    PPPPPPPPPPPP   CCCCCCCCCCCC
 SS         SS  CC          CC  AA         AA   LL              EE                              PP         PP   CC          CC
 SS             CC              AA         AA   LL              EE                              PP         PP   CC
 SS             CC              AA         AA   LL              EE                              PP         PP   CC
 SSSSSSSSSSS    CC              AAAAAAAAAAAAA   LL              EEEEEEEEE       -------------   PPPPPPPPPPPP   CC
  SSSSSSSSSSS   CC              AAAAAAAAAAAAA   LL              EEEEEEEEE       -------------   PPPPPPPPPPP    CC
           SS   CC              AA         AA   LL              EE                              PP             CC
           SS   CC              AA         AA   LL              EE                              PP             CC
 SS         SS  CC          CC  AA         AA   LL              EE                              PP             CC          CC
 SSSSSSSSSSS    CCCCCCCCCCCC    AA         AA   LLLLLLLLLLLLL   EEEEEEEEEEEE                    PP             CCCCCCCCCCCC
  SSSSSSSSSS     CCCCCCCCCC     AA         AA   LLLLLLLLLLLLL   EEEEEEEEEEEE                    PP              CCCCCCCCCC
```

```
                    ********************************************************************************
                    ********************************************************************************
                    ********************************************************************************
                    *****                                                                        *****
                    *****                  PROGRAM VERIFICATION INFORMATION                      *****
                    *****                                                                        *****
                    *****                CODE SYSTEM:  SCALE-PC VERSION:  4.3                    *****
                    *****                                                                        *****
                    ********************************************************************************
                    ********************************************************************************
                    *****                                                                        *****
                    *****                                                                        *****
                    *****              PROGRAM:  CSAS                                            *****
                    *****                                                                        *****
                    *****         CREATION DATE:  03/08/96                                       *****
                    *****                                                                        *****
                    *****              VOLUME:   ENG                                             *****
                    *****                                                                        *****
                    *****              LIBRARY:  G:\SCALE43\WIN_NT\EXE                           *****
                    *****                                                                        *****
                    *****                                                                        *****
                    *****      PRODUCTION CODE:  CSAS                                            *****
                    *****                                                                        *****
                    *****              VERSION:  3.1                                             *****
                    *****                                                                        *****
                    *****              JOBNAME:  SCALE-PC                                        *****
                    *****                                                                        *****
                    *****    DATE OF EXECUTION:  12/21/98                                        *****
                    *****                                                                        *****
                    *****    TIME OF EXECUTION:  03:00:50                                        *****
                    *****                                                                        *****
                    *****                                                                        *****
                    ********************************************************************************
                    ********************************************************************************
                    ********************************************************************************
```

```
**** PROBLEM PARAMETERS ****

LIB 27GROUPNDF4  LIBRARY
MXX          215 MIXTURES
MSC           79 COMPOSITION SPECIFICATIONS
IZM            1 MATERIAL ZONES
GE  INFHOMMEDIUM GEOMETRY
MORE           1 0/1 DO NOT READ/READ OPTIONAL PARAMETER DATA
MSLN           0 FUEL SOLUTIONS


**** PROBLEM GEOMETRY ****


**** INFINITE HOMOGENEOUS MEDIUM ****
MFUEL          1 MIXTURE NO. OF THE INFINITE HOMOGENEOUS MEDIUM

**** SPECIAL PARAMETERS ****

ISN            8 ORDER OF ANGULAR QUADRATURE
IIM           20 INNER ITERATION MAXIMUM
ICM           25 OUTER ITERATION MAXIMUM
SZF  1.00000E+00 SIZE FACTOR FOR SPATIAL MESH
EPS  1.00000E-04 OVERALL PROBLEM CONVERGENCE
PTC  1.00000E-04 SCALAR FLUX CONVERGENCE
BKL  1.42089E+00 BUCKLING FACTOR
IUS            0 THERMAL UPSCATTER SCALING
BAL         FINE BALANCE TABLE PRINT FLAG
DY   0.00000E+00 BUCKLING HEIGHT
DZ   0.00000E+00 BUCKLING DEPTH
IPN            0 DIFFUSION COEFFICIENT OPTION
FRD            0 LOGICAL UNIT NUMBER TO READ FLUX GUESS
FWR           -1 LOGICAL UNIT NUMBER TO WRITE FLUX GUESS
MSH         2001 NUMBER OF INTERVALS FOR RES. INTGRTNS
MLV            2 MAX LVALUE FOR RES. INTGRTNS
AXS            0 LOGICAL UNIT NUMBER TO WRITE ANISN LIB
RES           21 MIXTURE WITH SPECIAL RESONANCE CORRECTION
 *      CYLINDER GEOMETRY FOR SPECIAL RESONANCE CORRECTION
 *   6.47700E-01 DIMENSION (LBAR) FOR SPECIAL RESONANCE CORRECTION


DANCOFF FACTOR SPECIFICATION
MIXTURE     FACTOR
     21    0.38879
```

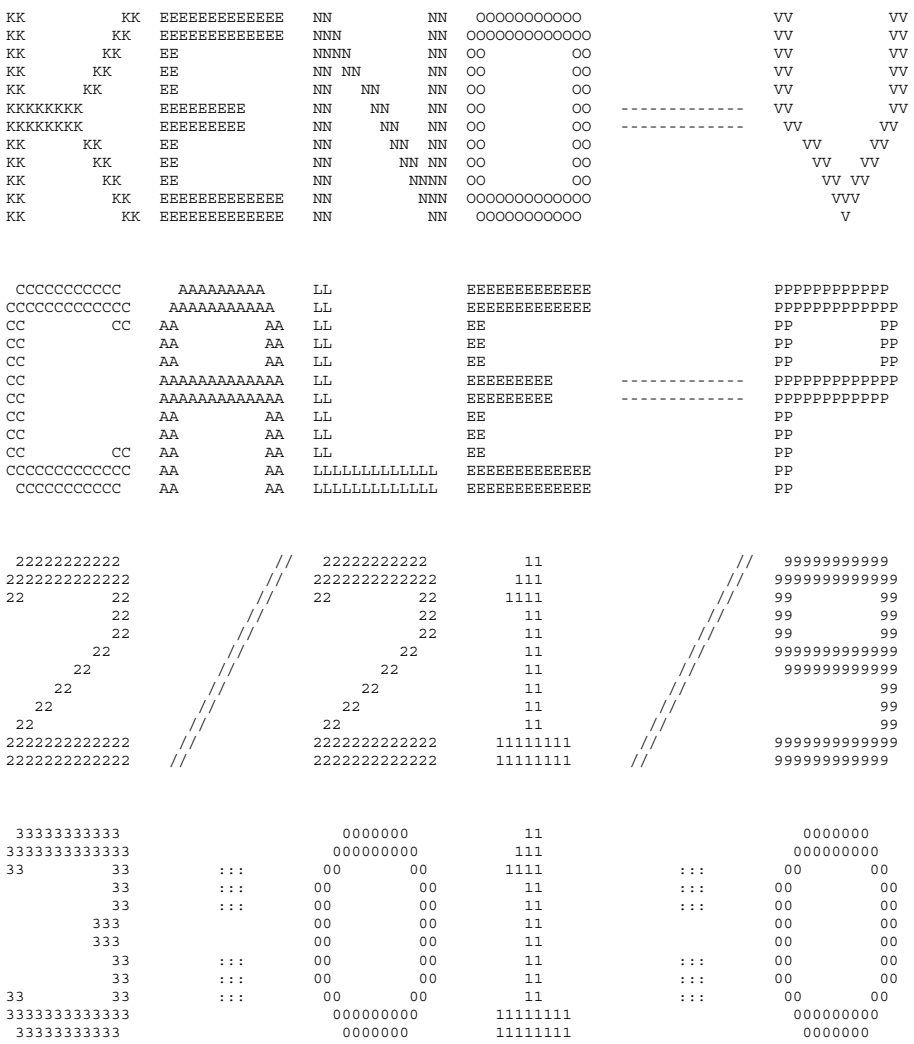
KK KK EEEEEEEEEEEEE NN NN OOOOOOOOOOO VV VV
KK KK EEEEEEEEEEEEE NNN NN OOOOOOOOOOOOO VV VV
KK KK EE NNNN NN OO OO VV VV
KK KK EE NN NN NN OO OO VV VV
KK KK EE NN NN NN OO OO VV VV
KKKKKKKK EEEEEEEEE NN NN NN OO OO VV VV
KKKKKKKK EEEEEEEEE NN NN NN OO OO VV VV
KK KK EE NN NN NN OO OO VV VV
KK KK EE NN NN NN OO OO VV VV
KK KK EE NN NNNN OO OO VV VV
KK KK EEEEEEEEEEEEE NN NNN OOOOOOOOOOOOO VVV
KK KK EEEEEEEEEEEEE NN NN OOOOOOOOOOO V
SSSSSSSSSS CCCCCCCCCC AAAAAAAAA LL EEEEEEEEEEEEE PPPPPPPPPPP CCCCCCCCCC
SSSSSSSSSSSS CCCCCCCCCCCC AAAAAAAAAAA LL EEEEEEEEEEEEE PPPPPPPPPPPP CCCCCCCCCCCC
SS SS CC CC AA AA LL EE PP PP CC CC
SS CC AA AA LL EE PP PP CC
SS CC AA AA LL EE PP PP CC
SSSSSSSSSSSS CC AAAAAAAAAAAAA LL EEEEEEEEE PPPPPPPPPPPP CC
SSSSSSSSSSS CC AAAAAAAAAAAAA LL EEEEEEEEE PPPPPPPPPPP CC
SS CC AA AA LL EE PP CC
SS CC AA AA LL EE PP CC
SS SS CC CC AA AA LL EE PP CC CC
SSSSSSSSSSSS CCCCCCCCCCCCC AA AA LLLLLLLLLLLL EEEEEEEEEEEEE PP CCCCCCCCCCCCC
SSSSSSSSSS CCCCCCCCCC AA AA LLLLLLLLLLLL EEEEEEEEEEEEE PP CCCCCCCCCC
11 22222222222 // 22222222222 11 // 99999999999 88888888888
111 2222222222222 // 2222222222222 111 // 9999999999999 8888888888888
1111 22 22 // 22 22 1111 // 99 99 88 88
11 22 // 22 11 // 99 99 88 88
11 22 // 22 11 // 99 99 88 88
11 22 // 22 11 // 9999999999999 88888888888
11 22 // 22 11 // 999999999999 88888888888
11 22 // 22 11 // 99 88 88
11 22 // 22 11 // 99 88 88
11 22 // 22 11 // 99 88 88
11111111 2222222222222 // 2222222222222 11111111 // 9999999999999 8888888888888
11111111 2222222222222 // 2222222222222 11111111 // 999999999999 88888888888
0000000 33333333333 0000000 11 0000000 88888888888
000000000 3333333333333 000000000 111 000000000 8888888888888
00 00 33 33 ::: 00 00 1111 ::: 00 00 88 88
00 00 33 33 ::: 00 00 11 ::: 00 00 88 88
00 00 33 33 ::: 00 00 11 ::: 00 00 88 88
00 00 333 00 00 11 00 00 88888888888
00 00 333 00 00 11 00 00 88888888888
00 00 33 ::: 00 00 11 ::: 00 00 88 88
00 00 33 ::: 00 00 11 ::: 00 00 88 88
00 00 33 33 ::: 00 00 11 ::: 00 00 88 88
000000000 3333333333333 000000000 11111111 000000000 8888888888888
0000000 33333333333 0000000 11111111 0000000 88888888888

```
 SSSSSSSSSS     CCCCCCCCCC      AAAAAAAAA     LL             EEEEEEEEEEEE                  PPPPPPPPPPP     CCCCCCCCCC
SSSSSSSSSSS   CCCCCCCCCCCC    AAAAAAAAAAA    LL             EEEEEEEEEEEE                  PPPPPPPPPPPP   CCCCCCCCCCCC
SS         SS CC          CC  AA         AA   LL             EE                            PP         PP  CC          CC
SS            CC             AA         AA   LL             EE                            PP         PP  CC
SS            CC             AA         AA   LL             EE                            PP         PP  CC
SSSSSSSSSSS   CC             AAAAAAAAAAAAA   LL             EEEEEEEEE       -------------  PPPPPPPPPPPP  CC
 SSSSSSSSSSS  CC             AAAAAAAAAAAAA   LL             EEEEEEEEE       -------------  PPPPPPPPPPP   CC
          SS  CC             AA         AA   LL             EE                            PP             CC
          SS  CC             AA         AA   LL             EE                            PP             CC
SS        SS  CC          CC  AA         AA   LL             EE                            PP             CC          CC
SSSSSSSSSSS   CCCCCCCCCCCCC   AA         AA   LLLLLLLLLLLLL  EEEEEEEEEEEE                  PP             CCCCCCCCCCCCC
 SSSSSSSSSS    CCCCCCCCCC    AA         AA   LLLLLLLLLLLLL  EEEEEEEEEEEE                  PP              CCCCCCCCCC
```

```
*******************************************************************************
*******************************************************************************
*******************************************************************************
*****                                                                     *****
*****                  PROGRAM VERIFICATION INFORMATION                   *****
*****                                                                     *****
*****                CODE SYSTEM:  SCALE-PC VERSION:  4.3                 *****
*****                                                                     *****
*******************************************************************************
*******************************************************************************
*****                                                                     *****
*****                                                                     *****
*****              PROGRAM:  O0O009                                       *****
*****                                                                     *****
*****        CREATION DATE:  03/08/96                                     *****
*****                                                                     *****
*****              VOLUME:   ENG                                          *****
*****                                                                     *****
*****              LIBRARY:  G:\SCALE43\WIN_NT\EXE                        *****
*****                                                                     *****
*****                                                                     *****
*****      PRODUCTION CODE:  KENOVA                                       *****
*****                                                                     *****
*****              VERSION:  3.1                                          *****
*****                                                                     *****
*****              JOBNAME:  SCALE-PC                                     *****
*****                                                                     *****
*****    DATE OF EXECUTION:  12/21/98                                     *****
*****                                                                     *****
*****    TIME OF EXECUTION:  03:01:08                                     *****
*****                                                                     *****
*****                                                                     *****
*******************************************************************************
*******************************************************************************
*******************************************************************************
```

```
*****************************************************************************************************************
***                                                                                                           ***
***                              TRIGA - PREF. FLOOD CANISTER                                                 ***
***                                                                                                           ***
*****************************************************************************************************************
***                                ******       NUMERIC PARAMETERS       ******                               ***
***                                                                                                           ***
***                                                                                                           ***
***                    TME         MAXIMUM PROBLEM TIME (MIN)                        170.00                   ***
***                                                                                                           ***
***                    TBA         TIME PER GENERATION (MIN)                           2.00                   ***
***                                                                                                           ***
***                    GEN         NUMBER OF GENERATIONS                                203                   ***
***                                                                                                           ***
***                    NPG         NUMBER PER GENERATION                                500                   ***
***                                                                                                           ***
***                    NSK         NUMBER OF GENERATIONS TO BE SKIPPED                    3                   ***
***                                                                                                           ***
***                    BEG         BEGINNING GENERATION NUMBER                            1                   ***
***                                                                                                           ***
***                    RES         GENERATIONS BETWEEN CHECKPOINTS                        0                   ***
***                                                                                                           ***
***                    X1D         NUMBER OF EXTRA 1-D CROSS SECTIONS                     1                   ***
***                                                                                                           ***
***                    NBK         NEUTRON BANK SIZE                                    525                   ***
***                                                                                                           ***
***                    XNB         EXTRA POSITIONS IN NEUTRON BANK                        0                   ***
***                                                                                                           ***
***                    NFB         FISSION BANK SIZE                                    500                   ***
***                                                                                                           ***
***                    XFB         EXTRA POSITIONS IN FISSION BANK                        0                   ***
***                                                                                                           ***
***                    WTA         DEFAULT VALUE OF WEIGHT AVERAGE                   0.5000                   ***
***                                                                                                           ***
***                    WTH         WEIGHT HIGH FOR SPLITTING                         3.0000                   ***
***                                                                                                           ***
***                    WTL         WEIGHT LOW FOR RUSSIAN ROULETTE                   0.3333                   ***
***                                                                                                           ***
***                    RND         STARTING RANDOM NUMBER                        BB827100001                  ***
***                                                                                                           ***
***                    NB8         NUMBER OF D.A. BLOCKS ON UNIT  8                     200                   ***
***                                                                                                           ***
***                    NL8         LENGTH OF D.A. BLOCKS ON UNIT  8                     512                   ***
***                                                                                                           ***
***                    ADJ         MODE OF CALCULATION                              FORWARD                  ***
***                                                                                                           ***
***                                INPUT DATA WRITTEN ON RESTART UNIT                    NO                   ***
***                                                                                                           ***
***                                BINARY DATA INTERFACE                                YES                  ***
***                                                                                                           ***
***                                                                                                           ***
*****************************************************************************************************************
*****************************************************************************************************************
```

```
*****************************************************************************************************************
*****************************************************************************************************************
***                                                                                                           ***
***                              TRIGA - PREF. FLOOD CANISTER                                                 ***
***                                                                                                           ***
*****************************************************************************************************************
***                                  ******      LOGICAL PARAMETERS        ******                             ***
***                                                                                                           ***
***  RUN  EXECUTE PROBLEM AFTER CHECKING DATA    YES            PLT  PLOT PICTURE MAP(S)                    NO ***
***                                                                                                           ***
***  FLX  COMPUTE FLUX                            NO            FDN  COMPUTE FISSION DENSITIES              NO ***
***                                                                                                           ***
***  SMU  COMPUTE AVG UNIT SELF-MULTIPLICATION    NO            NUB  COMPUTE NU-BAR & AVG FISSION GROUP     YES ***
***                                                                                                           ***
***  MKU  COMPUTE MATRIX K-EFF BY UNIT NUMBER     NO            MKP  COMPUTE MATRIX K-EFF BY UNIT LOCATION  NO ***
***                                                                                                           ***
***  CKU  COMPUTE COFACTOR K-EFF BY UNIT NUMBER   NO            CKP  COMPUTE COFACTOR K-EFF BY UNIT LOCATION NO ***
***                                                                                                           ***
***  FMU  PRINT FISS PROD MATRIX BY UNIT NUMBER   NO            FMP  PRINT FISS PROD MATRIX BY UNIT LOCATION NO ***
***                                                                                                           ***
***  MKH  COMPUTE MATRIX K-EFF BY HOLE NUMBER     NO            MKA  COMPUTE MATRIX K-EFF BY ARRAY NUMBER   NO ***
***                                                                                                           ***
***  CKH  COMPUTE COFACTOR K-EFF BY HOLE NUMBER   NO            CKA  COMPUTE COFACTOR K-EFF BY ARRAY NUMBER NO ***
***                                                                                                           ***
***  FMH  PRINT FISS PROD MATRIX BY HOLE NUMBER   NO            FMA  PRINT FISS PROD MATRIX BY ARRAY NUMBER NO ***
***                                                                                                           ***
***  HHL  COLLECT MATRIX BY HIGHEST HOLE LEVEL    NO            HAL  COLLECT MATRIX BY HIGHEST ARRAY LEVEL  NO ***
***                                                                                                           ***
***  AMX  PRINT ALL MIXED CROSS SECTIONS          NO            FAR  PRINT FIS. AND ABS. BY REGION          NO ***
***                                                                                                           ***
***  XS1  PRINT 1-D MIXTURE X-SECTIONS            NO            GAS  PRINT FAR BY GROUP                     NO ***
***                                                                                                           ***
***  XS2  PRINT 2-D MIXTURE X-SECTIONS            NO            PAX  PRINT XSEC-ALBEDO CORRELATION TABLES   NO ***
***                                                                                                           ***
***  XAP  PRINT MIXTURE ANGLES & PROBABILITIES    NO            PWT  PRINT WEIGHT AVERAGE ARRAY             NO ***
***                                                                                                           ***
***  PKI  PRINT FISSION SPECTRUM                  NO            PGM  PRINT INPUT GEOMETRY                   NO ***
***                                                                                                           ***
***  P1D  PRINT EXTRA 1-D CROSS SECTIONS          NO            BUG  PRINT DEBUG INFORMATION                NO ***
***                                                                                                           ***
***                                                             TRK  PRINT TRACKING INFORMATION             NO ***
***                                                                                                           ***
***                                                                                                           ***
*****************************************************************************************************************
*****************************************************************************************************************
*****************************************************************************************************************
                                    PARAMETER INPUT COMPLETED

                          .........    0 IO'S WERE USED READING THE PARAMETER DATA      .........
```

```
*****************************************************************************************************
***                                                                                               ***
***          TRIGA - PREF. FLOOD CANISTER                                                         ***
***                                                                                               ***
*****************************************************************************************************
*****************************************************************************************************
***                                                                                               ***
***                              ****** ADDITIONAL INFORMATION ******                             ***
***                                                                                               ***
***  NUMBER OF ENERGY GROUPS              27       USE LATTICE GEOMETRY                    YES  ***
***                                                                                               ***
***  NO. OF FISSION SPECTRUM SOURCE GROUP  1       GLOBAL ARRAY NUMBER                      20  ***
***                                                                                               ***
***  NO. OF SCATTERING ANGLES IN XSECS     2       NUMBER OF UNITS IN THE GLOBAL X DIR.      1  ***
***                                                                                               ***
***  ENTRIES/NEUTRON IN THE NEUTRON BANK  26       NUMBER OF UNITS IN THE GLOBAL Y DIR.      1  ***
***                                                                                               ***
***  ENTRIES/NEUTRON IN THE FISSION BANK  19       NUMBER OF UNITS IN THE GLOBAL Z DIR.      7  ***
***                                                                                               ***
***  NUMBER OF MIXTURES USED              20       USE A GLOBAL REFLECTOR                  YES  ***
***                                                                                               ***
***  NUMBER OF BIAS ID'S USED              1       USE NESTED HOLES                        YES  ***
***                                                                                               ***
***  NUMBER OF DIFFERENTIAL ALBEDOS USED   0       NUMBER OF HOLES                         142  ***
***                                                                                               ***
***  TOTAL INPUT GEOMETRY REGIONS        100       MAXIMUM HOLE NESTING LEVEL                4  ***
***                                                                                               ***
***  NUMBER OF GEOMETRY REGIONS USED      95       USE NESTED ARRAYS                       YES  ***
***                                                                                               ***
***  LARGEST GEOMETRY UNIT NUMBER        450       NUMBER OF ARRAYS USED                     7  ***
***                                                                                               ***
***  LARGEST ARRAY NUMBER                 43       MAXIMUM ARRAY NESTING LEVEL               2  ***
***                                                                                               ***
***                                                                                               ***
***  +X BOUNDARY CONDITION               MIR       -X BOUNDARY CONDITION                   MIR  ***
***                                                                                               ***
***  +Y BOUNDARY CONDITION               MIR       -Y BOUNDARY CONDITION                   MIR  ***
***                                                                                               ***
***  +Z BOUNDARY CONDITION               MIR       -Z BOUNDARY CONDITION                   MIR  ***
***                                                                                               ***
*****************************************************************************************************
```

```
_                                       TRIGA - PREF. FLOOD CANISTER

                MEDIA BIAS      GEOMETRY DESCRIPTION FOR THOSE UNITS UTILIZED IN THIS PROBLEM
REGION           NUM   ID

                                                -----   UNIT     1   -----

TRIGA FUEL (SMEARED)

  1 CYLINDER         1  1  RADIUS =  3.9877     +Z =  60.959     -Z = 1.00000E-03 CENTERLINE IS AT  X = 0.00000      Y = 0.00000

                                                -----   UNIT     5   -----

3.38 IN WIDTH / 0.28 IN THICKNESS DIVIDER CENTER STACK (SEALED)

  1 CUBOID           2  1      +X =  4.2672     -X = -4.2672     +Y = 0.71120     -Y = 0.00000     +Z =  74.290     -Z = -8.2550

                                                -----   UNIT     6   -----

3.38 IN WIDTH / 0.24 IN THICKNESS DIVIDER OUTSIDE STACK (SEALED)

  1 CUBOID           2  1      +X =  4.2672     -X = -4.2672     +Y = 0.60960     -Y = 0.00000     +Z =  74.290     -Z = -8.2550

                                                -----   UNIT     7   -----

SEALED CANISTER

  1 CYLINDER         3  1  RADIUS =  3.9878     +Z =  60.960     -Z = 0.00000     CENTERLINE IS AT  X = 0.00000      Y = 0.00000

    HOLE NUMBER      1       AT X = 0.00000      Y = 0.00000      Z = 0.00000     IS UNIT NUMBER      1

  2 CYLINDER         2  1  RADIUS =  4.1529     +Z =  63.500     -Z = -1.2700     CENTERLINE IS AT  X = 0.00000      Y = 0.00000

  3 CYLINDER        12  1  RADIUS =  4.1529     +Z =  74.290     -Z = -8.2550     CENTERLINE IS AT  X = 0.00000      Y = 0.00000

                                                -----   UNIT    10   -----

TRIGA ELEMENTS IN TOP OF 3.38 IN X 3.38 IN OPENING (SEALED)

  1 CUBOID          12  1      +X =  4.2672     -X = -4.2672     +Y =  4.2672     -Y = -4.2672     +Z =  74.290     -Z = -8.2550

    HOLE NUMBER      2       AT X = 0.00000      Y = 0.11420      Z = 0.00000     IS UNIT NUMBER      7

                                                -----   UNIT    11   -----

TRIGA ELEMENTS IN BOTTOM OF 3.38 IN X 3.38 IN OPENING (SEALED)

  1 CUBOID          12  1      +X =  4.2672     -X = -4.2672     +Y =  4.2672     -Y = -4.2672     +Z =  74.290     -Z = -8.2550

    HOLE NUMBER      3       AT X = 0.00000      Y =-0.11420      Z = 0.00000     IS UNIT NUMBER      7
_                                       TRIGA - PREF. FLOOD CANISTER

                MEDIA BIAS      GEOMETRY DESCRIPTION FOR THOSE UNITS UTILIZED IN THIS PROBLEM
REGION           NUM   ID

                                                -----   UNIT    12   -----

TRIGA ELEMENTS IN BOTTOM RIGHT OF 3.38 IN X 3.38 IN OPENING (SEALED)

  1 CUBOID          12  1      +X =  4.2672     -X = -4.2672     +Y =  4.2672     -Y = -4.2672     +Z =  74.290     -Z = -8.2550

    HOLE NUMBER      4       AT X = 0.11420      Y =-0.11420      Z = 0.00000     IS UNIT NUMBER      7

                                                -----   UNIT    13   -----

TRIGA ELEMENTS IN TOP RIGHT OF 3.38 IN X 3.38 IN OPENING (SEALED)

  1 CUBOID          12  1      +X =  4.2672     -X = -4.2672     +Y =  4.2672     -Y = -4.2672     +Z =  74.290     -Z = -8.2550

    HOLE NUMBER      5       AT X = 0.11420      Y = 0.11420      Z = 0.00000     IS UNIT NUMBER      7

                                                -----   UNIT    14   -----

TRIGA ELEMENTS IN BOTTOM LEFT OF 3.38 IN X 3.38 IN OPENING (SEALED)

  1 CUBOID          12  1      +X =  4.2672     -X = -4.2672     +Y =  4.2672     -Y = -4.2672     +Z =  74.290     -Z = -8.2550

    HOLE NUMBER      6       AT X =-0.11420      Y =-0.11420      Z = 0.00000     IS UNIT NUMBER      7

                                                -----   UNIT    15   -----

TRIGA ELEMENTS IN TOP LEFT OF 3.38 IN X 3.38 IN OPENING (SEALED)

  1 CUBOID          12  1      +X =  4.2672     -X = -4.2672     +Y =  4.2672     -Y = -4.2672     +Z =  74.290     -Z = -8.2550
```

```
    HOLE NUMBER      7       AT X =-0.11420      Y = 0.11420      Z = 0.00000     IS UNIT NUMBER      7

                                                -----   UNIT    16   -----

TRIGA BASKET 3.38 IN X 3.38 IN CENTER OPENING (SEALED)

  1 CUBOID          12  1      +X =  4.2672     -X = -4.2672     +Y =  4.2672     -Y = -4.2672     +Z =  74.290     -Z = -8.2550

    HOLE NUMBER      8       AT X = 0.00000      Y = 0.00000      Z = 0.00000     IS UNIT NUMBER      7

                                                -----   UNIT    17   -----

HORIZONTAL X-X POISON SHEET + WATER

  1 CUBOID          13  1      +X =  3.8227     -X = -3.8227     +Y = 0.31750     -Y = 0.00000     +Z =  73.020     -Z = -6.9850

  2 CUBOID          14  1      +X =  4.1402     -X = -4.1402     +Y = 0.31750     -Y = 0.00000     +Z =  73.020     -Z = -6.9850

  3 CUBOID          12  1      +X =  4.2672     -X = -4.2672     +Y = 0.31750     -Y = 0.00000     +Z =  74.290     -Z = -8.2550
_                                       TRIGA - PREF. FLOOD CANISTER

                MEDIA BIAS      GEOMETRY DESCRIPTION FOR THOSE UNITS UTILIZED IN THIS PROBLEM
REGION           NUM   ID

                                        -----   UNIT    20  EXTERNAL TO LATTICE  1   -----

CENTER COLUMN OF THREE OPENINGS W/ 0.28 IN PLATE (SEALED)

  1 ARRAY NUMBER     1          +X =  4.2672     -X = -4.2672     +Y =  13.830     -Y = -13.830     +Z =  74.290     -Z = -8.2550

  2 CUBOID           2  1       +X =  4.9784     -X = -4.9784     +Y =  14.542     -Y = -14.542     +Z =  74.290     -Z = -8.2550

                                        -----   UNIT    21  EXTERNAL TO LATTICE  2   -----

LEFT OUTSIDE COLUMN OF TWO OPENINGS W/ 0.12 IN PLATE (SEALED)

  1 ARRAY NUMBER     2          +X =  4.2672     -X = -4.2672     +Y =  8.9980     -Y = -8.9979     +Z =  74.290     -Z = -8.2550

  2 CUBOID           2  1       +X =  4.2672     -X = -4.5720     +Y =  9.3028     -Y = -9.3027     +Z =  74.290     -Z = -8.2550

                                        -----   UNIT    22  EXTERNAL TO LATTICE  3   -----

RIGHT OUTSIDE COLUMN OF TWO OPENINGS W/ 0.12 IN PLATE (SEALED)

  1 ARRAY NUMBER     3          +X =  4.2672     -X = -4.2672     +Y =  8.9980     -Y = -8.9979     +Z =  74.290     -Z = -8.2550

  2 CUBOID           2  1       +X =  4.5720     -X = -4.2672     +Y =  9.3028     -Y = -9.3027     +Z =  74.290     -Z = -8.2550

                                                -----   UNIT    30   -----

NAC-LWT TRIGA BASKET (SEALED)

  1 CYLINDER        12  1  RADIUS =  17.100     +Z =  74.290     -Z = -8.2550     CENTERLINE IS AT  X = 0.00000      Y = 0.00000

    HOLE NUMBER      9       AT X = 0.00000      Y = 0.00000      Z = 0.00000     IS UNIT NUMBER     20

    HOLE NUMBER     10       AT X = -9.2457      Y = 0.00000      Z = 0.00000     IS UNIT NUMBER     21

    HOLE NUMBER     11       AT X =  9.2457      Y = 0.00000      Z = 0.00000     IS UNIT NUMBER     22

  2 CYLINDER         2  1  RADIUS =  18.910     +Z =  74.930     -Z = -8.8900     CENTERLINE IS AT  X = 0.00000      Y = 0.00000

  3 CYLINDER         6  1  RADIUS =  33.465     +Z =  74.930     -Z = -8.8900     CENTERLINE IS AT  X = 0.00000      Y = 0.00000

  4 CYLINDER         2  1  RADIUS =  36.519     +Z =  74.930     -Z = -8.8900     CENTERLINE IS AT  X = 0.00000      Y = 0.00000

  5 CYLINDER         7  1  RADIUS =  49.223     +Z =  74.930     -Z = -8.8900     CENTERLINE IS AT  X = 0.00000      Y = 0.00000

  6 CYLINDER         2  1  RADIUS =  49.822     +Z =  74.930     -Z = -8.8900     CENTERLINE IS AT  X = 0.00000      Y = 0.00000

  7 CUBOID           8  1      +X =  49.822     -X = -49.822     +Y =  49.822     -Y = -49.822     +Z =  74.930     -Z = -8.8900
_                                       TRIGA - PREF. FLOOD CANISTER

                MEDIA BIAS      GEOMETRY DESCRIPTION FOR THOSE UNITS UTILIZED IN THIS PROBLEM
REGION           NUM   ID

                                                -----   UNIT    41   -----

TRIGA FUEL ELEMENT

  1 CYLINDER        21  1  RADIUS = 0.64770     +Z =  27.940     -Z = -27.940     CENTERLINE IS AT  X = 0.00000      Y = 0.00000

  2 CYLINDER        22  1  RADIUS = 0.68834     +Z =  27.940     -Z = -27.940     CENTERLINE IS AT  X = 0.00000      Y = 0.00000

  3 CYLINDER        29  1  RADIUS = 0.68834     +Z =  43.480     -Z = -33.040     CENTERLINE IS AT  X = 0.00000      Y = 0.00000

                                                -----   UNIT    42   -----
```

```
HORIZONTAL X-X POISON SHEET + WATER

  1 CUBOID         210  1      +X =  3.8227     -X = -3.8227     +Y = 0.31750     -Y = 0.00000     +Z =  39.380     -Z = -28.940

  2 CUBOID         211  1      +X =  4.1402     -X = -4.1402     +Y = 0.31750     -Y = 0.00000     +Z =  39.380     -Z = -28.940

  3 CUBOID          23  1      +X =  4.2672     -X = -4.2672     +Y = 0.31750     -Y = 0.00000     +Z =  43.480     -Z = -33.040

                                              -----   UNIT    45   -----

DIVIDER CENTER STACK

  1 CUBOID         212  1      +X =  4.2672     -X = -4.2672     +Y = 0.71120     -Y = 0.00000     +Z =  43.480     -Z = -33.040

                                              -----   UNIT    46   -----

DIVIDER OUTSIDE STACK

  1 CUBOID         212  1      +X =  4.2672     -X = -4.2672     +Y = 0.60960     -Y = 0.00000     +Z =  43.480     -Z = -33.040

                                              -----   UNIT    80   -----

SIMPLIFIED LID STRUCTURE NAC-LWT

  1 CYLINDER         2  1  RADIUS =  36.519     +Z =  14.135     -Z = -14.135     CENTERLINE IS AT  X = 0.00000      Y = 0.00000

  2 CYLINDER         8  1  RADIUS =  49.822     +Z =  14.135     -Z = -14.135     CENTERLINE IS AT  X = 0.00000      Y = 0.00000

  3 CUBOID           8  1      +X =  49.822     -X = -49.822     +Y =  49.822     -Y = -49.822     +Z =  14.135     -Z = -14.135
_                                        TRIGA - PREF. FLOOD CANISTER

                MEDIA BIAS      GEOMETRY DESCRIPTION FOR THOSE UNITS UTILIZED IN THIS PROBLEM
REGION           NUM   ID

                                              -----   UNIT    81   -----

SIMPLIFIED CASK BOTTOM STRUCTURE NAC-LWT

  1 CYLINDER         6  1  RADIUS =  26.353     +Z =  3.8100     -Z = -3.8100     CENTERLINE IS AT  X = 0.00000      Y = 0.00000

  2 CYLINDER         2  1  RADIUS =  36.619     +Z =  13.970     -Z = -12.700     CENTERLINE IS AT  X = 0.00000      Y = 0.00000

  3 CYLINDER         8  1  RADIUS =  49.822     +Z =  13.970     -Z = -12.700     CENTERLINE IS AT  X = 0.00000      Y = 0.00000

  4 CUBOID           8  1      +X =  49.822     -X = -49.822     +Y =  49.822     -Y = -49.822     +Z =  13.970     -Z = -12.700

                                        ******************   GLOBAL   ******************
                                        -----   UNIT    82  EXTERNAL TO LATTICE 20   -----

STACK OF 5 BASKETS IN CASK

  1 ARRAY NUMBER    20          +X =  49.822     -X = -49.822     +Y =  49.822     -Y = -49.822     +Z =  230.87     -Z = -221.30

                                              -----   UNIT   411   -----

TRIGA FUEL ELEMENTS IN AL TUBE, RIGHT

  1 CYLINDER        23  1  RADIUS = 0.80963     +Z =  43.480     -Z = -33.040     CENTERLINE IS AT  X = 0.00000      Y = 0.00000

    HOLE NUMBER     13       AT X = 0.12127      Y = 0.00000      Z = 0.00000     IS UNIT NUMBER     41

  2 CYLINDER       215  1  RADIUS = 0.94805     +Z =  43.480     -Z = -33.040     CENTERLINE IS AT  X = 0.00000      Y = 0.00000

                                              -----   UNIT   412   -----

TRIGA FUEL ELEMENTS IN AL TUBE, LEFT

  1 CYLINDER        23  1  RADIUS = 0.80963     +Z =  43.480     -Z = -33.040     CENTERLINE IS AT  X = 0.00000      Y = 0.00000

    HOLE NUMBER     14       AT X =-0.12127      Y = 0.00000      Z = 0.00000     IS UNIT NUMBER     41

  2 CYLINDER       215  1  RADIUS = 0.94805     +Z =  43.480     -Z = -33.040     CENTERLINE IS AT  X = 0.00000      Y = 0.00000

                                              -----   UNIT   413   -----

TRIGA FUEL ELEMENTS IN AL TUBE, TOP

  1 CYLINDER        23  1  RADIUS = 0.80963     +Z =  43.480     -Z = -33.040     CENTERLINE IS AT  X = 0.00000      Y = 0.00000

    HOLE NUMBER     15       AT X = 0.00000      Y = 0.12127      Z = 0.00000     IS UNIT NUMBER     41

  2 CYLINDER       215  1  RADIUS = 0.94805     +Z =  43.480     -Z = -33.040     CENTERLINE IS AT  X = 0.00000      Y = 0.00000
_                                        TRIGA - PREF. FLOOD CANISTER

                MEDIA BIAS      GEOMETRY DESCRIPTION FOR THOSE UNITS UTILIZED IN THIS PROBLEM
REGION           NUM   ID
```

```
                                          -----   UNIT   414   -----

TRIGA FUEL ELEMENTS IN AL TUBE, BOTTOM

  1 CYLINDER        23  1  RADIUS = 0.80963     +Z =  43.480     -Z = -33.040     CENTERLINE IS AT  X = 0.00000      Y = 0.00000

    HOLE NUMBER     16       AT X = 0.00000      Y =-0.12127      Z = 0.00000     IS UNIT NUMBER     41

  2 CYLINDER       215  1  RADIUS = 0.94805     +Z =  43.480     -Z = -33.040     CENTERLINE IS AT  X = 0.00000      Y = 0.00000

                                          -----   UNIT   415   -----

TRIGA FUEL ELEMENTS IN AL TUBE, TOP RIGHT

  1 CYLINDER        23  1  RADIUS = 0.80963     +Z =  43.480     -Z = -33.040     CENTERLINE IS AT  X = 0.00000      Y = 0.00000

    HOLE NUMBER     17       AT X = 8.57400E-02  Y = 8.57400E-02  Z = 0.00000     IS UNIT NUMBER     41

  2 CYLINDER       215  1  RADIUS = 0.94805     +Z =  43.480     -Z = -33.040     CENTERLINE IS AT  X = 0.00000      Y = 0.00000

                                          -----   UNIT   416   -----

TRIGA FUEL ELEMENTS IN AL TUBE, TOP LEFT

  1 CYLINDER        23  1  RADIUS = 0.80963     +Z =  43.480     -Z = -33.040     CENTERLINE IS AT  X = 0.00000      Y = 0.00000

    HOLE NUMBER     18       AT X =-8.57400E-02  Y = 8.57400E-02  Z = 0.00000     IS UNIT NUMBER     41

  2 CYLINDER       215  1  RADIUS = 0.94805     +Z =  43.480     -Z = -33.040     CENTERLINE IS AT  X = 0.00000      Y = 0.00000

                                          -----   UNIT   417   -----

TRIGA FUEL ELEMENTS IN AL TUBE, BOTTOM RIGHT

  1 CYLINDER        23  1  RADIUS = 0.80963     +Z =  43.480     -Z = -33.040     CENTERLINE IS AT  X = 0.00000      Y = 0.00000

    HOLE NUMBER     19       AT X = 8.57400E-02  Y =-8.57400E-02  Z = 0.00000     IS UNIT NUMBER     41

  2 CYLINDER       215  1  RADIUS = 0.94805     +Z =  43.480     -Z = -33.040     CENTERLINE IS AT  X = 0.00000      Y = 0.00000

                                          -----   UNIT   418   -----

TRIGA FUEL ELEMENTS IN AL TUBE, BOTTOM LEFT

  1 CYLINDER        23  1  RADIUS = 0.80963     +Z =  43.480     -Z = -33.040     CENTERLINE IS AT  X = 0.00000      Y = 0.00000

    HOLE NUMBER     20       AT X =-8.57400E-02  Y =-8.57400E-02  Z = 0.00000     IS UNIT NUMBER     41

  2 CYLINDER       215  1  RADIUS = 0.94805     +Z =  43.480     -Z = -33.040     CENTERLINE IS AT  X = 0.00000      Y = 0.00000
_                                    TRIGA - PREF. FLOOD CANISTER

               MEDIA BIAS      GEOMETRY DESCRIPTION FOR THOSE UNITS UTILIZED IN THIS PROBLEM
REGION          NUM   ID

                                          -----   UNIT   420   -----

AL TUBES WITH TRIGA FUEL, IN FUEL INSERT, CENTER OPENING

  1 CUBOID          23  1      +X =  4.1529     -X = -4.1529     +Y =  4.1529     -Y = -4.1529     +Z =  43.480     -Z = -33.040

    HOLE NUMBER     21       AT X = -2.8443      Y = -2.8443      Z = 0.00000     IS UNIT NUMBER    415

    HOLE NUMBER     22       AT X =-0.94810      Y = -2.8443      Z = 0.00000     IS UNIT NUMBER    413

    HOLE NUMBER     23       AT X = 0.94810      Y = -2.8443      Z = 0.00000     IS UNIT NUMBER    413

    HOLE NUMBER     24       AT X =  2.8443      Y = -2.8443      Z = 0.00000     IS UNIT NUMBER    416

    HOLE NUMBER     25       AT X = -2.8443      Y =-0.94810      Z = 0.00000     IS UNIT NUMBER    411

    HOLE NUMBER     26       AT X =-0.94810      Y =-0.94810      Z = 0.00000     IS UNIT NUMBER    415

    HOLE NUMBER     27       AT X = 0.94810      Y =-0.94810      Z = 0.00000     IS UNIT NUMBER    416

    HOLE NUMBER     28       AT X =  2.8443      Y =-0.94810      Z = 0.00000     IS UNIT NUMBER    412

    HOLE NUMBER     29       AT X = -2.8443      Y = 0.94810      Z = 0.00000     IS UNIT NUMBER    411

    HOLE NUMBER     30       AT X =-0.94810      Y = 0.94810      Z = 0.00000     IS UNIT NUMBER    417

    HOLE NUMBER     31       AT X = 0.94810      Y = 0.94810      Z = 0.00000     IS UNIT NUMBER    418

    HOLE NUMBER     32       AT X =  2.8443      Y = 0.94810      Z = 0.00000     IS UNIT NUMBER    412

    HOLE NUMBER     33       AT X = -2.8443      Y =  2.8443      Z = 0.00000     IS UNIT NUMBER    417

    HOLE NUMBER     34       AT X =-0.94810      Y =  2.8443      Z = 0.00000     IS UNIT NUMBER    414
```

```
    HOLE NUMBER     35       AT X = 0.94810      Y =  2.8443      Z = 0.00000     IS UNIT NUMBER    414
    HOLE NUMBER     36       AT X =  2.8443      Y =  2.8443      Z = 0.00000     IS UNIT NUMBER    418
  2 CUBOID          23  1      +X =  4.1529     -X = -4.1529     +Y =  4.1529     -Y = -4.1529     +Z =  43.480     -Z = -33.040
_                                       TRIGA - PREF. FLOOD CANISTER
                MEDIA BIAS      GEOMETRY DESCRIPTION FOR THOSE UNITS UTILIZED IN THIS PROBLEM
REGION           NUM   ID
                                                -----   UNIT   421   -----
AL TUBES WITH TRIGA FUEL, IN FUEL INSERT, BOTTOM OPENING
  1 CUBOID          23  1      +X =  4.1529     -X = -4.1529     +Y =  4.1529     -Y = -4.1529     +Z =  43.480     -Z = -33.040
    HOLE NUMBER     37       AT X = -2.8443      Y = -2.8443      Z = 0.00000     IS UNIT NUMBER    415
    HOLE NUMBER     38       AT X =-0.94810      Y = -2.8443      Z = 0.00000     IS UNIT NUMBER    413
    HOLE NUMBER     39       AT X = 0.94810      Y = -2.8443      Z = 0.00000     IS UNIT NUMBER    413
    HOLE NUMBER     40       AT X =  2.8443      Y = -2.8443      Z = 0.00000     IS UNIT NUMBER    416
    HOLE NUMBER     41       AT X = -2.8443      Y =-0.94810      Z = 0.00000     IS UNIT NUMBER    411
    HOLE NUMBER     42       AT X =-0.94810      Y =-0.94810      Z = 0.00000     IS UNIT NUMBER    415
    HOLE NUMBER     43       AT X = 0.94810      Y =-0.94810      Z = 0.00000     IS UNIT NUMBER    416
    HOLE NUMBER     44       AT X =  2.8443      Y =-0.94810      Z = 0.00000     IS UNIT NUMBER    412
    HOLE NUMBER     45       AT X = -2.8443      Y = 0.94810      Z = 0.00000     IS UNIT NUMBER    411
    HOLE NUMBER     46       AT X =-0.94810      Y = 0.94810      Z = 0.00000     IS UNIT NUMBER    417
    HOLE NUMBER     47       AT X = 0.94810      Y = 0.94810      Z = 0.00000     IS UNIT NUMBER    418
    HOLE NUMBER     48       AT X =  2.8443      Y = 0.94810      Z = 0.00000     IS UNIT NUMBER    412
    HOLE NUMBER     49       AT X = -2.8443      Y =  2.8443      Z = 0.00000     IS UNIT NUMBER    417
    HOLE NUMBER     50       AT X =-0.94810      Y =  2.8443      Z = 0.00000     IS UNIT NUMBER    414
    HOLE NUMBER     51       AT X = 0.94810      Y =  2.8443      Z = 0.00000     IS UNIT NUMBER    414
    HOLE NUMBER     52       AT X =  2.8443      Y =  2.8443      Z = 0.00000     IS UNIT NUMBER    418
  2 CUBOID          23  1      +X =  4.1529     -X = -4.1529     +Y =  4.1529     -Y = -4.1529     +Z =  43.480     -Z = -33.040
_                                       TRIGA - PREF. FLOOD CANISTER
                MEDIA BIAS      GEOMETRY DESCRIPTION FOR THOSE UNITS UTILIZED IN THIS PROBLEM
REGION           NUM   ID
                                                -----   UNIT   422   -----
AL TUBES WITH TRIGA FUEL, IN FUEL INSERT, TOP OPENING
  1 CUBOID          23  1      +X =  4.1529     -X = -4.1529     +Y =  4.1529     -Y = -4.1529     +Z =  43.480     -Z = -33.040
    HOLE NUMBER     53       AT X = -2.8443      Y = -2.8443      Z = 0.00000     IS UNIT NUMBER    415
    HOLE NUMBER     54       AT X =-0.94810      Y = -2.8443      Z = 0.00000     IS UNIT NUMBER    413
    HOLE NUMBER     55       AT X = 0.94810      Y = -2.8443      Z = 0.00000     IS UNIT NUMBER    413
    HOLE NUMBER     56       AT X =  2.8443      Y = -2.8443      Z = 0.00000     IS UNIT NUMBER    416
    HOLE NUMBER     57       AT X = -2.8443      Y =-0.94810      Z = 0.00000     IS UNIT NUMBER    411
    HOLE NUMBER     58       AT X =-0.94810      Y =-0.94810      Z = 0.00000     IS UNIT NUMBER    415
    HOLE NUMBER     59       AT X = 0.94810      Y =-0.94810      Z = 0.00000     IS UNIT NUMBER    416
    HOLE NUMBER     60       AT X =  2.8443      Y =-0.94810      Z = 0.00000     IS UNIT NUMBER    412
    HOLE NUMBER     61       AT X = -2.8443      Y = 0.94810      Z = 0.00000     IS UNIT NUMBER    411
    HOLE NUMBER     62       AT X =-0.94810      Y = 0.94810      Z = 0.00000     IS UNIT NUMBER    417
    HOLE NUMBER     63       AT X = 0.94810      Y = 0.94810      Z = 0.00000     IS UNIT NUMBER    418
    HOLE NUMBER     64       AT X =  2.8443      Y = 0.94810      Z = 0.00000     IS UNIT NUMBER    412
    HOLE NUMBER     65       AT X = -2.8443      Y =  2.8443      Z = 0.00000     IS UNIT NUMBER    417
    HOLE NUMBER     66       AT X =-0.94810      Y =  2.8443      Z = 0.00000     IS UNIT NUMBER    414
    HOLE NUMBER     67       AT X = 0.94810      Y =  2.8443      Z = 0.00000     IS UNIT NUMBER    414
    HOLE NUMBER     68       AT X =  2.8443      Y =  2.8443      Z = 0.00000     IS UNIT NUMBER    418
  2 CUBOID          23  1      +X =  4.1529     -X = -4.1529     +Y =  4.1529     -Y = -4.1529     +Z =  43.480     -Z = -33.040
_                                       TRIGA - PREF. FLOOD CANISTER
                MEDIA BIAS      GEOMETRY DESCRIPTION FOR THOSE UNITS UTILIZED IN THIS PROBLEM
REGION           NUM   ID
                                                -----   UNIT   423   -----
```

```
AL TUBES WITH TRIGA FUEL, IN FUEL INSERT, BOTTOM LEFT OPENING
  1 CUBOID          23  1      +X =  4.1529     -X = -4.1529     +Y =  4.1529     -Y = -4.1529     +Z =  43.480     -Z = -33.040
    HOLE NUMBER     69       AT X = -2.8443      Y = -2.8443      Z = 0.00000     IS UNIT NUMBER    415
    HOLE NUMBER     70       AT X =-0.94810      Y = -2.8443      Z = 0.00000     IS UNIT NUMBER    413
    HOLE NUMBER     71       AT X = 0.94810      Y = -2.8443      Z = 0.00000     IS UNIT NUMBER    413
    HOLE NUMBER     72       AT X =  2.8443      Y = -2.8443      Z = 0.00000     IS UNIT NUMBER    416
    HOLE NUMBER     73       AT X = -2.8443      Y =-0.94810      Z = 0.00000     IS UNIT NUMBER    411
    HOLE NUMBER     74       AT X =-0.94810      Y =-0.94810      Z = 0.00000     IS UNIT NUMBER    415
    HOLE NUMBER     75       AT X = 0.94810      Y =-0.94810      Z = 0.00000     IS UNIT NUMBER    416
    HOLE NUMBER     76       AT X =  2.8443      Y =-0.94810      Z = 0.00000     IS UNIT NUMBER    412
    HOLE NUMBER     77       AT X = -2.8443      Y = 0.94810      Z = 0.00000     IS UNIT NUMBER    411
    HOLE NUMBER     78       AT X =-0.94810      Y = 0.94810      Z = 0.00000     IS UNIT NUMBER    417
    HOLE NUMBER     79       AT X = 0.94810      Y = 0.94810      Z = 0.00000     IS UNIT NUMBER    418
    HOLE NUMBER     80       AT X =  2.8443      Y = 0.94810      Z = 0.00000     IS UNIT NUMBER    412
    HOLE NUMBER     81       AT X = -2.8443      Y =  2.8443      Z = 0.00000     IS UNIT NUMBER    417
    HOLE NUMBER     82       AT X =-0.94810      Y =  2.8443      Z = 0.00000     IS UNIT NUMBER    414
    HOLE NUMBER     83       AT X = 0.94810      Y =  2.8443      Z = 0.00000     IS UNIT NUMBER    414
    HOLE NUMBER     84       AT X =  2.8443      Y =  2.8443      Z = 0.00000     IS UNIT NUMBER    418
  2 CUBOID          23  1      +X =  4.1529     -X = -4.1529     +Y =  4.1529     -Y = -4.1529     +Z =  43.480     -Z = -33.040
_                                      TRIGA - PREF. FLOOD CANISTER
                MEDIA BIAS      GEOMETRY DESCRIPTION FOR THOSE UNITS UTILIZED IN THIS PROBLEM
REGION           NUM   ID
                                              -----   UNIT   424   -----
AL TUBES WITH TRIGA FUEL, IN FUEL INSERT, TOP LEFT OPENING
  1 CUBOID          23  1      +X =  4.1529     -X = -4.1529     +Y =  4.1529     -Y = -4.1529     +Z =  43.480     -Z = -33.040
    HOLE NUMBER     85       AT X = -2.8443      Y = -2.8443      Z = 0.00000     IS UNIT NUMBER    415
    HOLE NUMBER     86       AT X =-0.94810      Y = -2.8443      Z = 0.00000     IS UNIT NUMBER    413
    HOLE NUMBER     87       AT X = 0.94810      Y = -2.8443      Z = 0.00000     IS UNIT NUMBER    413
    HOLE NUMBER     88       AT X =  2.8443      Y = -2.8443      Z = 0.00000     IS UNIT NUMBER    416
    HOLE NUMBER     89       AT X = -2.8443      Y =-0.94810      Z = 0.00000     IS UNIT NUMBER    411
    HOLE NUMBER     90       AT X =-0.94810      Y =-0.94810      Z = 0.00000     IS UNIT NUMBER    415
    HOLE NUMBER     91       AT X = 0.94810      Y =-0.94810      Z = 0.00000     IS UNIT NUMBER    416
    HOLE NUMBER     92       AT X =  2.8443      Y =-0.94810      Z = 0.00000     IS UNIT NUMBER    412
    HOLE NUMBER     93       AT X = -2.8443      Y = 0.94810      Z = 0.00000     IS UNIT NUMBER    411
    HOLE NUMBER     94       AT X =-0.94810      Y = 0.94810      Z = 0.00000     IS UNIT NUMBER    417
    HOLE NUMBER     95       AT X = 0.94810      Y = 0.94810      Z = 0.00000     IS UNIT NUMBER    418
    HOLE NUMBER     96       AT X =  2.8443      Y = 0.94810      Z = 0.00000     IS UNIT NUMBER    412
    HOLE NUMBER     97       AT X = -2.8443      Y =  2.8443      Z = 0.00000     IS UNIT NUMBER    417
    HOLE NUMBER     98       AT X =-0.94810      Y =  2.8443      Z = 0.00000     IS UNIT NUMBER    414
    HOLE NUMBER     99       AT X = 0.94810      Y =  2.8443      Z = 0.00000     IS UNIT NUMBER    414
    HOLE NUMBER    100       AT X =  2.8443      Y =  2.8443      Z = 0.00000     IS UNIT NUMBER    418
  2 CUBOID          23  1      +X =  4.1529     -X = -4.1529     +Y =  4.1529     -Y = -4.1529     +Z =  43.480     -Z = -33.040
_                                      TRIGA - PREF. FLOOD CANISTER
                MEDIA BIAS      GEOMETRY DESCRIPTION FOR THOSE UNITS UTILIZED IN THIS PROBLEM
REGION           NUM   ID
                                              -----   UNIT   425   -----
AL TUBES WITH TRIGA FUEL, IN FUEL INSERT, BOTTOM RIGHT OPENING
  1 CUBOID          23  1      +X =  4.1529     -X = -4.1529     +Y =  4.1529     -Y = -4.1529     +Z =  43.480     -Z = -33.040
    HOLE NUMBER    101       AT X = -2.8443      Y = -2.8443      Z = 0.00000     IS UNIT NUMBER    415
    HOLE NUMBER    102       AT X =-0.94810      Y = -2.8443      Z = 0.00000     IS UNIT NUMBER    413
    HOLE NUMBER    103       AT X = 0.94810      Y = -2.8443      Z = 0.00000     IS UNIT NUMBER    413
    HOLE NUMBER    104       AT X =  2.8443      Y = -2.8443      Z = 0.00000     IS UNIT NUMBER    416
```

```
    HOLE NUMBER    105       AT X = -2.8443      Y =-0.94810      Z = 0.00000     IS UNIT NUMBER    411

    HOLE NUMBER    106       AT X =-0.94810      Y =-0.94810      Z = 0.00000     IS UNIT NUMBER    415

    HOLE NUMBER    107       AT X = 0.94810      Y =-0.94810      Z = 0.00000     IS UNIT NUMBER    416

    HOLE NUMBER    108       AT X =  2.8443      Y =-0.94810      Z = 0.00000     IS UNIT NUMBER    412

    HOLE NUMBER    109       AT X = -2.8443      Y = 0.94810      Z = 0.00000     IS UNIT NUMBER    411

    HOLE NUMBER    110       AT X =-0.94810      Y = 0.94810      Z = 0.00000     IS UNIT NUMBER    417

    HOLE NUMBER    111       AT X = 0.94810      Y = 0.94810      Z = 0.00000     IS UNIT NUMBER    418

    HOLE NUMBER    112       AT X =  2.8443      Y = 0.94810      Z = 0.00000     IS UNIT NUMBER    412

    HOLE NUMBER    113       AT X = -2.8443      Y =  2.8443      Z = 0.00000     IS UNIT NUMBER    417

    HOLE NUMBER    114       AT X =-0.94810      Y =  2.8443      Z = 0.00000     IS UNIT NUMBER    414

    HOLE NUMBER    115       AT X = 0.94810      Y =  2.8443      Z = 0.00000     IS UNIT NUMBER    414

    HOLE NUMBER    116       AT X =  2.8443      Y =  2.8443      Z = 0.00000     IS UNIT NUMBER    418

  2 CUBOID          23  1      +X =  4.1529     -X = -4.1529     +Y =  4.1529     -Y = -4.1529     +Z =  43.480     -Z = -33.040
_                                        TRIGA - PREF. FLOOD CANISTER

                MEDIA BIAS      GEOMETRY DESCRIPTION FOR THOSE UNITS UTILIZED IN THIS PROBLEM
REGION           NUM   ID

                                                 -----   UNIT   426   -----

AL TUBES WITH TRIGA FUEL, IN FUEL INSERT, TOP RIGHT OPENING

  1 CUBOID          23  1      +X =  4.1529     -X = -4.1529     +Y =  4.1529     -Y = -4.1529     +Z =  43.480     -Z = -33.040

    HOLE NUMBER    117       AT X = -2.8443      Y = -2.8443      Z = 0.00000     IS UNIT NUMBER    415

    HOLE NUMBER    118       AT X =-0.94810      Y = -2.8443      Z = 0.00000     IS UNIT NUMBER    413

    HOLE NUMBER    119       AT X = 0.94810      Y = -2.8443      Z = 0.00000     IS UNIT NUMBER    413

    HOLE NUMBER    120       AT X =  2.8443      Y = -2.8443      Z = 0.00000     IS UNIT NUMBER    416

    HOLE NUMBER    121       AT X = -2.8443      Y =-0.94810      Z = 0.00000     IS UNIT NUMBER    411

    HOLE NUMBER    122       AT X =-0.94810      Y =-0.94810      Z = 0.00000     IS UNIT NUMBER    415

    HOLE NUMBER    123       AT X = 0.94810      Y =-0.94810      Z = 0.00000     IS UNIT NUMBER    416

    HOLE NUMBER    124       AT X =  2.8443      Y =-0.94810      Z = 0.00000     IS UNIT NUMBER    412

    HOLE NUMBER    125       AT X = -2.8443      Y = 0.94810      Z = 0.00000     IS UNIT NUMBER    411

    HOLE NUMBER    126       AT X =-0.94810      Y = 0.94810      Z = 0.00000     IS UNIT NUMBER    417

    HOLE NUMBER    127       AT X = 0.94810      Y = 0.94810      Z = 0.00000     IS UNIT NUMBER    418

    HOLE NUMBER    128       AT X =  2.8443      Y = 0.94810      Z = 0.00000     IS UNIT NUMBER    412

    HOLE NUMBER    129       AT X = -2.8443      Y =  2.8443      Z = 0.00000     IS UNIT NUMBER    417

    HOLE NUMBER    130       AT X =-0.94810      Y =  2.8443      Z = 0.00000     IS UNIT NUMBER    414

    HOLE NUMBER    131       AT X = 0.94810      Y =  2.8443      Z = 0.00000     IS UNIT NUMBER    414

    HOLE NUMBER    132       AT X =  2.8443      Y =  2.8443      Z = 0.00000     IS UNIT NUMBER    418

  2 CUBOID          23  1      +X =  4.1529     -X = -4.1529     +Y =  4.1529     -Y = -4.1529     +Z =  43.480     -Z = -33.040

                                                 -----   UNIT   430   -----

FUEL INSERT IN, CENTER OPENING

  1 CUBOID          23  1      +X =  4.2672     -X = -4.2672     +Y =  4.2672     -Y = -4.2672     +Z =  43.480     -Z = -33.040

    HOLE NUMBER    133       AT X = 0.00000      Y = 0.00000      Z = 0.00000     IS UNIT NUMBER    420
_                                        TRIGA - PREF. FLOOD CANISTER

                MEDIA BIAS      GEOMETRY DESCRIPTION FOR THOSE UNITS UTILIZED IN THIS PROBLEM
REGION           NUM   ID

                                                 -----   UNIT   431   -----

FUEL INSERT IN, BOTTOM OPENING

  1 CUBOID          23  1      +X =  4.2672     -X = -4.2672     +Y =  4.2672     -Y = -4.2672     +Z =  43.480     -Z = -33.040

    HOLE NUMBER    134       AT X = 0.00000      Y =-0.11430      Z = 0.00000     IS UNIT NUMBER    421

                                                 -----   UNIT   432   -----

FUEL INSERT IN, TOP OPENING

  1 CUBOID          23  1      +X =  4.2672     -X = -4.2672     +Y =  4.2672     -Y = -4.2672     +Z =  43.480     -Z = -33.040

    HOLE NUMBER    135       AT X = 0.00000      Y = 0.11430      Z = 0.00000     IS UNIT NUMBER    422
```

```
                                          -----   UNIT   433   -----
FUEL INSERT IN, BOTTOM LEFT OPENING
  1 CUBOID          23  1      +X =  4.2672     -X = -4.2672     +Y =  4.2672     -Y = -4.2672     +Z =  43.480     -Z = -33.040
    HOLE NUMBER    136       AT X =-0.11430      Y =-0.11430      Z = 0.00000     IS UNIT NUMBER    423

                                          -----   UNIT   434   -----
FUEL INSERT IN, TOP LEFT OPENING
  1 CUBOID          23  1      +X =  4.2672     -X = -4.2672     +Y =  4.2672     -Y = -4.2672     +Z =  43.480     -Z = -33.040
    HOLE NUMBER    137       AT X =-0.11430      Y = 0.11430      Z = 0.00000     IS UNIT NUMBER    424

                                          -----   UNIT   435   -----
FUEL INSERT IN, BOTOM RIGHT OPENING
  1 CUBOID          23  1      +X =  4.2672     -X = -4.2672     +Y =  4.2672     -Y = -4.2672     +Z =  43.480     -Z = -33.040
    HOLE NUMBER    138       AT X = 0.11430      Y =-0.11430      Z = 0.00000     IS UNIT NUMBER    425

                                          -----   UNIT   436   -----
FUEL INSERT IN, TOP RIGHT OPENING
  1 CUBOID          23  1      +X =  4.2672     -X = -4.2672     +Y =  4.2672     -Y = -4.2672     +Z =  43.480     -Z = -33.040
    HOLE NUMBER    139       AT X = 0.11430      Y = 0.11430      Z = 0.00000     IS UNIT NUMBER    426
_                                    TRIGA - PREF. FLOOD CANISTER

               MEDIA BIAS      GEOMETRY DESCRIPTION FOR THOSE UNITS UTILIZED IN THIS PROBLEM
REGION          NUM   ID

                                       -----   UNIT   440  EXTERNAL TO LATTICE 41   -----
CENTER COLUMN OF THREE OPENINGS
  1 ARRAY NUMBER    41         +X =  4.2672     -X = -4.2672     +Y =  13.830     -Y = -13.830     +Z =  43.480     -Z = -33.040
  2 CUBOID         212  1      +X =  4.9784     -X = -4.9784     +Y =  14.542     -Y = -14.542     +Z =  43.480     -Z = -33.040

                                       -----   UNIT   441  EXTERNAL TO LATTICE 42   -----
LEFT OUTSIDE COLUMN OF TWO OPENINGS
  1 ARRAY NUMBER    42         +X =  4.2672     -X = -4.2672     +Y =  8.9980     -Y = -8.9979     +Z =  43.480     -Z = -33.040
  2 CUBOID         212  1      +X =  4.2672     -X = -4.6080     +Y =  9.3388     -Y = -9.3387     +Z =  43.480     -Z = -33.040

                                       -----   UNIT   442  EXTERNAL TO LATTICE 43   -----
RIGHT OUTSIDE COLUMN OF TWO OPENINGS
  1 ARRAY NUMBER    43         +X =  4.2672     -X = -4.2672     +Y =  8.9980     -Y = -8.9979     +Z =  43.480     -Z = -33.040
  2 CUBOID         212  1      +X =  4.6080     -X = -4.2672     +Y =  9.3388     -Y = -9.3387     +Z =  43.480     -Z = -33.040

                                          -----   UNIT   450   -----
28 TRIGA FUEL ELEMENTS IN EACH LWT BASKET
  1 CYLINDER        23  1  RADIUS =  17.150     +Z =  43.485     -Z = -33.045     CENTERLINE IS AT  X = 0.00000      Y = 0.00000
    HOLE NUMBER    140       AT X = 0.00000      Y = 0.00000      Z = 0.00000     IS UNIT NUMBER    440
    HOLE NUMBER    141       AT X = -9.2457      Y = 0.00000      Z = 0.00000     IS UNIT NUMBER    441
    HOLE NUMBER    142       AT X =  9.2457      Y = 0.00000      Z = 0.00000     IS UNIT NUMBER    442
  2 CYLINDER       212  1  RADIUS =  18.910     +Z =  43.485     -Z = -33.045     CENTERLINE IS AT  X = 0.00000      Y = 0.00000
  3 CYLINDER        26  1  RADIUS =  33.465     +Z =  43.485     -Z = -33.045     CENTERLINE IS AT  X = 0.00000      Y = 0.00000
  4 CYLINDER       212  1  RADIUS =  36.519     +Z =  43.485     -Z = -33.045     CENTERLINE IS AT  X = 0.00000      Y = 0.00000
  5 CYLINDER        27  1  RADIUS =  49.223     +Z =  43.485     -Z = -33.045     CENTERLINE IS AT  X = 0.00000      Y = 0.00000
  6 CYLINDER       212  1  RADIUS =  49.822     +Z =  43.485     -Z = -33.045     CENTERLINE IS AT  X = 0.00000      Y = 0.00000
  7 CUBOID          28  1      +X =  49.822     -X = -49.822     +Y =  49.822     -Y = -49.822     +Z =  43.485     -Z = -33.045
_                            TRIGA - PREF. FLOOD CANISTER

                      -------  UNIT ORIENTATION DESCRIPTION FOR ARRAY   1         -------

Z LAYER   1, X COLUMN   1 TO   1 LEFT TO RIGHT   Y ROW   1 TO   7  BOTTOM TO TOP

 11

  5
```

```
 17

 16

 17

  5

 10
                -------  UNIT ORIENTATION DESCRIPTION FOR ARRAY   2         -------
Z LAYER   1, X COLUMN   1 TO   1 LEFT TO RIGHT   Y ROW   1 TO   4  BOTTOM TO TOP
 12

  6

 17

 13
                -------  UNIT ORIENTATION DESCRIPTION FOR ARRAY   3         -------
Z LAYER   1, X COLUMN   1 TO   1 LEFT TO RIGHT   Y ROW   1 TO   4  BOTTOM TO TOP
 14

  6

 17

 15
_                       TRIGA - PREF. FLOOD CANISTER
                -------  UNIT ORIENTATION DESCRIPTION FOR ARRAY  20         -------
Z LAYER   1, X COLUMN   1 TO   1 LEFT TO RIGHT   Y ROW   1 TO   1  BOTTOM TO TOP
  81
Z LAYER   2, X COLUMN   1 TO   1 LEFT TO RIGHT   Y ROW   1 TO   1  BOTTOM TO TOP
  30
Z LAYER   3, X COLUMN   1 TO   1 LEFT TO RIGHT   Y ROW   1 TO   1  BOTTOM TO TOP
 450
Z LAYER   4, X COLUMN   1 TO   1 LEFT TO RIGHT   Y ROW   1 TO   1  BOTTOM TO TOP
 450
Z LAYER   5, X COLUMN   1 TO   1 LEFT TO RIGHT   Y ROW   1 TO   1  BOTTOM TO TOP
 450
Z LAYER   6, X COLUMN   1 TO   1 LEFT TO RIGHT   Y ROW   1 TO   1  BOTTOM TO TOP
  30
Z LAYER   7, X COLUMN   1 TO   1 LEFT TO RIGHT   Y ROW   1 TO   1  BOTTOM TO TOP
  80
_                       TRIGA - PREF. FLOOD CANISTER
                -------  UNIT ORIENTATION DESCRIPTION FOR ARRAY  41         -------
Z LAYER   1, X COLUMN   1 TO   1 LEFT TO RIGHT   Y ROW   1 TO   7  BOTTOM TO TOP
 431

  45

  42

 430

  42

  45

 432
                -------  UNIT ORIENTATION DESCRIPTION FOR ARRAY  42         -------
Z LAYER   1, X COLUMN   1 TO   1 LEFT TO RIGHT   Y ROW   1 TO   4  BOTTOM TO TOP
 435

  42

  46

 436
                -------  UNIT ORIENTATION DESCRIPTION FOR ARRAY  43         -------
Z LAYER   1, X COLUMN   1 TO   1 LEFT TO RIGHT   Y ROW   1 TO   4  BOTTOM TO TOP
 433

  42

  46

 434
```

TRIGA - PREF. FLOOD CANISTER
VOLUMES FOR THOSE UNITS UTILIZED IN THIS PROBLEM

UNIT	REGION	GEOMETRY REGION	VOLUME	CUMULATIVE VOLUME
1	1	1	3.04527E+03 CM**3	3.04527E+03 CM**3
5	1	2	5.01021E+02 CM**3	5.01021E+02 CM**3
6	1	3	4.29446E+02 CM**3	4.29446E+02 CM**3
7	1	4	2.52441E-01 CM**3	3.04552E+03 CM**3
	2	5	4.63830E+02 CM**3	3.50935E+03 CM**3
	3	6	9.63081E+02 CM**3	4.47243E+03 CM**3
10	1	7	1.53981E+03 CM**3	6.01225E+03 CM**3
11	1	8	1.53981E+03 CM**3	6.01225E+03 CM**3
12	1	9	1.53981E+03 CM**3	6.01225E+03 CM**3
13	1	10	1.53981E+03 CM**3	6.01225E+03 CM**3
14	1	11	1.53981E+03 CM**3	6.01225E+03 CM**3
15	1	12	1.53981E+03 CM**3	6.01225E+03 CM**3
16	1	13	1.53981E+03 CM**3	6.01225E+03 CM**3
17	1	14	1.94205E+02 CM**3	1.94205E+02 CM**3
	2	15	1.61300E+01 CM**3	2.10335E+02 CM**3
	3	16	1.33346E+01 CM**3	2.23670E+02 CM**3
SURROUNDING GEOMETRY VOLUMES - GEOMETRY REGION 20 IS AN ARRAY PLACEMENT BOUNDARY REGION				
20	1	20	1.94861E+04 CM**3	1.94861E+04 CM**3
	2	21	4.41673E+03 CM**3	2.39029E+04 CM**3
SURROUNDING GEOMETRY VOLUMES - GEOMETRY REGION 22 IS AN ARRAY PLACEMENT BOUNDARY REGION				
21	1	22	1.26776E+04 CM**3	1.26776E+04 CM**3
	2	23	8.97555E+02 CM**3	1.35752E+04 CM**3
SURROUNDING GEOMETRY VOLUMES - GEOMETRY REGION 24 IS AN ARRAY PLACEMENT BOUNDARY REGION				
22	1	24	1.26776E+04 CM**3	1.26776E+04 CM**3
	2	25	8.97555E+02 CM**3	1.35752E+04 CM**3
30	1	26	2.47754E+04 CM**3	7.58286E+04 CM**3
	2	27	1.83375E+04 CM**3	9.41660E+04 CM**3
	3	28	2.00728E+05 CM**3	2.94894E+05 CM**3
	4	29	5.62864E+04 CM**3	3.51181E+05 CM**3
	5	30	2.86831E+05 CM**3	6.38011E+05 CM**3
	6	31	1.56332E+04 CM**3	6.53645E+05 CM**3
	7	32	1.78602E+05 CM**3	8.32246E+05 CM**3
41	1	33	7.36468E+01 CM**3	7.36468E+01 CM**3
	2	34	9.53190E+00 CM**3	8.31787E+01 CM**3
	3	35	3.07231E+01 CM**3	1.13902E+02 CM**3
42	1	36	1.65841E+02 CM**3	1.65841E+02 CM**3
	2	37	1.37742E+01 CM**3	1.79615E+02 CM**3
	3	38	2.77290E+01 CM**3	2.07344E+02 CM**3
45	1	39	4.64451E+02 CM**3	4.64451E+02 CM**3
46	1	40	3.98101E+02 CM**3	3.98101E+02 CM**3
80	1	93	1.18444E+05 CM**3	1.18444E+05 CM**3
	2	94	1.02013E+05 CM**3	2.20456E+05 CM**3
	3	95	6.02374E+04 CM**3	2.80694E+05 CM**3
81	1	96	1.66245E+04 CM**3	1.66245E+04 CM**3
	2	97	9.57276E+04 CM**3	1.12352E+05 CM**3
	3	98	9.56257E+04 CM**3	2.07978E+05 CM**3
	4	99	5.68278E+04 CM**3	2.64806E+05 CM**3
SURROUNDING GEOMETRY VOLUMES - GEOMETRY REGION 100 IS AN ARRAY PLACEMENT BOUNDARY REGION				
82	1	100	4.48958E+06 CM**3	4.48958E+06 CM**3
411	1	43	4.36751E+01 CM**3	1.57577E+02 CM**3
	2	44	5.84895E+01 CM**3	2.16066E+02 CM**3
412	1	45	4.36751E+01 CM**3	1.57577E+02 CM**3
	2	46	5.84895E+01 CM**3	2.16066E+02 CM**3
413	1	47	4.36751E+01 CM**3	1.57577E+02 CM**3
	2	48	5.84895E+01 CM**3	2.16066E+02 CM**3
414	1	49	4.36751E+01 CM**3	1.57577E+02 CM**3
	2	50	5.84895E+01 CM**3	2.16066E+02 CM**3
415	1	51	4.36751E+01 CM**3	1.57577E+02 CM**3

```
            2        52         5.84895E+01 CM**3         2.16066E+02 CM**3

416         1        53         4.36751E+01 CM**3         1.57577E+02 CM**3
            2        54         5.84895E+01 CM**3         2.16066E+02 CM**3

417         1        55         4.36751E+01 CM**3         1.57577E+02 CM**3
            2        56         5.84895E+01 CM**3         2.16066E+02 CM**3

418         1        57         4.36751E+01 CM**3         1.57577E+02 CM**3
            2        58         5.84895E+01 CM**3         2.16066E+02 CM**3

420         1        59         1.82177E+03 CM**3         5.27883E+03 CM**3
            2        60         0.00000E+00 CM**3         5.27883E+03 CM**3

421         1        61         1.82177E+03 CM**3         5.27883E+03 CM**3
            2        62         0.00000E+00 CM**3         5.27883E+03 CM**3

422         1        63         1.82177E+03 CM**3         5.27883E+03 CM**3
            2        64         0.00000E+00 CM**3         5.27883E+03 CM**3

423         1        65         1.82177E+03 CM**3         5.27883E+03 CM**3
            2        66         0.00000E+00 CM**3         5.27883E+03 CM**3

424         1        67         1.82177E+03 CM**3         5.27883E+03 CM**3
            2        68         0.00000E+00 CM**3         5.27883E+03 CM**3

425         1        69         1.82177E+03 CM**3         5.27883E+03 CM**3
            2        70         0.00000E+00 CM**3         5.27883E+03 CM**3

426         1        71         1.82177E+03 CM**3         5.27883E+03 CM**3
            2        72         0.00000E+00 CM**3         5.27883E+03 CM**3

430         1        73         2.94576E+02 CM**3         5.57341E+03 CM**3

431         1        74         2.94576E+02 CM**3         5.57341E+03 CM**3

432         1        75         2.94576E+02 CM**3         5.57341E+03 CM**3

433         1        76         2.94576E+02 CM**3         5.57341E+03 CM**3


434         1        77         2.94576E+02 CM**3         5.57341E+03 CM**3

435         1        78         2.94576E+02 CM**3         5.57341E+03 CM**3

436         1        79         2.94576E+02 CM**3         5.57341E+03 CM**3

SURROUNDING GEOMETRY VOLUMES -  GEOMETRY REGION     80 IS AN ARRAY PLACEMENT BOUNDARY REGION

440         1        80         1.80638E+04 CM**3         1.80638E+04 CM**3
            2        81         4.09436E+03 CM**3         2.21582E+04 CM**3

SURROUNDING GEOMETRY VOLUMES -  GEOMETRY REGION     82 IS AN ARRAY PLACEMENT BOUNDARY REGION

441         1        82         1.17523E+04 CM**3         1.17523E+04 CM**3
            2        83         9.32192E+02 CM**3         1.26845E+04 CM**3

SURROUNDING GEOMETRY VOLUMES -  GEOMETRY REGION     84 IS AN ARRAY PLACEMENT BOUNDARY REGION

442         1        84         1.17523E+04 CM**3         1.17523E+04 CM**3
            2        85         9.32192E+02 CM**3         1.26845E+04 CM**3

450         1        86         2.31876E+04 CM**3         7.07147E+04 CM**3
            2        87         1.52615E+04 CM**3         8.59762E+04 CM**3
            3        88         1.83270E+05 CM**3         2.69247E+05 CM**3
            4        89         5.13911E+04 CM**3         3.20638E+05 CM**3
            5        90         2.61884E+05 CM**3         5.82522E+05 CM**3
            6        91         1.42735E+04 CM**3         5.96796E+05 CM**3
            7        92         1.63068E+05 CM**3         7.59864E+05 CM**3


                UNIT     USES    REGION     MIXTURE        TOTAL VOLUME

                  1        14         1           1         4.26338E+04 CM**3

                  5         4         1           2         2.00408E+03 CM**3

                  6         4         1           2         1.71778E+03 CM**3

                  7        14         1           3         3.53418E+00 CM**3
                                      2           2         6.49362E+03 CM**3
                                      3          12         1.34831E+04 CM**3

                 10         2         1          12         3.07963E+03 CM**3

                 11         2         1          12         3.07963E+03 CM**3

                 12         2         1          12         3.07963E+03 CM**3

                 13         2         1          12         3.07963E+03 CM**3

                 14         2         1          12         3.07963E+03 CM**3

                 15         2         1          12         3.07963E+03 CM**3
```

16	2	1	12	3.07963E+03 CM**3
17	8	1	13	1.55364E+03 CM**3
		2	14	1.29040E+02 CM**3
		3	12	1.06677E+02 CM**3
20	2	1		3.89722E+04 CM**3
		2	2	8.83347E+03 CM**3
21	2	1		2.53552E+04 CM**3
		2	2	1.79511E+03 CM**3
22	2	1		2.53552E+04 CM**3
		2	2	1.79511E+03 CM**3
30	2	1	12	4.95508E+04 CM**3
		2	2	3.66750E+04 CM**3
		3	6	4.01456E+05 CM**3
		4	2	1.12573E+05 CM**3
		5	7	5.73661E+05 CM**3
		6	2	3.12664E+04 CM**3
		7	8	3.57203E+05 CM**3
41	336	1	21	2.47453E+04 CM**3
		2	22	3.20272E+03 CM**3
		3	29	1.03230E+04 CM**3
42	12	1	210	1.99009E+03 CM**3
		2	211	1.65290E+02 CM**3
		3	23	3.32748E+02 CM**3
45	6	1	212	2.78670E+03 CM**3
46	6	1	212	2.38860E+03 CM**3
80	1	1	2	1.18444E+05 CM**3
		2	8	1.02013E+05 CM**3
		3	8	6.02374E+04 CM**3
81	1	1	6	1.66245E+04 CM**3
		2	2	9.57276E+04 CM**3
		3	8	9.56257E+04 CM**3
		4	8	5.68278E+04 CM**3
82	1	1		4.48958E+06 CM**3
411	42	1	23	1.83435E+03 CM**3
		2	215	2.45656E+03 CM**3
412	42	1	23	1.83435E+03 CM**3
		2	215	2.45656E+03 CM**3
413	42	1	23	1.83435E+03 CM**3
		2	215	2.45656E+03 CM**3
414	42	1	23	1.83435E+03 CM**3
		2	215	2.45656E+03 CM**3
415	42	1	23	1.83435E+03 CM**3
		2	215	2.45656E+03 CM**3
416	42	1	23	1.83435E+03 CM**3
		2	215	2.45656E+03 CM**3
417	42	1	23	1.83435E+03 CM**3
		2	215	2.45656E+03 CM**3
418	42	1	23	1.83435E+03 CM**3
		2	215	2.45656E+03 CM**3
420	3	1	23	5.46531E+03 CM**3
		2	23	0.00000E+00 CM**3
421	3	1	23	5.46531E+03 CM**3
		2	23	0.00000E+00 CM**3
422	3	1	23	5.46531E+03 CM**3
		2	23	0.00000E+00 CM**3
423	3	1	23	5.46531E+03 CM**3
		2	23	0.00000E+00 CM**3
424	3	1	23	5.46531E+03 CM**3
		2	23	0.00000E+00 CM**3
425	3	1	23	5.46531E+03 CM**3
		2	23	0.00000E+00 CM**3
426	3	1	23	5.46531E+03 CM**3
		2	23	0.00000E+00 CM**3
430	3	1	23	8.83729E+02 CM**3
431	3	1	23	8.83729E+02 CM**3

432	3	1	23	8.83729E+02 CM**3
433	3	1	23	8.83729E+02 CM**3
434	3	1	23	8.83729E+02 CM**3
435	3	1	23	8.83729E+02 CM**3
436	3	1	23	8.83729E+02 CM**3
440	3	1		5.41915E+04 CM**3
		2	212	1.22831E+04 CM**3
441	3	1		3.52568E+04 CM**3
		2	212	2.79658E+03 CM**3
442	3	1		3.52568E+04 CM**3
		2	212	2.79658E+03 CM**3
450	3	1	23	6.95629E+04 CM**3
		2	212	4.57845E+04 CM**3
		3	26	5.49811E+05 CM**3
		4	212	1.54173E+05 CM**3
		5	27	7.85653E+05 CM**3
		6	212	4.28205E+04 CM**3
		7	28	4.89205E+05 CM**3

TOTAL MIXTURE VOLUMES

MIXTURE	TOTAL VOLUME	MASS(G)
1	4.26338E+04 CM**3	7.52714E+04
2	4.17325E+05 CM**3	3.30521E+06
3	3.53418E+00 CM**3	3.52772E+00
6	4.18081E+05 CM**3	4.74271E+06
7	5.73661E+05 CM**3	5.72612E-15
8	6.71907E+05 CM**3	6.70678E-15
12	8.46980E+04 CM**3	8.45431E+01
13	1.55364E+03 CM**3	1.20454E+04
14	1.29040E+02 CM**3	9.92440E+02
21	2.47453E+04 CM**3	1.45038E+05
22	3.20272E+03 CM**3	2.57258E+04
23	1.29014E+05 CM**3	1.28778E+02
26	5.49811E+05 CM**3	6.23706E+06
27	7.85653E+05 CM**3	7.84216E-15
28	4.89205E+05 CM**3	4.88310E-15
29	1.03230E+04 CM**3	4.06226E+04
210	1.99009E+03 CM**3	1.54292E+04
211	1.65290E+02 CM**3	1.27124E+03
212	2.65830E+05 CM**3	2.10537E+06
215	1.96525E+04 CM**3	5.31009E+04

```
*****************************************************************************************************************
***                                                                                                           ***
***                                        BIASING INFORMATION                                                ***
***                                                                                                           ***
***     A DEFAULT WEIGHT OF    0.500 WILL BE USED FOR ALL BIAS ID'S.                                          ***
***                                                                                                           ***
*****************************************************************************************************************

                        ........    0 IO'S WERE USED IN KENO-V BEFORE TRACKING       ........

                        ........  0.02467 MINUTES WERE USED PROCESSING DATA.        ........

VOLUME FRACTION OF FISSILE MATERIAL IN THE CORE= 1.50079E-02

START TYPE 0 WAS USED.

THE NEUTRONS WERE STARTED WITH A FLAT DISTRIBUTION IN A CUBOID DEFINED BY:
                  +X= 4.98221E+01  -X=-4.98221E+01  +Y= 4.98221E+01  -Y=-4.98221E+01  +Z= 2.30870E+02  -Z=-2.21300E+02
THE FLAG TO START NEUTRONS IN THE REFLECTOR WAS TURNED OFF

0.66433 MINUTES WERE REQUIRED FOR STARTING.   TOTAL ELAPSED TIME IS 0.68267 MINUTES.
```

TRIGA - PREF. FLOOD CANISTER

GENERATION	GENERATION K-EFFECTIVE	ELAPSED TIME MINUTES	AVERAGE K-EFFECTIVE	AVG K-EFF DEVIATION	MATRIX K-EFFECTIVE	MATRIX K-EFF DEVIATION
KENO MESSAGE NUMBER K5-132		WARNING....ONLY	442 INDEPENDENT FISSION POINTS WERE GENERATED			
1	8.37539E-01	6.99333E-01	1.00000E+00	0.00000E+00	0.00000E+00	0.00000E+00
KENO MESSAGE NUMBER K5-132		WARNING....ONLY	488 INDEPENDENT FISSION POINTS WERE GENERATED			
2	8.52774E-01	7.14000E-01	1.00000E+00	0.00000E+00	0.00000E+00	0.00000E+00
3	8.40221E-01	7.26833E-01	8.40221E-01	0.00000E+00	0.00000E+00	0.00000E+00
4	8.80179E-01	7.40500E-01	8.60200E-01	1.99790E-02	0.00000E+00	0.00000E+00
5	8.77375E-01	7.52500E-01	8.65925E-01	1.28775E-02	0.00000E+00	0.00000E+00
6	8.52329E-01	7.65167E-01	8.62526E-01	9.71942E-03	0.00000E+00	0.00000E+00
7	8.64157E-01	7.79000E-01	8.62852E-01	7.53569E-03	0.00000E+00	0.00000E+00
8	8.52553E-01	7.91833E-01	8.61136E-01	6.38780E-03	0.00000E+00	0.00000E+00
9	8.56608E-01	8.05500E-01	8.60489E-01	5.43728E-03	0.00000E+00	0.00000E+00
10	8.10802E-01	8.19167E-01	8.54278E-01	7.79410E-03	0.00000E+00	0.00000E+00
11	8.41128E-01	8.33833E-01	8.52817E-01	7.02732E-03	0.00000E+00	0.00000E+00
12	8.19244E-01	8.48500E-01	8.49459E-01	7.12589E-03	0.00000E+00	0.00000E+00
13	8.45987E-01	8.63167E-01	8.49144E-01	6.45333E-03	0.00000E+00	0.00000E+00
14	8.71782E-01	8.76000E-01	8.51030E-01	6.18574E-03	0.00000E+00	0.00000E+00
15	8.45444E-01	8.89667E-01	8.50601E-01	5.70626E-03	0.00000E+00	0.00000E+00
16	7.71454E-01	9.03500E-01	8.44947E-01	7.73757E-03	0.00000E+00	0.00000E+00
17	8.59059E-01	9.16333E-01	8.45888E-01	7.26446E-03	0.00000E+00	0.00000E+00
18	8.37210E-01	9.29167E-01	8.45346E-01	6.81689E-03	0.00000E+00	0.00000E+00
19	8.47860E-01	9.41833E-01	8.45493E-01	6.40506E-03	0.00000E+00	0.00000E+00
20	8.54889E-01	9.53833E-01	8.46015E-01	6.06126E-03	0.00000E+00	0.00000E+00
21	8.36069E-01	9.66667E-01	8.45492E-01	5.75723E-03	0.00000E+00	0.00000E+00
22	8.28513E-01	9.79500E-01	8.44643E-01	5.52738E-03	0.00000E+00	0.00000E+00
23	8.43649E-01	9.91333E-01	8.44596E-01	5.25780E-03	0.00000E+00	0.00000E+00
24	8.99669E-01	1.00417E+00	8.47099E-01	5.60339E-03	0.00000E+00	0.00000E+00
25	8.14114E-01	1.01783E+00	8.45665E-01	5.54296E-03	0.00000E+00	0.00000E+00
26	8.57507E-01	1.03067E+00	8.46158E-01	5.32987E-03	0.00000E+00	0.00000E+00
27	8.05887E-01	1.04450E+00	8.44547E-01	5.36001E-03	0.00000E+00	0.00000E+00
28	8.80365E-01	1.05733E+00	8.45925E-01	5.33081E-03	0.00000E+00	0.00000E+00
29	8.56343E-01	1.07100E+00	8.46311E-01	5.14406E-03	0.00000E+00	0.00000E+00
30	9.08331E-01	1.08467E+00	8.48526E-01	5.42931E-03	0.00000E+00	0.00000E+00
31	8.66782E-01	1.09850E+00	8.49155E-01	5.27644E-03	0.00000E+00	0.00000E+00
32	8.40028E-01	1.11133E+00	8.48851E-01	5.10660E-03	0.00000E+00	0.00000E+00
33	8.96029E-01	1.12317E+00	8.50373E-01	5.16827E-03	0.00000E+00	0.00000E+00
34	8.15823E-01	1.13783E+00	8.49293E-01	5.11931E-03	0.00000E+00	0.00000E+00
35	7.67288E-01	1.15067E+00	8.46808E-01	5.54926E-03	0.00000E+00	0.00000E+00
36	8.30848E-01	1.16350E+00	8.46339E-01	5.40399E-03	0.00000E+00	0.00000E+00
37	8.23007E-01	1.17717E+00	8.45672E-01	5.28950E-03	0.00000E+00	0.00000E+00
38	8.26258E-01	1.19000E+00	8.45133E-01	5.16868E-03	0.00000E+00	0.00000E+00
39	8.42836E-01	1.20283E+00	8.45071E-01	5.02743E-03	0.00000E+00	0.00000E+00
40	8.29217E-01	1.21567E+00	8.44654E-01	4.91109E-03	0.00000E+00	0.00000E+00
41	8.12012E-01	1.22933E+00	8.43817E-01	4.85618E-03	0.00000E+00	0.00000E+00
42	7.91772E-01	1.24217E+00	8.42516E-01	4.90879E-03	0.00000E+00	0.00000E+00
43	7.68831E-01	1.25500E+00	8.40718E-01	5.11378E-03	0.00000E+00	0.00000E+00
44	8.31359E-01	1.26867E+00	8.40496E-01	4.99551E-03	0.00000E+00	0.00000E+00
45	8.77040E-01	1.28150E+00	8.41345E-01	4.95143E-03	0.00000E+00	0.00000E+00
46	8.86491E-01	1.29433E+00	8.42371E-01	4.94520E-03	0.00000E+00	0.00000E+00
47	8.58182E-01	1.30717E+00	8.42723E-01	4.84681E-03	0.00000E+00	0.00000E+00
48	8.53866E-01	1.32000E+00	8.42965E-01	4.74646E-03	0.00000E+00	0.00000E+00
49	8.26025E-01	1.33367E+00	8.42605E-01	4.65834E-03	0.00000E+00	0.00000E+00
50	8.31626E-01	1.34650E+00	8.42376E-01	4.56599E-03	0.00000E+00	0.00000E+00
51	8.30702E-01	1.35933E+00	8.42138E-01	4.47818E-03	0.00000E+00	0.00000E+00
52	8.43633E-01	1.37117E+00	8.42168E-01	4.38780E-03	0.00000E+00	0.00000E+00
53	8.41469E-01	1.38583E+00	8.42154E-01	4.30093E-03	0.00000E+00	0.00000E+00
54	8.06610E-01	1.39867E+00	8.41470E-01	4.27244E-03	0.00000E+00	0.00000E+00
55	8.57839E-01	1.41150E+00	8.41779E-01	4.20242E-03	0.00000E+00	0.00000E+00
56	8.56385E-01	1.42433E+00	8.42050E-01	4.13272E-03	0.00000E+00	0.00000E+00
57	8.56692E-01	1.43800E+00	8.42316E-01	4.06561E-03	0.00000E+00	0.00000E+00
58	8.08883E-01	1.45183E+00	8.41719E-01	4.03674E-03	0.00000E+00	0.00000E+00
59	8.56866E-01	1.46467E+00	8.41985E-01	3.97419E-03	0.00000E+00	0.00000E+00
60	8.14106E-01	1.47833E+00	8.41504E-01	3.93454E-03	0.00000E+00	0.00000E+00
61	7.76144E-01	1.49117E+00	8.40396E-01	4.02281E-03	0.00000E+00	0.00000E+00
62	8.09639E-01	1.50483E+00	8.39884E-01	3.98828E-03	0.00000E+00	0.00000E+00
63	8.17719E-01	1.51950E+00	8.39520E-01	3.93915E-03	0.00000E+00	0.00000E+00
64	8.20194E-01	1.53333E+00	8.39208E-01	3.88761E-03	0.00000E+00	0.00000E+00
65	8.51247E-01	1.54700E+00	8.39400E-01	3.83017E-03	0.00000E+00	0.00000E+00
66	8.74295E-01	1.56067E+00	8.39945E-01	3.80908E-03	0.00000E+00	0.00000E+00
67	8.51067E-01	1.57450E+00	8.40116E-01	3.75392E-03	0.00000E+00	0.00000E+00
68	8.13783E-01	1.58817E+00	8.39717E-01	3.71807E-03	0.00000E+00	0.00000E+00
69	8.42532E-01	1.60100E+00	8.39759E-01	3.66240E-03	0.00000E+00	0.00000E+00
70	8.28592E-01	1.61383E+00	8.39595E-01	3.61187E-03	0.00000E+00	0.00000E+00
71	8.03059E-01	1.62850E+00	8.39065E-01	3.59832E-03	0.00000E+00	0.00000E+00
72	8.25102E-01	1.64217E+00	8.38866E-01	3.55214E-03	0.00000E+00	0.00000E+00
73	8.28186E-01	1.65600E+00	8.38715E-01	3.50499E-03	0.00000E+00	0.00000E+00
74	8.50376E-01	1.66967E+00	8.38877E-01	3.45976E-03	0.00000E+00	0.00000E+00
75	8.36810E-01	1.68433E+00	8.38849E-01	3.41215E-03	0.00000E+00	0.00000E+00
76	8.55302E-01	1.69800E+00	8.39071E-01	3.37306E-03	0.00000E+00	0.00000E+00
77	8.44892E-01	1.71267E+00	8.39149E-01	3.32869E-03	0.00000E+00	0.00000E+00
78	9.18109E-01	1.72467E+00	8.40188E-01	3.44500E-03	0.00000E+00	0.00000E+00
79	8.45898E-01	1.73733E+00	8.40262E-01	3.40077E-03	0.00000E+00	0.00000E+00
80	8.66703E-01	1.75117E+00	8.40601E-01	3.37396E-03	0.00000E+00	0.00000E+00
81	9.18005E-01	1.76400E+00	8.41581E-01	3.47209E-03	0.00000E+00	0.00000E+00
82	8.75745E-01	1.77683E+00	8.42008E-01	3.45491E-03	0.00000E+00	0.00000E+00
83	7.87991E-01	1.79050E+00	8.41341E-01	3.47655E-03	0.00000E+00	0.00000E+00
84	8.46407E-01	1.80333E+00	8.41403E-01	3.43444E-03	0.00000E+00	0.00000E+00
85	8.41778E-01	1.81617E+00	8.41407E-01	3.39282E-03	0.00000E+00	0.00000E+00
86	8.30200E-01	1.82983E+00	8.41274E-01	3.35484E-03	0.00000E+00	0.00000E+00
87	8.08188E-01	1.84267E+00	8.40885E-01	3.33791E-03	0.00000E+00	0.00000E+00
88	8.08280E-01	1.85550E+00	8.40505E-01	3.32058E-03	0.00000E+00	0.00000E+00
89	8.60229E-01	1.86917E+00	8.40732E-01	3.29001E-03	0.00000E+00	0.00000E+00

90	8.58676E-01	1.88200E+00	8.40936E-01	3.25879E-03	0.00000E+00	0.00000E+00
91	8.94174E-01	1.89483E+00	8.41534E-01	3.27703E-03	0.00000E+00	0.00000E+00
92	8.29862E-01	1.90767E+00	8.41405E-01	3.24301E-03	0.00000E+00	0.00000E+00
93	8.82677E-01	1.92050E+00	8.41858E-01	3.23908E-03	0.00000E+00	0.00000E+00
94	8.51230E-01	1.93333E+00	8.41960E-01	3.20530E-03	0.00000E+00	0.00000E+00
95	8.93158E-01	1.94700E+00	8.42511E-01	3.21808E-03	0.00000E+00	0.00000E+00
96	7.90054E-01	1.96083E+00	8.41952E-01	3.23220E-03	0.00000E+00	0.00000E+00
97	8.91577E-01	1.97367E+00	8.42475E-01	3.24038E-03	0.00000E+00	0.00000E+00
98	7.91467E-01	1.98733E+00	8.41943E-01	3.25017E-03	0.00000E+00	0.00000E+00
99	8.29569E-01	2.00017E+00	8.41816E-01	3.21902E-03	0.00000E+00	0.00000E+00
100	8.59937E-01	2.01200E+00	8.42001E-01	3.19136E-03	0.00000E+00	0.00000E+00
101	8.23664E-01	2.02583E+00	8.41816E-01	3.16439E-03	0.00000E+00	0.00000E+00
102	8.40089E-01	2.03950E+00	8.41798E-01	3.13263E-03	0.00000E+00	0.00000E+00
103	7.54061E-01	2.05317E+00	8.40930E-01	3.22082E-03	0.00000E+00	0.00000E+00
104	7.79450E-01	2.06600E+00	8.40327E-01	3.24555E-03	0.00000E+00	0.00000E+00
105	8.03918E-01	2.07800E+00	8.39973E-01	3.23326E-03	0.00000E+00	0.00000E+00
106	8.19695E-01	2.08983E+00	8.39778E-01	3.20795E-03	0.00000E+00	0.00000E+00
107	8.05942E-01	2.10267E+00	8.39456E-01	3.19356E-03	0.00000E+00	0.00000E+00
108	8.62979E-01	2.11550E+00	8.39678E-01	3.17106E-03	0.00000E+00	0.00000E+00
109	8.85571E-01	2.12833E+00	8.40107E-01	3.17043E-03	0.00000E+00	0.00000E+00
110	8.46868E-01	2.14117E+00	8.40170E-01	3.14156E-03	0.00000E+00	0.00000E+00
111	8.43051E-01	2.15583E+00	8.40196E-01	3.11272E-03	0.00000E+00	0.00000E+00
112	8.60166E-01	2.16850E+00	8.40378E-01	3.08963E-03	0.00000E+00	0.00000E+00
113	8.19775E-01	2.18133E+00	8.40192E-01	3.06729E-03	0.00000E+00	0.00000E+00
114	8.00791E-01	2.19517E+00	8.39840E-01	3.06007E-03	0.00000E+00	0.00000E+00
115	8.07380E-01	2.20983E+00	8.39553E-01	3.04644E-03	0.00000E+00	0.00000E+00
116	8.06710E-01	2.22350E+00	8.39265E-01	3.03331E-03	0.00000E+00	0.00000E+00
117	9.00538E-01	2.23633E+00	8.39798E-01	3.05366E-03	0.00000E+00	0.00000E+00
118	7.96570E-01	2.25100E+00	8.39425E-01	3.05007E-03	0.00000E+00	0.00000E+00
119	8.44206E-01	2.26467E+00	8.39466E-01	3.02417E-03	0.00000E+00	0.00000E+00
120	7.89636E-01	2.27750E+00	8.39044E-01	3.02802E-03	0.00000E+00	0.00000E+00
121	8.44209E-01	2.29117E+00	8.39087E-01	3.00278E-03	0.00000E+00	0.00000E+00
122	8.46086E-01	2.30400E+00	8.39145E-01	2.97822E-03	0.00000E+00	0.00000E+00
123	8.76785E-01	2.31683E+00	8.39456E-01	2.96984E-03	0.00000E+00	0.00000E+00
124	8.09004E-01	2.33067E+00	8.39207E-01	2.95596E-03	0.00000E+00	0.00000E+00
125	8.32096E-01	2.34350E+00	8.39149E-01	2.93240E-03	0.00000E+00	0.00000E+00
126	8.05555E-01	2.35717E+00	8.38878E-01	2.92124E-03	0.00000E+00	0.00000E+00
127	8.38058E-01	2.37083E+00	8.38871E-01	2.89778E-03	0.00000E+00	0.00000E+00
128	8.21160E-01	2.38367E+00	8.38731E-01	2.87813E-03	0.00000E+00	0.00000E+00
129	8.34422E-01	2.39650E+00	8.38697E-01	2.85558E-03	0.00000E+00	0.00000E+00
130	8.47021E-01	2.41033E+00	8.38762E-01	2.83393E-03	0.00000E+00	0.00000E+00
131	7.95347E-01	2.42400E+00	8.38425E-01	2.83194E-03	0.00000E+00	0.00000E+00
132	8.65586E-01	2.43583E+00	8.38634E-01	2.81783E-03	0.00000E+00	0.00000E+00
133	8.32313E-01	2.45050E+00	8.38586E-01	2.79665E-03	0.00000E+00	0.00000E+00
134	8.32251E-01	2.46333E+00	8.38538E-01	2.77580E-03	0.00000E+00	0.00000E+00
135	8.43492E-01	2.47700E+00	8.38575E-01	2.75510E-03	0.00000E+00	0.00000E+00
136	8.67256E-01	2.48983E+00	8.38789E-01	2.74283E-03	0.00000E+00	0.00000E+00
137	8.18395E-01	2.50367E+00	8.38638E-01	2.72662E-03	0.00000E+00	0.00000E+00
138	8.72052E-01	2.51733E+00	8.38884E-01	2.71763E-03	0.00000E+00	0.00000E+00
139	8.77268E-01	2.53017E+00	8.39164E-01	2.71223E-03	0.00000E+00	0.00000E+00
140	8.21243E-01	2.54300E+00	8.39034E-01	2.69563E-03	0.00000E+00	0.00000E+00
141	8.24518E-01	2.55667E+00	8.38930E-01	2.67821E-03	0.00000E+00	0.00000E+00
142	8.42363E-01	2.57050E+00	8.38954E-01	2.65912E-03	0.00000E+00	0.00000E+00
143	7.97553E-01	2.58333E+00	8.38661E-01	2.65647E-03	0.00000E+00	0.00000E+00
144	8.76677E-01	2.59617E+00	8.38929E-01	2.65125E-03	0.00000E+00	0.00000E+00
145	8.32020E-01	2.60883E+00	8.38880E-01	2.63309E-03	0.00000E+00	0.00000E+00
146	8.17946E-01	2.62267E+00	8.38735E-01	2.61878E-03	0.00000E+00	0.00000E+00
147	8.19262E-01	2.63633E+00	8.38601E-01	2.60412E-03	0.00000E+00	0.00000E+00
148	8.22026E-01	2.64833E+00	8.38487E-01	2.58871E-03	0.00000E+00	0.00000E+00
149	8.37377E-01	2.66200E+00	8.38479E-01	2.57105E-03	0.00000E+00	0.00000E+00
150	8.46566E-01	2.67483E+00	8.38534E-01	2.55421E-03	0.00000E+00	0.00000E+00
151	7.74147E-01	2.68850E+00	8.38102E-01	2.57354E-03	0.00000E+00	0.00000E+00
152	9.01631E-01	2.70233E+00	8.38526E-01	2.59118E-03	0.00000E+00	0.00000E+00
153	8.60081E-01	2.71417E+00	8.38668E-01	2.57791E-03	0.00000E+00	0.00000E+00
154	8.95309E-01	2.72783E+00	8.39041E-01	2.58787E-03	0.00000E+00	0.00000E+00
155	8.64145E-01	2.73983E+00	8.39205E-01	2.57613E-03	0.00000E+00	0.00000E+00
156	8.24519E-01	2.75350E+00	8.39110E-01	2.56112E-03	0.00000E+00	0.00000E+00
157	8.42927E-01	2.76550E+00	8.39134E-01	2.54466E-03	0.00000E+00	0.00000E+00
158	8.07941E-01	2.77833E+00	8.38934E-01	2.53619E-03	0.00000E+00	0.00000E+00
159	8.91356E-01	2.79100E+00	8.39268E-01	2.54201E-03	0.00000E+00	0.00000E+00
160	8.78411E-01	2.80383E+00	8.39516E-01	2.53799E-03	0.00000E+00	0.00000E+00
161	8.64680E-01	2.81667E+00	8.39674E-01	2.52694E-03	0.00000E+00	0.00000E+00
162	8.41269E-01	2.82950E+00	8.39684E-01	2.51112E-03	0.00000E+00	0.00000E+00
163	8.53462E-01	2.84233E+00	8.39770E-01	2.49694E-03	0.00000E+00	0.00000E+00
164	8.29559E-01	2.85517E+00	8.39707E-01	2.48228E-03	0.00000E+00	0.00000E+00
165	8.19254E-01	2.86983E+00	8.39581E-01	2.47019E-03	0.00000E+00	0.00000E+00
166	8.46759E-01	2.88267E+00	8.39625E-01	2.45547E-03	0.00000E+00	0.00000E+00
167	8.46334E-01	2.89633E+00	8.39666E-01	2.44088E-03	0.00000E+00	0.00000E+00
168	8.42378E-01	2.91000E+00	8.39682E-01	2.42619E-03	0.00000E+00	0.00000E+00
169	8.60966E-01	2.92283E+00	8.39809E-01	2.41498E-03	0.00000E+00	0.00000E+00
170	7.61102E-01	2.93667E+00	8.39341E-01	2.44586E-03	0.00000E+00	0.00000E+00
171	8.09061E-01	2.95133E+00	8.39162E-01	2.43793E-03	0.00000E+00	0.00000E+00
172	8.40616E-01	2.96417E+00	8.39170E-01	2.42356E-03	0.00000E+00	0.00000E+00
173	8.10715E-01	2.97783E+00	8.39004E-01	2.41509E-03	0.00000E+00	0.00000E+00
174	7.81922E-01	2.99250E+00	8.38672E-01	2.42383E-03	0.00000E+00	0.00000E+00
175	8.18771E-01	3.00533E+00	8.38557E-01	2.41253E-03	0.00000E+00	0.00000E+00
176	8.25260E-01	3.01817E+00	8.38481E-01	2.39984E-03	0.00000E+00	0.00000E+00
177	8.09004E-01	3.03083E+00	8.38312E-01	2.39202E-03	0.00000E+00	0.00000E+00
178	8.47468E-01	3.04367E+00	8.38364E-01	2.37896E-03	0.00000E+00	0.00000E+00
179	8.70548E-01	3.05750E+00	8.38546E-01	2.37246E-03	0.00000E+00	0.00000E+00
180	8.77468E-01	3.07217E+00	8.38765E-01	2.36921E-03	0.00000E+00	0.00000E+00
181	7.97178E-01	3.08583E+00	8.38532E-01	2.36736E-03	0.00000E+00	0.00000E+00
182	8.25331E-01	3.09950E+00	8.38459E-01	2.35532E-03	0.00000E+00	0.00000E+00
183	8.62611E-01	3.11333E+00	8.38592E-01	2.34607E-03	0.00000E+00	0.00000E+00
184	8.46947E-01	3.12617E+00	8.38638E-01	2.33359E-03	0.00000E+00	0.00000E+00

185	8.81490E-01	3.13900E+00	8.38872E-01	2.33259E-03	0.00000E+00	0.00000E+00
186	8.06054E-01	3.15267E+00	8.38694E-01	2.32672E-03	0.00000E+00	0.00000E+00
187	8.31330E-01	3.16550E+00	8.38654E-01	2.31445E-03	0.00000E+00	0.00000E+00
188	8.50572E-01	3.17833E+00	8.38718E-01	2.30287E-03	0.00000E+00	0.00000E+00
189	8.47532E-01	3.19117E+00	8.38766E-01	2.29101E-03	0.00000E+00	0.00000E+00
190	8.18631E-01	3.20583E+00	8.38658E-01	2.28130E-03	0.00000E+00	0.00000E+00
191	8.44059E-01	3.21767E+00	8.38687E-01	2.26938E-03	0.00000E+00	0.00000E+00
192	9.00406E-01	3.23133E+00	8.39012E-01	2.28066E-03	0.00000E+00	0.00000E+00
193	8.55718E-01	3.24417E+00	8.39099E-01	2.27037E-03	0.00000E+00	0.00000E+00
194	8.18828E-01	3.25800E+00	8.38994E-01	2.26098E-03	0.00000E+00	0.00000E+00
195	8.39110E-01	3.27083E+00	8.38994E-01	2.24923E-03	0.00000E+00	0.00000E+00
196	8.78157E-01	3.28267E+00	8.39196E-01	2.24670E-03	0.00000E+00	0.00000E+00
197	8.45548E-01	3.29550E+00	8.39229E-01	2.23538E-03	0.00000E+00	0.00000E+00
198	8.57079E-01	3.30833E+00	8.39320E-01	2.22581E-03	0.00000E+00	0.00000E+00
199	8.34812E-01	3.32117E+00	8.39297E-01	2.21460E-03	0.00000E+00	0.00000E+00
200	8.44911E-01	3.33400E+00	8.39325E-01	2.20357E-03	0.00000E+00	0.00000E+00
201	8.40696E-01	3.34667E+00	8.39332E-01	2.19248E-03	0.00000E+00	0.00000E+00
202	8.72283E-01	3.35950E+00	8.39497E-01	2.18771E-03	0.00000E+00	0.00000E+00
203	8.29380E-01	3.37233E+00	8.39447E-01	2.17738E-03	0.00000E+00	0.00000E+00

KENO MESSAGE NUMBER K5-123 EXECUTION TERMINATED DUE TO COMPLETION OF THE SPECIFIED NUMBER OF GENERATIONS.

TRIGA - PREF. FLOOD CANISTER

LIFETIME = 5.96130E-05 + OR - 3.37432E-07 GENERATION TIME = 2.84400E-05 + OR - 1.23388E-07
NU BAR = 2.42081E+00 + OR - 1.76618E-05 AVERAGE FISSION GROUP = 2.23764E+01 + OR - 1.22941E-02
ENERGY(EV) OF THE AVERAGE LETHARGY CAUSING FISSION = 1.31694E-01 + OR - 1.11900E-03

NO. OF INITIAL GENERATIONS SKIPPED	AVERAGE K-EFFECTIVE	DEVIATION	67 PER CENT CONFIDENCE INTERVAL	95 PER CENT CONFIDENCE INTERVAL	99 PER CENT CONFIDENCE INTERVAL	NUMBER OF HISTORIES
3	0.83944	+ OR - 0.00219	0.83725 TO 0.84163	0.83507 TO 0.84382	0.83288 TO 0.84601	100000
4	0.83924	+ OR - 0.00219	0.83705 TO 0.84143	0.83486 TO 0.84362	0.83267 TO 0.84581	99500
5	0.83905	+ OR - 0.00219	0.83685 TO 0.84124	0.83466 TO 0.84343	0.83247 TO 0.84562	99000
6	0.83898	+ OR - 0.00220	0.83678 TO 0.84118	0.83457 TO 0.84338	0.83237 TO 0.84559	98500
7	0.83885	+ OR - 0.00221	0.83664 TO 0.84106	0.83443 TO 0.84327	0.83222 TO 0.84548	98000
8	0.83878	+ OR - 0.00222	0.83656 TO 0.84100	0.83434 TO 0.84322	0.83212 TO 0.84544	97500
9	0.83869	+ OR - 0.00223	0.83646 TO 0.84092	0.83423 TO 0.84315	0.83200 TO 0.84538	97000
10	0.83883	+ OR - 0.00224	0.83660 TO 0.84107	0.83436 TO 0.84330	0.83212 TO 0.84554	96500
11	0.83882	+ OR - 0.00225	0.83657 TO 0.84107	0.83432 TO 0.84332	0.83208 TO 0.84556	96000
12	0.83892	+ OR - 0.00226	0.83666 TO 0.84118	0.83441 TO 0.84344	0.83215 TO 0.84570	95500
17	0.83893	+ OR - 0.00228	0.83665 TO 0.84121	0.83437 TO 0.84349	0.83209 TO 0.84577	93000
22	0.83887	+ OR - 0.00234	0.83653 TO 0.84121	0.83419 TO 0.84355	0.83185 TO 0.84589	90500
27	0.83872	+ OR - 0.00237	0.83635 TO 0.84109	0.83399 TO 0.84346	0.83162 TO 0.84582	88000
32	0.83780	+ OR - 0.00238	0.83542 TO 0.84018	0.83304 TO 0.84256	0.83065 TO 0.84494	85500
37	0.83813	+ OR - 0.00238	0.83575 TO 0.84052	0.83337 TO 0.84290	0.83098 TO 0.84529	83000
42	0.83868	+ OR - 0.00243	0.83625 TO 0.84112	0.83382 TO 0.84355	0.83138 TO 0.84598	80500
47	0.83850	+ OR - 0.00244	0.83607 TO 0.84094	0.83363 TO 0.84337	0.83119 TO 0.84581	78000
52	0.83855	+ OR - 0.00251	0.83603 TO 0.84106	0.83352 TO 0.84357	0.83101 TO 0.84608	75500
57	0.83837	+ OR - 0.00258	0.83579 TO 0.84095	0.83321 TO 0.84352	0.83063 TO 0.84610	73000
62	0.83926	+ OR - 0.00261	0.83665 TO 0.84187	0.83404 TO 0.84448	0.83144 TO 0.84708	70500
67	0.83913	+ OR - 0.00268	0.83645 TO 0.84181	0.83377 TO 0.84449	0.83109 TO 0.84717	68000
72	0.83976	+ OR - 0.00276	0.83700 TO 0.84252	0.83424 TO 0.84527	0.83148 TO 0.84803	65500
77	0.83962	+ OR - 0.00286	0.83676 TO 0.84249	0.83390 TO 0.84535	0.83104 TO 0.84821	63000
82	0.83775	+ OR - 0.00281	0.83495 TO 0.84056	0.83214 TO 0.84336	0.82934 TO 0.84617	60500
87	0.83839	+ OR - 0.00288	0.83551 TO 0.84127	0.83263 TO 0.84416	0.82975 TO 0.84704	58000
92	0.83786	+ OR - 0.00294	0.83492 TO 0.84080	0.83197 TO 0.84374	0.82903 TO 0.84669	55500
97	0.83673	+ OR - 0.00292	0.83381 TO 0.83966	0.83088 TO 0.84258	0.82796 TO 0.84551	53000
102	0.83712	+ OR - 0.00302	0.83409 TO 0.84014	0.83107 TO 0.84317	0.82805 TO 0.84619	50500
107	0.83944	+ OR - 0.00295	0.83649 TO 0.84238	0.83354 TO 0.84533	0.83059 TO 0.84828	48000
112	0.83832	+ OR - 0.00304	0.83528 TO 0.84137	0.83223 TO 0.84441	0.82919 TO 0.84746	45500
117	0.83898	+ OR - 0.00306	0.83592 TO 0.84203	0.83286 TO 0.84509	0.82981 TO 0.84815	43000
122	0.83989	+ OR - 0.00314	0.83675 TO 0.84303	0.83361 TO 0.84617	0.83047 TO 0.84931	40500
127	0.84039	+ OR - 0.00325	0.83714 TO 0.84365	0.83389 TO 0.84690	0.83063 TO 0.85015	38000
132	0.84093	+ OR - 0.00339	0.83754 TO 0.84433	0.83415 TO 0.84772	0.83076 TO 0.85111	35500
137	0.84110	+ OR - 0.00361	0.83749 TO 0.84471	0.83389 TO 0.84831	0.83028 TO 0.85192	33000
142	0.84058	+ OR - 0.00380	0.83678 TO 0.84438	0.83297 TO 0.84818	0.82917 TO 0.85198	30500
147	0.84164	+ OR - 0.00397	0.83766 TO 0.84561	0.83369 TO 0.84958	0.82972 TO 0.85356	28000
152	0.84216	+ OR - 0.00396	0.83819 TO 0.84612	0.83423 TO 0.85008	0.83027 TO 0.85404	25500
157	0.84050	+ OR - 0.00417	0.83633 TO 0.84467	0.83216 TO 0.84883	0.82800 TO 0.85300	23000
162	0.83852	+ OR - 0.00429	0.83423 TO 0.84281	0.82995 TO 0.84709	0.82566 TO 0.85138	20500
167	0.83844	+ OR - 0.00482	0.83362 TO 0.84327	0.82879 TO 0.84809	0.82397 TO 0.85291	18000
172	0.84096	+ OR - 0.00484	0.83613 TO 0.84580	0.83129 TO 0.85063	0.82645 TO 0.85547	15500
177	0.84708	+ OR - 0.00474	0.84234 TO 0.85182	0.83760 TO 0.85657	0.83286 TO 0.86131	13000
182	0.84791	+ OR - 0.00492	0.84299 TO 0.85283	0.83807 TO 0.85775	0.83315 TO 0.86267	10500
187	0.84861	+ OR - 0.00532	0.84329 TO 0.85393	0.83797 TO 0.85924	0.83266 TO 0.86456	8000
192	0.84696	+ OR - 0.00535	0.84161 TO 0.85231	0.83626 TO 0.85766	0.83091 TO 0.86301	5500
197	0.84653	+ OR - 0.00644	0.84009 TO 0.85296	0.83366 TO 0.85940	0.82722 TO 0.86583	3000

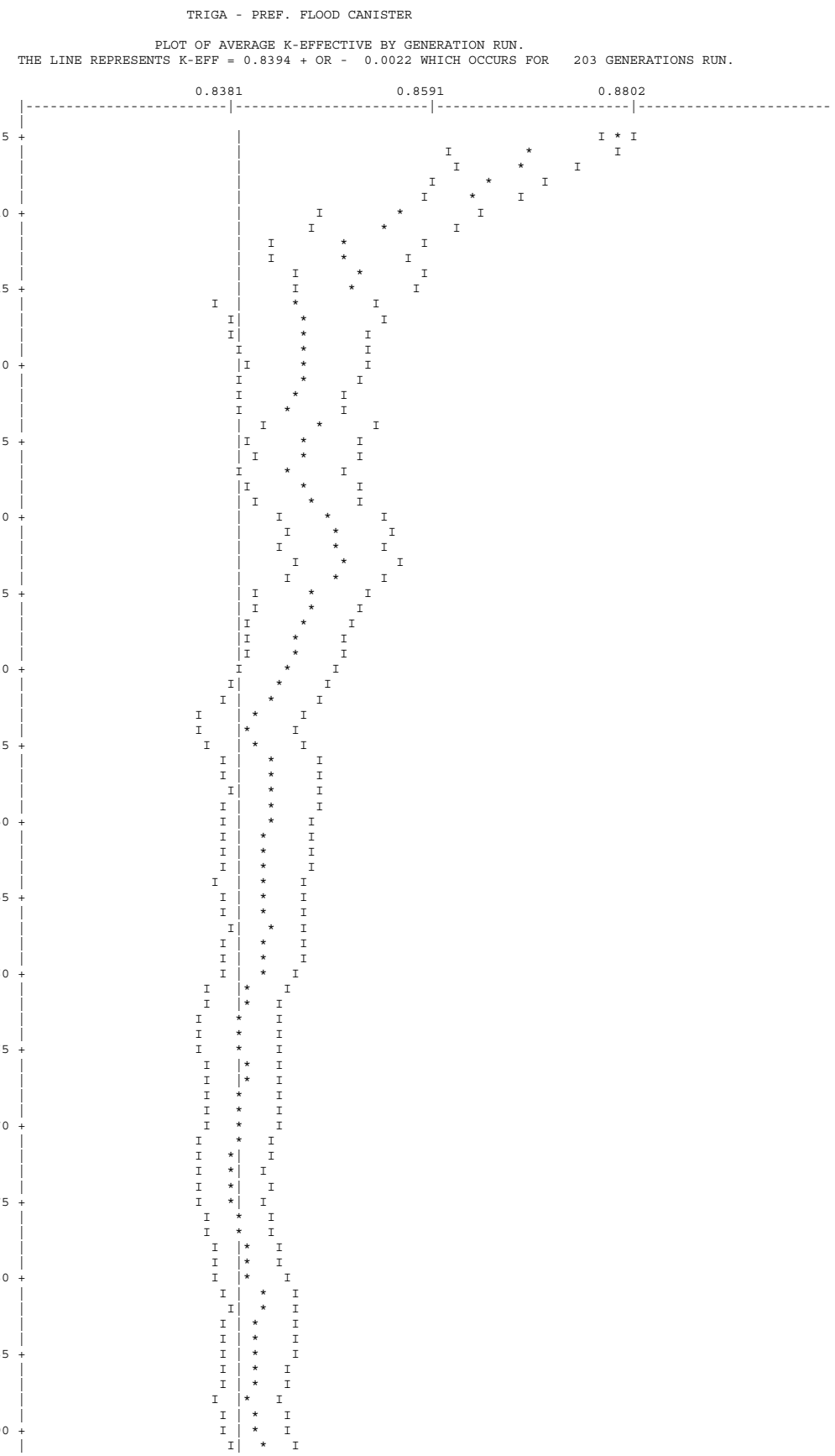
TRIGA - PREF. FLOOD CANISTER
PLOT OF AVERAGE K-EFFECTIVE BY GENERATION RUN.
THE LINE REPRESENTS K-EFF = 0.8394 + OR - 0.0022 WHICH OCCURS FOR 203 GENERATIONS RUN.
0.8381
0.8591
0.8802
5
10
15
20
25
30
35
40
45
50
55
60
65
70
75
80
85
90

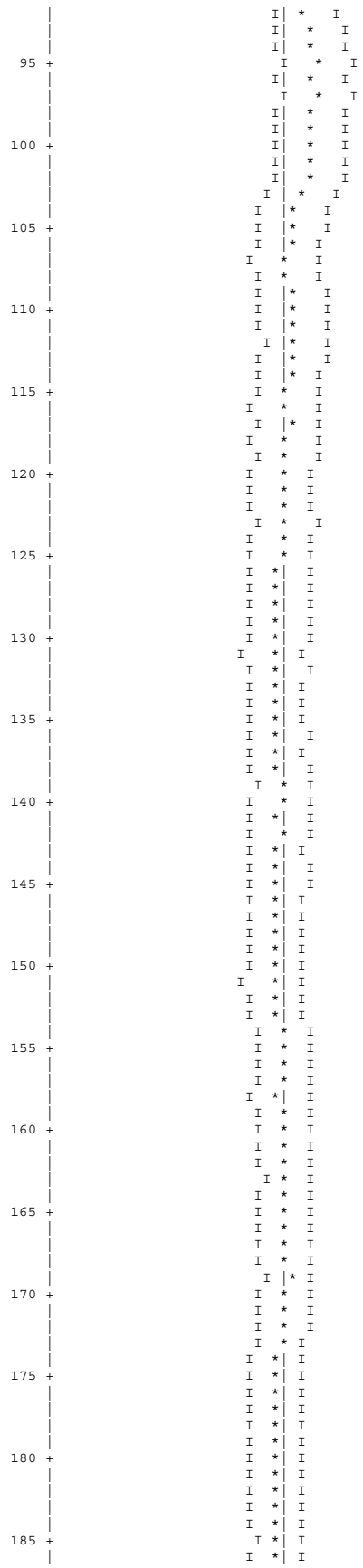

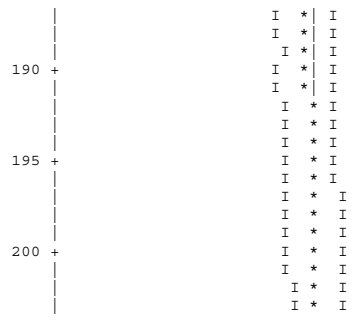
190
195
200

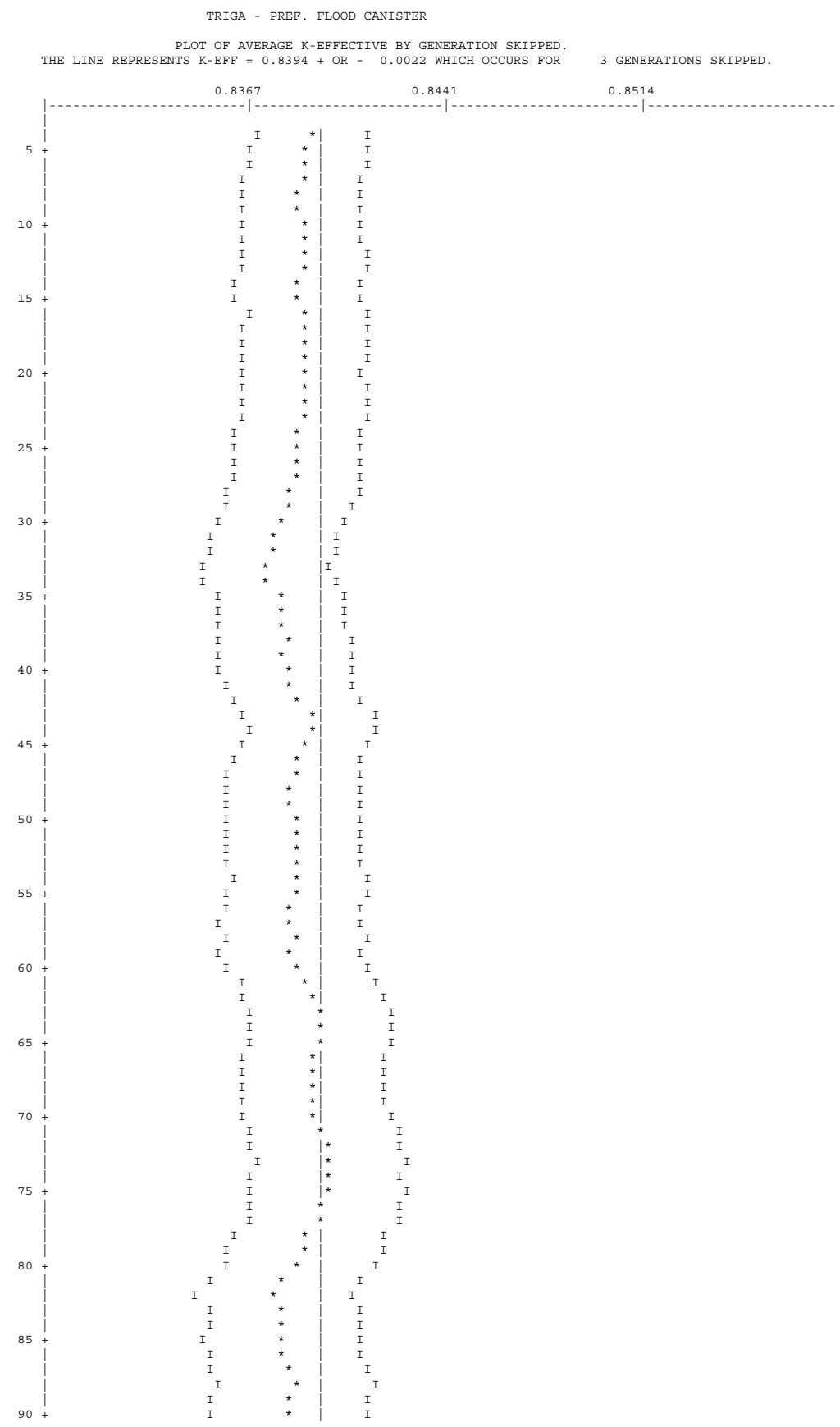
TRIGA - PREF. FLOOD CANISTER
PLOT OF AVERAGE K-EFFECTIVE BY GENERATION SKIPPED.
THE LINE REPRESENTS K-EFF = 0.8394 + OR - 0.0022 WHICH OCCURS FOR 3 GENERATIONS SKIPPED.
0.8367
0.8441
0.8514

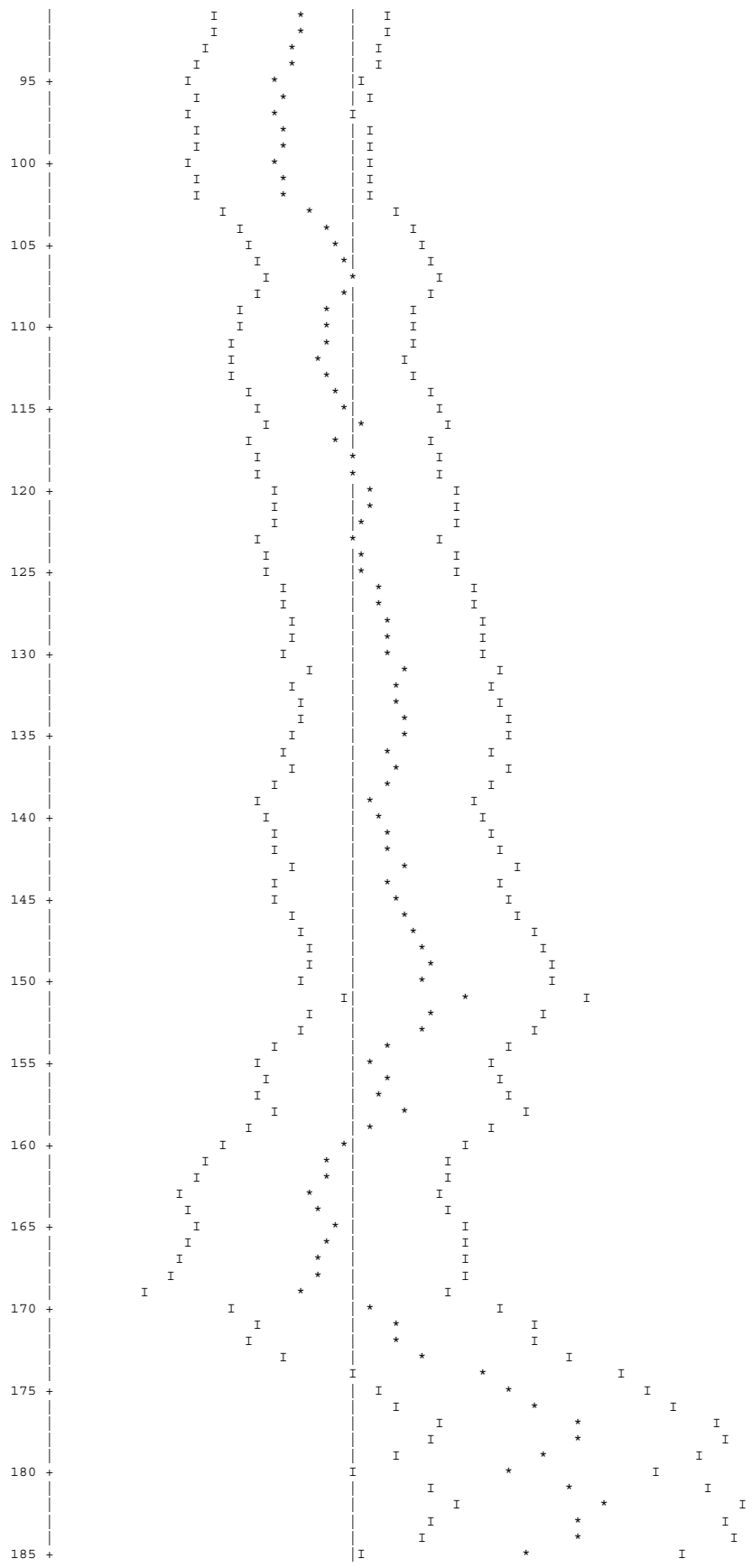
95
100
105
110
115
120
125
130
135
140
145
150
155
160
165
170
175
180
185

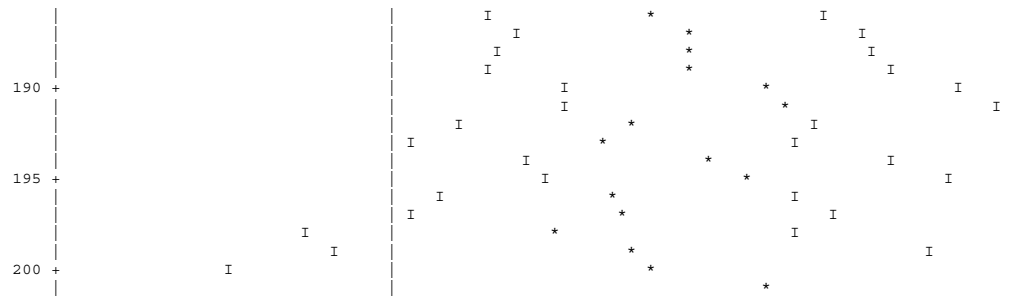

TRIGA - PREF. FLOOD CANISTER

SKIPPING 3 GENERATIONS

GROUP	FISSION FRACTION	UNIT	REGION	FISSIONS	PERCENT DEVIATION	ABSORPTIONS	PERCENT DEVIATION	LEAKAGE	PERCENT DEVIATION
1	0.0003			2.73895E-04	4.0673	1.33450E-03	2.7746	0.00000E+00	0.0000
2	0.0014			1.19806E-03	1.2584	3.36609E-03	0.8709	0.00000E+00	0.0000
3	0.0020			1.68688E-03	1.1356	1.74259E-03	0.8807	0.00000E+00	0.0000
4	0.0012			1.03640E-03	1.3855	9.49928E-04	0.9596	0.00000E+00	0.0000
5	0.0020			1.67448E-03	0.9764	2.20159E-03	0.7697	0.00000E+00	0.0000
6	0.0032			2.70608E-03	0.8466	8.32387E-03	0.6833	0.00000E+00	0.0000
7	0.0043			3.59833E-03	0.7624	1.82469E-02	0.6440	0.00000E+00	0.0000
8	0.0045			3.73819E-03	0.6936	1.56090E-02	0.6187	0.00000E+00	0.0000
9	0.0060			5.06579E-03	0.6812	1.68395E-02	0.5936	0.00000E+00	0.0000
10	0.0130			1.09527E-02	0.7204	4.19924E-02	0.6180	0.00000E+00	0.0000
11	0.0272			2.28163E-02	0.7072	5.68060E-02	0.5808	0.00000E+00	0.0000
12	0.0348			2.92515E-02	0.6059	4.76650E-02	0.5639	0.00000E+00	0.0000
13	0.0312			2.61532E-02	0.5835	5.60739E-02	0.5881	0.00000E+00	0.0000
14	0.0247			2.07663E-02	0.6049	6.75119E-02	0.5850	0.00000E+00	0.0000
15	0.0046			3.89927E-03	0.8558	3.23231E-02	0.9958	0.00000E+00	0.0000
16	0.0031			2.58234E-03	1.0355	1.77169E-02	1.1768	0.00000E+00	0.0000
17	0.0047			3.93622E-03	1.4643	9.80442E-03	1.4171	0.00000E+00	0.0000
18	0.0061			5.16029E-03	1.3830	9.06051E-03	1.2102	0.00000E+00	0.0000
19	0.0072			6.04149E-03	1.1357	1.45015E-02	1.2141	0.00000E+00	0.0000
20	0.0286			2.40046E-02	0.7267	4.57621E-02	0.8699	0.00000E+00	0.0000
21	0.0149			1.24996E-02	1.1105	1.65394E-02	1.2351	0.00000E+00	0.0000
22	0.0333			2.79547E-02	0.7799	3.18266E-02	0.9733	0.00000E+00	0.0000
23	0.0999			8.38267E-02	0.4921	8.59767E-02	0.5467	0.00000E+00	0.0000
24	0.1837			1.54208E-01	0.4465	1.30478E-01	0.4240	0.00000E+00	0.0000
25	0.1591			1.33568E-01	0.4544	1.01666E-01	0.4660	0.00000E+00	0.0000
26	0.2107			1.76904E-01	0.4336	1.21586E-01	0.4318	0.00000E+00	0.0000
27	0.0881			7.39396E-02	0.6454	4.53166E-02	0.6511	0.00000E+00	0.0000
SYSTEM TOTAL =				8.39443E-01	0.2607	1.00122E+00	0.0876	0.00000E+00	0.0000

ELAPSED TIME 3.37233 MINUTES

RANDOM NUMBER= 1A4E60BC74A8

```
TRIGA - PREF. FLOOD CANISTER

                              FREQUENCY FOR GENERATIONS    4 TO  203
0.7524 TO 0.7703     ****
0.7703 TO 0.7882     ******
0.7882 TO 0.8061     ***************
0.8061 TO 0.8240     **********************************
0.8240 TO 0.8419     ****************************************
0.8419 TO 0.8598     ************************************************************
0.8598 TO 0.8777     *************************
0.8777 TO 0.8956     *************
0.8956 TO 0.9134     ******
0.9134 TO 0.9313     **

                              FREQUENCY FOR GENERATIONS   54 TO  203
0.7524 TO 0.7703     **
0.7703 TO 0.7882     *****
0.7882 TO 0.8061     *************
0.8061 TO 0.8240     ****************************
0.8240 TO 0.8419     ***************************
0.8419 TO 0.8598     ************************************
0.8598 TO 0.8777     **********************
0.8777 TO 0.8956     **********
0.8956 TO 0.9134     ***
0.9134 TO 0.9313     **

                              FREQUENCY FOR GENERATIONS  104 TO  203
0.7524 TO 0.7703     *
0.7703 TO 0.7882     ***
0.7882 TO 0.8061     **********
0.8061 TO 0.8240     ******************
0.8240 TO 0.8419     ******************
0.8419 TO 0.8598     ************************
0.8598 TO 0.8777     ****************
0.8777 TO 0.8956     ******
0.8956 TO 0.9134     ***
0.9134 TO 0.9313

                              FREQUENCY FOR GENERATIONS  154 TO  203
0.7524 TO 0.7703     *
0.7703 TO 0.7882     *
0.7882 TO 0.8061     **
0.8061 TO 0.8240     ********
0.8240 TO 0.8419     ***********
0.8419 TO 0.8598     **************
0.8598 TO 0.8777     *******
0.8777 TO 0.8956     *****
0.8956 TO 0.9134     *
0.9134 TO 0.9313


*****************************************************************************************************************************************************
*

          CONGRATULATIONS!  YOU HAVE  SUCCESSFULLY TRAVERSED THE PERILOUS PATH THROUGH KENO V IN   3.37233 MINUTES
```

Figure 6.6.6-3 TRIGA Fuel Cluster Rods - Maximum Reactivity LEU Case

```
        PRIMARY MODULE ACCESS AND INPUT RECORD ( SCALE DRIVER - 95/03/29 - 09:06:37 )
MODULE CSAS25   WILL BE CALLED
  TRIGA - PREF. FLOOD CANISTER
  ' ACCIDENT CONDITION CASK ARRAY - CASKS TOUCHING
  ' DAMGED FUEL PAYLOAD - CANISTER FLOODED AT 0.9982 G/CM^3
  ' ROD GEOMETRY - DRY CASK MOST REACTIVE CONFIGURATION
  ' CASK CAVITY MODERATOR DENSITY 1E-20 GM^3
  ' CASK EXTERIOR MODERATOR DENSITY 1E-20 GM^3
  27GROUPNDF4  MULT
  'UNCANISTERED FUEL
  U-235   1 0.0 1.7323E-03 END
  U-238   1 0.0 6.8418E-03 END
  ZR      1 0.0 2.9039E-02 END
  H       1 0.0 4.9367E-02 END
  'CLAD INCOLOY
  NI      2 0.0 0.028516 END
  FE      2 0.0 0.033820 END
  CR      2 0.0 0.021151 END
  C       2 0.0 0.000399 END
  MN      2 0.0 0.001306 END
  S       2 0.0 0.000022 END
  SI      2 0.0 0.001703 END
  CU      2 0.0 0.000560 END
  AL      2 0.0 0.000266 END
  TI      2 0.0 0.000150 END
  'CASK INTERIOR MODERATOR MATERIAL
  H2O     3 1.0E-20 293.0 END
  'END FITTING FOR FUEL ELEMENT
  SS304   4 0.4968  293.0 END
  H2O     4 1.0E-20 293.0 END
  'BASKET, AND CASK
  SS304   5 1.0 293.0 END
  'AL FUEL HOLDER
  AL      6 1.0 293.0 END
  'LEAD SHIELD
  PB      7 1.0 293.0 END
  'NEUTRON SHIELD
  H2O     8 1.0E-20 293.0 END
  'CASK EXTERNAL MATERIAL
  H2O     9 1.0E-20 293.0 END
  'MIXTURE (FUEL) FOR CANISTER
  U-235   10 0.0 2.8119E-04 END
  U-238   10 0.0 1.1105E-03 END
  ZR      10 0.0 4.7136E-03 END
  H       10 0.0 8.0131E-03 END
  H2O    10 DEN=0.8362 1.0  300.0 END
  'CANISTER INTERNAL MODERATOR
  H2O    11 DEN=0.9982 1.0  293.0 END
  ' SECONDARY CASK CAVITY MATERIAL FOR MULTICELL CARD
  H2O     12 1.0E-20 293.0 END
  END COMP
  BUCKLEDCYL WHITE REFLECTED 0.0 57.15 END
  1 0.6731 2 0.7112 3 0.80518 6 0.9525 12 1.0748 END ZONE
  TRIGA - PREF. FLOOD CANISTER
  READ PARAM TME=170.0 GEN=403 NPG=1000 RUN=YES PLT=NO
  TBA=2.0 END PARAM
  READ GEOM
  UNIT 1
  COM='TRIGA FUEL (SMEARED)'
  CYLINDER 10 1 3.9623 60.959 0.001
  UNIT 5
  COM='3.38 in Width / 0.28 in Thickness DIVIDER CENTER STACK (SEALED)'
  CUBOID   5 1 2P4.2672 0.7112 0.0 +74.29 -8.255
  UNIT 6
  COM='3.38 in Width / 0.24 in Thickness DIVIDER OUTSIDE STACK (SEALED)'
  CUBOID   5 1 2P4.2672 0.6096 0.0 +74.29 -8.255
  UNIT 7
  COM='SEALED CANISTER'
  CYLINDER 11 1 3.9624 +60.96 0.0
  HOLE      1  0.0 0.0 0.0
  CYLINDER  5 1 4.1275 +63.50 -1.27
  CYLINDER  3 1 4.1275 +74.29 -8.255
  UNIT 10
  COM='TRIGA ELEMENTS IN Top of 3.38 in x 3.38 in OPENING (SEALED)'
  CUBOID    3 1 2P4.2672 2P4.2672 +74.29 -8.255
  HOLE 7    0.0 0.1397 0.0
  UNIT 11
  COM='TRIGA ELEMENTS IN Bottom of 3.38 in x 3.38 in OPENING (SEALED)'
  CUBOID    3 1 2P4.2672 2P4.2672 +74.29 -8.255
  HOLE 7    0.0 -0.1397 0.0
  UNIT 12
  COM='TRIGA ELEMENTS IN Bottom Right of 3.38 in x 3.38 in OPENING (SEALED)'
  CUBOID    3 1 2P4.2672 2P4.2672 +74.29 -8.255
  HOLE 7    +0.1397 -0.1397 0.0
  UNIT 13
  COM='TRIGA ELEMENTS IN Top Right of 3.38 in x 3.38 in OPENING (SEALED)'
  CUBOID    3 1 2P4.2672 2P4.2672 +74.29 -8.255
  HOLE 7    +0.1397 +0.1397 0.0
  UNIT 14
  COM='TRIGA ELEMENTS IN Bottom Left of 3.38 in x 3.38 in OPENING (SEALED)'
  CUBOID    3 1 2P4.2672 2P4.2672 +74.29 -8.255
```

```
HOLE 7    -0.1397 -0.1397 0.0
UNIT 15
COM='TRIGA ELEMENTS IN Top Left of 3.38 in x 3.38 in OPENING (SEALED)'
CUBOID    3 1 2P4.2672 2P4.2672 +74.29 -8.255
HOLE 7    -0.1397 +0.1397 0.0
UNIT 16
COM='TRIGA BASKET 3.38 in x 3.38 in CENTER OPENING (SEALED)'
CUBOID    3 1 2P4.2672 2P4.2672 +74.29 -8.255
UNIT 20
COM='CENTER COLUMN OF THREE OPENINGS w/ 0.28 in plate (SEALED)'
ARRAY 1  -4.2672 -13.5128 -8.255
REPLICATE 5 1 4R0.7112 2R0.0 1
UNIT 21
COM='LEFT OUTSIDE COLUMN OF TWO OPENINGS w/ 0.12 in plate (SEALED)'
ARRAY 2  -4.2672 -8.8392 -8.255
REPLICATE 5 1 0.0 0.3048 2R0.3048 2R0.0 1
UNIT 22
COM='RIGHT OUTSIDE COLUMN OF TWO OPENINGS w/ 0.12 in plate (SEALED)'
ARRAY 3  -4.2672 -8.8392 -8.255
REPLICATE 5 1 0.3048 0.0 2R0.3048 2R0.0 1
UNIT 30
COM='NAC-LWT TRIGA BASKET (SEALED)'
CYLINDER 3  1 17.1 +74.29 -8.255
HOLE 20 0.0 0.0 0.0
HOLE 21  -9.2457 0.0 0.0
HOLE 22  +9.2457 0.0 0.0
CYLINDER 5  1 18.9103 +74.93 -8.890
CYLINDER 7  1 33.4645 +74.93 -8.890
CYLINDER 5  1 36.5188 +74.93 -8.890
CYLINDER 8   1 49.2227 +74.93 -8.890
CYLINDER 5  1 49.8221 +74.93 -8.890
CUBOID   9   1 4P49.8221 +74.93 -8.890
'  ************************************
UNIT 41
COM='TRIGA FUEL ELEMENT'
CYLINDER 1 1 0.6731 2P28.575
CYLINDER 2 1 0.7112 2P28.575
CYLINDER 4 1 0.7112 43.48 -33.04
UNIT 45
COM='DIVIDER CENTER STACK'
CUBOID   5 1 2P4.2672 0.7112 0.0 43.48 -33.04
UNIT 46
COM='DIVIDER OUTSIDE STACK'
CUBOID   5 1 2P4.2672 0.6096 0.0 43.48 -33.04
UNIT 410
COM='TRIGA FUEL ELEMENTS IN AL TUBE, CENTERED'
CYLINDER  3 1 0.80518  43.48 -33.04
HOLE  41  0.0 0.0 0.0
CYLINDER  6 1 0.9525  43.48 -33.04
UNIT 411
COM='TRIGA FUEL ELEMENTS IN AL TUBE, RIGHT'
CYLINDER 3 1  0.80518  43.48 -33.04
HOLE  41   0.0938 0.0 0.0
CYLINDER 6 1 0.9525  43.48 -33.04
UNIT 412
COM='TRIGA FUEL ELEMENTS IN AL TUBE, LEFT'
CYLINDER 3 1  0.80518  43.48 -33.04
HOLE  41   -0.0938 0.0 0.0
CYLINDER 6 1 0.9525  43.48 -33.04
UNIT 413
COM='TRIGA FUEL ELEMENTS IN AL TUBE, TOP'
CYLINDER 3 1  0.80518  43.48 -33.04
HOLE  41  0.0  0.0938 0.0
CYLINDER 6 1 0.9525  43.48 -33.04
UNIT 414
COM='TRIGA FUEL ELEMENTS IN AL TUBE, BOTTOM'
CYLINDER 3 1  0.80518  43.48 -33.04
HOLE  41  0.0  -0.0938 0.0
CYLINDER 6 1 0.9525  43.48 -33.04
UNIT 415
COM='TRIGA FUEL ELEMENTS IN AL TUBE, TOP RIGHT'
CYLINDER 3 1  0.80518  43.48 -33.04
HOLE  41  0.0662 0.0662 0.0
CYLINDER 6 1 0.9525  43.48 -33.04
UNIT 416
COM='TRIGA FUEL ELEMENTS IN AL TUBE, TOP LEFT'
CYLINDER 3 1  0.80518  43.48 -33.04
HOLE  41  -0.0662 0.0662 0.0
CYLINDER 6 1 0.9525  43.48 -33.04
UNIT 417
COM='TRIGA FUEL ELEMENTS IN AL TUBE, BOTTOM RIGHT'
CYLINDER 3 1  0.80518  43.48 -33.04
HOLE  41  0.0662 -0.0662 0.0
CYLINDER 6 1 0.9525  43.48 -33.04
UNIT 418
COM='TRIGA FUEL ELEMENTS IN AL TUBE, BOTTOM LEFT'
CYLINDER 3 1  0.80518  43.48 -33.04
HOLE  41  -0.0662 -0.0662 0.0
CYLINDER 6 1 0.9525  43.48 -33.04
'  ************************************
UNIT 420
COM='AL TUBES WITH TRIGA FUEL, IN FUEL INSERT, CENTER OPENING'
CUBOID    3 1 4P4.1529 43.48 -33.04
HOLE           415  -2.8576 -2.8576      0
HOLE           413  -0.9525 -2.8576      0
```

```
HOLE            413    0.9525 -2.8576      0
HOLE            416    2.8576 -2.8576      0
HOLE            411   -2.8576 -0.9525      0
HOLE            415   -0.9525 -0.9525      0
HOLE            416    0.9525 -0.9525      0
HOLE            412    2.8576 -0.9525      0
HOLE            411   -2.8576  0.9525      0
HOLE            417   -0.9525  0.9525      0
HOLE            418    0.9525  0.9525      0
HOLE            412    2.8576  0.9525      0
HOLE            417   -2.8576  2.8576      0
HOLE            414   -0.9525  2.8576      0
HOLE            414    0.9525  2.8576      0
HOLE            418    2.8576  2.8576      0
CUBOID    3 1 4P4.1529 43.48 -33.04
' CHECK 4.1 CM ABOVE*********************
UNIT 421
COM='AL TUBES WITH TRIGA FUEL, IN FUEL INSERT, BOTTOM OPENING'
CUBOID    3 1 4P4.1529 43.48 -33.04
HOLE            415   -2.8576 -2.8576      0
HOLE            413   -0.9525 -2.8576      0
HOLE            413    0.9525 -2.8576      0
HOLE            416    2.8576 -2.8576      0
HOLE            411   -2.8576 -0.9525      0
HOLE            415   -0.9525 -0.9525      0
HOLE            416    0.9525 -0.9525      0
HOLE            412    2.8576 -0.9525      0
HOLE            411   -2.8576  0.9525      0
HOLE            417   -0.9525  0.9525      0
HOLE            418    0.9525  0.9525      0
HOLE            412    2.8576  0.9525      0
HOLE            417   -2.8576  2.8576      0
HOLE            414   -0.9525  2.8576      0
HOLE            414    0.9525  2.8576      0
HOLE            418    2.8576  2.8576      0
CUBOID     3 1 4P4.1529 43.48 -33.04
' CHECK 4.1 CM ABOVE*********************
UNIT 422
COM='AL TUBES WITH TRIGA FUEL, IN FUEL INSERT, TOP OPENING'
CUBOID     3 1 4P4.1529 43.48 -33.04
HOLE            415   -2.8576 -2.8576      0
HOLE            413   -0.9525 -2.8576      0
HOLE            413    0.9525 -2.8576      0
HOLE            416    2.8576 -2.8576      0
HOLE            411   -2.8576 -0.9525      0
HOLE            415   -0.9525 -0.9525      0
HOLE            416    0.9525 -0.9525      0
HOLE            412    2.8576 -0.9525      0
HOLE            411   -2.8576  0.9525      0
HOLE            417   -0.9525  0.9525      0
HOLE            418    0.9525  0.9525      0
HOLE            412    2.8576  0.9525      0
HOLE            417   -2.8576  2.8576      0
HOLE            414   -0.9525  2.8576      0
HOLE            414    0.9525  2.8576      0
HOLE            418    2.8576  2.8576      0
CUBOID     3 1 4P4.1529 43.48 -33.04
' CHECK 4.1 CM ABOVE*********************
UNIT 423
COM='AL TUBES WITH TRIGA FUEL, IN FUEL INSERT, BOTTOM LEFT OPENING'
CUBOID     3 1 4P4.1529 43.48 -33.04
HOLE            415   -2.8576 -2.8576      0
HOLE            413   -0.9525 -2.8576      0
HOLE            413    0.9525 -2.8576      0
HOLE            416    2.8576 -2.8576      0
HOLE            411   -2.8576 -0.9525      0
HOLE            415   -0.9525 -0.9525      0
HOLE            416    0.9525 -0.9525      0
HOLE            412    2.8576 -0.9525      0
HOLE            411   -2.8576  0.9525      0
HOLE            417   -0.9525  0.9525      0
HOLE            418    0.9525  0.9525      0
HOLE            412    2.8576  0.9525      0
HOLE            417   -2.8576  2.8576      0
HOLE            414   -0.9525  2.8576      0
HOLE            414    0.9525  2.8576      0
HOLE            418    2.8576  2.8576      0
CUBOID     3 1 4P4.1529 43.48 -33.04
' CHECK 4.1 CM ABOVE*********************
UNIT 424
COM='AL TUBES WITH TRIGA FUEL, IN FUEL INSERT, TOP LEFT OPENING'
CUBOID     3 1 4P4.1529 43.48 -33.04
HOLE            415   -2.8576 -2.8576      0
HOLE            413   -0.9525 -2.8576      0
HOLE            413    0.9525 -2.8576      0
HOLE            416    2.8576 -2.8576      0
HOLE            411   -2.8576 -0.9525      0
HOLE            415   -0.9525 -0.9525      0
HOLE            416    0.9525 -0.9525      0
HOLE            412    2.8576 -0.9525      0
HOLE            411   -2.8576  0.9525      0
HOLE            417   -0.9525  0.9525      0
HOLE            418    0.9525  0.9525      0
HOLE            412    2.8576  0.9525      0
HOLE            417   -2.8576  2.8576      0
```

```
HOLE            414  -0.9525  2.8576      0
HOLE            414   0.9525  2.8576      0
HOLE            418   2.8576  2.8576      0
CUBOID     3 1 4P4.1529 43.48 -33.04
' CHECK 4.1 CM ABOVE*********************
UNIT 425
COM='AL TUBES WITH TRIGA FUEL, IN FUEL INSERT, BOTTOM RIGHT OPENING'
CUBOID     3 1 4P4.1529 43.48 -33.04
HOLE            415  -2.8576 -2.8576      0
HOLE            413  -0.9525 -2.8576      0
HOLE            413   0.9525 -2.8576      0
HOLE            416   2.8576 -2.8576      0
HOLE            411  -2.8576 -0.9525      0
HOLE            415  -0.9525 -0.9525      0
HOLE            416   0.9525 -0.9525      0
HOLE            412   2.8576 -0.9525      0
HOLE            411  -2.8576  0.9525      0
HOLE            417  -0.9525  0.9525      0
HOLE            418   0.9525  0.9525      0
HOLE            412   2.8576  0.9525      0
HOLE            417  -2.8576  2.8576      0
HOLE            414  -0.9525  2.8576      0
HOLE            414   0.9525  2.8576      0
HOLE            418   2.8576  2.8576      0
CUBOID     3 1 4P4.1529 43.48 -33.04
' CHECK 4.1 CM ABOVE*********************
UNIT 426
COM='AL TUBES WITH TRIGA FUEL, IN FUEL INSERT, TOP RIGHT OPENING'
CUBOID     3 1 4P4.1529 43.48 -33.04
HOLE            415  -2.8576 -2.8576      0
HOLE            413  -0.9525 -2.8576      0
HOLE            413   0.9525 -2.8576      0
HOLE            416   2.8576 -2.8576      0
HOLE            411  -2.8576 -0.9525      0
HOLE            415  -0.9525 -0.9525      0
HOLE            416   0.9525 -0.9525      0
HOLE            412   2.8576 -0.9525      0
HOLE            411  -2.8576  0.9525      0
HOLE            417  -0.9525  0.9525      0
HOLE            418   0.9525  0.9525      0
HOLE            412   2.8576  0.9525      0
HOLE            417  -2.8576  2.8576      0
HOLE            414  -0.9525  2.8576      0
HOLE            414   0.9525  2.8576      0
HOLE            418   2.8576  2.8576      0
CUBOID     3 1 4P4.1529 43.48 -33.04
'  ***********************************
UNIT 430
COM='FUEL INSERT IN, CENTER OPENING'
CUBOID     3 1 4P4.2672 43.48 -33.04
UNIT 431
COM='FUEL INSERT IN, BOTTOM OPENING'
CUBOID     3 1 4P4.2672 43.48 -33.04
HOLE 421   0.0 -0.1143 0.0
UNIT 432
COM='FUEL INSERT IN, TOP OPENING'
CUBOID     3 1 4P4.2672 43.48 -33.04
HOLE 422   0.0 0.1143 0.0
UNIT 433
COM='FUEL INSERT IN, BOTTOM LEFT OPENING'
CUBOID     3 1 4P4.2672 43.48 -33.04
HOLE 423   -0.1143 -0.1143 0.0
UNIT 434
COM='FUEL INSERT IN, TOP LEFT OPENING'
CUBOID     3 1 4P4.2672 43.48 -33.04
HOLE 424   -0.1143 0.1143 0.0
UNIT 435
COM='FUEL INSERT IN, BOTOM RIGHT OPENING'
CUBOID     3 1 4P4.2672 43.48 -33.04
HOLE 425   0.1143 -0.1143 0.0
UNIT 436
COM='FUEL INSERT IN, TOP RIGHT OPENING'
CUBOID     3 1 4P4.2672 43.48 -33.04
HOLE 426   0.1143 0.1143 0.0
'  ***********************************
UNIT 440
COM='CENTER COLUMN OF THREE OPENINGS'
ARRAY 41  -4.2672 -13.5128 -33.04
REPLICATE 5 1 4R0.7112 2R0.0 1
UNIT 441
COM='LEFT OUTSIDE COLUMN OF TWO OPENINGS'
ARRAY 42  -4.2672 -8.8392 -33.04
REPLICATE 5 1 0.0 0.3408 2R0.3408 2R0.0 1
UNIT 442
COM='RIGHT OUTSIDE COLUMN OF TWO OPENINGS'
ARRAY 43  -4.2672 -8.8392 -33.04
REPLICATE 5 1 0.3408 0.0 2R0.3408 2R0.0 1
UNIT 450
COM='96 TRIGA FUEL ELEMENTS IN EACH LWT BASKET'
CYLINDER  3 1 17.1500 43.485 -33.045
HOLE 440   0.0    0.0 0.0
HOLE 441  -9.2457 0.0 0.0
HOLE 442  +9.2457 0.0 0.0
CYLINDER 5  1 18.9103 43.485 -33.045
CYLINDER 7  1 33.4645 43.485 -33.045
```

```
CYLINDER 5  1 36.5188 43.485 -33.045
CYLINDER 8  1 49.2227 43.485 -33.045
CYLINDER 5  1 49.8221 43.485 -33.045
CUBOID   9   1 4P49.8221 43.485 -33.045
'  ************************************
UNIT 80
COM='SIMPLIFIED LID STRUCTURE NAC-LWT'
CYLINDER 5 1 36.5188 2P14.1351
CYLINDER 9 1 49.8221 2P14.1351
CUBOID   9   1 4P49.8221 2P14.1351
UNIT 81
COM='SIMPLIFIED CASK BOTTOM STRUCTURE NAC-LWT'
CYLINDER 7 1 26.3525 2P3.81
CYLINDER 5 1 36.6188 +13.97 -12.7
CYLINDER 9 1 49.8221 +13.97 -12.7
CUBOID   9   1 4P49.8221 13.97 -12.7
GLOBAL UNIT 82
COM='STACK OF 5 BASKETS IN CASK'
ARRAY  20  -49.8221 -49.8221 -221.3
END GEOM
READ ARRAY
ARA=1 NUX=1 NUY=5 NUZ=1 FILL 10 5 16 5 11 END FILL
ARA=2 NUX=1 NUY=3 NUZ=1 FILL 13 6 12 END FILL
ARA=3 NUX=1 NUY=3 NUZ=1 FILL 15 6 14 END FILL
ARA=41 NUX=1 NUY=5 NUZ=1 FILL 432 45 430 45 431 END FILL
ARA=42 NUX=1 NUY=3 NUZ=1 FILL 436 46 435 END FILL
ARA=43 NUX=1 NUY=3 NUZ=1 FILL 434 46 433 END FILL
ARA=20 NUX=1 NUY=1 NUZ=7 FILL 81 30 3R450 30 80 END FILL
END ARRAY
READ BOUNDS ALL=MIR END BOUNDS
READ START XSM=-17 XSP=17 YSM=-17 YSP=17 ZSM=-200 ZSP=200 END START
READ PLOT
TTL='X-Y PLOT OF CASK (CANISTER ELEVATION)'
SCR=YES PIC=MAT LPI=10
UAX=1.0 VDN=-1.0 NAX=800
XUL=-50.0 YUL=50.0 ZUL=149.352
XLR=50.0 YLR=-50.0 ZLR=149.352 END
TTL='X-Y PLOT OF BASKET (CANISTER ELEVATION)'
SCR=YES PIC=MAT LPI=10
UAX=1.0 VDN=-1.0 NAX=800
XUL=-17.2 YUL=17.2 ZUL=149.352
XLR=17.2 YLR=-17.2 ZLR=149.352 END
TTL='X-Y PLOT OF BASKET (CAVITY MID PLANE)'
SCR=YES PIC=MAT LPI=10
UAX=1.0 VDN=-1.0 NAX=800
XUL=-17.2 YUL=17.2 ZUL=0.0
XLR=17.2 YLR=-17.2 ZLR=0.0 END
TTL='X-Y PLOT OF CENTER OPENING (CANISTER ELEVATION)'
SCR=YES PIC=MAT LPI=10
UAX=1.0 VDN=-1.0 NAX=800
XUL=-7.0 YUL=7.0 ZUL=149.352
XLR=7.0 YLR=-7.0 ZLR=149.352 END
TTL='X-Y PLOT OF PERIPHERAL OPENING (CANISTER ELEVATION)'
SCR=YES PIC=MAT LPI=10
UAX=1.0 VDN=-1.0 NAX=800
XUL=-7.0 YUL=16.0 ZUL=149.352
XLR=7.0  YLR=4.0 ZLR=149.352 END
TTL='Y-Z PLOT OF BASKET (CENTER OF FUEL ELEMENTS,CANISTER ELEVATION)'
SCR=YES PIC=MAT LPI=10
VAX=1.0 WDN=-1.0 NAX=800
XUL=2.12 YUL=-14.0 ZUL=186.69
XLR=2.12 YLR=-4.5 ZLR=112.014 END
TTL='Y-Z PLOT OF BASKET (CASK)'
SCR=YES PIC=MAT LPI=10
VAX=1.0 WDN=-1.0 NAX=800
XUL=2.12 YUL=-51 ZUL=220.0
XLR=2.12 YLR=+51 ZLR=-220.0
END PLOT
END DATA


**** PROBLEM PARAMETERS ****

LIB 27GROUPNDF4  LIBRARY
MXX           12 MIXTURES
MSC           29 COMPOSITION SPECIFICATIONS
IZM            5 MATERIAL ZONES
GE  MULTIREGION  GEOMETRY
MORE           0 0/1 DO NOT READ/READ OPTIONAL PARAMETER DATA
MSLN           0 FUEL SOLUTIONS


**** PROBLEM COMPOSITION DESCRIPTION ****

SC  U-235        STANDARD COMPOSITION
MX             1 MIXTURE NO.
DEN   1.7323E-03 ATOMIC DENSITY
ROTH      1.0000 THEORETICAL DENSITY
NEL            1 NO. ELEMENTS
ICP            1 0/1 MIXTURE/COMPOUND
          92235      1.00 ATOM/MOLECULE
END

SC  U-238        STANDARD COMPOSITION
MX             1 MIXTURE NO.
```

```
    DEN   6.8418E-03 ATOMIC DENSITY
    ROTH      1.0000 THEORETICAL DENSITY
    NEL            1 NO. ELEMENTS
    ICP            1 0/1 MIXTURE/COMPOUND
              92238      1.00 ATOM/MOLECULE
    END

    SC  ZR           STANDARD COMPOSITION
    MX             1 MIXTURE NO.
    DEN   2.9039E-02 ATOMIC DENSITY
    ROTH      6.4900 THEORETICAL DENSITY
    NEL            1 NO. ELEMENTS
    ICP            1 0/1 MIXTURE/COMPOUND
             40000      1.00 ATOM/MOLECULE
    END

    SC  H            STANDARD COMPOSITION
    MX             1 MIXTURE NO.
    DEN   4.9367E-02 ATOMIC DENSITY
    ROTH      1.0000 THEORETICAL DENSITY
    NEL            1 NO. ELEMENTS
    ICP            1 0/1 MIXTURE/COMPOUND
              1001      1.00 ATOM/MOLECULE

'CLAD INCOLOY
    END

    SC  NI           STANDARD COMPOSITION
    MX             2 MIXTURE NO.
    DEN   2.8516E-02 ATOMIC DENSITY
    ROTH      8.9000 THEORETICAL DENSITY
    NEL            1 NO. ELEMENTS
    ICP            1 0/1 MIXTURE/COMPOUND
             28000      1.00 ATOM/MOLECULE
    END

    SC  FE           STANDARD COMPOSITION
    MX             2 MIXTURE NO.
    DEN   3.3820E-02 ATOMIC DENSITY
    ROTH      7.8600 THEORETICAL DENSITY
    NEL            1 NO. ELEMENTS
    ICP            1 0/1 MIXTURE/COMPOUND
             26000      1.00 ATOM/MOLECULE
    END

    SC  CR           STANDARD COMPOSITION
    MX             2 MIXTURE NO.
    DEN   2.1151E-02 ATOMIC DENSITY
    ROTH      7.2000 THEORETICAL DENSITY
    NEL            1 NO. ELEMENTS
    ICP            1 0/1 MIXTURE/COMPOUND
             24000      1.00 ATOM/MOLECULE
    END

    SC  C            STANDARD COMPOSITION
    MX             2 MIXTURE NO.
    DEN   3.9900E-04 ATOMIC DENSITY
    ROTH      2.1000 THEORETICAL DENSITY
    NEL            1 NO. ELEMENTS
    ICP            1 0/1 MIXTURE/COMPOUND
              6012      1.00 ATOM/MOLECULE
    END

    SC  MN           STANDARD COMPOSITION
    MX             2 MIXTURE NO.
    DEN   1.3060E-03 ATOMIC DENSITY
    ROTH      7.2000 THEORETICAL DENSITY
    NEL            1 NO. ELEMENTS
    ICP            1 0/1 MIXTURE/COMPOUND
             25055      1.00 ATOM/MOLECULE
    END

    SC  S            STANDARD COMPOSITION
    MX             2 MIXTURE NO.
    DEN   2.2000E-05 ATOMIC DENSITY
    ROTH      2.0700 THEORETICAL DENSITY
    NEL            1 NO. ELEMENTS
    ICP            1 0/1 MIXTURE/COMPOUND
             16000      1.00 ATOM/MOLECULE
    END

    SC  SI           STANDARD COMPOSITION
    MX             2 MIXTURE NO.
    DEN   1.7030E-03 ATOMIC DENSITY
    ROTH      2.3300 THEORETICAL DENSITY
    NEL            1 NO. ELEMENTS
    ICP            1 0/1 MIXTURE/COMPOUND
             14000      1.00 ATOM/MOLECULE
    END

    SC  CU           STANDARD COMPOSITION
    MX             2 MIXTURE NO.
    DEN   5.6000E-04 ATOMIC DENSITY
    ROTH      8.9200 THEORETICAL DENSITY
    NEL            1 NO. ELEMENTS
```

```
    ICP            1 0/1 MIXTURE/COMPOUND
              29000      1.00 ATOM/MOLECULE
    END

    SC  AL           STANDARD COMPOSITION
    MX             2 MIXTURE NO.
    DEN   2.6600E-04 ATOMIC DENSITY
    ROTH      2.7020 THEORETICAL DENSITY
    NEL            1 NO. ELEMENTS
    ICP            1 0/1 MIXTURE/COMPOUND
              13027      1.00 ATOM/MOLECULE
    END

    SC  TI           STANDARD COMPOSITION
    MX             2 MIXTURE NO.
    DEN   1.5000E-04 ATOMIC DENSITY
    ROTH      4.5000 THEORETICAL DENSITY
    NEL            1 NO. ELEMENTS
    ICP            1 0/1 MIXTURE/COMPOUND
              22000      1.00 ATOM/MOLECULE

'CASK INTERIOR MODERATOR MATERIAL
    END

    SC  H2O          STANDARD COMPOSITION
    MX             3 MIXTURE NO.
    VF        0.0000 VOLUME FRACTION
    ROTH      0.9982 THEORETICAL DENSITY
    NEL            2 NO. ELEMENTS
    ICP            1 0/1 MIXTURE/COMPOUND
    TEMP       293.0 DEG KELVIN
                1001      2.00 ATOMS/MOLECULE
                8016      1.00 ATOM/MOLECULE

'END FITTING FOR FUEL ELEMENT
    END

    SC  SS304        STANDARD COMPOSITION
    MX             4 MIXTURE NO.
    VF        0.4968 VOLUME FRACTION
    ROTH      7.9200 THEORETICAL DENSITY
    NEL            4 NO. ELEMENTS
    ICP            0 0/1 MIXTURE/COMPOUND
    TEMP       293.0 DEG KELVIN
               24304    19.000 WT%
               25055     2.000 WT%
               26304    69.500 WT%
               28304     9.500 WT%
    END

    SC  H2O          STANDARD COMPOSITION
    MX             4 MIXTURE NO.
    VF        0.0000 VOLUME FRACTION
    ROTH      0.9982 THEORETICAL DENSITY
    NEL            2 NO. ELEMENTS
    ICP            1 0/1 MIXTURE/COMPOUND
    TEMP       293.0 DEG KELVIN
                1001      2.00 ATOMS/MOLECULE
                8016      1.00 ATOM/MOLECULE

'BASKET, AND CASK
    END

    SC  SS304        STANDARD COMPOSITION
    MX             5 MIXTURE NO.
    VF        1.0000 VOLUME FRACTION
    ROTH      7.9200 THEORETICAL DENSITY
    NEL            4 NO. ELEMENTS
    ICP            0 0/1 MIXTURE/COMPOUND
    TEMP       293.0 DEG KELVIN
               24304    19.000 WT%
               25055     2.000 WT%
               26304    69.500 WT%
               28304     9.500 WT%

'AL FUEL HOLDER
    END

    SC  AL           STANDARD COMPOSITION
    MX             6 MIXTURE NO.
    VF        1.0000 VOLUME FRACTION
    ROTH      2.7020 THEORETICAL DENSITY
    NEL            1 NO. ELEMENTS
    ICP            1 0/1 MIXTURE/COMPOUND
    TEMP       293.0 DEG KELVIN
               13027      1.00 ATOM/MOLECULE

'LEAD SHIELD
    END

    SC  PB           STANDARD COMPOSITION
    MX             7 MIXTURE NO.
    VF        1.0000 VOLUME FRACTION
    ROTH     11.3440 THEORETICAL DENSITY
    NEL            1 NO. ELEMENTS
```

```
    ICP            1 0/1 MIXTURE/COMPOUND
    TEMP       293.0 DEG KELVIN
               82000      1.00 ATOM/MOLECULE

'NEUTRON SHIELD
    END

    SC  H2O          STANDARD COMPOSITION
    MX             8 MIXTURE NO.
    VF        0.0000 VOLUME FRACTION
    ROTH      0.9982 THEORETICAL DENSITY
    NEL            2 NO. ELEMENTS
    ICP            1 0/1 MIXTURE/COMPOUND
    TEMP       293.0 DEG KELVIN
                1001      2.00 ATOMS/MOLECULE
                8016      1.00 ATOM/MOLECULE

'CASK EXTERNAL MATERIAL
    END

    SC  H2O          STANDARD COMPOSITION
    MX             9 MIXTURE NO.
    VF        0.0000 VOLUME FRACTION
    ROTH      0.9982 THEORETICAL DENSITY
    NEL            2 NO. ELEMENTS
    ICP            1 0/1 MIXTURE/COMPOUND
    TEMP       293.0 DEG KELVIN
                1001      2.00 ATOMS/MOLECULE
                8016      1.00 ATOM/MOLECULE

'MIXTURE (FUEL) FOR CANISTER
    END

    SC  U-235        STANDARD COMPOSITION
    MX            10 MIXTURE NO.
    DEN   2.8119E-04 ATOMIC DENSITY
    ROTH      1.0000 THEORETICAL DENSITY
    NEL            1 NO. ELEMENTS
    ICP            1 0/1 MIXTURE/COMPOUND
               92235      1.00 ATOM/MOLECULE
    END

    SC  U-238        STANDARD COMPOSITION
    MX            10 MIXTURE NO.
    DEN   1.1105E-03 ATOMIC DENSITY
    ROTH      1.0000 THEORETICAL DENSITY
    NEL            1 NO. ELEMENTS
    ICP            1 0/1 MIXTURE/COMPOUND
               92238      1.00 ATOM/MOLECULE
    END

    SC  ZR           STANDARD COMPOSITION
    MX            10 MIXTURE NO.
    DEN   4.7136E-03 ATOMIC DENSITY
    ROTH      6.4900 THEORETICAL DENSITY
    NEL            1 NO. ELEMENTS
    ICP            1 0/1 MIXTURE/COMPOUND
               40000      1.00 ATOM/MOLECULE
    END

    SC  H            STANDARD COMPOSITION
    MX            10 MIXTURE NO.
    DEN   8.0131E-03 ATOMIC DENSITY
    ROTH      1.0000 THEORETICAL DENSITY
    NEL            1 NO. ELEMENTS
    ICP            1 0/1 MIXTURE/COMPOUND
                1001      1.00 ATOM/MOLECULE
    END

    SC  H2O          STANDARD COMPOSITION
    MX            10 MIXTURE NO.
    VF        1.0000 VOLUME FRACTION
    ROTH      0.8362 SPECIFIED DENSITY
    NEL            2 NO. ELEMENTS
    ICP            1 0/1 MIXTURE/COMPOUND
    TEMP       300.0 DEG KELVIN
                1001      2.00 ATOMS/MOLECULE
                8016      1.00 ATOM/MOLECULE

'CANISTER INTERNAL MODERATOR
    END

    SC  H2O          STANDARD COMPOSITION
    MX            11 MIXTURE NO.
    VF        1.0000 VOLUME FRACTION
    ROTH      0.9982 SPECIFIED DENSITY
    NEL            2 NO. ELEMENTS
    ICP            1 0/1 MIXTURE/COMPOUND
    TEMP       293.0 DEG KELVIN
                1001      2.00 ATOMS/MOLECULE
                8016      1.00 ATOM/MOLECULE

' SECONDARY CASK CAVITY MATERIAL FOR MULTICELL CARD
    END
```

```
SC  H2O          STANDARD COMPOSITION
MX            12 MIXTURE NO.
VF        0.0000 VOLUME FRACTION
ROTH      0.9982 THEORETICAL DENSITY
NEL            2 NO. ELEMENTS
ICP            1 0/1 MIXTURE/COMPOUND
TEMP       293.0 DEG KELVIN
            1001      2.00 ATOMS/MOLECULE
            8016      1.00 ATOM/MOLECULE
END


**** PROBLEM GEOMETRY ****

CS   BUCKLEDCYL   COORDINATE SYSTEM
BR   WHITE        RIGHT BOUNDARY
BL   REFLECTED    LEFT BOUNDARY
ORGN         0.00 CM LEFT BOUNDARY LOCATION
DY          57.15 CM BUCKLING HEIGHT
DZ           0.00 CM BUCKLING DEPTH
END

ZONE NUMBER     1
MZX             1 MIXTURE NO.
RZ           0.67 CM RIGHT BOUNDARY LOCATION
XMOD                EXTERNAL MODERATOR INDEX

ZONE NUMBER     2
MZX             2 MIXTURE NO.
RZ           0.71 CM RIGHT BOUNDARY LOCATION
XMOD                EXTERNAL MODERATOR INDEX

ZONE NUMBER     3
MZX             3 MIXTURE NO.
RZ           0.81 CM RIGHT BOUNDARY LOCATION
XMOD                EXTERNAL MODERATOR INDEX

ZONE NUMBER     4
MZX             6 MIXTURE NO.
RZ           0.95 CM RIGHT BOUNDARY LOCATION
XMOD                EXTERNAL MODERATOR INDEX

ZONE NUMBER     5
MZX            12 MIXTURE NO.
RZ           1.07 CM RIGHT BOUNDARY LOCATION
XMOD                EXTERNAL MODERATOR INDEX


                  ********************************************************************************
                  ********************************************************************************
                  ********************************************************************************
                  *****                                                                      *****
                  *****                  PROGRAM VERIFICATION INFORMATION                    *****
                  *****                                                                      *****
                  *****                CODE SYSTEM:  SCALE-PC VERSION:  4.3                  *****
                  *****                                                                      *****
                  ********************************************************************************
                  ********************************************************************************
                  *****                                                                      *****
                  *****                                                                      *****
                  *****              PROGRAM:  O0O009                                        *****
                  *****                                                                      *****
                  *****         CREATION DATE:  03/08/96                                     *****
                  *****                                                                      *****
                  *****              VOLUME:   Eng                                           *****
                  *****                                                                      *****
                  *****              LIBRARY:  M:\SCALE43\WIN_NT\EXE                         *****
                  *****                                                                      *****
                  *****                                                                      *****
                  *****       PRODUCTION CODE:  KENOVA                                       *****
                  *****                                                                      *****
                  *****              VERSION:  3.1                                           *****
                  *****                                                                      *****
                  *****              JOBNAME:  SCALE-PC                                      *****
                  *****                                                                      *****
                  *****    DATE OF EXECUTION:  11/12/07                                      *****
                  *****                                                                      *****
                  *****    TIME OF EXECUTION:  09:16:50                                      *****
                  *****                                                                      *****
                  *****                                                                      *****
                  ********************************************************************************
                  ********************************************************************************
                  ********************************************************************************
```

```
*****************************************************************************************************************
***                                                                                                           ***
***                              TRIGA - PREF. FLOOD CANISTER                                                 ***
***                                                                                                           ***
*****************************************************************************************************************
***                                ******       NUMERIC PARAMETERS       ******                               ***
***                                                                                                           ***
***                                                                                                           ***
***                    TME         MAXIMUM PROBLEM TIME (MIN)                        170.00                   ***
***                                                                                                           ***
***                    TBA         TIME PER GENERATION (MIN)                           2.00                   ***
***                                                                                                           ***
***                    GEN         NUMBER OF GENERATIONS                                403                   ***
***                                                                                                           ***
***                    NPG         NUMBER PER GENERATION                               1000                   ***
***                                                                                                           ***
***                    NSK         NUMBER OF GENERATIONS TO BE SKIPPED                    3                   ***
***                                                                                                           ***
***                    BEG         BEGINNING GENERATION NUMBER                            1                   ***
***                                                                                                           ***
***                    RES         GENERATIONS BETWEEN CHECKPOINTS                        0                   ***
***                                                                                                           ***
***                    X1D         NUMBER OF EXTRA 1-D CROSS SECTIONS                     1                   ***
***                                                                                                           ***
***                    NBK         NEUTRON BANK SIZE                                   1025                   ***
***                                                                                                           ***
***                    XNB         EXTRA POSITIONS IN NEUTRON BANK                        0                   ***
***                                                                                                           ***
***                    NFB         FISSION BANK SIZE                                   1000                   ***
***                                                                                                           ***
***                    XFB         EXTRA POSITIONS IN FISSION BANK                        0                   ***
***                                                                                                           ***
***                    WTA         DEFAULT VALUE OF WEIGHT AVERAGE                   0.5000                   ***
***                                                                                                           ***
***                    WTH         WEIGHT HIGH FOR SPLITTING                         3.0000                   ***
***                                                                                                           ***
***                    WTL         WEIGHT LOW FOR RUSSIAN ROULETTE                   0.3333                   ***
***                                                                                                           ***
***                    RND         STARTING RANDOM NUMBER                        BB827100001                  ***
***                                                                                                           ***
***                    NB8         NUMBER OF D.A. BLOCKS ON UNIT  8                    200                   ***
***                                                                                                           ***
***                    NL8         LENGTH OF D.A. BLOCKS ON UNIT  8                    512                   ***
***                                                                                                           ***
***                    ADJ         MODE OF CALCULATION                             FORWARD                   ***
***                                                                                                           ***
***                                INPUT DATA WRITTEN ON RESTART UNIT                   NO                   ***
***                                                                                                           ***
***                                BINARY DATA INTERFACE                               YES                   ***
***                                                                                                           ***
***                                                                                                           ***
*****************************************************************************************************************
*****************************************************************************************************************
```

```
*****************************************************************************************************************************
*****************************************************************************************************************************
***                                                                                                                       ***
***                                TRIGA - PREF. FLOOD CANISTER                                                           ***
***                                                                                                                       ***
*****************************************************************************************************************************
***                                   ******      LOGICAL PARAMETERS        ******                                      ***
***                                                                                                                       ***
***  RUN  EXECUTE PROBLEM AFTER CHECKING DATA    YES            PLT  PLOT PICTURE MAP(S)                          NO  ***
***                                                                                                                       ***
***  FLX  COMPUTE FLUX                            NO            FDN  COMPUTE FISSION DENSITIES                    NO  ***
***                                                                                                                       ***
***  SMU  COMPUTE AVG UNIT SELF-MULTIPLICATION    NO            NUB  COMPUTE NU-BAR & AVG FISSION GROUP           YES  ***
***                                                                                                                       ***
***  MKU  COMPUTE MATRIX K-EFF BY UNIT NUMBER     NO            MKP  COMPUTE MATRIX K-EFF BY UNIT LOCATION        NO  ***
***                                                                                                                       ***
***  CKU  COMPUTE COFACTOR K-EFF BY UNIT NUMBER   NO            CKP  COMPUTE COFACTOR K-EFF BY UNIT LOCATION      NO  ***
***                                                                                                                       ***
***  FMU  PRINT FISS PROD MATRIX BY UNIT NUMBER   NO            FMP  PRINT FISS PROD MATRIX BY UNIT LOCATION      NO  ***
***                                                                                                                       ***
***  MKH  COMPUTE MATRIX K-EFF BY HOLE NUMBER     NO            MKA  COMPUTE MATRIX K-EFF BY ARRAY NUMBER         NO  ***
***                                                                                                                       ***
***  CKH  COMPUTE COFACTOR K-EFF BY HOLE NUMBER   NO            CKA  COMPUTE COFACTOR K-EFF BY ARRAY NUMBER       NO  ***
***                                                                                                                       ***
***  FMH  PRINT FISS PROD MATRIX BY HOLE NUMBER   NO            FMA  PRINT FISS PROD MATRIX BY ARRAY NUMBER       NO  ***
***                                                                                                                       ***
***  HHL  COLLECT MATRIX BY HIGHEST HOLE LEVEL    NO            HAL  COLLECT MATRIX BY HIGHEST ARRAY LEVEL        NO  ***
***                                                                                                                       ***
***  AMX  PRINT ALL MIXED CROSS SECTIONS          NO            FAR  PRINT FIS. AND ABS. BY REGION                NO  ***
***                                                                                                                       ***
***  XS1  PRINT 1-D MIXTURE X-SECTIONS            NO            GAS  PRINT FAR BY GROUP                           NO  ***
***                                                                                                                       ***
***  XS2  PRINT 2-D MIXTURE X-SECTIONS            NO            PAX  PRINT XSEC-ALBEDO CORRELATION TABLES         NO  ***
***                                                                                                                       ***
***  XAP  PRINT MIXTURE ANGLES & PROBABILITIES    NO            PWT  PRINT WEIGHT AVERAGE ARRAY                   NO  ***
***                                                                                                                       ***
***  PKI  PRINT FISSION SPECTRUM                  NO            PGM  PRINT INPUT GEOMETRY                         NO  ***
***                                                                                                                       ***
***  P1D  PRINT EXTRA 1-D CROSS SECTIONS          NO            BUG  PRINT DEBUG INFORMATION                      NO  ***
***                                                                                                                       ***
***                                                             TRK  PRINT TRACKING INFORMATION                   NO  ***
***                                                                                                                       ***
***                                                                                                                       ***
*****************************************************************************************************************************
*****************************************************************************************************************************
*****************************************************************************************************************************
                                        PARAMETER INPUT COMPLETED

                                     TRIGA - PREF. FLOOD CANISTER

                                              MIXING TABLE

                                        NUMBER OF SCATTERING ANGLES =  2
                                    CROSS SECTION MESSAGE THRESHOLD =3.0E-05


MIXTURE =     1          DENSITY(G/CC) =  7.8619
   NUCLIDE   ATOM-DENS.   WGT. FRAC.     ZA      AWT             NUCLIDE TITLE
   1001001  4.93670E-02  1.05068E-02    1001     1.0077      HYDROGEN       ENDF/B-IV MAT 1269/THRM1002             UPDATED
08/12/94
   1040000  2.90390E-02  5.59490E-01   40000    91.2196      ZIRCONIUM      ENDF/B-IV MAT 7141                      UPDATED
08/12/94
   1092235  1.73230E-03  8.59993E-02   92235   235.0441      URANIUM-235    ENDF/B-IV MAT 1261                      UPDATED
08/12/94
   1092238  6.84180E-03  3.44004E-01   92238   238.0510      URANIUM-238    ENDF/B-IV MAT 1262                      UPDATED
08/12/94

MIXTURE =     2          DENSITY(G/CC) =  8.0325
   NUCLIDE   ATOM-DENS.   WGT. FRAC.     ZA      AWT             NUCLIDE TITLE
   2006012  3.99000E-04  9.89820E-04    6000    12.0001      CARBON-12      ENDF/B-IV MAT 1274/THRM1065             UPDATED
08/12/94
   2013027  2.66000E-04  1.48372E-03   13027    26.9818     AL-27 1193 218 GP 040375(5)                             UPDATED
08/12/94
   2014000  1.70300E-03  9.88763E-03   14000    28.0853      SILICON        ENDF/B-IV MAT 1194                      UPDATED
08/12/94
   2016000  2.20000E-05  1.45825E-04   16000    32.0634     SULFUR  LENDL MAT 7020                                  UPDATED
08/12/94
   2022000  1.50000E-04  1.48470E-03   22000    47.8793      TITANIUM       ENDF/B-IV MAT 1286                      UPDATED
08/12/94
   2024000  2.11510E-02  2.27351E-01   24000    51.9957     CR 1191 218NGP WT 1/E P-3 293K SIGP=5+4 RE(042375)      UPDATED
08/12/94
   2025055  1.30600E-03  1.48325E-02   25055    54.9379      MANGANESE-55   ENDF/B-IV MAT 1197                      UPDATED
08/12/94
   2026000  3.38200E-02  3.90441E-01   26000    55.8447      IRON           ENDF/B-IV MAT 1192                      UPDATED
08/12/94
   2028000  2.85160E-02  3.45964E-01   28000    58.6872     NI 1190 218NGP WT 1/E P-3 293K SIGP=5+4 RE(042375)      UPDATED
08/12/94
   2029000  5.60000E-04  7.42031E-03   29000    64.0966      COPPER         ENDF/B-IV MAT 1295                      UPDATED
08/12/94

MIXTURE =     3          DENSITY(G/CC) = 0.99817E-20
   NUCLIDE   ATOM-DENS.   WGT. FRAC.     ZA      AWT             NUCLIDE TITLE
   3001001  6.67692E-22  1.11927E-01    1001     1.0077      HYDROGEN       ENDF/B-IV MAT 1269/THRM1002             UPDATED
08/12/94
```

```
   3008016  3.33846E-22  8.88073E-01    8016    15.9904      OXYGEN-16      ENDF/B-IV MAT 1276                      UPDATED
08/12/94

MIXTURE =     4          DENSITY(G/CC) =  3.9347
   NUCLIDE   ATOM-DENS.   WGT. FRAC.     ZA      AWT             NUCLIDE TITLE
   4001001  6.67692E-22  2.83943E-22    1001     1.0077      HYDROGEN       ENDF/B-IV MAT 1269/THRM1002             UPDATED
08/12/94
   4008016  3.33846E-22  2.25293E-21    8016    15.9904      OXYGEN-16      ENDF/B-IV MAT 1276                      UPDATED
08/12/94
   4024304  8.65852E-03  1.90000E-01   24000    51.9957     CR 1191 WT SS-304(1/EST) P-3 293K SP=5+4(42375)'        UPDATED
08/12/94
   4025055  8.62609E-04  1.99999E-02   25055    54.9379      MANGANESE-55   ENDF/B-IV MAT 1197                      UPDATED
08/12/94
   4026304  2.94890E-02  6.95000E-01   26000    55.8447     FE 1192 WT SS-304(1/EST) P-3 293K SP=5+4(42375)'        UPDATED
08/12/94
   4028304  3.83564E-03  9.50001E-02   28000    58.6872     NI 1190 WT SS-304(1/EST) P-3 293K SP=5+4(42375)'        UPDATED
08/12/94

MIXTURE =     5          DENSITY(G/CC) =  7.9200
   NUCLIDE   ATOM-DENS.   WGT. FRAC.     ZA      AWT             NUCLIDE TITLE
   5024304  1.74286E-02  1.90000E-01   24000    51.9957     CR 1191 WT SS-304(1/EST) P-3 293K SP=5+4(42375)'        UPDATED
08/12/94
   5025055  1.73633E-03  1.99999E-02   25055    54.9379      MANGANESE-55   ENDF/B-IV MAT 1197                      UPDATED
08/12/94
   5026304  5.93579E-02  6.95000E-01   26000    55.8447     FE 1192 WT SS-304(1/EST) P-3 293K SP=5+4(42375)'        UPDATED
08/12/94
   5028304  7.72070E-03  9.50001E-02   28000    58.6872     NI 1190 WT SS-304(1/EST) P-3 293K SP=5+4(42375)'        UPDATED
08/12/94

MIXTURE =     6          DENSITY(G/CC) =  2.7020
   NUCLIDE   ATOM-DENS.   WGT. FRAC.     ZA      AWT             NUCLIDE TITLE
   6013027  6.03066E-02  1.00000E+00   13027    26.9818     AL-27 1193 218 GP 040375(5)                             UPDATED
08/12/94

MIXTURE =     7          DENSITY(G/CC) =  11.344
   NUCLIDE   ATOM-DENS.   WGT. FRAC.     ZA      AWT             NUCLIDE TITLE
   7082000  3.29690E-02  1.00000E+00   82000   207.2100     PB   1288 218NGP 042375 P-3 293K                        UPDATED
08/12/94

MIXTURE =     8          DENSITY(G/CC) = 0.99817E-20
   NUCLIDE   ATOM-DENS.   WGT. FRAC.     ZA      AWT             NUCLIDE TITLE
   8001001  6.67692E-22  1.11927E-01    1001     1.0077      HYDROGEN       ENDF/B-IV MAT 1269/THRM1002             UPDATED
08/12/94
   8008016  3.33846E-22  8.88073E-01    8016    15.9904      OXYGEN-16      ENDF/B-IV MAT 1276                      UPDATED
08/12/94

MIXTURE =     9          DENSITY(G/CC) = 0.99817E-20
   NUCLIDE   ATOM-DENS.   WGT. FRAC.     ZA      AWT             NUCLIDE TITLE
   9001001  6.67692E-22  1.11927E-01    1001     1.0077      HYDROGEN       ENDF/B-IV MAT 1269/THRM1002             UPDATED
08/12/94
   9008016  3.33846E-22  8.88073E-01    8016    15.9904      OXYGEN-16      ENDF/B-IV MAT 1276                      UPDATED
08/12/94

MIXTURE =    10          DENSITY(G/CC) =  2.1123
   NUCLIDE   ATOM-DENS.   WGT. FRAC.     ZA      AWT             NUCLIDE TITLE
  10001001  6.39462E-02  5.06550E-02    1001     1.0077      HYDROGEN       ENDF/B-IV MAT 1269/THRM1002             UPDATED
08/12/94
  10008016  2.79665E-02  3.51554E-01    8016    15.9904      OXYGEN-16      ENDF/B-IV MAT 1276                      UPDATED
08/12/94
  10040000  4.71360E-03  3.38015E-01   40000    91.2196      ZIRCONIUM      ENDF/B-IV MAT 7141                      UPDATED
08/12/94
  10092235  2.81190E-04  5.19571E-02   92235   235.0441      URANIUM-235    ENDF/B-IV MAT 1261                      UPDATED
08/12/94
  10092238  1.11050E-03  2.07818E-01   92238   238.0510      URANIUM-238    ENDF/B-IV MAT 1262                      UPDATED
08/12/94

MIXTURE =    11          DENSITY(G/CC) = 0.99817
   NUCLIDE   ATOM-DENS.   WGT. FRAC.     ZA      AWT             NUCLIDE TITLE
  11001001  6.67692E-02  1.11927E-01    1001     1.0077      HYDROGEN       ENDF/B-IV MAT 1269/THRM1002             UPDATED
08/12/94
  11008016  3.33846E-02  8.88074E-01    8016    15.9904      OXYGEN-16      ENDF/B-IV MAT 1276                      UPDATED
08/12/94

MIXTURE =    12          DENSITY(G/CC) = 0.99817E-20
   NUCLIDE   ATOM-DENS.   WGT. FRAC.     ZA      AWT             NUCLIDE TITLE
  12001001  6.67692E-22  1.11927E-01    1001     1.0077      HYDROGEN       ENDF/B-IV MAT 1269/THRM1002             UPDATED
08/12/94
  12008016  3.33846E-22  8.88073E-01    8016    15.9904      OXYGEN-16      ENDF/B-IV MAT 1276                      UPDATED
08/12/94


                      1001001     HYDROGEN       ENDF/B-IV MAT 1269/THRM1002             UPDATED 08/12/94
                      3001001     HYDROGEN       ENDF/B-IV MAT 1269/THRM1002             UPDATED 08/12/94
                      4001001     HYDROGEN       ENDF/B-IV MAT 1269/THRM1002             UPDATED 08/12/94
                      8001001     HYDROGEN       ENDF/B-IV MAT 1269/THRM1002             UPDATED 08/12/94
                      9001001     HYDROGEN       ENDF/B-IV MAT 1269/THRM1002             UPDATED 08/12/94
                     10001001     HYDROGEN       ENDF/B-IV MAT 1269/THRM1002             UPDATED 08/12/94
                     11001001     HYDROGEN       ENDF/B-IV MAT 1269/THRM1002             UPDATED 08/12/94
                     12001001     HYDROGEN       ENDF/B-IV MAT 1269/THRM1002             UPDATED 08/12/94
                      2006012     CARBON-12      ENDF/B-IV MAT 1274/THRM1065             UPDATED 08/12/94
                      3008016     OXYGEN-16      ENDF/B-IV MAT 1276                      UPDATED 08/12/94
                      4008016     OXYGEN-16      ENDF/B-IV MAT 1276                      UPDATED 08/12/94
                      8008016     OXYGEN-16      ENDF/B-IV MAT 1276                      UPDATED 08/12/94
                      9008016     OXYGEN-16      ENDF/B-IV MAT 1276                      UPDATED 08/12/94
```

```
10008016     OXYGEN-16      ENDF/B-IV MAT 1276                    UPDATED 08/12/94
11008016     OXYGEN-16      ENDF/B-IV MAT 1276                    UPDATED 08/12/94
12008016     OXYGEN-16      ENDF/B-IV MAT 1276                    UPDATED 08/12/94
 2013027    AL-27 1193 218 GP 040375(5)                          UPDATED 08/12/94
 6013027    AL-27 1193 218 GP 040375(5)                          UPDATED 08/12/94
 2014000     SILICON        ENDF/B-IV MAT 1194                    UPDATED 08/12/94
 2016000    SULFUR  LENDL MAT 7020                               UPDATED 08/12/94
 2022000     TITANIUM       ENDF/B-IV MAT 1286                    UPDATED 08/12/94
 2024000    CR 1191 218NGP WT 1/E P-3 293K SIGP=5+4 RE(042375)   UPDATED 08/12/94
 4024304    CR 1191 WT SS-304(1/EST) P-3 293K SP=5+4(42375)'     UPDATED 08/12/94
 5024304    CR 1191 WT SS-304(1/EST) P-3 293K SP=5+4(42375)'     UPDATED 08/12/94
 2025055     MANGANESE-55   ENDF/B-IV MAT 1197                    UPDATED 08/12/94
 4025055     MANGANESE-55   ENDF/B-IV MAT 1197                    UPDATED 08/12/94
 5025055     MANGANESE-55   ENDF/B-IV MAT 1197                    UPDATED 08/12/94
 2026000     IRON           ENDF/B-IV MAT 1192                    UPDATED 08/12/94
 4026304    FE 1192 WT SS-304(1/EST) P-3 293K SP=5+4(42375)'     UPDATED 08/12/94
 5026304    FE 1192 WT SS-304(1/EST) P-3 293K SP=5+4(42375)'     UPDATED 08/12/94
 2028000    NI 1190 218NGP WT 1/E P-3 293K SIGP=5+4 RE(042375)   UPDATED 08/12/94
 4028304    NI 1190 WT SS-304(1/EST) P-3 293K SP=5+4(42375)'     UPDATED 08/12/94
 5028304    NI 1190 WT SS-304(1/EST) P-3 293K SP=5+4(42375)'     UPDATED 08/12/94
 2029000     COPPER         ENDF/B-IV MAT 1295                    UPDATED 08/12/94
 1040000     ZIRCONIUM      ENDF/B-IV MAT 7141                    UPDATED 08/12/94
10040000     ZIRCONIUM      ENDF/B-IV MAT 7141                    UPDATED 08/12/94
 7082000    PB   1288 218NGP 042375 P-3 293K                     UPDATED 08/12/94
 1092235     URANIUM-235    ENDF/B-IV MAT 1261                    UPDATED 08/12/94
10092235     URANIUM-235    ENDF/B-IV MAT 1261                    UPDATED 08/12/94
 1092238     URANIUM-238    ENDF/B-IV MAT 1262                    UPDATED 08/12/94
10092238     URANIUM-238    ENDF/B-IV MAT 1262                    UPDATED 08/12/94
```

```
*****************************************************************************************************
***                                                                                               ***
***          TRIGA - PREF. FLOOD CANISTER                                                         ***
***                                                                                               ***
*****************************************************************************************************
*****************************************************************************************************
***                                                                                               ***
***                              ****** ADDITIONAL INFORMATION ******                             ***
***                                                                                               ***
***  NUMBER OF ENERGY GROUPS              27       USE LATTICE GEOMETRY                    YES  ***
***                                                                                               ***
***  NO. OF FISSION SPECTRUM SOURCE GROUP  1       GLOBAL ARRAY NUMBER                      20  ***
***                                                                                               ***
***  NO. OF SCATTERING ANGLES IN XSECS     2       NUMBER OF UNITS IN THE GLOBAL X DIR.      1  ***
***                                                                                               ***
***  ENTRIES/NEUTRON IN THE NEUTRON BANK  26       NUMBER OF UNITS IN THE GLOBAL Y DIR.      1  ***
***                                                                                               ***
***  ENTRIES/NEUTRON IN THE FISSION BANK  19       NUMBER OF UNITS IN THE GLOBAL Z DIR.      7  ***
***                                                                                               ***
***  NUMBER OF MIXTURES USED              11       USE A GLOBAL REFLECTOR                  YES  ***
***                                                                                               ***
***  NUMBER OF BIAS ID'S USED              1       USE NESTED HOLES                        YES  ***
***                                                                                               ***
***  NUMBER OF DIFFERENTIAL ALBEDOS USED   0       NUMBER OF HOLES                         140  ***
***                                                                                               ***
***  TOTAL INPUT GEOMETRY REGIONS         91       MAXIMUM HOLE NESTING LEVEL                4  ***
***                                                                                               ***
***  NUMBER OF GEOMETRY REGIONS USED      87       USE NESTED ARRAYS                       YES  ***
***                                                                                               ***
***  LARGEST GEOMETRY UNIT NUMBER        450       NUMBER OF ARRAYS USED                     7  ***
***                                                                                               ***
***  LARGEST ARRAY NUMBER                 43       MAXIMUM ARRAY NESTING LEVEL               2  ***
***                                                                                               ***
***                                                                                               ***
***  +X BOUNDARY CONDITION               MIR       -X BOUNDARY CONDITION                   MIR  ***
***                                                                                               ***
***  +Y BOUNDARY CONDITION               MIR       -Y BOUNDARY CONDITION                   MIR  ***
***                                                                                               ***
***  +Z BOUNDARY CONDITION               MIR       -Z BOUNDARY CONDITION                   MIR  ***
***                                                                                               ***
*****************************************************************************************************
```

```
************************************************************
**                                                        **
**   ARRAY      UNITS IN   UNITS IN   UNITS IN   NESTING  **
**   NUMBER      X DIR.     Y DIR.     Z DIR.     LEVEL   **
**                                                        **
**     1            1          5          1          2    **
**                                                        **
**     2            1          3          1          2    **
**                                                        **
**     3            1          3          1          2    **
**                                                        **
**    20 GLOBAL     1          1          7          1    **
**                                                        **
**    41            1          5          1          2    **
**                                                        **
**    42            1          3          1          2    **
**                                                        **
**    43            1          3          1          2    **
**                                                        **
************************************************************

 ........    0 IO'S WERE USED LOADING THE DATA    ........
```

TRIGA - PREF. FLOOD CANISTER

REGION	MEDIA NUM	BIAS ID	GEOMETRY DESCRIPTION FOR THOSE UNITS UTILIZED IN THIS PROBLEM

----- UNIT 1 -----

TRIGA FUEL (SMEARED)

1 CYLINDER 10 1 RADIUS = 3.9623 +Z = 60.959 -Z = 1.00000E-03 CENTERLINE IS AT X = 0.00000 Y = 0.00000

----- UNIT 5 -----

3.38 IN WIDTH / 0.28 IN THICKNESS DIVIDER CENTER STACK (SEALED)

1 CUBOID 5 1 +X = 4.2672 -X = -4.2672 +Y = 0.71120 -Y = 0.00000 +Z = 74.290 -Z = -8.2550

----- UNIT 6 -----

3.38 IN WIDTH / 0.24 IN THICKNESS DIVIDER OUTSIDE STACK (SEALED)

1 CUBOID 5 1 +X = 4.2672 -X = -4.2672 +Y = 0.60960 -Y = 0.00000 +Z = 74.290 -Z = -8.2550

----- UNIT 7 -----

SEALED CANISTER

1 CYLINDER 11 1 RADIUS = 3.9624 +Z = 60.960 -Z = 0.00000 CENTERLINE IS AT X = 0.00000 Y = 0.00000

HOLE NUMBER 1 AT X = 0.00000 Y = 0.00000 Z = 0.00000 IS UNIT NUMBER 1

2 CYLINDER 5 1 RADIUS = 4.1275 +Z = 63.500 -Z = -1.2700 CENTERLINE IS AT X = 0.00000 Y = 0.00000

3 CYLINDER 3 1 RADIUS = 4.1275 +Z = 74.290 -Z = -8.2550 CENTERLINE IS AT X = 0.00000 Y = 0.00000

----- UNIT 10 -----

TRIGA ELEMENTS IN TOP OF 3.38 IN X 3.38 IN OPENING (SEALED)

1 CUBOID 3 1 +X = 4.2672 -X = -4.2672 +Y = 4.2672 -Y = -4.2672 +Z = 74.290 -Z = -8.2550

HOLE NUMBER 2 AT X = 0.00000 Y = 0.13970 Z = 0.00000 IS UNIT NUMBER 7

----- UNIT 11 -----

TRIGA ELEMENTS IN BOTTOM OF 3.38 IN X 3.38 IN OPENING (SEALED)

1 CUBOID 3 1 +X = 4.2672 -X = -4.2672 +Y = 4.2672 -Y = -4.2672 +Z = 74.290 -Z = -8.2550

HOLE NUMBER 3 AT X = 0.00000 Y =-0.13970 Z = 0.00000 IS UNIT NUMBER 7

```
                                    TRIGA - PREF. FLOOD CANISTER

                MEDIA BIAS      GEOMETRY DESCRIPTION FOR THOSE UNITS UTILIZED IN THIS PROBLEM
REGION           NUM   ID

                                                -----   UNIT    12   -----

TRIGA ELEMENTS IN BOTTOM RIGHT OF 3.38 IN X 3.38 IN OPENING (SEALED)

  1 CUBOID           3  1      +X =  4.2672     -X = -4.2672     +Y =  4.2672     -Y = -4.2672     +Z =  74.290     -Z = -8.2550

    HOLE NUMBER      4       AT X = 0.13970      Y =-0.13970      Z = 0.00000     IS UNIT NUMBER      7

                                                -----   UNIT    13   -----

TRIGA ELEMENTS IN TOP RIGHT OF 3.38 IN X 3.38 IN OPENING (SEALED)

  1 CUBOID           3  1      +X =  4.2672     -X = -4.2672     +Y =  4.2672     -Y = -4.2672     +Z =  74.290     -Z = -8.2550

    HOLE NUMBER      5       AT X = 0.13970      Y = 0.13970      Z = 0.00000     IS UNIT NUMBER      7

                                                -----   UNIT    14   -----

TRIGA ELEMENTS IN BOTTOM LEFT OF 3.38 IN X 3.38 IN OPENING (SEALED)

  1 CUBOID           3  1      +X =  4.2672     -X = -4.2672     +Y =  4.2672     -Y = -4.2672     +Z =  74.290     -Z = -8.2550

    HOLE NUMBER      6       AT X =-0.13970      Y =-0.13970      Z = 0.00000     IS UNIT NUMBER      7

                                                -----   UNIT    15   -----

TRIGA ELEMENTS IN TOP LEFT OF 3.38 IN X 3.38 IN OPENING (SEALED)

  1 CUBOID           3  1      +X =  4.2672     -X = -4.2672     +Y =  4.2672     -Y = -4.2672     +Z =  74.290     -Z = -8.2550

    HOLE NUMBER      7       AT X =-0.13970      Y = 0.13970      Z = 0.00000     IS UNIT NUMBER      7

                                                -----   UNIT    16   -----

TRIGA BASKET 3.38 IN X 3.38 IN CENTER OPENING (SEALED)

  1 CUBOID           3  1      +X =  4.2672     -X = -4.2672     +Y =  4.2672     -Y = -4.2672     +Z =  74.290     -Z = -8.2550

                                           -----   UNIT    20  EXTERNAL TO LATTICE  1   -----

CENTER COLUMN OF THREE OPENINGS W/ 0.28 IN PLATE (SEALED)

  1 ARRAY NUMBER     1          +X =  4.2672     -X = -4.2672     +Y =  13.513     -Y = -13.513     +Z =  74.290     -Z = -8.2550

  2 CUBOID           5  1      +X =  4.9784     -X = -4.9784     +Y =  14.224     -Y = -14.224     +Z =  74.290     -Z = -8.2550
```

TRIGA - PREF. FLOOD CANISTER

REGION	MEDIA NUM	BIAS ID	GEOMETRY DESCRIPTION FOR THOSE UNITS UTILIZED IN THIS PROBLEM									
----- UNIT 21 EXTERNAL TO LATTICE 2 -----												
LEFT OUTSIDE COLUMN OF TWO OPENINGS W/ 0.12 IN PLATE (SEALED)												
1 ARRAY NUMBER	2		+X = 4.2672	-X = -4.2672	+Y = 8.8392	-Y = -8.8392	+Z = 74.290	-Z = -8.2550				
2 CUBOID	5	1	+X = 4.2672	-X = -4.5720	+Y = 9.1440	-Y = -9.1440	+Z = 74.290	-Z = -8.2550				
----- UNIT 22 EXTERNAL TO LATTICE 3 -----												
RIGHT OUTSIDE COLUMN OF TWO OPENINGS W/ 0.12 IN PLATE (SEALED)												
1 ARRAY NUMBER	3		+X = 4.2672	-X = -4.2672	+Y = 8.8392	-Y = -8.8392	+Z = 74.290	-Z = -8.2550				
2 CUBOID	5	1	+X = 4.5720	-X = -4.2672	+Y = 9.1440	-Y = -9.1440	+Z = 74.290	-Z = -8.2550				
----- UNIT 30 -----												
NAC-LWT TRIGA BASKET (SEALED)												
1 CYLINDER	3	1	RADIUS = 17.100	+Z = 74.290	-Z = -8.2550	CENTERLINE IS AT	X = 0.00000	Y = 0.00000				
HOLE NUMBER	8		AT X = 0.00000	Y = 0.00000	Z = 0.00000	IS UNIT NUMBER	20					
HOLE NUMBER	9		AT X = -9.2457	Y = 0.00000	Z = 0.00000	IS UNIT NUMBER	21					
HOLE NUMBER	10		AT X = 9.2457	Y = 0.00000	Z = 0.00000	IS UNIT NUMBER	22					
2 CYLINDER	5	1	RADIUS = 18.910	+Z = 74.930	-Z = -8.8900	CENTERLINE IS AT	X = 0.00000	Y = 0.00000				
3 CYLINDER	7	1	RADIUS = 33.465	+Z = 74.930	-Z = -8.8900	CENTERLINE IS AT	X = 0.00000	Y = 0.00000				
4 CYLINDER	5	1	RADIUS = 36.519	+Z = 74.930	-Z = -8.8900	CENTERLINE IS AT	X = 0.00000	Y = 0.00000				
5 CYLINDER	8	1	RADIUS = 49.223	+Z = 74.930	-Z = -8.8900	CENTERLINE IS AT	X = 0.00000	Y = 0.00000				
6 CYLINDER	5	1	RADIUS = 49.822	+Z = 74.930	-Z = -8.8900	CENTERLINE IS AT	X = 0.00000	Y = 0.00000				
7 CUBOID	9	1	+X = 49.822	-X = -49.822	+Y = 49.822	-Y = -49.822	+Z = 74.930	-Z = -8.8900				
----- UNIT 41 -----												
TRIGA FUEL ELEMENT												
1 CYLINDER	1	1	RADIUS = 0.67310	+Z = 28.575	-Z = -28.575	CENTERLINE IS AT	X = 0.00000	Y = 0.00000				
2 CYLINDER	2	1	RADIUS = 0.71120	+Z = 28.575	-Z = -28.575	CENTERLINE IS AT	X = 0.00000	Y = 0.00000				
3 CYLINDER	4	1	RADIUS = 0.71120	+Z = 43.480	-Z = -33.040	CENTERLINE IS AT	X = 0.00000	Y = 0.00000				

TRIGA - PREF. FLOOD CANISTER

REGION	MEDIA NUM	BIAS ID	GEOMETRY DESCRIPTION FOR THOSE UNITS UTILIZED IN THIS PROBLEM
			----- UNIT 45 -----
DIVIDER CENTER STACK			
1 CUBOID	5	1	+X = 4.2672 -X = -4.2672 +Y = 0.71120 -Y = 0.00000 +Z = 43.480 -Z = -33.040
			----- UNIT 46 -----
DIVIDER OUTSIDE STACK			
1 CUBOID	5	1	+X = 4.2672 -X = -4.2672 +Y = 0.60960 -Y = 0.00000 +Z = 43.480 -Z = -33.040
			----- UNIT 80 -----
SIMPLIFIED LID STRUCTURE NAC-LWT			
1 CYLINDER	5	1	RADIUS = 36.519 +Z = 14.135 -Z = -14.135 CENTERLINE IS AT X = 0.00000 Y = 0.00000
2 CYLINDER	9	1	RADIUS = 49.822 +Z = 14.135 -Z = -14.135 CENTERLINE IS AT X = 0.00000 Y = 0.00000
3 CUBOID	9	1	+X = 49.822 -X = -49.822 +Y = 49.822 -Y = -49.822 +Z = 14.135 -Z = -14.135
			----- UNIT 81 -----
SIMPLIFIED CASK BOTTOM STRUCTURE NAC-LWT			
1 CYLINDER	7	1	RADIUS = 26.353 +Z = 3.8100 -Z = -3.8100 CENTERLINE IS AT X = 0.00000 Y = 0.00000
2 CYLINDER	5	1	RADIUS = 36.619 +Z = 13.970 -Z = -12.700 CENTERLINE IS AT X = 0.00000 Y = 0.00000
3 CYLINDER	9	1	RADIUS = 49.822 +Z = 13.970 -Z = -12.700 CENTERLINE IS AT X = 0.00000 Y = 0.00000
4 CUBOID	9	1	+X = 49.822 -X = -49.822 +Y = 49.822 -Y = -49.822 +Z = 13.970 -Z = -12.700
			********** GLOBAL **********
			----- UNIT 82 EXTERNAL TO LATTICE 20 -----
STACK OF 5 BASKETS IN CASK			
1 ARRAY NUMBER 20			+X = 49.822 -X = -49.822 +Y = 49.822 -Y = -49.822 +Z = 230.87 -Z = -221.30
			----- UNIT 411 -----
TRIGA FUEL ELEMENTS IN AL TUBE, RIGHT			
1 CYLINDER	3	1	RADIUS = 0.80518 +Z = 43.480 -Z = -33.040 CENTERLINE IS AT X = 0.00000 Y = 0.00000
HOLE NUMBER 12			AT X = 9.38000E-02 Y = 0.00000 Z = 0.00000 IS UNIT NUMBER 41
2 CYLINDER	6	1	RADIUS = 0.95250 +Z = 43.480 -Z = -33.040 CENTERLINE IS AT X = 0.00000 Y = 0.00000

TRIGA - PREF. FLOOD CANISTER

REGION	MEDIA NUM	BIAS ID	GEOMETRY DESCRIPTION FOR THOSE UNITS UTILIZED IN THIS PROBLEM

----- UNIT 412 -----

TRIGA FUEL ELEMENTS IN AL TUBE, LEFT

1 CYLINDER 3 1 RADIUS = 0.80518 +Z = 43.480 -Z = -33.040 CENTERLINE IS AT X = 0.00000 Y = 0.00000

HOLE NUMBER 13 AT X =-9.38000E-02 Y = 0.00000 Z = 0.00000 IS UNIT NUMBER 41

2 CYLINDER 6 1 RADIUS = 0.95250 +Z = 43.480 -Z = -33.040 CENTERLINE IS AT X = 0.00000 Y = 0.00000

----- UNIT 413 -----

TRIGA FUEL ELEMENTS IN AL TUBE, TOP

1 CYLINDER 3 1 RADIUS = 0.80518 +Z = 43.480 -Z = -33.040 CENTERLINE IS AT X = 0.00000 Y = 0.00000

HOLE NUMBER 14 AT X = 0.00000 Y = 9.38000E-02 Z = 0.00000 IS UNIT NUMBER 41

2 CYLINDER 6 1 RADIUS = 0.95250 +Z = 43.480 -Z = -33.040 CENTERLINE IS AT X = 0.00000 Y = 0.00000

----- UNIT 414 -----

TRIGA FUEL ELEMENTS IN AL TUBE, BOTTOM

1 CYLINDER 3 1 RADIUS = 0.80518 +Z = 43.480 -Z = -33.040 CENTERLINE IS AT X = 0.00000 Y = 0.00000

HOLE NUMBER 15 AT X = 0.00000 Y =-9.38000E-02 Z = 0.00000 IS UNIT NUMBER 41

2 CYLINDER 6 1 RADIUS = 0.95250 +Z = 43.480 -Z = -33.040 CENTERLINE IS AT X = 0.00000 Y = 0.00000

----- UNIT 415 -----

TRIGA FUEL ELEMENTS IN AL TUBE, TOP RIGHT

1 CYLINDER 3 1 RADIUS = 0.80518 +Z = 43.480 -Z = -33.040 CENTERLINE IS AT X = 0.00000 Y = 0.00000

HOLE NUMBER 16 AT X = 6.62000E-02 Y = 6.62000E-02 Z = 0.00000 IS UNIT NUMBER 41

2 CYLINDER 6 1 RADIUS = 0.95250 +Z = 43.480 -Z = -33.040 CENTERLINE IS AT X = 0.00000 Y = 0.00000

----- UNIT 416 -----

TRIGA FUEL ELEMENTS IN AL TUBE, TOP LEFT

1 CYLINDER 3 1 RADIUS = 0.80518 +Z = 43.480 -Z = -33.040 CENTERLINE IS AT X = 0.00000 Y = 0.00000

HOLE NUMBER 17 AT X =-6.62000E-02 Y = 6.62000E-02 Z = 0.00000 IS UNIT NUMBER 41

2 CYLINDER 6 1 RADIUS = 0.95250 +Z = 43.480 -Z = -33.040 CENTERLINE IS AT X = 0.00000 Y = 0.00000

```
                                    TRIGA - PREF. FLOOD CANISTER

                 MEDIA BIAS      GEOMETRY DESCRIPTION FOR THOSE UNITS UTILIZED IN THIS PROBLEM
REGION            NUM   ID

                                                -----   UNIT   417   -----

TRIGA FUEL ELEMENTS IN AL TUBE, BOTTOM RIGHT

  1 CYLINDER          3  1  RADIUS = 0.80518     +Z =  43.480     -Z = -33.040     CENTERLINE IS AT  X = 0.00000      Y = 0.00000

    HOLE NUMBER     18       AT X = 6.62000E-02  Y =-6.62000E-02  Z = 0.00000     IS UNIT NUMBER     41

  2 CYLINDER          6  1  RADIUS = 0.95250     +Z =  43.480     -Z = -33.040     CENTERLINE IS AT  X = 0.00000      Y = 0.00000

                                                -----   UNIT   418   -----

TRIGA FUEL ELEMENTS IN AL TUBE, BOTTOM LEFT

  1 CYLINDER          3  1  RADIUS = 0.80518     +Z =  43.480     -Z = -33.040     CENTERLINE IS AT  X = 0.00000      Y = 0.00000

    HOLE NUMBER     19       AT X =-6.62000E-02  Y =-6.62000E-02  Z = 0.00000     IS UNIT NUMBER     41

  2 CYLINDER          6  1  RADIUS = 0.95250     +Z =  43.480     -Z = -33.040     CENTERLINE IS AT  X = 0.00000      Y = 0.00000
```

TRIGA - PREF. FLOOD CANISTER

REGION	MEDIA NUM	BIAS ID	GEOMETRY DESCRIPTION FOR THOSE UNITS UTILIZED IN THIS PROBLEM

----- UNIT 421 -----

AL TUBES WITH TRIGA FUEL, IN FUEL INSERT, BOTTOM OPENING

1	CUBOID	3	1	+X = 4.1529	-X = -4.1529	+Y = 4.1529	-Y = -4.1529	+Z = 43.480	-Z = -33.040		
	HOLE NUMBER	36		AT X = -2.8576	Y = -2.8576	Z = 0.00000	IS UNIT NUMBER	415			
	HOLE NUMBER	37		AT X =-0.95250	Y = -2.8576	Z = 0.00000	IS UNIT NUMBER	413			
	HOLE NUMBER	38		AT X = 0.95250	Y = -2.8576	Z = 0.00000	IS UNIT NUMBER	413			
	HOLE NUMBER	39		AT X = 2.8576	Y = -2.8576	Z = 0.00000	IS UNIT NUMBER	416			
	HOLE NUMBER	40		AT X = -2.8576	Y =-0.95250	Z = 0.00000	IS UNIT NUMBER	411			
	HOLE NUMBER	41		AT X =-0.95250	Y =-0.95250	Z = 0.00000	IS UNIT NUMBER	415			
	HOLE NUMBER	42		AT X = 0.95250	Y =-0.95250	Z = 0.00000	IS UNIT NUMBER	416			
	HOLE NUMBER	43		AT X = 2.8576	Y =-0.95250	Z = 0.00000	IS UNIT NUMBER	412			
	HOLE NUMBER	44		AT X = -2.8576	Y = 0.95250	Z = 0.00000	IS UNIT NUMBER	411			
	HOLE NUMBER	45		AT X =-0.95250	Y = 0.95250	Z = 0.00000	IS UNIT NUMBER	417			
	HOLE NUMBER	46		AT X = 0.95250	Y = 0.95250	Z = 0.00000	IS UNIT NUMBER	418			
	HOLE NUMBER	47		AT X = 2.8576	Y = 0.95250	Z = 0.00000	IS UNIT NUMBER	412			
	HOLE NUMBER	48		AT X = -2.8576	Y = 2.8576	Z = 0.00000	IS UNIT NUMBER	417			
	HOLE NUMBER	49		AT X =-0.95250	Y = 2.8576	Z = 0.00000	IS UNIT NUMBER	414			
	HOLE NUMBER	50		AT X = 0.95250	Y = 2.8576	Z = 0.00000	IS UNIT NUMBER	414			
	HOLE NUMBER	51		AT X = 2.8576	Y = 2.8576	Z = 0.00000	IS UNIT NUMBER	418			
2	CUBOID	3	1	+X = 4.1529	-X = -4.1529	+Y = 4.1529	-Y = -4.1529	+Z = 43.480	-Z = -33.040		

TRIGA - PREF. FLOOD CANISTER

REGION	MEDIA NUM	BIAS ID	GEOMETRY DESCRIPTION FOR THOSE UNITS UTILIZED IN THIS PROBLEM

----- UNIT 422 -----

AL TUBES WITH TRIGA FUEL, IN FUEL INSERT, TOP OPENING

1 CUBOID	3	1	+X = 4.1529	-X = -4.1529	+Y = 4.1529	-Y = -4.1529	+Z = 43.480	-Z = -33.040			
HOLE NUMBER	52		AT X = -2.8576	Y = -2.8576	Z = 0.00000	IS UNIT NUMBER	415				
HOLE NUMBER	53		AT X =-0.95250	Y = -2.8576	Z = 0.00000	IS UNIT NUMBER	413				
HOLE NUMBER	54		AT X = 0.95250	Y = -2.8576	Z = 0.00000	IS UNIT NUMBER	413				
HOLE NUMBER	55		AT X = 2.8576	Y = -2.8576	Z = 0.00000	IS UNIT NUMBER	416				
HOLE NUMBER	56		AT X = -2.8576	Y =-0.95250	Z = 0.00000	IS UNIT NUMBER	411				
HOLE NUMBER	57		AT X =-0.95250	Y =-0.95250	Z = 0.00000	IS UNIT NUMBER	415				
HOLE NUMBER	58		AT X = 0.95250	Y =-0.95250	Z = 0.00000	IS UNIT NUMBER	416				
HOLE NUMBER	59		AT X = 2.8576	Y =-0.95250	Z = 0.00000	IS UNIT NUMBER	412				
HOLE NUMBER	60		AT X = -2.8576	Y = 0.95250	Z = 0.00000	IS UNIT NUMBER	411				
HOLE NUMBER	61		AT X =-0.95250	Y = 0.95250	Z = 0.00000	IS UNIT NUMBER	417				
HOLE NUMBER	62		AT X = 0.95250	Y = 0.95250	Z = 0.00000	IS UNIT NUMBER	418				
HOLE NUMBER	63		AT X = 2.8576	Y = 0.95250	Z = 0.00000	IS UNIT NUMBER	412				
HOLE NUMBER	64		AT X = -2.8576	Y = 2.8576	Z = 0.00000	IS UNIT NUMBER	417				
HOLE NUMBER	65		AT X =-0.95250	Y = 2.8576	Z = 0.00000	IS UNIT NUMBER	414				
HOLE NUMBER	66		AT X = 0.95250	Y = 2.8576	Z = 0.00000	IS UNIT NUMBER	414				
HOLE NUMBER	67		AT X = 2.8576	Y = 2.8576	Z = 0.00000	IS UNIT NUMBER	418				
2 CUBOID	3	1	+X = 4.1529	-X = -4.1529	+Y = 4.1529	-Y = -4.1529	+Z = 43.480	-Z = -33.040			

TRIGA - PREF. FLOOD CANISTER

REGION	MEDIA NUM	BIAS ID	GEOMETRY DESCRIPTION FOR THOSE UNITS UTILIZED IN THIS PROBLEM

----- UNIT 423 -----

AL TUBES WITH TRIGA FUEL, IN FUEL INSERT, BOTTOM LEFT OPENING

1 CUBOID	3	1	+X = 4.1529	-X = -4.1529	+Y = 4.1529	-Y = -4.1529	+Z = 43.480	-Z = -33.040			
HOLE NUMBER	68		AT X = -2.8576	Y = -2.8576	Z = 0.00000	IS UNIT NUMBER	415				
HOLE NUMBER	69		AT X =-0.95250	Y = -2.8576	Z = 0.00000	IS UNIT NUMBER	413				
HOLE NUMBER	70		AT X = 0.95250	Y = -2.8576	Z = 0.00000	IS UNIT NUMBER	413				
HOLE NUMBER	71		AT X = 2.8576	Y = -2.8576	Z = 0.00000	IS UNIT NUMBER	416				
HOLE NUMBER	72		AT X = -2.8576	Y =-0.95250	Z = 0.00000	IS UNIT NUMBER	411				
HOLE NUMBER	73		AT X =-0.95250	Y =-0.95250	Z = 0.00000	IS UNIT NUMBER	415				
HOLE NUMBER	74		AT X = 0.95250	Y =-0.95250	Z = 0.00000	IS UNIT NUMBER	416				
HOLE NUMBER	75		AT X = 2.8576	Y =-0.95250	Z = 0.00000	IS UNIT NUMBER	412				
HOLE NUMBER	76		AT X = -2.8576	Y = 0.95250	Z = 0.00000	IS UNIT NUMBER	411				
HOLE NUMBER	77		AT X =-0.95250	Y = 0.95250	Z = 0.00000	IS UNIT NUMBER	417				
HOLE NUMBER	78		AT X = 0.95250	Y = 0.95250	Z = 0.00000	IS UNIT NUMBER	418				
HOLE NUMBER	79		AT X = 2.8576	Y = 0.95250	Z = 0.00000	IS UNIT NUMBER	412				
HOLE NUMBER	80		AT X = -2.8576	Y = 2.8576	Z = 0.00000	IS UNIT NUMBER	417				
HOLE NUMBER	81		AT X =-0.95250	Y = 2.8576	Z = 0.00000	IS UNIT NUMBER	414				
HOLE NUMBER	82		AT X = 0.95250	Y = 2.8576	Z = 0.00000	IS UNIT NUMBER	414				
HOLE NUMBER	83		AT X = 2.8576	Y = 2.8576	Z = 0.00000	IS UNIT NUMBER	418				
2 CUBOID	3	1	+X = 4.1529	-X = -4.1529	+Y = 4.1529	-Y = -4.1529	+Z = 43.480	-Z = -33.040			

TRIGA - PREF. FLOOD CANISTER

REGION	MEDIA NUM	BIAS ID	GEOMETRY DESCRIPTION FOR THOSE UNITS UTILIZED IN THIS PROBLEM

----- UNIT 424 -----

AL TUBES WITH TRIGA FUEL, IN FUEL INSERT, TOP LEFT OPENING

1 CUBOID	3	1	+X = 4.1529	-X = -4.1529	+Y = 4.1529	-Y = -4.1529	+Z = 43.480	-Z = -33.040			
HOLE NUMBER	84		AT X = -2.8576	Y = -2.8576	Z = 0.00000	IS UNIT NUMBER	415				
HOLE NUMBER	85		AT X =-0.95250	Y = -2.8576	Z = 0.00000	IS UNIT NUMBER	413				
HOLE NUMBER	86		AT X = 0.95250	Y = -2.8576	Z = 0.00000	IS UNIT NUMBER	413				
HOLE NUMBER	87		AT X = 2.8576	Y = -2.8576	Z = 0.00000	IS UNIT NUMBER	416				
HOLE NUMBER	88		AT X = -2.8576	Y =-0.95250	Z = 0.00000	IS UNIT NUMBER	411				
HOLE NUMBER	89		AT X =-0.95250	Y =-0.95250	Z = 0.00000	IS UNIT NUMBER	415				
HOLE NUMBER	90		AT X = 0.95250	Y =-0.95250	Z = 0.00000	IS UNIT NUMBER	416				
HOLE NUMBER	91		AT X = 2.8576	Y =-0.95250	Z = 0.00000	IS UNIT NUMBER	412				
HOLE NUMBER	92		AT X = -2.8576	Y = 0.95250	Z = 0.00000	IS UNIT NUMBER	411				
HOLE NUMBER	93		AT X =-0.95250	Y = 0.95250	Z = 0.00000	IS UNIT NUMBER	417				
HOLE NUMBER	94		AT X = 0.95250	Y = 0.95250	Z = 0.00000	IS UNIT NUMBER	418				
HOLE NUMBER	95		AT X = 2.8576	Y = 0.95250	Z = 0.00000	IS UNIT NUMBER	412				
HOLE NUMBER	96		AT X = -2.8576	Y = 2.8576	Z = 0.00000	IS UNIT NUMBER	417				
HOLE NUMBER	97		AT X =-0.95250	Y = 2.8576	Z = 0.00000	IS UNIT NUMBER	414				
HOLE NUMBER	98		AT X = 0.95250	Y = 2.8576	Z = 0.00000	IS UNIT NUMBER	414				
HOLE NUMBER	99		AT X = 2.8576	Y = 2.8576	Z = 0.00000	IS UNIT NUMBER	418				
2 CUBOID	3	1	+X = 4.1529	-X = -4.1529	+Y = 4.1529	-Y = -4.1529	+Z = 43.480	-Z = -33.040			

TRIGA - PREF. FLOOD CANISTER

REGION	MEDIA NUM	BIAS ID	GEOMETRY DESCRIPTION FOR THOSE UNITS UTILIZED IN THIS PROBLEM

----- UNIT 425 -----

AL TUBES WITH TRIGA FUEL, IN FUEL INSERT, BOTTOM RIGHT OPENING

1	CUBOID	3	1	+X = 4.1529	-X = -4.1529	+Y = 4.1529	-Y = -4.1529	+Z = 43.480	-Z = -33.040		
	HOLE NUMBER	100		AT X = -2.8576	Y = -2.8576	Z = 0.00000	IS UNIT NUMBER	415			
	HOLE NUMBER	101		AT X =-0.95250	Y = -2.8576	Z = 0.00000	IS UNIT NUMBER	413			
	HOLE NUMBER	102		AT X = 0.95250	Y = -2.8576	Z = 0.00000	IS UNIT NUMBER	413			
	HOLE NUMBER	103		AT X = 2.8576	Y = -2.8576	Z = 0.00000	IS UNIT NUMBER	416			
	HOLE NUMBER	104		AT X = -2.8576	Y =-0.95250	Z = 0.00000	IS UNIT NUMBER	411			
	HOLE NUMBER	105		AT X =-0.95250	Y =-0.95250	Z = 0.00000	IS UNIT NUMBER	415			
	HOLE NUMBER	106		AT X = 0.95250	Y =-0.95250	Z = 0.00000	IS UNIT NUMBER	416			
	HOLE NUMBER	107		AT X = 2.8576	Y =-0.95250	Z = 0.00000	IS UNIT NUMBER	412			
	HOLE NUMBER	108		AT X = -2.8576	Y = 0.95250	Z = 0.00000	IS UNIT NUMBER	411			
	HOLE NUMBER	109		AT X =-0.95250	Y = 0.95250	Z = 0.00000	IS UNIT NUMBER	417			
	HOLE NUMBER	110		AT X = 0.95250	Y = 0.95250	Z = 0.00000	IS UNIT NUMBER	418			
	HOLE NUMBER	111		AT X = 2.8576	Y = 0.95250	Z = 0.00000	IS UNIT NUMBER	412			
	HOLE NUMBER	112		AT X = -2.8576	Y = 2.8576	Z = 0.00000	IS UNIT NUMBER	417			
	HOLE NUMBER	113		AT X =-0.95250	Y = 2.8576	Z = 0.00000	IS UNIT NUMBER	414			
	HOLE NUMBER	114		AT X = 0.95250	Y = 2.8576	Z = 0.00000	IS UNIT NUMBER	414			
	HOLE NUMBER	115		AT X = 2.8576	Y = 2.8576	Z = 0.00000	IS UNIT NUMBER	418			
2	CUBOID	3	1	+X = 4.1529	-X = -4.1529	+Y = 4.1529	-Y = -4.1529	+Z = 43.480	-Z = -33.040		

TRIGA - PREF. FLOOD CANISTER

REGION	MEDIA NUM	BIAS ID	GEOMETRY DESCRIPTION FOR THOSE UNITS UTILIZED IN THIS PROBLEM

----- UNIT 426 -----

AL TUBES WITH TRIGA FUEL, IN FUEL INSERT, TOP RIGHT OPENING

1 CUBOID 3 1 +X = 4.1529 -X = -4.1529 +Y = 4.1529 -Y = -4.1529 +Z = 43.480 -Z = -33.040

HOLE NUMBER 116 AT X = -2.8576 Y = -2.8576 Z = 0.00000 IS UNIT NUMBER 415

HOLE NUMBER 117 AT X =-0.95250 Y = -2.8576 Z = 0.00000 IS UNIT NUMBER 413

HOLE NUMBER 118 AT X = 0.95250 Y = -2.8576 Z = 0.00000 IS UNIT NUMBER 413

HOLE NUMBER 119 AT X = 2.8576 Y = -2.8576 Z = 0.00000 IS UNIT NUMBER 416

HOLE NUMBER 120 AT X = -2.8576 Y =-0.95250 Z = 0.00000 IS UNIT NUMBER 411

HOLE NUMBER 121 AT X =-0.95250 Y =-0.95250 Z = 0.00000 IS UNIT NUMBER 415

HOLE NUMBER 122 AT X = 0.95250 Y =-0.95250 Z = 0.00000 IS UNIT NUMBER 416

HOLE NUMBER 123 AT X = 2.8576 Y =-0.95250 Z = 0.00000 IS UNIT NUMBER 412

HOLE NUMBER 124 AT X = -2.8576 Y = 0.95250 Z = 0.00000 IS UNIT NUMBER 411

HOLE NUMBER 125 AT X =-0.95250 Y = 0.95250 Z = 0.00000 IS UNIT NUMBER 417

HOLE NUMBER 126 AT X = 0.95250 Y = 0.95250 Z = 0.00000 IS UNIT NUMBER 418

HOLE NUMBER 127 AT X = 2.8576 Y = 0.95250 Z = 0.00000 IS UNIT NUMBER 412

HOLE NUMBER 128 AT X = -2.8576 Y = 2.8576 Z = 0.00000 IS UNIT NUMBER 417

HOLE NUMBER 129 AT X =-0.95250 Y = 2.8576 Z = 0.00000 IS UNIT NUMBER 414

HOLE NUMBER 130 AT X = 0.95250 Y = 2.8576 Z = 0.00000 IS UNIT NUMBER 414

HOLE NUMBER 131 AT X = 2.8576 Y = 2.8576 Z = 0.00000 IS UNIT NUMBER 418

2 CUBOID 3 1 +X = 4.1529 -X = -4.1529 +Y = 4.1529 -Y = -4.1529 +Z = 43.480 -Z = -33.040

----- UNIT 430 -----

FUEL INSERT IN, CENTER OPENING

1 CUBOID 3 1 +X = 4.2672 -X = -4.2672 +Y = 4.2672 -Y = -4.2672 +Z = 43.480 -Z = -33.040

----- UNIT 431 -----

FUEL INSERT IN, BOTTOM OPENING

1 CUBOID 3 1 +X = 4.2672 -X = -4.2672 +Y = 4.2672 -Y = -4.2672 +Z = 43.480 -Z = -33.040

HOLE NUMBER 132 AT X = 0.00000 Y =-0.11430 Z = 0.00000 IS UNIT NUMBER 421

TRIGA - PREF. FLOOD CANISTER

REGION	MEDIA NUM	BIAS ID	GEOMETRY DESCRIPTION FOR THOSE UNITS UTILIZED IN THIS PROBLEM

----- UNIT 432 -----

FUEL INSERT IN, TOP OPENING

1 CUBOID 3 1 +X = 4.2672 -X = -4.2672 +Y = 4.2672 -Y = -4.2672 +Z = 43.480 -Z = -33.040

HOLE NUMBER 133 AT X = 0.00000 Y = 0.11430 Z = 0.00000 IS UNIT NUMBER 422

----- UNIT 433 -----

FUEL INSERT IN, BOTTOM LEFT OPENING

1 CUBOID 3 1 +X = 4.2672 -X = -4.2672 +Y = 4.2672 -Y = -4.2672 +Z = 43.480 -Z = -33.040

HOLE NUMBER 134 AT X =-0.11430 Y =-0.11430 Z = 0.00000 IS UNIT NUMBER 423

----- UNIT 434 -----

FUEL INSERT IN, TOP LEFT OPENING

1 CUBOID 3 1 +X = 4.2672 -X = -4.2672 +Y = 4.2672 -Y = -4.2672 +Z = 43.480 -Z = -33.040

HOLE NUMBER 135 AT X =-0.11430 Y = 0.11430 Z = 0.00000 IS UNIT NUMBER 424

----- UNIT 435 -----

FUEL INSERT IN, BOTOM RIGHT OPENING

1 CUBOID 3 1 +X = 4.2672 -X = -4.2672 +Y = 4.2672 -Y = -4.2672 +Z = 43.480 -Z = -33.040

HOLE NUMBER 136 AT X = 0.11430 Y =-0.11430 Z = 0.00000 IS UNIT NUMBER 425

----- UNIT 436 -----

FUEL INSERT IN, TOP RIGHT OPENING

1 CUBOID 3 1 +X = 4.2672 -X = -4.2672 +Y = 4.2672 -Y = -4.2672 +Z = 43.480 -Z = -33.040

HOLE NUMBER 137 AT X = 0.11430 Y = 0.11430 Z = 0.00000 IS UNIT NUMBER 426

----- UNIT 440 EXTERNAL TO LATTICE 41 -----

CENTER COLUMN OF THREE OPENINGS

1 ARRAY NUMBER 41 +X = 4.2672 -X = -4.2672 +Y = 13.513 -Y = -13.513 +Z = 43.480 -Z = -33.040

2 CUBOID 5 1 +X = 4.9784 -X = -4.9784 +Y = 14.224 -Y = -14.224 +Z = 43.480 -Z = -33.040

TRIGA - PREF. FLOOD CANISTER

REGION	MEDIA NUM	BIAS ID	GEOMETRY DESCRIPTION FOR THOSE UNITS UTILIZED IN THIS PROBLEM									
			----- UNIT 441 EXTERNAL TO LATTICE 42 -----									
LEFT OUTSIDE COLUMN OF TWO OPENINGS												
1 ARRAY NUMBER	42		+X = 4.2672	-X = -4.2672	+Y = 8.8392	-Y = -8.8392	+Z = 43.480	-Z = -33.040				
2 CUBOID	5	1	+X = 4.2672	-X = -4.6080	+Y = 9.1800	-Y = -9.1800	+Z = 43.480	-Z = -33.040				
			----- UNIT 442 EXTERNAL TO LATTICE 43 -----									
RIGHT OUTSIDE COLUMN OF TWO OPENINGS												
1 ARRAY NUMBER	43		+X = 4.2672	-X = -4.2672	+Y = 8.8392	-Y = -8.8392	+Z = 43.480	-Z = -33.040				
2 CUBOID	5	1	+X = 4.6080	-X = -4.2672	+Y = 9.1800	-Y = -9.1800	+Z = 43.480	-Z = -33.040				
			----- UNIT 450 -----									
96 TRIGA FUEL ELEMENTS IN EACH LWT BASKET												
1 CYLINDER	3	1	RADIUS = 17.150	+Z = 43.485	-Z = -33.045	CENTERLINE IS AT	X = 0.00000	Y = 0.00000				
HOLE NUMBER	138		AT X = 0.00000	Y = 0.00000	Z = 0.00000	IS UNIT NUMBER	440					
HOLE NUMBER	139		AT X = -9.2457	Y = 0.00000	Z = 0.00000	IS UNIT NUMBER	441					
HOLE NUMBER	140		AT X = 9.2457	Y = 0.00000	Z = 0.00000	IS UNIT NUMBER	442					
2 CYLINDER	5	1	RADIUS = 18.910	+Z = 43.485	-Z = -33.045	CENTERLINE IS AT	X = 0.00000	Y = 0.00000				
3 CYLINDER	7	1	RADIUS = 33.465	+Z = 43.485	-Z = -33.045	CENTERLINE IS AT	X = 0.00000	Y = 0.00000				
4 CYLINDER	5	1	RADIUS = 36.519	+Z = 43.485	-Z = -33.045	CENTERLINE IS AT	X = 0.00000	Y = 0.00000				
5 CYLINDER	8	1	RADIUS = 49.223	+Z = 43.485	-Z = -33.045	CENTERLINE IS AT	X = 0.00000	Y = 0.00000				
6 CYLINDER	5	1	RADIUS = 49.822	+Z = 43.485	-Z = -33.045	CENTERLINE IS AT	X = 0.00000	Y = 0.00000				
7 CUBOID	9	1	+X = 49.822	-X = -49.822	+Y = 49.822	-Y = -49.822	+Z = 43.485	-Z = -33.045				

```
                        TRIGA - PREF. FLOOD CANISTER

                  -------  UNIT ORIENTATION DESCRIPTION FOR ARRAY   1         -------

Z LAYER   1, X COLUMN   1 TO   1 LEFT TO RIGHT   Y ROW   1 TO   5  BOTTOM TO TOP

 11

  5

 16

  5

 10

                  -------  UNIT ORIENTATION DESCRIPTION FOR ARRAY   2         -------

Z LAYER   1, X COLUMN   1 TO   1 LEFT TO RIGHT   Y ROW   1 TO   3  BOTTOM TO TOP

 12

  6

 13

                  -------  UNIT ORIENTATION DESCRIPTION FOR ARRAY   3         -------

Z LAYER   1, X COLUMN   1 TO   1 LEFT TO RIGHT   Y ROW   1 TO   3  BOTTOM TO TOP

 14

  6

 15
```

```
                        TRIGA - PREF. FLOOD CANISTER

                  -------  UNIT ORIENTATION DESCRIPTION FOR ARRAY  20         -------

Z LAYER   1, X COLUMN   1 TO   1 LEFT TO RIGHT   Y ROW   1 TO   1  BOTTOM TO TOP

  81
Z LAYER   2, X COLUMN   1 TO   1 LEFT TO RIGHT   Y ROW   1 TO   1  BOTTOM TO TOP

  30
Z LAYER   3, X COLUMN   1 TO   1 LEFT TO RIGHT   Y ROW   1 TO   1  BOTTOM TO TOP

 450
Z LAYER   4, X COLUMN   1 TO   1 LEFT TO RIGHT   Y ROW   1 TO   1  BOTTOM TO TOP

 450
Z LAYER   5, X COLUMN   1 TO   1 LEFT TO RIGHT   Y ROW   1 TO   1  BOTTOM TO TOP

 450
Z LAYER   6, X COLUMN   1 TO   1 LEFT TO RIGHT   Y ROW   1 TO   1  BOTTOM TO TOP

  30
Z LAYER   7, X COLUMN   1 TO   1 LEFT TO RIGHT   Y ROW   1 TO   1  BOTTOM TO TOP

  80

                  -------  UNIT ORIENTATION DESCRIPTION FOR ARRAY  41         -------

Z LAYER   1, X COLUMN   1 TO   1 LEFT TO RIGHT   Y ROW   1 TO   5  BOTTOM TO TOP

 431

  45

 430

  45

 432
```

```
                        TRIGA - PREF. FLOOD CANISTER

                  -------  UNIT ORIENTATION DESCRIPTION FOR ARRAY  42         -------

Z LAYER   1, X COLUMN   1 TO   1 LEFT TO RIGHT   Y ROW   1 TO   3  BOTTOM TO TOP

 435

  46

 436

                  -------  UNIT ORIENTATION DESCRIPTION FOR ARRAY  43         -------

Z LAYER   1, X COLUMN   1 TO   1 LEFT TO RIGHT   Y ROW   1 TO   3  BOTTOM TO TOP

 433

  46

 434
```

```
                                  TRIGA - PREF. FLOOD CANISTER
                                 VOLUMES FOR THOSE UNITS UTILIZED IN  THIS PROBLEM


                                                TOTAL MIXTURE VOLUMES
                                              MIXTURE        TOTAL VOLUME              MASS(G)
                                                  1         2.34271E+04 CM**3        1.84181E+05
                                                  2         2.72718E+03 CM**3        2.19061E+04
                                                  3         2.30497E+05 CM**3        2.30076E-15
                                                  4         8.86453E+03 CM**3        3.48789E+04
                                                  5         6.81739E+05 CM**3        5.39938E+06
                                                  6         1.79275E+04 CM**3        4.84400E+04
                                                  7         9.67892E+05 CM**3        1.09798E+07
                                                  8         1.35931E+06 CM**3        1.35683E-14
                                                  9         1.16111E+06 CM**3        1.15899E-14
                                                 10         3.60792E+04 CM**3        7.62098E+04
                                                 11         3.00293E+00 CM**3        2.99744E+00


      ***************************************************************************************************************************
      ***                                                                                                                     ***
      ***                                          BIASING INFORMATION                                                        ***
      ***                                                                                                                     ***
      ***     A DEFAULT WEIGHT OF    0.500 WILL BE USED FOR ALL BIAS ID'S.                                                    ***
      ***                                                                                                                     ***
      ***************************************************************************************************************************

                              ........    0 IO'S WERE USED IN KENO-V BEFORE TRACKING       ........

                              ........  0.00733 MINUTES WERE USED PROCESSING DATA.        ........

VOLUME FRACTION OF FISSILE MATERIAL IN THE CORE= 1.32543E-02

START TYPE 0 WAS USED.

THE NEUTRONS WERE STARTED WITH A FLAT DISTRIBUTION IN A CUBOID DEFINED BY:
                      +X= 1.70000E+01  -X=-1.70000E+01  +Y= 1.70000E+01  -Y=-1.70000E+01  +Z= 2.00000E+02  -Z=-2.00000E+02
THE FLAG TO START NEUTRONS IN THE REFLECTOR WAS TURNED OFF

-.00233 MINUTES WERE REQUIRED FOR STARTING.   TOTAL ELAPSED TIME IS 0.01067 MINUTES.
```

TRIGA - PREF. FLOOD CANISTER

GENERATION	GENERATION K-EFFECTIVE	ELAPSED TIME MINUTES	AVERAGE K-EFFECTIVE	AVG K-EFF DEVIATION	MATRIX K-EFFECTIVE	MATRIX K-EFF DEVIATION
KENO MESSAGE NUMBER K5-132		WARNING....ONLY	908 INDEPENDENT FISSION POINTS WERE GENERATED			
1	8.07235E-01	1.38333E-02	1.00000E+00	0.00000E+00	0.00000E+00	0.00000E+00
KENO MESSAGE NUMBER K5-132		WARNING....ONLY	937 INDEPENDENT FISSION POINTS WERE GENERATED			
2	8.67507E-01	1.83333E-02	1.00000E+00	0.00000E+00	0.00000E+00	0.00000E+00
KENO MESSAGE NUMBER K5-132		WARNING....ONLY	914 INDEPENDENT FISSION POINTS WERE GENERATED			
3	8.39890E-01	2.30000E-02	8.39890E-01	0.00000E+00	0.00000E+00	0.00000E+00
4	8.46735E-01	2.75000E-02	8.43313E-01	3.42226E-03	0.00000E+00	0.00000E+00
5	8.51662E-01	3.21667E-02	8.46096E-01	3.41309E-03	0.00000E+00	0.00000E+00
6	8.38646E-01	3.66667E-02	8.44233E-01	3.04850E-03	0.00000E+00	0.00000E+00
7	8.34027E-01	4.13333E-02	8.42192E-01	3.12132E-03	0.00000E+00	0.00000E+00
8	8.40856E-01	4.58333E-02	8.41969E-01	2.55825E-03	0.00000E+00	0.00000E+00
9	8.61142E-01	5.03333E-02	8.44708E-01	3.48951E-03	0.00000E+00	0.00000E+00
10	8.85011E-01	5.50000E-02	8.49746E-01	5.87468E-03	0.00000E+00	0.00000E+00
11	8.82924E-01	5.86667E-02	8.53433E-01	6.35866E-03	0.00000E+00	0.00000E+00
12	8.41548E-01	6.31667E-02	8.52244E-01	5.81020E-03	0.00000E+00	0.00000E+00
13	8.04080E-01	6.86667E-02	8.47866E-01	6.84048E-03	0.00000E+00	0.00000E+00
14	8.09894E-01	7.33333E-02	8.44701E-01	7.00043E-03	0.00000E+00	0.00000E+00
15	8.95721E-01	7.78333E-02	8.48626E-01	7.54117E-03	0.00000E+00	0.00000E+00
16	8.65492E-01	8.15000E-02	8.49831E-01	7.08493E-03	0.00000E+00	0.00000E+00
17	8.45510E-01	8.70000E-02	8.49543E-01	6.60200E-03	0.00000E+00	0.00000E+00
18	8.28225E-01	9.16667E-02	8.48210E-01	6.31770E-03	0.00000E+00	0.00000E+00
19	8.75386E-01	9.61667E-02	8.49809E-01	6.14598E-03	0.00000E+00	0.00000E+00
20	8.53864E-01	1.00833E-01	8.50034E-01	5.79886E-03	0.00000E+00	0.00000E+00
21	8.80788E-01	1.05333E-01	8.51653E-01	5.71901E-03	0.00000E+00	0.00000E+00
22	8.32813E-01	1.09833E-01	8.50711E-01	5.50670E-03	0.00000E+00	0.00000E+00
23	8.76072E-01	1.14500E-01	8.51918E-01	5.37533E-03	0.00000E+00	0.00000E+00
24	8.22029E-01	1.19000E-01	8.50560E-01	5.30220E-03	0.00000E+00	0.00000E+00
25	8.58738E-01	1.23667E-01	8.50915E-01	5.07889E-03	0.00000E+00	0.00000E+00
26	8.24917E-01	1.28167E-01	8.49832E-01	4.98187E-03	0.00000E+00	0.00000E+00
27	8.16580E-01	1.32833E-01	8.48502E-01	4.96009E-03	0.00000E+00	0.00000E+00
28	8.62203E-01	1.37333E-01	8.49029E-01	4.79455E-03	0.00000E+00	0.00000E+00
29	8.42564E-01	1.42000E-01	8.48789E-01	4.61977E-03	0.00000E+00	0.00000E+00
30	8.65056E-01	1.46500E-01	8.49370E-01	4.48947E-03	0.00000E+00	0.00000E+00
31	8.34550E-01	1.51167E-01	8.48859E-01	4.36193E-03	0.00000E+00	0.00000E+00
32	8.32288E-01	1.55667E-01	8.48307E-01	4.25008E-03	0.00000E+00	0.00000E+00
33	8.36287E-01	1.60333E-01	8.47919E-01	4.12894E-03	0.00000E+00	0.00000E+00
34	8.39791E-01	1.64833E-01	8.47665E-01	4.00589E-03	0.00000E+00	0.00000E+00
35	8.46562E-01	1.69500E-01	8.47632E-01	3.88274E-03	0.00000E+00	0.00000E+00
36	8.51358E-01	1.74000E-01	8.47741E-01	3.76841E-03	0.00000E+00	0.00000E+00
37	8.26842E-01	1.78500E-01	8.47144E-01	3.70756E-03	0.00000E+00	0.00000E+00
38	8.42660E-01	1.83167E-01	8.47020E-01	3.60525E-03	0.00000E+00	0.00000E+00
39	8.48956E-01	1.87667E-01	8.47072E-01	3.50685E-03	0.00000E+00	0.00000E+00
40	8.30549E-01	1.92333E-01	8.46637E-01	3.44090E-03	0.00000E+00	0.00000E+00
41	8.23712E-01	1.96833E-01	8.46049E-01	3.40267E-03	0.00000E+00	0.00000E+00
42	8.43639E-01	2.01500E-01	8.45989E-01	3.31706E-03	0.00000E+00	0.00000E+00
43	8.15275E-01	2.06000E-01	8.45240E-01	3.32074E-03	0.00000E+00	0.00000E+00
44	8.30561E-01	2.11500E-01	8.44891E-01	3.25951E-03	0.00000E+00	0.00000E+00
45	8.43280E-01	2.16167E-01	8.44853E-01	3.18302E-03	0.00000E+00	0.00000E+00
46	8.88356E-01	2.20667E-01	8.45842E-01	3.26323E-03	0.00000E+00	0.00000E+00
47	8.75127E-01	2.25333E-01	8.46493E-01	3.25560E-03	0.00000E+00	0.00000E+00
48	8.70464E-01	2.29833E-01	8.47014E-01	3.22640E-03	0.00000E+00	0.00000E+00
49	9.04136E-01	2.34333E-01	8.48229E-01	3.38287E-03	0.00000E+00	0.00000E+00
50	8.22100E-01	2.39000E-01	8.47685E-01	3.35609E-03	0.00000E+00	0.00000E+00
51	8.68152E-01	2.43500E-01	8.48102E-01	3.31332E-03	0.00000E+00	0.00000E+00
52	8.91131E-01	2.47167E-01	8.48963E-01	3.35850E-03	0.00000E+00	0.00000E+00
53	8.33321E-01	2.52667E-01	8.48656E-01	3.30624E-03	0.00000E+00	0.00000E+00
54	8.40383E-01	2.57333E-01	8.48497E-01	3.24594E-03	0.00000E+00	0.00000E+00
55	8.83680E-01	2.61833E-01	8.49161E-01	3.25257E-03	0.00000E+00	0.00000E+00
56	8.48595E-01	2.66500E-01	8.49151E-01	3.19178E-03	0.00000E+00	0.00000E+00
57	8.57729E-01	2.71000E-01	8.49306E-01	3.13709E-03	0.00000E+00	0.00000E+00
58	8.16152E-01	2.75667E-01	8.48714E-01	3.13694E-03	0.00000E+00	0.00000E+00
59	8.44507E-01	2.79333E-01	8.48641E-01	3.08230E-03	0.00000E+00	0.00000E+00
60	8.69826E-01	2.84833E-01	8.49006E-01	3.05064E-03	0.00000E+00	0.00000E+00
.						
.						
.						
.						
.						
.						
347	8.53195E-01	1.61767E+00	8.48238E-01	1.16308E-03	0.00000E+00	0.00000E+00
348	8.41278E-01	1.62217E+00	8.48218E-01	1.15989E-03	0.00000E+00	0.00000E+00
349	8.61070E-01	1.62683E+00	8.48255E-01	1.15713E-03	0.00000E+00	0.00000E+00
350	8.56195E-01	1.63050E+00	8.48278E-01	1.15403E-03	0.00000E+00	0.00000E+00
351	8.52946E-01	1.63500E+00	8.48291E-01	1.15080E-03	0.00000E+00	0.00000E+00
352	8.67002E-01	1.63967E+00	8.48345E-01	1.14875E-03	0.00000E+00	0.00000E+00
353	8.44530E-01	1.64417E+00	8.48334E-01	1.14552E-03	0.00000E+00	0.00000E+00
354	8.46283E-01	1.64967E+00	8.48328E-01	1.14228E-03	0.00000E+00	0.00000E+00
355	8.43665E-01	1.65417E+00	8.48315E-01	1.13911E-03	0.00000E+00	0.00000E+00
356	8.65090E-01	1.65883E+00	8.48362E-01	1.13688E-03	0.00000E+00	0.00000E+00
357	8.67324E-01	1.66333E+00	8.48416E-01	1.13493E-03	0.00000E+00	0.00000E+00
358	8.36856E-01	1.66800E+00	8.48383E-01	1.13220E-03	0.00000E+00	0.00000E+00
359	8.55767E-01	1.67250E+00	8.48404E-01	1.12922E-03	0.00000E+00	0.00000E+00
360	8.15850E-01	1.67717E+00	8.48313E-01	1.12972E-03	0.00000E+00	0.00000E+00
361	8.28116E-01	1.68167E+00	8.48257E-01	1.12798E-03	0.00000E+00	0.00000E+00
362	8.36308E-01	1.68633E+00	8.48223E-01	1.12533E-03	0.00000E+00	0.00000E+00
363	8.40646E-01	1.69083E+00	8.48202E-01	1.12240E-03	0.00000E+00	0.00000E+00
364	8.13041E-01	1.69633E+00	8.48105E-01	1.12350E-03	0.00000E+00	0.00000E+00
365	8.12622E-01	1.70100E+00	8.48008E-01	1.12466E-03	0.00000E+00	0.00000E+00
366	8.81083E-01	1.70467E+00	8.48098E-01	1.12524E-03	0.00000E+00	0.00000E+00
367	8.86031E-01	1.70917E+00	8.48202E-01	1.12696E-03	0.00000E+00	0.00000E+00
368	8.97505E-01	1.71367E+00	8.48337E-01	1.13192E-03	0.00000E+00	0.00000E+00

369	8.26094E-01	1.71833E+00	8.48276E-01	1.13045E-03	0.00000E+00	0.00000E+00
370	8.32546E-01	1.72283E+00	8.48234E-01	1.12819E-03	0.00000E+00	0.00000E+00
371	8.54752E-01	1.72750E+00	8.48251E-01	1.12527E-03	0.00000E+00	0.00000E+00
372	8.49933E-01	1.73200E+00	8.48256E-01	1.12223E-03	0.00000E+00	0.00000E+00
373	8.72334E-01	1.73667E+00	8.48321E-01	1.12108E-03	0.00000E+00	0.00000E+00
374	8.29218E-01	1.74117E+00	8.48269E-01	1.11924E-03	0.00000E+00	0.00000E+00
375	8.03281E-01	1.74667E+00	8.48149E-01	1.12273E-03	0.00000E+00	0.00000E+00
376	8.34387E-01	1.75133E+00	8.48112E-01	1.12033E-03	0.00000E+00	0.00000E+00
377	8.40906E-01	1.75583E+00	8.48093E-01	1.11751E-03	0.00000E+00	0.00000E+00
378	8.40624E-01	1.76050E+00	8.48073E-01	1.11471E-03	0.00000E+00	0.00000E+00
379	8.40683E-01	1.76500E+00	8.48053E-01	1.11192E-03	0.00000E+00	0.00000E+00
380	8.59705E-01	1.76950E+00	8.48084E-01	1.10940E-03	0.00000E+00	0.00000E+00
381	8.66334E-01	1.77417E+00	8.48132E-01	1.10752E-03	0.00000E+00	0.00000E+00
382	8.64804E-01	1.77867E+00	8.48176E-01	1.10547E-03	0.00000E+00	0.00000E+00
383	8.34000E-01	1.78333E+00	8.48139E-01	1.10319E-03	0.00000E+00	0.00000E+00
384	8.87988E-01	1.78783E+00	8.48243E-01	1.10524E-03	0.00000E+00	0.00000E+00
385	8.51798E-01	1.79250E+00	8.48253E-01	1.10239E-03	0.00000E+00	0.00000E+00
386	8.85293E-01	1.79700E+00	8.48349E-01	1.10373E-03	0.00000E+00	0.00000E+00
387	8.45941E-01	1.80167E+00	8.48343E-01	1.10088E-03	0.00000E+00	0.00000E+00
388	8.67844E-01	1.80617E+00	8.48393E-01	1.09919E-03	0.00000E+00	0.00000E+00
389	8.40807E-01	1.81083E+00	8.48374E-01	1.09652E-03	0.00000E+00	0.00000E+00
390	8.51910E-01	1.81533E+00	8.48383E-01	1.09373E-03	0.00000E+00	0.00000E+00
391	8.57679E-01	1.82000E+00	8.48407E-01	1.09117E-03	0.00000E+00	0.00000E+00
392	8.56160E-01	1.82450E+00	8.48427E-01	1.08855E-03	0.00000E+00	0.00000E+00
393	8.90938E-01	1.82917E+00	8.48535E-01	1.09120E-03	0.00000E+00	0.00000E+00
394	7.97043E-01	1.83367E+00	8.48404E-01	1.09631E-03	0.00000E+00	0.00000E+00
395	8.77414E-01	1.83817E+00	8.48478E-01	1.09600E-03	0.00000E+00	0.00000E+00
396	8.73760E-01	1.84283E+00	8.48542E-01	1.09510E-03	0.00000E+00	0.00000E+00
397	8.81085E-01	1.84733E+00	8.48624E-01	1.09542E-03	0.00000E+00	0.00000E+00
398	8.69752E-01	1.85200E+00	8.48678E-01	1.09396E-03	0.00000E+00	0.00000E+00
399	8.74167E-01	1.85650E+00	8.48742E-01	1.09308E-03	0.00000E+00	0.00000E+00
400	8.40203E-01	1.86117E+00	8.48720E-01	1.09055E-03	0.00000E+00	0.00000E+00
401	8.12706E-01	1.86567E+00	8.48630E-01	1.09155E-03	0.00000E+00	0.00000E+00
402	8.68954E-01	1.87033E+00	8.48681E-01	1.09000E-03	0.00000E+00	0.00000E+00
403	8.54589E-01	1.87483E+00	8.48696E-01	1.08738E-03	0.00000E+00	0.00000E+00

KENO MESSAGE NUMBER K5-123 EXECUTION TERMINATED DUE TO COMPLETION OF THE SPECIFIED NUMBER OF GENERATIONS.

TRIGA - PREF. FLOOD CANISTER

LIFETIME = 6.28682E-05 + OR - 1.56887E-07 GENERATION TIME = 2.75919E-05 + OR - 6.62512E-08
NU BAR = 2.42436E+00 + OR - 2.75467E-05 AVERAGE FISSION GROUP = 2.17509E+01 + OR - 7.91590E-03
ENERGY(EV) OF THE AVERAGE LETHARGY CAUSING FISSION = 2.12558E-01 + OR - 1.18250E-03

NO. OF INITIAL GENERATIONS SKIPPED	AVERAGE K-EFFECTIVE	DEVIATION	67 PER CENT CONFIDENCE INTERVAL	95 PER CENT CONFIDENCE INTERVAL	99 PER CENT CONFIDENCE INTERVAL	NUMBER OF HISTORIES
3	0.84872	+ OR - 0.00109	0.84763 TO 0.84981	0.84654 TO 0.85090	0.84545 TO 0.85199	400000
4	0.84872	+ OR - 0.00109	0.84763 TO 0.84982	0.84654 TO 0.85091	0.84544 TO 0.85200	399000
5	0.84872	+ OR - 0.00110	0.84762 TO 0.84981	0.84652 TO 0.85091	0.84543 TO 0.85200	398000
6	0.84874	+ OR - 0.00110	0.84764 TO 0.84984	0.84655 TO 0.85094	0.84545 TO 0.85203	397000
7	0.84878	+ OR - 0.00110	0.84768 TO 0.84988	0.84658 TO 0.85098	0.84548 TO 0.85208	396000
8	0.84880	+ OR - 0.00110	0.84770 TO 0.84990	0.84659 TO 0.85100	0.84549 TO 0.85211	395000
9	0.84877	+ OR - 0.00110	0.84766 TO 0.84987	0.84656 TO 0.85098	0.84545 TO 0.85208	394000
10	0.84867	+ OR - 0.00110	0.84757 TO 0.84978	0.84647 TO 0.85088	0.84536 TO 0.85199	393000
11	0.84859	+ OR - 0.00110	0.84748 TO 0.84969	0.84638 TO 0.85079	0.84528 TO 0.85190	392000
12	0.84860	+ OR - 0.00111	0.84750 TO 0.84971	0.84639 TO 0.85082	0.84529 TO 0.85192	391000
17	0.84866	+ OR - 0.00110	0.84756 TO 0.84976	0.84646 TO 0.85087	0.84536 TO 0.85197	386000
22	0.84859	+ OR - 0.00111	0.84748 TO 0.84970	0.84637 TO 0.85081	0.84526 TO 0.85192	381000
27	0.84871	+ OR - 0.00111	0.84759 TO 0.84982	0.84648 TO 0.85094	0.84537 TO 0.85205	376000
32	0.84873	+ OR - 0.00113	0.84760 TO 0.84985	0.84648 TO 0.85098	0.84535 TO 0.85210	371000
37	0.84884	+ OR - 0.00114	0.84771 TO 0.84998	0.84657 TO 0.85112	0.84543 TO 0.85226	366000
42	0.84900	+ OR - 0.00115	0.84784 TO 0.85015	0.84669 TO 0.85130	0.84554 TO 0.85245	361000
47	0.84897	+ OR - 0.00115	0.84782 TO 0.85013	0.84667 TO 0.85128	0.84551 TO 0.85244	356000
.						
.						
.						
.						
.						
.						
367	0.85370	+ OR - 0.00398	0.84972 TO 0.85768	0.84574 TO 0.86165	0.84177 TO 0.86563	36000
372	0.85395	+ OR - 0.00425	0.84970 TO 0.85819	0.84545 TO 0.86244	0.84120 TO 0.86669	31000
377	0.85739	+ OR - 0.00437	0.85302 TO 0.86176	0.84865 TO 0.86613	0.84429 TO 0.87050	26000
382	0.85810	+ OR - 0.00528	0.85282 TO 0.86337	0.84754 TO 0.86865	0.84227 TO 0.87393	21000
387	0.85719	+ OR - 0.00622	0.85097 TO 0.86341	0.84475 TO 0.86963	0.83853 TO 0.87584	16000
392	0.85824	+ OR - 0.00897	0.84926 TO 0.86721	0.84029 TO 0.87618	0.83132 TO 0.88516	11000
397	0.85340	+ OR - 0.00961	0.84378 TO 0.86301	0.83417 TO 0.87262	0.82456 TO 0.88223	6000

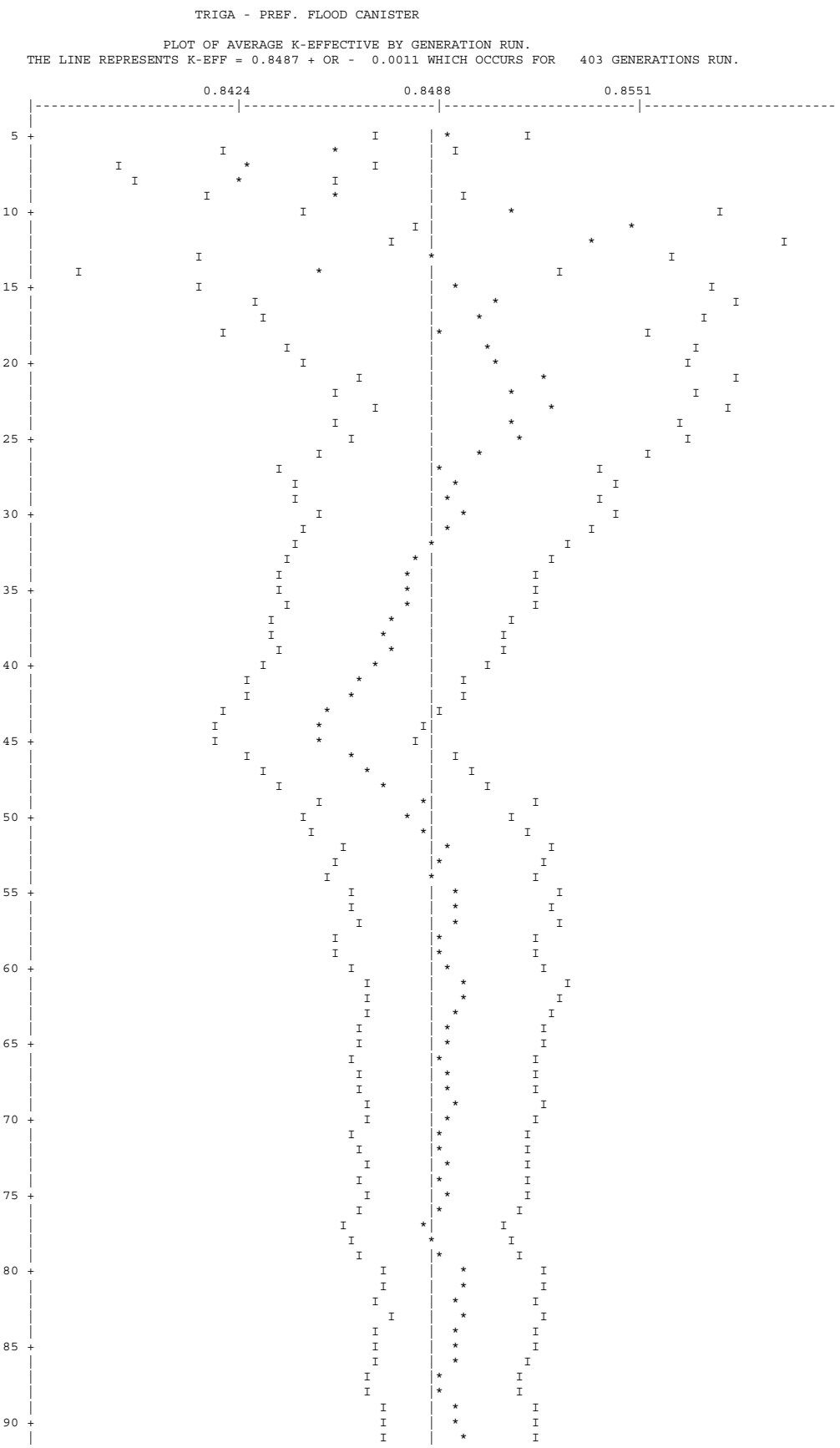
TRIGA - PREF. FLOOD CANISTER
PLOT OF AVERAGE K-EFFECTIVE BY GENERATION RUN.
THE LINE REPRESENTS K-EFF = 0.8487 + OR - 0.0011 WHICH OCCURS FOR 403 GENERATIONS RUN.
0.8424
0.8488
0.8551
5
10
15
20
25
30
35
40
45
50
55
60
65
70
75
80
85
90

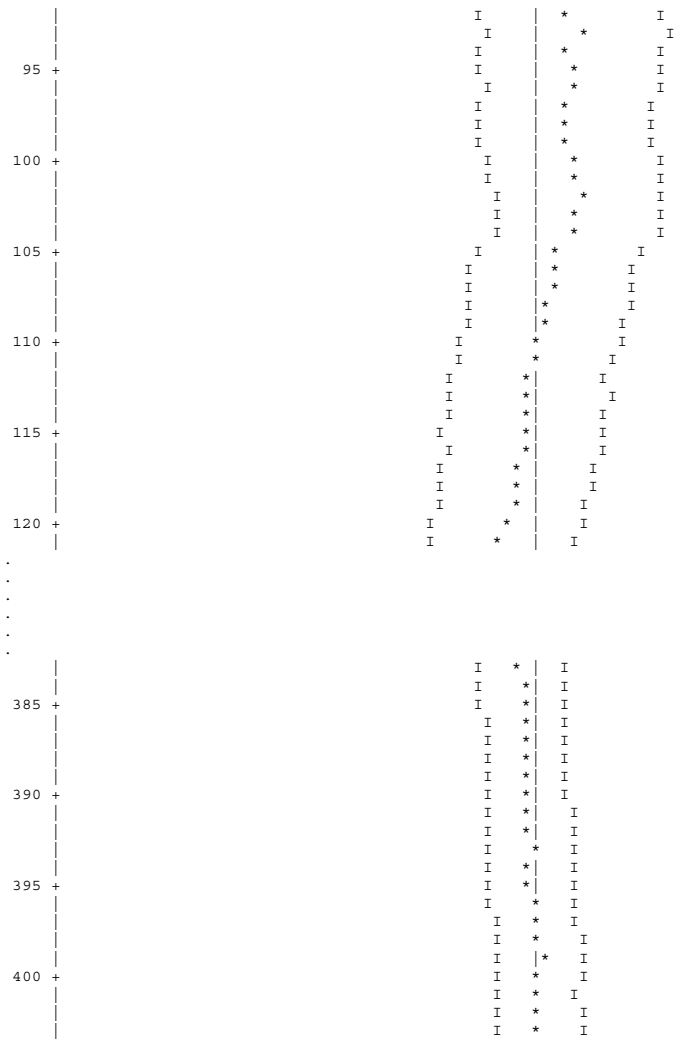

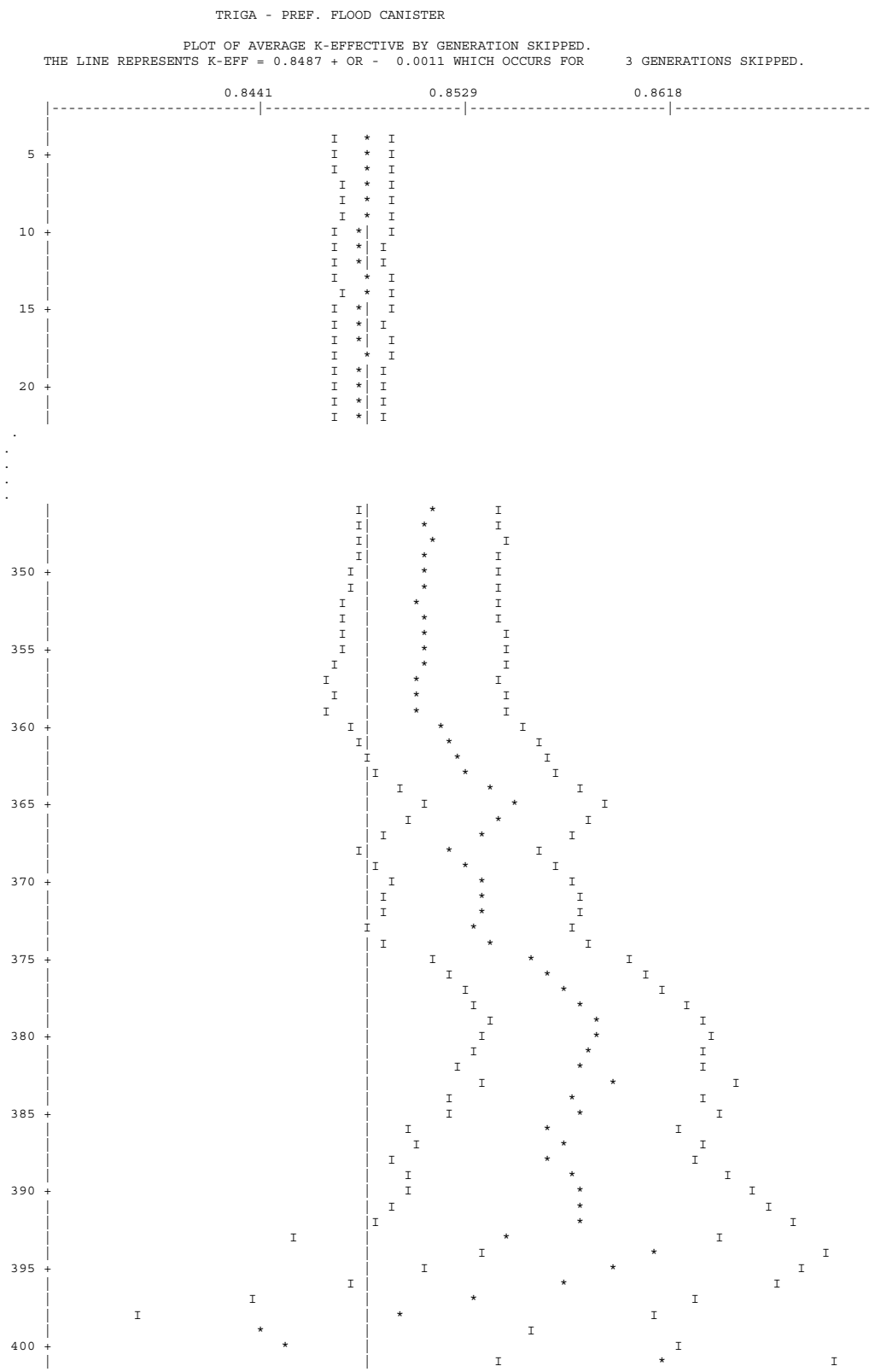
TRIGA - PREF. FLOOD CANISTER
PLOT OF AVERAGE K-EFFECTIVE BY GENERATION SKIPPED.
THE LINE REPRESENTS K-EFF = 0.8487 + OR - 0.0011 WHICH OCCURS FOR 3 GENERATIONS SKIPPED.
0.8441
0.8529
0.8618
5
10
15
20
350
355
360
365
370
375
380
385
390
395
400

TRIGA - PREF. FLOOD CANISTER

SKIPPING 3 GENERATIONS

GROUP	FISSION FRACTION	UNIT	REGION	FISSIONS	PERCENT DEVIATION	ABSORPTIONS	PERCENT DEVIATION	LEAKAGE	PERCENT DEVIATION
1	0.0011			9.11016E-04	2.0483	1.44722E-03	1.4308	0.00000E+00	0.0000
2	0.0049			4.13437E-03	0.6654	4.38445E-03	0.4784	0.00000E+00	0.0000
3	0.0060			5.10848E-03	0.5809	3.08989E-03	0.4698	0.00000E+00	0.0000
4	0.0031			2.59355E-03	0.6454	1.65717E-03	0.5041	0.00000E+00	0.0000
5	0.0027			2.27992E-03	0.5340	2.81194E-03	0.3798	0.00000E+00	0.0000
6	0.0041			3.45885E-03	0.4284	9.91625E-03	0.3262	0.00000E+00	0.0000
7	0.0055			4.70854E-03	0.3586	2.14216E-02	0.2862	0.00000E+00	0.0000
8	0.0057			4.82222E-03	0.3479	1.88953E-02	0.2953	0.00000E+00	0.0000
9	0.0075			6.38633E-03	0.3280	2.05380E-02	0.2566	0.00000E+00	0.0000
10	0.0162			1.37530E-02	0.3626	5.00036E-02	0.2732	0.00000E+00	0.0000
11	0.0324			2.75028E-02	0.3279	6.90049E-02	0.2278	0.00000E+00	0.0000
12	0.0397			3.36610E-02	0.3132	5.98571E-02	0.2109	0.00000E+00	0.0000
13	0.0340			2.88596E-02	0.2898	6.56003E-02	0.2109	0.00000E+00	0.0000
14	0.0256			2.16960E-02	0.2821	8.09273E-02	0.1985	0.00000E+00	0.0000
15	0.0053			4.46374E-03	0.3998	2.89047E-02	0.3705	0.00000E+00	0.0000
16	0.0035			2.94426E-03	0.4996	1.57641E-02	0.4189	0.00000E+00	0.0000
17	0.0052			4.40148E-03	0.7187	8.94175E-03	0.4698	0.00000E+00	0.0000
18	0.0068			5.74522E-03	0.6995	8.42296E-03	0.4837	0.00000E+00	0.0000
19	0.0082			6.98103E-03	0.5248	1.31466E-02	0.4587	0.00000E+00	0.0000
20	0.0323			2.73991E-02	0.3283	4.09554E-02	0.3806	0.00000E+00	0.0000
21	0.0164			1.39255E-02	0.4911	1.53079E-02	0.4510	0.00000E+00	0.0000
22	0.0366			3.10892E-02	0.3817	2.98264E-02	0.3818	0.00000E+00	0.0000
23	0.1058			8.97681E-02	0.2413	7.87515E-02	0.2410	0.00000E+00	0.0000
24	0.1783			1.51363E-01	0.2237	1.16485E-01	0.2203	0.00000E+00	0.0000
25	0.1479			1.25517E-01	0.2525	9.01161E-02	0.2404	0.00000E+00	0.0000
26	0.1886			1.60051E-01	0.2628	1.06558E-01	0.2549	0.00000E+00	0.0000
27	0.0768			6.51929E-02	0.3695	3.90816E-02	0.3829	0.00000E+00	0.0000
SYSTEM TOTAL =				8.48718E-01	0.1284	1.00182E+00	0.0457	0.00000E+00	0.0000

ELAPSED TIME 1.87483 MINUTES

RANDOM NUMBER= 4CFD05CD34A0

TRIGA - PREF. FLOOD CANISTER

FREQUENCY FOR GENERATIONS 4 TO 403

0.7929 TO 0.8010	***
0.8010 TO 0.8091	**********
0.8091 TO 0.8172	**********
0.8172 TO 0.8253	**********
0.8253 TO 0.8334	**********
0.8334 TO 0.8415	**********
0.8415 TO 0.8496	**********
0.8496 TO 0.8577	**********
0.8577 TO 0.8658	**********
0.8658 TO 0.8739	**********
0.8739 TO 0.8820	**********
0.8820 TO 0.8901	**********
0.8901 TO 0.8982	**********
0.8982 TO 0.9063	***
0.9063 TO 0.9144	*

FREQUENCY FOR GENERATIONS 104 TO 403

0.7929 TO 0.8010	***
0.8010 TO 0.8091	**********
0.8091 TO 0.8172	**********
0.8172 TO 0.8253	**********
0.8253 TO 0.8334	**********
0.8334 TO 0.8415	**********
0.8415 TO 0.8496	**********
0.8496 TO 0.8577	**********
0.8577 TO 0.8658	**********
0.8658 TO 0.8739	**********
0.8739 TO 0.8820	**********
0.8820 TO 0.8901	********
0.8901 TO 0.8982	********
0.8982 TO 0.9063	**
0.9063 TO 0.9144	

FREQUENCY FOR GENERATIONS 204 TO 403

0.7929 TO 0.8010	***
0.8010 TO 0.8091	********
0.8091 TO 0.8172	**********
0.8172 TO 0.8253	**********
0.8253 TO 0.8334	**********
0.8334 TO 0.8415	**********
0.8415 TO 0.8496	**********
0.8496 TO 0.8577	**********
0.8577 TO 0.8658	**********
0.8658 TO 0.8739	**********
0.8739 TO 0.8820	**********
0.8820 TO 0.8901	******
0.8901 TO 0.8982	******
0.8982 TO 0.9063	**
0.9063 TO 0.9144	

TRIGA - PREF. FLOOD CANISTER

FREQUENCY FOR GENERATIONS 304 TO 403

```
0.7929 TO 0.8010     *
0.8010 TO 0.8091     **
0.8091 TO 0.8172     *******
0.8172 TO 0.8253     ***
0.8253 TO 0.8334     ******
0.8334 TO 0.8415     ****************
0.8415 TO 0.8496     *******
0.8496 TO 0.8577     ******************
0.8577 TO 0.8658     ************
0.8658 TO 0.8739     ********************
0.8739 TO 0.8820     ****
0.8820 TO 0.8901     ****
0.8901 TO 0.8982     **
0.8982 TO 0.9063
0.9063 TO 0.9144
```

Figure 6.6.6-4 TRIGA Fuel Cluster Rods – Maximum Reactivity HEU Case

```
       PRIMARY MODULE ACCESS AND INPUT RECORD ( SCALE DRIVER - 95/03/29 - 09:06:37 )
MODULE CSAS25   WILL BE CALLED
  TRIGA - PREF. FLOOD CANISTER
  ' ACCIDENT CONDITION CASK ARRAY - CASKS TOUCHING
  ' DAMGED FUEL PAYLOAD - CANISTER FLOODED AT 0.9982 G/CM^3
  ' ROD GEOMETRY - DRY CASK MOST REACTIVE CONFIGURATION
  ' CASK CAVITY MODERATOR DENSITY 1E-20 GM^3
  ' CASK EXTERIOR MODERATOR DENSITY 1E-20 GM^3
  27GROUPNDF4  MULT
  'UNCANISTERED FUEL
  U-235   1 0.0 1.4646E-03 END
  U-238   1 0.0 7.6111E-05 END
  ZR      1 0.0 3.7145E-02 END
  H       1 0.0 6.3147E-02 END
  'CLAD INCOLOY
  NI      2 0.0 0.028516 END
  FE      2 0.0 0.033820 END
  CR      2 0.0 0.021151 END
  C       2 0.0 0.000399 END
  MN      2 0.0 0.001306 END
  S       2 0.0 0.000022 END
  SI      2 0.0 0.001703 END
  CU      2 0.0 0.000560 END
  AL      2 0.0 0.000266 END
  TI      2 0.0 0.000150 END
  'CASK INTERIOR MODERATOR MATERIAL
  H2O     3 1.0E-20 293.0 END
  'END FITTING FOR FUEL ELEMENT
  SS304   4 0.4968  293.0 END
  H2O     4 1.0E-20 293.0 END
  'BASKET, AND CASK
  SS304   5 1.0 293.0 END
  'AL FUEL HOLDER
  AL      6 1.0 293.0 END
  'LEAD SHIELD
  PB      7 1.0 293.0 END
  'NEUTRON SHIELD
  H2O     8 1.0E-20 293.0 END
  'CASK EXTERNAL MATERIAL
  H2O     9 1.0E-20 293.0 END
  'MIXTURE (FUEL) FOR CANISTER
  U-235   10 0.0 2.3773E-04 END
  U-238   10 0.0 1.2354E-05 END
  ZR      10 0.0 6.0293E-03 END
  H       10 0.0 1.0250E-02 END
  H2O    10 DEN=0.8362 1.0  300.0 END
  'CANISTER INTERNAL MODERATOR
  H2O    11 DEN=0.9982 1.0  293.0 END
  ' SECONDARY CASK CAVITY MATERIAL FOR MULTICELL CARD
  H2O     12 1.0E-20 293.0 END
  END COMP
  BUCKLEDCYL WHITE REFLECTED 0.0 57.15 END
  1 0.6731 2 0.7112 3 0.80518 6 0.9525 12 1.0748 END ZONE
  TRIGA - PREF. FLOOD CANISTER
  READ PARAM TME=170.0 GEN=403 NPG=1000 RUN=YES PLT=NO
  TBA=2.0 END PARAM
  READ GEOM
  UNIT 1
  COM='TRIGA FUEL (SMEARED)'
  CYLINDER 10 1 3.9623 60.959 0.001
  UNIT 5
  COM='3.38 in Width / 0.28 in Thickness DIVIDER CENTER STACK (SEALED)'
  CUBOID   5 1 2P4.2672 0.7112 0.0 +74.29 -8.255
  UNIT 6
  COM='3.38 in Width / 0.24 in Thickness DIVIDER OUTSIDE STACK (SEALED)'
  CUBOID   5 1 2P4.2672 0.6096 0.0 +74.29 -8.255
  UNIT 7
  COM='SEALED CANISTER'
  CYLINDER 11 1 3.9624 +60.96 0.0
  HOLE      1  0.0 0.0 0.0
  CYLINDER  5 1 4.1275 +63.50 -1.27
  CYLINDER  3 1 4.1275 +74.29 -8.255
  UNIT 10
  COM='TRIGA ELEMENTS IN Top of 3.38 in x 3.38 in OPENING (SEALED)'
  CUBOID    3 1 2P4.2672 2P4.2672 +74.29 -8.255
  HOLE 7    0.0 0.1397 0.0
  UNIT 11
  COM='TRIGA ELEMENTS IN Bottom of 3.38 in x 3.38 in OPENING (SEALED)'
  CUBOID    3 1 2P4.2672 2P4.2672 +74.29 -8.255
  HOLE 7    0.0 -0.1397 0.0
  UNIT 12
  COM='TRIGA ELEMENTS IN Bottom Right of 3.38 in x 3.38 in OPENING (SEALED)'
  CUBOID    3 1 2P4.2672 2P4.2672 +74.29 -8.255
  HOLE 7    +0.1397 -0.1397 0.0
  UNIT 13
  COM='TRIGA ELEMENTS IN Top Right of 3.38 in x 3.38 in OPENING (SEALED)'
  CUBOID    3 1 2P4.2672 2P4.2672 +74.29 -8.255
  HOLE 7    +0.1397 +0.1397 0.0
  UNIT 14
  COM='TRIGA ELEMENTS IN Bottom Left of 3.38 in x 3.38 in OPENING (SEALED)'
  CUBOID    3 1 2P4.2672 2P4.2672 +74.29 -8.255
```

```
HOLE 7    -0.1397 -0.1397 0.0
UNIT 15
COM='TRIGA ELEMENTS IN Top Left of 3.38 in x 3.38 in OPENING (SEALED)'
CUBOID    3 1 2P4.2672 2P4.2672 +74.29 -8.255
HOLE 7    -0.1397 +0.1397 0.0
UNIT 16
COM='TRIGA BASKET 3.38 in x 3.38 in CENTER OPENING (SEALED)'
CUBOID    3 1 2P4.2672 2P4.2672 +74.29 -8.255
UNIT 20
COM='CENTER COLUMN OF THREE OPENINGS w/ 0.28 in plate (SEALED)'
ARRAY 1  -4.2672 -13.5128 -8.255
REPLICATE 5 1 4R0.7112 2R0.0 1
UNIT 21
COM='LEFT OUTSIDE COLUMN OF TWO OPENINGS w/ 0.12 in plate (SEALED)'
ARRAY 2  -4.2672 -8.8392 -8.255
REPLICATE 5 1 0.0 0.3048 2R0.3048 2R0.0 1
UNIT 22
COM='RIGHT OUTSIDE COLUMN OF TWO OPENINGS w/ 0.12 in plate (SEALED)'
ARRAY 3  -4.2672 -8.8392 -8.255
REPLICATE 5 1 0.3048 0.0 2R0.3048 2R0.0 1
UNIT 30
COM='NAC-LWT TRIGA BASKET (SEALED)'
CYLINDER 3  1 17.1 +74.29 -8.255
HOLE 20 0.0 0.0 0.0
HOLE 21  -9.2457 0.0 0.0
HOLE 22  +9.2457 0.0 0.0
CYLINDER 5  1 18.9103 +74.93 -8.890
CYLINDER 7  1 33.4645 +74.93 -8.890
CYLINDER 5  1 36.5188 +74.93 -8.890
CYLINDER 8   1 49.2227 +74.93 -8.890
CYLINDER 5  1 49.8221 +74.93 -8.890
CUBOID   9   1 4P49.8221 +74.93 -8.890
'  ************************************
UNIT 41
COM='TRIGA FUEL ELEMENT'
CYLINDER 1 1 0.6731 2P28.575
CYLINDER 2 1 0.7112 2P28.575
CYLINDER 4 1 0.7112 43.48 -33.04
UNIT 45
COM='DIVIDER CENTER STACK'
CUBOID   5 1 2P4.2672 0.7112 0.0 43.48 -33.04
UNIT 46
COM='DIVIDER OUTSIDE STACK'
CUBOID   5 1 2P4.2672 0.6096 0.0 43.48 -33.04
UNIT 410
COM='TRIGA FUEL ELEMENTS IN AL TUBE, CENTERED'
CYLINDER  3 1 0.80518  43.48 -33.04
HOLE  41  0.0 0.0 0.0
CYLINDER  6 1 0.9525  43.48 -33.04
UNIT 411
COM='TRIGA FUEL ELEMENTS IN AL TUBE, RIGHT'
CYLINDER 3 1  0.80518  43.48 -33.04
HOLE  41   0.0938 0.0 0.0
CYLINDER 6 1 0.9525  43.48 -33.04
UNIT 412
COM='TRIGA FUEL ELEMENTS IN AL TUBE, LEFT'
CYLINDER 3 1  0.80518  43.48 -33.04
HOLE  41   -0.0938 0.0 0.0
CYLINDER 6 1 0.9525  43.48 -33.04
UNIT 413
COM='TRIGA FUEL ELEMENTS IN AL TUBE, TOP'
CYLINDER 3 1  0.80518  43.48 -33.04
HOLE  41  0.0  0.0938 0.0
CYLINDER 6 1 0.9525  43.48 -33.04
UNIT 414
COM='TRIGA FUEL ELEMENTS IN AL TUBE, BOTTOM'
CYLINDER 3 1  0.80518  43.48 -33.04
HOLE  41  0.0  -0.0938 0.0
CYLINDER 6 1 0.9525  43.48 -33.04
UNIT 415
COM='TRIGA FUEL ELEMENTS IN AL TUBE, TOP RIGHT'
CYLINDER 3 1  0.80518  43.48 -33.04
HOLE  41  0.0662 0.0662 0.0
CYLINDER 6 1 0.9525  43.48 -33.04
UNIT 416
COM='TRIGA FUEL ELEMENTS IN AL TUBE, TOP LEFT'
CYLINDER 3 1  0.80518  43.48 -33.04
HOLE  41  -0.0662 0.0662 0.0
CYLINDER 6 1 0.9525  43.48 -33.04
UNIT 417
COM='TRIGA FUEL ELEMENTS IN AL TUBE, BOTTOM RIGHT'
CYLINDER 3 1  0.80518  43.48 -33.04
HOLE  41  0.0662 -0.0662 0.0
CYLINDER 6 1 0.9525  43.48 -33.04
UNIT 418
COM='TRIGA FUEL ELEMENTS IN AL TUBE, BOTTOM LEFT'
CYLINDER 3 1  0.80518  43.48 -33.04
HOLE  41  -0.0662 -0.0662 0.0
CYLINDER 6 1 0.9525  43.48 -33.04
'  ************************************
UNIT 420
COM='AL TUBES WITH TRIGA FUEL, IN FUEL INSERT, CENTER OPENING'
CUBOID    3 1 4P4.1529 43.48 -33.04
HOLE           415  -2.8576 -2.8576      0
HOLE           413  -0.9525 -2.8576      0
```

```
HOLE            413    0.9525 -2.8576      0
HOLE            416    2.8576 -2.8576      0
HOLE            411   -2.8576 -0.9525      0
HOLE            415   -0.9525 -0.9525      0
HOLE            416    0.9525 -0.9525      0
HOLE            412    2.8576 -0.9525      0
HOLE            411   -2.8576  0.9525      0
HOLE            417   -0.9525  0.9525      0
HOLE            418    0.9525  0.9525      0
HOLE            412    2.8576  0.9525      0
HOLE            417   -2.8576  2.8576      0
HOLE            414   -0.9525  2.8576      0
HOLE            414    0.9525  2.8576      0
HOLE            418    2.8576  2.8576      0
CUBOID    3 1 4P4.1529 43.48 -33.04
' CHECK 4.1 CM ABOVE*********************
UNIT 421
COM='AL TUBES WITH TRIGA FUEL, IN FUEL INSERT, BOTTOM OPENING'
CUBOID    3 1 4P4.1529 43.48 -33.04
HOLE            415   -2.8576 -2.8576      0
HOLE            413   -0.9525 -2.8576      0
HOLE            413    0.9525 -2.8576      0
HOLE            416    2.8576 -2.8576      0
HOLE            411   -2.8576 -0.9525      0
HOLE            415   -0.9525 -0.9525      0
HOLE            416    0.9525 -0.9525      0
HOLE            412    2.8576 -0.9525      0
HOLE            411   -2.8576  0.9525      0
HOLE            417   -0.9525  0.9525      0
HOLE            418    0.9525  0.9525      0
HOLE            412    2.8576  0.9525      0
HOLE            417   -2.8576  2.8576      0
HOLE            414   -0.9525  2.8576      0
HOLE            414    0.9525  2.8576      0
HOLE            418    2.8576  2.8576      0
CUBOID     3 1 4P4.1529 43.48 -33.04
' CHECK 4.1 CM ABOVE*********************
UNIT 422
COM='AL TUBES WITH TRIGA FUEL, IN FUEL INSERT, TOP OPENING'
CUBOID     3 1 4P4.1529 43.48 -33.04
HOLE            415   -2.8576 -2.8576      0
HOLE            413   -0.9525 -2.8576      0
HOLE            413    0.9525 -2.8576      0
HOLE            416    2.8576 -2.8576      0
HOLE            411   -2.8576 -0.9525      0
HOLE            415   -0.9525 -0.9525      0
HOLE            416    0.9525 -0.9525      0
HOLE            412    2.8576 -0.9525      0
HOLE            411   -2.8576  0.9525      0
HOLE            417   -0.9525  0.9525      0
HOLE            418    0.9525  0.9525      0
HOLE            412    2.8576  0.9525      0
HOLE            417   -2.8576  2.8576      0
HOLE            414   -0.9525  2.8576      0
HOLE            414    0.9525  2.8576      0
HOLE            418    2.8576  2.8576      0
CUBOID     3 1 4P4.1529 43.48 -33.04
' CHECK 4.1 CM ABOVE*********************
UNIT 423
COM='AL TUBES WITH TRIGA FUEL, IN FUEL INSERT, BOTTOM LEFT OPENING'
CUBOID     3 1 4P4.1529 43.48 -33.04
HOLE            415   -2.8576 -2.8576      0
HOLE            413   -0.9525 -2.8576      0
HOLE            413    0.9525 -2.8576      0
HOLE            416    2.8576 -2.8576      0
HOLE            411   -2.8576 -0.9525      0
HOLE            415   -0.9525 -0.9525      0
HOLE            416    0.9525 -0.9525      0
HOLE            412    2.8576 -0.9525      0
HOLE            411   -2.8576  0.9525      0
HOLE            417   -0.9525  0.9525      0
HOLE            418    0.9525  0.9525      0
HOLE            412    2.8576  0.9525      0
HOLE            417   -2.8576  2.8576      0
HOLE            414   -0.9525  2.8576      0
HOLE            414    0.9525  2.8576      0
HOLE            418    2.8576  2.8576      0
CUBOID     3 1 4P4.1529 43.48 -33.04
' CHECK 4.1 CM ABOVE*********************
UNIT 424
COM='AL TUBES WITH TRIGA FUEL, IN FUEL INSERT, TOP LEFT OPENING'
CUBOID     3 1 4P4.1529 43.48 -33.04
HOLE            415   -2.8576 -2.8576      0
HOLE            413   -0.9525 -2.8576      0
HOLE            413    0.9525 -2.8576      0
HOLE            416    2.8576 -2.8576      0
HOLE            411   -2.8576 -0.9525      0
HOLE            415   -0.9525 -0.9525      0
HOLE            416    0.9525 -0.9525      0
HOLE            412    2.8576 -0.9525      0
HOLE            411   -2.8576  0.9525      0
HOLE            417   -0.9525  0.9525      0
HOLE            418    0.9525  0.9525      0
HOLE            412    2.8576  0.9525      0
HOLE            417   -2.8576  2.8576      0
```

```
HOLE            414  -0.9525  2.8576      0
HOLE            414   0.9525  2.8576      0
HOLE            418   2.8576  2.8576      0
CUBOID     3 1 4P4.1529 43.48 -33.04
' CHECK 4.1 CM ABOVE*********************
UNIT 425
COM='AL TUBES WITH TRIGA FUEL, IN FUEL INSERT, BOTTOM RIGHT OPENING'
CUBOID     3 1 4P4.1529 43.48 -33.04
HOLE            415  -2.8576 -2.8576      0
HOLE            413  -0.9525 -2.8576      0
HOLE            413   0.9525 -2.8576      0
HOLE            416   2.8576 -2.8576      0
HOLE            411  -2.8576 -0.9525      0
HOLE            415  -0.9525 -0.9525      0
HOLE            416   0.9525 -0.9525      0
HOLE            412   2.8576 -0.9525      0
HOLE            411  -2.8576  0.9525      0
HOLE            417  -0.9525  0.9525      0
HOLE            418   0.9525  0.9525      0
HOLE            412   2.8576  0.9525      0
HOLE            417  -2.8576  2.8576      0
HOLE            414  -0.9525  2.8576      0
HOLE            414   0.9525  2.8576      0
HOLE            418   2.8576  2.8576      0
CUBOID     3 1 4P4.1529 43.48 -33.04
' CHECK 4.1 CM ABOVE*********************
UNIT 426
COM='AL TUBES WITH TRIGA FUEL, IN FUEL INSERT, TOP RIGHT OPENING'
CUBOID     3 1 4P4.1529 43.48 -33.04
HOLE            415  -2.8576 -2.8576      0
HOLE            413  -0.9525 -2.8576      0
HOLE            413   0.9525 -2.8576      0
HOLE            416   2.8576 -2.8576      0
HOLE            411  -2.8576 -0.9525      0
HOLE            415  -0.9525 -0.9525      0
HOLE            416   0.9525 -0.9525      0
HOLE            412   2.8576 -0.9525      0
HOLE            411  -2.8576  0.9525      0
HOLE            417  -0.9525  0.9525      0
HOLE            418   0.9525  0.9525      0
HOLE            412   2.8576  0.9525      0
HOLE            417  -2.8576  2.8576      0
HOLE            414  -0.9525  2.8576      0
HOLE            414   0.9525  2.8576      0
HOLE            418   2.8576  2.8576      0
CUBOID     3 1 4P4.1529 43.48 -33.04
'  ***********************************
UNIT 430
COM='FUEL INSERT IN, CENTER OPENING'
CUBOID     3 1 4P4.2672 43.48 -33.04
UNIT 431
COM='FUEL INSERT IN, BOTTOM OPENING'
CUBOID     3 1 4P4.2672 43.48 -33.04
HOLE 421   0.0 -0.1143 0.0
UNIT 432
COM='FUEL INSERT IN, TOP OPENING'
CUBOID     3 1 4P4.2672 43.48 -33.04
HOLE 422   0.0 0.1143 0.0
UNIT 433
COM='FUEL INSERT IN, BOTTOM LEFT OPENING'
CUBOID     3 1 4P4.2672 43.48 -33.04
HOLE 423   -0.1143 -0.1143 0.0
UNIT 434
COM='FUEL INSERT IN, TOP LEFT OPENING'
CUBOID     3 1 4P4.2672 43.48 -33.04
HOLE 424   -0.1143 0.1143 0.0
UNIT 435
COM='FUEL INSERT IN, BOTOM RIGHT OPENING'
CUBOID     3 1 4P4.2672 43.48 -33.04
HOLE 425   0.1143 -0.1143 0.0
UNIT 436
COM='FUEL INSERT IN, TOP RIGHT OPENING'
CUBOID     3 1 4P4.2672 43.48 -33.04
HOLE 426   0.1143 0.1143 0.0
'  ***********************************
UNIT 440
COM='CENTER COLUMN OF THREE OPENINGS'
ARRAY 41  -4.2672 -13.5128 -33.04
REPLICATE 5 1 4R0.7112 2R0.0 1
UNIT 441
COM='LEFT OUTSIDE COLUMN OF TWO OPENINGS'
ARRAY 42  -4.2672 -8.8392 -33.04
REPLICATE 5 1 0.0 0.3408 2R0.3408 2R0.0 1
UNIT 442
COM='RIGHT OUTSIDE COLUMN OF TWO OPENINGS'
ARRAY 43  -4.2672 -8.8392 -33.04
REPLICATE 5 1 0.3408 0.0 2R0.3408 2R0.0 1
UNIT 450
COM='96 TRIGA FUEL ELEMENTS IN EACH LWT BASKET'
CYLINDER  3 1 17.1500 43.485 -33.045
HOLE 440   0.0    0.0 0.0
HOLE 441  -9.2457 0.0 0.0
HOLE 442  +9.2457 0.0 0.0
CYLINDER 5  1 18.9103 43.485 -33.045
CYLINDER 7  1 33.4645 43.485 -33.045
```

```
CYLINDER 5  1 36.5188 43.485 -33.045
CYLINDER 8  1 49.2227 43.485 -33.045
CYLINDER 5  1 49.8221 43.485 -33.045
CUBOID   9   1 4P49.8221 43.485 -33.045
'  ************************************
UNIT 80
COM='SIMPLIFIED LID STRUCTURE NAC-LWT'
CYLINDER 5 1 36.5188 2P14.1351
CYLINDER 9 1 49.8221 2P14.1351
CUBOID   9   1 4P49.8221 2P14.1351
UNIT 81
COM='SIMPLIFIED CASK BOTTOM STRUCTURE NAC-LWT'
CYLINDER 7 1 26.3525 2P3.81
CYLINDER 5 1 36.6188 +13.97 -12.7
CYLINDER 9 1 49.8221 +13.97 -12.7
CUBOID   9   1 4P49.8221 13.97 -12.7
GLOBAL UNIT 82
COM='STACK OF 5 BASKETS IN CASK'
ARRAY  20  -49.8221 -49.8221 -221.3
END GEOM
READ ARRAY
ARA=1 NUX=1 NUY=5 NUZ=1 FILL 10 5 16 5 11 END FILL
ARA=2 NUX=1 NUY=3 NUZ=1 FILL 13 6 12 END FILL
ARA=3 NUX=1 NUY=3 NUZ=1 FILL 15 6 14 END FILL
ARA=41 NUX=1 NUY=5 NUZ=1 FILL 432 45 430 45 431 END FILL
ARA=42 NUX=1 NUY=3 NUZ=1 FILL 436 46 435 END FILL
ARA=43 NUX=1 NUY=3 NUZ=1 FILL 434 46 433 END FILL
ARA=20 NUX=1 NUY=1 NUZ=7 FILL 81 30 3R450 30 80 END FILL
END ARRAY
READ BOUNDS ALL=MIR END BOUNDS
READ START XSM=-17 XSP=17 YSM=-17 YSP=17 ZSM=-200 ZSP=200 END START
READ PLOT
TTL='X-Y PLOT OF CASK (CANISTER ELEVATION)'
SCR=YES PIC=MAT LPI=10
UAX=1.0 VDN=-1.0 NAX=800
XUL=-50.0 YUL=50.0 ZUL=149.352
XLR=50.0 YLR=-50.0 ZLR=149.352 END
TTL='X-Y PLOT OF BASKET (CANISTER ELEVATION)'
SCR=YES PIC=MAT LPI=10
UAX=1.0 VDN=-1.0 NAX=800
XUL=-17.2 YUL=17.2 ZUL=149.352
XLR=17.2 YLR=-17.2 ZLR=149.352 END
TTL='X-Y PLOT OF BASKET (CAVITY MID PLANE)'
SCR=YES PIC=MAT LPI=10
UAX=1.0 VDN=-1.0 NAX=800
XUL=-17.2 YUL=17.2 ZUL=0.0
XLR=17.2 YLR=-17.2 ZLR=0.0 END
TTL='X-Y PLOT OF CENTER OPENING (CANISTER ELEVATION)'
SCR=YES PIC=MAT LPI=10
UAX=1.0 VDN=-1.0 NAX=800
XUL=-7.0 YUL=7.0 ZUL=149.352
XLR=7.0 YLR=-7.0 ZLR=149.352 END
TTL='X-Y PLOT OF PERIPHERAL OPENING (CANISTER ELEVATION)'
SCR=YES PIC=MAT LPI=10
UAX=1.0 VDN=-1.0 NAX=800
XUL=-7.0 YUL=16.0 ZUL=149.352
XLR=7.0  YLR=4.0 ZLR=149.352 END
TTL='Y-Z PLOT OF BASKET (CENTER OF FUEL ELEMENTS,CANISTER ELEVATION)'
SCR=YES PIC=MAT LPI=10
VAX=1.0 WDN=-1.0 NAX=800
XUL=2.12 YUL=-14.0 ZUL=186.69
XLR=2.12 YLR=-4.5 ZLR=112.014 END
TTL='Y-Z PLOT OF BASKET (CASK)'
SCR=YES PIC=MAT LPI=10
VAX=1.0 WDN=-1.0 NAX=800
XUL=2.12 YUL=-51 ZUL=220.0
XLR=2.12 YLR=+51 ZLR=-220.0
END PLOT
END DATA



**** PROBLEM PARAMETERS ****

LIB 27GROUPNDF4  LIBRARY
MXX           12 MIXTURES
MSC           29 COMPOSITION SPECIFICATIONS
IZM            5 MATERIAL ZONES
GE  MULTIREGION  GEOMETRY
MORE           0 0/1 DO NOT READ/READ OPTIONAL PARAMETER DATA
MSLN           0 FUEL SOLUTIONS


**** PROBLEM COMPOSITION DESCRIPTION ****

SC  U-235        STANDARD COMPOSITION
MX             1 MIXTURE NO.
DEN   1.4646E-03 ATOMIC DENSITY
ROTH      1.0000 THEORETICAL DENSITY
NEL            1 NO. ELEMENTS
ICP            1 0/1 MIXTURE/COMPOUND
           92235      1.00 ATOM/MOLECULE
END

SC  U-238        STANDARD COMPOSITION
```

```
    MX            1 MIXTURE NO.
    DEN   7.6111E-05 ATOMIC DENSITY
    ROTH      1.0000 THEORETICAL DENSITY
    NEL           1 NO. ELEMENTS
    ICP           1 0/1 MIXTURE/COMPOUND
             92238      1.00 ATOM/MOLECULE
    END

    SC  ZR          STANDARD COMPOSITION
    MX            1 MIXTURE NO.
    DEN   3.7145E-02 ATOMIC DENSITY
    ROTH      6.4900 THEORETICAL DENSITY
    NEL           1 NO. ELEMENTS
    ICP           1 0/1 MIXTURE/COMPOUND
            40000      1.00 ATOM/MOLECULE
    END

    SC  H           STANDARD COMPOSITION
    MX            1 MIXTURE NO.
    DEN   6.3147E-02 ATOMIC DENSITY
    ROTH      1.0000 THEORETICAL DENSITY
    NEL           1 NO. ELEMENTS
    ICP           1 0/1 MIXTURE/COMPOUND
             1001      1.00 ATOM/MOLECULE

'CLAD INCOLOY
    END

    SC  NI          STANDARD COMPOSITION
    MX            2 MIXTURE NO.
    DEN   2.8516E-02 ATOMIC DENSITY
    ROTH      8.9000 THEORETICAL DENSITY
    NEL           1 NO. ELEMENTS
    ICP           1 0/1 MIXTURE/COMPOUND
            28000      1.00 ATOM/MOLECULE
    END

    SC  FE          STANDARD COMPOSITION
    MX            2 MIXTURE NO.
    DEN   3.3820E-02 ATOMIC DENSITY
    ROTH      7.8600 THEORETICAL DENSITY
    NEL           1 NO. ELEMENTS
    ICP           1 0/1 MIXTURE/COMPOUND
            26000      1.00 ATOM/MOLECULE
    END

    SC  CR          STANDARD COMPOSITION
    MX            2 MIXTURE NO.
    DEN   2.1151E-02 ATOMIC DENSITY
    ROTH      7.2000 THEORETICAL DENSITY
    NEL           1 NO. ELEMENTS
    ICP           1 0/1 MIXTURE/COMPOUND
            24000      1.00 ATOM/MOLECULE
    END

    SC  C           STANDARD COMPOSITION
    MX            2 MIXTURE NO.
    DEN   3.9900E-04 ATOMIC DENSITY
    ROTH      2.1000 THEORETICAL DENSITY
    NEL           1 NO. ELEMENTS
    ICP           1 0/1 MIXTURE/COMPOUND
             6012      1.00 ATOM/MOLECULE
    END

    SC  MN          STANDARD COMPOSITION
    MX            2 MIXTURE NO.
    DEN   1.3060E-03 ATOMIC DENSITY
    ROTH      7.2000 THEORETICAL DENSITY
    NEL           1 NO. ELEMENTS
    ICP           1 0/1 MIXTURE/COMPOUND
            25055      1.00 ATOM/MOLECULE
    END

    SC  S           STANDARD COMPOSITION
    MX            2 MIXTURE NO.
    DEN   2.2000E-05 ATOMIC DENSITY
    ROTH      2.0700 THEORETICAL DENSITY
    NEL           1 NO. ELEMENTS
    ICP           1 0/1 MIXTURE/COMPOUND
            16000      1.00 ATOM/MOLECULE
    END

    SC  SI          STANDARD COMPOSITION
    MX            2 MIXTURE NO.
    DEN   1.7030E-03 ATOMIC DENSITY
    ROTH      2.3300 THEORETICAL DENSITY
    NEL           1 NO. ELEMENTS
    ICP           1 0/1 MIXTURE/COMPOUND
            14000      1.00 ATOM/MOLECULE
    END

    SC  CU          STANDARD COMPOSITION
    MX            2 MIXTURE NO.
    DEN   5.6000E-04 ATOMIC DENSITY
    ROTH      8.9200 THEORETICAL DENSITY
```

```
    NEL            1 NO. ELEMENTS
    ICP            1 0/1 MIXTURE/COMPOUND
             29000      1.00 ATOM/MOLECULE
    END

    SC  AL           STANDARD COMPOSITION
    MX             2 MIXTURE NO.
    DEN   2.6600E-04 ATOMIC DENSITY
    ROTH      2.7020 THEORETICAL DENSITY
    NEL            1 NO. ELEMENTS
    ICP            1 0/1 MIXTURE/COMPOUND
             13027      1.00 ATOM/MOLECULE
    END

    SC  TI           STANDARD COMPOSITION
    MX             2 MIXTURE NO.
    DEN   1.5000E-04 ATOMIC DENSITY
    ROTH      4.5000 THEORETICAL DENSITY
    NEL            1 NO. ELEMENTS
    ICP            1 0/1 MIXTURE/COMPOUND
             22000      1.00 ATOM/MOLECULE

'CASK INTERIOR MODERATOR MATERIAL
    END

    SC  H2O          STANDARD COMPOSITION
    MX             3 MIXTURE NO.
    VF        0.0000 VOLUME FRACTION
    ROTH      0.9982 THEORETICAL DENSITY
    NEL            2 NO. ELEMENTS
    ICP            1 0/1 MIXTURE/COMPOUND
    TEMP       293.0 DEG KELVIN
              1001      2.00 ATOMS/MOLECULE
              8016      1.00 ATOM/MOLECULE

'END FITTING FOR FUEL ELEMENT
    END

    SC  SS304        STANDARD COMPOSITION
    MX             4 MIXTURE NO.
    VF        0.4968 VOLUME FRACTION
    ROTH      7.9200 THEORETICAL DENSITY
    NEL            4 NO. ELEMENTS
    ICP            0 0/1 MIXTURE/COMPOUND
    TEMP       293.0 DEG KELVIN
              24304    19.000 WT%
              25055     2.000 WT%
              26304    69.500 WT%
              28304     9.500 WT%
    END

    SC  H2O          STANDARD COMPOSITION
    MX             4 MIXTURE NO.
    VF        0.0000 VOLUME FRACTION
    ROTH      0.9982 THEORETICAL DENSITY
    NEL            2 NO. ELEMENTS
    ICP            1 0/1 MIXTURE/COMPOUND
    TEMP       293.0 DEG KELVIN
              1001      2.00 ATOMS/MOLECULE
              8016      1.00 ATOM/MOLECULE

'BASKET, AND CASK
    END

    SC  SS304        STANDARD COMPOSITION
    MX             5 MIXTURE NO.
    VF        1.0000 VOLUME FRACTION
    ROTH      7.9200 THEORETICAL DENSITY
    NEL            4 NO. ELEMENTS
    ICP            0 0/1 MIXTURE/COMPOUND
    TEMP       293.0 DEG KELVIN
              24304    19.000 WT%
              25055     2.000 WT%
              26304    69.500 WT%
              28304     9.500 WT%

'AL FUEL HOLDER
    END

    SC  AL           STANDARD COMPOSITION
    MX             6 MIXTURE NO.
    VF        1.0000 VOLUME FRACTION
    ROTH      2.7020 THEORETICAL DENSITY
    NEL            1 NO. ELEMENTS
    ICP            1 0/1 MIXTURE/COMPOUND
    TEMP       293.0 DEG KELVIN
              13027      1.00 ATOM/MOLECULE

'LEAD SHIELD
    END

    SC  PB           STANDARD COMPOSITION
    MX             7 MIXTURE NO.
    VF        1.0000 VOLUME FRACTION
    ROTH     11.3440 THEORETICAL DENSITY
```

```
    NEL            1 NO. ELEMENTS
    ICP            1 0/1 MIXTURE/COMPOUND
    TEMP       293.0 DEG KELVIN
               82000      1.00 ATOM/MOLECULE

'NEUTRON SHIELD
    END

    SC  H2O          STANDARD COMPOSITION
    MX             8 MIXTURE NO.
    VF        0.0000 VOLUME FRACTION
    ROTH      0.9982 THEORETICAL DENSITY
    NEL            2 NO. ELEMENTS
    ICP            1 0/1 MIXTURE/COMPOUND
    TEMP       293.0 DEG KELVIN
                1001      2.00 ATOMS/MOLECULE
                8016      1.00 ATOM/MOLECULE

'CASK EXTERNAL MATERIAL
    END

    SC  H2O          STANDARD COMPOSITION
    MX             9 MIXTURE NO.
    VF        0.0000 VOLUME FRACTION
    ROTH      0.9982 THEORETICAL DENSITY
    NEL            2 NO. ELEMENTS
    ICP            1 0/1 MIXTURE/COMPOUND
    TEMP       293.0 DEG KELVIN
                1001      2.00 ATOMS/MOLECULE
                8016      1.00 ATOM/MOLECULE

'MIXTURE (FUEL) FOR CANISTER
    END

    SC  U-235        STANDARD COMPOSITION
    MX            10 MIXTURE NO.
    DEN   2.3773E-04 ATOMIC DENSITY
    ROTH      1.0000 THEORETICAL DENSITY
    NEL            1 NO. ELEMENTS
    ICP            1 0/1 MIXTURE/COMPOUND
               92235      1.00 ATOM/MOLECULE
    END

    SC  U-238        STANDARD COMPOSITION
    MX            10 MIXTURE NO.
    DEN   1.2354E-05 ATOMIC DENSITY
    ROTH      1.0000 THEORETICAL DENSITY
    NEL            1 NO. ELEMENTS
    ICP            1 0/1 MIXTURE/COMPOUND
               92238      1.00 ATOM/MOLECULE
    END

    SC  ZR           STANDARD COMPOSITION
    MX            10 MIXTURE NO.
    DEN   6.0293E-03 ATOMIC DENSITY
    ROTH      6.4900 THEORETICAL DENSITY
    NEL            1 NO. ELEMENTS
    ICP            1 0/1 MIXTURE/COMPOUND
               40000      1.00 ATOM/MOLECULE
    END

    SC  H            STANDARD COMPOSITION
    MX            10 MIXTURE NO.
    DEN   1.0250E-02 ATOMIC DENSITY
    ROTH      1.0000 THEORETICAL DENSITY
    NEL            1 NO. ELEMENTS
    ICP            1 0/1 MIXTURE/COMPOUND
                1001      1.00 ATOM/MOLECULE
    END

    SC  H2O          STANDARD COMPOSITION
    MX            10 MIXTURE NO.
    VF        1.0000 VOLUME FRACTION
    ROTH      0.8362 SPECIFIED DENSITY
    NEL            2 NO. ELEMENTS
    ICP            1 0/1 MIXTURE/COMPOUND
    TEMP       300.0 DEG KELVIN
                1001      2.00 ATOMS/MOLECULE
                8016      1.00 ATOM/MOLECULE

'CANISTER INTERNAL MODERATOR
    END

    SC  H2O          STANDARD COMPOSITION
    MX            11 MIXTURE NO.
    VF        1.0000 VOLUME FRACTION
    ROTH      0.9982 SPECIFIED DENSITY
    NEL            2 NO. ELEMENTS
    ICP            1 0/1 MIXTURE/COMPOUND
    TEMP       293.0 DEG KELVIN
                1001      2.00 ATOMS/MOLECULE
                8016      1.00 ATOM/MOLECULE

' SECONDARY CASK CAVITY MATERIAL FOR MULTICELL CARD
    END
```

```
SC  H2O          STANDARD COMPOSITION
MX            12 MIXTURE NO.
VF        0.0000 VOLUME FRACTION
ROTH      0.9982 THEORETICAL DENSITY
NEL            2 NO. ELEMENTS
ICP            1 0/1 MIXTURE/COMPOUND
TEMP       293.0 DEG KELVIN
            1001      2.00 ATOMS/MOLECULE
            8016      1.00 ATOM/MOLECULE
END


**** PROBLEM GEOMETRY ****

CS   BUCKLEDCYL   COORDINATE SYSTEM
BR   WHITE        RIGHT BOUNDARY
BL   REFLECTED    LEFT BOUNDARY
ORGN         0.00 CM LEFT BOUNDARY LOCATION
DY          57.15 CM BUCKLING HEIGHT
DZ           0.00 CM BUCKLING DEPTH
END

ZONE NUMBER     1
MZX             1 MIXTURE NO.
RZ           0.67 CM RIGHT BOUNDARY LOCATION
XMOD                EXTERNAL MODERATOR INDEX

ZONE NUMBER     2
MZX             2 MIXTURE NO.
RZ           0.71 CM RIGHT BOUNDARY LOCATION
XMOD                EXTERNAL MODERATOR INDEX

ZONE NUMBER     3
MZX             3 MIXTURE NO.
RZ           0.81 CM RIGHT BOUNDARY LOCATION
XMOD                EXTERNAL MODERATOR INDEX

ZONE NUMBER     4
MZX             6 MIXTURE NO.
RZ           0.95 CM RIGHT BOUNDARY LOCATION
XMOD                EXTERNAL MODERATOR INDEX

ZONE NUMBER     5
MZX            12 MIXTURE NO.
RZ           1.07 CM RIGHT BOUNDARY LOCATION
XMOD                EXTERNAL MODERATOR INDEX
```

```
*******************************************************************************
*******************************************************************************
*******************************************************************************
*****                                                                     *****
*****                  PROGRAM VERIFICATION INFORMATION                   *****
*****                                                                     *****
*****                 CODE SYSTEM:  SCALE-PC VERSION:  4.3                *****
*****                                                                     *****
*******************************************************************************
*******************************************************************************
*****                                                                     *****
*****                                                                     *****
*****              PROGRAM:  O0O009                                       *****
*****                                                                     *****
*****        CREATION DATE:  03/08/96                                     *****
*****                                                                     *****
*****              VOLUME:   Eng                                          *****
*****                                                                     *****
*****              LIBRARY:  M:\SCALE43\WIN_NT\EXE                        *****
*****                                                                     *****
*****                                                                     *****
*****      PRODUCTION CODE:  KENOVA                                       *****
*****                                                                     *****
*****              VERSION:  3.1                                          *****
*****                                                                     *****
*****              JOBNAME:  SCALE-PC                                     *****
*****                                                                     *****
*****    DATE OF EXECUTION:  11/12/07                                     *****
*****                                                                     *****
*****    TIME OF EXECUTION:  12:28:27                                     *****
*****                                                                     *****
*****                                                                     *****
*******************************************************************************
*******************************************************************************
*******************************************************************************
```

```
*****************************************************************************************************************
***                                                                                                           ***
***                              TRIGA - PREF. FLOOD CANISTER                                                 ***
***                                                                                                           ***
*****************************************************************************************************************
***                                ******       NUMERIC PARAMETERS       ******                               ***
***                                                                                                           ***
***                                                                                                           ***
***                    TME         MAXIMUM PROBLEM TIME (MIN)                        170.00                   ***
***                                                                                                           ***
***                    TBA         TIME PER GENERATION (MIN)                           2.00                   ***
***                                                                                                           ***
***                    GEN         NUMBER OF GENERATIONS                                403                   ***
***                                                                                                           ***
***                    NPG         NUMBER PER GENERATION                               1000                   ***
***                                                                                                           ***
***                    NSK         NUMBER OF GENERATIONS TO BE SKIPPED                    3                   ***
***                                                                                                           ***
***                    BEG         BEGINNING GENERATION NUMBER                            1                   ***
***                                                                                                           ***
***                    RES         GENERATIONS BETWEEN CHECKPOINTS                        0                   ***
***                                                                                                           ***
***                    X1D         NUMBER OF EXTRA 1-D CROSS SECTIONS                     1                   ***
***                                                                                                           ***
***                    NBK         NEUTRON BANK SIZE                                   1025                   ***
***                                                                                                           ***
***                    XNB         EXTRA POSITIONS IN NEUTRON BANK                        0                   ***
***                                                                                                           ***
***                    NFB         FISSION BANK SIZE                                   1000                   ***
***                                                                                                           ***
***                    XFB         EXTRA POSITIONS IN FISSION BANK                        0                   ***
***                                                                                                           ***
***                    WTA         DEFAULT VALUE OF WEIGHT AVERAGE                   0.5000                   ***
***                                                                                                           ***
***                    WTH         WEIGHT HIGH FOR SPLITTING                         3.0000                   ***
***                                                                                                           ***
***                    WTL         WEIGHT LOW FOR RUSSIAN ROULETTE                   0.3333                   ***
***                                                                                                           ***
***                    RND         STARTING RANDOM NUMBER                        BB827100001                  ***
***                                                                                                           ***
***                    NB8         NUMBER OF D.A. BLOCKS ON UNIT  8                    200                   ***
***                                                                                                           ***
***                    NL8         LENGTH OF D.A. BLOCKS ON UNIT  8                    512                   ***
***                                                                                                           ***
***                    ADJ         MODE OF CALCULATION                             FORWARD                   ***
***                                                                                                           ***
***                                INPUT DATA WRITTEN ON RESTART UNIT                   NO                   ***
***                                                                                                           ***
***                                BINARY DATA INTERFACE                               YES                   ***
***                                                                                                           ***
***                                                                                                           ***
*****************************************************************************************************************
*****************************************************************************************************************
```

```
*****************************************************************************************************************
*****************************************************************************************************************
***                                                                                                           ***
***                              TRIGA - PREF. FLOOD CANISTER                                                 ***
***                                                                                                           ***
*****************************************************************************************************************
***                                  ******      LOGICAL PARAMETERS        ******                             ***
***                                                                                                           ***
***  RUN  EXECUTE PROBLEM AFTER CHECKING DATA    YES            PLT  PLOT PICTURE MAP(S)                  NO ***
***                                                                                                           ***
***  FLX  COMPUTE FLUX                            NO            FDN  COMPUTE FISSION DENSITIES            NO ***
***                                                                                                           ***
***  SMU  COMPUTE AVG UNIT SELF-MULTIPLICATION    NO            NUB  COMPUTE NU-BAR & AVG FISSION GROUP   YES ***
***                                                                                                           ***
***  MKU  COMPUTE MATRIX K-EFF BY UNIT NUMBER     NO            MKP  COMPUTE MATRIX K-EFF BY UNIT LOCATION NO ***
***                                                                                                           ***
***  CKU  COMPUTE COFACTOR K-EFF BY UNIT NUMBER   NO            CKP  COMPUTE COFACTOR K-EFF BY UNIT LOCATION NO ***
***                                                                                                           ***
***  FMU  PRINT FISS PROD MATRIX BY UNIT NUMBER   NO            FMP  PRINT FISS PROD MATRIX BY UNIT LOCATION NO ***
***                                                                                                           ***
***  MKH  COMPUTE MATRIX K-EFF BY HOLE NUMBER     NO            MKA  COMPUTE MATRIX K-EFF BY ARRAY NUMBER  NO ***
***                                                                                                           ***
***  CKH  COMPUTE COFACTOR K-EFF BY HOLE NUMBER   NO            CKA  COMPUTE COFACTOR K-EFF BY ARRAY NUMBER NO ***
***                                                                                                           ***
***  FMH  PRINT FISS PROD MATRIX BY HOLE NUMBER   NO            FMA  PRINT FISS PROD MATRIX BY ARRAY NUMBER NO ***
***                                                                                                           ***
***  HHL  COLLECT MATRIX BY HIGHEST HOLE LEVEL    NO            HAL  COLLECT MATRIX BY HIGHEST ARRAY LEVEL  NO ***
***                                                                                                           ***
***  AMX  PRINT ALL MIXED CROSS SECTIONS          NO            FAR  PRINT FIS. AND ABS. BY REGION         NO ***
***                                                                                                           ***
***  XS1  PRINT 1-D MIXTURE X-SECTIONS            NO            GAS  PRINT FAR BY GROUP                    NO ***
***                                                                                                           ***
***  XS2  PRINT 2-D MIXTURE X-SECTIONS            NO            PAX  PRINT XSEC-ALBEDO CORRELATION TABLES  NO ***
***                                                                                                           ***
***  XAP  PRINT MIXTURE ANGLES & PROBABILITIES    NO            PWT  PRINT WEIGHT AVERAGE ARRAY            NO ***
***                                                                                                           ***
***  PKI  PRINT FISSION SPECTRUM                  NO            PGM  PRINT INPUT GEOMETRY                  NO ***
***                                                                                                           ***
***  P1D  PRINT EXTRA 1-D CROSS SECTIONS          NO            BUG  PRINT DEBUG INFORMATION               NO ***
***                                                                                                           ***
***                                                             TRK  PRINT TRACKING INFORMATION            NO ***
***                                                                                                           ***
***                                                                                                           ***
*****************************************************************************************************************
*****************************************************************************************************************
*****************************************************************************************************************
                                    PARAMETER INPUT COMPLETED

                          ........    0 IO'S WERE USED READING THE PARAMETER DATA      ........

                                    TRIGA - PREF. FLOOD CANISTER

                                              MIXING TABLE

                                        NUMBER OF SCATTERING ANGLES =  2
                                    CROSS SECTION MESSAGE THRESHOLD =3.0E-05


MIXTURE =     1          DENSITY(G/CC) =  6.3339
   NUCLIDE   ATOM-DENS.   WGT. FRAC.     ZA      AWT             NUCLIDE TITLE
   1001001  6.31470E-02  1.66819E-02    1001     1.0077      HYDROGEN       ENDF/B-IV MAT 1269/THRM1002             UPDATED
08/12/94
   1040000  3.71450E-02  8.88318E-01   40000    91.2196      ZIRCONIUM      ENDF/B-IV MAT 7141                      UPDATED
08/12/94
   1092235  1.46460E-03  9.02502E-02   92235   235.0441      URANIUM-235    ENDF/B-IV MAT 1261                      UPDATED
08/12/94
   1092238  7.61110E-05  4.75004E-03   92238   238.0510      URANIUM-238    ENDF/B-IV MAT 1262                      UPDATED
08/12/94

MIXTURE =     2          DENSITY(G/CC) =  8.0325
   NUCLIDE   ATOM-DENS.   WGT. FRAC.     ZA      AWT             NUCLIDE TITLE
   2006012  3.99000E-04  9.89820E-04    6000    12.0001      CARBON-12      ENDF/B-IV MAT 1274/THRM1065             UPDATED
08/12/94
   2013027  2.66000E-04  1.48372E-03   13027    26.9818     AL-27 1193 218 GP 040375(5)                            UPDATED
08/12/94
   2014000  1.70300E-03  9.88763E-03   14000    28.0853      SILICON        ENDF/B-IV MAT 1194                      UPDATED
08/12/94
   2016000  2.20000E-05  1.45825E-04   16000    32.0634     SULFUR  LENDL MAT 7020                                 UPDATED
08/12/94
   2022000  1.50000E-04  1.48470E-03   22000    47.8793      TITANIUM       ENDF/B-IV MAT 1286                      UPDATED
08/12/94
   2024000  2.11510E-02  2.27351E-01   24000    51.9957     CR 1191 218NGP WT 1/E P-3 293K SIGP=5+4 RE(042375)      UPDATED
08/12/94
   2025055  1.30600E-03  1.48325E-02   25055    54.9379      MANGANESE-55   ENDF/B-IV MAT 1197                      UPDATED
08/12/94
   2026000  3.38200E-02  3.90441E-01   26000    55.8447      IRON           ENDF/B-IV MAT 1192                      UPDATED
08/12/94
   2028000  2.85160E-02  3.45964E-01   28000    58.6872     NI 1190 218NGP WT 1/E P-3 293K SIGP=5+4 RE(042375)      UPDATED
08/12/94
   2029000  5.60000E-04  7.42031E-03   29000    64.0966      COPPER         ENDF/B-IV MAT 1295                      UPDATED
08/12/94

MIXTURE =     3          DENSITY(G/CC) = 0.99817E-20
```

```
   NUCLIDE   ATOM-DENS.   WGT. FRAC.     ZA      AWT             NUCLIDE TITLE
   3001001  6.67692E-22  1.11927E-01    1001     1.0077      HYDROGEN       ENDF/B-IV MAT 1269/THRM1002             UPDATED
08/12/94
   3008016  3.33846E-22  8.88073E-01    8016    15.9904      OXYGEN-16      ENDF/B-IV MAT 1276                      UPDATED
08/12/94

MIXTURE =     4          DENSITY(G/CC) =  3.9347
   NUCLIDE   ATOM-DENS.   WGT. FRAC.     ZA      AWT             NUCLIDE TITLE
   4001001  6.67692E-22  2.83943E-22    1001     1.0077      HYDROGEN       ENDF/B-IV MAT 1269/THRM1002             UPDATED
08/12/94
   4008016  3.33846E-22  2.25293E-21    8016    15.9904      OXYGEN-16      ENDF/B-IV MAT 1276                      UPDATED
08/12/94
   4024304  8.65852E-03  1.90000E-01   24000    51.9957     CR 1191 WT SS-304(1/EST) P-3 293K SP=5+4(42375)'        UPDATED
08/12/94
   4025055  8.62609E-04  1.99999E-02   25055    54.9379      MANGANESE-55   ENDF/B-IV MAT 1197                      UPDATED
08/12/94
   4026304  2.94890E-02  6.95000E-01   26000    55.8447     FE 1192 WT SS-304(1/EST) P-3 293K SP=5+4(42375)'        UPDATED
08/12/94
   4028304  3.83564E-03  9.50001E-02   28000    58.6872     NI 1190 WT SS-304(1/EST) P-3 293K SP=5+4(42375)'        UPDATED
08/12/94

MIXTURE =     5          DENSITY(G/CC) =  7.9200
   NUCLIDE   ATOM-DENS.   WGT. FRAC.     ZA      AWT             NUCLIDE TITLE
   5024304  1.74286E-02  1.90000E-01   24000    51.9957     CR 1191 WT SS-304(1/EST) P-3 293K SP=5+4(42375)'        UPDATED
08/12/94
   5025055  1.73633E-03  1.99999E-02   25055    54.9379      MANGANESE-55   ENDF/B-IV MAT 1197                      UPDATED
08/12/94
   5026304  5.93579E-02  6.95000E-01   26000    55.8447     FE 1192 WT SS-304(1/EST) P-3 293K SP=5+4(42375)'        UPDATED
08/12/94
   5028304  7.72070E-03  9.50001E-02   28000    58.6872     NI 1190 WT SS-304(1/EST) P-3 293K SP=5+4(42375)'        UPDATED
08/12/94

MIXTURE =     6          DENSITY(G/CC) =  2.7020
   NUCLIDE   ATOM-DENS.   WGT. FRAC.     ZA      AWT             NUCLIDE TITLE
   6013027  6.03066E-02  1.00000E+00   13027    26.9818     AL-27 1193 218 GP 040375(5)                             UPDATED
08/12/94

MIXTURE =     7          DENSITY(G/CC) =  11.344
   NUCLIDE   ATOM-DENS.   WGT. FRAC.     ZA      AWT             NUCLIDE TITLE
   7082000  3.29690E-02  1.00000E+00   82000   207.2100     PB   1288 218NGP 042375 P-3 293K                        UPDATED
08/12/94

MIXTURE =     8          DENSITY(G/CC) = 0.99817E-20
   NUCLIDE   ATOM-DENS.   WGT. FRAC.     ZA      AWT             NUCLIDE TITLE
   8001001  6.67692E-22  1.11927E-01    1001     1.0077      HYDROGEN       ENDF/B-IV MAT 1269/THRM1002             UPDATED
08/12/94
   8008016  3.33846E-22  8.88073E-01    8016    15.9904      OXYGEN-16      ENDF/B-IV MAT 1276                      UPDATED
08/12/94

MIXTURE =     9          DENSITY(G/CC) = 0.99817E-20
   NUCLIDE   ATOM-DENS.   WGT. FRAC.     ZA      AWT             NUCLIDE TITLE
   9001001  6.67692E-22  1.11927E-01    1001     1.0077      HYDROGEN       ENDF/B-IV MAT 1269/THRM1002             UPDATED
08/12/94
   9008016  3.33846E-22  8.88073E-01    8016    15.9904      OXYGEN-16      ENDF/B-IV MAT 1276                      UPDATED
08/12/94

MIXTURE =    10          DENSITY(G/CC) =  1.8643
   NUCLIDE   ATOM-DENS.   WGT. FRAC.     ZA      AWT             NUCLIDE TITLE
  10001001  6.61831E-02  5.94016E-02    1001     1.0077      HYDROGEN       ENDF/B-IV MAT 1269/THRM1002             UPDATED
08/12/94
  10008016  2.79665E-02  3.98324E-01    8016    15.9904      OXYGEN-16      ENDF/B-IV MAT 1276                      UPDATED
08/12/94
  10040000  6.02930E-03  4.89885E-01   40000    91.2196      ZIRCONIUM      ENDF/B-IV MAT 7141                      UPDATED
08/12/94
  10092235  2.37730E-04  4.97705E-02   92235   235.0441      URANIUM-235    ENDF/B-IV MAT 1261                      UPDATED
08/12/94
  10092238  1.23540E-05  2.61949E-03   92238   238.0510      URANIUM-238    ENDF/B-IV MAT 1262                      UPDATED
08/12/94

MIXTURE =    11          DENSITY(G/CC) = 0.99817
   NUCLIDE   ATOM-DENS.   WGT. FRAC.     ZA      AWT             NUCLIDE TITLE
  11001001  6.67692E-02  1.11927E-01    1001     1.0077      HYDROGEN       ENDF/B-IV MAT 1269/THRM1002             UPDATED
08/12/94
  11008016  3.33846E-02  8.88074E-01    8016    15.9904      OXYGEN-16      ENDF/B-IV MAT 1276                      UPDATED
08/12/94

MIXTURE =    12          DENSITY(G/CC) = 0.99817E-20
   NUCLIDE   ATOM-DENS.   WGT. FRAC.     ZA      AWT             NUCLIDE TITLE
  12001001  6.67692E-22  1.11927E-01    1001     1.0077      HYDROGEN       ENDF/B-IV MAT 1269/THRM1002             UPDATED
08/12/94
  12008016  3.33846E-22  8.88073E-01    8016    15.9904      OXYGEN-16      ENDF/B-IV MAT 1276                      UPDATED
08/12/94


                    1001001     HYDROGEN       ENDF/B-IV MAT 1269/THRM1002             UPDATED 08/12/94
                    3001001     HYDROGEN       ENDF/B-IV MAT 1269/THRM1002             UPDATED 08/12/94
                    4001001     HYDROGEN       ENDF/B-IV MAT 1269/THRM1002             UPDATED 08/12/94
                    8001001     HYDROGEN       ENDF/B-IV MAT 1269/THRM1002             UPDATED 08/12/94
                    9001001     HYDROGEN       ENDF/B-IV MAT 1269/THRM1002             UPDATED 08/12/94
                   10001001     HYDROGEN       ENDF/B-IV MAT 1269/THRM1002             UPDATED 08/12/94
                   11001001     HYDROGEN       ENDF/B-IV MAT 1269/THRM1002             UPDATED 08/12/94
                   12001001     HYDROGEN       ENDF/B-IV MAT 1269/THRM1002             UPDATED 08/12/94
                    2006012     CARBON-12      ENDF/B-IV MAT 1274/THRM1065             UPDATED 08/12/94
                    3008016     OXYGEN-16      ENDF/B-IV MAT 1276                      UPDATED 08/12/94
```

```
 4008016     OXYGEN-16      ENDF/B-IV MAT 1276                    UPDATED 08/12/94
 8008016     OXYGEN-16      ENDF/B-IV MAT 1276                    UPDATED 08/12/94
 9008016     OXYGEN-16      ENDF/B-IV MAT 1276                    UPDATED 08/12/94
10008016     OXYGEN-16      ENDF/B-IV MAT 1276                    UPDATED 08/12/94
11008016     OXYGEN-16      ENDF/B-IV MAT 1276                    UPDATED 08/12/94
12008016     OXYGEN-16      ENDF/B-IV MAT 1276                    UPDATED 08/12/94
 2013027    AL-27 1193 218 GP 040375(5)                           UPDATED 08/12/94
 6013027    AL-27 1193 218 GP 040375(5)                           UPDATED 08/12/94
 2014000     SILICON        ENDF/B-IV MAT 1194                    UPDATED 08/12/94
 2016000    SULFUR  LENDL MAT 7020                                UPDATED 08/12/94
 2022000     TITANIUM       ENDF/B-IV MAT 1286                    UPDATED 08/12/94
 2024000    CR 1191 218NGP WT 1/E P-3 293K SIGP=5+4 RE(042375)    UPDATED 08/12/94
 4024304    CR 1191 WT SS-304(1/EST) P-3 293K SP=5+4(42375)'      UPDATED 08/12/94
 5024304    CR 1191 WT SS-304(1/EST) P-3 293K SP=5+4(42375)'      UPDATED 08/12/94
 2025055     MANGANESE-55   ENDF/B-IV MAT 1197                    UPDATED 08/12/94
 4025055     MANGANESE-55   ENDF/B-IV MAT 1197                    UPDATED 08/12/94
 5025055     MANGANESE-55   ENDF/B-IV MAT 1197                    UPDATED 08/12/94
 2026000     IRON           ENDF/B-IV MAT 1192                    UPDATED 08/12/94
 4026304    FE 1192 WT SS-304(1/EST) P-3 293K SP=5+4(42375)'      UPDATED 08/12/94
 5026304    FE 1192 WT SS-304(1/EST) P-3 293K SP=5+4(42375)'      UPDATED 08/12/94
 2028000    NI 1190 218NGP WT 1/E P-3 293K SIGP=5+4 RE(042375)    UPDATED 08/12/94
 4028304    NI 1190 WT SS-304(1/EST) P-3 293K SP=5+4(42375)'      UPDATED 08/12/94
 5028304    NI 1190 WT SS-304(1/EST) P-3 293K SP=5+4(42375)'      UPDATED 08/12/94
 2029000     COPPER         ENDF/B-IV MAT 1295                    UPDATED 08/12/94
 1040000     ZIRCONIUM      ENDF/B-IV MAT 7141                    UPDATED 08/12/94
10040000     ZIRCONIUM      ENDF/B-IV MAT 7141                    UPDATED 08/12/94
 7082000    PB   1288 218NGP 042375 P-3 293K                      UPDATED 08/12/94
 1092235     URANIUM-235    ENDF/B-IV MAT 1261                    UPDATED 08/12/94
10092235     URANIUM-235    ENDF/B-IV MAT 1261                    UPDATED 08/12/94
 1092238     URANIUM-238    ENDF/B-IV MAT 1262                    UPDATED 08/12/94
10092238     URANIUM-238    ENDF/B-IV MAT 1262                    UPDATED 08/12/94
```

```
*****************************************************************************************************
***                                                                                               ***
***          TRIGA - PREF. FLOOD CANISTER                                                         ***
***                                                                                               ***
*****************************************************************************************************
*****************************************************************************************************
***                                                                                               ***
***                              ****** ADDITIONAL INFORMATION ******                             ***
***                                                                                               ***
***  NUMBER OF ENERGY GROUPS              27       USE LATTICE GEOMETRY                    YES  ***
***                                                                                               ***
***  NO. OF FISSION SPECTRUM SOURCE GROUP  1       GLOBAL ARRAY NUMBER                      20  ***
***                                                                                               ***
***  NO. OF SCATTERING ANGLES IN XSECS     2       NUMBER OF UNITS IN THE GLOBAL X DIR.      1  ***
***                                                                                               ***
***  ENTRIES/NEUTRON IN THE NEUTRON BANK  26       NUMBER OF UNITS IN THE GLOBAL Y DIR.      1  ***
***                                                                                               ***
***  ENTRIES/NEUTRON IN THE FISSION BANK  19       NUMBER OF UNITS IN THE GLOBAL Z DIR.      7  ***
***                                                                                               ***
***  NUMBER OF MIXTURES USED              11       USE A GLOBAL REFLECTOR                  YES  ***
***                                                                                               ***
***  NUMBER OF BIAS ID'S USED              1       USE NESTED HOLES                        YES  ***
***                                                                                               ***
***  NUMBER OF DIFFERENTIAL ALBEDOS USED   0       NUMBER OF HOLES                         140  ***
***                                                                                               ***
***  TOTAL INPUT GEOMETRY REGIONS         91       MAXIMUM HOLE NESTING LEVEL                4  ***
***                                                                                               ***
***  NUMBER OF GEOMETRY REGIONS USED      87       USE NESTED ARRAYS                       YES  ***
***                                                                                               ***
***  LARGEST GEOMETRY UNIT NUMBER        450       NUMBER OF ARRAYS USED                     7  ***
***                                                                                               ***
***  LARGEST ARRAY NUMBER                 43       MAXIMUM ARRAY NESTING LEVEL               2  ***
***                                                                                               ***
***                                                                                               ***
***  +X BOUNDARY CONDITION               MIR       -X BOUNDARY CONDITION                   MIR  ***
***                                                                                               ***
***  +Y BOUNDARY CONDITION               MIR       -Y BOUNDARY CONDITION                   MIR  ***
***                                                                                               ***
***  +Z BOUNDARY CONDITION               MIR       -Z BOUNDARY CONDITION                   MIR  ***
***                                                                                               ***
*****************************************************************************************************
```

```
************************************************************
**                                                        **
**   ARRAY      UNITS IN   UNITS IN   UNITS IN   NESTING  **
**   NUMBER      X DIR.     Y DIR.     Z DIR.     LEVEL   **
**                                                        **
**     1            1          5          1          2    **
**                                                        **
**     2            1          3          1          2    **
**                                                        **
**     3            1          3          1          2    **
**                                                        **
**    20 GLOBAL     1          1          7          1    **
**                                                        **
**    41            1          5          1          2    **
**                                                        **
**    42            1          3          1          2    **
**                                                        **
**    43            1          3          1          2    **
**                                                        **
************************************************************

 ........    0 IO'S WERE USED LOADING THE DATA    ........
```

TRIGA - PREF. FLOOD CANISTER

REGION	MEDIA NUM	BIAS ID	GEOMETRY DESCRIPTION FOR THOSE UNITS UTILIZED IN THIS PROBLEM

----- UNIT 1 -----

TRIGA FUEL (SMEARED)

1 CYLINDER 10 1 RADIUS = 3.9623 +Z = 60.959 -Z = 1.00000E-03 CENTERLINE IS AT X = 0.00000 Y = 0.00000

----- UNIT 5 -----

3.38 IN WIDTH / 0.28 IN THICKNESS DIVIDER CENTER STACK (SEALED)

1 CUBOID 5 1 +X = 4.2672 -X = -4.2672 +Y = 0.71120 -Y = 0.00000 +Z = 74.290 -Z = -8.2550

----- UNIT 6 -----

3.38 IN WIDTH / 0.24 IN THICKNESS DIVIDER OUTSIDE STACK (SEALED)

1 CUBOID 5 1 +X = 4.2672 -X = -4.2672 +Y = 0.60960 -Y = 0.00000 +Z = 74.290 -Z = -8.2550

----- UNIT 7 -----

SEALED CANISTER

1 CYLINDER 11 1 RADIUS = 3.9624 +Z = 60.960 -Z = 0.00000 CENTERLINE IS AT X = 0.00000 Y = 0.00000

HOLE NUMBER 1 AT X = 0.00000 Y = 0.00000 Z = 0.00000 IS UNIT NUMBER 1

2 CYLINDER 5 1 RADIUS = 4.1275 +Z = 63.500 -Z = -1.2700 CENTERLINE IS AT X = 0.00000 Y = 0.00000

3 CYLINDER 3 1 RADIUS = 4.1275 +Z = 74.290 -Z = -8.2550 CENTERLINE IS AT X = 0.00000 Y = 0.00000

----- UNIT 10 -----

TRIGA ELEMENTS IN TOP OF 3.38 IN X 3.38 IN OPENING (SEALED)

1 CUBOID 3 1 +X = 4.2672 -X = -4.2672 +Y = 4.2672 -Y = -4.2672 +Z = 74.290 -Z = -8.2550

HOLE NUMBER 2 AT X = 0.00000 Y = 0.13970 Z = 0.00000 IS UNIT NUMBER 7

----- UNIT 11 -----

TRIGA ELEMENTS IN BOTTOM OF 3.38 IN X 3.38 IN OPENING (SEALED)

1 CUBOID 3 1 +X = 4.2672 -X = -4.2672 +Y = 4.2672 -Y = -4.2672 +Z = 74.290 -Z = -8.2550

HOLE NUMBER 3 AT X = 0.00000 Y =-0.13970 Z = 0.00000 IS UNIT NUMBER 7

TRIGA - PREF. FLOOD CANISTER

REGION	MEDIA NUM	BIAS ID	GEOMETRY DESCRIPTION FOR THOSE UNITS UTILIZED IN THIS PROBLEM

----- UNIT 12 -----

TRIGA ELEMENTS IN BOTTOM RIGHT OF 3.38 IN X 3.38 IN OPENING (SEALED)

1 CUBOID 3 1 +X = 4.2672 -X = -4.2672 +Y = 4.2672 -Y = -4.2672 +Z = 74.290 -Z = -8.2550

HOLE NUMBER 4 AT X = 0.13970 Y =-0.13970 Z = 0.00000 IS UNIT NUMBER 7

----- UNIT 13 -----

TRIGA ELEMENTS IN TOP RIGHT OF 3.38 IN X 3.38 IN OPENING (SEALED)

1 CUBOID 3 1 +X = 4.2672 -X = -4.2672 +Y = 4.2672 -Y = -4.2672 +Z = 74.290 -Z = -8.2550

HOLE NUMBER 5 AT X = 0.13970 Y = 0.13970 Z = 0.00000 IS UNIT NUMBER 7

----- UNIT 14 -----

TRIGA ELEMENTS IN BOTTOM LEFT OF 3.38 IN X 3.38 IN OPENING (SEALED)

1 CUBOID 3 1 +X = 4.2672 -X = -4.2672 +Y = 4.2672 -Y = -4.2672 +Z = 74.290 -Z = -8.2550

HOLE NUMBER 6 AT X =-0.13970 Y =-0.13970 Z = 0.00000 IS UNIT NUMBER 7

----- UNIT 15 -----

TRIGA ELEMENTS IN TOP LEFT OF 3.38 IN X 3.38 IN OPENING (SEALED)

1 CUBOID 3 1 +X = 4.2672 -X = -4.2672 +Y = 4.2672 -Y = -4.2672 +Z = 74.290 -Z = -8.2550

HOLE NUMBER 7 AT X =-0.13970 Y = 0.13970 Z = 0.00000 IS UNIT NUMBER 7

----- UNIT 16 -----

TRIGA BASKET 3.38 IN X 3.38 IN CENTER OPENING (SEALED)

1 CUBOID 3 1 +X = 4.2672 -X = -4.2672 +Y = 4.2672 -Y = -4.2672 +Z = 74.290 -Z = -8.2550

----- UNIT 20 EXTERNAL TO LATTICE 1 -----

CENTER COLUMN OF THREE OPENINGS W/ 0.28 IN PLATE (SEALED)

1 ARRAY NUMBER 1 +X = 4.2672 -X = -4.2672 +Y = 13.513 -Y = -13.513 +Z = 74.290 -Z = -8.2550

2 CUBOID 5 1 +X = 4.9784 -X = -4.9784 +Y = 14.224 -Y = -14.224 +Z = 74.290 -Z = -8.2550

TRIGA - PREF. FLOOD CANISTER

REGION	MEDIA NUM	BIAS ID	GEOMETRY DESCRIPTION FOR THOSE UNITS UTILIZED IN THIS PROBLEM									
----- UNIT 21 EXTERNAL TO LATTICE 2 -----												
LEFT OUTSIDE COLUMN OF TWO OPENINGS W/ 0.12 IN PLATE (SEALED)												
1 ARRAY NUMBER	2		+X = 4.2672	-X = -4.2672	+Y = 8.8392	-Y = -8.8392	+Z = 74.290	-Z = -8.2550				
2 CUBOID	5	1	+X = 4.2672	-X = -4.5720	+Y = 9.1440	-Y = -9.1440	+Z = 74.290	-Z = -8.2550				
----- UNIT 22 EXTERNAL TO LATTICE 3 -----												
RIGHT OUTSIDE COLUMN OF TWO OPENINGS W/ 0.12 IN PLATE (SEALED)												
1 ARRAY NUMBER	3		+X = 4.2672	-X = -4.2672	+Y = 8.8392	-Y = -8.8392	+Z = 74.290	-Z = -8.2550				
2 CUBOID	5	1	+X = 4.5720	-X = -4.2672	+Y = 9.1440	-Y = -9.1440	+Z = 74.290	-Z = -8.2550				
----- UNIT 30 -----												
NAC-LWT TRIGA BASKET (SEALED)												
1 CYLINDER	3	1	RADIUS = 17.100	+Z = 74.290	-Z = -8.2550	CENTERLINE IS AT	X = 0.00000	Y = 0.00000				
HOLE NUMBER	8		AT X = 0.00000	Y = 0.00000	Z = 0.00000	IS UNIT NUMBER	20					
HOLE NUMBER	9		AT X = -9.2457	Y = 0.00000	Z = 0.00000	IS UNIT NUMBER	21					
HOLE NUMBER	10		AT X = 9.2457	Y = 0.00000	Z = 0.00000	IS UNIT NUMBER	22					
2 CYLINDER	5	1	RADIUS = 18.910	+Z = 74.930	-Z = -8.8900	CENTERLINE IS AT	X = 0.00000	Y = 0.00000				
3 CYLINDER	7	1	RADIUS = 33.465	+Z = 74.930	-Z = -8.8900	CENTERLINE IS AT	X = 0.00000	Y = 0.00000				
4 CYLINDER	5	1	RADIUS = 36.519	+Z = 74.930	-Z = -8.8900	CENTERLINE IS AT	X = 0.00000	Y = 0.00000				
5 CYLINDER	8	1	RADIUS = 49.223	+Z = 74.930	-Z = -8.8900	CENTERLINE IS AT	X = 0.00000	Y = 0.00000				
6 CYLINDER	5	1	RADIUS = 49.822	+Z = 74.930	-Z = -8.8900	CENTERLINE IS AT	X = 0.00000	Y = 0.00000				
7 CUBOID	9	1	+X = 49.822	-X = -49.822	+Y = 49.822	-Y = -49.822	+Z = 74.930	-Z = -8.8900				
----- UNIT 41 -----												
TRIGA FUEL ELEMENT												
1 CYLINDER	1	1	RADIUS = 0.67310	+Z = 28.575	-Z = -28.575	CENTERLINE IS AT	X = 0.00000	Y = 0.00000				
2 CYLINDER	2	1	RADIUS = 0.71120	+Z = 28.575	-Z = -28.575	CENTERLINE IS AT	X = 0.00000	Y = 0.00000				
3 CYLINDER	4	1	RADIUS = 0.71120	+Z = 43.480	-Z = -33.040	CENTERLINE IS AT	X = 0.00000	Y = 0.00000				

TRIGA - PREF. FLOOD CANISTER

REGION	MEDIA NUM	BIAS ID	GEOMETRY DESCRIPTION FOR THOSE UNITS UTILIZED IN THIS PROBLEM

----- UNIT 45 -----

DIVIDER CENTER STACK

1 CUBOID 5 1 +X = 4.2672 -X = -4.2672 +Y = 0.71120 -Y = 0.00000 +Z = 43.480 -Z = -33.040

----- UNIT 46 -----

DIVIDER OUTSIDE STACK

1 CUBOID 5 1 +X = 4.2672 -X = -4.2672 +Y = 0.60960 -Y = 0.00000 +Z = 43.480 -Z = -33.040

----- UNIT 80 -----

SIMPLIFIED LID STRUCTURE NAC-LWT

1 CYLINDER 5 1 RADIUS = 36.519 +Z = 14.135 -Z = -14.135 CENTERLINE IS AT X = 0.00000 Y = 0.00000

2 CYLINDER 9 1 RADIUS = 49.822 +Z = 14.135 -Z = -14.135 CENTERLINE IS AT X = 0.00000 Y = 0.00000

3 CUBOID 9 1 +X = 49.822 -X = -49.822 +Y = 49.822 -Y = -49.822 +Z = 14.135 -Z = -14.135

----- UNIT 81 -----

SIMPLIFIED CASK BOTTOM STRUCTURE NAC-LWT

1 CYLINDER 7 1 RADIUS = 26.353 +Z = 3.8100 -Z = -3.8100 CENTERLINE IS AT X = 0.00000 Y = 0.00000

2 CYLINDER 5 1 RADIUS = 36.619 +Z = 13.970 -Z = -12.700 CENTERLINE IS AT X = 0.00000 Y = 0.00000

3 CYLINDER 9 1 RADIUS = 49.822 +Z = 13.970 -Z = -12.700 CENTERLINE IS AT X = 0.00000 Y = 0.00000

4 CUBOID 9 1 +X = 49.822 -X = -49.822 +Y = 49.822 -Y = -49.822 +Z = 13.970 -Z = -12.700

********** GLOBAL **********
----- UNIT 82 EXTERNAL TO LATTICE 20 -----

STACK OF 5 BASKETS IN CASK

1 ARRAY NUMBER 20 +X = 49.822 -X = -49.822 +Y = 49.822 -Y = -49.822 +Z = 230.87 -Z = -221.30

----- UNIT 411 -----

TRIGA FUEL ELEMENTS IN AL TUBE, RIGHT

1 CYLINDER 3 1 RADIUS = 0.80518 +Z = 43.480 -Z = -33.040 CENTERLINE IS AT X = 0.00000 Y = 0.00000

HOLE NUMBER 12 AT X = 9.38000E-02 Y = 0.00000 Z = 0.00000 IS UNIT NUMBER 41

2 CYLINDER 6 1 RADIUS = 0.95250 +Z = 43.480 -Z = -33.040 CENTERLINE IS AT X = 0.00000 Y = 0.00000

TRIGA - PREF. FLOOD CANISTER

REGION	MEDIA NUM	BIAS ID	GEOMETRY DESCRIPTION FOR THOSE UNITS UTILIZED IN THIS PROBLEM

----- UNIT 412 -----

TRIGA FUEL ELEMENTS IN AL TUBE, LEFT

1 CYLINDER 3 1 RADIUS = 0.80518 +Z = 43.480 -Z = -33.040 CENTERLINE IS AT X = 0.00000 Y = 0.00000

HOLE NUMBER 13 AT X =-9.38000E-02 Y = 0.00000 Z = 0.00000 IS UNIT NUMBER 41

2 CYLINDER 6 1 RADIUS = 0.95250 +Z = 43.480 -Z = -33.040 CENTERLINE IS AT X = 0.00000 Y = 0.00000

----- UNIT 413 -----

TRIGA FUEL ELEMENTS IN AL TUBE, TOP

1 CYLINDER 3 1 RADIUS = 0.80518 +Z = 43.480 -Z = -33.040 CENTERLINE IS AT X = 0.00000 Y = 0.00000

HOLE NUMBER 14 AT X = 0.00000 Y = 9.38000E-02 Z = 0.00000 IS UNIT NUMBER 41

2 CYLINDER 6 1 RADIUS = 0.95250 +Z = 43.480 -Z = -33.040 CENTERLINE IS AT X = 0.00000 Y = 0.00000

----- UNIT 414 -----

TRIGA FUEL ELEMENTS IN AL TUBE, BOTTOM

1 CYLINDER 3 1 RADIUS = 0.80518 +Z = 43.480 -Z = -33.040 CENTERLINE IS AT X = 0.00000 Y = 0.00000

HOLE NUMBER 15 AT X = 0.00000 Y =-9.38000E-02 Z = 0.00000 IS UNIT NUMBER 41

2 CYLINDER 6 1 RADIUS = 0.95250 +Z = 43.480 -Z = -33.040 CENTERLINE IS AT X = 0.00000 Y = 0.00000

----- UNIT 415 -----

TRIGA FUEL ELEMENTS IN AL TUBE, TOP RIGHT

1 CYLINDER 3 1 RADIUS = 0.80518 +Z = 43.480 -Z = -33.040 CENTERLINE IS AT X = 0.00000 Y = 0.00000

HOLE NUMBER 16 AT X = 6.62000E-02 Y = 6.62000E-02 Z = 0.00000 IS UNIT NUMBER 41

2 CYLINDER 6 1 RADIUS = 0.95250 +Z = 43.480 -Z = -33.040 CENTERLINE IS AT X = 0.00000 Y = 0.00000

----- UNIT 416 -----

TRIGA FUEL ELEMENTS IN AL TUBE, TOP LEFT

1 CYLINDER 3 1 RADIUS = 0.80518 +Z = 43.480 -Z = -33.040 CENTERLINE IS AT X = 0.00000 Y = 0.00000

HOLE NUMBER 17 AT X =-6.62000E-02 Y = 6.62000E-02 Z = 0.00000 IS UNIT NUMBER 41

2 CYLINDER 6 1 RADIUS = 0.95250 +Z = 43.480 -Z = -33.040 CENTERLINE IS AT X = 0.00000 Y = 0.00000

TRIGA - PREF. FLOOD CANISTER

REGION	MEDIA NUM	BIAS ID	GEOMETRY DESCRIPTION FOR THOSE UNITS UTILIZED IN THIS PROBLEM

----- UNIT 417 -----

TRIGA FUEL ELEMENTS IN AL TUBE, BOTTOM RIGHT

1 CYLINDER 3 1 RADIUS = 0.80518 +Z = 43.480 -Z = -33.040 CENTERLINE IS AT X = 0.00000 Y = 0.00000

HOLE NUMBER 18 AT X = 6.62000E-02 Y =-6.62000E-02 Z = 0.00000 IS UNIT NUMBER 41

2 CYLINDER 6 1 RADIUS = 0.95250 +Z = 43.480 -Z = -33.040 CENTERLINE IS AT X = 0.00000 Y = 0.00000

----- UNIT 418 -----

TRIGA FUEL ELEMENTS IN AL TUBE, BOTTOM LEFT

1 CYLINDER 3 1 RADIUS = 0.80518 +Z = 43.480 -Z = -33.040 CENTERLINE IS AT X = 0.00000 Y = 0.00000

HOLE NUMBER 19 AT X =-6.62000E-02 Y =-6.62000E-02 Z = 0.00000 IS UNIT NUMBER 41

2 CYLINDER 6 1 RADIUS = 0.95250 +Z = 43.480 -Z = -33.040 CENTERLINE IS AT X = 0.00000 Y = 0.00000

TRIGA - PREF. FLOOD CANISTER

REGION	MEDIA NUM	BIAS ID	GEOMETRY DESCRIPTION FOR THOSE UNITS UTILIZED IN THIS PROBLEM

----- UNIT 421 -----

AL TUBES WITH TRIGA FUEL, IN FUEL INSERT, BOTTOM OPENING

1	CUBOID	3	1	+X = 4.1529	-X = -4.1529	+Y = 4.1529	-Y = -4.1529	+Z = 43.480	-Z = -33.040		
	HOLE NUMBER	36		AT X = -2.8576	Y = -2.8576	Z = 0.00000	IS UNIT NUMBER	415			
	HOLE NUMBER	37		AT X =-0.95250	Y = -2.8576	Z = 0.00000	IS UNIT NUMBER	413			
	HOLE NUMBER	38		AT X = 0.95250	Y = -2.8576	Z = 0.00000	IS UNIT NUMBER	413			
	HOLE NUMBER	39		AT X = 2.8576	Y = -2.8576	Z = 0.00000	IS UNIT NUMBER	416			
	HOLE NUMBER	40		AT X = -2.8576	Y =-0.95250	Z = 0.00000	IS UNIT NUMBER	411			
	HOLE NUMBER	41		AT X =-0.95250	Y =-0.95250	Z = 0.00000	IS UNIT NUMBER	415			
	HOLE NUMBER	42		AT X = 0.95250	Y =-0.95250	Z = 0.00000	IS UNIT NUMBER	416			
	HOLE NUMBER	43		AT X = 2.8576	Y =-0.95250	Z = 0.00000	IS UNIT NUMBER	412			
	HOLE NUMBER	44		AT X = -2.8576	Y = 0.95250	Z = 0.00000	IS UNIT NUMBER	411			
	HOLE NUMBER	45		AT X =-0.95250	Y = 0.95250	Z = 0.00000	IS UNIT NUMBER	417			
	HOLE NUMBER	46		AT X = 0.95250	Y = 0.95250	Z = 0.00000	IS UNIT NUMBER	418			
	HOLE NUMBER	47		AT X = 2.8576	Y = 0.95250	Z = 0.00000	IS UNIT NUMBER	412			
	HOLE NUMBER	48		AT X = -2.8576	Y = 2.8576	Z = 0.00000	IS UNIT NUMBER	417			
	HOLE NUMBER	49		AT X =-0.95250	Y = 2.8576	Z = 0.00000	IS UNIT NUMBER	414			
	HOLE NUMBER	50		AT X = 0.95250	Y = 2.8576	Z = 0.00000	IS UNIT NUMBER	414			
	HOLE NUMBER	51		AT X = 2.8576	Y = 2.8576	Z = 0.00000	IS UNIT NUMBER	418			
2	CUBOID	3	1	+X = 4.1529	-X = -4.1529	+Y = 4.1529	-Y = -4.1529	+Z = 43.480	-Z = -33.040		

TRIGA - PREF. FLOOD CANISTER

REGION	MEDIA NUM	BIAS ID	GEOMETRY DESCRIPTION FOR THOSE UNITS UTILIZED IN THIS PROBLEM

----- UNIT 422 -----

AL TUBES WITH TRIGA FUEL, IN FUEL INSERT, TOP OPENING

1	CUBOID	3	1	+X = 4.1529	-X = -4.1529	+Y = 4.1529	-Y = -4.1529	+Z = 43.480	-Z = -33.040		
	HOLE NUMBER	52		AT X = -2.8576	Y = -2.8576	Z = 0.00000	IS UNIT NUMBER	415			
	HOLE NUMBER	53		AT X =-0.95250	Y = -2.8576	Z = 0.00000	IS UNIT NUMBER	413			
	HOLE NUMBER	54		AT X = 0.95250	Y = -2.8576	Z = 0.00000	IS UNIT NUMBER	413			
	HOLE NUMBER	55		AT X = 2.8576	Y = -2.8576	Z = 0.00000	IS UNIT NUMBER	416			
	HOLE NUMBER	56		AT X = -2.8576	Y =-0.95250	Z = 0.00000	IS UNIT NUMBER	411			
	HOLE NUMBER	57		AT X =-0.95250	Y =-0.95250	Z = 0.00000	IS UNIT NUMBER	415			
	HOLE NUMBER	58		AT X = 0.95250	Y =-0.95250	Z = 0.00000	IS UNIT NUMBER	416			
	HOLE NUMBER	59		AT X = 2.8576	Y =-0.95250	Z = 0.00000	IS UNIT NUMBER	412			
	HOLE NUMBER	60		AT X = -2.8576	Y = 0.95250	Z = 0.00000	IS UNIT NUMBER	411			
	HOLE NUMBER	61		AT X =-0.95250	Y = 0.95250	Z = 0.00000	IS UNIT NUMBER	417			
	HOLE NUMBER	62		AT X = 0.95250	Y = 0.95250	Z = 0.00000	IS UNIT NUMBER	418			
	HOLE NUMBER	63		AT X = 2.8576	Y = 0.95250	Z = 0.00000	IS UNIT NUMBER	412			
	HOLE NUMBER	64		AT X = -2.8576	Y = 2.8576	Z = 0.00000	IS UNIT NUMBER	417			
	HOLE NUMBER	65		AT X =-0.95250	Y = 2.8576	Z = 0.00000	IS UNIT NUMBER	414			
	HOLE NUMBER	66		AT X = 0.95250	Y = 2.8576	Z = 0.00000	IS UNIT NUMBER	414			
	HOLE NUMBER	67		AT X = 2.8576	Y = 2.8576	Z = 0.00000	IS UNIT NUMBER	418			
2	CUBOID	3	1	+X = 4.1529	-X = -4.1529	+Y = 4.1529	-Y = -4.1529	+Z = 43.480	-Z = -33.040		

TRIGA - PREF. FLOOD CANISTER

REGION	MEDIA NUM	BIAS ID	GEOMETRY DESCRIPTION FOR THOSE UNITS UTILIZED IN THIS PROBLEM

----- UNIT 423 -----

AL TUBES WITH TRIGA FUEL, IN FUEL INSERT, BOTTOM LEFT OPENING

1 CUBOID	3	1	+X = 4.1529	-X = -4.1529	+Y = 4.1529	-Y = -4.1529	+Z = 43.480	-Z = -33.040			
HOLE NUMBER	68		AT X = -2.8576	Y = -2.8576	Z = 0.00000	IS UNIT NUMBER	415				
HOLE NUMBER	69		AT X =-0.95250	Y = -2.8576	Z = 0.00000	IS UNIT NUMBER	413				
HOLE NUMBER	70		AT X = 0.95250	Y = -2.8576	Z = 0.00000	IS UNIT NUMBER	413				
HOLE NUMBER	71		AT X = 2.8576	Y = -2.8576	Z = 0.00000	IS UNIT NUMBER	416				
HOLE NUMBER	72		AT X = -2.8576	Y =-0.95250	Z = 0.00000	IS UNIT NUMBER	411				
HOLE NUMBER	73		AT X =-0.95250	Y =-0.95250	Z = 0.00000	IS UNIT NUMBER	415				
HOLE NUMBER	74		AT X = 0.95250	Y =-0.95250	Z = 0.00000	IS UNIT NUMBER	416				
HOLE NUMBER	75		AT X = 2.8576	Y =-0.95250	Z = 0.00000	IS UNIT NUMBER	412				
HOLE NUMBER	76		AT X = -2.8576	Y = 0.95250	Z = 0.00000	IS UNIT NUMBER	411				
HOLE NUMBER	77		AT X =-0.95250	Y = 0.95250	Z = 0.00000	IS UNIT NUMBER	417				
HOLE NUMBER	78		AT X = 0.95250	Y = 0.95250	Z = 0.00000	IS UNIT NUMBER	418				
HOLE NUMBER	79		AT X = 2.8576	Y = 0.95250	Z = 0.00000	IS UNIT NUMBER	412				
HOLE NUMBER	80		AT X = -2.8576	Y = 2.8576	Z = 0.00000	IS UNIT NUMBER	417				
HOLE NUMBER	81		AT X =-0.95250	Y = 2.8576	Z = 0.00000	IS UNIT NUMBER	414				
HOLE NUMBER	82		AT X = 0.95250	Y = 2.8576	Z = 0.00000	IS UNIT NUMBER	414				
HOLE NUMBER	83		AT X = 2.8576	Y = 2.8576	Z = 0.00000	IS UNIT NUMBER	418				
2 CUBOID	3	1	+X = 4.1529	-X = -4.1529	+Y = 4.1529	-Y = -4.1529	+Z = 43.480	-Z = -33.040			

TRIGA - PREF. FLOOD CANISTER

REGION	MEDIA NUM	BIAS ID	GEOMETRY DESCRIPTION FOR THOSE UNITS UTILIZED IN THIS PROBLEM

----- UNIT 424 -----

AL TUBES WITH TRIGA FUEL, IN FUEL INSERT, TOP LEFT OPENING

1	CUBOID	3	1	+X = 4.1529	-X = -4.1529	+Y = 4.1529	-Y = -4.1529	+Z = 43.480	-Z = -33.040		
	HOLE NUMBER	84		AT X = -2.8576	Y = -2.8576	Z = 0.00000	IS UNIT NUMBER	415			
	HOLE NUMBER	85		AT X =-0.95250	Y = -2.8576	Z = 0.00000	IS UNIT NUMBER	413			
	HOLE NUMBER	86		AT X = 0.95250	Y = -2.8576	Z = 0.00000	IS UNIT NUMBER	413			
	HOLE NUMBER	87		AT X = 2.8576	Y = -2.8576	Z = 0.00000	IS UNIT NUMBER	416			
	HOLE NUMBER	88		AT X = -2.8576	Y =-0.95250	Z = 0.00000	IS UNIT NUMBER	411			
	HOLE NUMBER	89		AT X =-0.95250	Y =-0.95250	Z = 0.00000	IS UNIT NUMBER	415			
	HOLE NUMBER	90		AT X = 0.95250	Y =-0.95250	Z = 0.00000	IS UNIT NUMBER	416			
	HOLE NUMBER	91		AT X = 2.8576	Y =-0.95250	Z = 0.00000	IS UNIT NUMBER	412			
	HOLE NUMBER	92		AT X = -2.8576	Y = 0.95250	Z = 0.00000	IS UNIT NUMBER	411			
	HOLE NUMBER	93		AT X =-0.95250	Y = 0.95250	Z = 0.00000	IS UNIT NUMBER	417			
	HOLE NUMBER	94		AT X = 0.95250	Y = 0.95250	Z = 0.00000	IS UNIT NUMBER	418			
	HOLE NUMBER	95		AT X = 2.8576	Y = 0.95250	Z = 0.00000	IS UNIT NUMBER	412			
	HOLE NUMBER	96		AT X = -2.8576	Y = 2.8576	Z = 0.00000	IS UNIT NUMBER	417			
	HOLE NUMBER	97		AT X =-0.95250	Y = 2.8576	Z = 0.00000	IS UNIT NUMBER	414			
	HOLE NUMBER	98		AT X = 0.95250	Y = 2.8576	Z = 0.00000	IS UNIT NUMBER	414			
	HOLE NUMBER	99		AT X = 2.8576	Y = 2.8576	Z = 0.00000	IS UNIT NUMBER	418			
2	CUBOID	3	1	+X = 4.1529	-X = -4.1529	+Y = 4.1529	-Y = -4.1529	+Z = 43.480	-Z = -33.040		

TRIGA - PREF. FLOOD CANISTER

REGION	MEDIA NUM	BIAS ID	GEOMETRY DESCRIPTION FOR THOSE UNITS UTILIZED IN THIS PROBLEM

----- UNIT 425 -----

AL TUBES WITH TRIGA FUEL, IN FUEL INSERT, BOTTOM RIGHT OPENING

1 CUBOID	3	1	+X = 4.1529	-X = -4.1529	+Y = 4.1529	-Y = -4.1529	+Z = 43.480	-Z = -33.040			
HOLE NUMBER	100		AT X = -2.8576	Y = -2.8576	Z = 0.00000	IS UNIT NUMBER	415				
HOLE NUMBER	101		AT X =-0.95250	Y = -2.8576	Z = 0.00000	IS UNIT NUMBER	413				
HOLE NUMBER	102		AT X = 0.95250	Y = -2.8576	Z = 0.00000	IS UNIT NUMBER	413				
HOLE NUMBER	103		AT X = 2.8576	Y = -2.8576	Z = 0.00000	IS UNIT NUMBER	416				
HOLE NUMBER	104		AT X = -2.8576	Y =-0.95250	Z = 0.00000	IS UNIT NUMBER	411				
HOLE NUMBER	105		AT X =-0.95250	Y =-0.95250	Z = 0.00000	IS UNIT NUMBER	415				
HOLE NUMBER	106		AT X = 0.95250	Y =-0.95250	Z = 0.00000	IS UNIT NUMBER	416				
HOLE NUMBER	107		AT X = 2.8576	Y =-0.95250	Z = 0.00000	IS UNIT NUMBER	412				
HOLE NUMBER	108		AT X = -2.8576	Y = 0.95250	Z = 0.00000	IS UNIT NUMBER	411				
HOLE NUMBER	109		AT X =-0.95250	Y = 0.95250	Z = 0.00000	IS UNIT NUMBER	417				
HOLE NUMBER	110		AT X = 0.95250	Y = 0.95250	Z = 0.00000	IS UNIT NUMBER	418				
HOLE NUMBER	111		AT X = 2.8576	Y = 0.95250	Z = 0.00000	IS UNIT NUMBER	412				
HOLE NUMBER	112		AT X = -2.8576	Y = 2.8576	Z = 0.00000	IS UNIT NUMBER	417				
HOLE NUMBER	113		AT X =-0.95250	Y = 2.8576	Z = 0.00000	IS UNIT NUMBER	414				
HOLE NUMBER	114		AT X = 0.95250	Y = 2.8576	Z = 0.00000	IS UNIT NUMBER	414				
HOLE NUMBER	115		AT X = 2.8576	Y = 2.8576	Z = 0.00000	IS UNIT NUMBER	418				
2 CUBOID	3	1	+X = 4.1529	-X = -4.1529	+Y = 4.1529	-Y = -4.1529	+Z = 43.480	-Z = -33.040			

TRIGA - PREF. FLOOD CANISTER

REGION	MEDIA NUM	BIAS ID	GEOMETRY DESCRIPTION FOR THOSE UNITS UTILIZED IN THIS PROBLEM

----- UNIT 426 -----

AL TUBES WITH TRIGA FUEL, IN FUEL INSERT, TOP RIGHT OPENING

1 CUBOID 3 1 +X = 4.1529 -X = -4.1529 +Y = 4.1529 -Y = -4.1529 +Z = 43.480 -Z = -33.040

HOLE NUMBER 116 AT X = -2.8576 Y = -2.8576 Z = 0.00000 IS UNIT NUMBER 415

HOLE NUMBER 117 AT X =-0.95250 Y = -2.8576 Z = 0.00000 IS UNIT NUMBER 413

HOLE NUMBER 118 AT X = 0.95250 Y = -2.8576 Z = 0.00000 IS UNIT NUMBER 413

HOLE NUMBER 119 AT X = 2.8576 Y = -2.8576 Z = 0.00000 IS UNIT NUMBER 416

HOLE NUMBER 120 AT X = -2.8576 Y =-0.95250 Z = 0.00000 IS UNIT NUMBER 411

HOLE NUMBER 121 AT X =-0.95250 Y =-0.95250 Z = 0.00000 IS UNIT NUMBER 415

HOLE NUMBER 122 AT X = 0.95250 Y =-0.95250 Z = 0.00000 IS UNIT NUMBER 416

HOLE NUMBER 123 AT X = 2.8576 Y =-0.95250 Z = 0.00000 IS UNIT NUMBER 412

HOLE NUMBER 124 AT X = -2.8576 Y = 0.95250 Z = 0.00000 IS UNIT NUMBER 411

HOLE NUMBER 125 AT X =-0.95250 Y = 0.95250 Z = 0.00000 IS UNIT NUMBER 417

HOLE NUMBER 126 AT X = 0.95250 Y = 0.95250 Z = 0.00000 IS UNIT NUMBER 418

HOLE NUMBER 127 AT X = 2.8576 Y = 0.95250 Z = 0.00000 IS UNIT NUMBER 412

HOLE NUMBER 128 AT X = -2.8576 Y = 2.8576 Z = 0.00000 IS UNIT NUMBER 417

HOLE NUMBER 129 AT X =-0.95250 Y = 2.8576 Z = 0.00000 IS UNIT NUMBER 414

HOLE NUMBER 130 AT X = 0.95250 Y = 2.8576 Z = 0.00000 IS UNIT NUMBER 414

HOLE NUMBER 131 AT X = 2.8576 Y = 2.8576 Z = 0.00000 IS UNIT NUMBER 418

2 CUBOID 3 1 +X = 4.1529 -X = -4.1529 +Y = 4.1529 -Y = -4.1529 +Z = 43.480 -Z = -33.040

----- UNIT 430 -----

FUEL INSERT IN, CENTER OPENING

1 CUBOID 3 1 +X = 4.2672 -X = -4.2672 +Y = 4.2672 -Y = -4.2672 +Z = 43.480 -Z = -33.040

----- UNIT 431 -----

FUEL INSERT IN, BOTTOM OPENING

1 CUBOID 3 1 +X = 4.2672 -X = -4.2672 +Y = 4.2672 -Y = -4.2672 +Z = 43.480 -Z = -33.040

HOLE NUMBER 132 AT X = 0.00000 Y =-0.11430 Z = 0.00000 IS UNIT NUMBER 421

TRIGA - PREF. FLOOD CANISTER

REGION	MEDIA NUM	BIAS ID	GEOMETRY DESCRIPTION FOR THOSE UNITS UTILIZED IN THIS PROBLEM

----- UNIT 432 -----

FUEL INSERT IN, TOP OPENING

1 CUBOID 3 1 +X = 4.2672 -X = -4.2672 +Y = 4.2672 -Y = -4.2672 +Z = 43.480 -Z = -33.040

HOLE NUMBER 133 AT X = 0.00000 Y = 0.11430 Z = 0.00000 IS UNIT NUMBER 422

----- UNIT 433 -----

FUEL INSERT IN, BOTTOM LEFT OPENING

1 CUBOID 3 1 +X = 4.2672 -X = -4.2672 +Y = 4.2672 -Y = -4.2672 +Z = 43.480 -Z = -33.040

HOLE NUMBER 134 AT X =-0.11430 Y =-0.11430 Z = 0.00000 IS UNIT NUMBER 423

----- UNIT 434 -----

FUEL INSERT IN, TOP LEFT OPENING

1 CUBOID 3 1 +X = 4.2672 -X = -4.2672 +Y = 4.2672 -Y = -4.2672 +Z = 43.480 -Z = -33.040

HOLE NUMBER 135 AT X =-0.11430 Y = 0.11430 Z = 0.00000 IS UNIT NUMBER 424

----- UNIT 435 -----

FUEL INSERT IN, BOTOM RIGHT OPENING

1 CUBOID 3 1 +X = 4.2672 -X = -4.2672 +Y = 4.2672 -Y = -4.2672 +Z = 43.480 -Z = -33.040

HOLE NUMBER 136 AT X = 0.11430 Y =-0.11430 Z = 0.00000 IS UNIT NUMBER 425

----- UNIT 436 -----

FUEL INSERT IN, TOP RIGHT OPENING

1 CUBOID 3 1 +X = 4.2672 -X = -4.2672 +Y = 4.2672 -Y = -4.2672 +Z = 43.480 -Z = -33.040

HOLE NUMBER 137 AT X = 0.11430 Y = 0.11430 Z = 0.00000 IS UNIT NUMBER 426

----- UNIT 440 EXTERNAL TO LATTICE 41 -----

CENTER COLUMN OF THREE OPENINGS

1 ARRAY NUMBER 41 +X = 4.2672 -X = -4.2672 +Y = 13.513 -Y = -13.513 +Z = 43.480 -Z = -33.040

2 CUBOID 5 1 +X = 4.9784 -X = -4.9784 +Y = 14.224 -Y = -14.224 +Z = 43.480 -Z = -33.040

TRIGA - PREF. FLOOD CANISTER

REGION	MEDIA NUM	BIAS ID	GEOMETRY DESCRIPTION FOR THOSE UNITS UTILIZED IN THIS PROBLEM									
			----- UNIT 441 EXTERNAL TO LATTICE 42 -----									
LEFT OUTSIDE COLUMN OF TWO OPENINGS												
1 ARRAY NUMBER	42		+X = 4.2672	-X = -4.2672	+Y = 8.8392	-Y = -8.8392	+Z = 43.480	-Z = -33.040				
2 CUBOID	5	1	+X = 4.2672	-X = -4.6080	+Y = 9.1800	-Y = -9.1800	+Z = 43.480	-Z = -33.040				
			----- UNIT 442 EXTERNAL TO LATTICE 43 -----									
RIGHT OUTSIDE COLUMN OF TWO OPENINGS												
1 ARRAY NUMBER	43		+X = 4.2672	-X = -4.2672	+Y = 8.8392	-Y = -8.8392	+Z = 43.480	-Z = -33.040				
2 CUBOID	5	1	+X = 4.6080	-X = -4.2672	+Y = 9.1800	-Y = -9.1800	+Z = 43.480	-Z = -33.040				
			----- UNIT 450 -----									
96 TRIGA FUEL ELEMENTS IN EACH LWT BASKET												
1 CYLINDER	3	1	RADIUS = 17.150	+Z = 43.485	-Z = -33.045	CENTERLINE IS AT	X = 0.00000	Y = 0.00000				
HOLE NUMBER	138		AT X = 0.00000	Y = 0.00000	Z = 0.00000	IS UNIT NUMBER	440					
HOLE NUMBER	139		AT X = -9.2457	Y = 0.00000	Z = 0.00000	IS UNIT NUMBER	441					
HOLE NUMBER	140		AT X = 9.2457	Y = 0.00000	Z = 0.00000	IS UNIT NUMBER	442					
2 CYLINDER	5	1	RADIUS = 18.910	+Z = 43.485	-Z = -33.045	CENTERLINE IS AT	X = 0.00000	Y = 0.00000				
3 CYLINDER	7	1	RADIUS = 33.465	+Z = 43.485	-Z = -33.045	CENTERLINE IS AT	X = 0.00000	Y = 0.00000				
4 CYLINDER	5	1	RADIUS = 36.519	+Z = 43.485	-Z = -33.045	CENTERLINE IS AT	X = 0.00000	Y = 0.00000				
5 CYLINDER	8	1	RADIUS = 49.223	+Z = 43.485	-Z = -33.045	CENTERLINE IS AT	X = 0.00000	Y = 0.00000				
6 CYLINDER	5	1	RADIUS = 49.822	+Z = 43.485	-Z = -33.045	CENTERLINE IS AT	X = 0.00000	Y = 0.00000				
7 CUBOID	9	1	+X = 49.822	-X = -49.822	+Y = 49.822	-Y = -49.822	+Z = 43.485	-Z = -33.045				

```
                        TRIGA - PREF. FLOOD CANISTER

                  -------  UNIT ORIENTATION DESCRIPTION FOR ARRAY   1         -------

Z LAYER   1, X COLUMN   1 TO   1 LEFT TO RIGHT   Y ROW   1 TO   5  BOTTOM TO TOP

 11

  5

 16

  5

 10

                  -------  UNIT ORIENTATION DESCRIPTION FOR ARRAY   2         -------

Z LAYER   1, X COLUMN   1 TO   1 LEFT TO RIGHT   Y ROW   1 TO   3  BOTTOM TO TOP

 12

  6

 13

                  -------  UNIT ORIENTATION DESCRIPTION FOR ARRAY   3         -------

Z LAYER   1, X COLUMN   1 TO   1 LEFT TO RIGHT   Y ROW   1 TO   3  BOTTOM TO TOP

 14

  6

 15
```

```
                        TRIGA - PREF. FLOOD CANISTER

                  -------  UNIT ORIENTATION DESCRIPTION FOR ARRAY  20         -------

Z LAYER   1, X COLUMN   1 TO   1 LEFT TO RIGHT   Y ROW   1 TO   1  BOTTOM TO TOP

  81
Z LAYER   2, X COLUMN   1 TO   1 LEFT TO RIGHT   Y ROW   1 TO   1  BOTTOM TO TOP

  30
Z LAYER   3, X COLUMN   1 TO   1 LEFT TO RIGHT   Y ROW   1 TO   1  BOTTOM TO TOP

 450
Z LAYER   4, X COLUMN   1 TO   1 LEFT TO RIGHT   Y ROW   1 TO   1  BOTTOM TO TOP

 450
Z LAYER   5, X COLUMN   1 TO   1 LEFT TO RIGHT   Y ROW   1 TO   1  BOTTOM TO TOP

 450
Z LAYER   6, X COLUMN   1 TO   1 LEFT TO RIGHT   Y ROW   1 TO   1  BOTTOM TO TOP

  30
Z LAYER   7, X COLUMN   1 TO   1 LEFT TO RIGHT   Y ROW   1 TO   1  BOTTOM TO TOP

  80

                  -------  UNIT ORIENTATION DESCRIPTION FOR ARRAY  41         -------

Z LAYER   1, X COLUMN   1 TO   1 LEFT TO RIGHT   Y ROW   1 TO   5  BOTTOM TO TOP

 431

  45

 430

  45

 432
```

```
                        TRIGA - PREF. FLOOD CANISTER

                  -------  UNIT ORIENTATION DESCRIPTION FOR ARRAY  42         -------

Z LAYER   1, X COLUMN   1 TO   1 LEFT TO RIGHT   Y ROW   1 TO   3  BOTTOM TO TOP

 435

  46

 436

                  -------  UNIT ORIENTATION DESCRIPTION FOR ARRAY  43         -------

Z LAYER   1, X COLUMN   1 TO   1 LEFT TO RIGHT   Y ROW   1 TO   3  BOTTOM TO TOP

 433

  46

 434
```

TOTAL MIXTURE VOLUMES

MIXTURE	TOTAL VOLUME	MASS(G)
1	2.34271E+04 CM**3	1.48384E+05
2	2.72718E+03 CM**3	2.19061E+04
3	2.30497E+05 CM**3	2.30076E-15
4	8.86453E+03 CM**3	3.48789E+04
5	6.81739E+05 CM**3	5.39938E+06
6	1.79275E+04 CM**3	4.84400E+04
7	9.67892E+05 CM**3	1.09798E+07
8	1.35931E+06 CM**3	1.35683E-14
9	1.16111E+06 CM**3	1.15899E-14
10	3.60792E+04 CM**3	6.72616E+04
11	3.00293E+00 CM**3	2.99744E+00

```
      ********************************************************************************************************************
      ***                                                                                                              ***
      ***                                        BIASING INFORMATION                                                   ***
      ***                                                                                                              ***
      ***     A DEFAULT WEIGHT OF    0.500 WILL BE USED FOR ALL BIAS ID'S.                                             ***
      ***                                                                                                              ***
      ********************************************************************************************************************

                            ........    0 IO'S WERE USED IN KENO-V BEFORE TRACKING       ........

                            ........  0.01000 MINUTES WERE USED PROCESSING DATA.        ........

VOLUME FRACTION OF FISSILE MATERIAL IN THE CORE= 1.32543E-02

START TYPE 0 WAS USED.

THE NEUTRONS WERE STARTED WITH A FLAT DISTRIBUTION IN A CUBOID DEFINED BY:
                     +X= 1.70000E+01  -X=-1.70000E+01  +Y= 1.70000E+01  -Y=-1.70000E+01  +Z= 2.00000E+02  -Z=-2.00000E+02
THE FLAG TO START NEUTRONS IN THE REFLECTOR WAS TURNED OFF

0.04600 MINUTES WERE REQUIRED FOR STARTING.   TOTAL ELAPSED TIME IS 0.05333 MINUTES.
```

TRIGA - PREF. FLOOD CANISTER

GENERATION	GENERATION K-EFFECTIVE	ELAPSED TIME MINUTES	AVERAGE K-EFFECTIVE	AVG K-EFF DEVIATION	MATRIX K-EFFECTIVE	MATRIX K-EFF DEVIATION
KENO MESSAGE NUMBER K5-132		WARNING....ONLY	958 INDEPENDENT FISSION POINTS WERE GENERATED			
1	9.12272E-01	6.13333E-02	1.00000E+00	0.00000E+00	0.00000E+00	0.00000E+00
KENO MESSAGE NUMBER K5-132		WARNING....ONLY	981 INDEPENDENT FISSION POINTS WERE GENERATED			
2	8.97578E-01	6.58333E-02	1.00000E+00	0.00000E+00	0.00000E+00	0.00000E+00
KENO MESSAGE NUMBER K5-132		WARNING....ONLY	965 INDEPENDENT FISSION POINTS WERE GENERATED			
3	9.06507E-01	7.05000E-02	9.06507E-01	0.00000E+00	0.00000E+00	0.00000E+00
4	9.60092E-01	7.50000E-02	9.33300E-01	2.67925E-02	0.00000E+00	0.00000E+00
5	9.13258E-01	7.96667E-02	9.26619E-01	1.68497E-02	0.00000E+00	0.00000E+00
6	9.41285E-01	8.41667E-02	9.30286E-01	1.24659E-02	0.00000E+00	0.00000E+00
7	9.20685E-01	8.96667E-02	9.28366E-01	9.84508E-03	0.00000E+00	0.00000E+00
8	8.75864E-01	9.41667E-02	9.19615E-01	1.18820E-02	0.00000E+00	0.00000E+00
9	9.17508E-01	9.96667E-02	9.19314E-01	1.00467E-02	0.00000E+00	0.00000E+00
10	9.05698E-01	1.04333E-01	9.17612E-01	8.86557E-03	0.00000E+00	0.00000E+00
11	9.05332E-01	1.09833E-01	9.16248E-01	7.93686E-03	0.00000E+00	0.00000E+00
12	9.08428E-01	1.14333E-01	9.15466E-01	7.14188E-03	0.00000E+00	0.00000E+00
13	9.33723E-01	1.19000E-01	9.17126E-01	6.66988E-03	0.00000E+00	0.00000E+00
14	9.37258E-01	1.23500E-01	9.18803E-01	6.31565E-03	0.00000E+00	0.00000E+00
15	9.35896E-01	1.29000E-01	9.20118E-01	5.95648E-03	0.00000E+00	0.00000E+00
16	8.78309E-01	1.33667E-01	9.17132E-01	6.27134E-03	0.00000E+00	0.00000E+00
17	8.82510E-01	1.38167E-01	9.14824E-01	6.27799E-03	0.00000E+00	0.00000E+00
18	9.14908E-01	1.42833E-01	9.14829E-01	5.87253E-03	0.00000E+00	0.00000E+00
19	8.74650E-01	1.48333E-01	9.12465E-01	6.00128E-03	0.00000E+00	0.00000E+00
20	8.92229E-01	1.52833E-01	9.11341E-01	5.76868E-03	0.00000E+00	0.00000E+00
21	9.05493E-01	1.58333E-01	9.11033E-01	5.46530E-03	0.00000E+00	0.00000E+00
22	9.22732E-01	1.62833E-01	9.11618E-01	5.21773E-03	0.00000E+00	0.00000E+00
23	9.33108E-01	1.67500E-01	9.12642E-01	5.06745E-03	0.00000E+00	0.00000E+00
24	9.48880E-01	1.72000E-01	9.14289E-01	5.10469E-03	0.00000E+00	0.00000E+00
25	9.28723E-01	1.76667E-01	9.14916E-01	4.91791E-03	0.00000E+00	0.00000E+00
26	9.06127E-01	1.82167E-01	9.14550E-01	4.72276E-03	0.00000E+00	0.00000E+00
27	9.03149E-01	1.86667E-01	9.14094E-01	4.55281E-03	0.00000E+00	0.00000E+00
28	9.06903E-01	1.91333E-01	9.13818E-01	4.38293E-03	0.00000E+00	0.00000E+00
29	9.31051E-01	1.95833E-01	9.14456E-01	4.26551E-03	0.00000E+00	0.00000E+00
30	8.78445E-01	2.01333E-01	9.13170E-01	4.30685E-03	0.00000E+00	0.00000E+00
31	8.91480E-01	2.06000E-01	9.12422E-01	4.22245E-03	0.00000E+00	0.00000E+00
32	9.22563E-01	2.10500E-01	9.12760E-01	4.09326E-03	0.00000E+00	0.00000E+00
33	9.18055E-01	2.16000E-01	9.12931E-01	3.96270E-03	0.00000E+00	0.00000E+00
34	9.29423E-01	2.20500E-01	9.13446E-01	3.87133E-03	0.00000E+00	0.00000E+00
35	9.16588E-01	2.25167E-01	9.13541E-01	3.75339E-03	0.00000E+00	0.00000E+00
36	9.31661E-01	2.29667E-01	9.14074E-01	3.68011E-03	0.00000E+00	0.00000E+00
37	8.97653E-01	2.35167E-01	9.13605E-01	3.60409E-03	0.00000E+00	0.00000E+00
38	9.13426E-01	2.39833E-01	9.13600E-01	3.50255E-03	0.00000E+00	0.00000E+00
39	9.51547E-01	2.44333E-01	9.14626E-01	3.55760E-03	0.00000E+00	0.00000E+00
40	9.05553E-01	2.49000E-01	9.14387E-01	3.47094E-03	0.00000E+00	0.00000E+00
41	8.94125E-01	2.53500E-01	9.13867E-01	3.42046E-03	0.00000E+00	0.00000E+00
42	9.15771E-01	2.59000E-01	9.13915E-01	3.33419E-03	0.00000E+00	0.00000E+00
43	8.88163E-01	2.63667E-01	9.13287E-01	3.31195E-03	0.00000E+00	0.00000E+00
44	8.99240E-01	2.69167E-01	9.12952E-01	3.24939E-03	0.00000E+00	0.00000E+00
45	9.11400E-01	2.73667E-01	9.12916E-01	3.17313E-03	0.00000E+00	0.00000E+00
46	8.77056E-01	2.78167E-01	9.12101E-01	3.20552E-03	0.00000E+00	0.00000E+00
47	9.37693E-01	2.82833E-01	9.12670E-01	3.18467E-03	0.00000E+00	0.00000E+00
48	8.88130E-01	2.88333E-01	9.12137E-01	3.16002E-03	0.00000E+00	0.00000E+00
49	9.43464E-01	2.92833E-01	9.12803E-01	3.16309E-03	0.00000E+00	0.00000E+00
50	9.02860E-01	2.97500E-01	9.12596E-01	3.10341E-03	0.00000E+00	0.00000E+00
51	9.24351E-01	3.03000E-01	9.12836E-01	3.04887E-03	0.00000E+00	0.00000E+00
52	9.30765E-01	3.07500E-01	9.13194E-01	3.00871E-03	0.00000E+00	0.00000E+00
53	8.90087E-01	3.12167E-01	9.12741E-01	2.98373E-03	0.00000E+00	0.00000E+00
54	8.95261E-01	3.16667E-01	9.12405E-01	2.94504E-03	0.00000E+00	0.00000E+00
55	9.11013E-01	3.22167E-01	9.12379E-01	2.88905E-03	0.00000E+00	0.00000E+00
56	9.27266E-01	3.26833E-01	9.12655E-01	2.84842E-03	0.00000E+00	0.00000E+00
57	9.14924E-01	3.31333E-01	9.12696E-01	2.79646E-03	0.00000E+00	0.00000E+00
58	9.05747E-01	3.36000E-01	9.12572E-01	2.74887E-03	0.00000E+00	0.00000E+00
59	9.70181E-01	3.40500E-01	9.13582E-01	2.88316E-03	0.00000E+00	0.00000E+00
60	9.13601E-01	3.46000E-01	9.13583E-01	2.83302E-03	0.00000E+00	0.00000E+00
.						
.						
.						
.						
.						
347	9.32288E-01	1.73383E+00	9.10680E-01	1.26978E-03	0.00000E+00	0.00000E+00
348	9.39976E-01	1.73933E+00	9.10765E-01	1.26893E-03	0.00000E+00	0.00000E+00
349	9.26951E-01	1.74383E+00	9.10811E-01	1.26613E-03	0.00000E+00	0.00000E+00
350	9.36824E-01	1.74850E+00	9.10886E-01	1.26470E-03	0.00000E+00	0.00000E+00
351	9.31395E-01	1.75383E+00	9.10945E-01	1.26244E-03	0.00000E+00	0.00000E+00
352	9.09427E-01	1.75850E+00	9.10940E-01	1.25883E-03	0.00000E+00	0.00000E+00
353	8.91230E-01	1.76300E+00	9.10884E-01	1.25650E-03	0.00000E+00	0.00000E+00
354	8.82837E-01	1.76850E+00	9.10805E-01	1.25545E-03	0.00000E+00	0.00000E+00
355	8.94507E-01	1.77317E+00	9.10758E-01	1.25274E-03	0.00000E+00	0.00000E+00
356	9.20758E-01	1.77767E+00	9.10787E-01	1.24952E-03	0.00000E+00	0.00000E+00
357	9.21923E-01	1.78233E+00	9.10818E-01	1.24639E-03	0.00000E+00	0.00000E+00
358	8.95779E-01	1.78683E+00	9.10776E-01	1.24360E-03	0.00000E+00	0.00000E+00
359	8.92643E-01	1.79233E+00	9.10725E-01	1.24115E-03	0.00000E+00	0.00000E+00
360	8.92464E-01	1.79700E+00	9.10674E-01	1.23873E-03	0.00000E+00	0.00000E+00
361	9.36569E-01	1.80250E+00	9.10746E-01	1.23738E-03	0.00000E+00	0.00000E+00
362	9.16370E-01	1.80700E+00	9.10762E-01	1.23404E-03	0.00000E+00	0.00000E+00
363	9.19990E-01	1.81150E+00	9.10787E-01	1.23088E-03	0.00000E+00	0.00000E+00
364	8.68182E-01	1.81700E+00	9.10670E-01	1.23310E-03	0.00000E+00	0.00000E+00
365	9.09171E-01	1.82167E+00	9.10665E-01	1.22971E-03	0.00000E+00	0.00000E+00
366	9.13328E-01	1.82617E+00	9.10673E-01	1.22635E-03	0.00000E+00	0.00000E+00
367	9.26146E-01	1.83083E+00	9.10715E-01	1.22372E-03	0.00000E+00	0.00000E+00
368	9.18251E-01	1.83533E+00	9.10736E-01	1.22054E-03	0.00000E+00	0.00000E+00

369	9.27602E-01	1.84000E+00	9.10782E-01	1.21808E-03	0.00000E+00	0.00000E+00
370	9.05043E-01	1.84550E+00	9.10766E-01	1.21487E-03	0.00000E+00	0.00000E+00
371	9.10273E-01	1.85000E+00	9.10765E-01	1.21157E-03	0.00000E+00	0.00000E+00
372	8.65233E-01	1.85467E+00	9.10642E-01	1.21454E-03	0.00000E+00	0.00000E+00
373	9.29081E-01	1.85917E+00	9.10691E-01	1.21228E-03	0.00000E+00	0.00000E+00
374	9.41838E-01	1.86383E+00	9.10775E-01	1.21192E-03	0.00000E+00	0.00000E+00
375	9.13071E-01	1.86933E+00	9.10781E-01	1.20868E-03	0.00000E+00	0.00000E+00
376	8.91269E-01	1.87383E+00	9.10729E-01	1.20657E-03	0.00000E+00	0.00000E+00
377	9.11885E-01	1.87833E+00	9.10732E-01	1.20335E-03	0.00000E+00	0.00000E+00
378	9.41721E-01	1.88300E+00	9.10815E-01	1.20297E-03	0.00000E+00	0.00000E+00
379	9.08998E-01	1.88850E+00	9.10810E-01	1.19979E-03	0.00000E+00	0.00000E+00
380	9.16650E-01	1.89300E+00	9.10825E-01	1.19671E-03	0.00000E+00	0.00000E+00
381	9.38426E-01	1.89767E+00	9.10898E-01	1.19577E-03	0.00000E+00	0.00000E+00
382	8.84428E-01	1.90317E+00	9.10828E-01	1.19465E-03	0.00000E+00	0.00000E+00
383	9.13748E-01	1.90767E+00	9.10836E-01	1.19154E-03	0.00000E+00	0.00000E+00
384	9.27586E-01	1.91233E+00	9.10880E-01	1.18922E-03	0.00000E+00	0.00000E+00
385	9.32344E-01	1.91683E+00	9.10936E-01	1.18743E-03	0.00000E+00	0.00000E+00
386	9.01186E-01	1.92233E+00	9.10911E-01	1.18461E-03	0.00000E+00	0.00000E+00
387	8.94668E-01	1.92700E+00	9.10868E-01	1.18228E-03	0.00000E+00	0.00000E+00
388	9.39157E-01	1.93150E+00	9.10942E-01	1.18149E-03	0.00000E+00	0.00000E+00
389	9.35439E-01	1.93600E+00	9.11005E-01	1.18013E-03	0.00000E+00	0.00000E+00
390	9.16781E-01	1.94150E+00	9.11020E-01	1.17718E-03	0.00000E+00	0.00000E+00
391	8.54888E-01	1.94617E+00	9.10876E-01	1.18298E-03	0.00000E+00	0.00000E+00
392	9.32257E-01	1.95067E+00	9.10930E-01	1.18122E-03	0.00000E+00	0.00000E+00
393	9.15965E-01	1.95533E+00	9.10943E-01	1.17827E-03	0.00000E+00	0.00000E+00
394	9.44185E-01	1.96083E+00	9.11028E-01	1.17831E-03	0.00000E+00	0.00000E+00
395	9.41505E-01	1.96533E+00	9.11106E-01	1.17787E-03	0.00000E+00	0.00000E+00
396	9.05507E-01	1.97000E+00	9.11091E-01	1.17496E-03	0.00000E+00	0.00000E+00
397	9.23019E-01	1.97450E+00	9.11122E-01	1.17237E-03	0.00000E+00	0.00000E+00
398	8.99323E-01	1.97917E+00	9.11092E-01	1.16978E-03	0.00000E+00	0.00000E+00
399	9.50066E-01	1.98367E+00	9.11190E-01	1.17096E-03	0.00000E+00	0.00000E+00
400	9.31501E-01	1.98833E+00	9.11241E-01	1.16912E-03	0.00000E+00	0.00000E+00
401	9.40814E-01	1.99283E+00	9.11315E-01	1.16854E-03	0.00000E+00	0.00000E+00
402	8.74959E-01	1.99833E+00	9.11224E-01	1.16916E-03	0.00000E+00	0.00000E+00
403	8.91278E-01	2.00283E+00	9.11174E-01	1.16730E-03	0.00000E+00	0.00000E+00

KENO MESSAGE NUMBER K5-123 EXECUTION TERMINATED DUE TO COMPLETION OF THE SPECIFIED NUMBER OF GENERATIONS.

TRIGA - PREF. FLOOD CANISTER

LIFETIME = 6.88467E-05 + OR - 1.54921E-07 GENERATION TIME = 2.92747E-05 + OR - 7.16936E-08
NU BAR = 2.42097E+00 + OR - 9.21427E-06 AVERAGE FISSION GROUP = 2.20445E+01 + OR - 6.79883E-03
ENERGY(EV) OF THE AVERAGE LETHARGY CAUSING FISSION = 1.67845E-01 + OR - 7.91367E-04

NO. OF INITIAL GENERATIONS SKIPPED	AVERAGE K-EFFECTIVE	DEVIATION	67 PER CENT CONFIDENCE INTERVAL	95 PER CENT CONFIDENCE INTERVAL	99 PER CENT CONFIDENCE INTERVAL	NUMBER OF HISTORIES
3	0.91119	+ OR - 0.00117	0.91002 TO 0.91236	0.90885 TO 0.91353	0.90768 TO 0.91470	400000
4	0.91106	+ OR - 0.00117	0.90990 TO 0.91223	0.90873 TO 0.91340	0.90756 TO 0.91456	399000
5	0.91106	+ OR - 0.00117	0.90989 TO 0.91223	0.90872 TO 0.91340	0.90755 TO 0.91457	398000
6	0.91098	+ OR - 0.00117	0.90981 TO 0.91215	0.90864 TO 0.91332	0.90747 TO 0.91449	397000
7	0.91096	+ OR - 0.00117	0.90978 TO 0.91213	0.90861 TO 0.91330	0.90744 TO 0.91448	396000
8	0.91105	+ OR - 0.00117	0.90987 TO 0.91222	0.90870 TO 0.91339	0.90753 TO 0.91456	395000
9	0.91103	+ OR - 0.00118	0.90985 TO 0.91221	0.90868 TO 0.91338	0.90750 TO 0.91456	394000
10	0.91104	+ OR - 0.00118	0.90987 TO 0.91222	0.90869 TO 0.91340	0.90751 TO 0.91458	393000
11	0.91106	+ OR - 0.00118	0.90988 TO 0.91224	0.90870 TO 0.91342	0.90751 TO 0.91460	392000
12	0.91106	+ OR - 0.00118	0.90988 TO 0.91225	0.90870 TO 0.91343	0.90751 TO 0.91462	391000
17	0.91103	+ OR - 0.00119	0.90984 TO 0.91222	0.90865 TO 0.91341	0.90747 TO 0.91460	386000
22	0.91115	+ OR - 0.00120	0.90995 TO 0.91235	0.90875 TO 0.91355	0.90755 TO 0.91475	381000
27	0.91098	+ OR - 0.00121	0.90977 TO 0.91219	0.90856 TO 0.91340	0.90736 TO 0.91461	376000
32	0.91105	+ OR - 0.00122	0.90983 TO 0.91227	0.90861 TO 0.91348	0.90739 TO 0.91470	371000
37	0.91094	+ OR - 0.00123	0.90971 TO 0.91217	0.90848 TO 0.91341	0.90725 TO 0.91464	366000
42	0.91087	+ OR - 0.00124	0.90963 TO 0.91211	0.90838 TO 0.91336	0.90714 TO 0.91460	361000
47	0.91099	+ OR - 0.00125	0.90973 TO 0.91224	0.90848 TO 0.91349	0.90723 TO 0.91474	356000
.						
.						
.						
.						
.						
367	0.91583	+ OR - 0.00386	0.91197 TO 0.91969	0.90812 TO 0.92355	0.90426 TO 0.92740	36000
372	0.91753	+ OR - 0.00412	0.91341 TO 0.92166	0.90929 TO 0.92578	0.90517 TO 0.92990	31000
377	0.91755	+ OR - 0.00470	0.91286 TO 0.92225	0.90816 TO 0.92695	0.90346 TO 0.93164	26000
382	0.91744	+ OR - 0.00538	0.91206 TO 0.92281	0.90668 TO 0.92819	0.90130 TO 0.93357	21000
387	0.91854	+ OR - 0.00677	0.91177 TO 0.92531	0.90500 TO 0.93208	0.89823 TO 0.93885	16000
392	0.91983	+ OR - 0.00741	0.91242 TO 0.92724	0.90502 TO 0.93464	0.89761 TO 0.94205	11000
397	0.91466	+ OR - 0.01235	0.90230 TO 0.92701	0.88995 TO 0.93937	0.87759 TO 0.95172	6000

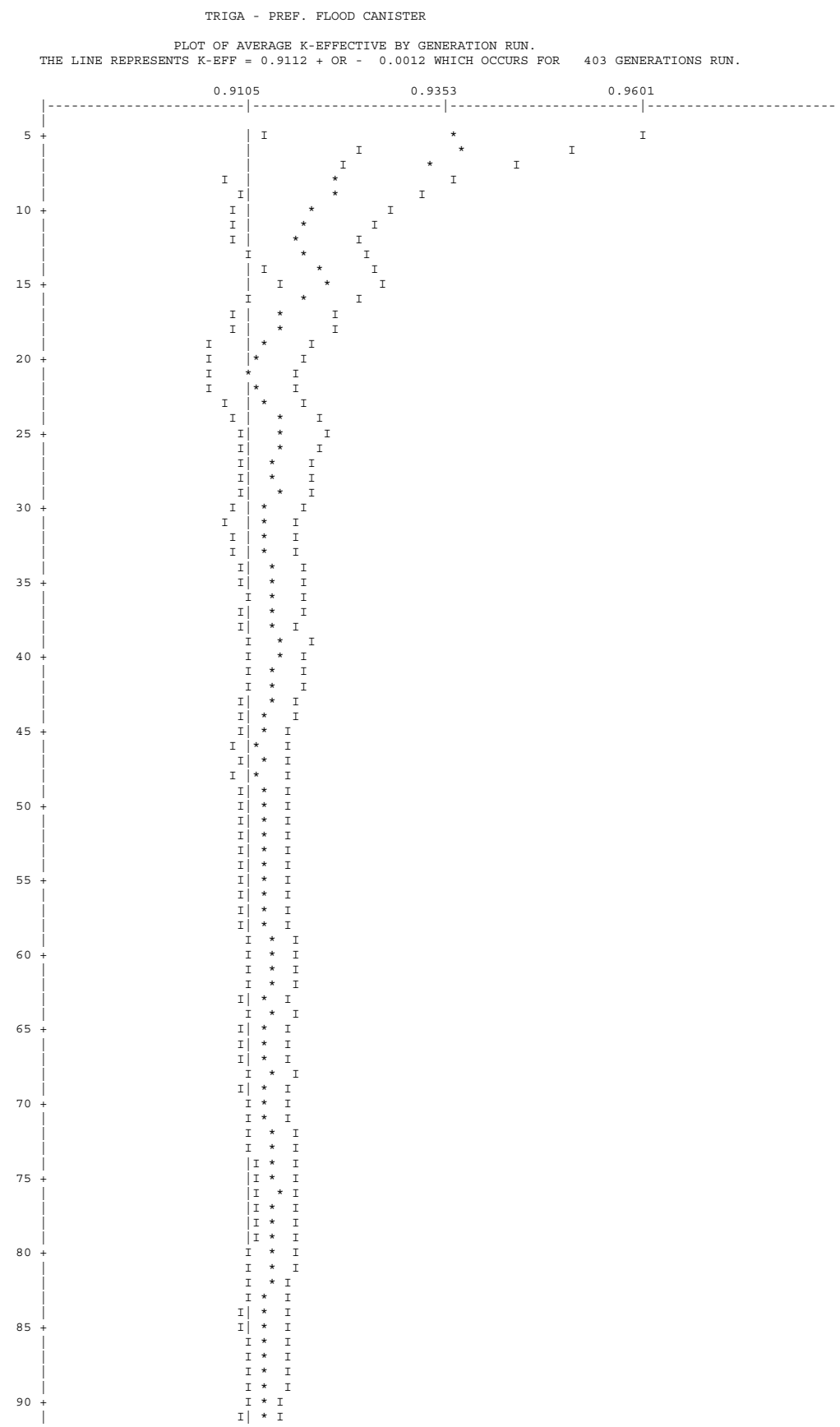
TRIGA - PREF. FLOOD CANISTER
PLOT OF AVERAGE K-EFFECTIVE BY GENERATION RUN.
THE LINE REPRESENTS K-EFF = 0.9112 + OR - 0.0012 WHICH OCCURS FOR 403 GENERATIONS RUN.
0.9105
0.9353
0.9601
5
10
15
20
25
30
35
40
45
50
55
60
65
70
75
80
85
90

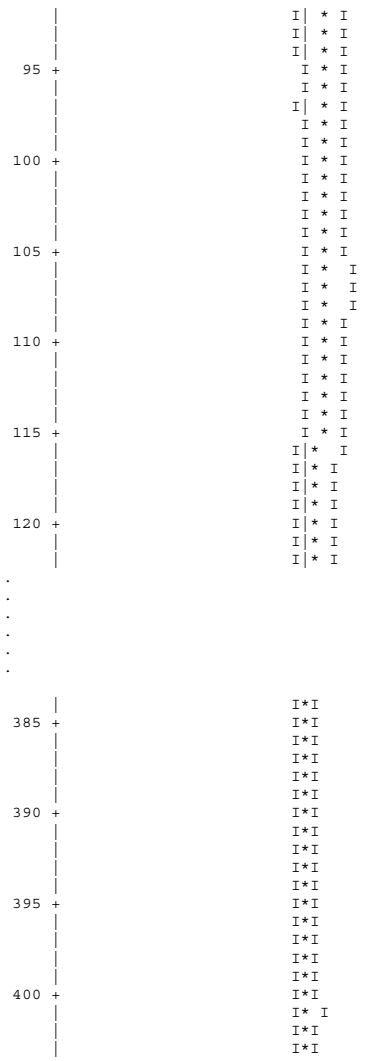

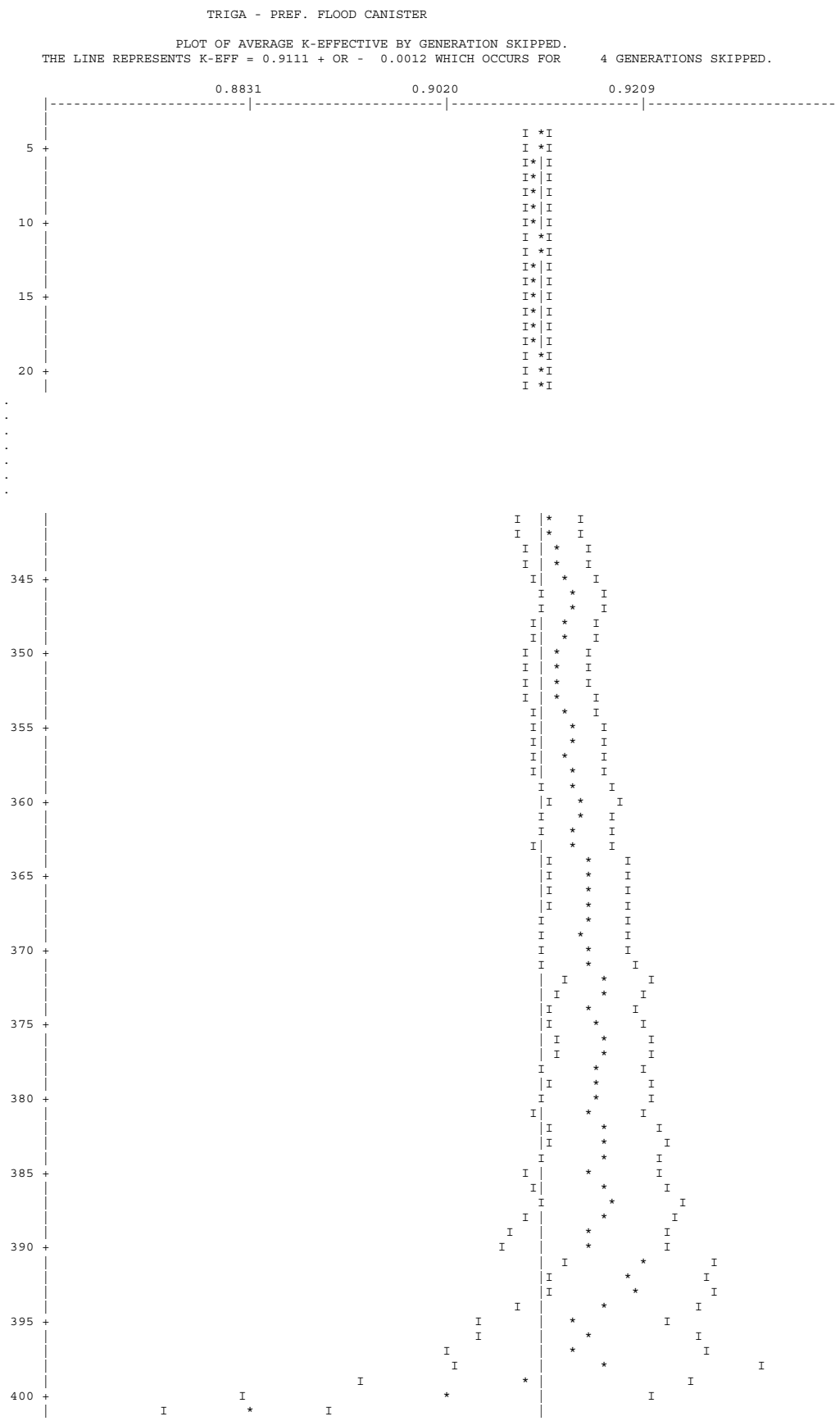
TRIGA - PREF. FLOOD CANISTER
PLOT OF AVERAGE K-EFFECTIVE BY GENERATION SKIPPED.
THE LINE REPRESENTS K-EFF = 0.9111 + OR - 0.0012 WHICH OCCURS FOR 4 GENERATIONS SKIPPED.
0.8831
0.9020
0.9209
5
10
15
20
345
350
355
360
365
370
375
380
385
390
395
400

TRIGA - PREF. FLOOD CANISTER

SKIPPING 3 GENERATIONS

GROUP	FISSION FRACTION	UNIT	REGION	FISSIONS	PERCENT DEVIATION	ABSORPTIONS	PERCENT DEVIATION	LEAKAGE	PERCENT DEVIATION
1	0.0003			2.83496E-04	1.9031	1.29360E-03	1.4083	0.00000E+00	0.0000
2	0.0016			1.41686E-03	0.6296	3.41264E-03	0.4423	0.00000E+00	0.0000
3	0.0021			1.91174E-03	0.5343	1.85564E-03	0.3922	0.00000E+00	0.0000
4	0.0014			1.23455E-03	0.5902	1.05460E-03	0.4228	0.00000E+00	0.0000
5	0.0022			1.97527E-03	0.5128	2.47901E-03	0.3603	0.00000E+00	0.0000
6	0.0035			3.19311E-03	0.3708	9.28203E-03	0.3281	0.00000E+00	0.0000
7	0.0046			4.20300E-03	0.3053	2.01369E-02	0.3109	0.00000E+00	0.0000
8	0.0048			4.33301E-03	0.3190	1.69557E-02	0.3274	0.00000E+00	0.0000
9	0.0064			5.86971E-03	0.3129	1.80217E-02	0.2698	0.00000E+00	0.0000
10	0.0140			1.27575E-02	0.2781	4.46620E-02	0.2905	0.00000E+00	0.0000
11	0.0292			2.65849E-02	0.3108	5.97859E-02	0.2609	0.00000E+00	0.0000
12	0.0379			3.45597E-02	0.2912	4.79199E-02	0.2395	0.00000E+00	0.0000
13	0.0340			3.09422E-02	0.3038	5.62476E-02	0.2495	0.00000E+00	0.0000
14	0.0275			2.50167E-02	0.2791	6.45882E-02	0.2650	0.00000E+00	0.0000
15	0.0053			4.85847E-03	0.3936	3.04517E-02	0.3715	0.00000E+00	0.0000
16	0.0036			3.27596E-03	0.4464	1.68993E-02	0.4071	0.00000E+00	0.0000
17	0.0053			4.85898E-03	0.6615	9.66689E-03	0.4238	0.00000E+00	0.0000
18	0.0072			6.51798E-03	0.7127	9.24759E-03	0.4621	0.00000E+00	0.0000
19	0.0087			7.89008E-03	0.5201	1.45394E-02	0.4346	0.00000E+00	0.0000
20	0.0344			3.13456E-02	0.3415	4.58006E-02	0.3527	0.00000E+00	0.0000
21	0.0175			1.59595E-02	0.5092	1.73339E-02	0.4036	0.00000E+00	0.0000
22	0.0397			3.61509E-02	0.3631	3.41677E-02	0.3508	0.00000E+00	0.0000
23	0.1115			1.01637E-01	0.2349	8.94561E-02	0.2346	0.00000E+00	0.0000
24	0.1831			1.66854E-01	0.2104	1.29711E-01	0.2009	0.00000E+00	0.0000
25	0.1501			1.36737E-01	0.2458	9.95705E-02	0.2382	0.00000E+00	0.0000
26	0.1882			1.71487E-01	0.2681	1.16429E-01	0.2624	0.00000E+00	0.0000
27	0.0761			6.93315E-02	0.3782	4.18532E-02	0.3919	0.00000E+00	0.0000
SYSTEM TOTAL =				9.11186E-01	0.1284	1.00282E+00	0.0434	0.00000E+00	0.0000

ELAPSED TIME 2.00283 MINUTES

RANDOM NUMBER= 750E700F5DF1

TRIGA - PREF. FLOOD CANISTER

FREQUENCY FOR GENERATIONS 4 TO 403

```
0.8423 TO 0.8540     ***
0.8540 TO 0.8656     ************
0.8656 TO 0.8773     ********************
0.8773 TO 0.8889     **********************************
0.8889 TO 0.9006     ************************************************
0.9006 TO 0.9123     ********************************************************************************
0.9123 TO 0.9239     ************************************************************************
0.9239 TO 0.9356     ********************************************************************
0.9356 TO 0.9472     ****************************************
0.9472 TO 0.9589     ****************
0.9589 TO 0.9705     ******
```

FREQUENCY FOR GENERATIONS 104 TO 403

```
0.8423 TO 0.8540     ***
0.8540 TO 0.8656     **********
0.8656 TO 0.8773     ****************
0.8773 TO 0.8889     ************************
0.8889 TO 0.9006     ****************************************
0.9006 TO 0.9123     ************************************************************
0.9123 TO 0.9239     **************************************************
0.9239 TO 0.9356     ********************************************
0.9356 TO 0.9472     **********************************
0.9472 TO 0.9589     *************
0.9589 TO 0.9705     ***
```

FREQUENCY FOR GENERATIONS 204 TO 403

```
0.8423 TO 0.8540     **
0.8540 TO 0.8656     ********
0.8656 TO 0.8773     *********
0.8773 TO 0.8889     ********************
0.8889 TO 0.9006     ************************
0.9006 TO 0.9123     **********************************
0.9123 TO 0.9239     ************************************
0.9239 TO 0.9356     ******************************
0.9356 TO 0.9472     ************************
0.9472 TO 0.9589     **********
0.9589 TO 0.9705     *
```

FREQUENCY FOR GENERATIONS 304 TO 403

```
0.8423 TO 0.8540     *
0.8540 TO 0.8656     ****
0.8656 TO 0.8773     *****
0.8773 TO 0.8889     ********
0.8889 TO 0.9006     **************
0.9006 TO 0.9123     ***************
0.9123 TO 0.9239     ******************
0.9239 TO 0.9356     **************
0.9356 TO 0.9472     ****************
0.9472 TO 0.9589     ***
0.9589 TO 0.9705     *
```

6.6.7 MTR Fuel Bounding Configuration

An evaluation was performed to extend limits of enrichment for MTR fuel elements. This section provides the summarized input/output data for the MTR fuel finite cask model in the accident condition. This case represents HEU fuel at 94 wt % enrichment with 414 g ^{235}U in 23 fuel plates. Also included is the bounding HEU case for the 460 g ^{235}U with 23 plates of 20 g ^{235}U per plate.

Figure 6.6.7-1 MTR Finite Cask Model

```
PRIMARY MODULE ACCESS AND INPUT RECORD ( SCALE DRIVER - 95/03/29 - 09:06:37 )
   MODULE CSAS25   WILL BE CALLED
     LWT MTR INPUT FOR CASK MODEL - PLATES IN CLOSE & PLATES @ FULL PITCH
     'MIN BASKET PLATE - COMMENT CARD REFERS TO NOMINAL PLATE SIZE
     '23 PLATES - 18 GRAM 235U PER PLATE
     'FUEL SHIFT AXIAL ALTERNATING
     '56 CM ACTIVE FUEL HEIGHT
     27GROUPNDF4  LATTICECELL
     URANIUM  1 DEN=19.05 0.03626 293 92235 94. 92238 6. END
     AL       1 DEN=2.702 0.25566 293 END
     AL    2 1.0    293.0 END
     H2O   3 1.0    293.0 END
     AL    4 1.0    293.0 END
     SS304 5 1.0    293.0 END
     PB    6 1.0    293.0 END
     H2O   7 1.E-20 293.0 END
     H2O   8 1.E-20 293.0 END
     END COMP
     SYMMSLABCELL 0.3919 0.075 1 3 0.115 2 END

     READ PARAM TBA=5 RUN=YES PLT=NO GEN=803 NPG=1000 END PARAM
     READ GEOM
     '
     ' FUEL PLATE CELL UNITS
     '
     UNIT 1
     COM='MIDDLE FUEL PLATE CELL'
     CUBOID 1 1 2P3.3000 2P0.0375 56.7 0.7
     CUBOID 2 1 2P3.3000 2P0.0575 57.4 0.0
     CUBOID 3 1 2P3.3000 2P0.1959 57.4 0.0
     UNIT 2
     COM='TOP FUEL PLATE CELL'
     CUBOID 1 1 2P3.3000 2P0.0375 56.7 0.7
     CUBOID 2 1 2P3.3000 2P0.0575 57.4 0.0
     CUBOID 3 1 2P3.3000 0.0575 -0.1959 57.4 0.0
     UNIT 3
     COM='BOTTOM FUEL PLATE CELL'
     CUBOID 1 1 2P3.3000 2P0.0375 56.7 0.7
     CUBOID 2 1 2P3.3000 2P0.0575 57.4 0.0
     CUBOID 3 1 2P3.3000 0.1959 -0.0575 57.4 0.0
     '
     UNIT 4
     COM='SIDE PLATE'
     CUBOID 2 1 2P0.2 2P3.75 57.4 0.0
     '
     ' PLATES AT BOTTOM OF BASKET OPENING
     '
     ' BASKET CENTER ROW ARRAY ELEMENTS
     '
     UNIT 10
     COM='FUEL PATE ARRAY - PLATES IN 5/16 IN. WEB CENTER'
     ARRAY  1 -3.3000 -4.3688 0.0
     CUBOID 3 1 2P4.3688 2P4.3688 73.152 0.0
     HOLE   4 -4.1687 0.0 0.0
     HOLE   4  4.1687 0.0 0.0
     REPLICATE 5 1 2R0.3556 4R0.0 1
     UNIT 11
     COM='FUEL ARRAY 20 PLATES IN 5/16 IN. WEB RIGHT'
     ARRAY  1 -3.9686 -4.3688 0.0
     CUBOID 3 1 2P4.3688 2P4.3688 73.152 0.0
     HOLE   4 -4.1687 0.0 0.0
     HOLE   4  4.1687 0.0 0.0
     REPLICATE 5 1 2R0.3556 4R0.0 1
     UNIT 12
     COM='FUEL ARRAY 20 PLATES IN 5/16 IN. WEB LEFT'
     ARRAY  1 -2.6314 -4.3688 0.0
     CUBOID 3 1 2P4.3688 2P4.3688 73.152 0.0
     HOLE   4 -4.1687 0.0 0.0
     HOLE   4  4.1687 0.0 0.0
     REPLICATE 5 1 2R0.3556 4R0.0 1
     '
     ' BASKET TOP ROW ARRAY ELEMENTS
     '
     UNIT 20
     COM='FUEL ARRAY WITH HALF OF 1/4 PLATE ON RIGHT -  TOP STACK'
     ARRAY  1 -2.6314 -4.3688 0.0
     CUBOID 3 1 2P4.3688 2P4.3688 73.152 0.0
     HOLE   4 -4.1687 0.0 0.0
     HOLE   4  4.1687 0.0 0.0
     REPLICATE 5 1 0.3048 5R0.0 1
     UNIT 21
     COM='FUEL WITH HALF OF 1/4 IN. PLATE ON LEFT  TOP STACK'
     ARRAY  1 -3.9686 -4.3688 0.0
     CUBOID 3 1 2P4.3688 2P4.3688 73.152 0.0
     HOLE   4 -4.1687 0.0 0.0
     HOLE   4  4.1687 0.0 0.0
     REPLICATE 5 1 0.0 0.3048 4R0.0 1
     '
     ' BASKET BOTTOM ROW ARRAY ELEMENTS
     '
```

```
UNIT 30
COM='FUEL ARRAY WITH HALF OF 1/4 IN. PLATE ON RIGHT -  BOTTOM STACK'
ARRAY  1 -2.6314 -4.3688 0.0
CUBOID 3 1 2P4.3688 2P4.3688 73.152 0.0
HOLE   4 -4.1687 0.0 0.0
HOLE   4  4.1687 0.0 0.0
REPLICATE 5 1 0.3048 5R0.0 1
UNIT 31
COM='FUEL ARRAY WITH HALF OF 1/4 IN. PLATE ON LEFT - BOTTOM STACK'
ARRAY  1 -3.9686 -4.3688 0.0
CUBOID 3 1 2P4.3688 2P4.3688 73.152 0.0
HOLE   4 -4.1687 0.0 0.0
HOLE   4  4.1687 0.0 0.0
REPLICATE 5 1 0.0 0.3048 4R0.0 1
'
' CONSTRUCTION BASKET ROWS
'
UNIT 40
COM='2 UNIT ARRAY WITH 1/4 IN. PLATE ON TOP AND SIDES'
ARRAY 2 -9.0428 -4.3688 0.0
REPLICATE 5 1 3R0.3048 0.0 2R0.0 1
UNIT 41
COM='3 UNIT ARRAY WITH REST OF 5/16 WEB'
ARRAY 3 -14.1738 -4.3688 0.0
REPLICATE 5 1 2R0.3556 2R0.7112 2R0.0 1
UNIT 42
COM='2 UNIT ARRAY WITH 1/4 IN. PLATE ON BOTTOM AND SIDES'
ARRAY 4 -9.0428 -4.3688 0.0
REPLICATE 5 1 2R0.3048 0.0 0.3048 2R0.0 1
'
' BASKET UNIT
'
UNIT 50
COM='7 MTR ELEMENTS IN THE LWT'
CYLINDER 3 1 17.0500 73.152 0.0
HOLE 40 0.0 +9.4489 0.0
HOLE 41 0.0  0.0    0.0
HOLE 42 0.0 -9.4489 0.0
CYLINDER 5 1 18.8913   73.152 -1.27
CYLINDER 6 1 33.4963   73.152 -1.27
CYLINDER 5 1 36.5443   73.152 -1.27
CYLINDER 7 1 49.2443   73.152 -1.27
CYLINDER 5 1 49.8539   73.152 -1.27
CUBOID   8 1 4P49.8539 73.152 -1.27
'
' PLATES AT TOP OF BASKET OPENING
'
' BASKET CENTER ROW ARRAY ELEMENTS
'
UNIT 110
COM='FUEL PATE ARRAY - PLATES IN 5/16 IN. WEB CENTER'
ARRAY  1 -3.3000 -4.3688 15.752
CUBOID 3 1 2P4.3688 2P4.3688 73.152 0.0
HOLE   4 -4.1687 0.0 15.752
HOLE   4  4.1687 0.0 15.752
REPLICATE 5 1 2R0.3556 4R0.0 1
UNIT 111
COM='FUEL ARRAY 20 PLATES IN 5/16 IN. WEB RIGHT'
ARRAY  1 -3.9686 -4.3688 15.752
CUBOID 3 1 2P4.3688 2P4.3688 73.152 0.0
HOLE   4 -4.1687 0.0 15.752
HOLE   4  4.1687 0.0 15.752
REPLICATE 5 1 2R0.3556 4R0.0 1
UNIT 112
COM='FUEL ARRAY 20 PLATES IN 5/16 IN. WEB LEFT'
ARRAY  1 -2.6314 -4.3688 15.752
CUBOID 3 1 2P4.3688 2P4.3688 73.152 0.0
HOLE   4 -4.1687 0.0 15.752
HOLE   4  4.1687 0.0 15.752
REPLICATE 5 1 2R0.3556 4R0.0 1
'
' BASKET TOP ROW ARRAY ELEMENTS
'
UNIT 120
COM='FUEL ARRAY WITH HALF OF 1/4 PLATE ON RIGHT -  TOP STACK'
ARRAY  1 -2.6314 -4.3688 15.752
CUBOID 3 1 2P4.3688 2P4.3688 73.152 0.0
HOLE   4 -4.1687 0.0 15.752
HOLE   4  4.1687 0.0 15.752
REPLICATE 5 1 0.3048 5R0.0 1
UNIT 121
COM='FUEL WITH HALF OF 1/4 IN. PLATE ON LEFT  TOP STACK'
ARRAY  1 -3.9686 -4.3688 15.752
CUBOID 3 1 2P4.3688 2P4.3688 73.152 0.0
HOLE   4 -4.1687 0.0 15.752
HOLE   4  4.1687 0.0 15.752
REPLICATE 5 1 0.0 0.3048 4R0.0 1
'
' BASKET BOTTOM ROW ARRAY ELEMENTS
'
UNIT 130
COM='FUEL ARRAY WITH HALF OF 1/4 IN. PLATE ON RIGHT -  BOTTOM STACK'
ARRAY  1 -2.6314 -4.3688 15.752
CUBOID 3 1 2P4.3688 2P4.3688 73.152 0.0
```

```
HOLE   4 -4.1687 0.0 15.752
HOLE   4  4.1687 0.0 15.752
REPLICATE 5 1 0.3048 5R0.0 1
UNIT 131
COM='FUEL ARRAY WITH HALF OF 1/4 IN. PLATE ON LEFT - BOTTOM STACK'
ARRAY  1 -3.9686 -4.3688 15.752
CUBOID 3 1 2P4.3688 2P4.3688 73.152 0.0
HOLE   4 -4.1687 0.0 15.752
HOLE   4  4.1687 0.0 15.752
REPLICATE 5 1 0.0 0.3048 4R0.0 1
'
' CONSTRUCTION BASKET ROWS
'
UNIT 140
COM='2 UNIT ARRAY WITH 1/4 IN. PLATE ON TOP AND SIDES'
ARRAY 12 -9.0428 -4.3688 0.0
REPLICATE 5 1 3R0.3048 0.0 2R0.0 1
UNIT 141
COM='3 UNIT ARRAY WITH REST OF 5/16 WEB'
ARRAY 13 -14.1738 -4.3688 0.0
REPLICATE 5 1 2R0.3556 2R0.7112 2R0.0 1
UNIT 142
COM='2 UNIT ARRAY WITH 1/4 IN. PLATE ON BOTTOM AND SIDES'
ARRAY 14 -9.0428 -4.3688 0.0
REPLICATE 5 1 2R0.3048 0.0 0.3048 2R0.0 1
'
' BASKET UNIT
'
UNIT 150
COM='7 MTR ELEMENTS IN THE LWT'
CYLINDER 3 1 17.0500 73.152 0.0
HOLE 140 0.0 +9.4489 0.0
HOLE 141 0.0  0.0    0.0
HOLE 142 0.0 -9.4489 0.0
CYLINDER 5 1 18.8913   73.152 -1.27
CYLINDER 6 1 33.4963   73.152 -1.27
CYLINDER 5 1 36.5443   73.152 -1.27
CYLINDER 7 1 49.2443   73.152 -1.27
CYLINDER 5 1 49.8539   73.152 -1.27
CUBOID   8 1 4P49.8539 73.152 -1.27
'
' CASK LID AND BOTTOM STRUCTURE
'
UNIT 60
COM='SIMPLIFIED LID STRUCTURE NAC-LWT'
CYLINDER 5 1 36.5188   13.6775 -14.1351
CYLINDER 8 1 49.8539   13.6775 -14.1351
CUBOID   8 1 4P49.8539 13.6775 -14.1351
UNIT 61
COM='SIMPLIFIED CASK BOTTOM STRUCTURE NAC-LWT'
CYLINDER 6 1 26.3525 2P3.81
CYLINDER 5 1 36.6188 +13.36 -12.7
CYLINDER 8 1 49.8539 +13.36 -12.7
CUBOID   8 1 4P49.8539 +13.36 -12.7
UNIT 62
COM='THIN TOP AND BOTTOM SHELL OF NEUTRON SHIELD - SUBTRACTED FROM LID MODEL'
CYLINDER 5 1 49.8539 0.61 0.0
CUBOID   8 1 4P49.8539 0.61 0.0
'
' STACK OF BASKETS WITH CASK LID AND BOTTOM
'
GLOBAL UNIT 70
COM='STACK OF 6 BASKETS IN CASK WITH LID AND BOTTOM'
ARRAY  10  -49.8539 -49.8539 0.0
END GEOM
READ ARRAY
'
' FUEL ELEMENT PLATE ARRAY
'
ARA=1 NUX=1 NUY=23 NUZ=1 FILL 3 21R1 2 END FILL
'
' ARRAYS OF BASKET OPENINGS (TOP, MIDDLE, BOTTOM)
' PLATES AT BOTTOM OF OPENING
'
ARA=2 NUX=2 NUY=1 NUZ=1 FILL 20 21 END FILL
ARA=3 NUX=3 NUY=1 NUZ=1 FILL 12 10 11 END FILL
ARA=4 NUX=2 NUY=1 NUZ=1 FILL 30 31 END FILL
'
' ARRAYS OF BASKET OPENINGS (TOP, MIDDLE, BOTTOM)
' PLATES AT TOP OF OPENING
'
ARA=12 NUX=2 NUY=1 NUZ=1 FILL 120 121 END FILL
ARA=13 NUX=3 NUY=1 NUZ=1 FILL 112 110 111 END FILL
ARA=14 NUX=2 NUY=1 NUZ=1 FILL 130 131 END FILL
'
' ARRAY OF BASKETS WITH LID AND BOTTOM
'
ARA=10 NUX=1 NUY=1 NUZ=10 FILL 61 62 150 50 150 50 150 50 62 60 END FILL
END ARRAY
READ BOUNDS ALL=MIR END BOUNDS
READ PLOT
TTL='X-Y PLOT OF CENTER ELEMENT - FUEL ELEVATION'
SCR=YES PIC=MAT LPI=10
UAX=1.0 VDN=-1.0 NAX=1500
XUL=-5.0 YUL=5.0 ZUL=50.0
```

```
  XLR=5.0 YLR=-5.0 ZLR=50.0 END
  TTL='X-Y PLOT OF BASKET - FUEL ELEVATION'
  UAX=1.0 VDN=-1.0 NAX=1500
  XUL=-17.0 YUL=17.0 ZUL=50.0
  XLR=17.0 YLR=-17.0 ZLR=50.0 END
  TTL='X-Y PLOT OF CASK - FUEL ELEVATION'
  UAX=1.0 VDN=-1.0 NAX=1500
  XUL=-65.0 YUL=65.0 ZUL=50.0
  XLR=65.0 YLR=-65.0 ZLR=50.0 END
  TTL='Y-Z (X=0) PLOT OF BOTTOM BASKET - CENTER SECTION'
  VAX=1.0 WDN=-1.0
  XUL=0.0 YUL=-5.0 ZUL=55.0
  XLR=0.0 YLR=5.0 ZLR=50.0 END
  TTL='Y-Z (X=0) PLOT OF BOTTOM BASKET - CENTER FUEL ELEMENT'
  VAX=1.0 WDN=-1.0
  XUL=0.0 YUL=-5.0 ZUL=101.1
  XLR=0.0 YLR=5.0 ZLR=26.6 END
  TTL='Y-Z (X=-2) PLOT OF BOTTOM BASKET'
  VAX=1.0 WDN=-1.0
  XUL=-2.0 YUL=-15.0 ZUL=101.1
  XLR=-2.0 YLR=15.0 ZLR=26.6 END
  TTL='Y-Z (X=-2) PLOT OF CASK - R=17.0'
  LPI=5 NAX=1000
  VAX=1.0 WDN=-1.0
  XUL=-2.0 YUL=-17.0 ZUL=502.0
  XLR=-2.0 YLR=17.0 ZLR=-1.0 END
  TTL='Y-Z (X=-2) PLOT OF CASK - R=51.0'
  VAX=1.0 WDN=-1.0
  XUL=-2.0 YUL=-51.0 ZUL=502.0
  XLR=-2.0 YLR=51.0 ZLR=-1.0 END
  END PLOT
  END DATA

SECONDARY MODULE O0O008   HAS BEEN CALLED.

MODULE O0O008   IS FINISHED. COMPLETION CODE     0. CPU TIME USED     0.61 (SECONDS).

SECONDARY MODULE O0O002   HAS BEEN CALLED.

MODULE O0O002   IS FINISHED. COMPLETION CODE     0. CPU TIME USED     4.83 (SECONDS).

SECONDARY MODULE O0O009   HAS BEEN CALLED.

MODULE O0O009   IS FINISHED. COMPLETION CODE     0. CPU TIME USED   742.04 (SECONDS).

MODULE CSAS25   IS FINISHED. COMPLETION CODE     0. CPU TIME USED   749.95 (SECONDS).
```


CCCCCCCCCC SSSSSSSSSS AAAAAAAAA SSSSSSSSSS 22222222222 5555555555555
CCCCCCCCCCCC SSSSSSSSSSSS AAAAAAAAAAA SSSSSSSSSSSS 2222222222222 5555555555555
CC CC SS SS AA AA SS SS 22 22 55
CC SS AA AA SS 22 55
CC SS AA AA SS 22 55
CC SSSSSSSSSSS AAAAAAAAAAAAA SSSSSSSSSSS 22 555555555555
CC SSSSSSSSSSS AAAAAAAAAAAAA SSSSSSSSSSS 22 5555555555555
CC SS AA AA SS 22 55
CC SS AA AA SS 22 55
CC CC SS SS AA AA SS SS 22 55 55
CCCCCCCCCCCC SSSSSSSSSSSS AA AA SSSSSSSSSSSS 2222222222222 5555555555555
CCCCCCCCCC SSSSSSSSSS AA AA SSSSSSSSSS 2222222222222 55555555555
SSSSSSSSSS CCCCCCCCCC AAAAAAAAA LL EEEEEEEEEEEE PPPPPPPPPPP CCCCCCCCCC
SSSSSSSSSSS CCCCCCCCCCCC AAAAAAAAAAA LL EEEEEEEEEEEE PPPPPPPPPPPP CCCCCCCCCCCC
SS SS CC CC AA AA LL EE PP PP CC CC
SS CC AA AA LL EE PP PP CC
SS CC AA AA LL EE PP PP CC
SSSSSSSSSSS CC AAAAAAAAAAAAA LL EEEEEEEEE ------------ PPPPPPPPPPPP CC
SSSSSSSSSSS CC AAAAAAAAAAAAA LL EEEEEEEEE ------------ PPPPPPPPPPP CC
SS CC AA AA LL EE PP CC
SS CC AA AA LL EE PP CC
SS SS CC CC AA AA LL EE PP CC CC
SSSSSSSSSSSS CCCCCCCCCCCCC AA AA LLLLLLLLLLLL EEEEEEEEEEEE PP CCCCCCCCCCCC
SSSSSSSSSS CCCCCCCCCC AA AA LLLLLLLLLLLL EEEEEEEEEEEE PP CCCCCCCCCC
11 0000000 // 11 22222222222 // 0000000 0000000
111 000000000 // 111 2222222222222 // 000000000 000000000
1111 00 00 // 1111 22 22 // 00 00 00 00
11 00 00 // 11 22 // 00 00 00 00
11 00 00 // 11 22 // 00 00 00 00
11 00 00 // 11 22 // 00 00 00 00
11 00 00 // 11 22 // 00 00 00 00
11 00 00 // 11 22 // 00 00 00 00
11 00 00 // 11 22 // 00 00 00 00
11 00 00 // 11 22 // 00 00 00 00
11 00 00 // 11 22 // 00 00 00 00
11111111 000000000 // 11111111 2222222222222 // 000000000 000000000
11111111 0000000 // 11111111 2222222222222 // 0000000 0000000
11 44 11 7777777777777 33333333333 22222222222
111 444 111 777777777777 3333333333333 2222222222222
1111 4444 ::: 1111 77 77 ::: 33 33 22 22
11 44 44 ::: 11 77 ::: 33 22
11 44 44 ::: 11 77 ::: 33 22
11 44 44 11 77 333 22
11 44 44 11 77 333 22
11 444444444444 ::: 11 77 ::: 33 22
11 4444444444444 ::: 11 77 ::: 33 22
11 44 ::: 11 77 ::: 33 33 22
11111111 44 11111111 77 3333333333333 2222222222222
11111111 44 11111111 77 33333333333 2222222222222

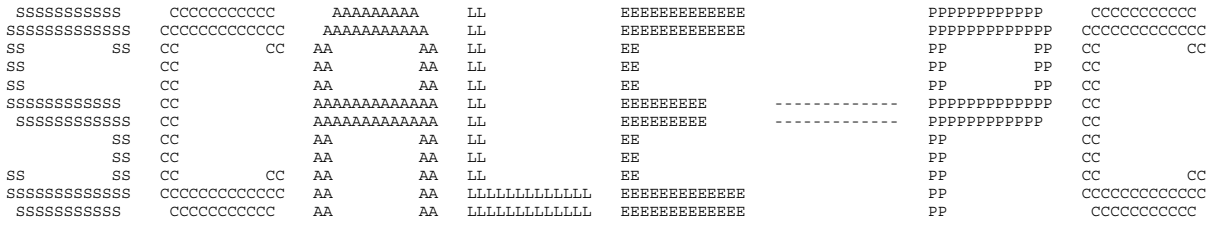


```
*******************************************************************************
*******************************************************************************
*******************************************************************************
*****                                                                     *****
*****                  PROGRAM VERIFICATION INFORMATION                   *****
*****                                                                     *****
*****                CODE SYSTEM:  SCALE-PC VERSION:  4.3                 *****
*****                                                                     *****
*******************************************************************************
*******************************************************************************
*****                                                                     *****
*****                                                                     *****
*****              PROGRAM:  CSAS                                         *****
*****                                                                     *****
*****        CREATION DATE:  03/08/96                                     *****
*****                                                                     *****
*****              VOLUME:   ENG                                          *****
*****                                                                     *****
*****              LIBRARY:  G:\SCALE43\WIN_NT\EXE                        *****
*****                                                                     *****
*****                                                                     *****
*****    THIS IS NOT A SCALE-PC CONFIGURATION CONTROLLED CODE             *****
*****                                                                     *****
*****              JOBNAME:  SCALE-PC                                     *****
*****                                                                     *****
*****    DATE OF EXECUTION:  10/12/00                                     *****
*****                                                                     *****
*****    TIME OF EXECUTION:  14:17:32                                     *****
*****                                                                     *****
*****                                                                     *****
*******************************************************************************
*******************************************************************************
*******************************************************************************
```

```
'MIN BASKET PLATE - COMMENT CARD REFERS TO NOMINAL PLATE SIZE

'23 PLATES - 18 GRAM 235U PER PLATE

'FUEL SHIFT AXIAL ALTERNATING

'56 CM ACTIVE FUEL HEIGHT

'MIN BASKET PLATE - COMMENT CARD REFERS TO NOMINAL PLATE SIZE

'23 PLATES - 18 GRAM 235U PER PLATE

'FUEL SHIFT AXIAL ALTERNATING

'56 CM ACTIVE FUEL HEIGHT
    LWT MTR INPUT FOR CASK MODEL - PLATES IN CLOSE & PLATES @ FULL PITCH


    **** PROBLEM PARAMETERS ****

    LIB 27GROUPNDF4  LIBRARY
    MXX            8 MIXTURES
    MSC            9 COMPOSITION SPECIFICATIONS
    IZM            3 MATERIAL ZONES
    GE  LATTICECELL  GEOMETRY
    MORE           0 0/1 DO NOT READ/READ OPTIONAL PARAMETER DATA
    MSLN           0 FUEL SOLUTIONS


    **** PROBLEM COMPOSITION DESCRIPTION ****

    SC  URANIUM      STANDARD COMPOSITION
    MX             1 MIXTURE NO.
    VF        0.0363 VOLUME FRACTION
    ROTH     19.0500 SPECIFIED DENSITY
    NEL            1 NO. ELEMENTS
    ICP            1 0/1 MIXTURE/COMPOUND
    TEMP       293.0 DEG KELVIN
               92000      1.00 ATOM/MOLECULE
                             92235    94.000 WT%
                             92238     6.000 WT%
    END

    SC  AL           STANDARD COMPOSITION
    MX             1 MIXTURE NO.
    VF        0.2557 VOLUME FRACTION
    ROTH      2.7020 SPECIFIED DENSITY
    NEL            1 NO. ELEMENTS
    ICP            1 0/1 MIXTURE/COMPOUND
    TEMP       293.0 DEG KELVIN
               13027      1.00 ATOM/MOLECULE
    END

    SC  AL           STANDARD COMPOSITION
    MX             2 MIXTURE NO.
    VF        1.0000 VOLUME FRACTION
    ROTH      2.7020 THEORETICAL DENSITY
    NEL            1 NO. ELEMENTS
    ICP            1 0/1 MIXTURE/COMPOUND
    TEMP       293.0 DEG KELVIN
               13027      1.00 ATOM/MOLECULE
    END

    SC  H2O          STANDARD COMPOSITION
    MX             3 MIXTURE NO.
    VF        1.0000 VOLUME FRACTION
    ROTH      0.9982 THEORETICAL DENSITY
    NEL            2 NO. ELEMENTS
    ICP            1 0/1 MIXTURE/COMPOUND
    TEMP       293.0 DEG KELVIN
                1001      2.00 ATOMS/MOLECULE
                8016      1.00 ATOM/MOLECULE
    END

    SC  AL           STANDARD COMPOSITION
    MX             4 MIXTURE NO.
    VF        1.0000 VOLUME FRACTION
    ROTH      2.7020 THEORETICAL DENSITY
    NEL            1 NO. ELEMENTS
    ICP            1 0/1 MIXTURE/COMPOUND
    TEMP       293.0 DEG KELVIN
               13027      1.00 ATOM/MOLECULE
    END

    SC  SS304        STANDARD COMPOSITION
    MX             5 MIXTURE NO.
    VF        1.0000 VOLUME FRACTION
    ROTH      7.9200 THEORETICAL DENSITY
    NEL            4 NO. ELEMENTS
    ICP            0 0/1 MIXTURE/COMPOUND
    TEMP       293.0 DEG KELVIN
               24304    19.000 WT%
               25055     2.000 WT%
               26304    69.500 WT%
```

```
          28304     9.500 WT%
END

SC  PB           STANDARD COMPOSITION
MX             6 MIXTURE NO.
VF        1.0000 VOLUME FRACTION
ROTH     11.3440 THEORETICAL DENSITY
NEL            1 NO. ELEMENTS
ICP            1 0/1 MIXTURE/COMPOUND
TEMP       293.0 DEG KELVIN
           82000      1.00 ATOM/MOLECULE
END

SC  H2O          STANDARD COMPOSITION
MX             7 MIXTURE NO.
VF        0.0000 VOLUME FRACTION
ROTH      0.9982 THEORETICAL DENSITY
NEL            2 NO. ELEMENTS
ICP            1 0/1 MIXTURE/COMPOUND
TEMP       293.0 DEG KELVIN
            1001      2.00 ATOMS/MOLECULE
            8016      1.00 ATOM/MOLECULE
END

SC  H2O          STANDARD COMPOSITION
MX             8 MIXTURE NO.
VF        0.0000 VOLUME FRACTION
ROTH      0.9982 THEORETICAL DENSITY
NEL            2 NO. ELEMENTS
ICP            1 0/1 MIXTURE/COMPOUND
TEMP       293.0 DEG KELVIN
            1001      2.00 ATOMS/MOLECULE
            8016      1.00 ATOM/MOLECULE
END


**** PROBLEM GEOMETRY ****

CTP SYMMSLABCELL CELL TYPE
PITCH     0.3919 CM CENTER TO CENTER SPACING
FUELOD    0.0750 CM FUEL DIAMETER OR SLAB THICKNESS
MFUEL          1 MIXTURE NO. OF FUEL
MMOD           3 MIXTURE NO. OF MODERATOR
CLADOD    0.1150 CM CLAD OUTER DIAMETER
MCLAD          2 MIXTURE NO. OF CLAD


ZONE SPECIFICATIONS FOR LATTICECELL GEOMETRY

              ZONE  1 IS FUEL
              ZONE  2 IS CLAD
              ZONE  3 IS MOD
```

```
*****************************************************************************************************************
***                                                                                                           ***
***                            LWT MTR INPUT FOR CASK MODEL - PLATES IN CLOSE & PLATES @ FULL PITCH            ***
***                                                                                                           ***
*****************************************************************************************************************
*****************************************************************************************************************
***                                                                                                           ***
***                              ********** DATA LIBRARY INFORMATION **********                              ***
***                                                                                                           ***
***          UNIT                                                VOLUME                                       ***
***         NUMBER               DATA SET NAME                   NAME        UNIT FUNCTION                    ***
***         ------               -------------                   ----        -------------                    ***
***                                                                                                           ***
***           89     G:\scale43\DATALIB\FT89F001                              STANDARD COMPOSITION LIBRARY     ***
***                                                                                                           ***
***           82     G:\scale43\DATALIB\FT82F001                              CROSS SECTION LIBRARY            ***
***                                                                                                           ***
***           11     D:\hjp\23p-18g-as-56h\FT11F001                           SHORT CROSS SECTION LIBRARY      ***
***                                                                                                           ***
***           90     D:\hjp\23p-18g-as-56h\FT90F001                           INPUT DATA DIRECT ACCESS         ***
***                                                                                                           ***
*****************************************************************************************************************
*****************************************************************************************************************
***                                                                                                           ***
***                                                                                                           ***
***                                    STANDARD COMPOSITION LIBRARY DATA                                      ***
***                                    ---------------------------------                                      ***
***                                                                                                           ***
***            UNIT NUMBER  :  89                                                                             ***
***                                                                                                           ***
***            DATASET NAME :  G:\scale43\DATALIB\FT89F001                                                    ***
***                                                                                                           ***
***            LIBRARY TITLE:  SCALE-4 STANDARD COMPOSITION LIBRARY                                           ***
***                            637 STANDARD COMPOSITIONS, 490 NUCLIDES                                        ***
***                            90 ELEMENTS WITH VARIABLE ISOTOPIC DISTRBUTIONS.                               ***
***                                                                                                           ***
***            CREATION DATE:   6/30/95                                                                       ***
***                                                                                                           ***
***                                                                                                           ***
***                                                                                                           ***
***                                       CROSS SECTION LIBRARY DATA                                          ***
***                                       --------------------------                                          ***
***                                                                                                           ***
***            UNIT NUMBER  :  82                                                                             ***
***                                                                                                           ***
***            DATASET NAME :  G:\scale43\DATALIB\FT82F001                                                    ***
***                                                                                                           ***
***            LIBRARY TITLE:  SCALE 4.2 - 27 GROUP NEUTRON GROUP LIBRARY                                     ***
***                               BASED ON ENDF-B VERSION 4 DATA                                              ***
***                                  COMPILED FOR NRC     1/27/89                                             ***
***                                     LAST UPDATED                                          08/12/94  ***
***                                        L.M.PETRIE   -   ORNL                                              ***
***                                                                                                           ***
***                                                                                                           ***
***                                                                                                           ***
***                                                                                                           ***
*****************************************************************************************************************
*****************************************************************************************************************
```

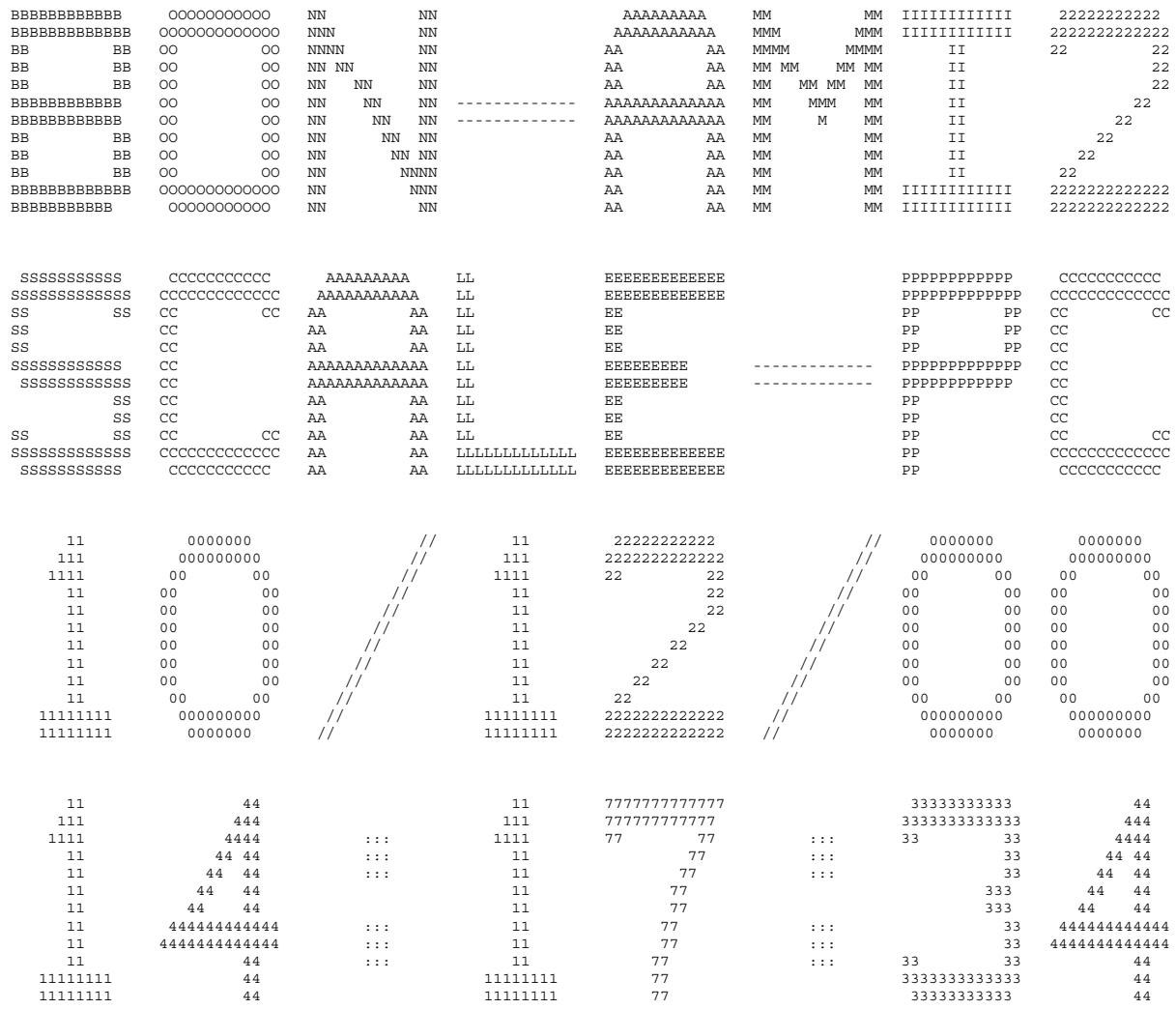
BBBBBBBBBBB OOOOOOOOOO NN NN AAAAAAAAA MM MM IIIIIIIIIII 22222222222
BBBBBBBBBBBB OOOOOOOOOOO NNN NN AAAAAAAAAA MMM MMM IIIIIIIIIII 2222222222222
BB BB OO OO NNNN NN AA AA MMMM MMMM II 22 22
BB BB OO OO NN NN NN AA AA MM MM MM MM II 22
BB BB OO OO NN NN NN AA AA MM MM MM MM II 22
BBBBBBBBBBB OO OO NN NN NN AAAAAAAAAAAA MM MMM MM II 22
BBBBBBBBBBB OO OO NN NN NN AAAAAAAAAAAA MM M MM II 22
BB BB OO OO NN NN NN AA AA MM MM II 22
BB BB OO OO NN NN NN AA AA MM MM II 22
BB BB OO OO NN NNNN AA AA MM MM II 22
BBBBBBBBBBBB OOOOOOOOOOO NN NNN AA AA MM MM IIIIIIIIIII 2222222222222
BBBBBBBBBB OOOOOOOOOO NN NN AA AA MM MM IIIIIIIIIII 2222222222222
SSSSSSSSSS CCCCCCCCCC AAAAAAAA LL EEEEEEEEEEE PPPPPPPPPP CCCCCCCCCC
SSSSSSSSSSS CCCCCCCCCCC AAAAAAAAAA LL EEEEEEEEEEE PPPPPPPPPPP CCCCCCCCCCC
SS SS CC CC AA AA LL EE PP PP CC CC
SS CC AA AA LL EE PP PP CC
SS CC AA AA LL EE PP PP CC
SSSSSSSSSSS CC AAAAAAAAAAAA LL EEEEEEEE PPPPPPPPPP CC
SSSSSSSSSS CC AAAAAAAAAAAA LL EEEEEEEE PPPPPPPPPP CC
SS CC AA AA LL EE PP CC
SS CC AA AA LL EE PP CC
SS SS CC CC AA AA LL EE PP CC CC
SSSSSSSSSSS CCCCCCCCCCC AA AA LLLLLLLLLL EEEEEEEEEE PP CCCCCCCCCC
SSSSSSSSSS CCCCCCCCCC AA AA LLLLLLLLLL EEEEEEEEEE PP CCCCCCCCCC
11 0000000 // 11 22222222222 // 0000000 0000000
111 000000000 // 111 2222222222222 // 000000000 000000000
1111 00 00 // 1111 22 22 // 00 00 00 00
11 00 00 // 11 22 // 00 00 00 00
11 00 00 // 11 22 // 00 00 00 00
11 00 00 // 11 22 // 00 00 00 00
11 00 00 // 11 22 // 00 00 00 00
11 00 00 // 11 22 // 00 00 00 00
11 00 00 // 11 22 // 00 00 00 00
11 00 00 // 11 22 // 00 00 00 00
11111111 000000000 // 11111111 2222222222222 // 000000000 000000000
11111111 0000000 // 11111111 2222222222222 // 0000000 0000000
11 44 11 7777777777777 33333333333 44
111 444 111 777777777777 3333333333333 444
1111 4444 ::: 1111 77 77 ::: 33 33 4444
11 44 44 ::: 11 77 ::: 33 44 44
11 44 44 ::: 11 77 ::: 33 44 44
11 44 44 11 77 333 44 44
11 44 44 11 77 333 44 44
11 444444444444 ::: 11 77 ::: 33 444444444444
11 4444444444444 ::: 11 77 ::: 33 4444444444444
11 44 ::: 11 77 ::: 33 33 44
11111111 44 11111111 77 3333333333333 44
11111111 44 11111111 77 33333333333 44

```
  SSSSSSSSSS     CCCCCCCCCC      AAAAAAAA     LL             EEEEEEEEEEEE                 PPPPPPPPPPP     CCCCCCCCCC
 SSSSSSSSSSSS   CCCCCCCCCCCC    AAAAAAAAAA    LL             EEEEEEEEEEEE                 PPPPPPPPPPPP   CCCCCCCCCCCC
 SS          SS CC          CC  AA          AA  LL             EE                           PP          PP  CC          CC
 SS             CC              AA          AA  LL             EE                           PP          PP  CC
 SS             CC              AA          AA  LL             EE                           PP          PP  CC
 SSSSSSSSSSSS   CC              AAAAAAAAAAAAAA  LL             EEEEEEEEE       -------------PPPPPPPPPPPP  CC
  SSSSSSSSSSSS  CC              AAAAAAAAAAAAAA  LL             EEEEEEEEE       -------------PPPPPPPPPPP   CC
           SS   CC              AA          AA  LL             EE                           PP              CC
           SS   CC              AA          AA  LL             EE                           PP              CC
 SS        SS   CC          CC  AA          AA  LL             EE                           PP              CC          CC
 SSSSSSSSSSSS   CCCCCCCCCCCC    AA          AA  LLLLLLLLLLLL   EEEEEEEEEEEE                 PP              CCCCCCCCCCCC
  SSSSSSSSSS     CCCCCCCCCC     AA          AA  LLLLLLLLLLLL   EEEEEEEEEEEE                 PP               CCCCCCCCCC
```

```
*******************************************************************************
*******************************************************************************
*******************************************************************************
*****                                                                     *****
*****                  PROGRAM VERIFICATION INFORMATION                   *****
*****                                                                     *****
*****                CODE SYSTEM:  SCALE-PC VERSION:  4.3                 *****
*****                                                                     *****
*******************************************************************************
*******************************************************************************
*****                                                                     *****
*****                                                                     *****
*****              PROGRAM:  O0O008                                       *****
*****                                                                     *****
*****        CREATION DATE:  09/15/95                                     *****
*****                                                                     *****
*****              VOLUME:   ENG                                          *****
*****                                                                     *****
*****              LIBRARY:  G:\SCALE43\WIN_NT\EXE                        *****
*****                                                                     *****
*****                                                                     *****
*****    THIS IS NOT A SCALE-PC CONFIGURATION CONTROLLED CODE             *****
*****                                                                     *****
*****              JOBNAME:  SCALE-PC                                     *****
*****                                                                     *****
*****    DATE OF EXECUTION:  10/12/00                                     *****
*****                                                                     *****
*****    TIME OF EXECUTION:  14:17:34                                     *****
*****                                                                     *****
*****                                                                     *****
*******************************************************************************
*******************************************************************************
*******************************************************************************
```

```
-1Q ARRAY HAS      1 ENTRIES.

 0Q ARRAY HAS      4 ENTRIES.

 1Q ARRAY HAS      6 ENTRIES.

 2Q ARRAY HAS      2 ENTRIES.
```

```
LOGICAL ASSIGNMENTS

MASTER LIBRARY   11
WORKING LIBRARY   0
SCRATCH FILE     18
NEW LIBRARY       1

P R O B L E M   D E S C R I P T I O N

IGR--GEOMETRY (0/1/2/3--INF MED/SLAB/CYL/SPHERE               1

IZM--NUMBER OF ZONES OR MATERIAL REGIONS                      8

MS--MIXING TABLE LENGTH                                      16

IBL--SHIELDED CROSS SECTION EDIT OPTION (0/1--NO/YES)         0

IBR--BONDARENKO FACTOR EDIT OPTION (0/1--NO/YES)              0

ISSOPT--DANCOFF FACTOR OPTION                                 0

CONVERGENCE CRITERION    1.00000E-03

GEOMETRY CORRECTION FACTOR FOR WIGNER RATIONAL APPROXIMATION  1.000E+00

        3Q ARRAY HAS     16 ENTRIES.

        4Q ARRAY HAS     16 ENTRIES.

        5Q ARRAY HAS     16 ENTRIES.

        6Q ARRAY HAS      8 ENTRIES.

        7Q ARRAY HAS      8 ENTRIES.

        8Q ARRAY HAS      8 ENTRIES.

        9Q ARRAY HAS      8 ENTRIES.

       10Q ARRAY HAS     16 ENTRIES.

       11Q ARRAY HAS      8 ENTRIES.

M I X I N G   T A B L E

ENTRY   MIXTURE   ISOTOPE   NUMBER DENSITY   NEW IDENTIFIER
   1       1        92235     1.66361E-03          1092235
   2       1        92238     1.04847E-04          1092238
   3       1        13027     1.54180E-02          1013027
   4       2        13027     6.03066E-02          2013027
   5       4        13027     6.03066E-02          4013027
   6       3         1001     6.67692E-02          3001001
   7       7         1001     6.67692E-22          7001001
   8       8         1001     6.67692E-22          8001001
   9       3         8016     3.33846E-02          3008016
  10       7         8016     3.33846E-22          7008016
  11       8         8016     3.33846E-22          8008016
  12       5        24304     1.74286E-02          5024304
  13       5        25055     1.73633E-03          5025055
  14       5        26304     5.93579E-02          5026304
  15       5        28304     7.72070E-03          5028304
  16       6        82000     3.29690E-02          6082000

GEOMETRY AND MATERIAL DESCRIPTION

ZONE   MIXTURE   OUTER DIMENSION   TEMPERATURE       EXTRA XS   TYPE (0/1--FUEL/MOD)
   1      1          3.75000E-02    2.93000E+02    2.62093E+00             0
   2      2          5.75000E-02    2.93000E+02    0.00000E+00             0
   3      3          1.95950E-01    2.93000E+02    0.00000E+00             0
   4      4          5.19595E+00    2.93000E+02    0.00000E+00             0
   5      5          1.01959E+01    2.93000E+02    0.00000E+00             0
   6      6          1.51959E+01    2.93000E+02    0.00000E+00             0
   7      7          2.01959E+01    2.93000E+02    0.00000E+00             0
   8      8          2.51959E+01    2.93000E+02    0.00000E+00             0
     3609 LOCATIONS OF   100000 AVAILABLE ARE REQUIRED TO MAKE A NEW MASTER CONTAINING THE SELF-SHIELDED VALUES

NO NUCLIDES IN YOUR PROBLEM HAVE BONDARENKO FACTOR DATA**BONAMI WILL COPY FROM LOGICAL 11 TO LOGICAL  1

COPY      1001   HYDROGEN        FROM LOG 11 TO LOG 18    BONDARENKO TRIGGER 0

COPY      1001   HYDROGEN        FROM LOG 18 TO LOG  1    BONDARENKO TRIGGER 0

COPY      1001   HYDROGEN        FROM LOG 18 TO LOG  1    BONDARENKO TRIGGER 0

COPY      1001   HYDROGEN        FROM LOG 18 TO LOG  1    BONDARENKO TRIGGER 0

COPY      8016   OXYGEN-16       FROM LOG 11 TO LOG 18    BONDARENKO TRIGGER 0

COPY      8016   OXYGEN-16       FROM LOG 18 TO LOG  1    BONDARENKO TRIGGER 0

COPY      8016   OXYGEN-16       FROM LOG 18 TO LOG  1    BONDARENKO TRIGGER 0

COPY      8016   OXYGEN-16       FROM LOG 18 TO LOG  1    BONDARENKO TRIGGER 0

COPY     13027  AL-27 1193 218 G FROM LOG 11 TO LOG 18    BONDARENKO TRIGGER 0
```

```
COPY     13027  AL-27 1193 218 G FROM LOG 18 TO LOG  1    BONDARENKO TRIGGER 0
COPY     13027  AL-27 1193 218 G FROM LOG 18 TO LOG  1    BONDARENKO TRIGGER 0
COPY     13027  AL-27 1193 218 G FROM LOG 18 TO LOG  1    BONDARENKO TRIGGER 0
COPY     24304  CR 1191 WT SS-30 FROM LOG 11 TO LOG  1    BONDARENKO TRIGGER 0
COPY     25055   MANGANESE-55    FROM LOG 11 TO LOG  1    BONDARENKO TRIGGER 0
COPY     26304  FE 1192 WT SS-30 FROM LOG 11 TO LOG  1    BONDARENKO TRIGGER 0
COPY     28304  NI 1190 WT SS-30 FROM LOG 11 TO LOG  1    BONDARENKO TRIGGER 0
COPY     82000  PB   1288 218NGP FROM LOG 11 TO LOG  1    BONDARENKO TRIGGER 0
COPY     92235   URANIUM-235     FROM LOG 11 TO LOG  1    BONDARENKO TRIGGER 0
COPY     92238   URANIUM-238     FROM LOG 11 TO LOG  1    BONDARENKO TRIGGER 0
```

```
SCALE 4.2 - 27 GROUP NEUTRON GROUP LIBRARY
   BASED ON ENDF-B VERSION 4 DATA
      COMPILED FOR NRC     1/27/89
         LAST UPDATED                                                08/12/94
            L.M.PETRIE   -   ORNL
    TAPE ID                          4321          NUMBER OF NUCLIDES                    16
    NUMBER OF NEUTRON GROUPS           27          NUMBER OF GAMMA GROUPS                 0
    FIRST THERMAL GROUP                15          LOGICAL UNIT                           1
                              TABLE OF CONTENTS
   HYDROGEN       ENDF/B-IV MAT 1269/THRM1002             UPDATED 08/12/94        ID   3001001
   HYDROGEN       ENDF/B-IV MAT 1269/THRM1002             UPDATED 08/12/94        ID   7001001
   HYDROGEN       ENDF/B-IV MAT 1269/THRM1002             UPDATED 08/12/94        ID   8001001
   OXYGEN-16      ENDF/B-IV MAT 1276                      UPDATED 08/12/94        ID   3008016
   OXYGEN-16      ENDF/B-IV MAT 1276                      UPDATED 08/12/94        ID   7008016
   OXYGEN-16      ENDF/B-IV MAT 1276                      UPDATED 08/12/94        ID   8008016
  AL-27 1193 218 GP 040375(5)                            UPDATED 08/12/94        ID   1013027
  AL-27 1193 218 GP 040375(5)                            UPDATED 08/12/94        ID   2013027
  AL-27 1193 218 GP 040375(5)                            UPDATED 08/12/94        ID   4013027
  CR 1191 WT SS-304(1/EST) P-3 293K SP=5+4(42375)'       UPDATED 08/12/94        ID   5024304
   MANGANESE-55   ENDF/B-IV MAT 1197                     UPDATED 08/12/94        ID   5025055
  FE 1192 WT SS-304(1/EST) P-3 293K SP=5+4(42375)'       UPDATED 08/12/94        ID   5026304
  NI 1190 WT SS-304(1/EST) P-3 293K SP=5+4(42375)'       UPDATED 08/12/94        ID   5028304
  PB   1288 218NGP 042375 P-3 293K                       UPDATED 08/12/94        ID   6082000
   URANIUM-235    ENDF/B-IV MAT 1261                      UPDATED 08/12/94        ID   1092235
   URANIUM-238    ENDF/B-IV MAT 1262                      UPDATED 08/12/94        ID   1092238

    TAPE COPY USED      0 I/O'S, AND TOOK    0.17 SECONDS
```

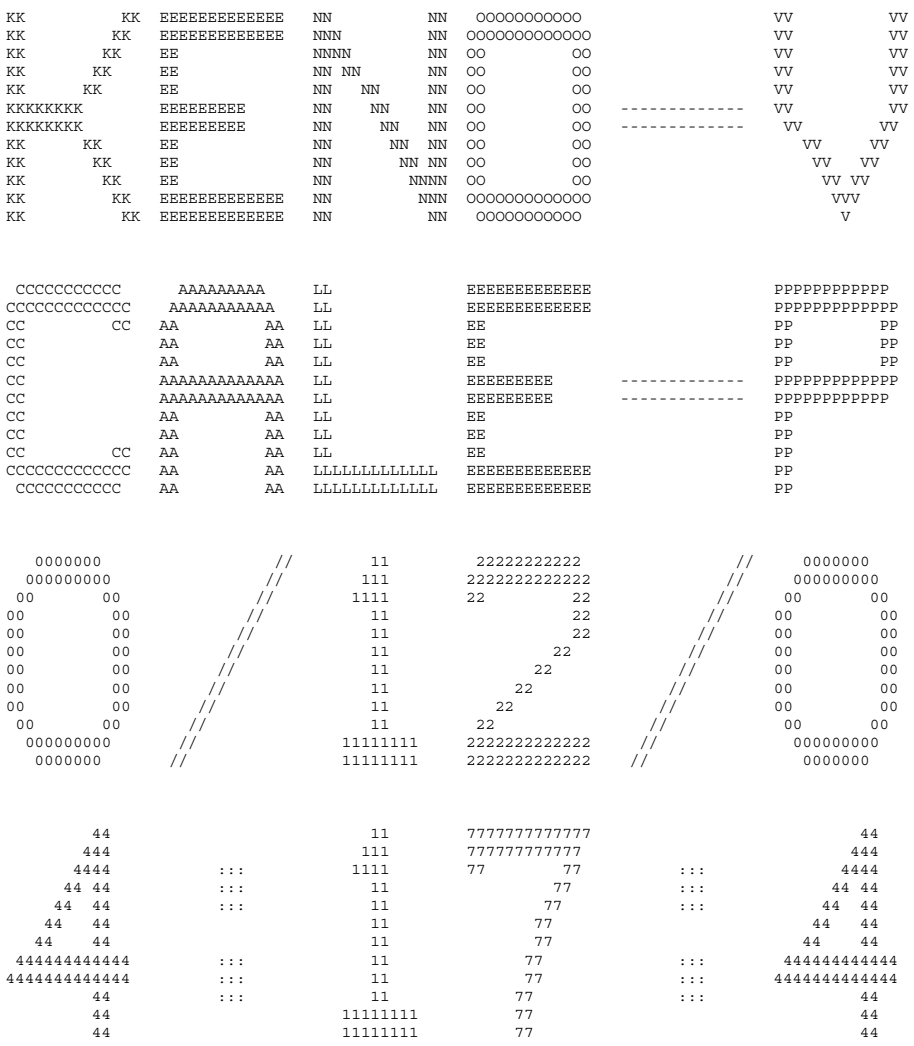
KK KK EEEEEEEEEEEE NN NN OOOOOOOOOO VV VV
KK KK EEEEEEEEEEEE NNN NN OOOOOOOOOOOO VV VV
KK KK EE NNNN NN OO OO VV VV
KK KK EE NN NN NN OO OO VV VV
KK KK EE NN NN NN OO OO VV VV
KKKKKKKK EEEEEEEE NN NN NN OO OO VV VV
KKKKKKKK EEEEEEEE NN NN NN OO OO VV VV
KK KK EE NN NN NN OO OO VV VV
KK KK EE NN NN NN OO OO VV VV
KK KK EE NN NNNN OO OO VV VV
KK KK EEEEEEEEEEEE NN NNN OOOOOOOOOOOO VVV
KK KK EEEEEEEEEEEE NN NN OOOOOOOOOO V
SSSSSSSSSS CCCCCCCCCC AAAAAAAAA LL EEEEEEEEEEEE PPPPPPPPPP CCCCCCCCCC
SSSSSSSSSSS CCCCCCCCCCCC AAAAAAAAAA LL EEEEEEEEEEEE PPPPPPPPPPP CCCCCCCCCCCC
SS SS CC CC AA AA LL EE PP PP CC CC
SS CC AA AA LL EE PP PP CC
SS CC AA AA LL EE PP PP CC
SSSSSSSSSSS CC AAAAAAAAAAAAA LL EEEEEEEE PPPPPPPPPPP CC
SSSSSSSSSS CC AAAAAAAAAAAAA LL EEEEEEEE PPPPPPPPPP CC
SS CC AA AA LL EE PP CC
SS CC AA AA LL EE PP CC
SS SS CC CC AA AA LL EE PP CC CC
SSSSSSSSSSS CCCCCCCCCCCC AA AA LLLLLLLLLLL EEEEEEEEEEE PP CCCCCCCCCCC
SSSSSSSSSS CCCCCCCCCC AA AA LLLLLLLLLLL EEEEEEEEEEE PP CCCCCCCCCC
11 0000000 // 11 22222222222 // 0000000 0000000
111 000000000 // 111 2222222222222 // 000000000 000000000
1111 00 00 // 1111 22 22 // 00 00 00 00
11 00 00 // 11 22 // 00 00 00 00
11 00 00 // 11 22 // 00 00 00 00
11 00 00 // 11 22 // 00 00 00 00
11 00 00 // 11 22 // 00 00 00 00
11 00 00 // 11 22 // 00 00 00 00
11 00 00 // 11 22 // 00 00 00 00
11 00 00 // 11 22 // 00 00 00 00
11 00 00 // 11 22 // 00 00 00 00
11111111 000000000 // 11111111 2222222222222 // 000000000 000000000
11111111 0000000 // 11111111 2222222222222 // 0000000 0000000
11 44 11 7777777777777 44 0000000
111 444 111 777777777777 444 000000000
1111 4444 ::: 1111 77 77 ::: 4444 00 00
11 44 44 ::: 11 77 ::: 44 44 00 00
11 44 44 ::: 11 77 ::: 44 44 00 00
11 44 44 11 77 44 44 00 00
11 44 44 11 77 44 44 00 00
11 444444444444 ::: 11 77 ::: 444444444444 00 00
11 4444444444444 ::: 11 77 ::: 4444444444444 00 00
11 44 ::: 11 77 ::: 44 00 00
11111111 44 11111111 77 44 000000000
11111111 44 11111111 77 44 0000000

```
  SSSSSSSSSS     CCCCCCCCCC      AAAAAAAA     LL             EEEEEEEEEEEE                 PPPPPPPPPPP     CCCCCCCCCC
 SSSSSSSSSSSS   CCCCCCCCCCCC    AAAAAAAAAA    LL             EEEEEEEEEEEE                 PPPPPPPPPPPP   CCCCCCCCCCCC
 SS          SS CC          CC  AA          AA  LL             EE                           PP          PP  CC          CC
 SS             CC              AA          AA  LL             EE                           PP          PP  CC
 SS             CC              AA          AA  LL             EE                           PP          PP  CC
 SSSSSSSSSSSS   CC              AAAAAAAAAAAAAA  LL             EEEEEEEEE       -------------PPPPPPPPPPPP  CC
  SSSSSSSSSSSS  CC              AAAAAAAAAAAAAA  LL             EEEEEEEEE       -------------PPPPPPPPPPP   CC
           SS   CC              AA          AA  LL             EE                           PP              CC
           SS   CC              AA          AA  LL             EE                           PP              CC
 SS        SS   CC          CC  AA          AA  LL             EE                           PP              CC          CC
 SSSSSSSSSSSS   CCCCCCCCCCCC    AA          AA  LLLLLLLLLLLL   EEEEEEEEEEEE                 PP              CCCCCCCCCCCC
  SSSSSSSSSS     CCCCCCCCCC     AA          AA  LLLLLLLLLLLL   EEEEEEEEEEEE                 PP               CCCCCCCCCC
```

```
*******************************************************************************
*******************************************************************************
*******************************************************************************
*****                                                                     *****
*****                  PROGRAM VERIFICATION INFORMATION                   *****
*****                                                                     *****
*****                CODE SYSTEM:  SCALE-PC VERSION:  4.3                 *****
*****                                                                     *****
*******************************************************************************
*******************************************************************************
*****                                                                     *****
*****                                                                     *****
*****              PROGRAM:  O0O009                                       *****
*****                                                                     *****
*****        CREATION DATE:  03/08/96                                     *****
*****                                                                     *****
*****              VOLUME:   ENG                                          *****
*****                                                                     *****
*****              LIBRARY:  G:\SCALE43\WIN_NT\EXE                        *****
*****                                                                     *****
*****                                                                     *****
*****    THIS IS NOT A SCALE-PC CONFIGURATION CONTROLLED CODE             *****
*****                                                                     *****
*****              JOBNAME:  SCALE-PC                                     *****
*****                                                                     *****
*****    DATE OF EXECUTION:  10/12/00                                     *****
*****                                                                     *****
*****    TIME OF EXECUTION:  14:17:40                                     *****
*****                                                                     *****
*****                                                                     *****
*******************************************************************************
*******************************************************************************
*******************************************************************************
```

```
*****************************************************************************************************************
***                                                                                                           ***
***                                                                                                           ***
***                                                                                                           ***
*****************************************************************************************************************
***                              ******       NUMERIC PARAMETERS       ******                                ***
***                                                                                                           ***
***                                                                                                           ***
***                    TME       MAXIMUM PROBLEM TIME (MIN)                        30.00                    ***
***                                                                                                           ***
***                    TBA       TIME PER GENERATION (MIN)                          5.00                    ***
***                                                                                                           ***
***                    GEN       NUMBER OF GENERATIONS                               803                    ***
***                                                                                                           ***
***                    NPG       NUMBER PER GENERATION                              1000                    ***
***                                                                                                           ***
***                    NSK       NUMBER OF GENERATIONS TO BE SKIPPED                   3                    ***
***                                                                                                           ***
***                    BEG       BEGINNING GENERATION NUMBER                           1                    ***
***                                                                                                           ***
***                    RES       GENERATIONS BETWEEN CHECKPOINTS                       0                    ***
***                                                                                                           ***
***                    X1D       NUMBER OF EXTRA 1-D CROSS SECTIONS                    1                    ***
***                                                                                                           ***
***                    NBK       NEUTRON BANK SIZE                                  1025                    ***
***                                                                                                           ***
***                    XNB       EXTRA POSITIONS IN NEUTRON BANK                       0                    ***
***                                                                                                           ***
***                    NFB       FISSION BANK SIZE                                  1000                    ***
***                                                                                                           ***
***                    XFB       EXTRA POSITIONS IN FISSION BANK                       0                    ***
***                                                                                                           ***
***                    WTA       DEFAULT VALUE OF WEIGHT AVERAGE                  0.5000                    ***
***                                                                                                           ***
***                    WTH       WEIGHT HIGH FOR SPLITTING                        3.0000                    ***
***                                                                                                           ***
***                    WTL       WEIGHT LOW FOR RUSSIAN ROULETTE                  0.3333                    ***
***                                                                                                           ***
***                    RND       STARTING RANDOM NUMBER                      BB827100001                    ***
***                                                                                                           ***
***                    NB8       NUMBER OF D.A. BLOCKS ON UNIT  8                    200                    ***
***                                                                                                           ***
***                    NL8       LENGTH OF D.A. BLOCKS ON UNIT  8                    512                    ***
***                                                                                                           ***
***                    ADJ       MODE OF CALCULATION                             FORWARD                    ***
***                                                                                                           ***
***                              INPUT DATA WRITTEN ON RESTART UNIT                     NO                    ***
***                                                                                                           ***
***                              BINARY DATA INTERFACE                                 YES                    ***
***                                                                                                           ***
***                                                                                                           ***
*****************************************************************************************************************
*****************************************************************************************************************
```

```
*****************************************************************************************************************************
*****************************************************************************************************************************
***                                                                                                                       ***
***                                                                                                                       ***
***                                                                                                                       ***
*****************************************************************************************************************************
***                                ******      LOGICAL PARAMETERS        ******                                         ***
***                                                                                                                       ***
***  RUN  EXECUTE PROBLEM AFTER CHECKING DATA    YES            PLT  PLOT PICTURE MAP(S)                        NO  ***
***                                                                                                                       ***
***  FLX  COMPUTE FLUX                            NO            FDN  COMPUTE FISSION DENSITIES                  NO  ***
***                                                                                                                       ***
***  SMU  COMPUTE AVG UNIT SELF-MULTIPLICATION    NO            NUB  COMPUTE NU-BAR & AVG FISSION GROUP         YES ***
***                                                                                                                       ***
***  MKU  COMPUTE MATRIX K-EFF BY UNIT NUMBER     NO            MKP  COMPUTE MATRIX K-EFF BY UNIT LOCATION      NO  ***
***                                                                                                                       ***
***  CKU  COMPUTE COFACTOR K-EFF BY UNIT NUMBER   NO            CKP  COMPUTE COFACTOR K-EFF BY UNIT LOCATION    NO  ***
***                                                                                                                       ***
***  FMU  PRINT FISS PROD MATRIX BY UNIT NUMBER   NO            FMP  PRINT FISS PROD MATRIX BY UNIT LOCATION    NO  ***
***                                                                                                                       ***
***  MKH  COMPUTE MATRIX K-EFF BY HOLE NUMBER     NO            MKA  COMPUTE MATRIX K-EFF BY ARRAY NUMBER       NO  ***
***                                                                                                                       ***
***  CKH  COMPUTE COFACTOR K-EFF BY HOLE NUMBER   NO            CKA  COMPUTE COFACTOR K-EFF BY ARRAY NUMBER     NO  ***
***                                                                                                                       ***
***  FMH  PRINT FISS PROD MATRIX BY HOLE NUMBER   NO            FMA  PRINT FISS PROD MATRIX BY ARRAY NUMBER     NO  ***
***                                                                                                                       ***
***  HHL  COLLECT MATRIX BY HIGHEST HOLE LEVEL    NO            HAL  COLLECT MATRIX BY HIGHEST ARRAY LEVEL      NO  ***
***                                                                                                                       ***
***  AMX  PRINT ALL MIXED CROSS SECTIONS          NO            FAR  PRINT FIS. AND ABS. BY REGION              NO  ***
***                                                                                                                       ***
***  XS1  PRINT 1-D MIXTURE X-SECTIONS            NO            GAS  PRINT FAR BY GROUP                         NO  ***
***                                                                                                                       ***
***  XS2  PRINT 2-D MIXTURE X-SECTIONS            NO            PAX  PRINT XSEC-ALBEDO CORRELATION TABLES       NO  ***
***                                                                                                                       ***
***  XAP  PRINT MIXTURE ANGLES & PROBABILITIES    NO            PWT  PRINT WEIGHT AVERAGE ARRAY                 NO  ***
***                                                                                                                       ***
***  PKI  PRINT FISSION SPECTRUM                  NO            PGM  PRINT INPUT GEOMETRY                       NO  ***
***                                                                                                                       ***
***  P1D  PRINT EXTRA 1-D CROSS SECTIONS          NO            BUG  PRINT DEBUG INFORMATION                    NO  ***
***                                                                                                                       ***
***                                                             TRK  PRINT TRACKING INFORMATION                 NO  ***
***                                                                                                                       ***
***                                                                                                                       ***
*****************************************************************************************************************************
*****************************************************************************************************************************
*****************************************************************************************************************************
                                    PARAMETER INPUT COMPLETED

                        ........    0 IO'S WERE USED READING THE PARAMETER DATA      ........

                       ************** DATA READING COMPLETED **************
```

```
*******************************************************************************************************************************
***                                                                                                                         ***
***                                                                                                                         ***
***                                                                                                                         ***
*******************************************************************************************************************************
*******************************************************************************************************************************
***                                                                                                                         ***
***          UNIT                                                VOLUME                                                     ***
***         NUMBER              DATA SET NAME                    NAME        UNIT FUNCTION                                  ***
***         ------              -------------                    ----        -------------                                  ***
***                                                                                                                         ***
***      XSC  14     D:\hjp\23p-18g-as-56h\FT14F001                          MIXED CROSS SECTIONS                           ***
***                                                                                                                         ***
***      ALB  79     G:\scale43\DATALIB\FT79F001                             INPUT ALBEDOS                                  ***
***                                                                                                                         ***
***      WTS  80     G:\scale43\DATALIB\FT80F001                             INPUT WEIGHTS                                  ***
***                                                                                                                         ***
***      SKT  16      UNKNOWN                                                WRITE SCRATCH DATA                             ***
***                                                                                                                         ***
***      BIN  95     D:\hjp\23p-18g-as-56h\FT95F001                          BINARY INPUT DATA                              ***
***                                                                                                                         ***
***      RST  95     D:\hjp\23p-18g-as-56h\FT95F001                          READ RESTART DATA                              ***
***                                                                                                                         ***
***      LIB   4     D:\hjp\23p-18g-as-56h\FT04F001                          INPUT AMPX WORKING LIBRARY                     ***
***                                                                                                                         ***
***            8     D:\hjp\23p-18g-as-56h\FT08F001                          INPUT DATA DIRECT ACCESS                       ***
***                                                                                                                         ***
***            9      UNKNOWN                                                SUPER GROUPED DIRECT ACCESS                    ***
***                                                                                                                         ***
***           10      UNKNOWN                                                XSEC MIXING DIRECT ACCESS                      ***
***                                                                                                                         ***
*******************************************************************************************************************************

                        ........    0 IO'S WERE USED PREPARING INPUT DATA    ........


                          CROSS SECTIONS READ FROM THE AMPX WORKING LIBRARY ON UNIT    4
```

```
                                        MIXING TABLE

                                    NUMBER OF SCATTERING ANGLES =  2
                                CROSS SECTION MESSAGE THRESHOLD =3.0E-05

MIXTURE =     1          DENSITY(G/CC) =  1.3815
   NUCLIDE   ATOM-DENS.   WGT. FRAC.     ZA      AWT             NUCLIDE TITLE
   1013027  1.54180E-02  5.00014E-01   13027    26.9818     AL-27 1193 218 GP 040375(5)                              UPDATED
08/12/94
   1092235  1.66361E-03  4.69986E-01   92235   235.0441      URANIUM-235    ENDF/B-IV MAT 1261                       UPDATED
08/12/94
   1092238  1.04847E-04  2.99991E-02   92238   238.0510      URANIUM-238    ENDF/B-IV MAT 1262                       UPDATED
08/12/94

MIXTURE =     2          DENSITY(G/CC) =  2.7020
   NUCLIDE   ATOM-DENS.   WGT. FRAC.     ZA      AWT             NUCLIDE TITLE
   2013027  6.03066E-02  1.00000E+00   13027    26.9818     AL-27 1193 218 GP 040375(5)                              UPDATED
08/12/94

MIXTURE =     3          DENSITY(G/CC) = 0.99817
   NUCLIDE   ATOM-DENS.   WGT. FRAC.     ZA      AWT             NUCLIDE TITLE
   3001001  6.67692E-02  1.11927E-01    1001     1.0077      HYDROGEN       ENDF/B-IV MAT 1269/THRM1002             UPDATED
08/12/94
   3008016  3.33846E-02  8.88074E-01    8016    15.9904      OXYGEN-16      ENDF/B-IV MAT 1276                       UPDATED
08/12/94

MIXTURE =     4          DENSITY(G/CC) =  2.7020
   NUCLIDE   ATOM-DENS.   WGT. FRAC.     ZA      AWT             NUCLIDE TITLE
   4013027  6.03066E-02  1.00000E+00   13027    26.9818     AL-27 1193 218 GP 040375(5)                              UPDATED
08/12/94

MIXTURE =     5          DENSITY(G/CC) =  7.9200
   NUCLIDE   ATOM-DENS.   WGT. FRAC.     ZA      AWT             NUCLIDE TITLE
   5024304  1.74286E-02  1.90000E-01   24000    51.9957     CR 1191 WT SS-304(1/EST) P-3 293K SP=5+4(42375)'         UPDATED
08/12/94
   5025055  1.73633E-03  1.99999E-02   25055    54.9379      MANGANESE-55   ENDF/B-IV MAT 1197                       UPDATED
08/12/94
   5026304  5.93579E-02  6.95000E-01   26000    55.8447     FE 1192 WT SS-304(1/EST) P-3 293K SP=5+4(42375)'         UPDATED
08/12/94
   5028304  7.72070E-03  9.50001E-02   28000    58.6872     NI 1190 WT SS-304(1/EST) P-3 293K SP=5+4(42375)'         UPDATED
08/12/94

MIXTURE =     6          DENSITY(G/CC) =  11.344
   NUCLIDE   ATOM-DENS.   WGT. FRAC.     ZA      AWT             NUCLIDE TITLE
   6082000  3.29690E-02  1.00000E+00   82000   207.2100     PB   1288 218NGP 042375 P-3 293K                         UPDATED
08/12/94

MIXTURE =     7          DENSITY(G/CC) = 0.99817E-20
   NUCLIDE   ATOM-DENS.   WGT. FRAC.     ZA      AWT             NUCLIDE TITLE
   7001001  6.67692E-22  1.11927E-01    1001     1.0077      HYDROGEN       ENDF/B-IV MAT 1269/THRM1002             UPDATED
08/12/94
   7008016  3.33846E-22  8.88073E-01    8016    15.9904      OXYGEN-16      ENDF/B-IV MAT 1276                       UPDATED
08/12/94

MIXTURE =     8          DENSITY(G/CC) = 0.99817E-20
   NUCLIDE   ATOM-DENS.   WGT. FRAC.     ZA      AWT             NUCLIDE TITLE
   8001001  6.67692E-22  1.11927E-01    1001     1.0077      HYDROGEN       ENDF/B-IV MAT 1269/THRM1002             UPDATED
08/12/94
   8008016  3.33846E-22  8.88073E-01    8016    15.9904      OXYGEN-16      ENDF/B-IV MAT 1276                       UPDATED
08/12/94


                            3001001     HYDROGEN       ENDF/B-IV MAT 1269/THRM1002            UPDATED 08/12/94
                            7001001     HYDROGEN       ENDF/B-IV MAT 1269/THRM1002            UPDATED 08/12/94
                            8001001     HYDROGEN       ENDF/B-IV MAT 1269/THRM1002            UPDATED 08/12/94
                            3008016     OXYGEN-16      ENDF/B-IV MAT 1276                     UPDATED 08/12/94
                            7008016     OXYGEN-16      ENDF/B-IV MAT 1276                     UPDATED 08/12/94
                            8008016     OXYGEN-16      ENDF/B-IV MAT 1276                     UPDATED 08/12/94
                            1013027    AL-27 1193 218 GP 040375(5)                            UPDATED 08/12/94
                            2013027    AL-27 1193 218 GP 040375(5)                            UPDATED 08/12/94
                            4013027    AL-27 1193 218 GP 040375(5)                            UPDATED 08/12/94
                            5024304    CR 1191 WT SS-304(1/EST) P-3 293K SP=5+4(42375)'       UPDATED 08/12/94
                            5025055     MANGANESE-55   ENDF/B-IV MAT 1197                     UPDATED 08/12/94
                            5026304    FE 1192 WT SS-304(1/EST) P-3 293K SP=5+4(42375)'       UPDATED 08/12/94
                            5028304    NI 1190 WT SS-304(1/EST) P-3 293K SP=5+4(42375)'       UPDATED 08/12/94
                            6082000    PB   1288 218NGP 042375 P-3 293K                       UPDATED 08/12/94
                            1092235     URANIUM-235    ENDF/B-IV MAT 1261                     UPDATED 08/12/94
                            1092238     URANIUM-238    ENDF/B-IV MAT 1262                     UPDATED 08/12/94

KENO MESSAGE NUMBER K5-222       1 TRANSFERS FOR MIXTURE     3 WERE CORRECTED FOR BAD MOMENTS.

KENO MESSAGE NUMBER K5-222       1 TRANSFERS FOR MIXTURE     7 WERE CORRECTED FOR BAD MOMENTS.

KENO MESSAGE NUMBER K5-222       1 TRANSFERS FOR MIXTURE     8 WERE CORRECTED FOR BAD MOMENTS.

                           ........    0 IO'S WERE USED MIXING CROSS-SECTIONS       ........

                            1-D CROSS SECTION ARRAY ID NUMBERS
                               1  2002  1452    27    18  1018

                           ........    0 IO'S WERE USED PREPARING THE CROSS SECTIONS    ........
```

```
*****************************************************************************************************
***                                                                                               ***
***                                                                                               ***
***                                                                                               ***
*****************************************************************************************************
*****************************************************************************************************
***                                                                                               ***
***                              ****** ADDITIONAL INFORMATION ******                             ***
***                                                                                               ***
***  NUMBER OF ENERGY GROUPS              27       USE LATTICE GEOMETRY                    YES  ***
***                                                                                               ***
***  NO. OF FISSION SPECTRUM SOURCE GROUP  1       GLOBAL ARRAY NUMBER                      10  ***
***                                                                                               ***
***  NO. OF SCATTERING ANGLES IN XSECS     2       NUMBER OF UNITS IN THE GLOBAL X DIR.      1  ***
***                                                                                               ***
***  ENTRIES/NEUTRON IN THE NEUTRON BANK  28       NUMBER OF UNITS IN THE GLOBAL Y DIR.      1  ***
***                                                                                               ***
***  ENTRIES/NEUTRON IN THE FISSION BANK  21       NUMBER OF UNITS IN THE GLOBAL Z DIR.     10  ***
***                                                                                               ***
***  NUMBER OF MIXTURES USED               7       USE A GLOBAL REFLECTOR                   YES  ***
***                                                                                               ***
***  NUMBER OF BIAS ID'S USED              1       USE NESTED HOLES                         YES  ***
***                                                                                               ***
***  NUMBER OF DIFFERENTIAL ALBEDOS USED   0       NUMBER OF HOLES                           34  ***
***                                                                                               ***
***  TOTAL INPUT GEOMETRY REGIONS         88       MAXIMUM HOLE NESTING LEVEL                 2  ***
***                                                                                               ***
***  NUMBER OF GEOMETRY REGIONS USED      88       USE NESTED ARRAYS                        YES  ***
***                                                                                               ***
***  LARGEST GEOMETRY UNIT NUMBER        150       NUMBER OF ARRAYS USED                      8  ***
***                                                                                               ***
***  LARGEST ARRAY NUMBER                 14       MAXIMUM ARRAY NESTING LEVEL                3  ***
***                                                                                               ***
***                                                                                               ***
***  +X BOUNDARY CONDITION               MIR       -X BOUNDARY CONDITION                    MIR  ***
***                                                                                               ***
***  +Y BOUNDARY CONDITION               MIR       -Y BOUNDARY CONDITION                    MIR  ***
***                                                                                               ***
***  +Z BOUNDARY CONDITION               MIR       -Z BOUNDARY CONDITION                    MIR  ***
***                                                                                               ***
*****************************************************************************************************
```

```
                MEDIA BIAS      GEOMETRY DESCRIPTION FOR THOSE UNITS UTILIZED IN THIS PROBLEM
REGION           NUM   ID

                                                -----   UNIT     1   -----

MIDDLE FUEL PLATE CELL

  1 CUBOID           1  1      +X =  3.3000     -X = -3.3000     +Y = 3.75000E-02 -Y =-3.75000E-02 +Z =  56.700     -Z = 0.70000

  2 CUBOID           2  1      +X =  3.3000     -X = -3.3000     +Y = 5.75000E-02 -Y =-5.75000E-02 +Z =  57.400     -Z = 0.00000

  3 CUBOID           3  1      +X =  3.3000     -X = -3.3000     +Y = 0.19590     -Y =-0.19590     +Z =  57.400     -Z = 0.00000

                                                -----   UNIT     2   -----

TOP FUEL PLATE CELL

  1 CUBOID           1  1      +X =  3.3000     -X = -3.3000     +Y = 3.75000E-02 -Y =-3.75000E-02 +Z =  56.700     -Z = 0.70000

  2 CUBOID           2  1      +X =  3.3000     -X = -3.3000     +Y = 5.75000E-02 -Y =-5.75000E-02 +Z =  57.400     -Z = 0.00000

  3 CUBOID           3  1      +X =  3.3000     -X = -3.3000     +Y = 5.75000E-02 -Y =-0.19590     +Z =  57.400     -Z = 0.00000

                                                -----   UNIT     3   -----

BOTTOM FUEL PLATE CELL

  1 CUBOID           1  1      +X =  3.3000     -X = -3.3000     +Y = 3.75000E-02 -Y =-3.75000E-02 +Z =  56.700     -Z = 0.70000

  2 CUBOID           2  1      +X =  3.3000     -X = -3.3000     +Y = 5.75000E-02 -Y =-5.75000E-02 +Z =  57.400     -Z = 0.00000

  3 CUBOID           3  1      +X =  3.3000     -X = -3.3000     +Y = 0.19590     -Y =-5.75000E-02 +Z =  57.400     -Z = 0.00000

                                                -----   UNIT     4   -----

SIDE PLATE

  1 CUBOID           2  1      +X = 0.20000     -X =-0.20000     +Y =  3.7500     -Y = -3.7500     +Z =  57.400     -Z = 0.00000

                                          -----   UNIT    10  EXTERNAL TO LATTICE  1   -----

FUEL PATE ARRAY - PLATES IN 5/16 IN. WEB CENTER

  1 ARRAY NUMBER     1          +X =  3.3000     -X = -3.3000     +Y =  4.3658     -Y = -4.3688     +Z =  57.400     -Z = 0.00000

  2 CUBOID           3  1      +X =  4.3688     -X = -4.3688     +Y =  4.3688     -Y = -4.3688     +Z =  73.152     -Z = 0.00000

    HOLE NUMBER      1       AT X = -4.1687      Y = 0.00000      Z = 0.00000     IS UNIT NUMBER      4

    HOLE NUMBER      2       AT X =  4.1687      Y = 0.00000      Z = 0.00000     IS UNIT NUMBER      4

  3 CUBOID           5  1      +X =  4.7244     -X = -4.7244     +Y =  4.3688     -Y = -4.3688     +Z =  73.152     -Z = 0.00000
```

```
                MEDIA BIAS      GEOMETRY DESCRIPTION FOR THOSE UNITS UTILIZED IN THIS PROBLEM
REGION           NUM   ID

                                      -----   UNIT    11  EXTERNAL TO LATTICE  1   -----

FUEL ARRAY 20 PLATES IN 5/16 IN. WEB RIGHT

  1 ARRAY NUMBER     1         +X =  2.6314     -X = -3.9686     +Y =  4.3658     -Y = -4.3688     +Z =  57.400     -Z = 0.00000

  2 CUBOID           3  1      +X =  4.3688     -X = -4.3688     +Y =  4.3688     -Y = -4.3688     +Z =  73.152     -Z = 0.00000

    HOLE NUMBER      3       AT X = -4.1687      Y = 0.00000      Z = 0.00000     IS UNIT NUMBER      4

    HOLE NUMBER      4       AT X =  4.1687      Y = 0.00000      Z = 0.00000     IS UNIT NUMBER      4

  3 CUBOID           5  1      +X =  4.7244     -X = -4.7244     +Y =  4.3688     -Y = -4.3688     +Z =  73.152     -Z = 0.00000

                                      -----   UNIT    12  EXTERNAL TO LATTICE  1   -----

FUEL ARRAY 20 PLATES IN 5/16 IN. WEB LEFT

  1 ARRAY NUMBER     1         +X =  3.9686     -X = -2.6314     +Y =  4.3658     -Y = -4.3688     +Z =  57.400     -Z = 0.00000

  2 CUBOID           3  1      +X =  4.3688     -X = -4.3688     +Y =  4.3688     -Y = -4.3688     +Z =  73.152     -Z = 0.00000

    HOLE NUMBER      5       AT X = -4.1687      Y = 0.00000      Z = 0.00000     IS UNIT NUMBER      4

    HOLE NUMBER      6       AT X =  4.1687      Y = 0.00000      Z = 0.00000     IS UNIT NUMBER      4

  3 CUBOID           5  1      +X =  4.7244     -X = -4.7244     +Y =  4.3688     -Y = -4.3688     +Z =  73.152     -Z = 0.00000

                                      -----   UNIT    20  EXTERNAL TO LATTICE  1   -----

FUEL ARRAY WITH HALF OF 1/4 PLATE ON RIGHT -  TOP STACK

  1 ARRAY NUMBER     1         +X =  3.9686     -X = -2.6314     +Y =  4.3658     -Y = -4.3688     +Z =  57.400     -Z = 0.00000

  2 CUBOID           3  1      +X =  4.3688     -X = -4.3688     +Y =  4.3688     -Y = -4.3688     +Z =  73.152     -Z = 0.00000

    HOLE NUMBER      7       AT X = -4.1687      Y = 0.00000      Z = 0.00000     IS UNIT NUMBER      4

    HOLE NUMBER      8       AT X =  4.1687      Y = 0.00000      Z = 0.00000     IS UNIT NUMBER      4

  3 CUBOID           5  1      +X =  4.6736     -X = -4.3688     +Y =  4.3688     -Y = -4.3688     +Z =  73.152     -Z = 0.00000
```

```
                MEDIA BIAS      GEOMETRY DESCRIPTION FOR THOSE UNITS UTILIZED IN THIS PROBLEM
REGION           NUM   ID

                                      -----   UNIT    21  EXTERNAL TO LATTICE  1   -----

FUEL WITH HALF OF 1/4 IN. PLATE ON LEFT  TOP STACK

  1 ARRAY NUMBER     1         +X =  2.6314     -X = -3.9686     +Y =  4.3658     -Y = -4.3688     +Z =  57.400     -Z = 0.00000

  2 CUBOID           3  1      +X =  4.3688     -X = -4.3688     +Y =  4.3688     -Y = -4.3688     +Z =  73.152     -Z = 0.00000

    HOLE NUMBER      9       AT X = -4.1687      Y = 0.00000      Z = 0.00000     IS UNIT NUMBER      4

    HOLE NUMBER     10       AT X =  4.1687      Y = 0.00000      Z = 0.00000     IS UNIT NUMBER      4

  3 CUBOID           5  1      +X =  4.3688     -X = -4.6736     +Y =  4.3688     -Y = -4.3688     +Z =  73.152     -Z = 0.00000

                                      -----   UNIT    30  EXTERNAL TO LATTICE  1   -----

FUEL ARRAY WITH HALF OF 1/4 IN. PLATE ON RIGHT -  BOTTOM STACK

  1 ARRAY NUMBER     1         +X =  3.9686     -X = -2.6314     +Y =  4.3658     -Y = -4.3688     +Z =  57.400     -Z = 0.00000

  2 CUBOID           3  1      +X =  4.3688     -X = -4.3688     +Y =  4.3688     -Y = -4.3688     +Z =  73.152     -Z = 0.00000

    HOLE NUMBER     11       AT X = -4.1687      Y = 0.00000      Z = 0.00000     IS UNIT NUMBER      4

    HOLE NUMBER     12       AT X =  4.1687      Y = 0.00000      Z = 0.00000     IS UNIT NUMBER      4

  3 CUBOID           5  1      +X =  4.6736     -X = -4.3688     +Y =  4.3688     -Y = -4.3688     +Z =  73.152     -Z = 0.00000

                                      -----   UNIT    31  EXTERNAL TO LATTICE  1   -----

FUEL ARRAY WITH HALF OF 1/4 IN. PLATE ON LEFT - BOTTOM STACK

  1 ARRAY NUMBER     1         +X =  2.6314     -X = -3.9686     +Y =  4.3658     -Y = -4.3688     +Z =  57.400     -Z = 0.00000

  2 CUBOID           3  1      +X =  4.3688     -X = -4.3688     +Y =  4.3688     -Y = -4.3688     +Z =  73.152     -Z = 0.00000

    HOLE NUMBER     13       AT X = -4.1687      Y = 0.00000      Z = 0.00000     IS UNIT NUMBER      4

    HOLE NUMBER     14       AT X =  4.1687      Y = 0.00000      Z = 0.00000     IS UNIT NUMBER      4

  3 CUBOID           5  1      +X =  4.3688     -X = -4.6736     +Y =  4.3688     -Y = -4.3688     +Z =  73.152     -Z = 0.00000

                                      -----   UNIT    40  EXTERNAL TO LATTICE  2   -----

2 UNIT ARRAY WITH 1/4 IN. PLATE ON TOP AND SIDES

  1 ARRAY NUMBER     2         +X =  9.0420     -X = -9.0428     +Y =  4.3688     -Y = -4.3688     +Z =  73.152     -Z = 0.00000

  2 CUBOID           5  1      +X =  9.3468     -X = -9.3476     +Y =  4.6736     -Y = -4.3688     +Z =  73.152     -Z = 0.00000
```

```
                MEDIA BIAS      GEOMETRY DESCRIPTION FOR THOSE UNITS UTILIZED IN THIS PROBLEM
REGION           NUM   ID

                                      -----   UNIT    41  EXTERNAL TO LATTICE  3   -----

3 UNIT ARRAY WITH REST OF 5/16 WEB

  1 ARRAY NUMBER     3         +X =  14.173     -X = -14.174     +Y =  4.3688     -Y = -4.3688     +Z =  73.152     -Z = 0.00000

  2 CUBOID           5  1      +X =  14.528     -X = -14.529     +Y =  5.0800     -Y = -5.0800     +Z =  73.152     -Z = 0.00000

                                      -----   UNIT    42  EXTERNAL TO LATTICE  4   -----

2 UNIT ARRAY WITH 1/4 IN. PLATE ON BOTTOM AND SIDES

  1 ARRAY NUMBER     4         +X =  9.0420     -X = -9.0428     +Y =  4.3688     -Y = -4.3688     +Z =  73.152     -Z = 0.00000

  2 CUBOID           5  1      +X =  9.3468     -X = -9.3476     +Y =  4.3688     -Y = -4.6736     +Z =  73.152     -Z = 0.00000

                                           -----   UNIT    50   -----

7 MTR ELEMENTS IN THE LWT

  1 CYLINDER         3  1  RADIUS =  17.050     +Z =  73.152     -Z = 0.00000     CENTERLINE IS AT  X = 0.00000      Y = 0.00000

    HOLE NUMBER     15       AT X = 0.00000      Y =  9.4489      Z = 0.00000     IS UNIT NUMBER     40

    HOLE NUMBER     16       AT X = 0.00000      Y = 0.00000      Z = 0.00000     IS UNIT NUMBER     41

    HOLE NUMBER     17       AT X = 0.00000      Y = -9.4489      Z = 0.00000     IS UNIT NUMBER     42

  2 CYLINDER         5  1  RADIUS =  18.891     +Z =  73.152     -Z = -1.2700     CENTERLINE IS AT  X = 0.00000      Y = 0.00000

  3 CYLINDER         6  1  RADIUS =  33.496     +Z =  73.152     -Z = -1.2700     CENTERLINE IS AT  X = 0.00000      Y = 0.00000

  4 CYLINDER         5  1  RADIUS =  36.544     +Z =  73.152     -Z = -1.2700     CENTERLINE IS AT  X = 0.00000      Y = 0.00000

  5 CYLINDER         7  1  RADIUS =  49.244     +Z =  73.152     -Z = -1.2700     CENTERLINE IS AT  X = 0.00000      Y = 0.00000

  6 CYLINDER         5  1  RADIUS =  49.854     +Z =  73.152     -Z = -1.2700     CENTERLINE IS AT  X = 0.00000      Y = 0.00000

  7 CUBOID           8  1      +X =  49.854     -X = -49.854     +Y =  49.854     -Y = -49.854     +Z =  73.152     -Z = -1.2700

                                           -----   UNIT    60   -----

SIMPLIFIED LID STRUCTURE NAC-LWT

  1 CYLINDER         5  1  RADIUS =  36.519     +Z =  13.677     -Z = -14.135     CENTERLINE IS AT  X = 0.00000      Y = 0.00000

  2 CYLINDER         8  1  RADIUS =  49.854     +Z =  13.677     -Z = -14.135     CENTERLINE IS AT  X = 0.00000      Y = 0.00000

  3 CUBOID           8  1      +X =  49.854     -X = -49.854     +Y =  49.854     -Y = -49.854     +Z =  13.677     -Z = -14.135
```

```
                MEDIA BIAS      GEOMETRY DESCRIPTION FOR THOSE UNITS UTILIZED IN THIS PROBLEM
REGION           NUM   ID

                                                -----   UNIT    61   -----

SIMPLIFIED CASK BOTTOM STRUCTURE NAC-LWT

  1 CYLINDER         6  1  RADIUS =  26.353     +Z =  3.8100     -Z = -3.8100     CENTERLINE IS AT  X = 0.00000      Y = 0.00000

  2 CYLINDER         5  1  RADIUS =  36.619     +Z =  13.360     -Z = -12.700     CENTERLINE IS AT  X = 0.00000      Y = 0.00000

  3 CYLINDER         8  1  RADIUS =  49.854     +Z =  13.360     -Z = -12.700     CENTERLINE IS AT  X = 0.00000      Y = 0.00000

  4 CUBOID           8  1       +X =  49.854     -X = -49.854     +Y =  49.854     -Y = -49.854     +Z =  13.360     -Z = -12.700

                                                -----   UNIT    62   -----

THIN TOP AND BOTTOM SHELL OF NEUTRON SHIELD - SUBTRACTED FROM LID MODEL

  1 CYLINDER         5  1  RADIUS =  49.854     +Z = 0.61000     -Z = 0.00000     CENTERLINE IS AT  X = 0.00000      Y = 0.00000

  2 CUBOID           8  1       +X =  49.854     -X = -49.854     +Y =  49.854     -Y = -49.854     +Z = 0.61000     -Z = 0.00000

                                        ******************   GLOBAL   ******************
                                        -----   UNIT    70  EXTERNAL TO LATTICE 10   -----

STACK OF 6 BASKETS IN CASK WITH LID AND BOTTOM

  1 ARRAY NUMBER    10          +X =  49.854     -X = -49.854     +Y =  49.854     -Y = -49.854     +Z =  501.62     -Z = 0.00000

                                        -----   UNIT   110  EXTERNAL TO LATTICE  1   -----

FUEL PATE ARRAY - PLATES IN 5/16 IN. WEB CENTER

  1 ARRAY NUMBER     1          +X =  3.3000     -X = -3.3000     +Y =  4.3658     -Y = -4.3688     +Z =  73.152     -Z =  15.752

  2 CUBOID           3  1       +X =  4.3688     -X = -4.3688     +Y =  4.3688     -Y = -4.3688     +Z =  73.152     -Z = 0.00000

    HOLE NUMBER     18        AT X = -4.1687      Y = 0.00000      Z =  15.752     IS UNIT NUMBER      4

    HOLE NUMBER     19        AT X =  4.1687      Y = 0.00000      Z =  15.752     IS UNIT NUMBER      4

  3 CUBOID           5  1       +X =  4.7244     -X = -4.7244     +Y =  4.3688     -Y = -4.3688     +Z =  73.152     -Z = 0.00000
```

```
                MEDIA BIAS      GEOMETRY DESCRIPTION FOR THOSE UNITS UTILIZED IN THIS PROBLEM
REGION           NUM   ID

                                      -----   UNIT   111  EXTERNAL TO LATTICE  1   -----

FUEL ARRAY 20 PLATES IN 5/16 IN. WEB RIGHT

  1 ARRAY NUMBER     1         +X =  2.6314     -X = -3.9686     +Y =  4.3658     -Y = -4.3688     +Z =  73.152     -Z =  15.752

  2 CUBOID           3  1      +X =  4.3688     -X = -4.3688     +Y =  4.3688     -Y = -4.3688     +Z =  73.152     -Z = 0.00000

    HOLE NUMBER     20       AT X = -4.1687      Y = 0.00000      Z =  15.752     IS UNIT NUMBER      4

    HOLE NUMBER     21       AT X =  4.1687      Y = 0.00000      Z =  15.752     IS UNIT NUMBER      4

  3 CUBOID           5  1      +X =  4.7244     -X = -4.7244     +Y =  4.3688     -Y = -4.3688     +Z =  73.152     -Z = 0.00000

                                      -----   UNIT   112  EXTERNAL TO LATTICE  1   -----

FUEL ARRAY 20 PLATES IN 5/16 IN. WEB LEFT

  1 ARRAY NUMBER     1         +X =  3.9686     -X = -2.6314     +Y =  4.3658     -Y = -4.3688     +Z =  73.152     -Z =  15.752

  2 CUBOID           3  1      +X =  4.3688     -X = -4.3688     +Y =  4.3688     -Y = -4.3688     +Z =  73.152     -Z = 0.00000

    HOLE NUMBER     22       AT X = -4.1687      Y = 0.00000      Z =  15.752     IS UNIT NUMBER      4

    HOLE NUMBER     23       AT X =  4.1687      Y = 0.00000      Z =  15.752     IS UNIT NUMBER      4

  3 CUBOID           5  1      +X =  4.7244     -X = -4.7244     +Y =  4.3688     -Y = -4.3688     +Z =  73.152     -Z = 0.00000

                                      -----   UNIT   120  EXTERNAL TO LATTICE  1   -----

FUEL ARRAY WITH HALF OF 1/4 PLATE ON RIGHT -  TOP STACK

  1 ARRAY NUMBER     1         +X =  3.9686     -X = -2.6314     +Y =  4.3658     -Y = -4.3688     +Z =  73.152     -Z =  15.752

  2 CUBOID           3  1      +X =  4.3688     -X = -4.3688     +Y =  4.3688     -Y = -4.3688     +Z =  73.152     -Z = 0.00000

    HOLE NUMBER     24       AT X = -4.1687      Y = 0.00000      Z =  15.752     IS UNIT NUMBER      4

    HOLE NUMBER     25       AT X =  4.1687      Y = 0.00000      Z =  15.752     IS UNIT NUMBER      4

  3 CUBOID           5  1      +X =  4.6736     -X = -4.3688     +Y =  4.3688     -Y = -4.3688     +Z =  73.152     -Z = 0.00000
```

```
                MEDIA BIAS      GEOMETRY DESCRIPTION FOR THOSE UNITS UTILIZED IN THIS PROBLEM
REGION           NUM   ID

                                      -----   UNIT   121  EXTERNAL TO LATTICE  1   -----

FUEL WITH HALF OF 1/4 IN. PLATE ON LEFT  TOP STACK

  1 ARRAY NUMBER     1         +X =  2.6314     -X = -3.9686     +Y =  4.3658     -Y = -4.3688     +Z =  73.152     -Z =  15.752

  2 CUBOID           3  1      +X =  4.3688     -X = -4.3688     +Y =  4.3688     -Y = -4.3688     +Z =  73.152     -Z = 0.00000

    HOLE NUMBER     26       AT X = -4.1687      Y = 0.00000      Z =  15.752     IS UNIT NUMBER      4

    HOLE NUMBER     27       AT X =  4.1687      Y = 0.00000      Z =  15.752     IS UNIT NUMBER      4

  3 CUBOID           5  1      +X =  4.3688     -X = -4.6736     +Y =  4.3688     -Y = -4.3688     +Z =  73.152     -Z = 0.00000

                                      -----   UNIT   130  EXTERNAL TO LATTICE  1   -----

FUEL ARRAY WITH HALF OF 1/4 IN. PLATE ON RIGHT -  BOTTOM STACK

  1 ARRAY NUMBER     1         +X =  3.9686     -X = -2.6314     +Y =  4.3658     -Y = -4.3688     +Z =  73.152     -Z =  15.752

  2 CUBOID           3  1      +X =  4.3688     -X = -4.3688     +Y =  4.3688     -Y = -4.3688     +Z =  73.152     -Z = 0.00000

    HOLE NUMBER     28       AT X = -4.1687      Y = 0.00000      Z =  15.752     IS UNIT NUMBER      4

    HOLE NUMBER     29       AT X =  4.1687      Y = 0.00000      Z =  15.752     IS UNIT NUMBER      4

  3 CUBOID           5  1      +X =  4.6736     -X = -4.3688     +Y =  4.3688     -Y = -4.3688     +Z =  73.152     -Z = 0.00000

                                      -----   UNIT   131  EXTERNAL TO LATTICE  1   -----

FUEL ARRAY WITH HALF OF 1/4 IN. PLATE ON LEFT - BOTTOM STACK

  1 ARRAY NUMBER     1         +X =  2.6314     -X = -3.9686     +Y =  4.3658     -Y = -4.3688     +Z =  73.152     -Z =  15.752

  2 CUBOID           3  1      +X =  4.3688     -X = -4.3688     +Y =  4.3688     -Y = -4.3688     +Z =  73.152     -Z = 0.00000

    HOLE NUMBER     30       AT X = -4.1687      Y = 0.00000      Z =  15.752     IS UNIT NUMBER      4

    HOLE NUMBER     31       AT X =  4.1687      Y = 0.00000      Z =  15.752     IS UNIT NUMBER      4

  3 CUBOID           5  1      +X =  4.3688     -X = -4.6736     +Y =  4.3688     -Y = -4.3688     +Z =  73.152     -Z = 0.00000

                                      -----   UNIT   140  EXTERNAL TO LATTICE 12   -----

2 UNIT ARRAY WITH 1/4 IN. PLATE ON TOP AND SIDES

  1 ARRAY NUMBER    12         +X =  9.0420     -X = -9.0428     +Y =  4.3688     -Y = -4.3688     +Z =  73.152     -Z = 0.00000

  2 CUBOID           5  1      +X =  9.3468     -X = -9.3476     +Y =  4.6736     -Y = -4.3688     +Z =  73.152     -Z = 0.00000
```

```
                MEDIA BIAS      GEOMETRY DESCRIPTION FOR THOSE UNITS UTILIZED IN THIS PROBLEM
REGION           NUM   ID

                                      -----   UNIT   141  EXTERNAL TO LATTICE 13   -----

3 UNIT ARRAY WITH REST OF 5/16 WEB

  1 ARRAY NUMBER    13         +X =  14.173     -X = -14.174     +Y =  4.3688     -Y = -4.3688     +Z =  73.152     -Z = 0.00000

  2 CUBOID           5  1      +X =  14.528     -X = -14.529     +Y =  5.0800     -Y = -5.0800     +Z =  73.152     -Z = 0.00000

                                      -----   UNIT   142  EXTERNAL TO LATTICE 14   -----

2 UNIT ARRAY WITH 1/4 IN. PLATE ON BOTTOM AND SIDES

  1 ARRAY NUMBER    14         +X =  9.0420     -X = -9.0428     +Y =  4.3688     -Y = -4.3688     +Z =  73.152     -Z = 0.00000

  2 CUBOID           5  1      +X =  9.3468     -X = -9.3476     +Y =  4.3688     -Y = -4.6736     +Z =  73.152     -Z = 0.00000

                                           -----   UNIT   150   -----

7 MTR ELEMENTS IN THE LWT

  1 CYLINDER         3  1  RADIUS =  17.050     +Z =  73.152     -Z = 0.00000     CENTERLINE IS AT  X = 0.00000      Y = 0.00000

    HOLE NUMBER     32       AT X = 0.00000      Y =  9.4489      Z = 0.00000     IS UNIT NUMBER    140

    HOLE NUMBER     33       AT X = 0.00000      Y = 0.00000      Z = 0.00000     IS UNIT NUMBER    141

    HOLE NUMBER     34       AT X = 0.00000      Y = -9.4489      Z = 0.00000     IS UNIT NUMBER    142

  2 CYLINDER         5  1  RADIUS =  18.891     +Z =  73.152     -Z = -1.2700     CENTERLINE IS AT  X = 0.00000      Y = 0.00000

  3 CYLINDER         6  1  RADIUS =  33.496     +Z =  73.152     -Z = -1.2700     CENTERLINE IS AT  X = 0.00000      Y = 0.00000

  4 CYLINDER         5  1  RADIUS =  36.544     +Z =  73.152     -Z = -1.2700     CENTERLINE IS AT  X = 0.00000      Y = 0.00000

  5 CYLINDER         7  1  RADIUS =  49.244     +Z =  73.152     -Z = -1.2700     CENTERLINE IS AT  X = 0.00000      Y = 0.00000

  6 CYLINDER         5  1  RADIUS =  49.854     +Z =  73.152     -Z = -1.2700     CENTERLINE IS AT  X = 0.00000      Y = 0.00000

  7 CUBOID           8  1      +X =  49.854     -X = -49.854     +Y =  49.854     -Y = -49.854     +Z =  73.152     -Z = -1.2700
```

```
                -------  UNIT ORIENTATION DESCRIPTION FOR ARRAY   1         -------
Z LAYER   1, X COLUMN   1 TO   1 LEFT TO RIGHT   Y ROW   1 TO  23  BOTTOM TO TOP
 2
 1
 1
 1
 1
 1
 1
 1
 1
 1
 1
 1
 1
 1
 1
 1
 1
 1
 1
 1
 1
 3
                -------  UNIT ORIENTATION DESCRIPTION FOR ARRAY   2         -------
Z LAYER   1, X COLUMN   1 TO   2 LEFT TO RIGHT   Y ROW   1 TO   1  BOTTOM TO TOP
 20 21
```

```
                -------  UNIT ORIENTATION DESCRIPTION FOR ARRAY   3         -------
Z LAYER   1, X COLUMN   1 TO   3 LEFT TO RIGHT   Y ROW   1 TO   1  BOTTOM TO TOP
 12 10 11
                -------  UNIT ORIENTATION DESCRIPTION FOR ARRAY   4         -------
Z LAYER   1, X COLUMN   1 TO   2 LEFT TO RIGHT   Y ROW   1 TO   1  BOTTOM TO TOP
 30 31
```

```
                -------  UNIT ORIENTATION DESCRIPTION FOR ARRAY  10         -------

Z LAYER   1, X COLUMN   1 TO   1 LEFT TO RIGHT   Y ROW   1 TO   1  BOTTOM TO TOP

  61
Z LAYER   2, X COLUMN   1 TO   1 LEFT TO RIGHT   Y ROW   1 TO   1  BOTTOM TO TOP

  62
Z LAYER   3, X COLUMN   1 TO   1 LEFT TO RIGHT   Y ROW   1 TO   1  BOTTOM TO TOP

 150
Z LAYER   4, X COLUMN   1 TO   1 LEFT TO RIGHT   Y ROW   1 TO   1  BOTTOM TO TOP

  50
Z LAYER   5, X COLUMN   1 TO   1 LEFT TO RIGHT   Y ROW   1 TO   1  BOTTOM TO TOP

 150
Z LAYER   6, X COLUMN   1 TO   1 LEFT TO RIGHT   Y ROW   1 TO   1  BOTTOM TO TOP

  50
Z LAYER   7, X COLUMN   1 TO   1 LEFT TO RIGHT   Y ROW   1 TO   1  BOTTOM TO TOP

 150
Z LAYER   8, X COLUMN   1 TO   1 LEFT TO RIGHT   Y ROW   1 TO   1  BOTTOM TO TOP

  50
Z LAYER   9, X COLUMN   1 TO   1 LEFT TO RIGHT   Y ROW   1 TO   1  BOTTOM TO TOP

  62
Z LAYER  10, X COLUMN   1 TO   1 LEFT TO RIGHT   Y ROW   1 TO   1  BOTTOM TO TOP

  60
```

```
                -------  UNIT ORIENTATION DESCRIPTION FOR ARRAY  12         -------
Z LAYER   1, X COLUMN   1 TO   2 LEFT TO RIGHT   Y ROW   1 TO   1  BOTTOM TO TOP
 120 121
                -------  UNIT ORIENTATION DESCRIPTION FOR ARRAY  13         -------
Z LAYER   1, X COLUMN   1 TO   3 LEFT TO RIGHT   Y ROW   1 TO   1  BOTTOM TO TOP
 112 110 111
                -------  UNIT ORIENTATION DESCRIPTION FOR ARRAY  14         -------
Z LAYER   1, X COLUMN   1 TO   2 LEFT TO RIGHT   Y ROW   1 TO   1  BOTTOM TO TOP
 130 131
```

VOLUMES FOR THOSE UNITS UTILIZED IN THIS PROBLEM

UNIT	REGION	GEOMETRY REGION	VOLUME	CUMULATIVE VOLUME
1	1	1	2.77200E+01 CM**3	2.77200E+01 CM**3
	2	2	1.58466E+01 CM**3	4.35666E+01 CM**3
	3	3	1.04863E+02 CM**3	1.48430E+02 CM**3
2	1	4	2.77200E+01 CM**3	2.77200E+01 CM**3
	2	5	1.58466E+01 CM**3	4.35666E+01 CM**3
	3	6	5.24315E+01 CM**3	9.59981E+01 CM**3
3	1	7	2.77200E+01 CM**3	2.77200E+01 CM**3
	2	8	1.58466E+01 CM**3	4.35666E+01 CM**3
	3	9	5.24315E+01 CM**3	9.59981E+01 CM**3
4	1	10	1.72200E+02 CM**3	1.72200E+02 CM**3
SURROUNDING GEOMETRY VOLUMES - GEOMETRY REGION 11 IS AN ARRAY PLACEMENT BOUNDARY REGION				
10	1	11	3.30902E+03 CM**3	3.30902E+03 CM**3
	2	12	1.93142E+03 CM**3	5.58484E+03 CM**3
	3	13	4.54580E+02 CM**3	6.03942E+03 CM**3
SURROUNDING GEOMETRY VOLUMES - GEOMETRY REGION 14 IS AN ARRAY PLACEMENT BOUNDARY REGION				
11	1	14	3.30902E+03 CM**3	3.30902E+03 CM**3
	2	15	1.93142E+03 CM**3	5.58484E+03 CM**3
	3	16	4.54580E+02 CM**3	6.03942E+03 CM**3
SURROUNDING GEOMETRY VOLUMES - GEOMETRY REGION 17 IS AN ARRAY PLACEMENT BOUNDARY REGION				
12	1	17	3.30902E+03 CM**3	3.30902E+03 CM**3
	2	18	1.93142E+03 CM**3	5.58484E+03 CM**3
	3	19	4.54580E+02 CM**3	6.03942E+03 CM**3
SURROUNDING GEOMETRY VOLUMES - GEOMETRY REGION 20 IS AN ARRAY PLACEMENT BOUNDARY REGION				
20	1	20	3.30902E+03 CM**3	3.30902E+03 CM**3
	2	21	1.93142E+03 CM**3	5.58484E+03 CM**3
	3	22	1.94820E+02 CM**3	5.77966E+03 CM**3
SURROUNDING GEOMETRY VOLUMES - GEOMETRY REGION 23 IS AN ARRAY PLACEMENT BOUNDARY REGION				
21	1	23	3.30902E+03 CM**3	3.30902E+03 CM**3
	2	24	1.93142E+03 CM**3	5.58484E+03 CM**3
	3	25	1.94820E+02 CM**3	5.77966E+03 CM**3
SURROUNDING GEOMETRY VOLUMES - GEOMETRY REGION 26 IS AN ARRAY PLACEMENT BOUNDARY REGION				
30	1	26	3.30902E+03 CM**3	3.30902E+03 CM**3
	2	27	1.93142E+03 CM**3	5.58484E+03 CM**3
	3	28	1.94820E+02 CM**3	5.77966E+03 CM**3
SURROUNDING GEOMETRY VOLUMES - GEOMETRY REGION 29 IS AN ARRAY PLACEMENT BOUNDARY REGION				
31	1	29	3.30902E+03 CM**3	3.30902E+03 CM**3
	2	30	1.93142E+03 CM**3	5.58484E+03 CM**3
	3	31	1.94820E+02 CM**3	5.77966E+03 CM**3
SURROUNDING GEOMETRY VOLUMES - GEOMETRY REGION 32 IS AN ARRAY PLACEMENT BOUNDARY REGION				
40	1	32	1.15593E+04 CM**3	1.15593E+04 CM**3
	2	33	8.06464E+02 CM**3	1.23658E+04 CM**3
SURROUNDING GEOMETRY VOLUMES - GEOMETRY REGION 34 IS AN ARRAY PLACEMENT BOUNDARY REGION				
41	1	34	1.81183E+04 CM**3	1.81183E+04 CM**3
	2	35	3.47806E+03 CM**3	2.15963E+04 CM**3
SURROUNDING GEOMETRY VOLUMES - GEOMETRY REGION 36 IS AN ARRAY PLACEMENT BOUNDARY REGION				
42	1	36	1.15593E+04 CM**3	1.15593E+04 CM**3
	2	37	8.06464E+02 CM**3	1.23658E+04 CM**3
50	1	38	2.04796E+04 CM**3	6.68074E+04 CM**3
	2	39	1.66327E+04 CM**3	8.34401E+04 CM**3
	3	40	1.78888E+05 CM**3	2.62328E+05 CM**3
	4	41	4.99133E+04 CM**3	3.12241E+05 CM**3
	5	42	2.54733E+05 CM**3	5.66974E+05 CM**3
	6	43	1.41241E+04 CM**3	5.81098E+05 CM**3
	7	44	1.58779E+05 CM**3	7.39877E+05 CM**3
60	1	79	1.16526E+05 CM**3	1.16526E+05 CM**3
	2	80	1.00639E+05 CM**3	2.17165E+05 CM**3
	3	81	5.93381E+04 CM**3	2.76503E+05 CM**3
61	1	82	1.66245E+04 CM**3	1.66245E+04 CM**3
	2	83	9.31579E+04 CM**3	1.09782E+05 CM**3
	3	84	9.36980E+04 CM**3	2.03480E+05 CM**3
	4	85	5.55989E+04 CM**3	2.59079E+05 CM**3
62	1	86	4.76297E+03 CM**3	4.76297E+03 CM**3

```
            2        87         1.30143E+03 CM**3         6.06440E+03 CM**3

SURROUNDING GEOMETRY VOLUMES -  GEOMETRY REGION     88 IS AN ARRAY PLACEMENT BOUNDARY REGION

 70         1        88         4.98697E+06 CM**3         4.98697E+06 CM**3

SURROUNDING GEOMETRY VOLUMES -  GEOMETRY REGION     45 IS AN ARRAY PLACEMENT BOUNDARY REGION

110         1        45         3.30902E+03 CM**3         3.30902E+03 CM**3
            2        46         1.93142E+03 CM**3         5.58484E+03 CM**3
            3        47         4.54580E+02 CM**3         6.03942E+03 CM**3

SURROUNDING GEOMETRY VOLUMES -  GEOMETRY REGION     48 IS AN ARRAY PLACEMENT BOUNDARY REGION

111         1        48         3.30902E+03 CM**3         3.30902E+03 CM**3
            2        49         1.93142E+03 CM**3         5.58484E+03 CM**3
            3        50         4.54580E+02 CM**3         6.03942E+03 CM**3

SURROUNDING GEOMETRY VOLUMES -  GEOMETRY REGION     51 IS AN ARRAY PLACEMENT BOUNDARY REGION

112         1        51         3.30902E+03 CM**3         3.30902E+03 CM**3
            2        52         1.93142E+03 CM**3         5.58484E+03 CM**3
            3        53         4.54580E+02 CM**3         6.03942E+03 CM**3

SURROUNDING GEOMETRY VOLUMES -  GEOMETRY REGION     54 IS AN ARRAY PLACEMENT BOUNDARY REGION

120         1        54         3.30902E+03 CM**3         3.30902E+03 CM**3
            2        55         1.93142E+03 CM**3         5.58484E+03 CM**3
            3        56         1.94820E+02 CM**3         5.77966E+03 CM**3

SURROUNDING GEOMETRY VOLUMES -  GEOMETRY REGION     57 IS AN ARRAY PLACEMENT BOUNDARY REGION

121         1        57         3.30902E+03 CM**3         3.30902E+03 CM**3
            2        58         1.93142E+03 CM**3         5.58484E+03 CM**3
            3        59         1.94820E+02 CM**3         5.77966E+03 CM**3

SURROUNDING GEOMETRY VOLUMES -  GEOMETRY REGION     60 IS AN ARRAY PLACEMENT BOUNDARY REGION

130         1        60         3.30902E+03 CM**3         3.30902E+03 CM**3
            2        61         1.93142E+03 CM**3         5.58484E+03 CM**3
            3        62         1.94820E+02 CM**3         5.77966E+03 CM**3

SURROUNDING GEOMETRY VOLUMES -  GEOMETRY REGION     63 IS AN ARRAY PLACEMENT BOUNDARY REGION

131         1        63         3.30902E+03 CM**3         3.30902E+03 CM**3
            2        64         1.93142E+03 CM**3         5.58484E+03 CM**3
            3        65         1.94820E+02 CM**3         5.77966E+03 CM**3

SURROUNDING GEOMETRY VOLUMES -  GEOMETRY REGION     66 IS AN ARRAY PLACEMENT BOUNDARY REGION

140         1        66         1.15593E+04 CM**3         1.15593E+04 CM**3
            2        67         8.06464E+02 CM**3         1.23658E+04 CM**3

SURROUNDING GEOMETRY VOLUMES -  GEOMETRY REGION     68 IS AN ARRAY PLACEMENT BOUNDARY REGION

141         1        68         1.81183E+04 CM**3         1.81183E+04 CM**3
            2        69         3.47806E+03 CM**3         2.15963E+04 CM**3

SURROUNDING GEOMETRY VOLUMES -  GEOMETRY REGION     70 IS AN ARRAY PLACEMENT BOUNDARY REGION

142         1        70         1.15593E+04 CM**3         1.15593E+04 CM**3
            2        71         8.06464E+02 CM**3         1.23658E+04 CM**3

150         1        72         2.04796E+04 CM**3         6.68074E+04 CM**3
            2        73         1.66327E+04 CM**3         8.34401E+04 CM**3
            3        74         1.78888E+05 CM**3         2.62328E+05 CM**3
            4        75         4.99133E+04 CM**3         3.12241E+05 CM**3
            5        76         2.54733E+05 CM**3         5.66974E+05 CM**3
            6        77         1.41241E+04 CM**3         5.81098E+05 CM**3
            7        78         1.58779E+05 CM**3         7.39877E+05 CM**3


                UNIT     USES    REGION     MIXTURE        TOTAL VOLUME

                  1       882         1           1         2.44490E+04 CM**3
                                      2           2         1.39767E+04 CM**3
                                      3           3         9.24891E+04 CM**3

                  2        42         1           1         1.16424E+03 CM**3
                                      2           2         6.65557E+02 CM**3
                                      3           3         2.20212E+03 CM**3

                  3        42         1           1         1.16424E+03 CM**3
                                      2           2         6.65557E+02 CM**3
                                      3           3         2.20212E+03 CM**3

                  4        84         1           2         1.44648E+04 CM**3

                 10         3         1                     9.92705E+03 CM**3
                                      2           3         5.79427E+03 CM**3
                                      3           5         1.36374E+03 CM**3

                 11         3         1                     9.92705E+03 CM**3
                                      2           3         5.79427E+03 CM**3
```

```
                    3          5         1.36374E+03 CM**3

 12         3       1                    9.92705E+03 CM**3
                    2          3         5.79427E+03 CM**3
                    3          5         1.36374E+03 CM**3

 20         3       1                    9.92705E+03 CM**3
                    2          3         5.79427E+03 CM**3
                    3          5         5.84459E+02 CM**3

 21         3       1                    9.92705E+03 CM**3
                    2          3         5.79427E+03 CM**3
                    3          5         5.84459E+02 CM**3

 30         3       1                    9.92705E+03 CM**3
                    2          3         5.79427E+03 CM**3
                    3          5         5.84459E+02 CM**3

 31         3       1                    9.92705E+03 CM**3
                    2          3         5.79427E+03 CM**3
                    3          5         5.84459E+02 CM**3

 40         3       1                    3.46779E+04 CM**3
                    2          5         2.41939E+03 CM**3

 41         3       1                    5.43548E+04 CM**3
                    2          5         1.04342E+04 CM**3

 42         3       1                    3.46779E+04 CM**3
                    2          5         2.41939E+03 CM**3

 50         3       1          3         6.14387E+04 CM**3
                    2          5         4.98980E+04 CM**3
                    3          6         5.36664E+05 CM**3
                    4          5         1.49740E+05 CM**3
                    5          7         7.64198E+05 CM**3
                    6          5         4.23722E+04 CM**3
                    7          8         4.76337E+05 CM**3

 60         1       1          5         1.16526E+05 CM**3
                    2          8         1.00639E+05 CM**3
                    3          8         5.93381E+04 CM**3

 61         1       1          6         1.66245E+04 CM**3
                    2          5         9.31579E+04 CM**3
                    3          8         9.36980E+04 CM**3
                    4          8         5.55989E+04 CM**3

 62         2       1          5         9.52594E+03 CM**3
                    2          8         2.60286E+03 CM**3

 70         1       1                    4.98697E+06 CM**3

110         3       1                    9.92705E+03 CM**3
                    2          3         5.79427E+03 CM**3
                    3          5         1.36374E+03 CM**3

111         3       1                    9.92705E+03 CM**3
                    2          3         5.79427E+03 CM**3
                    3          5         1.36374E+03 CM**3

112         3       1                    9.92705E+03 CM**3
                    2          3         5.79427E+03 CM**3
                    3          5         1.36374E+03 CM**3

120         3       1                    9.92705E+03 CM**3
                    2          3         5.79427E+03 CM**3
                    3          5         5.84459E+02 CM**3

121         3       1                    9.92705E+03 CM**3
                    2          3         5.79427E+03 CM**3
                    3          5         5.84459E+02 CM**3

130         3       1                    9.92705E+03 CM**3
                    2          3         5.79427E+03 CM**3
                    3          5         5.84459E+02 CM**3

131         3       1                    9.92705E+03 CM**3
                    2          3         5.79427E+03 CM**3
                    3          5         5.84459E+02 CM**3

140         3       1                    3.46779E+04 CM**3
                    2          5         2.41939E+03 CM**3

141         3       1                    5.43548E+04 CM**3
                    2          5         1.04342E+04 CM**3

142         3       1                    3.46779E+04 CM**3
                    2          5         2.41939E+03 CM**3

150         3       1          3         6.14387E+04 CM**3
                    2          5         4.98980E+04 CM**3
                    3          6         5.36664E+05 CM**3
                    4          5         1.49740E+05 CM**3
                    5          7         7.64198E+05 CM**3
```

```
                                                6          5         4.23722E+04 CM**3
                                                7          8         4.76337E+05 CM**3


                                                    TOTAL MIXTURE VOLUMES
                                               MIXTURE        TOTAL VOLUME              MASS(G)
                                                   1         2.67775E+04 CM**3        3.69944E+04
                                                   2         2.97726E+04 CM**3        8.04456E+04
                                                   3         3.00890E+05 CM**3        3.00340E+05
                                                   5         7.46635E+05 CM**3        5.91335E+06
                                                   6         1.08995E+06 CM**3        1.23644E+07
                                                   7         1.52840E+06 CM**3        1.52560E-14
                                                   8         1.26455E+06 CM**3        1.26224E-14

      ********************************************************************************************************************************
      ***                                                                                                                          ***
      ***                                          BIASING INFORMATION                                                             ***
      ***                                                                                                                          ***
      ***     A DEFAULT WEIGHT OF    0.500 WILL BE USED FOR ALL BIAS ID'S.                                                         ***
      ***                                                                                                                          ***
      ********************************************************************************************************************************

                              ........    0 IO'S WERE USED IN KENO-V BEFORE TRACKING       ........

                              ........  0.00733 MINUTES WERE USED PROCESSING DATA.        ........

VOLUME FRACTION OF FISSILE MATERIAL IN THE CORE= 5.36949E-03

START TYPE 0 WAS USED.

THE NEUTRONS WERE STARTED WITH A FLAT DISTRIBUTION IN A CUBOID DEFINED BY:
                      +X= 4.98539E+01  -X=-4.98539E+01  +Y= 4.98539E+01  -Y=-4.98539E+01  +Z= 5.01625E+02  -Z= 0.00000E+00
THE FLAG TO START NEUTRONS IN THE REFLECTOR WAS TURNED OFF

KENO MESSAGE NUMBER K5-105     ***** WARNING, ONLY  745 INDEPENDENT STARTING POSITIONS WERE GENERATED.  *****

  255 ADDITIONAL STARTING POINTS WERE PICKED FROM THE INITAL DISTRIBUTION.

4.49700 MINUTES WERE REQUIRED FOR STARTING.   TOTAL ELAPSED TIME IS 4.51200 MINUTES.
```

GENERATION	GENERATION K-EFFECTIVE	ELAPSED TIME MINUTES	AVERAGE K-EFFECTIVE	AVG K-EFF DEVIATION	MATRIX K-EFFECTIVE	MATRIX K-EFF DEVIATION
KENO MESSAGE NUMBER K5-132		WARNING....ONLY	999 INDEPENDENT FISSION POINTS WERE GENERATED			
1	9.05782E-01	4.51683E+00	1.00000E+00	0.00000E+00	0.00000E+00	0.00000E+00
KENO MESSAGE NUMBER K5-132		WARNING....ONLY	998 INDEPENDENT FISSION POINTS WERE GENERATED			
2	9.10251E-01	4.52683E+00	1.00000E+00	0.00000E+00	0.00000E+00	0.00000E+00
3	8.90695E-01	4.53683E+00	8.90695E-01	0.00000E+00	0.00000E+00	0.00000E+00
4	9.19914E-01	4.54700E+00	9.05304E-01	1.46094E-02	0.00000E+00	0.00000E+00
5	9.19734E-01	4.55700E+00	9.10114E-01	9.70976E-03	0.00000E+00	0.00000E+00
6	9.21886E-01	4.56617E+00	9.13057E-01	7.47003E-03	0.00000E+00	0.00000E+00
7	9.53605E-01	4.57633E+00	9.21167E-01	9.96223E-03	0.00000E+00	0.00000E+00
8	9.08830E-01	4.58550E+00	9.19111E-01	8.38999E-03	0.00000E+00	0.00000E+00
9	8.89421E-01	4.59633E+00	9.14869E-01	8.26250E-03	0.00000E+00	0.00000E+00
10	9.25939E-01	4.60550E+00	9.16253E-01	7.28810E-03	0.00000E+00	0.00000E+00
11	9.27039E-01	4.61567E+00	9.17451E-01	6.53828E-03	0.00000E+00	0.00000E+00
12	9.70198E-01	4.62483E+00	9.22726E-01	7.87535E-03	0.00000E+00	0.00000E+00
13	9.40410E-01	4.63483E+00	9.24334E-01	7.30267E-03	0.00000E+00	0.00000E+00
14	9.66821E-01	4.64400E+00	9.27874E-01	7.54829E-03	0.00000E+00	0.00000E+00
15	9.03005E-01	4.65400E+00	9.25961E-01	7.20213E-03	0.00000E+00	0.00000E+00
16	9.21764E-01	4.66417E+00	9.25662E-01	6.67462E-03	0.00000E+00	0.00000E+00
17	9.31197E-01	4.67417E+00	9.26031E-01	6.22468E-03	0.00000E+00	0.00000E+00
18	9.35219E-01	4.68333E+00	9.26605E-01	5.85090E-03	0.00000E+00	0.00000E+00
19	8.98210E-01	4.69350E+00	9.24935E-01	5.74417E-03	0.00000E+00	0.00000E+00
20	9.19709E-01	4.70350E+00	9.24644E-01	5.42344E-03	0.00000E+00	0.00000E+00
21	9.81539E-01	4.71267E+00	9.27639E-01	5.94005E-03	0.00000E+00	0.00000E+00
22	8.89901E-01	4.72267E+00	9.25752E-01	5.94273E-03	0.00000E+00	0.00000E+00
23	9.08486E-01	4.73283E+00	9.24930E-01	5.71215E-03	0.00000E+00	0.00000E+00
24	9.24379E-01	4.74283E+00	9.24905E-01	5.44638E-03	0.00000E+00	0.00000E+00
25	9.22234E-01	4.75200E+00	9.24788E-01	5.20549E-03	0.00000E+00	0.00000E+00
26	9.44589E-01	4.76117E+00	9.25613E-01	5.05170E-03	0.00000E+00	0.00000E+00
27	9.35349E-01	4.77133E+00	9.26003E-01	4.86105E-03	0.00000E+00	0.00000E+00
28	9.10675E-01	4.78133E+00	9.25413E-01	4.70740E-03	0.00000E+00	0.00000E+00
29	9.48476E-01	4.79133E+00	9.26268E-01	4.60954E-03	0.00000E+00	0.00000E+00
30	9.44440E-01	4.80050E+00	9.26917E-01	4.48903E-03	0.00000E+00	0.00000E+00
31	9.54902E-01	4.81067E+00	9.27882E-01	4.43766E-03	0.00000E+00	0.00000E+00
32	8.96797E-01	4.82067E+00	9.26845E-01	4.41062E-03	0.00000E+00	0.00000E+00
33	9.50450E-01	4.82983E+00	9.27607E-01	4.33340E-03	0.00000E+00	0.00000E+00
34	9.13527E-01	4.83983E+00	9.27167E-01	4.21880E-03	0.00000E+00	0.00000E+00
35	9.14272E-01	4.85000E+00	9.26776E-01	4.10759E-03	0.00000E+00	0.00000E+00
36	9.52428E-01	4.85917E+00	9.27531E-01	4.05573E-03	0.00000E+00	0.00000E+00

761	9.21736E-01	1.19400E+01	9.26718E-01	9.64740E-04	0.00000E+00	0.00000E+00
762	9.02916E-01	1.19500E+01	9.26687E-01	9.63979E-04	0.00000E+00	0.00000E+00
763	9.20364E-01	1.19600E+01	9.26679E-01	9.62747E-04	0.00000E+00	0.00000E+00
764	9.33754E-01	1.19692E+01	9.26688E-01	9.61528E-04	0.00000E+00	0.00000E+00
765	9.07859E-01	1.19793E+01	9.26663E-01	9.60584E-04	0.00000E+00	0.00000E+00
766	9.41903E-01	1.19893E+01	9.26683E-01	9.59533E-04	0.00000E+00	0.00000E+00
767	9.23249E-01	1.19995E+01	9.26679E-01	9.58289E-04	0.00000E+00	0.00000E+00
768	8.95873E-01	1.20095E+01	9.26638E-01	9.57881E-04	0.00000E+00	0.00000E+00
769	9.44687E-01	1.20197E+01	9.26662E-01	9.56921E-04	0.00000E+00	0.00000E+00
770	8.95803E-01	1.20287E+01	9.26622E-01	9.56519E-04	0.00000E+00	0.00000E+00
771	9.40899E-01	1.20388E+01	9.26640E-01	9.55454E-04	0.00000E+00	0.00000E+00
772	9.03765E-01	1.20480E+01	9.26611E-01	9.54675E-04	0.00000E+00	0.00000E+00
773	8.97725E-01	1.20580E+01	9.26573E-01	9.54172E-04	0.00000E+00	0.00000E+00
774	9.07220E-01	1.20672E+01	9.26548E-01	9.53265E-04	0.00000E+00	0.00000E+00
775	9.50358E-01	1.20773E+01	9.26579E-01	9.52529E-04	0.00000E+00	0.00000E+00
776	9.05261E-01	1.20873E+01	9.26551E-01	9.51696E-04	0.00000E+00	0.00000E+00
777	9.27807E-01	1.20965E+01	9.26553E-01	9.50469E-04	0.00000E+00	0.00000E+00
778	9.42900E-01	1.21065E+01	9.26574E-01	9.49477E-04	0.00000E+00	0.00000E+00
779	9.41042E-01	1.21167E+01	9.26593E-01	9.48437E-04	0.00000E+00	0.00000E+00
780	9.23276E-01	1.21267E+01	9.26588E-01	9.47227E-04	0.00000E+00	0.00000E+00
781	8.90843E-01	1.21368E+01	9.26543E-01	9.47122E-04	0.00000E+00	0.00000E+00
782	9.24456E-01	1.21458E+01	9.26540E-01	9.45911E-04	0.00000E+00	0.00000E+00
783	9.37806E-01	1.21560E+01	9.26554E-01	9.44809E-04	0.00000E+00	0.00000E+00
784	9.00231E-01	1.21660E+01	9.26521E-01	9.44200E-04	0.00000E+00	0.00000E+00
785	9.60546E-01	1.21762E+01	9.26564E-01	9.43994E-04	0.00000E+00	0.00000E+00
786	9.24507E-01	1.21853E+01	9.26561E-01	9.42793E-04	0.00000E+00	0.00000E+00
787	9.09256E-01	1.21953E+01	9.26539E-01	9.41849E-04	0.00000E+00	0.00000E+00
788	9.19815E-01	1.22053E+01	9.26531E-01	9.40689E-04	0.00000E+00	0.00000E+00
789	9.16692E-01	1.22155E+01	9.26518E-01	9.39576E-04	0.00000E+00	0.00000E+00
790	9.34050E-01	1.22255E+01	9.26528E-01	9.38432E-04	0.00000E+00	0.00000E+00
791	9.28294E-01	1.22347E+01	9.26530E-01	9.37244E-04	0.00000E+00	0.00000E+00
792	9.51657E-01	1.22448E+01	9.26562E-01	9.36597E-04	0.00000E+00	0.00000E+00
793	9.43198E-01	1.22548E+01	9.26583E-01	9.35649E-04	0.00000E+00	0.00000E+00
794	9.30817E-01	1.22640E+01	9.26588E-01	9.34482E-04	0.00000E+00	0.00000E+00
795	8.90619E-01	1.22740E+01	9.26543E-01	9.34405E-04	0.00000E+00	0.00000E+00
796	9.10460E-01	1.22832E+01	9.26523E-01	9.33447E-04	0.00000E+00	0.00000E+00
797	8.97591E-01	1.22933E+01	9.26486E-01	9.32982E-04	0.00000E+00	0.00000E+00
798	9.08117E-01	1.23033E+01	9.26463E-01	9.32095E-04	0.00000E+00	0.00000E+00
799	9.07942E-01	1.23135E+01	9.26440E-01	9.31215E-04	0.00000E+00	0.00000E+00
800	9.21666E-01	1.23227E+01	9.26434E-01	9.30066E-04	0.00000E+00	0.00000E+00
801	9.31197E-01	1.23327E+01	9.26440E-01	9.28921E-04	0.00000E+00	0.00000E+00
802	9.30922E-01	1.23427E+01	9.26446E-01	9.27776E-04	0.00000E+00	0.00000E+00
803	8.88743E-01	1.23528E+01	9.26399E-01	9.27811E-04	0.00000E+00	0.00000E+00

KENO MESSAGE NUMBER K5-123 EXECUTION TERMINATED DUE TO COMPLETION OF THE SPECIFIED NUMBER OF GENERATIONS.

LIFETIME = 7.96468E-05 + OR - 1.28891E-07 GENERATION TIME = 3.85994E-05 + OR - 6.32864E-08
NU BAR = 2.42036E+00 + OR - 1.14075E-05 AVERAGE FISSION GROUP = 2.34826E+01 + OR - 4.40629E-03
ENERGY(EV) OF THE AVERAGE LETHARGY CAUSING FISSION = 6.75831E-02 + OR - 2.21596E-04

NO. OF INITIAL GENERATIONS SKIPPED	AVERAGE K-EFFECTIVE	DEVIATION	67 PER CENT CONFIDENCE INTERVAL	95 PER CENT CONFIDENCE INTERVAL	99 PER CENT CONFIDENCE INTERVAL	NUMBER OF HISTORIES
3	0.92644	+ OR - 0.00093	0.92552 TO 0.92737	0.92459 TO 0.92830	0.92366 TO 0.92923	800000
4	0.92645	+ OR - 0.00093	0.92552 TO 0.92738	0.92459 TO 0.92831	0.92366 TO 0.92924	799000
5	0.92646	+ OR - 0.00093	0.92553 TO 0.92739	0.92460 TO 0.92832	0.92367 TO 0.92925	798000
6	0.92647	+ OR - 0.00093	0.92553 TO 0.92740	0.92460 TO 0.92833	0.92367 TO 0.92926	797000
7	0.92643	+ OR - 0.00093	0.92550 TO 0.92736	0.92457 TO 0.92830	0.92364 TO 0.92923	796000
8	0.92645	+ OR - 0.00093	0.92552 TO 0.92739	0.92459 TO 0.92832	0.92366 TO 0.92925	795000
9	0.92650	+ OR - 0.00093	0.92557 TO 0.92743	0.92463 TO 0.92837	0.92370 TO 0.92930	794000
10	0.92650	+ OR - 0.00093	0.92557 TO 0.92743	0.92463 TO 0.92837	0.92370 TO 0.92930	793000
11	0.92650	+ OR - 0.00094	0.92557 TO 0.92744	0.92463 TO 0.92837	0.92369 TO 0.92931	792000
12	0.92644	+ OR - 0.00093	0.92551 TO 0.92738	0.92458 TO 0.92831	0.92364 TO 0.92925	791000
17	0.92641	+ OR - 0.00094	0.92547 TO 0.92734	0.92453 TO 0.92828	0.92359 TO 0.92922	786000
22	0.92642	+ OR - 0.00094	0.92548 TO 0.92735	0.92454 TO 0.92829	0.92360 TO 0.92923	781000
27	0.92641	+ OR - 0.00095	0.92547 TO 0.92736	0.92452 TO 0.92830	0.92358 TO 0.92925	776000
32	0.92638	+ OR - 0.00095	0.92543 TO 0.92733	0.92448 TO 0.92828	0.92353 TO 0.92923	771000
37	0.92631	+ OR - 0.00095	0.92535 TO 0.92726	0.92440 TO 0.92821	0.92345 TO 0.92916	766000
42	0.92620	+ OR - 0.00095	0.92524 TO 0.92715	0.92429 TO 0.92811	0.92333 TO 0.92906	761000
702	0.92470	+ OR - 0.00219	0.92251 TO 0.92689	0.92032 TO 0.92908	0.91813 TO 0.93127	101000
707	0.92432	+ OR - 0.00223	0.92209 TO 0.92655	0.91987 TO 0.92877	0.91764 TO 0.93100	96000
712	0.92431	+ OR - 0.00229	0.92202 TO 0.92660	0.91973 TO 0.92889	0.91744 TO 0.93118	91000
717	0.92428	+ OR - 0.00233	0.92195 TO 0.92661	0.91962 TO 0.92894	0.91729 TO 0.93127	86000
722	0.92525	+ OR - 0.00238	0.92288 TO 0.92763	0.92050 TO 0.93001	0.91812 TO 0.93239	81000
727	0.92385	+ OR - 0.00240	0.92145 TO 0.92625	0.91905 TO 0.92865	0.91665 TO 0.93105	76000
732	0.92456	+ OR - 0.00252	0.92204 TO 0.92708	0.91952 TO 0.92960	0.91700 TO 0.93212	71000
737	0.92459	+ OR - 0.00268	0.92191 TO 0.92727	0.91924 TO 0.92995	0.91656 TO 0.93263	66000
742	0.92491	+ OR - 0.00280	0.92211 TO 0.92772	0.91930 TO 0.93052	0.91650 TO 0.93332	61000
747	0.92537	+ OR - 0.00300	0.92237 TO 0.92837	0.91936 TO 0.93138	0.91636 TO 0.93438	56000
752	0.92380	+ OR - 0.00316	0.92064 TO 0.92697	0.91747 TO 0.93013	0.91431 TO 0.93329	51000
757	0.92301	+ OR - 0.00305	0.91996 TO 0.92605	0.91691 TO 0.92910	0.91387 TO 0.93214	46000
762	0.92105	+ OR - 0.00296	0.91809 TO 0.92401	0.91514 TO 0.92697	0.91218 TO 0.92993	41000
767	0.92045	+ OR - 0.00328	0.91716 TO 0.92373	0.91388 TO 0.92701	0.91060 TO 0.93029	36000
772	0.92113	+ OR - 0.00345	0.91768 TO 0.92458	0.91423 TO 0.92803	0.91079 TO 0.93147	31000
777	0.92179	+ OR - 0.00375	0.91804 TO 0.92555	0.91429 TO 0.92930	0.91054 TO 0.93305	26000
782	0.92115	+ OR - 0.00419	0.91696 TO 0.92534	0.91278 TO 0.92952	0.90859 TO 0.93371	21000
787	0.91949	+ OR - 0.00452	0.91497 TO 0.92400	0.91045 TO 0.92852	0.90593 TO 0.93304	16000
792	0.91466	+ OR - 0.00548	0.90918 TO 0.92015	0.90369 TO 0.92563	0.89821 TO 0.93112	11000
797	0.91476	+ OR - 0.00670	0.90806 TO 0.92146	0.90137 TO 0.92816	0.89467 TO 0.93486	6000

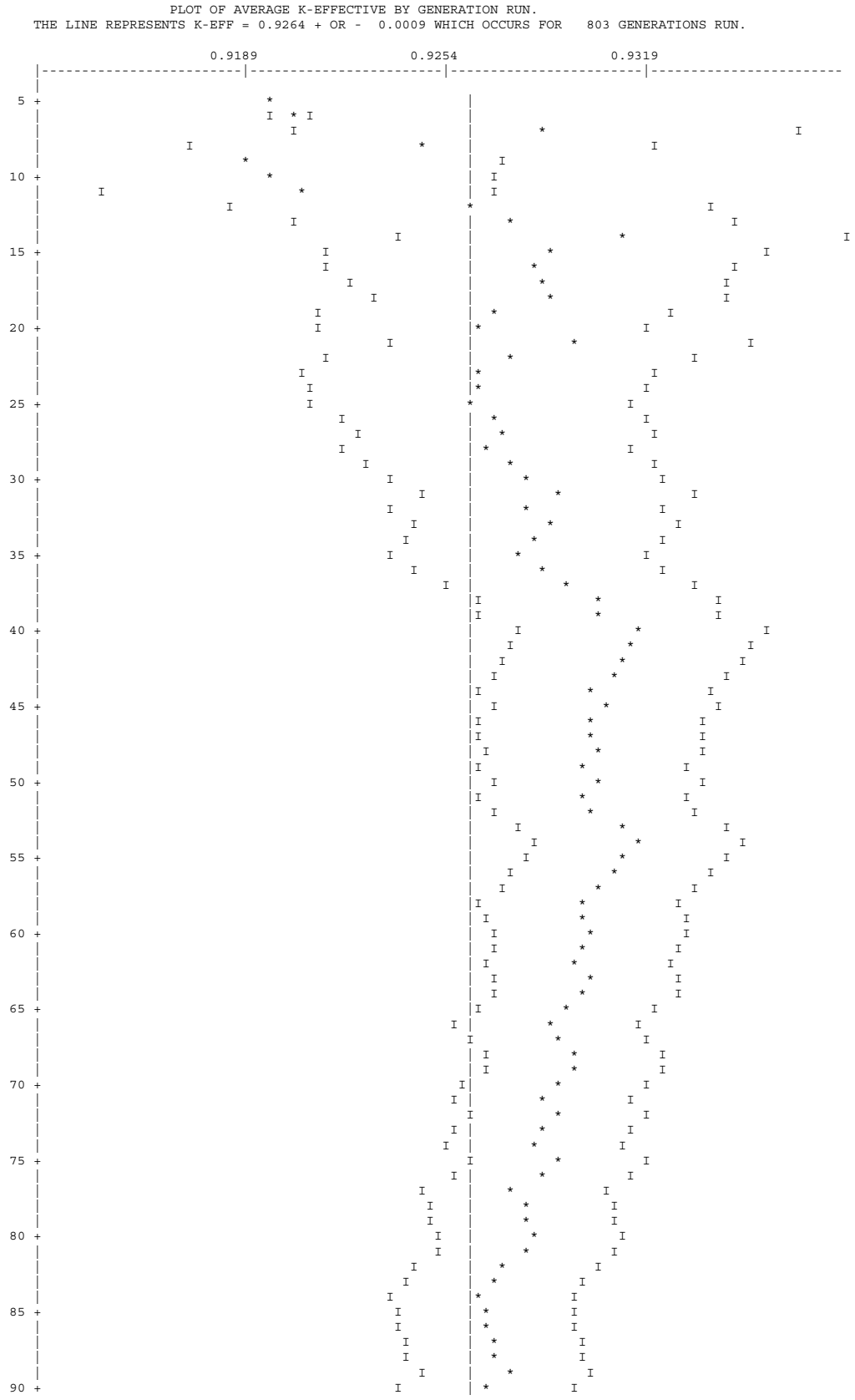
PLOT OF AVERAGE K-EFFECTIVE BY GENERATION RUN.
THE LINE REPRESENTS K-EFF = 0.9264 + OR - 0.0009 WHICH OCCURS FOR 803 GENERATIONS RUN.
0.9189
0.9254
0.9319
5
10
15
20
25
30
35
40
45
50
55
60
65
70
75
80
85
90

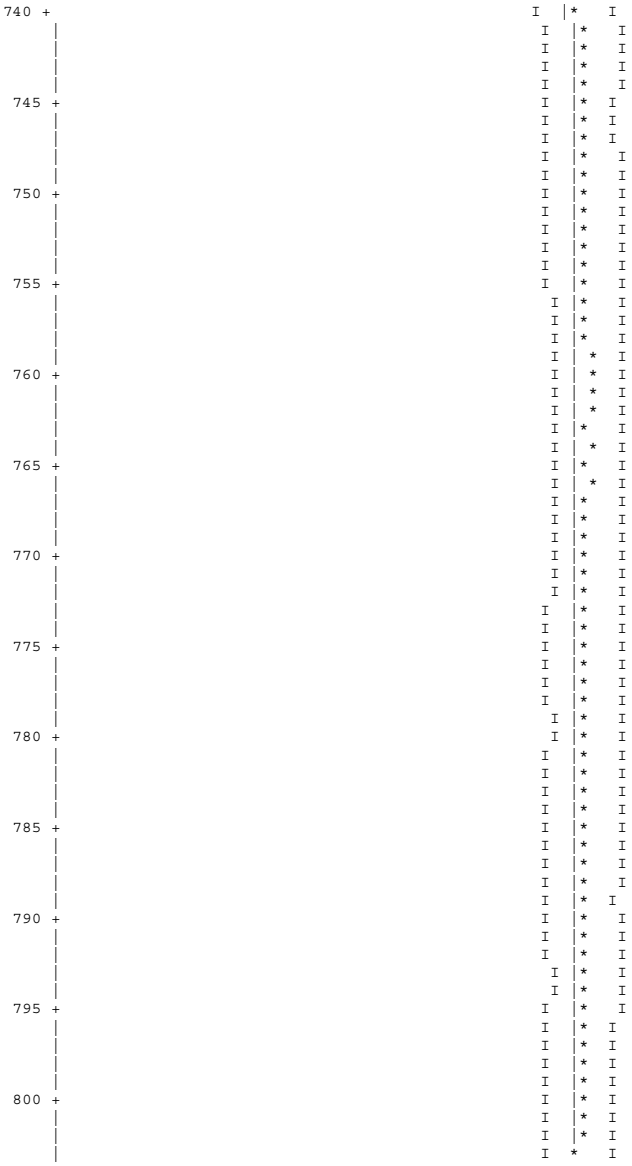

SKIPPING 3 GENERATIONS

GROUP	FISSION FRACTION	UNIT	REGION	FISSIONS	PERCENT DEVIATION	ABSORPTIONS	PERCENT DEVIATION	LEAKAGE	PERCENT DEVIATION
1	0.0003			2.76261E-04	3.3995	1.43894E-03	0.9898	0.00000E+00	0.0000
2	0.0014			1.33374E-03	1.0362	3.28433E-03	0.3305	0.00000E+00	0.0000
3	0.0018			1.64813E-03	0.8673	1.11443E-03	0.5432	0.00000E+00	0.0000
4	0.0010			9.43052E-04	1.1806	5.85020E-04	0.8038	0.00000E+00	0.0000
5	0.0014			1.30958E-03	0.9350	1.06813E-03	0.5493	0.00000E+00	0.0000
6	0.0019			1.76704E-03	0.6925	2.84069E-03	0.3908	0.00000E+00	0.0000
7	0.0019			1.78654E-03	0.7230	4.80578E-03	0.4113	0.00000E+00	0.0000
8	0.0020			1.85710E-03	1.0723	4.17631E-03	0.4801	0.00000E+00	0.0000
9	0.0028			2.60413E-03	1.1712	4.65358E-03	0.4959	0.00000E+00	0.0000
10	0.0059			5.50223E-03	1.1171	1.10633E-02	0.4949	0.00000E+00	0.0000
11	0.0131			1.21635E-02	0.9260	1.68813E-02	0.4983	0.00000E+00	0.0000
12	0.0178			1.65352E-02	0.8811	1.73134E-02	0.5908	0.00000E+00	0.0000
13	0.0170			1.57646E-02	0.8717	2.10273E-02	0.5340	0.00000E+00	0.0000
14	0.0146			1.35151E-02	0.9027	2.44601E-02	0.4544	0.00000E+00	0.0000
15	0.0029			2.67349E-03	1.8035	1.08525E-02	0.5227	0.00000E+00	0.0000
16	0.0019			1.74669E-03	2.6311	6.41294E-03	0.6061	0.00000E+00	0.0000
17	0.0032			2.93053E-03	2.3384	4.27639E-03	0.9743	0.00000E+00	0.0000
18	0.0041			3.80840E-03	2.4299	4.25856E-03	1.1451	0.00000E+00	0.0000
19	0.0051			4.75188E-03	2.0026	6.74256E-03	0.7563	0.00000E+00	0.0000
20	0.0209			1.93777E-02	0.9376	2.47722E-02	0.4593	0.00000E+00	0.0000
21	0.0119			1.10034E-02	1.3987	1.10177E-02	0.7502	0.00000E+00	0.0000
22	0.0286			2.65082E-02	0.8958	2.53200E-02	0.5355	0.00000E+00	0.0000
23	0.1058			9.80401E-02	0.4254	1.01658E-01	0.2336	0.00000E+00	0.0000
24	0.2177			2.01695E-01	0.2852	2.10402E-01	0.1515	0.00000E+00	0.0000
25	0.1894			1.75473E-01	0.3129	1.80973E-01	0.1588	0.00000E+00	0.0000
26	0.2376			2.20153E-01	0.2780	2.23276E-01	0.1535	0.00000E+00	0.0000
27	0.0877			8.12749E-02	0.4616	7.72601E-02	0.2863	0.00000E+00	0.0000
SYSTEM TOTAL =				9.26443E-01	0.1002	1.00194E+00	0.0216	0.00000E+00	0.0000

ELAPSED TIME 12.35367 MINUTES

RANDOM NUMBER= 653C16DB7132

```
                          FREQUENCY FOR GENERATIONS    4 TO  803
0.8243 TO 0.8292     *
0.8292 TO 0.8341
0.8341 TO 0.8390     *
0.8390 TO 0.8439     *
0.8439 TO 0.8487     *
0.8487 TO 0.8536
0.8536 TO 0.8585     **
0.8585 TO 0.8634     ****
0.8634 TO 0.8683     *
0.8683 TO 0.8732     *****
0.8732 TO 0.8781     ******
0.8781 TO 0.8830     ****************
0.8830 TO 0.8878     ****************
0.8878 TO 0.8927     ***********************
0.8927 TO 0.8976     ***************************
0.8976 TO 0.9025     ************************************
0.9025 TO 0.9074     ****************************************
0.9074 TO 0.9123     ************************************************************
0.9123 TO 0.9172     ************************************************
0.9172 TO 0.9220     ********************************************************
0.9220 TO 0.9269     ************************************************************
0.9269 TO 0.9318     ********************************************************************
0.9318 TO 0.9367     ************************************************************************
0.9367 TO 0.9416     ****************************************
0.9416 TO 0.9465     ************************************************************
0.9465 TO 0.9514     *******************************************
0.9514 TO 0.9563     *************************
0.9563 TO 0.9611     ******************
0.9611 TO 0.9660     ****************************
0.9660 TO 0.9709     ********************
0.9709 TO 0.9758     *********
0.9758 TO 0.9807     ***********
0.9807 TO 0.9856     ***
0.9856 TO 0.9905     *****
0.9905 TO 0.9954     ***
0.9954 TO 1.0002     *
1.0002 TO 1.0051     *
1.0051 TO 1.0100     *
```

FREQUENCY FOR GENERATIONS 204 TO 803

```
0.8243 TO 0.8292     *
0.8292 TO 0.8341
0.8341 TO 0.8390     *
0.8390 TO 0.8439     *
0.8439 TO 0.8487     *
0.8487 TO 0.8536
0.8536 TO 0.8585     **
0.8585 TO 0.8634     ***
0.8634 TO 0.8683     *
0.8683 TO 0.8732     ****
0.8732 TO 0.8781     *****
0.8781 TO 0.8830     **********
0.8830 TO 0.8878     ***********
0.8878 TO 0.8927     ******************
0.8927 TO 0.8976     **************
0.8976 TO 0.9025     ***************************
0.9025 TO 0.9074     ******************************
0.9074 TO 0.9123     ******************************************
0.9123 TO 0.9172     ************************************
0.9172 TO 0.9220     ****************************************
0.9220 TO 0.9269     ************************************************
0.9269 TO 0.9318     *********************************************
0.9318 TO 0.9367     ************************************************************
0.9367 TO 0.9416     ***********************************
0.9416 TO 0.9465     *******************************************
0.9465 TO 0.9514     *******************************
0.9514 TO 0.9563     ******************
0.9563 TO 0.9611     *************
0.9611 TO 0.9660     ***********************
0.9660 TO 0.9709     ******************
0.9709 TO 0.9758     ******
0.9758 TO 0.9807     *******
0.9807 TO 0.9856     *
0.9856 TO 0.9905     ***
0.9905 TO 0.9954     **
0.9954 TO 1.0002
1.0002 TO 1.0051     *
1.0051 TO 1.0100     *
```

FREQUENCY FOR GENERATIONS 404 TO 803

```
0.8243 TO 0.8292     *
0.8292 TO 0.8341
0.8341 TO 0.8390
0.8390 TO 0.8439     *
0.8439 TO 0.8487     *
0.8487 TO 0.8536
0.8536 TO 0.8585     **
0.8585 TO 0.8634     *
0.8634 TO 0.8683
0.8683 TO 0.8732     **
0.8732 TO 0.8781     ***
0.8781 TO 0.8830     *******
0.8830 TO 0.8878     ******
0.8878 TO 0.8927     ********
0.8927 TO 0.8976     **********
0.8976 TO 0.9025     ****************
0.9025 TO 0.9074     ******************
0.9074 TO 0.9123     ******************************
0.9123 TO 0.9172     ************************
0.9172 TO 0.9220     ********************
0.9220 TO 0.9269     ************************************
0.9269 TO 0.9318     ***********************************
0.9318 TO 0.9367     ************************************
0.9367 TO 0.9416     ***************************
0.9416 TO 0.9465     ************************
0.9465 TO 0.9514     ********************
0.9514 TO 0.9563     ***********
0.9563 TO 0.9611     ********
0.9611 TO 0.9660     ***************
0.9660 TO 0.9709     ************
0.9709 TO 0.9758     ****
0.9758 TO 0.9807     ******
0.9807 TO 0.9856     *
0.9856 TO 0.9905     ***
0.9905 TO 0.9954     **
0.9954 TO 1.0002
1.0002 TO 1.0051     *
1.0051 TO 1.0100     *
```

FREQUENCY FOR GENERATIONS 604 TO 803

```
0.8243 TO 0.8292
0.8292 TO 0.8341
0.8341 TO 0.8390
0.8390 TO 0.8439
0.8439 TO 0.8487
0.8487 TO 0.8536
0.8536 TO 0.8585     *
0.8585 TO 0.8634
0.8634 TO 0.8683
0.8683 TO 0.8732
0.8732 TO 0.8781     *
0.8781 TO 0.8830     ****
0.8830 TO 0.8878     ****
0.8878 TO 0.8927     *****
0.8927 TO 0.8976     *****
0.8976 TO 0.9025     **********
0.9025 TO 0.9074     *************
0.9074 TO 0.9123     *************
0.9123 TO 0.9172     *********
0.9172 TO 0.9220     **************
0.9220 TO 0.9269     ***************
0.9269 TO 0.9318     ********************
0.9318 TO 0.9367     ********************
0.9367 TO 0.9416     ***************
0.9416 TO 0.9465     **************
0.9465 TO 0.9514     **********
0.9514 TO 0.9563     *******
0.9563 TO 0.9611     ***
0.9611 TO 0.9660     *****
0.9660 TO 0.9709     ****
0.9709 TO 0.9758     *
0.9758 TO 0.9807     ***
0.9807 TO 0.9856     *
0.9856 TO 0.9905     *
0.9905 TO 0.9954
0.9954 TO 1.0002
1.0002 TO 1.0051     *
1.0051 TO 1.0100     *
```

Figure 6.6.7-2 HEU MTR Finite Cask Model (460 g ^{235}U)

```
PRIMARY MODULE ACCESS AND INPUT RECORD ( SCALE DRIVER - 95/03/29 - 09:06:37 )
   MODULE CSAS25   WILL BE CALLED
     LWT MTR INPUT FOR CASK MODEL - PLATES IN CLOSE & PLATES @ FULL PITCH
     'MIN BASKET PLATE - COMMENT CARD REFERS TO NOMINAL PLATE SIZE
     '23 PLATES - 20 GRAM 235U PER PLATE
     'FUEL SHIFT AXIAL ALTERNATING
     '56 CM ACTIVE FUEL HEIGHT
     'MODIIIED TO 1.23 CM PLATE THICKNESS / 2 CM OFFSET
     27GROUPNDF4  LATTICECELL
     URANIUM  1 DEN=19.05 0.03650 293 92235 94. 92238 6. END
     AL       1 DEN=2.702 0.25666 293 END
     AL    2 1.0    293.0 END
     H2O   3 1.0    293.0 END
     AL    4 1.0    293.0 END
     SS304 5 1.0    293.0 END
     PB    6 1.0    293.0 END
     H2O   7 1.E-20 293.0 END
     H2O   8 1.E-20 293.0 END
     END COMP
     SYMMSLABCELL 0.3915 0.083 1 3 0.123 2 END

     READ PARAM TBA=5 RUN=YES PLT=NO GEN=803 NPG=1000 END PARAM
     READ GEOM
     '
     ' FUEL PLATE CELL UNITS
     '
     UNIT 1
     COM='MIDDLE FUEL PLATE CELL'
     CUBOID 1 1 2P3.3000 2P0.0415 58.0 2.0
     CUBOID 2 1 2P3.3000 2P0.0615 60.0 0.0
     CUBOID 3 1 2P3.3000 2P0.1957 60.0 0.0
     UNIT 2
     COM='TOP FUEL PLATE CELL'
     CUBOID 1 1 2P3.3000 2P0.0415 58.0 2.0
     CUBOID 2 1 2P3.3000 2P0.0615 60.0 0.0
     CUBOID 3 1 2P3.3000 0.0615 -0.1957 60.0 0.0
     UNIT 3
     COM='BOTTOM FUEL PLATE CELL'
     CUBOID 1 1 2P3.3000 2P0.0415 58.0 2.0
     CUBOID 2 1 2P3.3000 2P0.0615 60.0 0.0
     CUBOID 3 1 2P3.3000 0.1957 -0.0615 60.0 0.0
     '
     UNIT 4
     COM='SIDE PLATE'
     CUBOID 2 1 2P0.2 2P3.75 60.0 0.0
     '
     ' PLATES AT BOTTOM OF BASKET OPENING
     '
     ' BASKET CENTER ROW ARRAY ELEMENTS
     '
     UNIT 10
     COM='FUEL PATE ARRAY - PLATES IN 5/16 IN. WEB CENTER'
     ARRAY  1 -3.3000 -4.3688 0.0
     CUBOID 3 1 2P4.3688 2P4.3688 73.152 0.0
     HOLE   4 -4.1687 0.0 0.0
     HOLE   4  4.1687 0.0 0.0
     REPLICATE 5 1 2R0.3556 4R0.0 1
     UNIT 11
     COM='FUEL ARRAY 20 PLATES IN 5/16 IN. WEB RIGHT'
     ARRAY  1 -3.9686 -4.3688 0.0
     CUBOID 3 1 2P4.3688 2P4.3688 73.152 0.0
     HOLE   4 -4.1687 0.0 0.0
     HOLE   4  4.1687 0.0 0.0
     REPLICATE 5 1 2R0.3556 4R0.0 1
     UNIT 12
     COM='FUEL ARRAY 20 PLATES IN 5/16 IN. WEB LEFT'
     ARRAY  1 -2.6314 -4.3688 0.0
     CUBOID 3 1 2P4.3688 2P4.3688 73.152 0.0
     HOLE   4 -4.1687 0.0 0.0
     HOLE   4  4.1687 0.0 0.0
     REPLICATE 5 1 2R0.3556 4R0.0 1
     '
     ' BASKET TOP ROW ARRAY ELEMENTS
     '
     UNIT 20
     COM='FUEL ARRAY WITH HALF OF 1/4 PLATE ON RIGHT -  TOP STACK'
     ARRAY  1 -2.6314 -4.3688 0.0
     CUBOID 3 1 2P4.3688 2P4.3688 73.152 0.0
     HOLE   4 -4.1687 0.0 0.0
     HOLE   4  4.1687 0.0 0.0
     REPLICATE 5 1 0.3048 5R0.0 1
     UNIT 21
     COM='FUEL WITH HALF OF 1/4 IN. PLATE ON LEFT  TOP STACK'
     ARRAY  1 -3.9686 -4.3688 0.0
     CUBOID 3 1 2P4.3688 2P4.3688 73.152 0.0
     HOLE   4 -4.1687 0.0 0.0
     HOLE   4  4.1687 0.0 0.0
     REPLICATE 5 1 0.0 0.3048 4R0.0 1
```

```
'
' BASKET BOTTOM ROW ARRAY ELEMENTS
'
UNIT 30
COM='FUEL ARRAY WITH HALF OF 1/4 IN. PLATE ON RIGHT -  BOTTOM STACK'
ARRAY  1 -2.6314 -4.3688 0.0
CUBOID 3 1 2P4.3688 2P4.3688 73.152 0.0
HOLE   4 -4.1687 0.0 0.0
HOLE   4  4.1687 0.0 0.0
REPLICATE 5 1 0.3048 5R0.0 1
UNIT 31
COM='FUEL ARRAY WITH HALF OF 1/4 IN. PLATE ON LEFT - BOTTOM STACK'
ARRAY  1 -3.9686 -4.3688 0.0
CUBOID 3 1 2P4.3688 2P4.3688 73.152 0.0
HOLE   4 -4.1687 0.0 0.0
HOLE   4  4.1687 0.0 0.0
REPLICATE 5 1 0.0 0.3048 4R0.0 1
'
' CONSTRUCTION BASKET ROWS
'
UNIT 40
COM='2 UNIT ARRAY WITH 1/4 IN. PLATE ON TOP AND SIDES'
ARRAY 2 -9.0428 -4.3688 0.0
REPLICATE 5 1 3R0.3048 0.0 2R0.0 1
UNIT 41
COM='3 UNIT ARRAY WITH REST OF 5/16 WEB'
ARRAY 3 -14.1738 -4.3688 0.0
REPLICATE 5 1 2R0.3556 2R0.7112 2R0.0 1
UNIT 42
COM='2 UNIT ARRAY WITH 1/4 IN. PLATE ON BOTTOM AND SIDES'
ARRAY 4 -9.0428 -4.3688 0.0
REPLICATE 5 1 2R0.3048 0.0 0.3048 2R0.0 1
'
' BASKET UNIT
'
UNIT 50
COM='7 MTR ELEMENTS IN THE LWT'
CYLINDER 3 1 17.0500 73.152 0.0
HOLE 40 0.0 +9.4489 0.0
HOLE 41 0.0  0.0    0.0
HOLE 42 0.0 -9.4489 0.0
CYLINDER 5 1 18.8913   73.152 -1.27
CYLINDER 6 1 33.4963   73.152 -1.27
CYLINDER 5 1 36.5443   73.152 -1.27
CYLINDER 7 1 49.2443   73.152 -1.27
CYLINDER 5 1 49.8539   73.152 -1.27
CUBOID   8 1 4P49.8539 73.152 -1.27
'
' PLATES AT TOP OF BASKET OPENING
'
' BASKET CENTER ROW ARRAY ELEMENTS
'
UNIT 110
COM='FUEL PATE ARRAY - PLATES IN 5/16 IN. WEB CENTER'
ARRAY  1 -3.3000 -4.3688 13.152
CUBOID 3 1 2P4.3688 2P4.3688 73.152 0.0
HOLE   4 -4.1687 0.0 13.152
HOLE   4  4.1687 0.0 13.152
REPLICATE 5 1 2R0.3556 4R0.0 1
UNIT 111
COM='FUEL ARRAY 20 PLATES IN 5/16 IN. WEB RIGHT'
ARRAY  1 -3.9686 -4.3688 13.152
CUBOID 3 1 2P4.3688 2P4.3688 73.152 0.0
HOLE   4 -4.1687 0.0 13.152
HOLE   4  4.1687 0.0 13.152
REPLICATE 5 1 2R0.3556 4R0.0 1
UNIT 112
COM='FUEL ARRAY 20 PLATES IN 5/16 IN. WEB LEFT'
ARRAY  1 -2.6314 -4.3688 13.152
CUBOID 3 1 2P4.3688 2P4.3688 73.152 0.0
HOLE   4 -4.1687 0.0 13.152
HOLE   4  4.1687 0.0 13.152
REPLICATE 5 1 2R0.3556 4R0.0 1
'
' BASKET TOP ROW ARRAY ELEMENTS
'
UNIT 120
COM='FUEL ARRAY WITH HALF OF 1/4 PLATE ON RIGHT -  TOP STACK'
ARRAY  1 -2.6314 -4.3688 13.152
CUBOID 3 1 2P4.3688 2P4.3688 73.152 0.0
HOLE   4 -4.1687 0.0 13.152
HOLE   4  4.1687 0.0 13.152
REPLICATE 5 1 0.3048 5R0.0 1
UNIT 121
COM='FUEL WITH HALF OF 1/4 IN. PLATE ON LEFT  TOP STACK'
ARRAY  1 -3.9686 -4.3688 13.152
CUBOID 3 1 2P4.3688 2P4.3688 73.152 0.0
HOLE   4 -4.1687 0.0 13.152
HOLE   4  4.1687 0.0 13.152
REPLICATE 5 1 0.0 0.3048 4R0.0 1
'
' BASKET BOTTOM ROW ARRAY ELEMENTS
'
UNIT 130
COM='FUEL ARRAY WITH HALF OF 1/4 IN. PLATE ON RIGHT -  BOTTOM STACK'
```

```
ARRAY  1 -2.6314 -4.3688 13.152
CUBOID 3 1 2P4.3688 2P4.3688 73.152 0.0
HOLE   4 -4.1687 0.0 13.152
HOLE   4  4.1687 0.0 13.152
REPLICATE 5 1 0.3048 5R0.0 1
UNIT 131
COM='FUEL ARRAY WITH HALF OF 1/4 IN. PLATE ON LEFT - BOTTOM STACK'
ARRAY  1 -3.9686 -4.3688 13.152
CUBOID 3 1 2P4.3688 2P4.3688 73.152 0.0
HOLE   4 -4.1687 0.0 13.152
HOLE   4  4.1687 0.0 13.152
REPLICATE 5 1 0.0 0.3048 4R0.0 1
'
' CONSTRUCTION BASKET ROWS
'
UNIT 140
COM='2 UNIT ARRAY WITH 1/4 IN. PLATE ON TOP AND SIDES'
ARRAY 12 -9.0428 -4.3688 0.0
REPLICATE 5 1 3R0.3048 0.0 2R0.0 1
UNIT 141
COM='3 UNIT ARRAY WITH REST OF 5/16 WEB'
ARRAY 13 -14.1738 -4.3688 0.0
REPLICATE 5 1 2R0.3556 2R0.7112 2R0.0 1
UNIT 142
COM='2 UNIT ARRAY WITH 1/4 IN. PLATE ON BOTTOM AND SIDES'
ARRAY 14 -9.0428 -4.3688 0.0
REPLICATE 5 1 2R0.3048 0.0 0.3048 2R0.0 1
'
' BASKET UNIT
'
UNIT 150
COM='7 MTR ELEMENTS IN THE LWT'
CYLINDER 3 1 17.0500 73.152 0.0
HOLE 140 0.0 +9.4489 0.0
HOLE 141 0.0  0.0    0.0
HOLE 142 0.0 -9.4489 0.0
CYLINDER 5 1 18.8913   73.152 -1.27
CYLINDER 6 1 33.4963   73.152 -1.27
CYLINDER 5 1 36.5443   73.152 -1.27
CYLINDER 7 1 49.2443   73.152 -1.27
CYLINDER 5 1 49.8539   73.152 -1.27
CUBOID   8 1 4P49.8539 73.152 -1.27
'
' CASK LID AND BOTTOM STRUCTURE
'
UNIT 60
COM='SIMPLIFIED LID STRUCTURE NAC-LWT'
CYLINDER 5 1 36.5188   13.6775 -14.1351
CYLINDER 8 1 49.8539   13.6775 -14.1351
CUBOID   8 1 4P49.8539 13.6775 -14.1351
UNIT 61
COM='SIMPLIFIED CASK BOTTOM STRUCTURE NAC-LWT'
CYLINDER 6 1 26.3525 2P3.81
CYLINDER 5 1 36.6188 +13.36 -12.7
CYLINDER 8 1 49.8539 +13.36 -12.7
CUBOID   8 1 4P49.8539 +13.36 -12.7
UNIT 62
COM='THIN TOP AND BOTTOM SHELL OF NEUTRON SHIELD - SUBTRACTED FROM LID MODEL'
CYLINDER 5 1 49.8539 0.61 0.0
CUBOID   8 1 4P49.8539 0.61 0.0
'
' STACK OF BASKETS WITH CASK LID AND BOTTOM
'
GLOBAL UNIT 70
COM='STACK OF 6 BASKETS IN CASK WITH LID AND BOTTOM'
ARRAY  10  -49.8539 -49.8539 0.0
END GEOM
READ ARRAY
'
' FUEL ELEMENT PLATE ARRAY
'
ARA=1 NUX=1 NUY=23 NUZ=1 FILL 3 21R1 2 END FILL
'
' ARRAYS OF BASKET OPENINGS (TOP, MIDDLE, BOTTOM)
' PLATES AT BOTTOM OF OPENING
'
ARA=2 NUX=2 NUY=1 NUZ=1 FILL 20 21 END FILL
ARA=3 NUX=3 NUY=1 NUZ=1 FILL 12 10 11 END FILL
ARA=4 NUX=2 NUY=1 NUZ=1 FILL 30 31 END FILL
'
' ARRAYS OF BASKET OPENINGS (TOP, MIDDLE, BOTTOM)
' PLATES AT TOP OF OPENING
'
ARA=12 NUX=2 NUY=1 NUZ=1 FILL 120 121 END FILL
ARA=13 NUX=3 NUY=1 NUZ=1 FILL 112 110 111 END FILL
ARA=14 NUX=2 NUY=1 NUZ=1 FILL 130 131 END FILL
'
' ARRAY OF BASKETS WITH LID AND BOTTOM
'
ARA=10 NUX=1 NUY=1 NUZ=10 FILL 61 62 150 50 150 50 150 50 62 60 END FILL
END ARRAY
READ BOUNDS ALL=MIR END BOUNDS
READ PLOT
TTL='X-Y PLOT OF CENTER ELEMENT - FUEL ELEVATION'
SCR=YES PIC=MAT LPI=10
```

```
  UAX=1.0 VDN=-1.0 NAX=1500
  XUL=-5.0 YUL=5.0 ZUL=50.0
  XLR=5.0 YLR=-5.0 ZLR=50.0 END
  TTL='X-Y PLOT OF BASKET - FUEL ELEVATION'
  UAX=1.0 VDN=-1.0 NAX=1500
  XUL=-17.0 YUL=17.0 ZUL=50.0
  XLR=17.0 YLR=-17.0 ZLR=50.0 END
  TTL='X-Y PLOT OF CASK - FUEL ELEVATION'
  UAX=1.0 VDN=-1.0 NAX=1500
  XUL=-65.0 YUL=65.0 ZUL=50.0
  XLR=65.0 YLR=-65.0 ZLR=50.0 END
  TTL='Y-Z (X=0) PLOT OF BOTTOM BASKET - CENTER SECTION'
  VAX=1.0 WDN=-1.0
  XUL=0.0 YUL=-5.0 ZUL=55.0
  XLR=0.0 YLR=5.0 ZLR=50.0 END
  TTL='Y-Z (X=0) PLOT OF BOTTOM BASKET - CENTER FUEL ELEMENT'
  VAX=1.0 WDN=-1.0
  XUL=0.0 YUL=-5.0 ZUL=101.1
  XLR=0.0 YLR=5.0 ZLR=26.6 END
  TTL='Y-Z (X=-2) PLOT OF BOTTOM BASKET'
  VAX=1.0 WDN=-1.0
  XUL=-2.0 YUL=-15.0 ZUL=101.1
  XLR=-2.0 YLR=15.0 ZLR=26.6 END
  TTL='Y-Z (X=-2) PLOT OF CASK - R=17.0'
  LPI=5 NAX=1000
  VAX=1.0 WDN=-1.0
  XUL=-2.0 YUL=-17.0 ZUL=502.0
  XLR=-2.0 YLR=17.0 ZLR=-1.0 END
  TTL='Y-Z (X=-2) PLOT OF CASK - R=51.0'
  VAX=1.0 WDN=-1.0
  XUL=-2.0 YUL=-51.0 ZUL=502.0
  XLR=-2.0 YLR=51.0 ZLR=-1.0 END
  END PLOT
  END DATA

SECONDARY MODULE O0O008   HAS BEEN CALLED.

MODULE O0O008   IS FINISHED. COMPLETION CODE     0. CPU TIME USED     0.55 (SECONDS).

SECONDARY MODULE O0O002   HAS BEEN CALLED.

MODULE O0O002   IS FINISHED. COMPLETION CODE     0. CPU TIME USED     3.29 (SECONDS).

SECONDARY MODULE O0O009   HAS BEEN CALLED.

MODULE O0O009   IS FINISHED. COMPLETION CODE     0. CPU TIME USED   745.01 (SECONDS).

MODULE CSAS25   IS FINISHED. COMPLETION CODE     0. CPU TIME USED   751.44 (SECONDS).
```

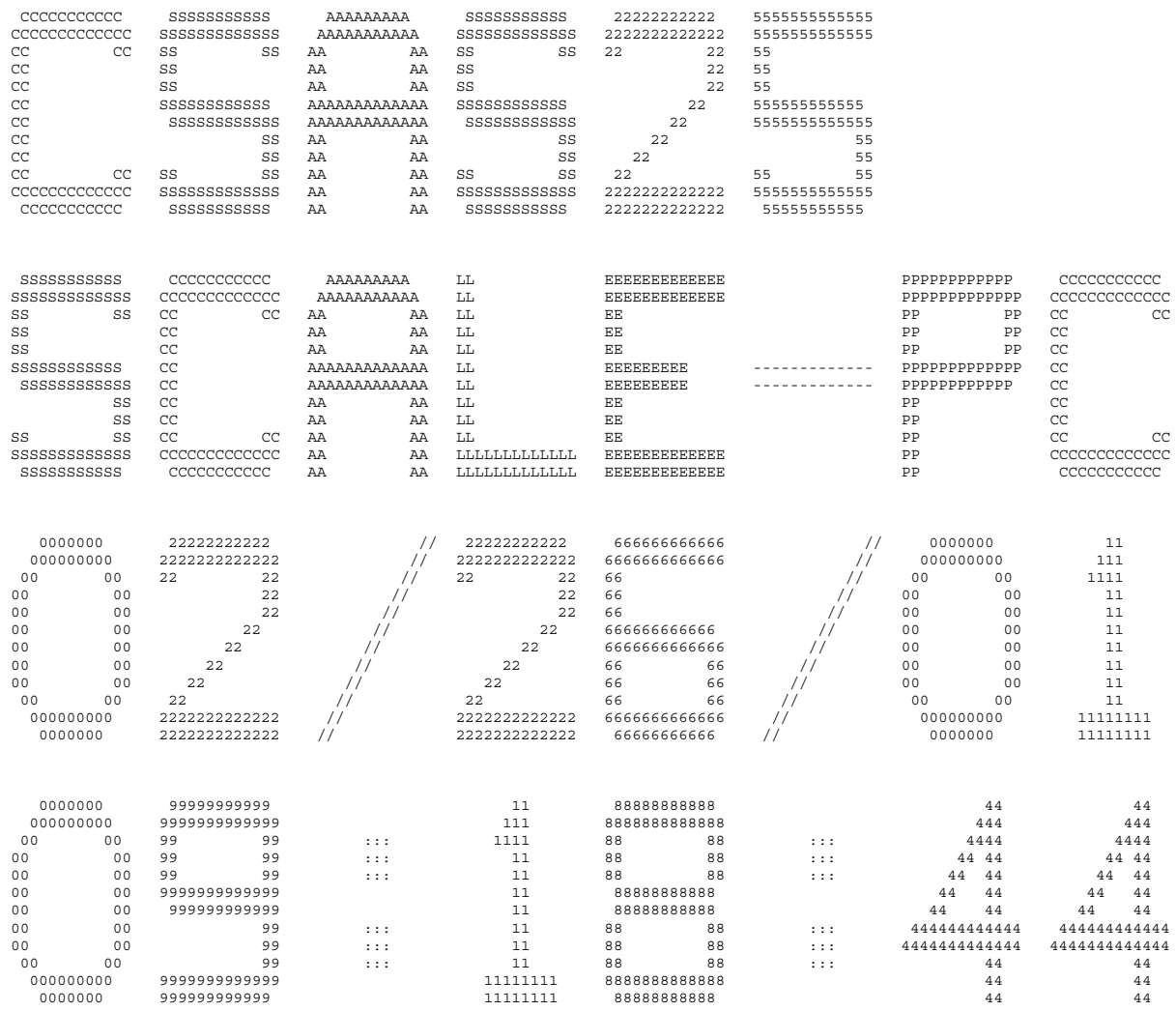

```
  SSSSSSSSSS     CCCCCCCCCC      AAAAAAAA     LL             EEEEEEEEEEEE                 PPPPPPPPPPP     CCCCCCCCCC
 SSSSSSSSSSSS   CCCCCCCCCCCC    AAAAAAAAAA    LL             EEEEEEEEEEEE                 PPPPPPPPPPPP   CCCCCCCCCCCC
 SS          SS CC          CC  AA          AA  LL             EE                           PP          PP  CC          CC
 SS             CC              AA          AA  LL             EE                           PP          PP  CC
 SS             CC              AA          AA  LL             EE                           PP          PP  CC
 SSSSSSSSSSSS   CC              AAAAAAAAAAAAAA  LL             EEEEEEEEE       -------------PPPPPPPPPPPP  CC
  SSSSSSSSSSSS  CC              AAAAAAAAAAAAAA  LL             EEEEEEEEE       -------------PPPPPPPPPPP   CC
           SS   CC              AA          AA  LL             EE                           PP              CC
           SS   CC              AA          AA  LL             EE                           PP              CC
 SS        SS   CC          CC  AA          AA  LL             EE                           PP              CC          CC
 SSSSSSSSSSSS   CCCCCCCCCCCC    AA          AA  LLLLLLLLLLLL   EEEEEEEEEEEE                 PP              CCCCCCCCCCCC
  SSSSSSSSSS     CCCCCCCCCC     AA          AA  LLLLLLLLLLLL   EEEEEEEEEEEE                 PP               CCCCCCCCCC
```

```
*******************************************************************************
*******************************************************************************
*******************************************************************************
*****                                                                     *****
*****                  PROGRAM VERIFICATION INFORMATION                   *****
*****                                                                     *****
*****                CODE SYSTEM:  SCALE-PC VERSION:  4.3                 *****
*****                                                                     *****
*******************************************************************************
*******************************************************************************
*****                                                                     *****
*****                                                                     *****
*****              PROGRAM:  CSAS                                         *****
*****                                                                     *****
*****        CREATION DATE:  03/08/96                                     *****
*****                                                                     *****
*****              VOLUME:   ENG                                          *****
*****                                                                     *****
*****              LIBRARY:  G:\SCALE43\WIN_NT\EXE                        *****
*****                                                                     *****
*****                                                                     *****
*****    THIS IS NOT A SCALE-PC CONFIGURATION CONTROLLED CODE             *****
*****                                                                     *****
*****              JOBNAME:  SCALE-PC                                     *****
*****                                                                     *****
*****    DATE OF EXECUTION:  02/26/01                                     *****
*****                                                                     *****
*****    TIME OF EXECUTION:  09:18:44                                     *****
*****                                                                     *****
*****                                                                     *****
*******************************************************************************
*******************************************************************************
*******************************************************************************
```

```
'MIN BASKET PLATE - COMMENT CARD REFERS TO NOMINAL PLATE SIZE

'23 PLATES - 20 GRAM 235U PER PLATE

'FUEL SHIFT AXIAL ALTERNATING

'56 CM ACTIVE FUEL HEIGHT

'MODIIIED TO 1.23 CM PLATE THICKNESS / 2 CM OFFSET

'MIN BASKET PLATE - COMMENT CARD REFERS TO NOMINAL PLATE SIZE

'23 PLATES - 20 GRAM 235U PER PLATE

'FUEL SHIFT AXIAL ALTERNATING

'56 CM ACTIVE FUEL HEIGHT

'MODIIIED TO 1.23 CM PLATE THICKNESS / 2 CM OFFSET
    LWT MTR INPUT FOR CASK MODEL - PLATES IN CLOSE & PLATES @ FULL PITCH


    **** PROBLEM PARAMETERS ****

    LIB 27GROUPNDF4  LIBRARY
    MXX            8 MIXTURES
    MSC            9 COMPOSITION SPECIFICATIONS
    IZM            3 MATERIAL ZONES
    GE  LATTICECELL  GEOMETRY
    MORE           0 0/1 DO NOT READ/READ OPTIONAL PARAMETER DATA
    MSLN           0 FUEL SOLUTIONS


    **** PROBLEM COMPOSITION DESCRIPTION ****

    SC  URANIUM      STANDARD COMPOSITION
    MX             1 MIXTURE NO.
    VF        0.0365 VOLUME FRACTION
    ROTH     19.0500 SPECIFIED DENSITY
    NEL            1 NO. ELEMENTS
    ICP            1 0/1 MIXTURE/COMPOUND
    TEMP       293.0 DEG KELVIN
               92000      1.00 ATOM/MOLECULE
                             92235    94.000 WT%
                             92238     6.000 WT%
    END

    SC  AL           STANDARD COMPOSITION
    MX             1 MIXTURE NO.
    VF        0.2567 VOLUME FRACTION
    ROTH      2.7020 SPECIFIED DENSITY
    NEL            1 NO. ELEMENTS
    ICP            1 0/1 MIXTURE/COMPOUND
    TEMP       293.0 DEG KELVIN
               13027      1.00 ATOM/MOLECULE
    END

    SC  AL           STANDARD COMPOSITION
    MX             2 MIXTURE NO.
    VF        1.0000 VOLUME FRACTION
    ROTH      2.7020 THEORETICAL DENSITY
    NEL            1 NO. ELEMENTS
    ICP            1 0/1 MIXTURE/COMPOUND
    TEMP       293.0 DEG KELVIN
               13027      1.00 ATOM/MOLECULE
    END

    SC  H2O          STANDARD COMPOSITION
    MX             3 MIXTURE NO.
    VF        1.0000 VOLUME FRACTION
    ROTH      0.9982 THEORETICAL DENSITY
    NEL            2 NO. ELEMENTS
    ICP            1 0/1 MIXTURE/COMPOUND
    TEMP       293.0 DEG KELVIN
                1001      2.00 ATOMS/MOLECULE
                8016      1.00 ATOM/MOLECULE
    END

    SC  AL           STANDARD COMPOSITION
    MX             4 MIXTURE NO.
    VF        1.0000 VOLUME FRACTION
    ROTH      2.7020 THEORETICAL DENSITY
    NEL            1 NO. ELEMENTS
    ICP            1 0/1 MIXTURE/COMPOUND
    TEMP       293.0 DEG KELVIN
               13027      1.00 ATOM/MOLECULE
    END

    SC  SS304        STANDARD COMPOSITION
    MX             5 MIXTURE NO.
    VF        1.0000 VOLUME FRACTION
    ROTH      7.9200 THEORETICAL DENSITY
    NEL            4 NO. ELEMENTS
    ICP            0 0/1 MIXTURE/COMPOUND
```

```
TEMP       293.0 DEG KELVIN
           24304    19.000 WT%
           25055     2.000 WT%
           26304    69.500 WT%
           28304     9.500 WT%
END

SC  PB           STANDARD COMPOSITION
MX             6 MIXTURE NO.
VF        1.0000 VOLUME FRACTION
ROTH     11.3440 THEORETICAL DENSITY
NEL            1 NO. ELEMENTS
ICP            1 0/1 MIXTURE/COMPOUND
TEMP       293.0 DEG KELVIN
           82000      1.00 ATOM/MOLECULE
END

SC  H2O          STANDARD COMPOSITION
MX             7 MIXTURE NO.
VF        0.0000 VOLUME FRACTION
ROTH      0.9982 THEORETICAL DENSITY
NEL            2 NO. ELEMENTS
ICP            1 0/1 MIXTURE/COMPOUND
TEMP       293.0 DEG KELVIN
            1001      2.00 ATOMS/MOLECULE
            8016      1.00 ATOM/MOLECULE
END

SC  H2O          STANDARD COMPOSITION
MX             8 MIXTURE NO.
VF        0.0000 VOLUME FRACTION
ROTH      0.9982 THEORETICAL DENSITY
NEL            2 NO. ELEMENTS
ICP            1 0/1 MIXTURE/COMPOUND
TEMP       293.0 DEG KELVIN
            1001      2.00 ATOMS/MOLECULE
            8016      1.00 ATOM/MOLECULE
END


**** PROBLEM GEOMETRY ****

CTP SYMMSLABCELL CELL TYPE
PITCH     0.3915 CM CENTER TO CENTER SPACING
FUELOD    0.0830 CM FUEL DIAMETER OR SLAB THICKNESS
MFUEL          1 MIXTURE NO. OF FUEL
MMOD           3 MIXTURE NO. OF MODERATOR
CLADOD    0.1230 CM CLAD OUTER DIAMETER
MCLAD          2 MIXTURE NO. OF CLAD


ZONE SPECIFICATIONS FOR LATTICECELL GEOMETRY

               ZONE  1 IS FUEL
               ZONE  2 IS CLAD
               ZONE  3 IS MOD
```

```
*****************************************************************************************************************
***                                                                                                           ***
***                            LWT MTR INPUT FOR CASK MODEL - PLATES IN CLOSE & PLATES @ FULL PITCH            ***
***                                                                                                           ***
*****************************************************************************************************************
*****************************************************************************************************************
***                                                                                                           ***
***                               ********** DATA LIBRARY INFORMATION **********                             ***
***                                                                                                           ***
***          UNIT                                                VOLUME                                       ***
***         NUMBER               DATA SET NAME                   NAME        UNIT FUNCTION                    ***
***         ------               -------------                   ----        -------------                    ***
***                                                                                                           ***
***           89     G:\scale43\DATALIB\FT89F001                              STANDARD COMPOSITION LIBRARY     ***
***                                                                                                           ***
***           82     G:\scale43\DATALIB\FT82F001                              CROSS SECTION LIBRARY            ***
***                                                                                                           ***
***           11     I:\PROJECTS\sts-proj\mtr\141000~1.2\HIGH-U~1             SHORT CROSS SECTION LIBRARY      ***
***                                                                                                           ***
***           90     I:\PROJECTS\sts-proj\mtr\141000~1.2\HIGH-U~1             INPUT DATA DIRECT ACCESS         ***
***                                                                                                           ***
*****************************************************************************************************************
*****************************************************************************************************************
***                                                                                                           ***
***                                                                                                           ***
***                                    STANDARD COMPOSITION LIBRARY DATA                                      ***
***                                    ---------------------------------                                      ***
***                                                                                                           ***
***            UNIT NUMBER  :  89                                                                             ***
***                                                                                                           ***
***            DATASET NAME :  G:\scale43\DATALIB\FT89F001                                                    ***
***                                                                                                           ***
***            LIBRARY TITLE:  SCALE-4 STANDARD COMPOSITION LIBRARY                                           ***
***                            637 STANDARD COMPOSITIONS, 490 NUCLIDES                                        ***
***                            90 ELEMENTS WITH VARIABLE ISOTOPIC DISTRBUTIONS.                               ***
***                                                                                                           ***
***            CREATION DATE:   6/30/95                                                                       ***
***                                                                                                           ***
***                                                                                                           ***
***                                                                                                           ***
***                                      CROSS SECTION LIBRARY DATA                                           ***
***                                     ---------------------------                                           ***
***                                                                                                           ***
***            UNIT NUMBER  :  82                                                                             ***
***                                                                                                           ***
***            DATASET NAME :  G:\scale43\DATALIB\FT82F001                                                    ***
***                                                                                                           ***
***            LIBRARY TITLE:  SCALE 4.2 - 27 GROUP NEUTRON GROUP LIBRARY                                     ***
***                               BASED ON ENDF-B VERSION 4 DATA                                              ***
***                                  COMPILED FOR NRC     1/27/89                                             ***
***                                     LAST UPDATED                                          08/12/94       ***
***                                        L.M.PETRIE   -   ORNL                                              ***
***                                                                                                           ***
***                                                                                                           ***
***                                                                                                           ***
***                                                                                                           ***
*****************************************************************************************************************
*****************************************************************************************************************

                        ........    0 IO'S WERE USED BEFORE READING KENO V DATA    ........

                        ........    0 IO'S WERE USED READING THE KENO V PARAMETER DATA    ........

'

 CONTROL MODULE CSAS25   IS COMPLETE.
```

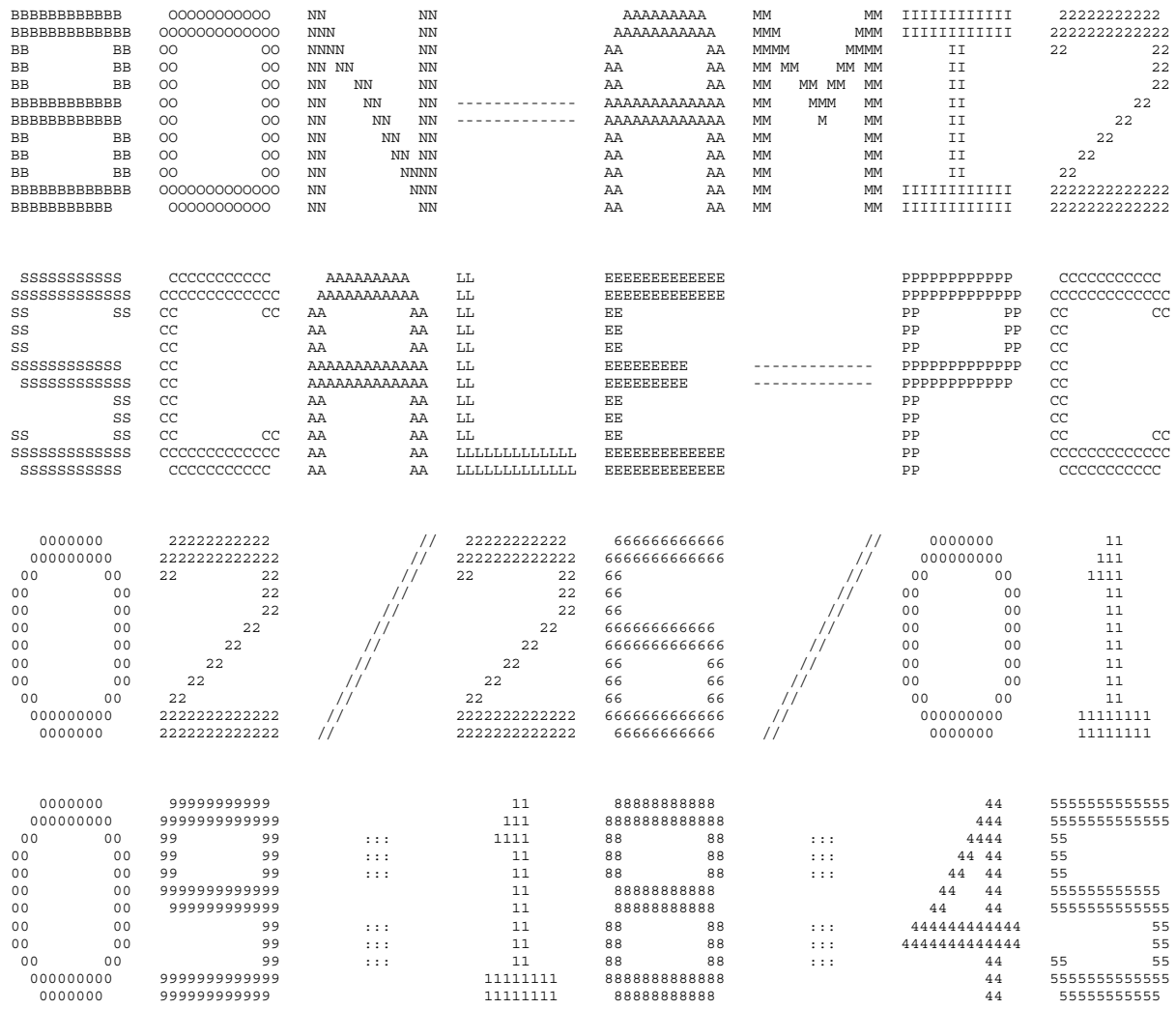
BBBBBBBBBBB OOOOOOOOOO NN NN AAAAAAAAA MM MM IIIIIIIIIII 22222222222
BBBBBBBBBBBB OOOOOOOOOOO NNN NN AAAAAAAAAA MMM MMM IIIIIIIIIII 2222222222222
BB BB OO OO NNNN NN AA AA MMMM MMMM II 22 22
BB BB OO OO NN NN NN AA AA MM MM MM MM II 22
BB BB OO OO NN NN NN AA AA MM MM MM MM II 22
BBBBBBBBBBB OO OO NN NN NN AAAAAAAAAAAAA MM MMM MM II 22
BBBBBBBBBBB OO OO NN NN NN AAAAAAAAAAAAA MM M MM II 22
BB BB OO OO NN NN NN AA AA MM MM II 22
BB BB OO OO NN NN NN AA AA MM MM II 22
BB BB OO OO NN NNNN AA AA MM MM II 22
BBBBBBBBBBBB OOOOOOOOOOOO NN NNN AA AA MM MM IIIIIIIIIII 2222222222222
BBBBBBBBBB OOOOOOOOOO NN NN AA AA MM MM IIIIIIIIIII 2222222222222
SSSSSSSSSS CCCCCCCCCC AAAAAAAAA LL EEEEEEEEEEEE PPPPPPPPPPP CCCCCCCCCC
SSSSSSSSSSSS CCCCCCCCCCCC AAAAAAAAAAA LL EEEEEEEEEEEE PPPPPPPPPPPP CCCCCCCCCCCC
SS SS CC CC AA AA LL EE PP PP CC CC
SS CC AA AA LL EE PP PP CC
SS CC AA AA LL EE PP PP CC
SSSSSSSSSSSS CC AAAAAAAAAAAAA LL EEEEEEEEE ------------ PPPPPPPPPPPP CC
SSSSSSSSSSS CC AAAAAAAAAAAAA LL EEEEEEEEE ------------ PPPPPPPPPPP CC
SS CC AA AA LL EE PP CC
SS CC AA AA LL EE PP CC
SS SS CC CC AA AA LL EE PP CC CC
SSSSSSSSSSSS CCCCCCCCCCCCC AA AA LLLLLLLLLLLL EEEEEEEEEEEE PP CCCCCCCCCCCCC
SSSSSSSSSS CCCCCCCCCC AA AA LLLLLLLLLLLL EEEEEEEEEEEE PP CCCCCCCCCC
0000000 22222222222 // 22222222222 666666666666 // 0000000 11
000000000 2222222222222 // 2222222222222 6666666666666 // 000000000 111
00 00 22 22 // 22 22 66 // 00 00 1111
00 00 22 // 22 66 // 00 00 11
00 00 22 // 22 66 // 00 00 11
00 00 22 // 22 666666666666 // 00 00 11
00 00 22 // 22 6666666666666 // 00 00 11
00 00 22 // 22 66 66 // 00 00 11
00 00 22 // 22 66 66 // 00 00 11
00 00 22 // 22 66 66 // 00 00 11
000000000 2222222222222 // 2222222222222 6666666666666 // 000000000 11111111
0000000 2222222222222 // 2222222222222 66666666666 // 0000000 11111111
0000000 99999999999 11 88888888888 44 5555555555555
000000000 9999999999999 111 8888888888888 444 5555555555555
00 00 99 99 ::: 1111 88 88 ::: 4444 55
00 00 99 99 ::: 11 88 88 ::: 44 44 55
00 00 99 99 ::: 11 88 88 ::: 44 44 55
00 00 9999999999999 11 88888888888 44 44 555555555555
00 00 999999999999 11 88888888888 44 44 5555555555555
00 00 99 ::: 11 88 88 ::: 444444444444 55
00 00 99 ::: 11 88 88 ::: 4444444444444 55
00 00 99 ::: 11 88 88 ::: 44 55 55
000000000 9999999999999 11111111 8888888888888 44 5555555555555
0000000 999999999999 11111111 88888888888 44 55555555555

```
  SSSSSSSSSS     CCCCCCCCCC      AAAAAAAA     LL             EEEEEEEEEEEE                 PPPPPPPPPPP     CCCCCCCCCC
 SSSSSSSSSSSS   CCCCCCCCCCCC    AAAAAAAAAA    LL             EEEEEEEEEEEE                 PPPPPPPPPPPP   CCCCCCCCCCCC
 SS          SS CC          CC  AA          AA  LL             EE                           PP          PP  CC          CC
 SS             CC              AA          AA  LL             EE                           PP          PP  CC
 SS             CC              AA          AA  LL             EE                           PP          PP  CC
 SSSSSSSSSSSS   CC              AAAAAAAAAAAAAA  LL             EEEEEEEEE       -------------PPPPPPPPPPPP  CC
  SSSSSSSSSSSS  CC              AAAAAAAAAAAAAA  LL             EEEEEEEEE       -------------PPPPPPPPPPP   CC
           SS   CC              AA          AA  LL             EE                           PP              CC
           SS   CC              AA          AA  LL             EE                           PP              CC
 SS        SS   CC          CC  AA          AA  LL             EE                           PP              CC          CC
 SSSSSSSSSSSS   CCCCCCCCCCCC    AA          AA  LLLLLLLLLLLL   EEEEEEEEEEEE                 PP              CCCCCCCCCCCC
  SSSSSSSSSS     CCCCCCCCCC     AA          AA  LLLLLLLLLLLL   EEEEEEEEEEEE                 PP               CCCCCCCCCC
```

```
*******************************************************************************
*******************************************************************************
*******************************************************************************
*****                                                                     *****
*****                  PROGRAM VERIFICATION INFORMATION                   *****
*****                                                                     *****
*****                CODE SYSTEM:  SCALE-PC VERSION:  4.3                 *****
*****                                                                     *****
*******************************************************************************
*******************************************************************************
*****                                                                     *****
*****                                                                     *****
*****              PROGRAM:  O0O008                                       *****
*****                                                                     *****
*****        CREATION DATE:  09/15/95                                     *****
*****                                                                     *****
*****              VOLUME:   ENG                                          *****
*****                                                                     *****
*****              LIBRARY:  G:\SCALE43\WIN_NT\EXE                        *****
*****                                                                     *****
*****                                                                     *****
*****    THIS IS NOT A SCALE-PC CONFIGURATION CONTROLLED CODE             *****
*****                                                                     *****
*****              JOBNAME:  SCALE-PC                                     *****
*****                                                                     *****
*****    DATE OF EXECUTION:  02/26/01                                     *****
*****                                                                     *****
*****    TIME OF EXECUTION:  09:18:45                                     *****
*****                                                                     *****
*****                                                                     *****
*******************************************************************************
*******************************************************************************
*******************************************************************************
```

```
-1Q ARRAY HAS      1 ENTRIES.

 0Q ARRAY HAS      4 ENTRIES.

 1Q ARRAY HAS      6 ENTRIES.

 2Q ARRAY HAS      2 ENTRIES.
```

```
LOGICAL ASSIGNMENTS

MASTER LIBRARY   11
WORKING LIBRARY   0
SCRATCH FILE     18
NEW LIBRARY       1

P R O B L E M   D E S C R I P T I O N

IGR--GEOMETRY (0/1/2/3--INF MED/SLAB/CYL/SPHERE               1

IZM--NUMBER OF ZONES OR MATERIAL REGIONS                      8

MS--MIXING TABLE LENGTH                                      16

IBL--SHIELDED CROSS SECTION EDIT OPTION (0/1--NO/YES)         0

IBR--BONDARENKO FACTOR EDIT OPTION (0/1--NO/YES)              0

ISSOPT--DANCOFF FACTOR OPTION                                 0

CONVERGENCE CRITERION    1.00000E-03

GEOMETRY CORRECTION FACTOR FOR WIGNER RATIONAL APPROXIMATION  1.000E+00

        3Q ARRAY HAS     16 ENTRIES.

        4Q ARRAY HAS     16 ENTRIES.

        5Q ARRAY HAS     16 ENTRIES.

        6Q ARRAY HAS      8 ENTRIES.

        7Q ARRAY HAS      8 ENTRIES.

        8Q ARRAY HAS      8 ENTRIES.

        9Q ARRAY HAS      8 ENTRIES.

       10Q ARRAY HAS     16 ENTRIES.

       11Q ARRAY HAS      8 ENTRIES.

M I X I N G   T A B L E

ENTRY   MIXTURE   ISOTOPE   NUMBER DENSITY   NEW IDENTIFIER
   1       1        92235     1.67462E-03          1092235
   2       1        92238     1.05541E-04          1092238
   3       1        13027     1.54783E-02          1013027
   4       2        13027     6.03066E-02          2013027
   5       4        13027     6.03066E-02          4013027
   6       3         1001     6.67692E-02          3001001
   7       7         1001     6.67692E-22          7001001
   8       8         1001     6.67692E-22          8001001
   9       3         8016     3.33846E-02          3008016
  10       7         8016     3.33846E-22          7008016
  11       8         8016     3.33846E-22          8008016
  12       5        24304     1.74286E-02          5024304
  13       5        25055     1.73633E-03          5025055
  14       5        26304     5.93579E-02          5026304
  15       5        28304     7.72070E-03          5028304
  16       6        82000     3.29690E-02          6082000

GEOMETRY AND MATERIAL DESCRIPTION

ZONE   MIXTURE   OUTER DIMENSION   TEMPERATURE       EXTRA XS   TYPE (0/1--FUEL/MOD)
   1      1          4.15000E-02    2.93000E+02    2.35465E+00             0
   2      2          6.15000E-02    2.93000E+02    0.00000E+00             0
   3      3          1.95750E-01    2.93000E+02    0.00000E+00             0
   4      4          5.19575E+00    2.93000E+02    0.00000E+00             0
   5      5          1.01958E+01    2.93000E+02    0.00000E+00             0
   6      6          1.51958E+01    2.93000E+02    0.00000E+00             0
   7      7          2.01958E+01    2.93000E+02    0.00000E+00             0
   8      8          2.51958E+01    2.93000E+02    0.00000E+00             0
     3609 LOCATIONS OF   100000 AVAILABLE ARE REQUIRED TO MAKE A NEW MASTER CONTAINING THE SELF-SHIELDED VALUES

NO NUCLIDES IN YOUR PROBLEM HAVE BONDARENKO FACTOR DATA**BONAMI WILL COPY FROM LOGICAL 11 TO LOGICAL  1

COPY      1001   HYDROGEN        FROM LOG 11 TO LOG 18    BONDARENKO TRIGGER 0

COPY      1001   HYDROGEN        FROM LOG 18 TO LOG  1    BONDARENKO TRIGGER 0

COPY      1001   HYDROGEN        FROM LOG 18 TO LOG  1    BONDARENKO TRIGGER 0

COPY      1001   HYDROGEN        FROM LOG 18 TO LOG  1    BONDARENKO TRIGGER 0

COPY      8016   OXYGEN-16       FROM LOG 11 TO LOG 18    BONDARENKO TRIGGER 0

COPY      8016   OXYGEN-16       FROM LOG 18 TO LOG  1    BONDARENKO TRIGGER 0

COPY      8016   OXYGEN-16       FROM LOG 18 TO LOG  1    BONDARENKO TRIGGER 0

COPY      8016   OXYGEN-16       FROM LOG 18 TO LOG  1    BONDARENKO TRIGGER 0

COPY     13027  AL-27 1193 218 G FROM LOG 11 TO LOG 18    BONDARENKO TRIGGER 0
```

```
COPY     13027  AL-27 1193 218 G FROM LOG 18 TO LOG  1    BONDARENKO TRIGGER 0
COPY     13027  AL-27 1193 218 G FROM LOG 18 TO LOG  1    BONDARENKO TRIGGER 0
COPY     13027  AL-27 1193 218 G FROM LOG 18 TO LOG  1    BONDARENKO TRIGGER 0
COPY     24304  CR 1191 WT SS-30 FROM LOG 11 TO LOG  1    BONDARENKO TRIGGER 0
COPY     25055   MANGANESE-55    FROM LOG 11 TO LOG  1    BONDARENKO TRIGGER 0
COPY     26304  FE 1192 WT SS-30 FROM LOG 11 TO LOG  1    BONDARENKO TRIGGER 0
COPY     28304  NI 1190 WT SS-30 FROM LOG 11 TO LOG  1    BONDARENKO TRIGGER 0
COPY     82000  PB   1288 218NGP FROM LOG 11 TO LOG  1    BONDARENKO TRIGGER 0
COPY     92235   URANIUM-235     FROM LOG 11 TO LOG  1    BONDARENKO TRIGGER 0
COPY     92238   URANIUM-238     FROM LOG 11 TO LOG  1    BONDARENKO TRIGGER 0
```

```
SCALE 4.2 - 27 GROUP NEUTRON GROUP LIBRARY
   BASED ON ENDF-B VERSION 4 DATA
      COMPILED FOR NRC     1/27/89
         LAST UPDATED                                                08/12/94
            L.M.PETRIE   -   ORNL
    TAPE ID                          4321          NUMBER OF NUCLIDES                    16
    NUMBER OF NEUTRON GROUPS           27          NUMBER OF GAMMA GROUPS                 0
    FIRST THERMAL GROUP                15          LOGICAL UNIT                           1
                              TABLE OF CONTENTS
   HYDROGEN       ENDF/B-IV MAT 1269/THRM1002          UPDATED 08/12/94        ID   3001001
   HYDROGEN       ENDF/B-IV MAT 1269/THRM1002          UPDATED 08/12/94        ID   7001001
   HYDROGEN       ENDF/B-IV MAT 1269/THRM1002          UPDATED 08/12/94        ID   8001001
   OXYGEN-16      ENDF/B-IV MAT 1276                   UPDATED 08/12/94        ID   3008016
   OXYGEN-16      ENDF/B-IV MAT 1276                   UPDATED 08/12/94        ID   7008016
   OXYGEN-16      ENDF/B-IV MAT 1276                   UPDATED 08/12/94        ID   8008016
  AL-27 1193 218 GP 040375(5)                         UPDATED 08/12/94        ID   1013027
  AL-27 1193 218 GP 040375(5)                         UPDATED 08/12/94        ID   2013027
  AL-27 1193 218 GP 040375(5)                         UPDATED 08/12/94        ID   4013027
  CR 1191 WT SS-304(1/EST) P-3 293K SP=5+4(42375)'    UPDATED 08/12/94        ID   5024304
   MANGANESE-55   ENDF/B-IV MAT 1197                  UPDATED 08/12/94        ID   5025055
  FE 1192 WT SS-304(1/EST) P-3 293K SP=5+4(42375)'    UPDATED 08/12/94        ID   5026304
  NI 1190 WT SS-304(1/EST) P-3 293K SP=5+4(42375)'    UPDATED 08/12/94        ID   5028304
  PB   1288 218NGP 042375 P-3 293K                    UPDATED 08/12/94        ID   6082000
   URANIUM-235    ENDF/B-IV MAT 1261                   UPDATED 08/12/94        ID   1092235
   URANIUM-238    ENDF/B-IV MAT 1262                   UPDATED 08/12/94        ID   1092238

    TAPE COPY USED      0 I/O'S, AND TOOK    0.11 SECONDS
```

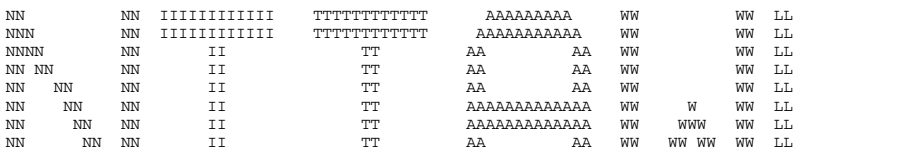
NN NN IIIIIIIIIIII TTTTTTTTTTTT AAAAAAAAA WW WW LL
NNN NN IIIIIIIIIIII TTTTTTTTTTTT AAAAAAAAAAA WW WW LL
NNNN NN II TT AA AA WW WW LL
NN NN NN II TT AA AA WW WW LL
NN NN NN II TT AA AA WW WW LL
NN NN NN II TT AAAAAAAAAAAAA WW W WW LL
NN NN NN II TT AAAAAAAAAAAAA WW WWW WW LL
NN NN NN II TT AA AA WW WW WW WW LL
NN NN NN II TT AA AA WW WW WW LL
NN NNNN II TT AA AA WWWW WWWW LL
NN NNN IIIIIIIIIIII TT AA AA WWW WWW LLLLLLLLLLLL
NN NN IIIIIIIIIIII TT AA AA WW WW LLLLLLLLLLLL

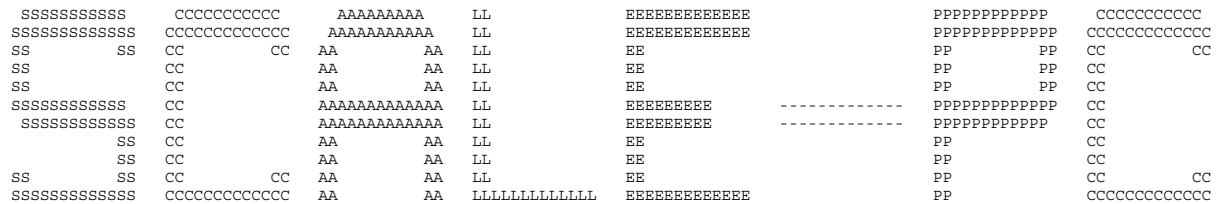
SSSSSSSSSS CCCCCCCCCC AAAAAAAAA LL EEEEEEEEEEEE PPPPPPPPPPP CCCCCCCCCC
SSSSSSSSSSSS CCCCCCCCCCCC AAAAAAAAAAA LL EEEEEEEEEEEE PPPPPPPPPPPP CCCCCCCCCCCC
SS SS CC CC AA AA LL EE PP PP CC CC
SS CC AA AA LL EE PP PP CC
SS CC AA AA LL EE PP PP CC
SSSSSSSSSSS CC AAAAAAAAAAAAA LL EEEEEEEEE ------------ PPPPPPPPPPPP CC
SSSSSSSSSSS CC AAAAAAAAAAAAA LL EEEEEEEEE ------------ PPPPPPPPPPP CC
SS CC AA AA LL EE PP CC
SS CC AA AA LL EE PP CC
SS SS CC CC AA AA LL EE PP CC CC
SSSSSSSSSSSS CCCCCCCCCCCC AA AA LLLLLLLLLLLL EEEEEEEEEEEE PP CCCCCCCCCCCC
SSSSSSSSSS CCCCCCCCCC AA AA LLLLLLLLLLLL EEEEEEEEEEEE PP CCCCCCCCCC

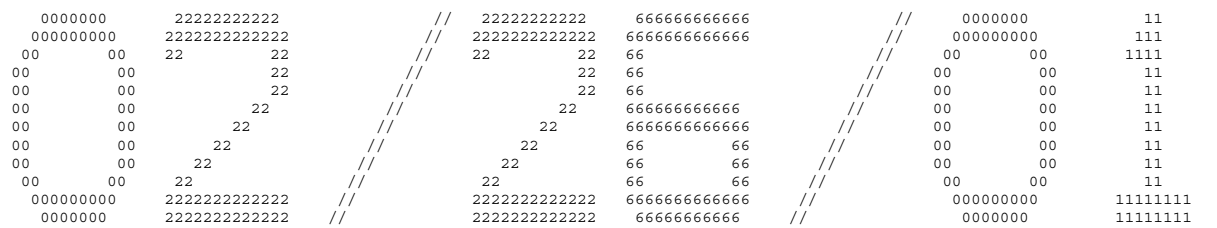
0000000 22222222222 // 22222222222 666666666666 // 0000000 11
000000000 2222222222222 // 2222222222222 6666666666666 // 000000000 111
00 00 22 22 // 22 22 66 // 00 00 1111
00 00 22 // 22 66 // 00 00 11
00 00 22 // 22 66 // 00 00 11
00 00 22 // 22 666666666666 // 00 00 11
00 00 22 // 22 6666666666666 // 00 00 11
00 00 22 // 22 66 66 // 00 00 11
00 00 22 // 22 66 66 // 00 00 11
00 00 22 // 22 66 66 // 00 00 11
000000000 2222222222222 // 2222222222222 6666666666666 // 000000000 11111111
0000000 2222222222222 // 2222222222222 66666666666 // 0000000 11111111

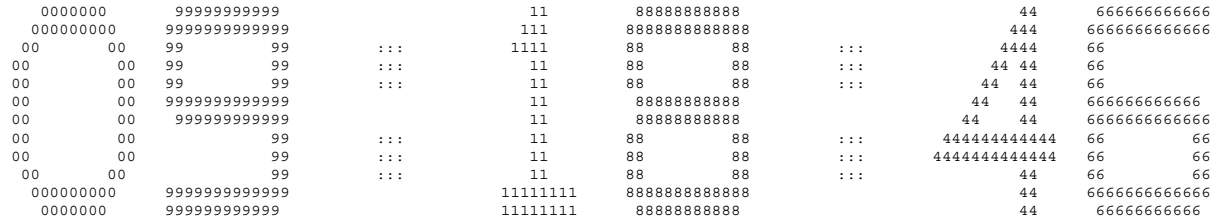
0000000 99999999999 11 88888888888 44 666666666666
000000000 9999999999999 111 8888888888888 444 6666666666666
00 00 99 99 ::: 1111 88 88 ::: 4444 66
00 00 99 99 ::: 11 88 88 ::: 44 44 66
00 00 99 99 ::: 11 88 88 ::: 44 44 66
00 00 9999999999999 11 88888888888 44 44 666666666666
00 00 999999999999 11 88888888888 44 44 6666666666666
00 00 99 ::: 11 88 88 ::: 444444444444 66 66
00 00 99 ::: 11 88 88 ::: 4444444444444 66 66
00 00 99 ::: 11 88 88 ::: 44 66 66
000000000 9999999999999 11111111 8888888888888 44 6666666666666
0000000 999999999999 11111111 88888888888 44 66666666666

```
  SSSSSSSSSS     CCCCCCCCCC      AAAAAAAA     LL             EEEEEEEEEEEE                 PPPPPPPPPPP     CCCCCCCCCC
 SSSSSSSSSSSS   CCCCCCCCCCCC    AAAAAAAAAA    LL             EEEEEEEEEEEE                 PPPPPPPPPPPP   CCCCCCCCCCCC
 SS          SS CC          CC  AA          AA  LL             EE                           PP          PP  CC          CC
 SS             CC              AA          AA  LL             EE                           PP          PP  CC
 SS             CC              AA          AA  LL             EE                           PP          PP  CC
 SSSSSSSSSSSS   CC              AAAAAAAAAAAAAA  LL             EEEEEEEEE       -------------PPPPPPPPPPPP  CC
  SSSSSSSSSSSS  CC              AAAAAAAAAAAAAA  LL             EEEEEEEEE       -------------PPPPPPPPPPP   CC
           SS   CC              AA          AA  LL             EE                           PP              CC
           SS   CC              AA          AA  LL             EE                           PP              CC
 SS        SS   CC          CC  AA          AA  LL             EE                           PP              CC          CC
 SSSSSSSSSSSS   CCCCCCCCCCCC    AA          AA  LLLLLLLLLLLL   EEEEEEEEEEEE                 PP              CCCCCCCCCCCC
  SSSSSSSSSS     CCCCCCCCCC     AA          AA  LLLLLLLLLLLL   EEEEEEEEEEEE                 PP               CCCCCCCCCC
```

```
*******************************************************************************
*******************************************************************************
*******************************************************************************
*****                                                                     *****
*****                  PROGRAM VERIFICATION INFORMATION                   *****
*****                                                                     *****
*****                CODE SYSTEM:  SCALE-PC VERSION:  4.3                 *****
*****                                                                     *****
*******************************************************************************
*******************************************************************************
*****                                                                     *****
*****                                                                     *****
*****              PROGRAM:  O0O002                                       *****
*****                                                                     *****
*****        CREATION DATE:  09/28/95                                     *****
*****                                                                     *****
*****              VOLUME:   ENG                                          *****
*****                                                                     *****
*****              LIBRARY:  G:\SCALE43\WIN_NT\EXE                        *****
*****                                                                     *****
*****                                                                     *****
*****    THIS IS NOT A SCALE-PC CONFIGURATION CONTROLLED CODE             *****
*****                                                                     *****
*****              JOBNAME:  SCALE-PC                                     *****
*****                                                                     *****
*****    DATE OF EXECUTION:  02/26/01                                     *****
*****                                                                     *****
*****    TIME OF EXECUTION:  09:18:46                                     *****
*****                                                                     *****
*****                                                                     *****
*******************************************************************************
*******************************************************************************
*******************************************************************************
```

```
       -1Q ARRAY HAS      1 ENTRIES.

        0Q ARRAY HAS      9 ENTRIES.

        1Q ARRAY HAS     12 ENTRIES.

SELECT 16 NUCLIDES FROM THE MASTER  LIBRARY ON LOGICAL  1
        0 NUCLIDES FROM THE WORKING LIBRARY ON LOGICAL  2
        0 NUCLIDES FROM THE WORKING LIBRARY ON LOGICAL  3
          TO CREATE THE NEW WORKING LIBRARY ON LOGICAL  4

        3 RESONANCE CALCULATIONS HAVE BEEN REQUESTED
       -1 OUTPUT OPTION FOR AMPX FORMATTED CROSS SECTION DATA
     2001 MAXIMUM NUMBER OF RESONANCE MESH INTERVALS
        2 ORDER OF RESONANCE LEVEL PROCESSING

THE STORAGE ALLOCATED FOR THIS CASE IS    100000 WORDS

        2Q ARRAY HAS     16 ENTRIES.

        3Q ARRAY HAS     45 ENTRIES.

        4Q ARRAY HAS     16 ENTRIES.

 GENERAL INFORMATION CONCERNING CROSS SECTION LIBRARY
   TAPE IDENTIFICATION NUMBER               4321
   NUMBER OF NUCLIDES ON TAPE                 16
   NUMBER OF NEUTRON ENERGY GROUPS            27
   FIRST THERMAL NEUTRON ENERGY GROUP         15
   NUMBER OF GAMMA ENERGY GROUPS               0

   DIRECT ACCESS UNIT NUMBER  9 REQUIRES 117 BLOCKS OF LENGTH  1680 WORDS
 XSDRN TAPE   4321
                       SCALE 4.2 - 27 GROUP NEUTRON GROUP LIBRARY
                          BASED ON ENDF-B VERSION 4 DATA
                             COMPILED FOR NRC     1/27/89
                                LAST UPDATED                                                    08/12/94
                                   L.M.PETRIE   -   ORNL

 NUCLIDES FROM XSDRN TAPE
    1     HYDROGEN       ENDF/B-IV MAT 1269/THRM1002            UPDATED 08/12/94     3001001
    2     HYDROGEN       ENDF/B-IV MAT 1269/THRM1002            UPDATED 08/12/94     7001001
    3     HYDROGEN       ENDF/B-IV MAT 1269/THRM1002            UPDATED 08/12/94     8001001
    4     OXYGEN-16      ENDF/B-IV MAT 1276                     UPDATED 08/12/94     3008016
    5     OXYGEN-16      ENDF/B-IV MAT 1276                     UPDATED 08/12/94     7008016
    6     OXYGEN-16      ENDF/B-IV MAT 1276                     UPDATED 08/12/94     8008016
    7    AL-27 1193 218 GP 040375(5)                            UPDATED 08/12/94     1013027
    8    AL-27 1193 218 GP 040375(5)                            UPDATED 08/12/94     2013027
    9    AL-27 1193 218 GP 040375(5)                            UPDATED 08/12/94     4013027
   10    CR 1191 WT SS-304(1/EST) P-3 293K SP=5+4(42375)'       UPDATED 08/12/94     5024304
   11     MANGANESE-55   ENDF/B-IV MAT 1197                     UPDATED 08/12/94     5025055
   12    FE 1192 WT SS-304(1/EST) P-3 293K SP=5+4(42375)'       UPDATED 08/12/94     5026304
   13    NI 1190 WT SS-304(1/EST) P-3 293K SP=5+4(42375)'       UPDATED 08/12/94     5028304
   14    PB   1288 218NGP 042375 P-3 293K                       UPDATED 08/12/94     6082000
   15     URANIUM-235    ENDF/B-IV MAT 1261                     UPDATED 08/12/94     1092235
   16     URANIUM-238    ENDF/B-IV MAT 1262                     UPDATED 08/12/94     1092238

 HYDROGEN       ENDF/B-IV MAT 1269/THRM1002            UPDATED 08/12/94   3001001     TEMPERATURE=   293.00
                                                            PROCESS NUMBER 1007 IS AT TEMPERATURE=   293.00

 HYDROGEN       ENDF/B-IV MAT 1269/THRM1002            UPDATED 08/12/94   7001001     TEMPERATURE=   293.00
                                                            PROCESS NUMBER 1007 IS AT TEMPERATURE=   293.00

 HYDROGEN       ENDF/B-IV MAT 1269/THRM1002            UPDATED 08/12/94   8001001     TEMPERATURE=   293.00
                                                            PROCESS NUMBER 1007 IS AT TEMPERATURE=   293.00

 OXYGEN-16      ENDF/B-IV MAT 1276                     UPDATED 08/12/94   3008016     TEMPERATURE=   293.00
                                                            PROCESS NUMBER 1007 IS AT TEMPERATURE=   293.00

 OXYGEN-16      ENDF/B-IV MAT 1276                     UPDATED 08/12/94   7008016     TEMPERATURE=   293.00
                                                            PROCESS NUMBER 1007 IS AT TEMPERATURE=   293.00

 OXYGEN-16      ENDF/B-IV MAT 1276                     UPDATED 08/12/94   8008016     TEMPERATURE=   293.00
                                                            PROCESS NUMBER 1007 IS AT TEMPERATURE=   293.00

AL-27 1193 218 GP 040375(5)                             UPDATED 08/12/94   1013027     TEMPERATURE=   293.00
                                                            PROCESS NUMBER 1007 IS AT TEMPERATURE=   293.00

AL-27 1193 218 GP 040375(5)                             UPDATED 08/12/94   2013027     TEMPERATURE=   293.00
                                                            PROCESS NUMBER 1007 IS AT TEMPERATURE=   293.00

AL-27 1193 218 GP 040375(5)                             UPDATED 08/12/94   4013027     TEMPERATURE=   293.00
                                                            PROCESS NUMBER 1007 IS AT TEMPERATURE=   293.00

CR 1191 WT SS-304(1/EST) P-3 293K SP=5+4(42375)'        UPDATED 08/12/94   5024304     TEMPERATURE=   293.00
                                                            PROCESS NUMBER 1007 IS AT TEMPERATURE=   293.00

 MANGANESE-55   ENDF/B-IV MAT 1197                      UPDATED 08/12/94   5025055     TEMPERATURE=   293.00

GEOMETRY HAS BEEN SET TO HOMOGENEOUS AS LBAR IS  0.0000E+00

RESONANCE DATA FOR THIS NUCLIDE

MASS NUMBER (A)          =    54.466              TEMPERATURE(KELVIN)       =   293.000
```

```
POTENTIAL SCATTER SIGMA  =     2.590              LUMPED NUCLEAR DENSITY    = 1.7363295E-03

SPIN FACTOR (G)          =    14.448              LUMP DIMENSION (A-BAR)    = 0.0000000E+00

INNER RADIUS             = 0.0000000E+00         DANCOFF CORRECTION (C)    = 0.0000000E+00

THE ABSORBER WILL BE TREATED BY THE NORDHEIM INTEGRAL METHOD.

MASS OF MODERATOR-1    =    55.845              SIGMA(PER ABSORBER ATOM)= 3.4663022E+02

MODERATOR-1 WILL BE TREATED BY THE NORDHEIM INTEGRAL METHOD.

MASS OF MODERATOR-2    =    55.925              SIGMA(PER ABSORBER ATOM)= 1.2557598E+02

MODERATOR-2 WILL BE TREATED BY THE NORDHEIM INTEGRAL METHOD.

THIS RESONANCE MATERIAL WILL BE TREATED AS A 0-DIMENSIONAL OBJECT.

VOLUME FRACTION OF LUMP IN CELL USED TO ACCOUNT FOR SPATIAL SELF-SHIELDING=1.00000

GROUP        RES ABS         RES FISS        RES SCAT
  8      -5.518788E-04    0.000000E+00   -3.944190E-01
  9      -2.797993E-03    0.000000E+00   -2.293471E+00
 10      -3.291452E-01    0.000000E+00   -3.820862E+01
 11      -2.680562E+00    0.000000E+00   -1.159996E+02

EXCESS RESONANCE INTEGRALS

                 RESOLVED

ABSORPTION       3.33719E+00
FISSION          0.00000E+00
                                                        PROCESS NUMBER 1007 IS AT TEMPERATURE=   293.00

FE 1192 WT SS-304(1/EST) P-3 293K SP=5+4(42375)'       UPDATED 08/12/94   5026304     TEMPERATURE=   293.00
                                                        PROCESS NUMBER 1007 IS AT TEMPERATURE=   293.00

NI 1190 WT SS-304(1/EST) P-3 293K SP=5+4(42375)'       UPDATED 08/12/94   5028304     TEMPERATURE=   293.00
                                                        PROCESS NUMBER 1007 IS AT TEMPERATURE=   293.00

PB   1288 218NGP 042375 P-3 293K                       UPDATED 08/12/94   6082000     TEMPERATURE=   293.00
                                                        PROCESS NUMBER 1007 IS AT TEMPERATURE=   293.00

 URANIUM-235    ENDF/B-IV MAT 1261                     UPDATED 08/12/94   1092235     TEMPERATURE=   293.00

RESONANCE DATA FOR THIS NUCLIDE

MASS NUMBER (A)          =   233.025              TEMPERATURE(KELVIN)       =   293.000

POTENTIAL SCATTER SIGMA  =    11.500              LUMPED NUCLEAR DENSITY    = 1.6746225E-03

SPIN FACTOR (G)          = 15171.100              LUMP DIMENSION (A-BAR)    = 8.2999997E-02

INNER RADIUS             = 0.0000000E+00         DANCOFF CORRECTION (C)    = 5.1177365E-01

THE ABSORBER WILL BE TREATED BY THE NORDHEIM INTEGRAL METHOD.

MASS OF MODERATOR-1    =    26.982              SIGMA(PER ABSORBER ATOM)= 1.2445693E+01

MODERATOR-1 WILL BE TREATED BY THE NORDHEIM INTEGRAL METHOD.

MASS OF MODERATOR-2    =   238.051              SIGMA(PER ABSORBER ATOM)= 7.7685076E-01

MODERATOR-2 WILL BE TREATED BY THE NORDHEIM INTEGRAL METHOD.

THIS RESONANCE MATERIAL WILL BE TREATED AS A 1-DIMENSIONAL OBJECT.

VOLUME FRACTION OF LUMP IN CELL USED TO ACCOUNT FOR SPATIAL SELF-SHIELDING=1.00000

GROUP        RES ABS         RES FISS        RES SCAT
 12      -3.991273E+00   -2.455652E+00   -1.020250E-01
 13      -1.148550E+01   -5.609972E+00   -2.579727E-01
 14      -8.385537E+00   -4.924647E+00   -6.251335E-02
 15      -4.888190E-04   -3.721843E-04    4.008032E-06

EXCESS RESONANCE INTEGRALS

                 RESOLVED

ABSORPTION       2.00383E+02
FISSION          1.20157E+02
                                                        PROCESS NUMBER 1007 IS AT TEMPERATURE=   293.00

 URANIUM-238    ENDF/B-IV MAT 1262                     UPDATED 08/12/94   1092238     TEMPERATURE=   293.00

RESONANCE DATA FOR THIS NUCLIDE

MASS NUMBER (A)          =   236.006              TEMPERATURE(KELVIN)       =   293.000

POTENTIAL SCATTER SIGMA  =    10.599              LUMPED NUCLEAR DENSITY    = 1.0554063E-04

SPIN FACTOR (G)          =   656.527              LUMP DIMENSION (A-BAR)    = 8.2999997E-02

INNER RADIUS             = 0.0000000E+00         DANCOFF CORRECTION (C)    = 5.1177365E-01
```

```
THE ABSORBER WILL BE TREATED BY THE NORDHEIM INTEGRAL METHOD.

MASS OF MODERATOR-1    =    26.982              SIGMA(PER ABSORBER ATOM)= 1.9747691E+02

MODERATOR-1 WILL BE TREATED BY THE NORDHEIM INTEGRAL METHOD.

MASS OF MODERATOR-2    =   235.044              SIGMA(PER ABSORBER ATOM)= 1.8885785E+02

MODERATOR-2 WILL BE TREATED BY THE NORDHEIM INTEGRAL METHOD.

THIS RESONANCE MATERIAL WILL BE TREATED AS A 1-DIMENSIONAL OBJECT.

VOLUME FRACTION OF LUMP IN CELL USED TO ACCOUNT FOR SPATIAL SELF-SHIELDING=1.00000

GROUP        RES ABS         RES FISS        RES SCAT
  9      -3.221209E-04    0.000000E+00   -3.615814E-03
 10      -1.701700E-02   -9.645751E-08   -1.233430E-01
 11      -7.790445E-01    0.000000E+00   -2.481573E+00
 12      -7.111002E+00    0.000000E+00   -8.512491E+00
 13      -8.282583E+00    0.000000E+00   -2.746092E+00
 14      -1.524248E+01    0.000000E+00   -8.966302E-01
 15      -5.454276E-09    0.000000E+00    6.277273E-09

EXCESS RESONANCE INTEGRALS

                 RESOLVED

ABSORPTION       2.35741E+02
FISSION          5.33533E-04
                                                    PROCESS NUMBER 1007 IS AT TEMPERATURE=   293.00
```

```
THIS XSDRN WORKING TAPE WAS CREATED 02/26/01 AT 09:18:46
THE TITLE OF THE PARENT CASE IS AS FOLLOWS
SCALE 4.2 - 27 GROUP NEUTRON GROUP LIBRARY
   BASED ON ENDF-B VERSION 4 DATA
      COMPILED FOR NRC     1/27/89
    TAPE ID                          4321          NUMBER OF NUCLIDES                   16
    NUMBER OF NEUTRON GROUPS           27          NUMBER OF GAMMA GROUPS                0
    FIRST THERMAL GROUP                15          LOGICAL UNIT                          4
                              TABLE OF CONTENTS
   HYDROGEN       ENDF/B-IV MAT 1269/THRM1002             UPDATED 08/12/94        ID   3001001
   HYDROGEN       ENDF/B-IV MAT 1269/THRM1002             UPDATED 08/12/94        ID   7001001
   HYDROGEN       ENDF/B-IV MAT 1269/THRM1002             UPDATED 08/12/94        ID   8001001
   OXYGEN-16      ENDF/B-IV MAT 1276                      UPDATED 08/12/94        ID   3008016
   OXYGEN-16      ENDF/B-IV MAT 1276                      UPDATED 08/12/94        ID   7008016
   OXYGEN-16      ENDF/B-IV MAT 1276                      UPDATED 08/12/94        ID   8008016
  AL-27 1193 218 GP 040375(5)                            UPDATED 08/12/94        ID   1013027
  AL-27 1193 218 GP 040375(5)                            UPDATED 08/12/94        ID   2013027
  AL-27 1193 218 GP 040375(5)                            UPDATED 08/12/94        ID   4013027
  CR 1191 WT SS-304(1/EST) P-3 293K SP=5+4(42375)'       UPDATED 08/12/94        ID   5024304
   MANGANESE-55   ENDF/B-IV MAT 1197                     UPDATED 08/12/94        ID   5025055
  FE 1192 WT SS-304(1/EST) P-3 293K SP=5+4(42375)'       UPDATED 08/12/94        ID   5026304
  NI 1190 WT SS-304(1/EST) P-3 293K SP=5+4(42375)'       UPDATED 08/12/94        ID   5028304
  PB   1288 218NGP 042375 P-3 293K                       UPDATED 08/12/94        ID   6082000
   URANIUM-235    ENDF/B-IV MAT 1261                      UPDATED 08/12/94        ID   1092235
   URANIUM-238    ENDF/B-IV MAT 1262                      UPDATED 08/12/94        ID   1092238

    TAPE COPY USED      0 I/O'S, AND TOOK    0.11 SECONDS
```

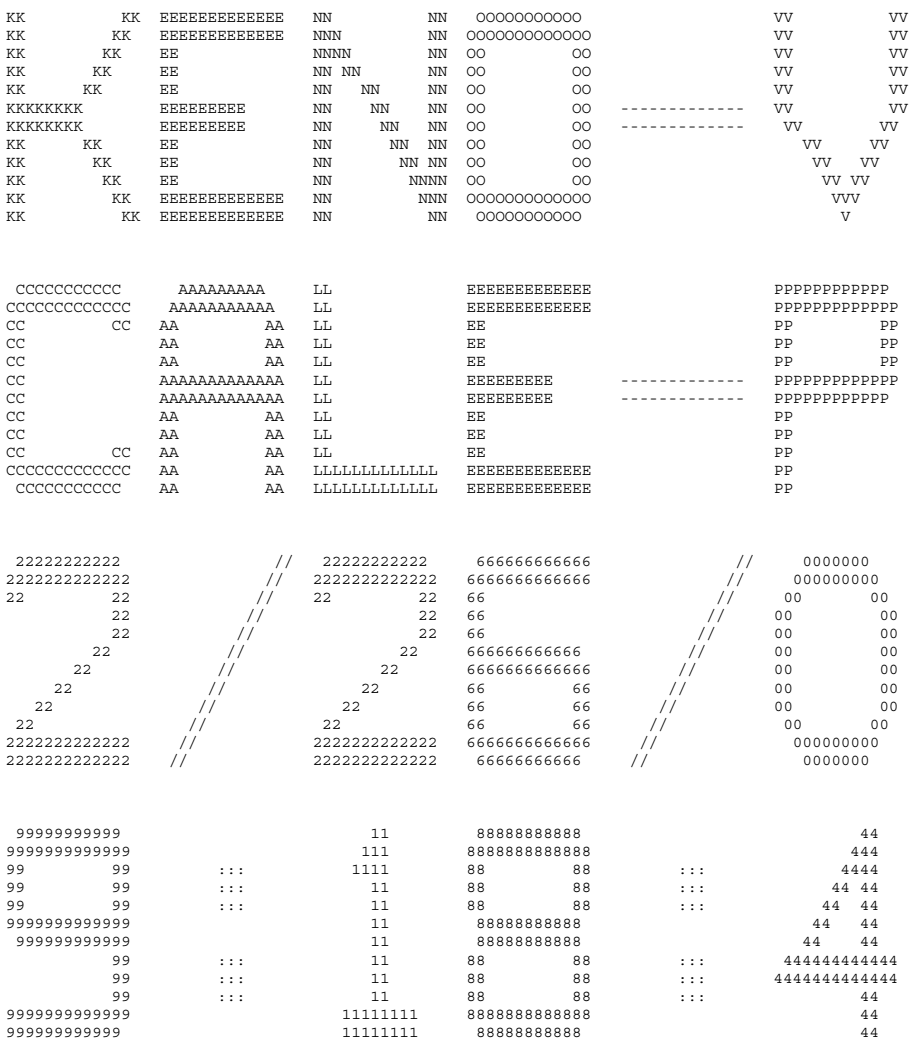
KK KK EEEEEEEEEEEE NN NN OOOOOOOOOO VV VV
KK KK EEEEEEEEEEEE NNN NN OOOOOOOOOOOO VV VV
KK KK EE NNNN NN OO OO VV VV
KK KK EE NN NN NN OO OO VV VV
KK KK EE NN NN NN OO OO VV VV
KKKKKKK EEEEEEEE NN NN NN OO OO VV VV
KKKKKKK EEEEEEEE NN NN NN OO OO VV VV
KK KK EE NN NN NN OO OO VV VV
KK KK EE NN NN NN OO OO VV VV
KK KK EE NN NNNN OO OO VV VV
KK KK EEEEEEEEEEEE NN NNN OOOOOOOOOOOO VVV
KK KK EEEEEEEEEEEE NN NN OOOOOOOOOO V
SSSSSSSSSS CCCCCCCCCC AAAAAAAAA LL EEEEEEEEEEEE PPPPPPPPPP CCCCCCCCCC
SSSSSSSSSSS CCCCCCCCCCCC AAAAAAAAAA LL EEEEEEEEEEEE PPPPPPPPPPP CCCCCCCCCCCC
SS SS CC CC AA AA LL EE PP PP CC CC
SS CC AA AA LL EE PP PP CC
SS CC AA AA LL EE PP PP CC
SSSSSSSSSSS CC AAAAAAAAAAAAA LL EEEEEEEE PPPPPPPPPPP CC
SSSSSSSSSS CC AAAAAAAAAAAAA LL EEEEEEEE PPPPPPPPPP CC
SS CC AA AA LL EE PP CC
SS CC AA AA LL EE PP CC
SS SS CC CC AA AA LL EE PP CC CC
SSSSSSSSSSS CCCCCCCCCCCC AA AA LLLLLLLLLLL EEEEEEEEEEE PP CCCCCCCCCCC
SSSSSSSSSS CCCCCCCCCC AA AA LLLLLLLLLLL EEEEEEEEEEE PP CCCCCCCCCC
0000000 22222222222 // 22222222222 6666666666666 // 0000000 11
000000000 2222222222222 // 2222222222222 6666666666666 // 000000000 111
00 00 22 22 // 22 22 66 // 00 00 1111
00 00 22 // 22 66 // 00 00 11
00 00 22 // 22 66 // 00 00 11
00 00 22 // 22 6666666666666 // 00 00 11
00 00 22 // 22 6666666666666 // 00 00 11
00 00 22 // 22 66 66 // 00 00 11
00 00 22 // 22 66 66 // 00 00 11
00 00 22 // 22 66 66 // 00 00 11
000000000 2222222222222 // 2222222222222 6666666666666 // 000000000 11111111
0000000 2222222222222 // 2222222222222 66666666666 // 0000000 11111111
0000000 99999999999 11 88888888888 44 99999999999
000000000 9999999999999 111 8888888888888 444 9999999999999
00 00 99 99 ::: 1111 88 88 ::: 4444 99 99
00 00 99 99 ::: 11 88 88 ::: 44 44 99 99
00 00 99 99 ::: 11 88 88 ::: 44 44 99 99
00 00 9999999999999 11 88888888888 44 44 9999999999999
00 00 999999999999 11 88888888888 44 44 999999999999
00 00 99 ::: 11 88 88 ::: 444444444444 99
00 00 99 ::: 11 88 88 ::: 4444444444444 99
00 00 99 ::: 11 88 88 ::: 44 99
000000000 9999999999999 11111111 8888888888888 44 9999999999999
0000000 999999999999 11111111 88888888888 44 999999999999

```
  SSSSSSSSSS     CCCCCCCCCC      AAAAAAAA     LL              EEEEEEEEEEEE                  PPPPPPPPPPP     CCCCCCCCCC
 SSSSSSSSSSSS   CCCCCCCCCCCC    AAAAAAAAAA    LL              EEEEEEEEEEEE                  PPPPPPPPPPPP   CCCCCCCCCCCC
 SS          SS CC          CC  AA          AA  LL              EE                            PP          PP  CC          CC
 SS             CC              AA          AA  LL              EE                            PP          PP  CC
 SS             CC              AA          AA  LL              EE                            PP          PP  CC
 SSSSSSSSSSSS   CC              AAAAAAAAAAAAAA  LL              EEEEEEEEE       -------------  PPPPPPPPPPPP  CC
  SSSSSSSSSSSS  CC              AAAAAAAAAAAAAA  LL              EEEEEEEEE       -------------  PPPPPPPPPPP   CC
           SS   CC              AA          AA  LL              EE                            PP             CC
           SS   CC              AA          AA  LL              EE                            PP             CC
 SS        SS   CC          CC  AA          AA  LL              EE                            PP             CC          CC
 SSSSSSSSSSSS   CCCCCCCCCCCC    AA          AA  LLLLLLLLLLLL    EEEEEEEEEEEE                  PP             CCCCCCCCCCCC
  SSSSSSSSSS     CCCCCCCCCC     AA          AA  LLLLLLLLLLLL    EEEEEEEEEEEE                  PP              CCCCCCCCCC
```

```
*******************************************************************************
*******************************************************************************
*******************************************************************************
*****                                                                     *****
*****                  PROGRAM VERIFICATION INFORMATION                   *****
*****                                                                     *****
*****                CODE SYSTEM:  SCALE-PC VERSION:  4.3                 *****
*****                                                                     *****
*******************************************************************************
*******************************************************************************
*****                                                                     *****
*****                                                                     *****
*****              PROGRAM:  O0O009                                       *****
*****                                                                     *****
*****        CREATION DATE:  03/08/96                                     *****
*****                                                                     *****
*****              VOLUME:   ENG                                          *****
*****                                                                     *****
*****              LIBRARY:  G:\SCALE43\WIN_NT\EXE                        *****
*****                                                                     *****
*****                                                                     *****
*****    THIS IS NOT A SCALE-PC CONFIGURATION CONTROLLED CODE             *****
*****                                                                     *****
*****              JOBNAME:  SCALE-PC                                     *****
*****                                                                     *****
*****    DATE OF EXECUTION:  02/26/01                                     *****
*****                                                                     *****
*****    TIME OF EXECUTION:  09:18:49                                     *****
*****                                                                     *****
*****                                                                     *****
*******************************************************************************
*******************************************************************************
*******************************************************************************
```

```
*****************************************************************************************************************
***                                                                                                           ***
***                                                                                                           ***
***                                                                                                           ***
*****************************************************************************************************************
***                              ******       NUMERIC PARAMETERS       ******                                ***
***                                                                                                           ***
***                                                                                                           ***
***                    TME       MAXIMUM PROBLEM TIME (MIN)                        30.00                    ***
***                                                                                                           ***
***                    TBA       TIME PER GENERATION (MIN)                          5.00                    ***
***                                                                                                           ***
***                    GEN       NUMBER OF GENERATIONS                               803                    ***
***                                                                                                           ***
***                    NPG       NUMBER PER GENERATION                              1000                    ***
***                                                                                                           ***
***                    NSK       NUMBER OF GENERATIONS TO BE SKIPPED                   3                    ***
***                                                                                                           ***
***                    BEG       BEGINNING GENERATION NUMBER                           1                    ***
***                                                                                                           ***
***                    RES       GENERATIONS BETWEEN CHECKPOINTS                       0                    ***
***                                                                                                           ***
***                    X1D       NUMBER OF EXTRA 1-D CROSS SECTIONS                    1                    ***
***                                                                                                           ***
***                    NBK       NEUTRON BANK SIZE                                  1025                    ***
***                                                                                                           ***
***                    XNB       EXTRA POSITIONS IN NEUTRON BANK                       0                    ***
***                                                                                                           ***
***                    NFB       FISSION BANK SIZE                                  1000                    ***
***                                                                                                           ***
***                    XFB       EXTRA POSITIONS IN FISSION BANK                       0                    ***
***                                                                                                           ***
***                    WTA       DEFAULT VALUE OF WEIGHT AVERAGE                  0.5000                    ***
***                                                                                                           ***
***                    WTH       WEIGHT HIGH FOR SPLITTING                        3.0000                    ***
***                                                                                                           ***
***                    WTL       WEIGHT LOW FOR RUSSIAN ROULETTE                  0.3333                    ***
***                                                                                                           ***
***                    RND       STARTING RANDOM NUMBER                       BB827100001                   ***
***                                                                                                           ***
***                    NB8       NUMBER OF D.A. BLOCKS ON UNIT  8                   200                    ***
***                                                                                                           ***
***                    NL8       LENGTH OF D.A. BLOCKS ON UNIT  8                   512                    ***
***                                                                                                           ***
***                    ADJ       MODE OF CALCULATION                            FORWARD                    ***
***                                                                                                           ***
***                              INPUT DATA WRITTEN ON RESTART UNIT                    NO                    ***
***                                                                                                           ***
***                              BINARY DATA INTERFACE                                YES                    ***
***                                                                                                           ***
***                                                                                                           ***
*****************************************************************************************************************
*****************************************************************************************************************
```

```
*****************************************************************************************************************************
*****************************************************************************************************************************
***                                                                                                                       ***
***                                                                                                                       ***
***                                                                                                                       ***
*****************************************************************************************************************************
***                                ******      LOGICAL PARAMETERS        ******                                         ***
***                                                                                                                       ***
***  RUN  EXECUTE PROBLEM AFTER CHECKING DATA    YES            PLT  PLOT PICTURE MAP(S)                        NO  ***
***                                                                                                                       ***
***  FLX  COMPUTE FLUX                            NO            FDN  COMPUTE FISSION DENSITIES                  NO  ***
***                                                                                                                       ***
***  SMU  COMPUTE AVG UNIT SELF-MULTIPLICATION    NO            NUB  COMPUTE NU-BAR & AVG FISSION GROUP         YES ***
***                                                                                                                       ***
***  MKU  COMPUTE MATRIX K-EFF BY UNIT NUMBER     NO            MKP  COMPUTE MATRIX K-EFF BY UNIT LOCATION      NO  ***
***                                                                                                                       ***
***  CKU  COMPUTE COFACTOR K-EFF BY UNIT NUMBER   NO            CKP  COMPUTE COFACTOR K-EFF BY UNIT LOCATION    NO  ***
***                                                                                                                       ***
***  FMU  PRINT FISS PROD MATRIX BY UNIT NUMBER   NO            FMP  PRINT FISS PROD MATRIX BY UNIT LOCATION    NO  ***
***                                                                                                                       ***
***  MKH  COMPUTE MATRIX K-EFF BY HOLE NUMBER     NO            MKA  COMPUTE MATRIX K-EFF BY ARRAY NUMBER       NO  ***
***                                                                                                                       ***
***  CKH  COMPUTE COFACTOR K-EFF BY HOLE NUMBER   NO            CKA  COMPUTE COFACTOR K-EFF BY ARRAY NUMBER     NO  ***
***                                                                                                                       ***
***  FMH  PRINT FISS PROD MATRIX BY HOLE NUMBER   NO            FMA  PRINT FISS PROD MATRIX BY ARRAY NUMBER     NO  ***
***                                                                                                                       ***
***  HHL  COLLECT MATRIX BY HIGHEST HOLE LEVEL    NO            HAL  COLLECT MATRIX BY HIGHEST ARRAY LEVEL      NO  ***
***                                                                                                                       ***
***  AMX  PRINT ALL MIXED CROSS SECTIONS          NO            FAR  PRINT FIS. AND ABS. BY REGION              NO  ***
***                                                                                                                       ***
***  XS1  PRINT 1-D MIXTURE X-SECTIONS            NO            GAS  PRINT FAR BY GROUP                         NO  ***
***                                                                                                                       ***
***  XS2  PRINT 2-D MIXTURE X-SECTIONS            NO            PAX  PRINT XSEC-ALBEDO CORRELATION TABLES       NO  ***
***                                                                                                                       ***
***  XAP  PRINT MIXTURE ANGLES & PROBABILITIES    NO            PWT  PRINT WEIGHT AVERAGE ARRAY                 NO  ***
***                                                                                                                       ***
***  PKI  PRINT FISSION SPECTRUM                  NO            PGM  PRINT INPUT GEOMETRY                       NO  ***
***                                                                                                                       ***
***  P1D  PRINT EXTRA 1-D CROSS SECTIONS          NO            BUG  PRINT DEBUG INFORMATION                    NO  ***
***                                                                                                                       ***
***                                                             TRK  PRINT TRACKING INFORMATION                 NO  ***
***                                                                                                                       ***
***                                                                                                                       ***
*****************************************************************************************************************************
*****************************************************************************************************************************
*****************************************************************************************************************************
                                    PARAMETER INPUT COMPLETED

                          ........    0 IO'S WERE USED READING THE PARAMETER DATA      ........

VOLUME FRACTION OF FISSILE MATERIAL IN THE CORE= 5.94224E-03

START TYPE 0 WAS USED.

THE NEUTRONS WERE STARTED WITH A FLAT DISTRIBUTION IN A CUBOID DEFINED BY:
                  +X= 4.98539E+01  -X=-4.98539E+01  +Y= 4.98539E+01  -Y=-4.98539E+01  +Z= 5.01625E+02  -Z= 0.00000E+00
THE FLAG TO START NEUTRONS IN THE REFLECTOR WAS TURNED OFF

KENO MESSAGE NUMBER K5-105     ***** WARNING, ONLY  905 INDEPENDENT STARTING POSITIONS WERE GENERATED.  *****

   95 ADDITIONAL STARTING POINTS WERE PICKED FROM THE INITAL DISTRIBUTION.

4.49683 MINUTES WERE REQUIRED FOR STARTING.   TOTAL ELAPSED TIME IS 4.51200 MINUTES.
```

GENERATION	GENERATION K-EFFECTIVE	ELAPSED TIME MINUTES	AVERAGE K-EFFECTIVE	AVG K-EFF DEVIATION	MATRIX K-EFFECTIVE	MATRIX K-EFF DEVIATION
KENO MESSAGE NUMBER K5-132		WARNING....ONLY	937 INDEPENDENT FISSION POINTS WERE GENERATED			
1	8.55343E-01	4.51767E+00	1.00000E+00	0.00000E+00	0.00000E+00	0.00000E+00
2	9.52762E-01	4.52683E+00	1.00000E+00	0.00000E+00	0.00000E+00	0.00000E+00
3	9.43276E-01	4.53600E+00	9.43276E-01	0.00000E+00	0.00000E+00	0.00000E+00
4	9.15340E-01	4.54600E+00	9.29308E-01	1.39679E-02	0.00000E+00	0.00000E+00
5	9.20312E-01	4.55517E+00	9.26310E-01	8.60381E-03	0.00000E+00	0.00000E+00
6	9.35103E-01	4.56533E+00	9.28508E-01	6.46878E-03	0.00000E+00	0.00000E+00
7	9.57650E-01	4.57533E+00	9.34336E-01	7.68620E-03	0.00000E+00	0.00000E+00
8	9.12494E-01	4.58450E+00	9.30696E-01	7.25517E-03	0.00000E+00	0.00000E+00
9	9.43531E-01	4.59450E+00	9.32529E-01	6.40001E-03	0.00000E+00	0.00000E+00
10	9.24840E-01	4.60467E+00	9.31568E-01	5.62531E-03	0.00000E+00	0.00000E+00
11	9.10585E-01	4.61383E+00	9.29237E-01	5.48160E-03	0.00000E+00	0.00000E+00
12	9.43642E-01	4.62383E+00	9.30677E-01	5.11014E-03	0.00000E+00	0.00000E+00
13	9.20175E-01	4.63383E+00	9.29722E-01	4.71987E-03	0.00000E+00	0.00000E+00
14	9.75696E-01	4.64400E+00	9.33554E-01	5.76559E-03	0.00000E+00	0.00000E+00
15	9.16658E-01	4.65317E+00	9.32254E-01	5.46050E-03	0.00000E+00	0.00000E+00
16	9.12942E-01	4.66417E+00	9.30875E-01	5.24025E-03	0.00000E+00	0.00000E+00
17	9.19028E-01	4.67417E+00	9.30085E-01	4.94192E-03	0.00000E+00	0.00000E+00
18	9.46357E-01	4.68333E+00	9.31102E-01	4.73330E-03	0.00000E+00	0.00000E+00
19	9.01398E-01	4.69333E+00	9.29354E-01	4.77717E-03	0.00000E+00	0.00000E+00
20	9.20218E-01	4.70250E+00	9.28847E-01	4.53247E-03	0.00000E+00	0.00000E+00
21	9.47900E-01	4.71267E+00	9.29850E-01	4.40301E-03	0.00000E+00	0.00000E+00
22	9.26415E-01	4.72267E+00	9.29678E-01	4.18059E-03	0.00000E+00	0.00000E+00
23	9.54758E-01	4.73283E+00	9.30872E-01	4.15200E-03	0.00000E+00	0.00000E+00
24	9.15572E-01	4.74200E+00	9.30177E-01	4.01940E-03	0.00000E+00	0.00000E+00
25	9.51173E-01	4.75200E+00	9.31090E-01	3.94767E-03	0.00000E+00	0.00000E+00
26	9.68620E-01	4.76200E+00	9.32653E-01	4.09033E-03	0.00000E+00	0.00000E+00
27	9.63570E-01	4.77117E+00	9.33890E-01	4.11359E-03	0.00000E+00	0.00000E+00
28	9.63525E-01	4.78133E+00	9.35030E-01	4.11329E-03	0.00000E+00	0.00000E+00
29	9.73742E-01	4.79133E+00	9.36464E-01	4.20971E-03	0.00000E+00	0.00000E+00
30	1.00936E+00	4.80050E+00	9.39067E-01	4.82014E-03	0.00000E+00	0.00000E+00
31	8.97393E-01	4.81067E+00	9.37630E-01	4.86791E-03	0.00000E+00	0.00000E+00
32	9.42504E-01	4.82067E+00	9.37793E-01	4.70565E-03	0.00000E+00	0.00000E+00
33	9.12839E-01	4.82983E+00	9.36988E-01	4.62196E-03	0.00000E+00	0.00000E+00
34	9.49503E-01	4.83983E+00	9.37379E-01	4.49225E-03	0.00000E+00	0.00000E+00
35	9.22407E-01	4.85000E+00	9.36925E-01	4.37757E-03	0.00000E+00	0.00000E+00
36	9.26712E-01	4.85917E+00	9.36625E-01	4.25747E-03	0.00000E+00	0.00000E+00
37	9.28231E-01	4.86917E+00	9.36385E-01	4.14099E-03	0.00000E+00	0.00000E+00
38	9.15251E-01	4.87833E+00	9.35798E-01	4.06691E-03	0.00000E+00	0.00000E+00
39	9.56362E-01	4.88833E+00	9.36354E-01	3.99433E-03	0.00000E+00	0.00000E+00
40	9.39974E-01	4.89750E+00	9.36449E-01	3.88896E-03	0.00000E+00	0.00000E+00
41	9.49166E-01	4.90767E+00	9.36775E-01	3.80194E-03	0.00000E+00	0.00000E+00
42	9.50192E-01	4.91767E+00	9.37110E-01	3.72082E-03	0.00000E+00	0.00000E+00
43	9.28187E-01	4.92783E+00	9.36893E-01	3.63546E-03	0.00000E+00	0.00000E+00
44	9.10787E-01	4.93783E+00	9.36271E-01	3.60188E-03	0.00000E+00	0.00000E+00
45	9.02307E-01	4.94783E+00	9.35481E-01	3.60472E-03	0.00000E+00	0.00000E+00
46	9.24200E-01	4.95800E+00	9.35225E-01	3.53116E-03	0.00000E+00	0.00000E+00
47	9.56755E-01	4.96717E+00	9.35703E-01	3.48480E-03	0.00000E+00	0.00000E+00
48	8.98639E-01	4.97717E+00	9.34898E-01	3.50215E-03	0.00000E+00	0.00000E+00
49	9.12026E-01	4.98733E+00	9.34411E-01	3.46121E-03	0.00000E+00	0.00000E+00
50	9.09649E-01	4.99733E+00	9.33895E-01	3.42738E-03	0.00000E+00	0.00000E+00
784	8.94491E-01	1.22155E+01	9.28832E-01	9.01006E-04	0.00000E+00	0.00000E+00
785	9.08315E-01	1.22255E+01	9.28806E-01	9.00236E-04	0.00000E+00	0.00000E+00
786	8.88725E-01	1.22357E+01	9.28755E-01	9.00539E-04	0.00000E+00	0.00000E+00
787	9.49059E-01	1.22465E+01	9.28781E-01	8.99763E-04	0.00000E+00	0.00000E+00
788	9.75643E-01	1.22557E+01	9.28841E-01	9.00593E-04	0.00000E+00	0.00000E+00
789	9.74076E-01	1.22658E+01	9.28898E-01	9.01283E-04	0.00000E+00	0.00000E+00
790	8.89811E-01	1.22768E+01	9.28848E-01	9.01504E-04	0.00000E+00	0.00000E+00
791	9.17117E-01	1.22860E+01	9.28834E-01	9.00484E-04	0.00000E+00	0.00000E+00
792	9.30645E-01	1.22960E+01	9.28836E-01	8.99346E-04	0.00000E+00	0.00000E+00
793	9.19421E-01	1.23052E+01	9.28824E-01	8.98287E-04	0.00000E+00	0.00000E+00
794	9.41785E-01	1.23152E+01	9.28840E-01	8.97301E-04	0.00000E+00	0.00000E+00
795	9.60725E-01	1.23253E+01	9.28881E-01	8.97071E-04	0.00000E+00	0.00000E+00
796	8.98373E-01	1.23345E+01	9.28842E-01	8.96764E-04	0.00000E+00	0.00000E+00
797	9.13509E-01	1.23445E+01	9.28823E-01	8.95843E-04	0.00000E+00	0.00000E+00
798	8.86803E-01	1.23547E+01	9.28770E-01	8.96272E-04	0.00000E+00	0.00000E+00
799	9.61447E-01	1.23647E+01	9.28811E-01	8.96086E-04	0.00000E+00	0.00000E+00
800	9.72897E-01	1.23747E+01	9.28866E-01	8.96665E-04	0.00000E+00	0.00000E+00
801	9.47415E-01	1.23857E+01	9.28890E-01	8.95843E-04	0.00000E+00	0.00000E+00
802	9.51550E-01	1.23958E+01	9.28918E-01	8.95171E-04	0.00000E+00	0.00000E+00
803	9.57784E-01	1.24050E+01	9.28954E-01	8.94779E-04	0.00000E+00	0.00000E+00

KENO MESSAGE NUMBER K5-123 EXECUTION TERMINATED DUE TO COMPLETION OF THE SPECIFIED NUMBER OF GENERATIONS.

LIFETIME = 7.89581E-05 + OR - 1.41168E-07 GENERATION TIME = 3.69606E-05 + OR - 6.24488E-08
NU BAR = 2.42056E+00 + OR - 1.23157E-05 AVERAGE FISSION GROUP = 2.33314E+01 + OR - 4.51865E-03
ENERGY(EV) OF THE AVERAGE LETHARGY CAUSING FISSION = 7.56224E-02 + OR - 2.51308E-04

NO. OF INITIAL GENERATIONS SKIPPED	AVERAGE K-EFFECTIVE	DEVIATION	67 PER CENT CONFIDENCE INTERVAL	95 PER CENT CONFIDENCE INTERVAL	99 PER CENT CONFIDENCE INTERVAL	NUMBER OF HISTORIES
3	0.92894	+ OR - 0.00090	0.92804 TO 0.92983	0.92714 TO 0.93073	0.92625 TO 0.93162	800000
4	0.92895	+ OR - 0.00090	0.92806 TO 0.92985	0.92716 TO 0.93075	0.92626 TO 0.93164	799000
5	0.92896	+ OR - 0.00090	0.92807 TO 0.92986	0.92717 TO 0.93076	0.92627 TO 0.93166	798000
6	0.92896	+ OR - 0.00090	0.92806 TO 0.92985	0.92716 TO 0.93075	0.92626 TO 0.93165	797000
7	0.92892	+ OR - 0.00090	0.92802 TO 0.92982	0.92712 TO 0.93072	0.92622 TO 0.93162	796000
8	0.92894	+ OR - 0.00090	0.92804 TO 0.92984	0.92714 TO 0.93074	0.92624 TO 0.93164	795000
9	0.92892	+ OR - 0.00090	0.92802 TO 0.92982	0.92712 TO 0.93072	0.92622 TO 0.93163	794000
10	0.92893	+ OR - 0.00090	0.92803 TO 0.92983	0.92712 TO 0.93073	0.92622 TO 0.93163	793000
11	0.92895	+ OR - 0.00090	0.92805 TO 0.92985	0.92714 TO 0.93076	0.92624 TO 0.93166	792000
12	0.92893	+ OR - 0.00090	0.92803 TO 0.92984	0.92712 TO 0.93074	0.92622 TO 0.93164	791000
17	0.92893	+ OR - 0.00091	0.92803 TO 0.92984	0.92712 TO 0.93075	0.92621 TO 0.93165	786000
22	0.92894	+ OR - 0.00091	0.92802 TO 0.92985	0.92711 TO 0.93076	0.92620 TO 0.93167	781000
27	0.92879	+ OR - 0.00091	0.92788 TO 0.92971	0.92697 TO 0.93062	0.92605 TO 0.93154	776000
32	0.92861	+ OR - 0.00091	0.92770 TO 0.92952	0.92679 TO 0.93043	0.92588 TO 0.93134	771000
37	0.92861	+ OR - 0.00092	0.92770 TO 0.92953	0.92678 TO 0.93044	0.92587 TO 0.93136	766000
42	0.92853	+ OR - 0.00092	0.92761 TO 0.92944	0.92669 TO 0.93036	0.92577 TO 0.93128	761000
47	0.92855	+ OR - 0.00092	0.92763 TO 0.92948	0.92671 TO 0.93040	0.92578 TO 0.93132	756000
52	0.92864	+ OR - 0.00093	0.92771 TO 0.92957	0.92679 TO 0.93050	0.92586 TO 0.93142	751000
57	0.92862	+ OR - 0.00093	0.92769 TO 0.92956	0.92676 TO 0.93049	0.92583 TO 0.93142	746000
772	0.93019	+ OR - 0.00534	0.92485 TO 0.93552	0.91951 TO 0.94086	0.91417 TO 0.94620	31000
777	0.93071	+ OR - 0.00572	0.92499 TO 0.93643	0.91926 TO 0.94216	0.91354 TO 0.94788	26000
782	0.93322	+ OR - 0.00670	0.92652 TO 0.93993	0.91982 TO 0.94663	0.91311 TO 0.95334	21000
787	0.93744	+ OR - 0.00753	0.92990 TO 0.94497	0.92237 TO 0.95251	0.91483 TO 0.96004	16000
792	0.93743	+ OR - 0.00858	0.92885 TO 0.94601	0.92027 TO 0.95458	0.91169 TO 0.96316	11000
797	0.94632	+ OR - 0.01243	0.93388 TO 0.95875	0.92145 TO 0.97118	0.90902 TO 0.98362	6000

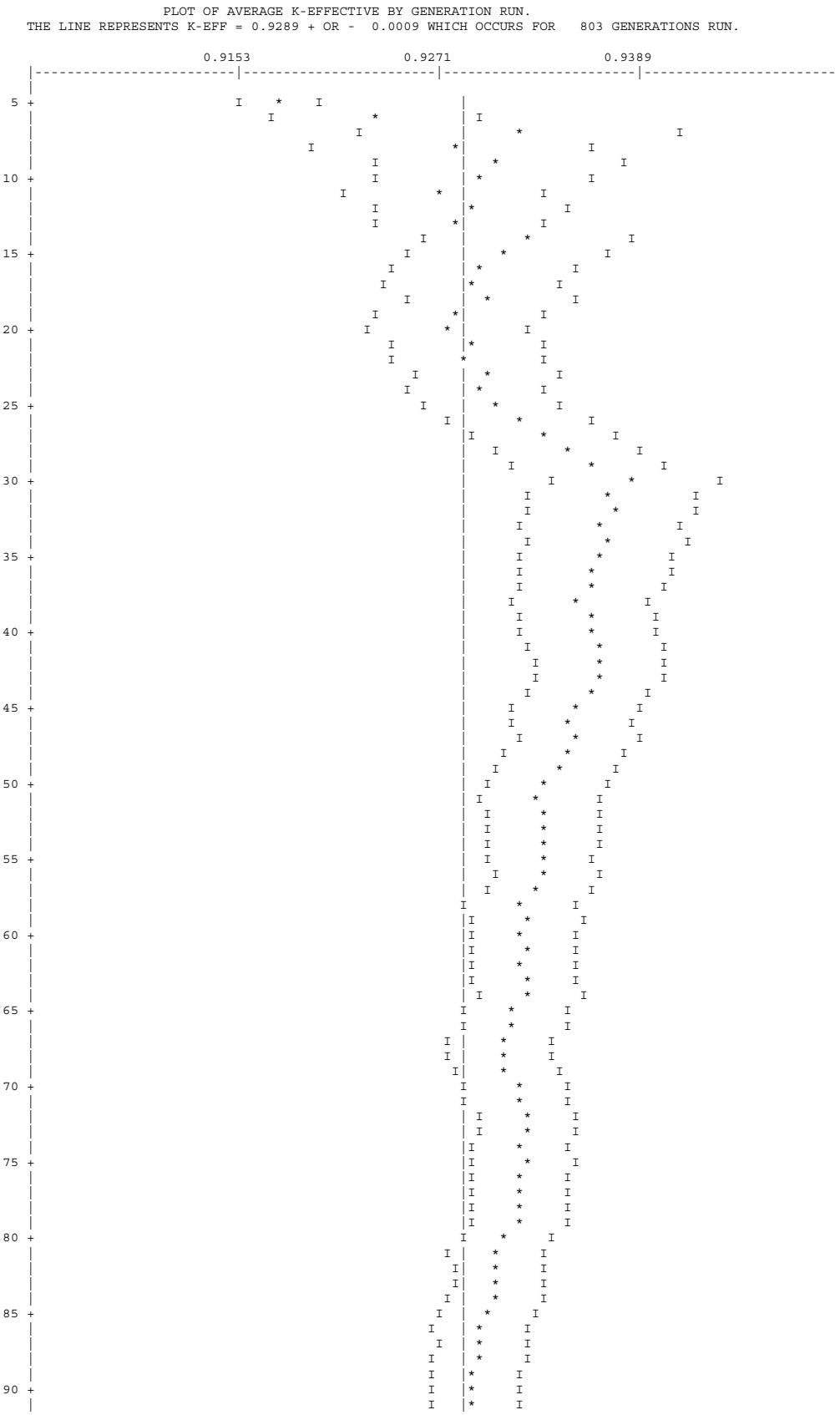
PLOT OF AVERAGE K-EFFECTIVE BY GENERATION RUN.
THE LINE REPRESENTS K-EFF = 0.9289 + OR - 0.0009 WHICH OCCURS FOR 803 GENERATIONS RUN.
0.9153
0.9271
0.9389
5
10
15
20
25
30
35
40
45
50
55
60
65
70
75
80
85
90

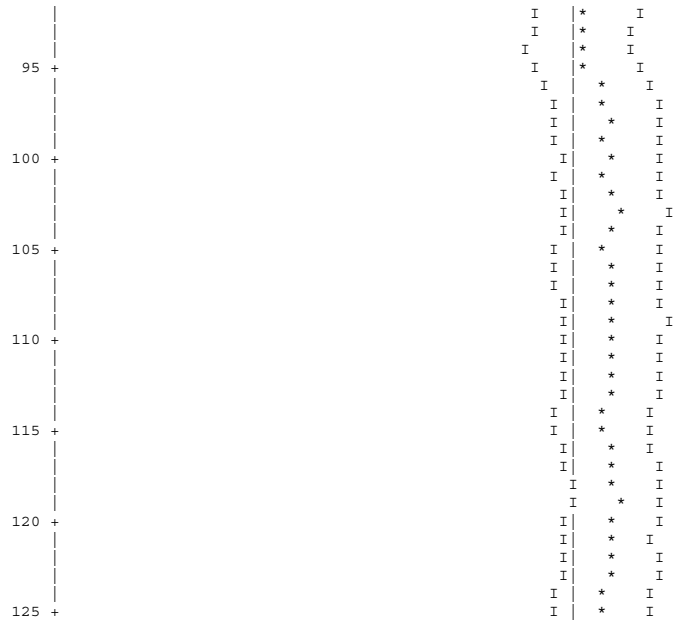

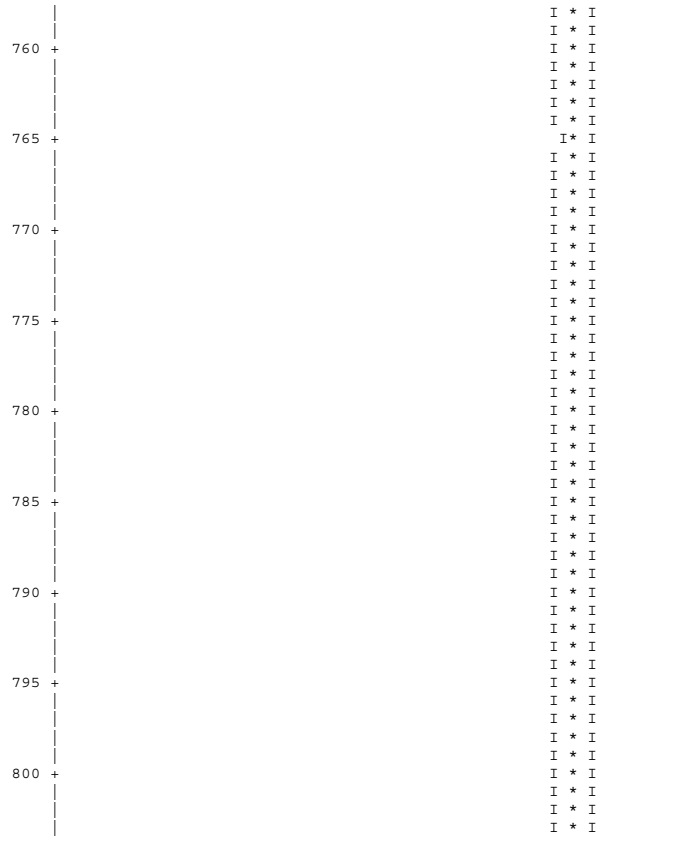

```
PLOT OF AVERAGE K-EFFECTIVE BY GENERATION SKIPPED.
     THE LINE REPRESENTS K-EFF = 0.9289 + OR -  0.0009 WHICH OCCURS FOR     3 GENERATIONS SKIPPED.

                          0.9278                   0.9430                   0.9582
     |------------------------|------------------------|------------------------|------------------------
     |
     |                         I* I
   5 +                         I* I
     |                         I* I
     |                         I* I
     |                         I* I
     |                         I* I
  10 +                         I* I
     |                         I* I
     |                         I* I
     |                         I* I
     |                         I* I
  15 +                         I* I
     |                         I* I
     |                         I* I
     |                         I* I
     |                         I* I
  20 +                         I* I
     |                         I* I
     |                         I* I
     |                         I* I
     |                         I* I
  25 +                         I* I
     |                         I* I
     |                         I* I
     |                         I* I
     |                        I *I
  30 +                        I *I
     |                        I *I
     |                        I *I
     |                        I *I
     |                        I *I
  35 +                        I *I
     |                        I *I
     |                        I *I
     |                        I *I
     |                        I *I
  40 +                        I *I
     |                        I *I
     |                        I *I
     |                        I *I
     |                        I *I
  45 +                        I *I
     |                        I *I
     |                        I *I
     |                        I *I
     |                        I *I
  50 +                        I *I
     |                        I *I
     |                        I *I
     |                        I *I
     |                        I *I
  55 +                        I *I
     |                        I *I
     |                        I *I
     |                        I * I
     |                        I *I
  60 +                        I *I
     |                        I *I
     |                        I *I
     |                        I *I
     |                        I *I
  65 +                        I * I
     |                        I * I
     |                         I* I
     |                         I* I
     |                         I* I
  70 +                        I *I
     |                        I *I
     |                        I *I
     |                        I *I
     |                        I *I
  75 +                        I *I
     |                        I *I
     |                        I *I
     |                        I *I
     |                        I *I
  80 +                        I * I
     |                        I * I
     |                        I * I
     |                        I * I
     |                         I* I
  85 +                         I* I
     |                         I* I
     |                         I* I
     |                         I* I


     |                       I   *   I
     |                       I   *    I
     |                       I   |*   I
 705 +                       I   |*   I
```

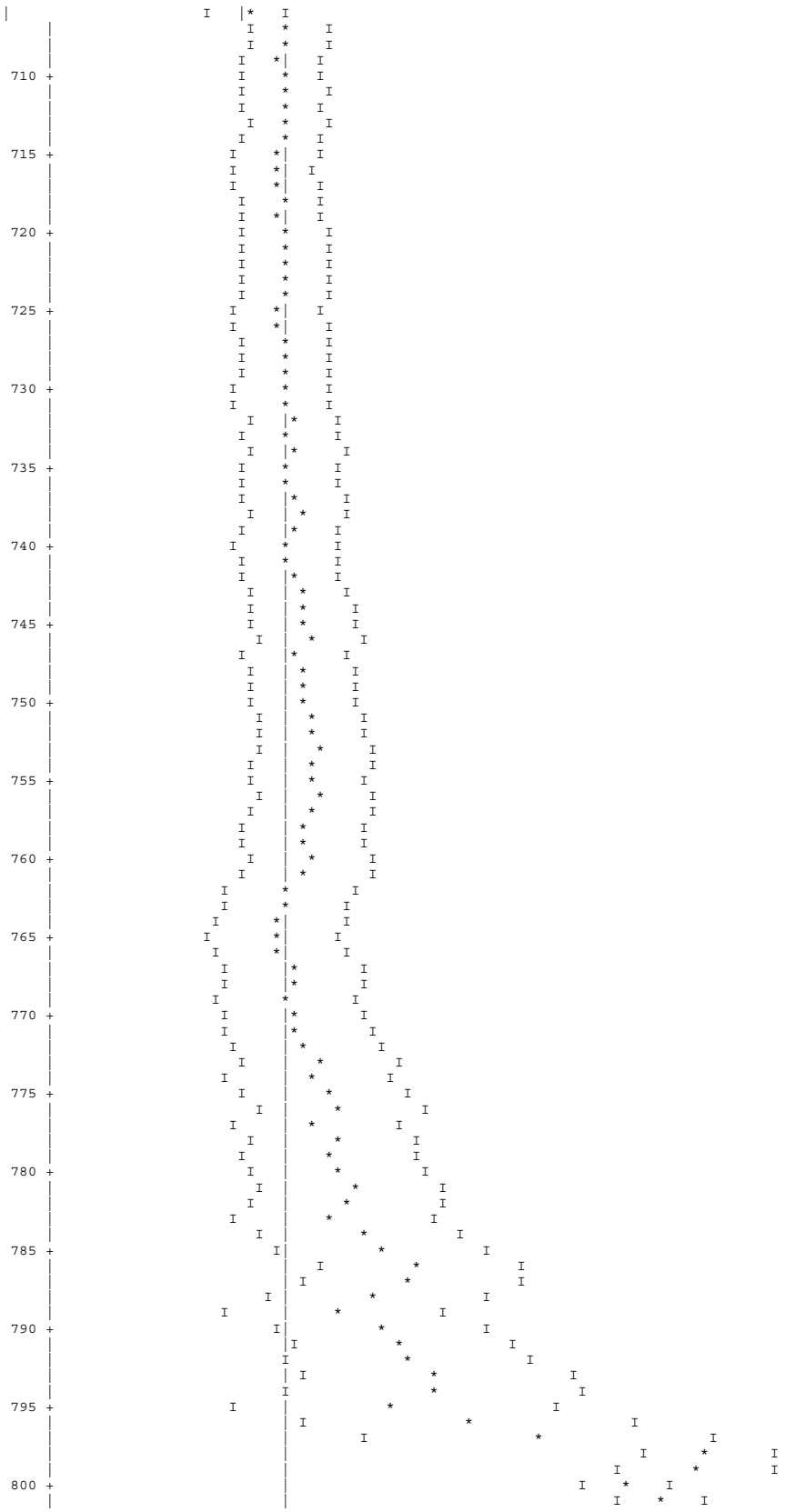

SKIPPING 3 GENERATIONS

GROUP	FISSION FRACTION	UNIT	REGION	FISSIONS	PERCENT DEVIATION	ABSORPTIONS	PERCENT DEVIATION	LEAKAGE	PERCENT DEVIATION
1	0.0003			3.08599E-04	3.2806	1.45027E-03	1.0089	0.00000E+00	0.0000
2	0.0016			1.46285E-03	1.0429	3.34241E-03	0.3409	0.00000E+00	0.0000
3	0.0020			1.82688E-03	0.8427	1.18930E-03	0.5459	0.00000E+00	0.0000
4	0.0011			1.05761E-03	1.1461	6.32283E-04	0.8050	0.00000E+00	0.0000
5	0.0016			1.45380E-03	0.9568	1.13056E-03	0.5669	0.00000E+00	0.0000
6	0.0021			1.94135E-03	0.7005	2.95458E-03	0.3781	0.00000E+00	0.0000
7	0.0021			1.98165E-03	0.7377	5.02578E-03	0.3877	0.00000E+00	0.0000
8	0.0023			2.10841E-03	0.9509	4.39348E-03	0.4452	0.00000E+00	0.0000
9	0.0031			2.83491E-03	1.1509	4.85365E-03	0.5306	0.00000E+00	0.0000
10	0.0067			6.19361E-03	1.0243	1.16847E-02	0.4715	0.00000E+00	0.0000
11	0.0142			1.31987E-02	0.8508	1.77136E-02	0.4712	0.00000E+00	0.0000
12	0.0190			1.76164E-02	0.8312	1.81847E-02	0.5562	0.00000E+00	0.0000
13	0.0182			1.69247E-02	0.8974	2.19290E-02	0.5596	0.00000E+00	0.0000
14	0.0157			1.45530E-02	0.8694	2.55460E-02	0.4510	0.00000E+00	0.0000
15	0.0030			2.79913E-03	1.6979	1.10108E-02	0.5184	0.00000E+00	0.0000
16	0.0021			1.94710E-03	2.2898	6.54953E-03	0.5876	0.00000E+00	0.0000
17	0.0033			3.02592E-03	2.2997	4.35406E-03	0.9772	0.00000E+00	0.0000
18	0.0046			4.28783E-03	2.1737	4.51204E-03	1.0749	0.00000E+00	0.0000
19	0.0056			5.21682E-03	1.8496	7.03214E-03	0.7471	0.00000E+00	0.0000
20	0.0234			2.17310E-02	0.9062	2.60732E-02	0.4375	0.00000E+00	0.0000
21	0.0127			1.17969E-02	1.2310	1.13868E-02	0.6969	0.00000E+00	0.0000
22	0.0307			2.85500E-02	0.8799	2.63312E-02	0.5384	0.00000E+00	0.0000
23	0.1087			1.00964E-01	0.4455	1.02819E-01	0.2386	0.00000E+00	0.0000
24	0.2182			2.02681E-01	0.2924	2.10037E-01	0.1542	0.00000E+00	0.0000
25	0.1858			1.72586E-01	0.3061	1.78378E-01	0.1595	0.00000E+00	0.0000
26	0.2292			2.12900E-01	0.2855	2.18767E-01	0.1605	0.00000E+00	0.0000
27	0.0829			7.69878E-02	0.4909	7.46563E-02	0.2891	0.00000E+00	0.0000
SYSTEM TOTAL =				9.28936E-01	0.0964	1.00194E+00	0.0244	0.00000E+00	0.0000

ELAPSED TIME 12.40683 MINUTES

RANDOM NUMBER= 1BC744B1029D

FREQUENCY FOR GENERATIONS 4 TO 803

```
0.8495 TO 0.8552     *
0.8552 TO 0.8609     ***
0.8609 TO 0.8666     **
0.8666 TO 0.8723     **
0.8723 TO 0.8780     *******
0.8780 TO 0.8836     ************
0.8836 TO 0.8893     ***************
0.8893 TO 0.8950     ************************
0.8950 TO 0.9007     *********************************************
0.9007 TO 0.9064     ****************************************
0.9064 TO 0.9120     ************************************************************
0.9120 TO 0.9177     ***************************************************************************
0.9177 TO 0.9234     ********************************************************************
0.9234 TO 0.9291     ****************************************************************
0.9291 TO 0.9348     ************************************************************
0.9348 TO 0.9405     *********************************************
0.9405 TO 0.9461     ********************************************************************
0.9461 TO 0.9518     ************************************************************
0.9518 TO 0.9575     ****************************************
0.9575 TO 0.9632     *********************************
0.9632 TO 0.9689     ***************************
0.9689 TO 0.9746     ***************
0.9746 TO 0.9802     ******************
0.9802 TO 0.9859     ********
0.9859 TO 0.9916     ***
0.9916 TO 0.9973
0.9973 TO 1.0030     *
1.0030 TO 1.0086
1.0086 TO 1.0143     ***
```

FREQUENCY FOR GENERATIONS 204 TO 803

```
0.8495 TO 0.8552     *
0.8552 TO 0.8609     **
0.8609 TO 0.8666     **
0.8666 TO 0.8723     *
0.8723 TO 0.8780     *****
0.8780 TO 0.8836     ********
0.8836 TO 0.8893     **************
0.8893 TO 0.8950     ******************
0.8950 TO 0.9007     ************************************
0.9007 TO 0.9064     ****************************
0.9064 TO 0.9120     ******************************************
0.9120 TO 0.9177     **************************************************
0.9177 TO 0.9234     ********************************************************
0.9234 TO 0.9291     ******************************************
0.9291 TO 0.9348     **************************************************
0.9348 TO 0.9405     ****************************
0.9405 TO 0.9461     ***********************************************
0.9461 TO 0.9518     ************************************************
0.9518 TO 0.9575     *********************************
0.9575 TO 0.9632     ****************************
0.9632 TO 0.9689     ******************
0.9689 TO 0.9746     **********
0.9746 TO 0.9802     ***************
0.9802 TO 0.9859     *******
0.9859 TO 0.9916     ***
0.9916 TO 0.9973
0.9973 TO 1.0030     *
1.0030 TO 1.0086
1.0086 TO 1.0143     **
```

```
                          FREQUENCY FOR GENERATIONS  404 TO  803
0.8495 TO 0.8552     *
0.8552 TO 0.8609     **
0.8609 TO 0.8666     *
0.8666 TO 0.8723     *
0.8723 TO 0.8780     ***
0.8780 TO 0.8836     ******
0.8836 TO 0.8893     ************
0.8893 TO 0.8950     ***************
0.8950 TO 0.9007     ******************************
0.9007 TO 0.9064     ******************
0.9064 TO 0.9120     ************************
0.9120 TO 0.9177     ******************************
0.9177 TO 0.9234     ****************************
0.9234 TO 0.9291     ********************************
0.9291 TO 0.9348     ****************************************
0.9348 TO 0.9405     ***************
0.9405 TO 0.9461     *********************************
0.9461 TO 0.9518     ***************************
0.9518 TO 0.9575     ************************
0.9575 TO 0.9632     *****************
0.9632 TO 0.9689     ************
0.9689 TO 0.9746     ******
0.9746 TO 0.9802     ************
0.9802 TO 0.9859     ****
0.9859 TO 0.9916     **
0.9916 TO 0.9973
0.9973 TO 1.0030     *
1.0030 TO 1.0086
1.0086 TO 1.0143
```

```
                              FREQUENCY FOR GENERATIONS  604 TO  803
0.8495 TO 0.8552
0.8552 TO 0.8609     *
0.8609 TO 0.8666
0.8666 TO 0.8723
0.8723 TO 0.8780     ***
0.8780 TO 0.8836     ***
0.8836 TO 0.8893     *****
0.8893 TO 0.8950     *********
0.8950 TO 0.9007     **************
0.9007 TO 0.9064     *******
0.9064 TO 0.9120     ******************
0.9120 TO 0.9177     **************
0.9177 TO 0.9234     ******************
0.9234 TO 0.9291     **********
0.9291 TO 0.9348     *************
0.9348 TO 0.9405     ******
0.9405 TO 0.9461     ********************
0.9461 TO 0.9518     ******************
0.9518 TO 0.9575     ***************
0.9575 TO 0.9632     *********
0.9632 TO 0.9689     ****
0.9689 TO 0.9746     ***
0.9746 TO 0.9802     ********
0.9802 TO 0.9859     *
0.9859 TO 0.9916
0.9916 TO 0.9973
0.9973 TO 1.0030
1.0030 TO 1.0086
1.0086 TO 1.0143


*****************************************************************************************************************************************
*
          CONGRATULATIONS!  YOU HAVE  SUCCESSFULLY TRAVERSED THE PERILOUS PATH THROUGH KENO V IN  12.40683 MINUTES

*****************************************************************************************************************************************
*
```

6.6.8 DIDO Fuel Assemblies

This section contains abbreviated output files from the most reactive normal condition and accident condition moderator density variation cases.

Figure 6.6.8-1 Maximum Reactivity DIDO Configuration – Eight Cask Array

```
_____________________________________________________________________
.
NAC International
QSCALENT Banner Generation Utility v3.6 (20010221)
+-----------------+
I JOB INFORMATION I
+-----------------+
.
Output File Name:             eight-cask-void_ext.out
Start Date:                   February 21, 2001
Start Time:                   18:17:21
.
+----------------------+
I SOFTWARE INFORMATION I
+----------------------+
.
Program Name:                 Scale 4.3 for Windows NT 4.0
Version:                      4.3.1
Installation Date:            June 10, 1998
Code Verification Package #:  EA913-1010-94, Rev. 0
Code Verification Date:       June 10, 1998
Program Location:             G:\scale43\win_nt\exe
.
+--------------------+
I SYSTEM INFORMATION I
+--------------------+
.
Computer Type:                Dell Precision 410
Operating System:             Windows NT Version 4.0
Computer ID:                  57NTY (MAC# 00C04F600F94)
Serial Number:                57NTY
Login ID:                     zjr
System Verification Date:     July 3, 2000
_____________________________________________________________________
.
```

```
        PRIMARY MODULE ACCESS AND INPUT RECORD ( SCALE DRIVER - 95/03/29 - 09:06:37 )
  MODULE CSAS25   WILL BE CALLED
    LWT with Loose DIDO HEU Fuel, Accident Condition, Radial Shift Pattern - Centere
    'Fuel Tube Thick - Nominal  Fuel Tube OD - Nominal  Fuel Tube Height - Nominal
    'Fuel Base  Plate - Nominal  Fuel Plate Diameter - Nominal  Fuel Plate Thickness
    'Fuel Plate Clad Thickness - Min  Active Fuel Length - Min  Fuel Element Height
    'U235 Fuel Mass - Max  Uranium Weight Fraction - Max  Cylinder Pitch - Outer_Fix
    27GROUPNDF4  LATTICECELL
    'Material Description for LWT Analysis - DIDO HEU Fuel
    URANIUM  1  DEN=0.5477  1.0  293.0  92235 94.0   92238 06.0  END
    AL  1  DEN=1.7930  1.0  293.0      END
    AL  2  1.00  293.0        END
    H2O  3  DEN=0.9998  1.00  293.0      END
    ARBMGLC  0.9437  3  0  1  0
      6012  2  1001  6  8016  2
      4  0.5840          END
    H2O  4  0.4160  293.0        END
    PB  5  1.00  293.0        END
    SS304  6  1.00  293.0        END
    AL  7  1.00  293.0        END
    SS304  8  1.00  293.0        END
    H2O  9  DEN=0.0001  1.00  293.0      END
    END COMP
    SYMMSLABCELL  0.9800  0.0650  1  3  0.1300  2  END

    READ PARAM  TBA=5  TME=90  RUN=YES  PLT=NO
      GEN=1203  NPG=1000         END PARAM
    READ START  XSM=-16.85  XSP=16.85  YSM=16.85  YSP=-16.85
      ZSM=26.67  ZSP=473.35        END START
    READ GEOM
    UNIT  1
    COM='Fueled Annular Sections       Tube  1  Loose    '
    'Fuel Annulus    1
    CYLINDER  3  1  3.0300  58.7500  0.0000  ORIGIN  0.0000  0.0000
    CYLINDER  2  1  3.0625  58.7500  0.0000  ORIGIN  0.0000  0.0000
    CYLINDER  1  1  3.1275  58.7500  0.0000  ORIGIN  0.0000  0.0000
    CYLINDER  2  1  3.1600  58.7500  0.0000  ORIGIN  0.0000  0.0000
    'Fuel Annulus    2
    CYLINDER  3  1  3.5300  58.7500  0.0000  ORIGIN  0.0000  0.0000
    CYLINDER  2  1  3.5625  58.7500  0.0000  ORIGIN  0.0000  0.0000
    CYLINDER  1  1  3.6275  58.7500  0.0000  ORIGIN  0.0000  0.0000
    CYLINDER  2  1  3.6600  58.7500  0.0000  ORIGIN  0.0000  0.0000
    'Fuel Annulus    3
    CYLINDER  3  1  4.0300  58.7500  0.0000  ORIGIN  0.0000  0.0000
    CYLINDER  2  1  4.0625  58.7500  0.0000  ORIGIN  0.0000  0.0000
    CYLINDER  1  1  4.1275  58.7500  0.0000  ORIGIN  0.0000  0.0000
    CYLINDER  2  1  4.1600  58.7500  0.0000  ORIGIN  0.0000  0.0000
    'Fuel Annulus    4
    CYLINDER  3  1  4.5300  58.7500  0.0000
    CYLINDER  2  1  4.5625  58.7500  0.0000
    CYLINDER  1  1  4.6275  58.7500  0.0000
    CYLINDER  2  1  4.6599  58.7500  0.0000
    UNIT  2
    COM='Axial Clad Sections       Tube  1  Loose    '
    'Clad Axial End Piece    1
    CYLINDER  3  1  3.0300  1.3750  0.0000  ORIGIN  0.0000  0.0000
    CYLINDER  2  1  3.1600  1.3750  0.0000  ORIGIN  0.0000  0.0000
    'Clad Axial End Piece    2
    CYLINDER  3  1  3.5300  1.3750  0.0000  ORIGIN  0.0000  0.0000
    CYLINDER  2  1  3.6600  1.3750  0.0000  ORIGIN  0.0000  0.0000
    'Clad Axial End Piece    3
    CYLINDER  3  1  4.0300  1.3750  0.0000  ORIGIN  0.0000  0.0000
    CYLINDER  2  1  4.1600  1.3750  0.0000  ORIGIN  0.0000  0.0000
    'Clad Axial End Piece    4
    CYLINDER  3  1  4.5300  1.3750  0.0000
    CYLINDER  2  1  4.6599  1.3750  0.0000
    UNIT  3
    COM='Fuel Element     Tube  1'
    CYLINDER  3  1  4.6600  61.5000  0.0000
    HOLE  2  0.0000  0.0000  0.0000
    HOLE  1  0.0000  0.0000  1.3750
    HOLE  2  0.0000  0.0000  60.1250
    UNIT  4
    COM='Basket Fuel Tube - Fuel Down        Radial Centered'
    CYLINDER  3  1  5.0927  73.1773  0.0000
    HOLE  3  0.0000  0.0000  0.0000
    CYLINDER  2  1  5.3974  73.1773  0.0000
    UNIT  5
    COM='Basket Fuel Tube - Fuel Up        Radial Centered'
    CYLINDER  3  1  5.0927  73.1773  0.0000
    HOLE  3  0.0000  0.0000  11.6772
    CYLINDER  2  1  5.3974  73.1773  0.0000
    UNIT  6
    COM='Basket Bottom Plate Hole '
    CYLINDER  3  1  1.27  1.2698  0.0000
    UNIT  7
    COM='Basket Bottom Plate '
    CYLINDER  6  1  16.8466  1.2698  0.0000
    HOLE  6  0.0000  0.0000  0.0000
    HOLE  6  10.7950  0.0000  0.0000
    HOLE  6  5.3975  9.3487  0.0000
    HOLE  6  -5.3975  9.3487  0.0000
    HOLE  6  -10.7950  0.0000  0.0000
    HOLE  6  -5.3975  -9.3487  0.0000
    HOLE  6  5.3975  -9.3487  0.0000
```

```
UNIT  8
COM='Heat Transfer Bar / Rod '
CYLINDER  7  1  0.3165  73.1773  0.0000
UNIT  9
COM='Basket Fuel Down'
CYLINDER  3  1  16.1926  73.1773  0.0000
HOLE  4  0.0000  0.0000  0.0000
HOLE  4  10.7950  0.0000  0.0000
HOLE  8  4.9493  2.8575  0.0000
HOLE  8  4.6024  3.3881  0.0000
HOLE  8  5.2354  2.2917  0.0000
HOLE  4  5.3975  9.3487  0.0000
HOLE  8  0.0000  5.7150  0.0000
HOLE  8  -0.6330  5.6798  0.0000
HOLE  8  0.6330  5.6798  0.0000
HOLE  4  -5.3975  9.3487  0.0000
HOLE  8  -4.9493  2.8575  0.0000
HOLE  8  -5.2354  2.2917  0.0000
HOLE  8  -4.6024  3.3881  0.0000
HOLE  4  -10.7950  0.0000  0.0000
HOLE  8  -4.9493  -2.8575  0.0000
HOLE  8  -4.6024  -3.3881  0.0000
HOLE  8  -5.2354  -2.2917  0.0000
HOLE  4  -5.3975  -9.3487  0.0000
HOLE  8  0.0000  -5.7150  0.0000
HOLE  8  0.6330  -5.6798  0.0000
HOLE  8  -0.6330  -5.6798  0.0000
HOLE  4  5.3975  -9.3487  0.0000
HOLE  8  4.9493  -2.8575  0.0000
HOLE  8  5.2354  -2.2917  0.0000
HOLE  8  4.6024  -3.3881  0.0000
CYLINDER  7  1  16.6688  73.1773  0.0000
CYLINDER  3  1  16.8466  73.1773  0.0000
UNIT  10
COM='Basket Fuel Up'
CYLINDER  3  1  16.1926  73.1773  0.0000
HOLE  5  0.0000  0.0000  0.0000
HOLE  5  10.7950  0.0000  0.0000
HOLE  8  4.9493  2.8575  0.0000
HOLE  8  4.6024  3.3881  0.0000
HOLE  8  5.2354  2.2917  0.0000
HOLE  5  5.3975  9.3487  0.0000
HOLE  8  0.0000  5.7150  0.0000
HOLE  8  -0.6330  5.6798  0.0000
HOLE  8  0.6330  5.6798  0.0000
HOLE  5  -5.3975  9.3487  0.0000
HOLE  8  -4.9493  2.8575  0.0000
HOLE  8  -5.2354  2.2917  0.0000
HOLE  8  -4.6024  3.3881  0.0000
HOLE  5  -10.7950  0.0000  0.0000
HOLE  8  -4.9493  -2.8575  0.0000
HOLE  8  -4.6024  -3.3881  0.0000
HOLE  8  -5.2354  -2.2917  0.0000
HOLE  5  -5.3975  -9.3487  0.0000
HOLE  8  0.0000  -5.7150  0.0000
HOLE  8  0.6330  -5.6798  0.0000
HOLE  8  -0.6330  -5.6798  0.0000
HOLE  5  5.3975  -9.3487  0.0000
HOLE  8  4.9493  -2.8575  0.0000
HOLE  8  5.2354  -2.2917  0.0000
HOLE  8  4.6024  -3.3881  0.0000
CYLINDER  7  1  16.6688  73.1773  0.0000
CYLINDER  3  1  16.8466  73.1773  0.0000
UNIT  11
COM='Cask Cavity '
CYLINDER  3  1  16.9863  446.6844  0.0000
HOLE  7  0.0000  0.0000  0.0001
HOLE  10  0.0000  0.0000  1.2700
HOLE  7  0.0000  0.0000  74.4475
HOLE  9  0.0000  0.0000  75.7174
HOLE  7  0.0000  0.0000  148.8949
HOLE  10  0.0000  0.0000  150.1648
HOLE  7  0.0000  0.0000  223.3423
HOLE  9  0.0000  0.0000  224.6122
HOLE  7  0.0000  0.0000  297.7897
HOLE  10  0.0000  0.0000  299.0596
HOLE  7  0.0000  0.0000  372.2371
HOLE  9  0.0000  0.0000  373.5070
UNIT  12
COM='Cask Shield Radial Configuration '
CYLINDER  3  1  16.9863  446.6844  0.0000
HOLE  11  0.0000  0.0000  0.0000
CYLINDER  8  1  18.9103  446.6844  0.0000
CYLINDER  5  1  33.4645  446.6844  0.0000
CYLINDER  8  1  36.5189  446.6844  0.0000
CYLINDER  9  1  49.2189  446.6844  0.0000
CYLINDER  8  1  49.8183  446.6844  0.0000
UNIT  13
COM='LWT Lid '
CYLINDER  8  1  36.5189  28.5750  0.5994
CYLINDER  9  1  49.8183  28.5750  0.5994
CYLINDER  8  1  49.8183  28.5750  0.0000
UNIT  14
COM='LWT Bottom Weldment '
CYLINDER  5  1  26.3525  16.5100  8.8900
```

```
  CYLINDER  8  1  36.5189  26.0706  0.0000
  CYLINDER  9  1  49.8183  26.0706  0.0000
  CYLINDER  8  1  49.8183  26.6700  0.0000
  UNIT  15
  COM='LWT Cask '
  CYLINDER  9  1  49.8183  501.9297  0.0000
  HOLE  14  0.0000  0.0000  0.0000
  HOLE  12  0.0000  0.0000  26.6701
  HOLE  13  0.0000  0.0000  473.3546
  Global UNIT  16
  COM='Finite Cask Array 8 Casks'
  CUBOID  3  1  199.2744  -149.4558  2P136.1066  501.9297  0.0000
  HOLE  15  0.0000  0.0000  0.0000
  HOLE  15  99.6368  0.0000  0.0000
  HOLE  15  49.8184  86.2880  0.0000
  HOLE  15  -49.8184  86.2880  0.0000
  HOLE  15  -99.6368  0.0000  0.0000
  HOLE  15  -49.8184  -86.2880  0.0000
  HOLE  15  49.8184  -86.2880  0.0000
  HOLE  15  149.4552  -86.2880  0.0000
  END GEOM
  READ BOUNDS    ALL=H2O    END BOUNDS
  READ PLOT
  TTL='X-Y PLOT OF CASK ARRAY'
  SCR=YES  PIC=MAT  LPI=10
  UAX=1.0  VDN=-1.0  NAX=1500
  XUL=-200  YUL=200  ZUL=57.4
  XLR=200  YLR=-200  ZLR=57.4  END
  END PLOT
  END DATA

SECONDARY MODULE O0O008   HAS BEEN CALLED.

MODULE O0O008   IS FINISHED. COMPLETION CODE     0. CPU TIME USED     0.77 (SECONDS).

SECONDARY MODULE O0O002   HAS BEEN CALLED.

MODULE O0O002   IS FINISHED. COMPLETION CODE     0. CPU TIME USED     4.67 (SECONDS).

SECONDARY MODULE O0O009   HAS BEEN CALLED.

MODULE O0O009   IS FINISHED. COMPLETION CODE     0. CPU TIME USED  1727.35 (SECONDS).

MODULE CSAS25   IS FINISHED. COMPLETION CODE     0. CPU TIME USED  1735.75 (SECONDS).
```

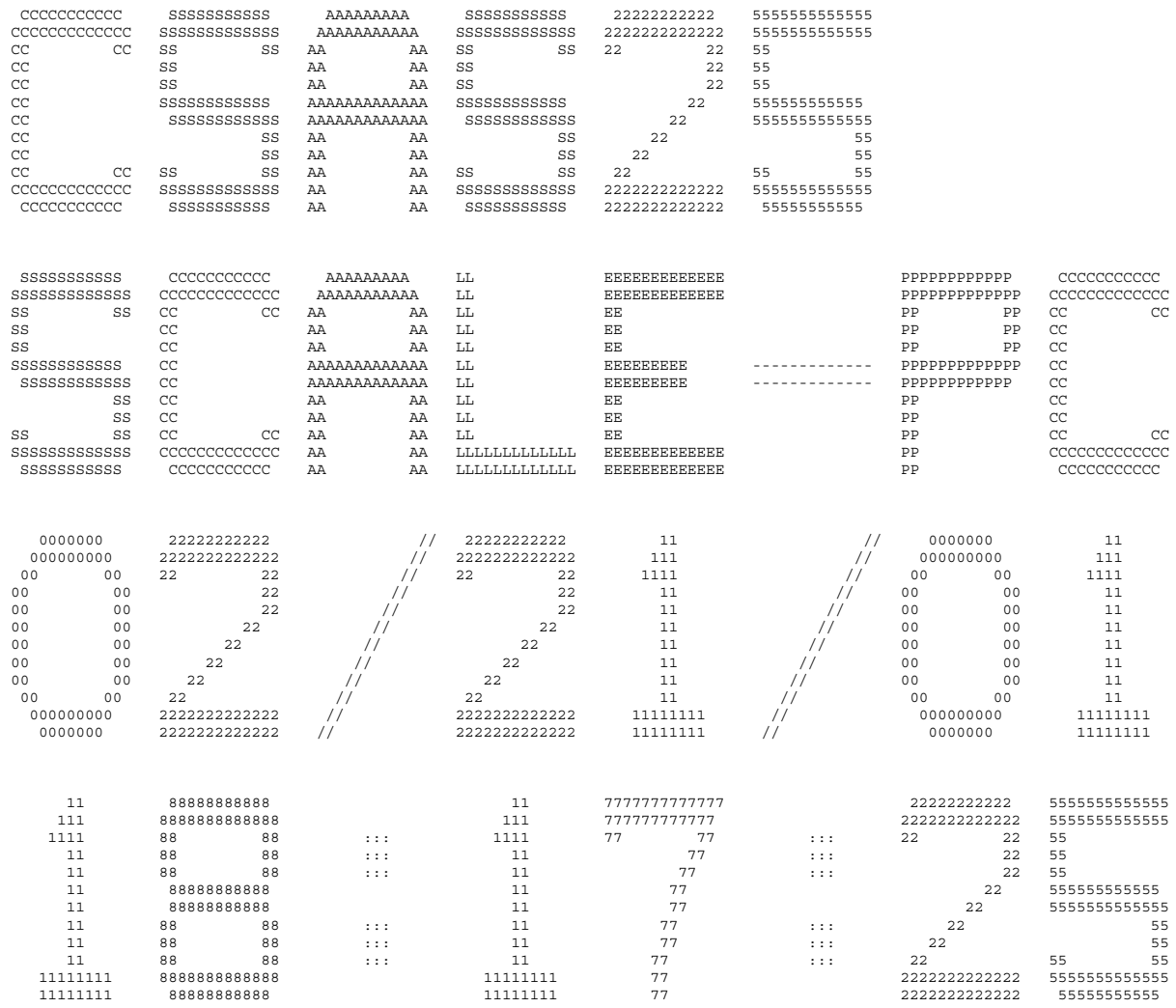

```
  SSSSSSSSSS     CCCCCCCCCC      AAAAAAAA     LL             EEEEEEEEEEEE                 PPPPPPPPPPP     CCCCCCCCCC
 SSSSSSSSSSSS   CCCCCCCCCCCC    AAAAAAAAAA    LL             EEEEEEEEEEEE                 PPPPPPPPPPPP   CCCCCCCCCCCC
 SS          SS CC          CC  AA          AA  LL             EE                           PP         PP  CC          CC
 SS             CC              AA          AA  LL             EE                           PP         PP  CC
 SS             CC              AA          AA  LL             EE                           PP         PP  CC
 SSSSSSSSSSSS   CC              AAAAAAAAAAAAAA  LL             EEEEEEEEE       -------------PPPPPPPPPPPP  CC
  SSSSSSSSSSSS  CC              AAAAAAAAAAAAAA  LL             EEEEEEEEE       -------------PPPPPPPPPPP   CC
           SS   CC              AA          AA  LL             EE                           PP             CC
           SS   CC              AA          AA  LL             EE                           PP             CC
 SS        SS   CC          CC  AA          AA  LL             EE                           PP             CC          CC
 SSSSSSSSSSSS   CCCCCCCCCCCC    AA          AA  LLLLLLLLLLLL   EEEEEEEEEEEE                 PP             CCCCCCCCCCCC
  SSSSSSSSSS     CCCCCCCCCC     AA          AA  LLLLLLLLLLLL   EEEEEEEEEEEE                 PP              CCCCCCCCCC
```

```
*******************************************************************************
*******************************************************************************
*******************************************************************************
*****                                                                     *****
*****                  PROGRAM VERIFICATION INFORMATION                   *****
*****                                                                     *****
*****                CODE SYSTEM:  SCALE-PC VERSION:  4.3                 *****
*****                                                                     *****
*******************************************************************************
*******************************************************************************
*****                                                                     *****
*****                                                                     *****
*****              PROGRAM:  CSAS                                         *****
*****                                                                     *****
*****        CREATION DATE:  03/08/96                                     *****
*****                                                                     *****
*****              VOLUME:   ENG                                          *****
*****                                                                     *****
*****              LIBRARY:  G:\SCALE43\WIN_NT\EXE                        *****
*****                                                                     *****
*****                                                                     *****
*****    THIS IS NOT A SCALE-PC CONFIGURATION CONTROLLED CODE             *****
*****                                                                     *****
*****              JOBNAME:  SCALE-PC                                     *****
*****                                                                     *****
*****    DATE OF EXECUTION:  02/21/01                                     *****
*****                                                                     *****
*****    TIME OF EXECUTION:  18:17:25                                     *****
*****                                                                     *****
*****                                                                     *****
*******************************************************************************
*******************************************************************************
*******************************************************************************
```

```
'Fuel Tube Thick - Nominal  Fuel Tube OD - Nominal  Fuel Tube Height - Nominal

'Fuel Base  Plate - Nominal  Fuel Plate Diameter - Nominal  Fuel Plate Thickness

'Fuel Plate Clad Thickness - Min  Active Fuel Length - Min  Fuel Element Height

'U235 Fuel Mass - Max  Uranium Weight Fraction - Max  Cylinder Pitch - Outer_Fix

'Material Description for LWT Analysis - DIDO HEU Fuel

'Fuel Tube Thick - Nominal  Fuel Tube OD - Nominal  Fuel Tube Height - Nominal

'Fuel Base  Plate - Nominal  Fuel Plate Diameter - Nominal  Fuel Plate Thickness

'Fuel Plate Clad Thickness - Min  Active Fuel Length - Min  Fuel Element Height

'U235 Fuel Mass - Max  Uranium Weight Fraction - Max  Cylinder Pitch - Outer_Fix

'Material Description for LWT Analysis - DIDO HEU Fuel
    LWT WITH LOOSE DIDO HEU FUEL, ACCIDENT CONDITION, RADIAL SHIFT PATTERN - CENTERE


    **** PROBLEM PARAMETERS ****

    LIB 27GROUPNDF4  LIBRARY
    MXX            9 MIXTURES
    MSC           11 COMPOSITION SPECIFICATIONS
    IZM            3 MATERIAL ZONES
    GE  LATTICECELL  GEOMETRY
    MORE           0 0/1 DO NOT READ/READ OPTIONAL PARAMETER DATA
    MSLN           0 FUEL SOLUTIONS


    **** PROBLEM COMPOSITION DESCRIPTION ****

    SC  URANIUM      STANDARD COMPOSITION
    MX             1 MIXTURE NO.
    VF        1.0000 VOLUME FRACTION
    ROTH      0.5477 SPECIFIED DENSITY
    NEL            1 NO. ELEMENTS
    ICP            1 0/1 MIXTURE/COMPOUND
    TEMP       293.0 DEG KELVIN
               92000      1.00 ATOM/MOLECULE
                             92235    94.000 WT%
                             92238     6.000 WT%
    END

    SC  AL           STANDARD COMPOSITION
    MX             1 MIXTURE NO.
    VF        1.0000 VOLUME FRACTION
    ROTH      1.7930 SPECIFIED DENSITY
    NEL            1 NO. ELEMENTS
    ICP            1 0/1 MIXTURE/COMPOUND
    TEMP       293.0 DEG KELVIN
               13027      1.00 ATOM/MOLECULE
    END

    SC  AL           STANDARD COMPOSITION
    MX             2 MIXTURE NO.
    VF        1.0000 VOLUME FRACTION
    ROTH      2.7020 THEORETICAL DENSITY
    NEL            1 NO. ELEMENTS
    ICP            1 0/1 MIXTURE/COMPOUND
    TEMP       293.0 DEG KELVIN
               13027      1.00 ATOM/MOLECULE
    END

    SC  H2O          STANDARD COMPOSITION
    MX             3 MIXTURE NO.
    VF        1.0000 VOLUME FRACTION
    ROTH      0.9998 SPECIFIED DENSITY
    NEL            2 NO. ELEMENTS
    ICP            1 0/1 MIXTURE/COMPOUND
    TEMP       293.0 DEG KELVIN
                1001      2.00 ATOMS/MOLECULE
                8016      1.00 ATOM/MOLECULE
    END

    SC  ARBMGLC      STANDARD COMPOSITION
    MX             4 MIXTURE NO.
    VF        0.5840 VOLUME FRACTION
    ROTH      0.9437 SPECIFIED DENSITY
    NEL            3 NO. ELEMENTS
    ICP            1 0/1 MIXTURE/COMPOUND
                6012      2.00 ATOMS/MOLECULE
                1001      6.00 ATOMS/MOLECULE
                8016      2.00 ATOMS/MOLECULE
    END

    SC  H2O          STANDARD COMPOSITION
    MX             4 MIXTURE NO.
    VF        0.4160 VOLUME FRACTION
    ROTH      0.9982 THEORETICAL DENSITY
    NEL            2 NO. ELEMENTS
```

```
ICP            1 0/1 MIXTURE/COMPOUND
TEMP       293.0 DEG KELVIN
            1001      2.00 ATOMS/MOLECULE
            8016      1.00 ATOM/MOLECULE
END

SC  PB           STANDARD COMPOSITION
MX             5 MIXTURE NO.
VF        1.0000 VOLUME FRACTION
ROTH     11.3440 THEORETICAL DENSITY
NEL            1 NO. ELEMENTS
ICP            1 0/1 MIXTURE/COMPOUND
TEMP       293.0 DEG KELVIN
            82000      1.00 ATOM/MOLECULE
END

SC  SS304        STANDARD COMPOSITION
MX             6 MIXTURE NO.
VF        1.0000 VOLUME FRACTION
ROTH      7.9200 THEORETICAL DENSITY
NEL            4 NO. ELEMENTS
ICP            0 0/1 MIXTURE/COMPOUND
TEMP       293.0 DEG KELVIN
            24304    19.000 WT%
            25055     2.000 WT%
            26304    69.500 WT%
            28304     9.500 WT%
END

SC  AL           STANDARD COMPOSITION
MX             7 MIXTURE NO.
VF        1.0000 VOLUME FRACTION
ROTH      2.7020 THEORETICAL DENSITY
NEL            1 NO. ELEMENTS
ICP            1 0/1 MIXTURE/COMPOUND
TEMP       293.0 DEG KELVIN
            13027      1.00 ATOM/MOLECULE
END

SC  SS304        STANDARD COMPOSITION
MX             8 MIXTURE NO.
VF        1.0000 VOLUME FRACTION
ROTH      7.9200 THEORETICAL DENSITY
NEL            4 NO. ELEMENTS
ICP            0 0/1 MIXTURE/COMPOUND
TEMP       293.0 DEG KELVIN
            24304    19.000 WT%
            25055     2.000 WT%
            26304    69.500 WT%
            28304     9.500 WT%
END

SC  H2O          STANDARD COMPOSITION
MX             9 MIXTURE NO.
VF        1.0000 VOLUME FRACTION
ROTH      0.0001 SPECIFIED DENSITY
NEL            2 NO. ELEMENTS
ICP            1 0/1 MIXTURE/COMPOUND
TEMP       293.0 DEG KELVIN
            1001      2.00 ATOMS/MOLECULE
            8016      1.00 ATOM/MOLECULE
END


**** PROBLEM GEOMETRY ****

CTP SYMMSLABCELL CELL TYPE
PITCH     0.9800 CM CENTER TO CENTER SPACING
FUELOD    0.0650 CM FUEL DIAMETER OR SLAB THICKNESS
MFUEL          1 MIXTURE NO. OF FUEL
MMOD           3 MIXTURE NO. OF MODERATOR
CLADOD    0.1300 CM CLAD OUTER DIAMETER
MCLAD          2 MIXTURE NO. OF CLAD


ZONE SPECIFICATIONS FOR LATTICECELL GEOMETRY

               ZONE  1 IS FUEL
               ZONE  2 IS CLAD
               ZONE  3 IS MOD
```

```
*****************************************************************************************************************
***                                                                                                           ***
***                            LWT WITH LOOSE DIDO HEU FUEL, ACCIDENT CONDITION, RADIAL SHIFT PATTERN - CENTERE***
***                                                                                                           ***
*****************************************************************************************************************
*****************************************************************************************************************
***                                                                                                           ***
***                               ********** DATA LIBRARY INFORMATION **********                             ***
***                                                                                                           ***
***          UNIT                                                VOLUME                                       ***
***         NUMBER               DATA SET NAME                   NAME        UNIT FUNCTION                    ***
***         ------               -------------                   ----        -------------                    ***
***                                                                                                           ***
***           89     G:\scale43\DATALIB\FT89F001                              STANDARD COMPOSITION LIBRARY     ***
***                                                                                                           ***
***           82     G:\scale43\DATALIB\FT82F001                              CROSS SECTION LIBRARY            ***
***                                                                                                           ***
***           11     T:\PROJECTS\sts-proj\DIDO\14110-~1\v1.8\HEU\             SHORT CROSS SECTION LIBRARY      ***
***                                                                                                           ***
***           90     T:\PROJECTS\sts-proj\DIDO\14110-~1\v1.8\HEU\             INPUT DATA DIRECT ACCESS         ***
***                                                                                                           ***
*****************************************************************************************************************
*****************************************************************************************************************
***                                                                                                           ***
***                                                                                                           ***
***                                    STANDARD COMPOSITION LIBRARY DATA                                      ***
***                                    ---------------------------------                                      ***
***                                                                                                           ***
***            UNIT NUMBER  :  89                                                                             ***
***                                                                                                           ***
***            DATASET NAME :  G:\scale43\DATALIB\FT89F001                                                    ***
***                                                                                                           ***
***            LIBRARY TITLE:  SCALE-4 STANDARD COMPOSITION LIBRARY                                           ***
***                            637 STANDARD COMPOSITIONS, 490 NUCLIDES                                        ***
***                            90 ELEMENTS WITH VARIABLE ISOTOPIC DISTRBUTIONS.                               ***
***                                                                                                           ***
***            CREATION DATE:   6/30/95                                                                       ***
***                                                                                                           ***
***                                                                                                           ***
***                                                                                                           ***
***                                       CROSS SECTION LIBRARY DATA                                          ***
***                                      ---------------------------                                          ***
***                                                                                                           ***
***            UNIT NUMBER  :  82                                                                             ***
***                                                                                                           ***
***            DATASET NAME :  G:\scale43\DATALIB\FT82F001                                                    ***
***                                                                                                           ***
***            LIBRARY TITLE:  SCALE 4.2 - 27 GROUP NEUTRON GROUP LIBRARY                                     ***
***                               BASED ON ENDF-B VERSION 4 DATA                                              ***
***                                  COMPILED FOR NRC     1/27/89                                             ***
***                                     LAST UPDATED                                    08/12/94  ***
***                                        L.M.PETRIE   -   ORNL                                              ***
***                                                                                                           ***
***                                                                                                           ***
***                                                                                                           ***
***                                                                                                           ***
*****************************************************************************************************************
*****************************************************************************************************************

                        ........    0 IO'S WERE USED BEFORE READING KENO V DATA    ........

                        ........    0 IO'S WERE USED READING THE KENO V PARAMETER DATA    ........

'Fuel Annulus    1

'Fuel Annulus    2

'Fuel Annulus    3

'Fuel Annulus    4

'Clad Axial End Piece    1

'Clad Axial End Piece    2

'Clad Axial End Piece    3

'Clad Axial End Piece    4


                       *************** DATA READING COMPLETED ***************

                        ........    0 IO'S WERE USED PREPARING THE KENO V INPUT DATA    ........

                        ........    0 IO'S WERE USED LOADING THE KENO V DATA    ........

                        ........    0 IO'S WERE USED LOADING THE DATA    ........

                        ........    0 IO'S WERE USED CHECKING THE KENO V GEOMETRY DATA    ........
                        *****  RESTART DATA HAS BEEN WRITTEN ON UNIT 95  *****

                        ........    0 IO'S WERE USED WRITING THE KENO V - CSAS DATA    ........

                        ........    0 IO'S WERE USED PROCESSING CSAS INPUT DATA    ........
```

```
CONTROL MODULE CSAS25   IS COMPLETE.
```

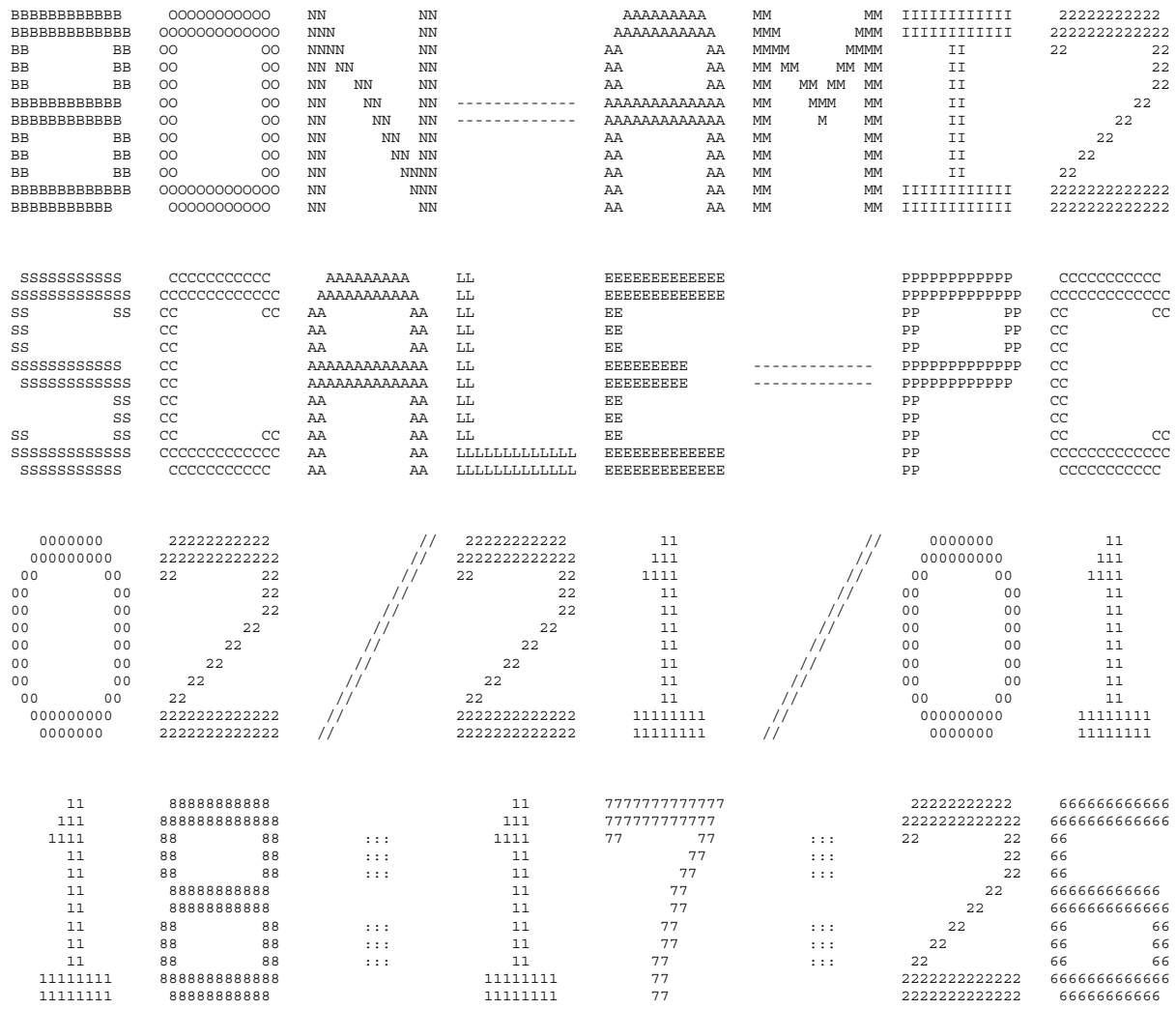
NAC-LWT
NAC-MPC
NAC-UMS
NAC-STC
NAC-I28
NAC-MAGNUM

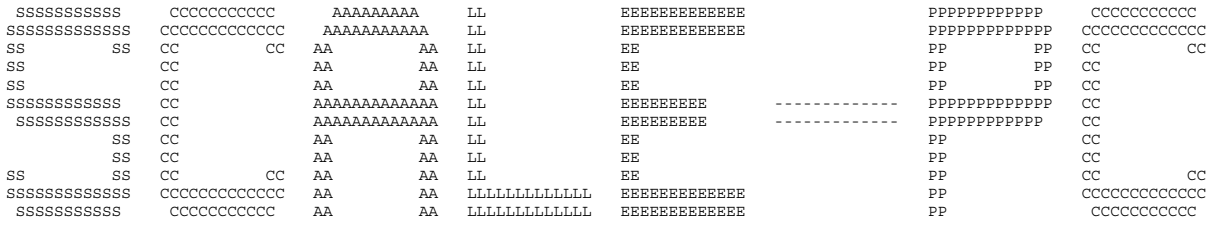


```
*******************************************************************************
*******************************************************************************
*******************************************************************************
*****                                                                     *****
*****                  PROGRAM VERIFICATION INFORMATION                   *****
*****                                                                     *****
*****                CODE SYSTEM:  SCALE-PC VERSION:  4.3                 *****
*****                                                                     *****
*******************************************************************************
*******************************************************************************
*****                                                                     *****
*****                                                                     *****
*****              PROGRAM:  O0O008                                       *****
*****                                                                     *****
*****        CREATION DATE:  09/15/95                                     *****
*****                                                                     *****
*****              VOLUME:   ENG                                          *****
*****                                                                     *****
*****              LIBRARY:  G:\SCALE43\WIN_NT\EXE                        *****
*****                                                                     *****
*****                                                                     *****
*****    THIS IS NOT A SCALE-PC CONFIGURATION CONTROLLED CODE             *****
*****                                                                     *****
*****              JOBNAME:  SCALE-PC                                     *****
*****                                                                     *****
*****    DATE OF EXECUTION:  02/21/01                                     *****
*****                                                                     *****
*****    TIME OF EXECUTION:  18:17:26                                     *****
*****                                                                     *****
*****                                                                     *****
*******************************************************************************
*******************************************************************************
*******************************************************************************
```

```
-1Q ARRAY HAS      1 ENTRIES.

 0Q ARRAY HAS      4 ENTRIES.

 1Q ARRAY HAS      6 ENTRIES.

 2Q ARRAY HAS      2 ENTRIES.
```

```
LOGICAL ASSIGNMENTS

MASTER LIBRARY   11
WORKING LIBRARY   0
SCRATCH FILE     18
NEW LIBRARY       1

P R O B L E M   D E S C R I P T I O N

IGR--GEOMETRY (0/1/2/3--INF MED/SLAB/CYL/SPHERE               1

IZM--NUMBER OF ZONES OR MATERIAL REGIONS                      9

MS--MIXING TABLE LENGTH                                      21

IBL--SHIELDED CROSS SECTION EDIT OPTION (0/1--NO/YES)         0

IBR--BONDARENKO FACTOR EDIT OPTION (0/1--NO/YES)              0

ISSOPT--DANCOFF FACTOR OPTION                                 0

CONVERGENCE CRITERION    1.00000E-03

GEOMETRY CORRECTION FACTOR FOR WIGNER RATIONAL APPROXIMATION  1.000E+00

        3Q ARRAY HAS     21 ENTRIES.

        4Q ARRAY HAS     21 ENTRIES.

        5Q ARRAY HAS     21 ENTRIES.

        6Q ARRAY HAS      9 ENTRIES.

        7Q ARRAY HAS      9 ENTRIES.

        8Q ARRAY HAS      9 ENTRIES.

        9Q ARRAY HAS      9 ENTRIES.

       10Q ARRAY HAS     21 ENTRIES.

       11Q ARRAY HAS      9 ENTRIES.

M I X I N G   T A B L E

ENTRY   MIXTURE   ISOTOPE   NUMBER DENSITY   NEW IDENTIFIER
   1       1        92235     1.31908E-03          1092235
   2       1        92238     8.31332E-05          1092238
   3       1        13027     4.00184E-02          1013027
   4       2        13027     6.03066E-02          2013027
   5       7        13027     6.03066E-02          7013027
   6       3         1001     6.68762E-02          3001001
   7       4         1001     5.98801E-02          4001001
   8       9         1001     6.68896E-06          9001001
   9       3         8016     3.34381E-02          3008016
  10       4         8016     2.45894E-02          4008016
  11       9         8016     3.34448E-06          9008016
  12       4         6012     1.07014E-02          4006012
  13       5        82000     3.29690E-02          5082000
  14       6        24304     1.74286E-02          6024304
  15       8        24304     1.74286E-02          8024304
  16       6        25055     1.73633E-03          6025055
  17       8        25055     1.73633E-03          8025055
  18       6        26304     5.93579E-02          6026304
  19       8        26304     5.93579E-02          8026304
  20       6        28304     7.72070E-03          6028304
  21       8        28304     7.72070E-03          8028304

GEOMETRY AND MATERIAL DESCRIPTION

ZONE   MIXTURE   OUTER DIMENSION   TEMPERATURE       EXTRA XS   TYPE (0/1--FUEL/MOD)
   1       1          3.25000E-02    2.93000E+02    4.53946E+00             0
   2       2          6.50000E-02    2.93000E+02    0.00000E+00             0
   3       3          4.90000E-01    2.93000E+02    0.00000E+00             0
   4       4          5.49000E+00    2.93000E+02    0.00000E+00             0
   5       5          1.04900E+01    2.93000E+02    0.00000E+00             0
   6       6          1.54900E+01    2.93000E+02    0.00000E+00             0
   7       7          2.04900E+01    2.93000E+02    0.00000E+00             0
   8       8          2.54900E+01    2.93000E+02    0.00000E+00             0
   9       9          3.04900E+01    2.93000E+02    0.00000E+00             0
     4087 LOCATIONS OF   100000 AVAILABLE ARE REQUIRED TO MAKE A NEW MASTER CONTAINING THE SELF-SHIELDED VALUES

NO NUCLIDES IN YOUR PROBLEM HAVE BONDARENKO FACTOR DATA**BONAMI WILL COPY FROM LOGICAL 11 TO LOGICAL  1

COPY      1001   HYDROGEN        FROM LOG 11 TO LOG 18    BONDARENKO TRIGGER 0

COPY      1001   HYDROGEN        FROM LOG 18 TO LOG  1    BONDARENKO TRIGGER 0

COPY      1001   HYDROGEN        FROM LOG 18 TO LOG  1    BONDARENKO TRIGGER 0

COPY      1001   HYDROGEN        FROM LOG 18 TO LOG  1    BONDARENKO TRIGGER 0

COPY      6012   CARBON-12       FROM LOG 11 TO LOG  1    BONDARENKO TRIGGER 0

COPY      8016   OXYGEN-16       FROM LOG 11 TO LOG 18    BONDARENKO TRIGGER 0
```

```
COPY      8016   OXYGEN-16       FROM LOG 18 TO LOG  1    BONDARENKO TRIGGER 0
COPY      8016   OXYGEN-16       FROM LOG 18 TO LOG  1    BONDARENKO TRIGGER 0
COPY      8016   OXYGEN-16       FROM LOG 18 TO LOG  1    BONDARENKO TRIGGER 0
COPY     13027  AL-27 1193 218 G FROM LOG 11 TO LOG 18    BONDARENKO TRIGGER 0
COPY     13027  AL-27 1193 218 G FROM LOG 18 TO LOG  1    BONDARENKO TRIGGER 0
COPY     13027  AL-27 1193 218 G FROM LOG 18 TO LOG  1    BONDARENKO TRIGGER 0
COPY     13027  AL-27 1193 218 G FROM LOG 18 TO LOG  1    BONDARENKO TRIGGER 0
COPY     24304  CR 1191 WT SS-30 FROM LOG 11 TO LOG 18    BONDARENKO TRIGGER 0
COPY     24304  CR 1191 WT SS-30 FROM LOG 18 TO LOG  1    BONDARENKO TRIGGER 0
COPY     24304  CR 1191 WT SS-30 FROM LOG 18 TO LOG  1    BONDARENKO TRIGGER 0
COPY     25055   MANGANESE-55    FROM LOG 11 TO LOG 18    BONDARENKO TRIGGER 0
COPY     25055   MANGANESE-55    FROM LOG 18 TO LOG  1    BONDARENKO TRIGGER 0
COPY     25055   MANGANESE-55    FROM LOG 18 TO LOG  1    BONDARENKO TRIGGER 0
COPY     26304  FE 1192 WT SS-30 FROM LOG 11 TO LOG 18    BONDARENKO TRIGGER 0
COPY     26304  FE 1192 WT SS-30 FROM LOG 18 TO LOG  1    BONDARENKO TRIGGER 0
COPY     26304  FE 1192 WT SS-30 FROM LOG 18 TO LOG  1    BONDARENKO TRIGGER 0
COPY     28304  NI 1190 WT SS-30 FROM LOG 11 TO LOG 18    BONDARENKO TRIGGER 0
COPY     28304  NI 1190 WT SS-30 FROM LOG 18 TO LOG  1    BONDARENKO TRIGGER 0
COPY     28304  NI 1190 WT SS-30 FROM LOG 18 TO LOG  1    BONDARENKO TRIGGER 0
COPY     82000  PB   1288 218NGP FROM LOG 11 TO LOG  1    BONDARENKO TRIGGER 0
COPY     92235   URANIUM-235     FROM LOG 11 TO LOG  1    BONDARENKO TRIGGER 0
COPY     92238   URANIUM-238     FROM LOG 11 TO LOG  1    BONDARENKO TRIGGER 0
```

```
SCALE 4.2 - 27 GROUP NEUTRON GROUP LIBRARY
   BASED ON ENDF-B VERSION 4 DATA
      COMPILED FOR NRC     1/27/89
         LAST UPDATED                                                08/12/94
            L.M.PETRIE   -   ORNL
    TAPE ID                          4321          NUMBER OF NUCLIDES                    21
    NUMBER OF NEUTRON GROUPS           27          NUMBER OF GAMMA GROUPS                 0
    FIRST THERMAL GROUP                15          LOGICAL UNIT                           1
                              TABLE OF CONTENTS
   HYDROGEN       ENDF/B-IV MAT 1269/THRM1002             UPDATED 08/12/94        ID   3001001
   HYDROGEN       ENDF/B-IV MAT 1269/THRM1002             UPDATED 08/12/94        ID   4001001
   HYDROGEN       ENDF/B-IV MAT 1269/THRM1002             UPDATED 08/12/94        ID   9001001
   CARBON-12      ENDF/B-IV MAT 1274/THRM1065             UPDATED 08/12/94        ID   4006012
   OXYGEN-16      ENDF/B-IV MAT 1276                      UPDATED 08/12/94        ID   3008016
   OXYGEN-16      ENDF/B-IV MAT 1276                      UPDATED 08/12/94        ID   4008016
   OXYGEN-16      ENDF/B-IV MAT 1276                      UPDATED 08/12/94        ID   9008016
  AL-27 1193 218 GP 040375(5)                             UPDATED 08/12/94        ID   1013027
  AL-27 1193 218 GP 040375(5)                             UPDATED 08/12/94        ID   2013027
  AL-27 1193 218 GP 040375(5)                             UPDATED 08/12/94        ID   7013027
  CR 1191 WT SS-304(1/EST) P-3 293K SP=5+4(42375)'        UPDATED 08/12/94        ID   6024304
  CR 1191 WT SS-304(1/EST) P-3 293K SP=5+4(42375)'        UPDATED 08/12/94        ID   8024304
   MANGANESE-55   ENDF/B-IV MAT 1197                      UPDATED 08/12/94        ID   6025055
   MANGANESE-55   ENDF/B-IV MAT 1197                      UPDATED 08/12/94        ID   8025055
  FE 1192 WT SS-304(1/EST) P-3 293K SP=5+4(42375)'        UPDATED 08/12/94        ID   6026304
  FE 1192 WT SS-304(1/EST) P-3 293K SP=5+4(42375)'        UPDATED 08/12/94        ID   8026304
  NI 1190 WT SS-304(1/EST) P-3 293K SP=5+4(42375)'        UPDATED 08/12/94        ID   6028304
  NI 1190 WT SS-304(1/EST) P-3 293K SP=5+4(42375)'        UPDATED 08/12/94        ID   8028304
  PB   1288 218NGP 042375 P-3 293K                        UPDATED 08/12/94        ID   5082000
   URANIUM-235    ENDF/B-IV MAT 1261                      UPDATED 08/12/94        ID   1092235
   URANIUM-238    ENDF/B-IV MAT 1262                      UPDATED 08/12/94        ID   1092238

    TAPE COPY USED      0 I/O'S, AND TOOK    0.17 SECONDS
```

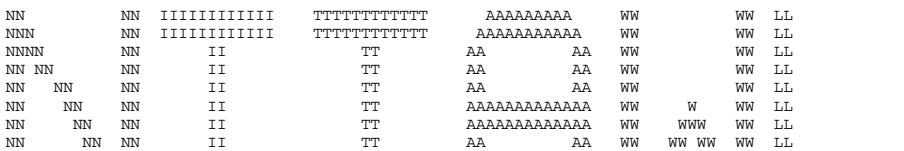
NN NN IIIIIIIIIIII TTTTTTTTTTTT AAAAAAAAA WW WW LL
NNN NN IIIIIIIIIIII TTTTTTTTTTTT AAAAAAAAAAA WW WW LL
NNNN NN II TT AA AA WW WW LL
NN NN NN II TT AA AA WW WW LL
NN NN NN II TT AA AA WW WW LL
NN NN NN II TT AAAAAAAAAAAAA WW W WW LL
NN NN NN II TT AAAAAAAAAAAAA WW WWW WW LL
NN NN NN II TT AA AA WW WW WW WW LL
NN NN NN II TT AA AA WW WW WW LL
NN NNNN II TT AA AA WWWW WWWW LL
NN NNN IIIIIIIIIIII TT AA AA WWW WWW LLLLLLLLLLLL
NN NN IIIIIIIIIIII TT AA AA WW WW LLLLLLLLLLLL

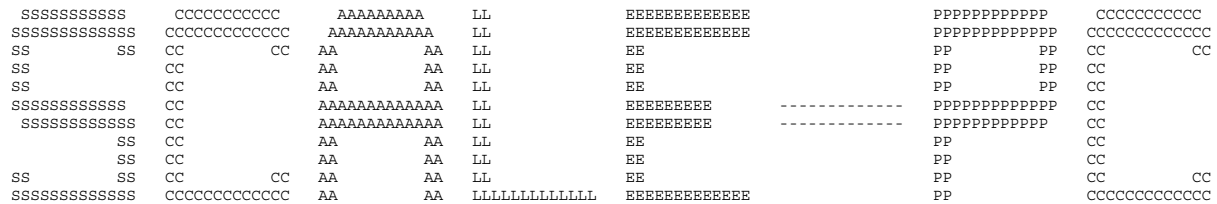
SSSSSSSSSS CCCCCCCCCC AAAAAAAA LL EEEEEEEEEEEE PPPPPPPPPP CCCCCCCCCC
SSSSSSSSSSS CCCCCCCCCCCC AAAAAAAAAA LL EEEEEEEEEEEE PPPPPPPPPPP CCCCCCCCCCCC
SS SS CC CC AA AA LL EE PP PP CC CC
SS CC AA AA LL EE PP PP CC
SS CC AA AA LL EE PP PP CC
SSSSSSSSSSS CC AAAAAAAAAAAA LL EEEEEEEE ---------- PPPPPPPPPPP CC
SSSSSSSSSS CC AAAAAAAAAAAA LL EEEEEEEE ---------- PPPPPPPPPP CC
SS CC AA AA LL EE PP CC
SS CC AA AA LL EE PP CC
SS SS CC CC AA AA LL EE PP CC CC
SSSSSSSSSSS CCCCCCCCCCCC AA AA LLLLLLLLLLL EEEEEEEEEEE PP CCCCCCCCCCC
SSSSSSSSS CCCCCCCCC AA AA LLLLLLLLLLL EEEEEEEEEEE PP CCCCCCCCC

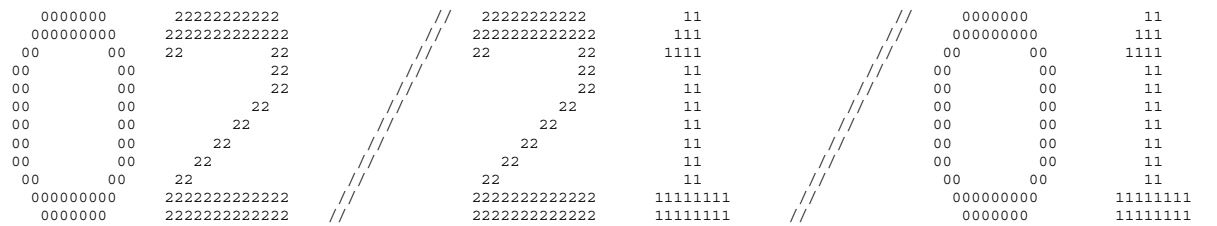
0000000 22222222222 // 22222222222 11 // 0000000 11
000000000 2222222222222 // 2222222222222 111 // 000000000 111
00 00 22 22 // 22 22 1111 // 00 00 1111
00 00 22 // 22 11 // 00 00 11
00 00 22 // 22 11 // 00 00 11
00 00 22 // 22 11 // 00 00 11
00 00 22 // 22 11 // 00 00 11
00 00 22 // 22 11 // 00 00 11
00 00 22 // 22 11 // 00 00 11
00 00 22 // 22 11 // 00 00 11
000000000 2222222222222 // 2222222222222 11111111 // 000000000 11111111
0000000 2222222222222 // 2222222222222 11111111 // 0000000 11111111

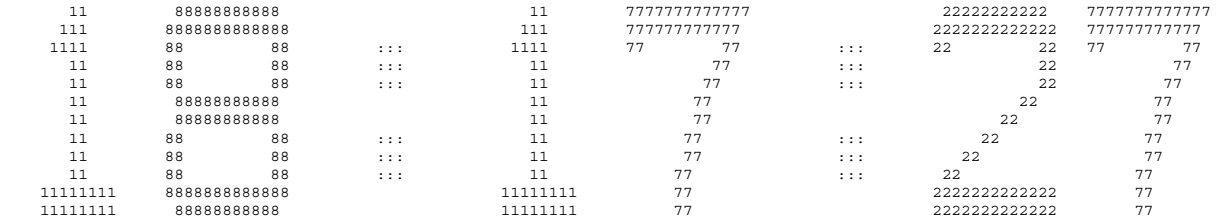
11 88888888888 11 7777777777777 22222222222 7777777777777
111 8888888888888 111 777777777777 2222222222222 777777777777
1111 88 88 ::: 1111 77 77 ::: 22 22 77 77
11 88 88 ::: 11 77 ::: 22 77
11 88 88 ::: 11 77 ::: 22 77
11 88888888888 11 77 22 77
11 88888888888 11 77 22 77
11 88 88 ::: 11 77 ::: 22 77
11 88 88 ::: 11 77 ::: 22 77
11 88 88 ::: 11 77 ::: 22 77
11111111 8888888888888 11111111 77 2222222222222 77
11111111 88888888888 11111111 77 2222222222222 77

```
  SSSSSSSSSS     CCCCCCCCCC      AAAAAAAA     LL              EEEEEEEEEEEE                  PPPPPPPPPPP     CCCCCCCCCC
 SSSSSSSSSSSS   CCCCCCCCCCCC    AAAAAAAAAA    LL              EEEEEEEEEEEE                  PPPPPPPPPPPP   CCCCCCCCCCCC
 SS          SS CC          CC  AA          AA  LL              EE                            PP          PP  CC          CC
 SS             CC              AA          AA  LL              EE                            PP          PP  CC
 SS             CC              AA          AA  LL              EE                            PP          PP  CC
 SSSSSSSSSSSS   CC              AAAAAAAAAAAAAA  LL              EEEEEEEEE       -------------  PPPPPPPPPPPP  CC
  SSSSSSSSSSSS  CC              AAAAAAAAAAAAAA  LL              EEEEEEEEE       -------------  PPPPPPPPPPP   CC
           SS   CC              AA          AA  LL              EE                            PP             CC
           SS   CC              AA          AA  LL              EE                            PP             CC
 SS        SS   CC          CC  AA          AA  LL              EE                            PP             CC          CC
 SSSSSSSSSSSS   CCCCCCCCCCCC    AA          AA  LLLLLLLLLLLL    EEEEEEEEEEEE                  PP             CCCCCCCCCCCC
  SSSSSSSSSS     CCCCCCCCCC     AA          AA  LLLLLLLLLLLL    EEEEEEEEEEEE                  PP              CCCCCCCCCC
```

```
*******************************************************************************
*******************************************************************************
*******************************************************************************
*****                                                                     *****
*****                  PROGRAM VERIFICATION INFORMATION                   *****
*****                                                                     *****
*****                CODE SYSTEM:  SCALE-PC VERSION:  4.3                 *****
*****                                                                     *****
*******************************************************************************
*******************************************************************************
*****                                                                     *****
*****                                                                     *****
*****              PROGRAM:  O0O002                                       *****
*****                                                                     *****
*****        CREATION DATE:  09/28/95                                     *****
*****                                                                     *****
*****              VOLUME:   ENG                                          *****
*****                                                                     *****
*****              LIBRARY:  G:\SCALE43\WIN_NT\EXE                        *****
*****                                                                     *****
*****                                                                     *****
*****    THIS IS NOT A SCALE-PC CONFIGURATION CONTROLLED CODE             *****
*****                                                                     *****
*****              JOBNAME:  SCALE-PC                                     *****
*****                                                                     *****
*****    DATE OF EXECUTION:  02/21/01                                     *****
*****                                                                     *****
*****    TIME OF EXECUTION:  18:17:27                                     *****
*****                                                                     *****
*****                                                                     *****
*******************************************************************************
*******************************************************************************
*******************************************************************************
```

```
       -1Q ARRAY HAS      1 ENTRIES.

        0Q ARRAY HAS      9 ENTRIES.

        1Q ARRAY HAS     12 ENTRIES.

SELECT 21 NUCLIDES FROM THE MASTER  LIBRARY ON LOGICAL  1
        0 NUCLIDES FROM THE WORKING LIBRARY ON LOGICAL  2
        0 NUCLIDES FROM THE WORKING LIBRARY ON LOGICAL  3
          TO CREATE THE NEW WORKING LIBRARY ON LOGICAL  4

        4 RESONANCE CALCULATIONS HAVE BEEN REQUESTED
       -1 OUTPUT OPTION FOR AMPX FORMATTED CROSS SECTION DATA
     2001 MAXIMUM NUMBER OF RESONANCE MESH INTERVALS
        2 ORDER OF RESONANCE LEVEL PROCESSING

THE STORAGE ALLOCATED FOR THIS CASE IS    100000 WORDS

        2Q ARRAY HAS     21 ENTRIES.

        3Q ARRAY HAS     60 ENTRIES.

        4Q ARRAY HAS     21 ENTRIES.

 GENERAL INFORMATION CONCERNING CROSS SECTION LIBRARY
   TAPE IDENTIFICATION NUMBER               4321
   NUMBER OF NUCLIDES ON TAPE                 21
   NUMBER OF NEUTRON ENERGY GROUPS            27
   FIRST THERMAL NEUTRON ENERGY GROUP         15
   NUMBER OF GAMMA ENERGY GROUPS               0

   DIRECT ACCESS UNIT NUMBER  9 REQUIRES 117 BLOCKS OF LENGTH  1680 WORDS
 XSDRN TAPE   4321
                       SCALE 4.2 - 27 GROUP NEUTRON GROUP LIBRARY
                          BASED ON ENDF-B VERSION 4 DATA
                             COMPILED FOR NRC     1/27/89
                                LAST UPDATED                                                    08/12/94
                                   L.M.PETRIE   -   ORNL

 NUCLIDES FROM XSDRN TAPE
    1     HYDROGEN       ENDF/B-IV MAT 1269/THRM1002            UPDATED 08/12/94     3001001
    2     HYDROGEN       ENDF/B-IV MAT 1269/THRM1002            UPDATED 08/12/94     4001001
    3     HYDROGEN       ENDF/B-IV MAT 1269/THRM1002            UPDATED 08/12/94     9001001
    4     CARBON-12      ENDF/B-IV MAT 1274/THRM1065            UPDATED 08/12/94     4006012
    5     OXYGEN-16      ENDF/B-IV MAT 1276                     UPDATED 08/12/94     3008016
    6     OXYGEN-16      ENDF/B-IV MAT 1276                     UPDATED 08/12/94     4008016
    7     OXYGEN-16      ENDF/B-IV MAT 1276                     UPDATED 08/12/94     9008016
    8    AL-27 1193 218 GP 040375(5)                            UPDATED 08/12/94     1013027
    9    AL-27 1193 218 GP 040375(5)                            UPDATED 08/12/94     2013027
   10    AL-27 1193 218 GP 040375(5)                            UPDATED 08/12/94     7013027
   11    CR 1191 WT SS-304(1/EST) P-3 293K SP=5+4(42375)'       UPDATED 08/12/94     6024304
   12    CR 1191 WT SS-304(1/EST) P-3 293K SP=5+4(42375)'       UPDATED 08/12/94     8024304
   13     MANGANESE-55   ENDF/B-IV MAT 1197                     UPDATED 08/12/94     6025055
   14     MANGANESE-55   ENDF/B-IV MAT 1197                     UPDATED 08/12/94     8025055
   15    FE 1192 WT SS-304(1/EST) P-3 293K SP=5+4(42375)'       UPDATED 08/12/94     6026304
   16    FE 1192 WT SS-304(1/EST) P-3 293K SP=5+4(42375)'       UPDATED 08/12/94     8026304
   17    NI 1190 WT SS-304(1/EST) P-3 293K SP=5+4(42375)'       UPDATED 08/12/94     6028304
   18    NI 1190 WT SS-304(1/EST) P-3 293K SP=5+4(42375)'       UPDATED 08/12/94     8028304
   19    PB   1288 218NGP 042375 P-3 293K                       UPDATED 08/12/94     5082000
   20     URANIUM-235    ENDF/B-IV MAT 1261                     UPDATED 08/12/94     1092235
   21     URANIUM-238    ENDF/B-IV MAT 1262                     UPDATED 08/12/94     1092238

 HYDROGEN       ENDF/B-IV MAT 1269/THRM1002            UPDATED 08/12/94   3001001     TEMPERATURE=   293.00
                                                            PROCESS NUMBER 1007 IS AT TEMPERATURE=   293.00

 HYDROGEN       ENDF/B-IV MAT 1269/THRM1002            UPDATED 08/12/94   4001001     TEMPERATURE=   293.00
                                                            PROCESS NUMBER 1007 IS AT TEMPERATURE=   293.00

 HYDROGEN       ENDF/B-IV MAT 1269/THRM1002            UPDATED 08/12/94   9001001     TEMPERATURE=   293.00
                                                            PROCESS NUMBER 1007 IS AT TEMPERATURE=   293.00

 CARBON-12      ENDF/B-IV MAT 1274/THRM1065            UPDATED 08/12/94   4006012     TEMPERATURE=   293.00
                                                            PROCESS NUMBER 1007 IS AT TEMPERATURE=   293.00

 OXYGEN-16      ENDF/B-IV MAT 1276                     UPDATED 08/12/94   3008016     TEMPERATURE=   293.00
                                                            PROCESS NUMBER 1007 IS AT TEMPERATURE=   293.00

 OXYGEN-16      ENDF/B-IV MAT 1276                     UPDATED 08/12/94   4008016     TEMPERATURE=   293.00
                                                            PROCESS NUMBER 1007 IS AT TEMPERATURE=   293.00

 OXYGEN-16      ENDF/B-IV MAT 1276                     UPDATED 08/12/94   9008016     TEMPERATURE=   293.00
                                                            PROCESS NUMBER 1007 IS AT TEMPERATURE=   293.00

AL-27 1193 218 GP 040375(5)                             UPDATED 08/12/94   1013027     TEMPERATURE=   293.00
                                                            PROCESS NUMBER 1007 IS AT TEMPERATURE=   293.00

AL-27 1193 218 GP 040375(5)                             UPDATED 08/12/94   2013027     TEMPERATURE=   293.00
                                                            PROCESS NUMBER 1007 IS AT TEMPERATURE=   293.00

AL-27 1193 218 GP 040375(5)                             UPDATED 08/12/94   7013027     TEMPERATURE=   293.00
                                                            PROCESS NUMBER 1007 IS AT TEMPERATURE=   293.00

CR 1191 WT SS-304(1/EST) P-3 293K SP=5+4(42375)'        UPDATED 08/12/94   6024304     TEMPERATURE=   293.00
                                                            PROCESS NUMBER 1007 IS AT TEMPERATURE=   293.00
```

```
CR 1191 WT SS-304(1/EST) P-3 293K SP=5+4(42375)'        UPDATED 08/12/94   8024304     TEMPERATURE=   293.00
                                                             PROCESS NUMBER 1007 IS AT TEMPERATURE=   293.00

 MANGANESE-55   ENDF/B-IV MAT 1197                      UPDATED 08/12/94   6025055     TEMPERATURE=   293.00

GEOMETRY HAS BEEN SET TO HOMOGENEOUS AS LBAR IS  0.0000E+00

RESONANCE DATA FOR THIS NUCLIDE

MASS NUMBER (A)          =    54.466               TEMPERATURE(KELVIN)       =   293.000

POTENTIAL SCATTER SIGMA  =     2.590               LUMPED NUCLEAR DENSITY    = 1.7363295E-03

SPIN FACTOR (G)          =    14.448               LUMP DIMENSION (A-BAR)    = 0.0000000E+00

INNER RADIUS             = 0.0000000E+00          DANCOFF CORRECTION (C)    = 0.0000000E+00

THE ABSORBER WILL BE TREATED BY THE NORDHEIM INTEGRAL METHOD.

MASS OF MODERATOR-1    =    55.845               SIGMA(PER ABSORBER ATOM)= 3.4663022E+02

MODERATOR-1 WILL BE TREATED BY THE NORDHEIM INTEGRAL METHOD.

MASS OF MODERATOR-2    =    55.925               SIGMA(PER ABSORBER ATOM)= 1.2557598E+02

MODERATOR-2 WILL BE TREATED BY THE NORDHEIM INTEGRAL METHOD.

THIS RESONANCE MATERIAL WILL BE TREATED AS A 0-DIMENSIONAL OBJECT.

VOLUME FRACTION OF LUMP IN CELL USED TO ACCOUNT FOR SPATIAL SELF-SHIELDING=1.00000

GROUP        RES ABS         RES FISS        RES SCAT
  8      -5.518788E-04    0.000000E+00   -3.944190E-01
  9      -2.797993E-03    0.000000E+00   -2.293471E+00
 10      -3.291452E-01    0.000000E+00   -3.820862E+01
 11      -2.680562E+00    0.000000E+00   -1.159996E+02

EXCESS RESONANCE INTEGRALS

                 RESOLVED

ABSORPTION       3.33719E+00
FISSION          0.00000E+00
                                                        PROCESS NUMBER 1007 IS AT TEMPERATURE=   293.00

 MANGANESE-55   ENDF/B-IV MAT 1197                      UPDATED 08/12/94   8025055     TEMPERATURE=   293.00

GEOMETRY HAS BEEN SET TO HOMOGENEOUS AS LBAR IS  0.0000E+00

RESONANCE DATA FOR THIS NUCLIDE

MASS NUMBER (A)          =    54.466               TEMPERATURE(KELVIN)       =   293.000

POTENTIAL SCATTER SIGMA  =     2.590               LUMPED NUCLEAR DENSITY    = 1.7363295E-03

SPIN FACTOR (G)          =    14.448               LUMP DIMENSION (A-BAR)    = 0.0000000E+00

INNER RADIUS             = 0.0000000E+00          DANCOFF CORRECTION (C)    = 0.0000000E+00

THE ABSORBER WILL BE TREATED BY THE NORDHEIM INTEGRAL METHOD.

MASS OF MODERATOR-1    =    55.845               SIGMA(PER ABSORBER ATOM)= 3.4663022E+02

MODERATOR-1 WILL BE TREATED BY THE NORDHEIM INTEGRAL METHOD.

MASS OF MODERATOR-2    =    55.925               SIGMA(PER ABSORBER ATOM)= 1.2557598E+02

MODERATOR-2 WILL BE TREATED BY THE NORDHEIM INTEGRAL METHOD.

THIS RESONANCE MATERIAL WILL BE TREATED AS A 0-DIMENSIONAL OBJECT.

VOLUME FRACTION OF LUMP IN CELL USED TO ACCOUNT FOR SPATIAL SELF-SHIELDING=1.00000

GROUP        RES ABS         RES FISS        RES SCAT
  8      -5.518788E-04    0.000000E+00   -3.944190E-01
  9      -2.797993E-03    0.000000E+00   -2.293471E+00
 10      -3.291452E-01    0.000000E+00   -3.820862E+01
 11      -2.680562E+00    0.000000E+00   -1.159996E+02

EXCESS RESONANCE INTEGRALS

                 RESOLVED

ABSORPTION       3.33719E+00
FISSION          0.00000E+00
                                                        PROCESS NUMBER 1007 IS AT TEMPERATURE=   293.00

FE 1192 WT SS-304(1/EST) P-3 293K SP=5+4(42375)'        UPDATED 08/12/94   6026304     TEMPERATURE=   293.00
                                                             PROCESS NUMBER 1007 IS AT TEMPERATURE=   293.00

FE 1192 WT SS-304(1/EST) P-3 293K SP=5+4(42375)'        UPDATED 08/12/94   8026304     TEMPERATURE=   293.00
                                                             PROCESS NUMBER 1007 IS AT TEMPERATURE=   293.00

NI 1190 WT SS-304(1/EST) P-3 293K SP=5+4(42375)'        UPDATED 08/12/94   6028304     TEMPERATURE=   293.00
```

```
                                                          PROCESS NUMBER 1007 IS AT TEMPERATURE=   293.00

NI 1190 WT SS-304(1/EST) P-3 293K SP=5+4(42375)'        UPDATED 08/12/94   8028304     TEMPERATURE=   293.00
                                                          PROCESS NUMBER 1007 IS AT TEMPERATURE=   293.00

PB   1288 218NGP 042375 P-3 293K                        UPDATED 08/12/94   5082000     TEMPERATURE=   293.00
                                                          PROCESS NUMBER 1007 IS AT TEMPERATURE=   293.00

 URANIUM-235    ENDF/B-IV MAT 1261                      UPDATED 08/12/94   1092235     TEMPERATURE=   293.00

RESONANCE DATA FOR THIS NUCLIDE

MASS NUMBER (A)          =   233.025               TEMPERATURE(KELVIN)       =   293.000

POTENTIAL SCATTER SIGMA  =    11.500               LUMPED NUCLEAR DENSITY    = 1.3190822E-03

SPIN FACTOR (G)          = 15171.100               LUMP DIMENSION (A-BAR)    = 6.4999998E-02

INNER RADIUS             = 0.0000000E+00           DANCOFF CORRECTION (C)    = 1.5211706E-01

THE ABSORBER WILL BE TREATED BY THE NORDHEIM INTEGRAL METHOD.

MASS OF MODERATOR-1    =    26.982               SIGMA(PER ABSORBER ATOM)= 4.0850834E+01

MODERATOR-1 WILL BE TREATED BY THE NORDHEIM INTEGRAL METHOD.

MASS OF MODERATOR-2    =   238.051               SIGMA(PER ABSORBER ATOM)= 7.7685082E-01

MODERATOR-2 WILL BE TREATED BY THE NORDHEIM INTEGRAL METHOD.

THIS RESONANCE MATERIAL WILL BE TREATED AS A 1-DIMENSIONAL OBJECT.

VOLUME FRACTION OF LUMP IN CELL USED TO ACCOUNT FOR SPATIAL SELF-SHIELDING=1.00000

GROUP        RES ABS         RES FISS        RES SCAT
 12      -1.712865E+00   -1.053512E+00   -4.421081E-02
 13      -5.191924E+00   -2.544281E+00   -1.184106E-01
 14      -3.743466E+00   -2.214335E+00   -2.824813E-02
 15      -2.253279E-04   -1.715397E-04    1.537884E-06

EXCESS RESONANCE INTEGRALS

                  RESOLVED

ABSORPTION       2.15925E+02
FISSION          1.28649E+02
                                                          PROCESS NUMBER 1007 IS AT TEMPERATURE=   293.00

 URANIUM-238    ENDF/B-IV MAT 1262                      UPDATED 08/12/94   1092238     TEMPERATURE=   293.00

RESONANCE DATA FOR THIS NUCLIDE

MASS NUMBER (A)          =   236.006               TEMPERATURE(KELVIN)       =   293.000

POTENTIAL SCATTER SIGMA  =    10.599               LUMPED NUCLEAR DENSITY    = 8.3133229E-05

SPIN FACTOR (G)          =   656.527               LUMP DIMENSION (A-BAR)    = 6.4999998E-02

INNER RADIUS             = 0.0000000E+00           DANCOFF CORRECTION (C)    = 1.5211706E-01

THE ABSORBER WILL BE TREATED BY THE NORDHEIM INTEGRAL METHOD.

MASS OF MODERATOR-1    =    26.982               SIGMA(PER ABSORBER ATOM)= 6.4818372E+02

MODERATOR-1 WILL BE TREATED BY THE NORDHEIM INTEGRAL METHOD.

MASS OF MODERATOR-2    =   235.044               SIGMA(PER ABSORBER ATOM)= 1.8885785E+02

MODERATOR-2 WILL BE TREATED BY THE NORDHEIM INTEGRAL METHOD.

THIS RESONANCE MATERIAL WILL BE TREATED AS A 1-DIMENSIONAL OBJECT.

VOLUME FRACTION OF LUMP IN CELL USED TO ACCOUNT FOR SPATIAL SELF-SHIELDING=1.00000

GROUP        RES ABS         RES FISS        RES SCAT
  9      -1.309125E-04    0.000000E+00   -1.475272E-03
 10      -7.025824E-03   -3.903629E-08   -5.099698E-02
 11      -3.303697E-01    0.000000E+00   -1.054719E+00
 12      -3.107242E+00    0.000000E+00   -3.725560E+00
 13      -3.585465E+00    0.000000E+00   -1.189779E+00
 14      -6.584399E+00    0.000000E+00   -3.875874E-01
 15      -4.155954E-09    0.000000E+00    3.752471E-09

EXCESS RESONANCE INTEGRALS

                  RESOLVED

ABSORPTION       2.57082E+02
FISSION          5.33631E-04
                                                          PROCESS NUMBER 1007 IS AT TEMPERATURE=   293.00
```

```
THIS XSDRN WORKING TAPE WAS CREATED 02/21/01 AT 18:17:27
THE TITLE OF THE PARENT CASE IS AS FOLLOWS
SCALE 4.2 - 27 GROUP NEUTRON GROUP LIBRARY
   BASED ON ENDF-B VERSION 4 DATA
      COMPILED FOR NRC     1/27/89
    TAPE ID                          4321          NUMBER OF NUCLIDES                   21
    NUMBER OF NEUTRON GROUPS           27          NUMBER OF GAMMA GROUPS                0
    FIRST THERMAL GROUP                15          LOGICAL UNIT                          4
                              TABLE OF CONTENTS
   HYDROGEN       ENDF/B-IV MAT 1269/THRM1002             UPDATED 08/12/94        ID   3001001
   HYDROGEN       ENDF/B-IV MAT 1269/THRM1002             UPDATED 08/12/94        ID   4001001
   HYDROGEN       ENDF/B-IV MAT 1269/THRM1002             UPDATED 08/12/94        ID   9001001
   CARBON-12      ENDF/B-IV MAT 1274/THRM1065             UPDATED 08/12/94        ID   4006012
   OXYGEN-16      ENDF/B-IV MAT 1276                      UPDATED 08/12/94        ID   3008016
   OXYGEN-16      ENDF/B-IV MAT 1276                      UPDATED 08/12/94        ID   4008016
   OXYGEN-16      ENDF/B-IV MAT 1276                      UPDATED 08/12/94        ID   9008016
  AL-27 1193 218 GP 040375(5)                            UPDATED 08/12/94        ID   1013027
  AL-27 1193 218 GP 040375(5)                            UPDATED 08/12/94        ID   2013027
  AL-27 1193 218 GP 040375(5)                            UPDATED 08/12/94        ID   7013027
  CR 1191 WT SS-304(1/EST) P-3 293K SP=5+4(42375)'       UPDATED 08/12/94        ID   6024304
  CR 1191 WT SS-304(1/EST) P-3 293K SP=5+4(42375)'       UPDATED 08/12/94        ID   8024304
   MANGANESE-55   ENDF/B-IV MAT 1197                     UPDATED 08/12/94        ID   6025055
   MANGANESE-55   ENDF/B-IV MAT 1197                     UPDATED 08/12/94        ID   8025055
  FE 1192 WT SS-304(1/EST) P-3 293K SP=5+4(42375)'       UPDATED 08/12/94        ID   6026304
  FE 1192 WT SS-304(1/EST) P-3 293K SP=5+4(42375)'       UPDATED 08/12/94        ID   8026304
  NI 1190 WT SS-304(1/EST) P-3 293K SP=5+4(42375)'       UPDATED 08/12/94        ID   6028304
  NI 1190 WT SS-304(1/EST) P-3 293K SP=5+4(42375)'       UPDATED 08/12/94        ID   8028304
  PB   1288 218NGP 042375 P-3 293K                       UPDATED 08/12/94        ID   5082000
   URANIUM-235    ENDF/B-IV MAT 1261                      UPDATED 08/12/94        ID   1092235
   URANIUM-238    ENDF/B-IV MAT 1262                      UPDATED 08/12/94        ID   1092238

    TAPE COPY USED      0 I/O'S, AND TOOK    0.16 SECONDS
```

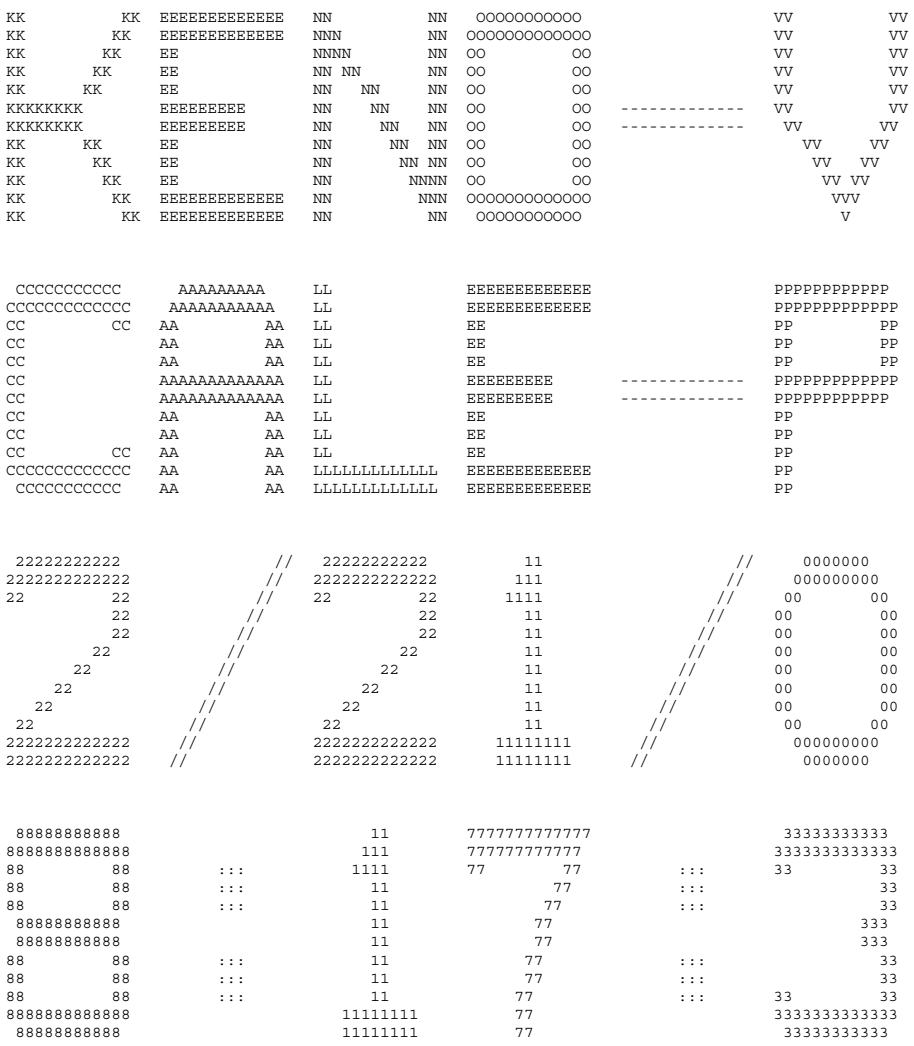
KK KK EEEEEEEEEEEEE NN NN OOOOOOOOOOO VV VV
KK KK EEEEEEEEEEEEE NNN NN OOOOOOOOOOOOO VV VV
KK KK EE NNNN NN OO OO VV VV
KK KK EE NN NN NN OO OO VV VV
KK KK EE NN NN NN OO OO VV VV
KKKKKKKK EEEEEEEEE NN NN NN OO OO VV VV
KKKKKKKK EEEEEEEEE NN NN NN OO OO VV VV
KK KK EE NN NN NN OO OO VV VV
KK KK EE NN NN NN OO OO VV VV
KK KK EE NN NNNN OO OO VV VV
KK KK EEEEEEEEEEEEE NN NNN OOOOOOOOOOOOO VVV
KK KK EEEEEEEEEEEEE NN NN OOOOOOOOOOO V
SSSSSSSSSS CCCCCCCCCC AAAAAAAAA LL EEEEEEEEEEEEE PPPPPPPPPPP CCCCCCCCCC
SSSSSSSSSSSS CCCCCCCCCCCC AAAAAAAAAA LL EEEEEEEEEEEEE PPPPPPPPPPPP CCCCCCCCCCCC
SS SS CC CC AA AA LL EE PP PP CC CC
SS CC AA AA LL EE PP PP CC
SS CC AA AA LL EE PP PP CC
SSSSSSSSSSSS CC AAAAAAAAAAAAA LL EEEEEEEEE PPPPPPPPPPPP CC
SSSSSSSSSS CC AAAAAAAAAAAAA LL EEEEEEEEE PPPPPPPPPPP CC
SS CC AA AA LL EE PP CC
SS CC AA AA LL EE PP CC
SS SS CC CC AA AA LL EE PP CC CC
SSSSSSSSSSSS CCCCCCCCCCCC AA AA LLLLLLLLLLLL EEEEEEEEEEEE PP CCCCCCCCCCCC
SSSSSSSSSS CCCCCCCCCC AA AA LLLLLLLLLLLL EEEEEEEEEEEE PP CCCCCCCCCC
0000000 22222222222 // 22222222222 11 // 0000000 11
000000000 2222222222222 // 2222222222222 111 // 000000000 111
00 00 22 22 // 22 22 1111 // 00 00 1111
00 00 22 // 22 11 // 00 00 11
00 00 22 // 22 11 // 00 00 11
00 00 22 // 22 11 // 00 00 11
00 00 22 // 22 11 // 00 00 11
00 00 22 // 22 11 // 00 00 11
00 00 22 // 22 11 // 00 00 11
00 00 22 // 22 11 // 00 00 11
000000000 2222222222222 // 2222222222222 11111111 // 000000000 11111111
0000000 2222222222222 // 2222222222222 11111111 // 0000000 11111111
11 88888888888 11 7777777777777 33333333333 22222222222
111 8888888888888 111 777777777777 3333333333333 2222222222222
1111 88 88 ::: 1111 77 77 ::: 33 33 22 22
11 88 88 ::: 11 77 ::: 33 22
11 88 88 ::: 11 77 ::: 33 22
11 88888888888 11 77 333 22
11 88888888888 11 77 333 22
11 88 88 ::: 11 77 ::: 33 22
11 88 88 ::: 11 77 ::: 33 22
11 88 88 ::: 11 77 ::: 33 33 22
11111111 8888888888888 11111111 77 3333333333333 2222222222222
11111111 88888888888 11111111 77 33333333333 2222222222222

```
  SSSSSSSSSS     CCCCCCCCCC      AAAAAAAA     LL             EEEEEEEEEEEE                 PPPPPPPPPP     CCCCCCCCCC
 SSSSSSSSSSS   CCCCCCCCCCCC    AAAAAAAAAA    LL             EEEEEEEEEEEE                 PPPPPPPPPPP   CCCCCCCCCCCC
 SS          SS CC          CC  AA          AA  LL             EE                           PP         PP  CC          CC
 SS             CC              AA          AA  LL             EE                           PP         PP  CC
 SS             CC              AA          AA  LL             EE                           PP         PP  CC
 SSSSSSSSSSS    CC              AAAAAAAAAAAA    LL             EEEEEEEEE       -------------  PPPPPPPPPPP   CC
  SSSSSSSSSSS   CC              AAAAAAAAAAAA    LL             EEEEEEEEE       -------------  PPPPPPPPPP    CC
           SS   CC              AA          AA  LL             EE                           PP             CC
           SS   CC              AA          AA  LL             EE                           PP             CC
 SS        SS   CC          CC  AA          AA  LL             EE                           PP             CC          CC
 SSSSSSSSSSSS   CCCCCCCCCCCC    AA          AA  LLLLLLLLLLLL   EEEEEEEEEEEE                 PP             CCCCCCCCCCCC
  SSSSSSSSSS     CCCCCCCCCC     AA          AA  LLLLLLLLLLLL   EEEEEEEEEEEE                 PP              CCCCCCCCCC
```

```
*******************************************************************************
*******************************************************************************
*******************************************************************************
*****                                                                     *****
*****                  PROGRAM VERIFICATION INFORMATION                   *****
*****                                                                     *****
*****                CODE SYSTEM:  SCALE-PC VERSION:  4.3                 *****
*****                                                                     *****
*******************************************************************************
*******************************************************************************
*****                                                                     *****
*****                                                                     *****
*****              PROGRAM:  O0O009                                       *****
*****                                                                     *****
*****        CREATION DATE:  03/08/96                                     *****
*****                                                                     *****
*****              VOLUME:   ENG                                          *****
*****                                                                     *****
*****              LIBRARY:  G:\SCALE43\WIN_NT\EXE                        *****
*****                                                                     *****
*****                                                                     *****
*****    THIS IS NOT A SCALE-PC CONFIGURATION CONTROLLED CODE             *****
*****                                                                     *****
*****              JOBNAME:  SCALE-PC                                     *****
*****                                                                     *****
*****    DATE OF EXECUTION:  02/21/01                                     *****
*****                                                                     *****
*****    TIME OF EXECUTION:  18:17:32                                     *****
*****                                                                     *****
*****                                                                     *****
*******************************************************************************
*******************************************************************************
*******************************************************************************
```

```
*****************************************************************************************************************
***                                                                                                           ***
***                                                                                                           ***
***                                                                                                           ***
*****************************************************************************************************************
***                              ******       NUMERIC PARAMETERS       ******                                ***
***                                                                                                           ***
***                                                                                                           ***
***                    TME       MAXIMUM PROBLEM TIME (MIN)                        90.00                    ***
***                                                                                                           ***
***                    TBA       TIME PER GENERATION (MIN)                          5.00                    ***
***                                                                                                           ***
***                    GEN       NUMBER OF GENERATIONS                              1203                    ***
***                                                                                                           ***
***                    NPG       NUMBER PER GENERATION                              1000                    ***
***                                                                                                           ***
***                    NSK       NUMBER OF GENERATIONS TO BE SKIPPED                   3                    ***
***                                                                                                           ***
***                    BEG       BEGINNING GENERATION NUMBER                           1                    ***
***                                                                                                           ***
***                    RES       GENERATIONS BETWEEN CHECKPOINTS                       0                    ***
***                                                                                                           ***
***                    X1D       NUMBER OF EXTRA 1-D CROSS SECTIONS                    1                    ***
***                                                                                                           ***
***                    NBK       NEUTRON BANK SIZE                                  1025                    ***
***                                                                                                           ***
***                    XNB       EXTRA POSITIONS IN NEUTRON BANK                       0                    ***
***                                                                                                           ***
***                    NFB       FISSION BANK SIZE                                  1000                    ***
***                                                                                                           ***
***                    XFB       EXTRA POSITIONS IN FISSION BANK                       0                    ***
***                                                                                                           ***
***                    WTA       DEFAULT VALUE OF WEIGHT AVERAGE                  0.5000                    ***
***                                                                                                           ***
***                    WTH       WEIGHT HIGH FOR SPLITTING                        3.0000                    ***
***                                                                                                           ***
***                    WTL       WEIGHT LOW FOR RUSSIAN ROULETTE                  0.3333                    ***
***                                                                                                           ***
***                    RND       STARTING RANDOM NUMBER                       BB827100001                   ***
***                                                                                                           ***
***                    NB8       NUMBER OF D.A. BLOCKS ON UNIT  8                   200                    ***
***                                                                                                           ***
***                    NL8       LENGTH OF D.A. BLOCKS ON UNIT  8                   512                    ***
***                                                                                                           ***
***                    ADJ       MODE OF CALCULATION                            FORWARD                    ***
***                                                                                                           ***
***                              INPUT DATA WRITTEN ON RESTART UNIT                    NO                    ***
***                                                                                                           ***
***                              BINARY DATA INTERFACE                                 YES                   ***
***                                                                                                           ***
***                                                                                                           ***
*****************************************************************************************************************
*****************************************************************************************************************
```

```
*****************************************************************************************************************************
*****************************************************************************************************************************
***                                                                                                                       ***
***                                                                                                                       ***
***                                                                                                                       ***
*****************************************************************************************************************************
***                                ******      LOGICAL PARAMETERS        ******                                         ***
***                                                                                                                       ***
***  RUN  EXECUTE PROBLEM AFTER CHECKING DATA    YES            PLT  PLOT PICTURE MAP(S)                        NO  ***
***                                                                                                                       ***
***  FLX  COMPUTE FLUX                            NO            FDN  COMPUTE FISSION DENSITIES                  NO  ***
***                                                                                                                       ***
***  SMU  COMPUTE AVG UNIT SELF-MULTIPLICATION    NO            NUB  COMPUTE NU-BAR & AVG FISSION GROUP         YES ***
***                                                                                                                       ***
***  MKU  COMPUTE MATRIX K-EFF BY UNIT NUMBER     NO            MKP  COMPUTE MATRIX K-EFF BY UNIT LOCATION      NO  ***
***                                                                                                                       ***
***  CKU  COMPUTE COFACTOR K-EFF BY UNIT NUMBER   NO            CKP  COMPUTE COFACTOR K-EFF BY UNIT LOCATION    NO  ***
***                                                                                                                       ***
***  FMU  PRINT FISS PROD MATRIX BY UNIT NUMBER   NO            FMP  PRINT FISS PROD MATRIX BY UNIT LOCATION    NO  ***
***                                                                                                                       ***
***  MKH  COMPUTE MATRIX K-EFF BY HOLE NUMBER     NO            MKA  COMPUTE MATRIX K-EFF BY ARRAY NUMBER       NO  ***
***                                                                                                                       ***
***  CKH  COMPUTE COFACTOR K-EFF BY HOLE NUMBER   NO            CKA  COMPUTE COFACTOR K-EFF BY ARRAY NUMBER     NO  ***
***                                                                                                                       ***
***  FMH  PRINT FISS PROD MATRIX BY HOLE NUMBER   NO            FMA  PRINT FISS PROD MATRIX BY ARRAY NUMBER     NO  ***
***                                                                                                                       ***
***  HHL  COLLECT MATRIX BY HIGHEST HOLE LEVEL    NO            HAL  COLLECT MATRIX BY HIGHEST ARRAY LEVEL      NO  ***
***                                                                                                                       ***
***  AMX  PRINT ALL MIXED CROSS SECTIONS          NO            FAR  PRINT FIS. AND ABS. BY REGION              NO  ***
***                                                                                                                       ***
***  XS1  PRINT 1-D MIXTURE X-SECTIONS            NO            GAS  PRINT FAR BY GROUP                         NO  ***
***                                                                                                                       ***
***  XS2  PRINT 2-D MIXTURE X-SECTIONS            NO            PAX  PRINT XSEC-ALBEDO CORRELATION TABLES       NO  ***
***                                                                                                                       ***
***  XAP  PRINT MIXTURE ANGLES & PROBABILITIES    NO            PWT  PRINT WEIGHT AVERAGE ARRAY                 NO  ***
***                                                                                                                       ***
***  PKI  PRINT FISSION SPECTRUM                  NO            PGM  PRINT INPUT GEOMETRY                       NO  ***
***                                                                                                                       ***
***  P1D  PRINT EXTRA 1-D CROSS SECTIONS          NO            BUG  PRINT DEBUG INFORMATION                    NO  ***
***                                                                                                                       ***
***                                                             TRK  PRINT TRACKING INFORMATION                 NO  ***
***                                                                                                                       ***
***                                                                                                                       ***
*****************************************************************************************************************************
*****************************************************************************************************************************
*****************************************************************************************************************************
                                    PARAMETER INPUT COMPLETED

                         ........    0 IO'S WERE USED READING THE PARAMETER DATA      ........

                       ************** DATA READING COMPLETED **************
```

```
*****************************************************************************************************************************
***                                                                                                                       ***
***                                                                                                                       ***
***                                                                                                                       ***
*****************************************************************************************************************************
*****************************************************************************************************************************
***                                                                                                                       ***
***          UNIT                                                    VOLUME                                               ***
***         NUMBER              DATA SET NAME                        NAME        UNIT FUNCTION                            ***
***         ------              -------------                        ----        -------------                            ***
***                                                                                                                       ***
***      XSC  14     T:\PROJECTS\sts-proj\DIDO\14110-~1\v1.8\HEU\                MIXED CROSS SECTIONS                     ***
***                                                                                                                       ***
***      ALB  79     G:\scale43\DATALIB\FT79F001                                 INPUT ALBEDOS                            ***
***                                                                                                                       ***
***      WTS  80     G:\scale43\DATALIB\FT80F001                                 INPUT WEIGHTS                            ***
***                                                                                                                       ***
***      SKT  16      UNKNOWN                                                    WRITE SCRATCH DATA                       ***
***                                                                                                                       ***
***      BIN  95     T:\PROJECTS\sts-proj\DIDO\14110-~1\v1.8\HEU\                BINARY INPUT DATA                        ***
***                                                                                                                       ***
***      RST  95     T:\PROJECTS\sts-proj\DIDO\14110-~1\v1.8\HEU\                READ RESTART DATA                        ***
***                                                                                                                       ***
***      LIB   4     T:\PROJECTS\sts-proj\DIDO\14110-~1\v1.8\HEU\                INPUT AMPX WORKING LIBRARY               ***
***                                                                                                                       ***
***             8     T:\PROJECTS\sts-proj\DIDO\14110-~1\v1.8\HEU\                INPUT DATA DIRECT ACCESS                 ***
***                                                                                                                       ***
***             9      UNKNOWN                                                    SUPER GROUPED DIRECT ACCESS              ***
***                                                                                                                       ***
***            10      UNKNOWN                                                    XSEC MIXING DIRECT ACCESS                ***
***                                                                                                                       ***
*****************************************************************************************************************************

                        ........    0 IO'S WERE USED PREPARING INPUT DATA    ........


                          CROSS SECTIONS READ FROM THE AMPX WORKING LIBRARY ON UNIT    4
```

MIXING TABLE

NUMBER OF SCATTERING ANGLES = 2
CROSS SECTION MESSAGE THRESHOLD =3.0E-05

MIXTURE = 1 DENSITY(G/CC) = 2.3407

NUCLIDE	ATOM-DENS.	WGT. FRAC.	ZA	AWT	NUCLIDE TITLE		
1013027	4.00184E-02	7.66010E-01	13027	26.9818	AL-27 1193 218 GP 040375(5)		UPDATED 08/12/94
1092235	1.31908E-03	2.19951E-01	92235	235.0441	URANIUM-235	ENDF/B-IV MAT 1261	UPDATED 08/12/94
1092238	8.31332E-05	1.40394E-02	92238	238.0510	URANIUM-238	ENDF/B-IV MAT 1262	UPDATED 08/12/94

MIXTURE = 2 DENSITY(G/CC) = 2.7020

NUCLIDE	ATOM-DENS.	WGT. FRAC.	ZA	AWT	NUCLIDE TITLE		
2013027	6.03066E-02	1.00000E+00	13027	26.9818	AL-27 1193 218 GP 040375(5)		UPDATED 08/12/94

MIXTURE = 3 DENSITY(G/CC) = 0.99977

NUCLIDE	ATOM-DENS.	WGT. FRAC.	ZA	AWT	NUCLIDE TITLE		
3001001	6.68762E-02	1.11927E-01	1001	1.0077	HYDROGEN	ENDF/B-IV MAT 1269/THRM1002	UPDATED 08/12/94
3008016	3.34381E-02	8.88074E-01	8016	15.9904	OXYGEN-16	ENDF/B-IV MAT 1276	UPDATED 08/12/94

MIXTURE = 4 DENSITY(G/CC) = 0.96635

NUCLIDE	ATOM-DENS.	WGT. FRAC.	ZA	AWT	NUCLIDE TITLE		
4001001	5.98801E-02	1.03684E-01	1001	1.0077	HYDROGEN	ENDF/B-IV MAT 1269/THRM1002	UPDATED 08/12/94
4006012	1.07014E-02	2.20668E-01	6000	12.0001	CARBON-12	ENDF/B-IV MAT 1274/THRM1065	UPDATED 08/12/94
4008016	2.45894E-02	6.75649E-01	8016	15.9904	OXYGEN-16	ENDF/B-IV MAT 1276	UPDATED 08/12/94

MIXTURE = 5 DENSITY(G/CC) = 11.344

NUCLIDE	ATOM-DENS.	WGT. FRAC.	ZA	AWT	NUCLIDE TITLE		
5082000	3.29690E-02	1.00000E+00	82000	207.2100	PB 1288 218NGP 042375 P-3 293K		UPDATED 08/12/94

MIXTURE = 6 DENSITY(G/CC) = 7.9200

NUCLIDE	ATOM-DENS.	WGT. FRAC.	ZA	AWT	NUCLIDE TITLE		
6024304	1.74286E-02	1.90000E-01	24000	51.9957	CR 1191 WT SS-304(1/EST) P-3 293K SP=5+4(42375)'		UPDATED 08/12/94
6025055	1.73633E-03	1.99999E-02	25055	54.9379	MANGANESE-55	ENDF/B-IV MAT 1197	UPDATED 08/12/94
6026304	5.93579E-02	6.95000E-01	26000	55.8447	FE 1192 WT SS-304(1/EST) P-3 293K SP=5+4(42375)'		UPDATED 08/12/94
6028304	7.72070E-03	9.50001E-02	28000	58.6872	NI 1190 WT SS-304(1/EST) P-3 293K SP=5+4(42375)'		UPDATED 08/12/94

MIXTURE = 7 DENSITY(G/CC) = 2.7020

NUCLIDE	ATOM-DENS.	WGT. FRAC.	ZA	AWT	NUCLIDE TITLE		
7013027	6.03066E-02	1.00000E+00	13027	26.9818	AL-27 1193 218 GP 040375(5)		UPDATED 08/12/94

MIXTURE = 8 DENSITY(G/CC) = 7.9200

NUCLIDE	ATOM-DENS.	WGT. FRAC.	ZA	AWT	NUCLIDE TITLE		
8024304	1.74286E-02	1.90000E-01	24000	51.9957	CR 1191 WT SS-304(1/EST) P-3 293K SP=5+4(42375)'		UPDATED 08/12/94
8025055	1.73633E-03	1.99999E-02	25055	54.9379	MANGANESE-55	ENDF/B-IV MAT 1197	UPDATED 08/12/94
8026304	5.93579E-02	6.95000E-01	26000	55.8447	FE 1192 WT SS-304(1/EST) P-3 293K SP=5+4(42375)'		UPDATED 08/12/94
8028304	7.72070E-03	9.50001E-02	28000	58.6872	NI 1190 WT SS-304(1/EST) P-3 293K SP=5+4(42375)'		UPDATED 08/12/94

MIXTURE = 9 DENSITY(G/CC) = 0.99997E-04

NUCLIDE	ATOM-DENS.	WGT. FRAC.	ZA	AWT	NUCLIDE TITLE		
9001001	6.68896E-06	1.11927E-01	1001	1.0077	HYDROGEN	ENDF/B-IV MAT 1269/THRM1002	UPDATED 08/12/94
9008016	3.34448E-06	8.88074E-01	8016	15.9904	OXYGEN-16	ENDF/B-IV MAT 1276	UPDATED 08/12/94

3001001	HYDROGEN	ENDF/B-IV MAT 1269/THRM1002	UPDATED 08/12/94
4001001	HYDROGEN	ENDF/B-IV MAT 1269/THRM1002	UPDATED 08/12/94
9001001	HYDROGEN	ENDF/B-IV MAT 1269/THRM1002	UPDATED 08/12/94
4006012	CARBON-12	ENDF/B-IV MAT 1274/THRM1065	UPDATED 08/12/94
3008016	OXYGEN-16	ENDF/B-IV MAT 1276	UPDATED 08/12/94
4008016	OXYGEN-16	ENDF/B-IV MAT 1276	UPDATED 08/12/94
9008016	OXYGEN-16	ENDF/B-IV MAT 1276	UPDATED 08/12/94
1013027	AL-27 1193 218 GP 040375(5)		UPDATED 08/12/94
2013027	AL-27 1193 218 GP 040375(5)		UPDATED 08/12/94
7013027	AL-27 1193 218 GP 040375(5)		UPDATED 08/12/94
6024304	CR 1191 WT SS-304(1/EST) P-3 293K SP=5+4(42375)'		UPDATED 08/12/94
8024304	CR 1191 WT SS-304(1/EST) P-3 293K SP=5+4(42375)'		UPDATED 08/12/94
6025055	MANGANESE-55	ENDF/B-IV MAT 1197	UPDATED 08/12/94
8025055	MANGANESE-55	ENDF/B-IV MAT 1197	UPDATED 08/12/94
6026304	FE 1192 WT SS-304(1/EST) P-3 293K SP=5+4(42375)'		UPDATED 08/12/94
8026304	FE 1192 WT SS-304(1/EST) P-3 293K SP=5+4(42375)'		UPDATED 08/12/94

```
                          6028304    NI 1190 WT SS-304(1/EST) P-3 293K SP=5+4(42375)'        UPDATED 08/12/94
                          8028304    NI 1190 WT SS-304(1/EST) P-3 293K SP=5+4(42375)'        UPDATED 08/12/94
                          5082000    PB   1288 218NGP 042375 P-3 293K                        UPDATED 08/12/94
                          1092235     URANIUM-235    ENDF/B-IV MAT 1261                     UPDATED 08/12/94
                          1092238     URANIUM-238    ENDF/B-IV MAT 1262                     UPDATED 08/12/94

KENO MESSAGE NUMBER K5-222       1 TRANSFERS FOR MIXTURE     3 WERE CORRECTED FOR BAD MOMENTS.

KENO MESSAGE NUMBER K5-222       1 TRANSFERS FOR MIXTURE     4 WERE CORRECTED FOR BAD MOMENTS.

KENO MESSAGE NUMBER K5-222       1 TRANSFERS FOR MIXTURE     9 WERE CORRECTED FOR BAD MOMENTS.

                                 ........    0 IO'S WERE USED MIXING CROSS-SECTIONS       ........

                                  1-D CROSS SECTION ARRAY ID NUMBERS
                                     1  2002  1452    27    18  1018

                                 ........    0 IO'S WERE USED PREPARING THE CROSS SECTIONS    ........
```

```
*****************************************************************************************************
***                                                                                               ***
***                                                                                               ***
***                                                                                               ***
*****************************************************************************************************
*****************************************************************************************************
***                                                                                               ***
***                              ****** ADDITIONAL INFORMATION ******                             ***
***                                                                                               ***
***  NUMBER OF ENERGY GROUPS              27       USE LATTICE GEOMETRY                     NO   ***
***                                                                                               ***
***  NO. OF FISSION SPECTRUM SOURCE GROUP  1       GLOBAL ARRAY NUMBER                       0   ***
***                                                                                               ***
***  NO. OF SCATTERING ANGLES IN XSECS     2       NUMBER OF UNITS IN THE GLOBAL X DIR.      0   ***
***                                                                                               ***
***  ENTRIES/NEUTRON IN THE NEUTRON BANK  24       NUMBER OF UNITS IN THE GLOBAL Y DIR.      0   ***
***                                                                                               ***
***  ENTRIES/NEUTRON IN THE FISSION BANK  17       NUMBER OF UNITS IN THE GLOBAL Z DIR.      0   ***
***                                                                                               ***
***  NUMBER OF MIXTURES USED               8       USE A GLOBAL REFLECTOR                   YES   ***
***                                                                                               ***
***  NUMBER OF BIAS ID'S USED              1       USE NESTED HOLES                         YES   ***
***                                                                                               ***
***  NUMBER OF DIFFERENTIAL ALBEDOS USED   1       NUMBER OF HOLES                           86   ***
***                                                                                               ***
***  TOTAL INPUT GEOMETRY REGIONS         54       MAXIMUM HOLE NESTING LEVEL                 7   ***
***                                                                                               ***
***  NUMBER OF GEOMETRY REGIONS USED      54       USE NESTED ARRAYS                         NO   ***
***                                                                                               ***
***  LARGEST GEOMETRY UNIT NUMBER         16       NUMBER OF ARRAYS USED                     0   ***
***                                                                                               ***
***  LARGEST ARRAY NUMBER                  1       MAXIMUM ARRAY NESTING LEVEL               0   ***
***                                                                                               ***
***                                                                                               ***
***  +X BOUNDARY CONDITION               H2O       -X BOUNDARY CONDITION                    H2O   ***
***                                                                                               ***
***  +Y BOUNDARY CONDITION               H2O       -Y BOUNDARY CONDITION                    H2O   ***
***                                                                                               ***
***  +Z BOUNDARY CONDITION               H2O       -Z BOUNDARY CONDITION                    H2O   ***
***                                                                                               ***
*****************************************************************************************************
```

```
*******************************************************************************************
***                                                                                     ***
***                                                                                     ***
***                                                                                     ***
*******************************************************************************************
*******************************************************************************************
***                                                                                     ***
***                    ****** SPACE AND SUPERGROUP INFORMATION ******                   ***
***                                                                                     ***
***       100000 WORDS IS THE TOTAL SPACE AVAILABLE.                                    ***
***                                                                                     ***
***        46861 WORDS WERE USED FOR NON-SUPERGROUP STORAGE.                            ***
***                                                                                     ***
***        53139 WORDS OF STORAGE ARE AVAILABLE FOR SUPERGROUPED DATA.                  ***
***                                                                                     ***
***        99444 WORDS OF STORAGE ARE AVAILABLE FOR CONSTRUCTING THE SUPERGROUPS.       ***
***                                                                                     ***
***        53078 WORDS OF STORAGE ARE AVAILABLE TO EACH SUPERGROUP.                     ***
***                                                                                     ***
***         1369 WORDS ARE NEEDED FOR THE LARGEST GROUP.                                ***
***                                                                                     ***
***        48473 WORDS OF STORAGE IS SUFFICIENT TO RUN THIS PROBLEM.                    ***
***                                                                                     ***
***        60385 WORDS OF STORAGE WILL ALLOW THE PROBLEM TO RUN WITH ONE SUPERGROUP.     ***
***                                                                                     ***
***        60576 WORDS OF STORAGE WILL BE USED TO RUN THIS PROBLEM.                     ***
***                                                                                     ***
*******************************************************************************************
*******************************************************************************************
***                                                                                     ***
***                   STARTING       ENDING        XSEC        ALBEDO       TOTAL       ***
***   SUPERGROUP        GROUP         GROUP       LENGTH       LENGTH       LENGTH       ***
***                                                                                     ***
***                                                                                     ***
***          1            1             27         2010          544        13595       ***
***                                                                                     ***
*******************************************************************************************

            ........    0 IO'S WERE USED IN SUPERGROUPING    ........

            ........    0 IO'S WERE USED LOADING THE DATA    ........
```

REGION		MEDIA NUM	BIAS ID	GEOMETRY DESCRIPTION FOR THOSE UNITS UTILIZED IN THIS PROBLEM						
				----- UNIT 1 -----						
FUELED ANNULAR SECTIONS				TUBE 1 LOOSE						
1	CYLINDER	3	1	RADIUS = 3.0300	+Z = 58.750	-Z = 0.00000	CENTERLINE IS AT	X = 0.00000	Y = 0.00000	
2	CYLINDER	2	1	RADIUS = 3.0625	+Z = 58.750	-Z = 0.00000	CENTERLINE IS AT	X = 0.00000	Y = 0.00000	
3	CYLINDER	1	1	RADIUS = 3.1275	+Z = 58.750	-Z = 0.00000	CENTERLINE IS AT	X = 0.00000	Y = 0.00000	
4	CYLINDER	2	1	RADIUS = 3.1600	+Z = 58.750	-Z = 0.00000	CENTERLINE IS AT	X = 0.00000	Y = 0.00000	
5	CYLINDER	3	1	RADIUS = 3.5300	+Z = 58.750	-Z = 0.00000	CENTERLINE IS AT	X = 0.00000	Y = 0.00000	
6	CYLINDER	2	1	RADIUS = 3.5625	+Z = 58.750	-Z = 0.00000	CENTERLINE IS AT	X = 0.00000	Y = 0.00000	
7	CYLINDER	1	1	RADIUS = 3.6275	+Z = 58.750	-Z = 0.00000	CENTERLINE IS AT	X = 0.00000	Y = 0.00000	
8	CYLINDER	2	1	RADIUS = 3.6600	+Z = 58.750	-Z = 0.00000	CENTERLINE IS AT	X = 0.00000	Y = 0.00000	
9	CYLINDER	3	1	RADIUS = 4.0300	+Z = 58.750	-Z = 0.00000	CENTERLINE IS AT	X = 0.00000	Y = 0.00000	
10	CYLINDER	2	1	RADIUS = 4.0625	+Z = 58.750	-Z = 0.00000	CENTERLINE IS AT	X = 0.00000	Y = 0.00000	
11	CYLINDER	1	1	RADIUS = 4.1275	+Z = 58.750	-Z = 0.00000	CENTERLINE IS AT	X = 0.00000	Y = 0.00000	
12	CYLINDER	2	1	RADIUS = 4.1600	+Z = 58.750	-Z = 0.00000	CENTERLINE IS AT	X = 0.00000	Y = 0.00000	
13	CYLINDER	3	1	RADIUS = 4.5300	+Z = 58.750	-Z = 0.00000	CENTERLINE IS AT	X = 0.00000	Y = 0.00000	
14	CYLINDER	2	1	RADIUS = 4.5625	+Z = 58.750	-Z = 0.00000	CENTERLINE IS AT	X = 0.00000	Y = 0.00000	
15	CYLINDER	1	1	RADIUS = 4.6275	+Z = 58.750	-Z = 0.00000	CENTERLINE IS AT	X = 0.00000	Y = 0.00000	
16	CYLINDER	2	1	RADIUS = 4.6599	+Z = 58.750	-Z = 0.00000	CENTERLINE IS AT	X = 0.00000	Y = 0.00000	

```
                MEDIA BIAS      GEOMETRY DESCRIPTION FOR THOSE UNITS UTILIZED IN THIS PROBLEM
REGION           NUM   ID

                                                -----   UNIT     2   -----

AXIAL CLAD SECTIONS       TUBE  1  LOOSE

  1 CYLINDER         3  1  RADIUS =  3.0300     +Z =  1.3750     -Z = 0.00000     CENTERLINE IS AT  X = 0.00000      Y = 0.00000

  2 CYLINDER         2  1  RADIUS =  3.1600     +Z =  1.3750     -Z = 0.00000     CENTERLINE IS AT  X = 0.00000      Y = 0.00000

  3 CYLINDER         3  1  RADIUS =  3.5300     +Z =  1.3750     -Z = 0.00000     CENTERLINE IS AT  X = 0.00000      Y = 0.00000

  4 CYLINDER         2  1  RADIUS =  3.6600     +Z =  1.3750     -Z = 0.00000     CENTERLINE IS AT  X = 0.00000      Y = 0.00000

  5 CYLINDER         3  1  RADIUS =  4.0300     +Z =  1.3750     -Z = 0.00000     CENTERLINE IS AT  X = 0.00000      Y = 0.00000

  6 CYLINDER         2  1  RADIUS =  4.1600     +Z =  1.3750     -Z = 0.00000     CENTERLINE IS AT  X = 0.00000      Y = 0.00000

  7 CYLINDER         3  1  RADIUS =  4.5300     +Z =  1.3750     -Z = 0.00000     CENTERLINE IS AT  X = 0.00000      Y = 0.00000

  8 CYLINDER         2  1  RADIUS =  4.6599     +Z =  1.3750     -Z = 0.00000     CENTERLINE IS AT  X = 0.00000      Y = 0.00000

                                                -----   UNIT     3   -----

FUEL ELEMENT      TUBE  1

  1 CYLINDER         3  1  RADIUS =  4.6600     +Z =  61.500     -Z = 0.00000     CENTERLINE IS AT  X = 0.00000      Y = 0.00000

    HOLE NUMBER      1       AT X = 0.00000      Y = 0.00000      Z = 0.00000     IS UNIT NUMBER      2

    HOLE NUMBER      2       AT X = 0.00000      Y = 0.00000      Z =  1.3750     IS UNIT NUMBER      1

    HOLE NUMBER      3       AT X = 0.00000      Y = 0.00000      Z =  60.125     IS UNIT NUMBER      2

                                                -----   UNIT     4   -----

BASKET FUEL TUBE - FUEL DOWN        RADIAL CENTERED

  1 CYLINDER         3  1  RADIUS =  5.0927     +Z =  73.177     -Z = 0.00000     CENTERLINE IS AT  X = 0.00000      Y = 0.00000

    HOLE NUMBER      4       AT X = 0.00000      Y = 0.00000      Z = 0.00000     IS UNIT NUMBER      3

  2 CYLINDER         2  1  RADIUS =  5.3974     +Z =  73.177     -Z = 0.00000     CENTERLINE IS AT  X = 0.00000      Y = 0.00000

                                                -----   UNIT     5   -----

BASKET FUEL TUBE - FUEL UP        RADIAL CENTERED

  1 CYLINDER         3  1  RADIUS =  5.0927     +Z =  73.177     -Z = 0.00000     CENTERLINE IS AT  X = 0.00000      Y = 0.00000

    HOLE NUMBER      5       AT X = 0.00000      Y = 0.00000      Z =  11.677     IS UNIT NUMBER      3

  2 CYLINDER         2  1  RADIUS =  5.3974     +Z =  73.177     -Z = 0.00000     CENTERLINE IS AT  X = 0.00000      Y = 0.00000
```

```
                MEDIA BIAS      GEOMETRY DESCRIPTION FOR THOSE UNITS UTILIZED IN THIS PROBLEM
REGION           NUM   ID

                                                -----   UNIT     6   -----

BASKET BOTTOM PLATE HOLE

  1 CYLINDER         3  1  RADIUS =  1.2700     +Z =  1.2698     -Z = 0.00000     CENTERLINE IS AT  X = 0.00000      Y = 0.00000

                                                -----   UNIT     7   -----

BASKET BOTTOM PLATE

  1 CYLINDER         6  1  RADIUS =  16.847     +Z =  1.2698     -Z = 0.00000     CENTERLINE IS AT  X = 0.00000      Y = 0.00000

    HOLE NUMBER      6       AT X = 0.00000      Y = 0.00000      Z = 0.00000     IS UNIT NUMBER      6

    HOLE NUMBER      7       AT X =  10.795      Y = 0.00000      Z = 0.00000     IS UNIT NUMBER      6

    HOLE NUMBER      8       AT X =  5.3975      Y =  9.3487      Z = 0.00000     IS UNIT NUMBER      6

    HOLE NUMBER      9       AT X = -5.3975      Y =  9.3487      Z = 0.00000     IS UNIT NUMBER      6

    HOLE NUMBER     10       AT X = -10.795      Y = 0.00000      Z = 0.00000     IS UNIT NUMBER      6

    HOLE NUMBER     11       AT X = -5.3975      Y = -9.3487      Z = 0.00000     IS UNIT NUMBER      6

    HOLE NUMBER     12       AT X =  5.3975      Y = -9.3487      Z = 0.00000     IS UNIT NUMBER      6

                                                -----   UNIT     8   -----

HEAT TRANSFER BAR / ROD

  1 CYLINDER         7  1  RADIUS = 0.31650     +Z =  73.177     -Z = 0.00000     CENTERLINE IS AT  X = 0.00000      Y = 0.00000
```

```
                MEDIA BIAS      GEOMETRY DESCRIPTION FOR THOSE UNITS UTILIZED IN THIS PROBLEM
REGION           NUM   ID

                                                -----   UNIT     9   -----

BASKET FUEL DOWN

  1 CYLINDER         3  1  RADIUS =  16.193     +Z =  73.177     -Z = 0.00000     CENTERLINE IS AT  X = 0.00000      Y = 0.00000

    HOLE NUMBER     13       AT X = 0.00000      Y = 0.00000      Z = 0.00000     IS UNIT NUMBER      4

    HOLE NUMBER     14       AT X =  10.795      Y = 0.00000      Z = 0.00000     IS UNIT NUMBER      4

    HOLE NUMBER     15       AT X =  4.9493      Y =  2.8575      Z = 0.00000     IS UNIT NUMBER      8

    HOLE NUMBER     16       AT X =  4.6024      Y =  3.3881      Z = 0.00000     IS UNIT NUMBER      8

    HOLE NUMBER     17       AT X =  5.2354      Y =  2.2917      Z = 0.00000     IS UNIT NUMBER      8

    HOLE NUMBER     18       AT X =  5.3975      Y =  9.3487      Z = 0.00000     IS UNIT NUMBER      4

    HOLE NUMBER     19       AT X = 0.00000      Y =  5.7150      Z = 0.00000     IS UNIT NUMBER      8

    HOLE NUMBER     20       AT X =-0.63300      Y =  5.6798      Z = 0.00000     IS UNIT NUMBER      8

    HOLE NUMBER     21       AT X = 0.63300      Y =  5.6798      Z = 0.00000     IS UNIT NUMBER      8

    HOLE NUMBER     22       AT X = -5.3975      Y =  9.3487      Z = 0.00000     IS UNIT NUMBER      4

    HOLE NUMBER     23       AT X = -4.9493      Y =  2.8575      Z = 0.00000     IS UNIT NUMBER      8

    HOLE NUMBER     24       AT X = -5.2354      Y =  2.2917      Z = 0.00000     IS UNIT NUMBER      8

    HOLE NUMBER     25       AT X = -4.6024      Y =  3.3881      Z = 0.00000     IS UNIT NUMBER      8

    HOLE NUMBER     26       AT X = -10.795      Y = 0.00000      Z = 0.00000     IS UNIT NUMBER      4

    HOLE NUMBER     27       AT X = -4.9493      Y = -2.8575      Z = 0.00000     IS UNIT NUMBER      8

    HOLE NUMBER     28       AT X = -4.6024      Y = -3.3881      Z = 0.00000     IS UNIT NUMBER      8

    HOLE NUMBER     29       AT X = -5.2354      Y = -2.2917      Z = 0.00000     IS UNIT NUMBER      8

    HOLE NUMBER     30       AT X = -5.3975      Y = -9.3487      Z = 0.00000     IS UNIT NUMBER      4

    HOLE NUMBER     31       AT X = 0.00000      Y = -5.7150      Z = 0.00000     IS UNIT NUMBER      8

    HOLE NUMBER     32       AT X = 0.63300      Y = -5.6798      Z = 0.00000     IS UNIT NUMBER      8

    HOLE NUMBER     33       AT X =-0.63300      Y = -5.6798      Z = 0.00000     IS UNIT NUMBER      8

    HOLE NUMBER     34       AT X =  5.3975      Y = -9.3487      Z = 0.00000     IS UNIT NUMBER      4

    HOLE NUMBER     35       AT X =  4.9493      Y = -2.8575      Z = 0.00000     IS UNIT NUMBER      8

    HOLE NUMBER     36       AT X =  5.2354      Y = -2.2917      Z = 0.00000     IS UNIT NUMBER      8

    HOLE NUMBER     37       AT X =  4.6024      Y = -3.3881      Z = 0.00000     IS UNIT NUMBER      8

  2 CYLINDER         7  1  RADIUS =  16.669     +Z =  73.177     -Z = 0.00000     CENTERLINE IS AT  X = 0.00000      Y = 0.00000

  3 CYLINDER         3  1  RADIUS =  16.847     +Z =  73.177     -Z = 0.00000     CENTERLINE IS AT  X = 0.00000      Y = 0.00000
```

```
                MEDIA BIAS      GEOMETRY DESCRIPTION FOR THOSE UNITS UTILIZED IN THIS PROBLEM
REGION           NUM   ID

                                                -----   UNIT    10   -----

BASKET FUEL UP

  1 CYLINDER         3  1  RADIUS =  16.193     +Z =  73.177     -Z = 0.00000     CENTERLINE IS AT  X = 0.00000      Y = 0.00000

    HOLE NUMBER     38       AT X = 0.00000      Y = 0.00000      Z = 0.00000     IS UNIT NUMBER      5

    HOLE NUMBER     39       AT X =  10.795      Y = 0.00000      Z = 0.00000     IS UNIT NUMBER      5

    HOLE NUMBER     40       AT X =  4.9493      Y =  2.8575      Z = 0.00000     IS UNIT NUMBER      8

    HOLE NUMBER     41       AT X =  4.6024      Y =  3.3881      Z = 0.00000     IS UNIT NUMBER      8

    HOLE NUMBER     42       AT X =  5.2354      Y =  2.2917      Z = 0.00000     IS UNIT NUMBER      8

    HOLE NUMBER     43       AT X =  5.3975      Y =  9.3487      Z = 0.00000     IS UNIT NUMBER      5

    HOLE NUMBER     44       AT X = 0.00000      Y =  5.7150      Z = 0.00000     IS UNIT NUMBER      8

    HOLE NUMBER     45       AT X =-0.63300      Y =  5.6798      Z = 0.00000     IS UNIT NUMBER      8

    HOLE NUMBER     46       AT X = 0.63300      Y =  5.6798      Z = 0.00000     IS UNIT NUMBER      8

    HOLE NUMBER     47       AT X = -5.3975      Y =  9.3487      Z = 0.00000     IS UNIT NUMBER      5

    HOLE NUMBER     48       AT X = -4.9493      Y =  2.8575      Z = 0.00000     IS UNIT NUMBER      8

    HOLE NUMBER     49       AT X = -5.2354      Y =  2.2917      Z = 0.00000     IS UNIT NUMBER      8

    HOLE NUMBER     50       AT X = -4.6024      Y =  3.3881      Z = 0.00000     IS UNIT NUMBER      8

    HOLE NUMBER     51       AT X = -10.795      Y = 0.00000      Z = 0.00000     IS UNIT NUMBER      5

    HOLE NUMBER     52       AT X = -4.9493      Y = -2.8575      Z = 0.00000     IS UNIT NUMBER      8

    HOLE NUMBER     53       AT X = -4.6024      Y = -3.3881      Z = 0.00000     IS UNIT NUMBER      8

    HOLE NUMBER     54       AT X = -5.2354      Y = -2.2917      Z = 0.00000     IS UNIT NUMBER      8

    HOLE NUMBER     55       AT X = -5.3975      Y = -9.3487      Z = 0.00000     IS UNIT NUMBER      5

    HOLE NUMBER     56       AT X = 0.00000      Y = -5.7150      Z = 0.00000     IS UNIT NUMBER      8

    HOLE NUMBER     57       AT X = 0.63300      Y = -5.6798      Z = 0.00000     IS UNIT NUMBER      8

    HOLE NUMBER     58       AT X =-0.63300      Y = -5.6798      Z = 0.00000     IS UNIT NUMBER      8

    HOLE NUMBER     59       AT X =  5.3975      Y = -9.3487      Z = 0.00000     IS UNIT NUMBER      5

    HOLE NUMBER     60       AT X =  4.9493      Y = -2.8575      Z = 0.00000     IS UNIT NUMBER      8

    HOLE NUMBER     61       AT X =  5.2354      Y = -2.2917      Z = 0.00000     IS UNIT NUMBER      8

    HOLE NUMBER     62       AT X =  4.6024      Y = -3.3881      Z = 0.00000     IS UNIT NUMBER      8

  2 CYLINDER         7  1  RADIUS =  16.669     +Z =  73.177     -Z = 0.00000     CENTERLINE IS AT  X = 0.00000      Y = 0.00000

  3 CYLINDER         3  1  RADIUS =  16.847     +Z =  73.177     -Z = 0.00000     CENTERLINE IS AT  X = 0.00000      Y = 0.00000
```

```
                MEDIA BIAS      GEOMETRY DESCRIPTION FOR THOSE UNITS UTILIZED IN THIS PROBLEM
REGION           NUM   ID

                                                -----   UNIT    11   -----

CASK CAVITY

  1 CYLINDER         3  1  RADIUS =  16.986     +Z =  446.68     -Z = 0.00000     CENTERLINE IS AT  X = 0.00000      Y = 0.00000

    HOLE NUMBER     63       AT X = 0.00000      Y = 0.00000      Z = 1.00000E-04 IS UNIT NUMBER      7

    HOLE NUMBER     64       AT X = 0.00000      Y = 0.00000      Z =  1.2700     IS UNIT NUMBER     10

    HOLE NUMBER     65       AT X = 0.00000      Y = 0.00000      Z =  74.448     IS UNIT NUMBER      7

    HOLE NUMBER     66       AT X = 0.00000      Y = 0.00000      Z =  75.717     IS UNIT NUMBER      9

    HOLE NUMBER     67       AT X = 0.00000      Y = 0.00000      Z =  148.89     IS UNIT NUMBER      7

    HOLE NUMBER     68       AT X = 0.00000      Y = 0.00000      Z =  150.16     IS UNIT NUMBER     10

    HOLE NUMBER     69       AT X = 0.00000      Y = 0.00000      Z =  223.34     IS UNIT NUMBER      7

    HOLE NUMBER     70       AT X = 0.00000      Y = 0.00000      Z =  224.61     IS UNIT NUMBER      9

    HOLE NUMBER     71       AT X = 0.00000      Y = 0.00000      Z =  297.79     IS UNIT NUMBER      7

    HOLE NUMBER     72       AT X = 0.00000      Y = 0.00000      Z =  299.06     IS UNIT NUMBER     10

    HOLE NUMBER     73       AT X = 0.00000      Y = 0.00000      Z =  372.24     IS UNIT NUMBER      7

    HOLE NUMBER     74       AT X = 0.00000      Y = 0.00000      Z =  373.51     IS UNIT NUMBER      9

                                                -----   UNIT    12   -----

CASK SHIELD RADIAL CONFIGURATION

  1 CYLINDER         3  1  RADIUS =  16.986     +Z =  446.68     -Z = 0.00000     CENTERLINE IS AT  X = 0.00000      Y = 0.00000

    HOLE NUMBER     75       AT X = 0.00000      Y = 0.00000      Z = 0.00000     IS UNIT NUMBER     11

  2 CYLINDER         8  1  RADIUS =  18.910     +Z =  446.68     -Z = 0.00000     CENTERLINE IS AT  X = 0.00000      Y = 0.00000

  3 CYLINDER         5  1  RADIUS =  33.465     +Z =  446.68     -Z = 0.00000     CENTERLINE IS AT  X = 0.00000      Y = 0.00000

  4 CYLINDER         8  1  RADIUS =  36.519     +Z =  446.68     -Z = 0.00000     CENTERLINE IS AT  X = 0.00000      Y = 0.00000

  5 CYLINDER         9  1  RADIUS =  49.219     +Z =  446.68     -Z = 0.00000     CENTERLINE IS AT  X = 0.00000      Y = 0.00000

  6 CYLINDER         8  1  RADIUS =  49.818     +Z =  446.68     -Z = 0.00000     CENTERLINE IS AT  X = 0.00000      Y = 0.00000
```

```
                MEDIA BIAS      GEOMETRY DESCRIPTION FOR THOSE UNITS UTILIZED IN THIS PROBLEM
REGION           NUM   ID

                                              -----   UNIT    13   -----

LWT LID

  1 CYLINDER         8  1  RADIUS =  36.519     +Z =  28.575     -Z = 0.59940     CENTERLINE IS AT  X = 0.00000      Y = 0.00000

  2 CYLINDER         9  1  RADIUS =  49.818     +Z =  28.575     -Z = 0.59940     CENTERLINE IS AT  X = 0.00000      Y = 0.00000

  3 CYLINDER         8  1  RADIUS =  49.818     +Z =  28.575     -Z = 0.00000     CENTERLINE IS AT  X = 0.00000      Y = 0.00000

                                              -----   UNIT    14   -----

LWT BOTTOM WELDMENT

  1 CYLINDER         5  1  RADIUS =  26.353     +Z =  16.510     -Z =  8.8900     CENTERLINE IS AT  X = 0.00000      Y = 0.00000

  2 CYLINDER         8  1  RADIUS =  36.519     +Z =  26.071     -Z = 0.00000     CENTERLINE IS AT  X = 0.00000      Y = 0.00000

  3 CYLINDER         9  1  RADIUS =  49.818     +Z =  26.071     -Z = 0.00000     CENTERLINE IS AT  X = 0.00000      Y = 0.00000

  4 CYLINDER         8  1  RADIUS =  49.818     +Z =  26.670     -Z = 0.00000     CENTERLINE IS AT  X = 0.00000      Y = 0.00000

                                              -----   UNIT    15   -----

LWT CASK

  1 CYLINDER         9  1  RADIUS =  49.818     +Z =  501.93     -Z = 0.00000     CENTERLINE IS AT  X = 0.00000      Y = 0.00000

    HOLE NUMBER     76       AT X = 0.00000      Y = 0.00000      Z = 0.00000     IS UNIT NUMBER     14

    HOLE NUMBER     77       AT X = 0.00000      Y = 0.00000      Z =  26.670     IS UNIT NUMBER     12

    HOLE NUMBER     78       AT X = 0.00000      Y = 0.00000      Z =  473.35     IS UNIT NUMBER     13
```

```
                MEDIA BIAS      GEOMETRY DESCRIPTION FOR THOSE UNITS UTILIZED IN THIS PROBLEM
REGION           NUM   ID

                                      ******************   GLOBAL   ******************
                                                 -----   UNIT    16   -----

FINITE CASK ARRAY 8 CASKS

  1 CUBOID           3  1      +X =  199.27     -X = -149.46     +Y =  136.11     -Y = -136.11     +Z =  501.93     -Z = 0.00000

    HOLE NUMBER     79       AT X = 0.00000      Y = 0.00000      Z = 0.00000     IS UNIT NUMBER     15

    HOLE NUMBER     80       AT X =  99.637      Y = 0.00000      Z = 0.00000     IS UNIT NUMBER     15

    HOLE NUMBER     81       AT X =  49.818      Y =  86.288      Z = 0.00000     IS UNIT NUMBER     15

    HOLE NUMBER     82       AT X = -49.818      Y =  86.288      Z = 0.00000     IS UNIT NUMBER     15

    HOLE NUMBER     83       AT X = -99.637      Y = 0.00000      Z = 0.00000     IS UNIT NUMBER     15

    HOLE NUMBER     84       AT X = -49.818      Y = -86.288      Z = 0.00000     IS UNIT NUMBER     15

    HOLE NUMBER     85       AT X =  49.818      Y = -86.288      Z = 0.00000     IS UNIT NUMBER     15

    HOLE NUMBER     86       AT X =  149.46      Y = -86.288      Z = 0.00000     IS UNIT NUMBER     15
```

VOLUMES FOR THOSE UNITS UTILIZED IN THIS PROBLEM

UNIT	REGION	GEOMETRY REGION	VOLUME	CUMULATIVE VOLUME
1	1	1	1.69451E+03 CM**3	1.69451E+03 CM**3
	2	2	3.65458E+01 CM**3	1.73105E+03 CM**3
	3	3	7.42612E+01 CM**3	1.80531E+03 CM**3
	4	4	3.77155E+01 CM**3	1.84303E+03 CM**3
	5	5	4.56862E+02 CM**3	2.29989E+03 CM**3
	6	6	4.25442E+01 CM**3	2.34243E+03 CM**3
	7	7	8.62583E+01 CM**3	2.42869E+03 CM**3
	8	8	4.37139E+01 CM**3	2.47241E+03 CM**3
	9	9	5.25153E+02 CM**3	2.99756E+03 CM**3
	10	10	4.85422E+01 CM**3	3.04610E+03 CM**3
	11	11	9.82551E+01 CM**3	3.14436E+03 CM**3
	12	12	4.97122E+01 CM**3	3.19407E+03 CM**3
	13	13	5.93444E+02 CM**3	3.78751E+03 CM**3
	14	14	5.45405E+01 CM**3	3.84205E+03 CM**3
	15	15	1.10252E+02 CM**3	3.95231E+03 CM**3
	16	16	5.55391E+01 CM**3	4.00785E+03 CM**3
2	1	17	3.96586E+01 CM**3	3.96586E+01 CM**3
	2	18	3.47606E+00 CM**3	4.31347E+01 CM**3
	3	19	1.06925E+01 CM**3	5.38272E+01 CM**3
	4	20	4.03762E+00 CM**3	5.78648E+01 CM**3
	5	21	1.22908E+01 CM**3	7.01557E+01 CM**3
	6	22	4.59916E+00 CM**3	7.47548E+01 CM**3
	7	23	1.38891E+01 CM**3	8.86439E+01 CM**3
	8	24	5.15671E+00 CM**3	9.38006E+01 CM**3
3	1	25	1.79337E-01 CM**3	4.19563E+03 CM**3
4	1	26	1.76679E+03 CM**3	5.96242E+03 CM**3
	2	27	7.34815E+02 CM**3	6.69723E+03 CM**3
5	1	28	1.76679E+03 CM**3	5.96242E+03 CM**3
	2	29	7.34815E+02 CM**3	6.69723E+03 CM**3
6	1	30	6.43417E+00 CM**3	6.43417E+00 CM**3
7	1	31	1.08713E+03 CM**3	1.13216E+03 CM**3
8	1	32	2.30289E+01 CM**3	2.30289E+01 CM**3
9	1	33	1.29829E+04 CM**3	6.02781E+04 CM**3
	2	34	3.59751E+03 CM**3	6.38756E+04 CM**3
	3	35	1.36994E+03 CM**3	6.52455E+04 CM**3
10	1	36	1.29829E+04 CM**3	6.02781E+04 CM**3
	2	37	3.59751E+03 CM**3	6.38756E+04 CM**3
	3	38	1.36994E+03 CM**3	6.52455E+04 CM**3
11	1	39	6.63421E+03 CM**3	4.04900E+05 CM**3
12	1	40	0.00000E+00 CM**3	4.04900E+05 CM**3
	2	41	9.69190E+04 CM**3	5.01819E+05 CM**3
	3	42	1.06970E+06 CM**3	1.57152E+06 CM**3
	4	43	2.99966E+05 CM**3	1.87148E+06 CM**3
	5	44	1.52801E+06 CM**3	3.39950E+06 CM**3
	6	45	8.33038E+04 CM**3	3.48280E+06 CM**3
13	1	46	1.17210E+05 CM**3	1.17210E+05 CM**3
	2	47	1.00916E+05 CM**3	2.18126E+05 CM**3
	3	48	4.67352E+03 CM**3	2.22799E+05 CM**3
14	1	49	1.66245E+04 CM**3	1.66245E+04 CM**3
	2	50	9.26041E+04 CM**3	1.09229E+05 CM**3
	3	51	9.40439E+04 CM**3	2.03273E+05 CM**3
	4	52	4.67353E+03 CM**3	2.07946E+05 CM**3
15	1	53	2.42188E+00 CM**3	3.91355E+06 CM**3
16	1	54	1.63393E+07 CM**3	4.76477E+07 CM**3

UNIT	USES	REGION	MIXTURE	TOTAL VOLUME
1	336	1	3	5.69354E+05 CM**3
		2	2	1.22794E+04 CM**3
		3	1	2.49518E+04 CM**3
		4	2	1.26724E+04 CM**3
		5	3	1.53506E+05 CM**3
		6	2	1.42948E+04 CM**3
		7	1	2.89828E+04 CM**3
		8	2	1.46879E+04 CM**3
		9	3	1.76452E+05 CM**3
		10	2	1.63102E+04 CM**3
		11	1	3.30137E+04 CM**3
		12	2	1.67033E+04 CM**3
		13	3	1.99397E+05 CM**3
		14	2	1.83256E+04 CM**3
		15	1	3.70448E+04 CM**3

		16	2	1.86611E+04 CM**3
2	672	1	3	2.66506E+04 CM**3
		2	2	2.33591E+03 CM**3
		3	3	7.18538E+03 CM**3
		4	2	2.71328E+03 CM**3
		5	3	8.25943E+03 CM**3
		6	2	3.09064E+03 CM**3
		7	3	9.33348E+03 CM**3
		8	2	3.46531E+03 CM**3
3	336	1	3	6.02571E+01 CM**3
4	168	1	3	2.96821E+05 CM**3
		2	2	1.23449E+05 CM**3
5	168	1	3	2.96821E+05 CM**3
		2	2	1.23449E+05 CM**3
6	336	1	3	2.16188E+03 CM**3
7	48	1	6	5.21820E+04 CM**3
8	864	1	7	1.98970E+04 CM**3
9	24	1	3	3.11591E+05 CM**3
		2	7	8.63402E+04 CM**3
		3	3	3.28785E+04 CM**3
10	24	1	3	3.11591E+05 CM**3
		2	7	8.63402E+04 CM**3
		3	3	3.28785E+04 CM**3
11	8	1	3	5.30737E+04 CM**3
12	8	1	3	0.00000E+00 CM**3
		2	8	7.75352E+05 CM**3
		3	5	8.55759E+06 CM**3
		4	8	2.39973E+06 CM**3
		5	9	1.22241E+07 CM**3
		6	8	6.66430E+05 CM**3
13	8	1	8	9.37680E+05 CM**3
		2	9	8.07326E+05 CM**3
		3	8	3.73881E+04 CM**3
14	8	1	5	1.32996E+05 CM**3
		2	8	7.40833E+05 CM**3
		3	9	7.52351E+05 CM**3
		4	8	3.73883E+04 CM**3
15	8	1	9	1.93750E+01 CM**3
16	1	1	3	1.63393E+07 CM**3

TOTAL MIXTURE VOLUMES

MIXTURE	TOTAL VOLUME	MASS(G)
1	1.23993E+05 CM**3	2.90231E+05
2	3.82438E+05 CM**3	1.03335E+06
3	1.88273E+07 CM**3	1.88230E+07
5	8.69059E+06 CM**3	9.85860E+07
6	5.21820E+04 CM**3	4.13282E+05
7	1.92577E+05 CM**3	5.20344E+05
8	5.59480E+06 CM**3	4.43108E+07
9	1.37838E+07 CM**3	1.37834E+03

```
**********************************************************************************************************************
***                                                                                                                    ***
***                                        BIASING INFORMATION                                                         ***
***                                                                                                                    ***
***     A DEFAULT WEIGHT OF    0.500 WILL BE USED FOR ALL BIAS ID'S.                                                   ***
***                                                                                                                    ***
**********************************************************************************************************************

                          ........    0 IO'S WERE USED IN KENO-V BEFORE TRACKING       ........

                          ........  0.01267 MINUTES WERE USED PROCESSING DATA.        ........

VOLUME FRACTION OF FISSILE MATERIAL IN THE CORE= 2.60229E-03

START TYPE 0 WAS USED.

THE NEUTRONS WERE STARTED WITH A FLAT DISTRIBUTION IN A CUBOID DEFINED BY:
                     +X= 1.68500E+01  -X=-1.68500E+01  +Y=-1.68500E+01  -Y= 1.68500E+01  +Z= 4.73350E+02  -Z= 2.66700E+01
THE FLAG TO START NEUTRONS IN THE REFLECTOR WAS TURNED OFF

0.11100 MINUTES WERE REQUIRED FOR STARTING.   TOTAL ELAPSED TIME IS 0.11733 MINUTES.
```

GENERATION	GENERATION K-EFFECTIVE	ELAPSED TIME MINUTES	AVERAGE K-EFFECTIVE	AVG K-EFF DEVIATION	MATRIX K-EFFECTIVE	MATRIX K-EFF DEVIATION
KENO MESSAGE NUMBER K5-132		WARNING....ONLY	961 INDEPENDENT FISSION POINTS WERE GENERATED			
1	8.58773E-01	1.46333E-01	1.00000E+00	0.00000E+00	0.00000E+00	0.00000E+00
2	9.33771E-01	1.68333E-01	1.00000E+00	0.00000E+00	0.00000E+00	0.00000E+00
KENO MESSAGE NUMBER K5-132		WARNING....ONLY	957 INDEPENDENT FISSION POINTS WERE GENERATED			
3	8.63486E-01	1.93000E-01	8.63486E-01	0.00000E+00	0.00000E+00	0.00000E+00
4	8.78581E-01	2.16000E-01	8.71034E-01	7.54768E-03	0.00000E+00	0.00000E+00
5	9.04679E-01	2.39833E-01	8.82249E-01	1.20320E-02	0.00000E+00	0.00000E+00
6	9.24609E-01	2.62667E-01	8.92839E-01	1.35843E-02	0.00000E+00	0.00000E+00
7	9.17145E-01	2.84667E-01	8.97700E-01	1.15910E-02	0.00000E+00	0.00000E+00
8	9.05527E-01	3.08500E-01	8.99005E-01	9.55350E-03	0.00000E+00	0.00000E+00
9	9.23056E-01	3.32167E-01	9.02441E-01	8.77483E-03	0.00000E+00	0.00000E+00
10	9.21692E-01	3.56000E-01	9.04847E-01	7.97116E-03	0.00000E+00	0.00000E+00
11	9.00007E-01	3.79833E-01	9.04309E-01	7.05044E-03	0.00000E+00	0.00000E+00
12	8.57565E-01	4.04500E-01	8.99635E-01	7.84969E-03	0.00000E+00	0.00000E+00
13	8.57721E-01	4.28333E-01	8.95824E-01	8.05812E-03	0.00000E+00	0.00000E+00
14	9.43923E-01	4.51167E-01	8.99833E-01	8.37718E-03	0.00000E+00	0.00000E+00
15	9.09837E-01	4.74167E-01	9.00602E-01	7.74422E-03	0.00000E+00	0.00000E+00
16	9.19908E-01	4.97000E-01	9.01981E-01	7.30116E-03	0.00000E+00	0.00000E+00
17	9.33907E-01	5.21667E-01	9.04110E-01	7.12246E-03	0.00000E+00	0.00000E+00
18	8.70579E-01	5.44667E-01	9.02014E-01	6.98426E-03	0.00000E+00	0.00000E+00
19	9.15282E-01	5.68333E-01	9.02794E-01	6.60683E-03	0.00000E+00	0.00000E+00
20	8.77815E-01	5.93167E-01	9.01407E-01	6.38169E-03	0.00000E+00	0.00000E+00
21	9.26908E-01	6.16000E-01	9.02749E-01	6.18389E-03	0.00000E+00	0.00000E+00
22	8.79347E-01	6.41667E-01	9.01579E-01	5.98210E-03	0.00000E+00	0.00000E+00
23	9.13359E-01	6.65500E-01	9.02140E-01	5.71770E-03	0.00000E+00	0.00000E+00
24	8.82892E-01	6.89167E-01	9.01265E-01	5.52137E-03	0.00000E+00	0.00000E+00
25	9.10070E-01	7.13000E-01	9.01648E-01	5.28972E-03	0.00000E+00	0.00000E+00
26	8.56690E-01	7.37833E-01	8.99774E-01	5.39986E-03	0.00000E+00	0.00000E+00
27	8.64557E-01	7.62500E-01	8.98366E-01	5.36752E-03	0.00000E+00	0.00000E+00
28	9.22162E-01	7.85333E-01	8.99281E-01	5.23753E-03	0.00000E+00	0.00000E+00
29	8.95370E-01	8.08167E-01	8.99136E-01	5.04190E-03	0.00000E+00	0.00000E+00
30	8.96834E-01	8.33833E-01	8.99054E-01	4.85919E-03	0.00000E+00	0.00000E+00
31	8.81740E-01	8.57667E-01	8.98457E-01	4.72650E-03	0.00000E+00	0.00000E+00
32	8.88292E-01	8.81500E-01	8.98118E-01	4.57879E-03	0.00000E+00	0.00000E+00
33	8.98466E-01	9.06167E-01	8.98129E-01	4.42863E-03	0.00000E+00	0.00000E+00
34	9.31577E-01	9.29000E-01	8.99175E-01	4.41356E-03	0.00000E+00	0.00000E+00
35	8.80767E-01	9.52833E-01	8.98617E-01	4.31394E-03	0.00000E+00	0.00000E+00
36	9.21118E-01	9.76667E-01	8.99278E-01	4.23714E-03	0.00000E+00	0.00000E+00
37	8.52259E-01	1.00050E+00	8.97935E-01	4.32807E-03	0.00000E+00	0.00000E+00
38	8.69525E-01	1.02433E+00	8.97146E-01	4.27953E-03	0.00000E+00	0.00000E+00
39	9.03040E-01	1.04817E+00	8.97305E-01	4.16530E-03	0.00000E+00	0.00000E+00
40	8.81602E-01	1.07183E+00	8.96892E-01	4.07522E-03	0.00000E+00	0.00000E+00
41	8.62374E-01	1.09667E+00	8.96007E-01	4.06682E-03	0.00000E+00	0.00000E+00
42	9.02090E-01	1.12133E+00	8.96159E-01	3.96677E-03	0.00000E+00	0.00000E+00
43	8.94155E-01	1.14517E+00	8.96110E-01	3.86911E-03	0.00000E+00	0.00000E+00
44	9.02857E-01	1.16900E+00	8.96271E-01	3.77929E-03	0.00000E+00	0.00000E+00
45	9.40155E-01	1.19083E+00	8.97291E-01	3.82887E-03	0.00000E+00	0.00000E+00
46	8.79557E-01	1.21467E+00	8.96888E-01	3.76249E-03	0.00000E+00	0.00000E+00
47	9.17170E-01	1.23850E+00	8.97339E-01	3.70544E-03	0.00000E+00	0.00000E+00
48	9.17262E-01	1.26233E+00	8.97772E-01	3.64978E-03	0.00000E+00	0.00000E+00
49	9.12876E-01	1.28617E+00	8.98093E-01	3.58571E-03	0.00000E+00	0.00000E+00
50	8.99770E-01	1.31083E+00	8.98128E-01	3.51039E-03	0.00000E+00	0.00000E+00
51	8.66263E-01	1.33467E+00	8.97478E-01	3.49896E-03	0.00000E+00	0.00000E+00
52	8.75319E-01	1.35933E+00	8.97035E-01	3.45680E-03	0.00000E+00	0.00000E+00
53	8.80759E-01	1.38317E+00	8.96716E-01	3.40333E-03	0.00000E+00	0.00000E+00
54	8.67570E-01	1.40783E+00	8.96155E-01	3.38398E-03	0.00000E+00	0.00000E+00
55	9.51958E-01	1.43250E+00	8.97208E-01	3.48250E-03	0.00000E+00	0.00000E+00
56	9.09210E-01	1.45550E+00	8.97430E-01	3.42462E-03	0.00000E+00	0.00000E+00
57	9.07998E-01	1.47933E+00	8.97623E-01	3.36726E-03	0.00000E+00	0.00000E+00
58	8.73204E-01	1.50400E+00	8.97186E-01	3.33521E-03	0.00000E+00	0.00000E+00
59	9.10378E-01	1.52783E+00	8.97418E-01	3.28434E-03	0.00000E+00	0.00000E+00
60	8.92000E-01	1.55150E+00	8.97325E-01	3.22857E-03	0.00000E+00	0.00000E+00
61	8.89776E-01	1.57633E+00	8.97197E-01	3.17596E-03	0.00000E+00	0.00000E+00
62	8.55916E-01	1.60100E+00	8.96509E-01	3.19747E-03	0.00000E+00	0.00000E+00
63	9.32555E-01	1.62300E+00	8.97099E-01	3.19966E-03	0.00000E+00	0.00000E+00
64	9.25066E-01	1.64583E+00	8.97551E-01	3.17978E-03	0.00000E+00	0.00000E+00
65	8.77079E-01	1.67050E+00	8.97226E-01	3.14573E-03	0.00000E+00	0.00000E+00
66	9.09881E-01	1.69433E+00	8.97423E-01	3.10250E-03	0.00000E+00	0.00000E+00
67	8.76992E-01	1.71817E+00	8.97109E-01	3.07052E-03	0.00000E+00	0.00000E+00
68	9.21783E-01	1.74100E+00	8.97483E-01	3.04667E-03	0.00000E+00	0.00000E+00
69	9.05453E-01	1.76483E+00	8.97602E-01	3.00321E-03	0.00000E+00	0.00000E+00
70	9.24480E-01	1.78783E+00	8.97997E-01	2.98500E-03	0.00000E+00	0.00000E+00
71	8.63590E-01	1.81250E+00	8.97498E-01	2.98339E-03	0.00000E+00	0.00000E+00
72	9.37983E-01	1.83533E+00	8.98077E-01	2.99680E-03	0.00000E+00	0.00000E+00
73	8.79989E-01	1.85917E+00	8.97822E-01	2.96525E-03	0.00000E+00	0.00000E+00
74	8.83123E-01	1.88300E+00	8.97618E-01	2.93090E-03	0.00000E+00	0.00000E+00
75	9.15389E-01	1.90683E+00	8.97861E-01	2.90070E-03	0.00000E+00	0.00000E+00
76	8.74826E-01	1.93233E+00	8.97550E-01	2.87812E-03	0.00000E+00	0.00000E+00
77	8.80442E-01	1.95533E+00	8.97322E-01	2.84863E-03	0.00000E+00	0.00000E+00
78	8.80627E-01	1.97817E+00	8.97102E-01	2.81947E-03	0.00000E+00	0.00000E+00
79	9.12211E-01	2.00200E+00	8.97298E-01	2.78952E-03	0.00000E+00	0.00000E+00
80	8.44802E-01	2.02667E+00	8.96625E-01	2.83459E-03	0.00000E+00	0.00000E+00
81	8.98826E-01	2.05050E+00	8.96653E-01	2.79862E-03	0.00000E+00	0.00000E+00
82	8.72723E-01	2.07433E+00	8.96354E-01	2.77955E-03	0.00000E+00	0.00000E+00
83	8.83782E-01	2.09717E+00	8.96199E-01	2.74941E-03	0.00000E+00	0.00000E+00
84	8.99513E-01	2.12183E+00	8.96239E-01	2.71597E-03	0.00000E+00	0.00000E+00
85	9.24791E-01	2.14567E+00	8.96583E-01	2.70501E-03	0.00000E+00	0.00000E+00
86	8.74108E-01	2.16850E+00	8.96316E-01	2.68598E-03	0.00000E+00	0.00000E+00
87	9.23002E-01	2.19233E+00	8.96630E-01	2.67269E-03	0.00000E+00	0.00000E+00
88	9.00543E-01	2.21717E+00	8.96675E-01	2.64182E-03	0.00000E+00	0.00000E+00
89	8.82276E-01	2.24083E+00	8.96510E-01	2.61652E-03	0.00000E+00	0.00000E+00

90	8.56795E-01	2.26467E+00	8.96058E-01	2.62569E-03	0.00000E+00	0.00000E+00
91	8.99466E-01	2.28850E+00	8.96097E-01	2.59631E-03	0.00000E+00	0.00000E+00
92	8.66877E-01	2.31317E+00	8.95772E-01	2.58774E-03	0.00000E+00	0.00000E+00
93	8.74085E-01	2.33700E+00	8.95534E-01	2.57022E-03	0.00000E+00	0.00000E+00
94	9.21830E-01	2.36083E+00	8.95820E-01	2.55815E-03	0.00000E+00	0.00000E+00
95	9.10253E-01	2.38367E+00	8.95975E-01	2.53525E-03	0.00000E+00	0.00000E+00
96	9.00694E-01	2.40750E+00	8.96025E-01	2.50863E-03	0.00000E+00	0.00000E+00
97	9.26241E-01	2.43133E+00	8.96343E-01	2.50238E-03	0.00000E+00	0.00000E+00
98	8.86651E-01	2.45417E+00	8.96242E-01	2.47824E-03	0.00000E+00	0.00000E+00
99	8.99097E-01	2.47883E+00	8.96272E-01	2.45273E-03	0.00000E+00	0.00000E+00
100	9.44858E-01	2.50183E+00	8.96767E-01	2.47768E-03	0.00000E+00	0.00000E+00
101	8.97823E-01	2.52550E+00	8.96778E-01	2.45255E-03	0.00000E+00	0.00000E+00
102	9.16019E-01	2.54850E+00	8.96970E-01	2.43551E-03	0.00000E+00	0.00000E+00
103	9.08980E-01	2.57233E+00	8.97089E-01	2.41421E-03	0.00000E+00	0.00000E+00
104	8.86222E-01	2.59600E+00	8.96983E-01	2.39280E-03	0.00000E+00	0.00000E+00
105	9.21146E-01	2.61983E+00	8.97217E-01	2.38104E-03	0.00000E+00	0.00000E+00
106	8.86269E-01	2.64283E+00	8.97112E-01	2.36038E-03	0.00000E+00	0.00000E+00
107	9.49570E-01	2.66650E+00	8.97612E-01	2.39058E-03	0.00000E+00	0.00000E+00
108	8.80226E-01	2.69033E+00	8.97448E-01	2.37359E-03	0.00000E+00	0.00000E+00
109	8.79681E-01	2.71317E+00	8.97282E-01	2.35716E-03	0.00000E+00	0.00000E+00
110	8.90503E-01	2.73617E+00	8.97219E-01	2.33608E-03	0.00000E+00	0.00000E+00
111	9.24128E-01	2.76000E+00	8.97466E-01	2.32768E-03	0.00000E+00	0.00000E+00
112	9.04722E-01	2.78367E+00	8.97532E-01	2.30736E-03	0.00000E+00	0.00000E+00
113	8.95747E-01	2.80850E+00	8.97516E-01	2.28654E-03	0.00000E+00	0.00000E+00
114	8.68503E-01	2.83233E+00	8.97257E-01	2.28079E-03	0.00000E+00	0.00000E+00
115	9.27085E-01	2.85600E+00	8.97521E-01	2.27587E-03	0.00000E+00	0.00000E+00
116	8.80557E-01	2.87900E+00	8.97372E-01	2.26072E-03	0.00000E+00	0.00000E+00
117	8.99169E-01	2.90267E+00	8.97387E-01	2.24103E-03	0.00000E+00	0.00000E+00
118	9.34573E-01	2.92567E+00	8.97708E-01	2.24464E-03	0.00000E+00	0.00000E+00
119	9.18461E-01	2.94850E+00	8.97885E-01	2.23243E-03	0.00000E+00	0.00000E+00
120	8.64606E-01	2.97233E+00	8.97603E-01	2.23132E-03	0.00000E+00	0.00000E+00
121	9.13743E-01	2.99617E+00	8.97739E-01	2.21665E-03	0.00000E+00	0.00000E+00
122	9.13687E-01	3.01983E+00	8.97872E-01	2.20211E-03	0.00000E+00	0.00000E+00
123	8.71706E-01	3.04283E+00	8.97656E-01	2.19452E-03	0.00000E+00	0.00000E+00
124	8.73371E-01	3.06750E+00	8.97457E-01	2.18554E-03	0.00000E+00	0.00000E+00
125	8.61744E-01	3.09133E+00	8.97166E-01	2.18705E-03	0.00000E+00	0.00000E+00
126	8.87808E-01	3.11417E+00	8.97091E-01	2.17066E-03	0.00000E+00	0.00000E+00
127	8.46442E-01	3.13900E+00	8.96686E-01	2.19101E-03	0.00000E+00	0.00000E+00
128	8.63348E-01	3.16367E+00	8.96421E-01	2.18960E-03	0.00000E+00	0.00000E+00
129	8.53674E-01	3.18833E+00	8.96084E-01	2.19821E-03	0.00000E+00	0.00000E+00
130	9.09836E-01	3.21217E+00	8.96192E-01	2.18362E-03	0.00000E+00	0.00000E+00
131	8.96024E-01	3.23600E+00	8.96190E-01	2.16662E-03	0.00000E+00	0.00000E+00
132	8.98081E-01	3.25983E+00	8.96205E-01	2.14994E-03	0.00000E+00	0.00000E+00
133	8.88058E-01	3.28350E+00	8.96143E-01	2.13437E-03	0.00000E+00	0.00000E+00
134	9.16562E-01	3.30833E+00	8.96298E-01	2.12378E-03	0.00000E+00	0.00000E+00
135	8.81358E-01	3.33200E+00	8.96185E-01	2.11075E-03	0.00000E+00	0.00000E+00
136	8.88469E-01	3.35583E+00	8.96128E-01	2.09573E-03	0.00000E+00	0.00000E+00
137	8.84176E-01	3.37967E+00	8.96039E-01	2.08203E-03	0.00000E+00	0.00000E+00
138	9.08892E-01	3.40350E+00	8.96134E-01	2.06882E-03	0.00000E+00	0.00000E+00
139	9.07285E-01	3.42817E+00	8.96215E-01	2.05528E-03	0.00000E+00	0.00000E+00
140	8.79684E-01	3.45200E+00	8.96095E-01	2.04384E-03	0.00000E+00	0.00000E+00
141	8.87105E-01	3.47583E+00	8.96031E-01	2.03012E-03	0.00000E+00	0.00000E+00
142	8.94803E-01	3.49867E+00	8.96022E-01	2.01558E-03	0.00000E+00	0.00000E+00
143	9.08305E-01	3.52150E+00	8.96109E-01	2.00313E-03	0.00000E+00	0.00000E+00
144	8.55544E-01	3.54533E+00	8.95823E-01	2.00939E-03	0.00000E+00	0.00000E+00
145	8.85286E-01	3.56833E+00	8.95749E-01	1.99664E-03	0.00000E+00	0.00000E+00
146	8.92547E-01	3.59200E+00	8.95727E-01	1.98285E-03	0.00000E+00	0.00000E+00
147	8.52651E-01	3.61683E+00	8.95430E-01	1.99142E-03	0.00000E+00	0.00000E+00
148	9.24393E-01	3.64050E+00	8.95629E-01	1.98765E-03	0.00000E+00	0.00000E+00
149	9.03056E-01	3.66533E+00	8.95679E-01	1.97473E-03	0.00000E+00	0.00000E+00
150	9.16130E-01	3.68817E+00	8.95817E-01	1.96621E-03	0.00000E+00	0.00000E+00
151	9.09824E-01	3.71200E+00	8.95911E-01	1.95523E-03	0.00000E+00	0.00000E+00
152	8.96596E-01	3.73483E+00	8.95916E-01	1.94215E-03	0.00000E+00	0.00000E+00
153	8.98241E-01	3.75767E+00	8.95931E-01	1.92931E-03	0.00000E+00	0.00000E+00
154	9.12544E-01	3.78150E+00	8.96041E-01	1.91969E-03	0.00000E+00	0.00000E+00
155	9.37176E-01	3.80450E+00	8.96309E-01	1.92596E-03	0.00000E+00	0.00000E+00
156	9.42169E-01	3.82817E+00	8.96607E-01	1.93645E-03	0.00000E+00	0.00000E+00
157	8.91191E-01	3.85300E+00	8.96572E-01	1.92423E-03	0.00000E+00	0.00000E+00
158	9.08956E-01	3.87583E+00	8.96652E-01	1.91350E-03	0.00000E+00	0.00000E+00
159	8.95884E-01	3.89967E+00	8.96647E-01	1.90128E-03	0.00000E+00	0.00000E+00
160	8.98953E-01	3.92350E+00	8.96661E-01	1.88927E-03	0.00000E+00	0.00000E+00
161	8.96101E-01	3.94717E+00	8.96658E-01	1.87735E-03	0.00000E+00	0.00000E+00
162	8.83021E-01	3.97100E+00	8.96573E-01	1.86753E-03	0.00000E+00	0.00000E+00
163	9.16210E-01	3.99583E+00	8.96695E-01	1.85989E-03	0.00000E+00	0.00000E+00
164	8.58566E-01	4.01950E+00	8.96459E-01	1.86330E-03	0.00000E+00	0.00000E+00
165	9.21076E-01	4.04333E+00	8.96610E-01	1.85798E-03	0.00000E+00	0.00000E+00
166	8.95743E-01	4.06533E+00	8.96605E-01	1.84663E-03	0.00000E+00	0.00000E+00
167	8.88705E-01	4.09000E+00	8.96557E-01	1.83602E-03	0.00000E+00	0.00000E+00
168	8.83226E-01	4.11383E+00	8.96477E-01	1.82670E-03	0.00000E+00	0.00000E+00
169	8.78492E-01	4.13767E+00	8.96369E-01	1.81892E-03	0.00000E+00	0.00000E+00
170	8.94948E-01	4.16150E+00	8.96361E-01	1.80808E-03	0.00000E+00	0.00000E+00
171	8.81945E-01	4.18517E+00	8.96275E-01	1.79937E-03	0.00000E+00	0.00000E+00
172	9.10233E-01	4.20817E+00	8.96357E-01	1.79064E-03	0.00000E+00	0.00000E+00
173	9.23181E-01	4.23283E+00	8.96514E-01	1.78703E-03	0.00000E+00	0.00000E+00
174	9.22740E-01	4.25483E+00	8.96667E-01	1.78314E-03	0.00000E+00	0.00000E+00
175	9.10878E-01	4.27950E+00	8.96749E-01	1.77471E-03	0.00000E+00	0.00000E+00
176	9.17149E-01	4.30333E+00	8.96866E-01	1.76837E-03	0.00000E+00	0.00000E+00
177	8.88689E-01	4.32617E+00	8.96819E-01	1.75886E-03	0.00000E+00	0.00000E+00
178	8.99471E-01	4.35100E+00	8.96834E-01	1.74890E-03	0.00000E+00	0.00000E+00
179	9.09166E-01	4.37383E+00	8.96904E-01	1.74039E-03	0.00000E+00	0.00000E+00
180	8.35989E-01	4.39850E+00	8.96562E-01	1.76409E-03	0.00000E+00	0.00000E+00
181	8.69753E-01	4.42233E+00	8.96412E-01	1.76059E-03	0.00000E+00	0.00000E+00
182	9.01969E-01	4.44700E+00	8.96443E-01	1.75106E-03	0.00000E+00	0.00000E+00
183	8.91836E-01	4.47083E+00	8.96418E-01	1.74154E-03	0.00000E+00	0.00000E+00
184	9.17951E-01	4.49550E+00	8.96536E-01	1.73598E-03	0.00000E+00	0.00000E+00

185	8.99231E-01	4.51933E+00	8.96551E-01	1.72653E-03	0.00000E+00	0.00000E+00
186	8.84331E-01	4.54233E+00	8.96484E-01	1.71841E-03	0.00000E+00	0.00000E+00
187	9.16742E-01	4.56700E+00	8.96594E-01	1.71260E-03	0.00000E+00	0.00000E+00
188	8.71679E-01	4.59167E+00	8.96460E-01	1.70862E-03	0.00000E+00	0.00000E+00
189	8.58782E-01	4.61550E+00	8.96258E-01	1.71136E-03	0.00000E+00	0.00000E+00
190	8.96294E-01	4.63933E+00	8.96258E-01	1.70224E-03	0.00000E+00	0.00000E+00
191	8.59250E-01	4.66217E+00	8.96063E-01	1.70449E-03	0.00000E+00	0.00000E+00
192	8.84561E-01	4.68500E+00	8.96002E-01	1.69658E-03	0.00000E+00	0.00000E+00
193	9.31881E-01	4.70883E+00	8.96190E-01	1.69809E-03	0.00000E+00	0.00000E+00
194	8.75438E-01	4.73450E+00	8.96082E-01	1.69268E-03	0.00000E+00	0.00000E+00
195	9.27613E-01	4.75733E+00	8.96245E-01	1.69179E-03	0.00000E+00	0.00000E+00
196	8.86960E-01	4.78117E+00	8.96197E-01	1.68373E-03	0.00000E+00	0.00000E+00
197	8.78513E-01	4.80500E+00	8.96107E-01	1.67753E-03	0.00000E+00	0.00000E+00
198	8.43970E-01	4.83150E+00	8.95841E-01	1.69001E-03	0.00000E+00	0.00000E+00
199	8.93770E-01	4.85633E+00	8.95830E-01	1.68145E-03	0.00000E+00	0.00000E+00
200	8.99111E-01	4.87917E+00	8.95847E-01	1.67301E-03	0.00000E+00	0.00000E+00
201	9.19939E-01	4.90200E+00	8.95968E-01	1.66898E-03	0.00000E+00	0.00000E+00
202	9.30312E-01	4.92483E+00	8.96140E-01	1.66947E-03	0.00000E+00	0.00000E+00
203	8.90682E-01	4.94967E+00	8.96112E-01	1.66137E-03	0.00000E+00	0.00000E+00
204	8.33278E-01	4.97533E+00	8.95801E-01	1.68213E-03	0.00000E+00	0.00000E+00
205	8.94063E-01	4.99900E+00	8.95793E-01	1.67385E-03	0.00000E+00	0.00000E+00
206	8.93316E-01	5.02200E+00	8.95781E-01	1.66567E-03	0.00000E+00	0.00000E+00
207	9.06016E-01	5.04667E+00	8.95831E-01	1.65827E-03	0.00000E+00	0.00000E+00
208	9.00892E-01	5.06950E+00	8.95855E-01	1.65039E-03	0.00000E+00	0.00000E+00
209	9.42164E-01	5.09250E+00	8.96079E-01	1.65756E-03	0.00000E+00	0.00000E+00
210	8.75255E-01	5.11800E+00	8.95979E-01	1.65261E-03	0.00000E+00	0.00000E+00
211	8.89688E-01	5.14183E+00	8.95949E-01	1.64496E-03	0.00000E+00	0.00000E+00
212	8.90783E-01	5.16483E+00	8.95924E-01	1.63729E-03	0.00000E+00	0.00000E+00
213	8.93693E-01	5.18850E+00	8.95913E-01	1.62955E-03	0.00000E+00	0.00000E+00
214	8.65067E-01	5.21333E+00	8.95768E-01	1.62836E-03	0.00000E+00	0.00000E+00
215	8.67362E-01	5.23617E+00	8.95635E-01	1.62617E-03	0.00000E+00	0.00000E+00
216	8.88983E-01	5.26000E+00	8.95603E-01	1.61885E-03	0.00000E+00	0.00000E+00
217	9.22045E-01	5.28383E+00	8.95726E-01	1.61599E-03	0.00000E+00	0.00000E+00
218	9.43618E-01	5.30750E+00	8.95948E-01	1.62370E-03	0.00000E+00	0.00000E+00
219	8.66742E-01	5.33133E+00	8.95814E-01	1.62180E-03	0.00000E+00	0.00000E+00
220	8.71369E-01	5.35517E+00	8.95701E-01	1.61823E-03	0.00000E+00	0.00000E+00
221	8.55960E-01	5.37983E+00	8.95520E-01	1.62101E-03	0.00000E+00	0.00000E+00
222	9.12158E-01	5.40283E+00	8.95596E-01	1.61540E-03	0.00000E+00	0.00000E+00
223	8.95254E-01	5.42650E+00	8.95594E-01	1.60807E-03	0.00000E+00	0.00000E+00
224	8.60585E-01	5.45033E+00	8.95436E-01	1.60856E-03	0.00000E+00	0.00000E+00
225	8.74524E-01	5.47417E+00	8.95343E-01	1.60408E-03	0.00000E+00	0.00000E+00
226	9.14818E-01	5.49700E+00	8.95430E-01	1.59926E-03	0.00000E+00	0.00000E+00
227	9.31760E-01	5.52083E+00	8.95591E-01	1.60031E-03	0.00000E+00	0.00000E+00
228	8.65724E-01	5.54550E+00	8.95459E-01	1.59868E-03	0.00000E+00	0.00000E+00
229	9.18458E-01	5.56850E+00	8.95560E-01	1.59485E-03	0.00000E+00	0.00000E+00
230	9.06092E-01	5.59317E+00	8.95606E-01	1.58851E-03	0.00000E+00	0.00000E+00
231	9.21820E-01	5.61600E+00	8.95721E-01	1.58569E-03	0.00000E+00	0.00000E+00
232	8.93586E-01	5.64167E+00	8.95712E-01	1.57881E-03	0.00000E+00	0.00000E+00
233	9.10990E-01	5.66450E+00	8.95778E-01	1.57335E-03	0.00000E+00	0.00000E+00
234	9.12836E-01	5.68833E+00	8.95851E-01	1.56828E-03	0.00000E+00	0.00000E+00
235	9.13126E-01	5.71033E+00	8.95925E-01	1.56329E-03	0.00000E+00	0.00000E+00
236	9.25522E-01	5.73417E+00	8.96052E-01	1.56173E-03	0.00000E+00	0.00000E+00
237	8.87379E-01	5.75883E+00	8.96015E-01	1.55551E-03	0.00000E+00	0.00000E+00
238	8.68187E-01	5.78350E+00	8.95897E-01	1.55338E-03	0.00000E+00	0.00000E+00
239	8.60217E-01	5.80917E+00	8.95746E-01	1.55412E-03	0.00000E+00	0.00000E+00
240	8.69248E-01	5.83217E+00	8.95635E-01	1.55158E-03	0.00000E+00	0.00000E+00
241	8.98512E-01	5.85583E+00	8.95647E-01	1.54512E-03	0.00000E+00	0.00000E+00
242	9.11914E-01	5.87883E+00	8.95715E-01	1.54016E-03	0.00000E+00	0.00000E+00
243	8.77626E-01	5.90167E+00	8.95640E-01	1.53559E-03	0.00000E+00	0.00000E+00
244	8.84961E-01	5.92550E+00	8.95596E-01	1.52987E-03	0.00000E+00	0.00000E+00
245	9.15886E-01	5.94933E+00	8.95679E-01	1.52585E-03	0.00000E+00	0.00000E+00
246	8.46228E-01	5.97400E+00	8.95477E-01	1.53304E-03	0.00000E+00	0.00000E+00
247	9.17179E-01	5.99783E+00	8.95565E-01	1.52934E-03	0.00000E+00	0.00000E+00
248	8.59401E-01	6.02167E+00	8.95418E-01	1.53018E-03	0.00000E+00	0.00000E+00
249	8.95811E-01	6.04533E+00	8.95420E-01	1.52398E-03	0.00000E+00	0.00000E+00
250	8.92145E-01	6.06917E+00	8.95407E-01	1.51788E-03	0.00000E+00	0.00000E+00
251	9.48130E-01	6.09200E+00	8.95618E-01	1.52653E-03	0.00000E+00	0.00000E+00
252	8.78052E-01	6.11583E+00	8.95548E-01	1.52203E-03	0.00000E+00	0.00000E+00
253	9.35664E-01	6.13967E+00	8.95708E-01	1.52436E-03	0.00000E+00	0.00000E+00
254	8.93427E-01	6.16533E+00	8.95699E-01	1.51832E-03	0.00000E+00	0.00000E+00
255	8.96659E-01	6.18817E+00	8.95703E-01	1.51231E-03	0.00000E+00	0.00000E+00
256	9.01249E-01	6.21200E+00	8.95724E-01	1.50651E-03	0.00000E+00	0.00000E+00
257	9.24391E-01	6.23483E+00	8.95837E-01	1.50479E-03	0.00000E+00	0.00000E+00
258	8.77010E-01	6.25783E+00	8.95763E-01	1.50070E-03	0.00000E+00	0.00000E+00
259	9.03217E-01	6.28067E+00	8.95792E-01	1.49513E-03	0.00000E+00	0.00000E+00
260	8.79833E-01	6.30633E+00	8.95730E-01	1.49061E-03	0.00000E+00	0.00000E+00
261	9.02200E-01	6.33017E+00	8.95755E-01	1.48506E-03	0.00000E+00	0.00000E+00
262	8.80712E-01	6.35383E+00	8.95698E-01	1.48046E-03	0.00000E+00	0.00000E+00
263	9.17152E-01	6.37683E+00	8.95780E-01	1.47707E-03	0.00000E+00	0.00000E+00
264	8.63141E-01	6.40150E+00	8.95655E-01	1.47669E-03	0.00000E+00	0.00000E+00
265	8.95414E-01	6.42533E+00	8.95654E-01	1.47106E-03	0.00000E+00	0.00000E+00
266	9.00271E-01	6.44817E+00	8.95672E-01	1.46558E-03	0.00000E+00	0.00000E+00
267	8.75753E-01	6.47383E+00	8.95597E-01	1.46197E-03	0.00000E+00	0.00000E+00
268	9.23365E-01	6.49767E+00	8.95701E-01	1.46020E-03	0.00000E+00	0.00000E+00
269	8.88812E-01	6.52317E+00	8.95675E-01	1.45495E-03	0.00000E+00	0.00000E+00
270	9.20117E-01	6.54617E+00	8.95766E-01	1.45238E-03	0.00000E+00	0.00000E+00
271	9.11885E-01	6.57000E+00	8.95826E-01	1.44821E-03	0.00000E+00	0.00000E+00
272	9.21993E-01	6.59367E+00	8.95923E-01	1.44609E-03	0.00000E+00	0.00000E+00
273	8.49401E-01	6.61850E+00	8.95752E-01	1.45093E-03	0.00000E+00	0.00000E+00
274	8.95063E-01	6.64217E+00	8.95749E-01	1.44559E-03	0.00000E+00	0.00000E+00
275	8.66475E-01	6.66700E+00	8.95642E-01	1.44427E-03	0.00000E+00	0.00000E+00
276	8.65963E-01	6.69267E+00	8.95533E-01	1.44306E-03	0.00000E+00	0.00000E+00
277	8.87114E-01	6.71550E+00	8.95503E-01	1.43813E-03	0.00000E+00	0.00000E+00
278	8.90469E-01	6.73933E+00	8.95485E-01	1.43303E-03	0.00000E+00	0.00000E+00
279	9.05177E-01	6.76317E+00	8.95520E-01	1.42827E-03	0.00000E+00	0.00000E+00

280	9.07149E-01	6.78783E+00	8.95561E-01	1.42374E-03	0.00000E+00	0.00000E+00
281	8.55320E-01	6.81167E+00	8.95417E-01	1.42594E-03	0.00000E+00	0.00000E+00
282	8.62157E-01	6.83450E+00	8.95298E-01	1.42580E-03	0.00000E+00	0.00000E+00
283	9.01137E-01	6.85917E+00	8.95319E-01	1.42087E-03	0.00000E+00	0.00000E+00
284	8.77530E-01	6.88300E+00	8.95256E-01	1.41722E-03	0.00000E+00	0.00000E+00
285	8.60813E-01	6.90683E+00	8.95134E-01	1.41744E-03	0.00000E+00	0.00000E+00
286	8.66350E-01	6.93150E+00	8.95033E-01	1.41607E-03	0.00000E+00	0.00000E+00
287	8.76397E-01	6.95533E+00	8.94968E-01	1.41261E-03	0.00000E+00	0.00000E+00
288	8.82161E-01	6.97817E+00	8.94923E-01	1.40838E-03	0.00000E+00	0.00000E+00
289	8.65790E-01	7.00200E+00	8.94821E-01	1.40713E-03	0.00000E+00	0.00000E+00
290	9.37929E-01	7.02483E+00	8.94971E-01	1.41020E-03	0.00000E+00	0.00000E+00
291	9.29246E-01	7.04867E+00	8.95090E-01	1.41031E-03	0.00000E+00	0.00000E+00
292	9.10414E-01	7.07150E+00	8.95143E-01	1.40643E-03	0.00000E+00	0.00000E+00
293	8.82829E-01	7.09533E+00	8.95100E-01	1.40222E-03	0.00000E+00	0.00000E+00
294	8.63260E-01	7.12100E+00	8.94991E-01	1.40166E-03	0.00000E+00	0.00000E+00
295	9.20586E-01	7.14383E+00	8.95079E-01	1.39960E-03	0.00000E+00	0.00000E+00
296	9.41261E-01	7.16683E+00	8.95236E-01	1.40365E-03	0.00000E+00	0.00000E+00
297	8.84594E-01	7.19150E+00	8.95200E-01	1.39935E-03	0.00000E+00	0.00000E+00
298	9.17430E-01	7.21533E+00	8.95275E-01	1.39663E-03	0.00000E+00	0.00000E+00
299	8.83992E-01	7.23917E+00	8.95237E-01	1.39244E-03	0.00000E+00	0.00000E+00
300	8.89306E-01	7.26200E+00	8.95217E-01	1.38790E-03	0.00000E+00	0.00000E+00
301	9.06865E-01	7.28667E+00	8.95256E-01	1.38380E-03	0.00000E+00	0.00000E+00
302	9.43762E-01	7.31050E+00	8.95417E-01	1.38862E-03	0.00000E+00	0.00000E+00
303	9.18035E-01	7.33433E+00	8.95493E-01	1.38604E-03	0.00000E+00	0.00000E+00
304	8.98479E-01	7.35717E+00	8.95502E-01	1.38148E-03	0.00000E+00	0.00000E+00
305	9.04385E-01	7.38000E+00	8.95532E-01	1.37723E-03	0.00000E+00	0.00000E+00
306	9.10615E-01	7.40383E+00	8.95581E-01	1.37358E-03	0.00000E+00	0.00000E+00
307	9.18945E-01	7.42767E+00	8.95658E-01	1.37121E-03	0.00000E+00	0.00000E+00
308	8.87790E-01	7.45150E+00	8.95632E-01	1.36697E-03	0.00000E+00	0.00000E+00
309	8.94523E-01	7.47433E+00	8.95629E-01	1.36251E-03	0.00000E+00	0.00000E+00
310	8.91631E-01	7.49917E+00	8.95616E-01	1.35814E-03	0.00000E+00	0.00000E+00
311	8.99515E-01	7.52283E+00	8.95628E-01	1.35380E-03	0.00000E+00	0.00000E+00
312	9.39045E-01	7.54483E+00	8.95768E-01	1.35667E-03	0.00000E+00	0.00000E+00
313	8.85895E-01	7.56867E+00	8.95737E-01	1.35268E-03	0.00000E+00	0.00000E+00
314	8.78723E-01	7.59250E+00	8.95682E-01	1.34944E-03	0.00000E+00	0.00000E+00
315	8.64668E-01	7.61717E+00	8.95583E-01	1.34876E-03	0.00000E+00	0.00000E+00
316	9.02749E-01	7.64100E+00	8.95606E-01	1.34466E-03	0.00000E+00	0.00000E+00
317	8.67690E-01	7.66667E+00	8.95517E-01	1.34331E-03	0.00000E+00	0.00000E+00
318	8.97839E-01	7.69033E+00	8.95524E-01	1.33907E-03	0.00000E+00	0.00000E+00
319	9.31740E-01	7.71417E+00	8.95639E-01	1.33972E-03	0.00000E+00	0.00000E+00
320	9.15333E-01	7.73800E+00	8.95701E-01	1.33693E-03	0.00000E+00	0.00000E+00
321	8.97757E-01	7.76267E+00	8.95707E-01	1.33275E-03	0.00000E+00	0.00000E+00
322	9.07318E-01	7.78650E+00	8.95743E-01	1.32908E-03	0.00000E+00	0.00000E+00
323	9.00348E-01	7.81033E+00	8.95758E-01	1.32501E-03	0.00000E+00	0.00000E+00
324	8.93546E-01	7.83317E+00	8.95751E-01	1.32090E-03	0.00000E+00	0.00000E+00
325	9.13417E-01	7.85700E+00	8.95806E-01	1.31794E-03	0.00000E+00	0.00000E+00
326	8.67137E-01	7.88167E+00	8.95717E-01	1.31684E-03	0.00000E+00	0.00000E+00
327	9.11058E-01	7.90733E+00	8.95764E-01	1.31363E-03	0.00000E+00	0.00000E+00
328	8.93492E-01	7.93117E+00	8.95757E-01	1.30962E-03	0.00000E+00	0.00000E+00
329	8.58242E-01	7.95400E+00	8.95643E-01	1.31064E-03	0.00000E+00	0.00000E+00
330	8.87510E-01	7.97883E+00	8.95618E-01	1.30687E-03	0.00000E+00	0.00000E+00
331	8.84861E-01	8.00167E+00	8.95585E-01	1.30330E-03	0.00000E+00	0.00000E+00
332	9.20879E-01	8.02550E+00	8.95662E-01	1.30161E-03	0.00000E+00	0.00000E+00
333	8.92014E-01	8.04933E+00	8.95651E-01	1.29771E-03	0.00000E+00	0.00000E+00
334	8.98793E-01	8.07483E+00	8.95660E-01	1.29383E-03	0.00000E+00	0.00000E+00
335	9.05699E-01	8.09867E+00	8.95690E-01	1.29029E-03	0.00000E+00	0.00000E+00
336	8.77431E-01	8.12250E+00	8.95636E-01	1.28759E-03	0.00000E+00	0.00000E+00
337	9.39878E-01	8.14533E+00	8.95768E-01	1.29051E-03	0.00000E+00	0.00000E+00
338	8.97092E-01	8.16917E+00	8.95772E-01	1.28667E-03	0.00000E+00	0.00000E+00
339	8.92360E-01	8.19117E+00	8.95762E-01	1.28289E-03	0.00000E+00	0.00000E+00
340	8.63111E-01	8.21583E+00	8.95665E-01	1.28273E-03	0.00000E+00	0.00000E+00
341	8.56991E-01	8.24050E+00	8.95551E-01	1.28402E-03	0.00000E+00	0.00000E+00
342	8.54876E-01	8.26433E+00	8.95431E-01	1.28581E-03	0.00000E+00	0.00000E+00
343	9.22585E-01	8.28817E+00	8.95511E-01	1.28451E-03	0.00000E+00	0.00000E+00
344	9.04882E-01	8.31100E+00	8.95538E-01	1.28104E-03	0.00000E+00	0.00000E+00
345	8.62203E-01	8.33483E+00	8.95441E-01	1.28099E-03	0.00000E+00	0.00000E+00
346	8.91068E-01	8.35867E+00	8.95428E-01	1.27733E-03	0.00000E+00	0.00000E+00
347	8.77276E-01	8.38333E+00	8.95376E-01	1.27470E-03	0.00000E+00	0.00000E+00
348	8.80922E-01	8.40717E+00	8.95334E-01	1.27170E-03	0.00000E+00	0.00000E+00
349	8.87942E-01	8.43000E+00	8.95313E-01	1.26821E-03	0.00000E+00	0.00000E+00
350	9.08687E-01	8.45483E+00	8.95351E-01	1.26514E-03	0.00000E+00	0.00000E+00
351	8.55023E-01	8.47950E+00	8.95236E-01	1.26680E-03	0.00000E+00	0.00000E+00
352	9.10473E-01	8.50333E+00	8.95279E-01	1.26392E-03	0.00000E+00	0.00000E+00
353	9.23391E-01	8.52617E+00	8.95359E-01	1.26286E-03	0.00000E+00	0.00000E+00
354	8.92780E-01	8.55000E+00	8.95352E-01	1.25929E-03	0.00000E+00	0.00000E+00
355	8.80755E-01	8.57283E+00	8.95311E-01	1.25639E-03	0.00000E+00	0.00000E+00
356	8.95925E-01	8.59767E+00	8.95312E-01	1.25284E-03	0.00000E+00	0.00000E+00
357	9.49281E-01	8.62050E+00	8.95464E-01	1.25852E-03	0.00000E+00	0.00000E+00
358	8.91730E-01	8.64433E+00	8.95454E-01	1.25503E-03	0.00000E+00	0.00000E+00
359	8.82525E-01	8.66817E+00	8.95418E-01	1.25203E-03	0.00000E+00	0.00000E+00
360	9.10724E-01	8.69183E+00	8.95460E-01	1.24926E-03	0.00000E+00	0.00000E+00
361	9.29336E-01	8.71383E+00	8.95555E-01	1.24934E-03	0.00000E+00	0.00000E+00
362	9.19163E-01	8.73667E+00	8.95620E-01	1.24759E-03	0.00000E+00	0.00000E+00
363	8.90057E-01	8.75967E+00	8.95605E-01	1.24423E-03	0.00000E+00	0.00000E+00
364	8.68297E-01	8.78350E+00	8.95529E-01	1.24308E-03	0.00000E+00	0.00000E+00
365	8.95902E-01	8.80817E+00	8.95530E-01	1.23965E-03	0.00000E+00	0.00000E+00
366	8.53996E-01	8.83283E+00	8.95416E-01	1.24149E-03	0.00000E+00	0.00000E+00
367	8.95485E-01	8.85750E+00	8.95417E-01	1.23809E-03	0.00000E+00	0.00000E+00
368	8.70299E-01	8.88233E+00	8.95348E-01	1.23660E-03	0.00000E+00	0.00000E+00
369	9.39315E-01	8.90517E+00	8.95468E-01	1.23904E-03	0.00000E+00	0.00000E+00
370	8.42743E-01	8.92983E+00	8.95324E-01	1.24394E-03	0.00000E+00	0.00000E+00
371	9.00029E-01	8.95367E+00	8.95337E-01	1.24063E-03	0.00000E+00	0.00000E+00
372	8.88064E-01	8.97650E+00	8.95318E-01	1.23743E-03	0.00000E+00	0.00000E+00
373	8.96316E-01	8.99950E+00	8.95320E-01	1.23409E-03	0.00000E+00	0.00000E+00
374	8.80433E-01	9.02333E+00	8.95280E-01	1.23142E-03	0.00000E+00	0.00000E+00

375	9.32961E-01	9.04617E+00	8.95381E-01	1.23226E-03	0.00000E+00	0.00000E+00
376	8.60609E-01	9.07083E+00	8.95288E-01	1.23248E-03	0.00000E+00	0.00000E+00
377	8.89423E-01	9.09567E+00	8.95273E-01	1.22929E-03	0.00000E+00	0.00000E+00
378	9.17431E-01	9.11750E+00	8.95332E-01	1.22743E-03	0.00000E+00	0.00000E+00
379	8.90763E-01	9.14133E+00	8.95319E-01	1.22423E-03	0.00000E+00	0.00000E+00
380	9.05093E-01	9.16517E+00	8.95345E-01	1.22126E-03	0.00000E+00	0.00000E+00
381	9.02580E-01	9.18983E+00	8.95364E-01	1.21818E-03	0.00000E+00	0.00000E+00
382	9.12075E-01	9.21367E+00	8.95408E-01	1.21577E-03	0.00000E+00	0.00000E+00
383	8.65641E-01	9.23750E+00	8.95330E-01	1.21509E-03	0.00000E+00	0.00000E+00
384	8.66290E-01	9.26217E+00	8.95254E-01	1.21428E-03	0.00000E+00	0.00000E+00
385	8.89759E-01	9.28683E+00	8.95240E-01	1.21119E-03	0.00000E+00	0.00000E+00
386	9.14192E-01	9.31067E+00	8.95289E-01	1.20904E-03	0.00000E+00	0.00000E+00
387	9.17638E-01	9.33367E+00	8.95347E-01	1.20729E-03	0.00000E+00	0.00000E+00
388	9.25979E-01	9.35733E+00	8.95427E-01	1.20677E-03	0.00000E+00	0.00000E+00
389	9.32704E-01	9.38033E+00	8.95523E-01	1.20750E-03	0.00000E+00	0.00000E+00
390	9.03165E-01	9.40417E+00	8.95543E-01	1.20455E-03	0.00000E+00	0.00000E+00
391	9.46238E-01	9.42783E+00	8.95673E-01	1.20849E-03	0.00000E+00	0.00000E+00
392	9.08953E-01	9.45267E+00	8.95707E-01	1.20587E-03	0.00000E+00	0.00000E+00
393	9.64028E-01	9.47550E+00	8.95882E-01	1.21541E-03	0.00000E+00	0.00000E+00
394	9.09928E-01	9.50017E+00	8.95918E-01	1.21283E-03	0.00000E+00	0.00000E+00
395	8.59672E-01	9.52500E+00	8.95825E-01	1.21325E-03	0.00000E+00	0.00000E+00
396	8.69255E-01	9.54867E+00	8.95758E-01	1.21205E-03	0.00000E+00	0.00000E+00
397	8.91838E-01	9.57250E+00	8.95748E-01	1.20902E-03	0.00000E+00	0.00000E+00
398	9.24188E-01	9.59533E+00	8.95820E-01	1.20810E-03	0.00000E+00	0.00000E+00
399	8.94896E-01	9.61917E+00	8.95817E-01	1.20505E-03	0.00000E+00	0.00000E+00
400	9.11581E-01	9.64400E+00	8.95857E-01	1.20267E-03	0.00000E+00	0.00000E+00
401	8.91078E-01	9.66767E+00	8.95845E-01	1.19971E-03	0.00000E+00	0.00000E+00
402	8.95141E-01	9.69150E+00	8.95843E-01	1.19671E-03	0.00000E+00	0.00000E+00
403	9.06940E-01	9.71533E+00	8.95871E-01	1.19405E-03	0.00000E+00	0.00000E+00
404	8.85631E-01	9.73917E+00	8.95846E-01	1.19134E-03	0.00000E+00	0.00000E+00
405	9.18539E-01	9.76300E+00	8.95902E-01	1.18972E-03	0.00000E+00	0.00000E+00
406	9.11942E-01	9.78583E+00	8.95942E-01	1.18743E-03	0.00000E+00	0.00000E+00
407	9.70086E-01	9.80967E+00	8.96125E-01	1.19856E-03	0.00000E+00	0.00000E+00
408	9.04730E-01	9.83350E+00	8.96146E-01	1.19579E-03	0.00000E+00	0.00000E+00
409	8.94946E-01	9.85717E+00	8.96143E-01	1.19286E-03	0.00000E+00	0.00000E+00
410	9.05643E-01	9.88200E+00	8.96166E-01	1.19016E-03	0.00000E+00	0.00000E+00
411	9.16808E-01	9.90567E+00	8.96217E-01	1.18831E-03	0.00000E+00	0.00000E+00
412	8.86415E-01	9.92950E+00	8.96193E-01	1.18565E-03	0.00000E+00	0.00000E+00
413	9.08300E-01	9.95333E+00	8.96222E-01	1.18313E-03	0.00000E+00	0.00000E+00
414	8.38968E-01	9.97717E+00	8.96083E-01	1.18841E-03	0.00000E+00	0.00000E+00
415	9.04074E-01	9.99917E+00	8.96103E-01	1.18569E-03	0.00000E+00	0.00000E+00
416	9.34861E-01	1.00220E+01	8.96196E-01	1.18652E-03	0.00000E+00	0.00000E+00
417	9.10037E-01	1.00458E+01	8.96230E-01	1.18413E-03	0.00000E+00	0.00000E+00
418	9.15567E-01	1.00697E+01	8.96276E-01	1.18219E-03	0.00000E+00	0.00000E+00
419	9.55204E-01	1.00925E+01	8.96417E-01	1.18779E-03	0.00000E+00	0.00000E+00
420	8.82081E-01	1.01163E+01	8.96383E-01	1.18544E-03	0.00000E+00	0.00000E+00
421	9.08086E-01	1.01402E+01	8.96411E-01	1.18294E-03	0.00000E+00	0.00000E+00
422	9.12650E-01	1.01648E+01	8.96450E-01	1.18075E-03	0.00000E+00	0.00000E+00
423	8.54102E-01	1.01895E+01	8.96349E-01	1.18223E-03	0.00000E+00	0.00000E+00
424	9.08926E-01	1.02123E+01	8.96379E-01	1.17980E-03	0.00000E+00	0.00000E+00
425	9.35580E-01	1.02343E+01	8.96472E-01	1.18065E-03	0.00000E+00	0.00000E+00
426	8.81976E-01	1.02582E+01	8.96437E-01	1.17836E-03	0.00000E+00	0.00000E+00
427	8.94689E-01	1.02820E+01	8.96433E-01	1.17559E-03	0.00000E+00	0.00000E+00
428	9.27000E-01	1.03058E+01	8.96505E-01	1.17502E-03	0.00000E+00	0.00000E+00
429	8.87504E-01	1.03295E+01	8.96484E-01	1.17246E-03	0.00000E+00	0.00000E+00
430	9.34985E-01	1.03525E+01	8.96574E-01	1.17317E-03	0.00000E+00	0.00000E+00
431	9.17721E-01	1.03753E+01	8.96623E-01	1.17147E-03	0.00000E+00	0.00000E+00
432	9.03182E-01	1.03992E+01	8.96638E-01	1.16884E-03	0.00000E+00	0.00000E+00
433	9.94514E-01	1.04212E+01	8.96865E-01	1.18803E-03	0.00000E+00	0.00000E+00
434	8.97109E-01	1.04450E+01	8.96866E-01	1.18528E-03	0.00000E+00	0.00000E+00
435	8.68383E-01	1.04697E+01	8.96800E-01	1.18436E-03	0.00000E+00	0.00000E+00
436	9.04481E-01	1.04935E+01	8.96818E-01	1.18176E-03	0.00000E+00	0.00000E+00
437	9.18522E-01	1.05153E+01	8.96868E-01	1.18010E-03	0.00000E+00	0.00000E+00
438	9.03273E-01	1.05392E+01	8.96883E-01	1.17748E-03	0.00000E+00	0.00000E+00
439	9.03496E-01	1.05622E+01	8.96898E-01	1.17488E-03	0.00000E+00	0.00000E+00
440	8.87313E-01	1.05868E+01	8.96876E-01	1.17240E-03	0.00000E+00	0.00000E+00
441	8.70212E-01	1.06115E+01	8.96815E-01	1.17130E-03	0.00000E+00	0.00000E+00
442	8.58089E-01	1.06353E+01	8.96727E-01	1.17195E-03	0.00000E+00	0.00000E+00
443	8.91367E-01	1.06582E+01	8.96715E-01	1.16935E-03	0.00000E+00	0.00000E+00
444	9.07255E-01	1.06820E+01	8.96739E-01	1.16694E-03	0.00000E+00	0.00000E+00
445	8.76624E-01	1.07058E+01	8.96693E-01	1.16519E-03	0.00000E+00	0.00000E+00
446	8.79254E-01	1.07297E+01	8.96654E-01	1.16323E-03	0.00000E+00	0.00000E+00
447	8.80421E-01	1.07535E+01	8.96618E-01	1.16118E-03	0.00000E+00	0.00000E+00
448	8.92619E-01	1.07772E+01	8.96609E-01	1.15861E-03	0.00000E+00	0.00000E+00
449	8.87123E-01	1.08010E+01	8.96587E-01	1.15621E-03	0.00000E+00	0.00000E+00
450	8.93978E-01	1.08238E+01	8.96582E-01	1.15364E-03	0.00000E+00	0.00000E+00
451	8.74146E-01	1.08477E+01	8.96532E-01	1.15216E-03	0.00000E+00	0.00000E+00
452	9.10700E-01	1.08707E+01	8.96563E-01	1.15002E-03	0.00000E+00	0.00000E+00
453	9.24132E-01	1.08935E+01	8.96624E-01	1.14910E-03	0.00000E+00	0.00000E+00
454	9.01100E-01	1.09173E+01	8.96634E-01	1.14660E-03	0.00000E+00	0.00000E+00
455	9.23492E-01	1.09402E+01	8.96693E-01	1.14560E-03	0.00000E+00	0.00000E+00
456	9.05902E-01	1.09640E+01	8.96714E-01	1.14325E-03	0.00000E+00	0.00000E+00
457	9.00037E-01	1.09878E+01	8.96721E-01	1.14076E-03	0.00000E+00	0.00000E+00
458	8.78071E-01	1.10125E+01	8.96680E-01	1.13899E-03	0.00000E+00	0.00000E+00
459	8.78601E-01	1.10363E+01	8.96641E-01	1.13718E-03	0.00000E+00	0.00000E+00
460	8.74789E-01	1.10602E+01	8.96593E-01	1.13570E-03	0.00000E+00	0.00000E+00
461	9.11807E-01	1.10838E+01	8.96626E-01	1.13371E-03	0.00000E+00	0.00000E+00
462	9.08229E-01	1.11077E+01	8.96651E-01	1.13152E-03	0.00000E+00	0.00000E+00
463	8.95114E-01	1.11315E+01	8.96648E-01	1.12907E-03	0.00000E+00	0.00000E+00
464	8.93458E-01	1.11562E+01	8.96641E-01	1.12664E-03	0.00000E+00	0.00000E+00
465	8.78004E-01	1.11800E+01	8.96601E-01	1.12493E-03	0.00000E+00	0.00000E+00
466	8.81664E-01	1.12028E+01	8.96569E-01	1.12296E-03	0.00000E+00	0.00000E+00
467	9.22024E-01	1.12267E+01	8.96623E-01	1.12188E-03	0.00000E+00	0.00000E+00
468	8.74849E-01	1.12505E+01	8.96577E-01	1.12044E-03	0.00000E+00	0.00000E+00
469	9.07953E-01	1.12743E+01	8.96601E-01	1.11831E-03	0.00000E+00	0.00000E+00

470	9.00350E-01	1.12990E+01	8.96609E-01	1.11595E-03	0.00000E+00	0.00000E+00
471	8.92630E-01	1.13237E+01	8.96600E-01	1.11360E-03	0.00000E+00	0.00000E+00
472	8.84763E-01	1.13475E+01	8.96575E-01	1.11151E-03	0.00000E+00	0.00000E+00
473	8.92004E-01	1.13713E+01	8.96566E-01	1.10919E-03	0.00000E+00	0.00000E+00
474	8.79063E-01	1.13960E+01	8.96528E-01	1.10746E-03	0.00000E+00	0.00000E+00
475	8.93526E-01	1.14198E+01	8.96522E-01	1.10513E-03	0.00000E+00	0.00000E+00
476	8.97703E-01	1.14437E+01	8.96525E-01	1.10280E-03	0.00000E+00	0.00000E+00
477	8.82148E-01	1.14665E+01	8.96494E-01	1.10089E-03	0.00000E+00	0.00000E+00
478	8.80307E-01	1.14895E+01	8.96460E-01	1.09910E-03	0.00000E+00	0.00000E+00
479	9.40191E-01	1.15123E+01	8.96552E-01	1.10062E-03	0.00000E+00	0.00000E+00
480	8.67054E-01	1.15370E+01	8.96490E-01	1.10005E-03	0.00000E+00	0.00000E+00
481	8.84586E-01	1.15598E+01	8.96465E-01	1.09803E-03	0.00000E+00	0.00000E+00
482	8.77404E-01	1.15837E+01	8.96426E-01	1.09646E-03	0.00000E+00	0.00000E+00
483	9.26403E-01	1.16075E+01	8.96488E-01	1.09595E-03	0.00000E+00	0.00000E+00
484	9.10083E-01	1.16313E+01	8.96516E-01	1.09404E-03	0.00000E+00	0.00000E+00
485	9.16693E-01	1.16542E+01	8.96558E-01	1.09257E-03	0.00000E+00	0.00000E+00
486	8.49247E-01	1.16788E+01	8.96460E-01	1.09469E-03	0.00000E+00	0.00000E+00
487	8.83473E-01	1.17027E+01	8.96433E-01	1.09275E-03	0.00000E+00	0.00000E+00
488	9.26183E-01	1.17265E+01	8.96495E-01	1.09222E-03	0.00000E+00	0.00000E+00
489	8.57221E-01	1.17512E+01	8.96414E-01	1.09295E-03	0.00000E+00	0.00000E+00
490	9.06872E-01	1.17750E+01	8.96435E-01	1.09092E-03	0.00000E+00	0.00000E+00
491	9.17416E-01	1.17988E+01	8.96478E-01	1.08953E-03	0.00000E+00	0.00000E+00
492	8.94006E-01	1.18227E+01	8.96473E-01	1.08732E-03	0.00000E+00	0.00000E+00
493	9.14281E-01	1.18465E+01	8.96510E-01	1.08571E-03	0.00000E+00	0.00000E+00
494	9.52789E-01	1.18693E+01	8.96624E-01	1.08952E-03	0.00000E+00	0.00000E+00
495	8.69660E-01	1.18940E+01	8.96569E-01	1.08868E-03	0.00000E+00	0.00000E+00
496	9.11134E-01	1.19170E+01	8.96599E-01	1.08688E-03	0.00000E+00	0.00000E+00
497	9.20718E-01	1.19398E+01	8.96648E-01	1.08577E-03	0.00000E+00	0.00000E+00
498	8.96202E-01	1.19645E+01	8.96647E-01	1.08358E-03	0.00000E+00	0.00000E+00
499	9.02916E-01	1.19873E+01	8.96659E-01	1.08147E-03	0.00000E+00	0.00000E+00
500	8.85633E-01	1.20122E+01	8.96637E-01	1.07953E-03	0.00000E+00	0.00000E+00
501	9.25873E-01	1.20360E+01	8.96696E-01	1.07895E-03	0.00000E+00	0.00000E+00
502	8.97125E-01	1.20597E+01	8.96697E-01	1.07679E-03	0.00000E+00	0.00000E+00
503	8.73163E-01	1.20835E+01	8.96650E-01	1.07567E-03	0.00000E+00	0.00000E+00
504	8.86625E-01	1.21083E+01	8.96630E-01	1.07371E-03	0.00000E+00	0.00000E+00
505	9.03667E-01	1.21320E+01	8.96644E-01	1.07166E-03	0.00000E+00	0.00000E+00
506	8.93322E-01	1.21568E+01	8.96637E-01	1.06956E-03	0.00000E+00	0.00000E+00
507	9.20239E-01	1.21805E+01	8.96684E-01	1.06846E-03	0.00000E+00	0.00000E+00
508	8.97849E-01	1.22035E+01	8.96686E-01	1.06635E-03	0.00000E+00	0.00000E+00
509	9.03579E-01	1.22273E+01	8.96700E-01	1.06433E-03	0.00000E+00	0.00000E+00
510	9.41743E-01	1.22510E+01	8.96788E-01	1.06593E-03	0.00000E+00	0.00000E+00
511	9.09846E-01	1.22748E+01	8.96814E-01	1.06414E-03	0.00000E+00	0.00000E+00
512	9.02922E-01	1.22977E+01	8.96826E-01	1.06212E-03	0.00000E+00	0.00000E+00
513	8.83000E-01	1.23215E+01	8.96799E-01	1.06038E-03	0.00000E+00	0.00000E+00
514	8.94430E-01	1.23453E+01	8.96794E-01	1.05832E-03	0.00000E+00	0.00000E+00
515	8.46309E-01	1.23710E+01	8.96696E-01	1.06083E-03	0.00000E+00	0.00000E+00
516	9.29154E-01	1.23930E+01	8.96759E-01	1.06065E-03	0.00000E+00	0.00000E+00
517	8.75636E-01	1.24177E+01	8.96718E-01	1.05938E-03	0.00000E+00	0.00000E+00
518	9.25388E-01	1.24415E+01	8.96774E-01	1.05878E-03	0.00000E+00	0.00000E+00
519	9.01574E-01	1.24643E+01	8.96783E-01	1.05677E-03	0.00000E+00	0.00000E+00
520	8.93721E-01	1.24872E+01	8.96777E-01	1.05475E-03	0.00000E+00	0.00000E+00
521	8.85690E-01	1.25110E+01	8.96756E-01	1.05293E-03	0.00000E+00	0.00000E+00
522	8.43889E-01	1.25358E+01	8.96654E-01	1.05581E-03	0.00000E+00	0.00000E+00
523	8.99307E-01	1.25595E+01	8.96659E-01	1.05379E-03	0.00000E+00	0.00000E+00
524	9.39461E-01	1.25833E+01	8.96741E-01	1.05496E-03	0.00000E+00	0.00000E+00
525	9.13382E-01	1.26080E+01	8.96773E-01	1.05343E-03	0.00000E+00	0.00000E+00
526	9.20663E-01	1.26310E+01	8.96818E-01	1.05240E-03	0.00000E+00	0.00000E+00
527	9.11607E-01	1.26548E+01	8.96847E-01	1.05077E-03	0.00000E+00	0.00000E+00
528	8.89681E-01	1.26785E+01	8.96833E-01	1.04886E-03	0.00000E+00	0.00000E+00
529	9.28580E-01	1.27015E+01	8.96893E-01	1.04860E-03	0.00000E+00	0.00000E+00
530	8.65511E-01	1.27262E+01	8.96834E-01	1.04830E-03	0.00000E+00	0.00000E+00
531	9.11819E-01	1.27508E+01	8.96862E-01	1.04670E-03	0.00000E+00	0.00000E+00
532	8.78168E-01	1.27747E+01	8.96827E-01	1.04532E-03	0.00000E+00	0.00000E+00
533	8.34391E-01	1.27985E+01	8.96709E-01	1.04995E-03	0.00000E+00	0.00000E+00
534	9.08869E-01	1.28223E+01	8.96732E-01	1.04823E-03	0.00000E+00	0.00000E+00
535	8.64387E-01	1.28460E+01	8.96671E-01	1.04802E-03	0.00000E+00	0.00000E+00
536	8.99302E-01	1.28698E+01	8.96676E-01	1.04606E-03	0.00000E+00	0.00000E+00
537	9.32684E-01	1.28937E+01	8.96744E-01	1.04627E-03	0.00000E+00	0.00000E+00
538	8.79891E-01	1.29183E+01	8.96712E-01	1.04479E-03	0.00000E+00	0.00000E+00
539	9.14136E-01	1.29413E+01	8.96745E-01	1.04335E-03	0.00000E+00	0.00000E+00
540	9.01656E-01	1.29642E+01	8.96754E-01	1.04145E-03	0.00000E+00	0.00000E+00
541	8.75015E-01	1.29898E+01	8.96713E-01	1.04030E-03	0.00000E+00	0.00000E+00
542	8.68825E-01	1.30127E+01	8.96662E-01	1.03965E-03	0.00000E+00	0.00000E+00
543	8.82160E-01	1.30373E+01	8.96635E-01	1.03807E-03	0.00000E+00	0.00000E+00
544	8.95750E-01	1.30622E+01	8.96633E-01	1.03616E-03	0.00000E+00	0.00000E+00
545	9.08330E-01	1.30842E+01	8.96655E-01	1.03447E-03	0.00000E+00	0.00000E+00
546	9.23595E-01	1.31078E+01	8.96704E-01	1.03376E-03	0.00000E+00	0.00000E+00
547	8.70013E-01	1.31327E+01	8.96655E-01	1.03302E-03	0.00000E+00	0.00000E+00
548	8.93271E-01	1.31563E+01	8.96649E-01	1.03114E-03	0.00000E+00	0.00000E+00
549	8.97267E-01	1.31802E+01	8.96650E-01	1.02926E-03	0.00000E+00	0.00000E+00
550	8.46308E-01	1.32040E+01	8.96558E-01	1.03148E-03	0.00000E+00	0.00000E+00
551	8.93473E-01	1.32278E+01	8.96553E-01	1.02961E-03	0.00000E+00	0.00000E+00
552	8.52139E-01	1.32525E+01	8.96472E-01	1.03091E-03	0.00000E+00	0.00000E+00
553	8.77510E-01	1.32772E+01	8.96438E-01	1.02961E-03	0.00000E+00	0.00000E+00
554	9.29491E-01	1.33002E+01	8.96498E-01	1.02948E-03	0.00000E+00	0.00000E+00
555	8.98625E-01	1.33240E+01	8.96501E-01	1.02763E-03	0.00000E+00	0.00000E+00
556	9.12137E-01	1.33477E+01	8.96530E-01	1.02616E-03	0.00000E+00	0.00000E+00
557	8.86835E-01	1.33707E+01	8.96512E-01	1.02446E-03	0.00000E+00	0.00000E+00
558	8.75002E-01	1.33935E+01	8.96473E-01	1.02335E-03	0.00000E+00	0.00000E+00
559	8.99338E-01	1.34163E+01	8.96479E-01	1.02152E-03	0.00000E+00	0.00000E+00
560	8.55454E-01	1.34412E+01	8.96405E-01	1.02233E-03	0.00000E+00	0.00000E+00
561	8.86954E-01	1.34648E+01	8.96388E-01	1.02064E-03	0.00000E+00	0.00000E+00
562	8.93705E-01	1.34887E+01	8.96383E-01	1.01883E-03	0.00000E+00	0.00000E+00
563	9.00043E-01	1.35125E+01	8.96390E-01	1.01703E-03	0.00000E+00	0.00000E+00
564	9.35165E-01	1.35363E+01	8.96459E-01	1.01756E-03	0.00000E+00	0.00000E+00

565	9.18707E-01	1.35602E+01	8.96498E-01	1.01652E-03	0.00000E+00	0.00000E+00
566	9.02933E-01	1.35838E+01	8.96510E-01	1.01478E-03	0.00000E+00	0.00000E+00
567	9.02138E-01	1.36077E+01	8.96520E-01	1.01304E-03	0.00000E+00	0.00000E+00
568	8.84605E-01	1.36315E+01	8.96499E-01	1.01146E-03	0.00000E+00	0.00000E+00
569	8.65252E-01	1.36562E+01	8.96444E-01	1.01118E-03	0.00000E+00	0.00000E+00
570	8.59762E-01	1.36800E+01	8.96379E-01	1.01146E-03	0.00000E+00	0.00000E+00
571	8.85772E-01	1.37038E+01	8.96360E-01	1.00986E-03	0.00000E+00	0.00000E+00
572	9.05816E-01	1.37267E+01	8.96377E-01	1.00822E-03	0.00000E+00	0.00000E+00
573	9.24165E-01	1.37505E+01	8.96426E-01	1.00763E-03	0.00000E+00	0.00000E+00
574	9.12854E-01	1.37733E+01	8.96454E-01	1.00627E-03	0.00000E+00	0.00000E+00
575	9.04969E-01	1.37972E+01	8.96469E-01	1.00463E-03	0.00000E+00	0.00000E+00
576	9.22231E-01	1.38202E+01	8.96514E-01	1.00388E-03	0.00000E+00	0.00000E+00
577	9.18564E-01	1.38430E+01	8.96552E-01	1.00286E-03	0.00000E+00	0.00000E+00
578	9.22708E-01	1.38668E+01	8.96598E-01	1.00215E-03	0.00000E+00	0.00000E+00
579	9.49538E-01	1.38915E+01	8.96690E-01	1.00461E-03	0.00000E+00	0.00000E+00
580	9.11573E-01	1.39135E+01	8.96715E-01	1.00320E-03	0.00000E+00	0.00000E+00
581	9.09612E-01	1.39373E+01	8.96738E-01	1.00172E-03	0.00000E+00	0.00000E+00
582	8.74688E-01	1.39610E+01	8.96700E-01	1.00071E-03	0.00000E+00	0.00000E+00
583	9.06132E-01	1.39848E+01	8.96716E-01	9.99118E-04	0.00000E+00	0.00000E+00
584	9.00629E-01	1.40078E+01	8.96723E-01	9.97422E-04	0.00000E+00	0.00000E+00
585	9.05499E-01	1.40315E+01	8.96738E-01	9.95824E-04	0.00000E+00	0.00000E+00
586	9.03479E-01	1.40545E+01	8.96749E-01	9.94184E-04	0.00000E+00	0.00000E+00
587	9.06552E-01	1.40782E+01	8.96766E-01	9.92624E-04	0.00000E+00	0.00000E+00
588	8.59516E-01	1.41012E+01	8.96702E-01	9.92966E-04	0.00000E+00	0.00000E+00
589	9.16276E-01	1.41240E+01	8.96736E-01	9.91834E-04	0.00000E+00	0.00000E+00
590	8.65798E-01	1.41487E+01	8.96683E-01	9.91542E-04	0.00000E+00	0.00000E+00
591	9.13283E-01	1.41717E+01	8.96711E-01	9.90259E-04	0.00000E+00	0.00000E+00
592	8.79095E-01	1.41963E+01	8.96681E-01	9.89030E-04	0.00000E+00	0.00000E+00
593	8.85133E-01	1.42202E+01	8.96662E-01	9.87548E-04	0.00000E+00	0.00000E+00
594	8.80839E-01	1.42440E+01	8.96635E-01	9.86241E-04	0.00000E+00	0.00000E+00
595	8.86666E-01	1.42677E+01	8.96618E-01	9.84720E-04	0.00000E+00	0.00000E+00
596	8.84925E-01	1.42933E+01	8.96599E-01	9.83258E-04	0.00000E+00	0.00000E+00
597	8.77997E-01	1.43182E+01	8.96567E-01	9.82101E-04	0.00000E+00	0.00000E+00
598	9.12672E-01	1.43428E+01	8.96594E-01	9.80824E-04	0.00000E+00	0.00000E+00
599	8.74607E-01	1.43667E+01	8.96558E-01	9.79873E-04	0.00000E+00	0.00000E+00
600	8.75190E-01	1.43913E+01	8.96522E-01	9.78885E-04	0.00000E+00	0.00000E+00
601	9.26165E-01	1.44142E+01	8.96571E-01	9.78502E-04	0.00000E+00	0.00000E+00
602	8.63866E-01	1.44390E+01	8.96517E-01	9.78389E-04	0.00000E+00	0.00000E+00
603	9.43383E-01	1.44627E+01	8.96595E-01	9.79868E-04	0.00000E+00	0.00000E+00
604	9.09885E-01	1.44857E+01	8.96617E-01	9.78488E-04	0.00000E+00	0.00000E+00
605	9.12432E-01	1.45103E+01	8.96643E-01	9.77216E-04	0.00000E+00	0.00000E+00
606	8.77274E-01	1.45342E+01	8.96611E-01	9.76123E-04	0.00000E+00	0.00000E+00
607	9.14951E-01	1.45570E+01	8.96641E-01	9.74980E-04	0.00000E+00	0.00000E+00
608	9.17347E-01	1.45808E+01	8.96676E-01	9.73969E-04	0.00000E+00	0.00000E+00
609	9.24481E-01	1.46037E+01	8.96721E-01	9.73442E-04	0.00000E+00	0.00000E+00
610	9.21725E-01	1.46267E+01	8.96762E-01	9.72709E-04	0.00000E+00	0.00000E+00
611	8.77816E-01	1.46503E+01	8.96731E-01	9.71609E-04	0.00000E+00	0.00000E+00
612	9.16235E-01	1.46752E+01	8.96763E-01	9.70541E-04	0.00000E+00	0.00000E+00
613	8.83370E-01	1.46988E+01	8.96741E-01	9.69199E-04	0.00000E+00	0.00000E+00
614	8.99418E-01	1.47227E+01	8.96746E-01	9.67624E-04	0.00000E+00	0.00000E+00
615	8.86865E-01	1.47465E+01	8.96730E-01	9.66179E-04	0.00000E+00	0.00000E+00
616	8.66860E-01	1.47693E+01	8.96681E-01	9.65830E-04	0.00000E+00	0.00000E+00
617	9.38340E-01	1.47932E+01	8.96749E-01	9.66635E-04	0.00000E+00	0.00000E+00
618	8.96360E-01	1.48170E+01	8.96748E-01	9.65065E-04	0.00000E+00	0.00000E+00
619	8.64843E-01	1.48408E+01	8.96696E-01	9.64886E-04	0.00000E+00	0.00000E+00
620	9.07567E-01	1.48647E+01	8.96714E-01	9.63484E-04	0.00000E+00	0.00000E+00
621	8.85979E-01	1.48875E+01	8.96697E-01	9.62082E-04	0.00000E+00	0.00000E+00
622	8.92642E-01	1.49113E+01	8.96690E-01	9.60552E-04	0.00000E+00	0.00000E+00
623	8.90951E-01	1.49342E+01	8.96681E-01	9.59048E-04	0.00000E+00	0.00000E+00
624	9.12984E-01	1.49570E+01	8.96707E-01	9.57864E-04	0.00000E+00	0.00000E+00
625	9.03836E-01	1.49808E+01	8.96719E-01	9.56393E-04	0.00000E+00	0.00000E+00
626	8.87053E-01	1.50047E+01	8.96703E-01	9.54985E-04	0.00000E+00	0.00000E+00
627	9.01798E-01	1.50275E+01	8.96711E-01	9.53491E-04	0.00000E+00	0.00000E+00
628	8.71258E-01	1.50513E+01	8.96671E-01	9.52834E-04	0.00000E+00	0.00000E+00
629	8.80493E-01	1.50742E+01	8.96645E-01	9.51663E-04	0.00000E+00	0.00000E+00
630	9.01947E-01	1.50980E+01	8.96653E-01	9.50184E-04	0.00000E+00	0.00000E+00
631	8.69068E-01	1.51227E+01	8.96609E-01	9.49685E-04	0.00000E+00	0.00000E+00
632	9.03954E-01	1.51465E+01	8.96621E-01	9.48248E-04	0.00000E+00	0.00000E+00
633	8.90630E-01	1.51703E+01	8.96612E-01	9.46792E-04	0.00000E+00	0.00000E+00
634	8.87538E-01	1.51950E+01	8.96597E-01	9.45402E-04	0.00000E+00	0.00000E+00
635	8.79876E-01	1.52188E+01	8.96571E-01	9.44277E-04	0.00000E+00	0.00000E+00
636	8.34785E-01	1.52435E+01	8.96473E-01	9.47809E-04	0.00000E+00	0.00000E+00
637	8.28974E-01	1.52683E+01	8.96367E-01	9.52267E-04	0.00000E+00	0.00000E+00
638	9.04197E-01	1.52922E+01	8.96379E-01	9.50848E-04	0.00000E+00	0.00000E+00
639	8.53858E-01	1.53158E+01	8.96313E-01	9.51699E-04	0.00000E+00	0.00000E+00
640	8.76145E-01	1.53407E+01	8.96281E-01	9.50731E-04	0.00000E+00	0.00000E+00
641	8.65992E-01	1.53645E+01	8.96234E-01	9.50425E-04	0.00000E+00	0.00000E+00
642	8.94271E-01	1.53892E+01	8.96230E-01	9.48944E-04	0.00000E+00	0.00000E+00
643	8.87355E-01	1.54130E+01	8.96217E-01	9.47563E-04	0.00000E+00	0.00000E+00
644	9.05501E-01	1.54367E+01	8.96231E-01	9.46197E-04	0.00000E+00	0.00000E+00
645	9.02579E-01	1.54605E+01	8.96241E-01	9.44776E-04	0.00000E+00	0.00000E+00
646	8.95672E-01	1.54843E+01	8.96240E-01	9.43308E-04	0.00000E+00	0.00000E+00
647	8.79846E-01	1.55072E+01	8.96215E-01	9.42187E-04	0.00000E+00	0.00000E+00
648	9.08793E-01	1.55302E+01	8.96234E-01	9.40929E-04	0.00000E+00	0.00000E+00
649	9.13886E-01	1.55538E+01	8.96261E-01	9.39870E-04	0.00000E+00	0.00000E+00
650	8.74276E-01	1.55777E+01	8.96227E-01	9.39031E-04	0.00000E+00	0.00000E+00
651	8.80085E-01	1.56015E+01	8.96203E-01	9.37913E-04	0.00000E+00	0.00000E+00
652	9.01869E-01	1.56243E+01	8.96211E-01	9.36510E-04	0.00000E+00	0.00000E+00
653	8.84645E-01	1.56482E+01	8.96194E-01	9.35239E-04	0.00000E+00	0.00000E+00
654	8.47322E-01	1.56728E+01	8.96119E-01	9.36807E-04	0.00000E+00	0.00000E+00
655	8.66875E-01	1.56967E+01	8.96074E-01	9.36443E-04	0.00000E+00	0.00000E+00
656	9.05990E-01	1.57197E+01	8.96089E-01	9.35132E-04	0.00000E+00	0.00000E+00
657	8.75003E-01	1.57433E+01	8.96057E-01	9.34259E-04	0.00000E+00	0.00000E+00
658	8.78428E-01	1.57672E+01	8.96030E-01	9.33220E-04	0.00000E+00	0.00000E+00
659	8.82439E-01	1.57920E+01	8.96009E-01	9.32028E-04	0.00000E+00	0.00000E+00

660	8.75620E-01	1.58157E+01	8.95978E-01	9.31127E-04	0.00000E+00	0.00000E+00
661	9.00068E-01	1.58405E+01	8.95984E-01	9.29733E-04	0.00000E+00	0.00000E+00
662	8.88360E-01	1.58642E+01	8.95973E-01	9.28395E-04	0.00000E+00	0.00000E+00
663	8.80138E-01	1.58890E+01	8.95949E-01	9.27299E-04	0.00000E+00	0.00000E+00
664	9.30244E-01	1.59118E+01	8.96001E-01	9.27346E-04	0.00000E+00	0.00000E+00
665	8.98375E-01	1.59347E+01	8.96004E-01	9.25953E-04	0.00000E+00	0.00000E+00
666	8.78347E-01	1.59585E+01	8.95978E-01	9.24940E-04	0.00000E+00	0.00000E+00
667	9.29099E-01	1.59813E+01	8.96028E-01	9.24890E-04	0.00000E+00	0.00000E+00
668	9.12020E-01	1.60052E+01	8.96052E-01	9.23812E-04	0.00000E+00	0.00000E+00
669	8.53710E-01	1.60300E+01	8.95988E-01	9.24608E-04	0.00000E+00	0.00000E+00
670	9.10854E-01	1.60537E+01	8.96010E-01	9.23491E-04	0.00000E+00	0.00000E+00
671	9.15832E-01	1.60775E+01	8.96040E-01	9.22585E-04	0.00000E+00	0.00000E+00
672	9.03861E-01	1.61013E+01	8.96052E-01	9.21281E-04	0.00000E+00	0.00000E+00
673	9.01234E-01	1.61260E+01	8.96059E-01	9.19940E-04	0.00000E+00	0.00000E+00
674	8.88334E-01	1.61498E+01	8.96048E-01	9.18642E-04	0.00000E+00	0.00000E+00
675	9.03907E-01	1.61745E+01	8.96060E-01	9.17350E-04	0.00000E+00	0.00000E+00
676	8.77962E-01	1.61983E+01	8.96033E-01	9.16381E-04	0.00000E+00	0.00000E+00
677	8.38561E-01	1.62240E+01	8.95948E-01	9.18975E-04	0.00000E+00	0.00000E+00
678	8.93554E-01	1.62478E+01	8.95944E-01	9.17622E-04	0.00000E+00	0.00000E+00
679	9.01517E-01	1.62707E+01	8.95952E-01	9.16302E-04	0.00000E+00	0.00000E+00
680	8.86653E-01	1.62953E+01	8.95939E-01	9.15053E-04	0.00000E+00	0.00000E+00
681	8.89348E-01	1.63192E+01	8.95929E-01	9.13756E-04	0.00000E+00	0.00000E+00
682	8.88747E-01	1.63430E+01	8.95918E-01	9.12472E-04	0.00000E+00	0.00000E+00
683	9.01776E-01	1.63668E+01	8.95927E-01	9.11172E-04	0.00000E+00	0.00000E+00
684	9.01454E-01	1.63907E+01	8.95935E-01	9.09871E-04	0.00000E+00	0.00000E+00
685	9.32153E-01	1.64143E+01	8.95988E-01	9.10084E-04	0.00000E+00	0.00000E+00
686	9.12537E-01	1.64373E+01	8.96012E-01	9.09074E-04	0.00000E+00	0.00000E+00
687	8.72577E-01	1.64620E+01	8.95978E-01	9.08391E-04	0.00000E+00	0.00000E+00
688	9.01912E-01	1.64848E+01	8.95987E-01	9.07107E-04	0.00000E+00	0.00000E+00
689	8.75728E-01	1.65097E+01	8.95957E-01	9.06265E-04	0.00000E+00	0.00000E+00
690	8.56792E-01	1.65343E+01	8.95900E-01	9.06736E-04	0.00000E+00	0.00000E+00
691	9.18720E-01	1.65582E+01	8.95933E-01	9.06024E-04	0.00000E+00	0.00000E+00
692	9.40426E-01	1.65810E+01	8.95998E-01	9.07005E-04	0.00000E+00	0.00000E+00
693	9.41321E-01	1.66038E+01	8.96063E-01	9.08064E-04	0.00000E+00	0.00000E+00
694	8.95081E-01	1.66287E+01	8.96062E-01	9.06752E-04	0.00000E+00	0.00000E+00
695	9.36425E-01	1.66515E+01	8.96120E-01	9.07314E-04	0.00000E+00	0.00000E+00
696	9.24387E-01	1.66743E+01	8.96161E-01	9.06921E-04	0.00000E+00	0.00000E+00
697	8.90040E-01	1.66973E+01	8.96152E-01	9.05657E-04	0.00000E+00	0.00000E+00
698	8.92430E-01	1.67210E+01	8.96147E-01	9.04371E-04	0.00000E+00	0.00000E+00
699	9.44390E-01	1.67430E+01	8.96216E-01	9.05721E-04	0.00000E+00	0.00000E+00
700	8.87635E-01	1.67678E+01	8.96204E-01	9.04506E-04	0.00000E+00	0.00000E+00
701	8.85004E-01	1.67915E+01	8.96188E-01	9.03354E-04	0.00000E+00	0.00000E+00
702	9.32628E-01	1.68145E+01	8.96240E-01	9.03563E-04	0.00000E+00	0.00000E+00
703	9.11362E-01	1.68365E+01	8.96261E-01	9.02531E-04	0.00000E+00	0.00000E+00
704	9.09693E-01	1.68602E+01	8.96280E-01	9.01447E-04	0.00000E+00	0.00000E+00
705	9.00177E-01	1.68832E+01	8.96286E-01	9.00181E-04	0.00000E+00	0.00000E+00
706	9.22326E-01	1.69068E+01	8.96323E-01	8.99662E-04	0.00000E+00	0.00000E+00
707	8.86457E-01	1.69317E+01	8.96309E-01	8.98494E-04	0.00000E+00	0.00000E+00
708	8.87745E-01	1.69555E+01	8.96297E-01	8.97303E-04	0.00000E+00	0.00000E+00
709	9.06482E-01	1.69792E+01	8.96311E-01	8.96148E-04	0.00000E+00	0.00000E+00
710	8.94310E-01	1.70030E+01	8.96308E-01	8.94886E-04	0.00000E+00	0.00000E+00
711	8.83331E-01	1.70277E+01	8.96290E-01	8.93811E-04	0.00000E+00	0.00000E+00
712	9.23554E-01	1.70525E+01	8.96329E-01	8.93376E-04	0.00000E+00	0.00000E+00
713	9.40958E-01	1.70753E+01	8.96391E-01	8.94325E-04	0.00000E+00	0.00000E+00
714	8.73210E-01	1.70992E+01	8.96359E-01	8.93661E-04	0.00000E+00	0.00000E+00
715	9.02008E-01	1.71230E+01	8.96367E-01	8.92442E-04	0.00000E+00	0.00000E+00
716	8.89512E-01	1.71458E+01	8.96357E-01	8.91243E-04	0.00000E+00	0.00000E+00
717	9.28326E-01	1.71697E+01	8.96402E-01	8.91118E-04	0.00000E+00	0.00000E+00
718	9.11495E-01	1.71925E+01	8.96423E-01	8.90122E-04	0.00000E+00	0.00000E+00
719	9.22444E-01	1.72172E+01	8.96459E-01	8.89620E-04	0.00000E+00	0.00000E+00
720	8.98003E-01	1.72410E+01	8.96461E-01	8.88383E-04	0.00000E+00	0.00000E+00
721	8.83291E-01	1.72648E+01	8.96443E-01	8.87336E-04	0.00000E+00	0.00000E+00
722	8.58316E-01	1.72895E+01	8.96390E-01	8.87683E-04	0.00000E+00	0.00000E+00
723	9.11684E-01	1.73143E+01	8.96411E-01	8.86705E-04	0.00000E+00	0.00000E+00
724	8.89329E-01	1.73380E+01	8.96401E-01	8.85530E-04	0.00000E+00	0.00000E+00
725	9.22263E-01	1.73618E+01	8.96437E-01	8.85028E-04	0.00000E+00	0.00000E+00
726	9.06097E-01	1.73867E+01	8.96451E-01	8.83905E-04	0.00000E+00	0.00000E+00
727	8.88787E-01	1.74095E+01	8.96440E-01	8.82749E-04	0.00000E+00	0.00000E+00
728	9.12740E-01	1.74333E+01	8.96462E-01	8.81818E-04	0.00000E+00	0.00000E+00
729	9.21494E-01	1.74570E+01	8.96497E-01	8.81277E-04	0.00000E+00	0.00000E+00
730	9.06084E-01	1.74818E+01	8.96510E-01	8.80164E-04	0.00000E+00	0.00000E+00
731	8.44856E-01	1.75075E+01	8.96439E-01	8.81807E-04	0.00000E+00	0.00000E+00
732	9.13042E-01	1.75312E+01	8.96462E-01	8.80892E-04	0.00000E+00	0.00000E+00
733	9.27032E-01	1.75550E+01	8.96504E-01	8.80680E-04	0.00000E+00	0.00000E+00
734	8.87729E-01	1.75788E+01	8.96492E-01	8.79557E-04	0.00000E+00	0.00000E+00
735	8.87608E-01	1.76027E+01	8.96480E-01	8.78440E-04	0.00000E+00	0.00000E+00
736	8.87589E-01	1.76265E+01	8.96468E-01	8.77326E-04	0.00000E+00	0.00000E+00
737	9.40468E-01	1.76502E+01	8.96527E-01	8.78175E-04	0.00000E+00	0.00000E+00
738	8.80430E-01	1.76750E+01	8.96506E-01	8.77253E-04	0.00000E+00	0.00000E+00
739	9.27698E-01	1.76988E+01	8.96548E-01	8.77084E-04	0.00000E+00	0.00000E+00
740	9.19151E-01	1.77217E+01	8.96578E-01	8.76430E-04	0.00000E+00	0.00000E+00
741	8.92995E-01	1.77455E+01	8.96574E-01	8.75257E-04	0.00000E+00	0.00000E+00
742	9.21454E-01	1.77692E+01	8.96607E-01	8.74719E-04	0.00000E+00	0.00000E+00
743	9.21646E-01	1.77930E+01	8.96641E-01	8.74192E-04	0.00000E+00	0.00000E+00
744	8.62474E-01	1.78178E+01	8.96595E-01	8.74226E-04	0.00000E+00	0.00000E+00
745	8.78658E-01	1.78415E+01	8.96571E-01	8.73382E-04	0.00000E+00	0.00000E+00
746	8.95708E-01	1.78653E+01	8.96570E-01	8.72209E-04	0.00000E+00	0.00000E+00
747	9.28713E-01	1.78892E+01	8.96613E-01	8.72105E-04	0.00000E+00	0.00000E+00
748	9.44537E-01	1.79130E+01	8.96677E-01	8.73301E-04	0.00000E+00	0.00000E+00
749	9.25454E-01	1.79368E+01	8.96716E-01	8.72982E-04	0.00000E+00	0.00000E+00
750	9.07206E-01	1.79597E+01	8.96730E-01	8.71927E-04	0.00000E+00	0.00000E+00
751	9.24168E-01	1.79835E+01	8.96766E-01	8.71532E-04	0.00000E+00	0.00000E+00
752	8.69112E-01	1.80082E+01	8.96729E-01	8.71150E-04	0.00000E+00	0.00000E+00
753	9.19546E-01	1.80310E+01	8.96760E-01	8.70519E-04	0.00000E+00	0.00000E+00
754	9.11653E-01	1.80548E+01	8.96780E-01	8.69587E-04	0.00000E+00	0.00000E+00

755	8.89243E-01	1.80795E+01	8.96770E-01	8.68489E-04	0.00000E+00	0.00000E+00
756	8.91823E-01	1.81025E+01	8.96763E-01	8.67361E-04	0.00000E+00	0.00000E+00
757	8.33849E-01	1.81272E+01	8.96680E-01	8.70210E-04	0.00000E+00	0.00000E+00
758	9.41370E-01	1.81500E+01	8.96739E-01	8.71067E-04	0.00000E+00	0.00000E+00
759	8.49148E-01	1.81738E+01	8.96676E-01	8.72184E-04	0.00000E+00	0.00000E+00
760	9.24990E-01	1.81977E+01	8.96713E-01	8.71833E-04	0.00000E+00	0.00000E+00
761	9.23285E-01	1.82205E+01	8.96748E-01	8.71387E-04	0.00000E+00	0.00000E+00
762	9.10927E-01	1.82443E+01	8.96767E-01	8.70440E-04	0.00000E+00	0.00000E+00
763	9.42739E-01	1.82672E+01	8.96827E-01	8.71392E-04	0.00000E+00	0.00000E+00
764	9.13939E-01	1.82902E+01	8.96850E-01	8.70537E-04	0.00000E+00	0.00000E+00
765	9.01541E-01	1.83148E+01	8.96856E-01	8.69417E-04	0.00000E+00	0.00000E+00
766	8.89058E-01	1.83377E+01	8.96846E-01	8.68338E-04	0.00000E+00	0.00000E+00
767	9.43874E-01	1.83615E+01	8.96907E-01	8.69379E-04	0.00000E+00	0.00000E+00
768	8.99420E-01	1.83853E+01	8.96911E-01	8.68249E-04	0.00000E+00	0.00000E+00
769	8.78321E-01	1.84092E+01	8.96886E-01	8.67455E-04	0.00000E+00	0.00000E+00
770	8.93033E-01	1.84320E+01	8.96881E-01	8.66340E-04	0.00000E+00	0.00000E+00
771	8.60661E-01	1.84577E+01	8.96834E-01	8.66493E-04	0.00000E+00	0.00000E+00
772	8.41810E-01	1.84823E+01	8.96763E-01	8.68313E-04	0.00000E+00	0.00000E+00
773	9.00824E-01	1.85052E+01	8.96768E-01	8.67202E-04	0.00000E+00	0.00000E+00
774	8.52743E-01	1.85300E+01	8.96711E-01	8.67953E-04	0.00000E+00	0.00000E+00
775	9.13975E-01	1.85547E+01	8.96733E-01	8.67117E-04	0.00000E+00	0.00000E+00
776	8.84565E-01	1.85793E+01	8.96718E-01	8.66139E-04	0.00000E+00	0.00000E+00
777	8.97693E-01	1.86042E+01	8.96719E-01	8.65022E-04	0.00000E+00	0.00000E+00
778	9.14455E-01	1.86278E+01	8.96742E-01	8.64208E-04	0.00000E+00	0.00000E+00
779	9.20641E-01	1.86508E+01	8.96772E-01	8.63643E-04	0.00000E+00	0.00000E+00
780	8.92296E-01	1.86737E+01	8.96767E-01	8.62552E-04	0.00000E+00	0.00000E+00
781	8.77353E-01	1.86983E+01	8.96742E-01	8.61804E-04	0.00000E+00	0.00000E+00
782	8.83960E-01	1.87232E+01	8.96725E-01	8.60855E-04	0.00000E+00	0.00000E+00
783	8.86227E-01	1.87468E+01	8.96712E-01	8.59857E-04	0.00000E+00	0.00000E+00
784	8.98030E-01	1.87717E+01	8.96714E-01	8.58758E-04	0.00000E+00	0.00000E+00
785	9.14458E-01	1.87945E+01	8.96736E-01	8.57960E-04	0.00000E+00	0.00000E+00
786	9.54414E-01	1.88183E+01	8.96810E-01	8.60017E-04	0.00000E+00	0.00000E+00
787	9.06428E-01	1.88422E+01	8.96822E-01	8.59009E-04	0.00000E+00	0.00000E+00
788	8.68680E-01	1.88660E+01	8.96786E-01	8.58662E-04	0.00000E+00	0.00000E+00
789	8.95655E-01	1.88897E+01	8.96785E-01	8.57571E-04	0.00000E+00	0.00000E+00
790	9.21673E-01	1.89127E+01	8.96816E-01	8.57064E-04	0.00000E+00	0.00000E+00
791	8.98787E-01	1.89373E+01	8.96819E-01	8.55981E-04	0.00000E+00	0.00000E+00
792	9.21291E-01	1.89612E+01	8.96850E-01	8.55458E-04	0.00000E+00	0.00000E+00
793	9.00681E-01	1.89850E+01	8.96855E-01	8.54390E-04	0.00000E+00	0.00000E+00
794	9.07533E-01	1.90087E+01	8.96868E-01	8.53417E-04	0.00000E+00	0.00000E+00
795	9.26335E-01	1.90325E+01	8.96905E-01	8.53149E-04	0.00000E+00	0.00000E+00
796	9.22731E-01	1.90553E+01	8.96938E-01	8.52695E-04	0.00000E+00	0.00000E+00
797	8.68620E-01	1.90802E+01	8.96902E-01	8.52366E-04	0.00000E+00	0.00000E+00
798	8.60341E-01	1.91040E+01	8.96856E-01	8.52533E-04	0.00000E+00	0.00000E+00
799	9.05900E-01	1.91268E+01	8.96868E-01	8.51538E-04	0.00000E+00	0.00000E+00
800	8.50813E-01	1.91507E+01	8.96810E-01	8.52426E-04	0.00000E+00	0.00000E+00
801	8.84755E-01	1.91743E+01	8.96795E-01	8.51492E-04	0.00000E+00	0.00000E+00
802	9.60932E-01	1.91973E+01	8.96875E-01	8.54198E-04	0.00000E+00	0.00000E+00
803	8.76828E-01	1.92212E+01	8.96850E-01	8.53498E-04	0.00000E+00	0.00000E+00
804	8.62301E-01	1.92458E+01	8.96807E-01	8.53521E-04	0.00000E+00	0.00000E+00
805	8.76213E-01	1.92705E+01	8.96781E-01	8.52843E-04	0.00000E+00	0.00000E+00
806	8.74276E-01	1.92943E+01	8.96753E-01	8.52241E-04	0.00000E+00	0.00000E+00
807	8.93648E-01	1.93182E+01	8.96749E-01	8.51191E-04	0.00000E+00	0.00000E+00
808	8.65924E-01	1.93420E+01	8.96711E-01	8.50994E-04	0.00000E+00	0.00000E+00
809	9.52415E-01	1.93648E+01	8.96780E-01	8.52737E-04	0.00000E+00	0.00000E+00
810	9.08650E-01	1.93895E+01	8.96795E-01	8.51808E-04	0.00000E+00	0.00000E+00
811	9.41810E-01	1.94115E+01	8.96851E-01	8.52572E-04	0.00000E+00	0.00000E+00
812	9.06418E-01	1.94343E+01	8.96862E-01	8.51601E-04	0.00000E+00	0.00000E+00
813	8.92819E-01	1.94582E+01	8.96857E-01	8.50564E-04	0.00000E+00	0.00000E+00
814	8.98339E-01	1.94820E+01	8.96859E-01	8.49518E-04	0.00000E+00	0.00000E+00
815	8.77347E-01	1.95058E+01	8.96835E-01	8.48812E-04	0.00000E+00	0.00000E+00
816	8.87159E-01	1.95297E+01	8.96823E-01	8.47852E-04	0.00000E+00	0.00000E+00
817	9.42640E-01	1.95525E+01	8.96880E-01	8.48675E-04	0.00000E+00	0.00000E+00
818	8.70783E-01	1.95782E+01	8.96848E-01	8.48237E-04	0.00000E+00	0.00000E+00
819	9.40829E-01	1.96010E+01	8.96901E-01	8.48907E-04	0.00000E+00	0.00000E+00
820	9.16201E-01	1.96238E+01	8.96925E-01	8.48197E-04	0.00000E+00	0.00000E+00
821	8.66118E-01	1.96487E+01	8.96887E-01	8.47995E-04	0.00000E+00	0.00000E+00
822	9.34448E-01	1.96723E+01	8.96933E-01	8.48198E-04	0.00000E+00	0.00000E+00
823	9.11216E-01	1.96962E+01	8.96951E-01	8.47343E-04	0.00000E+00	0.00000E+00
824	9.02826E-01	1.97192E+01	8.96958E-01	8.46342E-04	0.00000E+00	0.00000E+00
825	9.08861E-01	1.97420E+01	8.96972E-01	8.45437E-04	0.00000E+00	0.00000E+00
826	9.03117E-01	1.97667E+01	8.96980E-01	8.44443E-04	0.00000E+00	0.00000E+00
827	8.83126E-01	1.97905E+01	8.96963E-01	8.43586E-04	0.00000E+00	0.00000E+00
828	8.81592E-01	1.98143E+01	8.96944E-01	8.42769E-04	0.00000E+00	0.00000E+00
829	8.73749E-01	1.98363E+01	8.96916E-01	8.42217E-04	0.00000E+00	0.00000E+00
830	8.87441E-01	1.98610E+01	8.96905E-01	8.41277E-04	0.00000E+00	0.00000E+00
831	9.38631E-01	1.98848E+01	8.96955E-01	8.41768E-04	0.00000E+00	0.00000E+00
832	9.11097E-01	1.99095E+01	8.96972E-01	8.40926E-04	0.00000E+00	0.00000E+00
833	9.35022E-01	1.99323E+01	8.97018E-01	8.41160E-04	0.00000E+00	0.00000E+00
834	9.17385E-01	1.99553E+01	8.97042E-01	8.40505E-04	0.00000E+00	0.00000E+00
835	9.02165E-01	1.99790E+01	8.97049E-01	8.39518E-04	0.00000E+00	0.00000E+00
836	9.05111E-01	2.00028E+01	8.97058E-01	8.38567E-04	0.00000E+00	0.00000E+00
837	9.03150E-01	2.00277E+01	8.97066E-01	8.37593E-04	0.00000E+00	0.00000E+00
838	9.14907E-01	2.00505E+01	8.97087E-01	8.36863E-04	0.00000E+00	0.00000E+00
839	9.11821E-01	2.00733E+01	8.97104E-01	8.36048E-04	0.00000E+00	0.00000E+00
840	8.32084E-01	2.00980E+01	8.97027E-01	8.38647E-04	0.00000E+00	0.00000E+00
841	8.96703E-01	2.01228E+01	8.97026E-01	8.37647E-04	0.00000E+00	0.00000E+00
842	8.86132E-01	2.01467E+01	8.97014E-01	8.36749E-04	0.00000E+00	0.00000E+00
843	9.30081E-01	2.01703E+01	8.97053E-01	8.36678E-04	0.00000E+00	0.00000E+00
844	8.79857E-01	2.01942E+01	8.97032E-01	8.35933E-04	0.00000E+00	0.00000E+00
845	9.24139E-01	2.02180E+01	8.97065E-01	8.35560E-04	0.00000E+00	0.00000E+00
846	8.89679E-01	2.02418E+01	8.97056E-01	8.34615E-04	0.00000E+00	0.00000E+00
847	8.78686E-01	2.02657E+01	8.97034E-01	8.33911E-04	0.00000E+00	0.00000E+00
848	9.00913E-01	2.02885E+01	8.97039E-01	8.32937E-04	0.00000E+00	0.00000E+00
849	9.03616E-01	2.03123E+01	8.97046E-01	8.31989E-04	0.00000E+00	0.00000E+00

850	8.87309E-01	2.03362E+01	8.97035E-01	8.31087E-04	0.00000E+00	0.00000E+00
851	8.86621E-01	2.03608E+01	8.97023E-01	8.30198E-04	0.00000E+00	0.00000E+00
852	9.28976E-01	2.03855E+01	8.97060E-01	8.30072E-04	0.00000E+00	0.00000E+00
853	9.17824E-01	2.04093E+01	8.97085E-01	8.29455E-04	0.00000E+00	0.00000E+00
854	8.91841E-01	2.04332E+01	8.97079E-01	8.28504E-04	0.00000E+00	0.00000E+00
855	8.97408E-01	2.04570E+01	8.97079E-01	8.27532E-04	0.00000E+00	0.00000E+00
856	9.00859E-01	2.04825E+01	8.97083E-01	8.26575E-04	0.00000E+00	0.00000E+00
857	8.89706E-01	2.05055E+01	8.97075E-01	8.25652E-04	0.00000E+00	0.00000E+00
858	9.27852E-01	2.05302E+01	8.97111E-01	8.25471E-04	0.00000E+00	0.00000E+00
859	9.12221E-01	2.05540E+01	8.97128E-01	8.24695E-04	0.00000E+00	0.00000E+00
860	8.77890E-01	2.05787E+01	8.97106E-01	8.24039E-04	0.00000E+00	0.00000E+00
861	9.06913E-01	2.06025E+01	8.97117E-01	8.23158E-04	0.00000E+00	0.00000E+00
862	9.07860E-01	2.06263E+01	8.97130E-01	8.22295E-04	0.00000E+00	0.00000E+00
863	9.02653E-01	2.06500E+01	8.97136E-01	8.21365E-04	0.00000E+00	0.00000E+00
864	9.23429E-01	2.06730E+01	8.97167E-01	8.20978E-04	0.00000E+00	0.00000E+00
865	9.04582E-01	2.06958E+01	8.97175E-01	8.20071E-04	0.00000E+00	0.00000E+00
866	8.95726E-01	2.07205E+01	8.97174E-01	8.19123E-04	0.00000E+00	0.00000E+00
867	9.08764E-01	2.07443E+01	8.97187E-01	8.18285E-04	0.00000E+00	0.00000E+00
868	8.87258E-01	2.07682E+01	8.97176E-01	8.17420E-04	0.00000E+00	0.00000E+00
869	8.66767E-01	2.07920E+01	8.97140E-01	8.17230E-04	0.00000E+00	0.00000E+00
870	9.38072E-01	2.08140E+01	8.97188E-01	8.17649E-04	0.00000E+00	0.00000E+00
871	8.62568E-01	2.08377E+01	8.97148E-01	8.17679E-04	0.00000E+00	0.00000E+00
872	9.20281E-01	2.08615E+01	8.97174E-01	8.17171E-04	0.00000E+00	0.00000E+00
873	9.34936E-01	2.08853E+01	8.97218E-01	8.17383E-04	0.00000E+00	0.00000E+00
874	9.13250E-01	2.09092E+01	8.97236E-01	8.16652E-04	0.00000E+00	0.00000E+00
875	8.47220E-01	2.09338E+01	8.97179E-01	8.17725E-04	0.00000E+00	0.00000E+00
876	8.80179E-01	2.09585E+01	8.97159E-01	8.17021E-04	0.00000E+00	0.00000E+00
877	8.80312E-01	2.09833E+01	8.97140E-01	8.16313E-04	0.00000E+00	0.00000E+00
878	9.40622E-01	2.10062E+01	8.97190E-01	8.16891E-04	0.00000E+00	0.00000E+00
879	8.53698E-01	2.10308E+01	8.97140E-01	8.17464E-04	0.00000E+00	0.00000E+00
880	8.85290E-01	2.10557E+01	8.97127E-01	8.16644E-04	0.00000E+00	0.00000E+00
881	8.62659E-01	2.10803E+01	8.97087E-01	8.16657E-04	0.00000E+00	0.00000E+00
882	8.77399E-01	2.11050E+01	8.97065E-01	8.16035E-04	0.00000E+00	0.00000E+00
883	8.96399E-01	2.11298E+01	8.97064E-01	8.15108E-04	0.00000E+00	0.00000E+00
884	8.85206E-01	2.11545E+01	8.97051E-01	8.14295E-04	0.00000E+00	0.00000E+00
885	9.08646E-01	2.11783E+01	8.97064E-01	8.13478E-04	0.00000E+00	0.00000E+00
886	9.08222E-01	2.12012E+01	8.97077E-01	8.12655E-04	0.00000E+00	0.00000E+00
887	9.04370E-01	2.12258E+01	8.97085E-01	8.11778E-04	0.00000E+00	0.00000E+00
888	8.91415E-01	2.12507E+01	8.97078E-01	8.10887E-04	0.00000E+00	0.00000E+00
889	8.79315E-01	2.12753E+01	8.97058E-01	8.10220E-04	0.00000E+00	0.00000E+00
890	9.09294E-01	2.12992E+01	8.97072E-01	8.09424E-04	0.00000E+00	0.00000E+00
891	9.35346E-01	2.13220E+01	8.97115E-01	8.09658E-04	0.00000E+00	0.00000E+00
892	8.63768E-01	2.13467E+01	8.97078E-01	8.09616E-04	0.00000E+00	0.00000E+00
893	8.79302E-01	2.13715E+01	8.97058E-01	8.08952E-04	0.00000E+00	0.00000E+00
894	8.56139E-01	2.13952E+01	8.97012E-01	8.09346E-04	0.00000E+00	0.00000E+00
895	8.47750E-01	2.14200E+01	8.96957E-01	8.10319E-04	0.00000E+00	0.00000E+00
896	8.89862E-01	2.14438E+01	8.96949E-01	8.09451E-04	0.00000E+00	0.00000E+00
897	8.60465E-01	2.14685E+01	8.96908E-01	8.09573E-04	0.00000E+00	0.00000E+00
898	9.24712E-01	2.14923E+01	8.96939E-01	8.09264E-04	0.00000E+00	0.00000E+00
899	8.65832E-01	2.15160E+01	8.96904E-01	8.09105E-04	0.00000E+00	0.00000E+00
900	8.92025E-01	2.15398E+01	8.96899E-01	8.08222E-04	0.00000E+00	0.00000E+00
901	8.90804E-01	2.15647E+01	8.96892E-01	8.07351E-04	0.00000E+00	0.00000E+00
902	9.21082E-01	2.15875E+01	8.96919E-01	8.06901E-04	0.00000E+00	0.00000E+00
903	8.89179E-01	2.16113E+01	8.96911E-01	8.06051E-04	0.00000E+00	0.00000E+00
904	9.00549E-01	2.16360E+01	8.96915E-01	8.05167E-04	0.00000E+00	0.00000E+00
905	8.83174E-01	2.16598E+01	8.96899E-01	8.04419E-04	0.00000E+00	0.00000E+00
906	8.83253E-01	2.16837E+01	8.96884E-01	8.03670E-04	0.00000E+00	0.00000E+00
907	8.29947E-01	2.17083E+01	8.96810E-01	8.06182E-04	0.00000E+00	0.00000E+00
908	8.53567E-01	2.17322E+01	8.96763E-01	8.06705E-04	0.00000E+00	0.00000E+00
909	9.33725E-01	2.17558E+01	8.96803E-01	8.06844E-04	0.00000E+00	0.00000E+00
910	9.07859E-01	2.17797E+01	8.96816E-01	8.06047E-04	0.00000E+00	0.00000E+00
911	8.69146E-01	2.18045E+01	8.96785E-01	8.05735E-04	0.00000E+00	0.00000E+00
912	9.33907E-01	2.18282E+01	8.96826E-01	8.05883E-04	0.00000E+00	0.00000E+00
913	8.68292E-01	2.18512E+01	8.96795E-01	8.05607E-04	0.00000E+00	0.00000E+00
914	8.88328E-01	2.18758E+01	8.96785E-01	8.04776E-04	0.00000E+00	0.00000E+00
915	9.14710E-01	2.18997E+01	8.96805E-01	8.04134E-04	0.00000E+00	0.00000E+00
916	8.92708E-01	2.19225E+01	8.96800E-01	8.03266E-04	0.00000E+00	0.00000E+00
917	8.72728E-01	2.19472E+01	8.96774E-01	8.02819E-04	0.00000E+00	0.00000E+00
918	9.03811E-01	2.19702E+01	8.96782E-01	8.01979E-04	0.00000E+00	0.00000E+00
919	8.74917E-01	2.19948E+01	8.96758E-01	8.01459E-04	0.00000E+00	0.00000E+00
920	8.66324E-01	2.20195E+01	8.96725E-01	8.01271E-04	0.00000E+00	0.00000E+00
921	8.83617E-01	2.20443E+01	8.96711E-01	8.00526E-04	0.00000E+00	0.00000E+00
922	9.22406E-01	2.20672E+01	8.96738E-01	8.00143E-04	0.00000E+00	0.00000E+00
923	8.66842E-01	2.20918E+01	8.96706E-01	7.99933E-04	0.00000E+00	0.00000E+00
924	8.89395E-01	2.21157E+01	8.96698E-01	7.99104E-04	0.00000E+00	0.00000E+00
925	8.36655E-01	2.21395E+01	8.96633E-01	8.00884E-04	0.00000E+00	0.00000E+00
926	8.95882E-01	2.21652E+01	8.96632E-01	8.00017E-04	0.00000E+00	0.00000E+00
927	8.56521E-01	2.21898E+01	8.96589E-01	8.00327E-04	0.00000E+00	0.00000E+00
928	8.76121E-01	2.22145E+01	8.96567E-01	7.99768E-04	0.00000E+00	0.00000E+00
929	8.49620E-01	2.22383E+01	8.96516E-01	8.00509E-04	0.00000E+00	0.00000E+00
930	8.52140E-01	2.22630E+01	8.96468E-01	8.01074E-04	0.00000E+00	0.00000E+00
931	9.00874E-01	2.22878E+01	8.96473E-01	8.00225E-04	0.00000E+00	0.00000E+00
932	9.05055E-01	2.23115E+01	8.96482E-01	7.99418E-04	0.00000E+00	0.00000E+00
933	9.16334E-01	2.23353E+01	8.96504E-01	7.98843E-04	0.00000E+00	0.00000E+00
934	8.26662E-01	2.23602E+01	8.96429E-01	8.01496E-04	0.00000E+00	0.00000E+00
935	8.64593E-01	2.23848E+01	8.96395E-01	8.01364E-04	0.00000E+00	0.00000E+00
936	8.73175E-01	2.24095E+01	8.96370E-01	8.00891E-04	0.00000E+00	0.00000E+00
937	8.66541E-01	2.24342E+01	8.96338E-01	8.00670E-04	0.00000E+00	0.00000E+00
938	8.98576E-01	2.24572E+01	8.96340E-01	7.99818E-04	0.00000E+00	0.00000E+00
939	8.94220E-01	2.24810E+01	8.96338E-01	7.98967E-04	0.00000E+00	0.00000E+00
940	9.23132E-01	2.25047E+01	8.96366E-01	7.98626E-04	0.00000E+00	0.00000E+00
941	8.92493E-01	2.25285E+01	8.96362E-01	7.97785E-04	0.00000E+00	0.00000E+00
942	8.71159E-01	2.25523E+01	8.96335E-01	7.97387E-04	0.00000E+00	0.00000E+00
943	9.16876E-01	2.25762E+01	8.96357E-01	7.96838E-04	0.00000E+00	0.00000E+00
944	8.93818E-01	2.26000E+01	8.96355E-01	7.95996E-04	0.00000E+00	0.00000E+00

945	9.11905E-01	2.26237E+01	8.96371E-01	7.95323E-04	0.00000E+00	0.00000E+00
946	8.74771E-01	2.26485E+01	8.96348E-01	7.94809E-04	0.00000E+00	0.00000E+00
947	9.16302E-01	2.26713E+01	8.96369E-01	7.94249E-04	0.00000E+00	0.00000E+00
948	8.71349E-01	2.26952E+01	8.96343E-01	7.93849E-04	0.00000E+00	0.00000E+00
949	8.56971E-01	2.27180E+01	8.96301E-01	7.94100E-04	0.00000E+00	0.00000E+00
950	8.88669E-01	2.27418E+01	8.96293E-01	7.93302E-04	0.00000E+00	0.00000E+00
951	8.90950E-01	2.27657E+01	8.96288E-01	7.92486E-04	0.00000E+00	0.00000E+00
952	9.28767E-01	2.27895E+01	8.96322E-01	7.92389E-04	0.00000E+00	0.00000E+00
953	8.58953E-01	2.28132E+01	8.96283E-01	7.92530E-04	0.00000E+00	0.00000E+00
954	9.59375E-01	2.28370E+01	8.96349E-01	7.94466E-04	0.00000E+00	0.00000E+00
955	8.57345E-01	2.28608E+01	8.96308E-01	7.94687E-04	0.00000E+00	0.00000E+00
956	9.13339E-01	2.28837E+01	8.96326E-01	7.94054E-04	0.00000E+00	0.00000E+00
957	9.04645E-01	2.29075E+01	8.96334E-01	7.93270E-04	0.00000E+00	0.00000E+00
958	9.21641E-01	2.29313E+01	8.96361E-01	7.92882E-04	0.00000E+00	0.00000E+00
959	8.77621E-01	2.29552E+01	8.96341E-01	7.92295E-04	0.00000E+00	0.00000E+00
960	9.04417E-01	2.29798E+01	8.96350E-01	7.91512E-04	0.00000E+00	0.00000E+00
961	8.91568E-01	2.30045E+01	8.96345E-01	7.90702E-04	0.00000E+00	0.00000E+00
962	9.21566E-01	2.30283E+01	8.96371E-01	7.90315E-04	0.00000E+00	0.00000E+00
963	8.82102E-01	2.30530E+01	8.96356E-01	7.89632E-04	0.00000E+00	0.00000E+00
964	8.66841E-01	2.30778E+01	8.96326E-01	7.89407E-04	0.00000E+00	0.00000E+00
965	9.07051E-01	2.31025E+01	8.96337E-01	7.88666E-04	0.00000E+00	0.00000E+00
966	9.17604E-01	2.31272E+01	8.96359E-01	7.88156E-04	0.00000E+00	0.00000E+00
967	8.55027E-01	2.31520E+01	8.96316E-01	7.88503E-04	0.00000E+00	0.00000E+00
968	8.85794E-01	2.31757E+01	8.96305E-01	7.87761E-04	0.00000E+00	0.00000E+00
969	8.90583E-01	2.31995E+01	8.96299E-01	7.86969E-04	0.00000E+00	0.00000E+00
970	8.84951E-01	2.32225E+01	8.96287E-01	7.86243E-04	0.00000E+00	0.00000E+00
971	8.98120E-01	2.32462E+01	8.96289E-01	7.85433E-04	0.00000E+00	0.00000E+00
972	9.26559E-01	2.32692E+01	8.96320E-01	7.85243E-04	0.00000E+00	0.00000E+00
973	8.53054E-01	2.32928E+01	8.96276E-01	7.85699E-04	0.00000E+00	0.00000E+00
974	8.45202E-01	2.33185E+01	8.96223E-01	7.86647E-04	0.00000E+00	0.00000E+00
975	8.92275E-01	2.33423E+01	8.96219E-01	7.85848E-04	0.00000E+00	0.00000E+00
976	8.96983E-01	2.33652E+01	8.96220E-01	7.85041E-04	0.00000E+00	0.00000E+00
977	9.23888E-01	2.33900E+01	8.96248E-01	7.84749E-04	0.00000E+00	0.00000E+00
978	9.03130E-01	2.34128E+01	8.96256E-01	7.83976E-04	0.00000E+00	0.00000E+00
979	8.89610E-01	2.34367E+01	8.96249E-01	7.83203E-04	0.00000E+00	0.00000E+00
980	9.08651E-01	2.34605E+01	8.96261E-01	7.82505E-04	0.00000E+00	0.00000E+00
981	9.23001E-01	2.34852E+01	8.96289E-01	7.82182E-04	0.00000E+00	0.00000E+00
982	9.34685E-01	2.35090E+01	8.96328E-01	7.82365E-04	0.00000E+00	0.00000E+00
983	8.80812E-01	2.35328E+01	8.96312E-01	7.81727E-04	0.00000E+00	0.00000E+00
984	8.90980E-01	2.35557E+01	8.96307E-01	7.80950E-04	0.00000E+00	0.00000E+00
985	8.89848E-01	2.35803E+01	8.96300E-01	7.80182E-04	0.00000E+00	0.00000E+00
986	9.14138E-01	2.36032E+01	8.96318E-01	7.79600E-04	0.00000E+00	0.00000E+00
987	9.17277E-01	2.36280E+01	8.96339E-01	7.79099E-04	0.00000E+00	0.00000E+00
988	9.20812E-01	2.36508E+01	8.96364E-01	7.78704E-04	0.00000E+00	0.00000E+00
989	8.90277E-01	2.36755E+01	8.96358E-01	7.77939E-04	0.00000E+00	0.00000E+00
990	8.61549E-01	2.36993E+01	8.96323E-01	7.77949E-04	0.00000E+00	0.00000E+00
991	9.06464E-01	2.37222E+01	8.96333E-01	7.77230E-04	0.00000E+00	0.00000E+00
992	8.76428E-01	2.37460E+01	8.96313E-01	7.76705E-04	0.00000E+00	0.00000E+00
993	8.98159E-01	2.37708E+01	8.96315E-01	7.75923E-04	0.00000E+00	0.00000E+00
994	8.77262E-01	2.37937E+01	8.96296E-01	7.75378E-04	0.00000E+00	0.00000E+00
995	8.86444E-01	2.38193E+01	8.96286E-01	7.74660E-04	0.00000E+00	0.00000E+00
996	9.29766E-01	2.38422E+01	8.96319E-01	7.74613E-04	0.00000E+00	0.00000E+00
997	9.17535E-01	2.38642E+01	8.96341E-01	7.74128E-04	0.00000E+00	0.00000E+00
998	9.15832E-01	2.38870E+01	8.96360E-01	7.73598E-04	0.00000E+00	0.00000E+00
999	9.35707E-01	2.39108E+01	8.96400E-01	7.73829E-04	0.00000E+00	0.00000E+00
1000	8.65155E-01	2.39337E+01	8.96369E-01	7.73687E-04	0.00000E+00	0.00000E+00
1001	8.84044E-01	2.39567E+01	8.96356E-01	7.73010E-04	0.00000E+00	0.00000E+00
1002	8.68562E-01	2.39813E+01	8.96328E-01	7.72737E-04	0.00000E+00	0.00000E+00
1003	8.88865E-01	2.40052E+01	8.96321E-01	7.72001E-04	0.00000E+00	0.00000E+00
1004	8.80088E-01	2.40288E+01	8.96305E-01	7.71400E-04	0.00000E+00	0.00000E+00
1005	8.86939E-01	2.40527E+01	8.96295E-01	7.70687E-04	0.00000E+00	0.00000E+00
1006	9.02762E-01	2.40765E+01	8.96302E-01	7.69946E-04	0.00000E+00	0.00000E+00
1007	8.64564E-01	2.41012E+01	8.96270E-01	7.69827E-04	0.00000E+00	0.00000E+00
1008	9.00696E-01	2.41250E+01	8.96275E-01	7.69074E-04	0.00000E+00	0.00000E+00
1009	9.00350E-01	2.41497E+01	8.96279E-01	7.68321E-04	0.00000E+00	0.00000E+00
1010	9.00566E-01	2.41735E+01	8.96283E-01	7.67570E-04	0.00000E+00	0.00000E+00
1011	8.91664E-01	2.41973E+01	8.96278E-01	7.66823E-04	0.00000E+00	0.00000E+00
1012	8.97271E-01	2.42230E+01	8.96279E-01	7.66064E-04	0.00000E+00	0.00000E+00
1013	9.16475E-01	2.42458E+01	8.96299E-01	7.65566E-04	0.00000E+00	0.00000E+00
1014	8.97566E-01	2.42707E+01	8.96301E-01	7.64810E-04	0.00000E+00	0.00000E+00
1015	8.86673E-01	2.42943E+01	8.96291E-01	7.64114E-04	0.00000E+00	0.00000E+00
1016	8.87857E-01	2.43173E+01	8.96283E-01	7.63406E-04	0.00000E+00	0.00000E+00
1017	9.22095E-01	2.43410E+01	8.96308E-01	7.63077E-04	0.00000E+00	0.00000E+00
1018	9.01253E-01	2.43648E+01	8.96313E-01	7.62341E-04	0.00000E+00	0.00000E+00
1019	9.23257E-01	2.43897E+01	8.96340E-01	7.62052E-04	0.00000E+00	0.00000E+00
1020	8.96923E-01	2.44125E+01	8.96340E-01	7.61303E-04	0.00000E+00	0.00000E+00
1021	8.97407E-01	2.44363E+01	8.96341E-01	7.60556E-04	0.00000E+00	0.00000E+00
1022	9.07315E-01	2.44592E+01	8.96352E-01	7.59886E-04	0.00000E+00	0.00000E+00
1023	8.95572E-01	2.44838E+01	8.96351E-01	7.59142E-04	0.00000E+00	0.00000E+00
1024	9.07718E-01	2.45087E+01	8.96362E-01	7.58481E-04	0.00000E+00	0.00000E+00
1025	9.02544E-01	2.45323E+01	8.96368E-01	7.57763E-04	0.00000E+00	0.00000E+00
1026	8.94517E-01	2.45553E+01	8.96367E-01	7.57025E-04	0.00000E+00	0.00000E+00
1027	8.87744E-01	2.45800E+01	8.96358E-01	7.56332E-04	0.00000E+00	0.00000E+00
1028	8.91779E-01	2.46038E+01	8.96354E-01	7.55608E-04	0.00000E+00	0.00000E+00
1029	8.81953E-01	2.46277E+01	8.96340E-01	7.55002E-04	0.00000E+00	0.00000E+00
1030	8.91379E-01	2.46523E+01	8.96335E-01	7.54283E-04	0.00000E+00	0.00000E+00
1031	8.97679E-01	2.46762E+01	8.96336E-01	7.53551E-04	0.00000E+00	0.00000E+00
1032	8.77777E-01	2.47000E+01	8.96318E-01	7.53034E-04	0.00000E+00	0.00000E+00
1033	8.83846E-01	2.47247E+01	8.96306E-01	7.52401E-04	0.00000E+00	0.00000E+00
1034	8.79761E-01	2.47475E+01	8.96290E-01	7.51842E-04	0.00000E+00	0.00000E+00
1035	8.97991E-01	2.47713E+01	8.96292E-01	7.51116E-04	0.00000E+00	0.00000E+00
1036	8.89629E-01	2.47952E+01	8.96285E-01	7.50417E-04	0.00000E+00	0.00000E+00
1037	8.66763E-01	2.48180E+01	8.96257E-01	7.50234E-04	0.00000E+00	0.00000E+00
1038	8.84214E-01	2.48437E+01	8.96245E-01	7.49600E-04	0.00000E+00	0.00000E+00
1039	9.15908E-01	2.48683E+01	8.96264E-01	7.49116E-04	0.00000E+00	0.00000E+00

1040	9.21075E-01	2.48922E+01	8.96288E-01	7.48776E-04	0.00000E+00	0.00000E+00
1041	8.55317E-01	2.49168E+01	8.96248E-01	7.49094E-04	0.00000E+00	0.00000E+00
1042	8.96144E-01	2.49407E+01	8.96248E-01	7.48373E-04	0.00000E+00	0.00000E+00
1043	9.08740E-01	2.49645E+01	8.96260E-01	7.47750E-04	0.00000E+00	0.00000E+00
1044	8.51237E-01	2.49883E+01	8.96217E-01	7.48281E-04	0.00000E+00	0.00000E+00
1045	8.96748E-01	2.50130E+01	8.96218E-01	7.47563E-04	0.00000E+00	0.00000E+00
1046	8.54888E-01	2.50377E+01	8.96178E-01	7.47895E-04	0.00000E+00	0.00000E+00
1047	8.85638E-01	2.50625E+01	8.96168E-01	7.47247E-04	0.00000E+00	0.00000E+00
1048	8.88498E-01	2.50872E+01	8.96161E-01	7.46568E-04	0.00000E+00	0.00000E+00
1049	9.04067E-01	2.51118E+01	8.96168E-01	7.45893E-04	0.00000E+00	0.00000E+00
1050	8.65492E-01	2.51365E+01	8.96139E-01	7.45756E-04	0.00000E+00	0.00000E+00
1051	8.89499E-01	2.51595E+01	8.96133E-01	7.45071E-04	0.00000E+00	0.00000E+00
1052	8.95148E-01	2.51833E+01	8.96132E-01	7.44362E-04	0.00000E+00	0.00000E+00
1053	9.21011E-01	2.52070E+01	8.96155E-01	7.44030E-04	0.00000E+00	0.00000E+00
1054	8.79649E-01	2.52300E+01	8.96140E-01	7.43488E-04	0.00000E+00	0.00000E+00
1055	8.94670E-01	2.52538E+01	8.96138E-01	7.42783E-04	0.00000E+00	0.00000E+00
1056	9.09842E-01	2.52775E+01	8.96151E-01	7.42192E-04	0.00000E+00	0.00000E+00
1057	9.12909E-01	2.53023E+01	8.96167E-01	7.41658E-04	0.00000E+00	0.00000E+00
1058	9.31263E-01	2.53242E+01	8.96200E-01	7.41701E-04	0.00000E+00	0.00000E+00
1059	9.05228E-01	2.53480E+01	8.96209E-01	7.41048E-04	0.00000E+00	0.00000E+00
1060	9.40802E-01	2.53710E+01	8.96251E-01	7.41546E-04	0.00000E+00	0.00000E+00
1061	8.74881E-01	2.53947E+01	8.96231E-01	7.41120E-04	0.00000E+00	0.00000E+00
1062	9.05753E-01	2.54177E+01	8.96240E-01	7.40475E-04	0.00000E+00	0.00000E+00
1063	8.88956E-01	2.54413E+01	8.96233E-01	7.39809E-04	0.00000E+00	0.00000E+00
1064	9.42077E-01	2.54643E+01	8.96276E-01	7.40371E-04	0.00000E+00	0.00000E+00
1065	9.24862E-01	2.54882E+01	8.96303E-01	7.40163E-04	0.00000E+00	0.00000E+00
1066	8.55677E-01	2.55118E+01	8.96265E-01	7.40452E-04	0.00000E+00	0.00000E+00
1067	8.85195E-01	2.55357E+01	8.96254E-01	7.39830E-04	0.00000E+00	0.00000E+00
1068	8.49246E-01	2.55595E+01	8.96210E-01	7.40450E-04	0.00000E+00	0.00000E+00
1069	8.85453E-01	2.55842E+01	8.96200E-01	7.39824E-04	0.00000E+00	0.00000E+00
1070	8.44168E-01	2.56080E+01	8.96152E-01	7.40735E-04	0.00000E+00	0.00000E+00
1071	9.04609E-01	2.56327E+01	8.96159E-01	7.40084E-04	0.00000E+00	0.00000E+00
1072	8.84240E-01	2.56565E+01	8.96148E-01	7.39476E-04	0.00000E+00	0.00000E+00
1073	8.44388E-01	2.56803E+01	8.96100E-01	7.40364E-04	0.00000E+00	0.00000E+00
1074	8.84394E-01	2.57042E+01	8.96089E-01	7.39754E-04	0.00000E+00	0.00000E+00
1075	8.84275E-01	2.57280E+01	8.96078E-01	7.39146E-04	0.00000E+00	0.00000E+00
1076	8.82604E-01	2.57527E+01	8.96066E-01	7.38564E-04	0.00000E+00	0.00000E+00
1077	9.01255E-01	2.57755E+01	8.96070E-01	7.37892E-04	0.00000E+00	0.00000E+00
1078	9.15737E-01	2.57993E+01	8.96089E-01	7.37433E-04	0.00000E+00	0.00000E+00
1079	8.98836E-01	2.58232E+01	8.96091E-01	7.36752E-04	0.00000E+00	0.00000E+00
1080	8.66644E-01	2.58478E+01	8.96064E-01	7.36575E-04	0.00000E+00	0.00000E+00
1081	8.58190E-01	2.58725E+01	8.96029E-01	7.36729E-04	0.00000E+00	0.00000E+00
1082	8.92714E-01	2.58973E+01	8.96026E-01	7.36053E-04	0.00000E+00	0.00000E+00
1083	8.54882E-01	2.59212E+01	8.95988E-01	7.36356E-04	0.00000E+00	0.00000E+00
1084	9.02746E-01	2.59448E+01	8.95994E-01	7.35702E-04	0.00000E+00	0.00000E+00
1085	9.08642E-01	2.59678E+01	8.96006E-01	7.35115E-04	0.00000E+00	0.00000E+00
1086	8.88831E-01	2.59917E+01	8.95999E-01	7.34466E-04	0.00000E+00	0.00000E+00
1087	9.28360E-01	2.60145E+01	8.96029E-01	7.34395E-04	0.00000E+00	0.00000E+00
1088	8.89307E-01	2.60392E+01	8.96023E-01	7.33744E-04	0.00000E+00	0.00000E+00
1089	9.13454E-01	2.60630E+01	8.96039E-01	7.33244E-04	0.00000E+00	0.00000E+00
1090	9.16673E-01	2.60868E+01	8.96058E-01	7.32816E-04	0.00000E+00	0.00000E+00
1091	8.74491E-01	2.61097E+01	8.96038E-01	7.32410E-04	0.00000E+00	0.00000E+00
1092	9.01690E-01	2.61335E+01	8.96043E-01	7.31756E-04	0.00000E+00	0.00000E+00
1093	8.46123E-01	2.61582E+01	8.95997E-01	7.32516E-04	0.00000E+00	0.00000E+00
1094	9.08212E-01	2.61820E+01	8.96008E-01	7.31930E-04	0.00000E+00	0.00000E+00
1095	8.98488E-01	2.62058E+01	8.96011E-01	7.31264E-04	0.00000E+00	0.00000E+00
1096	9.09170E-01	2.62287E+01	8.96023E-01	7.30694E-04	0.00000E+00	0.00000E+00
1097	8.90699E-01	2.62533E+01	8.96018E-01	7.30042E-04	0.00000E+00	0.00000E+00
1098	8.81684E-01	2.62763E+01	8.96005E-01	7.29493E-04	0.00000E+00	0.00000E+00
1099	8.94330E-01	2.63010E+01	8.96003E-01	7.28830E-04	0.00000E+00	0.00000E+00
1100	8.61453E-01	2.63257E+01	8.95972E-01	7.28845E-04	0.00000E+00	0.00000E+00
1101	8.77511E-01	2.63495E+01	8.95955E-01	7.28375E-04	0.00000E+00	0.00000E+00
1102	8.96574E-01	2.63733E+01	8.95956E-01	7.27713E-04	0.00000E+00	0.00000E+00
1103	8.74184E-01	2.63980E+01	8.95936E-01	7.27321E-04	0.00000E+00	0.00000E+00
1104	8.78485E-01	2.64218E+01	8.95920E-01	7.26833E-04	0.00000E+00	0.00000E+00
1105	9.01330E-01	2.64465E+01	8.95925E-01	7.26190E-04	0.00000E+00	0.00000E+00
1106	9.34887E-01	2.64703E+01	8.95960E-01	7.26390E-04	0.00000E+00	0.00000E+00
1107	8.93618E-01	2.64942E+01	8.95958E-01	7.25735E-04	0.00000E+00	0.00000E+00
1108	9.02750E-01	2.65170E+01	8.95964E-01	7.25105E-04	0.00000E+00	0.00000E+00
1109	9.18999E-01	2.65408E+01	8.95985E-01	7.24748E-04	0.00000E+00	0.00000E+00
1110	8.98118E-01	2.65637E+01	8.95987E-01	7.24097E-04	0.00000E+00	0.00000E+00
1111	8.98897E-01	2.65875E+01	8.95989E-01	7.23448E-04	0.00000E+00	0.00000E+00
1112	9.08947E-01	2.66113E+01	8.96001E-01	7.22890E-04	0.00000E+00	0.00000E+00
1113	9.26974E-01	2.66352E+01	8.96029E-01	7.22777E-04	0.00000E+00	0.00000E+00
1114	8.71905E-01	2.66590E+01	8.96007E-01	7.22453E-04	0.00000E+00	0.00000E+00
1115	8.96963E-01	2.66827E+01	8.96008E-01	7.21804E-04	0.00000E+00	0.00000E+00
1116	8.71165E-01	2.67057E+01	8.95986E-01	7.21500E-04	0.00000E+00	0.00000E+00
1117	8.90311E-01	2.67295E+01	8.95981E-01	7.20871E-04	0.00000E+00	0.00000E+00
1118	8.99518E-01	2.67542E+01	8.95984E-01	7.20232E-04	0.00000E+00	0.00000E+00
1119	8.91354E-01	2.67780E+01	8.95980E-01	7.19599E-04	0.00000E+00	0.00000E+00
1120	9.17347E-01	2.68017E+01	8.95999E-01	7.19209E-04	0.00000E+00	0.00000E+00
1121	8.77721E-01	2.68255E+01	8.95983E-01	7.18751E-04	0.00000E+00	0.00000E+00
1122	9.00307E-01	2.68485E+01	8.95986E-01	7.18120E-04	0.00000E+00	0.00000E+00
1123	8.69085E-01	2.68713E+01	8.95962E-01	7.17880E-04	0.00000E+00	0.00000E+00
1124	8.69200E-01	2.68952E+01	8.95939E-01	7.17636E-04	0.00000E+00	0.00000E+00
1125	9.31893E-01	2.69180E+01	8.95971E-01	7.17711E-04	0.00000E+00	0.00000E+00
1126	9.03385E-01	2.69427E+01	8.95977E-01	7.17103E-04	0.00000E+00	0.00000E+00
1127	8.59036E-01	2.69665E+01	8.95944E-01	7.17217E-04	0.00000E+00	0.00000E+00
1128	9.04152E-01	2.69903E+01	8.95952E-01	7.16617E-04	0.00000E+00	0.00000E+00
1129	9.12474E-01	2.70132E+01	8.95966E-01	7.16131E-04	0.00000E+00	0.00000E+00
1130	8.60995E-01	2.70378E+01	8.95935E-01	7.16167E-04	0.00000E+00	0.00000E+00
1131	8.71672E-01	2.70627E+01	8.95914E-01	7.15855E-04	0.00000E+00	0.00000E+00
1132	9.26681E-01	2.70865E+01	8.95941E-01	7.15740E-04	0.00000E+00	0.00000E+00
1133	8.94016E-01	2.71102E+01	8.95939E-01	7.15109E-04	0.00000E+00	0.00000E+00
1134	8.93460E-01	2.71350E+01	8.95937E-01	7.14480E-04	0.00000E+00	0.00000E+00

1135	9.08239E-01	2.71578E+01	8.95948E-01	7.13932E-04	0.00000E+00	0.00000E+00
1136	8.62759E-01	2.71825E+01	8.95919E-01	7.13902E-04	0.00000E+00	0.00000E+00
1137	8.77150E-01	2.72063E+01	8.95902E-01	7.13464E-04	0.00000E+00	0.00000E+00
1138	9.16201E-01	2.72302E+01	8.95920E-01	7.13060E-04	0.00000E+00	0.00000E+00
1139	9.28077E-01	2.72522E+01	8.95948E-01	7.12994E-04	0.00000E+00	0.00000E+00
1140	9.15754E-01	2.72768E+01	8.95966E-01	7.12579E-04	0.00000E+00	0.00000E+00
1141	8.83411E-01	2.72997E+01	8.95955E-01	7.12039E-04	0.00000E+00	0.00000E+00
1142	8.69228E-01	2.73263E+01	8.95931E-01	7.11800E-04	0.00000E+00	0.00000E+00
1143	8.85366E-01	2.73492E+01	8.95922E-01	7.11236E-04	0.00000E+00	0.00000E+00
1144	8.86207E-01	2.73738E+01	8.95914E-01	7.10664E-04	0.00000E+00	0.00000E+00
1145	9.06083E-01	2.73968E+01	8.95922E-01	7.10098E-04	0.00000E+00	0.00000E+00
1146	8.85198E-01	2.74215E+01	8.95913E-01	7.09539E-04	0.00000E+00	0.00000E+00
1147	9.09287E-01	2.74443E+01	8.95925E-01	7.09015E-04	0.00000E+00	0.00000E+00
1148	9.23632E-01	2.74682E+01	8.95949E-01	7.08809E-04	0.00000E+00	0.00000E+00
1149	9.00286E-01	2.74920E+01	8.95953E-01	7.08200E-04	0.00000E+00	0.00000E+00
1150	8.69474E-01	2.75167E+01	8.95930E-01	7.07959E-04	0.00000E+00	0.00000E+00
1151	8.50941E-01	2.75395E+01	8.95891E-01	7.08426E-04	0.00000E+00	0.00000E+00
1152	8.59734E-01	2.75652E+01	8.95859E-01	7.08507E-04	0.00000E+00	0.00000E+00
1153	8.87615E-01	2.75890E+01	8.95852E-01	7.07928E-04	0.00000E+00	0.00000E+00
1154	8.40925E-01	2.76128E+01	8.95804E-01	7.08918E-04	0.00000E+00	0.00000E+00
1155	8.68554E-01	2.76367E+01	8.95781E-01	7.08697E-04	0.00000E+00	0.00000E+00
1156	9.28105E-01	2.76595E+01	8.95809E-01	7.08637E-04	0.00000E+00	0.00000E+00
1157	8.83594E-01	2.76833E+01	8.95798E-01	7.08102E-04	0.00000E+00	0.00000E+00
1158	9.12399E-01	2.77062E+01	8.95812E-01	7.07635E-04	0.00000E+00	0.00000E+00
1159	9.17283E-01	2.77290E+01	8.95831E-01	7.07266E-04	0.00000E+00	0.00000E+00
1160	8.97163E-01	2.77520E+01	8.95832E-01	7.06656E-04	0.00000E+00	0.00000E+00
1161	9.02969E-01	2.77757E+01	8.95838E-01	7.06073E-04	0.00000E+00	0.00000E+00
1162	8.64871E-01	2.77995E+01	8.95812E-01	7.05969E-04	0.00000E+00	0.00000E+00
1163	8.51225E-01	2.78243E+01	8.95773E-01	7.06405E-04	0.00000E+00	0.00000E+00
1164	9.14045E-01	2.78480E+01	8.95789E-01	7.05972E-04	0.00000E+00	0.00000E+00
1165	9.02196E-01	2.78710E+01	8.95794E-01	7.05386E-04	0.00000E+00	0.00000E+00
1166	8.64393E-01	2.78948E+01	8.95767E-01	7.05296E-04	0.00000E+00	0.00000E+00
1167	8.72484E-01	2.79185E+01	8.95747E-01	7.04974E-04	0.00000E+00	0.00000E+00
1168	9.08082E-01	2.79415E+01	8.95758E-01	7.04449E-04	0.00000E+00	0.00000E+00
1169	8.61882E-01	2.79662E+01	8.95729E-01	7.04443E-04	0.00000E+00	0.00000E+00
1170	8.85325E-01	2.79900E+01	8.95720E-01	7.03896E-04	0.00000E+00	0.00000E+00
1171	8.91575E-01	2.80128E+01	8.95717E-01	7.03303E-04	0.00000E+00	0.00000E+00
1172	8.73048E-01	2.80367E+01	8.95697E-01	7.02968E-04	0.00000E+00	0.00000E+00
1173	8.62656E-01	2.80595E+01	8.95669E-01	7.02934E-04	0.00000E+00	0.00000E+00
1174	8.58240E-01	2.80852E+01	8.95637E-01	7.03060E-04	0.00000E+00	0.00000E+00
1175	9.06722E-01	2.81090E+01	8.95646E-01	7.02524E-04	0.00000E+00	0.00000E+00
1176	9.05635E-01	2.81328E+01	8.95655E-01	7.01977E-04	0.00000E+00	0.00000E+00
1177	9.41449E-01	2.81557E+01	8.95694E-01	7.02461E-04	0.00000E+00	0.00000E+00
1178	8.96015E-01	2.81785E+01	8.95694E-01	7.01863E-04	0.00000E+00	0.00000E+00
1179	9.18680E-01	2.82033E+01	8.95714E-01	7.01539E-04	0.00000E+00	0.00000E+00
1180	9.09530E-01	2.82270E+01	8.95725E-01	7.01041E-04	0.00000E+00	0.00000E+00
1181	9.22157E-01	2.82518E+01	8.95748E-01	7.00805E-04	0.00000E+00	0.00000E+00
1182	9.17719E-01	2.82755E+01	8.95767E-01	7.00458E-04	0.00000E+00	0.00000E+00
1183	8.68359E-01	2.82993E+01	8.95743E-01	7.00250E-04	0.00000E+00	0.00000E+00
1184	9.04160E-01	2.83232E+01	8.95750E-01	6.99693E-04	0.00000E+00	0.00000E+00
1185	9.23835E-01	2.83470E+01	8.95774E-01	6.99504E-04	0.00000E+00	0.00000E+00
1186	9.16994E-01	2.83708E+01	8.95792E-01	6.99143E-04	0.00000E+00	0.00000E+00
1187	9.20446E-01	2.83955E+01	8.95813E-01	6.98863E-04	0.00000E+00	0.00000E+00
1188	9.08031E-01	2.84183E+01	8.95823E-01	6.98349E-04	0.00000E+00	0.00000E+00
1189	9.27445E-01	2.84422E+01	8.95850E-01	6.98269E-04	0.00000E+00	0.00000E+00
1190	8.84641E-01	2.84668E+01	8.95840E-01	6.97745E-04	0.00000E+00	0.00000E+00
1191	9.12230E-01	2.84917E+01	8.95854E-01	6.97294E-04	0.00000E+00	0.00000E+00
1192	9.27426E-01	2.85145E+01	8.95881E-01	6.97213E-04	0.00000E+00	0.00000E+00
1193	8.89833E-01	2.85373E+01	8.95876E-01	6.96645E-04	0.00000E+00	0.00000E+00
1194	9.27713E-01	2.85603E+01	8.95902E-01	6.96573E-04	0.00000E+00	0.00000E+00
1195	9.52418E-01	2.85840E+01	8.95950E-01	6.97599E-04	0.00000E+00	0.00000E+00
1196	8.74577E-01	2.86078E+01	8.95932E-01	6.97245E-04	0.00000E+00	0.00000E+00
1197	8.51631E-01	2.86317E+01	8.95895E-01	6.97647E-04	0.00000E+00	0.00000E+00
1198	8.98460E-01	2.86555E+01	8.95897E-01	6.97066E-04	0.00000E+00	0.00000E+00
1199	8.77306E-01	2.86802E+01	8.95881E-01	6.96657E-04	0.00000E+00	0.00000E+00
1200	9.21877E-01	2.87040E+01	8.95903E-01	6.96413E-04	0.00000E+00	0.00000E+00
1201	8.84406E-01	2.87287E+01	8.95893E-01	6.95898E-04	0.00000E+00	0.00000E+00
1202	9.26636E-01	2.87517E+01	8.95919E-01	6.95790E-04	0.00000E+00	0.00000E+00
1203	9.09364E-01	2.87753E+01	8.95930E-01	6.95300E-04	0.00000E+00	0.00000E+00

KENO MESSAGE NUMBER K5-123 EXECUTION TERMINATED DUE TO COMPLETION OF THE SPECIFIED NUMBER OF GENERATIONS.

LIFETIME = 1.45824E-04 + OR - 1.69663E-07 GENERATION TIME = 9.91010E-05 + OR - 1.05326E-07
NU BAR = 2.41915E+00 + OR - 3.80479E-06 AVERAGE FISSION GROUP = 2.45928E+01 + OR - 2.26697E-03
ENERGY(EV) OF THE AVERAGE LETHARGY CAUSING FISSION = 3.06273E-02 + OR - 6.87042E-05

NO. OF INITIAL GENERATIONS SKIPPED	AVERAGE K-EFFECTIVE	DEVIATION	67 PER CENT CONFIDENCE INTERVAL	95 PER CENT CONFIDENCE INTERVAL	99 PER CENT CONFIDENCE INTERVAL	NUMBER OF HISTORIES
3	0.89596	+ OR - 0.00070	0.89526 TO 0.89665	0.89457 TO 0.89735	0.89387 TO 0.89804	1200000
4	0.89597	+ OR - 0.00070	0.89528 TO 0.89667	0.89458 TO 0.89736	0.89388 TO 0.89806	1199000
5	0.89596	+ OR - 0.00070	0.89527 TO 0.89666	0.89457 TO 0.89736	0.89388 TO 0.89805	1198000
6	0.89594	+ OR - 0.00070	0.89524 TO 0.89664	0.89455 TO 0.89733	0.89385 TO 0.89803	1197000
7	0.89592	+ OR - 0.00070	0.89523 TO 0.89662	0.89453 TO 0.89732	0.89383 TO 0.89801	1196000
8	0.89591	+ OR - 0.00070	0.89522 TO 0.89661	0.89452 TO 0.89731	0.89382 TO 0.89801	1195000
9	0.89589	+ OR - 0.00070	0.89519 TO 0.89659	0.89450 TO 0.89729	0.89380 TO 0.89798	1194000
10	0.89587	+ OR - 0.00070	0.89517 TO 0.89657	0.89447 TO 0.89727	0.89378 TO 0.89796	1193000
11	0.89587	+ OR - 0.00070	0.89517 TO 0.89657	0.89447 TO 0.89726	0.89377 TO 0.89796	1192000
12	0.89590	+ OR - 0.00070	0.89520 TO 0.89660	0.89450 TO 0.89730	0.89380 TO 0.89799	1191000
17	0.89583	+ OR - 0.00070	0.89513 TO 0.89653	0.89443 TO 0.89722	0.89373 TO 0.89792	1186000
22	0.89583	+ OR - 0.00070	0.89513 TO 0.89653	0.89443 TO 0.89723	0.89374 TO 0.89793	1181000
27	0.89588	+ OR - 0.00070	0.89518 TO 0.89658	0.89448 TO 0.89728	0.89378 TO 0.89798	1176000
32	0.89587	+ OR - 0.00070	0.89517 TO 0.89658	0.89447 TO 0.89728	0.89376 TO 0.89799	1171000
37	0.89587	+ OR - 0.00070	0.89517 TO 0.89657	0.89446 TO 0.89728	0.89376 TO 0.89798	1166000
42	0.89592	+ OR - 0.00071	0.89522 TO 0.89663	0.89451 TO 0.89734	0.89380 TO 0.89804	1161000
47	0.89588	+ OR - 0.00071	0.89517 TO 0.89658	0.89446 TO 0.89729	0.89375 TO 0.89800	1156000
52	0.89588	+ OR - 0.00071	0.89517 TO 0.89659	0.89446 TO 0.89730	0.89375 TO 0.89801	1151000
57	0.89585	+ OR - 0.00071	0.89514 TO 0.89656	0.89443 TO 0.89727	0.89372 TO 0.89798	1146000
62	0.89590	+ OR - 0.00071	0.89519 TO 0.89661	0.89447 TO 0.89733	0.89376 TO 0.89804	1141000
67	0.89586	+ OR - 0.00071	0.89515 TO 0.89658	0.89443 TO 0.89729	0.89372 TO 0.89801	1136000
72	0.89580	+ OR - 0.00071	0.89508 TO 0.89651	0.89437 TO 0.89723	0.89365 TO 0.89794	1131000
77	0.89584	+ OR - 0.00072	0.89512 TO 0.89655	0.89440 TO 0.89727	0.89369 TO 0.89799	1126000
82	0.89590	+ OR - 0.00072	0.89518 TO 0.89662	0.89446 TO 0.89734	0.89374 TO 0.89806	1121000
87	0.89588	+ OR - 0.00072	0.89516 TO 0.89660	0.89444 TO 0.89732	0.89372 TO 0.89804	1116000
92	0.89594	+ OR - 0.00072	0.89522 TO 0.89667	0.89450 TO 0.89739	0.89378 TO 0.89811	1111000

NO. OF INITIAL GENERATIONS SKIPPED	AVERAGE K-EFFECTIVE	DEVIATION	67 PER CENT CONFIDENCE INTERVAL	95 PER CENT CONFIDENCE INTERVAL	99 PER CENT CONFIDENCE INTERVAL	NUMBER OF HISTORIES
97	0.89589	+ OR - 0.00072	0.89517 TO 0.89662	0.89445 TO 0.89734	0.89372 TO 0.89807	1106000
102	0.89584	+ OR - 0.00073	0.89511 TO 0.89656	0.89438 TO 0.89729	0.89366 TO 0.89801	1101000
107	0.89577	+ OR - 0.00073	0.89504 TO 0.89650	0.89432 TO 0.89722	0.89359 TO 0.89795	1096000
112	0.89577	+ OR - 0.00073	0.89504 TO 0.89650	0.89431 TO 0.89723	0.89358 TO 0.89796	1091000
117	0.89578	+ OR - 0.00073	0.89504 TO 0.89651	0.89431 TO 0.89724	0.89358 TO 0.89797	1086000
122	0.89571	+ OR - 0.00073	0.89498 TO 0.89645	0.89425 TO 0.89718	0.89352 TO 0.89791	1081000
127	0.89584	+ OR - 0.00073	0.89511 TO 0.89658	0.89438 TO 0.89731	0.89364 TO 0.89804	1076000
132	0.89590	+ OR - 0.00074	0.89516 TO 0.89663	0.89443 TO 0.89737	0.89369 TO 0.89810	1071000
137	0.89592	+ OR - 0.00074	0.89518 TO 0.89665	0.89444 TO 0.89739	0.89370 TO 0.89813	1066000
142	0.89592	+ OR - 0.00074	0.89518 TO 0.89666	0.89444 TO 0.89740	0.89369 TO 0.89814	1061000
147	0.89600	+ OR - 0.00074	0.89526 TO 0.89674	0.89451 TO 0.89748	0.89377 TO 0.89823	1056000
152	0.89593	+ OR - 0.00074	0.89519 TO 0.89668	0.89444 TO 0.89742	0.89370 TO 0.89817	1051000
157	0.89584	+ OR - 0.00075	0.89509 TO 0.89658	0.89434 TO 0.89733	0.89360 TO 0.89807	1046000
162	0.89583	+ OR - 0.00075	0.89508 TO 0.89658	0.89433 TO 0.89733	0.89358 TO 0.89808	1041000
167	0.89583	+ OR - 0.00075	0.89508 TO 0.89658	0.89433 TO 0.89733	0.89358 TO 0.89808	1036000
172	0.89586	+ OR - 0.00075	0.89511 TO 0.89661	0.89435 TO 0.89737	0.89360 TO 0.89812	1031000
177	0.89578	+ OR - 0.00076	0.89502 TO 0.89654	0.89426 TO 0.89729	0.89351 TO 0.89805	1026000
182	0.89584	+ OR - 0.00076	0.89508 TO 0.89660	0.89432 TO 0.89736	0.89357 TO 0.89811	1021000
187	0.89581	+ OR - 0.00076	0.89505 TO 0.89657	0.89429 TO 0.89733	0.89353 TO 0.89809	1016000
192	0.89592	+ OR - 0.00076	0.89515 TO 0.89668	0.89439 TO 0.89744	0.89363 TO 0.89820	1011000
197	0.89590	+ OR - 0.00076	0.89513 TO 0.89666	0.89437 TO 0.89742	0.89360 TO 0.89819	1006000
202	0.89589	+ OR - 0.00076	0.89512 TO 0.89665	0.89436 TO 0.89742	0.89359 TO 0.89818	1001000
207	0.89595	+ OR - 0.00077	0.89518 TO 0.89672	0.89442 TO 0.89748	0.89365 TO 0.89825	996000
212	0.89593	+ OR - 0.00077	0.89516 TO 0.89670	0.89440 TO 0.89747	0.89363 TO 0.89824	991000
217	0.89597	+ OR - 0.00077	0.89520 TO 0.89675	0.89443 TO 0.89752	0.89366 TO 0.89829	986000
222	0.89601	+ OR - 0.00077	0.89523 TO 0.89678	0.89446 TO 0.89755	0.89369 TO 0.89832	981000
227	0.89601	+ OR - 0.00077	0.89524 TO 0.89678	0.89446 TO 0.89755	0.89369 TO 0.89833	976000

NO. OF INITIAL GENERATIONS SKIPPED	AVERAGE K-EFFECTIVE	DEVIATION	67 PER CENT CONFIDENCE INTERVAL	95 PER CENT CONFIDENCE INTERVAL	99 PER CENT CONFIDENCE INTERVAL	NUMBER OF HISTORIES
232	0.89598	+ OR - 0.00077	0.89521 TO 0.89676	0.89443 TO 0.89753	0.89366 TO 0.89831	971000
237	0.89591	+ OR - 0.00078	0.89513 TO 0.89669	0.89435 TO 0.89746	0.89358 TO 0.89824	966000
242	0.89598	+ OR - 0.00078	0.89520 TO 0.89676	0.89442 TO 0.89754	0.89365 TO 0.89832	961000
247	0.89602	+ OR - 0.00078	0.89524 TO 0.89680	0.89446 TO 0.89759	0.89368 TO 0.89837	956000
252	0.89603	+ OR - 0.00078	0.89525 TO 0.89681	0.89447 TO 0.89759	0.89368 TO 0.89838	951000
257	0.89596	+ OR - 0.00078	0.89517 TO 0.89674	0.89439 TO 0.89752	0.89360 TO 0.89831	946000
262	0.89599	+ OR - 0.00079	0.89521 TO 0.89678	0.89442 TO 0.89757	0.89363 TO 0.89836	941000
267	0.89602	+ OR - 0.00079	0.89523 TO 0.89682	0.89444 TO 0.89761	0.89365 TO 0.89840	936000
272	0.89593	+ OR - 0.00079	0.89514 TO 0.89673	0.89435 TO 0.89752	0.89355 TO 0.89831	931000
277	0.89606	+ OR - 0.00079	0.89526 TO 0.89685	0.89447 TO 0.89765	0.89367 TO 0.89844	926000
282	0.89612	+ OR - 0.00080	0.89533 TO 0.89692	0.89453 TO 0.89772	0.89373 TO 0.89851	921000
287	0.89623	+ OR - 0.00080	0.89543 TO 0.89703	0.89463 TO 0.89783	0.89383 TO 0.89863	916000
292	0.89618	+ OR - 0.00080	0.89538 TO 0.89698	0.89458 TO 0.89778	0.89378 TO 0.89858	911000
297	0.89617	+ OR - 0.00080	0.89537 TO 0.89697	0.89457 TO 0.89777	0.89376 TO 0.89857	906000
302	0.89610	+ OR - 0.00080	0.89530 TO 0.89690	0.89449 TO 0.89771	0.89369 TO 0.89851	901000
307	0.89602	+ OR - 0.00081	0.89522 TO 0.89683	0.89441 TO 0.89764	0.89360 TO 0.89844	896000
312	0.89599	+ OR - 0.00081	0.89518 TO 0.89680	0.89437 TO 0.89761	0.89356 TO 0.89842	891000
317	0.89608	+ OR - 0.00081	0.89526 TO 0.89689	0.89445 TO 0.89770	0.89364 TO 0.89852	886000
322	0.89600	+ OR - 0.00082	0.89518 TO 0.89681	0.89437 TO 0.89763	0.89355 TO 0.89845	881000
327	0.89599	+ OR - 0.00082	0.89517 TO 0.89681	0.89435 TO 0.89763	0.89353 TO 0.89845	876000
332	0.89603	+ OR - 0.00082	0.89521 TO 0.89685	0.89439 TO 0.89768	0.89356 TO 0.89850	871000
337	0.89599	+ OR - 0.00083	0.89517 TO 0.89682	0.89434 TO 0.89764	0.89352 TO 0.89847	866000
342	0.89613	+ OR - 0.00083	0.89530 TO 0.89695	0.89447 TO 0.89778	0.89365 TO 0.89861	861000
347	0.89615	+ OR - 0.00083	0.89532 TO 0.89698	0.89449 TO 0.89781	0.89366 TO 0.89864	856000
352	0.89620	+ OR - 0.00083	0.89537 TO 0.89703	0.89453 TO 0.89786	0.89370 TO 0.89870	851000
357	0.89613	+ OR - 0.00083	0.89529 TO 0.89696	0.89446 TO 0.89779	0.89362 TO 0.89863	846000
362	0.89606	+ OR - 0.00084	0.89523 TO 0.89690	0.89439 TO 0.89774	0.89355 TO 0.89858	841000

NO. OF INITIAL GENERATIONS SKIPPED	AVERAGE K-EFFECTIVE	DEVIATION	67 PER CENT CONFIDENCE INTERVAL	95 PER CENT CONFIDENCE INTERVAL	99 PER CENT CONFIDENCE INTERVAL	NUMBER OF HISTORIES
367	0.89615	+ OR - 0.00084	0.89531 TO 0.89699	0.89447 TO 0.89784	0.89363 TO 0.89868	836000
372	0.89620	+ OR - 0.00084	0.89536 TO 0.89704	0.89452 TO 0.89788	0.89368 TO 0.89873	831000
377	0.89623	+ OR - 0.00084	0.89539 TO 0.89707	0.89454 TO 0.89792	0.89370 TO 0.89876	826000
382	0.89617	+ OR - 0.00085	0.89532 TO 0.89702	0.89448 TO 0.89787	0.89363 TO 0.89871	821000
387	0.89621	+ OR - 0.00085	0.89535 TO 0.89706	0.89450 TO 0.89791	0.89365 TO 0.89876	816000
392	0.89604	+ OR - 0.00085	0.89519 TO 0.89689	0.89433 TO 0.89774	0.89348 TO 0.89859	811000
397	0.89602	+ OR - 0.00085	0.89517 TO 0.89687	0.89432 TO 0.89772	0.89347 TO 0.89857	806000
402	0.89597	+ OR - 0.00085	0.89512 TO 0.89683	0.89426 TO 0.89768	0.89341 TO 0.89854	801000
407	0.89583	+ OR - 0.00085	0.89498 TO 0.89669	0.89412 TO 0.89754	0.89327 TO 0.89839	796000
412	0.89579	+ OR - 0.00086	0.89494 TO 0.89665	0.89408 TO 0.89751	0.89322 TO 0.89837	791000
417	0.89577	+ OR - 0.00086	0.89491 TO 0.89663	0.89405 TO 0.89749	0.89319 TO 0.89835	786000
422	0.89565	+ OR - 0.00086	0.89479 TO 0.89651	0.89393 TO 0.89737	0.89307 TO 0.89823	781000
427	0.89565	+ OR - 0.00086	0.89479 TO 0.89652	0.89393 TO 0.89738	0.89307 TO 0.89824	776000
432	0.89554	+ OR - 0.00087	0.89467 TO 0.89640	0.89380 TO 0.89727	0.89294 TO 0.89813	771000
437	0.89540	+ OR - 0.00086	0.89454 TO 0.89626	0.89368 TO 0.89712	0.89282 TO 0.89798	766000
442	0.89547	+ OR - 0.00086	0.89461 TO 0.89633	0.89374 TO 0.89720	0.89288 TO 0.89806	761000
447	0.89553	+ OR - 0.00087	0.89466 TO 0.89639	0.89379 TO 0.89726	0.89292 TO 0.89813	756000
452	0.89555	+ OR - 0.00087	0.89468 TO 0.89642	0.89381 TO 0.89730	0.89293 TO 0.89817	751000
457	0.89545	+ OR - 0.00088	0.89457 TO 0.89632	0.89369 TO 0.89720	0.89282 TO 0.89808	746000
462	0.89548	+ OR - 0.00088	0.89460 TO 0.89636	0.89372 TO 0.89725	0.89284 TO 0.89813	741000
467	0.89549	+ OR - 0.00089	0.89461 TO 0.89638	0.89372 TO 0.89726	0.89283 TO 0.89815	736000
472	0.89552	+ OR - 0.00089	0.89462 TO 0.89641	0.89373 TO 0.89730	0.89284 TO 0.89819	731000
477	0.89556	+ OR - 0.00090	0.89466 TO 0.89646	0.89377 TO 0.89736	0.89287 TO 0.89825	726000
482	0.89560	+ OR - 0.00090	0.89470 TO 0.89650	0.89380 TO 0.89740	0.89290 TO 0.89830	721000
487	0.89559	+ OR - 0.00090	0.89469 TO 0.89649	0.89379 TO 0.89739	0.89288 TO 0.89829	716000
492	0.89556	+ OR - 0.00090	0.89465 TO 0.89646	0.89375 TO 0.89737	0.89284 TO 0.89827	711000
497	0.89543	+ OR - 0.00091	0.89452 TO 0.89633	0.89362 TO 0.89724	0.89271 TO 0.89814	706000

NO. OF INITIAL GENERATIONS SKIPPED	AVERAGE K-EFFECTIVE	DEVIATION	67 PER CENT CONFIDENCE INTERVAL	95 PER CENT CONFIDENCE INTERVAL	99 PER CENT CONFIDENCE INTERVAL	NUMBER OF HISTORIES
502	0.89538	+ OR - 0.00091	0.89447 TO 0.89629	0.89356 TO 0.89721	0.89265 TO 0.89812	701000
507	0.89538	+ OR - 0.00092	0.89447 TO 0.89630	0.89355 TO 0.89722	0.89264 TO 0.89813	696000
512	0.89527	+ OR - 0.00092	0.89435 TO 0.89619	0.89343 TO 0.89711	0.89251 TO 0.89803	691000
517	0.89534	+ OR - 0.00092	0.89442 TO 0.89626	0.89350 TO 0.89718	0.89257 TO 0.89810	686000
522	0.89538	+ OR - 0.00092	0.89445 TO 0.89630	0.89353 TO 0.89723	0.89261 TO 0.89815	681000
527	0.89522	+ OR - 0.00093	0.89429 TO 0.89615	0.89336 TO 0.89707	0.89244 TO 0.89800	676000
532	0.89522	+ OR - 0.00093	0.89429 TO 0.89615	0.89336 TO 0.89708	0.89243 TO 0.89801	671000
537	0.89528	+ OR - 0.00093	0.89435 TO 0.89621	0.89342 TO 0.89714	0.89249 TO 0.89807	666000
542	0.89533	+ OR - 0.00094	0.89440 TO 0.89627	0.89346 TO 0.89720	0.89253 TO 0.89814	661000
547	0.89533	+ OR - 0.00094	0.89439 TO 0.89627	0.89345 TO 0.89721	0.89251 TO 0.89815	656000
552	0.89547	+ OR - 0.00094	0.89453 TO 0.89641	0.89359 TO 0.89736	0.89265 TO 0.89830	651000
557	0.89543	+ OR - 0.00095	0.89448 TO 0.89638	0.89354 TO 0.89732	0.89259 TO 0.89827	646000
562	0.89553	+ OR - 0.00095	0.89458 TO 0.89649	0.89363 TO 0.89744	0.89268 TO 0.89839	641000
567	0.89541	+ OR - 0.00096	0.89445 TO 0.89636	0.89349 TO 0.89732	0.89254 TO 0.89828	636000
572	0.89553	+ OR - 0.00096	0.89457 TO 0.89649	0.89361 TO 0.89745	0.89264 TO 0.89841	631000
577	0.89536	+ OR - 0.00097	0.89439 TO 0.89632	0.89343 TO 0.89729	0.89246 TO 0.89825	626000
582	0.89521	+ OR - 0.00097	0.89425 TO 0.89618	0.89328 TO 0.89715	0.89231 TO 0.89811	621000
587	0.89514	+ OR - 0.00097	0.89416 TO 0.89611	0.89319 TO 0.89708	0.89221 TO 0.89806	616000
592	0.89520	+ OR - 0.00098	0.89423 TO 0.89618	0.89325 TO 0.89716	0.89227 TO 0.89814	611000
597	0.89530	+ OR - 0.00098	0.89432 TO 0.89629	0.89334 TO 0.89727	0.89235 TO 0.89826	606000
602	0.89534	+ OR - 0.00099	0.89436 TO 0.89633	0.89337 TO 0.89732	0.89238 TO 0.89831	601000
607	0.89521	+ OR - 0.00099	0.89422 TO 0.89620	0.89323 TO 0.89719	0.89223 TO 0.89818	596000
612	0.89507	+ OR - 0.00100	0.89407 TO 0.89607	0.89308 TO 0.89706	0.89208 TO 0.89806	591000
617	0.89507	+ OR - 0.00100	0.89407 TO 0.89607	0.89307 TO 0.89707	0.89207 TO 0.89807	586000
622	0.89512	+ OR - 0.00101	0.89411 TO 0.89613	0.89310 TO 0.89713	0.89210 TO 0.89814	581000
627	0.89508	+ OR - 0.00102	0.89407 TO 0.89610	0.89305 TO 0.89711	0.89204 TO 0.89813	576000
632	0.89517	+ OR - 0.00102	0.89415 TO 0.89619	0.89312 TO 0.89721	0.89210 TO 0.89823	571000

NO. OF INITIAL GENERATIONS SKIPPED	AVERAGE K-EFFECTIVE	DEVIATION	67 PER CENT CONFIDENCE INTERVAL	95 PER CENT CONFIDENCE INTERVAL	99 PER CENT CONFIDENCE INTERVAL	NUMBER OF HISTORIES
637	0.89544	+ OR - 0.00102	0.89442 TO 0.89646	0.89340 TO 0.89748	0.89239 TO 0.89849	566000
642	0.89559	+ OR - 0.00102	0.89457 TO 0.89661	0.89354 TO 0.89763	0.89252 TO 0.89865	561000
647	0.89560	+ OR - 0.00103	0.89457 TO 0.89663	0.89354 TO 0.89766	0.89251 TO 0.89869	556000
652	0.89560	+ OR - 0.00104	0.89456 TO 0.89664	0.89352 TO 0.89768	0.89248 TO 0.89871	551000
657	0.89578	+ OR - 0.00104	0.89474 TO 0.89682	0.89370 TO 0.89786	0.89265 TO 0.89890	546000
662	0.89588	+ OR - 0.00105	0.89483 TO 0.89693	0.89378 TO 0.89798	0.89273 TO 0.89903	541000
667	0.89581	+ OR - 0.00105	0.89475 TO 0.89686	0.89370 TO 0.89792	0.89265 TO 0.89897	536000
672	0.89578	+ OR - 0.00106	0.89472 TO 0.89684	0.89366 TO 0.89790	0.89260 TO 0.89896	531000
677	0.89591	+ OR - 0.00106	0.89484 TO 0.89697	0.89378 TO 0.89804	0.89272 TO 0.89910	526000
682	0.89595	+ OR - 0.00107	0.89487 TO 0.89702	0.89380 TO 0.89809	0.89272 TO 0.89917	521000
687	0.89587	+ OR - 0.00108	0.89479 TO 0.89695	0.89371 TO 0.89803	0.89263 TO 0.89911	516000
692	0.89584	+ OR - 0.00108	0.89476 TO 0.89692	0.89367 TO 0.89800	0.89259 TO 0.89909	511000
697	0.89563	+ OR - 0.00109	0.89454 TO 0.89671	0.89345 TO 0.89780	0.89237 TO 0.89888	506000
702	0.89550	+ OR - 0.00109	0.89441 TO 0.89659	0.89332 TO 0.89768	0.89223 TO 0.89877	501000
707	0.89539	+ OR - 0.00110	0.89429 TO 0.89649	0.89320 TO 0.89759	0.89210 TO 0.89868	496000
712	0.89535	+ OR - 0.00111	0.89425 TO 0.89646	0.89314 TO 0.89757	0.89203 TO 0.89867	491000
717	0.89524	+ OR - 0.00111	0.89413 TO 0.89635	0.89301 TO 0.89746	0.89190 TO 0.89857	486000
722	0.89524	+ OR - 0.00112	0.89412 TO 0.89636	0.89301 TO 0.89748	0.89189 TO 0.89860	481000
727	0.89515	+ OR - 0.00113	0.89403 TO 0.89628	0.89290 TO 0.89741	0.89177 TO 0.89854	476000
732	0.89511	+ OR - 0.00113	0.89398 TO 0.89624	0.89284 TO 0.89737	0.89171 TO 0.89850	471000
737	0.89499	+ OR - 0.00114	0.89385 TO 0.89613	0.89271 TO 0.89726	0.89158 TO 0.89840	466000
742	0.89484	+ OR - 0.00114	0.89370 TO 0.89599	0.89256 TO 0.89713	0.89141 TO 0.89828	461000
747	0.89482	+ OR - 0.00115	0.89367 TO 0.89596	0.89252 TO 0.89711	0.89137 TO 0.89826	456000
752	0.89460	+ OR - 0.00115	0.89345 TO 0.89575	0.89230 TO 0.89690	0.89115 TO 0.89806	451000
757	0.89466	+ OR - 0.00115	0.89351 TO 0.89582	0.89235 TO 0.89697	0.89120 TO 0.89812	446000
762	0.89449	+ OR - 0.00115	0.89333 TO 0.89564	0.89218 TO 0.89680	0.89103 TO 0.89795	441000
767	0.89422	+ OR - 0.00115	0.89306 TO 0.89537	0.89191 TO 0.89653	0.89075 TO 0.89768	436000

NO. OF INITIAL GENERATIONS SKIPPED	AVERAGE K-EFFECTIVE	DEVIATION	67 PER CENT CONFIDENCE INTERVAL	95 PER CENT CONFIDENCE INTERVAL	99 PER CENT CONFIDENCE INTERVAL	NUMBER OF HISTORIES
772	0.89444	+ OR - 0.00116	0.89328 TO 0.89560	0.89213 TO 0.89676	0.89097 TO 0.89792	431000
777	0.89450	+ OR - 0.00117	0.89333 TO 0.89566	0.89216 TO 0.89683	0.89100 TO 0.89800	426000
782	0.89446	+ OR - 0.00118	0.89328 TO 0.89563	0.89210 TO 0.89681	0.89093 TO 0.89799	421000
787	0.89425	+ OR - 0.00118	0.89307 TO 0.89543	0.89189 TO 0.89661	0.89070 TO 0.89779	416000
792	0.89416	+ OR - 0.00119	0.89297 TO 0.89535	0.89178 TO 0.89654	0.89059 TO 0.89773	411000
797	0.89403	+ OR - 0.00120	0.89283 TO 0.89522	0.89163 TO 0.89642	0.89043 TO 0.89762	406000
802	0.89405	+ OR - 0.00119	0.89285 TO 0.89524	0.89166 TO 0.89643	0.89047 TO 0.89762	401000
807	0.89426	+ OR - 0.00120	0.89306 TO 0.89547	0.89186 TO 0.89667	0.89066 TO 0.89787	396000
812	0.89400	+ OR - 0.00120	0.89280 TO 0.89520	0.89160 TO 0.89640	0.89040 TO 0.89760	391000
817	0.89393	+ OR - 0.00121	0.89272 TO 0.89513	0.89151 TO 0.89634	0.89030 TO 0.89755	386000
822	0.89377	+ OR - 0.00121	0.89256 TO 0.89498	0.89136 TO 0.89619	0.89015 TO 0.89739	381000
827	0.89366	+ OR - 0.00122	0.89244 TO 0.89489	0.89122 TO 0.89611	0.89000 TO 0.89733	376000
832	0.89360	+ OR - 0.00123	0.89237 TO 0.89483	0.89114 TO 0.89606	0.88991 TO 0.89729	371000
837	0.89334	+ OR - 0.00124	0.89210 TO 0.89458	0.89086 TO 0.89582	0.88963 TO 0.89705	366000
842	0.89341	+ OR - 0.00124	0.89217 TO 0.89465	0.89093 TO 0.89589	0.88969 TO 0.89713	361000
847	0.89331	+ OR - 0.00125	0.89206 TO 0.89456	0.89081 TO 0.89581	0.88956 TO 0.89706	356000
852	0.89319	+ OR - 0.00126	0.89193 TO 0.89446	0.89067 TO 0.89572	0.88941 TO 0.89698	351000
857	0.89310	+ OR - 0.00128	0.89182 TO 0.89438	0.89055 TO 0.89566	0.88927 TO 0.89694	346000
862	0.89291	+ OR - 0.00129	0.89162 TO 0.89419	0.89033 TO 0.89548	0.88904 TO 0.89677	341000
867	0.89269	+ OR - 0.00130	0.89139 TO 0.89400	0.89009 TO 0.89530	0.88878 TO 0.89661	336000
872	0.89266	+ OR - 0.00131	0.89135 TO 0.89397	0.89004 TO 0.89528	0.88873 TO 0.89659	331000
877	0.89268	+ OR - 0.00131	0.89137 TO 0.89400	0.89006 TO 0.89531	0.88875 TO 0.89662	326000
882	0.89282	+ OR - 0.00131	0.89151 TO 0.89413	0.89019 TO 0.89545	0.88888 TO 0.89676	321000
887	0.89270	+ OR - 0.00133	0.89136 TO 0.89403	0.89003 TO 0.89536	0.88870 TO 0.89669	316000
892	0.89265	+ OR - 0.00134	0.89130 TO 0.89399	0.88996 TO 0.89533	0.88862 TO 0.89667	311000
897	0.89307	+ OR - 0.00135	0.89172 TO 0.89442	0.89038 TO 0.89576	0.88903 TO 0.89711	306000
902	0.89297	+ OR - 0.00136	0.89162 TO 0.89433	0.89026 TO 0.89569	0.88890 TO 0.89705	301000

NO. OF INITIAL GENERATIONS SKIPPED	AVERAGE K-EFFECTIVE	DEVIATION	67 PER CENT CONFIDENCE INTERVAL	95 PER CENT CONFIDENCE INTERVAL	99 PER CENT CONFIDENCE INTERVAL	NUMBER OF HISTORIES
907	0.89324	+ OR - 0.00136	0.89188 TO 0.89460	0.89051 TO 0.89597	0.88915 TO 0.89733	296000
912	0.89313	+ OR - 0.00136	0.89177 TO 0.89449	0.89041 TO 0.89585	0.88904 TO 0.89722	291000
917	0.89323	+ OR - 0.00138	0.89185 TO 0.89461	0.89047 TO 0.89599	0.88909 TO 0.89737	286000
922	0.89328	+ OR - 0.00139	0.89189 TO 0.89468	0.89050 TO 0.89607	0.88910 TO 0.89747	281000
927	0.89372	+ OR - 0.00139	0.89233 TO 0.89512	0.89093 TO 0.89651	0.88954 TO 0.89791	276000
932	0.89404	+ OR - 0.00140	0.89264 TO 0.89544	0.89124 TO 0.89684	0.88984 TO 0.89824	271000
937	0.89450	+ OR - 0.00139	0.89311 TO 0.89589	0.89172 TO 0.89728	0.89033 TO 0.89867	266000
942	0.89447	+ OR - 0.00141	0.89306 TO 0.89588	0.89165 TO 0.89729	0.89024 TO 0.89870	261000
947	0.89431	+ OR - 0.00143	0.89288 TO 0.89574	0.89145 TO 0.89717	0.89003 TO 0.89859	256000
952	0.89445	+ OR - 0.00144	0.89301 TO 0.89589	0.89157 TO 0.89733	0.89013 TO 0.89877	251000
957	0.89436	+ OR - 0.00143	0.89293 TO 0.89579	0.89151 TO 0.89721	0.89008 TO 0.89864	246000
962	0.89417	+ OR - 0.00145	0.89273 TO 0.89562	0.89128 TO 0.89706	0.88984 TO 0.89851	241000
967	0.89435	+ OR - 0.00146	0.89290 TO 0.89581	0.89144 TO 0.89727	0.88998 TO 0.89872	236000
972	0.89429	+ OR - 0.00148	0.89281 TO 0.89577	0.89133 TO 0.89725	0.88985 TO 0.89873	231000
977	0.89456	+ OR - 0.00148	0.89308 TO 0.89604	0.89160 TO 0.89752	0.89012 TO 0.89900	226000
982	0.89417	+ OR - 0.00149	0.89267 TO 0.89566	0.89118 TO 0.89716	0.88968 TO 0.89865	221000
987	0.89406	+ OR - 0.00152	0.89254 TO 0.89559	0.89102 TO 0.89711	0.88950 TO 0.89863	216000
992	0.89413	+ OR - 0.00154	0.89259 TO 0.89568	0.89105 TO 0.89722	0.88951 TO 0.89876	211000
997	0.89395	+ OR - 0.00156	0.89239 TO 0.89551	0.89082 TO 0.89707	0.88926 TO 0.89863	206000
1002	0.89395	+ OR - 0.00157	0.89238 TO 0.89552	0.89081 TO 0.89709	0.88924 TO 0.89866	201000
1007	0.89419	+ OR - 0.00160	0.89259 TO 0.89579	0.89098 TO 0.89739	0.88938 TO 0.89899	196000
1012	0.89408	+ OR - 0.00164	0.89244 TO 0.89573	0.89080 TO 0.89737	0.88916 TO 0.89901	191000
1017	0.89387	+ OR - 0.00167	0.89219 TO 0.89554	0.89052 TO 0.89722	0.88884 TO 0.89889	186000
1022	0.89355	+ OR - 0.00171	0.89184 TO 0.89527	0.89013 TO 0.89698	0.88842 TO 0.89869	181000
1027	0.89344	+ OR - 0.00176	0.89168 TO 0.89520	0.88993 TO 0.89695	0.88817 TO 0.89871	176000
1032	0.89359	+ OR - 0.00180	0.89179 TO 0.89540	0.88999 TO 0.89720	0.88818 TO 0.89901	171000
1037	0.89390	+ OR - 0.00185	0.89205 TO 0.89574	0.89020 TO 0.89759	0.88835 TO 0.89944	166000

NO. OF INITIAL GENERATIONS SKIPPED	AVERAGE K-EFFECTIVE	DEVIATION	67 PER CENT CONFIDENCE INTERVAL	95 PER CENT CONFIDENCE INTERVAL	99 PER CENT CONFIDENCE INTERVAL	NUMBER OF HISTORIES
1042	0.89388	+ OR - 0.00188	0.89200 TO 0.89575	0.89012 TO 0.89763	0.88824 TO 0.89951	161000
1047	0.89434	+ OR - 0.00190	0.89244 TO 0.89624	0.89054 TO 0.89813	0.88864 TO 0.90003	156000
1052	0.89453	+ OR - 0.00195	0.89258 TO 0.89648	0.89063 TO 0.89843	0.88868 TO 0.90038	151000
1057	0.89422	+ OR - 0.00200	0.89222 TO 0.89622	0.89022 TO 0.89822	0.88822 TO 0.90022	146000
1062	0.89360	+ OR - 0.00202	0.89159 TO 0.89562	0.88957 TO 0.89764	0.88755 TO 0.89966	141000
1067	0.89339	+ OR - 0.00203	0.89136 TO 0.89542	0.88934 TO 0.89745	0.88731 TO 0.89948	136000
1072	0.89415	+ OR - 0.00204	0.89211 TO 0.89619	0.89007 TO 0.89823	0.88803 TO 0.90027	131000
1077	0.89474	+ OR - 0.00208	0.89266 TO 0.89681	0.89058 TO 0.89889	0.88851 TO 0.90096	126000
1082	0.89508	+ OR - 0.00212	0.89296 TO 0.89720	0.89084 TO 0.89932	0.88872 TO 0.90144	121000
1087	0.89501	+ OR - 0.00216	0.89285 TO 0.89717	0.89069 TO 0.89933	0.88853 TO 0.90149	116000
1092	0.89482	+ OR - 0.00223	0.89259 TO 0.89706	0.89035 TO 0.89929	0.88812 TO 0.90153	111000
1097	0.89503	+ OR - 0.00229	0.89274 TO 0.89731	0.89045 TO 0.89960	0.88817 TO 0.90189	106000
1102	0.89566	+ OR - 0.00237	0.89329 TO 0.89802	0.89092 TO 0.90039	0.88856 TO 0.90275	101000
1107	0.89561	+ OR - 0.00244	0.89317 TO 0.89805	0.89074 TO 0.90049	0.88830 TO 0.90293	96000
1112	0.89507	+ OR - 0.00255	0.89251 TO 0.89762	0.88996 TO 0.90017	0.88741 TO 0.90272	91000
1117	0.89527	+ OR - 0.00265	0.89263 TO 0.89792	0.88998 TO 0.90057	0.88733 TO 0.90322	86000
1122	0.89515	+ OR - 0.00279	0.89236 TO 0.89794	0.88958 TO 0.90073	0.88679 TO 0.90352	81000
1127	0.89572	+ OR - 0.00285	0.89287 TO 0.89857	0.89002 TO 0.90142	0.88717 TO 0.90427	76000
1132	0.89576	+ OR - 0.00295	0.89281 TO 0.89871	0.88986 TO 0.90165	0.88692 TO 0.90460	71000
1137	0.89641	+ OR - 0.00311	0.89330 TO 0.89952	0.89019 TO 0.90264	0.88708 TO 0.90575	66000
1142	0.89591	+ OR - 0.00326	0.89265 TO 0.89917	0.88939 TO 0.90243	0.88613 TO 0.90569	61000
1147	0.89604	+ OR - 0.00352	0.89252 TO 0.89957	0.88899 TO 0.90309	0.88547 TO 0.90662	56000
1152	0.89754	+ OR - 0.00361	0.89392 TO 0.90115	0.89031 TO 0.90476	0.88669 TO 0.90838	51000
1157	0.89925	+ OR - 0.00367	0.89558 TO 0.90292	0.89191 TO 0.90659	0.88824 TO 0.91026	46000
1162	0.89929	+ OR - 0.00400	0.89529 TO 0.90329	0.89129 TO 0.90728	0.88730 TO 0.91128	41000
1167	0.90185	+ OR - 0.00413	0.89772 TO 0.90598	0.89359 TO 0.91011	0.88946 TO 0.91424	36000
1172	0.90473	+ OR - 0.00445	0.90028 TO 0.90918	0.89583 TO 0.91362	0.89139 TO 0.91807	31000

NO. OF INITIAL GENERATIONS SKIPPED	AVERAGE K-EFFECTIVE	DEVIATION	67 PER CENT CONFIDENCE INTERVAL	95 PER CENT CONFIDENCE INTERVAL	99 PER CENT CONFIDENCE INTERVAL	NUMBER OF HISTORIES
1177	0.90661	+ OR - 0.00447	0.90214 TO 0.91109	0.89766 TO 0.91556	0.89319 TO 0.92003	26000
1182	0.90513	+ OR - 0.00542	0.89971 TO 0.91055	0.89429 TO 0.91597	0.88887 TO 0.92139	21000
1187	0.90462	+ OR - 0.00654	0.89809 TO 0.91116	0.89155 TO 0.91770	0.88501 TO 0.92423	16000
1192	0.90129	+ OR - 0.00885	0.89244 TO 0.91015	0.88359 TO 0.91900	0.87473 TO 0.92785	11000
1197	0.90301	+ OR - 0.00813	0.89488 TO 0.91114	0.88675 TO 0.91926	0.87862 TO 0.92739	6000

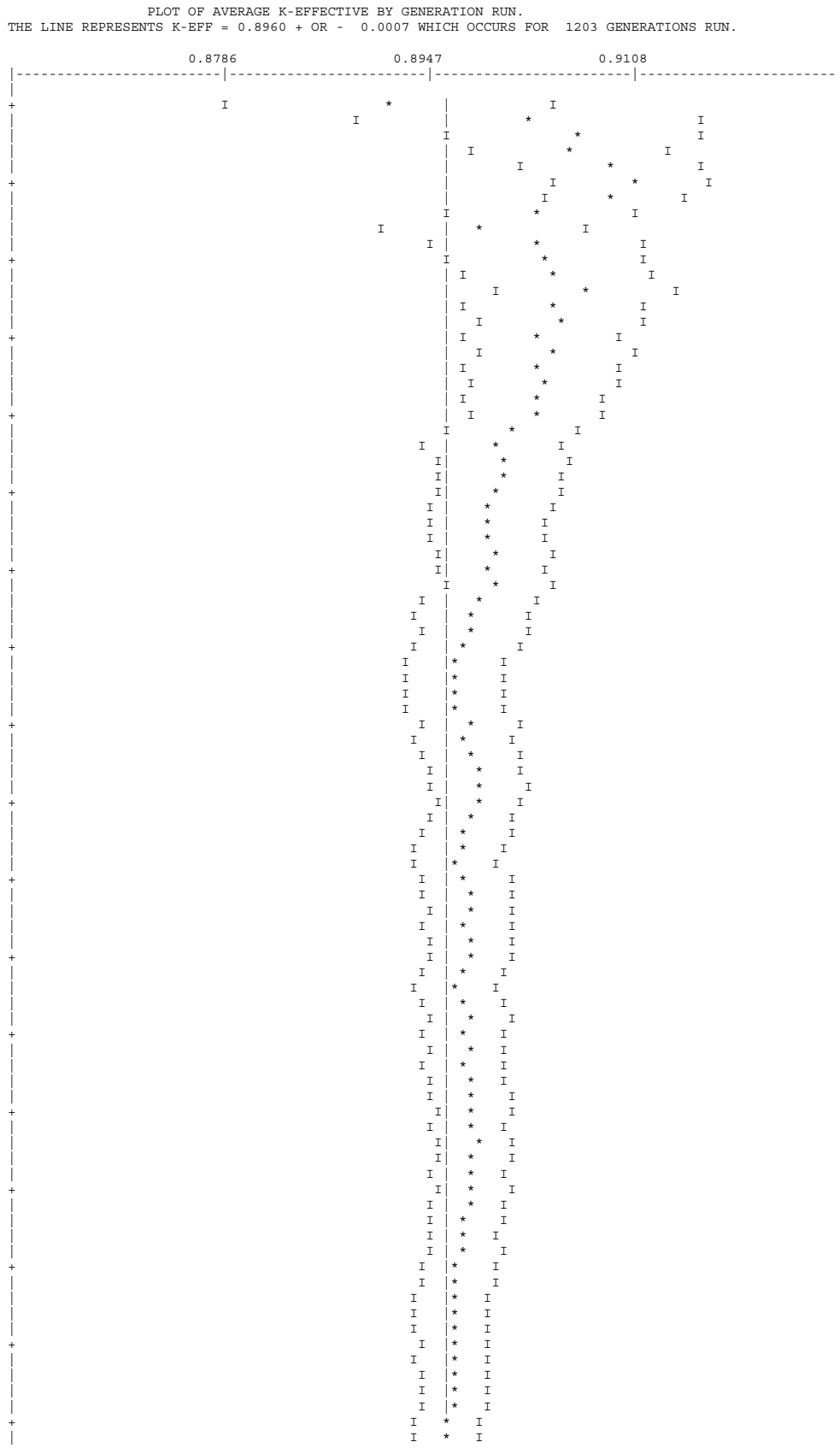
PLOT OF AVERAGE K-EFFECTIVE BY GENERATION RUN.
THE LINE REPRESENTS K-EFF = 0.8960 + OR - 0.0007 WHICH OCCURS FOR 1203 GENERATIONS RUN.
0.8786
0.8947
0.9108
5
10
15
20
25
30
35
40
45
50
55
60
65
70
75
80
85
90

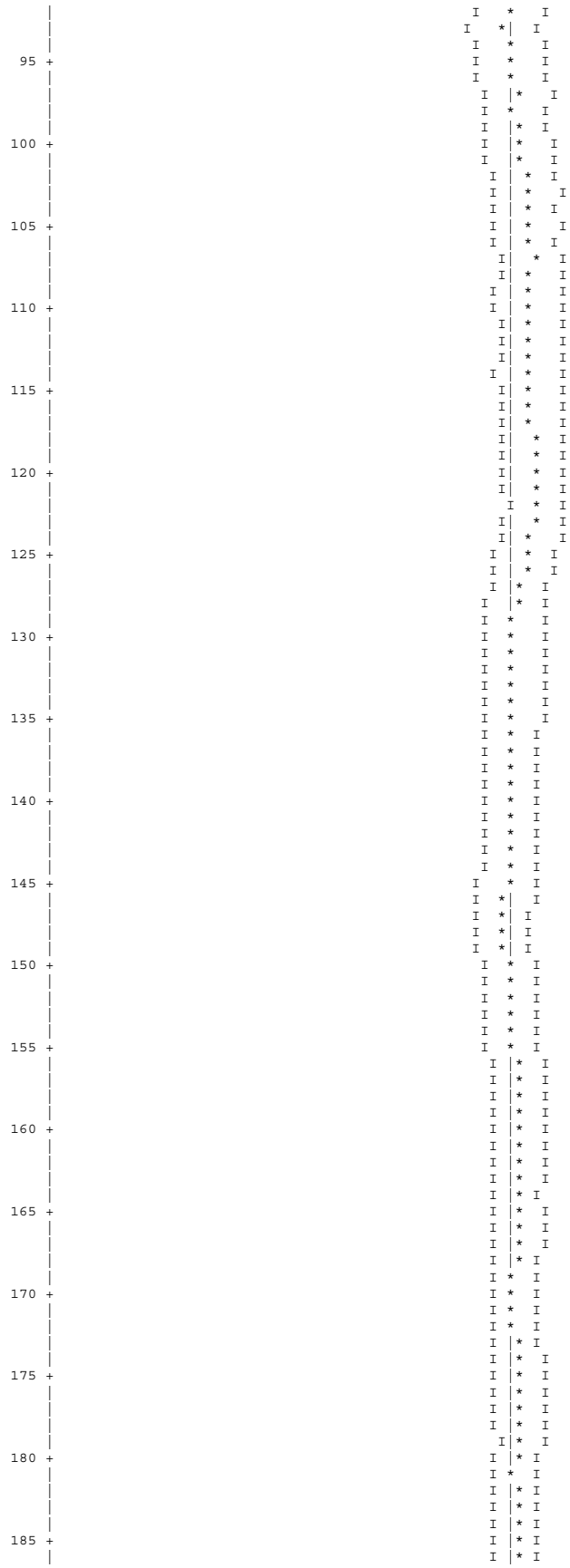

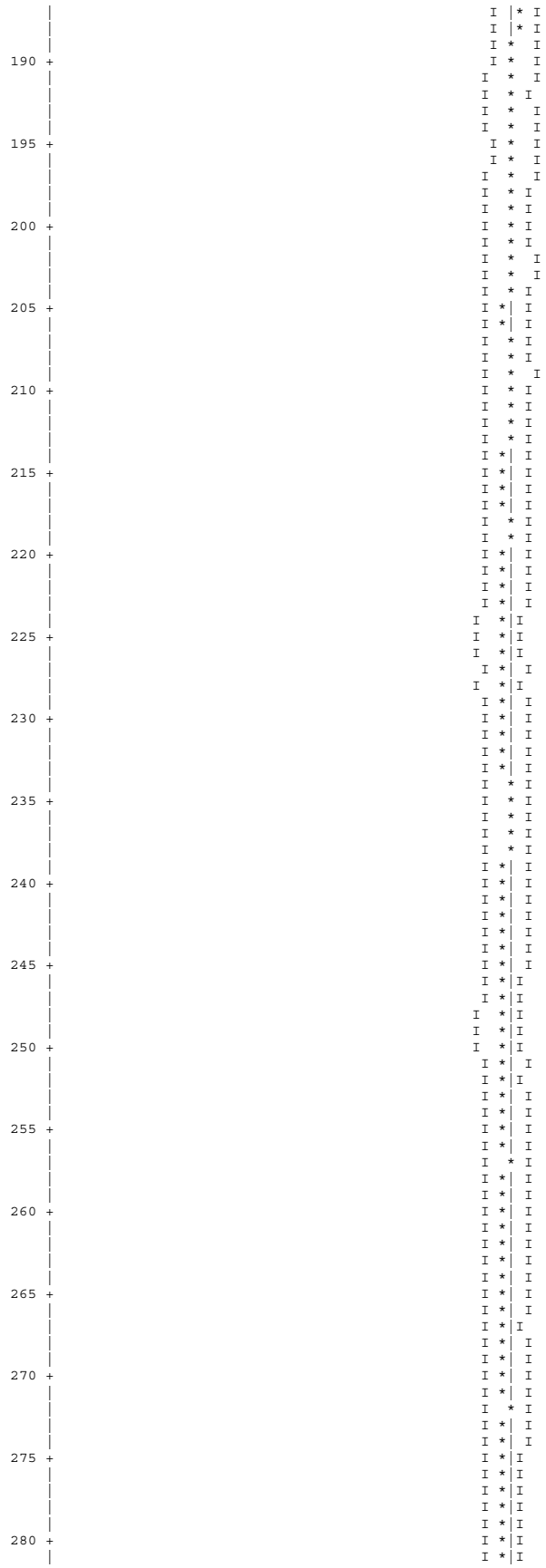

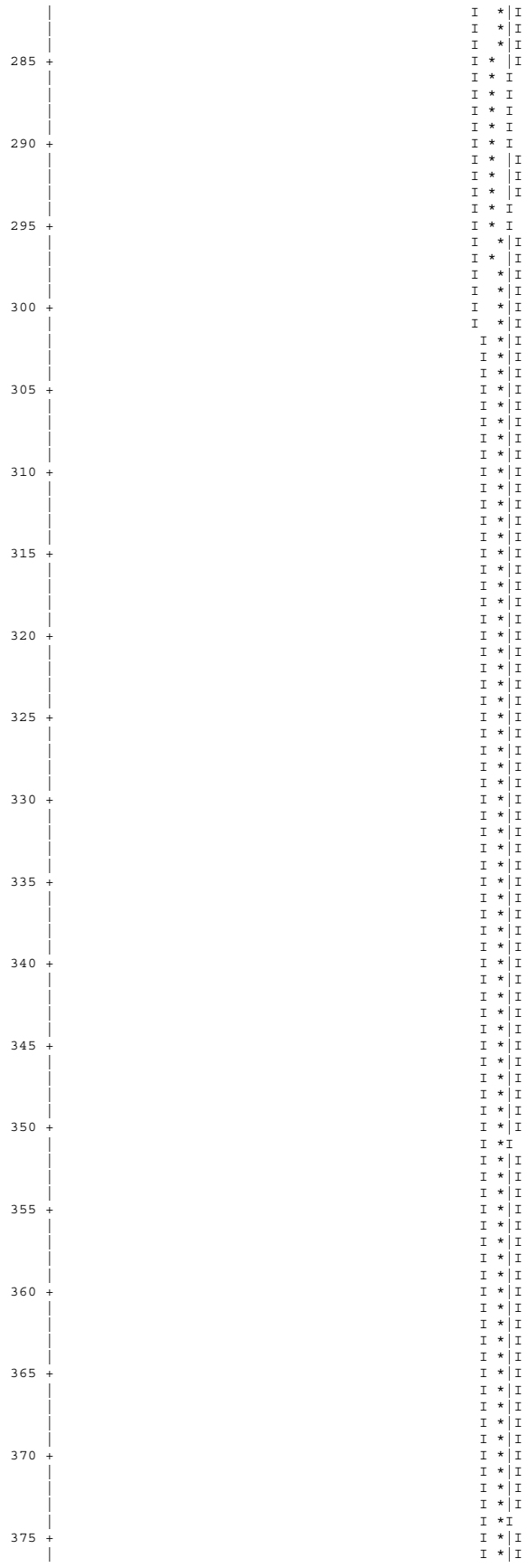

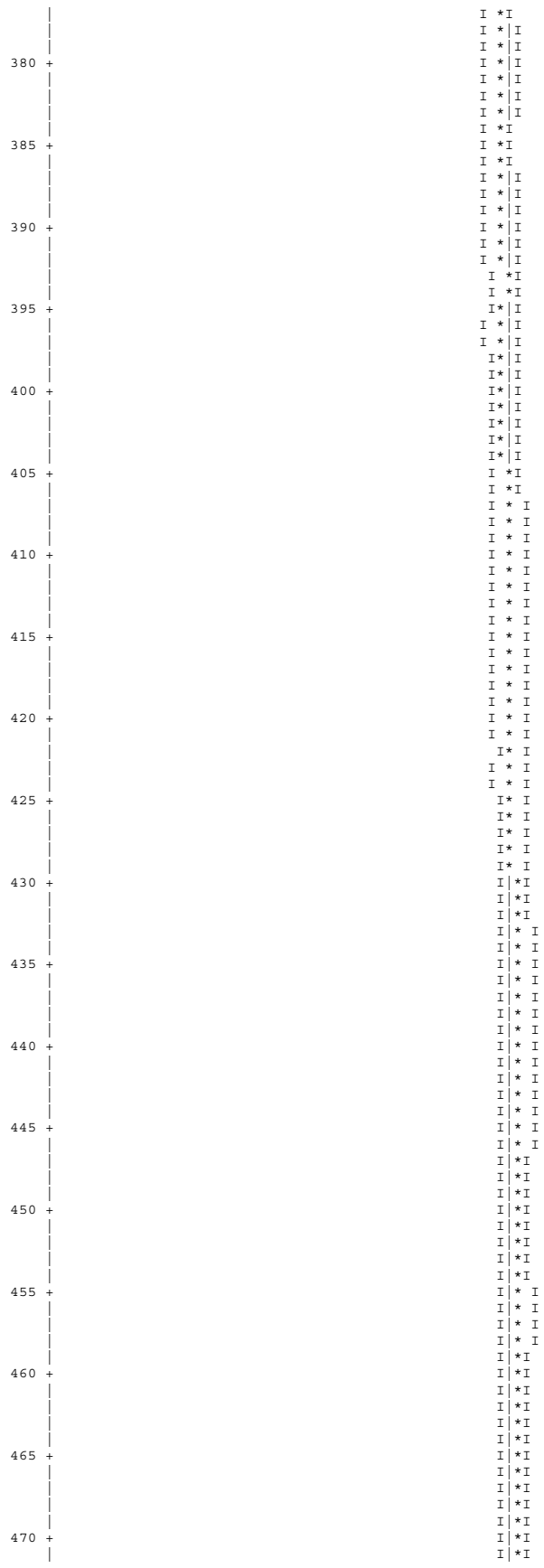

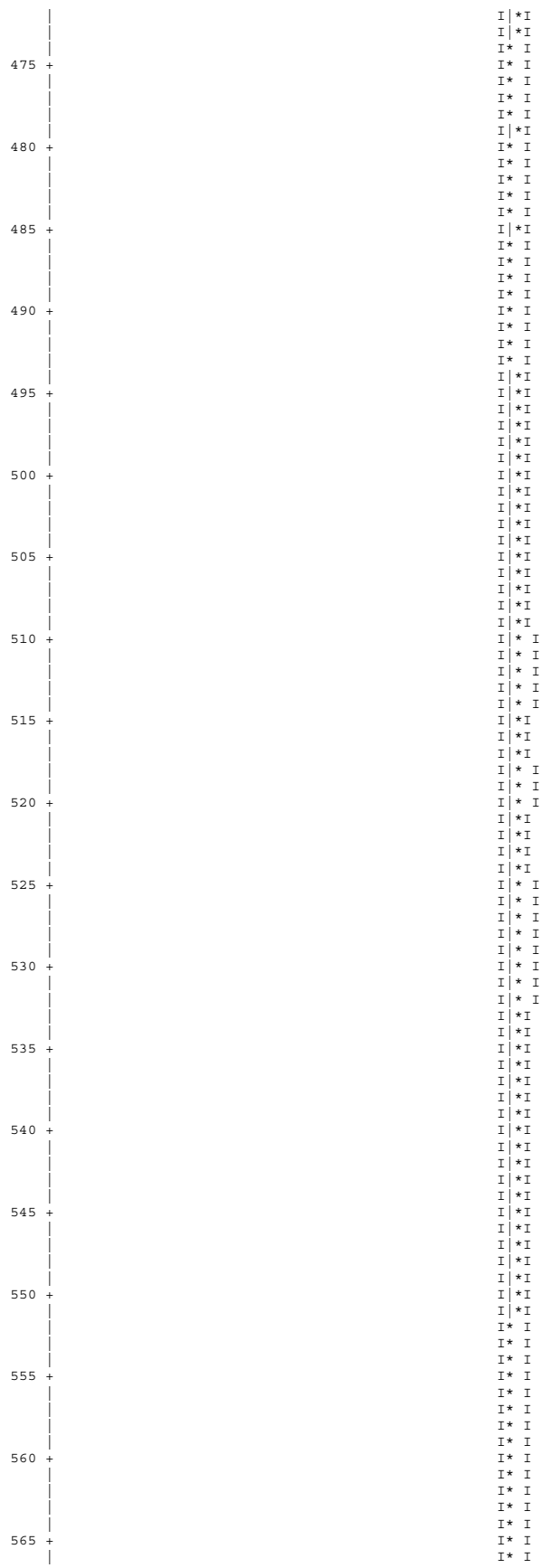

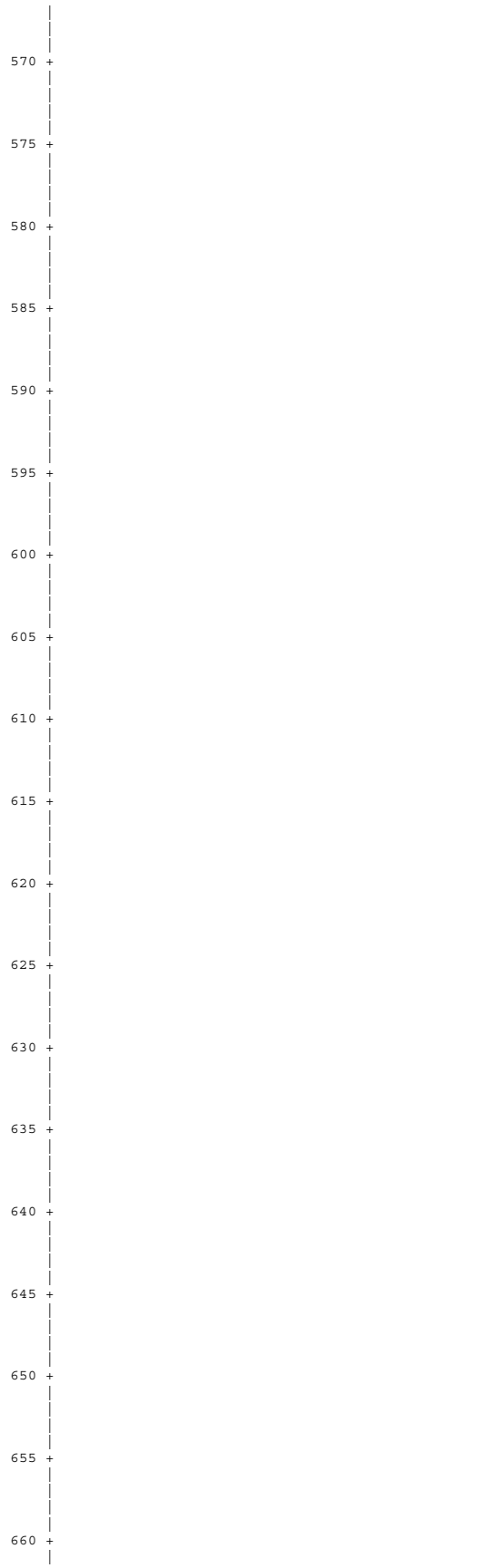

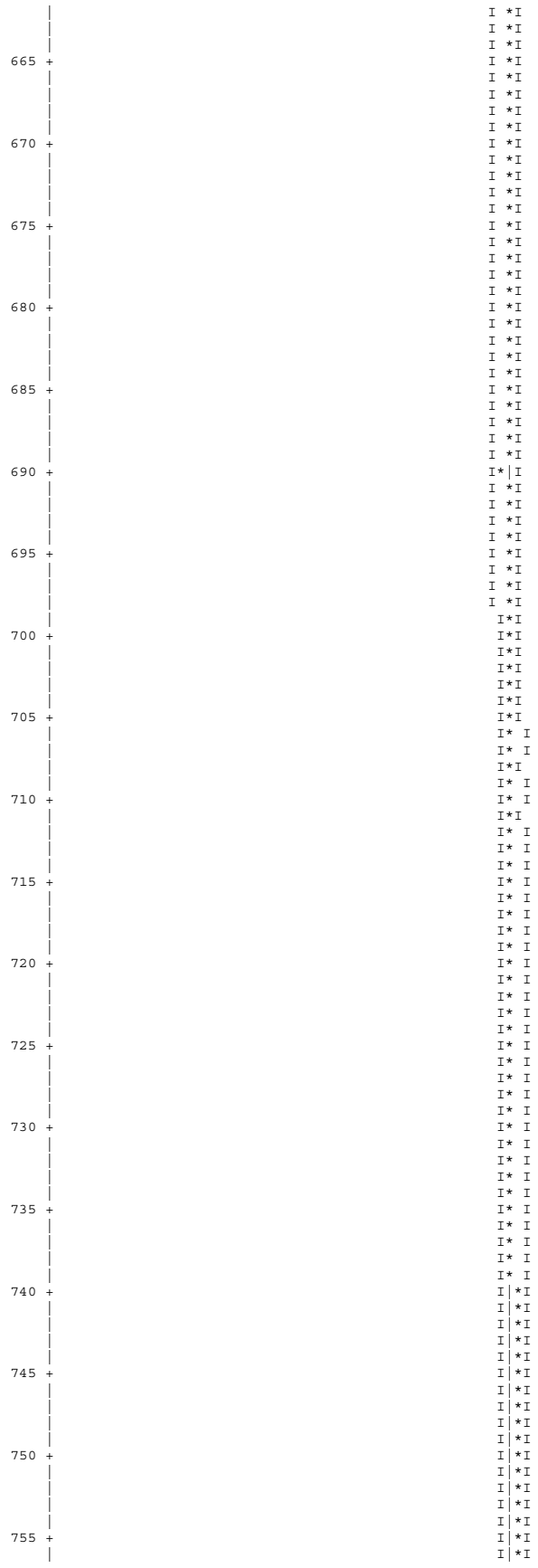

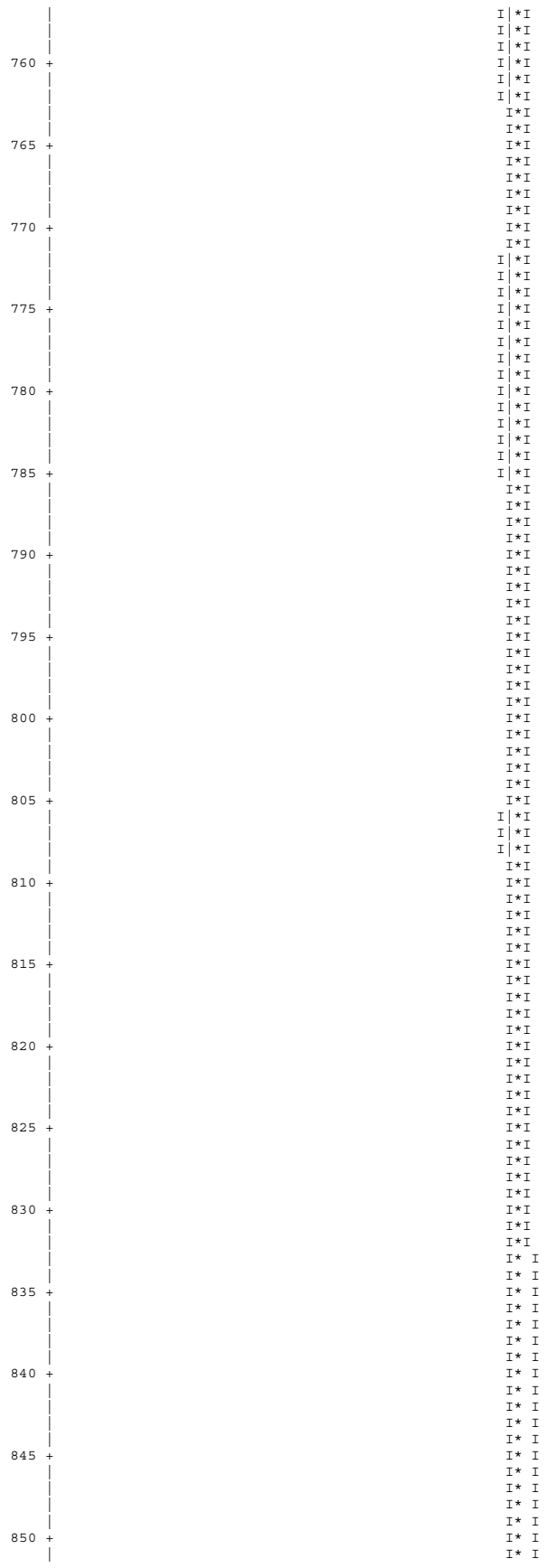

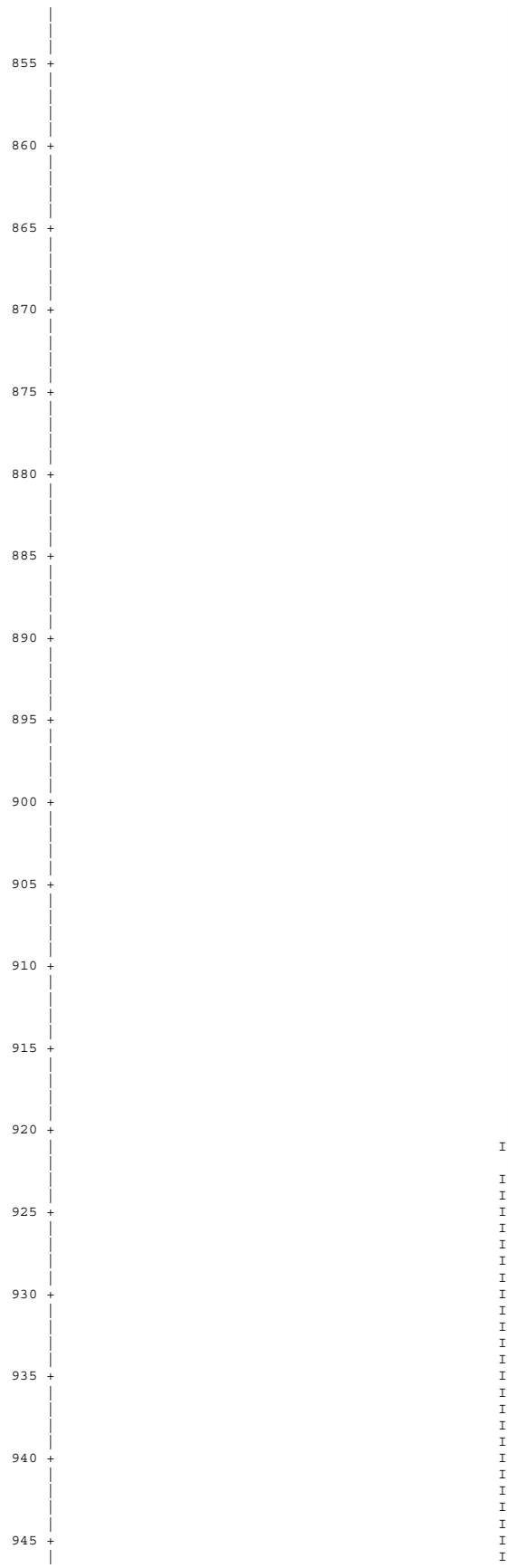

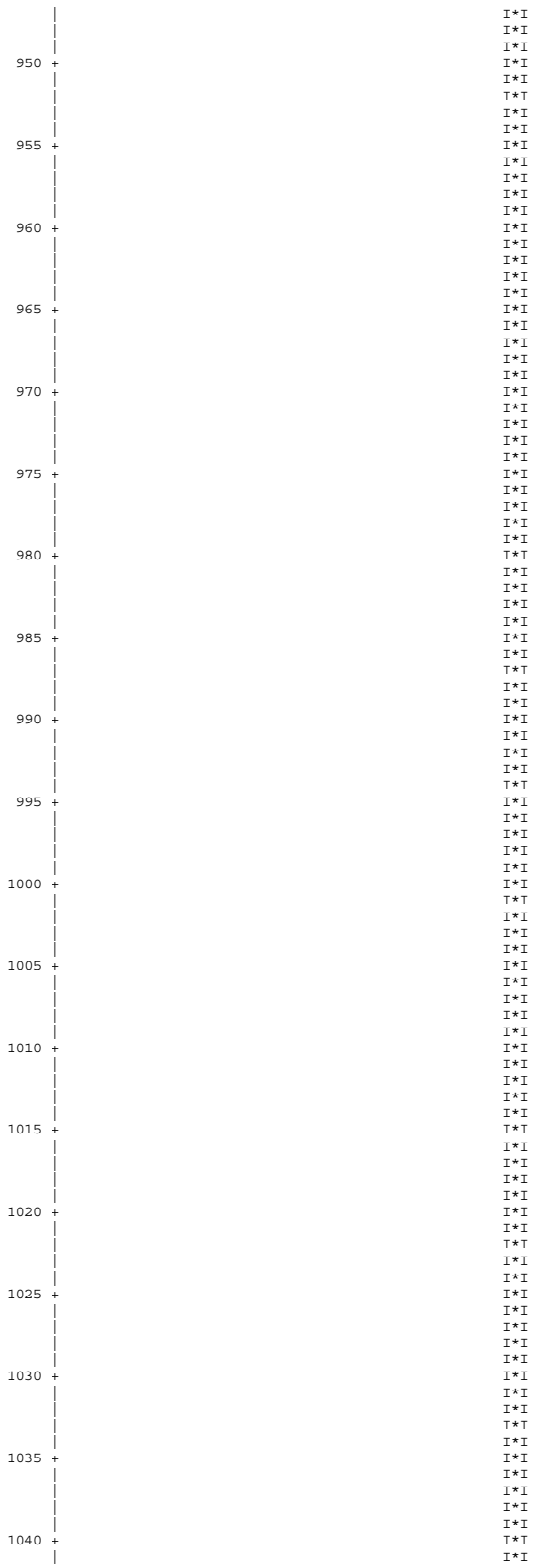
950
955
960
965
970
975
980
985
990
995
1000
1005
1010
1015
1020
1025
1030
1035
1040

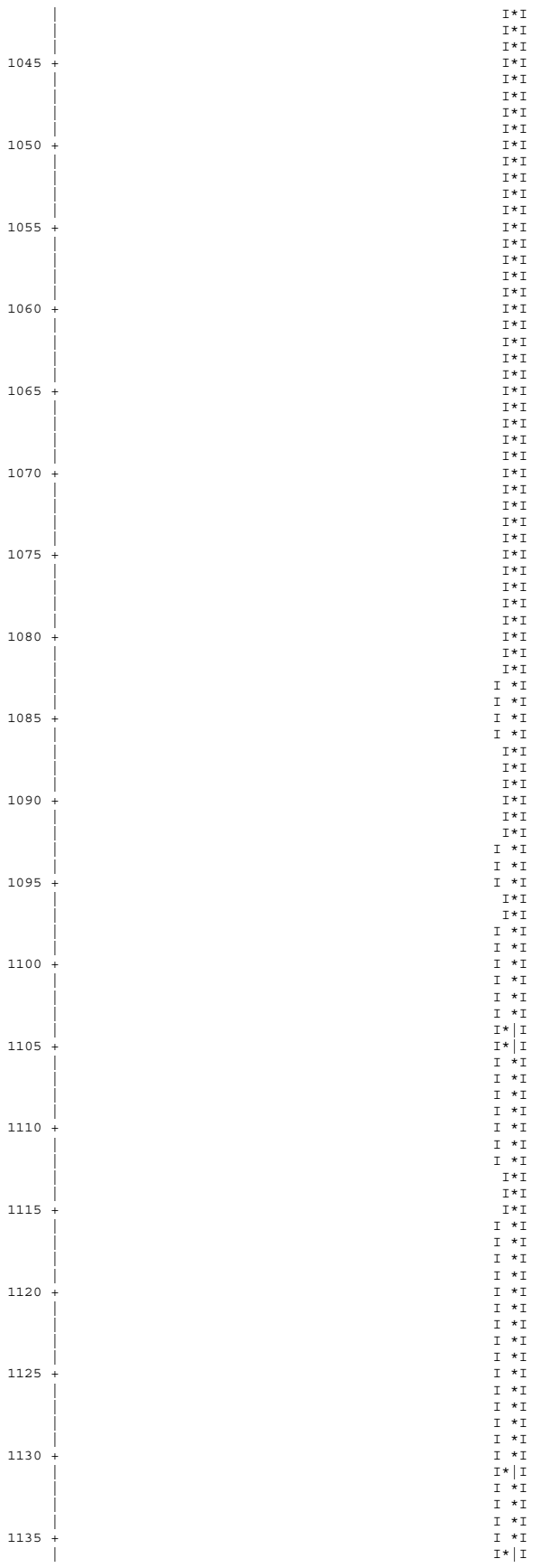

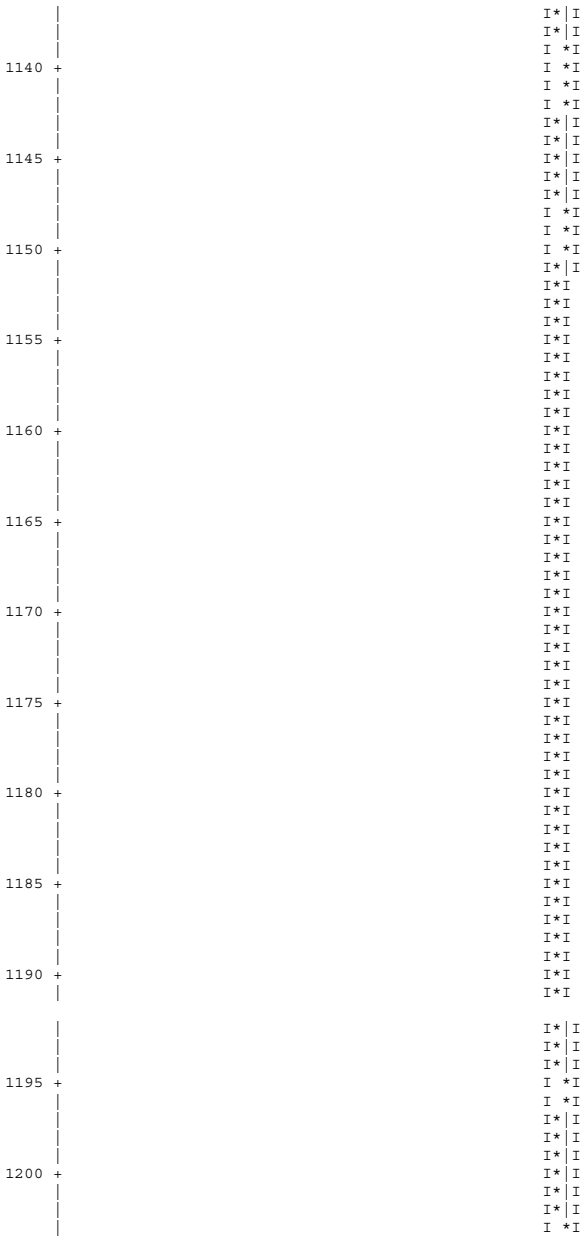

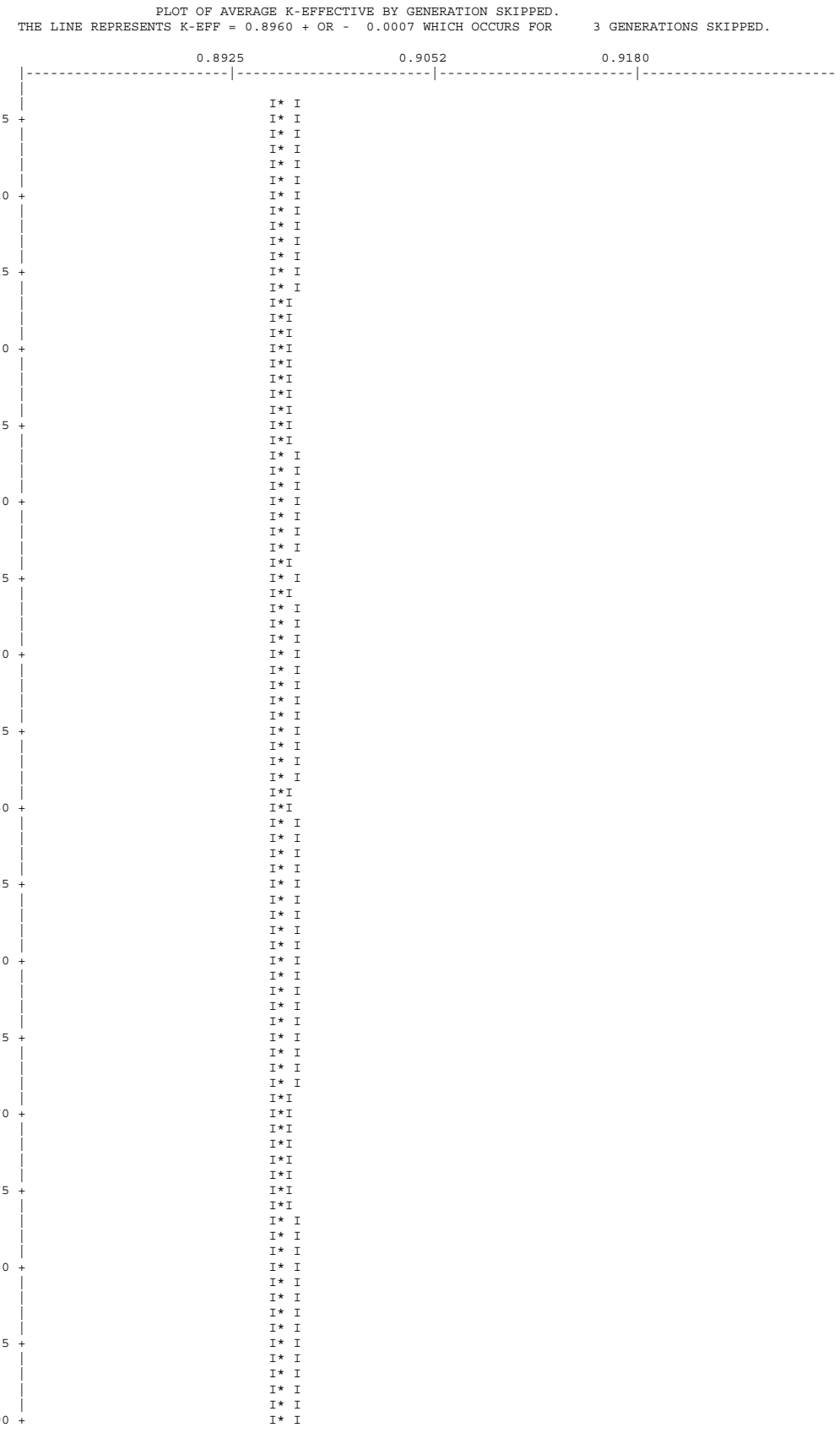
PLOT OF AVERAGE K-EFFECTIVE BY GENERATION SKIPPED.
THE LINE REPRESENTS K-EFF = 0.8960 + OR - 0.0007 WHICH OCCURS FOR 3 GENERATIONS SKIPPED.
0.8925
0.9052
0.9180
5
10
15
20
25
30
35
40
45
50
55
60
65
70
75
80
85
90

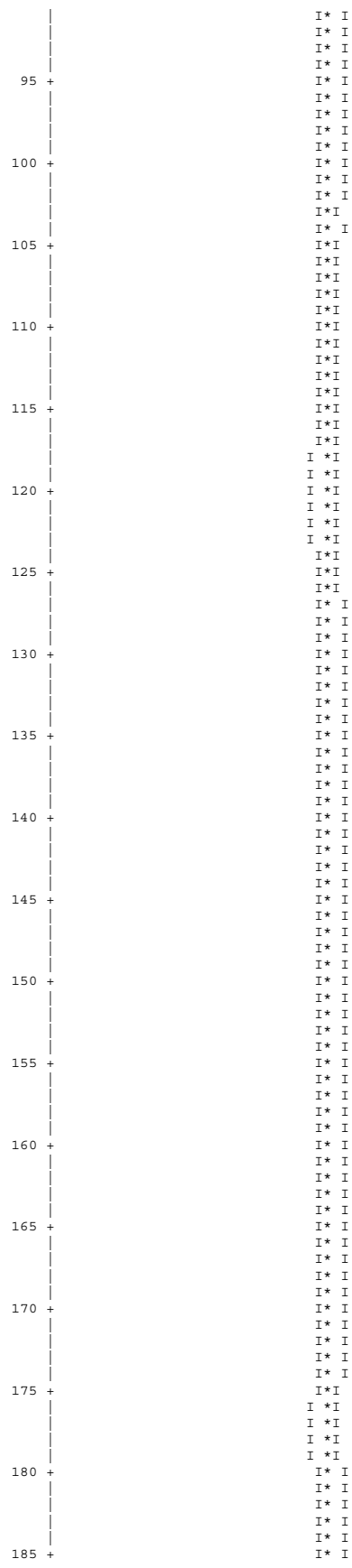

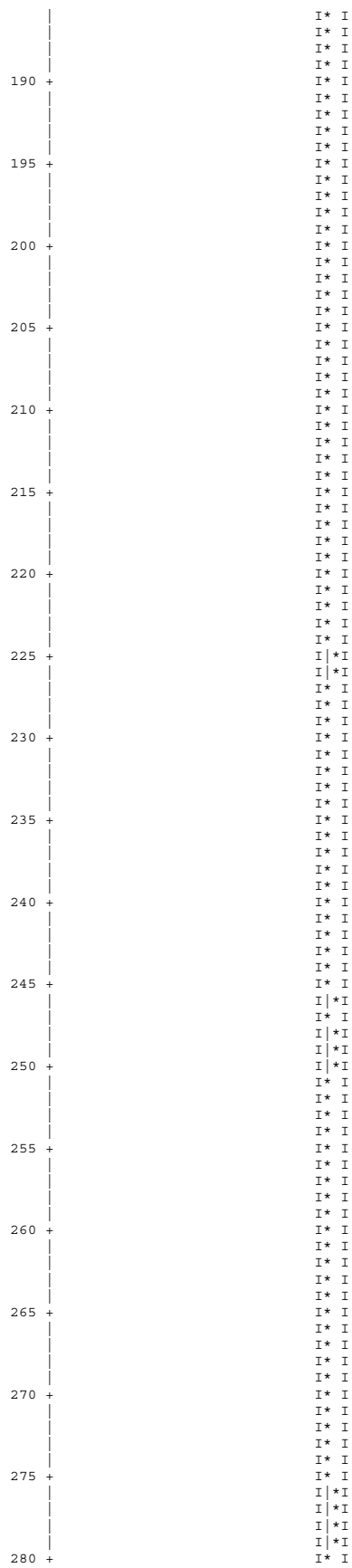

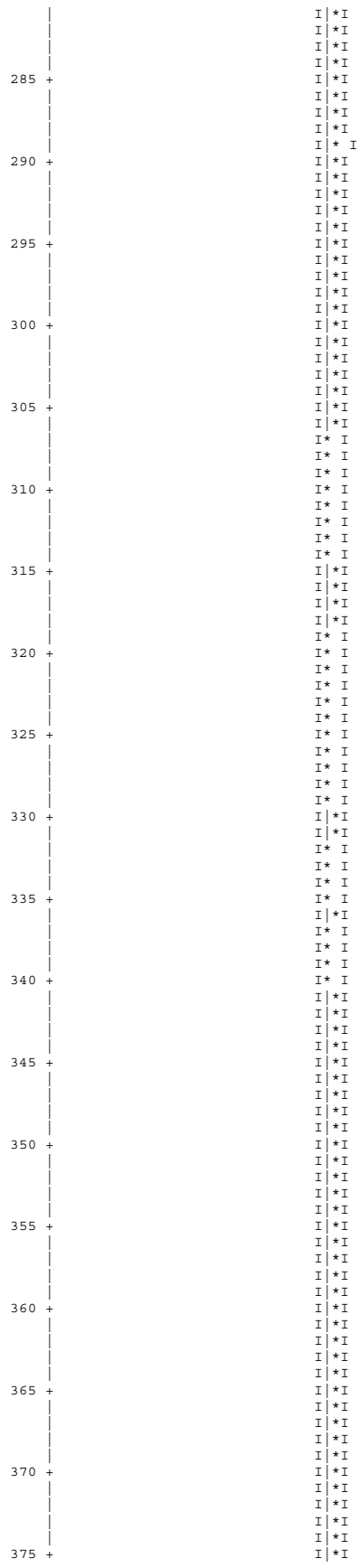

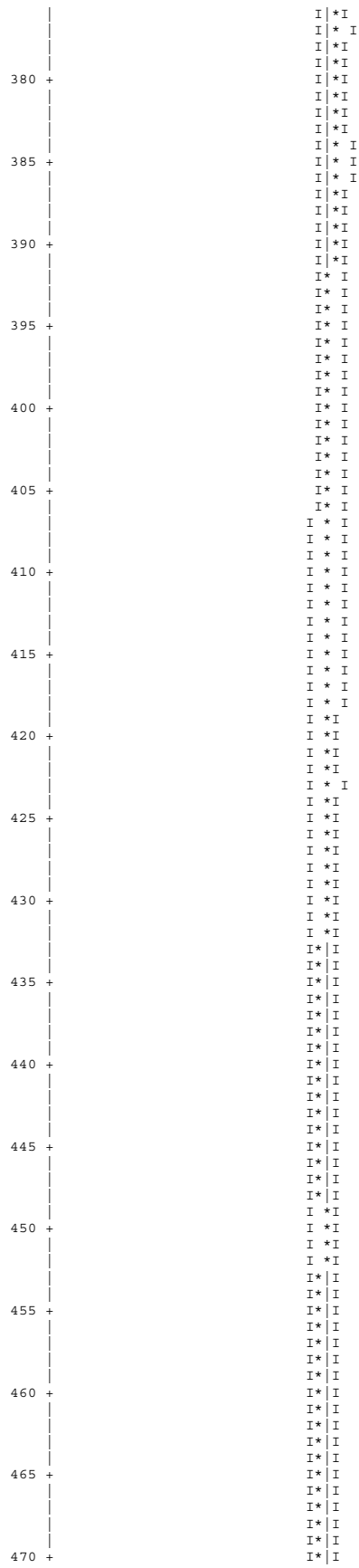

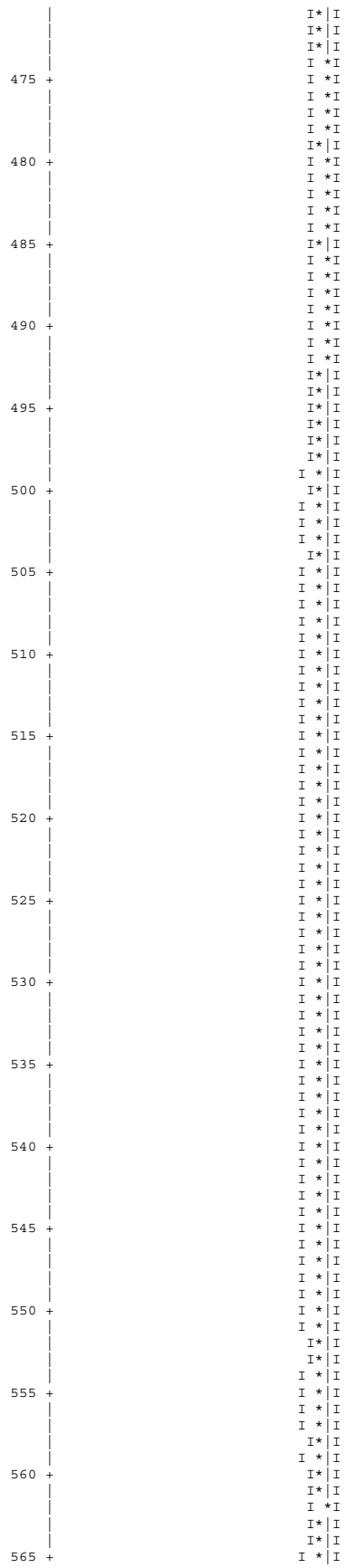

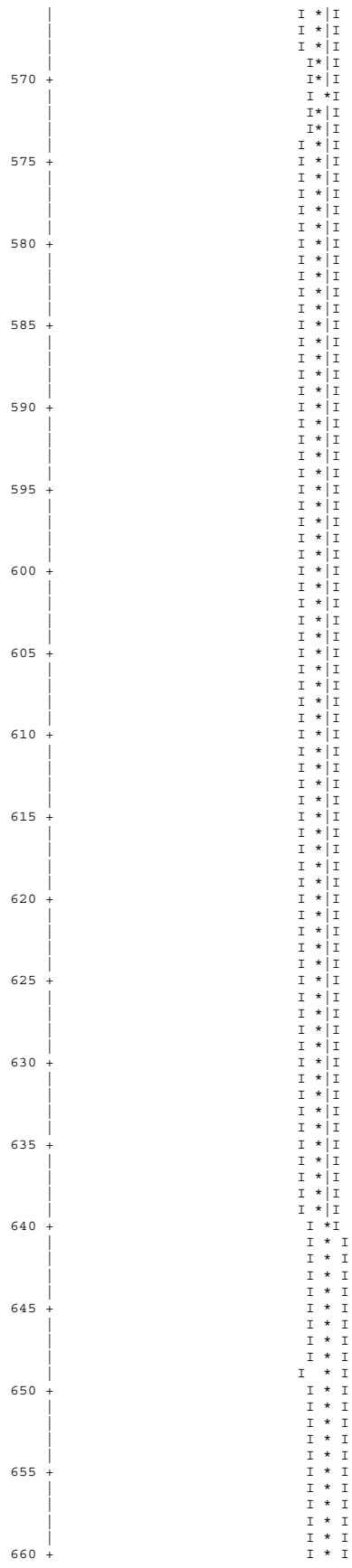

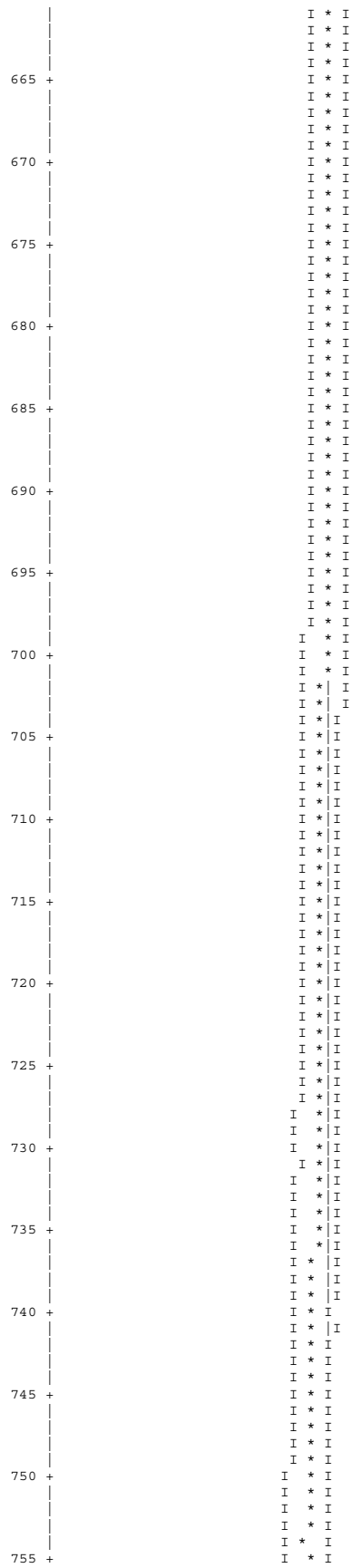

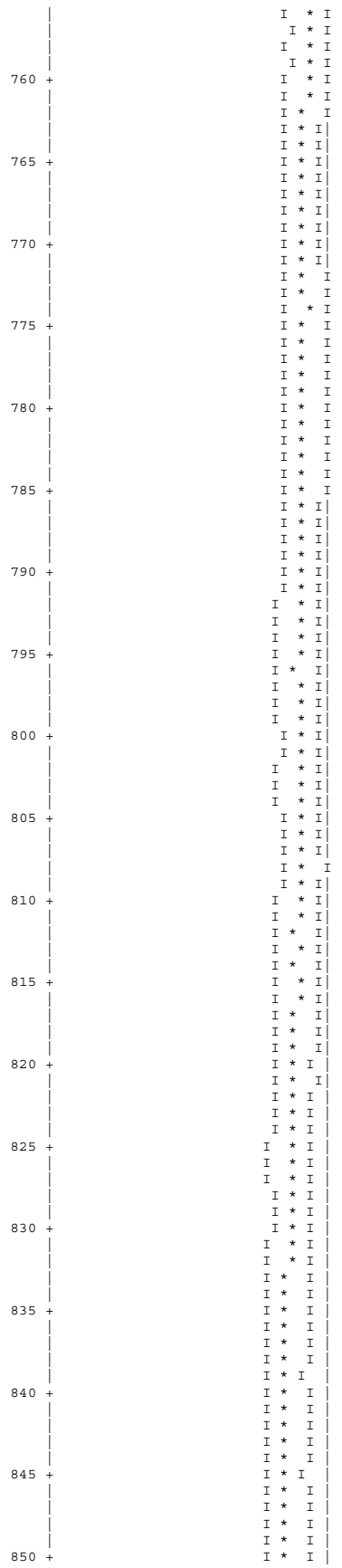

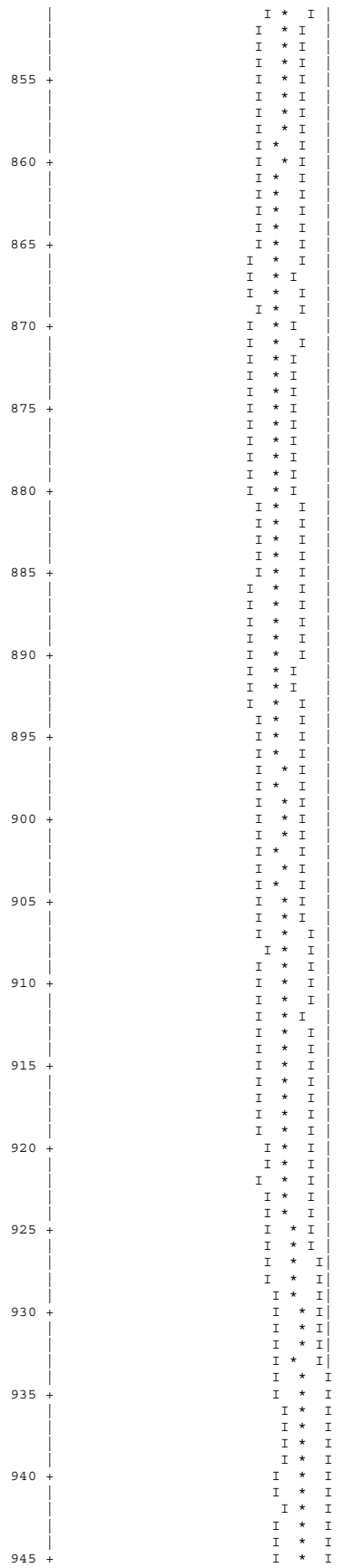

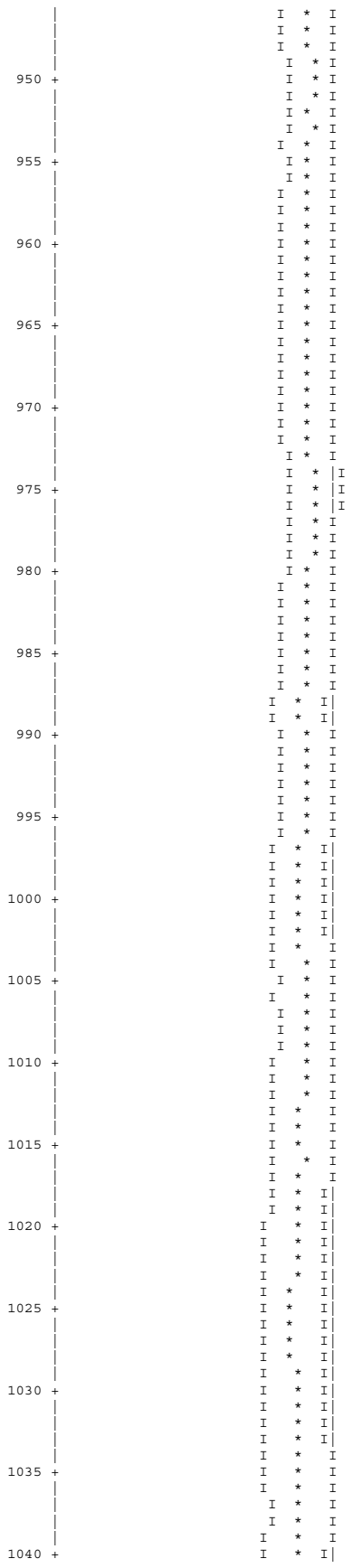

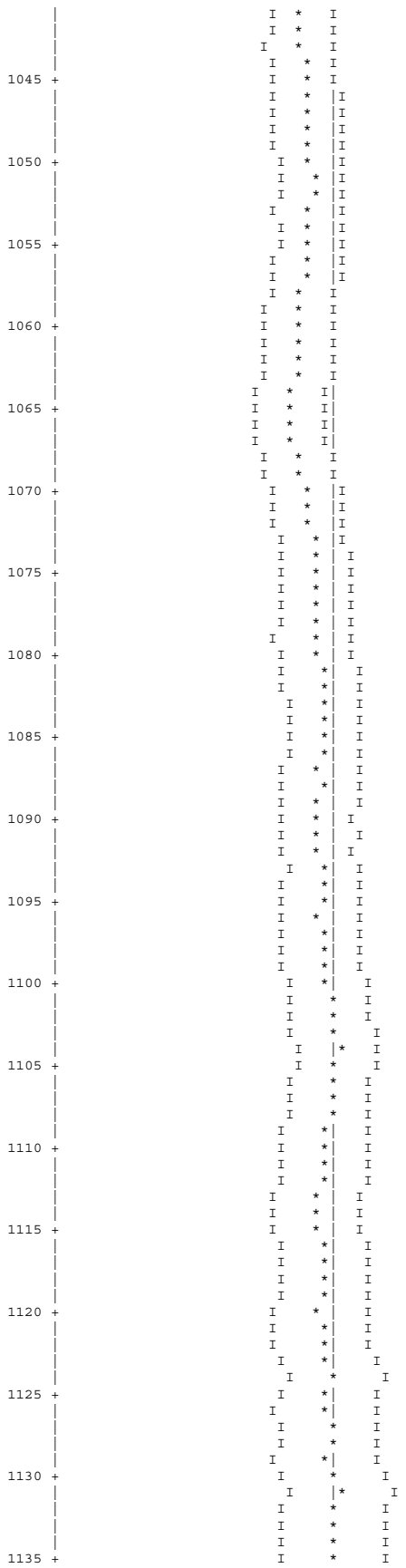

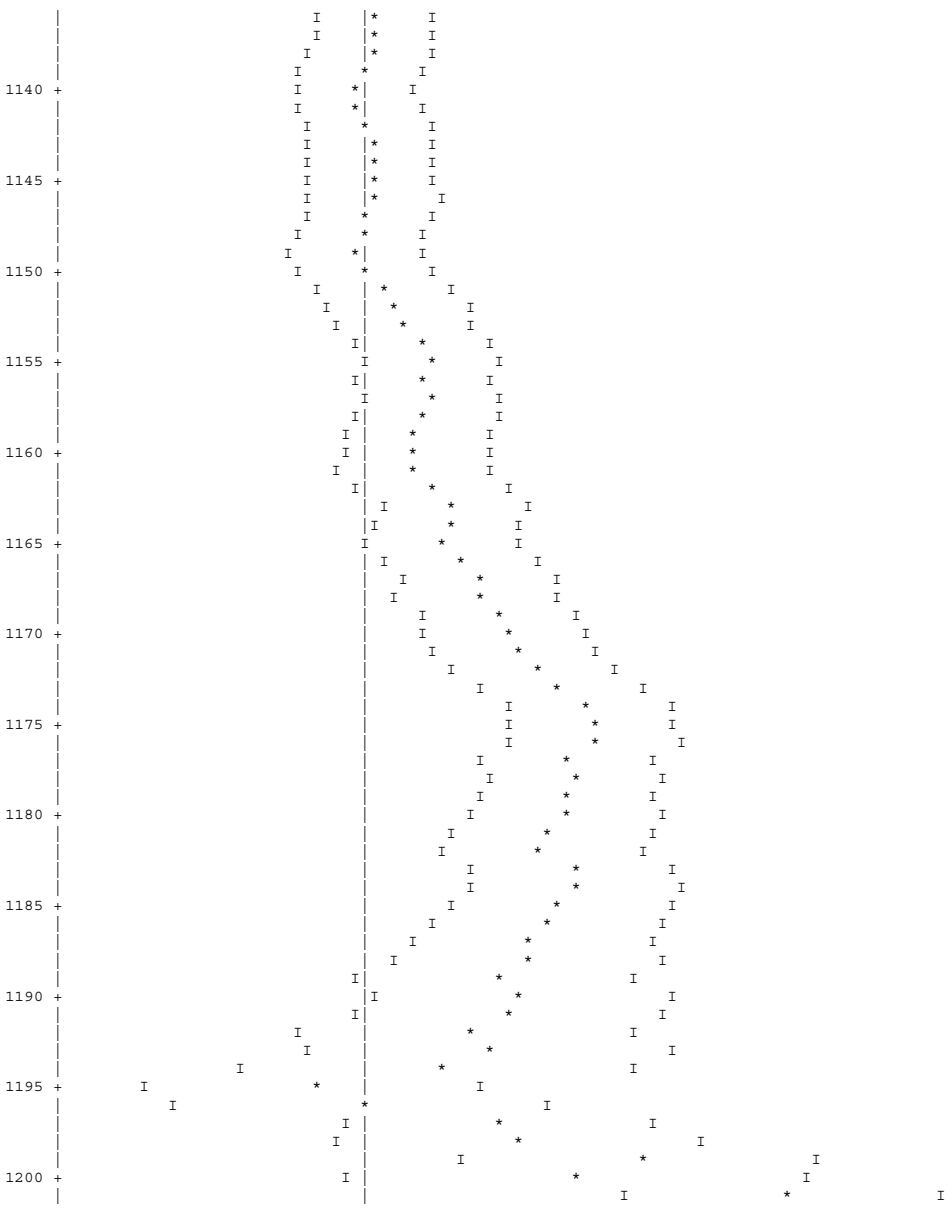
1140
1145
1150
1155
1160
1165
1170
1175
1180
1185
1190
1195
1200

SKIPPING 3 GENERATIONS

GROUP	FISSION FRACTION	UNIT	REGION	FISSIONS	PERCENT DEVIATION	ABSORPTIONS	PERCENT DEVIATION	LEAKAGE	PERCENT DEVIATION
1	0.0001			1.15906E-04	2.6399	1.24682E-03	0.8113	0.00000E+00	0.0000
2	0.0006			5.30927E-04	0.8489	2.58406E-03	0.2550	0.00000E+00	0.0000
3	0.0007			6.37244E-04	0.7231	5.16051E-04	0.4371	0.00000E+00	0.0000
4	0.0004			3.61739E-04	0.9316	2.75979E-04	0.5533	0.00000E+00	0.0000
5	0.0006			4.95953E-04	0.7663	5.19655E-04	0.4174	0.00000E+00	0.0000
6	0.0007			6.30678E-04	0.5838	1.17802E-03	0.3372	0.00000E+00	0.0000
7	0.0007			6.17082E-04	0.6394	1.33636E-03	0.3352	0.00000E+00	0.0000
8	0.0007			6.51906E-04	1.0317	1.32331E-03	0.4530	0.00000E+00	0.0000
9	0.0010			8.76805E-04	1.2629	1.70744E-03	0.5290	0.00000E+00	0.0000
10	0.0020			1.82750E-03	1.2042	3.48738E-03	0.5153	0.00000E+00	0.0000
11	0.0046			4.13279E-03	1.0065	5.82339E-03	0.5354	0.00000E+00	0.0000
12	0.0065			5.83378E-03	1.0512	6.36455E-03	0.6660	0.00000E+00	0.0000
13	0.0067			5.97500E-03	1.0600	8.36976E-03	0.6245	0.00000E+00	0.0000
14	0.0057			5.07462E-03	1.0934	1.06577E-02	0.5148	0.00000E+00	0.0000
15	0.0011			9.72058E-04	1.9130	5.36482E-03	0.5775	0.00000E+00	0.0000
16	0.0008			6.81455E-04	2.5720	3.37848E-03	0.6513	0.00000E+00	0.0000
17	0.0012			1.04935E-03	2.8709	2.08826E-03	0.9768	0.00000E+00	0.0000
18	0.0016			1.43756E-03	2.7740	2.11158E-03	1.0450	0.00000E+00	0.0000
19	0.0019			1.72396E-03	2.3100	3.60815E-03	0.7272	0.00000E+00	0.0000
20	0.0085			7.58284E-03	1.2034	1.42955E-02	0.4725	0.00000E+00	0.0000
21	0.0048			4.27904E-03	1.7006	5.99441E-03	0.7166	0.00000E+00	0.0000
22	0.0128			1.15042E-02	0.9810	1.47838E-02	0.4785	0.00000E+00	0.0000
23	0.0757			6.78354E-02	0.4004	8.37234E-02	0.1931	0.00000E+00	0.0000
24	0.2228			1.99619E-01	0.2243	2.20541E-01	0.1080	0.00000E+00	0.0000
25	0.2184			1.95709E-01	0.2293	2.06575E-01	0.1129	0.00000E+00	0.0000
26	0.3012			2.69875E-01	0.1764	2.75820E-01	0.0920	0.00000E+00	0.0000
27	0.1182			1.05926E-01	0.3261	1.05296E-01	0.1776	0.00000E+00	0.0000
SYSTEM TOTAL =				8.95957E-01	0.0776	9.88970E-01	0.0233	0.00000E+00	0.0000

THE WEIGHT LOST IN THE ALBEDO PORTION OF THE PROBLEM = 1.2370E-02 + OR - 0.0001

ELAPSED TIME 28.77900 MINUTES

RANDOM NUMBER= 415C58355882

```
                          FREQUENCY FOR GENERATIONS    4 TO 1203
0.8240 TO 0.8274     *
0.8274 TO 0.8309     **
0.8309 TO 0.8343     ***
0.8343 TO 0.8377     ****
0.8377 TO 0.8411     ***
0.8411 TO 0.8445     ******
0.8445 TO 0.8480     ***********
0.8480 TO 0.8514     *********
0.8514 TO 0.8548     **************
0.8548 TO 0.8582     *************************
0.8582 TO 0.8616     ***********************
0.8616 TO 0.8650     *************************
0.8650 TO 0.8685     ************************************
0.8685 TO 0.8719     ******************************
0.8719 TO 0.8753     ***********************************
0.8753 TO 0.8787     ************************************************
0.8787 TO 0.8821     ************************************************
0.8821 TO 0.8855     ************************************************************
0.8855 TO 0.8890     ************************************************************************
0.8890 TO 0.8924     ****************************************************************
0.8924 TO 0.8958     ****************************************************************
0.8958 TO 0.8992     ************************************************************************
0.8992 TO 0.9026     ****************************************************************
0.9026 TO 0.9060     ****************************************************************
0.9060 TO 0.9095     ************************************************************
0.9095 TO 0.9129     ************************************************************
0.9129 TO 0.9163     *********************************************
0.9163 TO 0.9197     *********************************************
0.9197 TO 0.9231     ************************************************
0.9231 TO 0.9265     ****************************************
0.9265 TO 0.9300     ****************************
0.9300 TO 0.9334     ***************
0.9334 TO 0.9368     ******************
0.9368 TO 0.9402     ************
0.9402 TO 0.9436     ********************
0.9436 TO 0.9470     *******
0.9470 TO 0.9505     ****
0.9505 TO 0.9539     ****
0.9539 TO 0.9573     **
0.9573 TO 0.9607     *
0.9607 TO 0.9641     **
0.9641 TO 0.9675
0.9675 TO 0.9710     *
0.9710 TO 0.9744
0.9744 TO 0.9778
0.9778 TO 0.9812
0.9812 TO 0.9846
0.9846 TO 0.9880
0.9880 TO 0.9915
0.9915 TO 0.9949     *
```

FREQUENCY FOR GENERATIONS 304 TO 1203

```
0.8240 TO 0.8274     *
0.8274 TO 0.8309     **
0.8309 TO 0.8343     **
0.8343 TO 0.8377     ***
0.8377 TO 0.8411     ***
0.8411 TO 0.8445     *****
0.8445 TO 0.8480     ********
0.8480 TO 0.8514     ********
0.8514 TO 0.8548     ***********
0.8548 TO 0.8582     ******************
0.8582 TO 0.8616     ****************
0.8616 TO 0.8650     ******************
0.8650 TO 0.8685     ***************************
0.8685 TO 0.8719     ***********************
0.8719 TO 0.8753     *************************
0.8753 TO 0.8787     ************************************
0.8787 TO 0.8821     *********************************
0.8821 TO 0.8855     ****************************************
0.8855 TO 0.8890     ********************************************************
0.8890 TO 0.8924     ****************************************************
0.8924 TO 0.8958     ************************************************
0.8958 TO 0.8992     ********************************************
0.8992 TO 0.9026     ************************************************
0.9026 TO 0.9060     ********************************************************
0.9060 TO 0.9095     ************************************************
0.9095 TO 0.9129     ****************************************
0.9129 TO 0.9163     *********************************
0.9163 TO 0.9197     *********************************
0.9197 TO 0.9231     *********************************
0.9231 TO 0.9265     ****************************
0.9265 TO 0.9300     ************************
0.9300 TO 0.9334     **********
0.9334 TO 0.9368     **************
0.9368 TO 0.9402     ********
0.9402 TO 0.9436     ***************
0.9436 TO 0.9470     ****
0.9470 TO 0.9505     **
0.9505 TO 0.9539     ***
0.9539 TO 0.9573     **
0.9573 TO 0.9607     *
0.9607 TO 0.9641     **
0.9641 TO 0.9675
0.9675 TO 0.9710     *
0.9710 TO 0.9744
0.9744 TO 0.9778
0.9778 TO 0.9812
0.9812 TO 0.9846
0.9846 TO 0.9880
0.9880 TO 0.9915
0.9915 TO 0.9949     *
```

FREQUENCY FOR GENERATIONS 604 TO 1203

```
0.8240 TO 0.8274     *
0.8274 TO 0.8309     **
0.8309 TO 0.8343     **
0.8343 TO 0.8377     **
0.8377 TO 0.8411     **
0.8411 TO 0.8445     ***
0.8445 TO 0.8480     ******
0.8480 TO 0.8514     *******
0.8514 TO 0.8548     ********
0.8548 TO 0.8582     ***********
0.8582 TO 0.8616     ***********
0.8616 TO 0.8650     *************
0.8650 TO 0.8685     ******************
0.8685 TO 0.8719     ******************
0.8719 TO 0.8753     ******************
0.8753 TO 0.8787     ****************************
0.8787 TO 0.8821     *******************
0.8821 TO 0.8855     *********************************
0.8855 TO 0.8890     ************************************
0.8890 TO 0.8924     ****************************************
0.8924 TO 0.8958     ***************************
0.8958 TO 0.8992     *********************************
0.8992 TO 0.9026     *********************************
0.9026 TO 0.9060     *********************************
0.9060 TO 0.9095     ************************************
0.9095 TO 0.9129     **********************
0.9129 TO 0.9163     ************************
0.9163 TO 0.9197     ********************
0.9197 TO 0.9231     ************************
0.9231 TO 0.9265     ******************
0.9265 TO 0.9300     *******************
0.9300 TO 0.9334     ******
0.9334 TO 0.9368     **********
0.9368 TO 0.9402     ***
0.9402 TO 0.9436     *************
0.9436 TO 0.9470     ***
0.9470 TO 0.9505
0.9505 TO 0.9539     **
0.9539 TO 0.9573     *
0.9573 TO 0.9607     *
0.9607 TO 0.9641     *
0.9641 TO 0.9675
0.9675 TO 0.9710
0.9710 TO 0.9744
0.9744 TO 0.9778
0.9778 TO 0.9812
0.9812 TO 0.9846
0.9846 TO 0.9880
0.9880 TO 0.9915
0.9915 TO 0.9949
```

```
                              FREQUENCY FOR GENERATIONS  904 TO 1203
0.8240 TO 0.8274     *
0.8274 TO 0.8309     *
0.8309 TO 0.8343
0.8343 TO 0.8377     *
0.8377 TO 0.8411     *
0.8411 TO 0.8445     **
0.8445 TO 0.8480     **
0.8480 TO 0.8514     *****
0.8514 TO 0.8548     ****
0.8548 TO 0.8582     *********
0.8582 TO 0.8616     *******
0.8616 TO 0.8650     *******
0.8650 TO 0.8685     **********
0.8685 TO 0.8719     ***********
0.8719 TO 0.8753     ***********
0.8753 TO 0.8787     **********
0.8787 TO 0.8821     *******
0.8821 TO 0.8855     ********************
0.8855 TO 0.8890     **************
0.8890 TO 0.8924     *********************
0.8924 TO 0.8958     *************
0.8958 TO 0.8992     ***********************
0.8992 TO 0.9026     **************
0.9026 TO 0.9060     ****************
0.9060 TO 0.9095     ******************
0.9095 TO 0.9129     ******
0.9129 TO 0.9163     ***********
0.9163 TO 0.9197     **************
0.9197 TO 0.9231     ***********
0.9231 TO 0.9265     ******
0.9265 TO 0.9300     ************
0.9300 TO 0.9334     **
0.9334 TO 0.9368     *****
0.9368 TO 0.9402
0.9402 TO 0.9436     ***
0.9436 TO 0.9470
0.9470 TO 0.9505
0.9505 TO 0.9539     *
0.9539 TO 0.9573
0.9573 TO 0.9607     *
0.9607 TO 0.9641
0.9641 TO 0.9675
0.9675 TO 0.9710
0.9710 TO 0.9744
0.9744 TO 0.9778
0.9778 TO 0.9812
0.9812 TO 0.9846
0.9846 TO 0.9880
0.9880 TO 0.9915
0.9915 TO 0.9949


*****************************************************************************************************************************************
*

          CONGRATULATIONS!  YOU HAVE  SUCCESSFULLY TRAVERSED THE PERILOUS PATH THROUGH KENO V IN  28.77900 MINUTES

*****************************************************************************************************************************************
*
```

Figure 6.6.8-2 Maximum Reactivity DIDO Configuration – Infinite Array

```
_____________________________________________________________________
.
NAC International
QSCALENT Banner Generation Utility v3.6 (20010221)
+-----------------+
I JOB INFORMATION I
+-----------------+
.
Working Directory:            D:\HJP\PLATEMIN_THCLAMIN_FUELLMIN_HTELEMIN_UM-MAX_UWMAX_OCFMAX\
Output File Name:             plateMin_thclaMin_fuellMin_hteleMin_um-Max_uwMax_OCFMax.out
Start Date:                   February 21, 2001
Start Time:                   17:18:06
.
+----------------------+
I SOFTWARE INFORMATION I
+----------------------+
.
Program Name:                 Scale 4.3 for Windows NT 4.0
Version:                      4.3.1
Installation Date:            June 10, 1998
Code Verification Package #:  EA913-1010-94, Rev. 0
Code Verification Date:       June 10, 1998
Program Location:             G:\scale43\win_nt\exe
.
+--------------------+
I SYSTEM INFORMATION I
+--------------------+
.
Computer Type:                Dell Precision 410
Operating System:             Windows NT Version 4.0
Computer ID:                  57NTY (MAC# 00C04F600F94)
Serial Number:                57NTY
Login ID:                     zjr
System Verification Date:     July 3, 2000
_____________________________________________________________________
.
```

```
       PRIMARY MODULE ACCESS AND INPUT RECORD ( SCALE DRIVER - 95/03/29 - 09:06:37 )
MODULE CSAS25   WILL BE CALLED
  LWT with Loose DIDO HEU Fuel, Accident Condition, Radial Shift Pattern - Centere
  'Fuel Tube Thick - Nominal  Fuel Tube OD - Nominal  Fuel Tube Height - Nominal
  'Fuel Base  Plate - Nominal  Fuel Plate Diameter - Nominal  Fuel Plate Thickness
  'Fuel Plate Clad Thickness - Min  Active Fuel Length - Min  Fuel Element Height
  'U235 Fuel Mass - Max  Uranium Weight Fraction - Max  Cylinder Pitch - Outer_Fix
  27GROUPNDF4  LATTICECELL
  'Material Description for LWT Analysis - DIDO HEU Fuel
  URANIUM  1  DEN=0.5477  1.0  293.0  92235 94.0   92238 06.0  END
  AL  1  DEN=1.7930  1.0  293.0      END
  AL  2  1.00  293.0        END
  H2O  3  DEN=0.9998  1.00  293.0      END
  ARBMGLC  0.9437  3  0  1  0
    6012  2  1001  6  8016  2
    4  0.5840          END
  H2O  4  0.4160  293.0        END
  PB  5  1.00  293.0        END
  SS304  6  1.00  293.0        END
  AL  7  1.00  293.0        END
  SS304  8  1.00  293.0        END
  H2O  9  DEN=0.0001  1.00  293.0      END
  END COMP
  SYMMSLABCELL  0.9800  0.0650  1  3  0.1300  2  END

  READ PARAM  TBA=5  TME=90  RUN=YES  PLT=NO
    GEN=1203  NPG=1000         END PARAM
  READ START  XSM=-16.85  XSP=16.85  YSM=16.85  YSP=-16.85
    ZSM=26.67  ZSP=473.35        END START
  READ GEOM
  UNIT  1
  COM='Fueled Annular Sections       Tube  1  Loose    '
  'Fuel Annulus    1
  CYLINDER  3  1  3.0300  58.7500  0.0000  ORIGIN  0.0000  0.0000
  CYLINDER  2  1  3.0625  58.7500  0.0000  ORIGIN  0.0000  0.0000
  CYLINDER  1  1  3.1275  58.7500  0.0000  ORIGIN  0.0000  0.0000
  CYLINDER  2  1  3.1600  58.7500  0.0000  ORIGIN  0.0000  0.0000
  'Fuel Annulus    2
  CYLINDER  3  1  3.5300  58.7500  0.0000  ORIGIN  0.0000  0.0000
  CYLINDER  2  1  3.5625  58.7500  0.0000  ORIGIN  0.0000  0.0000
  CYLINDER  1  1  3.6275  58.7500  0.0000  ORIGIN  0.0000  0.0000
  CYLINDER  2  1  3.6600  58.7500  0.0000  ORIGIN  0.0000  0.0000
  'Fuel Annulus    3
  CYLINDER  3  1  4.0300  58.7500  0.0000  ORIGIN  0.0000  0.0000
  CYLINDER  2  1  4.0625  58.7500  0.0000  ORIGIN  0.0000  0.0000
  CYLINDER  1  1  4.1275  58.7500  0.0000  ORIGIN  0.0000  0.0000
  CYLINDER  2  1  4.1600  58.7500  0.0000  ORIGIN  0.0000  0.0000
  'Fuel Annulus    4
  CYLINDER  3  1  4.5300  58.7500  0.0000
  CYLINDER  2  1  4.5625  58.7500  0.0000
  CYLINDER  1  1  4.6275  58.7500  0.0000
  CYLINDER  2  1  4.6599  58.7500  0.0000
  UNIT  2
  COM='Axial Clad Sections       Tube  1  Loose    '
  'Clad Axial End Piece    1
  CYLINDER  3  1  3.0300  1.3750  0.0000  ORIGIN  0.0000  0.0000
  CYLINDER  2  1  3.1600  1.3750  0.0000  ORIGIN  0.0000  0.0000
  'Clad Axial End Piece    2
  CYLINDER  3  1  3.5300  1.3750  0.0000  ORIGIN  0.0000  0.0000
  CYLINDER  2  1  3.6600  1.3750  0.0000  ORIGIN  0.0000  0.0000
  'Clad Axial End Piece    3
  CYLINDER  3  1  4.0300  1.3750  0.0000  ORIGIN  0.0000  0.0000
  CYLINDER  2  1  4.1600  1.3750  0.0000  ORIGIN  0.0000  0.0000
  'Clad Axial End Piece    4
  CYLINDER  3  1  4.5300  1.3750  0.0000
  CYLINDER  2  1  4.6599  1.3750  0.0000
  UNIT  3
  COM='Fuel Element     Tube  1'
  CYLINDER  3  1  4.6600  61.5000  0.0000
  HOLE  2  0.0000  0.0000  0.0000
  HOLE  1  0.0000  0.0000  1.3750
  HOLE  2  0.0000  0.0000  60.1250
  UNIT  4
  COM='Basket Fuel Tube - Fuel Down        Radial Centered'
  CYLINDER  3  1  5.0927  73.1773  0.0000
  HOLE  3  0.0000  0.0000  0.0000
  CYLINDER  2  1  5.3974  73.1773  0.0000
  UNIT  5
  COM='Basket Fuel Tube - Fuel Up        Radial Centered'
  CYLINDER  3  1  5.0927  73.1773  0.0000
  HOLE  3  0.0000  0.0000  11.6772
  CYLINDER  2  1  5.3974  73.1773  0.0000
  UNIT  6
  COM='Basket Bottom Plate Hole '
  CYLINDER  3  1  1.27  1.2698  0.0000
  UNIT  7
  COM='Basket Bottom Plate '
  CYLINDER  6  1  16.8466  1.2698  0.0000
  HOLE  6  0.0000  0.0000  0.0000
  HOLE  6  10.7950  0.0000  0.0000
  HOLE  6  5.3975  9.3487  0.0000
  HOLE  6  -5.3975  9.3487  0.0000
  HOLE  6  -10.7950  0.0000  0.0000
  HOLE  6  -5.3975  -9.3487  0.0000
  HOLE  6  5.3975  -9.3487  0.0000
```

```
UNIT  8
COM='Heat Transfer Bar / Rod '
CYLINDER  7  1  0.3165  73.1773  0.0000
UNIT  9
COM='Basket Fuel Down'
CYLINDER  3  1  16.1926  73.1773  0.0000
HOLE  4  0.0000  0.0000  0.0000
HOLE  4  10.7950  0.0000  0.0000
HOLE  8  4.9493  2.8575  0.0000
HOLE  8  4.6024  3.3881  0.0000
HOLE  8  5.2354  2.2917  0.0000
HOLE  4  5.3975  9.3487  0.0000
HOLE  8  0.0000  5.7150  0.0000
HOLE  8  -0.6330  5.6798  0.0000
HOLE  8  0.6330  5.6798  0.0000
HOLE  4  -5.3975  9.3487  0.0000
HOLE  8  -4.9493  2.8575  0.0000
HOLE  8  -5.2354  2.2917  0.0000
HOLE  8  -4.6024  3.3881  0.0000
HOLE  4  -10.7950  0.0000  0.0000
HOLE  8  -4.9493  -2.8575  0.0000
HOLE  8  -4.6024  -3.3881  0.0000
HOLE  8  -5.2354  -2.2917  0.0000
HOLE  4  -5.3975  -9.3487  0.0000
HOLE  8  0.0000  -5.7150  0.0000
HOLE  8  0.6330  -5.6798  0.0000
HOLE  8  -0.6330  -5.6798  0.0000
HOLE  4  5.3975  -9.3487  0.0000
HOLE  8  4.9493  -2.8575  0.0000
HOLE  8  5.2354  -2.2917  0.0000
HOLE  8  4.6024  -3.3881  0.0000
CYLINDER  7  1  16.6688  73.1773  0.0000
CYLINDER  3  1  16.8466  73.1773  0.0000
UNIT  10
COM='Basket Fuel Up'
CYLINDER  3  1  16.1926  73.1773  0.0000
HOLE  5  0.0000  0.0000  0.0000
HOLE  5  10.7950  0.0000  0.0000
HOLE  8  4.9493  2.8575  0.0000
HOLE  8  4.6024  3.3881  0.0000
HOLE  8  5.2354  2.2917  0.0000
HOLE  5  5.3975  9.3487  0.0000
HOLE  8  0.0000  5.7150  0.0000
HOLE  8  -0.6330  5.6798  0.0000
HOLE  8  0.6330  5.6798  0.0000
HOLE  5  -5.3975  9.3487  0.0000
HOLE  8  -4.9493  2.8575  0.0000
HOLE  8  -5.2354  2.2917  0.0000
HOLE  8  -4.6024  3.3881  0.0000
HOLE  5  -10.7950  0.0000  0.0000
HOLE  8  -4.9493  -2.8575  0.0000
HOLE  8  -4.6024  -3.3881  0.0000
HOLE  8  -5.2354  -2.2917  0.0000
HOLE  5  -5.3975  -9.3487  0.0000
HOLE  8  0.0000  -5.7150  0.0000
HOLE  8  0.6330  -5.6798  0.0000
HOLE  8  -0.6330  -5.6798  0.0000
HOLE  5  5.3975  -9.3487  0.0000
HOLE  8  4.9493  -2.8575  0.0000
HOLE  8  5.2354  -2.2917  0.0000
HOLE  8  4.6024  -3.3881  0.0000
CYLINDER  7  1  16.6688  73.1773  0.0000
CYLINDER  3  1  16.8466  73.1773  0.0000
UNIT  11
COM='Cask Cavity '
CYLINDER  3  1  16.9863  446.6844  0.0000
HOLE  7  0.0000  0.0000  0.0001
HOLE  10  0.0000  0.0000  1.2700
HOLE  7  0.0000  0.0000  74.4475
HOLE  9  0.0000  0.0000  75.7174
HOLE  7  0.0000  0.0000  148.8949
HOLE  10  0.0000  0.0000  150.1648
HOLE  7  0.0000  0.0000  223.3423
HOLE  9  0.0000  0.0000  224.6122
HOLE  7  0.0000  0.0000  297.7897
HOLE  10  0.0000  0.0000  299.0596
HOLE  7  0.0000  0.0000  372.2371
HOLE  9  0.0000  0.0000  373.5070
UNIT  12
COM='Cask Shield Radial Configuration '
CYLINDER  3  1  16.9863  446.6844  0.0000
HOLE  11  0.0000  0.0000  0.0000
CYLINDER  8  1  18.9103  446.6844  0.0000
CYLINDER  5  1  33.4645  446.6844  0.0000
CYLINDER  8  1  36.5189  446.6844  0.0000
CYLINDER  9  1  49.2189  446.6844  0.0000
CYLINDER  8  1  49.8183  446.6844  0.0000
CUBOID  9  1  4P49.8183  446.6844  0.0000
UNIT  13
COM='LWT Lid '
CYLINDER  8  1  36.5189  28.5750  0.5994
CYLINDER  9  1  49.8183  28.5750  0.5994
CYLINDER  8  1  49.8183  28.5750  0.0000
CUBOID  9  1  4P49.8183  28.5750  0.0000
UNIT  14
```

```
   COM='LWT Bottom Weldment '
   CYLINDER  5  1  26.3525  16.5100  8.8900
   CYLINDER  8  1  36.5189  26.0706  0.0000
   CYLINDER  9  1  49.8183  26.0706  0.0000
   CYLINDER  8  1  49.8183  26.6700  0.0000
   CUBOID  9  1  4P49.8183  26.6700  0.0000
   GLOBAL UNIT  15
   COM='LWT Cask '
   ARRAY  1  -49.8183  -49.8183  0.0000
   END GEOM
   READ ARRAY
   ARA=1  NUX=1  NUY=1  NUZ=3  FILL  14 12 13  END FILL
   END ARRAY
   READ BOUNDS    ALL=MIRROR    END BOUNDS
   READ PLOT
   TTL='X-Y PLOT OF CENTER ELEMENT - FUEL ELEVATION  '
   SCR=YES  PIC=MAT  LPI=10
   UAX=1.0  VDN=-1.0  NAX=1500
   XUL=-5.4  YUL=5.4  ZUL=57.4
   XLR=5.4  YLR=-5.4  ZLR=57.4  END
   TTL='X-Y PLOT OF BASKET - FUEL ELEVATION '
   SCR=YES  PIC=MAT  LPI=10
   UAX=1.0  VDN=-1.0  NAX=1500
   XUL=-17.0  YUL=17.0  ZUL=57.4
   XLR=17.0  YLR=-17.0  ZLR=57.4  END
   TTL='X-Y PLOT OF CASK - FUEL ELEVATION'
   SCR=YES  PIC=MAT  LPI=10
   UAX=1.0  VDN=-1.0  NAX=1500
   XUL=-49.8  YUL=49.8  ZUL=57.4
   XLR=49.8  YLR=-49.8  ZLR=57.4  END
   TTL='X-Z PLOT OF BOTTOM BASKET - CENTER FUEL ELEMENT CROSS SECTION '
   SCR=YES  PIC=MAT  LPI=10
   UAX=1.0  WDN=-1.0  NAX=1500
   XUL=-5.4  YUL=0.0  ZUL=77.4
   XLR=5.4  YLR=0.0  ZLR=57.4  END
   TTL='X-Z PLOT OF BOTTOM BASKET - CENTER FUEL ELEMENT ROW '
   SCR=YES  PIC=MAT  LPI=10
   UAX=1.0  WDN=-1.0  NAX=1500
   XUL=-17.0  YUL=0.0  ZUL=101.1
   XLR=17.0  YLR=0.0  ZLR=26.7  END
   TTL='Y-Z (X=0) PLOT OF BOTTOM BASKET '
   SCR=YES  PIC=MAT  LPI=10
   VAX=1.0  WDN=-1.0  NAX=1500
   XUL=0.0  YUL=-17.0  ZUL=101.1
   XLR=0.0  YLR=17.0  ZLR=26.7  END
   TTL='X-Z PLOT OF BOTTOM BASKET - TOP FUEL ELEMENT ROW '
   SCR=YES  PIC=MAT  LPI=10
   UAX=1.0  WDN=-1.0  NAX=1500
   XUL=-17.0  YUL=9.3  ZUL=101.1
   XLR=17.0  YLR=9.3  ZLR=26.7  END
   TTL='X-Z  PLOT OF CASK CAVITY '
   SCR=YES  PIC=MAT  LPI=5
   UAX=1.0  WDN=-1.0  NAX=1500
   XUL=-17.0  YUL=0.0  ZUL=474.4
   XLR=17.0  YLR=0.0  ZLR=25.7  END
   TTL='X-Z  PLOT OF CASK '
   SCR=YES  PIC=MAT  LPI=5
   UAX=1.0  WDN=-1.0  NAX=1500
   XUL=-49.8  YUL=0.0  ZUL=502.9
   XLR=49.8  YLR=0.0  ZLR=0.0  END
   END PLOT
   END DATA

SECONDARY MODULE O0O008   HAS BEEN CALLED.

MODULE O0O008   IS FINISHED. COMPLETION CODE     0. CPU TIME USED     0.88 (SECONDS).

SECONDARY MODULE O0O002   HAS BEEN CALLED.

MODULE O0O002   IS FINISHED. COMPLETION CODE     0. CPU TIME USED     4.28 (SECONDS).

SECONDARY MODULE O0O009   HAS BEEN CALLED.

MODULE O0O009   IS FINISHED. COMPLETION CODE     0. CPU TIME USED  1748.06 (SECONDS).

MODULE CSAS25   IS FINISHED. COMPLETION CODE     0. CPU TIME USED  1755.97 (SECONDS).
```

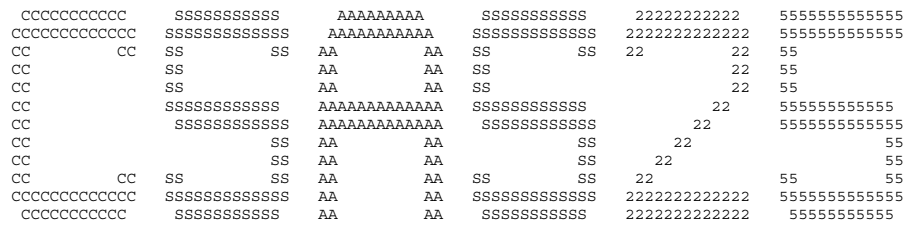

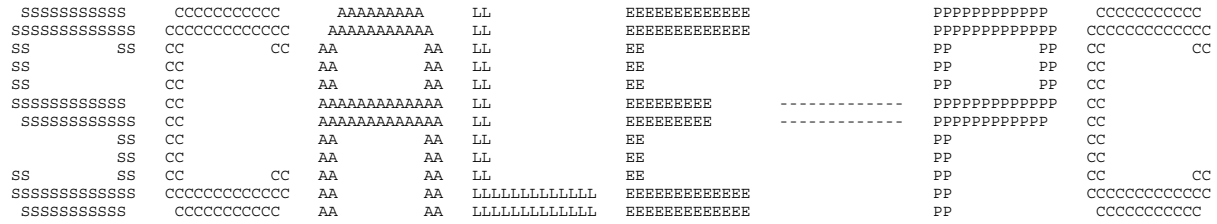

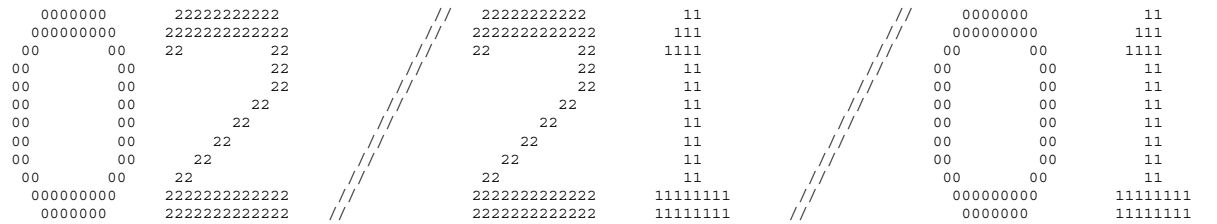

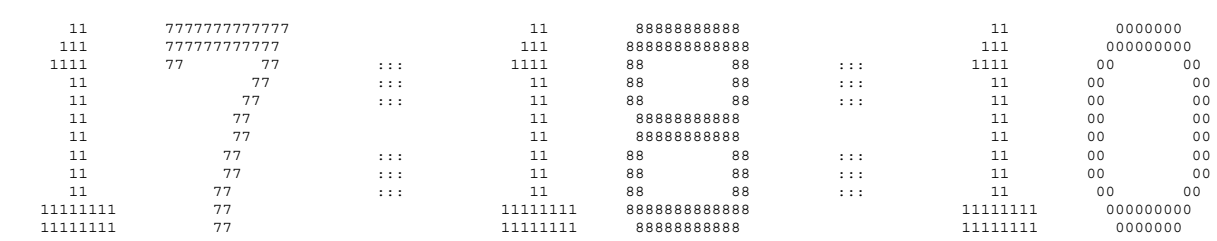

```
  SSSSSSSSSS     CCCCCCCCCC      AAAAAAAA     LL             EEEEEEEEEEEE                 PPPPPPPPPPP     CCCCCCCCCC
 SSSSSSSSSSSS   CCCCCCCCCCCC    AAAAAAAAAA    LL             EEEEEEEEEEEE                 PPPPPPPPPPPP   CCCCCCCCCCCC
 SS          SS CC          CC  AA          AA  LL             EE                           PP          PP  CC          CC
 SS             CC              AA          AA  LL             EE                           PP          PP  CC
 SS             CC              AA          AA  LL             EE                           PP          PP  CC
 SSSSSSSSSSSS   CC              AAAAAAAAAAAAAA  LL             EEEEEEEEE       -------------PPPPPPPPPPPP  CC
  SSSSSSSSSSSS  CC              AAAAAAAAAAAAAA  LL             EEEEEEEEE       -------------PPPPPPPPPPP   CC
           SS   CC              AA          AA  LL             EE                           PP              CC
           SS   CC              AA          AA  LL             EE                           PP              CC
 SS        SS   CC          CC  AA          AA  LL             EE                           PP              CC          CC
 SSSSSSSSSSSS   CCCCCCCCCCCC    AA          AA  LLLLLLLLLLLL   EEEEEEEEEEEE                 PP              CCCCCCCCCCCC
  SSSSSSSSSS     CCCCCCCCCC     AA          AA  LLLLLLLLLLLL   EEEEEEEEEEEE                 PP               CCCCCCCCCC
```

```
*******************************************************************************
*******************************************************************************
*******************************************************************************
*****                                                                     *****
*****                  PROGRAM VERIFICATION INFORMATION                   *****
*****                                                                     *****
*****                CODE SYSTEM:  SCALE-PC VERSION:  4.3                 *****
*****                                                                     *****
*******************************************************************************
*******************************************************************************
*****                                                                     *****
*****                                                                     *****
*****              PROGRAM:  CSAS                                         *****
*****                                                                     *****
*****        CREATION DATE:  03/08/96                                     *****
*****                                                                     *****
*****              VOLUME:   ENG                                          *****
*****                                                                     *****
*****              LIBRARY:  G:\SCALE43\WIN_NT\EXE                        *****
*****                                                                     *****
*****                                                                     *****
*****    THIS IS NOT A SCALE-PC CONFIGURATION CONTROLLED CODE             *****
*****                                                                     *****
*****              JOBNAME:  SCALE-PC                                     *****
*****                                                                     *****
*****    DATE OF EXECUTION:  02/21/01                                     *****
*****                                                                     *****
*****    TIME OF EXECUTION:  17:18:10                                     *****
*****                                                                     *****
*****                                                                     *****
*******************************************************************************
*******************************************************************************
*******************************************************************************
```

```
'Fuel Tube Thick - Nominal  Fuel Tube OD - Nominal  Fuel Tube Height - Nominal

'Fuel Base  Plate - Nominal  Fuel Plate Diameter - Nominal  Fuel Plate Thickness

'Fuel Plate Clad Thickness - Min  Active Fuel Length - Min  Fuel Element Height

'U235 Fuel Mass - Max  Uranium Weight Fraction - Max  Cylinder Pitch - Outer_Fix

'Material Description for LWT Analysis - DIDO HEU Fuel

'Fuel Tube Thick - Nominal  Fuel Tube OD - Nominal  Fuel Tube Height - Nominal

'Fuel Base  Plate - Nominal  Fuel Plate Diameter - Nominal  Fuel Plate Thickness

'Fuel Plate Clad Thickness - Min  Active Fuel Length - Min  Fuel Element Height

'U235 Fuel Mass - Max  Uranium Weight Fraction - Max  Cylinder Pitch - Outer_Fix

'Material Description for LWT Analysis - DIDO HEU Fuel

    LWT WITH LOOSE DIDO HEU FUEL, ACCIDENT CONDITION, RADIAL SHIFT PATTERN - CENTERE


    **** PROBLEM PARAMETERS ****

    LIB 27GROUPNDF4  LIBRARY
    MXX             9 MIXTURES
    MSC            11 COMPOSITION SPECIFICATIONS
    IZM             3 MATERIAL ZONES
    GE  LATTICECELL  GEOMETRY
    MORE            0 0/1 DO NOT READ/READ OPTIONAL PARAMETER DATA
    MSLN            0 FUEL SOLUTIONS


    **** PROBLEM COMPOSITION DESCRIPTION ****

    SC  URANIUM      STANDARD COMPOSITION
    MX              1 MIXTURE NO.
    VF         1.0000 VOLUME FRACTION
    ROTH       0.5477 SPECIFIED DENSITY
    NEL             1 NO. ELEMENTS
    ICP             1 0/1 MIXTURE/COMPOUND
    TEMP        293.0 DEG KELVIN
                92000      1.00 ATOM/MOLECULE
                              92235    94.000 WT%
                              92238     6.000 WT%
    END

    SC  AL           STANDARD COMPOSITION
    MX              1 MIXTURE NO.
    VF         1.0000 VOLUME FRACTION
    ROTH       1.7930 SPECIFIED DENSITY
    NEL             1 NO. ELEMENTS
    ICP             1 0/1 MIXTURE/COMPOUND
    TEMP        293.0 DEG KELVIN
                13027      1.00 ATOM/MOLECULE
    END

    SC  AL           STANDARD COMPOSITION
    MX              2 MIXTURE NO.
    VF         1.0000 VOLUME FRACTION
    ROTH       2.7020 THEORETICAL DENSITY
    NEL             1 NO. ELEMENTS
    ICP             1 0/1 MIXTURE/COMPOUND
    TEMP        293.0 DEG KELVIN
                13027      1.00 ATOM/MOLECULE
    END

    SC  H2O          STANDARD COMPOSITION
    MX              3 MIXTURE NO.
    VF         1.0000 VOLUME FRACTION
    ROTH       0.9998 SPECIFIED DENSITY
    NEL             2 NO. ELEMENTS
    ICP             1 0/1 MIXTURE/COMPOUND
    TEMP        293.0 DEG KELVIN
                 1001      2.00 ATOMS/MOLECULE
                 8016      1.00 ATOM/MOLECULE
    END

    SC  ARBMGLC      STANDARD COMPOSITION
    MX              4 MIXTURE NO.
    VF         0.5840 VOLUME FRACTION
    ROTH       0.9437 SPECIFIED DENSITY
    NEL             3 NO. ELEMENTS
    ICP             1 0/1 MIXTURE/COMPOUND
                6012      2.00 ATOMS/MOLECULE
                1001      6.00 ATOMS/MOLECULE
                8016      2.00 ATOMS/MOLECULE
    END

    SC  H2O          STANDARD COMPOSITION
    MX              4 MIXTURE NO.
    VF         0.4160 VOLUME FRACTION
    ROTH       0.9982 THEORETICAL DENSITY
```

```
NEL            2 NO. ELEMENTS
ICP            1 0/1 MIXTURE/COMPOUND
TEMP       293.0 DEG KELVIN
            1001      2.00 ATOMS/MOLECULE
            8016      1.00 ATOM/MOLECULE
END

SC  PB           STANDARD COMPOSITION
MX             5 MIXTURE NO.
VF        1.0000 VOLUME FRACTION
ROTH     11.3440 THEORETICAL DENSITY
NEL            1 NO. ELEMENTS
ICP            1 0/1 MIXTURE/COMPOUND
TEMP       293.0 DEG KELVIN
           82000      1.00 ATOM/MOLECULE
END

SC  SS304        STANDARD COMPOSITION
MX             6 MIXTURE NO.
VF        1.0000 VOLUME FRACTION
ROTH      7.9200 THEORETICAL DENSITY
NEL            4 NO. ELEMENTS
ICP            0 0/1 MIXTURE/COMPOUND
TEMP       293.0 DEG KELVIN
           24304    19.000 WT%
           25055     2.000 WT%
           26304    69.500 WT%
           28304     9.500 WT%
END

SC  AL           STANDARD COMPOSITION
MX             7 MIXTURE NO.
VF        1.0000 VOLUME FRACTION
ROTH      2.7020 THEORETICAL DENSITY
NEL            1 NO. ELEMENTS
ICP            1 0/1 MIXTURE/COMPOUND
TEMP       293.0 DEG KELVIN
           13027      1.00 ATOM/MOLECULE
END

SC  SS304        STANDARD COMPOSITION
MX             8 MIXTURE NO.
VF        1.0000 VOLUME FRACTION
ROTH      7.9200 THEORETICAL DENSITY
NEL            4 NO. ELEMENTS
ICP            0 0/1 MIXTURE/COMPOUND
TEMP       293.0 DEG KELVIN
           24304    19.000 WT%
           25055     2.000 WT%
           26304    69.500 WT%
           28304     9.500 WT%
END

SC  H2O          STANDARD COMPOSITION
MX             9 MIXTURE NO.
VF        1.0000 VOLUME FRACTION
ROTH      0.0001 SPECIFIED DENSITY
NEL            2 NO. ELEMENTS
ICP            1 0/1 MIXTURE/COMPOUND
TEMP       293.0 DEG KELVIN
            1001      2.00 ATOMS/MOLECULE
            8016      1.00 ATOM/MOLECULE
END


**** PROBLEM GEOMETRY ****

CTP SYMMSLABCELL CELL TYPE
PITCH     0.9800 CM CENTER TO CENTER SPACING
FUELOD    0.0650 CM FUEL DIAMETER OR SLAB THICKNESS
MFUEL          1 MIXTURE NO. OF FUEL
MMOD           3 MIXTURE NO. OF MODERATOR
CLADOD    0.1300 CM CLAD OUTER DIAMETER
MCLAD          2 MIXTURE NO. OF CLAD


ZONE SPECIFICATIONS FOR LATTICECELL GEOMETRY

              ZONE  1 IS FUEL
              ZONE  2 IS CLAD
              ZONE  3 IS MOD
```

```
******************************************************************************************************************************
***                                                                                                                        ***
***                              LWT WITH LOOSE DIDO HEU FUEL, ACCIDENT CONDITION, RADIAL SHIFT PATTERN - CENTERE***
***                                                                                                                        ***
******************************************************************************************************************************
******************************************************************************************************************************
***                                                                                                                        ***
***                                 ********** DATA LIBRARY INFORMATION **********                                       ***
***                                                                                                                        ***
***          UNIT                                                VOLUME                                                ***
***         NUMBER               DATA SET NAME                   NAME        UNIT FUNCTION                             ***
***         ------               -------------                   ----        -------------                             ***
***                                                                                                                        ***
***           89     G:\scale43\DATALIB\FT89F001                                STANDARD COMPOSITION LIBRARY     ***
***                                                                                                                        ***
***           82     G:\scale43\DATALIB\FT82F001                                CROSS SECTION LIBRARY            ***
***                                                                                                                        ***
***           11     D:\hjp\plateMin_thclaMin_fuellMin_hteleMin_u               SHORT CROSS SECTION LIBRARY      ***
***                                                                                                                        ***
***           90     D:\hjp\plateMin_thclaMin_fuellMin_hteleMin_u               INPUT DATA DIRECT ACCESS         ***
***                                                                                                                        ***
******************************************************************************************************************************
******************************************************************************************************************************
***                                                                                                                        ***
***                                                                                                                        ***
***                                      STANDARD COMPOSITION LIBRARY DATA                                                 ***
***                                      ---------------------------------                                                 ***
***                                                                                                                        ***
***            UNIT NUMBER  :  89                                                                                          ***
***                                                                                                                        ***
***            DATASET NAME :  G:\scale43\DATALIB\FT89F001                                                                 ***
***                                                                                                                        ***
***            LIBRARY TITLE:  SCALE-4 STANDARD COMPOSITION LIBRARY                                                        ***
***                            637 STANDARD COMPOSITIONS, 490 NUCLIDES                                                     ***
***                            90 ELEMENTS WITH VARIABLE ISOTOPIC DISTRBUTIONS.                                            ***
***                                                                                                                        ***
***            CREATION DATE:   6/30/95                                                                                    ***
***                                                                                                                        ***
***                                                                                                                        ***
***                                                                                                                        ***
***                                       CROSS SECTION LIBRARY DATA                                                       ***
***                                      ---------------------------                                                       ***
***                                                                                                                        ***
***            UNIT NUMBER  :  82                                                                                          ***
***                                                                                                                        ***
***            DATASET NAME :  G:\scale43\DATALIB\FT82F001                                                                 ***
***                                                                                                                        ***
***            LIBRARY TITLE:  SCALE 4.2 - 27 GROUP NEUTRON GROUP LIBRARY                                                  ***
***                               BASED ON ENDF-B VERSION 4 DATA                                                           ***
***                                  COMPILED FOR NRC     1/27/89                                                        ***
***                                     LAST UPDATED                                                  08/12/94  ***
***                                        L.M.PETRIE   -   ORNL                                                           ***
***                                                                                                                        ***
***                                                                                                                        ***
***                                                                                                                        ***
***                                                                                                                        ***
******************************************************************************************************************************
******************************************************************************************************************************

                          ........    0 IO'S WERE USED BEFORE READING KENO V DATA    ........

                          ........    0 IO'S WERE USED READING THE KENO V PARAMETER DATA    ........

'Fuel Annulus    1

'Fuel Annulus    2

'Fuel Annulus    3

'Fuel Annulus    4

'Clad Axial End Piece    1

'Clad Axial End Piece    2

'Clad Axial End Piece    3

'Clad Axial End Piece    4


                         *************** DATA READING COMPLETED ***************

                          ........    0 IO'S WERE USED PREPARING THE KENO V INPUT DATA    ........

                          ........    0 IO'S WERE USED LOADING THE KENO V DATA    ........

                          ........    0 IO'S WERE USED LOADING THE DATA    ........

                          ........    0 IO'S WERE USED CHECKING THE KENO V GEOMETRY DATA    ........
                          *****  RESTART DATA HAS BEEN WRITTEN ON UNIT 95  *****

                          ........    0 IO'S WERE USED WRITING THE KENO V - CSAS DATA    ........

                          ........    0 IO'S WERE USED PROCESSING CSAS INPUT DATA    ........
```

```
CONTROL MODULE CSAS25   IS COMPLETE.
```

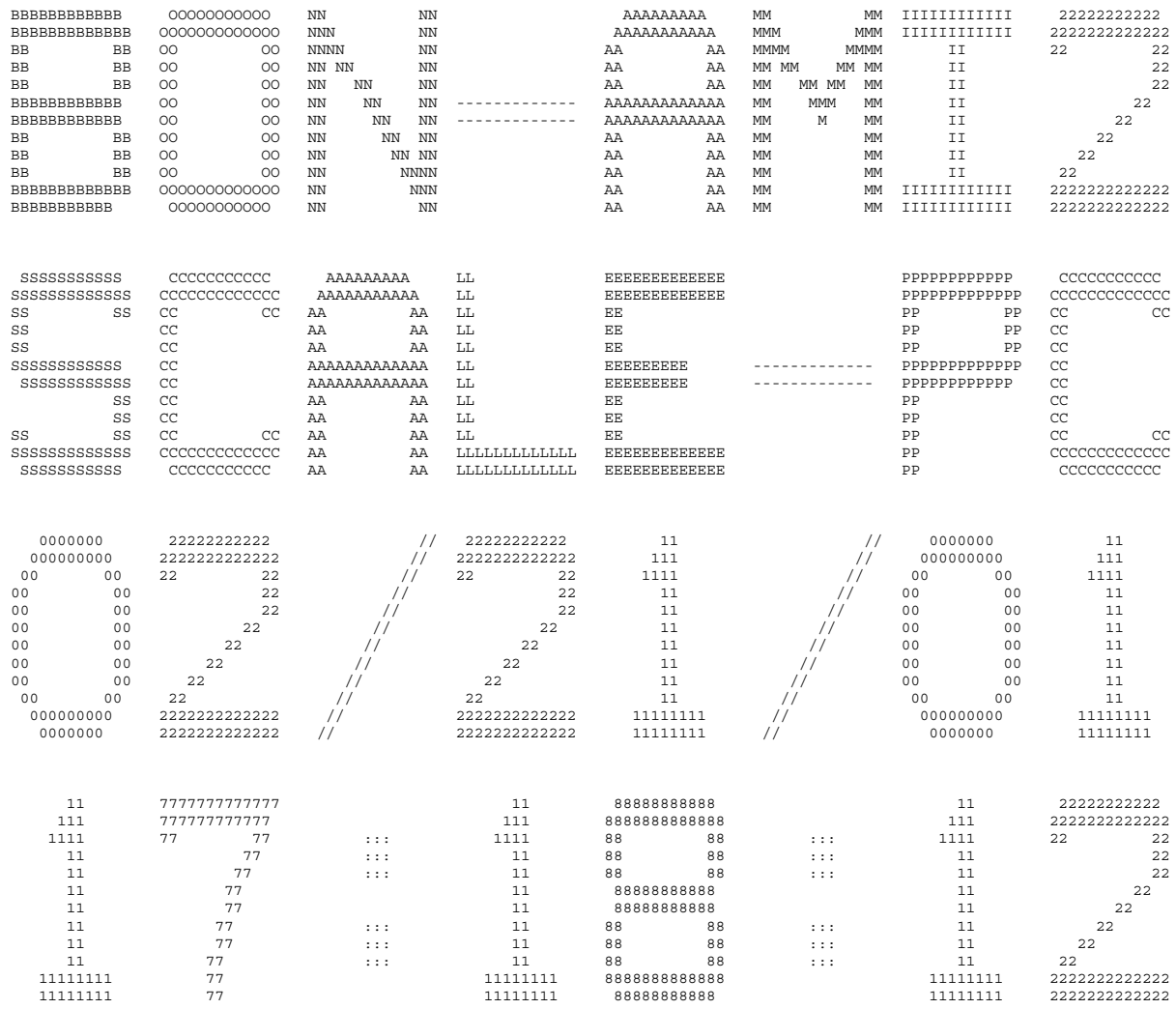
BBBBBBBBBBB OOOOOOOOOO NN NN AAAAAAAAA MM MM IIIIIIIIIII 22222222222
BBBBBBBBBBBB OOOOOOOOOOO NNN NN AAAAAAAAAA MMM MMM IIIIIIIIIII 2222222222222
BB BB OO OO NNNN NN AA AA MMMM MMMM II 22 22
BB BB OO OO NN NN NN AA AA MM MM MM MM II 22
BB BB OO OO NN NN NN AA AA MM MM MM MM II 22
BBBBBBBBBBB OO OO NN NN NN AAAAAAAAAAAAA MM MMM MM II 22
BBBBBBBBBBB OO OO NN NN NN AAAAAAAAAAAAA MM M MM II 22
BB BB OO OO NN NN NN AA AA MM MM II 22
BB BB OO OO NN NN NN AA AA MM MM II 22
BB BB OO OO NN NNNN AA AA MM MM II 22
BBBBBBBBBBBB OOOOOOOOOOOO NN NNN AA AA MM MM IIIIIIIIIII 2222222222222
BBBBBBBBBB OOOOOOOOOO NN NN AA AA MM MM IIIIIIIIIII 2222222222222
SSSSSSSSSS CCCCCCCCCC AAAAAAAAA LL EEEEEEEEEEEE PPPPPPPPPPP CCCCCCCCCC
SSSSSSSSSSSS CCCCCCCCCCCC AAAAAAAAAAA LL EEEEEEEEEEEE PPPPPPPPPPPP CCCCCCCCCCCC
SS SS CC CC AA AA LL EE PP PP CC CC
SS CC AA AA LL EE PP PP CC
SS CC AA AA LL EE PP PP CC
SSSSSSSSSSSS CC AAAAAAAAAAAAA LL EEEEEEEEE ------------ PPPPPPPPPPPP CC
SSSSSSSSSSS CC AAAAAAAAAAAAA LL EEEEEEEEE ------------ PPPPPPPPPPP CC
SS CC AA AA LL EE PP CC
SS CC AA AA LL EE PP CC
SS SS CC CC AA AA LL EE PP CC CC
SSSSSSSSSSSS CCCCCCCCCCCCC AA AA LLLLLLLLLLLL EEEEEEEEEEEE PP CCCCCCCCCCCCC
SSSSSSSSSS CCCCCCCCCC AA AA LLLLLLLLLLLL EEEEEEEEEEEE PP CCCCCCCCCC
0000000 22222222222 // 22222222222 11 // 0000000 11
000000000 2222222222222 // 2222222222222 111 // 000000000 111
00 00 22 22 // 22 22 1111 // 00 00 1111
00 00 22 // 22 11 // 00 00 11
00 00 22 // 22 11 // 00 00 11
00 00 22 // 22 11 // 00 00 11
00 00 22 // 22 11 // 00 00 11
00 00 22 // 22 11 // 00 00 11
00 00 22 // 22 11 // 00 00 11
00 00 22 // 22 11 // 00 00 11
000000000 2222222222222 // 2222222222222 11111111 // 000000000 11111111
0000000 2222222222222 // 2222222222222 11111111 // 0000000 11111111
11 7777777777777 11 88888888888 11 22222222222
111 777777777777 111 8888888888888 111 2222222222222
1111 77 77 ::: 1111 88 88 ::: 1111 22 22
11 77 ::: 11 88 88 ::: 11 22
11 77 ::: 11 88 88 ::: 11 22
11 77 11 88888888888 11 22
11 77 11 88888888888 11 22
11 77 ::: 11 88 88 ::: 11 22
11 77 ::: 11 88 88 ::: 11 22
11 77 ::: 11 88 88 ::: 11 22
11111111 77 11111111 8888888888888 11111111 2222222222222
11111111 77 11111111 88888888888 11111111 2222222222222

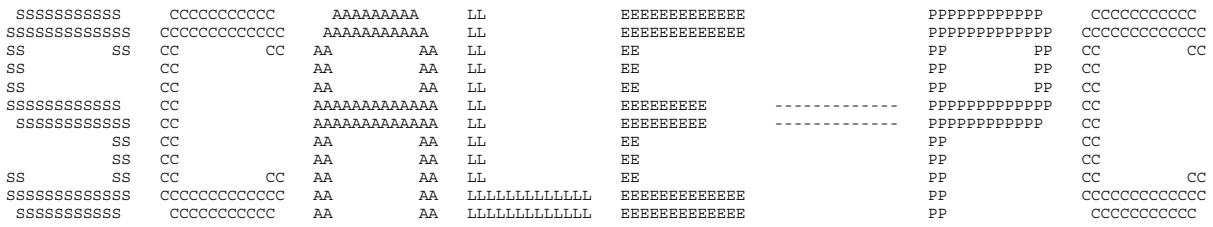


```
*******************************************************************************
*******************************************************************************
*******************************************************************************
*****                                                                     *****
*****                  PROGRAM VERIFICATION INFORMATION                   *****
*****                                                                     *****
*****                CODE SYSTEM:  SCALE-PC VERSION:  4.3                 *****
*****                                                                     *****
*******************************************************************************
*******************************************************************************
*****                                                                     *****
*****                                                                     *****
*****              PROGRAM:  O0O008                                       *****
*****                                                                     *****
*****        CREATION DATE:  09/15/95                                     *****
*****                                                                     *****
*****              VOLUME:   ENG                                          *****
*****                                                                     *****
*****              LIBRARY:  G:\SCALE43\WIN_NT\EXE                        *****
*****                                                                     *****
*****                                                                     *****
*****    THIS IS NOT A SCALE-PC CONFIGURATION CONTROLLED CODE             *****
*****                                                                     *****
*****              JOBNAME:  SCALE-PC                                     *****
*****                                                                     *****
*****    DATE OF EXECUTION:  02/21/01                                     *****
*****                                                                     *****
*****    TIME OF EXECUTION:  17:18:12                                     *****
*****                                                                     *****
*****                                                                     *****
*******************************************************************************
*******************************************************************************
*******************************************************************************
```

```
-1Q ARRAY HAS      1 ENTRIES.

 0Q ARRAY HAS      4 ENTRIES.

 1Q ARRAY HAS      6 ENTRIES.

 2Q ARRAY HAS      2 ENTRIES.
```

```
LOGICAL ASSIGNMENTS

MASTER LIBRARY   11
WORKING LIBRARY   0
SCRATCH FILE     18
NEW LIBRARY       1

P R O B L E M   D E S C R I P T I O N

IGR--GEOMETRY (0/1/2/3--INF MED/SLAB/CYL/SPHERE               1

IZM--NUMBER OF ZONES OR MATERIAL REGIONS                      9

MS--MIXING TABLE LENGTH                                      21

IBL--SHIELDED CROSS SECTION EDIT OPTION (0/1--NO/YES)         0

IBR--BONDARENKO FACTOR EDIT OPTION (0/1--NO/YES)              0

ISSOPT--DANCOFF FACTOR OPTION                                 0

CONVERGENCE CRITERION    1.00000E-03

GEOMETRY CORRECTION FACTOR FOR WIGNER RATIONAL APPROXIMATION  1.000E+00

        3Q ARRAY HAS     21 ENTRIES.

        4Q ARRAY HAS     21 ENTRIES.

        5Q ARRAY HAS     21 ENTRIES.

        6Q ARRAY HAS      9 ENTRIES.

        7Q ARRAY HAS      9 ENTRIES.

        8Q ARRAY HAS      9 ENTRIES.

        9Q ARRAY HAS      9 ENTRIES.

       10Q ARRAY HAS     21 ENTRIES.

       11Q ARRAY HAS      9 ENTRIES.

M I X I N G   T A B L E

ENTRY   MIXTURE   ISOTOPE   NUMBER DENSITY   NEW IDENTIFIER
   1       1        92235     1.31908E-03          1092235
   2       1        92238     8.31332E-05          1092238
   3       1        13027     4.00184E-02          1013027
   4       2        13027     6.03066E-02          2013027
   5       7        13027     6.03066E-02          7013027
   6       3         1001     6.68762E-02          3001001
   7       4         1001     5.98801E-02          4001001
   8       9         1001     6.68896E-06          9001001
   9       3         8016     3.34381E-02          3008016
  10       4         8016     2.45894E-02          4008016
  11       9         8016     3.34448E-06          9008016
  12       4         6012     1.07014E-02          4006012
  13       5        82000     3.29690E-02          5082000
  14       6        24304     1.74286E-02          6024304
  15       8        24304     1.74286E-02          8024304
  16       6        25055     1.73633E-03          6025055
  17       8        25055     1.73633E-03          8025055
  18       6        26304     5.93579E-02          6026304
  19       8        26304     5.93579E-02          8026304
  20       6        28304     7.72070E-03          6028304
  21       8        28304     7.72070E-03          8028304

GEOMETRY AND MATERIAL DESCRIPTION

ZONE   MIXTURE   OUTER DIMENSION   TEMPERATURE       EXTRA XS   TYPE (0/1--FUEL/MOD)
   1      1          3.25000E-02    2.93000E+02    4.53946E+00             0
   2      2          6.50000E-02    2.93000E+02    0.00000E+00             0
   3      3          4.90000E-01    2.93000E+02    0.00000E+00             0
   4      4          5.49000E+00    2.93000E+02    0.00000E+00             0
   5      5          1.04900E+01    2.93000E+02    0.00000E+00             0
   6      6          1.54900E+01    2.93000E+02    0.00000E+00             0
   7      7          2.04900E+01    2.93000E+02    0.00000E+00             0
   8      8          2.54900E+01    2.93000E+02    0.00000E+00             0
   9      9          3.04900E+01    2.93000E+02    0.00000E+00             0
     4087 LOCATIONS OF   100000 AVAILABLE ARE REQUIRED TO MAKE A NEW MASTER CONTAINING THE SELF-SHIELDED VALUES

NO NUCLIDES IN YOUR PROBLEM HAVE BONDARENKO FACTOR DATA**BONAMI WILL COPY FROM LOGICAL 11 TO LOGICAL  1

COPY      1001   HYDROGEN        FROM LOG 11 TO LOG 18    BONDARENKO TRIGGER 0

COPY      1001   HYDROGEN        FROM LOG 18 TO LOG  1    BONDARENKO TRIGGER 0

COPY      1001   HYDROGEN        FROM LOG 18 TO LOG  1    BONDARENKO TRIGGER 0

COPY      1001   HYDROGEN        FROM LOG 18 TO LOG  1    BONDARENKO TRIGGER 0

COPY      6012   CARBON-12       FROM LOG 11 TO LOG  1    BONDARENKO TRIGGER 0

COPY      8016   OXYGEN-16       FROM LOG 11 TO LOG 18    BONDARENKO TRIGGER 0
```

```
COPY      8016   OXYGEN-16       FROM LOG 18 TO LOG  1    BONDARENKO TRIGGER 0
COPY      8016   OXYGEN-16       FROM LOG 18 TO LOG  1    BONDARENKO TRIGGER 0
COPY      8016   OXYGEN-16       FROM LOG 18 TO LOG  1    BONDARENKO TRIGGER 0
COPY     13027  AL-27 1193 218 G FROM LOG 11 TO LOG 18    BONDARENKO TRIGGER 0
COPY     13027  AL-27 1193 218 G FROM LOG 18 TO LOG  1    BONDARENKO TRIGGER 0
COPY     13027  AL-27 1193 218 G FROM LOG 18 TO LOG  1    BONDARENKO TRIGGER 0
COPY     13027  AL-27 1193 218 G FROM LOG 18 TO LOG  1    BONDARENKO TRIGGER 0
COPY     24304  CR 1191 WT SS-30 FROM LOG 11 TO LOG 18    BONDARENKO TRIGGER 0
COPY     24304  CR 1191 WT SS-30 FROM LOG 18 TO LOG  1    BONDARENKO TRIGGER 0
COPY     24304  CR 1191 WT SS-30 FROM LOG 18 TO LOG  1    BONDARENKO TRIGGER 0
COPY     25055   MANGANESE-55    FROM LOG 11 TO LOG 18    BONDARENKO TRIGGER 0
COPY     25055   MANGANESE-55    FROM LOG 18 TO LOG  1    BONDARENKO TRIGGER 0
COPY     25055   MANGANESE-55    FROM LOG 18 TO LOG  1    BONDARENKO TRIGGER 0
COPY     26304  FE 1192 WT SS-30 FROM LOG 11 TO LOG 18    BONDARENKO TRIGGER 0
COPY     26304  FE 1192 WT SS-30 FROM LOG 18 TO LOG  1    BONDARENKO TRIGGER 0
COPY     26304  FE 1192 WT SS-30 FROM LOG 18 TO LOG  1    BONDARENKO TRIGGER 0
COPY     28304  NI 1190 WT SS-30 FROM LOG 11 TO LOG 18    BONDARENKO TRIGGER 0
COPY     28304  NI 1190 WT SS-30 FROM LOG 18 TO LOG  1    BONDARENKO TRIGGER 0
COPY     28304  NI 1190 WT SS-30 FROM LOG 18 TO LOG  1    BONDARENKO TRIGGER 0
COPY     82000  PB   1288 218NGP FROM LOG 11 TO LOG  1    BONDARENKO TRIGGER 0
COPY     92235   URANIUM-235     FROM LOG 11 TO LOG  1    BONDARENKO TRIGGER 0
COPY     92238   URANIUM-238     FROM LOG 11 TO LOG  1    BONDARENKO TRIGGER 0
```

```
SCALE 4.2 - 27 GROUP NEUTRON GROUP LIBRARY
   BASED ON ENDF-B VERSION 4 DATA
      COMPILED FOR NRC     1/27/89
         LAST UPDATED                                                08/12/94
            L.M.PETRIE   -   ORNL
    TAPE ID                          4321          NUMBER OF NUCLIDES                    21
    NUMBER OF NEUTRON GROUPS           27          NUMBER OF GAMMA GROUPS                 0
    FIRST THERMAL GROUP                15          LOGICAL UNIT                           1
                              TABLE OF CONTENTS
   HYDROGEN       ENDF/B-IV MAT 1269/THRM1002             UPDATED 08/12/94        ID   3001001
   HYDROGEN       ENDF/B-IV MAT 1269/THRM1002             UPDATED 08/12/94        ID   4001001
   HYDROGEN       ENDF/B-IV MAT 1269/THRM1002             UPDATED 08/12/94        ID   9001001
   CARBON-12      ENDF/B-IV MAT 1274/THRM1065             UPDATED 08/12/94        ID   4006012
   OXYGEN-16      ENDF/B-IV MAT 1276                      UPDATED 08/12/94        ID   3008016
   OXYGEN-16      ENDF/B-IV MAT 1276                      UPDATED 08/12/94        ID   4008016
   OXYGEN-16      ENDF/B-IV MAT 1276                      UPDATED 08/12/94        ID   9008016
  AL-27 1193 218 GP 040375(5)                             UPDATED 08/12/94        ID   1013027
  AL-27 1193 218 GP 040375(5)                             UPDATED 08/12/94        ID   2013027
  AL-27 1193 218 GP 040375(5)                             UPDATED 08/12/94        ID   7013027
  CR 1191 WT SS-304(1/EST) P-3 293K SP=5+4(42375)'        UPDATED 08/12/94        ID   6024304
  CR 1191 WT SS-304(1/EST) P-3 293K SP=5+4(42375)'        UPDATED 08/12/94        ID   8024304
   MANGANESE-55   ENDF/B-IV MAT 1197                      UPDATED 08/12/94        ID   6025055
   MANGANESE-55   ENDF/B-IV MAT 1197                      UPDATED 08/12/94        ID   8025055
  FE 1192 WT SS-304(1/EST) P-3 293K SP=5+4(42375)'        UPDATED 08/12/94        ID   6026304
  FE 1192 WT SS-304(1/EST) P-3 293K SP=5+4(42375)'        UPDATED 08/12/94        ID   8026304
  NI 1190 WT SS-304(1/EST) P-3 293K SP=5+4(42375)'        UPDATED 08/12/94        ID   6028304
  NI 1190 WT SS-304(1/EST) P-3 293K SP=5+4(42375)'        UPDATED 08/12/94        ID   8028304
  PB   1288 218NGP 042375 P-3 293K                        UPDATED 08/12/94        ID   5082000
   URANIUM-235    ENDF/B-IV MAT 1261                      UPDATED 08/12/94        ID   1092235
   URANIUM-238    ENDF/B-IV MAT 1262                      UPDATED 08/12/94        ID   1092238

    TAPE COPY USED      0 I/O'S, AND TOOK    0.27 SECONDS
```

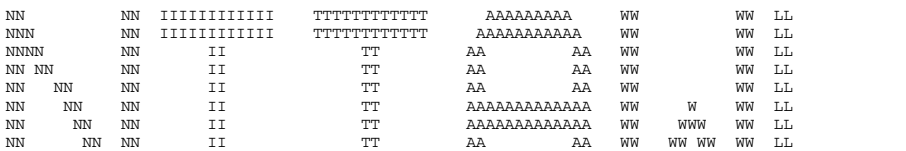
NN NN IIIIIIIIIIII TTTTTTTTTTTT AAAAAAAAA WW WW LL
NNN NN IIIIIIIIIIII TTTTTTTTTTTT AAAAAAAAAAA WW WW LL
NNNN NN II TT AA AA WW WW LL
NN NN NN II TT AA AA WW WW LL
NN NN NN II TT AA AA WW WW LL
NN NN NN II TT AAAAAAAAAAAAA WW W WW LL
NN NN NN II TT AAAAAAAAAAAAA WW WWW WW LL
NN NN NN II TT AA AA WW WW WW WW LL
NN NN NN II TT AA AA WW WW WW LL
NN NNNN II TT AA AA WWWW WWWW LL
NN NNN IIIIIIIIIIII TT AA AA WWW WWW LLLLLLLLLLLL
NN NN IIIIIIIIIIII TT AA AA WW WW LLLLLLLLLLLL

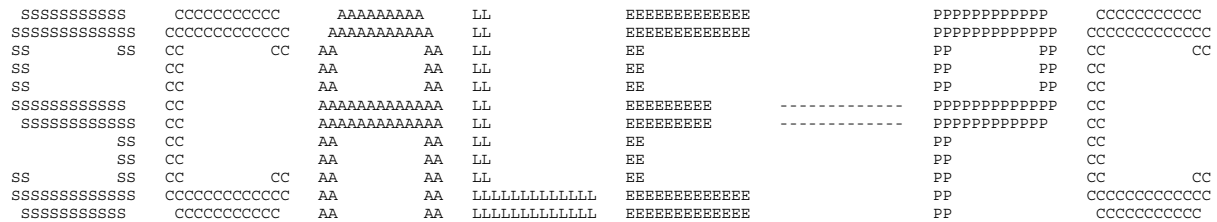
SSSSSSSSSS CCCCCCCCCC AAAAAAAAA LL EEEEEEEEEEEE PPPPPPPPPPP CCCCCCCCCC
SSSSSSSSSSSS CCCCCCCCCCCC AAAAAAAAAA LL EEEEEEEEEEEE PPPPPPPPPPPP CCCCCCCCCCCC
SS SS CC CC AA AA LL EE PP PP CC CC
SS CC AA AA LL EE PP PP CC
SS CC AA AA LL EE PP PP CC
SSSSSSSSSSS CC AAAAAAAAAAAAA LL EEEEEEEEE ---------- PPPPPPPPPPPP CC
SSSSSSSSSSS CC AAAAAAAAAAAAA LL EEEEEEEEE ---------- PPPPPPPPPPP CC
SS CC AA AA LL EE PP CC
SS CC AA AA LL EE PP CC
SS SS CC CC AA AA LL EE PP CC CC
SSSSSSSSSSSS CCCCCCCCCCCC AA AA LLLLLLLLLLLL EEEEEEEEEEEE PP CCCCCCCCCCCC
SSSSSSSSSS CCCCCCCCCC AA AA LLLLLLLLLLLL EEEEEEEEEEEE PP CCCCCCCCCC

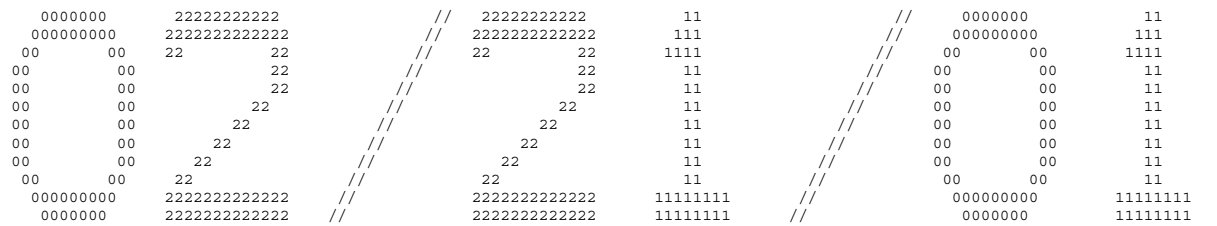
0000000 22222222222 // 22222222222 11 // 0000000 11
000000000 2222222222222 // 2222222222222 111 // 000000000 111
00 00 22 22 // 22 22 1111 // 00 00 1111
00 00 22 // 22 11 // 00 00 11
00 00 22 // 22 11 // 00 00 11
00 00 22 // 22 11 // 00 00 11
00 00 22 // 22 11 // 00 00 11
00 00 22 // 22 11 // 00 00 11
00 00 22 // 22 11 // 00 00 11
00 00 22 // 22 11 // 00 00 11
000000000 2222222222222 // 2222222222222 11111111 // 000000000 11111111
0000000 2222222222222 // 2222222222222 11111111 // 0000000 11111111

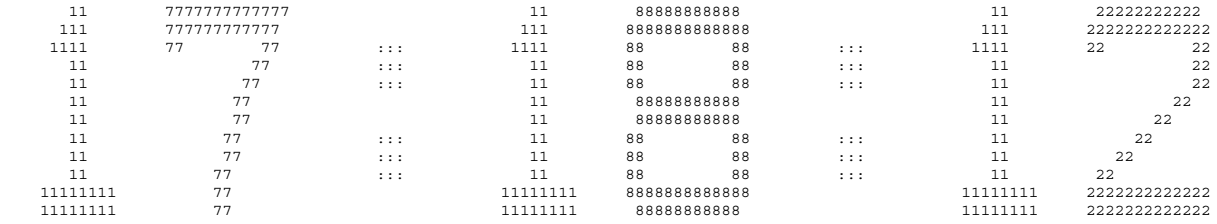
11 7777777777777 11 88888888888 11 22222222222
111 777777777777 111 8888888888888 111 2222222222222
1111 77 77 ::: 1111 88 88 ::: 1111 22 22
11 77 ::: 11 88 88 ::: 11 22
11 77 ::: 11 88 88 ::: 11 22
11 77 11 88888888888 11 22
11 77 11 88888888888 11 22
11 77 ::: 11 88 88 ::: 11 22
11 77 ::: 11 88 88 ::: 11 22
11 77 ::: 11 88 88 ::: 11 22
11111111 77 11111111 8888888888888 11111111 2222222222222
11111111 77 11111111 88888888888 11111111 2222222222222

```
  SSSSSSSSSS     CCCCCCCCCC      AAAAAAAA     LL             EEEEEEEEEEEE                 PPPPPPPPPP     CCCCCCCCCC
 SSSSSSSSSSS   CCCCCCCCCCCC    AAAAAAAAAA    LL             EEEEEEEEEEEE                 PPPPPPPPPPP   CCCCCCCCCCCC
 SS          SS CC          CC  AA          AA  LL             EE                           PP         PP  CC          CC
 SS             CC              AA          AA  LL             EE                           PP         PP  CC
 SS             CC              AA          AA  LL             EE                           PP         PP  CC
 SSSSSSSSSSS    CC              AAAAAAAAAAAAAA  LL             EEEEEEEEE       -------------  PPPPPPPPPPP   CC
  SSSSSSSSSSS   CC              AAAAAAAAAAAAAA  LL             EEEEEEEEE       -------------  PPPPPPPPPP    CC
           SS   CC              AA          AA  LL             EE                           PP             CC
           SS   CC              AA          AA  LL             EE                           PP             CC
 SS        SS   CC          CC  AA          AA  LL             EE                           PP             CC          CC
 SSSSSSSSSSSS   CCCCCCCCCCCC    AA          AA  LLLLLLLLLLLL   EEEEEEEEEEEE                 PP             CCCCCCCCCCCC
  SSSSSSSSSS     CCCCCCCCCC     AA          AA  LLLLLLLLLLLL   EEEEEEEEEEEE                 PP              CCCCCCCCCC
```

```
*******************************************************************************
*******************************************************************************
*******************************************************************************
*****                                                                     *****
*****                  PROGRAM VERIFICATION INFORMATION                   *****
*****                                                                     *****
*****                CODE SYSTEM:  SCALE-PC VERSION:  4.3                 *****
*****                                                                     *****
*******************************************************************************
*******************************************************************************
*****                                                                     *****
*****                                                                     *****
*****              PROGRAM:  O0O002                                       *****
*****                                                                     *****
*****        CREATION DATE:  09/28/95                                     *****
*****                                                                     *****
*****              VOLUME:   ENG                                          *****
*****                                                                     *****
*****              LIBRARY:  G:\SCALE43\WIN_NT\EXE                        *****
*****                                                                     *****
*****                                                                     *****
*****    THIS IS NOT A SCALE-PC CONFIGURATION CONTROLLED CODE             *****
*****                                                                     *****
*****              JOBNAME:  SCALE-PC                                     *****
*****                                                                     *****
*****    DATE OF EXECUTION:  02/21/01                                     *****
*****                                                                     *****
*****    TIME OF EXECUTION:  17:18:12                                     *****
*****                                                                     *****
*****                                                                     *****
*******************************************************************************
*******************************************************************************
*******************************************************************************
```

```
       -1Q ARRAY HAS      1 ENTRIES.

        0Q ARRAY HAS      9 ENTRIES.

        1Q ARRAY HAS     12 ENTRIES.

SELECT 21 NUCLIDES FROM THE MASTER  LIBRARY ON LOGICAL  1
        0 NUCLIDES FROM THE WORKING LIBRARY ON LOGICAL  2
        0 NUCLIDES FROM THE WORKING LIBRARY ON LOGICAL  3
          TO CREATE THE NEW WORKING LIBRARY ON LOGICAL  4

        4 RESONANCE CALCULATIONS HAVE BEEN REQUESTED
       -1 OUTPUT OPTION FOR AMPX FORMATTED CROSS SECTION DATA
     2001 MAXIMUM NUMBER OF RESONANCE MESH INTERVALS
        2 ORDER OF RESONANCE LEVEL PROCESSING

THE STORAGE ALLOCATED FOR THIS CASE IS    100000 WORDS

        2Q ARRAY HAS     21 ENTRIES.

        3Q ARRAY HAS     60 ENTRIES.

        4Q ARRAY HAS     21 ENTRIES.

 GENERAL INFORMATION CONCERNING CROSS SECTION LIBRARY
   TAPE IDENTIFICATION NUMBER               4321
   NUMBER OF NUCLIDES ON TAPE                 21
   NUMBER OF NEUTRON ENERGY GROUPS            27
   FIRST THERMAL NEUTRON ENERGY GROUP         15
   NUMBER OF GAMMA ENERGY GROUPS               0

   DIRECT ACCESS UNIT NUMBER  9 REQUIRES 117 BLOCKS OF LENGTH  1680 WORDS
 XSDRN TAPE   4321
                       SCALE 4.2 - 27 GROUP NEUTRON GROUP LIBRARY
                          BASED ON ENDF-B VERSION 4 DATA
                             COMPILED FOR NRC     1/27/89
                                LAST UPDATED                                                    08/12/94
                                   L.M.PETRIE   -   ORNL

 NUCLIDES FROM XSDRN TAPE
    1     HYDROGEN       ENDF/B-IV MAT 1269/THRM1002            UPDATED 08/12/94     3001001
    2     HYDROGEN       ENDF/B-IV MAT 1269/THRM1002            UPDATED 08/12/94     4001001
    3     HYDROGEN       ENDF/B-IV MAT 1269/THRM1002            UPDATED 08/12/94     9001001
    4     CARBON-12      ENDF/B-IV MAT 1274/THRM1065            UPDATED 08/12/94     4006012
    5     OXYGEN-16      ENDF/B-IV MAT 1276                     UPDATED 08/12/94     3008016
    6     OXYGEN-16      ENDF/B-IV MAT 1276                     UPDATED 08/12/94     4008016
    7     OXYGEN-16      ENDF/B-IV MAT 1276                     UPDATED 08/12/94     9008016
    8    AL-27 1193 218 GP 040375(5)                            UPDATED 08/12/94     1013027
    9    AL-27 1193 218 GP 040375(5)                            UPDATED 08/12/94     2013027
   10    AL-27 1193 218 GP 040375(5)                            UPDATED 08/12/94     7013027
   11    CR 1191 WT SS-304(1/EST) P-3 293K SP=5+4(42375)'       UPDATED 08/12/94     6024304
   12    CR 1191 WT SS-304(1/EST) P-3 293K SP=5+4(42375)'       UPDATED 08/12/94     8024304
   13     MANGANESE-55   ENDF/B-IV MAT 1197                     UPDATED 08/12/94     6025055
   14     MANGANESE-55   ENDF/B-IV MAT 1197                     UPDATED 08/12/94     8025055
   15    FE 1192 WT SS-304(1/EST) P-3 293K SP=5+4(42375)'       UPDATED 08/12/94     6026304
   16    FE 1192 WT SS-304(1/EST) P-3 293K SP=5+4(42375)'       UPDATED 08/12/94     8026304
   17    NI 1190 WT SS-304(1/EST) P-3 293K SP=5+4(42375)'       UPDATED 08/12/94     6028304
   18    NI 1190 WT SS-304(1/EST) P-3 293K SP=5+4(42375)'       UPDATED 08/12/94     8028304
   19    PB   1288 218NGP 042375 P-3 293K                       UPDATED 08/12/94     5082000
   20     URANIUM-235    ENDF/B-IV MAT 1261                     UPDATED 08/12/94     1092235
   21     URANIUM-238    ENDF/B-IV MAT 1262                     UPDATED 08/12/94     1092238

 HYDROGEN       ENDF/B-IV MAT 1269/THRM1002            UPDATED 08/12/94   3001001     TEMPERATURE=   293.00
                                                            PROCESS NUMBER 1007 IS AT TEMPERATURE=   293.00

 HYDROGEN       ENDF/B-IV MAT 1269/THRM1002            UPDATED 08/12/94   4001001     TEMPERATURE=   293.00
                                                            PROCESS NUMBER 1007 IS AT TEMPERATURE=   293.00

 HYDROGEN       ENDF/B-IV MAT 1269/THRM1002            UPDATED 08/12/94   9001001     TEMPERATURE=   293.00
                                                            PROCESS NUMBER 1007 IS AT TEMPERATURE=   293.00

 CARBON-12      ENDF/B-IV MAT 1274/THRM1065            UPDATED 08/12/94   4006012     TEMPERATURE=   293.00
                                                            PROCESS NUMBER 1007 IS AT TEMPERATURE=   293.00

 OXYGEN-16      ENDF/B-IV MAT 1276                     UPDATED 08/12/94   3008016     TEMPERATURE=   293.00
                                                            PROCESS NUMBER 1007 IS AT TEMPERATURE=   293.00

 OXYGEN-16      ENDF/B-IV MAT 1276                     UPDATED 08/12/94   4008016     TEMPERATURE=   293.00
                                                            PROCESS NUMBER 1007 IS AT TEMPERATURE=   293.00

 OXYGEN-16      ENDF/B-IV MAT 1276                     UPDATED 08/12/94   9008016     TEMPERATURE=   293.00
                                                            PROCESS NUMBER 1007 IS AT TEMPERATURE=   293.00

AL-27 1193 218 GP 040375(5)                             UPDATED 08/12/94   1013027     TEMPERATURE=   293.00
                                                            PROCESS NUMBER 1007 IS AT TEMPERATURE=   293.00

AL-27 1193 218 GP 040375(5)                             UPDATED 08/12/94   2013027     TEMPERATURE=   293.00
                                                            PROCESS NUMBER 1007 IS AT TEMPERATURE=   293.00

AL-27 1193 218 GP 040375(5)                             UPDATED 08/12/94   7013027     TEMPERATURE=   293.00
                                                            PROCESS NUMBER 1007 IS AT TEMPERATURE=   293.00

CR 1191 WT SS-304(1/EST) P-3 293K SP=5+4(42375)'        UPDATED 08/12/94   6024304     TEMPERATURE=   293.00
                                                            PROCESS NUMBER 1007 IS AT TEMPERATURE=   293.00
```

```
CR 1191 WT SS-304(1/EST) P-3 293K SP=5+4(42375)'        UPDATED 08/12/94   8024304     TEMPERATURE=   293.00
                                                             PROCESS NUMBER 1007 IS AT TEMPERATURE=   293.00

 MANGANESE-55   ENDF/B-IV MAT 1197                      UPDATED 08/12/94   6025055     TEMPERATURE=   293.00

GEOMETRY HAS BEEN SET TO HOMOGENEOUS AS LBAR IS  0.0000E+00

RESONANCE DATA FOR THIS NUCLIDE

MASS NUMBER (A)          =    54.466               TEMPERATURE(KELVIN)       =   293.000

POTENTIAL SCATTER SIGMA  =     2.590               LUMPED NUCLEAR DENSITY    = 1.7363295E-03

SPIN FACTOR (G)          =    14.448               LUMP DIMENSION (A-BAR)    = 0.0000000E+00

INNER RADIUS             = 0.0000000E+00          DANCOFF CORRECTION (C)    = 0.0000000E+00

THE ABSORBER WILL BE TREATED BY THE NORDHEIM INTEGRAL METHOD.

MASS OF MODERATOR-1    =    55.845               SIGMA(PER ABSORBER ATOM)= 3.4663022E+02

MODERATOR-1 WILL BE TREATED BY THE NORDHEIM INTEGRAL METHOD.

MASS OF MODERATOR-2    =    55.925               SIGMA(PER ABSORBER ATOM)= 1.2557598E+02


MODERATOR-2 WILL BE TREATED BY THE NORDHEIM INTEGRAL METHOD.

THIS RESONANCE MATERIAL WILL BE TREATED AS A 0-DIMENSIONAL OBJECT.

VOLUME FRACTION OF LUMP IN CELL USED TO ACCOUNT FOR SPATIAL SELF-SHIELDING=1.00000

GROUP        RES ABS         RES FISS        RES SCAT
  8      -5.518788E-04    0.000000E+00   -3.944190E-01
  9      -2.797993E-03    0.000000E+00   -2.293471E+00
 10      -3.291452E-01    0.000000E+00   -3.820862E+01
 11      -2.680562E+00    0.000000E+00   -1.159996E+02

EXCESS RESONANCE INTEGRALS

                 RESOLVED

ABSORPTION       3.33719E+00
FISSION          0.00000E+00
                                                             PROCESS NUMBER 1007 IS AT TEMPERATURE=   293.00

 MANGANESE-55   ENDF/B-IV MAT 1197                      UPDATED 08/12/94   8025055     TEMPERATURE=   293.00

GEOMETRY HAS BEEN SET TO HOMOGENEOUS AS LBAR IS  0.0000E+00

RESONANCE DATA FOR THIS NUCLIDE

MASS NUMBER (A)          =    54.466               TEMPERATURE(KELVIN)       =   293.000

POTENTIAL SCATTER SIGMA  =     2.590               LUMPED NUCLEAR DENSITY    = 1.7363295E-03

SPIN FACTOR (G)          =    14.448               LUMP DIMENSION (A-BAR)    = 0.0000000E+00

INNER RADIUS             = 0.0000000E+00          DANCOFF CORRECTION (C)    = 0.0000000E+00

THE ABSORBER WILL BE TREATED BY THE NORDHEIM INTEGRAL METHOD.

MASS OF MODERATOR-1    =    55.845               SIGMA(PER ABSORBER ATOM)= 3.4663022E+02

MODERATOR-1 WILL BE TREATED BY THE NORDHEIM INTEGRAL METHOD.

MASS OF MODERATOR-2    =    55.925               SIGMA(PER ABSORBER ATOM)= 1.2557598E+02

MODERATOR-2 WILL BE TREATED BY THE NORDHEIM INTEGRAL METHOD.

THIS RESONANCE MATERIAL WILL BE TREATED AS A 0-DIMENSIONAL OBJECT.

VOLUME FRACTION OF LUMP IN CELL USED TO ACCOUNT FOR SPATIAL SELF-SHIELDING=1.00000

GROUP        RES ABS         RES FISS        RES SCAT
  8      -5.518788E-04    0.000000E+00   -3.944190E-01
  9      -2.797993E-03    0.000000E+00   -2.293471E+00
 10      -3.291452E-01    0.000000E+00   -3.820862E+01
 11      -2.680562E+00    0.000000E+00   -1.159996E+02

EXCESS RESONANCE INTEGRALS

                 RESOLVED

ABSORPTION       3.33719E+00
FISSION          0.00000E+00
                                                             PROCESS NUMBER 1007 IS AT TEMPERATURE=   293.00

FE 1192 WT SS-304(1/EST) P-3 293K SP=5+4(42375)'        UPDATED 08/12/94   6026304     TEMPERATURE=   293.00
                                                             PROCESS NUMBER 1007 IS AT TEMPERATURE=   293.00

FE 1192 WT SS-304(1/EST) P-3 293K SP=5+4(42375)'        UPDATED 08/12/94   8026304     TEMPERATURE=   293.00
                                                             PROCESS NUMBER 1007 IS AT TEMPERATURE=   293.00
```

```
NI 1190 WT SS-304(1/EST) P-3 293K SP=5+4(42375)'        UPDATED 08/12/94   6028304     TEMPERATURE=   293.00
                                                             PROCESS NUMBER 1007 IS AT TEMPERATURE=   293.00

NI 1190 WT SS-304(1/EST) P-3 293K SP=5+4(42375)'        UPDATED 08/12/94   8028304     TEMPERATURE=   293.00
                                                             PROCESS NUMBER 1007 IS AT TEMPERATURE=   293.00

PB   1288 218NGP 042375 P-3 293K                        UPDATED 08/12/94   5082000     TEMPERATURE=   293.00
                                                             PROCESS NUMBER 1007 IS AT TEMPERATURE=   293.00

 URANIUM-235    ENDF/B-IV MAT 1261                      UPDATED 08/12/94   1092235     TEMPERATURE=   293.00

RESONANCE DATA FOR THIS NUCLIDE

MASS NUMBER (A)          =   233.025               TEMPERATURE(KELVIN)       =   293.000

POTENTIAL SCATTER SIGMA  =    11.500               LUMPED NUCLEAR DENSITY    = 1.3190822E-03

SPIN FACTOR (G)          = 15171.100               LUMP DIMENSION (A-BAR)    = 6.4999998E-02

INNER RADIUS             = 0.0000000E+00           DANCOFF CORRECTION (C)    = 1.5211706E-01

THE ABSORBER WILL BE TREATED BY THE NORDHEIM INTEGRAL METHOD.

MASS OF MODERATOR-1    =    26.982               SIGMA(PER ABSORBER ATOM)= 4.0850834E+01

MODERATOR-1 WILL BE TREATED BY THE NORDHEIM INTEGRAL METHOD.

MASS OF MODERATOR-2    =   238.051               SIGMA(PER ABSORBER ATOM)= 7.7685082E-01

MODERATOR-2 WILL BE TREATED BY THE NORDHEIM INTEGRAL METHOD.

THIS RESONANCE MATERIAL WILL BE TREATED AS A 1-DIMENSIONAL OBJECT.

VOLUME FRACTION OF LUMP IN CELL USED TO ACCOUNT FOR SPATIAL SELF-SHIELDING=1.00000

GROUP        RES ABS         RES FISS        RES SCAT
 12      -1.712865E+00   -1.053512E+00   -4.421081E-02
 13      -5.191924E+00   -2.544281E+00   -1.184106E-01
 14      -3.743466E+00   -2.214335E+00   -2.824813E-02
 15      -2.253279E-04   -1.715397E-04    1.537884E-06

EXCESS RESONANCE INTEGRALS

                 RESOLVED

ABSORPTION       2.15925E+02
FISSION          1.28649E+02
                                                             PROCESS NUMBER 1007 IS AT TEMPERATURE=   293.00

 URANIUM-238    ENDF/B-IV MAT 1262                      UPDATED 08/12/94   1092238     TEMPERATURE=   293.00

RESONANCE DATA FOR THIS NUCLIDE

MASS NUMBER (A)          =   236.006               TEMPERATURE(KELVIN)       =   293.000

POTENTIAL SCATTER SIGMA  =    10.599               LUMPED NUCLEAR DENSITY    = 8.3133229E-05

SPIN FACTOR (G)          =   656.527               LUMP DIMENSION (A-BAR)    = 6.4999998E-02

INNER RADIUS             = 0.0000000E+00           DANCOFF CORRECTION (C)    = 1.5211706E-01

THE ABSORBER WILL BE TREATED BY THE NORDHEIM INTEGRAL METHOD.

MASS OF MODERATOR-1    =    26.982               SIGMA(PER ABSORBER ATOM)= 6.4818372E+02

MODERATOR-1 WILL BE TREATED BY THE NORDHEIM INTEGRAL METHOD.

MASS OF MODERATOR-2    =   235.044               SIGMA(PER ABSORBER ATOM)= 1.8885785E+02

MODERATOR-2 WILL BE TREATED BY THE NORDHEIM INTEGRAL METHOD.

THIS RESONANCE MATERIAL WILL BE TREATED AS A 1-DIMENSIONAL OBJECT.

VOLUME FRACTION OF LUMP IN CELL USED TO ACCOUNT FOR SPATIAL SELF-SHIELDING=1.00000

GROUP        RES ABS         RES FISS        RES SCAT
  9      -1.309125E-04    0.000000E+00   -1.475272E-03
 10      -7.025824E-03   -3.903629E-08   -5.099698E-02
 11      -3.303697E-01    0.000000E+00   -1.054719E+00
 12      -3.107242E+00    0.000000E+00   -3.725560E+00
 13      -3.585465E+00    0.000000E+00   -1.189779E+00
 14      -6.584399E+00    0.000000E+00   -3.875874E-01
 15      -4.155954E-09    0.000000E+00    3.752471E-09

EXCESS RESONANCE INTEGRALS

                 RESOLVED

ABSORPTION       2.57082E+02
FISSION          5.33631E-04
                                                             PROCESS NUMBER 1007 IS AT TEMPERATURE=   293.00
```

```
THIS XSDRN WORKING TAPE WAS CREATED 02/21/01 AT 17:18:13
THE TITLE OF THE PARENT CASE IS AS FOLLOWS
SCALE 4.2 - 27 GROUP NEUTRON GROUP LIBRARY
   BASED ON ENDF-B VERSION 4 DATA
      COMPILED FOR NRC     1/27/89
    TAPE ID                          4321          NUMBER OF NUCLIDES                   21
    NUMBER OF NEUTRON GROUPS           27          NUMBER OF GAMMA GROUPS                0
    FIRST THERMAL GROUP                15          LOGICAL UNIT                          4
                              TABLE OF CONTENTS
   HYDROGEN       ENDF/B-IV MAT 1269/THRM1002             UPDATED 08/12/94        ID   3001001
   HYDROGEN       ENDF/B-IV MAT 1269/THRM1002             UPDATED 08/12/94        ID   4001001
   HYDROGEN       ENDF/B-IV MAT 1269/THRM1002             UPDATED 08/12/94        ID   9001001
   CARBON-12      ENDF/B-IV MAT 1274/THRM1065             UPDATED 08/12/94        ID   4006012
   OXYGEN-16      ENDF/B-IV MAT 1276                      UPDATED 08/12/94        ID   3008016
   OXYGEN-16      ENDF/B-IV MAT 1276                      UPDATED 08/12/94        ID   4008016
   OXYGEN-16      ENDF/B-IV MAT 1276                      UPDATED 08/12/94        ID   9008016
  AL-27 1193 218 GP 040375(5)                             UPDATED 08/12/94        ID   1013027
  AL-27 1193 218 GP 040375(5)                             UPDATED 08/12/94        ID   2013027
  AL-27 1193 218 GP 040375(5)                             UPDATED 08/12/94        ID   7013027
  CR 1191 WT SS-304(1/EST) P-3 293K SP=5+4(42375)'        UPDATED 08/12/94        ID   6024304
  CR 1191 WT SS-304(1/EST) P-3 293K SP=5+4(42375)'        UPDATED 08/12/94        ID   8024304
   MANGANESE-55   ENDF/B-IV MAT 1197                      UPDATED 08/12/94        ID   6025055
   MANGANESE-55   ENDF/B-IV MAT 1197                      UPDATED 08/12/94        ID   8025055
  FE 1192 WT SS-304(1/EST) P-3 293K SP=5+4(42375)'        UPDATED 08/12/94        ID   6026304
  FE 1192 WT SS-304(1/EST) P-3 293K SP=5+4(42375)'        UPDATED 08/12/94        ID   8026304
  NI 1190 WT SS-304(1/EST) P-3 293K SP=5+4(42375)'        UPDATED 08/12/94        ID   6028304
  NI 1190 WT SS-304(1/EST) P-3 293K SP=5+4(42375)'        UPDATED 08/12/94        ID   8028304
  PB   1288 218NGP 042375 P-3 293K                        UPDATED 08/12/94        ID   5082000
   URANIUM-235    ENDF/B-IV MAT 1261                      UPDATED 08/12/94        ID   1092235
   URANIUM-238    ENDF/B-IV MAT 1262                      UPDATED 08/12/94        ID   1092238

    TAPE COPY USED      0 I/O'S, AND TOOK    0.11 SECONDS
```

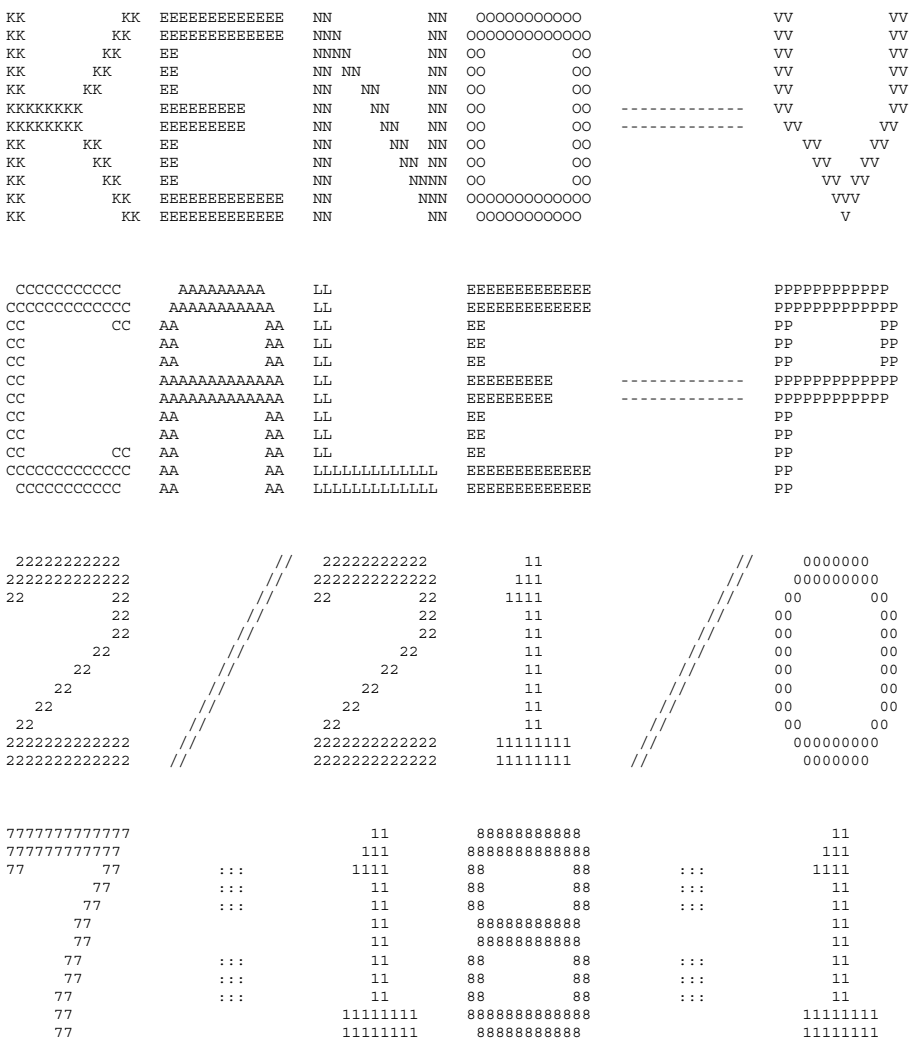
KK KK EEEEEEEEEEEE NN NN OOOOOOOOOO VV VV
KK KK EEEEEEEEEEEE NNN NN OOOOOOOOOOOO VV VV
KK KK EE NNNN NN OO OO VV VV
KK KK EE NN NN NN OO OO VV VV
KK KK EE NN NN NN OO OO VV VV
KKKKKKK EEEEEEEE NN NN NN OO OO VV VV
KKKKKKK EEEEEEEE NN NN NN OO OO VV VV
KK KK EE NN NN NN OO OO VV VV
KK KK EE NN NN NN OO OO VV VV
KK KK EE NN NNNN OO OO VV VV
KK KK EEEEEEEEEEEE NN NNN OOOOOOOOOOOO VVV
KK KK EEEEEEEEEEEE NN NN OOOOOOOOOO V
SSSSSSSSSS CCCCCCCCCC AAAAAAAAA LL EEEEEEEEEEEE PPPPPPPPPP CCCCCCCCCC
SSSSSSSSSSS CCCCCCCCCCCC AAAAAAAAAA LL EEEEEEEEEEEE PPPPPPPPPPP CCCCCCCCCCCC
SS SS CC CC AA AA LL EE PP PP CC CC
SS CC AA AA LL EE PP PP CC
SS CC AA AA LL EE PP PP CC
SSSSSSSSSSS CC AAAAAAAAAAAAA LL EEEEEEEE PPPPPPPPPPP CC
SSSSSSSSSS CC AAAAAAAAAAAAA LL EEEEEEEE PPPPPPPPPP CC
SS CC AA AA LL EE PP CC
SS CC AA AA LL EE PP CC
SS SS CC CC AA AA LL EE PP CC CC
SSSSSSSSSSS CCCCCCCCCCCC AA AA LLLLLLLLLLL EEEEEEEEEEE PP CCCCCCCCCCC
SSSSSSSSSS CCCCCCCCCC AA AA LLLLLLLLLLL EEEEEEEEEEE PP CCCCCCCCCC
0000000 22222222222 // 22222222222 11 // 0000000 11
000000000 2222222222222 // 2222222222222 111 // 000000000 111
00 00 22 22 // 22 22 1111 // 00 00 1111
00 00 22 // 22 11 // 00 00 11
00 00 22 // 22 11 // 00 00 11
00 00 22 // 22 11 // 00 00 11
00 00 22 // 22 11 // 00 00 11
00 00 22 // 22 11 // 00 00 11
00 00 22 // 22 11 // 00 00 11
00 00 22 // 22 11 // 00 00 11
000000000 2222222222222 // 2222222222222 11111111 // 000000000 11111111
0000000 2222222222222 // 2222222222222 11111111 // 0000000 11111111
11 7777777777777 11 88888888888 11 7777777777777
111 777777777777 111 8888888888888 111 777777777777
1111 77 77 ::: 1111 88 88 ::: 1111 77 77
11 77 ::: 11 88 88 ::: 11 77
11 77 ::: 11 88 88 ::: 11 77
11 77 11 88888888888 11 77
11 77 11 88888888888 11 77
11 77 ::: 11 88 88 ::: 11 77
11 77 ::: 11 88 88 ::: 11 77
11 77 ::: 11 88 88 ::: 11 77
11111111 77 11111111 8888888888888 11111111 77
11111111 77 11111111 88888888888 11111111 77

```
  SSSSSSSSSS     CCCCCCCCCC      AAAAAAAA     LL             EEEEEEEEEEEE                 PPPPPPPPPP     CCCCCCCCCC
 SSSSSSSSSSS   CCCCCCCCCCCC    AAAAAAAAAA    LL             EEEEEEEEEEEE                 PPPPPPPPPPP   CCCCCCCCCCCC
 SS          SS CC          CC  AA          AA  LL             EE                           PP         PP  CC          CC
 SS             CC              AA          AA  LL             EE                           PP         PP  CC
 SS             CC              AA          AA  LL             EE                           PP         PP  CC
 SSSSSSSSSSS    CC              AAAAAAAAAAAAAA  LL             EEEEEEEEE       -------------  PPPPPPPPPPP   CC
  SSSSSSSSSSS   CC              AAAAAAAAAAAAAA  LL             EEEEEEEEE       -------------  PPPPPPPPPP    CC
           SS   CC              AA          AA  LL             EE                           PP             CC
           SS   CC              AA          AA  LL             EE                           PP             CC
 SS          SS CC          CC  AA          AA  LL             EE                           PP             CC          CC
 SSSSSSSSSSSS   CCCCCCCCCCCC    AA          AA  LLLLLLLLLLLL   EEEEEEEEEEEE                 PP             CCCCCCCCCCCC
  SSSSSSSSSS     CCCCCCCCCC     AA          AA  LLLLLLLLLLLL   EEEEEEEEEEEE                 PP              CCCCCCCCCC
```

```
*******************************************************************************
*******************************************************************************
*******************************************************************************
*****                                                                     *****
*****                  PROGRAM VERIFICATION INFORMATION                   *****
*****                                                                     *****
*****                CODE SYSTEM:  SCALE-PC VERSION:  4.3                 *****
*****                                                                     *****
*******************************************************************************
*******************************************************************************
*****                                                                     *****
*****                                                                     *****
*****              PROGRAM:  O0O009                                       *****
*****                                                                     *****
*****        CREATION DATE:  03/08/96                                     *****
*****                                                                     *****
*****              VOLUME:   ENG                                          *****
*****                                                                     *****
*****              LIBRARY:  G:\SCALE43\WIN_NT\EXE                        *****
*****                                                                     *****
*****                                                                     *****
*****    THIS IS NOT A SCALE-PC CONFIGURATION CONTROLLED CODE             *****
*****                                                                     *****
*****              JOBNAME:  SCALE-PC                                     *****
*****                                                                     *****
*****    DATE OF EXECUTION:  02/21/01                                     *****
*****                                                                     *****
*****    TIME OF EXECUTION:  17:18:17                                     *****
*****                                                                     *****
*****                                                                     *****
*******************************************************************************
*******************************************************************************
*******************************************************************************
```

```
*****************************************************************************************************************
***                                                                                                           ***
***                                                                                                           ***
***                                                                                                           ***
*****************************************************************************************************************
***                              ******       NUMERIC PARAMETERS       ******                                ***
***                                                                                                           ***
***                                                                                                           ***
***                    TME       MAXIMUM PROBLEM TIME (MIN)                        90.00                    ***
***                                                                                                           ***
***                    TBA       TIME PER GENERATION (MIN)                          5.00                    ***
***                                                                                                           ***
***                    GEN       NUMBER OF GENERATIONS                             1203                     ***
***                                                                                                           ***
***                    NPG       NUMBER PER GENERATION                             1000                     ***
***                                                                                                           ***
***                    NSK       NUMBER OF GENERATIONS TO BE SKIPPED                  3                     ***
***                                                                                                           ***
***                    BEG       BEGINNING GENERATION NUMBER                          1                     ***
***                                                                                                           ***
***                    RES       GENERATIONS BETWEEN CHECKPOINTS                      0                     ***
***                                                                                                           ***
***                    X1D       NUMBER OF EXTRA 1-D CROSS SECTIONS                   1                     ***
***                                                                                                           ***
***                    NBK       NEUTRON BANK SIZE                                 1025                     ***
***                                                                                                           ***
***                    XNB       EXTRA POSITIONS IN NEUTRON BANK                      0                     ***
***                                                                                                           ***
***                    NFB       FISSION BANK SIZE                                 1000                     ***
***                                                                                                           ***
***                    XFB       EXTRA POSITIONS IN FISSION BANK                      0                     ***
***                                                                                                           ***
***                    WTA       DEFAULT VALUE OF WEIGHT AVERAGE                 0.5000                     ***
***                                                                                                           ***
***                    WTH       WEIGHT HIGH FOR SPLITTING                       3.0000                     ***
***                                                                                                           ***
***                    WTL       WEIGHT LOW FOR RUSSIAN ROULETTE                 0.3333                     ***
***                                                                                                           ***
***                    RND       STARTING RANDOM NUMBER                     BB827100001                     ***
***                                                                                                           ***
***                    NB8       NUMBER OF D.A. BLOCKS ON UNIT  8                   200                     ***
***                                                                                                           ***
***                    NL8       LENGTH OF D.A. BLOCKS ON UNIT  8                   512                     ***
***                                                                                                           ***
***                    ADJ       MODE OF CALCULATION                           FORWARD                      ***
***                                                                                                           ***
***                              INPUT DATA WRITTEN ON RESTART UNIT                   NO                     ***
***                                                                                                           ***
***                              BINARY DATA INTERFACE                               YES                     ***
***                                                                                                           ***
***                                                                                                           ***
*****************************************************************************************************************
*****************************************************************************************************************
```

```
*****************************************************************************************************************************
*****************************************************************************************************************************
***                                                                                                                       ***
***                                                                                                                       ***
***                                                                                                                       ***
*****************************************************************************************************************************
***                                ******      LOGICAL PARAMETERS        ******                                         ***
***                                                                                                                       ***
***  RUN  EXECUTE PROBLEM AFTER CHECKING DATA    YES            PLT  PLOT PICTURE MAP(S)                        NO  ***
***                                                                                                                       ***
***  FLX  COMPUTE FLUX                            NO            FDN  COMPUTE FISSION DENSITIES                  NO  ***
***                                                                                                                       ***
***  SMU  COMPUTE AVG UNIT SELF-MULTIPLICATION    NO            NUB  COMPUTE NU-BAR & AVG FISSION GROUP         YES ***
***                                                                                                                       ***
***  MKU  COMPUTE MATRIX K-EFF BY UNIT NUMBER     NO            MKP  COMPUTE MATRIX K-EFF BY UNIT LOCATION      NO  ***
***                                                                                                                       ***
***  CKU  COMPUTE COFACTOR K-EFF BY UNIT NUMBER   NO            CKP  COMPUTE COFACTOR K-EFF BY UNIT LOCATION    NO  ***
***                                                                                                                       ***
***  FMU  PRINT FISS PROD MATRIX BY UNIT NUMBER   NO            FMP  PRINT FISS PROD MATRIX BY UNIT LOCATION    NO  ***
***                                                                                                                       ***
***  MKH  COMPUTE MATRIX K-EFF BY HOLE NUMBER     NO            MKA  COMPUTE MATRIX K-EFF BY ARRAY NUMBER       NO  ***
***                                                                                                                       ***
***  CKH  COMPUTE COFACTOR K-EFF BY HOLE NUMBER   NO            CKA  COMPUTE COFACTOR K-EFF BY ARRAY NUMBER     NO  ***
***                                                                                                                       ***
***  FMH  PRINT FISS PROD MATRIX BY HOLE NUMBER   NO            FMA  PRINT FISS PROD MATRIX BY ARRAY NUMBER     NO  ***
***                                                                                                                       ***
***  HHL  COLLECT MATRIX BY HIGHEST HOLE LEVEL    NO            HAL  COLLECT MATRIX BY HIGHEST ARRAY LEVEL      NO  ***
***                                                                                                                       ***
***  AMX  PRINT ALL MIXED CROSS SECTIONS          NO            FAR  PRINT FIS. AND ABS. BY REGION              NO  ***
***                                                                                                                       ***
***  XS1  PRINT 1-D MIXTURE X-SECTIONS            NO            GAS  PRINT FAR BY GROUP                         NO  ***
***                                                                                                                       ***
***  XS2  PRINT 2-D MIXTURE X-SECTIONS            NO            PAX  PRINT XSEC-ALBEDO CORRELATION TABLES       NO  ***
***                                                                                                                       ***
***  XAP  PRINT MIXTURE ANGLES & PROBABILITIES    NO            PWT  PRINT WEIGHT AVERAGE ARRAY                 NO  ***
***                                                                                                                       ***
***  PKI  PRINT FISSION SPECTRUM                  NO            PGM  PRINT INPUT GEOMETRY                       NO  ***
***                                                                                                                       ***
***  P1D  PRINT EXTRA 1-D CROSS SECTIONS          NO            BUG  PRINT DEBUG INFORMATION                    NO  ***
***                                                                                                                       ***
***                                                             TRK  PRINT TRACKING INFORMATION                 NO  ***
***                                                                                                                       ***
***                                                                                                                       ***
*****************************************************************************************************************************
*****************************************************************************************************************************
*****************************************************************************************************************************
                                    PARAMETER INPUT COMPLETED

                          ........    0 IO'S WERE USED READING THE PARAMETER DATA      ........

                        ************** DATA READING COMPLETED **************
```

```
*******************************************************************************************************************************
***                                                                                                                         ***
***                                                                                                                         ***
***                                                                                                                         ***
*******************************************************************************************************************************
*******************************************************************************************************************************
***                                                                                                                         ***
***          UNIT                                                    VOLUME                                             ***
***         NUMBER              DATA SET NAME                        NAME        UNIT FUNCTION                          ***
***         ------              -------------                        ----        -------------                          ***
***                                                                                                                         ***
***      XSC  14     D:\hjp\plateMin_thclaMin_fuellMin_hteleMin_u                 MIXED CROSS SECTIONS                   ***
***                                                                                                                         ***
***      ALB  79     G:\scale43\DATALIB\FT79F001                                  INPUT ALBEDOS                          ***
***                                                                                                                         ***
***      WTS  80     G:\scale43\DATALIB\FT80F001                                  INPUT WEIGHTS                          ***
***                                                                                                                         ***
***      SKT  16      UNKNOWN                                                     WRITE SCRATCH DATA                     ***
***                                                                                                                         ***
***      BIN  95     D:\hjp\plateMin_thclaMin_fuellMin_hteleMin_u                 BINARY INPUT DATA                      ***
***                                                                                                                         ***
***      RST  95     D:\hjp\plateMin_thclaMin_fuellMin_hteleMin_u                 READ RESTART DATA                      ***
***                                                                                                                         ***
***      LIB   4     D:\hjp\plateMin_thclaMin_fuellMin_hteleMin_u                 INPUT AMPX WORKING LIBRARY             ***
***                                                                                                                         ***
***             8     D:\hjp\plateMin_thclaMin_fuellMin_hteleMin_u                 INPUT DATA DIRECT ACCESS               ***
***                                                                                                                         ***
***             9      UNKNOWN                                                     SUPER GROUPED DIRECT ACCESS            ***
***                                                                                                                         ***
***            10      UNKNOWN                                                     XSEC MIXING DIRECT ACCESS              ***
***                                                                                                                         ***
*******************************************************************************************************************************

                        ........    0 IO'S WERE USED PREPARING INPUT DATA    ........


                          CROSS SECTIONS READ FROM THE AMPX WORKING LIBRARY ON UNIT    4
```

MIXING TABLE

NUMBER OF SCATTERING ANGLES = 2
CROSS SECTION MESSAGE THRESHOLD =3.0E-05

MIXTURE = 1 DENSITY(G/CC) = 2.3407

NUCLIDE	ATOM-DENS.	WGT. FRAC.	ZA	AWT	NUCLIDE TITLE		
1013027	4.00184E-02	7.66010E-01	13027	26.9818	AL-27 1193 218 GP 040375(5)		UPDATED 08/12/94
1092235	1.31908E-03	2.19951E-01	92235	235.0441	URANIUM-235	ENDF/B-IV MAT 1261	UPDATED 08/12/94
1092238	8.31332E-05	1.40394E-02	92238	238.0510	URANIUM-238	ENDF/B-IV MAT 1262	UPDATED 08/12/94

MIXTURE = 2 DENSITY(G/CC) = 2.7020

NUCLIDE	ATOM-DENS.	WGT. FRAC.	ZA	AWT	NUCLIDE TITLE		
2013027	6.03066E-02	1.00000E+00	13027	26.9818	AL-27 1193 218 GP 040375(5)		UPDATED 08/12/94

MIXTURE = 3 DENSITY(G/CC) = 0.99977

NUCLIDE	ATOM-DENS.	WGT. FRAC.	ZA	AWT	NUCLIDE TITLE		
3001001	6.68762E-02	1.11927E-01	1001	1.0077	HYDROGEN	ENDF/B-IV MAT 1269/THRM1002	UPDATED 08/12/94
3008016	3.34381E-02	8.88074E-01	8016	15.9904	OXYGEN-16	ENDF/B-IV MAT 1276	UPDATED 08/12/94

MIXTURE = 4 DENSITY(G/CC) = 0.96635

NUCLIDE	ATOM-DENS.	WGT. FRAC.	ZA	AWT	NUCLIDE TITLE		
4001001	5.98801E-02	1.03684E-01	1001	1.0077	HYDROGEN	ENDF/B-IV MAT 1269/THRM1002	UPDATED 08/12/94
4006012	1.07014E-02	2.20668E-01	6000	12.0001	CARBON-12	ENDF/B-IV MAT 1274/THRM1065	UPDATED 08/12/94
4008016	2.45894E-02	6.75649E-01	8016	15.9904	OXYGEN-16	ENDF/B-IV MAT 1276	UPDATED 08/12/94

MIXTURE = 5 DENSITY(G/CC) = 11.344

NUCLIDE	ATOM-DENS.	WGT. FRAC.	ZA	AWT	NUCLIDE TITLE		
5082000	3.29690E-02	1.00000E+00	82000	207.2100	PB 1288 218NGP 042375 P-3 293K		UPDATED 08/12/94

MIXTURE = 6 DENSITY(G/CC) = 7.9200

NUCLIDE	ATOM-DENS.	WGT. FRAC.	ZA	AWT	NUCLIDE TITLE		
6024304	1.74286E-02	1.90000E-01	24000	51.9957	CR 1191 WT SS-304(1/EST) P-3 293K SP=5+4(42375)'		UPDATED 08/12/94
6025055	1.73633E-03	1.99999E-02	25055	54.9379	MANGANESE-55	ENDF/B-IV MAT 1197	UPDATED 08/12/94
6026304	5.93579E-02	6.95000E-01	26000	55.8447	FE 1192 WT SS-304(1/EST) P-3 293K SP=5+4(42375)'		UPDATED 08/12/94
6028304	7.72070E-03	9.50001E-02	28000	58.6872	NI 1190 WT SS-304(1/EST) P-3 293K SP=5+4(42375)'		UPDATED 08/12/94

MIXTURE = 7 DENSITY(G/CC) = 2.7020

NUCLIDE	ATOM-DENS.	WGT. FRAC.	ZA	AWT	NUCLIDE TITLE		
7013027	6.03066E-02	1.00000E+00	13027	26.9818	AL-27 1193 218 GP 040375(5)		UPDATED 08/12/94

MIXTURE = 8 DENSITY(G/CC) = 7.9200

NUCLIDE	ATOM-DENS.	WGT. FRAC.	ZA	AWT	NUCLIDE TITLE		
8024304	1.74286E-02	1.90000E-01	24000	51.9957	CR 1191 WT SS-304(1/EST) P-3 293K SP=5+4(42375)'		UPDATED 08/12/94
8025055	1.73633E-03	1.99999E-02	25055	54.9379	MANGANESE-55	ENDF/B-IV MAT 1197	UPDATED 08/12/94
8026304	5.93579E-02	6.95000E-01	26000	55.8447	FE 1192 WT SS-304(1/EST) P-3 293K SP=5+4(42375)'		UPDATED 08/12/94
8028304	7.72070E-03	9.50001E-02	28000	58.6872	NI 1190 WT SS-304(1/EST) P-3 293K SP=5+4(42375)'		UPDATED 08/12/94

MIXTURE = 9 DENSITY(G/CC) = 0.99997E-04

NUCLIDE	ATOM-DENS.	WGT. FRAC.	ZA	AWT	NUCLIDE TITLE		
9001001	6.68896E-06	1.11927E-01	1001	1.0077	HYDROGEN	ENDF/B-IV MAT 1269/THRM1002	UPDATED 08/12/94
9008016	3.34448E-06	8.88074E-01	8016	15.9904	OXYGEN-16	ENDF/B-IV MAT 1276	UPDATED 08/12/94

3001001	HYDROGEN	ENDF/B-IV MAT 1269/THRM1002	UPDATED 08/12/94
4001001	HYDROGEN	ENDF/B-IV MAT 1269/THRM1002	UPDATED 08/12/94
9001001	HYDROGEN	ENDF/B-IV MAT 1269/THRM1002	UPDATED 08/12/94
4006012	CARBON-12	ENDF/B-IV MAT 1274/THRM1065	UPDATED 08/12/94
3008016	OXYGEN-16	ENDF/B-IV MAT 1276	UPDATED 08/12/94
4008016	OXYGEN-16	ENDF/B-IV MAT 1276	UPDATED 08/12/94
9008016	OXYGEN-16	ENDF/B-IV MAT 1276	UPDATED 08/12/94
1013027	AL-27 1193 218 GP 040375(5)		UPDATED 08/12/94
2013027	AL-27 1193 218 GP 040375(5)		UPDATED 08/12/94
7013027	AL-27 1193 218 GP 040375(5)		UPDATED 08/12/94
6024304	CR 1191 WT SS-304(1/EST) P-3 293K SP=5+4(42375)'		UPDATED 08/12/94
8024304	CR 1191 WT SS-304(1/EST) P-3 293K SP=5+4(42375)'		UPDATED 08/12/94
6025055	MANGANESE-55	ENDF/B-IV MAT 1197	UPDATED 08/12/94
8025055	MANGANESE-55	ENDF/B-IV MAT 1197	UPDATED 08/12/94
6026304	FE 1192 WT SS-304(1/EST) P-3 293K SP=5+4(42375)'		UPDATED 08/12/94
8026304	FE 1192 WT SS-304(1/EST) P-3 293K SP=5+4(42375)'		UPDATED 08/12/94

```
                          6028304    NI 1190 WT SS-304(1/EST) P-3 293K SP=5+4(42375)'        UPDATED 08/12/94
                          8028304    NI 1190 WT SS-304(1/EST) P-3 293K SP=5+4(42375)'        UPDATED 08/12/94
                          5082000    PB   1288 218NGP 042375 P-3 293K                        UPDATED 08/12/94
                          1092235     URANIUM-235    ENDF/B-IV MAT 1261                      UPDATED 08/12/94
                          1092238     URANIUM-238    ENDF/B-IV MAT 1262                      UPDATED 08/12/94

KENO MESSAGE NUMBER K5-222       1 TRANSFERS FOR MIXTURE     3 WERE CORRECTED FOR BAD MOMENTS.

KENO MESSAGE NUMBER K5-222       1 TRANSFERS FOR MIXTURE     4 WERE CORRECTED FOR BAD MOMENTS.

KENO MESSAGE NUMBER K5-222       1 TRANSFERS FOR MIXTURE     9 WERE CORRECTED FOR BAD MOMENTS.

                            ........    0 IO'S WERE USED MIXING CROSS-SECTIONS       ........

                             1-D CROSS SECTION ARRAY ID NUMBERS
                                1  2002  1452    27    18  1018

                            ........    0 IO'S WERE USED PREPARING THE CROSS SECTIONS    ........
```

```
*****************************************************************************************************
***                                                                                               ***
***                                                                                               ***
***                                                                                               ***
*****************************************************************************************************
*****************************************************************************************************
***                                                                                               ***
***                              ****** ADDITIONAL INFORMATION ******                             ***
***                                                                                               ***
***  NUMBER OF ENERGY GROUPS              27       USE LATTICE GEOMETRY                    YES  ***
***                                                                                               ***
***  NO. OF FISSION SPECTRUM SOURCE GROUP  1       GLOBAL ARRAY NUMBER                       1  ***
***                                                                                               ***
***  NO. OF SCATTERING ANGLES IN XSECS     2       NUMBER OF UNITS IN THE GLOBAL X DIR.      1  ***
***                                                                                               ***
***  ENTRIES/NEUTRON IN THE NEUTRON BANK  22       NUMBER OF UNITS IN THE GLOBAL Y DIR.      1  ***
***                                                                                               ***
***  ENTRIES/NEUTRON IN THE FISSION BANK  15       NUMBER OF UNITS IN THE GLOBAL Z DIR.      3  ***
***                                                                                               ***
***  NUMBER OF MIXTURES USED               8       USE A GLOBAL REFLECTOR                  YES  ***
***                                                                                               ***
***  NUMBER OF BIAS ID'S USED              1       USE NESTED HOLES                        YES  ***
***                                                                                               ***
***  NUMBER OF DIFFERENTIAL ALBEDOS USED   0       NUMBER OF HOLES                          75  ***
***                                                                                               ***
***  TOTAL INPUT GEOMETRY REGIONS         56       MAXIMUM HOLE NESTING LEVEL                5  ***
***                                                                                               ***
***  NUMBER OF GEOMETRY REGIONS USED      56       USE NESTED ARRAYS                        NO  ***
***                                                                                               ***
***  LARGEST GEOMETRY UNIT NUMBER         15       NUMBER OF ARRAYS USED                     1  ***
***                                                                                               ***
***  LARGEST ARRAY NUMBER                  1       MAXIMUM ARRAY NESTING LEVEL               1  ***
***                                                                                               ***
***                                                                                               ***
***  +X BOUNDARY CONDITION            MIRROR       -X BOUNDARY CONDITION                MIRROR  ***
***                                                                                               ***
***  +Y BOUNDARY CONDITION            MIRROR       -Y BOUNDARY CONDITION                MIRROR  ***
***                                                                                               ***
***  +Z BOUNDARY CONDITION            MIRROR       -Z BOUNDARY CONDITION                MIRROR  ***
***                                                                                               ***
*****************************************************************************************************
```

```
*******************************************************************************************
***                                                                                     ***
***                                                                                     ***
***                                                                                     ***
*******************************************************************************************
*******************************************************************************************
***                                                                                     ***
***                    ****** SPACE AND SUPERGROUP INFORMATION ******                   ***
***                                                                                     ***
***       100000 WORDS IS THE TOTAL SPACE AVAILABLE.                                    ***
***                                                                                     ***
***        42609 WORDS WERE USED FOR NON-SUPERGROUP STORAGE.                            ***
***                                                                                     ***
***        57391 WORDS OF STORAGE ARE AVAILABLE FOR SUPERGROUPED DATA.                  ***
***                                                                                     ***
***        99738 WORDS OF STORAGE ARE AVAILABLE FOR CONSTRUCTING THE SUPERGROUPS.       ***
***                                                                                     ***
***        57331 WORDS OF STORAGE ARE AVAILABLE TO EACH SUPERGROUP.                     ***
***                                                                                     ***
***         1037 WORDS ARE NEEDED FOR THE LARGEST GROUP.                                ***
***                                                                                     ***
***        43862 WORDS OF STORAGE IS SUFFICIENT TO RUN THIS PROBLEM.                    ***
***                                                                                     ***
***        53220 WORDS OF STORAGE WILL ALLOW THE PROBLEM TO RUN WITH ONE SUPERGROUP.     ***
***                                                                                     ***
***        53408 WORDS OF STORAGE WILL BE USED TO RUN THIS PROBLEM.                     ***
***                                                                                     ***
*******************************************************************************************
*******************************************************************************************
***                                                                                     ***
***                   STARTING      ENDING       XSEC       ALBEDO      TOTAL          ***
***   SUPERGROUP        GROUP        GROUP      LENGTH      LENGTH      LENGTH          ***
***                                                                                     ***
***                                                                                     ***
***          1            1            27         2010           0       10551          ***
***                                                                                     ***
*******************************************************************************************

            ........    0 IO'S WERE USED IN SUPERGROUPING    ........

            ........    0 IO'S WERE USED LOADING THE DATA    ........
```

```
                MEDIA BIAS      GEOMETRY DESCRIPTION FOR THOSE UNITS UTILIZED IN THIS PROBLEM
REGION           NUM   ID

                                                 -----   UNIT     1   -----

FUELED ANNULAR SECTIONS       TUBE  1  LOOSE

  1 CYLINDER         3  1  RADIUS =  3.0300     +Z =  58.750     -Z = 0.00000     CENTERLINE IS AT  X = 0.00000      Y = 0.00000

  2 CYLINDER         2  1  RADIUS =  3.0625     +Z =  58.750     -Z = 0.00000     CENTERLINE IS AT  X = 0.00000      Y = 0.00000

  3 CYLINDER         1  1  RADIUS =  3.1275     +Z =  58.750     -Z = 0.00000     CENTERLINE IS AT  X = 0.00000      Y = 0.00000

  4 CYLINDER         2  1  RADIUS =  3.1600     +Z =  58.750     -Z = 0.00000     CENTERLINE IS AT  X = 0.00000      Y = 0.00000

  5 CYLINDER         3  1  RADIUS =  3.5300     +Z =  58.750     -Z = 0.00000     CENTERLINE IS AT  X = 0.00000      Y = 0.00000

  6 CYLINDER         2  1  RADIUS =  3.5625     +Z =  58.750     -Z = 0.00000     CENTERLINE IS AT  X = 0.00000      Y = 0.00000

  7 CYLINDER         1  1  RADIUS =  3.6275     +Z =  58.750     -Z = 0.00000     CENTERLINE IS AT  X = 0.00000      Y = 0.00000

  8 CYLINDER         2  1  RADIUS =  3.6600     +Z =  58.750     -Z = 0.00000     CENTERLINE IS AT  X = 0.00000      Y = 0.00000

  9 CYLINDER         3  1  RADIUS =  4.0300     +Z =  58.750     -Z = 0.00000     CENTERLINE IS AT  X = 0.00000      Y = 0.00000

 10 CYLINDER         2  1  RADIUS =  4.0625     +Z =  58.750     -Z = 0.00000     CENTERLINE IS AT  X = 0.00000      Y = 0.00000

 11 CYLINDER         1  1  RADIUS =  4.1275     +Z =  58.750     -Z = 0.00000     CENTERLINE IS AT  X = 0.00000      Y = 0.00000

 12 CYLINDER         2  1  RADIUS =  4.1600     +Z =  58.750     -Z = 0.00000     CENTERLINE IS AT  X = 0.00000      Y = 0.00000

 13 CYLINDER         3  1  RADIUS =  4.5300     +Z =  58.750     -Z = 0.00000     CENTERLINE IS AT  X = 0.00000      Y = 0.00000

 14 CYLINDER         2  1  RADIUS =  4.5625     +Z =  58.750     -Z = 0.00000     CENTERLINE IS AT  X = 0.00000      Y = 0.00000

 15 CYLINDER         1  1  RADIUS =  4.6275     +Z =  58.750     -Z = 0.00000     CENTERLINE IS AT  X = 0.00000      Y = 0.00000

 16 CYLINDER         2  1  RADIUS =  4.6599     +Z =  58.750     -Z = 0.00000     CENTERLINE IS AT  X = 0.00000      Y = 0.00000
```

```
                MEDIA BIAS      GEOMETRY DESCRIPTION FOR THOSE UNITS UTILIZED IN THIS PROBLEM
REGION           NUM   ID

                                                -----   UNIT     2   -----

AXIAL CLAD SECTIONS       TUBE  1  LOOSE

  1 CYLINDER         3  1  RADIUS =  3.0300     +Z =  1.3750     -Z = 0.00000     CENTERLINE IS AT  X = 0.00000      Y = 0.00000

  2 CYLINDER         2  1  RADIUS =  3.1600     +Z =  1.3750     -Z = 0.00000     CENTERLINE IS AT  X = 0.00000      Y = 0.00000

  3 CYLINDER         3  1  RADIUS =  3.5300     +Z =  1.3750     -Z = 0.00000     CENTERLINE IS AT  X = 0.00000      Y = 0.00000

  4 CYLINDER         2  1  RADIUS =  3.6600     +Z =  1.3750     -Z = 0.00000     CENTERLINE IS AT  X = 0.00000      Y = 0.00000

  5 CYLINDER         3  1  RADIUS =  4.0300     +Z =  1.3750     -Z = 0.00000     CENTERLINE IS AT  X = 0.00000      Y = 0.00000

  6 CYLINDER         2  1  RADIUS =  4.1600     +Z =  1.3750     -Z = 0.00000     CENTERLINE IS AT  X = 0.00000      Y = 0.00000

  7 CYLINDER         3  1  RADIUS =  4.5300     +Z =  1.3750     -Z = 0.00000     CENTERLINE IS AT  X = 0.00000      Y = 0.00000

  8 CYLINDER         2  1  RADIUS =  4.6599     +Z =  1.3750     -Z = 0.00000     CENTERLINE IS AT  X = 0.00000      Y = 0.00000

                                                -----   UNIT     3   -----

FUEL ELEMENT      TUBE  1

  1 CYLINDER         3  1  RADIUS =  4.6600     +Z =  61.500     -Z = 0.00000     CENTERLINE IS AT  X = 0.00000      Y = 0.00000

    HOLE NUMBER      1       AT X = 0.00000      Y = 0.00000      Z = 0.00000     IS UNIT NUMBER      2

    HOLE NUMBER      2       AT X = 0.00000      Y = 0.00000      Z =  1.3750     IS UNIT NUMBER      1

    HOLE NUMBER      3       AT X = 0.00000      Y = 0.00000      Z =  60.125     IS UNIT NUMBER      2

                                                -----   UNIT     4   -----

BASKET FUEL TUBE - FUEL DOWN        RADIAL CENTERED

  1 CYLINDER         3  1  RADIUS =  5.0927     +Z =  73.177     -Z = 0.00000     CENTERLINE IS AT  X = 0.00000      Y = 0.00000

    HOLE NUMBER      4       AT X = 0.00000      Y = 0.00000      Z = 0.00000     IS UNIT NUMBER      3

  2 CYLINDER         2  1  RADIUS =  5.3974     +Z =  73.177     -Z = 0.00000     CENTERLINE IS AT  X = 0.00000      Y = 0.00000

                                                -----   UNIT     5   -----

BASKET FUEL TUBE - FUEL UP        RADIAL CENTERED

  1 CYLINDER         3  1  RADIUS =  5.0927     +Z =  73.177     -Z = 0.00000     CENTERLINE IS AT  X = 0.00000      Y = 0.00000

    HOLE NUMBER      5       AT X = 0.00000      Y = 0.00000      Z =  11.677     IS UNIT NUMBER      3

  2 CYLINDER         2  1  RADIUS =  5.3974     +Z =  73.177     -Z = 0.00000     CENTERLINE IS AT  X = 0.00000      Y = 0.00000
```

```
                MEDIA BIAS      GEOMETRY DESCRIPTION FOR THOSE UNITS UTILIZED IN THIS PROBLEM
REGION           NUM   ID

                                                -----   UNIT     6   -----

BASKET BOTTOM PLATE HOLE

  1 CYLINDER         3  1  RADIUS =  1.2700     +Z =  1.2698     -Z = 0.00000     CENTERLINE IS AT  X = 0.00000      Y = 0.00000

                                                -----   UNIT     7   -----

BASKET BOTTOM PLATE

  1 CYLINDER         6  1  RADIUS =  16.847     +Z =  1.2698     -Z = 0.00000     CENTERLINE IS AT  X = 0.00000      Y = 0.00000

    HOLE NUMBER      6       AT X = 0.00000      Y = 0.00000      Z = 0.00000     IS UNIT NUMBER      6

    HOLE NUMBER      7       AT X =  10.795      Y = 0.00000      Z = 0.00000     IS UNIT NUMBER      6

    HOLE NUMBER      8       AT X =  5.3975      Y =  9.3487      Z = 0.00000     IS UNIT NUMBER      6

    HOLE NUMBER      9       AT X = -5.3975      Y =  9.3487      Z = 0.00000     IS UNIT NUMBER      6

    HOLE NUMBER     10       AT X = -10.795      Y = 0.00000      Z = 0.00000     IS UNIT NUMBER      6

    HOLE NUMBER     11       AT X = -5.3975      Y = -9.3487      Z = 0.00000     IS UNIT NUMBER      6

    HOLE NUMBER     12       AT X =  5.3975      Y = -9.3487      Z = 0.00000     IS UNIT NUMBER      6

                                                -----   UNIT     8   -----

HEAT TRANSFER BAR / ROD

  1 CYLINDER         7  1  RADIUS = 0.31650     +Z =  73.177     -Z = 0.00000     CENTERLINE IS AT  X = 0.00000      Y = 0.00000
```

```
                MEDIA BIAS      GEOMETRY DESCRIPTION FOR THOSE UNITS UTILIZED IN THIS PROBLEM
REGION           NUM   ID

                                                -----   UNIT     9   -----

BASKET FUEL DOWN

  1 CYLINDER         3  1  RADIUS =  16.193     +Z =  73.177     -Z = 0.00000     CENTERLINE IS AT  X = 0.00000      Y = 0.00000

    HOLE NUMBER     13       AT X = 0.00000      Y = 0.00000      Z = 0.00000     IS UNIT NUMBER      4

    HOLE NUMBER     14       AT X =  10.795      Y = 0.00000      Z = 0.00000     IS UNIT NUMBER      4

    HOLE NUMBER     15       AT X =  4.9493      Y =  2.8575      Z = 0.00000     IS UNIT NUMBER      8

    HOLE NUMBER     16       AT X =  4.6024      Y =  3.3881      Z = 0.00000     IS UNIT NUMBER      8

    HOLE NUMBER     17       AT X =  5.2354      Y =  2.2917      Z = 0.00000     IS UNIT NUMBER      8

    HOLE NUMBER     18       AT X =  5.3975      Y =  9.3487      Z = 0.00000     IS UNIT NUMBER      4

    HOLE NUMBER     19       AT X = 0.00000      Y =  5.7150      Z = 0.00000     IS UNIT NUMBER      8

    HOLE NUMBER     20       AT X =-0.63300      Y =  5.6798      Z = 0.00000     IS UNIT NUMBER      8

    HOLE NUMBER     21       AT X = 0.63300      Y =  5.6798      Z = 0.00000     IS UNIT NUMBER      8

    HOLE NUMBER     22       AT X = -5.3975      Y =  9.3487      Z = 0.00000     IS UNIT NUMBER      4

    HOLE NUMBER     23       AT X = -4.9493      Y =  2.8575      Z = 0.00000     IS UNIT NUMBER      8

    HOLE NUMBER     24       AT X = -5.2354      Y =  2.2917      Z = 0.00000     IS UNIT NUMBER      8

    HOLE NUMBER     25       AT X = -4.6024      Y =  3.3881      Z = 0.00000     IS UNIT NUMBER      8

    HOLE NUMBER     26       AT X = -10.795      Y = 0.00000      Z = 0.00000     IS UNIT NUMBER      4

    HOLE NUMBER     27       AT X = -4.9493      Y = -2.8575      Z = 0.00000     IS UNIT NUMBER      8

    HOLE NUMBER     28       AT X = -4.6024      Y = -3.3881      Z = 0.00000     IS UNIT NUMBER      8

    HOLE NUMBER     29       AT X = -5.2354      Y = -2.2917      Z = 0.00000     IS UNIT NUMBER      8

    HOLE NUMBER     30       AT X = -5.3975      Y = -9.3487      Z = 0.00000     IS UNIT NUMBER      4

    HOLE NUMBER     31       AT X = 0.00000      Y = -5.7150      Z = 0.00000     IS UNIT NUMBER      8

    HOLE NUMBER     32       AT X = 0.63300      Y = -5.6798      Z = 0.00000     IS UNIT NUMBER      8

    HOLE NUMBER     33       AT X =-0.63300      Y = -5.6798      Z = 0.00000     IS UNIT NUMBER      8

    HOLE NUMBER     34       AT X =  5.3975      Y = -9.3487      Z = 0.00000     IS UNIT NUMBER      4

    HOLE NUMBER     35       AT X =  4.9493      Y = -2.8575      Z = 0.00000     IS UNIT NUMBER      8

    HOLE NUMBER     36       AT X =  5.2354      Y = -2.2917      Z = 0.00000     IS UNIT NUMBER      8

    HOLE NUMBER     37       AT X =  4.6024      Y = -3.3881      Z = 0.00000     IS UNIT NUMBER      8

  2 CYLINDER         7  1  RADIUS =  16.669     +Z =  73.177     -Z = 0.00000     CENTERLINE IS AT  X = 0.00000      Y = 0.00000

  3 CYLINDER         3  1  RADIUS =  16.847     +Z =  73.177     -Z = 0.00000     CENTERLINE IS AT  X = 0.00000      Y = 0.00000
```

```
                MEDIA BIAS      GEOMETRY DESCRIPTION FOR THOSE UNITS UTILIZED IN THIS PROBLEM
REGION           NUM   ID

                                                -----   UNIT    10   -----

BASKET FUEL UP

  1 CYLINDER         3  1  RADIUS =  16.193     +Z =  73.177     -Z = 0.00000     CENTERLINE IS AT  X = 0.00000      Y = 0.00000

    HOLE NUMBER     38       AT X = 0.00000      Y = 0.00000      Z = 0.00000     IS UNIT NUMBER      5

    HOLE NUMBER     39       AT X =  10.795      Y = 0.00000      Z = 0.00000     IS UNIT NUMBER      5

    HOLE NUMBER     40       AT X =  4.9493      Y =  2.8575      Z = 0.00000     IS UNIT NUMBER      8

    HOLE NUMBER     41       AT X =  4.6024      Y =  3.3881      Z = 0.00000     IS UNIT NUMBER      8

    HOLE NUMBER     42       AT X =  5.2354      Y =  2.2917      Z = 0.00000     IS UNIT NUMBER      8

    HOLE NUMBER     43       AT X =  5.3975      Y =  9.3487      Z = 0.00000     IS UNIT NUMBER      5

    HOLE NUMBER     44       AT X = 0.00000      Y =  5.7150      Z = 0.00000     IS UNIT NUMBER      8

    HOLE NUMBER     45       AT X =-0.63300      Y =  5.6798      Z = 0.00000     IS UNIT NUMBER      8

    HOLE NUMBER     46       AT X = 0.63300      Y =  5.6798      Z = 0.00000     IS UNIT NUMBER      8

    HOLE NUMBER     47       AT X = -5.3975      Y =  9.3487      Z = 0.00000     IS UNIT NUMBER      5

    HOLE NUMBER     48       AT X = -4.9493      Y =  2.8575      Z = 0.00000     IS UNIT NUMBER      8

    HOLE NUMBER     49       AT X = -5.2354      Y =  2.2917      Z = 0.00000     IS UNIT NUMBER      8

    HOLE NUMBER     50       AT X = -4.6024      Y =  3.3881      Z = 0.00000     IS UNIT NUMBER      8

    HOLE NUMBER     51       AT X = -10.795      Y = 0.00000      Z = 0.00000     IS UNIT NUMBER      5

    HOLE NUMBER     52       AT X = -4.9493      Y = -2.8575      Z = 0.00000     IS UNIT NUMBER      8

    HOLE NUMBER     53       AT X = -4.6024      Y = -3.3881      Z = 0.00000     IS UNIT NUMBER      8

    HOLE NUMBER     54       AT X = -5.2354      Y = -2.2917      Z = 0.00000     IS UNIT NUMBER      8

    HOLE NUMBER     55       AT X = -5.3975      Y = -9.3487      Z = 0.00000     IS UNIT NUMBER      5

    HOLE NUMBER     56       AT X = 0.00000      Y = -5.7150      Z = 0.00000     IS UNIT NUMBER      8

    HOLE NUMBER     57       AT X = 0.63300      Y = -5.6798      Z = 0.00000     IS UNIT NUMBER      8

    HOLE NUMBER     58       AT X =-0.63300      Y = -5.6798      Z = 0.00000     IS UNIT NUMBER      8

    HOLE NUMBER     59       AT X =  5.3975      Y = -9.3487      Z = 0.00000     IS UNIT NUMBER      5

    HOLE NUMBER     60       AT X =  4.9493      Y = -2.8575      Z = 0.00000     IS UNIT NUMBER      8

    HOLE NUMBER     61       AT X =  5.2354      Y = -2.2917      Z = 0.00000     IS UNIT NUMBER      8

    HOLE NUMBER     62       AT X =  4.6024      Y = -3.3881      Z = 0.00000     IS UNIT NUMBER      8

  2 CYLINDER         7  1  RADIUS =  16.669     +Z =  73.177     -Z = 0.00000     CENTERLINE IS AT  X = 0.00000      Y = 0.00000

  3 CYLINDER         3  1  RADIUS =  16.847     +Z =  73.177     -Z = 0.00000     CENTERLINE IS AT  X = 0.00000      Y = 0.00000
```

```
                MEDIA BIAS      GEOMETRY DESCRIPTION FOR THOSE UNITS UTILIZED IN THIS PROBLEM
REGION           NUM   ID

                                                -----   UNIT    11   -----

CASK CAVITY

  1 CYLINDER         3  1  RADIUS =  16.986     +Z =  446.68     -Z = 0.00000     CENTERLINE IS AT  X = 0.00000      Y = 0.00000

    HOLE NUMBER     63       AT X = 0.00000      Y = 0.00000      Z = 1.00000E-04 IS UNIT NUMBER      7

    HOLE NUMBER     64       AT X = 0.00000      Y = 0.00000      Z =  1.2700     IS UNIT NUMBER     10

    HOLE NUMBER     65       AT X = 0.00000      Y = 0.00000      Z =  74.448     IS UNIT NUMBER      7

    HOLE NUMBER     66       AT X = 0.00000      Y = 0.00000      Z =  75.717     IS UNIT NUMBER      9

    HOLE NUMBER     67       AT X = 0.00000      Y = 0.00000      Z =  148.89     IS UNIT NUMBER      7

    HOLE NUMBER     68       AT X = 0.00000      Y = 0.00000      Z =  150.16     IS UNIT NUMBER     10

    HOLE NUMBER     69       AT X = 0.00000      Y = 0.00000      Z =  223.34     IS UNIT NUMBER      7

    HOLE NUMBER     70       AT X = 0.00000      Y = 0.00000      Z =  224.61     IS UNIT NUMBER      9

    HOLE NUMBER     71       AT X = 0.00000      Y = 0.00000      Z =  297.79     IS UNIT NUMBER      7

    HOLE NUMBER     72       AT X = 0.00000      Y = 0.00000      Z =  299.06     IS UNIT NUMBER     10

    HOLE NUMBER     73       AT X = 0.00000      Y = 0.00000      Z =  372.24     IS UNIT NUMBER      7

    HOLE NUMBER     74       AT X = 0.00000      Y = 0.00000      Z =  373.51     IS UNIT NUMBER      9

                                                -----   UNIT    12   -----

CASK SHIELD RADIAL CONFIGURATION

  1 CYLINDER         3  1  RADIUS =  16.986     +Z =  446.68     -Z = 0.00000     CENTERLINE IS AT  X = 0.00000      Y = 0.00000

    HOLE NUMBER     75       AT X = 0.00000      Y = 0.00000      Z = 0.00000     IS UNIT NUMBER     11

  2 CYLINDER         8  1  RADIUS =  18.910     +Z =  446.68     -Z = 0.00000     CENTERLINE IS AT  X = 0.00000      Y = 0.00000

  3 CYLINDER         5  1  RADIUS =  33.465     +Z =  446.68     -Z = 0.00000     CENTERLINE IS AT  X = 0.00000      Y = 0.00000

  4 CYLINDER         8  1  RADIUS =  36.519     +Z =  446.68     -Z = 0.00000     CENTERLINE IS AT  X = 0.00000      Y = 0.00000

  5 CYLINDER         9  1  RADIUS =  49.219     +Z =  446.68     -Z = 0.00000     CENTERLINE IS AT  X = 0.00000      Y = 0.00000

  6 CYLINDER         8  1  RADIUS =  49.818     +Z =  446.68     -Z = 0.00000     CENTERLINE IS AT  X = 0.00000      Y = 0.00000

  7 CUBOID           9  1      +X =  49.818     -X = -49.818     +Y =  49.818     -Y = -49.818     +Z =  446.68     -Z = 0.00000
```

```
                MEDIA BIAS      GEOMETRY DESCRIPTION FOR THOSE UNITS UTILIZED IN THIS PROBLEM
REGION           NUM   ID

                                                -----   UNIT    13   -----

LWT LID

  1 CYLINDER         8  1  RADIUS =  36.519     +Z =  28.575     -Z = 0.59940     CENTERLINE IS AT  X = 0.00000      Y = 0.00000

  2 CYLINDER         9  1  RADIUS =  49.818     +Z =  28.575     -Z = 0.59940     CENTERLINE IS AT  X = 0.00000      Y = 0.00000

  3 CYLINDER         8  1  RADIUS =  49.818     +Z =  28.575     -Z = 0.00000     CENTERLINE IS AT  X = 0.00000      Y = 0.00000

  4 CUBOID           9  1       +X =  49.818     -X = -49.818     +Y =  49.818     -Y = -49.818     +Z =  28.575     -Z = 0.00000

                                                -----   UNIT    14   -----

LWT BOTTOM WELDMENT

  1 CYLINDER         5  1  RADIUS =  26.353     +Z =  16.510     -Z =  8.8900     CENTERLINE IS AT  X = 0.00000      Y = 0.00000

  2 CYLINDER         8  1  RADIUS =  36.519     +Z =  26.071     -Z = 0.00000     CENTERLINE IS AT  X = 0.00000      Y = 0.00000

  3 CYLINDER         9  1  RADIUS =  49.818     +Z =  26.071     -Z = 0.00000     CENTERLINE IS AT  X = 0.00000      Y = 0.00000

  4 CYLINDER         8  1  RADIUS =  49.818     +Z =  26.670     -Z = 0.00000     CENTERLINE IS AT  X = 0.00000      Y = 0.00000

  5 CUBOID           9  1       +X =  49.818     -X = -49.818     +Y =  49.818     -Y = -49.818     +Z =  26.670     -Z = 0.00000

                                    ******************   GLOBAL   ******************
                                    -----   UNIT    15  EXTERNAL TO LATTICE  1   -----

LWT CASK

  1 ARRAY NUMBER     1         +X =  49.818     -X = -49.818     +Y =  49.818     -Y = -49.818     +Z =  501.93     -Z = 0.00000
```

```
                -------  UNIT ORIENTATION DESCRIPTION FOR ARRAY   1         -------

Z LAYER   1, X COLUMN   1 TO   1 LEFT TO RIGHT   Y ROW   1 TO   1  BOTTOM TO TOP

 14
Z LAYER   2, X COLUMN   1 TO   1 LEFT TO RIGHT   Y ROW   1 TO   1  BOTTOM TO TOP

 12
Z LAYER   3, X COLUMN   1 TO   1 LEFT TO RIGHT   Y ROW   1 TO   1  BOTTOM TO TOP

 13
```

VOLUMES FOR THOSE UNITS UTILIZED IN THIS PROBLEM

UNIT	REGION	GEOMETRY REGION	VOLUME	CUMULATIVE VOLUME
1	1	1	1.69451E+03 CM**3	1.69451E+03 CM**3
	2	2	3.65458E+01 CM**3	1.73105E+03 CM**3
	3	3	7.42612E+01 CM**3	1.80531E+03 CM**3
	4	4	3.77155E+01 CM**3	1.84303E+03 CM**3
	5	5	4.56862E+02 CM**3	2.29989E+03 CM**3
	6	6	4.25442E+01 CM**3	2.34243E+03 CM**3
	7	7	8.62583E+01 CM**3	2.42869E+03 CM**3
	8	8	4.37139E+01 CM**3	2.47241E+03 CM**3
	9	9	5.25153E+02 CM**3	2.99756E+03 CM**3
	10	10	4.85422E+01 CM**3	3.04610E+03 CM**3
	11	11	9.82551E+01 CM**3	3.14436E+03 CM**3
	12	12	4.97122E+01 CM**3	3.19407E+03 CM**3
	13	13	5.93444E+02 CM**3	3.78751E+03 CM**3
	14	14	5.45405E+01 CM**3	3.84205E+03 CM**3
	15	15	1.10252E+02 CM**3	3.95231E+03 CM**3
	16	16	5.55391E+01 CM**3	4.00785E+03 CM**3
2	1	17	3.96586E+01 CM**3	3.96586E+01 CM**3
	2	18	3.47606E+00 CM**3	4.31347E+01 CM**3
	3	19	1.06925E+01 CM**3	5.38272E+01 CM**3
	4	20	4.03762E+00 CM**3	5.78648E+01 CM**3
	5	21	1.22908E+01 CM**3	7.01557E+01 CM**3
	6	22	4.59916E+00 CM**3	7.47548E+01 CM**3
	7	23	1.38891E+01 CM**3	8.86439E+01 CM**3
	8	24	5.15671E+00 CM**3	9.38006E+01 CM**3
3	1	25	1.79337E-01 CM**3	4.19563E+03 CM**3
4	1	26	1.76679E+03 CM**3	5.96242E+03 CM**3
	2	27	7.34815E+02 CM**3	6.69723E+03 CM**3
5	1	28	1.76679E+03 CM**3	5.96242E+03 CM**3
	2	29	7.34815E+02 CM**3	6.69723E+03 CM**3
6	1	30	6.43417E+00 CM**3	6.43417E+00 CM**3
7	1	31	1.08713E+03 CM**3	1.13216E+03 CM**3
8	1	32	2.30289E+01 CM**3	2.30289E+01 CM**3
9	1	33	1.29829E+04 CM**3	6.02781E+04 CM**3
	2	34	3.59751E+03 CM**3	6.38756E+04 CM**3
	3	35	1.36994E+03 CM**3	6.52455E+04 CM**3
10	1	36	1.29829E+04 CM**3	6.02781E+04 CM**3
	2	37	3.59751E+03 CM**3	6.38756E+04 CM**3
	3	38	1.36994E+03 CM**3	6.52455E+04 CM**3
11	1	39	6.63421E+03 CM**3	4.04900E+05 CM**3
12	1	40	0.00000E+00 CM**3	4.04900E+05 CM**3
	2	41	9.69190E+04 CM**3	5.01819E+05 CM**3
	3	42	1.06970E+06 CM**3	1.57152E+06 CM**3
	4	43	2.99966E+05 CM**3	1.87148E+06 CM**3
	5	44	1.52801E+06 CM**3	3.39950E+06 CM**3
	6	45	8.33038E+04 CM**3	3.48280E+06 CM**3
	7	46	9.51639E+05 CM**3	4.43444E+06 CM**3
13	1	47	1.17210E+05 CM**3	1.17210E+05 CM**3
	2	48	1.00916E+05 CM**3	2.18126E+05 CM**3
	3	49	4.67352E+03 CM**3	2.22799E+05 CM**3
	4	50	6.08776E+04 CM**3	2.83677E+05 CM**3
14	1	51	1.66245E+04 CM**3	1.66245E+04 CM**3
	2	52	9.26041E+04 CM**3	1.09229E+05 CM**3
	3	53	9.40439E+04 CM**3	2.03273E+05 CM**3
	4	54	4.67353E+03 CM**3	2.07946E+05 CM**3
	5	55	5.68191E+04 CM**3	2.64765E+05 CM**3

SURROUNDING GEOMETRY VOLUMES - GEOMETRY REGION 56 IS AN ARRAY PLACEMENT BOUNDARY REGION

15	1	56	4.98288E+06 CM**3	4.98288E+06 CM**3

UNIT	USES	REGION	MIXTURE	TOTAL VOLUME
1	42	1	3	7.11692E+04 CM**3
		2	2	1.53492E+03 CM**3
		3	1	3.11897E+03 CM**3
		4	2	1.58405E+03 CM**3
		5	3	1.91882E+04 CM**3
		6	2	1.78686E+03 CM**3
		7	1	3.62285E+03 CM**3
		8	2	1.83598E+03 CM**3
		9	3	2.20564E+04 CM**3
		10	2	2.03877E+03 CM**3
		11	1	4.12672E+03 CM**3
		12	2	2.08791E+03 CM**3

```
                                  13          3         2.49247E+04 CM**3
                                  14          2         2.29070E+03 CM**3
                                  15          1         4.63060E+03 CM**3
                                  16          2         2.33264E+03 CM**3

                2         84       1          3         3.33133E+03 CM**3
                                   2          2         2.91989E+02 CM**3
                                   3          3         8.98172E+02 CM**3
                                   4          2         3.39160E+02 CM**3
                                   5          3         1.03243E+03 CM**3
                                   6          2         3.86329E+02 CM**3
                                   7          3         1.16669E+03 CM**3
                                   8          2         4.33163E+02 CM**3

                3         42       1          3         7.53214E+00 CM**3

                4         21       1          3         3.71026E+04 CM**3
                                   2          2         1.54311E+04 CM**3

                5         21       1          3         3.71026E+04 CM**3
                                   2          2         1.54311E+04 CM**3

                6         42       1          3         2.70235E+02 CM**3

                7          6       1          6         6.52275E+03 CM**3

                8        108       1          7         2.48712E+03 CM**3

                9          3       1          3         3.89488E+04 CM**3
                                   2          7         1.07925E+04 CM**3
                                   3          3         4.10981E+03 CM**3

               10          3       1          3         3.89488E+04 CM**3
                                   2          7         1.07925E+04 CM**3
                                   3          3         4.10981E+03 CM**3

               11          1       1          3         6.63421E+03 CM**3

               12          1       1          3         0.00000E+00 CM**3
                                   2          8         9.69190E+04 CM**3
                                   3          5         1.06970E+06 CM**3
                                   4          8         2.99966E+05 CM**3
                                   5          9         1.52801E+06 CM**3
                                   6          8         8.33038E+04 CM**3
                                   7          9         9.51639E+05 CM**3

               13          1       1          8         1.17210E+05 CM**3
                                   2          9         1.00916E+05 CM**3
                                   3          8         4.67352E+03 CM**3
                                   4          9         6.08776E+04 CM**3

               14          1       1          5         1.66245E+04 CM**3
                                   2          8         9.26041E+04 CM**3
                                   3          9         9.40439E+04 CM**3
                                   4          8         4.67353E+03 CM**3
                                   5          9         5.68191E+04 CM**3

               15          1       1                    4.98288E+06 CM**3


                                TOTAL MIXTURE VOLUMES
                              MIXTURE        TOTAL VOLUME              MASS(G)
                                  1         1.54991E+04 CM**3        3.62788E+04
                                  2         4.78047E+04 CM**3        1.29168E+05
                                  3         3.11002E+05 CM**3        3.10931E+05
                                  5         1.08632E+06 CM**3        1.23233E+07
                                  6         6.52275E+03 CM**3        5.16602E+04
                                  7         2.40722E+04 CM**3        6.50430E+04
                                  8         6.99350E+05 CM**3        5.53885E+06
                                  9         2.79231E+06 CM**3        2.79223E+02

      ********************************************************************************************************************
      ***                                                                                                              ***
      ***                                        BIASING INFORMATION                                                   ***
      ***                                                                                                              ***
      ***     A DEFAULT WEIGHT OF    0.500 WILL BE USED FOR ALL BIAS ID'S.                                             ***
      ***                                                                                                              ***
      ********************************************************************************************************************

                            ........    0 IO'S WERE USED IN KENO-V BEFORE TRACKING       ........

                            ........  0.01100 MINUTES WERE USED PROCESSING DATA.        ........

VOLUME FRACTION OF FISSILE MATERIAL IN THE CORE= 3.11048E-03

START TYPE 0 WAS USED.

THE NEUTRONS WERE STARTED WITH A FLAT DISTRIBUTION IN A CUBOID DEFINED BY:
                     +X= 1.68500E+01  -X=-1.68500E+01  +Y=-1.68500E+01  -Y= 1.68500E+01  +Z= 4.73350E+02  -Z= 2.66700E+01
THE FLAG TO START NEUTRONS IN THE REFLECTOR WAS TURNED OFF

0.93233 MINUTES WERE REQUIRED FOR STARTING.   TOTAL ELAPSED TIME IS 0.93867 MINUTES.
```

GENERATION	GENERATION K-EFFECTIVE	ELAPSED TIME MINUTES	AVERAGE K-EFFECTIVE	AVG K-EFF DEVIATION	MATRIX K-EFFECTIVE	MATRIX K-EFF DEVIATION
1	9.49538E-01	9.66667E-01	1.00000E+00	0.00000E+00	0.00000E+00	0.00000E+00
2	9.17465E-01	9.90500E-01	1.00000E+00	0.00000E+00	0.00000E+00	0.00000E+00
3	9.25396E-01	1.01433E+00	9.25396E-01	0.00000E+00	0.00000E+00	0.00000E+00
4	9.74601E-01	1.03717E+00	9.49998E-01	2.46028E-02	0.00000E+00	0.00000E+00
5	9.07974E-01	1.06100E+00	9.35990E-01	1.99497E-02	0.00000E+00	0.00000E+00
6	9.58538E-01	1.08383E+00	9.41627E-01	1.51911E-02	0.00000E+00	0.00000E+00
7	9.45317E-01	1.10683E+00	9.42365E-01	1.17901E-02	0.00000E+00	0.00000E+00
8	9.27517E-01	1.13067E+00	9.39890E-01	9.93954E-03	0.00000E+00	0.00000E+00
9	9.71780E-01	1.15250E+00	9.44446E-01	9.55624E-03	0.00000E+00	0.00000E+00
10	9.06022E-01	1.17633E+00	9.39643E-01	9.56871E-03	0.00000E+00	0.00000E+00
11	9.35873E-01	1.20117E+00	9.39224E-01	8.44920E-03	0.00000E+00	0.00000E+00
12	9.12748E-01	1.22400E+00	9.36577E-01	8.00758E-03	0.00000E+00	0.00000E+00
13	9.34845E-01	1.24783E+00	9.36419E-01	7.24484E-03	0.00000E+00	0.00000E+00
14	9.15009E-01	1.27067E+00	9.34635E-01	6.85004E-03	0.00000E+00	0.00000E+00
15	9.62264E-01	1.29450E+00	9.36760E-01	6.64988E-03	0.00000E+00	0.00000E+00
16	9.41319E-01	1.31733E+00	9.37086E-01	6.16520E-03	0.00000E+00	0.00000E+00
17	9.05721E-01	1.34117E+00	9.34995E-01	6.10851E-03	0.00000E+00	0.00000E+00
18	9.35457E-01	1.36583E+00	9.35024E-01	5.71406E-03	0.00000E+00	0.00000E+00
19	9.73335E-01	1.38883E+00	9.37277E-01	5.82133E-03	0.00000E+00	0.00000E+00
20	9.36168E-01	1.41250E+00	9.37216E-01	5.48875E-03	0.00000E+00	0.00000E+00
21	9.18860E-01	1.43733E+00	9.36250E-01	5.28096E-03	0.00000E+00	0.00000E+00
22	9.40510E-01	1.46100E+00	9.36463E-01	5.01448E-03	0.00000E+00	0.00000E+00
23	9.45995E-01	1.48400E+00	9.36917E-01	4.79127E-03	0.00000E+00	0.00000E+00
24	9.49764E-01	1.50783E+00	9.37501E-01	4.60547E-03	0.00000E+00	0.00000E+00
25	9.13888E-01	1.53067E+00	9.36474E-01	4.51885E-03	0.00000E+00	0.00000E+00
26	9.37879E-01	1.55450E+00	9.36532E-01	4.32687E-03	0.00000E+00	0.00000E+00
27	9.80078E-01	1.57633E+00	9.38274E-01	4.50088E-03	0.00000E+00	0.00000E+00
28	8.93904E-01	1.60117E+00	9.36568E-01	4.64886E-03	0.00000E+00	0.00000E+00
29	9.35162E-01	1.62400E+00	9.36516E-01	4.47367E-03	0.00000E+00	0.00000E+00
30	9.07047E-01	1.64683E+00	9.35463E-01	4.43755E-03	0.00000E+00	0.00000E+00
31	9.15548E-01	1.67067E+00	9.34776E-01	4.33652E-03	0.00000E+00	0.00000E+00
32	9.11447E-01	1.69450E+00	9.33999E-01	4.26104E-03	0.00000E+00	0.00000E+00
33	9.42132E-01	1.71833E+00	9.34261E-01	4.12963E-03	0.00000E+00	0.00000E+00
34	9.73521E-01	1.74033E+00	9.35488E-01	4.18249E-03	0.00000E+00	0.00000E+00
35	9.12017E-01	1.76400E+00	9.34777E-01	4.11569E-03	0.00000E+00	0.00000E+00
36	9.48197E-01	1.78783E+00	9.35171E-01	4.01226E-03	0.00000E+00	0.00000E+00
37	9.47007E-01	1.81167E+00	9.35510E-01	3.91059E-03	0.00000E+00	0.00000E+00
38	9.50145E-01	1.83450E+00	9.35916E-01	3.82209E-03	0.00000E+00	0.00000E+00
39	9.31024E-01	1.85833E+00	9.35784E-01	3.71971E-03	0.00000E+00	0.00000E+00
40	8.87928E-01	1.88300E+00	9.34525E-01	3.83328E-03	0.00000E+00	0.00000E+00
41	9.50054E-01	1.90683E+00	9.34923E-01	3.75487E-03	0.00000E+00	0.00000E+00
42	9.24555E-01	1.92983E+00	9.34664E-01	3.66896E-03	0.00000E+00	0.00000E+00
43	9.51347E-01	1.95267E+00	9.35071E-01	3.60142E-03	0.00000E+00	0.00000E+00
44	9.12795E-01	1.97733E+00	9.34540E-01	3.55442E-03	0.00000E+00	0.00000E+00
45	9.30073E-01	2.00117E+00	9.34436E-01	3.47233E-03	0.00000E+00	0.00000E+00
46	9.45772E-01	2.02500E+00	9.34694E-01	3.40226E-03	0.00000E+00	0.00000E+00
47	9.21591E-01	2.04783E+00	9.34403E-01	3.33852E-03	0.00000E+00	0.00000E+00
48	9.44161E-01	2.07067E+00	9.34615E-01	3.27202E-03	0.00000E+00	0.00000E+00
49	9.44982E-01	2.09367E+00	9.34835E-01	3.20923E-03	0.00000E+00	0.00000E+00
50	9.45684E-01	2.11750E+00	9.35061E-01	3.14978E-03	0.00000E+00	0.00000E+00
51	9.57844E-01	2.14033E+00	9.35526E-01	3.11967E-03	0.00000E+00	0.00000E+00
52	9.32145E-01	2.16317E+00	9.35459E-01	3.05739E-03	0.00000E+00	0.00000E+00
53	1.00046E+00	2.18517E+00	9.36733E-01	3.25659E-03	0.00000E+00	0.00000E+00
54	9.76345E-01	2.20900E+00	9.37495E-01	3.28295E-03	0.00000E+00	0.00000E+00
55	9.33856E-01	2.23183E+00	9.37426E-01	3.22114E-03	0.00000E+00	0.00000E+00
56	9.18827E-01	2.25383E+00	9.37082E-01	3.17964E-03	0.00000E+00	0.00000E+00
57	9.33764E-01	2.27667E+00	9.37022E-01	3.12187E-03	0.00000E+00	0.00000E+00
58	9.50672E-01	2.30050E+00	9.37265E-01	3.07529E-03	0.00000E+00	0.00000E+00
59	9.34552E-01	2.32433E+00	9.37218E-01	3.02123E-03	0.00000E+00	0.00000E+00
60	9.62475E-01	2.34817E+00	9.37653E-01	3.00046E-03	0.00000E+00	0.00000E+00
61	9.76074E-01	2.37200E+00	9.38304E-01	3.02020E-03	0.00000E+00	0.00000E+00
62	9.37632E-01	2.39383E+00	9.38293E-01	2.96946E-03	0.00000E+00	0.00000E+00
63	9.41751E-01	2.41683E+00	9.38350E-01	2.92092E-03	0.00000E+00	0.00000E+00
64	9.59089E-01	2.43867E+00	9.38684E-01	2.89283E-03	0.00000E+00	0.00000E+00
65	9.70014E-01	2.46250E+00	9.39182E-01	2.88965E-03	0.00000E+00	0.00000E+00
66	9.45509E-01	2.48550E+00	9.39281E-01	2.84586E-03	0.00000E+00	0.00000E+00
67	8.79076E-01	2.50917E+00	9.38354E-01	2.95087E-03	0.00000E+00	0.00000E+00
68	9.18401E-01	2.53217E+00	9.38052E-01	2.92150E-03	0.00000E+00	0.00000E+00
69	9.40542E-01	2.55600E+00	9.38089E-01	2.87781E-03	0.00000E+00	0.00000E+00
70	9.83618E-01	2.57783E+00	9.38759E-01	2.91316E-03	0.00000E+00	0.00000E+00
71	9.30024E-01	2.60167E+00	9.38632E-01	2.87342E-03	0.00000E+00	0.00000E+00
72	9.66689E-01	2.62450E+00	9.39033E-01	2.86029E-03	0.00000E+00	0.00000E+00
73	9.07280E-01	2.64933E+00	9.38586E-01	2.85496E-03	0.00000E+00	0.00000E+00
74	9.27001E-01	2.67400E+00	9.38425E-01	2.81963E-03	0.00000E+00	0.00000E+00
75	9.21773E-01	2.69683E+00	9.38197E-01	2.79007E-03	0.00000E+00	0.00000E+00
76	9.45134E-01	2.71983E+00	9.38290E-01	2.75371E-03	0.00000E+00	0.00000E+00
77	9.50359E-01	2.74350E+00	9.38451E-01	2.72151E-03	0.00000E+00	0.00000E+00
78	9.26346E-01	2.76550E+00	9.38292E-01	2.69018E-03	0.00000E+00	0.00000E+00
79	9.65130E-01	2.78933E+00	9.38641E-01	2.67779E-03	0.00000E+00	0.00000E+00
80	9.06211E-01	2.81317E+00	9.38225E-01	2.67574E-03	0.00000E+00	0.00000E+00
81	9.64141E-01	2.83517E+00	9.38553E-01	2.66194E-03	0.00000E+00	0.00000E+00
82	9.59074E-01	2.85900E+00	9.38809E-01	2.64094E-03	0.00000E+00	0.00000E+00
83	9.28865E-01	2.88183E+00	9.38687E-01	2.61102E-03	0.00000E+00	0.00000E+00
84	9.42305E-01	2.90567E+00	9.38731E-01	2.57936E-03	0.00000E+00	0.00000E+00
85	9.54830E-01	2.92933E+00	9.38925E-01	2.55547E-03	0.00000E+00	0.00000E+00
86	9.07779E-01	2.95233E+00	9.38554E-01	2.55194E-03	0.00000E+00	0.00000E+00
87	9.23838E-01	2.97700E+00	9.38381E-01	2.52767E-03	0.00000E+00	0.00000E+00
88	9.22466E-01	2.99900E+00	9.38196E-01	2.50496E-03	0.00000E+00	0.00000E+00
89	9.51520E-01	3.02283E+00	9.38349E-01	2.48073E-03	0.00000E+00	0.00000E+00
90	9.20859E-01	3.04567E+00	9.38150E-01	2.46042E-03	0.00000E+00	0.00000E+00
91	9.30163E-01	3.07033E+00	9.38060E-01	2.43427E-03	0.00000E+00	0.00000E+00

92	9.03638E-01	3.09417E+00	9.37678E-01	2.43727E-03	0.00000E+00	0.00000E+00
93	9.63904E-01	3.11700E+00	9.37966E-01	2.42750E-03	0.00000E+00	0.00000E+00
94	9.40290E-01	3.14000E+00	9.37991E-01	2.40110E-03	0.00000E+00	0.00000E+00
95	9.67088E-01	3.16200E+00	9.38304E-01	2.39566E-03	0.00000E+00	0.00000E+00
96	9.28079E-01	3.18567E+00	9.38195E-01	2.37254E-03	0.00000E+00	0.00000E+00
97	9.16710E-01	3.20950E+00	9.37969E-01	2.35830E-03	0.00000E+00	0.00000E+00
98	9.04349E-01	3.23333E+00	9.37619E-01	2.35974E-03	0.00000E+00	0.00000E+00
99	9.45791E-01	3.25717E+00	9.37703E-01	2.33680E-03	0.00000E+00	0.00000E+00
100	9.22640E-01	3.28100E+00	9.37550E-01	2.31793E-03	0.00000E+00	0.00000E+00
101	9.47696E-01	3.30383E+00	9.37652E-01	2.29669E-03	0.00000E+00	0.00000E+00
102	9.21694E-01	3.32667E+00	9.37493E-01	2.27920E-03	0.00000E+00	0.00000E+00
103	9.27957E-01	3.34967E+00	9.37398E-01	2.25850E-03	0.00000E+00	0.00000E+00
104	9.61926E-01	3.37333E+00	9.37639E-01	2.24914E-03	0.00000E+00	0.00000E+00
105	9.38029E-01	3.39717E+00	9.37642E-01	2.22720E-03	0.00000E+00	0.00000E+00
106	9.61417E-01	3.42100E+00	9.37871E-01	2.21749E-03	0.00000E+00	0.00000E+00
107	9.17091E-01	3.44483E+00	9.37673E-01	2.20517E-03	0.00000E+00	0.00000E+00
108	9.09695E-01	3.46950E+00	9.37409E-01	2.20016E-03	0.00000E+00	0.00000E+00
109	9.09150E-01	3.49333E+00	9.37145E-01	2.19544E-03	0.00000E+00	0.00000E+00
110	8.82745E-01	3.51617E+00	9.36641E-01	2.23258E-03	0.00000E+00	0.00000E+00
111	9.72105E-01	3.54000E+00	9.36967E-01	2.23580E-03	0.00000E+00	0.00000E+00
112	9.43321E-01	3.56283E+00	9.37024E-01	2.21614E-03	0.00000E+00	0.00000E+00
113	9.39161E-01	3.58767E+00	9.37044E-01	2.19617E-03	0.00000E+00	0.00000E+00
114	9.82694E-01	3.60950E+00	9.37451E-01	2.21431E-03	0.00000E+00	0.00000E+00
115	9.44917E-01	3.63333E+00	9.37517E-01	2.19562E-03	0.00000E+00	0.00000E+00
116	9.35272E-01	3.65633E+00	9.37498E-01	2.17636E-03	0.00000E+00	0.00000E+00
117	9.58157E-01	3.68000E+00	9.37677E-01	2.16482E-03	0.00000E+00	0.00000E+00
118	9.67329E-01	3.70300E+00	9.37933E-01	2.16125E-03	0.00000E+00	0.00000E+00
119	9.56101E-01	3.72667E+00	9.38088E-01	2.14831E-03	0.00000E+00	0.00000E+00
120	9.25867E-01	3.75050E+00	9.37985E-01	2.13255E-03	0.00000E+00	0.00000E+00
121	9.54698E-01	3.77433E+00	9.38125E-01	2.11921E-03	0.00000E+00	0.00000E+00
122	9.52020E-01	3.79717E+00	9.38241E-01	2.10466E-03	0.00000E+00	0.00000E+00
123	9.57472E-01	3.82017E+00	9.38400E-01	2.09324E-03	0.00000E+00	0.00000E+00
124	9.01513E-01	3.84400E+00	9.38097E-01	2.09791E-03	0.00000E+00	0.00000E+00
125	9.23868E-01	3.86683E+00	9.37982E-01	2.08400E-03	0.00000E+00	0.00000E+00
126	9.42828E-01	3.88967E+00	9.38021E-01	2.06749E-03	0.00000E+00	0.00000E+00
127	9.25702E-01	3.91250E+00	9.37922E-01	2.05325E-03	0.00000E+00	0.00000E+00
128	9.27309E-01	3.93550E+00	9.37838E-01	2.03863E-03	0.00000E+00	0.00000E+00
129	9.37097E-01	3.95933E+00	9.37832E-01	2.02253E-03	0.00000E+00	0.00000E+00
130	9.27498E-01	3.98400E+00	9.37752E-01	2.00829E-03	0.00000E+00	0.00000E+00
131	9.58525E-01	4.00683E+00	9.37913E-01	1.99915E-03	0.00000E+00	0.00000E+00
132	9.68885E-01	4.02983E+00	9.38151E-01	1.99797E-03	0.00000E+00	0.00000E+00
133	9.52461E-01	4.05450E+00	9.38260E-01	1.98567E-03	0.00000E+00	0.00000E+00
134	9.24990E-01	4.07917E+00	9.38160E-01	1.97313E-03	0.00000E+00	0.00000E+00
135	9.10651E-01	4.10300E+00	9.37953E-01	1.96913E-03	0.00000E+00	0.00000E+00
136	9.25992E-01	4.12583E+00	9.37863E-01	1.95642E-03	0.00000E+00	0.00000E+00
137	9.20223E-01	4.15067E+00	9.37733E-01	1.94626E-03	0.00000E+00	0.00000E+00
138	9.41400E-01	4.17433E+00	9.37760E-01	1.93209E-03	0.00000E+00	0.00000E+00
139	9.15200E-01	4.19733E+00	9.37595E-01	1.92499E-03	0.00000E+00	0.00000E+00
140	9.17256E-01	4.22100E+00	9.37448E-01	1.91667E-03	0.00000E+00	0.00000E+00
141	9.58561E-01	4.24400E+00	9.37600E-01	1.90888E-03	0.00000E+00	0.00000E+00
142	9.54807E-01	4.26683E+00	9.37722E-01	1.89918E-03	0.00000E+00	0.00000E+00
143	9.37850E-01	4.29067E+00	9.37723E-01	1.88566E-03	0.00000E+00	0.00000E+00
144	9.51011E-01	4.31350E+00	9.37817E-01	1.87467E-03	0.00000E+00	0.00000E+00
145	9.08446E-01	4.33733E+00	9.37612E-01	1.87281E-03	0.00000E+00	0.00000E+00
146	9.33168E-01	4.36117E+00	9.37581E-01	1.86002E-03	0.00000E+00	0.00000E+00
147	9.39235E-01	4.38400E+00	9.37592E-01	1.84718E-03	0.00000E+00	0.00000E+00
148	9.44775E-01	4.40683E+00	9.37641E-01	1.83514E-03	0.00000E+00	0.00000E+00
149	9.33997E-01	4.42983E+00	9.37617E-01	1.82278E-03	0.00000E+00	0.00000E+00
150	9.29083E-01	4.45367E+00	9.37559E-01	1.81134E-03	0.00000E+00	0.00000E+00
151	9.53913E-01	4.47650E+00	9.37669E-01	1.80249E-03	0.00000E+00	0.00000E+00
152	9.15940E-01	4.50033E+00	9.37524E-01	1.79628E-03	0.00000E+00	0.00000E+00
153	9.32896E-01	4.52400E+00	9.37493E-01	1.78461E-03	0.00000E+00	0.00000E+00
154	9.22501E-01	4.54700E+00	9.37394E-01	1.77557E-03	0.00000E+00	0.00000E+00
155	9.45032E-01	4.56900E+00	9.37444E-01	1.76464E-03	0.00000E+00	0.00000E+00
156	9.63012E-01	4.59267E+00	9.37610E-01	1.76099E-03	0.00000E+00	0.00000E+00
157	9.65988E-01	4.61567E+00	9.37794E-01	1.75914E-03	0.00000E+00	0.00000E+00
158	9.11861E-01	4.63950E+00	9.37627E-01	1.75571E-03	0.00000E+00	0.00000E+00
159	9.48924E-01	4.66233E+00	9.37699E-01	1.74598E-03	0.00000E+00	0.00000E+00
160	9.37244E-01	4.68517E+00	9.37696E-01	1.73490E-03	0.00000E+00	0.00000E+00
161	9.26593E-01	4.70983E+00	9.37627E-01	1.72536E-03	0.00000E+00	0.00000E+00
162	9.49352E-01	4.73367E+00	9.37700E-01	1.71611E-03	0.00000E+00	0.00000E+00
163	9.53957E-01	4.75667E+00	9.37801E-01	1.70841E-03	0.00000E+00	0.00000E+00
164	9.49314E-01	4.77950E+00	9.37872E-01	1.69931E-03	0.00000E+00	0.00000E+00
165	9.46746E-01	4.80333E+00	9.37926E-01	1.68973E-03	0.00000E+00	0.00000E+00
166	9.76021E-01	4.82617E+00	9.38159E-01	1.69539E-03	0.00000E+00	0.00000E+00
167	9.42887E-01	4.84900E+00	9.38187E-01	1.68533E-03	0.00000E+00	0.00000E+00
168	9.19916E-01	4.87100E+00	9.38077E-01	1.67875E-03	0.00000E+00	0.00000E+00
169	9.42499E-01	4.89483E+00	9.38104E-01	1.66888E-03	0.00000E+00	0.00000E+00
170	9.67871E-01	4.91767E+00	9.38281E-01	1.66835E-03	0.00000E+00	0.00000E+00
171	9.31285E-01	4.94067E+00	9.38239E-01	1.65897E-03	0.00000E+00	0.00000E+00
172	9.23169E-01	4.96433E+00	9.38151E-01	1.65156E-03	0.00000E+00	0.00000E+00
173	1.00631E+00	4.98633E+00	9.38549E-01	1.68956E-03	0.00000E+00	0.00000E+00
174	9.56174E-01	5.00933E+00	9.38652E-01	1.68283E-03	0.00000E+00	0.00000E+00
175	9.44454E-01	5.03300E+00	9.38685E-01	1.67341E-03	0.00000E+00	0.00000E+00
176	9.28782E-01	5.05683E+00	9.38628E-01	1.66474E-03	0.00000E+00	0.00000E+00
177	9.53540E-01	5.07967E+00	9.38714E-01	1.65739E-03	0.00000E+00	0.00000E+00
178	9.69673E-01	5.10350E+00	9.38890E-01	1.65731E-03	0.00000E+00	0.00000E+00
179	9.65518E-01	5.12650E+00	9.39040E-01	1.65477E-03	0.00000E+00	0.00000E+00
180	9.45176E-01	5.14933E+00	9.39074E-01	1.64581E-03	0.00000E+00	0.00000E+00
181	9.16883E-01	5.17217E+00	9.38950E-01	1.64128E-03	0.00000E+00	0.00000E+00
182	9.24655E-01	5.19600E+00	9.38871E-01	1.63407E-03	0.00000E+00	0.00000E+00
183	9.76833E-01	5.21883E+00	9.39081E-01	1.63849E-03	0.00000E+00	0.00000E+00
184	9.41853E-01	5.24083E+00	9.39096E-01	1.62954E-03	0.00000E+00	0.00000E+00
185	9.45393E-01	5.26467E+00	9.39130E-01	1.62097E-03	0.00000E+00	0.00000E+00
186	9.31129E-01	5.28750E+00	9.39087E-01	1.61272E-03	0.00000E+00	0.00000E+00

187	9.40526E-01	5.31233E+00	9.39095E-01	1.60400E-03	0.00000E+00	0.00000E+00
188	9.19446E-01	5.33600E+00	9.38989E-01	1.59885E-03	0.00000E+00	0.00000E+00
189	9.51800E-01	5.35900E+00	9.39058E-01	1.59175E-03	0.00000E+00	0.00000E+00
190	9.22636E-01	5.38183E+00	9.38970E-01	1.58567E-03	0.00000E+00	0.00000E+00
191	9.66691E-01	5.40467E+00	9.39117E-01	1.58406E-03	0.00000E+00	0.00000E+00
192	9.62568E-01	5.42850E+00	9.39240E-01	1.58053E-03	0.00000E+00	0.00000E+00
193	9.36855E-01	5.45233E+00	9.39228E-01	1.57228E-03	0.00000E+00	0.00000E+00
194	8.67588E-01	5.47700E+00	9.38855E-01	1.60796E-03	0.00000E+00	0.00000E+00
195	9.37215E-01	5.50000E+00	9.38846E-01	1.59963E-03	0.00000E+00	0.00000E+00
196	8.97593E-01	5.52367E+00	9.38634E-01	1.60551E-03	0.00000E+00	0.00000E+00
197	9.06624E-01	5.54667E+00	9.38469E-01	1.60567E-03	0.00000E+00	0.00000E+00
198	9.76595E-01	5.56950E+00	9.38664E-01	1.60925E-03	0.00000E+00	0.00000E+00
199	9.11062E-01	5.59233E+00	9.38524E-01	1.60718E-03	0.00000E+00	0.00000E+00
200	8.97753E-01	5.61617E+00	9.38318E-01	1.61225E-03	0.00000E+00	0.00000E+00
201	9.37698E-01	5.64000E+00	9.38315E-01	1.60413E-03	0.00000E+00	0.00000E+00
202	9.92385E-01	5.66200E+00	9.38585E-01	1.61882E-03	0.00000E+00	0.00000E+00
203	9.69492E-01	5.68583E+00	9.38739E-01	1.61807E-03	0.00000E+00	0.00000E+00
204	9.46732E-01	5.70867E+00	9.38779E-01	1.61053E-03	0.00000E+00	0.00000E+00
205	9.24176E-01	5.73250E+00	9.38707E-01	1.60419E-03	0.00000E+00	0.00000E+00
206	9.67610E-01	5.75533E+00	9.38848E-01	1.60258E-03	0.00000E+00	0.00000E+00
207	9.27192E-01	5.77817E+00	9.38791E-01	1.59576E-03	0.00000E+00	0.00000E+00
208	9.96263E-01	5.80117E+00	9.39070E-01	1.61231E-03	0.00000E+00	0.00000E+00
209	9.44437E-01	5.82483E+00	9.39096E-01	1.60472E-03	0.00000E+00	0.00000E+00
210	9.42144E-01	5.84783E+00	9.39111E-01	1.59705E-03	0.00000E+00	0.00000E+00
211	9.84103E-01	5.87167E+00	9.39326E-01	1.60390E-03	0.00000E+00	0.00000E+00
212	9.27594E-01	5.89533E+00	9.39270E-01	1.59722E-03	0.00000E+00	0.00000E+00
213	9.47447E-01	5.91917E+00	9.39309E-01	1.59011E-03	0.00000E+00	0.00000E+00
214	9.50908E-01	5.94383E+00	9.39364E-01	1.58353E-03	0.00000E+00	0.00000E+00
215	9.58715E-01	5.96683E+00	9.39455E-01	1.57870E-03	0.00000E+00	0.00000E+00
216	9.24961E-01	5.99150E+00	9.39387E-01	1.57276E-03	0.00000E+00	0.00000E+00
217	9.19465E-01	6.01433E+00	9.39294E-01	1.56817E-03	0.00000E+00	0.00000E+00
218	9.71157E-01	6.03817E+00	9.39442E-01	1.56785E-03	0.00000E+00	0.00000E+00
219	9.76932E-01	6.06100E+00	9.39615E-01	1.57014E-03	0.00000E+00	0.00000E+00
220	9.13037E-01	6.08483E+00	9.39493E-01	1.56767E-03	0.00000E+00	0.00000E+00
221	9.41447E-01	6.10867E+00	9.39502E-01	1.56052E-03	0.00000E+00	0.00000E+00
222	9.23828E-01	6.13250E+00	9.39430E-01	1.55504E-03	0.00000E+00	0.00000E+00
223	8.88887E-01	6.15633E+00	9.39202E-01	1.56480E-03	0.00000E+00	0.00000E+00
224	9.14007E-01	6.18100E+00	9.39088E-01	1.56186E-03	0.00000E+00	0.00000E+00
225	9.32980E-01	6.20483E+00	9.39061E-01	1.55508E-03	0.00000E+00	0.00000E+00
226	9.81846E-01	6.22683E+00	9.39252E-01	1.55986E-03	0.00000E+00	0.00000E+00
227	9.68973E-01	6.24867E+00	9.39384E-01	1.55852E-03	0.00000E+00	0.00000E+00
228	8.94740E-01	6.27433E+00	9.39186E-01	1.56413E-03	0.00000E+00	0.00000E+00
229	9.18278E-01	6.29733E+00	9.39094E-01	1.55995E-03	0.00000E+00	0.00000E+00
230	9.44474E-01	6.32017E+00	9.39118E-01	1.55327E-03	0.00000E+00	0.00000E+00
231	9.73623E-01	6.34400E+00	9.39268E-01	1.55380E-03	0.00000E+00	0.00000E+00
232	9.32279E-01	6.36600E+00	9.39238E-01	1.54733E-03	0.00000E+00	0.00000E+00
233	9.49064E-01	6.38967E+00	9.39281E-01	1.54120E-03	0.00000E+00	0.00000E+00
234	9.92940E-01	6.41267E+00	9.39512E-01	1.55187E-03	0.00000E+00	0.00000E+00
235	9.29619E-01	6.43550E+00	9.39469E-01	1.54578E-03	0.00000E+00	0.00000E+00
236	9.30159E-01	6.45933E+00	9.39430E-01	1.53968E-03	0.00000E+00	0.00000E+00
237	8.90670E-01	6.48400E+00	9.39222E-01	1.54709E-03	0.00000E+00	0.00000E+00
238	9.61941E-01	6.50683E+00	9.39318E-01	1.54352E-03	0.00000E+00	0.00000E+00
239	9.84050E-01	6.52983E+00	9.39507E-01	1.54854E-03	0.00000E+00	0.00000E+00
240	9.18877E-01	6.55267E+00	9.39421E-01	1.54446E-03	0.00000E+00	0.00000E+00
241	9.90503E-01	6.57650E+00	9.39634E-01	1.55276E-03	0.00000E+00	0.00000E+00
242	9.16239E-01	6.59933E+00	9.39537E-01	1.54935E-03	0.00000E+00	0.00000E+00
243	9.17816E-01	6.62317E+00	9.39447E-01	1.54554E-03	0.00000E+00	0.00000E+00
244	9.08668E-01	6.64600E+00	9.39319E-01	1.54438E-03	0.00000E+00	0.00000E+00
245	9.68559E-01	6.66983E+00	9.39440E-01	1.54271E-03	0.00000E+00	0.00000E+00
246	9.51985E-01	6.69267E+00	9.39491E-01	1.53724E-03	0.00000E+00	0.00000E+00
247	9.54398E-01	6.71467E+00	9.39552E-01	1.53216E-03	0.00000E+00	0.00000E+00
248	9.23769E-01	6.73850E+00	9.39488E-01	1.52727E-03	0.00000E+00	0.00000E+00
249	9.75270E-01	6.76050E+00	9.39633E-01	1.52795E-03	0.00000E+00	0.00000E+00
250	8.94501E-01	6.78433E+00	9.39451E-01	1.53262E-03	0.00000E+00	0.00000E+00
251	9.48733E-01	6.80800E+00	9.39488E-01	1.52691E-03	0.00000E+00	0.00000E+00
252	9.35980E-01	6.83100E+00	9.39474E-01	1.52085E-03	0.00000E+00	0.00000E+00
253	9.79347E-01	6.85483E+00	9.39633E-01	1.52309E-03	0.00000E+00	0.00000E+00
254	9.10337E-01	6.87850E+00	9.39517E-01	1.52148E-03	0.00000E+00	0.00000E+00
255	9.55501E-01	6.90150E+00	9.39580E-01	1.51677E-03	0.00000E+00	0.00000E+00
256	9.31794E-01	6.92517E+00	9.39549E-01	1.51110E-03	0.00000E+00	0.00000E+00
257	9.50651E-01	6.94817E+00	9.39593E-01	1.50579E-03	0.00000E+00	0.00000E+00
258	9.65015E-01	6.97200E+00	9.39692E-01	1.50318E-03	0.00000E+00	0.00000E+00
259	9.34965E-01	6.99483E+00	9.39674E-01	1.49744E-03	0.00000E+00	0.00000E+00
260	9.30063E-01	7.01867E+00	9.39636E-01	1.49208E-03	0.00000E+00	0.00000E+00
261	9.63928E-01	7.04150E+00	9.39730E-01	1.48927E-03	0.00000E+00	0.00000E+00
262	9.10698E-01	7.06533E+00	9.39618E-01	1.48773E-03	0.00000E+00	0.00000E+00
263	9.55887E-01	7.08917E+00	9.39681E-01	1.48333E-03	0.00000E+00	0.00000E+00
264	9.53464E-01	7.11200E+00	9.39733E-01	1.47859E-03	0.00000E+00	0.00000E+00
265	8.97046E-01	7.13583E+00	9.39571E-01	1.48187E-03	0.00000E+00	0.00000E+00
266	9.28045E-01	7.16050E+00	9.39527E-01	1.47689E-03	0.00000E+00	0.00000E+00
267	9.09391E-01	7.18433E+00	9.39414E-01	1.47570E-03	0.00000E+00	0.00000E+00
268	9.85255E-01	7.20717E+00	9.39586E-01	1.48021E-03	0.00000E+00	0.00000E+00
269	9.32915E-01	7.23100E+00	9.39561E-01	1.47486E-03	0.00000E+00	0.00000E+00
270	9.41335E-01	7.25383E+00	9.39568E-01	1.46937E-03	0.00000E+00	0.00000E+00
271	9.18650E-01	7.27867E+00	9.39490E-01	1.46596E-03	0.00000E+00	0.00000E+00
272	9.50063E-01	7.30233E+00	9.39529E-01	1.46104E-03	0.00000E+00	0.00000E+00
273	9.43201E-01	7.32617E+00	9.39543E-01	1.45570E-03	0.00000E+00	0.00000E+00
274	9.06694E-01	7.34917E+00	9.39422E-01	1.45536E-03	0.00000E+00	0.00000E+00
275	9.51824E-01	7.37200E+00	9.39467E-01	1.45073E-03	0.00000E+00	0.00000E+00
276	9.17806E-01	7.39667E+00	9.39388E-01	1.44759E-03	0.00000E+00	0.00000E+00
277	9.10898E-01	7.42050E+00	9.39285E-01	1.44603E-03	0.00000E+00	0.00000E+00
278	9.52998E-01	7.44333E+00	9.39334E-01	1.44164E-03	0.00000E+00	0.00000E+00
279	9.62492E-01	7.46633E+00	9.39418E-01	1.43886E-03	0.00000E+00	0.00000E+00
280	9.57823E-01	7.49000E+00	9.39484E-01	1.43520E-03	0.00000E+00	0.00000E+00
281	9.39945E-01	7.51383E+00	9.39486E-01	1.43005E-03	0.00000E+00	0.00000E+00

282	9.52223E-01	7.53667E+00	9.39531E-01	1.42566E-03	0.00000E+00	0.00000E+00
283	9.64879E-01	7.55967E+00	9.39621E-01	1.42343E-03	0.00000E+00	0.00000E+00
284	9.70561E-01	7.58350E+00	9.39731E-01	1.42261E-03	0.00000E+00	0.00000E+00
285	9.78155E-01	7.60633E+00	9.39867E-01	1.42407E-03	0.00000E+00	0.00000E+00
286	9.64362E-01	7.62917E+00	9.39953E-01	1.42166E-03	0.00000E+00	0.00000E+00
287	9.11106E-01	7.65300E+00	9.39852E-01	1.42028E-03	0.00000E+00	0.00000E+00
288	8.89182E-01	7.67683E+00	9.39675E-01	1.42635E-03	0.00000E+00	0.00000E+00
289	9.95390E-01	7.69967E+00	9.39869E-01	1.43456E-03	0.00000E+00	0.00000E+00
290	8.88753E-01	7.72350E+00	9.39691E-01	1.44055E-03	0.00000E+00	0.00000E+00
291	9.34134E-01	7.74733E+00	9.39672E-01	1.43569E-03	0.00000E+00	0.00000E+00
292	9.33624E-01	7.77017E+00	9.39651E-01	1.43088E-03	0.00000E+00	0.00000E+00
293	9.16708E-01	7.79400E+00	9.39573E-01	1.42813E-03	0.00000E+00	0.00000E+00
294	8.90530E-01	7.81783E+00	9.39405E-01	1.43311E-03	0.00000E+00	0.00000E+00
295	9.48421E-01	7.84067E+00	9.39435E-01	1.42854E-03	0.00000E+00	0.00000E+00
296	9.39398E-01	7.86450E+00	9.39435E-01	1.42367E-03	0.00000E+00	0.00000E+00
297	9.47277E-01	7.88833E+00	9.39462E-01	1.41909E-03	0.00000E+00	0.00000E+00
298	9.41025E-01	7.91200E+00	9.39467E-01	1.41429E-03	0.00000E+00	0.00000E+00
299	9.29999E-01	7.93500E+00	9.39435E-01	1.40988E-03	0.00000E+00	0.00000E+00
300	9.39157E-01	7.95883E+00	9.39434E-01	1.40515E-03	0.00000E+00	0.00000E+00
301	9.42934E-01	7.98167E+00	9.39446E-01	1.40049E-03	0.00000E+00	0.00000E+00
302	9.39666E-01	8.00450E+00	9.39447E-01	1.39581E-03	0.00000E+00	0.00000E+00
303	9.31815E-01	8.02733E+00	9.39421E-01	1.39140E-03	0.00000E+00	0.00000E+00
304	9.46213E-01	8.05117E+00	9.39444E-01	1.38697E-03	0.00000E+00	0.00000E+00
305	9.14904E-01	8.07600E+00	9.39363E-01	1.38475E-03	0.00000E+00	0.00000E+00
306	9.23716E-01	8.09967E+00	9.39311E-01	1.38115E-03	0.00000E+00	0.00000E+00
307	9.45717E-01	8.12267E+00	9.39332E-01	1.37677E-03	0.00000E+00	0.00000E+00
308	9.63413E-01	8.14467E+00	9.39411E-01	1.37452E-03	0.00000E+00	0.00000E+00
309	9.18006E-01	8.16833E+00	9.39341E-01	1.37181E-03	0.00000E+00	0.00000E+00
310	8.92698E-01	8.19217E+00	9.39190E-01	1.37571E-03	0.00000E+00	0.00000E+00
311	9.67557E-01	8.21500E+00	9.39282E-01	1.37432E-03	0.00000E+00	0.00000E+00
312	9.57126E-01	8.23800E+00	9.39339E-01	1.37109E-03	0.00000E+00	0.00000E+00
313	9.31290E-01	8.26083E+00	9.39313E-01	1.36692E-03	0.00000E+00	0.00000E+00
314	9.44222E-01	8.28467E+00	9.39329E-01	1.36262E-03	0.00000E+00	0.00000E+00
315	9.41217E-01	8.30750E+00	9.39335E-01	1.35827E-03	0.00000E+00	0.00000E+00
316	9.53593E-01	8.33133E+00	9.39381E-01	1.35470E-03	0.00000E+00	0.00000E+00
317	9.31452E-01	8.35417E+00	9.39355E-01	1.35063E-03	0.00000E+00	0.00000E+00
318	9.08266E-01	8.37717E+00	9.39257E-01	1.34994E-03	0.00000E+00	0.00000E+00
319	9.37460E-01	8.40083E+00	9.39251E-01	1.34568E-03	0.00000E+00	0.00000E+00
320	9.38285E-01	8.42467E+00	9.39248E-01	1.34145E-03	0.00000E+00	0.00000E+00
321	9.13572E-01	8.44767E+00	9.39168E-01	1.33966E-03	0.00000E+00	0.00000E+00
322	9.49265E-01	8.47133E+00	9.39199E-01	1.33584E-03	0.00000E+00	0.00000E+00
323	9.39618E-01	8.49517E+00	9.39201E-01	1.33167E-03	0.00000E+00	0.00000E+00
324	9.11437E-01	8.51983E+00	9.39114E-01	1.33032E-03	0.00000E+00	0.00000E+00
325	9.97960E-01	8.54283E+00	9.39297E-01	1.33865E-03	0.00000E+00	0.00000E+00
326	9.52573E-01	8.56567E+00	9.39338E-01	1.33515E-03	0.00000E+00	0.00000E+00
327	9.20705E-01	8.58950E+00	9.39280E-01	1.33226E-03	0.00000E+00	0.00000E+00
328	9.07825E-01	8.61333E+00	9.39184E-01	1.33167E-03	0.00000E+00	0.00000E+00
329	9.31026E-01	8.63717E+00	9.39159E-01	1.32783E-03	0.00000E+00	0.00000E+00
330	9.70184E-01	8.66000E+00	9.39253E-01	1.32715E-03	0.00000E+00	0.00000E+00
331	9.42351E-01	8.68283E+00	9.39263E-01	1.32314E-03	0.00000E+00	0.00000E+00
332	9.50763E-01	8.70667E+00	9.39298E-01	1.31959E-03	0.00000E+00	0.00000E+00
333	9.82450E-01	8.72867E+00	9.39428E-01	1.32204E-03	0.00000E+00	0.00000E+00
334	9.18881E-01	8.75250E+00	9.39366E-01	1.31950E-03	0.00000E+00	0.00000E+00
335	9.38450E-01	8.77533E+00	9.39363E-01	1.31554E-03	0.00000E+00	0.00000E+00
336	9.21143E-01	8.79917E+00	9.39309E-01	1.31273E-03	0.00000E+00	0.00000E+00
337	9.14949E-01	8.82383E+00	9.39236E-01	1.31082E-03	0.00000E+00	0.00000E+00
338	9.36758E-01	8.84667E+00	9.39229E-01	1.30693E-03	0.00000E+00	0.00000E+00
339	9.45463E-01	8.87050E+00	9.39247E-01	1.30318E-03	0.00000E+00	0.00000E+00
340	9.28761E-01	8.89333E+00	9.39216E-01	1.29969E-03	0.00000E+00	0.00000E+00
341	9.07910E-01	8.91717E+00	9.39124E-01	1.29914E-03	0.00000E+00	0.00000E+00
342	9.27775E-01	8.94100E+00	9.39091E-01	1.29574E-03	0.00000E+00	0.00000E+00
343	9.24335E-01	8.96483E+00	9.39047E-01	1.29266E-03	0.00000E+00	0.00000E+00
344	9.34777E-01	8.98683E+00	9.39035E-01	1.28893E-03	0.00000E+00	0.00000E+00
345	9.43687E-01	9.00967E+00	9.39048E-01	1.28524E-03	0.00000E+00	0.00000E+00
346	9.11846E-01	9.03433E+00	9.38969E-01	1.28394E-03	0.00000E+00	0.00000E+00
347	9.10129E-01	9.05817E+00	9.38886E-01	1.28294E-03	0.00000E+00	0.00000E+00
348	9.22555E-01	9.08283E+00	9.38838E-01	1.28009E-03	0.00000E+00	0.00000E+00
349	9.21278E-01	9.10667E+00	9.38788E-01	1.27740E-03	0.00000E+00	0.00000E+00
350	9.46399E-01	9.12967E+00	9.38810E-01	1.27392E-03	0.00000E+00	0.00000E+00
351	9.41957E-01	9.15250E+00	9.38819E-01	1.27029E-03	0.00000E+00	0.00000E+00
352	9.43312E-01	9.17533E+00	9.38832E-01	1.26672E-03	0.00000E+00	0.00000E+00
353	9.44722E-01	9.19917E+00	9.38848E-01	1.26322E-03	0.00000E+00	0.00000E+00
354	9.21439E-01	9.22383E+00	9.38799E-01	1.26060E-03	0.00000E+00	0.00000E+00
355	9.33778E-01	9.24683E+00	9.38785E-01	1.25710E-03	0.00000E+00	0.00000E+00
356	9.41920E-01	9.27150E+00	9.38794E-01	1.25358E-03	0.00000E+00	0.00000E+00
357	9.32474E-01	9.29433E+00	9.38776E-01	1.25017E-03	0.00000E+00	0.00000E+00
358	9.79291E-01	9.31717E+00	9.38890E-01	1.25183E-03	0.00000E+00	0.00000E+00
359	9.55704E-01	9.34100E+00	9.38937E-01	1.24921E-03	0.00000E+00	0.00000E+00
360	9.57182E-01	9.36400E+00	9.38988E-01	1.24676E-03	0.00000E+00	0.00000E+00
361	9.53013E-01	9.38683E+00	9.39027E-01	1.24389E-03	0.00000E+00	0.00000E+00
362	9.07709E-01	9.41067E+00	9.38940E-01	1.24348E-03	0.00000E+00	0.00000E+00
363	9.61226E-01	9.43350E+00	9.39001E-01	1.24157E-03	0.00000E+00	0.00000E+00
364	9.06823E-01	9.45733E+00	9.38913E-01	1.24132E-03	0.00000E+00	0.00000E+00
365	9.23508E-01	9.48117E+00	9.38870E-01	1.23862E-03	0.00000E+00	0.00000E+00
366	9.59195E-01	9.50400E+00	9.38926E-01	1.23648E-03	0.00000E+00	0.00000E+00
367	9.34420E-01	9.52783E+00	9.38914E-01	1.23315E-03	0.00000E+00	0.00000E+00
368	9.68963E-01	9.55067E+00	9.38996E-01	1.23251E-03	0.00000E+00	0.00000E+00
369	9.50643E-01	9.57450E+00	9.39027E-01	1.22956E-03	0.00000E+00	0.00000E+00
370	9.54914E-01	9.59733E+00	9.39071E-01	1.22697E-03	0.00000E+00	0.00000E+00
371	9.46119E-01	9.62033E+00	9.39090E-01	1.22379E-03	0.00000E+00	0.00000E+00
372	9.34350E-01	9.64317E+00	9.39077E-01	1.22054E-03	0.00000E+00	0.00000E+00
373	8.95746E-01	9.66783E+00	9.38960E-01	1.22284E-03	0.00000E+00	0.00000E+00
374	9.14995E-01	9.69067E+00	9.38896E-01	1.22125E-03	0.00000E+00	0.00000E+00
375	9.25020E-01	9.71367E+00	9.38858E-01	1.21854E-03	0.00000E+00	0.00000E+00

376	9.52837E-01	9.73750E+00	9.38896E-01	1.21585E-03	0.00000E+00	0.00000E+00
377	9.06733E-01	9.76033E+00	9.38810E-01	1.21563E-03	0.00000E+00	0.00000E+00
378	9.26923E-01	9.78417E+00	9.38778E-01	1.21281E-03	0.00000E+00	0.00000E+00
379	9.48775E-01	9.80700E+00	9.38805E-01	1.20988E-03	0.00000E+00	0.00000E+00
380	9.03598E-01	9.83083E+00	9.38712E-01	1.21026E-03	0.00000E+00	0.00000E+00
381	9.09665E-01	9.85467E+00	9.38635E-01	1.20950E-03	0.00000E+00	0.00000E+00
382	9.40097E-01	9.87833E+00	9.38639E-01	1.20631E-03	0.00000E+00	0.00000E+00
383	9.67118E-01	9.90033E+00	9.38714E-01	1.20546E-03	0.00000E+00	0.00000E+00
384	9.08400E-01	9.92417E+00	9.38634E-01	1.20492E-03	0.00000E+00	0.00000E+00
385	9.35608E-01	9.94700E+00	9.38627E-01	1.20180E-03	0.00000E+00	0.00000E+00
386	9.36297E-01	9.97083E+00	9.38620E-01	1.19868E-03	0.00000E+00	0.00000E+00
387	9.42066E-01	9.99367E+00	9.38629E-01	1.19559E-03	0.00000E+00	0.00000E+00
388	9.35191E-01	1.00175E+01	9.38621E-01	1.19253E-03	0.00000E+00	0.00000E+00
389	8.97222E-01	1.00413E+01	9.38514E-01	1.19424E-03	0.00000E+00	0.00000E+00
390	9.30595E-01	1.00642E+01	9.38493E-01	1.19133E-03	0.00000E+00	0.00000E+00
391	9.25689E-01	1.00880E+01	9.38460E-01	1.18872E-03	0.00000E+00	0.00000E+00
392	9.62236E-01	1.01128E+01	9.38521E-01	1.18724E-03	0.00000E+00	0.00000E+00
393	9.65988E-01	1.01365E+01	9.38591E-01	1.18628E-03	0.00000E+00	0.00000E+00
394	9.54448E-01	1.01585E+01	9.38632E-01	1.18394E-03	0.00000E+00	0.00000E+00
395	9.72413E-01	1.01813E+01	9.38718E-01	1.18405E-03	0.00000E+00	0.00000E+00
396	9.49476E-01	1.02043E+01	9.38745E-01	1.18135E-03	0.00000E+00	0.00000E+00
397	9.28210E-01	1.02282E+01	9.38718E-01	1.17866E-03	0.00000E+00	0.00000E+00
398	9.87399E-01	1.02518E+01	9.38841E-01	1.18209E-03	0.00000E+00	0.00000E+00
399	9.36637E-01	1.02757E+01	9.38836E-01	1.17912E-03	0.00000E+00	0.00000E+00
400	9.34826E-01	1.02985E+01	9.38826E-01	1.17620E-03	0.00000E+00	0.00000E+00
401	8.83044E-01	1.03233E+01	9.38686E-01	1.18155E-03	0.00000E+00	0.00000E+00
402	9.58315E-01	1.03462E+01	9.38735E-01	1.17961E-03	0.00000E+00	0.00000E+00
403	9.47168E-01	1.03690E+01	9.38756E-01	1.17685E-03	0.00000E+00	0.00000E+00
404	9.40690E-01	1.03928E+01	9.38761E-01	1.17393E-03	0.00000E+00	0.00000E+00
405	9.24255E-01	1.04167E+01	9.38725E-01	1.17157E-03	0.00000E+00	0.00000E+00
406	9.26128E-01	1.04395E+01	9.38694E-01	1.16908E-03	0.00000E+00	0.00000E+00
407	9.04208E-01	1.04643E+01	9.38609E-01	1.16930E-03	0.00000E+00	0.00000E+00
408	9.22815E-01	1.04880E+01	9.38570E-01	1.16706E-03	0.00000E+00	0.00000E+00
409	9.67198E-01	1.05110E+01	9.38640E-01	1.16631E-03	0.00000E+00	0.00000E+00
410	9.27545E-01	1.05348E+01	9.38613E-01	1.16377E-03	0.00000E+00	0.00000E+00
411	9.17396E-01	1.05577E+01	9.38561E-01	1.16208E-03	0.00000E+00	0.00000E+00
412	9.41994E-01	1.05805E+01	9.38569E-01	1.15927E-03	0.00000E+00	0.00000E+00
413	9.31300E-01	1.06043E+01	9.38552E-01	1.15658E-03	0.00000E+00	0.00000E+00
414	9.43036E-01	1.06282E+01	9.38563E-01	1.15382E-03	0.00000E+00	0.00000E+00
415	1.00201E+00	1.06510E+01	9.38716E-01	1.16123E-03	0.00000E+00	0.00000E+00
416	9.21520E-01	1.06748E+01	9.38675E-01	1.15917E-03	0.00000E+00	0.00000E+00
417	9.34770E-01	1.06987E+01	9.38665E-01	1.15641E-03	0.00000E+00	0.00000E+00
418	9.07589E-01	1.07225E+01	9.38590E-01	1.15604E-03	0.00000E+00	0.00000E+00
419	9.08249E-01	1.07462E+01	9.38518E-01	1.15556E-03	0.00000E+00	0.00000E+00
420	9.46312E-01	1.07710E+01	9.38536E-01	1.15294E-03	0.00000E+00	0.00000E+00
421	9.58714E-01	1.07938E+01	9.38585E-01	1.15120E-03	0.00000E+00	0.00000E+00
422	9.00820E-01	1.08185E+01	9.38495E-01	1.15197E-03	0.00000E+00	0.00000E+00
423	9.37089E-01	1.08415E+01	9.38491E-01	1.14923E-03	0.00000E+00	0.00000E+00
424	9.86161E-01	1.08633E+01	9.38604E-01	1.15206E-03	0.00000E+00	0.00000E+00
425	9.77884E-01	1.08863E+01	9.38697E-01	1.15307E-03	0.00000E+00	0.00000E+00
426	9.66077E-01	1.09092E+01	9.38762E-01	1.15216E-03	0.00000E+00	0.00000E+00
427	9.48712E-01	1.09320E+01	9.38785E-01	1.14969E-03	0.00000E+00	0.00000E+00
428	9.68704E-01	1.09558E+01	9.38855E-01	1.14913E-03	0.00000E+00	0.00000E+00
429	9.55306E-01	1.09787E+01	9.38894E-01	1.14709E-03	0.00000E+00	0.00000E+00
430	9.19911E-01	1.10035E+01	9.38849E-01	1.14526E-03	0.00000E+00	0.00000E+00
431	9.27123E-01	1.10263E+01	9.38822E-01	1.14292E-03	0.00000E+00	0.00000E+00
432	9.99755E-01	1.10492E+01	9.38964E-01	1.14903E-03	0.00000E+00	0.00000E+00
433	9.60097E-01	1.10730E+01	9.39013E-01	1.14741E-03	0.00000E+00	0.00000E+00
434	9.31431E-01	1.10977E+01	9.38995E-01	1.14488E-03	0.00000E+00	0.00000E+00
435	9.24593E-01	1.11215E+01	9.38962E-01	1.14272E-03	0.00000E+00	0.00000E+00
436	9.46137E-01	1.11445E+01	9.38979E-01	1.14020E-03	0.00000E+00	0.00000E+00
437	9.50072E-01	1.11673E+01	9.39004E-01	1.13786E-03	0.00000E+00	0.00000E+00
438	9.50420E-01	1.11902E+01	9.39030E-01	1.13555E-03	0.00000E+00	0.00000E+00
439	9.15100E-01	1.12150E+01	9.38976E-01	1.13427E-03	0.00000E+00	0.00000E+00
440	9.56027E-01	1.12387E+01	9.39014E-01	1.13235E-03	0.00000E+00	0.00000E+00
441	9.57646E-01	1.12625E+01	9.39057E-01	1.13057E-03	0.00000E+00	0.00000E+00
442	9.46629E-01	1.12863E+01	9.39074E-01	1.12812E-03	0.00000E+00	0.00000E+00
443	9.42689E-01	1.13102E+01	9.39082E-01	1.12559E-03	0.00000E+00	0.00000E+00
444	9.06844E-01	1.13340E+01	9.39009E-01	1.12541E-03	0.00000E+00	0.00000E+00
445	8.90291E-01	1.13587E+01	9.38899E-01	1.12824E-03	0.00000E+00	0.00000E+00
446	9.33697E-01	1.13825E+01	9.38888E-01	1.12576E-03	0.00000E+00	0.00000E+00
447	9.54983E-01	1.14053E+01	9.38924E-01	1.12381E-03	0.00000E+00	0.00000E+00
448	9.69413E-01	1.14292E+01	9.38992E-01	1.12337E-03	0.00000E+00	0.00000E+00
449	9.71913E-01	1.14520E+01	9.39066E-01	1.12327E-03	0.00000E+00	0.00000E+00
450	9.31640E-01	1.14767E+01	9.39049E-01	1.12088E-03	0.00000E+00	0.00000E+00
451	9.08462E-01	1.14997E+01	9.38981E-01	1.12045E-03	0.00000E+00	0.00000E+00
452	9.55838E-01	1.15235E+01	9.39019E-01	1.11859E-03	0.00000E+00	0.00000E+00
453	8.95889E-01	1.15463E+01	9.38923E-01	1.12019E-03	0.00000E+00	0.00000E+00
454	9.18999E-01	1.15702E+01	9.38879E-01	1.11858E-03	0.00000E+00	0.00000E+00
455	8.80548E-01	1.15938E+01	9.38750E-01	1.12351E-03	0.00000E+00	0.00000E+00
456	9.27797E-01	1.16177E+01	9.38726E-01	1.12129E-03	0.00000E+00	0.00000E+00
457	9.22671E-01	1.16415E+01	9.38691E-01	1.11938E-03	0.00000E+00	0.00000E+00
458	9.66367E-01	1.16653E+01	9.38751E-01	1.11857E-03	0.00000E+00	0.00000E+00
459	9.26899E-01	1.16900E+01	9.38725E-01	1.11643E-03	0.00000E+00	0.00000E+00
460	8.95283E-01	1.17138E+01	9.38631E-01	1.11802E-03	0.00000E+00	0.00000E+00
461	9.08385E-01	1.17377E+01	9.38565E-01	1.11752E-03	0.00000E+00	0.00000E+00
462	9.46708E-01	1.17605E+01	9.38582E-01	1.11523E-03	0.00000E+00	0.00000E+00
463	9.07869E-01	1.17852E+01	9.38516E-01	1.11480E-03	0.00000E+00	0.00000E+00
464	8.98300E-01	1.18082E+01	9.38429E-01	1.11579E-03	0.00000E+00	0.00000E+00
465	9.45685E-01	1.18320E+01	9.38444E-01	1.11348E-03	0.00000E+00	0.00000E+00
466	9.61955E-01	1.18567E+01	9.38495E-01	1.11224E-03	0.00000E+00	0.00000E+00
467	8.89168E-01	1.18805E+01	9.38389E-01	1.11490E-03	0.00000E+00	0.00000E+00
468	9.54388E-01	1.19033E+01	9.38423E-01	1.11303E-03	0.00000E+00	0.00000E+00
469	9.26787E-01	1.19272E+01	9.38398E-01	1.11093E-03	0.00000E+00	0.00000E+00
470	9.01678E-01	1.19510E+01	9.38320E-01	1.11133E-03	0.00000E+00	0.00000E+00

471	9.50547E-01	1.19738E+01	9.38346E-01	1.10926E-03	0.00000E+00	0.00000E+00
472	9.52515E-01	1.19967E+01	9.38376E-01	1.10731E-03	0.00000E+00	0.00000E+00
473	9.44461E-01	1.20195E+01	9.38389E-01	1.10503E-03	0.00000E+00	0.00000E+00
474	9.10779E-01	1.20443E+01	9.38331E-01	1.10424E-03	0.00000E+00	0.00000E+00
475	8.98324E-01	1.20682E+01	9.38246E-01	1.10514E-03	0.00000E+00	0.00000E+00
476	9.83666E-01	1.20910E+01	9.38342E-01	1.10696E-03	0.00000E+00	0.00000E+00
477	9.23606E-01	1.21148E+01	9.38311E-01	1.10506E-03	0.00000E+00	0.00000E+00
478	9.53784E-01	1.21377E+01	9.38343E-01	1.10322E-03	0.00000E+00	0.00000E+00
479	9.16858E-01	1.21623E+01	9.38298E-01	1.10183E-03	0.00000E+00	0.00000E+00
480	9.49425E-01	1.21853E+01	9.38322E-01	1.09976E-03	0.00000E+00	0.00000E+00
481	8.95088E-01	1.22090E+01	9.38231E-01	1.10117E-03	0.00000E+00	0.00000E+00
482	9.06154E-01	1.22328E+01	9.38165E-01	1.10090E-03	0.00000E+00	0.00000E+00
483	9.79822E-01	1.22548E+01	9.38251E-01	1.10202E-03	0.00000E+00	0.00000E+00
484	9.26159E-01	1.22787E+01	9.38226E-01	1.10002E-03	0.00000E+00	0.00000E+00
485	9.45075E-01	1.23007E+01	9.38240E-01	1.09783E-03	0.00000E+00	0.00000E+00
486	9.68298E-01	1.23235E+01	9.38302E-01	1.09732E-03	0.00000E+00	0.00000E+00
487	9.34389E-01	1.23473E+01	9.38294E-01	1.09508E-03	0.00000E+00	0.00000E+00
488	9.55932E-01	1.23702E+01	9.38331E-01	1.09343E-03	0.00000E+00	0.00000E+00
489	9.07645E-01	1.23948E+01	9.38268E-01	1.09300E-03	0.00000E+00	0.00000E+00
490	9.57325E-01	1.24178E+01	9.38307E-01	1.09146E-03	0.00000E+00	0.00000E+00
491	9.02099E-01	1.24425E+01	9.38233E-01	1.09174E-03	0.00000E+00	0.00000E+00
492	9.82575E-01	1.24645E+01	9.38323E-01	1.09326E-03	0.00000E+00	0.00000E+00
493	9.51446E-01	1.24873E+01	9.38350E-01	1.09136E-03	0.00000E+00	0.00000E+00
494	9.53624E-01	1.25120E+01	9.38381E-01	1.08958E-03	0.00000E+00	0.00000E+00
495	9.79774E-01	1.25340E+01	9.38465E-01	1.09060E-03	0.00000E+00	0.00000E+00
496	9.54342E-01	1.25570E+01	9.38497E-01	1.08887E-03	0.00000E+00	0.00000E+00
497	9.28966E-01	1.25807E+01	9.38478E-01	1.08684E-03	0.00000E+00	0.00000E+00
498	9.59628E-01	1.26037E+01	9.38520E-01	1.08548E-03	0.00000E+00	0.00000E+00
499	9.19447E-01	1.26275E+01	9.38482E-01	1.08397E-03	0.00000E+00	0.00000E+00
500	9.11680E-01	1.26512E+01	9.38428E-01	1.08313E-03	0.00000E+00	0.00000E+00
501	9.70748E-01	1.26750E+01	9.38493E-01	1.08290E-03	0.00000E+00	0.00000E+00
502	9.27489E-01	1.26988E+01	9.38471E-01	1.08096E-03	0.00000E+00	0.00000E+00
503	9.69445E-01	1.27217E+01	9.38533E-01	1.08057E-03	0.00000E+00	0.00000E+00
504	9.34773E-01	1.27465E+01	9.38525E-01	1.07844E-03	0.00000E+00	0.00000E+00
505	9.15393E-01	1.27693E+01	9.38479E-01	1.07727E-03	0.00000E+00	0.00000E+00
506	9.31199E-01	1.27932E+01	9.38465E-01	1.07523E-03	0.00000E+00	0.00000E+00
507	9.25936E-01	1.28160E+01	9.38440E-01	1.07339E-03	0.00000E+00	0.00000E+00
508	9.49934E-01	1.28388E+01	9.38463E-01	1.07150E-03	0.00000E+00	0.00000E+00
509	9.35312E-01	1.28627E+01	9.38456E-01	1.06941E-03	0.00000E+00	0.00000E+00
510	9.42506E-01	1.28855E+01	9.38464E-01	1.06733E-03	0.00000E+00	0.00000E+00
511	8.88290E-01	1.29103E+01	9.38366E-01	1.06978E-03	0.00000E+00	0.00000E+00
512	9.33835E-01	1.29332E+01	9.38357E-01	1.06772E-03	0.00000E+00	0.00000E+00
513	9.12717E-01	1.29570E+01	9.38307E-01	1.06681E-03	0.00000E+00	0.00000E+00
514	9.74707E-01	1.29790E+01	9.38378E-01	1.06709E-03	0.00000E+00	0.00000E+00
515	9.28346E-01	1.30027E+01	9.38358E-01	1.06519E-03	0.00000E+00	0.00000E+00
516	9.28062E-01	1.30257E+01	9.38338E-01	1.06330E-03	0.00000E+00	0.00000E+00
517	9.40332E-01	1.30495E+01	9.38342E-01	1.06124E-03	0.00000E+00	0.00000E+00
518	9.43171E-01	1.30732E+01	9.38352E-01	1.05923E-03	0.00000E+00	0.00000E+00
519	9.33438E-01	1.30962E+01	9.38342E-01	1.05722E-03	0.00000E+00	0.00000E+00
520	9.40989E-01	1.31190E+01	9.38347E-01	1.05519E-03	0.00000E+00	0.00000E+00
521	9.27610E-01	1.31428E+01	9.38326E-01	1.05336E-03	0.00000E+00	0.00000E+00
522	9.55027E-01	1.31657E+01	9.38359E-01	1.05182E-03	0.00000E+00	0.00000E+00
523	9.49024E-01	1.31885E+01	9.38379E-01	1.05000E-03	0.00000E+00	0.00000E+00
524	9.45034E-01	1.32123E+01	9.38392E-01	1.04806E-03	0.00000E+00	0.00000E+00
525	9.57488E-01	1.32343E+01	9.38428E-01	1.04669E-03	0.00000E+00	0.00000E+00
526	8.88605E-01	1.32582E+01	9.38333E-01	1.04901E-03	0.00000E+00	0.00000E+00
527	9.01363E-01	1.32820E+01	9.38263E-01	1.04938E-03	0.00000E+00	0.00000E+00
528	9.01442E-01	1.33058E+01	9.38193E-01	1.04972E-03	0.00000E+00	0.00000E+00
529	9.02342E-01	1.33295E+01	9.38125E-01	1.04993E-03	0.00000E+00	0.00000E+00
530	9.69731E-01	1.33525E+01	9.38185E-01	1.04965E-03	0.00000E+00	0.00000E+00
531	9.54672E-01	1.33753E+01	9.38216E-01	1.04813E-03	0.00000E+00	0.00000E+00
532	9.20068E-01	1.33982E+01	9.38182E-01	1.04671E-03	0.00000E+00	0.00000E+00
533	9.40693E-01	1.34220E+01	9.38186E-01	1.04474E-03	0.00000E+00	0.00000E+00
534	9.40306E-01	1.34458E+01	9.38190E-01	1.04279E-03	0.00000E+00	0.00000E+00
535	9.13337E-01	1.34705E+01	9.38144E-01	1.04187E-03	0.00000E+00	0.00000E+00
536	9.35768E-01	1.34943E+01	9.38139E-01	1.03993E-03	0.00000E+00	0.00000E+00
537	9.27914E-01	1.35182E+01	9.38120E-01	1.03816E-03	0.00000E+00	0.00000E+00
538	9.12905E-01	1.35428E+01	9.38073E-01	1.03729E-03	0.00000E+00	0.00000E+00
539	9.57329E-01	1.35657E+01	9.38109E-01	1.03597E-03	0.00000E+00	0.00000E+00
540	9.42952E-01	1.35887E+01	9.38118E-01	1.03409E-03	0.00000E+00	0.00000E+00
541	9.01678E-01	1.36133E+01	9.38050E-01	1.03438E-03	0.00000E+00	0.00000E+00
542	9.52520E-01	1.36362E+01	9.38077E-01	1.03281E-03	0.00000E+00	0.00000E+00
543	9.40350E-01	1.36592E+01	9.38081E-01	1.03091E-03	0.00000E+00	0.00000E+00
544	9.69920E-01	1.36820E+01	9.38140E-01	1.03068E-03	0.00000E+00	0.00000E+00
545	9.72675E-01	1.37048E+01	9.38204E-01	1.03074E-03	0.00000E+00	0.00000E+00
546	9.82117E-01	1.37287E+01	9.38284E-01	1.03201E-03	0.00000E+00	0.00000E+00
547	9.36257E-01	1.37515E+01	9.38281E-01	1.03012E-03	0.00000E+00	0.00000E+00
548	9.29249E-01	1.37753E+01	9.38264E-01	1.02836E-03	0.00000E+00	0.00000E+00
549	9.15145E-01	1.37983E+01	9.38222E-01	1.02735E-03	0.00000E+00	0.00000E+00
550	9.28437E-01	1.38220E+01	9.38204E-01	1.02563E-03	0.00000E+00	0.00000E+00
551	9.42862E-01	1.38458E+01	9.38212E-01	1.02380E-03	0.00000E+00	0.00000E+00
552	9.34042E-01	1.38697E+01	9.38205E-01	1.02196E-03	0.00000E+00	0.00000E+00
553	9.14296E-01	1.38935E+01	9.38161E-01	1.02103E-03	0.00000E+00	0.00000E+00
554	9.69382E-01	1.39163E+01	9.38218E-01	1.02074E-03	0.00000E+00	0.00000E+00
555	9.13431E-01	1.39392E+01	9.38173E-01	1.01988E-03	0.00000E+00	0.00000E+00
556	9.45486E-01	1.39612E+01	9.38186E-01	1.01812E-03	0.00000E+00	0.00000E+00
557	9.59166E-01	1.39850E+01	9.38224E-01	1.01699E-03	0.00000E+00	0.00000E+00
558	9.87518E-01	1.40070E+01	9.38313E-01	1.01902E-03	0.00000E+00	0.00000E+00
559	9.28154E-01	1.40308E+01	9.38295E-01	1.01736E-03	0.00000E+00	0.00000E+00
560	9.29636E-01	1.40545E+01	9.38279E-01	1.01565E-03	0.00000E+00	0.00000E+00
561	9.68078E-01	1.40775E+01	9.38332E-01	1.01523E-03	0.00000E+00	0.00000E+00
562	9.30675E-01	1.41013E+01	9.38319E-01	1.01351E-03	0.00000E+00	0.00000E+00
563	9.13440E-01	1.41250E+01	9.38274E-01	1.01267E-03	0.00000E+00	0.00000E+00
564	9.45130E-01	1.41470E+01	9.38287E-01	1.01094E-03	0.00000E+00	0.00000E+00
565	9.26970E-01	1.41708E+01	9.38266E-01	1.00935E-03	0.00000E+00	0.00000E+00

566	9.29468E-01	1.41947E+01	9.38251E-01	1.00768E-03	0.00000E+00	0.00000E+00
567	9.07029E-01	1.42193E+01	9.38196E-01	1.00741E-03	0.00000E+00	0.00000E+00
568	9.11395E-01	1.42432E+01	9.38148E-01	1.00674E-03	0.00000E+00	0.00000E+00
569	9.36097E-01	1.42660E+01	9.38145E-01	1.00497E-03	0.00000E+00	0.00000E+00
570	9.77811E-01	1.42898E+01	9.38214E-01	1.00563E-03	0.00000E+00	0.00000E+00
571	9.54758E-01	1.43127E+01	9.38244E-01	1.00428E-03	0.00000E+00	0.00000E+00
572	9.47146E-01	1.43357E+01	9.38259E-01	1.00264E-03	0.00000E+00	0.00000E+00
573	9.28991E-01	1.43585E+01	9.38243E-01	1.00101E-03	0.00000E+00	0.00000E+00
574	8.87358E-01	1.43823E+01	9.38154E-01	1.00321E-03	0.00000E+00	0.00000E+00
575	9.75028E-01	1.44052E+01	9.38218E-01	1.00352E-03	0.00000E+00	0.00000E+00
576	9.77525E-01	1.44272E+01	9.38287E-01	1.00411E-03	0.00000E+00	0.00000E+00
577	9.18977E-01	1.44518E+01	9.38253E-01	1.00293E-03	0.00000E+00	0.00000E+00
578	9.32075E-01	1.44748E+01	9.38243E-01	1.00124E-03	0.00000E+00	0.00000E+00
579	9.25098E-01	1.44977E+01	9.38220E-01	9.99764E-04	0.00000E+00	0.00000E+00
580	9.21433E-01	1.45223E+01	9.38191E-01	9.98456E-04	0.00000E+00	0.00000E+00
581	9.40642E-01	1.45452E+01	9.38195E-01	9.96739E-04	0.00000E+00	0.00000E+00
582	9.79132E-01	1.45682E+01	9.38266E-01	9.97519E-04	0.00000E+00	0.00000E+00
583	9.82711E-01	1.45910E+01	9.38342E-01	9.98734E-04	0.00000E+00	0.00000E+00
584	9.41636E-01	1.46138E+01	9.38348E-01	9.97033E-04	0.00000E+00	0.00000E+00
585	9.32929E-01	1.46377E+01	9.38338E-01	9.95365E-04	0.00000E+00	0.00000E+00
586	9.42901E-01	1.46615E+01	9.38346E-01	9.93690E-04	0.00000E+00	0.00000E+00
587	9.11376E-01	1.46853E+01	9.38300E-01	9.93060E-04	0.00000E+00	0.00000E+00
588	9.65887E-01	1.47073E+01	9.38347E-01	9.92481E-04	0.00000E+00	0.00000E+00
589	9.68138E-01	1.47310E+01	9.38398E-01	9.92088E-04	0.00000E+00	0.00000E+00
590	9.36696E-01	1.47548E+01	9.38395E-01	9.90404E-04	0.00000E+00	0.00000E+00
591	8.92257E-01	1.47797E+01	9.38317E-01	9.91819E-04	0.00000E+00	0.00000E+00
592	9.52667E-01	1.48033E+01	9.38341E-01	9.90435E-04	0.00000E+00	0.00000E+00
593	1.01253E+00	1.48263E+01	9.38467E-01	9.96694E-04	0.00000E+00	0.00000E+00
594	9.72563E-01	1.48492E+01	9.38524E-01	9.96674E-04	0.00000E+00	0.00000E+00
595	9.46801E-01	1.48712E+01	9.38538E-01	9.95090E-04	0.00000E+00	0.00000E+00
596	9.15585E-01	1.48950E+01	9.38499E-01	9.94164E-04	0.00000E+00	0.00000E+00
597	9.18616E-01	1.49187E+01	9.38466E-01	9.93055E-04	0.00000E+00	0.00000E+00
598	9.29666E-01	1.49425E+01	9.38451E-01	9.91497E-04	0.00000E+00	0.00000E+00
599	8.82997E-01	1.49663E+01	9.38358E-01	9.94184E-04	0.00000E+00	0.00000E+00
600	9.96421E-01	1.49892E+01	9.38455E-01	9.97258E-04	0.00000E+00	0.00000E+00
601	9.49348E-01	1.50122E+01	9.38474E-01	9.95757E-04	0.00000E+00	0.00000E+00
602	9.30217E-01	1.50358E+01	9.38460E-01	9.94192E-04	0.00000E+00	0.00000E+00
603	9.20505E-01	1.50588E+01	9.38430E-01	9.92986E-04	0.00000E+00	0.00000E+00
604	9.56219E-01	1.50817E+01	9.38460E-01	9.91775E-04	0.00000E+00	0.00000E+00
605	9.85087E-01	1.51045E+01	9.38537E-01	9.93144E-04	0.00000E+00	0.00000E+00
606	9.23140E-01	1.51283E+01	9.38511E-01	9.91826E-04	0.00000E+00	0.00000E+00
607	9.39363E-01	1.51512E+01	9.38513E-01	9.90186E-04	0.00000E+00	0.00000E+00
608	9.45778E-01	1.51742E+01	9.38525E-01	9.88623E-04	0.00000E+00	0.00000E+00
609	9.19351E-01	1.51980E+01	9.38493E-01	9.87499E-04	0.00000E+00	0.00000E+00
610	9.52071E-01	1.52208E+01	9.38516E-01	9.86126E-04	0.00000E+00	0.00000E+00
611	9.79187E-01	1.52437E+01	9.38582E-01	9.86768E-04	0.00000E+00	0.00000E+00
612	9.50653E-01	1.52675E+01	9.38602E-01	9.85348E-04	0.00000E+00	0.00000E+00
613	9.44038E-01	1.52913E+01	9.38611E-01	9.83774E-04	0.00000E+00	0.00000E+00
614	9.44213E-01	1.53142E+01	9.38620E-01	9.82208E-04	0.00000E+00	0.00000E+00
615	9.33929E-01	1.53380E+01	9.38613E-01	9.80634E-04	0.00000E+00	0.00000E+00
616	9.31973E-01	1.53618E+01	9.38602E-01	9.79095E-04	0.00000E+00	0.00000E+00
617	9.07024E-01	1.53857E+01	9.38550E-01	9.78850E-04	0.00000E+00	0.00000E+00
618	9.98090E-01	1.54085E+01	9.38647E-01	9.82028E-04	0.00000E+00	0.00000E+00
619	9.62230E-01	1.54305E+01	9.38685E-01	9.81179E-04	0.00000E+00	0.00000E+00
620	9.21974E-01	1.54543E+01	9.38658E-01	9.79964E-04	0.00000E+00	0.00000E+00
621	9.16871E-01	1.54780E+01	9.38623E-01	9.79012E-04	0.00000E+00	0.00000E+00
622	9.23423E-01	1.55018E+01	9.38598E-01	9.77739E-04	0.00000E+00	0.00000E+00
623	8.95480E-01	1.55257E+01	9.38529E-01	9.78630E-04	0.00000E+00	0.00000E+00
624	9.71361E-01	1.55485E+01	9.38582E-01	9.78480E-04	0.00000E+00	0.00000E+00
625	9.53844E-01	1.55723E+01	9.38606E-01	9.77215E-04	0.00000E+00	0.00000E+00
626	9.30552E-01	1.55962E+01	9.38593E-01	9.75733E-04	0.00000E+00	0.00000E+00
627	9.35378E-01	1.56200E+01	9.38588E-01	9.74184E-04	0.00000E+00	0.00000E+00
628	9.44078E-01	1.56420E+01	9.38597E-01	9.72666E-04	0.00000E+00	0.00000E+00
629	9.54964E-01	1.56657E+01	9.38623E-01	9.71465E-04	0.00000E+00	0.00000E+00
630	9.27703E-01	1.56887E+01	9.38606E-01	9.70072E-04	0.00000E+00	0.00000E+00
631	1.00296E+00	1.57123E+01	9.38708E-01	9.73917E-04	0.00000E+00	0.00000E+00
632	9.31571E-01	1.57362E+01	9.38697E-01	9.72436E-04	0.00000E+00	0.00000E+00
633	9.69320E-01	1.57600E+01	9.38745E-01	9.72106E-04	0.00000E+00	0.00000E+00
634	9.89042E-01	1.57828E+01	9.38825E-01	9.73824E-04	0.00000E+00	0.00000E+00
635	9.32962E-01	1.58058E+01	9.38816E-01	9.72329E-04	0.00000E+00	0.00000E+00
636	9.40863E-01	1.58295E+01	9.38819E-01	9.70799E-04	0.00000E+00	0.00000E+00
637	8.92825E-01	1.58543E+01	9.38746E-01	9.71972E-04	0.00000E+00	0.00000E+00
638	9.20157E-01	1.58782E+01	9.38717E-01	9.70882E-04	0.00000E+00	0.00000E+00
639	9.96603E-01	1.59000E+01	9.38808E-01	9.73607E-04	0.00000E+00	0.00000E+00
640	9.60582E-01	1.59230E+01	9.38842E-01	9.72679E-04	0.00000E+00	0.00000E+00
641	9.70939E-01	1.59468E+01	9.38892E-01	9.72453E-04	0.00000E+00	0.00000E+00
642	9.42895E-01	1.59705E+01	9.38899E-01	9.70953E-04	0.00000E+00	0.00000E+00
643	9.51506E-01	1.59935E+01	9.38918E-01	9.69637E-04	0.00000E+00	0.00000E+00
644	9.27407E-01	1.60172E+01	9.38900E-01	9.68291E-04	0.00000E+00	0.00000E+00
645	9.29923E-01	1.60410E+01	9.38886E-01	9.66885E-04	0.00000E+00	0.00000E+00
646	9.30328E-01	1.60640E+01	9.38873E-01	9.65474E-04	0.00000E+00	0.00000E+00
647	9.44038E-01	1.60877E+01	9.38881E-01	9.64009E-04	0.00000E+00	0.00000E+00
648	9.21504E-01	1.61115E+01	9.38854E-01	9.62891E-04	0.00000E+00	0.00000E+00
649	9.43148E-01	1.61343E+01	9.38861E-01	9.61425E-04	0.00000E+00	0.00000E+00
650	9.64703E-01	1.61582E+01	9.38901E-01	9.60768E-04	0.00000E+00	0.00000E+00
651	9.08608E-01	1.61812E+01	9.38854E-01	9.60421E-04	0.00000E+00	0.00000E+00
652	9.23426E-01	1.62048E+01	9.38830E-01	9.59236E-04	0.00000E+00	0.00000E+00
653	9.53679E-01	1.62287E+01	9.38853E-01	9.58033E-04	0.00000E+00	0.00000E+00
654	9.56435E-01	1.62517E+01	9.38880E-01	9.56943E-04	0.00000E+00	0.00000E+00
655	9.40723E-01	1.62745E+01	9.38883E-01	9.55480E-04	0.00000E+00	0.00000E+00
656	9.25284E-01	1.62973E+01	9.38862E-01	9.54245E-04	0.00000E+00	0.00000E+00
657	9.08590E-01	1.63212E+01	9.38816E-01	9.53907E-04	0.00000E+00	0.00000E+00
658	9.26671E-01	1.63440E+01	9.38797E-01	9.52632E-04	0.00000E+00	0.00000E+00
659	9.01560E-01	1.63688E+01	9.38741E-01	9.52868E-04	0.00000E+00	0.00000E+00
660	9.77940E-01	1.63917E+01	9.38800E-01	9.53282E-04	0.00000E+00	0.00000E+00

661	9.58119E-01	1.64155E+01	9.38830E-01	9.52286E-04	0.00000E+00	0.00000E+00
662	9.42903E-01	1.64383E+01	9.38836E-01	9.50862E-04	0.00000E+00	0.00000E+00
663	9.34902E-01	1.64622E+01	9.38830E-01	9.49441E-04	0.00000E+00	0.00000E+00
664	9.29915E-01	1.64850E+01	9.38816E-01	9.48101E-04	0.00000E+00	0.00000E+00
665	9.24465E-01	1.65078E+01	9.38795E-01	9.46917E-04	0.00000E+00	0.00000E+00
666	9.34045E-01	1.65317E+01	9.38788E-01	9.45517E-04	0.00000E+00	0.00000E+00
667	9.49178E-01	1.65555E+01	9.38803E-01	9.44224E-04	0.00000E+00	0.00000E+00
668	9.39517E-01	1.65775E+01	9.38804E-01	9.42805E-04	0.00000E+00	0.00000E+00
669	9.40568E-01	1.66013E+01	9.38807E-01	9.41395E-04	0.00000E+00	0.00000E+00
670	9.65484E-01	1.66242E+01	9.38847E-01	9.40832E-04	0.00000E+00	0.00000E+00
671	9.38007E-01	1.66480E+01	9.38846E-01	9.39426E-04	0.00000E+00	0.00000E+00
672	9.41043E-01	1.66718E+01	9.38849E-01	9.38028E-04	0.00000E+00	0.00000E+00
673	9.48740E-01	1.66947E+01	9.38864E-01	9.36745E-04	0.00000E+00	0.00000E+00
674	9.22209E-01	1.67185E+01	9.38839E-01	9.35679E-04	0.00000E+00	0.00000E+00
675	9.64288E-01	1.67423E+01	9.38877E-01	9.35052E-04	0.00000E+00	0.00000E+00
676	9.29147E-01	1.67642E+01	9.38862E-01	9.33775E-04	0.00000E+00	0.00000E+00
677	9.75030E-01	1.67880E+01	9.38916E-01	9.33929E-04	0.00000E+00	0.00000E+00
678	9.36713E-01	1.68118E+01	9.38913E-01	9.32552E-04	0.00000E+00	0.00000E+00
679	9.47822E-01	1.68347E+01	9.38926E-01	9.31267E-04	0.00000E+00	0.00000E+00
680	9.67767E-01	1.68585E+01	9.38968E-01	9.30865E-04	0.00000E+00	0.00000E+00
681	9.78379E-01	1.68813E+01	9.39026E-01	9.31303E-04	0.00000E+00	0.00000E+00
682	9.30224E-01	1.69052E+01	9.39013E-01	9.30023E-04	0.00000E+00	0.00000E+00
683	9.52216E-01	1.69290E+01	9.39033E-01	9.28859E-04	0.00000E+00	0.00000E+00
684	9.07414E-01	1.69518E+01	9.38986E-01	9.28654E-04	0.00000E+00	0.00000E+00
685	9.76482E-01	1.69748E+01	9.39041E-01	9.28917E-04	0.00000E+00	0.00000E+00
686	9.61002E-01	1.69967E+01	9.39073E-01	9.28113E-04	0.00000E+00	0.00000E+00
687	9.48217E-01	1.70205E+01	9.39087E-01	9.26853E-04	0.00000E+00	0.00000E+00
688	9.19925E-01	1.70443E+01	9.39059E-01	9.25923E-04	0.00000E+00	0.00000E+00
689	9.18225E-01	1.70672E+01	9.39028E-01	9.25071E-04	0.00000E+00	0.00000E+00
690	9.29547E-01	1.70920E+01	9.39015E-01	9.23828E-04	0.00000E+00	0.00000E+00
691	9.74512E-01	1.71148E+01	9.39066E-01	9.23924E-04	0.00000E+00	0.00000E+00
692	9.23995E-01	1.71387E+01	9.39044E-01	9.22843E-04	0.00000E+00	0.00000E+00
693	9.44968E-01	1.71625E+01	9.39053E-01	9.21546E-04	0.00000E+00	0.00000E+00
694	9.37986E-01	1.71862E+01	9.39051E-01	9.20215E-04	0.00000E+00	0.00000E+00
695	8.71771E-01	1.72110E+01	9.38954E-01	9.24000E-04	0.00000E+00	0.00000E+00
696	9.57521E-01	1.72338E+01	9.38981E-01	9.23056E-04	0.00000E+00	0.00000E+00
697	9.11858E-01	1.72577E+01	9.38942E-01	9.22553E-04	0.00000E+00	0.00000E+00
698	9.74981E-01	1.72805E+01	9.38994E-01	9.22680E-04	0.00000E+00	0.00000E+00
699	9.47938E-01	1.73043E+01	9.39007E-01	9.21445E-04	0.00000E+00	0.00000E+00
700	9.30839E-01	1.73282E+01	9.38995E-01	9.20198E-04	0.00000E+00	0.00000E+00
701	9.56392E-01	1.73520E+01	9.39020E-01	9.19218E-04	0.00000E+00	0.00000E+00
702	9.04129E-01	1.73748E+01	9.38970E-01	9.19256E-04	0.00000E+00	0.00000E+00
703	9.04947E-01	1.73987E+01	9.38921E-01	9.19226E-04	0.00000E+00	0.00000E+00
704	9.35171E-01	1.74225E+01	9.38916E-01	9.17931E-04	0.00000E+00	0.00000E+00
705	9.61477E-01	1.74453E+01	9.38948E-01	9.17186E-04	0.00000E+00	0.00000E+00
706	9.14978E-01	1.74700E+01	9.38914E-01	9.16515E-04	0.00000E+00	0.00000E+00
707	9.25121E-01	1.74938E+01	9.38895E-01	9.15423E-04	0.00000E+00	0.00000E+00
708	9.46967E-01	1.75167E+01	9.38906E-01	9.14197E-04	0.00000E+00	0.00000E+00
709	9.40055E-01	1.75405E+01	9.38908E-01	9.12904E-04	0.00000E+00	0.00000E+00
710	9.35305E-01	1.75633E+01	9.38903E-01	9.11628E-04	0.00000E+00	0.00000E+00
711	9.73473E-01	1.75872E+01	9.38951E-01	9.11647E-04	0.00000E+00	0.00000E+00
712	9.70251E-01	1.76100E+01	9.38995E-01	9.11428E-04	0.00000E+00	0.00000E+00
713	9.19442E-01	1.76330E+01	9.38968E-01	9.10561E-04	0.00000E+00	0.00000E+00
714	9.04699E-01	1.76568E+01	9.38920E-01	9.10554E-04	0.00000E+00	0.00000E+00
715	9.45347E-01	1.76805E+01	9.38929E-01	9.09321E-04	0.00000E+00	0.00000E+00
716	9.01123E-01	1.77035E+01	9.38876E-01	9.09589E-04	0.00000E+00	0.00000E+00
717	9.61063E-01	1.77273E+01	9.38907E-01	9.08846E-04	0.00000E+00	0.00000E+00
718	9.36848E-01	1.77502E+01	9.38904E-01	9.07580E-04	0.00000E+00	0.00000E+00
719	9.01023E-01	1.77740E+01	9.38851E-01	9.07852E-04	0.00000E+00	0.00000E+00
720	9.34268E-01	1.77987E+01	9.38845E-01	9.06609E-04	0.00000E+00	0.00000E+00
721	9.08481E-01	1.78215E+01	9.38803E-01	9.06332E-04	0.00000E+00	0.00000E+00
722	9.29685E-01	1.78453E+01	9.38790E-01	9.05161E-04	0.00000E+00	0.00000E+00
723	9.11574E-01	1.78692E+01	9.38752E-01	9.04692E-04	0.00000E+00	0.00000E+00
724	9.83318E-01	1.78920E+01	9.38814E-01	9.05544E-04	0.00000E+00	0.00000E+00
725	9.66869E-01	1.79150E+01	9.38853E-01	9.05123E-04	0.00000E+00	0.00000E+00
726	9.18746E-01	1.79378E+01	9.38825E-01	9.04299E-04	0.00000E+00	0.00000E+00
727	9.17843E-01	1.79625E+01	9.38796E-01	9.03514E-04	0.00000E+00	0.00000E+00
728	9.60154E-01	1.79863E+01	9.38825E-01	9.02748E-04	0.00000E+00	0.00000E+00
729	9.68030E-01	1.80092E+01	9.38866E-01	9.02400E-04	0.00000E+00	0.00000E+00
730	9.64705E-01	1.80330E+01	9.38901E-01	9.01859E-04	0.00000E+00	0.00000E+00
731	9.46238E-01	1.80558E+01	9.38911E-01	9.00677E-04	0.00000E+00	0.00000E+00
732	9.50756E-01	1.80788E+01	9.38927E-01	8.99589E-04	0.00000E+00	0.00000E+00
733	9.17882E-01	1.81017E+01	9.38899E-01	8.98818E-04	0.00000E+00	0.00000E+00
734	9.20579E-01	1.81255E+01	9.38874E-01	8.97938E-04	0.00000E+00	0.00000E+00
735	9.46260E-01	1.81483E+01	9.38884E-01	8.96769E-04	0.00000E+00	0.00000E+00
736	9.64619E-01	1.81722E+01	9.38919E-01	8.96233E-04	0.00000E+00	0.00000E+00
737	9.51975E-01	1.81950E+01	9.38936E-01	8.95189E-04	0.00000E+00	0.00000E+00
738	9.41043E-01	1.82180E+01	9.38939E-01	8.93976E-04	0.00000E+00	0.00000E+00
739	9.45898E-01	1.82417E+01	9.38949E-01	8.92812E-04	0.00000E+00	0.00000E+00
740	9.65496E-01	1.82655E+01	9.38985E-01	8.92327E-04	0.00000E+00	0.00000E+00
741	9.13476E-01	1.82893E+01	9.38950E-01	8.91787E-04	0.00000E+00	0.00000E+00
742	9.18150E-01	1.83132E+01	9.38922E-01	8.91025E-04	0.00000E+00	0.00000E+00
743	9.26568E-01	1.83370E+01	9.38905E-01	8.89978E-04	0.00000E+00	0.00000E+00
744	9.18823E-01	1.83607E+01	9.38878E-01	8.89189E-04	0.00000E+00	0.00000E+00
745	9.49542E-01	1.83845E+01	9.38893E-01	8.88108E-04	0.00000E+00	0.00000E+00
746	9.54471E-01	1.84083E+01	9.38914E-01	8.87160E-04	0.00000E+00	0.00000E+00
747	9.36317E-01	1.84322E+01	9.38910E-01	8.85976E-04	0.00000E+00	0.00000E+00
748	9.31862E-01	1.84550E+01	9.38901E-01	8.84838E-04	0.00000E+00	0.00000E+00
749	9.36146E-01	1.84778E+01	9.38897E-01	8.83660E-04	0.00000E+00	0.00000E+00
750	9.62301E-01	1.85017E+01	9.38928E-01	8.83032E-04	0.00000E+00	0.00000E+00
751	9.90744E-01	1.85247E+01	9.38997E-01	8.84562E-04	0.00000E+00	0.00000E+00
752	9.38020E-01	1.85475E+01	9.38996E-01	8.83383E-04	0.00000E+00	0.00000E+00
753	9.26880E-01	1.85713E+01	9.38980E-01	8.82353E-04	0.00000E+00	0.00000E+00
754	9.26182E-01	1.85950E+01	9.38963E-01	8.81343E-04	0.00000E+00	0.00000E+00
755	9.36353E-01	1.86180E+01	9.38960E-01	8.80179E-04	0.00000E+00	0.00000E+00

756	9.03621E-01	1.86418E+01	9.38913E-01	8.80259E-04	0.00000E+00	0.00000E+00
757	9.57084E-01	1.86637E+01	9.38937E-01	8.79422E-04	0.00000E+00	0.00000E+00
758	9.31246E-01	1.86875E+01	9.38927E-01	8.78317E-04	0.00000E+00	0.00000E+00
759	9.35875E-01	1.87113E+01	9.38923E-01	8.77165E-04	0.00000E+00	0.00000E+00
760	9.86561E-01	1.87352E+01	9.38985E-01	8.78259E-04	0.00000E+00	0.00000E+00
761	9.25748E-01	1.87580E+01	9.38968E-01	8.77274E-04	0.00000E+00	0.00000E+00
762	9.39688E-01	1.87818E+01	9.38969E-01	8.76120E-04	0.00000E+00	0.00000E+00
763	9.55200E-01	1.88057E+01	9.38990E-01	8.75228E-04	0.00000E+00	0.00000E+00
764	9.67303E-01	1.88295E+01	9.39027E-01	8.74868E-04	0.00000E+00	0.00000E+00
765	9.60331E-01	1.88523E+01	9.39055E-01	8.74166E-04	0.00000E+00	0.00000E+00
766	9.58079E-01	1.88762E+01	9.39080E-01	8.73376E-04	0.00000E+00	0.00000E+00
767	9.92942E-01	1.88990E+01	9.39151E-01	8.75071E-04	0.00000E+00	0.00000E+00
768	9.36634E-01	1.89218E+01	9.39147E-01	8.73934E-04	0.00000E+00	0.00000E+00
769	9.69284E-01	1.89448E+01	9.39187E-01	8.73678E-04	0.00000E+00	0.00000E+00
770	9.02905E-01	1.89685E+01	9.39139E-01	8.73818E-04	0.00000E+00	0.00000E+00
771	9.31800E-01	1.89923E+01	9.39130E-01	8.72733E-04	0.00000E+00	0.00000E+00
772	9.20422E-01	1.90153E+01	9.39106E-01	8.71937E-04	0.00000E+00	0.00000E+00
773	9.70387E-01	1.90382E+01	9.39146E-01	8.71750E-04	0.00000E+00	0.00000E+00
774	9.01684E-01	1.90620E+01	9.39098E-01	8.71972E-04	0.00000E+00	0.00000E+00
775	9.38387E-01	1.90848E+01	9.39097E-01	8.70843E-04	0.00000E+00	0.00000E+00
776	9.01963E-01	1.91077E+01	9.39049E-01	8.71040E-04	0.00000E+00	0.00000E+00
777	9.48430E-01	1.91325E+01	9.39061E-01	8.69999E-04	0.00000E+00	0.00000E+00
778	9.19217E-01	1.91562E+01	9.39035E-01	8.69254E-04	0.00000E+00	0.00000E+00
779	9.26475E-01	1.91792E+01	9.39019E-01	8.68285E-04	0.00000E+00	0.00000E+00
780	9.92574E-01	1.92020E+01	9.39088E-01	8.69896E-04	0.00000E+00	0.00000E+00
781	9.34852E-01	1.92248E+01	9.39082E-01	8.68795E-04	0.00000E+00	0.00000E+00
782	9.24003E-01	1.92487E+01	9.39063E-01	8.67896E-04	0.00000E+00	0.00000E+00
783	9.25178E-01	1.92733E+01	9.39045E-01	8.66966E-04	0.00000E+00	0.00000E+00
784	9.45854E-01	1.92963E+01	9.39054E-01	8.65901E-04	0.00000E+00	0.00000E+00
785	9.53401E-01	1.93192E+01	9.39072E-01	8.64988E-04	0.00000E+00	0.00000E+00
786	9.93710E-01	1.93430E+01	9.39142E-01	8.66691E-04	0.00000E+00	0.00000E+00
787	9.39756E-01	1.93658E+01	9.39143E-01	8.65586E-04	0.00000E+00	0.00000E+00
788	9.40221E-01	1.93888E+01	9.39144E-01	8.64486E-04	0.00000E+00	0.00000E+00
789	9.26972E-01	1.94117E+01	9.39129E-01	8.63525E-04	0.00000E+00	0.00000E+00
790	9.19882E-01	1.94355E+01	9.39104E-01	8.62774E-04	0.00000E+00	0.00000E+00
791	9.36054E-01	1.94583E+01	9.39100E-01	8.61689E-04	0.00000E+00	0.00000E+00
792	9.57824E-01	1.94822E+01	9.39124E-01	8.60923E-04	0.00000E+00	0.00000E+00
793	9.56740E-01	1.95060E+01	9.39146E-01	8.60123E-04	0.00000E+00	0.00000E+00
794	9.60888E-01	1.95288E+01	9.39174E-01	8.59475E-04	0.00000E+00	0.00000E+00
795	9.37800E-01	1.95517E+01	9.39172E-01	8.58392E-04	0.00000E+00	0.00000E+00
796	9.25421E-01	1.95755E+01	9.39155E-01	8.57485E-04	0.00000E+00	0.00000E+00
797	9.09263E-01	1.95983E+01	9.39117E-01	8.57231E-04	0.00000E+00	0.00000E+00
798	9.52050E-01	1.96213E+01	9.39133E-01	8.56307E-04	0.00000E+00	0.00000E+00
799	9.12904E-01	1.96460E+01	9.39101E-01	8.55865E-04	0.00000E+00	0.00000E+00
800	9.36917E-01	1.96698E+01	9.39098E-01	8.54796E-04	0.00000E+00	0.00000E+00
801	9.70928E-01	1.96927E+01	9.39138E-01	8.54655E-04	0.00000E+00	0.00000E+00
802	9.10008E-01	1.97165E+01	9.39101E-01	8.54362E-04	0.00000E+00	0.00000E+00
803	9.26777E-01	1.97403E+01	9.39086E-01	8.53433E-04	0.00000E+00	0.00000E+00
804	9.24964E-01	1.97640E+01	9.39068E-01	8.52550E-04	0.00000E+00	0.00000E+00
805	9.37624E-01	1.97870E+01	9.39066E-01	8.51490E-04	0.00000E+00	0.00000E+00
806	9.05660E-01	1.98108E+01	9.39025E-01	8.51445E-04	0.00000E+00	0.00000E+00
807	9.06057E-01	1.98355E+01	9.38984E-01	8.51372E-04	0.00000E+00	0.00000E+00
808	9.19422E-01	1.98583E+01	9.38960E-01	8.50661E-04	0.00000E+00	0.00000E+00
809	9.18639E-01	1.98822E+01	9.38934E-01	8.49980E-04	0.00000E+00	0.00000E+00
810	9.19503E-01	1.99068E+01	9.38910E-01	8.49268E-04	0.00000E+00	0.00000E+00
811	9.26878E-01	1.99298E+01	9.38896E-01	8.48348E-04	0.00000E+00	0.00000E+00
812	9.43545E-01	1.99527E+01	9.38901E-01	8.47319E-04	0.00000E+00	0.00000E+00
813	9.55380E-01	1.99755E+01	9.38922E-01	8.46517E-04	0.00000E+00	0.00000E+00
814	9.11339E-01	2.00003E+01	9.38888E-01	8.46156E-04	0.00000E+00	0.00000E+00
815	9.09312E-01	2.00240E+01	9.38851E-01	8.45898E-04	0.00000E+00	0.00000E+00
816	9.37536E-01	2.00470E+01	9.38850E-01	8.44859E-04	0.00000E+00	0.00000E+00
817	9.70622E-01	2.00688E+01	9.38889E-01	8.44722E-04	0.00000E+00	0.00000E+00
818	9.57916E-01	2.00918E+01	9.38912E-01	8.44008E-04	0.00000E+00	0.00000E+00
819	9.27445E-01	2.01157E+01	9.38898E-01	8.43092E-04	0.00000E+00	0.00000E+00
820	9.44088E-01	2.01385E+01	9.38904E-01	8.42084E-04	0.00000E+00	0.00000E+00
821	9.30320E-01	2.01623E+01	9.38894E-01	8.41121E-04	0.00000E+00	0.00000E+00
822	9.32914E-01	2.01862E+01	9.38887E-01	8.40126E-04	0.00000E+00	0.00000E+00
823	9.30894E-01	2.02090E+01	9.38877E-01	8.39159E-04	0.00000E+00	0.00000E+00
824	9.30168E-01	2.02337E+01	9.38866E-01	8.38204E-04	0.00000E+00	0.00000E+00
825	9.22243E-01	2.02575E+01	9.38846E-01	8.37428E-04	0.00000E+00	0.00000E+00
826	9.66003E-01	2.02803E+01	9.38879E-01	8.37061E-04	0.00000E+00	0.00000E+00
827	9.29377E-01	2.03042E+01	9.38867E-01	8.36125E-04	0.00000E+00	0.00000E+00
828	9.55647E-01	2.03262E+01	9.38888E-01	8.35359E-04	0.00000E+00	0.00000E+00
829	9.13633E-01	2.03500E+01	9.38857E-01	8.34907E-04	0.00000E+00	0.00000E+00
830	9.50101E-01	2.03737E+01	9.38871E-01	8.34009E-04	0.00000E+00	0.00000E+00
831	9.48961E-01	2.03967E+01	9.38883E-01	8.33091E-04	0.00000E+00	0.00000E+00
832	9.48862E-01	2.04205E+01	9.38895E-01	8.32173E-04	0.00000E+00	0.00000E+00
833	9.41736E-01	2.04433E+01	9.38898E-01	8.31178E-04	0.00000E+00	0.00000E+00
834	9.37363E-01	2.04680E+01	9.38897E-01	8.30181E-04	0.00000E+00	0.00000E+00
835	9.66748E-01	2.04910E+01	9.38930E-01	8.29857E-04	0.00000E+00	0.00000E+00
836	1.01260E+00	2.05138E+01	9.39018E-01	8.33555E-04	0.00000E+00	0.00000E+00
837	9.00539E-01	2.05367E+01	9.38972E-01	8.33830E-04	0.00000E+00	0.00000E+00
838	9.62066E-01	2.05605E+01	9.39000E-01	8.33290E-04	0.00000E+00	0.00000E+00
839	9.10203E-01	2.05833E+01	9.38965E-01	8.33005E-04	0.00000E+00	0.00000E+00
840	9.38133E-01	2.06072E+01	9.38964E-01	8.32011E-04	0.00000E+00	0.00000E+00
841	9.02632E-01	2.06300E+01	9.38921E-01	8.32146E-04	0.00000E+00	0.00000E+00
842	9.67458E-01	2.06530E+01	9.38955E-01	8.31849E-04	0.00000E+00	0.00000E+00
843	9.28494E-01	2.06758E+01	9.38943E-01	8.30952E-04	0.00000E+00	0.00000E+00
844	9.21864E-01	2.07005E+01	9.38922E-01	8.30213E-04	0.00000E+00	0.00000E+00
845	9.43201E-01	2.07235E+01	9.38927E-01	8.29243E-04	0.00000E+00	0.00000E+00
846	9.35636E-01	2.07463E+01	9.38924E-01	8.28269E-04	0.00000E+00	0.00000E+00
847	9.09182E-01	2.07710E+01	9.38888E-01	8.28037E-04	0.00000E+00	0.00000E+00
848	9.36806E-01	2.07940E+01	9.38886E-01	8.27061E-04	0.00000E+00	0.00000E+00
849	8.90424E-01	2.08177E+01	9.38829E-01	8.28063E-04	0.00000E+00	0.00000E+00
850	9.36661E-01	2.08425E+01	9.38826E-01	8.27090E-04	0.00000E+00	0.00000E+00

851	9.57491E-01	2.08653E+01	9.38848E-01	8.26407E-04	0.00000E+00	0.00000E+00
852	9.41807E-01	2.08873E+01	9.38852E-01	8.25442E-04	0.00000E+00	0.00000E+00
853	9.48774E-01	2.09102E+01	9.38863E-01	8.24554E-04	0.00000E+00	0.00000E+00
854	9.42531E-01	2.09330E+01	9.38868E-01	8.23597E-04	0.00000E+00	0.00000E+00
855	9.02756E-01	2.09568E+01	9.38825E-01	8.23719E-04	0.00000E+00	0.00000E+00
856	9.06990E-01	2.09798E+01	9.38788E-01	8.23598E-04	0.00000E+00	0.00000E+00
857	9.91736E-01	2.10027E+01	9.38850E-01	8.24962E-04	0.00000E+00	0.00000E+00
858	9.72841E-01	2.10273E+01	9.38890E-01	8.24954E-04	0.00000E+00	0.00000E+00
859	9.29756E-01	2.10512E+01	9.38879E-01	8.24060E-04	0.00000E+00	0.00000E+00
860	9.35268E-01	2.10740E+01	9.38875E-01	8.23109E-04	0.00000E+00	0.00000E+00
861	9.34254E-01	2.10970E+01	9.38869E-01	8.22168E-04	0.00000E+00	0.00000E+00
862	9.33841E-01	2.11207E+01	9.38863E-01	8.21233E-04	0.00000E+00	0.00000E+00
863	9.20073E-01	2.11437E+01	9.38842E-01	8.20568E-04	0.00000E+00	0.00000E+00
864	9.22744E-01	2.11665E+01	9.38823E-01	8.19829E-04	0.00000E+00	0.00000E+00
865	9.26794E-01	2.11903E+01	9.38809E-01	8.18997E-04	0.00000E+00	0.00000E+00
866	9.08680E-01	2.12142E+01	9.38774E-01	8.18791E-04	0.00000E+00	0.00000E+00
867	9.27036E-01	2.12370E+01	9.38761E-01	8.17957E-04	0.00000E+00	0.00000E+00
868	1.00571E+00	2.12580E+01	9.38838E-01	8.20661E-04	0.00000E+00	0.00000E+00
869	9.37281E-01	2.12810E+01	9.38836E-01	8.19715E-04	0.00000E+00	0.00000E+00
870	9.50696E-01	2.13047E+01	9.38850E-01	8.18885E-04	0.00000E+00	0.00000E+00
871	9.35703E-01	2.13285E+01	9.38846E-01	8.17950E-04	0.00000E+00	0.00000E+00
872	9.30543E-01	2.13523E+01	9.38837E-01	8.17065E-04	0.00000E+00	0.00000E+00
873	9.11515E-01	2.13762E+01	9.38805E-01	8.16729E-04	0.00000E+00	0.00000E+00
874	9.64393E-01	2.13990E+01	9.38835E-01	8.16319E-04	0.00000E+00	0.00000E+00
875	9.15660E-01	2.14237E+01	9.38808E-01	8.15816E-04	0.00000E+00	0.00000E+00
876	9.69804E-01	2.14467E+01	9.38844E-01	8.15653E-04	0.00000E+00	0.00000E+00
877	9.24031E-01	2.14705E+01	9.38827E-01	8.14896E-04	0.00000E+00	0.00000E+00
878	9.13524E-01	2.14942E+01	9.38798E-01	8.14478E-04	0.00000E+00	0.00000E+00
879	9.21083E-01	2.15172E+01	9.38778E-01	8.13799E-04	0.00000E+00	0.00000E+00
880	8.98358E-01	2.15418E+01	9.38731E-01	8.14174E-04	0.00000E+00	0.00000E+00
881	9.44424E-01	2.15647E+01	9.38738E-01	8.13273E-04	0.00000E+00	0.00000E+00
882	9.32353E-01	2.15885E+01	9.38731E-01	8.12381E-04	0.00000E+00	0.00000E+00
883	9.86574E-01	2.16123E+01	9.38785E-01	8.13273E-04	0.00000E+00	0.00000E+00
884	8.83376E-01	2.16352E+01	9.38722E-01	8.14776E-04	0.00000E+00	0.00000E+00
885	9.04659E-01	2.16590E+01	9.38684E-01	8.14767E-04	0.00000E+00	0.00000E+00
886	9.26387E-01	2.16828E+01	9.38670E-01	8.13964E-04	0.00000E+00	0.00000E+00
887	9.05810E-01	2.17067E+01	9.38633E-01	8.13891E-04	0.00000E+00	0.00000E+00
888	9.09202E-01	2.17303E+01	9.38599E-01	8.13650E-04	0.00000E+00	0.00000E+00
889	9.47268E-01	2.17542E+01	9.38609E-01	8.12791E-04	0.00000E+00	0.00000E+00
890	9.51634E-01	2.17772E+01	9.38624E-01	8.12007E-04	0.00000E+00	0.00000E+00
891	9.47755E-01	2.18008E+01	9.38634E-01	8.11159E-04	0.00000E+00	0.00000E+00
892	9.63209E-01	2.18247E+01	9.38662E-01	8.10717E-04	0.00000E+00	0.00000E+00
893	9.34602E-01	2.18467E+01	9.38657E-01	8.09819E-04	0.00000E+00	0.00000E+00
894	9.24959E-01	2.18695E+01	9.38642E-01	8.09057E-04	0.00000E+00	0.00000E+00
895	9.20309E-01	2.18933E+01	9.38621E-01	8.08411E-04	0.00000E+00	0.00000E+00
896	9.12534E-01	2.19172E+01	9.38592E-01	8.08033E-04	0.00000E+00	0.00000E+00
897	9.60613E-01	2.19410E+01	9.38617E-01	8.07505E-04	0.00000E+00	0.00000E+00
898	9.07657E-01	2.19648E+01	9.38582E-01	8.07343E-04	0.00000E+00	0.00000E+00
899	9.47533E-01	2.19885E+01	9.38592E-01	8.06504E-04	0.00000E+00	0.00000E+00
900	8.98525E-01	2.20123E+01	9.38547E-01	8.06840E-04	0.00000E+00	0.00000E+00
901	9.36608E-01	2.20352E+01	9.38545E-01	8.05945E-04	0.00000E+00	0.00000E+00
902	9.48771E-01	2.20582E+01	9.38557E-01	8.05129E-04	0.00000E+00	0.00000E+00
903	9.61735E-01	2.20828E+01	9.38582E-01	8.04646E-04	0.00000E+00	0.00000E+00
904	9.57278E-01	2.21057E+01	9.38603E-01	8.04021E-04	0.00000E+00	0.00000E+00
905	9.42837E-01	2.21295E+01	9.38608E-01	8.03144E-04	0.00000E+00	0.00000E+00
906	9.06335E-01	2.21533E+01	9.38572E-01	8.03049E-04	0.00000E+00	0.00000E+00
907	9.27818E-01	2.21772E+01	9.38560E-01	8.02249E-04	0.00000E+00	0.00000E+00
908	9.33947E-01	2.22000E+01	9.38555E-01	8.01379E-04	0.00000E+00	0.00000E+00
909	9.72791E-01	2.22228E+01	9.38593E-01	8.01385E-04	0.00000E+00	0.00000E+00
910	9.22613E-01	2.22458E+01	9.38575E-01	8.00695E-04	0.00000E+00	0.00000E+00
911	9.27260E-01	2.22697E+01	9.38563E-01	7.99911E-04	0.00000E+00	0.00000E+00
912	9.40504E-01	2.22933E+01	9.38565E-01	7.99034E-04	0.00000E+00	0.00000E+00
913	9.27604E-01	2.23163E+01	9.38553E-01	7.98247E-04	0.00000E+00	0.00000E+00
914	9.32108E-01	2.23400E+01	9.38546E-01	7.97403E-04	0.00000E+00	0.00000E+00
915	9.39948E-01	2.23638E+01	9.38547E-01	7.96530E-04	0.00000E+00	0.00000E+00
916	9.07274E-01	2.23887E+01	9.38513E-01	7.96394E-04	0.00000E+00	0.00000E+00
917	9.60385E-01	2.24115E+01	9.38537E-01	7.95882E-04	0.00000E+00	0.00000E+00
918	9.38172E-01	2.24353E+01	9.38537E-01	7.95013E-04	0.00000E+00	0.00000E+00
919	9.27022E-01	2.24582E+01	9.38524E-01	7.94244E-04	0.00000E+00	0.00000E+00
920	9.34728E-01	2.24820E+01	9.38520E-01	7.93390E-04	0.00000E+00	0.00000E+00
921	9.46692E-01	2.25058E+01	9.38529E-01	7.92576E-04	0.00000E+00	0.00000E+00
922	9.23109E-01	2.25287E+01	9.38512E-01	7.91891E-04	0.00000E+00	0.00000E+00
923	8.87189E-01	2.25525E+01	9.38456E-01	7.92991E-04	0.00000E+00	0.00000E+00
924	9.61856E-01	2.25753E+01	9.38482E-01	7.92537E-04	0.00000E+00	0.00000E+00
925	9.20343E-01	2.26000E+01	9.38462E-01	7.91922E-04	0.00000E+00	0.00000E+00
926	9.84631E-01	2.26230E+01	9.38512E-01	7.92641E-04	0.00000E+00	0.00000E+00
927	9.28523E-01	2.26450E+01	9.38501E-01	7.91857E-04	0.00000E+00	0.00000E+00
928	9.23518E-01	2.26697E+01	9.38485E-01	7.91167E-04	0.00000E+00	0.00000E+00
929	9.56012E-01	2.26925E+01	9.38504E-01	7.90539E-04	0.00000E+00	0.00000E+00
930	9.47862E-01	2.27163E+01	9.38514E-01	7.89751E-04	0.00000E+00	0.00000E+00
931	1.00085E+00	2.27383E+01	9.38581E-01	7.91749E-04	0.00000E+00	0.00000E+00
932	9.32273E-01	2.27622E+01	9.38574E-01	7.90926E-04	0.00000E+00	0.00000E+00
933	9.59697E-01	2.27850E+01	9.38597E-01	7.90402E-04	0.00000E+00	0.00000E+00
934	9.74502E-01	2.28088E+01	9.38636E-01	7.90492E-04	0.00000E+00	0.00000E+00
935	9.19740E-01	2.28325E+01	9.38615E-01	7.89904E-04	0.00000E+00	0.00000E+00
936	9.30225E-01	2.28563E+01	9.38606E-01	7.89109E-04	0.00000E+00	0.00000E+00
937	9.02700E-01	2.28812E+01	9.38568E-01	7.89200E-04	0.00000E+00	0.00000E+00
938	9.81155E-01	2.29040E+01	9.38613E-01	7.89668E-04	0.00000E+00	0.00000E+00
939	9.71186E-01	2.29268E+01	9.38648E-01	7.89590E-04	0.00000E+00	0.00000E+00
940	9.17643E-01	2.29488E+01	9.38626E-01	7.89066E-04	0.00000E+00	0.00000E+00
941	9.70050E-01	2.29708E+01	9.38659E-01	7.88935E-04	0.00000E+00	0.00000E+00
942	8.94729E-01	2.29947E+01	9.38613E-01	7.89480E-04	0.00000E+00	0.00000E+00
943	9.46672E-01	2.30183E+01	9.38621E-01	7.88687E-04	0.00000E+00	0.00000E+00
944	9.37264E-01	2.30422E+01	9.38620E-01	7.87851E-04	0.00000E+00	0.00000E+00
945	9.42056E-01	2.30660E+01	9.38623E-01	7.87023E-04	0.00000E+00	0.00000E+00

946	9.09905E-01	2.30898E+01	9.38593E-01	7.86777E-04	0.00000E+00	0.00000E+00
947	9.44193E-01	2.31137E+01	9.38599E-01	7.85967E-04	0.00000E+00	0.00000E+00
948	9.35474E-01	2.31373E+01	9.38596E-01	7.85142E-04	0.00000E+00	0.00000E+00
949	9.61784E-01	2.31612E+01	9.38620E-01	7.84695E-04	0.00000E+00	0.00000E+00
950	9.39951E-01	2.31842E+01	9.38621E-01	7.83868E-04	0.00000E+00	0.00000E+00
951	9.60090E-01	2.32070E+01	9.38644E-01	7.83368E-04	0.00000E+00	0.00000E+00
952	9.40739E-01	2.32298E+01	9.38646E-01	7.82547E-04	0.00000E+00	0.00000E+00
953	9.60578E-01	2.32528E+01	9.38669E-01	7.82063E-04	0.00000E+00	0.00000E+00
954	9.25059E-01	2.32757E+01	9.38655E-01	7.81372E-04	0.00000E+00	0.00000E+00
955	9.35311E-01	2.32995E+01	9.38652E-01	7.80560E-04	0.00000E+00	0.00000E+00
956	9.60339E-01	2.33215E+01	9.38674E-01	7.80072E-04	0.00000E+00	0.00000E+00
957	9.10698E-01	2.33462E+01	9.38645E-01	7.79806E-04	0.00000E+00	0.00000E+00
958	9.43670E-01	2.33690E+01	9.38650E-01	7.79007E-04	0.00000E+00	0.00000E+00
959	9.20223E-01	2.33928E+01	9.38631E-01	7.78431E-04	0.00000E+00	0.00000E+00
960	9.60063E-01	2.34157E+01	9.38653E-01	7.77940E-04	0.00000E+00	0.00000E+00
961	9.27028E-01	2.34395E+01	9.38641E-01	7.77223E-04	0.00000E+00	0.00000E+00
962	9.13701E-01	2.34633E+01	9.38615E-01	7.76847E-04	0.00000E+00	0.00000E+00
963	9.78438E-01	2.34853E+01	9.38657E-01	7.77144E-04	0.00000E+00	0.00000E+00
964	9.62132E-01	2.35090E+01	9.38681E-01	7.76719E-04	0.00000E+00	0.00000E+00
965	9.22775E-01	2.35338E+01	9.38665E-01	7.76088E-04	0.00000E+00	0.00000E+00
966	9.08247E-01	2.35567E+01	9.38633E-01	7.75924E-04	0.00000E+00	0.00000E+00
967	9.01881E-01	2.35813E+01	9.38595E-01	7.76055E-04	0.00000E+00	0.00000E+00
968	9.35932E-01	2.36052E+01	9.38592E-01	7.75256E-04	0.00000E+00	0.00000E+00
969	9.31346E-01	2.36290E+01	9.38585E-01	7.74490E-04	0.00000E+00	0.00000E+00
970	9.59867E-01	2.36518E+01	9.38607E-01	7.74002E-04	0.00000E+00	0.00000E+00
971	9.30092E-01	2.36757E+01	9.38598E-01	7.73253E-04	0.00000E+00	0.00000E+00
972	9.25621E-01	2.36985E+01	9.38584E-01	7.72571E-04	0.00000E+00	0.00000E+00
973	8.99646E-01	2.37223E+01	9.38544E-01	7.72816E-04	0.00000E+00	0.00000E+00
974	9.13953E-01	2.37462E+01	9.38519E-01	7.72435E-04	0.00000E+00	0.00000E+00
975	9.71791E-01	2.37700E+01	9.38553E-01	7.72398E-04	0.00000E+00	0.00000E+00
976	9.52036E-01	2.37928E+01	9.38567E-01	7.71729E-04	0.00000E+00	0.00000E+00
977	9.03184E-01	2.38167E+01	9.38531E-01	7.71790E-04	0.00000E+00	0.00000E+00
978	9.51272E-01	2.38405E+01	9.38544E-01	7.71110E-04	0.00000E+00	0.00000E+00
979	9.86197E-01	2.38625E+01	9.38593E-01	7.71863E-04	0.00000E+00	0.00000E+00
980	9.35043E-01	2.38862E+01	9.38589E-01	7.71082E-04	0.00000E+00	0.00000E+00
981	9.29248E-01	2.39092E+01	9.38580E-01	7.70353E-04	0.00000E+00	0.00000E+00
982	9.33718E-01	2.39338E+01	9.38575E-01	7.69582E-04	0.00000E+00	0.00000E+00
983	9.42042E-01	2.39567E+01	9.38578E-01	7.68805E-04	0.00000E+00	0.00000E+00
984	8.88027E-01	2.39805E+01	9.38527E-01	7.69745E-04	0.00000E+00	0.00000E+00
985	9.14078E-01	2.40043E+01	9.38502E-01	7.69364E-04	0.00000E+00	0.00000E+00
986	9.70847E-01	2.40282E+01	9.38535E-01	7.69284E-04	0.00000E+00	0.00000E+00
987	9.29961E-01	2.40510E+01	9.38526E-01	7.68552E-04	0.00000E+00	0.00000E+00
988	9.53439E-01	2.40748E+01	9.38541E-01	7.67921E-04	0.00000E+00	0.00000E+00
989	9.33792E-01	2.40987E+01	9.38536E-01	7.67158E-04	0.00000E+00	0.00000E+00
990	9.49253E-01	2.41223E+01	9.38547E-01	7.66458E-04	0.00000E+00	0.00000E+00
991	9.62434E-01	2.41472E+01	9.38571E-01	7.66063E-04	0.00000E+00	0.00000E+00
992	8.98207E-01	2.41710E+01	9.38530E-01	7.66374E-04	0.00000E+00	0.00000E+00
993	9.59347E-01	2.41938E+01	9.38551E-01	7.65889E-04	0.00000E+00	0.00000E+00
994	9.10898E-01	2.42167E+01	9.38524E-01	7.65624E-04	0.00000E+00	0.00000E+00
995	9.39084E-01	2.42405E+01	9.38524E-01	7.64853E-04	0.00000E+00	0.00000E+00
996	9.33349E-01	2.42643E+01	9.38519E-01	7.64101E-04	0.00000E+00	0.00000E+00
997	9.87495E-01	2.42872E+01	9.38568E-01	7.64918E-04	0.00000E+00	0.00000E+00
998	9.25661E-01	2.43100E+01	9.38555E-01	7.64259E-04	0.00000E+00	0.00000E+00
999	9.34588E-01	2.43338E+01	9.38551E-01	7.63503E-04	0.00000E+00	0.00000E+00
1000	9.45410E-01	2.43568E+01	9.38558E-01	7.62768E-04	0.00000E+00	0.00000E+00
1001	9.39255E-01	2.43805E+01	9.38559E-01	7.62005E-04	0.00000E+00	0.00000E+00
1002	9.32947E-01	2.44043E+01	9.38553E-01	7.61263E-04	0.00000E+00	0.00000E+00
1003	9.12819E-01	2.44282E+01	9.38527E-01	7.60936E-04	0.00000E+00	0.00000E+00
1004	9.73663E-01	2.44510E+01	9.38563E-01	7.60985E-04	0.00000E+00	0.00000E+00
1005	9.47157E-01	2.44758E+01	9.38571E-01	7.60274E-04	0.00000E+00	0.00000E+00
1006	9.54433E-01	2.44987E+01	9.38587E-01	7.59681E-04	0.00000E+00	0.00000E+00
1007	9.36710E-01	2.45225E+01	9.38585E-01	7.58927E-04	0.00000E+00	0.00000E+00
1008	9.69821E-01	2.45453E+01	9.38616E-01	7.58808E-04	0.00000E+00	0.00000E+00
1009	9.67534E-01	2.45682E+01	9.38645E-01	7.58597E-04	0.00000E+00	0.00000E+00
1010	9.60390E-01	2.45920E+01	9.38666E-01	7.58151E-04	0.00000E+00	0.00000E+00
1011	9.39272E-01	2.46148E+01	9.38667E-01	7.57400E-04	0.00000E+00	0.00000E+00
1012	9.50145E-01	2.46387E+01	9.38678E-01	7.56735E-04	0.00000E+00	0.00000E+00
1013	9.53153E-01	2.46617E+01	9.38693E-01	7.56122E-04	0.00000E+00	0.00000E+00
1014	9.23548E-01	2.46863E+01	9.38678E-01	7.55522E-04	0.00000E+00	0.00000E+00
1015	9.16007E-01	2.47092E+01	9.38655E-01	7.55108E-04	0.00000E+00	0.00000E+00
1016	9.35179E-01	2.47330E+01	9.38652E-01	7.54371E-04	0.00000E+00	0.00000E+00
1017	9.56556E-01	2.47558E+01	9.38670E-01	7.53833E-04	0.00000E+00	0.00000E+00
1018	9.18734E-01	2.47807E+01	9.38650E-01	7.53347E-04	0.00000E+00	0.00000E+00
1019	9.16668E-01	2.48035E+01	9.38628E-01	7.52916E-04	0.00000E+00	0.00000E+00
1020	9.25423E-01	2.48273E+01	9.38615E-01	7.52288E-04	0.00000E+00	0.00000E+00
1021	9.14754E-01	2.48502E+01	9.38592E-01	7.51914E-04	0.00000E+00	0.00000E+00
1022	9.07734E-01	2.48748E+01	9.38562E-01	7.51785E-04	0.00000E+00	0.00000E+00
1023	9.56991E-01	2.48968E+01	9.38580E-01	7.51265E-04	0.00000E+00	0.00000E+00
1024	8.95227E-01	2.49207E+01	9.38537E-01	7.51728E-04	0.00000E+00	0.00000E+00
1025	9.12037E-01	2.49453E+01	9.38511E-01	7.51439E-04	0.00000E+00	0.00000E+00
1026	8.98296E-01	2.49683E+01	9.38472E-01	7.51732E-04	0.00000E+00	0.00000E+00
1027	9.21735E-01	2.49920E+01	9.38456E-01	7.51175E-04	0.00000E+00	0.00000E+00
1028	9.64811E-01	2.50150E+01	9.38481E-01	7.50882E-04	0.00000E+00	0.00000E+00
1029	9.36293E-01	2.50388E+01	9.38479E-01	7.50154E-04	0.00000E+00	0.00000E+00
1030	9.53964E-01	2.50625E+01	9.38494E-01	7.49575E-04	0.00000E+00	0.00000E+00
1031	9.18974E-01	2.50855E+01	9.38475E-01	7.49087E-04	0.00000E+00	0.00000E+00
1032	1.00510E+00	2.51083E+01	9.38540E-01	7.51150E-04	0.00000E+00	0.00000E+00
1033	8.88793E-01	2.51312E+01	9.38492E-01	7.51970E-04	0.00000E+00	0.00000E+00
1034	9.14311E-01	2.51560E+01	9.38468E-01	7.51607E-04	0.00000E+00	0.00000E+00
1035	9.29491E-01	2.51788E+01	9.38460E-01	7.50929E-04	0.00000E+00	0.00000E+00
1036	9.04914E-01	2.52017E+01	9.38427E-01	7.50904E-04	0.00000E+00	0.00000E+00
1037	9.42794E-01	2.52255E+01	9.38432E-01	7.50190E-04	0.00000E+00	0.00000E+00
1038	9.38853E-01	2.52483E+01	9.38432E-01	7.49465E-04	0.00000E+00	0.00000E+00
1039	9.30046E-01	2.52722E+01	9.38424E-01	7.48786E-04	0.00000E+00	0.00000E+00
1040	9.86186E-01	2.52960E+01	9.38470E-01	7.49478E-04	0.00000E+00	0.00000E+00

1041	9.20355E-01	2.53188E+01	9.38452E-01	7.48959E-04	0.00000E+00	0.00000E+00
1042	9.61868E-01	2.53427E+01	9.38475E-01	7.48577E-04	0.00000E+00	0.00000E+00
1043	9.53092E-01	2.53655E+01	9.38489E-01	7.47990E-04	0.00000E+00	0.00000E+00
1044	9.07531E-01	2.53893E+01	9.38459E-01	7.47862E-04	0.00000E+00	0.00000E+00
1045	9.15629E-01	2.54132E+01	9.38437E-01	7.47465E-04	0.00000E+00	0.00000E+00
1046	1.02357E+00	2.54360E+01	9.38519E-01	7.51188E-04	0.00000E+00	0.00000E+00
1047	8.82422E-01	2.54608E+01	9.38465E-01	7.52386E-04	0.00000E+00	0.00000E+00
1048	9.25004E-01	2.54837E+01	9.38452E-01	7.51777E-04	0.00000E+00	0.00000E+00
1049	9.45780E-01	2.55075E+01	9.38459E-01	7.51091E-04	0.00000E+00	0.00000E+00
1050	8.74873E-01	2.55322E+01	9.38399E-01	7.52823E-04	0.00000E+00	0.00000E+00
1051	9.35099E-01	2.55560E+01	9.38396E-01	7.52111E-04	0.00000E+00	0.00000E+00
1052	9.23574E-01	2.55798E+01	9.38381E-01	7.51527E-04	0.00000E+00	0.00000E+00
1053	8.74252E-01	2.56045E+01	9.38320E-01	7.53287E-04	0.00000E+00	0.00000E+00
1054	9.85759E-01	2.56265E+01	9.38365E-01	7.53921E-04	0.00000E+00	0.00000E+00
1055	9.45428E-01	2.56493E+01	9.38372E-01	7.53234E-04	0.00000E+00	0.00000E+00
1056	9.43343E-01	2.56722E+01	9.38377E-01	7.52534E-04	0.00000E+00	0.00000E+00
1057	9.64986E-01	2.56952E+01	9.38402E-01	7.52243E-04	0.00000E+00	0.00000E+00
1058	9.30655E-01	2.57188E+01	9.38395E-01	7.51567E-04	0.00000E+00	0.00000E+00
1059	9.61544E-01	2.57418E+01	9.38417E-01	7.51175E-04	0.00000E+00	0.00000E+00
1060	9.57602E-01	2.57657E+01	9.38435E-01	7.50683E-04	0.00000E+00	0.00000E+00
1061	9.25422E-01	2.57885E+01	9.38423E-01	7.50075E-04	0.00000E+00	0.00000E+00
1062	9.67254E-01	2.58123E+01	9.38450E-01	7.49860E-04	0.00000E+00	0.00000E+00
1063	9.89360E-01	2.58352E+01	9.38498E-01	7.50688E-04	0.00000E+00	0.00000E+00
1064	8.97188E-01	2.58590E+01	9.38459E-01	7.50989E-04	0.00000E+00	0.00000E+00
1065	9.55907E-01	2.58818E+01	9.38475E-01	7.50462E-04	0.00000E+00	0.00000E+00
1066	8.90272E-01	2.59065E+01	9.38430E-01	7.51124E-04	0.00000E+00	0.00000E+00
1067	9.24183E-01	2.59295E+01	9.38417E-01	7.50537E-04	0.00000E+00	0.00000E+00
1068	8.95895E-01	2.59533E+01	9.38377E-01	7.50893E-04	0.00000E+00	0.00000E+00
1069	9.38783E-01	2.59762E+01	9.38377E-01	7.50189E-04	0.00000E+00	0.00000E+00
1070	9.51304E-01	2.59990E+01	9.38389E-01	7.49584E-04	0.00000E+00	0.00000E+00
1071	9.36803E-01	2.60238E+01	9.38388E-01	7.48884E-04	0.00000E+00	0.00000E+00
1072	9.04873E-01	2.60475E+01	9.38356E-01	7.48839E-04	0.00000E+00	0.00000E+00
1073	9.17795E-01	2.60705E+01	9.38337E-01	7.48386E-04	0.00000E+00	0.00000E+00
1074	9.50613E-01	2.60942E+01	9.38349E-01	7.47775E-04	0.00000E+00	0.00000E+00
1075	9.30687E-01	2.61180E+01	9.38341E-01	7.47112E-04	0.00000E+00	0.00000E+00
1076	9.32428E-01	2.61410E+01	9.38336E-01	7.46436E-04	0.00000E+00	0.00000E+00
1077	9.48388E-01	2.61638E+01	9.38345E-01	7.45800E-04	0.00000E+00	0.00000E+00
1078	9.21246E-01	2.61877E+01	9.38329E-01	7.45276E-04	0.00000E+00	0.00000E+00
1079	9.22593E-01	2.62123E+01	9.38315E-01	7.44727E-04	0.00000E+00	0.00000E+00
1080	9.16644E-01	2.62352E+01	9.38295E-01	7.44308E-04	0.00000E+00	0.00000E+00
1081	9.18269E-01	2.62590E+01	9.38276E-01	7.43849E-04	0.00000E+00	0.00000E+00
1082	9.55646E-01	2.62828E+01	9.38292E-01	7.43334E-04	0.00000E+00	0.00000E+00
1083	9.44325E-01	2.63057E+01	9.38298E-01	7.42667E-04	0.00000E+00	0.00000E+00
1084	9.25116E-01	2.63295E+01	9.38286E-01	7.42080E-04	0.00000E+00	0.00000E+00
1085	9.03483E-01	2.63533E+01	9.38253E-01	7.42091E-04	0.00000E+00	0.00000E+00
1086	9.44617E-01	2.63772E+01	9.38259E-01	7.41429E-04	0.00000E+00	0.00000E+00
1087	9.16163E-01	2.64008E+01	9.38239E-01	7.41026E-04	0.00000E+00	0.00000E+00
1088	9.07352E-01	2.64247E+01	9.38211E-01	7.40889E-04	0.00000E+00	0.00000E+00
1089	9.43691E-01	2.64485E+01	9.38216E-01	7.40224E-04	0.00000E+00	0.00000E+00
1090	9.03327E-01	2.64723E+01	9.38184E-01	7.40238E-04	0.00000E+00	0.00000E+00
1091	8.88026E-01	2.64980E+01	9.38137E-01	7.40991E-04	0.00000E+00	0.00000E+00
1092	9.54301E-01	2.65208E+01	9.38152E-01	7.40460E-04	0.00000E+00	0.00000E+00
1093	9.83354E-01	2.65455E+01	9.38194E-01	7.40940E-04	0.00000E+00	0.00000E+00
1094	9.30533E-01	2.65693E+01	9.38187E-01	7.40294E-04	0.00000E+00	0.00000E+00
1095	8.99736E-01	2.65932E+01	9.38152E-01	7.40453E-04	0.00000E+00	0.00000E+00
1096	9.45797E-01	2.66170E+01	9.38159E-01	7.39809E-04	0.00000E+00	0.00000E+00
1097	9.46175E-01	2.66388E+01	9.38166E-01	7.39169E-04	0.00000E+00	0.00000E+00
1098	9.66585E-01	2.66618E+01	9.38192E-01	7.38949E-04	0.00000E+00	0.00000E+00
1099	8.97523E-01	2.66857E+01	9.38155E-01	7.39206E-04	0.00000E+00	0.00000E+00
1100	9.75841E-01	2.67093E+01	9.38189E-01	7.39329E-04	0.00000E+00	0.00000E+00
1101	9.90322E-01	2.67323E+01	9.38236E-01	7.40178E-04	0.00000E+00	0.00000E+00
1102	9.22798E-01	2.67552E+01	9.38222E-01	7.39638E-04	0.00000E+00	0.00000E+00
1103	9.27561E-01	2.67772E+01	9.38213E-01	7.39029E-04	0.00000E+00	0.00000E+00
1104	9.31462E-01	2.68010E+01	9.38207E-01	7.38384E-04	0.00000E+00	0.00000E+00
1105	9.63463E-01	2.68238E+01	9.38230E-01	7.38069E-04	0.00000E+00	0.00000E+00
1106	9.54171E-01	2.68467E+01	9.38244E-01	7.37542E-04	0.00000E+00	0.00000E+00
1107	9.37351E-01	2.68697E+01	9.38243E-01	7.36874E-04	0.00000E+00	0.00000E+00
1108	9.05554E-01	2.68933E+01	9.38214E-01	7.36801E-04	0.00000E+00	0.00000E+00
1109	9.05221E-01	2.69182E+01	9.38184E-01	7.36738E-04	0.00000E+00	0.00000E+00
1110	9.85107E-01	2.69402E+01	9.38226E-01	7.37290E-04	0.00000E+00	0.00000E+00
1111	9.12616E-01	2.69648E+01	9.38203E-01	7.36987E-04	0.00000E+00	0.00000E+00
1112	9.67415E-01	2.69877E+01	9.38229E-01	7.36793E-04	0.00000E+00	0.00000E+00
1113	9.12251E-01	2.70115E+01	9.38206E-01	7.36501E-04	0.00000E+00	0.00000E+00
1114	9.62824E-01	2.70362E+01	9.38228E-01	7.36171E-04	0.00000E+00	0.00000E+00
1115	9.18163E-01	2.70592E+01	9.38210E-01	7.35730E-04	0.00000E+00	0.00000E+00
1116	9.22717E-01	2.70828E+01	9.38196E-01	7.35201E-04	0.00000E+00	0.00000E+00
1117	9.57151E-01	2.71058E+01	9.38213E-01	7.34738E-04	0.00000E+00	0.00000E+00
1118	9.74900E-01	2.71297E+01	9.38246E-01	7.34815E-04	0.00000E+00	0.00000E+00
1119	9.64975E-01	2.71525E+01	9.38270E-01	7.34547E-04	0.00000E+00	0.00000E+00
1120	9.47854E-01	2.71753E+01	9.38279E-01	7.33940E-04	0.00000E+00	0.00000E+00
1121	8.98628E-01	2.72000E+01	9.38243E-01	7.34139E-04	0.00000E+00	0.00000E+00
1122	9.10932E-01	2.72248E+01	9.38219E-01	7.33888E-04	0.00000E+00	0.00000E+00
1123	9.24210E-01	2.72487E+01	9.38206E-01	7.33340E-04	0.00000E+00	0.00000E+00
1124	9.16405E-01	2.72723E+01	9.38187E-01	7.32944E-04	0.00000E+00	0.00000E+00
1125	9.38150E-01	2.72962E+01	9.38187E-01	7.32291E-04	0.00000E+00	0.00000E+00
1126	9.58066E-01	2.73190E+01	9.38204E-01	7.31853E-04	0.00000E+00	0.00000E+00
1127	9.10032E-01	2.73428E+01	9.38179E-01	7.31631E-04	0.00000E+00	0.00000E+00
1128	9.10568E-01	2.73677E+01	9.38155E-01	7.31392E-04	0.00000E+00	0.00000E+00
1129	9.11948E-01	2.73913E+01	9.38132E-01	7.31112E-04	0.00000E+00	0.00000E+00
1130	9.35171E-01	2.74143E+01	9.38129E-01	7.30469E-04	0.00000E+00	0.00000E+00
1131	9.33174E-01	2.74380E+01	9.38125E-01	7.29834E-04	0.00000E+00	0.00000E+00
1132	9.55790E-01	2.74610E+01	9.38140E-01	7.29356E-04	0.00000E+00	0.00000E+00
1133	9.43953E-01	2.74848E+01	9.38145E-01	7.28729E-04	0.00000E+00	0.00000E+00
1134	9.17241E-01	2.75085E+01	9.38127E-01	7.28319E-04	0.00000E+00	0.00000E+00
1135	9.29098E-01	2.75323E+01	9.38119E-01	7.27720E-04	0.00000E+00	0.00000E+00

1136	9.31610E-01	2.75553E+01	9.38113E-01	7.27100E-04	0.00000E+00	0.00000E+00
1137	9.31269E-01	2.75782E+01	9.38107E-01	7.26484E-04	0.00000E+00	0.00000E+00
1138	9.69908E-01	2.76010E+01	9.38135E-01	7.26384E-04	0.00000E+00	0.00000E+00
1139	9.45357E-01	2.76238E+01	9.38142E-01	7.25773E-04	0.00000E+00	0.00000E+00
1140	8.99880E-01	2.76468E+01	9.38108E-01	7.25914E-04	0.00000E+00	0.00000E+00
1141	9.18903E-01	2.76707E+01	9.38091E-01	7.25472E-04	0.00000E+00	0.00000E+00
1142	9.57568E-01	2.76935E+01	9.38108E-01	7.25037E-04	0.00000E+00	0.00000E+00
1143	9.66128E-01	2.77163E+01	9.38133E-01	7.24817E-04	0.00000E+00	0.00000E+00
1144	9.84791E-01	2.77393E+01	9.38174E-01	7.25334E-04	0.00000E+00	0.00000E+00
1145	9.45275E-01	2.77630E+01	9.38180E-01	7.24726E-04	0.00000E+00	0.00000E+00
1146	9.25944E-01	2.77860E+01	9.38169E-01	7.24171E-04	0.00000E+00	0.00000E+00
1147	9.37324E-01	2.78107E+01	9.38168E-01	7.23538E-04	0.00000E+00	0.00000E+00
1148	9.13569E-01	2.78345E+01	9.38147E-01	7.23225E-04	0.00000E+00	0.00000E+00
1149	9.56348E-01	2.78573E+01	9.38163E-01	7.22769E-04	0.00000E+00	0.00000E+00
1150	9.30874E-01	2.78802E+01	9.38156E-01	7.22167E-04	0.00000E+00	0.00000E+00
1151	9.42039E-01	2.79032E+01	9.38160E-01	7.21546E-04	0.00000E+00	0.00000E+00
1152	9.08727E-01	2.79278E+01	9.38134E-01	7.21372E-04	0.00000E+00	0.00000E+00
1153	9.44263E-01	2.79517E+01	9.38140E-01	7.20765E-04	0.00000E+00	0.00000E+00
1154	9.56480E-01	2.79745E+01	9.38155E-01	7.20315E-04	0.00000E+00	0.00000E+00
1155	9.50713E-01	2.79973E+01	9.38166E-01	7.19773E-04	0.00000E+00	0.00000E+00
1156	9.14870E-01	2.80203E+01	9.38146E-01	7.19432E-04	0.00000E+00	0.00000E+00
1157	9.40514E-01	2.80442E+01	9.38148E-01	7.18812E-04	0.00000E+00	0.00000E+00
1158	9.67724E-01	2.80670E+01	9.38174E-01	7.18645E-04	0.00000E+00	0.00000E+00
1159	9.04789E-01	2.80908E+01	9.38145E-01	7.18603E-04	0.00000E+00	0.00000E+00
1160	9.67256E-01	2.81137E+01	9.38170E-01	7.18422E-04	0.00000E+00	0.00000E+00
1161	9.71579E-01	2.81375E+01	9.38199E-01	7.18381E-04	0.00000E+00	0.00000E+00
1162	9.04867E-01	2.81622E+01	9.38170E-01	7.18336E-04	0.00000E+00	0.00000E+00
1163	9.36354E-01	2.81860E+01	9.38169E-01	7.17719E-04	0.00000E+00	0.00000E+00
1164	9.26787E-01	2.82098E+01	9.38159E-01	7.17168E-04	0.00000E+00	0.00000E+00
1165	9.48700E-01	2.82337E+01	9.38168E-01	7.16608E-04	0.00000E+00	0.00000E+00
1166	9.28933E-01	2.82573E+01	9.38160E-01	7.16036E-04	0.00000E+00	0.00000E+00
1167	9.48152E-01	2.82803E+01	9.38168E-01	7.15473E-04	0.00000E+00	0.00000E+00
1168	9.48642E-01	2.83032E+01	9.38177E-01	7.14915E-04	0.00000E+00	0.00000E+00
1169	9.45000E-01	2.83260E+01	9.38183E-01	7.14326E-04	0.00000E+00	0.00000E+00
1170	8.99952E-01	2.83498E+01	9.38151E-01	7.14465E-04	0.00000E+00	0.00000E+00
1171	9.35812E-01	2.83727E+01	9.38149E-01	7.13856E-04	0.00000E+00	0.00000E+00
1172	9.25186E-01	2.83965E+01	9.38138E-01	7.13332E-04	0.00000E+00	0.00000E+00
1173	9.19110E-01	2.84203E+01	9.38121E-01	7.12908E-04	0.00000E+00	0.00000E+00
1174	9.42315E-01	2.84432E+01	9.38125E-01	7.12308E-04	0.00000E+00	0.00000E+00
1175	9.04755E-01	2.84670E+01	9.38096E-01	7.12269E-04	0.00000E+00	0.00000E+00
1176	9.66406E-01	2.84898E+01	9.38121E-01	7.12070E-04	0.00000E+00	0.00000E+00
1177	9.55823E-01	2.85137E+01	9.38136E-01	7.11624E-04	0.00000E+00	0.00000E+00
1178	9.47044E-01	2.85375E+01	9.38143E-01	7.11058E-04	0.00000E+00	0.00000E+00
1179	9.15941E-01	2.85603E+01	9.38124E-01	7.10705E-04	0.00000E+00	0.00000E+00
1180	9.59063E-01	2.85833E+01	9.38142E-01	7.10323E-04	0.00000E+00	0.00000E+00
1181	9.03423E-01	2.86070E+01	9.38113E-01	7.10331E-04	0.00000E+00	0.00000E+00
1182	9.16915E-01	2.86308E+01	9.38095E-01	7.09956E-04	0.00000E+00	0.00000E+00
1183	9.05548E-01	2.86547E+01	9.38067E-01	7.09890E-04	0.00000E+00	0.00000E+00
1184	9.47179E-01	2.86785E+01	9.38075E-01	7.09331E-04	0.00000E+00	0.00000E+00
1185	9.60084E-01	2.87013E+01	9.38093E-01	7.08975E-04	0.00000E+00	0.00000E+00
1186	9.56989E-01	2.87243E+01	9.38109E-01	7.08556E-04	0.00000E+00	0.00000E+00
1187	9.08298E-01	2.87472E+01	9.38084E-01	7.08405E-04	0.00000E+00	0.00000E+00
1188	9.48080E-01	2.87710E+01	9.38093E-01	7.07857E-04	0.00000E+00	0.00000E+00
1189	9.44883E-01	2.87957E+01	9.38098E-01	7.07284E-04	0.00000E+00	0.00000E+00
1190	9.18628E-01	2.88203E+01	9.38082E-01	7.06878E-04	0.00000E+00	0.00000E+00
1191	9.34015E-01	2.88433E+01	9.38079E-01	7.06292E-04	0.00000E+00	0.00000E+00
1192	9.63594E-01	2.88670E+01	9.38100E-01	7.06024E-04	0.00000E+00	0.00000E+00
1193	9.68365E-01	2.88908E+01	9.38125E-01	7.05888E-04	0.00000E+00	0.00000E+00
1194	9.39015E-01	2.89137E+01	9.38126E-01	7.05296E-04	0.00000E+00	0.00000E+00
1195	9.56916E-01	2.89375E+01	9.38142E-01	7.04881E-04	0.00000E+00	0.00000E+00
1196	9.53049E-01	2.89605E+01	9.38154E-01	7.04401E-04	0.00000E+00	0.00000E+00
1197	9.20751E-01	2.89842E+01	9.38140E-01	7.03962E-04	0.00000E+00	0.00000E+00
1198	9.36968E-01	2.90072E+01	9.38139E-01	7.03374E-04	0.00000E+00	0.00000E+00
1199	9.03918E-01	2.90310E+01	9.38110E-01	7.03367E-04	0.00000E+00	0.00000E+00
1200	9.39716E-01	2.90538E+01	9.38112E-01	7.02781E-04	0.00000E+00	0.00000E+00
1201	9.27605E-01	2.90777E+01	9.38103E-01	7.02249E-04	0.00000E+00	0.00000E+00
1202	9.20185E-01	2.91005E+01	9.38088E-01	7.01823E-04	0.00000E+00	0.00000E+00
1203	9.79878E-01	2.91225E+01	9.38123E-01	7.02101E-04	0.00000E+00	0.00000E+00

KENO MESSAGE NUMBER K5-123 EXECUTION TERMINATED DUE TO COMPLETION OF THE SPECIFIED NUMBER OF GENERATIONS.

LIFETIME = 1.29025E-04 + OR - 1.25620E-07 GENERATION TIME = 1.00056E-04 + OR - 1.07505E-07
NU BAR = 2.41912E+00 + OR - 3.78543E-06 AVERAGE FISSION GROUP = 2.46004E+01 + OR - 2.21850E-03
ENERGY(EV) OF THE AVERAGE LETHARGY CAUSING FISSION = 3.04781E-02 + OR - 6.68436E-05

NO. OF INITIAL GENERATIONS SKIPPED	AVERAGE K-EFFECTIVE	DEVIATION	67 PER CENT CONFIDENCE INTERVAL	95 PER CENT CONFIDENCE INTERVAL	99 PER CENT CONFIDENCE INTERVAL	NUMBER OF HISTORIES
3	0.93813	+ OR - 0.00070	0.93743 TO 0.93884	0.93673 TO 0.93954	0.93603 TO 0.94024	1200000
4	0.93810	+ OR - 0.00070	0.93740 TO 0.93881	0.93670 TO 0.93951	0.93600 TO 0.94021	1199000
5	0.93813	+ OR - 0.00070	0.93743 TO 0.93883	0.93672 TO 0.93953	0.93602 TO 0.94024	1198000
6	0.93811	+ OR - 0.00070	0.93741 TO 0.93881	0.93670 TO 0.93952	0.93600 TO 0.94022	1197000
7	0.93810	+ OR - 0.00070	0.93740 TO 0.93881	0.93670 TO 0.93951	0.93599 TO 0.94022	1196000
8	0.93811	+ OR - 0.00070	0.93741 TO 0.93882	0.93671 TO 0.93952	0.93600 TO 0.94023	1195000
9	0.93809	+ OR - 0.00070	0.93738 TO 0.93879	0.93668 TO 0.93949	0.93597 TO 0.94020	1194000
10	0.93811	+ OR - 0.00070	0.93741 TO 0.93882	0.93670 TO 0.93952	0.93600 TO 0.94023	1193000
11	0.93811	+ OR - 0.00070	0.93741 TO 0.93882	0.93670 TO 0.93952	0.93600 TO 0.94023	1192000
12	0.93814	+ OR - 0.00071	0.93743 TO 0.93884	0.93673 TO 0.93955	0.93602 TO 0.94025	1191000
17	0.93816	+ OR - 0.00071	0.93746 TO 0.93887	0.93675 TO 0.93958	0.93604 TO 0.94028	1186000
22	0.93815	+ OR - 0.00071	0.93744 TO 0.93886	0.93673 TO 0.93957	0.93602 TO 0.94028	1181000
27	0.93812	+ OR - 0.00071	0.93741 TO 0.93883	0.93670 TO 0.93954	0.93599 TO 0.94025	1176000
32	0.93823	+ OR - 0.00071	0.93752 TO 0.93894	0.93680 TO 0.93965	0.93609 TO 0.94036	1171000
37	0.93820	+ OR - 0.00071	0.93749 TO 0.93891	0.93677 TO 0.93963	0.93606 TO 0.94034	1166000
42	0.93824	+ OR - 0.00072	0.93753 TO 0.93896	0.93681 TO 0.93967	0.93610 TO 0.94039	1161000
47	0.93827	+ OR - 0.00072	0.93755 TO 0.93899	0.93683 TO 0.93970	0.93611 TO 0.94042	1156000
52	0.93824	+ OR - 0.00072	0.93752 TO 0.93896	0.93680 TO 0.93968	0.93608 TO 0.94040	1151000
57	0.93818	+ OR - 0.00072	0.93745 TO 0.93890	0.93673 TO 0.93962	0.93601 TO 0.94034	1146000
62	0.93811	+ OR - 0.00072	0.93739 TO 0.93884	0.93667 TO 0.93956	0.93595 TO 0.94028	1141000
67	0.93811	+ OR - 0.00072	0.93739 TO 0.93883	0.93666 TO 0.93956	0.93594 TO 0.94028	1136000
72	0.93807	+ OR - 0.00072	0.93734 TO 0.93879	0.93662 TO 0.93952	0.93589 TO 0.94024	1131000
77	0.93810	+ OR - 0.00073	0.93737 TO 0.93883	0.93665 TO 0.93955	0.93592 TO 0.94028	1126000
82	0.93807	+ OR - 0.00073	0.93735 TO 0.93880	0.93662 TO 0.93953	0.93589 TO 0.94026	1121000
87	0.93810	+ OR - 0.00073	0.93737 TO 0.93883	0.93664 TO 0.93956	0.93591 TO 0.94030	1116000
92	0.93816	+ OR - 0.00073	0.93743 TO 0.93889	0.93669 TO 0.93962	0.93596 TO 0.94036	1111000

NO. OF INITIAL GENERATIONS SKIPPED	AVERAGE K-EFFECTIVE	DEVIATION	67 PER CENT CONFIDENCE INTERVAL	95 PER CENT CONFIDENCE INTERVAL	99 PER CENT CONFIDENCE INTERVAL	NUMBER OF HISTORIES
97	0.93814	+ OR - 0.00074	0.93740 TO 0.93887	0.93667 TO 0.93961	0.93593 TO 0.94034	1106000
102	0.93818	+ OR - 0.00074	0.93744 TO 0.93892	0.93670 TO 0.93966	0.93597 TO 0.94039	1101000
107	0.93817	+ OR - 0.00074	0.93743 TO 0.93891	0.93669 TO 0.93965	0.93595 TO 0.94039	1096000
112	0.93823	+ OR - 0.00074	0.93749 TO 0.93897	0.93675 TO 0.93971	0.93601 TO 0.94045	1091000
117	0.93817	+ OR - 0.00074	0.93743 TO 0.93891	0.93669 TO 0.93965	0.93594 TO 0.94040	1086000
122	0.93811	+ OR - 0.00074	0.93736 TO 0.93885	0.93662 TO 0.93960	0.93588 TO 0.94034	1081000
127	0.93815	+ OR - 0.00075	0.93740 TO 0.93889	0.93665 TO 0.93964	0.93591 TO 0.94039	1076000
132	0.93812	+ OR - 0.00075	0.93737 TO 0.93887	0.93662 TO 0.93962	0.93587 TO 0.94037	1071000
137	0.93817	+ OR - 0.00075	0.93742 TO 0.93892	0.93667 TO 0.93968	0.93592 TO 0.94043	1066000
142	0.93818	+ OR - 0.00075	0.93742 TO 0.93893	0.93667 TO 0.93968	0.93591 TO 0.94044	1061000
147	0.93820	+ OR - 0.00076	0.93744 TO 0.93895	0.93668 TO 0.93971	0.93592 TO 0.94047	1056000
152	0.93821	+ OR - 0.00076	0.93745 TO 0.93897	0.93669 TO 0.93973	0.93593 TO 0.94049	1051000
157	0.93817	+ OR - 0.00076	0.93741 TO 0.93893	0.93665 TO 0.93970	0.93588 TO 0.94046	1046000
162	0.93819	+ OR - 0.00077	0.93742 TO 0.93895	0.93666 TO 0.93972	0.93589 TO 0.94049	1041000
167	0.93811	+ OR - 0.00077	0.93734 TO 0.93888	0.93658 TO 0.93965	0.93581 TO 0.94042	1036000
172	0.93812	+ OR - 0.00077	0.93735 TO 0.93889	0.93658 TO 0.93966	0.93580 TO 0.94043	1031000
177	0.93802	+ OR - 0.00077	0.93725 TO 0.93879	0.93648 TO 0.93957	0.93571 TO 0.94034	1026000
182	0.93799	+ OR - 0.00077	0.93722 TO 0.93876	0.93644 TO 0.93954	0.93567 TO 0.94031	1021000
187	0.93795	+ OR - 0.00078	0.93717 TO 0.93872	0.93639 TO 0.93950	0.93561 TO 0.94028	1016000
192	0.93791	+ OR - 0.00078	0.93713 TO 0.93869	0.93635 TO 0.93947	0.93557 TO 0.94025	1011000
197	0.93806	+ OR - 0.00078	0.93728 TO 0.93883	0.93650 TO 0.93961	0.93572 TO 0.94039	1006000
202	0.93803	+ OR - 0.00078	0.93725 TO 0.93881	0.93647 TO 0.93959	0.93570 TO 0.94036	1001000
207	0.93799	+ OR - 0.00078	0.93720 TO 0.93877	0.93642 TO 0.93955	0.93564 TO 0.94033	996000
212	0.93788	+ OR - 0.00078	0.93710 TO 0.93866	0.93632 TO 0.93944	0.93554 TO 0.94022	991000
217	0.93787	+ OR - 0.00078	0.93708 TO 0.93865	0.93630 TO 0.93944	0.93552 TO 0.94022	986000
222	0.93783	+ OR - 0.00079	0.93704 TO 0.93862	0.93626 TO 0.93940	0.93547 TO 0.94019	981000
227	0.93783	+ OR - 0.00079	0.93705 TO 0.93862	0.93626 TO 0.93940	0.93547 TO 0.94019	976000

NO. OF INITIAL GENERATIONS SKIPPED	AVERAGE K-EFFECTIVE	DEVIATION	67 PER CENT CONFIDENCE INTERVAL	95 PER CENT CONFIDENCE INTERVAL	99 PER CENT CONFIDENCE INTERVAL	NUMBER OF HISTORIES
232	0.93786	+ OR - 0.00079	0.93707 TO 0.93865	0.93628 TO 0.93943	0.93550 TO 0.94022	971000
237	0.93786	+ OR - 0.00079	0.93707 TO 0.93864	0.93628 TO 0.93943	0.93549 TO 0.94022	966000
242	0.93777	+ OR - 0.00079	0.93698 TO 0.93856	0.93619 TO 0.93934	0.93541 TO 0.94013	961000
247	0.93776	+ OR - 0.00079	0.93697 TO 0.93855	0.93618 TO 0.93934	0.93539 TO 0.94013	956000
252	0.93777	+ OR - 0.00079	0.93698 TO 0.93856	0.93618 TO 0.93935	0.93539 TO 0.94014	951000
257	0.93773	+ OR - 0.00079	0.93693 TO 0.93852	0.93614 TO 0.93931	0.93535 TO 0.94011	946000
262	0.93771	+ OR - 0.00080	0.93691 TO 0.93851	0.93612 TO 0.93930	0.93532 TO 0.94010	941000
267	0.93776	+ OR - 0.00080	0.93696 TO 0.93856	0.93616 TO 0.93935	0.93536 TO 0.94015	936000
272	0.93771	+ OR - 0.00080	0.93691 TO 0.93852	0.93611 TO 0.93932	0.93531 TO 0.94012	931000
277	0.93778	+ OR - 0.00080	0.93697 TO 0.93858	0.93617 TO 0.93938	0.93537 TO 0.94019	926000
282	0.93769	+ OR - 0.00081	0.93689 TO 0.93850	0.93608 TO 0.93931	0.93528 TO 0.94011	921000
287	0.93758	+ OR - 0.00081	0.93678 TO 0.93839	0.93597 TO 0.93920	0.93516 TO 0.94001	916000
292	0.93764	+ OR - 0.00081	0.93683 TO 0.93844	0.93602 TO 0.93925	0.93522 TO 0.94005	911000
297	0.93769	+ OR - 0.00081	0.93688 TO 0.93849	0.93607 TO 0.93930	0.93526 TO 0.94011	906000
302	0.93768	+ OR - 0.00081	0.93687 TO 0.93849	0.93606 TO 0.93931	0.93525 TO 0.94012	901000
307	0.93771	+ OR - 0.00082	0.93689 TO 0.93853	0.93608 TO 0.93934	0.93526 TO 0.94016	896000
312	0.93770	+ OR - 0.00082	0.93688 TO 0.93852	0.93606 TO 0.93933	0.93525 TO 0.94015	891000
317	0.93768	+ OR - 0.00082	0.93686 TO 0.93851	0.93604 TO 0.93933	0.93522 TO 0.94015	886000
322	0.93773	+ OR - 0.00083	0.93691 TO 0.93856	0.93608 TO 0.93938	0.93526 TO 0.94021	881000
327	0.93769	+ OR - 0.00083	0.93687 TO 0.93852	0.93604 TO 0.93935	0.93522 TO 0.94017	876000
332	0.93768	+ OR - 0.00083	0.93685 TO 0.93851	0.93602 TO 0.93934	0.93519 TO 0.94016	871000
337	0.93769	+ OR - 0.00083	0.93686 TO 0.93852	0.93603 TO 0.93935	0.93520 TO 0.94019	866000
342	0.93774	+ OR - 0.00084	0.93691 TO 0.93858	0.93607 TO 0.93941	0.93523 TO 0.94025	861000
347	0.93782	+ OR - 0.00084	0.93698 TO 0.93865	0.93614 TO 0.93949	0.93530 TO 0.94033	856000
352	0.93783	+ OR - 0.00084	0.93699 TO 0.93867	0.93614 TO 0.93952	0.93530 TO 0.94036	851000
357	0.93785	+ OR - 0.00085	0.93700 TO 0.93870	0.93615 TO 0.93954	0.93531 TO 0.94039	846000
362	0.93777	+ OR - 0.00085	0.93692 TO 0.93862	0.93607 TO 0.93947	0.93522 TO 0.94032	841000

NO. OF INITIAL GENERATIONS SKIPPED	AVERAGE K-EFFECTIVE	DEVIATION	67 PER CENT CONFIDENCE INTERVAL	95 PER CENT CONFIDENCE INTERVAL	99 PER CENT CONFIDENCE INTERVAL	NUMBER OF HISTORIES
367	0.93778	+ OR - 0.00085	0.93692 TO 0.93863	0.93607 TO 0.93948	0.93522 TO 0.94034	836000
372	0.93770	+ OR - 0.00086	0.93684 TO 0.93855	0.93598 TO 0.93941	0.93513 TO 0.94027	831000
377	0.93781	+ OR - 0.00086	0.93695 TO 0.93867	0.93609 TO 0.93953	0.93523 TO 0.94039	826000
382	0.93788	+ OR - 0.00086	0.93702 TO 0.93875	0.93616 TO 0.93961	0.93530 TO 0.94047	821000
387	0.93788	+ OR - 0.00087	0.93702 TO 0.93875	0.93615 TO 0.93962	0.93529 TO 0.94048	816000
392	0.93793	+ OR - 0.00087	0.93706 TO 0.93880	0.93619 TO 0.93967	0.93532 TO 0.94054	811000
397	0.93783	+ OR - 0.00087	0.93696 TO 0.93870	0.93609 TO 0.93958	0.93521 TO 0.94045	806000
402	0.93782	+ OR - 0.00087	0.93694 TO 0.93869	0.93607 TO 0.93956	0.93520 TO 0.94044	801000
407	0.93788	+ OR - 0.00088	0.93700 TO 0.93875	0.93612 TO 0.93963	0.93524 TO 0.94051	796000
412	0.93789	+ OR - 0.00088	0.93701 TO 0.93877	0.93613 TO 0.93965	0.93525 TO 0.94053	791000
417	0.93784	+ OR - 0.00088	0.93695 TO 0.93872	0.93607 TO 0.93960	0.93519 TO 0.94048	786000
422	0.93792	+ OR - 0.00088	0.93704 TO 0.93881	0.93615 TO 0.93969	0.93527 TO 0.94058	781000
427	0.93776	+ OR - 0.00089	0.93687 TO 0.93865	0.93599 TO 0.93953	0.93510 TO 0.94042	776000
432	0.93765	+ OR - 0.00089	0.93677 TO 0.93854	0.93588 TO 0.93943	0.93499 TO 0.94031	771000
437	0.93762	+ OR - 0.00089	0.93673 TO 0.93851	0.93584 TO 0.93940	0.93495 TO 0.94030	766000
442	0.93757	+ OR - 0.00090	0.93668 TO 0.93847	0.93578 TO 0.93936	0.93489 TO 0.94026	761000
447	0.93765	+ OR - 0.00090	0.93675 TO 0.93855	0.93585 TO 0.93945	0.93496 TO 0.94035	756000
452	0.93759	+ OR - 0.00090	0.93669 TO 0.93849	0.93578 TO 0.93939	0.93488 TO 0.94029	751000
457	0.93778	+ OR - 0.00090	0.93688 TO 0.93868	0.93597 TO 0.93958	0.93507 TO 0.94048	746000
462	0.93784	+ OR - 0.00090	0.93693 TO 0.93874	0.93603 TO 0.93964	0.93513 TO 0.94055	741000
467	0.93795	+ OR - 0.00090	0.93705 TO 0.93886	0.93615 TO 0.93976	0.93524 TO 0.94067	736000
472	0.93796	+ OR - 0.00091	0.93705 TO 0.93887	0.93614 TO 0.93978	0.93524 TO 0.94068	731000
477	0.93800	+ OR - 0.00091	0.93709 TO 0.93891	0.93618 TO 0.93982	0.93527 TO 0.94073	726000
482	0.93809	+ OR - 0.00091	0.93718 TO 0.93901	0.93627 TO 0.93992	0.93536 TO 0.94083	721000
487	0.93801	+ OR - 0.00092	0.93709 TO 0.93892	0.93618 TO 0.93984	0.93526 TO 0.94075	716000
492	0.93798	+ OR - 0.00092	0.93707 TO 0.93890	0.93615 TO 0.93982	0.93524 TO 0.94073	711000
497	0.93787	+ OR - 0.00092	0.93695 TO 0.93879	0.93603 TO 0.93971	0.93511 TO 0.94063	706000

NO. OF INITIAL GENERATIONS SKIPPED	AVERAGE K-EFFECTIVE	DEVIATION	67 PER CENT CONFIDENCE INTERVAL	95 PER CENT CONFIDENCE INTERVAL	99 PER CENT CONFIDENCE INTERVAL	NUMBER OF HISTORIES
502	0.93787	+ OR - 0.00092	0.93695 TO 0.93880	0.93603 TO 0.93972	0.93510 TO 0.94065	701000
507	0.93789	+ OR - 0.00093	0.93696 TO 0.93882	0.93604 TO 0.93975	0.93511 TO 0.94068	696000
512	0.93795	+ OR - 0.00093	0.93702 TO 0.93888	0.93609 TO 0.93981	0.93515 TO 0.94075	691000
517	0.93796	+ OR - 0.00094	0.93702 TO 0.93889	0.93608 TO 0.93983	0.93515 TO 0.94077	686000
522	0.93794	+ OR - 0.00094	0.93700 TO 0.93889	0.93606 TO 0.93983	0.93511 TO 0.94077	681000
527	0.93801	+ OR - 0.00094	0.93707 TO 0.93896	0.93612 TO 0.93990	0.93518 TO 0.94085	676000
532	0.93808	+ OR - 0.00095	0.93713 TO 0.93902	0.93618 TO 0.93997	0.93523 TO 0.94092	671000
537	0.93812	+ OR - 0.00095	0.93717 TO 0.93908	0.93622 TO 0.94003	0.93526 TO 0.94098	666000
542	0.93816	+ OR - 0.00096	0.93720 TO 0.93912	0.93624 TO 0.94007	0.93529 TO 0.94103	661000
547	0.93799	+ OR - 0.00096	0.93703 TO 0.93895	0.93607 TO 0.93991	0.93511 TO 0.94087	656000
552	0.93805	+ OR - 0.00097	0.93709 TO 0.93902	0.93612 TO 0.93999	0.93515 TO 0.94095	651000
557	0.93804	+ OR - 0.00097	0.93707 TO 0.93901	0.93609 TO 0.93998	0.93512 TO 0.94095	646000
562	0.93795	+ OR - 0.00097	0.93698 TO 0.93892	0.93600 TO 0.93990	0.93503 TO 0.94087	641000
567	0.93806	+ OR - 0.00098	0.93708 TO 0.93904	0.93610 TO 0.94002	0.93512 TO 0.94099	636000
572	0.93800	+ OR - 0.00098	0.93702 TO 0.93898	0.93603 TO 0.93997	0.93505 TO 0.94095	631000
577	0.93800	+ OR - 0.00098	0.93702 TO 0.93899	0.93604 TO 0.93997	0.93505 TO 0.94095	626000
582	0.93799	+ OR - 0.00099	0.93700 TO 0.93898	0.93601 TO 0.93997	0.93502 TO 0.94095	621000
587	0.93795	+ OR - 0.00099	0.93696 TO 0.93895	0.93597 TO 0.93994	0.93498 TO 0.94093	616000
592	0.93791	+ OR - 0.00100	0.93692 TO 0.93891	0.93592 TO 0.93990	0.93492 TO 0.94090	611000
597	0.93779	+ OR - 0.00099	0.93679 TO 0.93878	0.93580 TO 0.93977	0.93481 TO 0.94077	606000
602	0.93779	+ OR - 0.00099	0.93679 TO 0.93878	0.93580 TO 0.93977	0.93481 TO 0.94076	601000
607	0.93773	+ OR - 0.00100	0.93673 TO 0.93872	0.93573 TO 0.93972	0.93474 TO 0.94072	596000
612	0.93763	+ OR - 0.00100	0.93663 TO 0.93863	0.93563 TO 0.93963	0.93462 TO 0.94063	591000
617	0.93767	+ OR - 0.00101	0.93667 TO 0.93868	0.93566 TO 0.93969	0.93465 TO 0.94070	586000
622	0.93761	+ OR - 0.00101	0.93661 TO 0.93862	0.93560 TO 0.93963	0.93459 TO 0.94064	581000
627	0.93762	+ OR - 0.00101	0.93660 TO 0.93863	0.93559 TO 0.93964	0.93458 TO 0.94066	576000
632	0.93749	+ OR - 0.00101	0.93647 TO 0.93850	0.93546 TO 0.93952	0.93444 TO 0.94053	571000

NO. OF INITIAL GENERATIONS SKIPPED	AVERAGE K-EFFECTIVE	DEVIATION	67 PER CENT CONFIDENCE INTERVAL	95 PER CENT CONFIDENCE INTERVAL	99 PER CENT CONFIDENCE INTERVAL	NUMBER OF HISTORIES
637	0.93742	+ OR - 0.00102	0.93641 TO 0.93844	0.93539 TO 0.93945	0.93438 TO 0.94047	566000
642	0.93724	+ OR - 0.00102	0.93622 TO 0.93825	0.93521 TO 0.93927	0.93419 TO 0.94028	561000
647	0.93724	+ OR - 0.00102	0.93622 TO 0.93827	0.93519 TO 0.93929	0.93417 TO 0.94032	556000
652	0.93729	+ OR - 0.00103	0.93626 TO 0.93832	0.93523 TO 0.93935	0.93420 TO 0.94038	551000
657	0.93729	+ OR - 0.00104	0.93625 TO 0.93833	0.93522 TO 0.93936	0.93418 TO 0.94040	546000
662	0.93725	+ OR - 0.00104	0.93621 TO 0.93829	0.93517 TO 0.93933	0.93413 TO 0.94037	541000
667	0.93728	+ OR - 0.00105	0.93623 TO 0.93833	0.93518 TO 0.93938	0.93413 TO 0.94043	536000
672	0.93721	+ OR - 0.00106	0.93615 TO 0.93826	0.93509 TO 0.93932	0.93403 TO 0.94038	531000
677	0.93710	+ OR - 0.00106	0.93604 TO 0.93817	0.93498 TO 0.93923	0.93391 TO 0.94030	526000
682	0.93696	+ OR - 0.00107	0.93589 TO 0.93803	0.93482 TO 0.93910	0.93375 TO 0.94017	521000
687	0.93684	+ OR - 0.00107	0.93577 TO 0.93792	0.93470 TO 0.93899	0.93362 TO 0.94006	516000
692	0.93688	+ OR - 0.00108	0.93580 TO 0.93796	0.93472 TO 0.93904	0.93364 TO 0.94012	511000
697	0.93700	+ OR - 0.00108	0.93592 TO 0.93808	0.93483 TO 0.93916	0.93375 TO 0.94024	506000
702	0.93694	+ OR - 0.00109	0.93585 TO 0.93803	0.93477 TO 0.93911	0.93368 TO 0.94020	501000
707	0.93703	+ OR - 0.00109	0.93593 TO 0.93812	0.93484 TO 0.93921	0.93375 TO 0.94031	496000
712	0.93686	+ OR - 0.00110	0.93576 TO 0.93796	0.93466 TO 0.93906	0.93356 TO 0.94016	491000
717	0.93697	+ OR - 0.00110	0.93586 TO 0.93807	0.93476 TO 0.93918	0.93365 TO 0.94028	486000
722	0.93712	+ OR - 0.00111	0.93601 TO 0.93824	0.93490 TO 0.93935	0.93379 TO 0.94046	481000
727	0.93710	+ OR - 0.00112	0.93598 TO 0.93821	0.93487 TO 0.93933	0.93375 TO 0.94044	476000
732	0.93688	+ OR - 0.00112	0.93575 TO 0.93800	0.93463 TO 0.93912	0.93351 TO 0.94024	471000
737	0.93684	+ OR - 0.00113	0.93571 TO 0.93797	0.93458 TO 0.93910	0.93345 TO 0.94023	466000
742	0.93684	+ OR - 0.00114	0.93570 TO 0.93798	0.93456 TO 0.93912	0.93342 TO 0.94026	461000
747	0.93684	+ OR - 0.00115	0.93569 TO 0.93799	0.93454 TO 0.93914	0.93339 TO 0.94028	456000
752	0.93667	+ OR - 0.00115	0.93552 TO 0.93782	0.93436 TO 0.93898	0.93321 TO 0.94013	451000
757	0.93674	+ OR - 0.00116	0.93558 TO 0.93791	0.93442 TO 0.93907	0.93325 TO 0.94024	446000
762	0.93666	+ OR - 0.00117	0.93549 TO 0.93784	0.93432 TO 0.93901	0.93315 TO 0.94018	441000
767	0.93632	+ OR - 0.00117	0.93515 TO 0.93749	0.93397 TO 0.93866	0.93280 TO 0.93984	436000

NO. OF INITIAL GENERATIONS SKIPPED	AVERAGE K-EFFECTIVE	DEVIATION	67 PER CENT CONFIDENCE INTERVAL	95 PER CENT CONFIDENCE INTERVAL	99 PER CENT CONFIDENCE INTERVAL	NUMBER OF HISTORIES
772	0.93637	+ OR - 0.00118	0.93519 TO 0.93755	0.93401 TO 0.93873	0.93283 TO 0.93991	431000
777	0.93642	+ OR - 0.00119	0.93523 TO 0.93760	0.93404 TO 0.93879	0.93286 TO 0.93997	426000
782	0.93638	+ OR - 0.00119	0.93519 TO 0.93757	0.93400 TO 0.93876	0.93281 TO 0.93995	421000
787	0.93620	+ OR - 0.00120	0.93500 TO 0.93739	0.93381 TO 0.93859	0.93261 TO 0.93979	416000
792	0.93620	+ OR - 0.00121	0.93499 TO 0.93741	0.93378 TO 0.93861	0.93257 TO 0.93982	411000
797	0.93618	+ OR - 0.00122	0.93496 TO 0.93739	0.93374 TO 0.93861	0.93252 TO 0.93983	406000
802	0.93617	+ OR - 0.00123	0.93494 TO 0.93740	0.93372 TO 0.93862	0.93249 TO 0.93985	401000
807	0.93637	+ OR - 0.00124	0.93513 TO 0.93761	0.93390 TO 0.93885	0.93266 TO 0.94008	396000
812	0.93651	+ OR - 0.00125	0.93526 TO 0.93776	0.93401 TO 0.93901	0.93276 TO 0.94026	391000
817	0.93651	+ OR - 0.00126	0.93525 TO 0.93776	0.93399 TO 0.93902	0.93273 TO 0.94028	386000
822	0.93648	+ OR - 0.00127	0.93520 TO 0.93775	0.93393 TO 0.93903	0.93266 TO 0.94030	381000
827	0.93649	+ OR - 0.00129	0.93520 TO 0.93778	0.93391 TO 0.93906	0.93263 TO 0.94035	376000
832	0.93639	+ OR - 0.00130	0.93509 TO 0.93770	0.93379 TO 0.93900	0.93249 TO 0.94030	371000
837	0.93618	+ OR - 0.00130	0.93489 TO 0.93748	0.93359 TO 0.93878	0.93230 TO 0.94007	366000
842	0.93619	+ OR - 0.00130	0.93488 TO 0.93749	0.93358 TO 0.93879	0.93228 TO 0.94010	361000
847	0.93631	+ OR - 0.00132	0.93499 TO 0.93762	0.93367 TO 0.93894	0.93235 TO 0.94026	356000
852	0.93636	+ OR - 0.00133	0.93503 TO 0.93769	0.93370 TO 0.93902	0.93237 TO 0.94035	351000
857	0.93633	+ OR - 0.00133	0.93499 TO 0.93766	0.93366 TO 0.93899	0.93233 TO 0.94032	346000
862	0.93625	+ OR - 0.00135	0.93491 TO 0.93760	0.93356 TO 0.93895	0.93221 TO 0.94030	341000
867	0.93648	+ OR - 0.00136	0.93512 TO 0.93784	0.93375 TO 0.93921	0.93239 TO 0.94057	336000
872	0.93625	+ OR - 0.00137	0.93488 TO 0.93761	0.93351 TO 0.93898	0.93215 TO 0.94035	331000
877	0.93623	+ OR - 0.00138	0.93486 TO 0.93761	0.93348 TO 0.93899	0.93210 TO 0.94037	326000
882	0.93646	+ OR - 0.00139	0.93506 TO 0.93785	0.93367 TO 0.93924	0.93228 TO 0.94063	321000
887	0.93669	+ OR - 0.00139	0.93531 TO 0.93808	0.93392 TO 0.93947	0.93254 TO 0.94085	316000
892	0.93658	+ OR - 0.00140	0.93518 TO 0.93798	0.93378 TO 0.93938	0.93238 TO 0.94079	311000
897	0.93668	+ OR - 0.00142	0.93526 TO 0.93810	0.93384 TO 0.93952	0.93242 TO 0.94093	306000
902	0.93683	+ OR - 0.00143	0.93539 TO 0.93826	0.93396 TO 0.93969	0.93253 TO 0.94112	301000

NO. OF INITIAL GENERATIONS SKIPPED	AVERAGE K-EFFECTIVE	DEVIATION	67 PER CENT CONFIDENCE INTERVAL	95 PER CENT CONFIDENCE INTERVAL	99 PER CENT CONFIDENCE INTERVAL	NUMBER OF HISTORIES
907	0.93678	+ OR - 0.00145	0.93534 TO 0.93823	0.93389 TO 0.93968	0.93244 TO 0.94113	296000
912	0.93674	+ OR - 0.00147	0.93527 TO 0.93821	0.93381 TO 0.93967	0.93234 TO 0.94114	291000
917	0.93680	+ OR - 0.00149	0.93531 TO 0.93828	0.93382 TO 0.93977	0.93234 TO 0.94126	286000
922	0.93685	+ OR - 0.00151	0.93534 TO 0.93836	0.93383 TO 0.93987	0.93231 TO 0.94138	281000
927	0.93685	+ OR - 0.00151	0.93534 TO 0.93837	0.93383 TO 0.93988	0.93231 TO 0.94140	276000
932	0.93657	+ OR - 0.00152	0.93505 TO 0.93809	0.93353 TO 0.93961	0.93201 TO 0.94113	271000
937	0.93656	+ OR - 0.00153	0.93502 TO 0.93809	0.93349 TO 0.93962	0.93196 TO 0.94116	266000
942	0.93636	+ OR - 0.00153	0.93483 TO 0.93789	0.93329 TO 0.93942	0.93176 TO 0.94095	261000
947	0.93636	+ OR - 0.00156	0.93481 TO 0.93792	0.93325 TO 0.93948	0.93169 TO 0.94104	256000
952	0.93614	+ OR - 0.00158	0.93456 TO 0.93772	0.93298 TO 0.93931	0.93139 TO 0.94089	251000
957	0.93610	+ OR - 0.00160	0.93449 TO 0.93770	0.93289 TO 0.93930	0.93128 TO 0.94091	246000
962	0.93616	+ OR - 0.00163	0.93453 TO 0.93779	0.93290 TO 0.93942	0.93127 TO 0.94105	241000
967	0.93619	+ OR - 0.00164	0.93455 TO 0.93783	0.93291 TO 0.93947	0.93127 TO 0.94111	236000
972	0.93618	+ OR - 0.00167	0.93451 TO 0.93785	0.93284 TO 0.93953	0.93117 TO 0.94120	231000
977	0.93636	+ OR - 0.00168	0.93468 TO 0.93804	0.93300 TO 0.93973	0.93132 TO 0.94141	226000
982	0.93612	+ OR - 0.00170	0.93442 TO 0.93782	0.93271 TO 0.93953	0.93101 TO 0.94123	221000
987	0.93628	+ OR - 0.00172	0.93457 TO 0.93800	0.93285 TO 0.93972	0.93113 TO 0.94144	216000
992	0.93621	+ OR - 0.00174	0.93447 TO 0.93795	0.93273 TO 0.93969	0.93098 TO 0.94144	211000
997	0.93597	+ OR - 0.00176	0.93421 TO 0.93773	0.93245 TO 0.93949	0.93070 TO 0.94125	206000
1002	0.93598	+ OR - 0.00180	0.93418 TO 0.93778	0.93238 TO 0.93958	0.93058 TO 0.94138	201000
1007	0.93575	+ OR - 0.00183	0.93392 TO 0.93758	0.93209 TO 0.93941	0.93026 TO 0.94124	196000
1012	0.93518	+ OR - 0.00186	0.93333 TO 0.93704	0.93147 TO 0.93889	0.92962 TO 0.94075	191000
1017	0.93514	+ OR - 0.00190	0.93324 TO 0.93703	0.93135 TO 0.93893	0.92945 TO 0.94082	186000
1022	0.93565	+ OR - 0.00193	0.93372 TO 0.93758	0.93178 TO 0.93951	0.92985 TO 0.94145	181000
1027	0.93618	+ OR - 0.00195	0.93423 TO 0.93814	0.93228 TO 0.94009	0.93033 TO 0.94204	176000
1032	0.93561	+ OR - 0.00196	0.93365 TO 0.93756	0.93170 TO 0.93952	0.92974 TO 0.94148	171000
1037	0.93620	+ OR - 0.00198	0.93422 TO 0.93818	0.93224 TO 0.94016	0.93026 TO 0.94214	166000

NO. OF INITIAL GENERATIONS SKIPPED	AVERAGE K-EFFECTIVE	DEVIATION	67 PER CENT CONFIDENCE INTERVAL	95 PER CENT CONFIDENCE INTERVAL	99 PER CENT CONFIDENCE INTERVAL	NUMBER OF HISTORIES
1042	0.93585	+ OR - 0.00201	0.93384 TO 0.93786	0.93183 TO 0.93987	0.92982 TO 0.94187	161000
1047	0.93583	+ OR - 0.00195	0.93388 TO 0.93778	0.93193 TO 0.93973	0.92998 TO 0.94168	156000
1052	0.93632	+ OR - 0.00197	0.93435 TO 0.93829	0.93239 TO 0.94026	0.93042 TO 0.94223	151000
1057	0.93610	+ OR - 0.00195	0.93415 TO 0.93805	0.93220 TO 0.94000	0.93025 TO 0.94195	146000
1062	0.93566	+ OR - 0.00199	0.93367 TO 0.93766	0.93168 TO 0.93965	0.92969 TO 0.94164	141000
1067	0.93582	+ OR - 0.00197	0.93385 TO 0.93779	0.93188 TO 0.93976	0.92991 TO 0.94173	136000
1072	0.93621	+ OR - 0.00201	0.93421 TO 0.93822	0.93220 TO 0.94022	0.93020 TO 0.94223	131000
1077	0.93622	+ OR - 0.00207	0.93415 TO 0.93830	0.93208 TO 0.94037	0.93000 TO 0.94245	126000
1082	0.93661	+ OR - 0.00214	0.93447 TO 0.93875	0.93234 TO 0.94088	0.93020 TO 0.94302	121000
1087	0.93703	+ OR - 0.00220	0.93484 TO 0.93923	0.93264 TO 0.94143	0.93044 TO 0.94363	116000
1092	0.93783	+ OR - 0.00221	0.93562 TO 0.94004	0.93341 TO 0.94225	0.93120 TO 0.94446	111000
1097	0.93768	+ OR - 0.00224	0.93544 TO 0.93992	0.93319 TO 0.94216	0.93095 TO 0.94440	106000
1102	0.93704	+ OR - 0.00220	0.93483 TO 0.93924	0.93263 TO 0.94144	0.93043 TO 0.94364	101000
1107	0.93674	+ OR - 0.00229	0.93445 TO 0.93903	0.93216 TO 0.94132	0.92987 TO 0.94361	96000
1112	0.93682	+ OR - 0.00226	0.93456 TO 0.93909	0.93229 TO 0.94135	0.93003 TO 0.94362	91000
1117	0.93695	+ OR - 0.00233	0.93462 TO 0.93928	0.93228 TO 0.94161	0.92995 TO 0.94395	86000
1122	0.93679	+ OR - 0.00233	0.93446 TO 0.93913	0.93213 TO 0.94146	0.92980 TO 0.94379	81000
1127	0.93728	+ OR - 0.00242	0.93486 TO 0.93971	0.93243 TO 0.94213	0.93001 TO 0.94456	76000
1132	0.93784	+ OR - 0.00253	0.93531 TO 0.94037	0.93279 TO 0.94290	0.93026 TO 0.94543	71000
1137	0.93839	+ OR - 0.00269	0.93570 TO 0.94108	0.93300 TO 0.94378	0.93031 TO 0.94647	66000
1142	0.93839	+ OR - 0.00276	0.93564 TO 0.94115	0.93288 TO 0.94391	0.93012 TO 0.94667	61000
1147	0.93719	+ OR - 0.00283	0.93436 TO 0.94002	0.93153 TO 0.94285	0.92870 TO 0.94568	56000
1152	0.93786	+ OR - 0.00299	0.93487 TO 0.94086	0.93188 TO 0.94385	0.92889 TO 0.94684	51000
1157	0.93748	+ OR - 0.00324	0.93424 TO 0.94072	0.93100 TO 0.94396	0.92776 TO 0.94720	46000
1162	0.93678	+ OR - 0.00318	0.93360 TO 0.93996	0.93041 TO 0.94315	0.92723 TO 0.94633	41000
1167	0.93664	+ OR - 0.00358	0.93306 TO 0.94022	0.92947 TO 0.94381	0.92589 TO 0.94739	36000
1172	0.93756	+ OR - 0.00394	0.93362 TO 0.94151	0.92968 TO 0.94545	0.92573 TO 0.94939	31000

NO. OF INITIAL GENERATIONS SKIPPED	AVERAGE K-EFFECTIVE	DEVIATION	67 PER CENT CONFIDENCE INTERVAL	95 PER CENT CONFIDENCE INTERVAL	99 PER CENT CONFIDENCE INTERVAL	NUMBER OF HISTORIES
1177	0.93754	+ OR - 0.00427	0.93327 TO 0.94181	0.92900 TO 0.94608	0.92473 TO 0.95035	26000
1182	0.93970	+ OR - 0.00467	0.93503 TO 0.94437	0.93036 TO 0.94903	0.92569 TO 0.95370	21000
1187	0.94097	+ OR - 0.00508	0.93589 TO 0.94606	0.93080 TO 0.95114	0.92572 TO 0.95623	16000
1192	0.94058	+ OR - 0.00679	0.93379 TO 0.94737	0.92699 TO 0.95417	0.92020 TO 0.96096	11000
1197	0.93471	+ OR - 0.01046	0.92426 TO 0.94517	0.91380 TO 0.95562	0.90334 TO 0.96608	6000

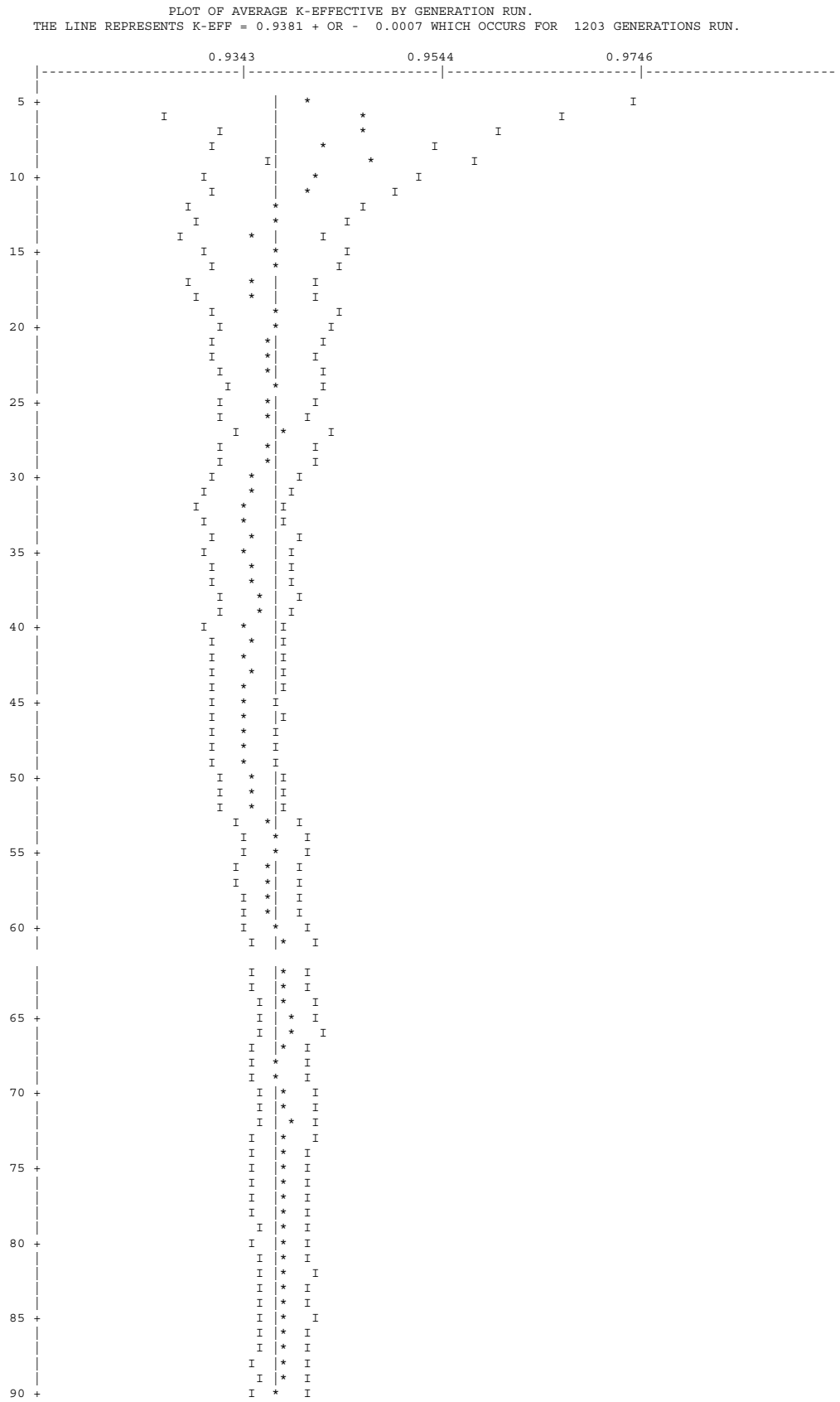
PLOT OF AVERAGE K-EFFECTIVE BY GENERATION RUN.
THE LINE REPRESENTS K-EFF = 0.9381 + OR - 0.0007 WHICH OCCURS FOR 1203 GENERATIONS RUN.
0.9343
0.9544
0.9746
5
10
15
20
25
30
35
40
45
50
55
60
65
70
75
80
85
90

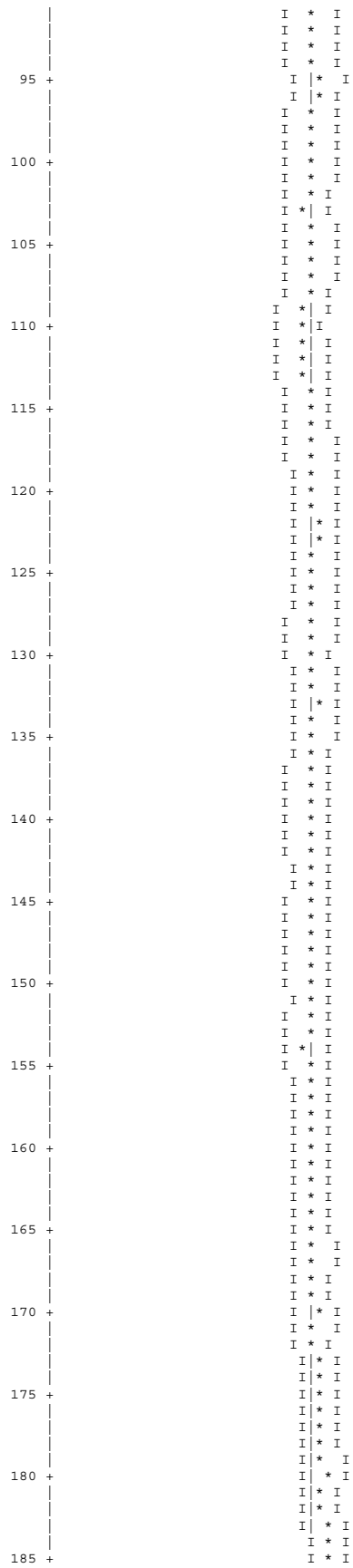

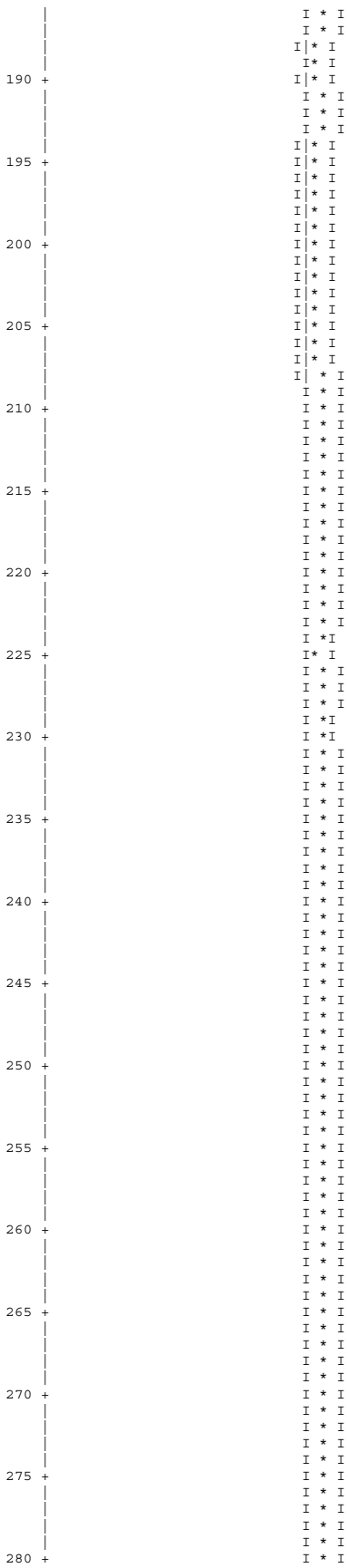

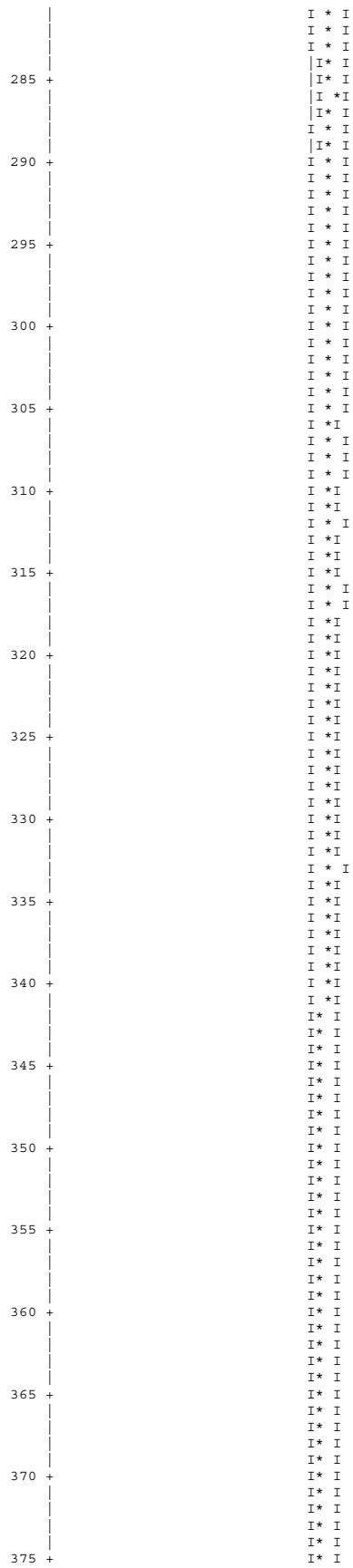

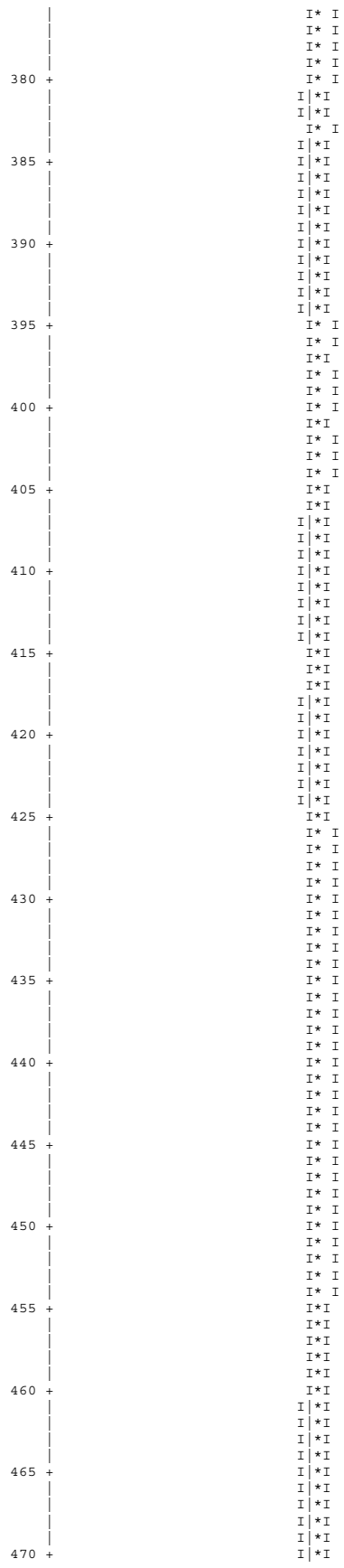

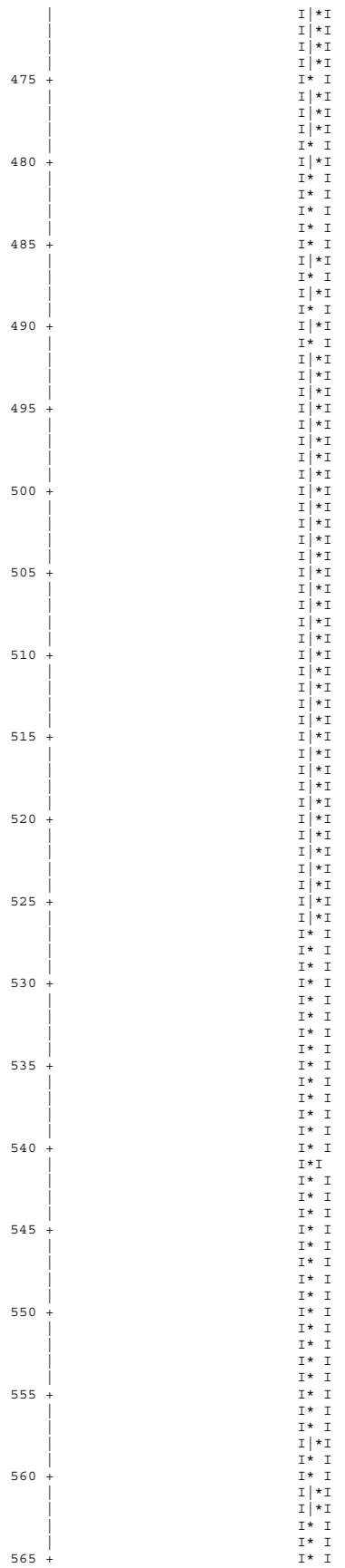

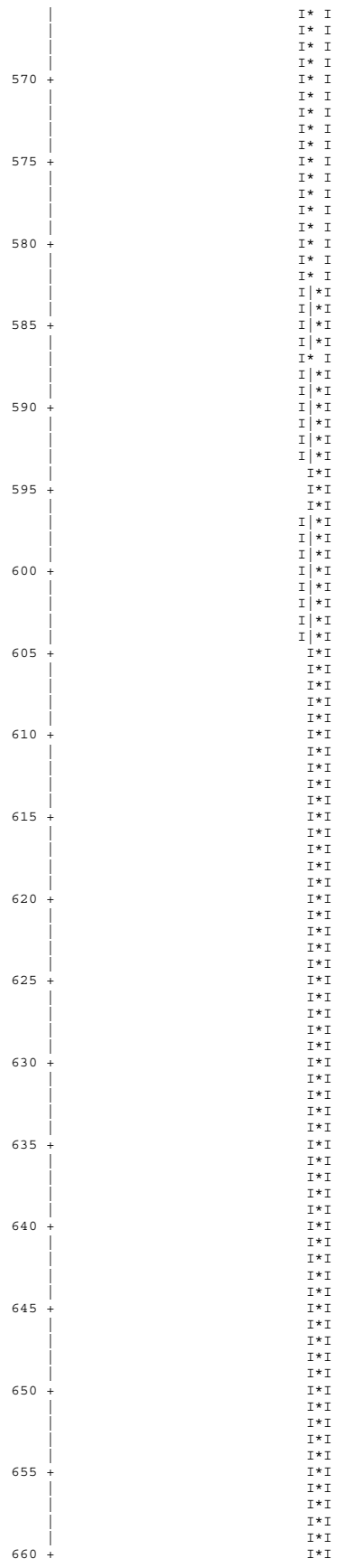

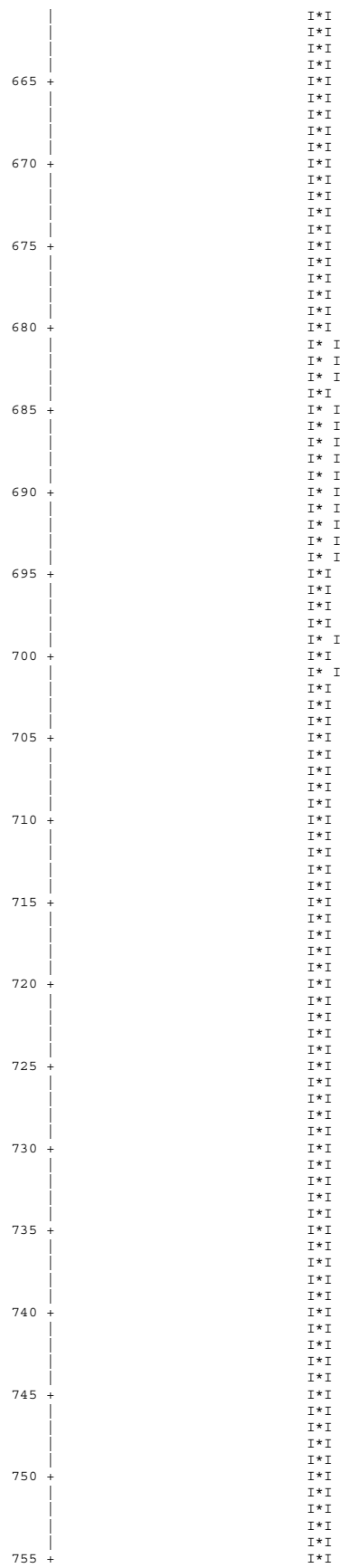
665
670
675
680
685
690
695
700
705
710
715
720
725
730
735
740
745
750
755

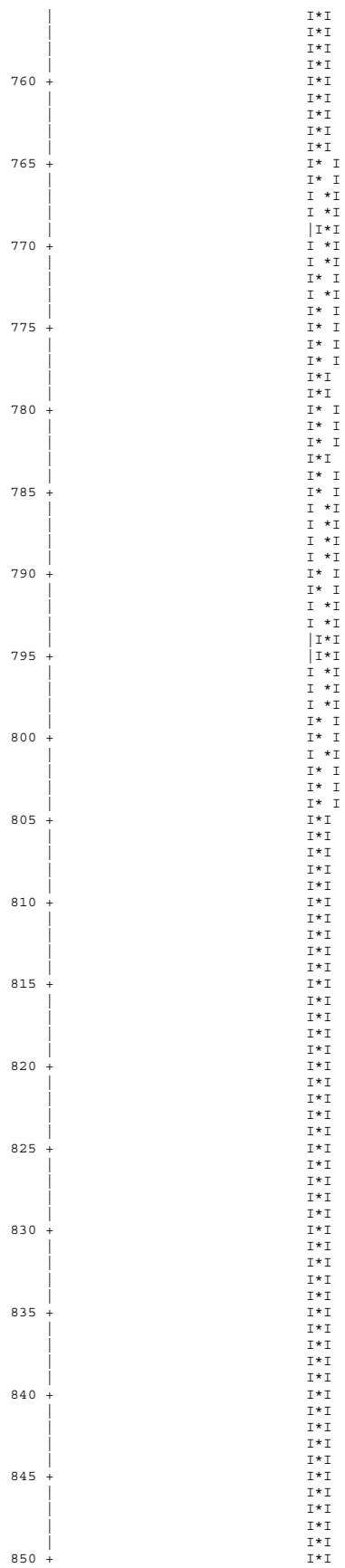

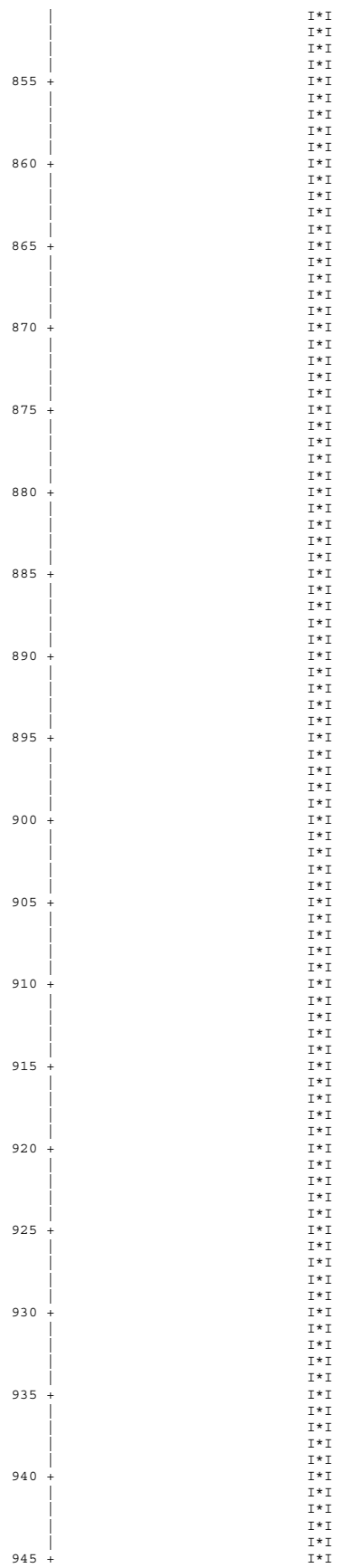
I*I

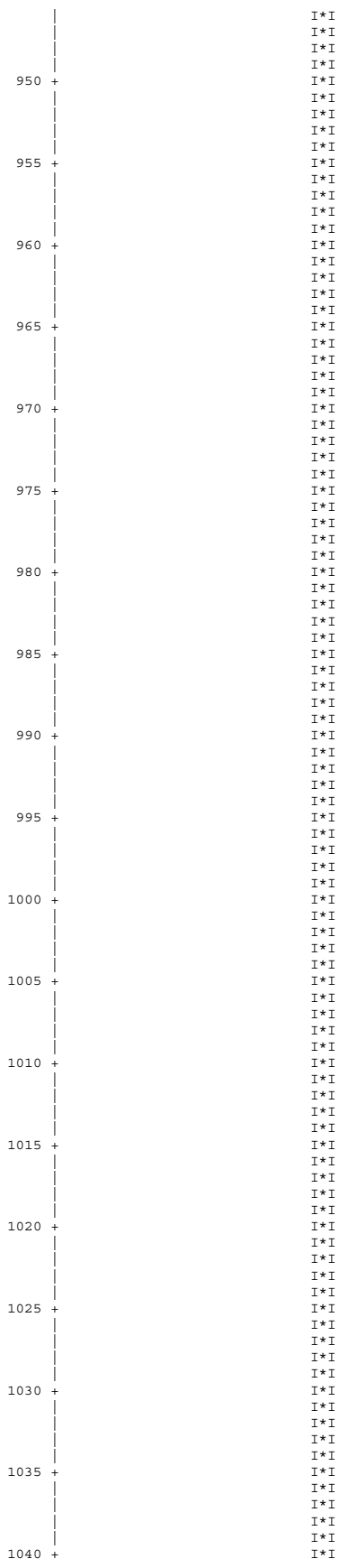
950
955
960
965
970
975
980
985
990
995
1000
1005
1010
1015
1020
1025
1030
1035
1040

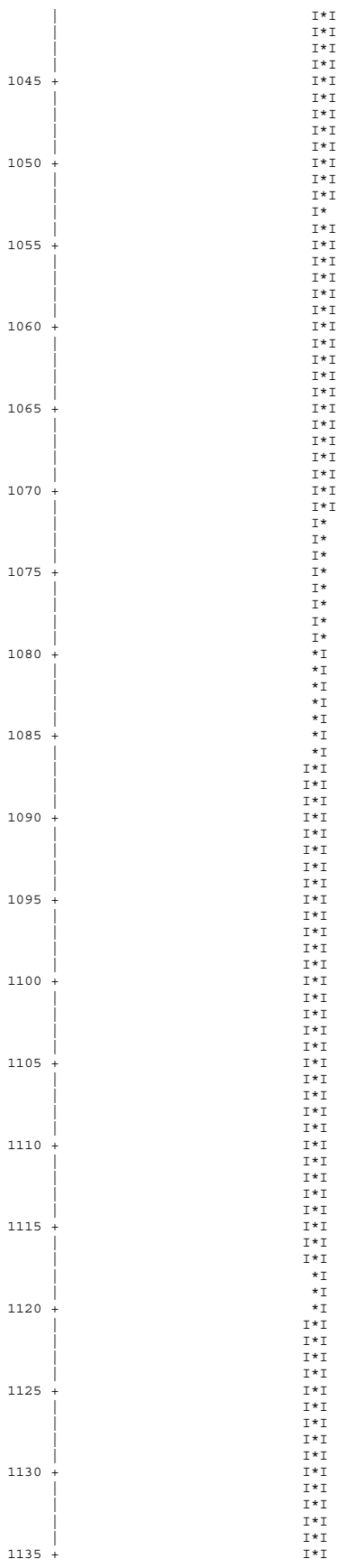


1140
1145
1150
1155
1160
1165
1170
1175
1180
1185
1190
1195
1200

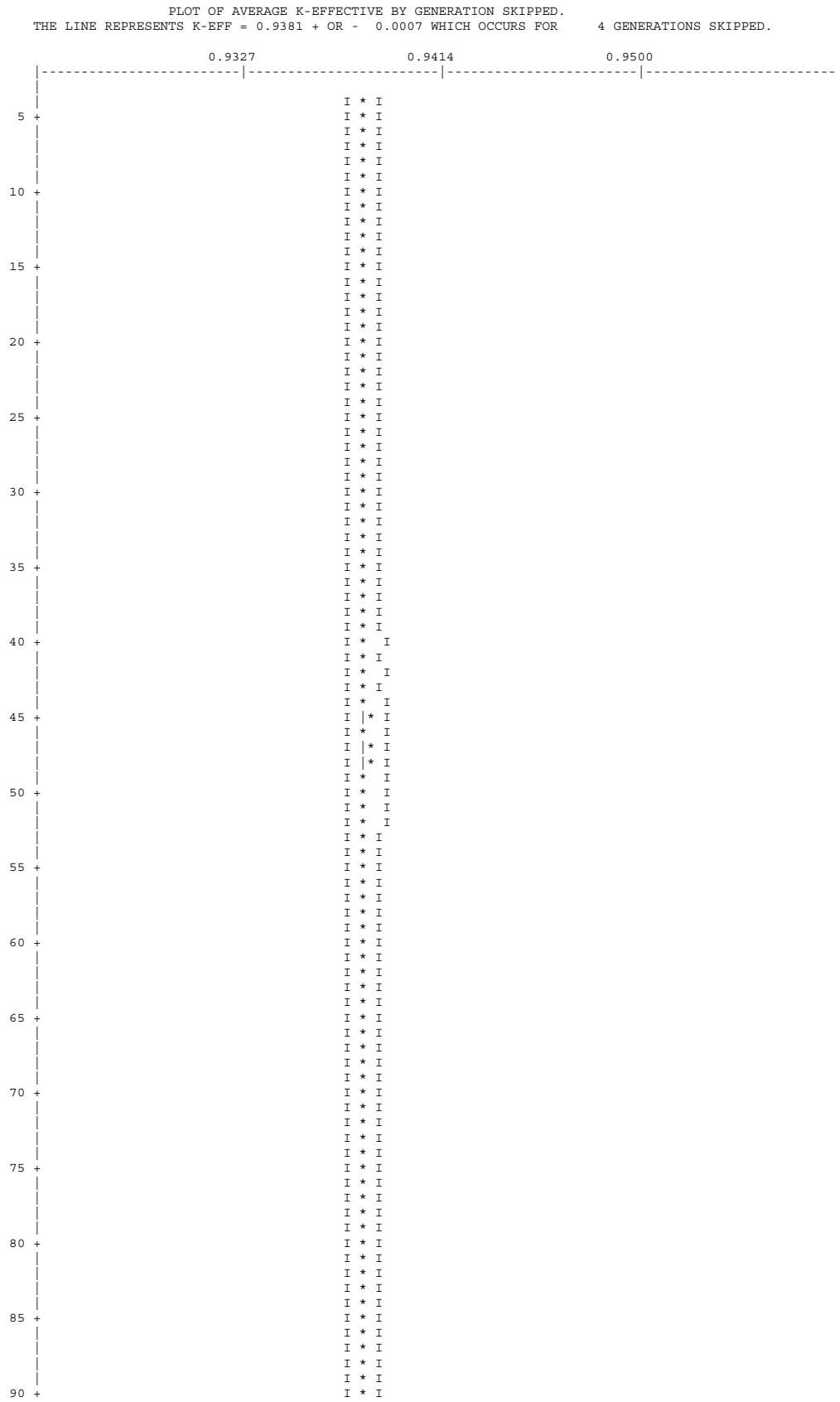
PLOT OF AVERAGE K-EFFECTIVE BY GENERATION SKIPPED.
THE LINE REPRESENTS K-EFF = 0.9381 + OR - 0.0007 WHICH OCCURS FOR 4 GENERATIONS SKIPPED.
0.9327
0.9414
0.9500

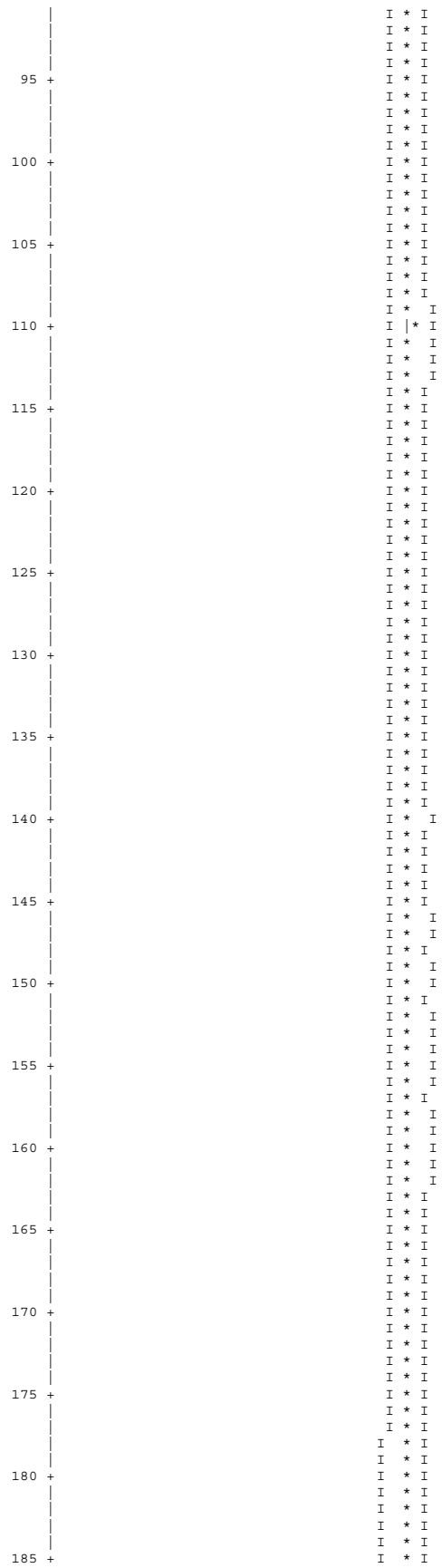

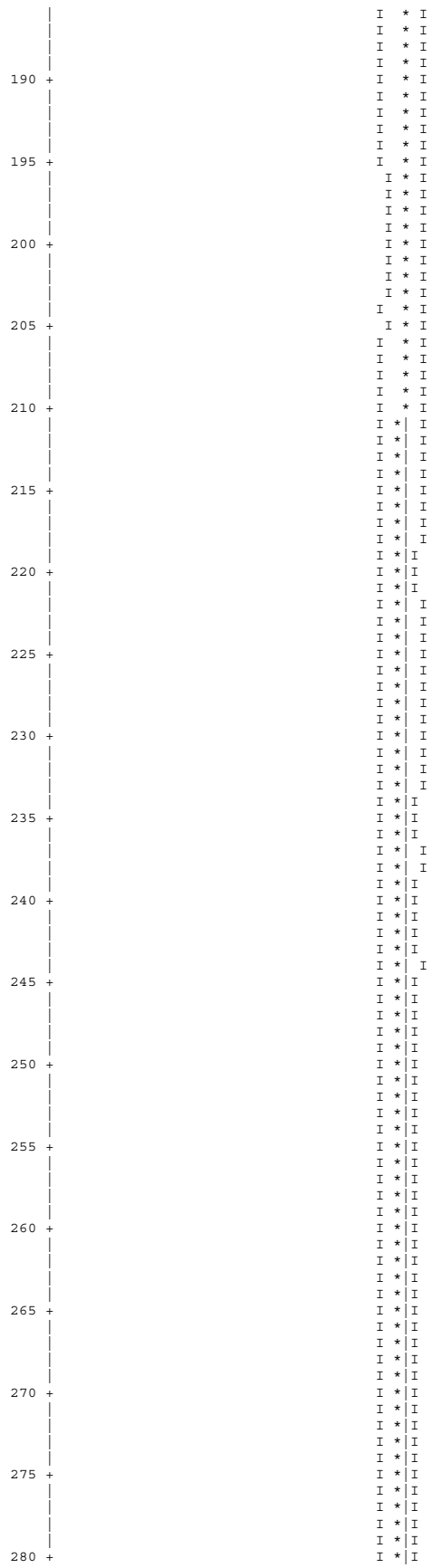

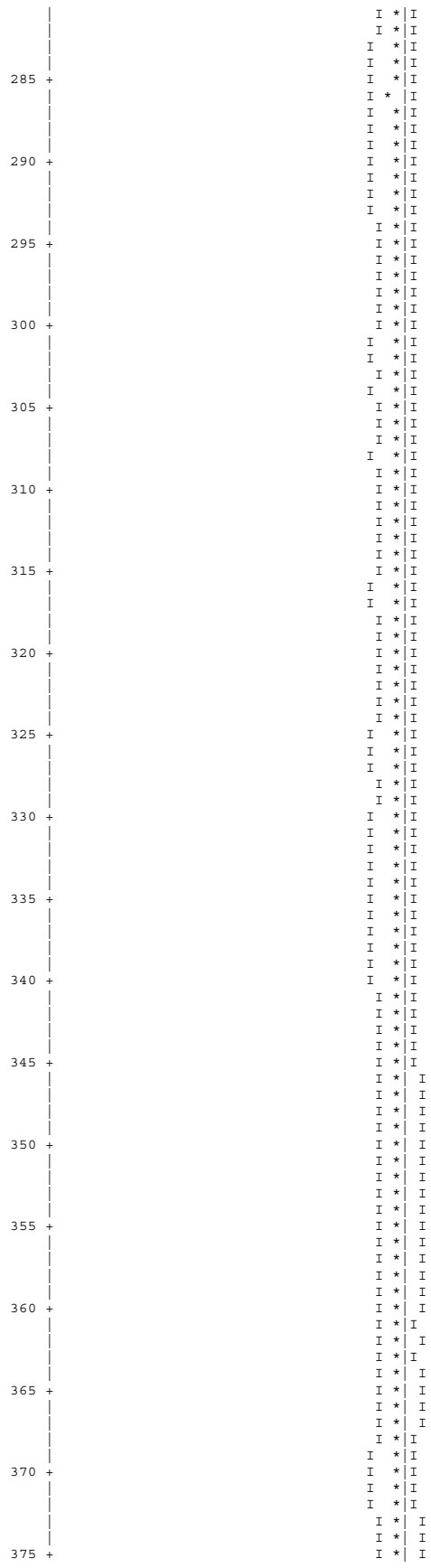

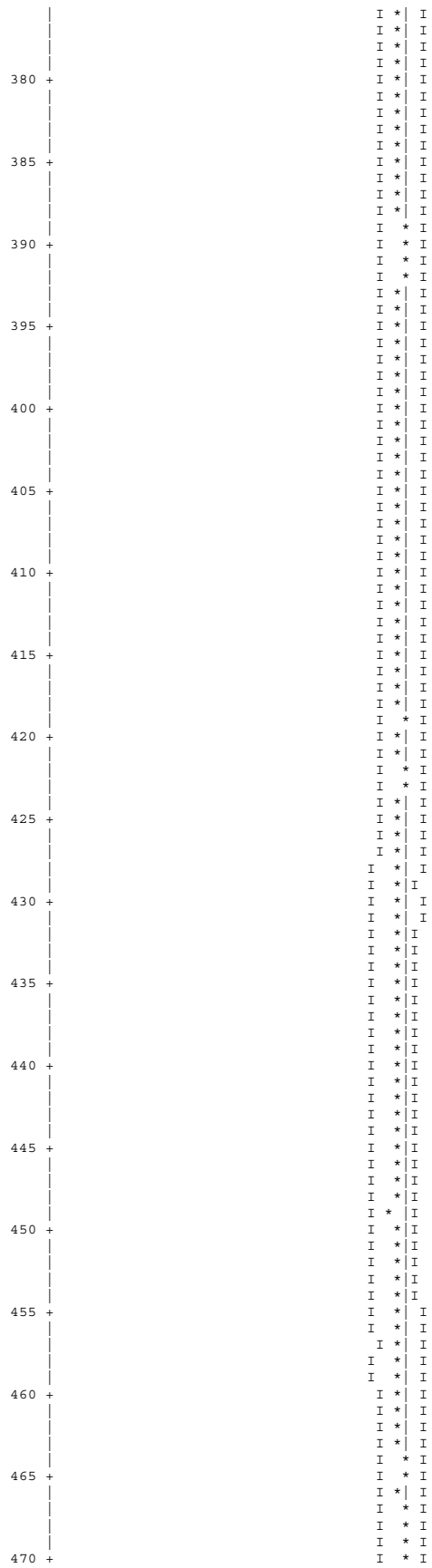

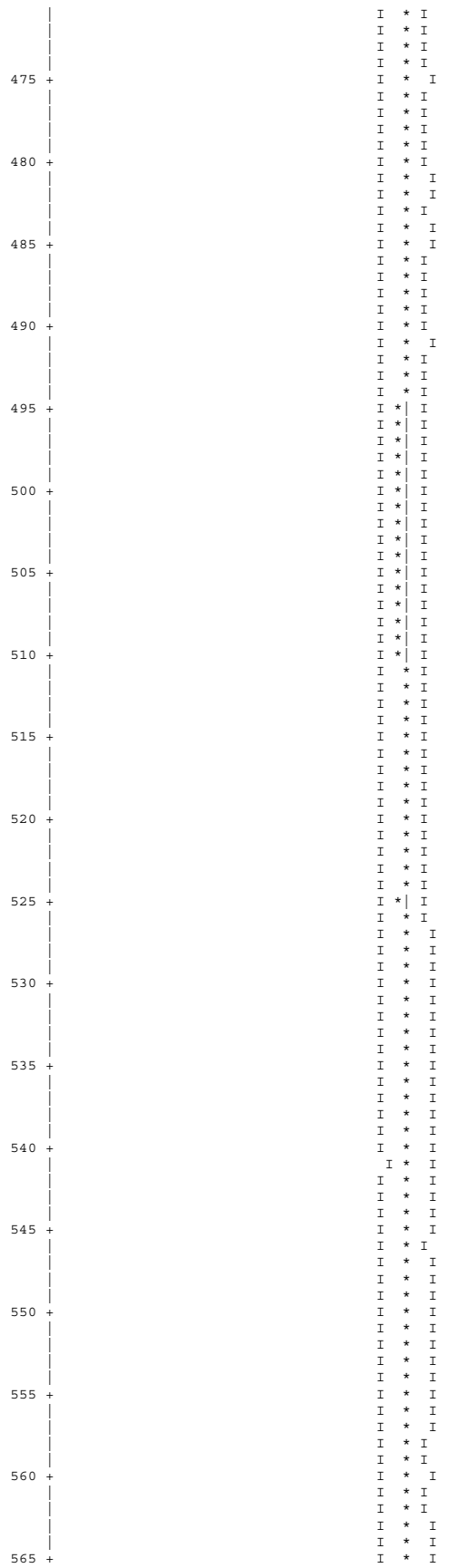

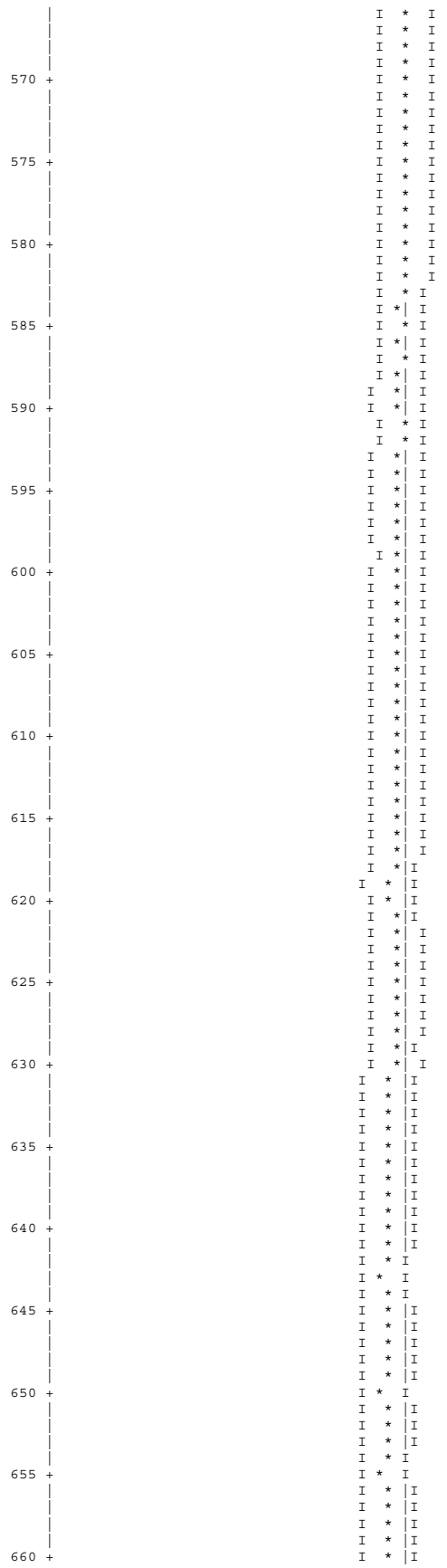

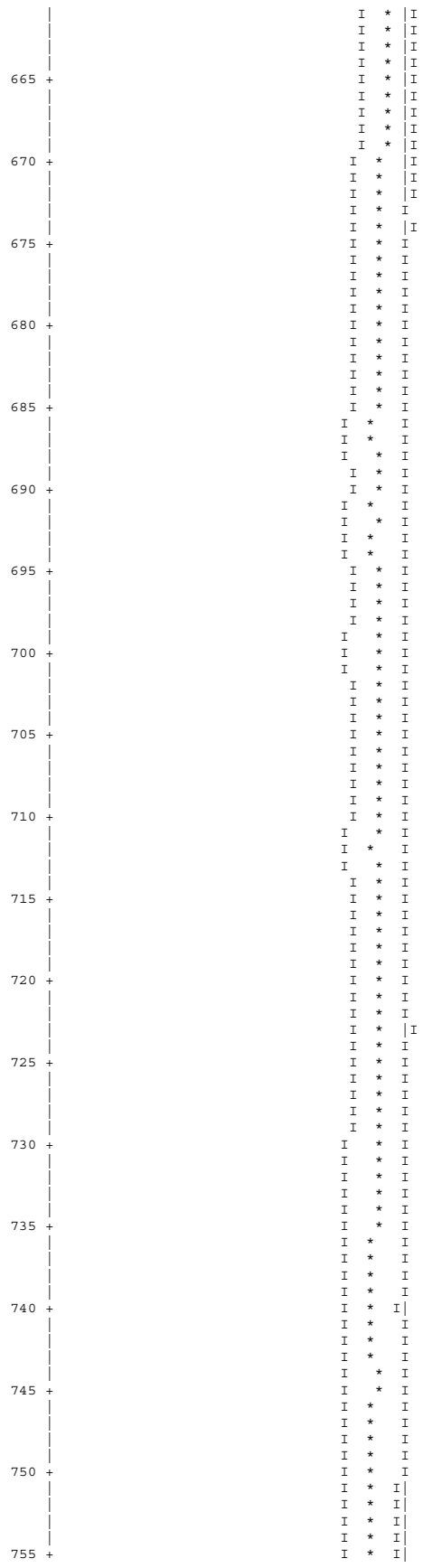

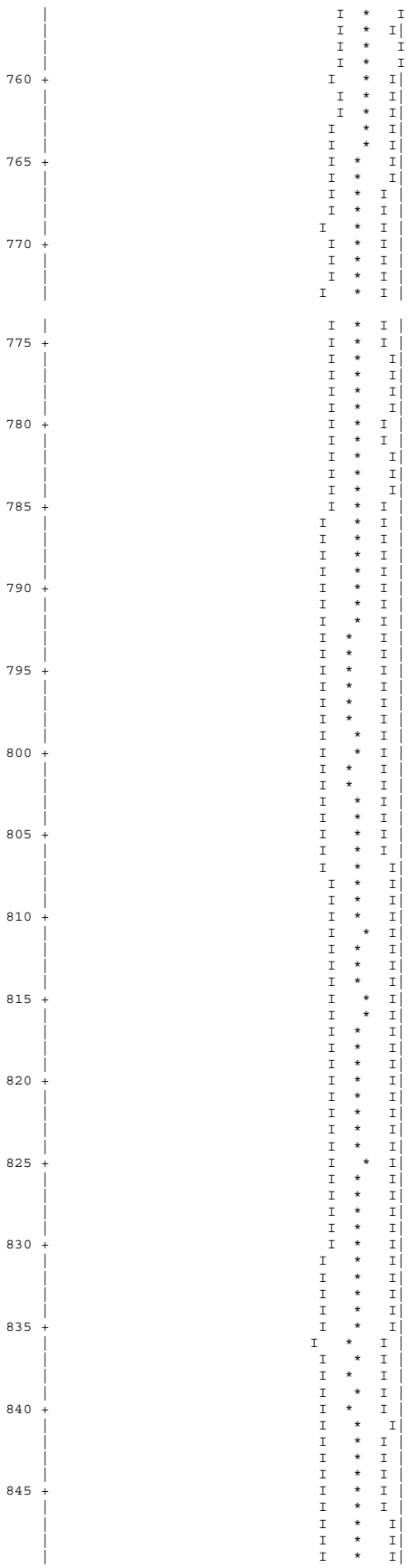

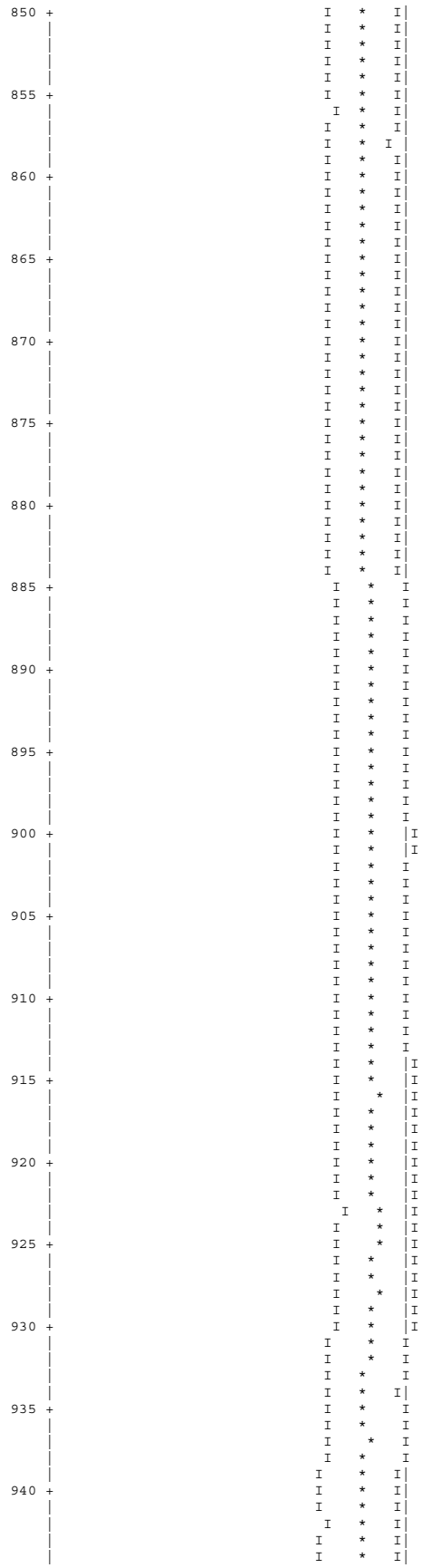

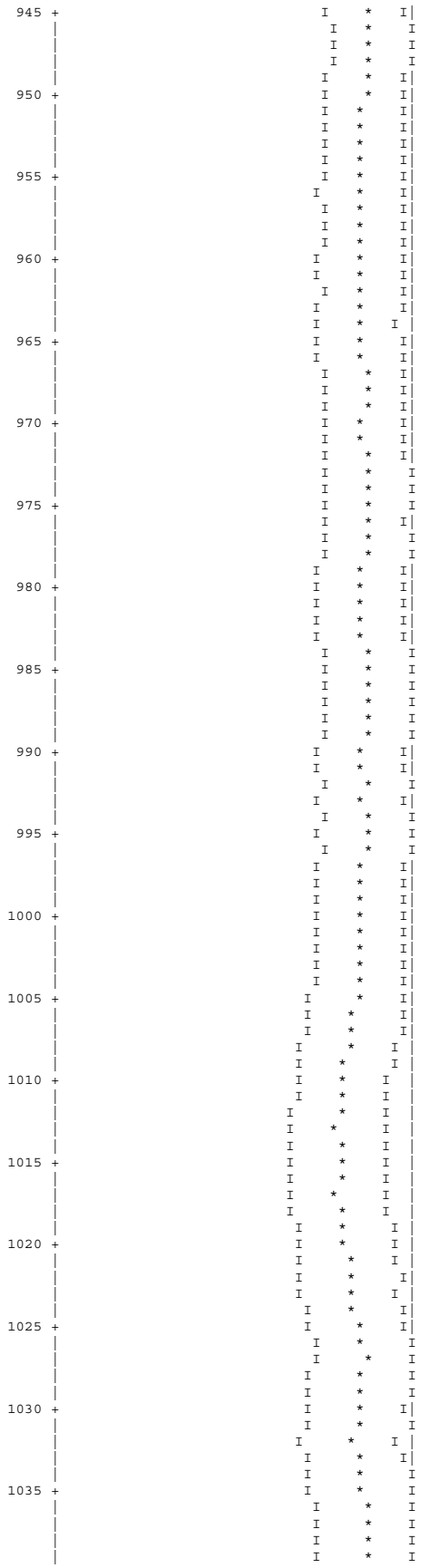

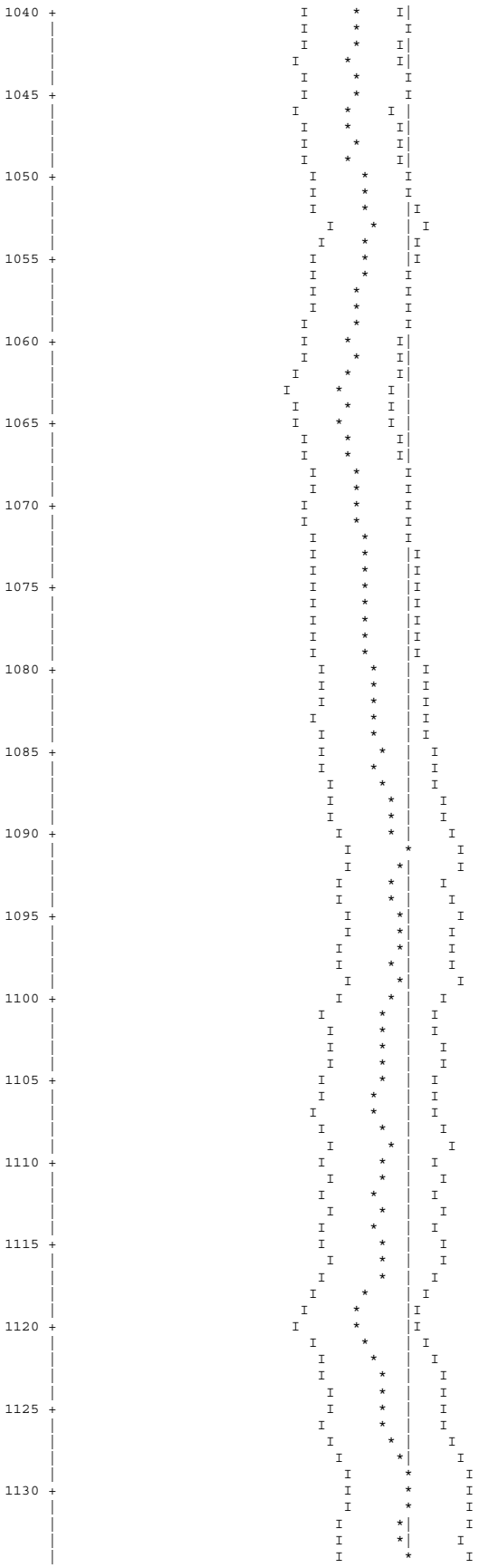

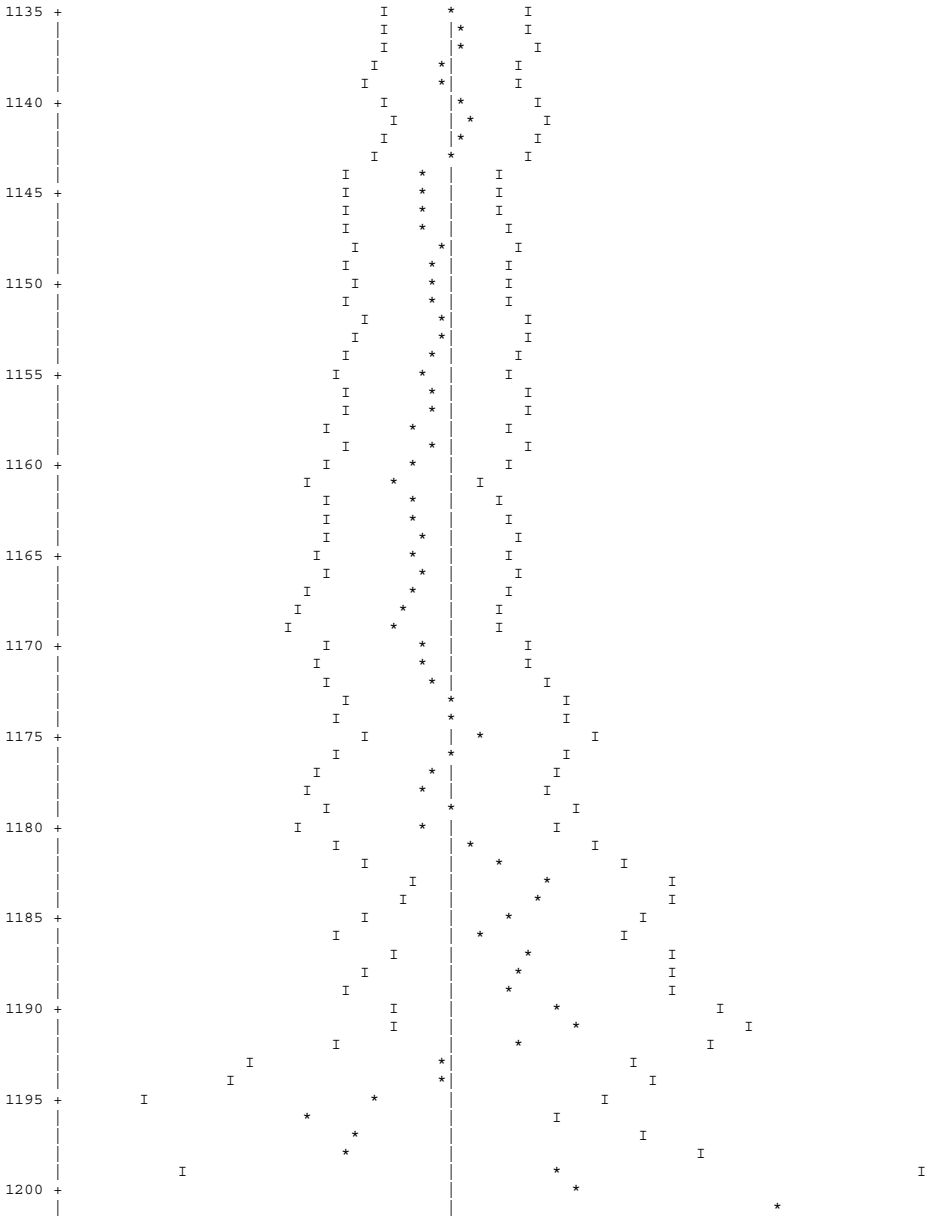

SKIPPING 3 GENERATIONS

GROUP	FISSION FRACTION	UNIT	REGION	FISSIONS	PERCENT DEVIATION	ABSORPTIONS	PERCENT DEVIATION	LEAKAGE	PERCENT DEVIATION
1	0.0001			1.16021E-04	2.7239	1.28235E-03	0.8058	0.00000E+00	0.0000
2	0.0006			5.37105E-04	0.8501	2.61916E-03	0.2615	0.00000E+00	0.0000
3	0.0007			6.36084E-04	0.7171	5.64053E-04	0.4240	0.00000E+00	0.0000
4	0.0004			3.65024E-04	0.9455	3.10795E-04	0.5413	0.00000E+00	0.0000
5	0.0005			4.85982E-04	0.7449	6.75654E-04	0.3927	0.00000E+00	0.0000
6	0.0007			6.37578E-04	0.5699	2.36923E-03	0.3594	0.00000E+00	0.0000
7	0.0007			6.46534E-04	0.6280	4.51992E-03	0.3858	0.00000E+00	0.0000
8	0.0007			6.55531E-04	0.9764	3.63595E-03	0.4314	0.00000E+00	0.0000
9	0.0010			8.92779E-04	1.2147	3.58812E-03	0.4163	0.00000E+00	0.0000
10	0.0021			1.93895E-03	1.1809	9.08369E-03	0.4190	0.00000E+00	0.0000
11	0.0045			4.25875E-03	1.0450	1.16783E-02	0.4192	0.00000E+00	0.0000
12	0.0065			6.08684E-03	1.0529	1.03751E-02	0.4893	0.00000E+00	0.0000
13	0.0065			6.06546E-03	1.0763	1.32515E-02	0.4720	0.00000E+00	0.0000
14	0.0058			5.39501E-03	1.0500	1.70211E-02	0.3958	0.00000E+00	0.0000
15	0.0011			1.02704E-03	1.8212	8.80660E-03	0.4769	0.00000E+00	0.0000
16	0.0007			6.78870E-04	2.4958	5.05885E-03	0.5069	0.00000E+00	0.0000
17	0.0011			1.05328E-03	2.8411	2.85075E-03	0.7361	0.00000E+00	0.0000
18	0.0016			1.50301E-03	2.6453	2.74035E-03	0.8076	0.00000E+00	0.0000
19	0.0019			1.78180E-03	2.2783	4.58632E-03	0.6086	0.00000E+00	0.0000
20	0.0085			7.96153E-03	1.1565	1.62386E-02	0.4304	0.00000E+00	0.0000
21	0.0048			4.51121E-03	1.6031	6.50981E-03	0.6547	0.00000E+00	0.0000
22	0.0131			1.22697E-02	1.0000	1.52535E-02	0.4896	0.00000E+00	0.0000
23	0.0755			7.08406E-02	0.3751	8.10936E-02	0.1957	0.00000E+00	0.0000
24	0.2215			2.07785E-01	0.2114	2.11288E-01	0.1123	0.00000E+00	0.0000
25	0.2199			2.06269E-01	0.2137	1.99371E-01	0.1168	0.00000E+00	0.0000
26	0.3015			2.82848E-01	0.1849	2.65750E-01	0.1040	0.00000E+00	0.0000
27	0.1182			1.10886E-01	0.3190	1.00796E-01	0.1880	0.00000E+00	0.0000
SYSTEM TOTAL =				9.38133E-01	0.0749	1.00132E+00	0.0184	0.00000E+00	0.0000

ELAPSED TIME 29.12517 MINUTES

RANDOM NUMBER= 3BD444363C0D

FREQUENCY FOR GENERATIONS 4 TO 1203

```
0.8664 TO 0.8692     *
0.8692 TO 0.8721     *
0.8721 TO 0.8749     **
0.8749 TO 0.8777
0.8777 TO 0.8806     **
0.8806 TO 0.8834     *****
0.8834 TO 0.8862
0.8862 TO 0.8891     **********
0.8891 TO 0.8919     *******
0.8919 TO 0.8948     *******
0.8948 TO 0.8976     ***********
0.8976 TO 0.9004     *************
0.9004 TO 0.9033     ********************
0.9033 TO 0.9061     *************************
0.9061 TO 0.9089     ****************************************
0.9089 TO 0.9118     *********************************
0.9118 TO 0.9146     ******************************
0.9146 TO 0.9174     *********************************
0.9174 TO 0.9203     ************************************************
0.9203 TO 0.9231     ************************************
0.9231 TO 0.9259     ************************************************
0.9259 TO 0.9288     ************************************************************
0.9288 TO 0.9316     ************************************************************
0.9316 TO 0.9344     *********************************************
0.9344 TO 0.9373     ************************************************************************
0.9373 TO 0.9401     *********************************************
0.9401 TO 0.9429     ************************************************************
0.9429 TO 0.9458     ************************************************************
0.9458 TO 0.9486     *********************************************
0.9486 TO 0.9514     ************************************************
0.9514 TO 0.9543     ************************************
0.9543 TO 0.9571     *********************************************
0.9571 TO 0.9600     ************************************
0.9600 TO 0.9628     ************************************
0.9628 TO 0.9656     ************************
0.9656 TO 0.9685     *********************************
0.9685 TO 0.9713     ******************************
0.9713 TO 0.9741     ****************
0.9741 TO 0.9770     ******************
0.9770 TO 0.9798     ************
0.9798 TO 0.9826     ********
0.9826 TO 0.9855     *************
0.9855 TO 0.9883     *********
0.9883 TO 0.9911     *****
0.9911 TO 0.9940     ******
0.9940 TO 0.9968     ****
0.9968 TO 0.9996     **
0.9996 TO 1.0025     ****
1.0025 TO 1.0053     **
1.0053 TO 1.0081     **
1.0081 TO 1.0110
1.0110 TO 1.0138     **
1.0138 TO 1.0167
1.0167 TO 1.0195
1.0195 TO 1.0223
1.0223 TO 1.0252     *
```

FREQUENCY FOR GENERATIONS 304 TO 1203

```
0.8664 TO 0.8692
0.8692 TO 0.8721     *
0.8721 TO 0.8749     **
0.8749 TO 0.8777
0.8777 TO 0.8806     *
0.8806 TO 0.8834     ****
0.8834 TO 0.8862
0.8862 TO 0.8891     *******
0.8891 TO 0.8919     ****
0.8919 TO 0.8948     ****
0.8948 TO 0.8976     **********
0.8976 TO 0.9004     ***********
0.9004 TO 0.9033     ******************
0.9033 TO 0.9061     **********************
0.9061 TO 0.9089     *******************************
0.9089 TO 0.9118     **********************
0.9118 TO 0.9146     ************************
0.9146 TO 0.9174     **********************
0.9174 TO 0.9203     ************************************
0.9203 TO 0.9231     ******************************
0.9231 TO 0.9259     ************************************
0.9259 TO 0.9288     ***********************************************
0.9288 TO 0.9316     ************************************************
0.9316 TO 0.9344     *********************************
0.9344 TO 0.9373     ******************************************************
0.9373 TO 0.9401     *********************************
0.9401 TO 0.9429     ****************************************
0.9429 TO 0.9458     ******************************************
0.9458 TO 0.9486     *********************************
0.9486 TO 0.9514     *******************************
0.9514 TO 0.9543     ************************
0.9543 TO 0.9571     ************************************
0.9571 TO 0.9600     ***************************
0.9600 TO 0.9628     ******************************
0.9628 TO 0.9656     ***************
0.9656 TO 0.9685     ***************************
0.9685 TO 0.9713     **********************
0.9713 TO 0.9741     ***********
0.9741 TO 0.9770     *********
0.9770 TO 0.9798     **********
0.9798 TO 0.9826     ******
0.9826 TO 0.9855     ********
0.9855 TO 0.9883     *********
0.9883 TO 0.9911     ****
0.9911 TO 0.9940     ****
0.9940 TO 0.9968     **
0.9968 TO 0.9996     **
0.9996 TO 1.0025     ***
1.0025 TO 1.0053     **
1.0053 TO 1.0081     *
1.0081 TO 1.0110
1.0110 TO 1.0138     **
1.0138 TO 1.0167
1.0167 TO 1.0195
1.0195 TO 1.0223
1.0223 TO 1.0252     *
```

FREQUENCY FOR GENERATIONS 604 TO 1203

```
0.8664 TO 0.8692
0.8692 TO 0.8721     *
0.8721 TO 0.8749     **
0.8749 TO 0.8777
0.8777 TO 0.8806
0.8806 TO 0.8834     **
0.8834 TO 0.8862
0.8862 TO 0.8891     ****
0.8891 TO 0.8919     **
0.8919 TO 0.8948     **
0.8948 TO 0.8976     *****
0.8976 TO 0.9004     *********
0.9004 TO 0.9033     ************
0.9033 TO 0.9061     ********************
0.9061 TO 0.9089     ****************
0.9089 TO 0.9118     ***************
0.9118 TO 0.9146     ****************
0.9146 TO 0.9174     **************
0.9174 TO 0.9203     ****************************
0.9203 TO 0.9231     ********************
0.9231 TO 0.9259     ****************************
0.9259 TO 0.9288     ************************
0.9288 TO 0.9316     *********************************
0.9316 TO 0.9344     **********************
0.9344 TO 0.9373     ************************************
0.9373 TO 0.9401     ****************************
0.9401 TO 0.9429     ********************
0.9429 TO 0.9458     *************************
0.9458 TO 0.9486     ************************
0.9486 TO 0.9514     ******************
0.9514 TO 0.9543     ****************
0.9543 TO 0.9571     ***********************
0.9571 TO 0.9600     ***************
0.9600 TO 0.9628     ************************
0.9628 TO 0.9656     **************
0.9656 TO 0.9685     ****************
0.9685 TO 0.9713     *************
0.9713 TO 0.9741     *******
0.9741 TO 0.9770     *******
0.9770 TO 0.9798     ****
0.9798 TO 0.9826     **
0.9826 TO 0.9855     ******
0.9855 TO 0.9883     ******
0.9883 TO 0.9911     ****
0.9911 TO 0.9940     ****
0.9940 TO 0.9968     *
0.9968 TO 0.9996     *
0.9996 TO 1.0025     *
1.0025 TO 1.0053     **
1.0053 TO 1.0081     *
1.0081 TO 1.0110
1.0110 TO 1.0138     *
1.0138 TO 1.0167
1.0167 TO 1.0195
1.0195 TO 1.0223
1.0223 TO 1.0252     *
```

```
                              FREQUENCY FOR GENERATIONS  904 TO 1203
0.8664 TO 0.8692
0.8692 TO 0.8721
0.8721 TO 0.8749     **
0.8749 TO 0.8777
0.8777 TO 0.8806
0.8806 TO 0.8834     *
0.8834 TO 0.8862
0.8862 TO 0.8891     ****
0.8891 TO 0.8919     *
0.8919 TO 0.8948     *
0.8948 TO 0.8976     ****
0.8976 TO 0.9004     *******
0.9004 TO 0.9033     ***
0.9033 TO 0.9061     ************
0.9061 TO 0.9089     ********
0.9089 TO 0.9118     ******
0.9118 TO 0.9146     **********
0.9146 TO 0.9174     ***********
0.9174 TO 0.9203     ************
0.9203 TO 0.9231     **********
0.9231 TO 0.9259     **************
0.9259 TO 0.9288     **********
0.9288 TO 0.9316     ***************
0.9316 TO 0.9344     ***********
0.9344 TO 0.9373     ****************
0.9373 TO 0.9401     *************
0.9401 TO 0.9429     *********
0.9429 TO 0.9458     **************
0.9458 TO 0.9486     *************
0.9486 TO 0.9514     ********
0.9514 TO 0.9543     *******
0.9543 TO 0.9571     *************
0.9571 TO 0.9600     *********
0.9600 TO 0.9628     *************
0.9628 TO 0.9656     ******
0.9656 TO 0.9685     *********
0.9685 TO 0.9713     *****
0.9713 TO 0.9741     ****
0.9741 TO 0.9770     ***
0.9770 TO 0.9798     *
0.9798 TO 0.9826     **
0.9826 TO 0.9855     ****
0.9855 TO 0.9883     ****
0.9883 TO 0.9911     **
0.9911 TO 0.9940
0.9940 TO 0.9968
0.9968 TO 0.9996
0.9996 TO 1.0025     *
1.0025 TO 1.0053     *
1.0053 TO 1.0081
1.0081 TO 1.0110
1.0110 TO 1.0138
1.0138 TO 1.0167
1.0167 TO 1.0195
1.0195 TO 1.0223
1.0223 TO 1.0252     *


*************************************************************************************************************************************
*
          CONGRATULATIONS!  YOU HAVE  SUCCESSFULLY TRAVERSED THE PERILOUS PATH THROUGH KENO V IN  29.12517 MINUTES
*************************************************************************************************************************************
*
```

6.6.9 General Atomics Irradiated Fuel Material

This section contains the output file for the most reactive configuration of GA IFM in the NAC-LWT cask.

Figure 6.6.9-1 Maximum Reactivity GA IFM Configuration

```
_____________________________________________________________
.
NAC International
QSCALENT Banner Generation Utility v5.1 (20020221)
+-----------------+
I JOB INFORMATION I
+-----------------+
.
Working Directory:            gaifm_173ps_000i_100h_000e_068t
Output File Name:             gaifm_173ps_000i_100h_000e_068t.out
Start Date:
Fri 05/16/2003
Start Time:
11:02a
.
+----------------------+
I SOFTWARE INFORMATION I
+----------------------+
.
Program Name:                 Scale 4.3 for Windows NT 4.0/2000
Installation Date:            June 10, 1998
Code Verification Package #:  EA9131010-127, Rev. 0
Code Verification Date:       June 10, 1998
Program Location:             G:\SCALE4.3\WIN_NT\EXE
.
+--------------------+
I SYSTEM INFORMATION I
+--------------------+
.
Computer Type:                Dell Precision 530
Operating System:             Windows 2000
Computer ID:                  ROSEZ1-IT1215
Serial Number:                3VTCR01
Login ID:                     rosez1
System Verification Date:     January 10, 2002
_____________________________________________________________
.
```

```
        PRIMARY MODULE ACCESS AND INPUT RECORD ( SCALE DRIVER - 95/03/29 - 09:06:37 )
  MODULE CSAS25   WILL BE CALLED
    LWT WITH GA IFM
    27GROUPNDF4 INFHOMMEDIUM
    ' RERTR TRIGA FUEL - HOMOGENIZED (NO CLAD)
    H2O   1 0.6816 293.0 END
    U-235 1 DEN=0.10624 1.0 END
    U-238 1 DEN=0.43306 1.0 END
    ZR    1 DEN=0.94133 1.0 END
    H     1 DEN=0.01625 1.0 END
    C     1 DEN=0.00216 1.0 END
    ' HTGR FUEL MATRIX
    H2O   3 1.0000 293.0 END
    C     3 DEN=0.74050 1.0 END
    TH    3 DEN=0.20480 1.0 END
    SI    3 DEN=0.14739 1.0 END
    O     3 DEN=0.00234 1.0 END
    U-235 3 DEN=0.01997 1.0 END
    U-238 3 DEN=0.00147 1.0 END
    ' CASK INTERIOR MODERATOR
    H2O   4 0.0001 293.0 END
    ' CASK EXTERIOR MODERATOR
    H2O   5 0.0001 293.0 END
    ' LEAD SHIELD
    PB    6 1.0000 293.0 END
    ' NEUTRON SHIELD
    H2O   7 0.0001 293.0 END
    ' STAINLESS STEEL
    SS304 8 1.0000 293.0 END
    ' WATER
    H2O   9 1.0000 293.0 END
    END COMP
    LWT WITH GA IFM
    READ PARAM RUN=YES PLT=NO TME=5000 GEN=803 NPG=1000 TBA=5 END PARAM
    READ GEOM
    UNIT 1
    COM=''TRIGA/RERTR FHU - NO BASKET'
    CYLINDER 1 1 5.0927 2P28.0000
    CYLINDER 8 1 5.3975 2P28.0000
    CYLINDER 4 1 5.7277 2P28.0000
    CYLINDER 8 1 6.0325 2P28.0000
    UNIT 2
    COM='HTGR FHU - NO BASKET'
    CYLINDER 3 1 5.7277 2P28.0000
    CYLINDER 8 1 6.0325 2P28.0000
    CYLINDER 4 1 6.3627 2P28.0000
    CYLINDER 8 1 6.6675 2P28.0000
    GLOBAL UNIT 5
    COM='ASSEMBLED LWT'
    CYLINDER 4 1 17.1500 2P28.0000
    HOLE 1 0.0000 6.0325 0.0000
    HOLE 2 0.0000 -6.6675 0.0000
    CYLINDER 8 1 18.9103 2P28.0000
    CYLINDER 6 1 33.4645 2P28.0000
    CYLINDER 8 1 36.5188 2P28.0000
    CYLINDER 7 1 49.2227 2P28.0000
    CYLINDER 8 1 49.8221 2P28.0000
    CUBOID 5 1 4P49.8221 2P28.0000
    END GEOM
    READ BOUNDS ALL=MIR END BOUNDS
    READ PLOT
    TTL='XY SLICE OF CASK'
    SCR=YES PIC=MAT LPI=10
    XUL=-50.0 YUL=50.0 ZUL=0.0 XLR=50.0 YLR=-50.0 ZLR=0.0
    UAX=1.0 VDN=-1.0 NAX=1500 END
    END PLOT
    END DATA

  SECONDARY MODULE O0O008   HAS BEEN CALLED.

  MODULE O0O008   IS FINISHED. COMPLETION CODE     0. CPU TIME USED     0.44 (SECONDS).

  SECONDARY MODULE O0O002   HAS BEEN CALLED.

  MODULE O0O002   IS FINISHED. COMPLETION CODE     0. CPU TIME USED     4.45 (SECONDS).

  SECONDARY MODULE O0O009   HAS BEEN CALLED.

  MODULE O0O009   IS FINISHED. COMPLETION CODE     0. CPU TIME USED   538.87 (SECONDS).

  MODULE CSAS25   IS FINISHED. COMPLETION CODE     0. CPU TIME USED   544.75 (SECONDS).

THE FOLLOWING DATA CARDS PRECEDE AN = CARD
```



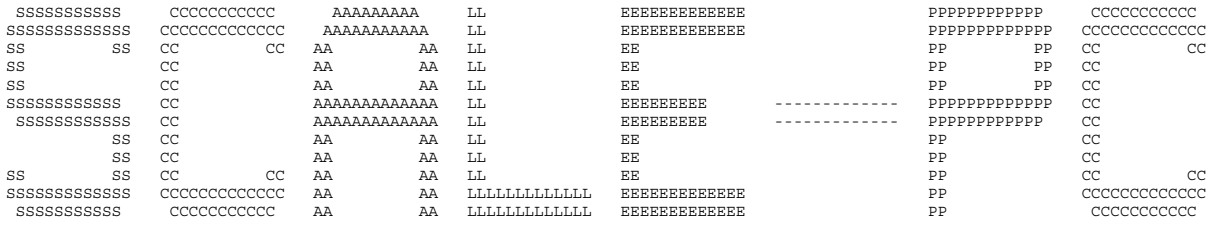


```
*******************************************************************************
*******************************************************************************
*******************************************************************************
*****                                                                     *****
*****                  PROGRAM VERIFICATION INFORMATION                   *****
*****                                                                     *****
*****                CODE SYSTEM:  SCALE-PC VERSION:  4.3                 *****
*****                                                                     *****
*******************************************************************************
*******************************************************************************
*****                                                                     *****
*****                                                                     *****
*****              PROGRAM:  CSAS                                         *****
*****                                                                     *****
*****        CREATION DATE:  03/08/96                                     *****
*****                                                                     *****
*****              VOLUME:   Eng                                          *****
*****                                                                     *****
*****              LIBRARY:  M:\SCALE43\WIN_NT\EXE                        *****
*****                                                                     *****
*****                                                                     *****
*****      PRODUCTION CODE:  CSAS                                         *****
*****                                                                     *****
*****              VERSION:  3.1                                          *****
*****                                                                     *****
*****              JOBNAME:  SCALE-PC                                     *****
*****                                                                     *****
*****    DATE OF EXECUTION:  05/16/03                                     *****
*****                                                                     *****
*****    TIME OF EXECUTION:  11:02:32                                     *****
*****                                                                     *****
*****                                                                     *****
*******************************************************************************
*******************************************************************************
*******************************************************************************
```

```
' RERTR TRIGA FUEL - HOMOGENIZED (NO CLAD)

' HTGR FUEL MATRIX

' CASK INTERIOR MODERATOR

' CASK EXTERIOR MODERATOR

' LEAD SHIELD

' NEUTRON SHIELD

' STAINLESS STEEL

' WATER

' RERTR TRIGA FUEL - HOMOGENIZED (NO CLAD)
    LWT WITH GA IFM

    **** PROBLEM PARAMETERS ****

    LIB 27GROUPNDF4  LIBRARY
    MXX            9 MIXTURES
    MSC           19 COMPOSITION SPECIFICATIONS
    IZM            1 MATERIAL ZONES
    GE  INFHOMMEDIUM GEOMETRY
    MORE           0 0/1 DO NOT READ/READ OPTIONAL PARAMETER DATA
    MSLN           0 FUEL SOLUTIONS


    **** PROBLEM COMPOSITION DESCRIPTION ****

    SC  H2O          STANDARD COMPOSITION
    MX             1 MIXTURE NO.
    VF        0.6816 VOLUME FRACTION
    ROTH      0.9982 THEORETICAL DENSITY
    NEL            2 NO. ELEMENTS
    ICP            1 0/1 MIXTURE/COMPOUND
    TEMP       293.0 DEG KELVIN
                1001      2.00 ATOMS/MOLECULE
                8016      1.00 ATOM/MOLECULE
    END

    SC  U-235        STANDARD COMPOSITION
    MX             1 MIXTURE NO.
    VF        1.0000 VOLUME FRACTION
    ROTH      0.1062 SPECIFIED DENSITY
    NEL            1 NO. ELEMENTS
    ICP            1 0/1 MIXTURE/COMPOUND
              92235      1.00 ATOM/MOLECULE
    END

    SC  U-238        STANDARD COMPOSITION
    MX             1 MIXTURE NO.
    VF        1.0000 VOLUME FRACTION
    ROTH      0.4331 SPECIFIED DENSITY
    NEL            1 NO. ELEMENTS
    ICP            1 0/1 MIXTURE/COMPOUND
              92238      1.00 ATOM/MOLECULE
    END

    SC  ZR           STANDARD COMPOSITION
    MX             1 MIXTURE NO.
    VF        1.0000 VOLUME FRACTION
    ROTH      0.9413 SPECIFIED DENSITY
    NEL            1 NO. ELEMENTS
    ICP            1 0/1 MIXTURE/COMPOUND
               40000      1.00 ATOM/MOLECULE
    END

    SC  H            STANDARD COMPOSITION
    MX             1 MIXTURE NO.
    VF        1.0000 VOLUME FRACTION
    ROTH      0.0162 SPECIFIED DENSITY
    NEL            1 NO. ELEMENTS
    ICP            1 0/1 MIXTURE/COMPOUND
                1001      1.00 ATOM/MOLECULE
    END

    SC  C            STANDARD COMPOSITION
    MX             1 MIXTURE NO.
    VF        1.0000 VOLUME FRACTION
    ROTH      0.0022 SPECIFIED DENSITY
    NEL            1 NO. ELEMENTS
    ICP            1 0/1 MIXTURE/COMPOUND
                6012      1.00 ATOM/MOLECULE

' HTGR FUEL MATRIX
    END

    SC  H2O          STANDARD COMPOSITION
    MX             3 MIXTURE NO.
    VF        1.0000 VOLUME FRACTION
```

```
    ROTH      0.9982 THEORETICAL DENSITY
    NEL            2 NO. ELEMENTS
    ICP            1 0/1 MIXTURE/COMPOUND
    TEMP       293.0 DEG KELVIN
                1001      2.00 ATOMS/MOLECULE
                8016      1.00 ATOM/MOLECULE
    END

    SC  C             STANDARD COMPOSITION
    MX             3 MIXTURE NO.
    VF        1.0000 VOLUME FRACTION
    ROTH      0.7405 SPECIFIED DENSITY
    NEL            1 NO. ELEMENTS
    ICP            1 0/1 MIXTURE/COMPOUND
               6012      1.00 ATOM/MOLECULE
    END

    SC  TH            STANDARD COMPOSITION
    MX             3 MIXTURE NO.
    VF        1.0000 VOLUME FRACTION
    ROTH      0.2048 SPECIFIED DENSITY
    NEL            1 NO. ELEMENTS
    ICP            1 0/1 MIXTURE/COMPOUND
              90000      1.00 ATOM/MOLECULE
                           90232   100.000 WT%
    END

    SC  SI            STANDARD COMPOSITION
    MX             3 MIXTURE NO.
    VF        1.0000 VOLUME FRACTION
    ROTH      0.1474 SPECIFIED DENSITY
    NEL            1 NO. ELEMENTS
    ICP            1 0/1 MIXTURE/COMPOUND
              14000      1.00 ATOM/MOLECULE
    END

    SC  O             STANDARD COMPOSITION
    MX             3 MIXTURE NO.
    VF        1.0000 VOLUME FRACTION
    ROTH      0.0023 SPECIFIED DENSITY
    NEL            1 NO. ELEMENTS
    ICP            1 0/1 MIXTURE/COMPOUND
               8016      1.00 ATOM/MOLECULE
    END

    SC  U-235         STANDARD COMPOSITION
    MX             3 MIXTURE NO.
    VF        1.0000 VOLUME FRACTION
    ROTH      0.0200 SPECIFIED DENSITY
    NEL            1 NO. ELEMENTS
    ICP            1 0/1 MIXTURE/COMPOUND
              92235      1.00 ATOM/MOLECULE
    END

    SC  U-238         STANDARD COMPOSITION
    MX             3 MIXTURE NO.
    VF        1.0000 VOLUME FRACTION
    ROTH      0.0015 SPECIFIED DENSITY
    NEL            1 NO. ELEMENTS
    ICP            1 0/1 MIXTURE/COMPOUND
              92238      1.00 ATOM/MOLECULE

' CASK INTERIOR MODERATOR
    END

    SC  H2O           STANDARD COMPOSITION
    MX             4 MIXTURE NO.
    VF        0.0001 VOLUME FRACTION
    ROTH      0.9982 THEORETICAL DENSITY
    NEL            2 NO. ELEMENTS
    ICP            1 0/1 MIXTURE/COMPOUND
    TEMP       293.0 DEG KELVIN
                1001      2.00 ATOMS/MOLECULE
                8016      1.00 ATOM/MOLECULE

' CASK EXTERIOR MODERATOR
    END

    SC  H2O           STANDARD COMPOSITION
    MX             5 MIXTURE NO.
    VF        0.0001 VOLUME FRACTION
    ROTH      0.9982 THEORETICAL DENSITY
    NEL            2 NO. ELEMENTS
    ICP            1 0/1 MIXTURE/COMPOUND
    TEMP       293.0 DEG KELVIN
                1001      2.00 ATOMS/MOLECULE
                8016      1.00 ATOM/MOLECULE

' LEAD SHIELD
    END

    SC  PB            STANDARD COMPOSITION
    MX             6 MIXTURE NO.
    VF        1.0000 VOLUME FRACTION
    ROTH     11.3440 THEORETICAL DENSITY
```

```
    NEL            1 NO. ELEMENTS
    ICP            1 0/1 MIXTURE/COMPOUND
    TEMP       293.0 DEG KELVIN
               82000      1.00 ATOM/MOLECULE

' NEUTRON SHIELD
    END

    SC  H2O          STANDARD COMPOSITION
    MX             7 MIXTURE NO.
    VF        0.0001 VOLUME FRACTION
    ROTH      0.9982 THEORETICAL DENSITY
    NEL            2 NO. ELEMENTS
    ICP            1 0/1 MIXTURE/COMPOUND
    TEMP       293.0 DEG KELVIN
                1001      2.00 ATOMS/MOLECULE
                8016      1.00 ATOM/MOLECULE

' STAINLESS STEEL
    END

    SC  SS304        STANDARD COMPOSITION
    MX             8 MIXTURE NO.
    VF        1.0000 VOLUME FRACTION
    ROTH      7.9200 THEORETICAL DENSITY
    NEL            4 NO. ELEMENTS
    ICP            0 0/1 MIXTURE/COMPOUND
    TEMP       293.0 DEG KELVIN
               24304    19.000 WT%
               25055     2.000 WT%
               26304    69.500 WT%
               28304     9.500 WT%

' WATER
    END

    SC  H2O          STANDARD COMPOSITION
    MX             9 MIXTURE NO.
    VF        1.0000 VOLUME FRACTION
    ROTH      0.9982 THEORETICAL DENSITY
    NEL            2 NO. ELEMENTS
    ICP            1 0/1 MIXTURE/COMPOUND
    TEMP       293.0 DEG KELVIN
                1001      2.00 ATOMS/MOLECULE
                8016      1.00 ATOM/MOLECULE
    END


    **** PROBLEM GEOMETRY ****


    **** INFINITE HOMOGENEOUS MEDIUM ****
    MFUEL          1 MIXTURE NO. OF THE INFINITE HOMOGENEOUS MEDIUM

MIP MESSAGE NUMBER MP-22 FOLLOWS:
**WARNING**   STANDARD COMPOSITION SPECIFICATION CARD(S) MISSING
              FOR MIXTURE NUMBER  2
```

```
*****************************************************************************************************************
***                                                                                                           ***
***                              LWT WITH GA IFM                                                              ***
***                                                                                                           ***
*****************************************************************************************************************
*****************************************************************************************************************
***                                                                                                           ***
***                                 ********** DATA LIBRARY INFORMATION **********                           ***
***                                                                                                           ***
***          UNIT                                                VOLUME                                       ***
***         NUMBER                DATA SET NAME                  NAME        UNIT FUNCTION                  ***
***         ------                -------------                  ----        -------------                  ***
***                                                                                                           ***
***           89     M:\scale43\DATALIB\FT89F001                              STANDARD COMPOSITION LIBRARY   ***
***                                                                                                           ***
***           82     M:\scale43\DATALIB\FT82F001                              CROSS SECTION LIBRARY          ***
***                                                                                                           ***
***           11     D:\zjr\Lwt\GAIFM\Crit\DAMAGED\gaifm_173ps_00             SHORT CROSS SECTION LIBRARY    ***
***                                                                                                           ***
***           90     D:\zjr\Lwt\GAIFM\Crit\DAMAGED\gaifm_173ps_00             INPUT DATA DIRECT ACCESS       ***
***                                                                                                           ***
*****************************************************************************************************************
*****************************************************************************************************************
***                                                                                                           ***
***                                                                                                           ***
***                                    STANDARD COMPOSITION LIBRARY DATA                                      ***
***                                    ---------------------------------                                      ***
***                                                                                                           ***
***            UNIT NUMBER  :  89                                                                             ***
***                                                                                                           ***
***            DATASET NAME :  M:\scale43\DATALIB\FT89F001                                                    ***
***                                                                                                           ***
***            LIBRARY TITLE:  SCALE-4 STANDARD COMPOSITION LIBRARY                                           ***
***                            637 STANDARD COMPOSITIONS, 490 NUCLIDES                                        ***
***                            90 ELEMENTS WITH VARIABLE ISOTOPIC DISTRBUTIONS.                               ***
***                                                                                                           ***
***            CREATION DATE:   6/30/95                                                                       ***
***                                                                                                           ***
***                                                                                                           ***
***                                                                                                           ***
***                                      CROSS SECTION LIBRARY DATA                                           ***
***                                     ---------------------------                                           ***
***                                                                                                           ***
***            UNIT NUMBER  :  82                                                                             ***
***                                                                                                           ***
***            DATASET NAME :  M:\scale43\DATALIB\FT82F001                                                    ***
***                                                                                                           ***
***            LIBRARY TITLE:  SCALE 4.2 - 27 GROUP NEUTRON GROUP LIBRARY                                     ***
***                               BASED ON ENDF-B VERSION 4 DATA                                              ***
***                                  COMPILED FOR NRC     1/27/89                                             ***
***                                     LAST UPDATED                                          08/12/94  ***
***                                        L.M.PETRIE   -   ORNL                                              ***
***                                                                                                           ***
***                                                                                                           ***
***                                                                                                           ***
***                                                                                                           ***
*****************************************************************************************************************
*****************************************************************************************************************

                        ........    0 IO'S WERE USED BEFORE READING KENO V DATA    ........

                        ........    0 IO'S WERE USED READING THE KENO V PARAMETER DATA    ........


                       *************** DATA READING COMPLETED ***************

                        ........    0 IO'S WERE USED PREPARING THE KENO V INPUT DATA    ........

                        ........    0 IO'S WERE USED LOADING THE KENO V DATA    ........

                        ........    0 IO'S WERE USED LOADING THE DATA    ........

                        ........    0 IO'S WERE USED CHECKING THE KENO V GEOMETRY DATA    ........
                        *****  RESTART DATA HAS BEEN WRITTEN ON UNIT 95  *****

                        ........    0 IO'S WERE USED WRITING THE KENO V - CSAS DATA    ........

                        ........    0 IO'S WERE USED PROCESSING CSAS INPUT DATA    ........

 CONTROL MODULE CSAS25   IS COMPLETE.
```

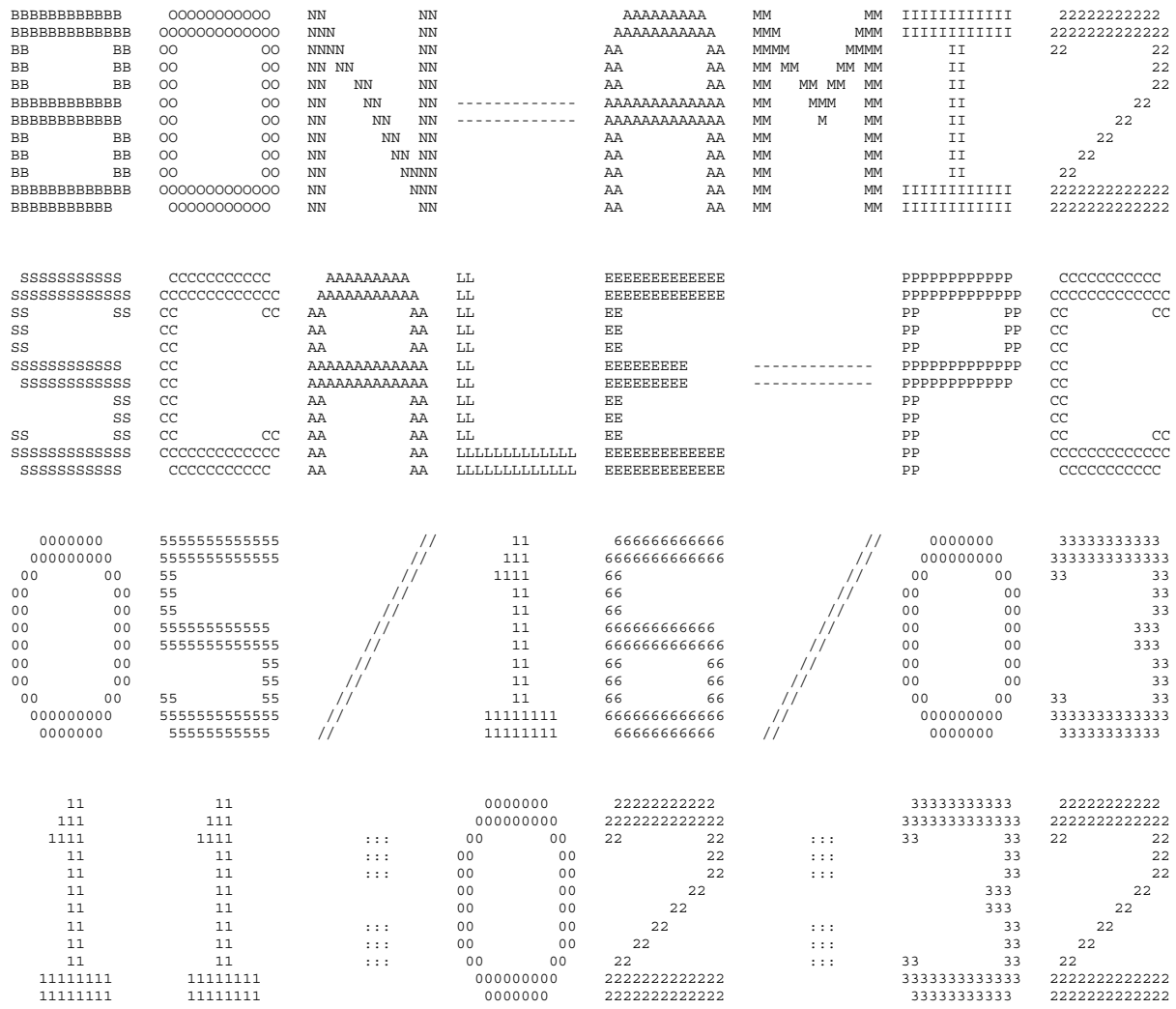

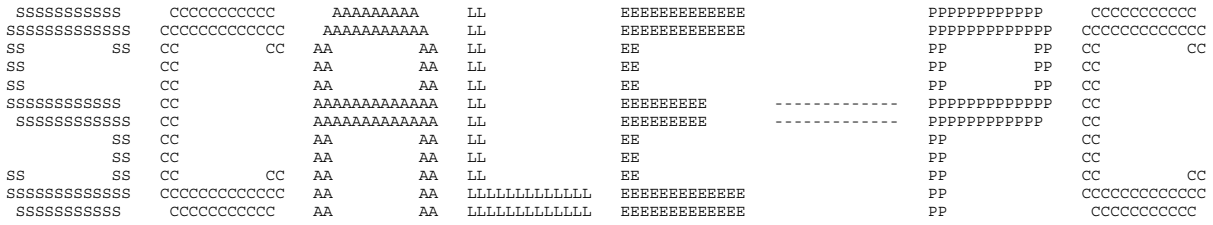


```
*******************************************************************************
*******************************************************************************
*******************************************************************************
*****                                                                     *****
*****                  PROGRAM VERIFICATION INFORMATION                   *****
*****                                                                     *****
*****                CODE SYSTEM:  SCALE-PC VERSION:  4.3                 *****
*****                                                                     *****
*******************************************************************************
*******************************************************************************
*****                                                                     *****
*****                                                                     *****
*****              PROGRAM:  O0O008                                       *****
*****                                                                     *****
*****        CREATION DATE:  09/16/95                                     *****
*****                                                                     *****
*****              VOLUME:   Eng                                          *****
*****                                                                     *****
*****              LIBRARY:  M:\SCALE43\WIN_NT\EXE                        *****
*****                                                                     *****
*****                                                                     *****
*****    THIS IS NOT A SCALE-PC CONFIGURATION CONTROLLED CODE             *****
*****                                                                     *****
*****              JOBNAME:  SCALE-PC                                     *****
*****                                                                     *****
*****    DATE OF EXECUTION:  05/16/03                                     *****
*****                                                                     *****
*****    TIME OF EXECUTION:  11:02:32                                     *****
*****                                                                     *****
*****                                                                     *****
*******************************************************************************
*******************************************************************************
*******************************************************************************
```

```
-1Q ARRAY HAS      1 ENTRIES.

 0Q ARRAY HAS      4 ENTRIES.

 1Q ARRAY HAS      6 ENTRIES.

 2Q ARRAY HAS      2 ENTRIES.
```

```
LOGICAL ASSIGNMENTS

MASTER LIBRARY   11
WORKING LIBRARY   0
SCRATCH FILE     18
NEW LIBRARY       1

P R O B L E M   D E S C R I P T I O N

IGR--GEOMETRY (0/1/2/3--INF MED/SLAB/CYL/SPHERE               1

IZM--NUMBER OF ZONES OR MATERIAL REGIONS                      9

MS--MIXING TABLE LENGTH                                      26

IBL--SHIELDED CROSS SECTION EDIT OPTION (0/1--NO/YES)         0

IBR--BONDARENKO FACTOR EDIT OPTION (0/1--NO/YES)              0

ISSOPT--DANCOFF FACTOR OPTION                                 0

CONVERGENCE CRITERION    1.00000E-03

GEOMETRY CORRECTION FACTOR FOR WIGNER RATIONAL APPROXIMATION  1.000E+00

        3Q ARRAY HAS     26 ENTRIES.

        4Q ARRAY HAS     26 ENTRIES.

        5Q ARRAY HAS     26 ENTRIES.

        6Q ARRAY HAS      9 ENTRIES.

        7Q ARRAY HAS      9 ENTRIES.

        8Q ARRAY HAS      9 ENTRIES.

        9Q ARRAY HAS      9 ENTRIES.

       10Q ARRAY HAS     26 ENTRIES.

       11Q ARRAY HAS      9 ENTRIES.

M I X I N G   T A B L E

ENTRY   MIXTURE   ISOTOPE   NUMBER DENSITY   NEW IDENTIFIER
   1       1         1001     5.52201E-02          1001001
   2       3         1001     6.67692E-02          3001001
   3       4         1001     6.67692E-06          4001001
   4       5         1001     6.67692E-06          5001001
   5       7         1001     6.67692E-06          7001001
   6       9         1001     6.67692E-02          9001001
   7       1         8016     2.27549E-02          1008016
   8       3         8016     3.34727E-02          3008016
   9       4         8016     3.33846E-06          4008016
  10       5         8016     3.33846E-06          5008016
  11       7         8016     3.33846E-06          7008016
  12       9         8016     3.33846E-02          9008016
  13       1        92235     2.72201E-04          1092235
  14       3        92235     5.11657E-05          3092235
  15       1        92238     1.09554E-03          1092238
  16       3        92238     3.71876E-06          3092238
  17       1        40000     6.21447E-03          1040000
  18       1         6012     1.08398E-04          1006012
  19       3         6012     3.71616E-02          3006012
  20       3        90232     5.31533E-04          3090232
  21       3        14000     3.16038E-03          3014000
  22       6        82000     3.29690E-02          6082000
  23       8        24304     1.74286E-02          8024304
  24       8        25055     1.73633E-03          8025055
  25       8        26304     5.93579E-02          8026304
  26       8        28304     7.72070E-03          8028304

GEOMETRY AND MATERIAL DESCRIPTION

ZONE   MIXTURE   OUTER DIMENSION   TEMPERATURE       EXTRA XS   TYPE (0/1--FUEL/MOD)
   1       1         1.00000E+00    2.93000E+02    0.00000E+00             0
   2       2         6.00000E+00   -2.93000E+02    0.00000E+00             0
   3       3         1.10000E+01    2.93000E+02    0.00000E+00             0
   4       4         1.60000E+01    2.93000E+02    0.00000E+00             0
   5       5         2.10000E+01    2.93000E+02    0.00000E+00             0
   6       6         2.60000E+01    2.93000E+02    0.00000E+00             0
   7       7         3.10000E+01    2.93000E+02    0.00000E+00             0
   8       8         3.60000E+01    2.93000E+02    0.00000E+00             0
   9       9         4.10000E+01    2.93000E+02    0.00000E+00             0
     4532 LOCATIONS OF   100000 AVAILABLE ARE REQUIRED TO MAKE A NEW MASTER CONTAINING THE SELF-SHIELDED VALUES

NO NUCLIDES IN YOUR PROBLEM HAVE BONDARENKO FACTOR DATA**BONAMI WILL COPY FROM LOGICAL 11 TO LOGICAL  1

COPY      1001   HYDROGEN        FROM LOG 11 TO LOG 18    BONDARENKO TRIGGER 0

COPY      1001   HYDROGEN        FROM LOG 18 TO LOG  1    BONDARENKO TRIGGER 0

COPY      1001   HYDROGEN        FROM LOG 18 TO LOG  1    BONDARENKO TRIGGER 0
```

```
COPY      1001   HYDROGEN        FROM LOG 18 TO LOG  1    BONDARENKO TRIGGER 0
COPY      1001   HYDROGEN        FROM LOG 18 TO LOG  1    BONDARENKO TRIGGER 0
COPY      1001   HYDROGEN        FROM LOG 18 TO LOG  1    BONDARENKO TRIGGER 0
COPY      1001   HYDROGEN        FROM LOG 18 TO LOG  1    BONDARENKO TRIGGER 0
COPY      6012   CARBON-12       FROM LOG 11 TO LOG 18    BONDARENKO TRIGGER 0
COPY      6012   CARBON-12       FROM LOG 18 TO LOG  1    BONDARENKO TRIGGER 0
COPY      6012   CARBON-12       FROM LOG 18 TO LOG  1    BONDARENKO TRIGGER 0
COPY      8016   OXYGEN-16       FROM LOG 11 TO LOG 18    BONDARENKO TRIGGER 0
COPY      8016   OXYGEN-16       FROM LOG 18 TO LOG  1    BONDARENKO TRIGGER 0
COPY      8016   OXYGEN-16       FROM LOG 18 TO LOG  1    BONDARENKO TRIGGER 0
COPY      8016   OXYGEN-16       FROM LOG 18 TO LOG  1    BONDARENKO TRIGGER 0
COPY      8016   OXYGEN-16       FROM LOG 18 TO LOG  1    BONDARENKO TRIGGER 0
COPY      8016   OXYGEN-16       FROM LOG 18 TO LOG  1    BONDARENKO TRIGGER 0
COPY      8016   OXYGEN-16       FROM LOG 18 TO LOG  1    BONDARENKO TRIGGER 0
COPY     14000   SILICON         FROM LOG 11 TO LOG  1    BONDARENKO TRIGGER 0
COPY     24304  CR 1191 WT SS-30 FROM LOG 11 TO LOG  1    BONDARENKO TRIGGER 0
COPY     25055   MANGANESE-55    FROM LOG 11 TO LOG  1    BONDARENKO TRIGGER 0
COPY     26304  FE 1192 WT SS-30 FROM LOG 11 TO LOG  1    BONDARENKO TRIGGER 0
COPY     28304  NI 1190 WT SS-30 FROM LOG 11 TO LOG  1    BONDARENKO TRIGGER 0
COPY     40000   ZIRCONIUM       FROM LOG 11 TO LOG  1    BONDARENKO TRIGGER 0
COPY     82000  PB   1288 218NGP FROM LOG 11 TO LOG  1    BONDARENKO TRIGGER 0
COPY     90232   THORIUM-232     FROM LOG 11 TO LOG  1    BONDARENKO TRIGGER 0
COPY     92235   URANIUM-235     FROM LOG 11 TO LOG 18    BONDARENKO TRIGGER 0
COPY     92235   URANIUM-235     FROM LOG 18 TO LOG  1    BONDARENKO TRIGGER 0
COPY     92235   URANIUM-235     FROM LOG 18 TO LOG  1    BONDARENKO TRIGGER 0
COPY     92238   URANIUM-238     FROM LOG 11 TO LOG 18    BONDARENKO TRIGGER 0
COPY     92238   URANIUM-238     FROM LOG 18 TO LOG  1    BONDARENKO TRIGGER 0
COPY     92238   URANIUM-238     FROM LOG 18 TO LOG  1    BONDARENKO TRIGGER 0
```

```
SCALE 4.2 - 27 GROUP NEUTRON GROUP LIBRARY
   BASED ON ENDF-B VERSION 4 DATA
      COMPILED FOR NRC     1/27/89
         LAST UPDATED                                                08/12/94
            L.M.PETRIE   -   ORNL
    TAPE ID                          4321          NUMBER OF NUCLIDES                    26
    NUMBER OF NEUTRON GROUPS           27          NUMBER OF GAMMA GROUPS                 0
    FIRST THERMAL GROUP                15          LOGICAL UNIT                           1
                              TABLE OF CONTENTS
   HYDROGEN       ENDF/B-IV MAT 1269/THRM1002          UPDATED 08/12/94        ID   1001001
   HYDROGEN       ENDF/B-IV MAT 1269/THRM1002          UPDATED 08/12/94        ID   3001001
   HYDROGEN       ENDF/B-IV MAT 1269/THRM1002          UPDATED 08/12/94        ID   4001001
   HYDROGEN       ENDF/B-IV MAT 1269/THRM1002          UPDATED 08/12/94        ID   5001001
   HYDROGEN       ENDF/B-IV MAT 1269/THRM1002          UPDATED 08/12/94        ID   7001001
   HYDROGEN       ENDF/B-IV MAT 1269/THRM1002          UPDATED 08/12/94        ID   9001001
   CARBON-12      ENDF/B-IV MAT 1274/THRM1065          UPDATED 08/12/94        ID   1006012
   CARBON-12      ENDF/B-IV MAT 1274/THRM1065          UPDATED 08/12/94        ID   3006012
   OXYGEN-16      ENDF/B-IV MAT 1276                   UPDATED 08/12/94        ID   1008016
   OXYGEN-16      ENDF/B-IV MAT 1276                   UPDATED 08/12/94        ID   3008016
   OXYGEN-16      ENDF/B-IV MAT 1276                   UPDATED 08/12/94        ID   4008016
   OXYGEN-16      ENDF/B-IV MAT 1276                   UPDATED 08/12/94        ID   5008016
   OXYGEN-16      ENDF/B-IV MAT 1276                   UPDATED 08/12/94        ID   7008016
   OXYGEN-16      ENDF/B-IV MAT 1276                   UPDATED 08/12/94        ID   9008016
   SILICON        ENDF/B-IV MAT 1194                   UPDATED 08/12/94        ID   3014000
  CR 1191 WT SS-304(1/EST) P-3 293K SP=5+4(42375)'     UPDATED 08/12/94        ID   8024304
   MANGANESE-55   ENDF/B-IV MAT 1197                   UPDATED 08/12/94        ID   8025055
  FE 1192 WT SS-304(1/EST) P-3 293K SP=5+4(42375)'     UPDATED 08/12/94        ID   8026304
  NI 1190 WT SS-304(1/EST) P-3 293K SP=5+4(42375)'     UPDATED 08/12/94        ID   8028304
   ZIRCONIUM      ENDF/B-IV MAT 7141                   UPDATED 08/12/94        ID   1040000
  PB   1288 218NGP 042375 P-3 293K                     UPDATED 08/12/94        ID   6082000
   THORIUM-232    ENDF/B-IV MAT 1296                   UPDATED 08/12/94        ID   3090232
   URANIUM-235    ENDF/B-IV MAT 1261                   UPDATED 08/12/94        ID   1092235
   URANIUM-235    ENDF/B-IV MAT 1261                   UPDATED 08/12/94        ID   3092235
   URANIUM-238    ENDF/B-IV MAT 1262                   UPDATED 08/12/94        ID   1092238
   URANIUM-238    ENDF/B-IV MAT 1262                   UPDATED 08/12/94        ID   3092238

    TAPE COPY USED      0 I/O'S, AND TOOK    0.17 SECONDS
```

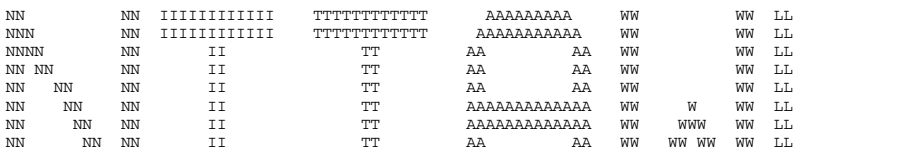
NN NN IIIIIIIIIIII TTTTTTTTTTTT AAAAAAAAA WW WW LL
NNN NN IIIIIIIIIIII TTTTTTTTTTTT AAAAAAAAAAA WW WW LL
NNNN NN II TT AA AA WW WW LL
NN NN NN II TT AA AA WW WW LL
NN NN NN II TT AA AA WW WW LL
NN NN NN II TT AAAAAAAAAAAAA WW W WW LL
NN NN NN II TT AAAAAAAAAAAAA WW WWW WW LL
NN NN NN II TT AA AA WW WW WW WW LL
NN NN NN II TT AA AA WW WW WW LL
NN NNNN II TT AA AA WWWW WWWW LL
NN NNN IIIIIIIIIIII TT AA AA WWW WWW LLLLLLLLLLLL
NN NN IIIIIIIIIIII TT AA AA WW WW LLLLLLLLLLLL

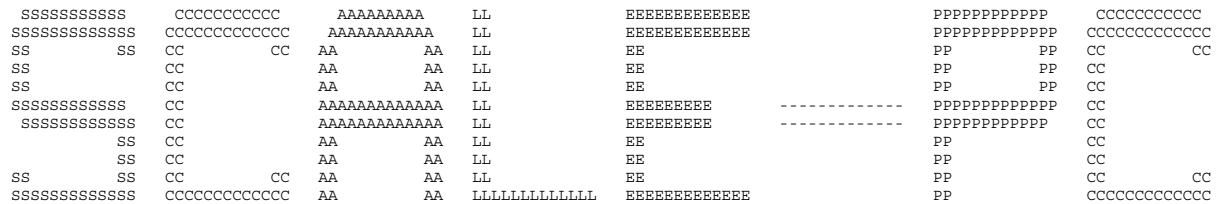
SSSSSSSSSS CCCCCCCCCC AAAAAAAAA LL EEEEEEEEEEEE PPPPPPPPPPP CCCCCCCCCC
SSSSSSSSSSSS CCCCCCCCCCCC AAAAAAAAAAA LL EEEEEEEEEEEE PPPPPPPPPPPP CCCCCCCCCCCC
SS SS CC CC AA AA LL EE PP PP CC CC
SS CC AA AA LL EE PP PP CC
SS CC AA AA LL EE PP PP CC
SSSSSSSSSSS CC AAAAAAAAAAAAA LL EEEEEEEEE ------------ PPPPPPPPPPPP CC
SSSSSSSSSSS CC AAAAAAAAAAAAA LL EEEEEEEEE ------------ PPPPPPPPPPP CC
SS CC AA AA LL EE PP CC
SS CC AA AA LL EE PP CC
SS SS CC CC AA AA LL EE PP CC CC
SSSSSSSSSSSS CCCCCCCCCCCC AA AA LLLLLLLLLLLL EEEEEEEEEEEE PP CCCCCCCCCCCC
SSSSSSSSSS CCCCCCCCCC AA AA LLLLLLLLLLLL EEEEEEEEEEEE PP CCCCCCCCCC

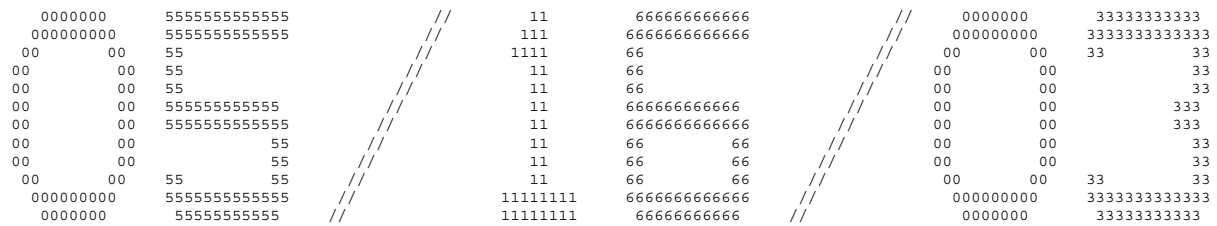
0000000 5555555555555 // 11 666666666666 // 0000000 33333333333
000000000 5555555555555 // 111 6666666666666 // 000000000 3333333333333
00 00 55 // 1111 66 // 00 00 33 33
00 00 55 // 11 66 // 00 00 33
00 00 55 // 11 66 // 00 00 33
00 00 555555555555 // 11 666666666666 // 00 00 333
00 00 5555555555555 // 11 6666666666666 // 00 00 333
00 00 55 // 11 66 66 // 00 00 33
00 00 55 // 11 66 66 // 00 00 33
00 00 55 55 // 11 66 66 // 00 00 33 33
000000000 5555555555555 // 11111111 6666666666666 // 000000000 3333333333333
0000000 55555555555 // 11111111 66666666666 // 0000000 33333333333

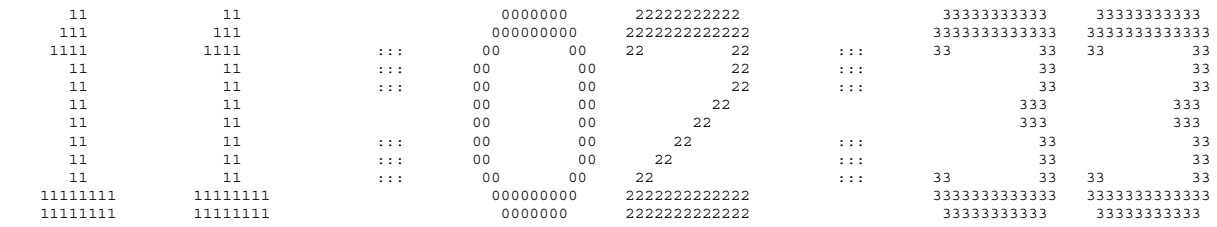
11 11 0000000 22222222222 33333333333 33333333333
111 111 000000000 2222222222222 3333333333333 3333333333333
1111 1111 ::: 00 00 22 22 ::: 33 33 33 33
11 11 ::: 00 00 22 ::: 33 33
11 11 ::: 00 00 22 ::: 33 33
11 11 00 00 22 333 333
11 11 00 00 22 333 333
11 11 ::: 00 00 22 ::: 33 33
11 11 ::: 00 00 22 ::: 33 33
11 11 ::: 00 00 22 ::: 33 33 33 33
11111111 11111111 000000000 2222222222222 3333333333333 3333333333333
11111111 11111111 0000000 2222222222222 33333333333 33333333333

```
  SSSSSSSSSS     CCCCCCCCCC      AAAAAAAA     LL             EEEEEEEEEEEE                 PPPPPPPPPPP     CCCCCCCCCC
 SSSSSSSSSSSS   CCCCCCCCCCCC    AAAAAAAAAA    LL             EEEEEEEEEEEE                 PPPPPPPPPPPP   CCCCCCCCCCCC
 SS          SS CC          CC  AA          AA  LL             EE                           PP         PP  CC          CC
 SS             CC              AA          AA  LL             EE                           PP         PP  CC
 SS             CC              AA          AA  LL             EE                           PP         PP  CC
 SSSSSSSSSSSS   CC              AAAAAAAAAAAAAA  LL             EEEEEEEEE       -------------PPPPPPPPPPPP  CC
  SSSSSSSSSSSS  CC              AAAAAAAAAAAAAA  LL             EEEEEEEEE       -------------PPPPPPPPPPP   CC
           SS   CC              AA          AA  LL             EE                           PP             CC
           SS   CC              AA          AA  LL             EE                           PP             CC
 SS        SS   CC          CC  AA          AA  LL             EE                           PP             CC          CC
 SSSSSSSSSSSS   CCCCCCCCCCCC    AA          AA  LLLLLLLLLLLL   EEEEEEEEEEEE                 PP             CCCCCCCCCCCC
  SSSSSSSSSS     CCCCCCCCCC     AA          AA  LLLLLLLLLLLL   EEEEEEEEEEEE                 PP              CCCCCCCCCC
```

```
*******************************************************************************
*******************************************************************************
*******************************************************************************
*****                                                                     *****
*****                  PROGRAM VERIFICATION INFORMATION                   *****
*****                                                                     *****
*****                CODE SYSTEM:  SCALE-PC VERSION:  4.3                 *****
*****                                                                     *****
*******************************************************************************
*******************************************************************************
*****                                                                     *****
*****                                                                     *****
*****              PROGRAM:  O0O002                                       *****
*****                                                                     *****
*****        CREATION DATE:  09/28/95                                     *****
*****                                                                     *****
*****              VOLUME:   Eng                                          *****
*****                                                                     *****
*****              LIBRARY:  M:\SCALE43\WIN_NT\EXE                        *****
*****                                                                     *****
*****                                                                     *****
*****      PRODUCTION CODE:  NITAWL                                       *****
*****                                                                     *****
*****              VERSION:  3.0                                          *****
*****                                                                     *****
*****              JOBNAME:  SCALE-PC                                     *****
*****                                                                     *****
*****    DATE OF EXECUTION:  05/16/03                                     *****
*****                                                                     *****
*****    TIME OF EXECUTION:  11:02:33                                     *****
*****                                                                     *****
*****                                                                     *****
*******************************************************************************
*******************************************************************************
*******************************************************************************
```

```
       -1Q ARRAY HAS      1 ENTRIES.

        0Q ARRAY HAS      9 ENTRIES.

        1Q ARRAY HAS     12 ENTRIES.

SELECT 26 NUCLIDES FROM THE MASTER  LIBRARY ON LOGICAL  1
        0 NUCLIDES FROM THE WORKING LIBRARY ON LOGICAL  2
        0 NUCLIDES FROM THE WORKING LIBRARY ON LOGICAL  3
          TO CREATE THE NEW WORKING LIBRARY ON LOGICAL  4

        6 RESONANCE CALCULATIONS HAVE BEEN REQUESTED
       -1 OUTPUT OPTION FOR AMPX FORMATTED CROSS SECTION DATA
     2001 MAXIMUM NUMBER OF RESONANCE MESH INTERVALS
        2 ORDER OF RESONANCE LEVEL PROCESSING

THE STORAGE ALLOCATED FOR THIS CASE IS    100000 WORDS

        2Q ARRAY HAS     26 ENTRIES.

        3Q ARRAY HAS     90 ENTRIES.

        4Q ARRAY HAS     26 ENTRIES.

 GENERAL INFORMATION CONCERNING CROSS SECTION LIBRARY
   TAPE IDENTIFICATION NUMBER               4321
   NUMBER OF NUCLIDES ON TAPE                 26
   NUMBER OF NEUTRON ENERGY GROUPS            27
   FIRST THERMAL NEUTRON ENERGY GROUP         15
   NUMBER OF GAMMA ENERGY GROUPS               0

   DIRECT ACCESS UNIT NUMBER  9 REQUIRES 117 BLOCKS OF LENGTH  1680 WORDS
 XSDRN TAPE   4321
                       SCALE 4.2 - 27 GROUP NEUTRON GROUP LIBRARY
                          BASED ON ENDF-B VERSION 4 DATA
                             COMPILED FOR NRC     1/27/89
                                LAST UPDATED                                                  08/12/94
                                   L.M.PETRIE   -   ORNL

 NUCLIDES FROM XSDRN TAPE
    1     HYDROGEN       ENDF/B-IV MAT 1269/THRM1002            UPDATED 08/12/94     1001001
    2     HYDROGEN       ENDF/B-IV MAT 1269/THRM1002            UPDATED 08/12/94     3001001
    3     HYDROGEN       ENDF/B-IV MAT 1269/THRM1002            UPDATED 08/12/94     4001001
    4     HYDROGEN       ENDF/B-IV MAT 1269/THRM1002            UPDATED 08/12/94     5001001
    5     HYDROGEN       ENDF/B-IV MAT 1269/THRM1002            UPDATED 08/12/94     7001001
    6     HYDROGEN       ENDF/B-IV MAT 1269/THRM1002            UPDATED 08/12/94     9001001
    7     CARBON-12      ENDF/B-IV MAT 1274/THRM1065            UPDATED 08/12/94     1006012
    8     CARBON-12      ENDF/B-IV MAT 1274/THRM1065            UPDATED 08/12/94     3006012
    9     OXYGEN-16      ENDF/B-IV MAT 1276                     UPDATED 08/12/94     1008016
   10     OXYGEN-16      ENDF/B-IV MAT 1276                     UPDATED 08/12/94     3008016
   11     OXYGEN-16      ENDF/B-IV MAT 1276                     UPDATED 08/12/94     4008016
   12     OXYGEN-16      ENDF/B-IV MAT 1276                     UPDATED 08/12/94     5008016
   13     OXYGEN-16      ENDF/B-IV MAT 1276                     UPDATED 08/12/94     7008016
   14     OXYGEN-16      ENDF/B-IV MAT 1276                     UPDATED 08/12/94     9008016
   15     SILICON        ENDF/B-IV MAT 1194                     UPDATED 08/12/94     3014000
   16    CR 1191 WT SS-304(1/EST) P-3 293K SP=5+4(42375)'       UPDATED 08/12/94     8024304
   17     MANGANESE-55   ENDF/B-IV MAT 1197                     UPDATED 08/12/94     8025055
   18    FE 1192 WT SS-304(1/EST) P-3 293K SP=5+4(42375)'       UPDATED 08/12/94     8026304
   19    NI 1190 WT SS-304(1/EST) P-3 293K SP=5+4(42375)'       UPDATED 08/12/94     8028304
   20     ZIRCONIUM      ENDF/B-IV MAT 7141                     UPDATED 08/12/94     1040000
   21    PB   1288 218NGP 042375 P-3 293K                       UPDATED 08/12/94     6082000
   22     THORIUM-232    ENDF/B-IV MAT 1296                     UPDATED 08/12/94     3090232
   23     URANIUM-235    ENDF/B-IV MAT 1261                     UPDATED 08/12/94     1092235
   24     URANIUM-235    ENDF/B-IV MAT 1261                     UPDATED 08/12/94     3092235
   25     URANIUM-238    ENDF/B-IV MAT 1262                     UPDATED 08/12/94     1092238
   26     URANIUM-238    ENDF/B-IV MAT 1262                     UPDATED 08/12/94     3092238

 HYDROGEN       ENDF/B-IV MAT 1269/THRM1002            UPDATED 08/12/94   1001001     TEMPERATURE=   293.00
                                                            PROCESS NUMBER 1007 IS AT TEMPERATURE=   293.00

 HYDROGEN       ENDF/B-IV MAT 1269/THRM1002            UPDATED 08/12/94   3001001     TEMPERATURE=   293.00
                                                            PROCESS NUMBER 1007 IS AT TEMPERATURE=   293.00

 HYDROGEN       ENDF/B-IV MAT 1269/THRM1002            UPDATED 08/12/94   4001001     TEMPERATURE=   293.00
                                                            PROCESS NUMBER 1007 IS AT TEMPERATURE=   293.00

 HYDROGEN       ENDF/B-IV MAT 1269/THRM1002            UPDATED 08/12/94   5001001     TEMPERATURE=   293.00
                                                            PROCESS NUMBER 1007 IS AT TEMPERATURE=   293.00

 HYDROGEN       ENDF/B-IV MAT 1269/THRM1002            UPDATED 08/12/94   7001001     TEMPERATURE=   293.00
                                                            PROCESS NUMBER 1007 IS AT TEMPERATURE=   293.00

 HYDROGEN       ENDF/B-IV MAT 1269/THRM1002            UPDATED 08/12/94   9001001     TEMPERATURE=   293.00
                                                            PROCESS NUMBER 1007 IS AT TEMPERATURE=   293.00

 CARBON-12      ENDF/B-IV MAT 1274/THRM1065            UPDATED 08/12/94   1006012     TEMPERATURE=   293.00
                                                            PROCESS NUMBER 1007 IS AT TEMPERATURE=   293.00

 CARBON-12      ENDF/B-IV MAT 1274/THRM1065            UPDATED 08/12/94   3006012     TEMPERATURE=   293.00
                                                            PROCESS NUMBER 1007 IS AT TEMPERATURE=   293.00

 OXYGEN-16      ENDF/B-IV MAT 1276                     UPDATED 08/12/94   1008016     TEMPERATURE=   293.00
                                                            PROCESS NUMBER 1007 IS AT TEMPERATURE=   293.00
```

```
 OXYGEN-16      ENDF/B-IV MAT 1276                    UPDATED 08/12/94   3008016     TEMPERATURE=   293.00
                                                           PROCESS NUMBER 1007 IS AT TEMPERATURE=   293.00

 OXYGEN-16      ENDF/B-IV MAT 1276                    UPDATED 08/12/94   4008016     TEMPERATURE=   293.00
                                                           PROCESS NUMBER 1007 IS AT TEMPERATURE=   293.00

 OXYGEN-16      ENDF/B-IV MAT 1276                    UPDATED 08/12/94   5008016     TEMPERATURE=   293.00
                                                           PROCESS NUMBER 1007 IS AT TEMPERATURE=   293.00

 OXYGEN-16      ENDF/B-IV MAT 1276                    UPDATED 08/12/94   7008016     TEMPERATURE=   293.00
                                                           PROCESS NUMBER 1007 IS AT TEMPERATURE=   293.00

 OXYGEN-16      ENDF/B-IV MAT 1276                    UPDATED 08/12/94   9008016     TEMPERATURE=   293.00
                                                           PROCESS NUMBER 1007 IS AT TEMPERATURE=   293.00

 SILICON        ENDF/B-IV MAT 1194                    UPDATED 08/12/94   3014000     TEMPERATURE=   293.00
                                                           PROCESS NUMBER 1007 IS AT TEMPERATURE=     0.00

CR 1191 WT SS-304(1/EST) P-3 293K SP=5+4(42375)'      UPDATED 08/12/94   8024304     TEMPERATURE=   293.00
                                                           PROCESS NUMBER 1007 IS AT TEMPERATURE=   293.00

 MANGANESE-55   ENDF/B-IV MAT 1197                    UPDATED 08/12/94   8025055     TEMPERATURE=   293.00

GEOMETRY HAS BEEN SET TO HOMOGENEOUS AS LBAR IS  0.0000E+00

RESONANCE DATA FOR THIS NUCLIDE

MASS NUMBER (A)          =    54.466              TEMPERATURE(KELVIN)       =   293.000

POTENTIAL SCATTER SIGMA  =     2.590              LUMPED NUCLEAR DENSITY    = 1.7363295E-03

SPIN FACTOR (G)          =    14.448              LUMP DIMENSION (A-BAR)    = 0.0000000E+00

INNER RADIUS             = 0.0000000E+00         DANCOFF CORRECTION (C)    = 0.0000000E+00

THE ABSORBER WILL BE TREATED BY THE NORDHEIM INTEGRAL METHOD.

MASS OF MODERATOR-1    =    55.845              SIGMA(PER ABSORBER ATOM)= 3.4663022E+02

MODERATOR-1 WILL BE TREATED BY THE NORDHEIM INTEGRAL METHOD.

MASS OF MODERATOR-2    =    55.925              SIGMA(PER ABSORBER ATOM)= 1.2557598E+02

MODERATOR-2 WILL BE TREATED BY THE NORDHEIM INTEGRAL METHOD.

THIS RESONANCE MATERIAL WILL BE TREATED AS A 0-DIMENSIONAL OBJECT.

VOLUME FRACTION OF LUMP IN CELL USED TO ACCOUNT FOR SPATIAL SELF-SHIELDING=1.00000

GROUP        RES ABS         RES FISS        RES SCAT
  8      -5.518788E-04    0.000000E+00   -3.944190E-01
  9      -2.797993E-03    0.000000E+00   -2.293471E+00
 10      -3.291452E-01    0.000000E+00   -3.820862E+01
 11      -2.680562E+00    0.000000E+00   -1.159996E+02

EXCESS RESONANCE INTEGRALS

                 RESOLVED

ABSORPTION       3.33719E+00
FISSION          0.00000E+00
                                                      PROCESS NUMBER 1007 IS AT TEMPERATURE=   293.00

FE 1192 WT SS-304(1/EST) P-3 293K SP=5+4(42375)'      UPDATED 08/12/94   8026304     TEMPERATURE=   293.00
                                                           PROCESS NUMBER 1007 IS AT TEMPERATURE=   293.00

NI 1190 WT SS-304(1/EST) P-3 293K SP=5+4(42375)'      UPDATED 08/12/94   8028304     TEMPERATURE=   293.00
                                                           PROCESS NUMBER 1007 IS AT TEMPERATURE=   293.00

 ZIRCONIUM      ENDF/B-IV MAT 7141                    UPDATED 08/12/94   1040000     TEMPERATURE=   293.00
                                                           PROCESS NUMBER 1007 IS AT TEMPERATURE=   293.00

PB   1288 218NGP 042375 P-3 293K                      UPDATED 08/12/94   6082000     TEMPERATURE=   293.00
                                                           PROCESS NUMBER 1007 IS AT TEMPERATURE=   293.00

 THORIUM-232    ENDF/B-IV MAT 1296                    UPDATED 08/12/94   3090232     TEMPERATURE=   293.00

GEOMETRY HAS BEEN SET TO HOMOGENEOUS AS LBAR IS  0.0000E+00

RESONANCE DATA FOR THIS NUCLIDE

MASS NUMBER (A)          =   230.040              TEMPERATURE(KELVIN)       =   293.000

POTENTIAL SCATTER SIGMA  =    10.150              LUMPED NUCLEAR DENSITY    = 5.3153303E-04

SPIN FACTOR (G)          =   666.678              LUMP DIMENSION (A-BAR)    = 0.0000000E+00

INNER RADIUS             = 0.0000000E+00         DANCOFF CORRECTION (C)    = 0.0000000E+00

THE ABSORBER WILL BE TREATED BY THE NORDHEIM INTEGRAL METHOD.

MASS OF MODERATOR-1    =     1.008              SIGMA(PER ABSORBER ATOM)= 2.5601689E+03

MODERATOR-1 WILL BE TREATED BY THE NORDHEIM INTEGRAL METHOD.
```

```
MASS OF MODERATOR-2    =    13.617              SIGMA(PER ABSORBER ATOM)= 5.8951794E+02

MODERATOR-2 WILL BE TREATED BY THE NORDHEIM INTEGRAL METHOD.

THIS RESONANCE MATERIAL WILL BE TREATED AS A 0-DIMENSIONAL OBJECT.

VOLUME FRACTION OF LUMP IN CELL USED TO ACCOUNT FOR SPATIAL SELF-SHIELDING=1.00000

GROUP        RES ABS         RES FISS        RES SCAT
  9      -1.537706E-03    0.000000E+00   -1.274133E-02
 10      -9.518421E-02    0.000000E+00   -5.100160E-01
 11      -1.724563E+00    0.000000E+00   -2.284316E+00
 12      -5.948936E+00    0.000000E+00   -9.034661E+00
 13      -1.168305E+01    0.000000E+00   -1.439534E+00

EXCESS RESONANCE INTEGRALS

                 RESOLVED

ABSORPTION       5.75991E+01
FISSION          0.00000E+00
                                                    PROCESS NUMBER 1007 IS AT TEMPERATURE=   293.00

 URANIUM-235    ENDF/B-IV MAT 1261                    UPDATED 08/12/94   1092235     TEMPERATURE=   293.00

GEOMETRY HAS BEEN SET TO HOMOGENEOUS AS LBAR IS  0.0000E+00

RESONANCE DATA FOR THIS NUCLIDE

MASS NUMBER (A)          =   233.025              TEMPERATURE(KELVIN)       =   293.000

POTENTIAL SCATTER SIGMA  =    11.500              LUMPED NUCLEAR DENSITY    = 2.7220073E-04

SPIN FACTOR (G)          = 15171.100              LUMP DIMENSION (A-BAR)    = 0.0000000E+00

INNER RADIUS             = 0.0000000E+00          DANCOFF CORRECTION (C)    = 0.0000000E+00

THE ABSORBER WILL BE TREATED BY THE NORDHEIM INTEGRAL METHOD.

MASS OF MODERATOR-1    =     1.008              SIGMA(PER ABSORBER ATOM)= 4.1345737E+03

MODERATOR-1 WILL BE TREATED BY THE NORDHEIM INTEGRAL METHOD.

MASS OF MODERATOR-2    =    23.697              SIGMA(PER ABSORBER ATOM)= 5.2259918E+02

MODERATOR-2 WILL BE TREATED BY THE NORDHEIM INTEGRAL METHOD.

THIS RESONANCE MATERIAL WILL BE TREATED AS A 0-DIMENSIONAL OBJECT.

VOLUME FRACTION OF LUMP IN CELL USED TO ACCOUNT FOR SPATIAL SELF-SHIELDING=1.00000

GROUP        RES ABS         RES FISS        RES SCAT
 12      -1.562050E+00   -9.584369E-01   -4.085827E-02
 13      -5.262661E+00   -2.581354E+00   -1.213858E-01
 14      -3.765349E+00   -2.255217E+00   -2.806130E-02
 15      -1.919643E-04   -1.459400E-04    1.329683E-06

EXCESS RESONANCE INTEGRALS

                 RESOLVED

ABSORPTION       2.15993E+02
FISSION          1.28668E+02
                                                    PROCESS NUMBER 1007 IS AT TEMPERATURE=   293.00

 URANIUM-235    ENDF/B-IV MAT 1261                    UPDATED 08/12/94   3092235     TEMPERATURE=   293.00

GEOMETRY HAS BEEN SET TO HOMOGENEOUS AS LBAR IS  0.0000E+00

RESONANCE DATA FOR THIS NUCLIDE

MASS NUMBER (A)          =   233.025              TEMPERATURE(KELVIN)       =   293.000

POTENTIAL SCATTER SIGMA  =    11.500              LUMPED NUCLEAR DENSITY    = 5.1165749E-05

SPIN FACTOR (G)          = 15171.100              LUMP DIMENSION (A-BAR)    = 0.0000000E+00

INNER RADIUS             = 0.0000000E+00          DANCOFF CORRECTION (C)    = 0.0000000E+00

THE ABSORBER WILL BE TREATED BY THE NORDHEIM INTEGRAL METHOD.

MASS OF MODERATOR-1    =     1.008              SIGMA(PER ABSORBER ATOM)= 2.6596197E+04

MODERATOR-1 WILL BE TREATED BY THE NORDHEIM INTEGRAL METHOD.

MASS OF MODERATOR-2    =    13.920              SIGMA(PER ABSORBER ATOM)= 6.2625801E+03

MODERATOR-2 WILL BE TREATED BY THE NORDHEIM INTEGRAL METHOD.

THIS RESONANCE MATERIAL WILL BE TREATED AS A 0-DIMENSIONAL OBJECT.

VOLUME FRACTION OF LUMP IN CELL USED TO ACCOUNT FOR SPATIAL SELF-SHIELDING=1.00000

GROUP        RES ABS         RES FISS        RES SCAT
 12      -2.344056E-01   -1.438800E-01   -6.240554E-03
```

```
 13      -8.441902E-01   -4.162556E-01   -1.976475E-02
 14      -5.930282E-01   -3.583517E-01   -4.437619E-03
 15      -6.245016E-05   -4.746152E-05    3.750866E-08

EXCESS RESONANCE INTEGRALS

                 RESOLVED

ABSORPTION       2.26514E+02
FISSION          1.34455E+02
                                                        PROCESS NUMBER 1007 IS AT TEMPERATURE=   293.00

 URANIUM-238    ENDF/B-IV MAT 1262                    UPDATED 08/12/94   1092238     TEMPERATURE=   293.00

GEOMETRY HAS BEEN SET TO HOMOGENEOUS AS LBAR IS  0.0000E+00

RESONANCE DATA FOR THIS NUCLIDE

MASS NUMBER (A)          =   236.006               TEMPERATURE(KELVIN)       =   293.000

POTENTIAL SCATTER SIGMA  =    10.599               LUMPED NUCLEAR DENSITY    = 1.0955411E-03

SPIN FACTOR (G)          =   656.527               LUMP DIMENSION (A-BAR)    = 0.0000000E+00

INNER RADIUS             = 0.0000000E+00           DANCOFF CORRECTION (C)    = 0.0000000E+00

THE ABSORBER WILL BE TREATED BY THE NORDHEIM INTEGRAL METHOD.

MASS OF MODERATOR-1    =     1.008               SIGMA(PER ABSORBER ATOM)= 1.0272860E+03

MODERATOR-1 WILL BE TREATED BY THE NORDHEIM INTEGRAL METHOD.

MASS OF MODERATOR-2    =    22.105               SIGMA(PER ABSORBER ATOM)= 1.2047719E+02

MODERATOR-2 WILL BE TREATED BY THE NORDHEIM INTEGRAL METHOD.

THIS RESONANCE MATERIAL WILL BE TREATED AS A 0-DIMENSIONAL OBJECT.

VOLUME FRACTION OF LUMP IN CELL USED TO ACCOUNT FOR SPATIAL SELF-SHIELDING=1.00000

GROUP        RES ABS         RES FISS        RES SCAT
  9      -5.670995E-03    0.000000E+00   -6.271562E-02
 10      -2.582614E-01   -1.776290E-06   -1.805436E+00
 11      -5.712295E+00    0.000000E+00   -1.704868E+01
 12      -3.260907E+01    0.000000E+00   -3.853433E+01
 13      -4.122983E+01    0.000000E+00   -1.360831E+01
 14      -7.892720E+01    0.000000E+00   -4.614881E+00
 15      -5.014865E-08    0.000000E+00    9.319286E-08

EXCESS RESONANCE INTEGRALS

                 RESOLVED

ABSORPTION       8.34181E+01
FISSION          5.30689E-04
                                                        PROCESS NUMBER 1007 IS AT TEMPERATURE=   293.00

 URANIUM-238    ENDF/B-IV MAT 1262                    UPDATED 08/12/94   3092238     TEMPERATURE=   293.00

GEOMETRY HAS BEEN SET TO HOMOGENEOUS AS LBAR IS  0.0000E+00

RESONANCE DATA FOR THIS NUCLIDE

MASS NUMBER (A)          =   236.006               TEMPERATURE(KELVIN)       =   293.000

POTENTIAL SCATTER SIGMA  =    10.599               LUMPED NUCLEAR DENSITY    = 3.7187583E-06

SPIN FACTOR (G)          =   656.527               LUMP DIMENSION (A-BAR)    = 0.0000000E+00

INNER RADIUS             = 0.0000000E+00           DANCOFF CORRECTION (C)    = 0.0000000E+00

THE ABSORBER WILL BE TREATED BY THE NORDHEIM INTEGRAL METHOD.

MASS OF MODERATOR-1    =     1.008               SIGMA(PER ABSORBER ATOM)= 3.6593247E+05

MODERATOR-1 WILL BE TREATED BY THE NORDHEIM INTEGRAL METHOD.

MASS OF MODERATOR-2    =    13.944               SIGMA(PER ABSORBER ATOM)= 8.6317188E+04

MODERATOR-2 WILL BE TREATED BY THE NORDHEIM INTEGRAL METHOD.

THIS RESONANCE MATERIAL WILL BE TREATED AS A 0-DIMENSIONAL OBJECT.

VOLUME FRACTION OF LUMP IN CELL USED TO ACCOUNT FOR SPATIAL SELF-SHIELDING=1.00000

GROUP        RES ABS         RES FISS        RES SCAT
  9      -1.458856E-05    0.000000E+00   -1.704482E-04
 10      -8.678175E-04   -4.383982E-09   -6.304161E-03
 11      -5.092458E-02    0.000000E+00   -1.643915E-01
 12      -5.565513E-01    0.000000E+00   -6.664960E-01
 13      -6.091141E-01    0.000000E+00   -2.016093E-01
 14      -1.094999E+00    0.000000E+00   -6.417535E-02
 15      -3.734067E-09    0.000000E+00    2.932041E-09

EXCESS RESONANCE INTEGRALS
```

```
                RESOLVED

ABSORPTION      2.70632E+02
FISSION         5.33689E-04
                                    PROCESS NUMBER 1007 IS AT TEMPERATURE=   293.00
```

```
THIS XSDRN WORKING TAPE WAS CREATED 05/16/03 AT 11:02:33
THE TITLE OF THE PARENT CASE IS AS FOLLOWS
SCALE 4.2 - 27 GROUP NEUTRON GROUP LIBRARY
   BASED ON ENDF-B VERSION 4 DATA
      COMPILED FOR NRC     1/27/89
    TAPE ID                          4321          NUMBER OF NUCLIDES                   26
    NUMBER OF NEUTRON GROUPS           27          NUMBER OF GAMMA GROUPS                0
    FIRST THERMAL GROUP                15          LOGICAL UNIT                          4
                              TABLE OF CONTENTS
   HYDROGEN       ENDF/B-IV MAT 1269/THRM1002             UPDATED 08/12/94        ID   1001001
   HYDROGEN       ENDF/B-IV MAT 1269/THRM1002             UPDATED 08/12/94        ID   3001001
   HYDROGEN       ENDF/B-IV MAT 1269/THRM1002             UPDATED 08/12/94        ID   4001001
   HYDROGEN       ENDF/B-IV MAT 1269/THRM1002             UPDATED 08/12/94        ID   5001001
   HYDROGEN       ENDF/B-IV MAT 1269/THRM1002             UPDATED 08/12/94        ID   7001001
   HYDROGEN       ENDF/B-IV MAT 1269/THRM1002             UPDATED 08/12/94        ID   9001001
   CARBON-12      ENDF/B-IV MAT 1274/THRM1065             UPDATED 08/12/94        ID   1006012
   CARBON-12      ENDF/B-IV MAT 1274/THRM1065             UPDATED 08/12/94        ID   3006012
   OXYGEN-16      ENDF/B-IV MAT 1276                      UPDATED 08/12/94        ID   1008016
   OXYGEN-16      ENDF/B-IV MAT 1276                      UPDATED 08/12/94        ID   3008016
   OXYGEN-16      ENDF/B-IV MAT 1276                      UPDATED 08/12/94        ID   4008016
   OXYGEN-16      ENDF/B-IV MAT 1276                      UPDATED 08/12/94        ID   5008016
   OXYGEN-16      ENDF/B-IV MAT 1276                      UPDATED 08/12/94        ID   7008016
   OXYGEN-16      ENDF/B-IV MAT 1276                      UPDATED 08/12/94        ID   9008016
   SILICON        ENDF/B-IV MAT 1194                      UPDATED 08/12/94        ID   3014000
  CR 1191 WT SS-304(1/EST) P-3 293K SP=5+4(42375)'        UPDATED 08/12/94        ID   8024304
   MANGANESE-55   ENDF/B-IV MAT 1197                      UPDATED 08/12/94        ID   8025055
  FE 1192 WT SS-304(1/EST) P-3 293K SP=5+4(42375)'        UPDATED 08/12/94        ID   8026304
  NI 1190 WT SS-304(1/EST) P-3 293K SP=5+4(42375)'        UPDATED 08/12/94        ID   8028304
   ZIRCONIUM      ENDF/B-IV MAT 7141                      UPDATED 08/12/94        ID   1040000
  PB   1288 218NGP 042375 P-3 293K                        UPDATED 08/12/94        ID   6082000
   THORIUM-232    ENDF/B-IV MAT 1296                      UPDATED 08/12/94        ID   3090232
   URANIUM-235    ENDF/B-IV MAT 1261                      UPDATED 08/12/94        ID   1092235
   URANIUM-235    ENDF/B-IV MAT 1261                      UPDATED 08/12/94        ID   3092235
   URANIUM-238    ENDF/B-IV MAT 1262                      UPDATED 08/12/94        ID   1092238
   URANIUM-238    ENDF/B-IV MAT 1262                      UPDATED 08/12/94        ID   3092238

    TAPE COPY USED      0 I/O'S, AND TOOK    0.11 SECONDS
```

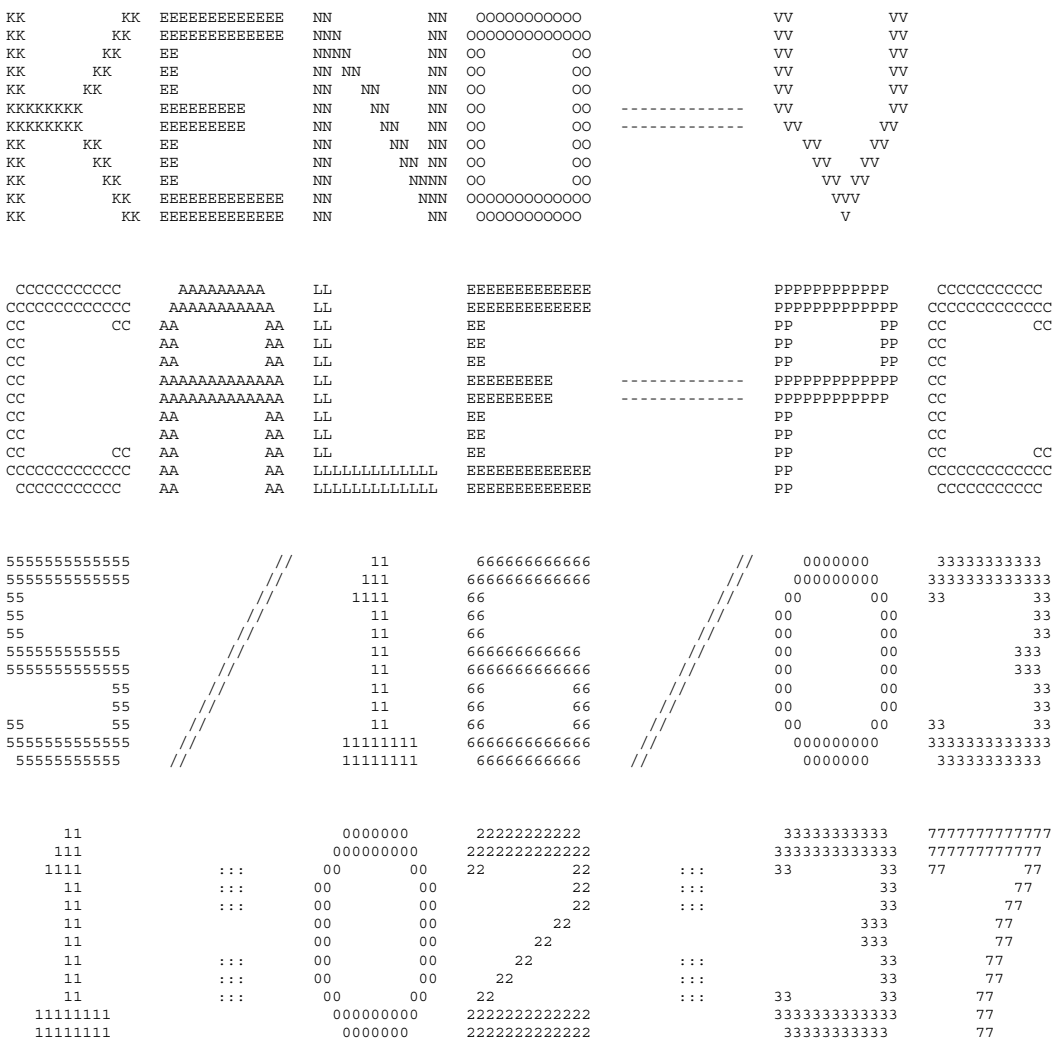
KK KK EEEEEEEEEEEE NN NN OOOOOOOOOO VV VV
KK KK EEEEEEEEEEEE NNN NN OOOOOOOOOOOO VV VV
KK KK EE NNNN NN OO OO VV VV
KK KK EE NN NN NN OO OO VV VV
KK KK EE NN NN NN OO OO VV VV
KKKKKKK EEEEEEEE NN NN NN OO OO VV VV
KKKKKKK EEEEEEEE NN NN NN OO OO VV VV
KK KK EE NN NN NN OO OO VV VV
KK KK EE NN NN NN OO OO VV VV
KK KK EE NN NNNN OO OO VV VV
KK KK EEEEEEEEEEEE NN NNN OOOOOOOOOOOO VVV
KK KK EEEEEEEEEEEE NN NN OOOOOOOOOO V
SSSSSSSSSS CCCCCCCCCC AAAAAAAA LL EEEEEEEEEEEE PPPPPPPPPP CCCCCCCCCC
SSSSSSSSSSS CCCCCCCCCCCC AAAAAAAAAA LL EEEEEEEEEEEE PPPPPPPPPPP CCCCCCCCCCCC
SS SS CC CC AA AA LL EE PP PP CC CC
SS CC AA AA LL EE PP PP CC
SS CC AA AA LL EE PP PP CC
SSSSSSSSSSS CC AAAAAAAAAAAA LL EEEEEEEE PPPPPPPPPPP CC
SSSSSSSSSS CC AAAAAAAAAAAA LL EEEEEEEE PPPPPPPPPP CC
SS CC AA AA LL EE PP CC
SS CC AA AA LL EE PP CC
SS SS CC CC AA AA LL EE PP CC CC
SSSSSSSSSSS CCCCCCCCCCCC AA AA LLLLLLLLLLL EEEEEEEEEEE PP CCCCCCCCCCC
SSSSSSSSSS CCCCCCCCCC AA AA LLLLLLLLLLL EEEEEEEEEEE PP CCCCCCCCCC
0000000 5555555555 // 11 666666666 // 0000000 33333333
000000000 5555555555 // 111 6666666666 // 000000000 3333333333
00 00 55 // 1111 66 // 00 00 33 33
00 00 55 // 11 66 // 00 00 33
00 00 55 // 11 66 // 00 00 33
00 00 555555555 // 11 666666666 // 00 00 333
00 00 5555555555 // 11 6666666666 // 00 00 333
00 00 55 // 11 66 66 // 00 00 33
00 00 55 // 11 66 66 // 00 00 33
00 00 55 55 // 11 66 66 // 00 00 33 33
000000000 5555555555 // 11111111 6666666666 // 000000000 3333333333
0000000 55555555 // 11111111 66666666 // 0000000 33333333
11 11 0000000 22222222 33333333 7777777777
111 111 000000000 2222222222 3333333333 777777777
1111 1111 ::: 00 00 22 22 ::: 33 33 77 77
11 11 ::: 00 00 22 ::: 33 77
11 11 ::: 00 00 22 ::: 33 77
11 11 00 00 22 333 77
11 11 00 00 22 333 77
11 11 ::: 00 00 22 ::: 33 77
11 11 ::: 00 00 22 ::: 33 77
11 11 ::: 00 00 22 ::: 33 33 77
11111111 11111111 000000000 2222222222 3333333333 77
11111111 11111111 0000000 2222222222 33333333 77

```
  SSSSSSSSSS     CCCCCCCCCC      AAAAAAAA     LL             EEEEEEEEEEEE                 PPPPPPPPPPP     CCCCCCCCCC
 SSSSSSSSSSSS   CCCCCCCCCCCC    AAAAAAAAAA    LL             EEEEEEEEEEEE                 PPPPPPPPPPPP   CCCCCCCCCCCC
 SS          SS CC          CC  AA          AA  LL             EE                           PP         PP  CC          CC
 SS             CC              AA          AA  LL             EE                           PP         PP  CC
 SS             CC              AA          AA  LL             EE                           PP         PP  CC
 SSSSSSSSSSSS   CC              AAAAAAAAAAAAAA  LL             EEEEEEEEE       -------------PPPPPPPPPPPP  CC
  SSSSSSSSSSSS  CC              AAAAAAAAAAAAAA  LL             EEEEEEEEE       -------------PPPPPPPPPPP   CC
           SS   CC              AA          AA  LL             EE                           PP             CC
           SS   CC              AA          AA  LL             EE                           PP             CC
 SS        SS   CC          CC  AA          AA  LL             EE                           PP             CC          CC
 SSSSSSSSSSSS   CCCCCCCCCCCC    AA          AA  LLLLLLLLLLLL   EEEEEEEEEEEE                 PP             CCCCCCCCCCCC
  SSSSSSSSSS     CCCCCCCCCC     AA          AA  LLLLLLLLLLLL   EEEEEEEEEEEE                 PP              CCCCCCCCCC
```

```
*******************************************************************************
*******************************************************************************
*******************************************************************************
*****                                                                     *****
*****                  PROGRAM VERIFICATION INFORMATION                   *****
*****                                                                     *****
*****                CODE SYSTEM:  SCALE-PC VERSION:  4.3                 *****
*****                                                                     *****
*******************************************************************************
*******************************************************************************
*****                                                                     *****
*****                                                                     *****
*****              PROGRAM:  O0O009                                       *****
*****                                                                     *****
*****        CREATION DATE:  03/08/96                                     *****
*****                                                                     *****
*****              VOLUME:   Eng                                          *****
*****                                                                     *****
*****              LIBRARY:  M:\SCALE43\WIN_NT\EXE                        *****
*****                                                                     *****
*****                                                                     *****
*****      PRODUCTION CODE:  KENOVA                                       *****
*****                                                                     *****
*****              VERSION:  3.1                                          *****
*****                                                                     *****
*****              JOBNAME:  SCALE-PC                                     *****
*****                                                                     *****
*****    DATE OF EXECUTION:  05/16/03                                     *****
*****                                                                     *****
*****    TIME OF EXECUTION:  11:02:37                                     *****
*****                                                                     *****
*****                                                                     *****
*******************************************************************************
*******************************************************************************
*******************************************************************************
```

```
*****************************************************************************************************************
***                                                                                                           ***
***                              LWT WITH GA IFM                                                              ***
***                                                                                                           ***
*****************************************************************************************************************
***                              ******       NUMERIC PARAMETERS       ******                                ***
***                                                                                                           ***
***                                                                                                           ***
***                    TME       MAXIMUM PROBLEM TIME (MIN)                        ******                   ***
***                                                                                                           ***
***                    TBA       TIME PER GENERATION (MIN)                           5.00                   ***
***                                                                                                           ***
***                    GEN       NUMBER OF GENERATIONS                                803                   ***
***                                                                                                           ***
***                    NPG       NUMBER PER GENERATION                               1000                   ***
***                                                                                                           ***
***                    NSK       NUMBER OF GENERATIONS TO BE SKIPPED                    3                   ***
***                                                                                                           ***
***                    BEG       BEGINNING GENERATION NUMBER                            1                   ***
***                                                                                                           ***
***                    RES       GENERATIONS BETWEEN CHECKPOINTS                        0                   ***
***                                                                                                           ***
***                    X1D       NUMBER OF EXTRA 1-D CROSS SECTIONS                     1                   ***
***                                                                                                           ***
***                    NBK       NEUTRON BANK SIZE                                   1025                   ***
***                                                                                                           ***
***                    XNB       EXTRA POSITIONS IN NEUTRON BANK                        0                   ***
***                                                                                                           ***
***                    NFB       FISSION BANK SIZE                                   1000                   ***
***                                                                                                           ***
***                    XFB       EXTRA POSITIONS IN FISSION BANK                        0                   ***
***                                                                                                           ***
***                    WTA       DEFAULT VALUE OF WEIGHT AVERAGE                   0.5000                   ***
***                                                                                                           ***
***                    WTH       WEIGHT HIGH FOR SPLITTING                         3.0000                   ***
***                                                                                                           ***
***                    WTL       WEIGHT LOW FOR RUSSIAN ROULETTE                   0.3333                   ***
***                                                                                                           ***
***                    RND       STARTING RANDOM NUMBER                         BB827100001                 ***
***                                                                                                           ***
***                    NB8       NUMBER OF D.A. BLOCKS ON UNIT  8                    200                   ***
***                                                                                                           ***
***                    NL8       LENGTH OF D.A. BLOCKS ON UNIT  8                    512                   ***
***                                                                                                           ***
***                    ADJ       MODE OF CALCULATION                              FORWARD                  ***
***                                                                                                           ***
***                              INPUT DATA WRITTEN ON RESTART UNIT                    NO                   ***
***                                                                                                           ***
***                              BINARY DATA INTERFACE                                YES                   ***
***                                                                                                           ***
***                                                                                                           ***
*****************************************************************************************************************
*****************************************************************************************************************
```

```
*****************************************************************************************************************
*****************************************************************************************************************
***                                                                                                           ***
***                              LWT WITH GA IFM                                                              ***
***                                                                                                           ***
*****************************************************************************************************************
***                                  ******      LOGICAL PARAMETERS        ******                             ***
***                                                                                                           ***
***  RUN  EXECUTE PROBLEM AFTER CHECKING DATA    YES            PLT  PLOT PICTURE MAP(S)                    NO ***
***                                                                                                           ***
***  FLX  COMPUTE FLUX                            NO            FDN  COMPUTE FISSION DENSITIES              NO ***
***                                                                                                           ***
***  SMU  COMPUTE AVG UNIT SELF-MULTIPLICATION    NO            NUB  COMPUTE NU-BAR & AVG FISSION GROUP     YES ***
***                                                                                                           ***
***  MKU  COMPUTE MATRIX K-EFF BY UNIT NUMBER     NO            MKP  COMPUTE MATRIX K-EFF BY UNIT LOCATION  NO ***
***                                                                                                           ***
***  CKU  COMPUTE COFACTOR K-EFF BY UNIT NUMBER   NO            CKP  COMPUTE COFACTOR K-EFF BY UNIT LOCATION NO ***
***                                                                                                           ***
***  FMU  PRINT FISS PROD MATRIX BY UNIT NUMBER   NO            FMP  PRINT FISS PROD MATRIX BY UNIT LOCATION NO ***
***                                                                                                           ***
***  MKH  COMPUTE MATRIX K-EFF BY HOLE NUMBER     NO            MKA  COMPUTE MATRIX K-EFF BY ARRAY NUMBER    NO ***
***                                                                                                           ***
***  CKH  COMPUTE COFACTOR K-EFF BY HOLE NUMBER   NO            CKA  COMPUTE COFACTOR K-EFF BY ARRAY NUMBER  NO ***
***                                                                                                           ***
***  FMH  PRINT FISS PROD MATRIX BY HOLE NUMBER   NO            FMA  PRINT FISS PROD MATRIX BY ARRAY NUMBER  NO ***
***                                                                                                           ***
***  HHL  COLLECT MATRIX BY HIGHEST HOLE LEVEL    NO            HAL  COLLECT MATRIX BY HIGHEST ARRAY LEVEL   NO ***
***                                                                                                           ***
***  AMX  PRINT ALL MIXED CROSS SECTIONS          NO            FAR  PRINT FIS. AND ABS. BY REGION           NO ***
***                                                                                                           ***
***  XS1  PRINT 1-D MIXTURE X-SECTIONS            NO            GAS  PRINT FAR BY GROUP                      NO ***
***                                                                                                           ***
***  XS2  PRINT 2-D MIXTURE X-SECTIONS            NO            PAX  PRINT XSEC-ALBEDO CORRELATION TABLES    NO ***
***                                                                                                           ***
***  XAP  PRINT MIXTURE ANGLES & PROBABILITIES    NO            PWT  PRINT WEIGHT AVERAGE ARRAY              NO ***
***                                                                                                           ***
***  PKI  PRINT FISSION SPECTRUM                  NO            PGM  PRINT INPUT GEOMETRY                    NO ***
***                                                                                                           ***
***  P1D  PRINT EXTRA 1-D CROSS SECTIONS          NO            BUG  PRINT DEBUG INFORMATION                 NO ***
***                                                                                                           ***
***                                                             TRK  PRINT TRACKING INFORMATION              NO ***
***                                                                                                           ***
***                                                                                                           ***
*****************************************************************************************************************
*****************************************************************************************************************
*****************************************************************************************************************
                                   PARAMETER INPUT COMPLETED

                        ........    0 IO'S WERE USED READING THE PARAMETER DATA      ........

                       ************** DATA READING COMPLETED **************
```

```
*****************************************************************************************************************************
***                                                                                                                       ***
***                              LWT WITH GA IFM                                                                          ***
***                                                                                                                       ***
*****************************************************************************************************************************
*****************************************************************************************************************************
***                                                                                                                       ***
***          UNIT                                                VOLUME                                                   ***
***         NUMBER               DATA SET NAME                   NAME        UNIT FUNCTION                             ***
***         ------               -------------                   ----        -------------                             ***
***                                                                                                                       ***
***      XSC  14     D:\zjr\Lwt\GAIFM\Crit\DAMAGED\gaifm_173ps_00              MIXED CROSS SECTIONS                     ***
***                                                                                                                       ***
***      ALB  79     M:\scale43\DATALIB\FT79F001                               INPUT ALBEDOS                            ***
***                                                                                                                       ***
***      WTS  80     M:\scale43\DATALIB\FT80F001                               INPUT WEIGHTS                            ***
***                                                                                                                       ***
***      SKT  16      UNKNOWN                                                  WRITE SCRATCH DATA                       ***
***                                                                                                                       ***
***      BIN  95     D:\zjr\Lwt\GAIFM\Crit\DAMAGED\gaifm_173ps_00              BINARY INPUT DATA                        ***
***                                                                                                                       ***
***      RST  95     D:\zjr\Lwt\GAIFM\Crit\DAMAGED\gaifm_173ps_00              READ RESTART DATA                        ***
***                                                                                                                       ***
***      LIB   4     D:\zjr\Lwt\GAIFM\Crit\DAMAGED\gaifm_173ps_00              INPUT AMPX WORKING LIBRARY               ***
***                                                                                                                       ***
***             8     D:\zjr\Lwt\GAIFM\Crit\DAMAGED\gaifm_173ps_00              INPUT DATA DIRECT ACCESS                 ***
***                                                                                                                       ***
***             9      UNKNOWN                                                  SUPER GROUPED DIRECT ACCESS              ***
***                                                                                                                       ***
***            10      UNKNOWN                                                  XSEC MIXING DIRECT ACCESS                ***
***                                                                                                                       ***
*****************************************************************************************************************************

                        ........    0 IO'S WERE USED PREPARING INPUT DATA    ........


                          CROSS SECTIONS READ FROM THE AMPX WORKING LIBRARY ON UNIT    4
```

LWT WITH GA IFM

MIXING TABLE

NUMBER OF SCATTERING ANGLES = 2
CROSS SECTION MESSAGE THRESHOLD =3.0E-05

MIXTURE = 1 DENSITY(G/CC) = 2.1794

NUCLIDE	ATOM-DENS.	WGT. FRAC.	ZA	AWT	NUCLIDE TITLE		
1001001	5.52201E-02	4.23959E-02	1001	1.0077	HYDROGEN	ENDF/B-IV MAT 1269/THRM1002	UPDATED 08/12/94
1006012	1.08398E-04	9.91110E-04	6000	12.0001	CARBON-12	ENDF/B-IV MAT 1274/THRM1065	UPDATED 08/12/94
1008016	2.27549E-02	2.77235E-01	8016	15.9904	OXYGEN-16	ENDF/B-IV MAT 1276	UPDATED 08/12/94
1040000	6.21447E-03	4.31923E-01	40000	91.2196	ZIRCONIUM	ENDF/B-IV MAT 7141	UPDATED 08/12/94
1092235	2.72201E-04	4.87476E-02	92235	235.0441	URANIUM-235	ENDF/B-IV MAT 1261	UPDATED 08/12/94
1092238	1.09554E-03	1.98707E-01	92238	238.0510	URANIUM-238	ENDF/B-IV MAT 1262	UPDATED 08/12/94

MIXTURE = 3 DENSITY(G/CC) = 2.1146

NUCLIDE	ATOM-DENS.	WGT. FRAC.	ZA	AWT	NUCLIDE TITLE		
3001001	6.67692E-02	5.28324E-02	1001	1.0077	HYDROGEN	ENDF/B-IV MAT 1269/THRM1002	UPDATED 08/12/94
3006012	3.71616E-02	3.50179E-01	6000	12.0001	CARBON-12	ENDF/B-IV MAT 1274/THRM1065	UPDATED 08/12/94
3008016	3.34727E-02	4.20302E-01	8016	15.9904	OXYGEN-16	ENDF/B-IV MAT 1276	UPDATED 08/12/94
3014000	3.16038E-03	6.96995E-02	14000	28.0853	SILICON	ENDF/B-IV MAT 1194	UPDATED 08/12/94
3090232	5.31533E-04	9.68483E-02	90232	232.0333	THORIUM-232	ENDF/B-IV MAT 1296	UPDATED 08/12/94
3092235	5.11657E-05	9.44366E-03	92235	235.0441	URANIUM-235	ENDF/B-IV MAT 1261	UPDATED 08/12/94
3092238	3.71876E-06	6.95152E-04	92238	238.0510	URANIUM-238	ENDF/B-IV MAT 1262	UPDATED 08/12/94

MIXTURE = 4 DENSITY(G/CC) = 0.99817E-04

NUCLIDE	ATOM-DENS.	WGT. FRAC.	ZA	AWT	NUCLIDE TITLE		
4001001	6.67692E-06	1.11927E-01	1001	1.0077	HYDROGEN	ENDF/B-IV MAT 1269/THRM1002	UPDATED 08/12/94
4008016	3.33846E-06	8.88074E-01	8016	15.9904	OXYGEN-16	ENDF/B-IV MAT 1276	UPDATED 08/12/94

MIXTURE = 5 DENSITY(G/CC) = 0.99817E-04

NUCLIDE	ATOM-DENS.	WGT. FRAC.	ZA	AWT	NUCLIDE TITLE		
5001001	6.67692E-06	1.11927E-01	1001	1.0077	HYDROGEN	ENDF/B-IV MAT 1269/THRM1002	UPDATED 08/12/94
5008016	3.33846E-06	8.88074E-01	8016	15.9904	OXYGEN-16	ENDF/B-IV MAT 1276	UPDATED 08/12/94

MIXTURE = 6 DENSITY(G/CC) = 11.344

NUCLIDE	ATOM-DENS.	WGT. FRAC.	ZA	AWT	NUCLIDE TITLE		
6082000	3.29690E-02	1.00000E+00	82000	207.2100	PB 1288 218NGP 042375 P-3 293K		UPDATED 08/12/94

MIXTURE = 7 DENSITY(G/CC) = 0.99817E-04

NUCLIDE	ATOM-DENS.	WGT. FRAC.	ZA	AWT	NUCLIDE TITLE		
7001001	6.67692E-06	1.11927E-01	1001	1.0077	HYDROGEN	ENDF/B-IV MAT 1269/THRM1002	UPDATED 08/12/94
7008016	3.33846E-06	8.88074E-01	8016	15.9904	OXYGEN-16	ENDF/B-IV MAT 1276	UPDATED 08/12/94

MIXTURE = 8 DENSITY(G/CC) = 7.9200

NUCLIDE	ATOM-DENS.	WGT. FRAC.	ZA	AWT	NUCLIDE TITLE		
8024304	1.74286E-02	1.90000E-01	24000	51.9957	CR 1191 WT SS-304(1/EST) P-3 293K SP=5+4(42375)'		UPDATED 08/12/94
8025055	1.73633E-03	1.99999E-02	25055	54.9379	MANGANESE-55	ENDF/B-IV MAT 1197	UPDATED 08/12/94
8026304	5.93579E-02	6.95000E-01	26000	55.8447	FE 1192 WT SS-304(1/EST) P-3 293K SP=5+4(42375)'		UPDATED 08/12/94
8028304	7.72070E-03	9.50001E-02	28000	58.6872	NI 1190 WT SS-304(1/EST) P-3 293K SP=5+4(42375)'		UPDATED 08/12/94

MIXTURE = 9 DENSITY(G/CC) = 0.99817

NUCLIDE	ATOM-DENS.	WGT. FRAC.	ZA	AWT	NUCLIDE TITLE		
9001001	6.67692E-02	1.11927E-01	1001	1.0077	HYDROGEN	ENDF/B-IV MAT 1269/THRM1002	UPDATED 08/12/94
9008016	3.33846E-02	8.88074E-01	8016	15.9904	OXYGEN-16	ENDF/B-IV MAT 1276	UPDATED 08/12/94

1001001	HYDROGEN	ENDF/B-IV MAT 1269/THRM1002	UPDATED 08/12/94
3001001	HYDROGEN	ENDF/B-IV MAT 1269/THRM1002	UPDATED 08/12/94
4001001	HYDROGEN	ENDF/B-IV MAT 1269/THRM1002	UPDATED 08/12/94
5001001	HYDROGEN	ENDF/B-IV MAT 1269/THRM1002	UPDATED 08/12/94
7001001	HYDROGEN	ENDF/B-IV MAT 1269/THRM1002	UPDATED 08/12/94
9001001	HYDROGEN	ENDF/B-IV MAT 1269/THRM1002	UPDATED 08/12/94
1006012	CARBON-12	ENDF/B-IV MAT 1274/THRM1065	UPDATED 08/12/94
3006012	CARBON-12	ENDF/B-IV MAT 1274/THRM1065	UPDATED 08/12/94
1008016	OXYGEN-16	ENDF/B-IV MAT 1276	UPDATED 08/12/94

```
                          3008016     OXYGEN-16      ENDF/B-IV MAT 1276                    UPDATED 08/12/94
                          4008016     OXYGEN-16      ENDF/B-IV MAT 1276                    UPDATED 08/12/94
                          5008016     OXYGEN-16      ENDF/B-IV MAT 1276                    UPDATED 08/12/94
                          7008016     OXYGEN-16      ENDF/B-IV MAT 1276                    UPDATED 08/12/94
                          9008016     OXYGEN-16      ENDF/B-IV MAT 1276                    UPDATED 08/12/94
                          3014000     SILICON        ENDF/B-IV MAT 1194                    UPDATED 08/12/94
                          8024304    CR 1191 WT SS-304(1/EST) P-3 293K SP=5+4(42375)'       UPDATED 08/12/94
                          8025055     MANGANESE-55   ENDF/B-IV MAT 1197                    UPDATED 08/12/94
                          8026304    FE 1192 WT SS-304(1/EST) P-3 293K SP=5+4(42375)'       UPDATED 08/12/94
                          8028304    NI 1190 WT SS-304(1/EST) P-3 293K SP=5+4(42375)'       UPDATED 08/12/94
                          1040000     ZIRCONIUM      ENDF/B-IV MAT 7141                    UPDATED 08/12/94
                          6082000    PB   1288 218NGP 042375 P-3 293K                      UPDATED 08/12/94
                          3090232     THORIUM-232    ENDF/B-IV MAT 1296                    UPDATED 08/12/94
                          1092235     URANIUM-235    ENDF/B-IV MAT 1261                    UPDATED 08/12/94
                          3092235     URANIUM-235    ENDF/B-IV MAT 1261                    UPDATED 08/12/94
                          1092238     URANIUM-238    ENDF/B-IV MAT 1262                    UPDATED 08/12/94
                          3092238     URANIUM-238    ENDF/B-IV MAT 1262                    UPDATED 08/12/94

KENO MESSAGE NUMBER K5-222       2 TRANSFERS FOR MIXTURE     1 WERE CORRECTED FOR BAD MOMENTS.

KENO MESSAGE NUMBER K5-222       2 TRANSFERS FOR MIXTURE     3 WERE CORRECTED FOR BAD MOMENTS.

KENO MESSAGE NUMBER K5-222       2 TRANSFERS FOR MIXTURE     4 WERE CORRECTED FOR BAD MOMENTS.

KENO MESSAGE NUMBER K5-222       2 TRANSFERS FOR MIXTURE     5 WERE CORRECTED FOR BAD MOMENTS.

KENO MESSAGE NUMBER K5-222       2 TRANSFERS FOR MIXTURE     7 WERE CORRECTED FOR BAD MOMENTS.

KENO MESSAGE NUMBER K5-222       1 TRANSFERS FOR MIXTURE     9 WERE CORRECTED FOR BAD MOMENTS.

                         ........    0 IO'S WERE USED MIXING CROSS-SECTIONS       ........

                          1-D CROSS SECTION ARRAY ID NUMBERS
                             1  2002  1452    27    18  1018

                         ........    0 IO'S WERE USED PREPARING THE CROSS SECTIONS    ........
```

```
*****************************************************************************************************
***                                                                                               ***
***          LWT WITH GA IFM                                                                      ***
***                                                                                               ***
*****************************************************************************************************
*****************************************************************************************************
***                                                                                               ***
***                              ****** ADDITIONAL INFORMATION ******                             ***
***                                                                                               ***
***  NUMBER OF ENERGY GROUPS              27       USE LATTICE GEOMETRY                     NO   ***
***                                                                                               ***
***  NO. OF FISSION SPECTRUM SOURCE GROUP  1       GLOBAL ARRAY NUMBER                       0   ***
***                                                                                               ***
***  NO. OF SCATTERING ANGLES IN XSECS     2       NUMBER OF UNITS IN THE GLOBAL X DIR.      0   ***
***                                                                                               ***
***  ENTRIES/NEUTRON IN THE NEUTRON BANK  17       NUMBER OF UNITS IN THE GLOBAL Y DIR.      0   ***
***                                                                                               ***
***  ENTRIES/NEUTRON IN THE FISSION BANK  10       NUMBER OF UNITS IN THE GLOBAL Z DIR.      0   ***
***                                                                                               ***
***  NUMBER OF MIXTURES USED               7       USE A GLOBAL REFLECTOR                   YES   ***
***                                                                                               ***
***  NUMBER OF BIAS ID'S USED              1       USE NESTED HOLES                          NO   ***
***                                                                                               ***
***  NUMBER OF DIFFERENTIAL ALBEDOS USED   0       NUMBER OF HOLES                           2   ***
***                                                                                               ***
***  TOTAL INPUT GEOMETRY REGIONS         15       MAXIMUM HOLE NESTING LEVEL                1   ***
***                                                                                               ***
***  NUMBER OF GEOMETRY REGIONS USED      15       USE NESTED ARRAYS                         NO   ***
***                                                                                               ***
***  LARGEST GEOMETRY UNIT NUMBER          5       NUMBER OF ARRAYS USED                     0   ***
***                                                                                               ***
***  LARGEST ARRAY NUMBER                  1       MAXIMUM ARRAY NESTING LEVEL               0   ***
***                                                                                               ***
***                                                                                               ***
***  +X BOUNDARY CONDITION               MIR       -X BOUNDARY CONDITION                    MIR   ***
***                                                                                               ***
***  +Y BOUNDARY CONDITION               MIR       -Y BOUNDARY CONDITION                    MIR   ***
***                                                                                               ***
***  +Z BOUNDARY CONDITION               MIR       -Z BOUNDARY CONDITION                    MIR   ***
***                                                                                               ***
*****************************************************************************************************
```

```
*******************************************************************************************
***                                                                                     ***
***          LWT WITH GA IFM                                                            ***
***                                                                                     ***
*******************************************************************************************
*******************************************************************************************
***                                                                                     ***
***                    ****** SPACE AND SUPERGROUP INFORMATION ******                   ***
***                                                                                     ***
***       100000 WORDS IS THE TOTAL SPACE AVAILABLE.                                    ***
***                                                                                     ***
***        30617 WORDS WERE USED FOR NON-SUPERGROUP STORAGE.                            ***
***                                                                                     ***
***        69383 WORDS OF STORAGE ARE AVAILABLE FOR SUPERGROUPED DATA.                  ***
***                                                                                     ***
***        99796 WORDS OF STORAGE ARE AVAILABLE FOR CONSTRUCTING THE SUPERGROUPS.       ***
***                                                                                     ***
***        69323 WORDS OF STORAGE ARE AVAILABLE TO EACH SUPERGROUP.                     ***
***                                                                                     ***
***         1022 WORDS ARE NEEDED FOR THE LARGEST GROUP.                                ***
***                                                                                     ***
***        31855 WORDS OF STORAGE IS SUFFICIENT TO RUN THIS PROBLEM.                    ***
***                                                                                     ***
***        43309 WORDS OF STORAGE WILL ALLOW THE PROBLEM TO RUN WITH ONE SUPERGROUP.     ***
***                                                                                     ***
***        43680 WORDS OF STORAGE WILL BE USED TO RUN THIS PROBLEM.                     ***
***                                                                                     ***
*******************************************************************************************
*******************************************************************************************
***                                                                                     ***
***                   STARTING      ENDING       XSEC       ALBEDO      TOTAL          ***
***   SUPERGROUP        GROUP        GROUP      LENGTH      LENGTH      LENGTH          ***
***                                                                                     ***
***                                                                                     ***
***          1            1            27         2591           0       12632          ***
***                                                                                     ***
*******************************************************************************************

            ........    0 IO'S WERE USED IN SUPERGROUPING    ........

            ........    0 IO'S WERE USED LOADING THE DATA    ........
```

LWT WITH GA IFM

REGION		MEDIA NUM	BIAS ID	GEOMETRY DESCRIPTION FOR THOSE UNITS UTILIZED IN THIS PROBLEM					
				----- UNIT 1 -----					
TRIGA/RERTR FHU - NO BASKET									
1	CYLINDER	1	1	RADIUS = 5.0927	+Z = 28.000	-Z = -28.000	CENTERLINE IS AT	X = 0.00000	Y = 0.00000
2	CYLINDER	8	1	RADIUS = 5.3975	+Z = 28.000	-Z = -28.000	CENTERLINE IS AT	X = 0.00000	Y = 0.00000
3	CYLINDER	4	1	RADIUS = 5.7277	+Z = 28.000	-Z = -28.000	CENTERLINE IS AT	X = 0.00000	Y = 0.00000
4	CYLINDER	8	1	RADIUS = 6.0325	+Z = 28.000	-Z = -28.000	CENTERLINE IS AT	X = 0.00000	Y = 0.00000
				----- UNIT 2 -----					
HTGR FHU - NO BASKET									
1	CYLINDER	3	1	RADIUS = 5.7277	+Z = 28.000	-Z = -28.000	CENTERLINE IS AT	X = 0.00000	Y = 0.00000
2	CYLINDER	8	1	RADIUS = 6.0325	+Z = 28.000	-Z = -28.000	CENTERLINE IS AT	X = 0.00000	Y = 0.00000
3	CYLINDER	4	1	RADIUS = 6.3627	+Z = 28.000	-Z = -28.000	CENTERLINE IS AT	X = 0.00000	Y = 0.00000
4	CYLINDER	8	1	RADIUS = 6.6675	+Z = 28.000	-Z = -28.000	CENTERLINE IS AT	X = 0.00000	Y = 0.00000
				********** GLOBAL **********					
				----- UNIT 5 -----					
ASSEMBLED LWT									
1	CYLINDER	4	1	RADIUS = 17.150	+Z = 28.000	-Z = -28.000	CENTERLINE IS AT	X = 0.00000	Y = 0.00000
	HOLE NUMBER	1		AT X = 0.00000	Y = 6.0325	Z = 0.00000	IS UNIT NUMBER	1	
	HOLE NUMBER	2		AT X = 0.00000	Y = -6.6675	Z = 0.00000	IS UNIT NUMBER	2	
2	CYLINDER	8	1	RADIUS = 18.910	+Z = 28.000	-Z = -28.000	CENTERLINE IS AT	X = 0.00000	Y = 0.00000
3	CYLINDER	6	1	RADIUS = 33.465	+Z = 28.000	-Z = -28.000	CENTERLINE IS AT	X = 0.00000	Y = 0.00000
4	CYLINDER	8	1	RADIUS = 36.519	+Z = 28.000	-Z = -28.000	CENTERLINE IS AT	X = 0.00000	Y = 0.00000
5	CYLINDER	7	1	RADIUS = 49.223	+Z = 28.000	-Z = -28.000	CENTERLINE IS AT	X = 0.00000	Y = 0.00000
6	CYLINDER	8	1	RADIUS = 49.822	+Z = 28.000	-Z = -28.000	CENTERLINE IS AT	X = 0.00000	Y = 0.00000
7	CUBOID	5	1	+X = 49.822	-X = -49.822	+Y = 49.822	-Y = -49.822	+Z = 28.000	-Z = -28.000

LWT WITH GA IFM
VOLUMES FOR THOSE UNITS UTILIZED IN THIS PROBLEM

UNIT	REGION	GEOMETRY REGION	VOLUME	CUMULATIVE VOLUME
1	1	1	4.56283E+03 CM**3	4.56283E+03 CM**3
	2	2	5.62519E+02 CM**3	5.12535E+03 CM**3
	3	3	6.46283E+02 CM**3	5.77163E+03 CM**3
	4	4	6.30619E+02 CM**3	6.40225E+03 CM**3
2	1	5	5.77163E+03 CM**3	5.77163E+03 CM**3
	2	6	6.30619E+02 CM**3	6.40225E+03 CM**3
	3	7	7.20060E+02 CM**3	7.12231E+03 CM**3
	4	8	6.98721E+02 CM**3	7.82103E+03 CM**3
5	1	9	3.75214E+04 CM**3	5.17447E+04 CM**3
	2	10	1.11674E+04 CM**3	6.29122E+04 CM**3
	3	11	1.34106E+05 CM**3	1.97018E+05 CM**3
	4	12	3.76048E+04 CM**3	2.34623E+05 CM**3
	5	13	1.91631E+05 CM**3	4.26254E+05 CM**3
	6	14	1.04445E+04 CM**3	4.36699E+05 CM**3
	7	15	1.19323E+05 CM**3	5.56022E+05 CM**3

UNIT	USES	REGION	MIXTURE	TOTAL VOLUME
1	1	1	1	4.56283E+03 CM**3
		2	8	5.62519E+02 CM**3
		3	4	6.46283E+02 CM**3
		4	8	6.30619E+02 CM**3
2	1	1	3	5.77163E+03 CM**3
		2	8	6.30619E+02 CM**3
		3	4	7.20060E+02 CM**3
		4	8	6.98721E+02 CM**3
5	1	1	4	3.75214E+04 CM**3
		2	8	1.11674E+04 CM**3
		3	6	1.34106E+05 CM**3
		4	8	3.76048E+04 CM**3
		5	7	1.91631E+05 CM**3
		6	8	1.04445E+04 CM**3
		7	5	1.19323E+05 CM**3

TOTAL MIXTURE VOLUMES

MIXTURE	TOTAL VOLUME	MASS(G)
1	4.56283E+03 CM**3	9.94419E+03
3	5.77163E+03 CM**3	1.22050E+04
4	3.88878E+04 CM**3	3.88167E+00
5	1.19323E+05 CM**3	1.19105E+01
6	1.34106E+05 CM**3	1.52130E+06
7	1.91631E+05 CM**3	1.91281E+01
8	6.17393E+04 CM**3	4.88975E+05

```
**********************************************************************************************************************
***                                                                                                                    ***
***                                        BIASING INFORMATION                                                         ***
***                                                                                                                    ***
***     A DEFAULT WEIGHT OF    0.500 WILL BE USED FOR ALL BIAS ID'S.                                                   ***
***                                                                                                                    ***
**********************************************************************************************************************

                        ........    0 IO'S WERE USED IN KENO-V BEFORE TRACKING       ........

                        ........  0.00550 MINUTES WERE USED PROCESSING DATA.        ........

VOLUME FRACTION OF FISSILE MATERIAL IN THE CORE= 1.85864E-02

START TYPE 0 WAS USED.

THE NEUTRONS WERE STARTED UNIFORMLY THROUGHOUT THE ENTIRE VOLUME DEFINED BY THE OUTERMOST GEOMETRY CARD.
THE FLAG TO START NEUTRONS IN THE REFLECTOR WAS TURNED OFF

1.49067 MINUTES WERE REQUIRED FOR STARTING.   TOTAL ELAPSED TIME IS 1.50400 MINUTES.
```

LWT WITH GA IFM

GENERATION	GENERATION K-EFFECTIVE	ELAPSED TIME MINUTES	AVERAGE K-EFFECTIVE	AVG K-EFF DEVIATION	MATRIX K-EFFECTIVE	MATRIX K-EFF DEVIATION
KENO MESSAGE NUMBER K5-132	WARNING....ONLY	752 INDEPENDENT FISSION POINTS WERE GENERATED				
1	6.83685E-01	1.51050E+00	1.00000E+00	0.00000E+00	0.00000E+00	0.00000E+00
KENO MESSAGE NUMBER K5-132	WARNING....ONLY	773 INDEPENDENT FISSION POINTS WERE GENERATED				
2	6.90002E-01	1.52050E+00	1.00000E+00	0.00000E+00	0.00000E+00	0.00000E+00
KENO MESSAGE NUMBER K5-132	WARNING....ONLY	809 INDEPENDENT FISSION POINTS WERE GENERATED				
3	7.23529E-01	1.52967E+00	7.23529E-01	0.00000E+00	0.00000E+00	0.00000E+00
4	7.41132E-01	1.53783E+00	7.32331E-01	8.80119E-03	0.00000E+00	0.00000E+00
5	7.14495E-01	1.54800E+00	7.26385E-01	7.82097E-03	0.00000E+00	0.00000E+00
6	7.14133E-01	1.55717E+00	7.23322E-01	6.32186E-03	0.00000E+00	0.00000E+00
7	7.15718E-01	1.56633E+00	7.21801E-01	5.12763E-03	0.00000E+00	0.00000E+00
8	7.35289E-01	1.57550E+00	7.24049E-01	4.75198E-03	0.00000E+00	0.00000E+00
9	7.25221E-01	1.58450E+00	7.24217E-01	4.01964E-03	0.00000E+00	0.00000E+00
10	7.27787E-01	1.59367E+00	7.24663E-01	3.50960E-03	0.00000E+00	0.00000E+00
11	7.22119E-01	1.60383E+00	7.24380E-01	3.10806E-03	0.00000E+00	0.00000E+00
12	7.48817E-01	1.61300E+00	7.26824E-01	3.70127E-03	0.00000E+00	0.00000E+00
13	7.24320E-01	1.62217E+00	7.26596E-01	3.35565E-03	0.00000E+00	0.00000E+00
14	7.45940E-01	1.63133E+00	7.28208E-01	3.46152E-03	0.00000E+00	0.00000E+00
15	7.16945E-01	1.64033E+00	7.27342E-01	3.29990E-03	0.00000E+00	0.00000E+00
16	7.30916E-01	1.64950E+00	7.27597E-01	3.06576E-03	0.00000E+00	0.00000E+00
17	6.88560E-01	1.65867E+00	7.24995E-01	3.86247E-03	0.00000E+00	0.00000E+00
18	7.26335E-01	1.66783E+00	7.25078E-01	3.61398E-03	0.00000E+00	0.00000E+00
19	7.12447E-01	1.67700E+00	7.24335E-01	3.47510E-03	0.00000E+00	0.00000E+00
20	7.32608E-01	1.68717E+00	7.24795E-01	3.30843E-03	0.00000E+00	0.00000E+00
21	7.24642E-01	1.69633E+00	7.24787E-01	3.12947E-03	0.00000E+00	0.00000E+00
22	7.04239E-01	1.70533E+00	7.23760E-01	3.14162E-03	0.00000E+00	0.00000E+00
23	7.38077E-01	1.71450E+00	7.24441E-01	3.06506E-03	0.00000E+00	0.00000E+00
24	7.03708E-01	1.72367E+00	7.23499E-01	3.07062E-03	0.00000E+00	0.00000E+00
25	7.20492E-01	1.73283E+00	7.23368E-01	2.93699E-03	0.00000E+00	0.00000E+00
26	7.47220E-01	1.74300E+00	7.24362E-01	2.98241E-03	0.00000E+00	0.00000E+00
27	6.86648E-01	1.75217E+00	7.22853E-01	3.23403E-03	0.00000E+00	0.00000E+00
28	7.29513E-01	1.76117E+00	7.23110E-01	3.11770E-03	0.00000E+00	0.00000E+00
29	7.28965E-01	1.77033E+00	7.23326E-01	3.00784E-03	0.00000E+00	0.00000E+00
30	7.22443E-01	1.77950E+00	7.23295E-01	2.89860E-03	0.00000E+00	0.00000E+00
31	7.34518E-01	1.78867E+00	7.23682E-01	2.82351E-03	0.00000E+00	0.00000E+00
32	7.42341E-01	1.79783E+00	7.24304E-01	2.79778E-03	0.00000E+00	0.00000E+00
33	7.25865E-01	1.80700E+00	7.24354E-01	2.70649E-03	0.00000E+00	0.00000E+00
34	7.38221E-01	1.81617E+00	7.24788E-01	2.65614E-03	0.00000E+00	0.00000E+00
35	7.32307E-01	1.82533E+00	7.25015E-01	2.58445E-03	0.00000E+00	0.00000E+00
36	7.06762E-01	1.83450E+00	7.24479E-01	2.56412E-03	0.00000E+00	0.00000E+00
37	7.40806E-01	1.84367E+00	7.24945E-01	2.53311E-03	0.00000E+00	0.00000E+00
38	7.45111E-01	1.85283E+00	7.25505E-01	2.52467E-03	0.00000E+00	0.00000E+00
39	7.24951E-01	1.86200E+00	7.25490E-01	2.45553E-03	0.00000E+00	0.00000E+00
40	7.23367E-01	1.87200E+00	7.25434E-01	2.39069E-03	0.00000E+00	0.00000E+00
41	7.62480E-01	1.88033E+00	7.26384E-01	2.51487E-03	0.00000E+00	0.00000E+00
42	7.19762E-01	1.88933E+00	7.26219E-01	2.45678E-03	0.00000E+00	0.00000E+00
43	6.95096E-01	1.89850E+00	7.25460E-01	2.51348E-03	0.00000E+00	0.00000E+00
44	7.06250E-01	1.90867E+00	7.25002E-01	2.49518E-03	0.00000E+00	0.00000E+00
45	7.21876E-01	1.91783E+00	7.24929E-01	2.43755E-03	0.00000E+00	0.00000E+00
46	7.25800E-01	1.92700E+00	7.24949E-01	2.38159E-03	0.00000E+00	0.00000E+00
47	7.10344E-01	1.93617E+00	7.24625E-01	2.35058E-03	0.00000E+00	0.00000E+00
48	7.45183E-01	1.94533E+00	7.25072E-01	2.34195E-03	0.00000E+00	0.00000E+00
49	7.19422E-01	1.95433E+00	7.24951E-01	2.29473E-03	0.00000E+00	0.00000E+00
50	7.31561E-01	1.96350E+00	7.25089E-01	2.25063E-03	0.00000E+00	0.00000E+00
51	7.13145E-01	1.97367E+00	7.24845E-01	2.21766E-03	0.00000E+00	0.00000E+00
52	7.12367E-01	1.98283E+00	7.24596E-01	2.18714E-03	0.00000E+00	0.00000E+00
53	7.25705E-01	1.99200E+00	7.24618E-01	2.14393E-03	0.00000E+00	0.00000E+00
54	7.28151E-01	2.00117E+00	7.24686E-01	2.10340E-03	0.00000E+00	0.00000E+00
55	7.32886E-01	2.01017E+00	7.24840E-01	2.06912E-03	0.00000E+00	0.00000E+00
56	7.27373E-01	2.01933E+00	7.24887E-01	2.03098E-03	0.00000E+00	0.00000E+00
57	7.30672E-01	2.02850E+00	7.24992E-01	1.99649E-03	0.00000E+00	0.00000E+00
58	7.64964E-01	2.03767E+00	7.25706E-01	2.08640E-03	0.00000E+00	0.00000E+00
59	7.10690E-01	2.04683E+00	7.25443E-01	2.06634E-03	0.00000E+00	0.00000E+00
60	7.16296E-01	2.05517E+00	7.25285E-01	2.03651E-03	0.00000E+00	0.00000E+00
61	7.06627E-01	2.06517E+00	7.24969E-01	2.02652E-03	0.00000E+00	0.00000E+00
62	7.37613E-01	2.07433E+00	7.25179E-01	2.00357E-03	0.00000E+00	0.00000E+00
63	6.94466E-01	2.08433E+00	7.24676E-01	2.03377E-03	0.00000E+00	0.00000E+00
64	7.18753E-01	2.09350E+00	7.24580E-01	2.00298E-03	0.00000E+00	0.00000E+00
65	7.30344E-01	2.10267E+00	7.24672E-01	1.97305E-03	0.00000E+00	0.00000E+00
66	7.25085E-01	2.11183E+00	7.24678E-01	1.94199E-03	0.00000E+00	0.00000E+00
67	7.05691E-01	2.12100E+00	7.24386E-01	1.93406E-03	0.00000E+00	0.00000E+00
68	6.95387E-01	2.13017E+00	7.23947E-01	1.95456E-03	0.00000E+00	0.00000E+00
69	7.35146E-01	2.13933E+00	7.24114E-01	1.93241E-03	0.00000E+00	0.00000E+00
70	6.96014E-01	2.14850E+00	7.23701E-01	1.94811E-03	0.00000E+00	0.00000E+00
.						
.						
.						
721	7.57513E-01	8.21767E+00	7.22303E-01	7.13515E-04	0.00000E+00	0.00000E+00
722	7.42350E-01	8.22683E+00	7.22331E-01	7.13067E-04	0.00000E+00	0.00000E+00
723	7.12217E-01	8.23600E+00	7.22316E-01	7.12216E-04	0.00000E+00	0.00000E+00
724	7.12637E-01	8.24517E+00	7.22303E-01	7.11355E-04	0.00000E+00	0.00000E+00
725	6.93314E-01	8.25433E+00	7.22263E-01	7.11501E-04	0.00000E+00	0.00000E+00
726	7.18909E-01	8.26350E+00	7.22258E-01	7.10533E-04	0.00000E+00	0.00000E+00
727	7.17417E-01	8.27350E+00	7.22252E-01	7.09583E-04	0.00000E+00	0.00000E+00
728	7.39636E-01	8.28267E+00	7.22276E-01	7.09010E-04	0.00000E+00	0.00000E+00
729	7.28333E-01	8.29183E+00	7.22284E-01	7.08083E-04	0.00000E+00	0.00000E+00
730	7.37924E-01	8.30100E+00	7.22305E-01	7.07436E-04	0.00000E+00	0.00000E+00
731	6.88150E-01	8.31017E+00	7.22259E-01	7.08017E-04	0.00000E+00	0.00000E+00
732	6.96444E-01	8.32033E+00	7.22223E-01	7.07930E-04	0.00000E+00	0.00000E+00
733	6.94301E-01	8.32950E+00	7.22185E-01	7.07992E-04	0.00000E+00	0.00000E+00
734	7.42358E-01	8.33850E+00	7.22213E-01	7.07561E-04	0.00000E+00	0.00000E+00
735	7.14699E-01	8.34867E+00	7.22202E-01	7.06669E-04	0.00000E+00	0.00000E+00

736	7.08865E-01	8.35683E+00	7.22184E-01	7.05940E-04	0.00000E+00	0.00000E+00
737	6.97861E-01	8.36600E+00	7.22151E-01	7.05755E-04	0.00000E+00	0.00000E+00
738	7.14015E-01	8.37517E+00	7.22140E-01	7.04882E-04	0.00000E+00	0.00000E+00
739	7.48313E-01	8.38433E+00	7.22176E-01	7.04820E-04	0.00000E+00	0.00000E+00
740	7.16405E-01	8.39350E+00	7.22168E-01	7.03908E-04	0.00000E+00	0.00000E+00
741	7.17382E-01	8.40350E+00	7.22161E-01	7.02985E-04	0.00000E+00	0.00000E+00
742	7.08630E-01	8.41267E+00	7.22143E-01	7.02272E-04	0.00000E+00	0.00000E+00
743	7.48760E-01	8.42183E+00	7.22179E-01	7.02243E-04	0.00000E+00	0.00000E+00
744	7.05792E-01	8.43100E+00	7.22157E-01	7.01644E-04	0.00000E+00	0.00000E+00
745	6.88416E-01	8.44017E+00	7.22111E-01	7.02169E-04	0.00000E+00	0.00000E+00
746	7.47754E-01	8.44933E+00	7.22146E-01	7.02071E-04	0.00000E+00	0.00000E+00
747	7.47333E-01	8.45850E+00	7.22180E-01	7.01943E-04	0.00000E+00	0.00000E+00
748	7.45001E-01	8.46667E+00	7.22210E-01	7.01668E-04	0.00000E+00	0.00000E+00
749	7.06693E-01	8.47583E+00	7.22189E-01	7.01036E-04	0.00000E+00	0.00000E+00
750	7.28547E-01	8.48500E+00	7.22198E-01	7.00150E-04	0.00000E+00	0.00000E+00
751	7.44589E-01	8.49417E+00	7.22228E-01	6.99853E-04	0.00000E+00	0.00000E+00
752	7.34765E-01	8.50333E+00	7.22245E-01	6.99119E-04	0.00000E+00	0.00000E+00
753	7.24710E-01	8.51250E+00	7.22248E-01	6.98195E-04	0.00000E+00	0.00000E+00
754	7.06538E-01	8.52167E+00	7.22227E-01	6.97579E-04	0.00000E+00	0.00000E+00
755	7.08145E-01	8.53083E+00	7.22208E-01	6.96903E-04	0.00000E+00	0.00000E+00
756	7.10409E-01	8.54083E+00	7.22193E-01	6.96154E-04	0.00000E+00	0.00000E+00
757	7.22536E-01	8.54917E+00	7.22193E-01	6.95232E-04	0.00000E+00	0.00000E+00
758	7.46064E-01	8.55917E+00	7.22225E-01	6.95029E-04	0.00000E+00	0.00000E+00
759	7.32577E-01	8.56833E+00	7.22238E-01	6.94245E-04	0.00000E+00	0.00000E+00
760	7.62131E-01	8.57750E+00	7.22291E-01	6.95323E-04	0.00000E+00	0.00000E+00
761	7.14714E-01	8.58567E+00	7.22281E-01	6.94478E-04	0.00000E+00	0.00000E+00
762	6.93322E-01	8.59483E+00	7.22243E-01	6.94610E-04	0.00000E+00	0.00000E+00
763	6.90859E-01	8.60400E+00	7.22202E-01	6.94921E-04	0.00000E+00	0.00000E+00
764	6.89029E-01	8.61417E+00	7.22158E-01	6.95373E-04	0.00000E+00	0.00000E+00
765	7.40473E-01	8.62333E+00	7.22182E-01	6.94875E-04	0.00000E+00	0.00000E+00
766	6.97511E-01	8.63150E+00	7.22150E-01	6.94716E-04	0.00000E+00	0.00000E+00
767	7.08889E-01	8.64067E+00	7.22132E-01	6.94024E-04	0.00000E+00	0.00000E+00
768	7.29606E-01	8.64983E+00	7.22142E-01	6.93186E-04	0.00000E+00	0.00000E+00
769	7.04155E-01	8.65983E+00	7.22119E-01	6.92679E-04	0.00000E+00	0.00000E+00
770	7.19046E-01	8.66817E+00	7.22115E-01	6.91788E-04	0.00000E+00	0.00000E+00
771	6.99645E-01	8.67817E+00	7.22086E-01	6.91505E-04	0.00000E+00	0.00000E+00
772	7.20975E-01	8.68733E+00	7.22084E-01	6.90608E-04	0.00000E+00	0.00000E+00
773	7.34212E-01	8.69650E+00	7.22100E-01	6.89891E-04	0.00000E+00	0.00000E+00
774	7.23828E-01	8.70567E+00	7.22102E-01	6.89000E-04	0.00000E+00	0.00000E+00
775	7.08155E-01	8.71483E+00	7.22084E-01	6.88345E-04	0.00000E+00	0.00000E+00
776	7.58171E-01	8.72400E+00	7.22131E-01	6.89034E-04	0.00000E+00	0.00000E+00
777	7.23155E-01	8.73317E+00	7.22132E-01	6.88146E-04	0.00000E+00	0.00000E+00
778	7.22573E-01	8.74233E+00	7.22133E-01	6.87259E-04	0.00000E+00	0.00000E+00
779	7.50599E-01	8.75150E+00	7.22169E-01	6.87351E-04	0.00000E+00	0.00000E+00
780	6.86529E-01	8.76067E+00	7.22123E-01	6.87994E-04	0.00000E+00	0.00000E+00
781	7.09853E-01	8.76967E+00	7.22108E-01	6.87290E-04	0.00000E+00	0.00000E+00
782	7.15874E-01	8.77983E+00	7.22100E-01	6.86455E-04	0.00000E+00	0.00000E+00
783	7.24166E-01	8.78900E+00	7.22102E-01	6.85581E-04	0.00000E+00	0.00000E+00
784	7.21670E-01	8.79817E+00	7.22102E-01	6.84704E-04	0.00000E+00	0.00000E+00
785	6.92098E-01	8.80733E+00	7.22063E-01	6.84902E-04	0.00000E+00	0.00000E+00
786	7.49026E-01	8.81650E+00	7.22098E-01	6.84891E-04	0.00000E+00	0.00000E+00
787	7.03746E-01	8.82567E+00	7.22074E-01	6.84418E-04	0.00000E+00	0.00000E+00
788	6.94186E-01	8.83467E+00	7.22039E-01	6.84467E-04	0.00000E+00	0.00000E+00
789	7.23685E-01	8.84483E+00	7.22041E-01	6.83600E-04	0.00000E+00	0.00000E+00
790	6.97640E-01	8.85300E+00	7.22010E-01	6.83433E-04	0.00000E+00	0.00000E+00
791	7.19260E-01	8.86317E+00	7.22007E-01	6.82576E-04	0.00000E+00	0.00000E+00
792	7.02020E-01	8.87233E+00	7.21981E-01	6.82180E-04	0.00000E+00	0.00000E+00
793	7.24258E-01	8.88150E+00	7.21984E-01	6.81323E-04	0.00000E+00	0.00000E+00
794	6.97537E-01	8.89050E+00	7.21953E-01	6.81162E-04	0.00000E+00	0.00000E+00
795	7.59961E-01	8.89967E+00	7.22001E-01	6.81989E-04	0.00000E+00	0.00000E+00
796	7.00746E-01	8.90800E+00	7.21974E-01	6.81655E-04	0.00000E+00	0.00000E+00
797	7.19767E-01	8.91800E+00	7.21972E-01	6.80803E-04	0.00000E+00	0.00000E+00
798	7.00395E-01	8.92817E+00	7.21945E-01	6.80487E-04	0.00000E+00	0.00000E+00
799	7.55817E-01	8.93817E+00	7.21987E-01	6.80961E-04	0.00000E+00	0.00000E+00
800	7.35244E-01	8.94833E+00	7.22004E-01	6.80310E-04	0.00000E+00	0.00000E+00
801	7.11048E-01	8.95733E+00	7.21990E-01	6.79596E-04	0.00000E+00	0.00000E+00
802	6.96909E-01	8.96650E+00	7.21959E-01	6.79470E-04	0.00000E+00	0.00000E+00
803	7.46393E-01	8.97667E+00	7.21989E-01	6.79306E-04	0.00000E+00	0.00000E+00

KENO MESSAGE NUMBER K5-123 EXECUTION TERMINATED DUE TO COMPLETION OF THE SPECIFIED NUMBER OF GENERATIONS.

LWT WITH GA IFM

LIFETIME = 1.17843E-04 + OR - 1.60373E-07 GENERATION TIME = 5.55083E-05 + OR - 8.38097E-08
NU BAR = 2.42082E+00 + OR - 7.82673E-06 AVERAGE FISSION GROUP = 2.38836E+01 + OR - 1.52648E-03
ENERGY(EV) OF THE AVERAGE LETHARGY CAUSING FISSION = 4.80629E-02 + OR - 6.19113E-05

NO. OF INITIAL GENERATIONS SKIPPED	AVERAGE K-EFFECTIVE	DEVIATION	67 PER CENT CONFIDENCE INTERVAL	95 PER CENT CONFIDENCE INTERVAL	99 PER CENT CONFIDENCE INTERVAL	NUMBER OF HISTORIES
3	0.72199	+ OR - 0.00068	0.72131 TO 0.72267	0.72063 TO 0.72335	0.71995 TO 0.72403	800000
4	0.72196	+ OR - 0.00068	0.72128 TO 0.72264	0.72060 TO 0.72332	0.71992 TO 0.72400	799000
5	0.72197	+ OR - 0.00068	0.72129 TO 0.72265	0.72061 TO 0.72334	0.71993 TO 0.72402	798000
6	0.72198	+ OR - 0.00068	0.72130 TO 0.72266	0.72062 TO 0.72335	0.71994 TO 0.72403	797000
7	0.72199	+ OR - 0.00068	0.72131 TO 0.72267	0.72062 TO 0.72336	0.71994 TO 0.72404	796000
8	0.72197	+ OR - 0.00068	0.72129 TO 0.72266	0.72061 TO 0.72334	0.71992 TO 0.72402	795000
9	0.72197	+ OR - 0.00068	0.72129 TO 0.72265	0.72060 TO 0.72334	0.71992 TO 0.72402	794000
10	0.72196	+ OR - 0.00069	0.72128 TO 0.72265	0.72059 TO 0.72333	0.71991 TO 0.72402	793000
11	0.72196	+ OR - 0.00069	0.72128 TO 0.72265	0.72059 TO 0.72333	0.71990 TO 0.72402	792000
12	0.72193	+ OR - 0.00069	0.72124 TO 0.72261	0.72056 TO 0.72330	0.71987 TO 0.72399	791000
17	0.72193	+ OR - 0.00069	0.72124 TO 0.72262	0.72055 TO 0.72331	0.71987 TO 0.72400	786000
22	0.72194	+ OR - 0.00069	0.72125 TO 0.72264	0.72056 TO 0.72333	0.71987 TO 0.72402	781000
27	0.72196	+ OR - 0.00069	0.72127 TO 0.72265	0.72057 TO 0.72335	0.71988 TO 0.72404	776000
32	0.72190	+ OR - 0.00070	0.72120 TO 0.72260	0.72050 TO 0.72329	0.71981 TO 0.72399	771000
37	0.72185	+ OR - 0.00070	0.72115 TO 0.72255	0.72045 TO 0.72326	0.71975 TO 0.72396	766000
42	0.72177	+ OR - 0.00070	0.72106 TO 0.72247	0.72036 TO 0.72317	0.71966 TO 0.72387	761000
47	0.72183	+ OR - 0.00071	0.72113 TO 0.72254	0.72042 TO 0.72324	0.71971 TO 0.72395	756000
52	0.72182	+ OR - 0.00071	0.72111 TO 0.72253	0.72040 TO 0.72323	0.71969 TO 0.72394	751000
57	0.72177	+ OR - 0.00071	0.72105 TO 0.72248	0.72034 TO 0.72320	0.71963 TO 0.72391	746000
62	0.72173	+ OR - 0.00072	0.72102 TO 0.72245	0.72030 TO 0.72316	0.71958 TO 0.72388	741000
67	0.72178	+ OR - 0.00072	0.72106 TO 0.72250	0.72034 TO 0.72322	0.71962 TO 0.72393	736000
72	0.72187	+ OR - 0.00072	0.72115 TO 0.72259	0.72043 TO 0.72331	0.71971 TO 0.72403	731000
77	0.72177	+ OR - 0.00072	0.72105 TO 0.72250	0.72033 TO 0.72322	0.71961 TO 0.72394	726000
82	0.72182	+ OR - 0.00073	0.72110 TO 0.72255	0.72037 TO 0.72328	0.71964 TO 0.72400	721000
87	0.72187	+ OR - 0.00073	0.72114 TO 0.72260	0.72041 TO 0.72333	0.71968 TO 0.72406	716000
92	0.72181	+ OR - 0.00073	0.72108 TO 0.72254	0.72035 TO 0.72328	0.71961 TO 0.72401	711000

LWT WITH GA IFM

NO. OF INITIAL GENERATIONS SKIPPED	AVERAGE K-EFFECTIVE	DEVIATION	67 PER CENT CONFIDENCE INTERVAL	95 PER CENT CONFIDENCE INTERVAL	99 PER CENT CONFIDENCE INTERVAL	NUMBER OF HISTORIES
97	0.72181	+ OR - 0.00074	0.72108 TO 0.72255	0.72034 TO 0.72329	0.71960 TO 0.72402	706000
102	0.72184	+ OR - 0.00074	0.72110 TO 0.72258	0.72036 TO 0.72332	0.71962 TO 0.72406	701000
107	0.72190	+ OR - 0.00074	0.72116 TO 0.72264	0.72042 TO 0.72338	0.71968 TO 0.72413	696000
112	0.72200	+ OR - 0.00074	0.72125 TO 0.72274	0.72051 TO 0.72348	0.71977 TO 0.72422	691000
117	0.72196	+ OR - 0.00075	0.72121 TO 0.72270	0.72046 TO 0.72345	0.71971 TO 0.72420	686000
122	0.72196	+ OR - 0.00075	0.72121 TO 0.72271	0.72046 TO 0.72346	0.71970 TO 0.72421	681000
127	0.72197	+ OR - 0.00076	0.72122 TO 0.72273	0.72046 TO 0.72349	0.71971 TO 0.72424	676000
132	0.72198	+ OR - 0.00076	0.72122 TO 0.72274	0.72046 TO 0.72350	0.71970 TO 0.72426	671000
137	0.72192	+ OR - 0.00076	0.72116 TO 0.72268	0.72040 TO 0.72345	0.71964 TO 0.72421	666000
142	0.72191	+ OR - 0.00077	0.72115 TO 0.72268	0.72038 TO 0.72344	0.71962 TO 0.72421	661000
147	0.72185	+ OR - 0.00077	0.72108 TO 0.72261	0.72031 TO 0.72338	0.71955 TO 0.72415	656000
152	0.72198	+ OR - 0.00077	0.72122 TO 0.72275	0.72045 TO 0.72352	0.71968 TO 0.72429	651000
157	0.72199	+ OR - 0.00077	0.72122 TO 0.72276	0.72045 TO 0.72354	0.71967 TO 0.72431	646000
162	0.72195	+ OR - 0.00078	0.72118 TO 0.72273	0.72040 TO 0.72351	0.71962 TO 0.72428	641000
167	0.72203	+ OR - 0.00078	0.72125 TO 0.72281	0.72047 TO 0.72359	0.71969 TO 0.72437	636000
172	0.72218	+ OR - 0.00078	0.72140 TO 0.72296	0.72062 TO 0.72375	0.71983 TO 0.72453	631000
177	0.72225	+ OR - 0.00079	0.72146 TO 0.72303	0.72067 TO 0.72382	0.71988 TO 0.72461	626000
182	0.72227	+ OR - 0.00079	0.72148 TO 0.72306	0.72069 TO 0.72385	0.71990 TO 0.72464	621000
187	0.72226	+ OR - 0.00080	0.72146 TO 0.72305	0.72067 TO 0.72385	0.71987 TO 0.72464	616000
192	0.72234	+ OR - 0.00080	0.72154 TO 0.72314	0.72074 TO 0.72394	0.71994 TO 0.72474	611000
197	0.72243	+ OR - 0.00080	0.72163 TO 0.72323	0.72082 TO 0.72403	0.72002 TO 0.72484	606000
202	0.72239	+ OR - 0.00081	0.72158 TO 0.72320	0.72077 TO 0.72400	0.71997 TO 0.72481	601000
207	0.72246	+ OR - 0.00081	0.72165 TO 0.72327	0.72084 TO 0.72409	0.72003 TO 0.72490	596000
212	0.72236	+ OR - 0.00081	0.72155 TO 0.72317	0.72074 TO 0.72399	0.71992 TO 0.72480	591000
217	0.72246	+ OR - 0.00081	0.72164 TO 0.72327	0.72083 TO 0.72408	0.72001 TO 0.72490	586000
222	0.72248	+ OR - 0.00082	0.72166 TO 0.72330	0.72084 TO 0.72412	0.72002 TO 0.72494	581000
227	0.72243	+ OR - 0.00083	0.72161 TO 0.72326	0.72078 TO 0.72409	0.71996 TO 0.72491	576000

LWT WITH GA IFM

NO. OF INITIAL GENERATIONS SKIPPED	AVERAGE K-EFFECTIVE	DEVIATION	67 PER CENT CONFIDENCE INTERVAL	95 PER CENT CONFIDENCE INTERVAL	99 PER CENT CONFIDENCE INTERVAL	NUMBER OF HISTORIES
637	0.72076	+ OR - 0.00156	0.71920 TO 0.72231	0.71764 TO 0.72387	0.71609 TO 0.72543	166000
642	0.72062	+ OR - 0.00159	0.71903 TO 0.72221	0.71744 TO 0.72380	0.71585 TO 0.72539	161000
647	0.72102	+ OR - 0.00160	0.71942 TO 0.72262	0.71782 TO 0.72422	0.71622 TO 0.72582	156000
652	0.72100	+ OR - 0.00163	0.71937 TO 0.72262	0.71774 TO 0.72425	0.71612 TO 0.72588	151000
657	0.72156	+ OR - 0.00163	0.71993 TO 0.72318	0.71830 TO 0.72481	0.71668 TO 0.72644	146000
662	0.72127	+ OR - 0.00167	0.71960 TO 0.72295	0.71793 TO 0.72462	0.71626 TO 0.72629	141000
667	0.72109	+ OR - 0.00172	0.71938 TO 0.72281	0.71766 TO 0.72453	0.71595 TO 0.72624	136000
672	0.72085	+ OR - 0.00176	0.71909 TO 0.72261	0.71733 TO 0.72438	0.71557 TO 0.72614	131000
677	0.72067	+ OR - 0.00182	0.71885 TO 0.72249	0.71702 TO 0.72432	0.71520 TO 0.72614	126000
682	0.72036	+ OR - 0.00189	0.71848 TO 0.72225	0.71659 TO 0.72414	0.71470 TO 0.72603	121000
687	0.72069	+ OR - 0.00189	0.71880 TO 0.72258	0.71691 TO 0.72447	0.71502 TO 0.72636	116000
692	0.72086	+ OR - 0.00197	0.71890 TO 0.72283	0.71693 TO 0.72480	0.71496 TO 0.72677	111000
697	0.72029	+ OR - 0.00203	0.71826 TO 0.72232	0.71623 TO 0.72436	0.71420 TO 0.72639	106000
702	0.72032	+ OR - 0.00208	0.71824 TO 0.72240	0.71616 TO 0.72448	0.71408 TO 0.72656	101000
707	0.72002	+ OR - 0.00217	0.71785 TO 0.72218	0.71569 TO 0.72435	0.71352 TO 0.72652	96000
712	0.71981	+ OR - 0.00224	0.71758 TO 0.72205	0.71534 TO 0.72428	0.71310 TO 0.72652	91000
717	0.71915	+ OR - 0.00225	0.71691 TO 0.72140	0.71466 TO 0.72364	0.71242 TO 0.72589	86000
722	0.71895	+ OR - 0.00221	0.71674 TO 0.72116	0.71453 TO 0.72337	0.71232 TO 0.72558	81000
727	0.71948	+ OR - 0.00233	0.71716 TO 0.72181	0.71483 TO 0.72414	0.71250 TO 0.72647	76000
732	0.71958	+ OR - 0.00240	0.71719 TO 0.72198	0.71479 TO 0.72438	0.71239 TO 0.72677	71000
737	0.72019	+ OR - 0.00250	0.71769 TO 0.72268	0.71519 TO 0.72518	0.71269 TO 0.72768	66000
742	0.72012	+ OR - 0.00265	0.71747 TO 0.72278	0.71482 TO 0.72543	0.71216 TO 0.72808	61000
747	0.71945	+ OR - 0.00269	0.71677 TO 0.72214	0.71408 TO 0.72482	0.71140 TO 0.72751	56000
752	0.71823	+ OR - 0.00283	0.71541 TO 0.72106	0.71258 TO 0.72388	0.70975 TO 0.72671	51000
757	0.71864	+ OR - 0.00311	0.71553 TO 0.72175	0.71243 TO 0.72486	0.70932 TO 0.72797	46000
762	0.71729	+ OR - 0.00317	0.71412 TO 0.72045	0.71096 TO 0.72362	0.70779 TO 0.72678	41000
767	0.71894	+ OR - 0.00331	0.71563 TO 0.72226	0.71232 TO 0.72557	0.70900 TO 0.72888	36000

LWT WITH GA IFM

NO. OF INITIAL GENERATIONS SKIPPED	AVERAGE K-EFFECTIVE	DEVIATION	67 PER CENT CONFIDENCE INTERVAL	95 PER CENT CONFIDENCE INTERVAL	99 PER CENT CONFIDENCE INTERVAL	NUMBER OF HISTORIES
772	0.71963	+ OR - 0.00375	0.71587 TO 0.72338	0.71212 TO 0.72714	0.70837 TO 0.73089	31000
777	0.71773	+ OR - 0.00414	0.71359 TO 0.72187	0.70944 TO 0.72602	0.70530 TO 0.73016	26000
782	0.71788	+ OR - 0.00463	0.71325 TO 0.72252	0.70862 TO 0.72715	0.70399 TO 0.73178	21000
787	0.71780	+ OR - 0.00545	0.71235 TO 0.72325	0.70691 TO 0.72870	0.70146 TO 0.73415	16000
792	0.72255	+ OR - 0.00715	0.71540 TO 0.72971	0.70825 TO 0.73686	0.70109 TO 0.74401	11000
797	0.72430	+ OR - 0.01016	0.71414 TO 0.73446	0.70398 TO 0.74463	0.69381 TO 0.75479	6000

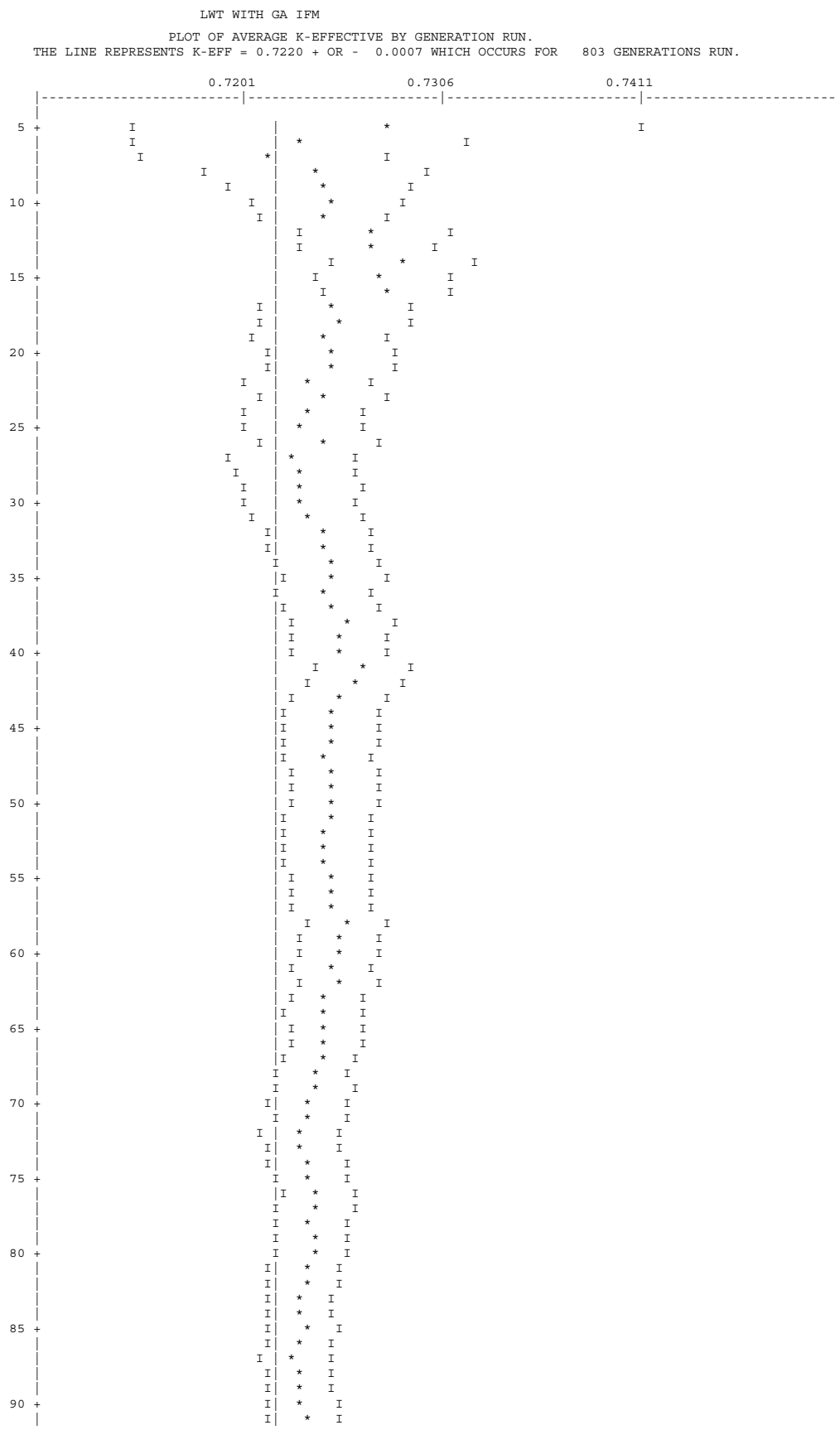
LWT WITH GA IFM
PLOT OF AVERAGE K-EFFECTIVE BY GENERATION RUN.
THE LINE REPRESENTS K-EFF = 0.7220 + OR - 0.0007 WHICH OCCURS FOR 803 GENERATIONS RUN.
0.7201
0.7306
0.7411
5
10
15
20
25
30
35
40
45
50
55
60
65
70
75
80
85
90

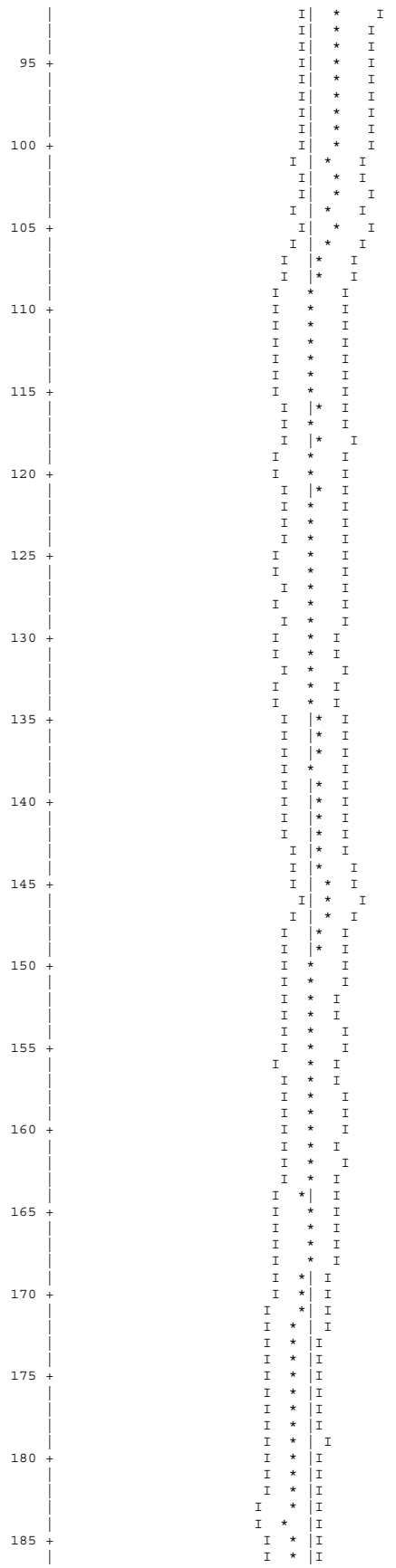

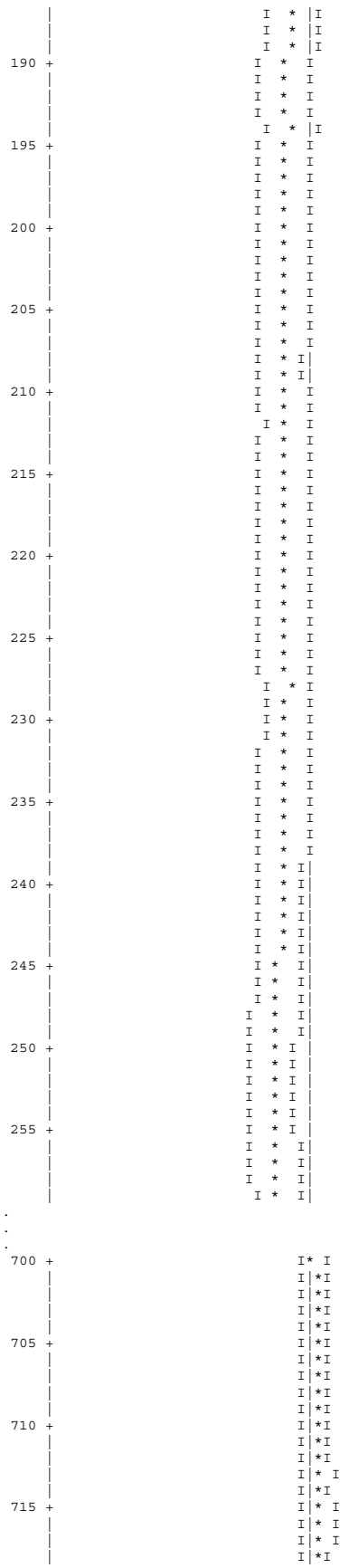

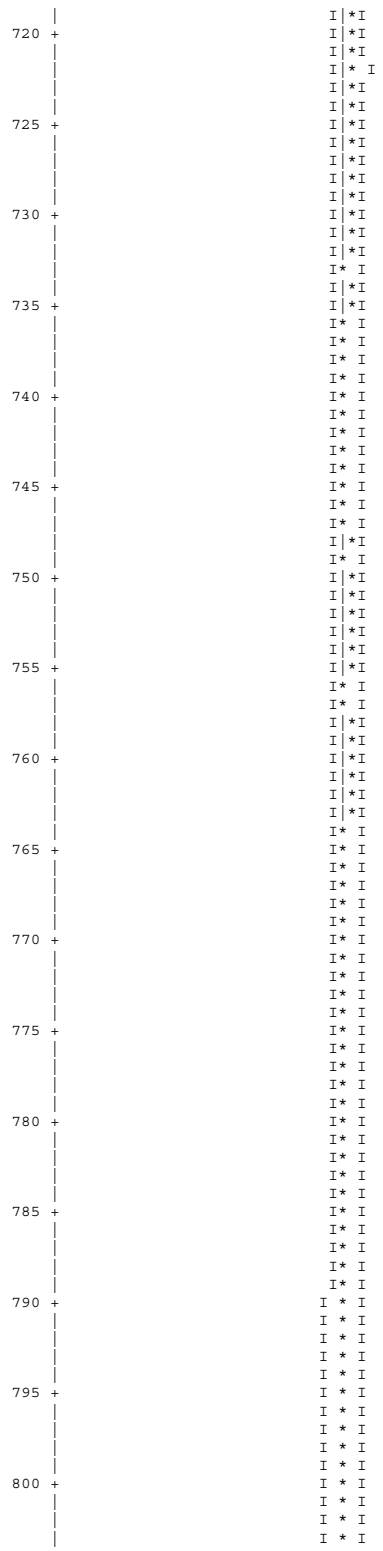

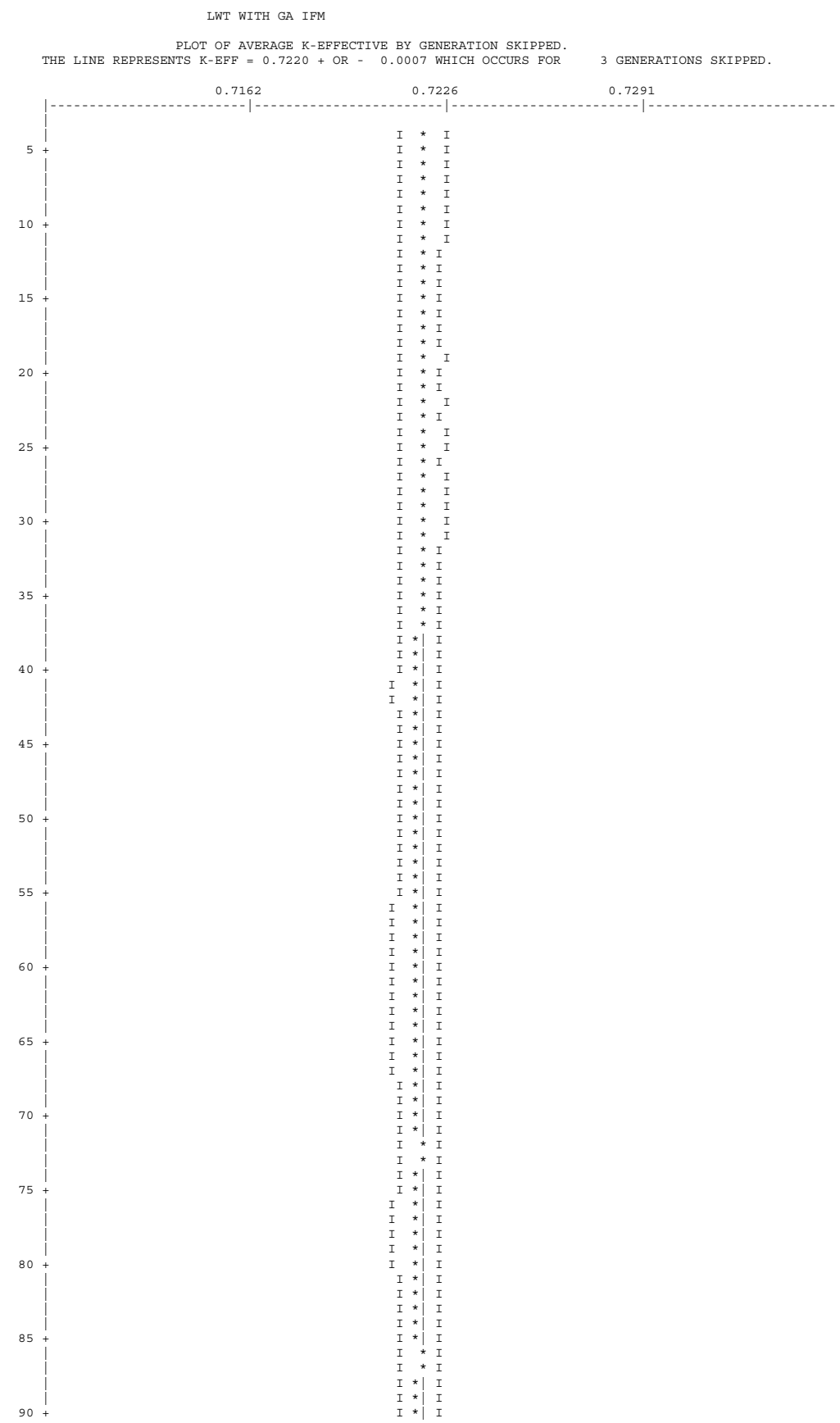
LWT WITH GA IFM
PLOT OF AVERAGE K-EFFECTIVE BY GENERATION SKIPPED.
THE LINE REPRESENTS K-EFF = 0.7220 + OR - 0.0007 WHICH OCCURS FOR 3 GENERATIONS SKIPPED.
0.7162
0.7226
0.7291
5
10
15
20
25
30
35
40
45
50
55
60
65
70
75
80
85
90

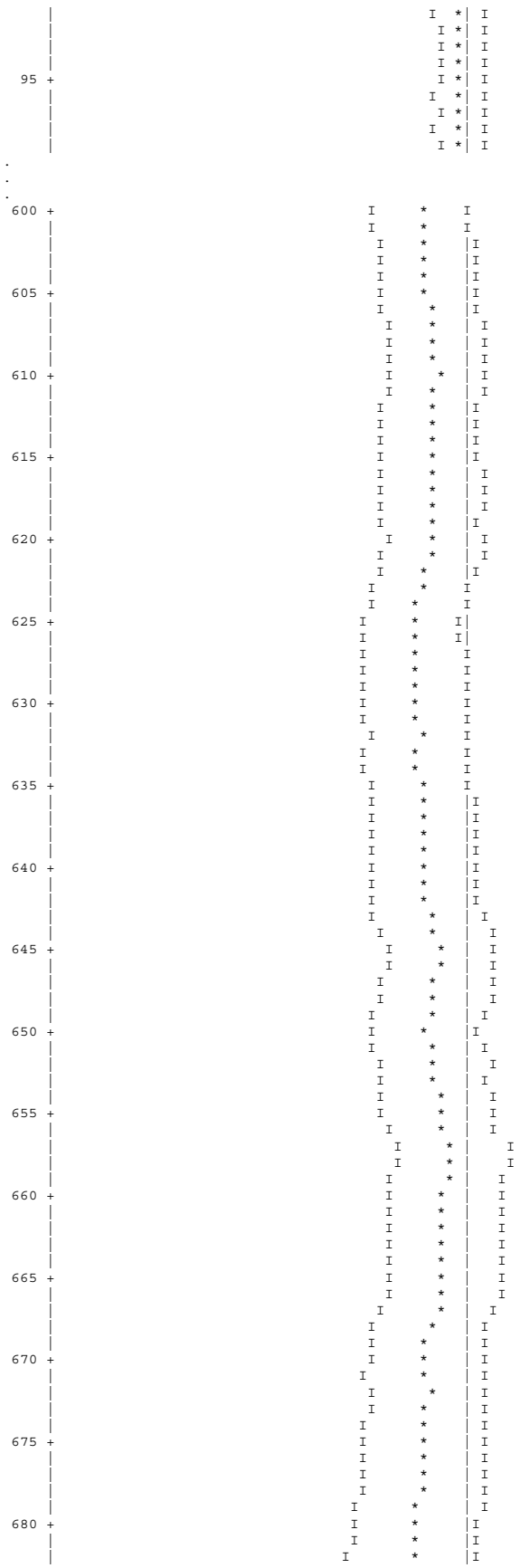

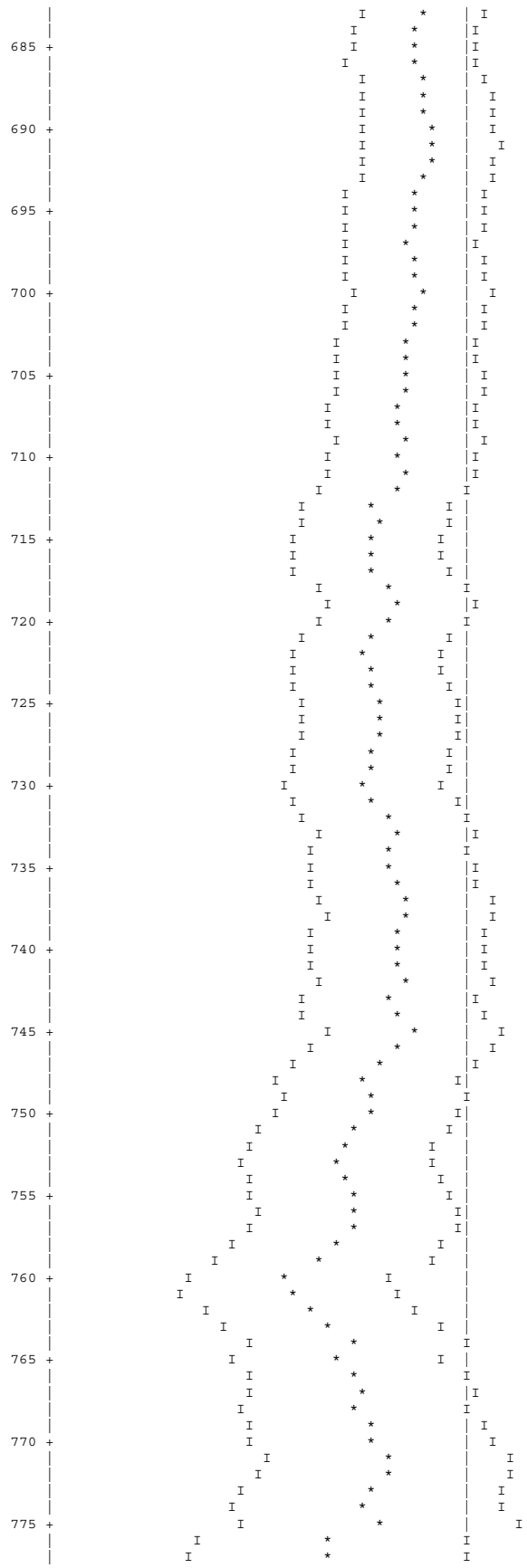
685
690
695
700
705
710
715
720
725
730
735
740
745
750
755
760
765
770
775

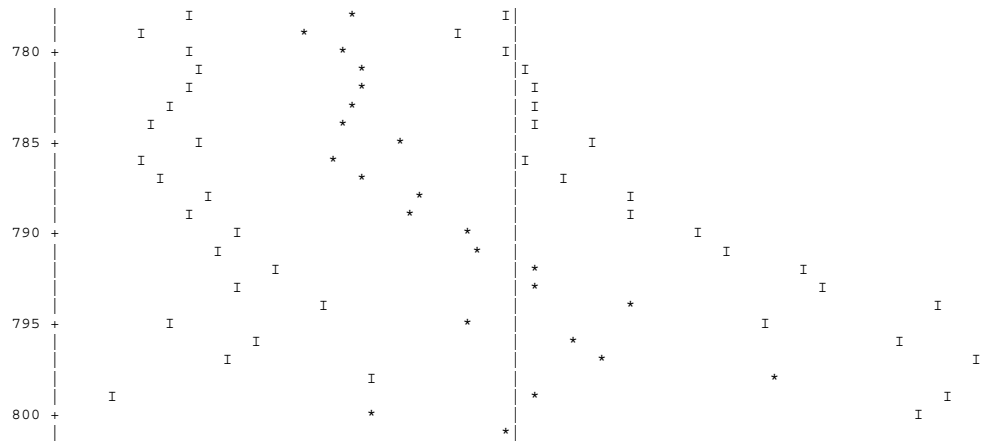
780
785
790
795
800

LWT WITH GA IFM

SKIPPING 3 GENERATIONS

GROUP	FISSION FRACTION	UNIT	REGION	FISSIONS	PERCENT DEVIATION	ABSORPTIONS	PERCENT DEVIATION	LEAKAGE	PERCENT DEVIATION
1	0.0006			4.00192E-04	1.2672	1.27462E-03	0.9486	0.00000E+00	0.0000
2	0.0022			1.59620E-03	0.4160	3.02760E-03	0.3251	0.00000E+00	0.0000
3	0.0025			1.82061E-03	0.3354	1.55179E-03	0.2726	0.00000E+00	0.0000
4	0.0012			8.62742E-04	0.3730	8.32470E-04	0.2807	0.00000E+00	0.0000
5	0.0009			6.76402E-04	0.2862	1.74872E-03	0.2795	0.00000E+00	0.0000
6	0.0013			9.13395E-04	0.2168	7.38533E-03	0.2572	0.00000E+00	0.0000
7	0.0015			1.08146E-03	0.1791	1.48384E-02	0.2389	0.00000E+00	0.0000
8	0.0016			1.14697E-03	0.1791	1.20744E-02	0.2599	0.00000E+00	0.0000
9	0.0022			1.58067E-03	0.1807	1.21250E-02	0.2548	0.00000E+00	0.0000
10	0.0047			3.42751E-03	0.1860	3.03179E-02	0.2487	0.00000E+00	0.0000
11	0.0104			7.47447E-03	0.1748	4.07010E-02	0.2030	0.00000E+00	0.0000
12	0.0146			1.05204E-02	0.1891	3.32275E-02	0.1821	0.00000E+00	0.0000
13	0.0142			1.02616E-02	0.1907	4.31473E-02	0.1706	0.00000E+00	0.0000
14	0.0117			8.45094E-03	0.1787	5.28353E-02	0.2124	0.00000E+00	0.0000
15	0.0022			1.56657E-03	0.2617	2.40140E-02	0.3384	0.00000E+00	0.0000
16	0.0015			1.05366E-03	0.3224	1.32672E-02	0.3664	0.00000E+00	0.0000
17	0.0023			1.64657E-03	0.4663	6.76399E-03	0.3719	0.00000E+00	0.0000
18	0.0031			2.25149E-03	0.4738	6.20648E-03	0.3773	0.00000E+00	0.0000
19	0.0038			2.70772E-03	0.3751	1.06971E-02	0.3856	0.00000E+00	0.0000
20	0.0158			1.13935E-02	0.2345	3.32724E-02	0.3217	0.00000E+00	0.0000
21	0.0089			6.40846E-03	0.3567	1.18196E-02	0.3676	0.00000E+00	0.0000
22	0.0221			1.59248E-02	0.2701	2.38316E-02	0.3046	0.00000E+00	0.0000
23	0.0871			6.28856E-02	0.1617	8.17318E-02	0.1725	0.00000E+00	0.0000
24	0.2046			1.47719E-01	0.1240	1.59106E-01	0.1190	0.00000E+00	0.0000
25	0.1939			1.40005E-01	0.1273	1.37342E-01	0.1176	0.00000E+00	0.0000
26	0.2695			1.94597E-01	0.1268	1.74117E-01	0.1224	0.00000E+00	0.0000
27	0.1158			8.36149E-02	0.1690	6.46415E-02	0.1785	0.00000E+00	0.0000
SYSTEM TOTAL =				7.21987E-01	0.0942	1.00190E+00	0.0315	0.00000E+00	0.0000

ELAPSED TIME 8.97750 MINUTES

RANDOM NUMBER= 23A12AE52FEC

LWT WITH GA IFM

FREQUENCY FOR GENERATIONS 4 TO 803

```
0.6657 TO 0.6687     **
0.6687 TO 0.6717
0.6717 TO 0.6747     ****
0.6747 TO 0.6778     *
0.6778 TO 0.6808
0.6808 TO 0.6838     ******
0.6838 TO 0.6868     **************
0.6868 TO 0.6899     ***********
0.6899 TO 0.6929     ********************
0.6929 TO 0.6959     ************************
0.6959 TO 0.6990     ********************
0.6990 TO 0.7020     **********************
0.7020 TO 0.7050     ***************************
0.7050 TO 0.7080     ************************************
0.7080 TO 0.7111     ****************************************
0.7111 TO 0.7141     **************************************************
0.7141 TO 0.7171     ************************************************
0.7171 TO 0.7201     ***********************************
0.7201 TO 0.7232     ************************************************************
0.7232 TO 0.7262     ******************************************
0.7262 TO 0.7292     ************************************************
0.7292 TO 0.7322     **************************************************
0.7322 TO 0.7353     ************************************
0.7353 TO 0.7383     *********************************
0.7383 TO 0.7413     ************************
0.7413 TO 0.7444     ***************************
0.7444 TO 0.7474     ***********************************
0.7474 TO 0.7504     ************************
0.7504 TO 0.7534     *************
0.7534 TO 0.7565     *********
0.7565 TO 0.7595     *******
0.7595 TO 0.7625     ***
0.7625 TO 0.7655     *****
0.7655 TO 0.7686     ******
0.7686 TO 0.7716     ****
0.7716 TO 0.7746     *
0.7746 TO 0.7776     *
```

LWT WITH GA IFM

FREQUENCY FOR GENERATIONS 204 TO 803

```
0.6657 TO 0.6687     **
0.6687 TO 0.6717
0.6717 TO 0.6747     ****
0.6747 TO 0.6778     *
0.6778 TO 0.6808
0.6808 TO 0.6838     *****
0.6838 TO 0.6868     ***********
0.6868 TO 0.6899     ********
0.6899 TO 0.6929     *************
0.6929 TO 0.6959     ******************
0.6959 TO 0.6990     **************
0.6990 TO 0.7020     ****************
0.7020 TO 0.7050     ******************
0.7050 TO 0.7080     ***************************
0.7080 TO 0.7111     ****************************
0.7111 TO 0.7141     ****************************************
0.7141 TO 0.7171     ***********************************
0.7171 TO 0.7201     ************************
0.7201 TO 0.7232     ***********************************************
0.7232 TO 0.7262     ****************************
0.7262 TO 0.7292     ************************************
0.7292 TO 0.7322     ****************************************
0.7322 TO 0.7353     ************************
0.7353 TO 0.7383     ************************
0.7383 TO 0.7413     ******************
0.7413 TO 0.7444     **********************
0.7444 TO 0.7474     ************************
0.7474 TO 0.7504     ********************
0.7504 TO 0.7534     ************
0.7534 TO 0.7565     ********
0.7565 TO 0.7595     *******
0.7595 TO 0.7625     **
0.7625 TO 0.7655     ***
0.7655 TO 0.7686     ******
0.7686 TO 0.7716     ****
0.7716 TO 0.7746     *
0.7746 TO 0.7776     *
```

LWT WITH GA IFM

FREQUENCY FOR GENERATIONS 404 TO 803

```
0.6657 TO 0.6687     **
0.6687 TO 0.6717
0.6717 TO 0.6747     **
0.6747 TO 0.6778
0.6778 TO 0.6808
0.6808 TO 0.6838     **
0.6838 TO 0.6868     ********
0.6868 TO 0.6899     *******
0.6899 TO 0.6929     ********
0.6929 TO 0.6959     *************
0.6959 TO 0.6990     **********
0.6990 TO 0.7020     *********
0.7020 TO 0.7050     **************
0.7050 TO 0.7080     ****************
0.7080 TO 0.7111     **********************
0.7111 TO 0.7141     ***************************
0.7141 TO 0.7171     ****************************
0.7171 TO 0.7201     ******************
0.7201 TO 0.7232     ********************************
0.7232 TO 0.7262     ******************
0.7262 TO 0.7292     ************************
0.7292 TO 0.7322     ********************
0.7322 TO 0.7353     ******************
0.7353 TO 0.7383     ************
0.7383 TO 0.7413     ***********
0.7413 TO 0.7444     ****************
0.7444 TO 0.7474     ****************
0.7474 TO 0.7504     *************
0.7504 TO 0.7534     *********
0.7534 TO 0.7565     ***
0.7565 TO 0.7595     ******
0.7595 TO 0.7625     **
0.7625 TO 0.7655     **
0.7655 TO 0.7686     ***
0.7686 TO 0.7716     **
0.7716 TO 0.7746     *
0.7746 TO 0.7776     *
```

```
LWT WITH GA IFM

                              FREQUENCY FOR GENERATIONS  604 TO  803
0.6657 TO 0.6687     **
0.6687 TO 0.6717
0.6717 TO 0.6747
0.6747 TO 0.6778
0.6778 TO 0.6808
0.6808 TO 0.6838     *
0.6838 TO 0.6868     *****
0.6868 TO 0.6899     ***
0.6899 TO 0.6929     ****
0.6929 TO 0.6959     ********
0.6959 TO 0.6990     *******
0.6990 TO 0.7020     ****
0.7020 TO 0.7050     *******
0.7050 TO 0.7080     **********
0.7080 TO 0.7111     **************
0.7111 TO 0.7141     ************
0.7141 TO 0.7171     ************
0.7171 TO 0.7201     **********
0.7201 TO 0.7232     ************
0.7232 TO 0.7262     **********
0.7262 TO 0.7292     ***************
0.7292 TO 0.7322     ******
0.7322 TO 0.7353     *********
0.7353 TO 0.7383     *****
0.7383 TO 0.7413     ******
0.7413 TO 0.7444     ********
0.7444 TO 0.7474     *********
0.7474 TO 0.7504     *******
0.7504 TO 0.7534     *****
0.7534 TO 0.7565     **
0.7565 TO 0.7595     ***
0.7595 TO 0.7625     **
0.7625 TO 0.7655
0.7655 TO 0.7686
0.7686 TO 0.7716
0.7716 TO 0.7746     *
0.7746 TO 0.7776


*******************************************************************************************************************************************
*

          CONGRATULATIONS!  YOU HAVE  SUCCESSFULLY TRAVERSED THE PERILOUS PATH THROUGH KENO V IN   8.97750 MINUTES

*******************************************************************************************************************************************
*
```

6.6.10 Damaged Fuel Rods in a Rod Holder

This section contains a sample output file from the evaluation of 25 fuel rods in a rod holder in which up to 14 of the fuel rods are classified as damaged. The output file is shown in Figure 6.6.10-1.

Figure 6.6.10-1 Damaged BWR Rods in a Rod Holder

```
PRIMARY MODULE ACCESS AND INPUT RECORD ( SCALE DRIVER - 95/03/29 - 09:06:37 )
MODULE CSAS25 WILL BE CALLED
NAC-LWT, BWR, DAMAGED-SMALLER PIN SIZE, NO BASKET
27GROUPNDF4 LATTICECELL
UO2       1 0.95 293.0 92235 5.0 92238 95.0 END
H2O       2 1.0000 293.0 END
ZIRCALLOY 3 1.0000 293.0 END
H2O       4 1.0000 293.0 END
H2O       5 0.0001 293.0 END
PB        6 1.0000 293.0 END
H2O       7 0.0001 293.0 END
SS304     8 1.0000 293.0 END
END COMP
TRIANGPITCH 2.15289 0.7968 1 4 END
NAC-LWT, BWR, DAMAGED-SMALLER PIN SIZE, NO BASKET
READ PARAM RUN=YES PLT=NO TME=5000 GEN=803 NPG=1000 TBA=5 END PARAM
READ GEOM
UNIT 1
COM='LWR FUEL ROD-NO CLAD'
CYLINDER 1 1 0.3984 2P10.0000
CYLINDER 4 1 0.4049 2P10.0000
GLOBAL UNIT 2
CYLINDER 4 1 9.0166 2P10.0000
HOLE 1 0.0000 0.0000 0.0000
HOLE 1 2.1529 0.0000 0.0000
HOLE 1 1.0764 1.8645 0.0000
HOLE 1 -1.0764 1.8645 0.0000
HOLE 1 -2.1529 0.0000 0.0000
HOLE 1 -1.0764 -1.8645 0.0000
HOLE 1 1.0764 -1.8645 0.0000
HOLE 1 3.2293 -1.8645 0.0000
HOLE 1 4.3058 0.0000 0.0000
HOLE 1 3.2293 1.8645 0.0000
HOLE 1 2.1529 3.7289 0.0000
HOLE 1 0.0000 3.7289 0.0000
HOLE 1 -2.1529 3.7289 0.0000
HOLE 1 -3.2293 1.8645 0.0000
HOLE 1 -4.3058 0.0000 0.0000
HOLE 1 -3.2293 -1.8645 0.0000
HOLE 1 -2.1529 -3.7289 0.0000
HOLE 1 0.0000 -3.7289 0.0000
HOLE 1 2.1529 -3.7289 0.0000
HOLE 1 4.3058 -3.7289 0.0000
HOLE 1 5.3822 1.8645 0.0000
HOLE 1 1.0764 5.5934 0.0000
HOLE 1 -4.3058 3.7289 0.0000
HOLE 1 -5.3822 -1.8645 0.0000
HOLE 1 -1.0764 -5.5934 0.0000
HOLE 1 1.0764 -5.5934 0.0000
HOLE 1 4.3058 3.7289 0.0000
HOLE 1 3.2293 5.5934 0.0000
HOLE 1 -1.0764 5.5934 0.0000
HOLE 1 -4.3058 -3.7289 0.0000
HOLE 1 -3.2293 -5.5934 0.0000
HOLE 1 3.2293 -5.5934 0.0000
HOLE 1 5.3822 -1.8645 0.0000
HOLE 1 -3.2293 5.5934 0.0000
HOLE 1 -5.3822 1.8645 0.0000
HOLE 1 6.4587 0.0000 0.0000
HOLE 1 -6.4587 0.0000 0.0000
HOLE 1 0.0000 -7.4578 0.0000
HOLE 1 2.1529 -7.4578 0.0000
HOLE 1 4.3058 -7.4578 0.0000
HOLE 1 5.3822 -5.5934 0.0000
HOLE 1 6.4587 -3.7289 0.0000
HOLE 1 7.5351 -1.8645 0.0000
HOLE 1 8.6116 0.0000 0.0000
HOLE 1 7.5351 1.8645 0.0000
HOLE 1 6.4587 3.7289 0.0000
HOLE 1 5.3822 5.5934 0.0000
HOLE 1 4.3058 7.4578 0.0000
HOLE 1 2.1529 7.4578 0.0000
HOLE 1 0.0000 7.4578 0.0000
HOLE 1 -2.1529 7.4578 0.0000
HOLE 1 -4.3058 7.4578 0.0000
HOLE 1 -5.3822 5.5934 0.0000
HOLE 1 -6.4587 3.7289 0.0000
HOLE 1 -7.5351 1.8645 0.0000
HOLE 1 -8.6116 0.0000 0.0000
HOLE 1 -7.5351 -1.8645 0.0000
HOLE 1 -6.4587 -3.7289 0.0000
HOLE 1 -5.3822 -5.5934 0.0000
HOLE 1 -4.3058 -7.4578 0.0000
HOLE 1 -2.1529 -7.4578 0.0000
CYLINDER 5 1 16.9863 2P10.0000
CYLINDER 8 1 18.8976 2P10.0000
CYLINDER 6 1 33.5026 2P10.0000
CYLINDER 8 1 36.5506 2P10.0000
CYLINDER 7 1 49.2443 2P10.0000
CYLINDER 8 1 49.8221 2P10.0000
```

```
    CUBOID 5 1 4P49.8221 2P10.0000
    END GEOM
    READ BOUNDS ALL=MIR END BOUNDS
    READ PLOT
    TTL='XY SLICE OF CASK'
    SCR=YES PIC=MAT LPI=10
    XUL=-50.0 YUL=50.0 ZUL=0.0 XLR=50.0 YLR=-50.0 ZLR=0.0
    UAX=1.0 VDN=-1.0 NAX=1500 END
    END PLOT
    END DATA

  SECONDARY MODULE O0O0008   HAS BEEN CALLED.

  MODULE O0O0008   IS FINISHED. COMPLETION CODE     0. CPU TIME USED     0.33 (SECONDS).

  SECONDARY MODULE O0O0002   HAS BEEN CALLED.

  MODULE O0O0002   IS FINISHED. COMPLETION CODE     0. CPU TIME USED     2.30 (SECONDS).

  SECONDARY MODULE O0O0009   HAS BEEN CALLED.

  MODULE O0O0009   IS FINISHED. COMPLETION CODE     0. CPU TIME USED  1721.70 (SECONDS).

  MODULE CSAS25   IS FINISHED. COMPLETION CODE     0. CPU TIME USED  1725.59 (SECONDS).

THE FOLLOWING DATA CARDS PRECEDE AN = CARD

  EXECUTION TERMINATED DUE TO ERRORS

 CCCCCCCCCCC     SSSSSSSSSS      AAAAAAAAA      SSSSSSSSSS     22222222222    5555555555555
CCCCCCCCCCCCC   SSSSSSSSSSSS    AAAAAAAAAAA    SSSSSSSSSSSS   2222222222222   5555555555555
CC          CC  SS          SS  AA         AA  SS          SS  22          22  55
CC              SS              AA         AA  SS              22          22  55
CC              SS              AA         AA  SS              22          22  55
CC              SSSSSSSSSSSS    AAAAAAAAAAAAA  SSSSSSSSSSSS            22     555555555555
CC               SSSSSSSSSSSS   AAAAAAAAAAAAA   SSSSSSSSSSSS         22       5555555555555
CC                       SS  AA         AA              SS        22                  55
CC                       SS  AA         AA              SS      22                    55
CC          CC  SS       SS  AA         AA  SS          SS   22                55    55
CCCCCCCCCCCCC   SSSSSSSSSSSS  AA         AA  SSSSSSSSSSSS  2222222222222   5555555555555
 CCCCCCCCCCC     SSSSSSSSSS   AA         AA   SSSSSSSSSS   2222222222222    55555555555


 SSSSSSSSSS     CCCCCCCCCC      AAAAAAAAA     LL             EEEEEEEEEEEEE                  PPPPPPPPPPP     CCCCCCCCCC
SSSSSSSSSSSS   CCCCCCCCCCCCC    AAAAAAAAAAA    LL             EEEEEEEEEEEEE                  PPPPPPPPPPPP   CCCCCCCCCCCCC
SS         SS  CC          CC  AA         AA  LL             EE                             PP          PP  CC          CC
SS             CC              AA         AA  LL             EE                             PP          PP  CC
SS             CC              AA         AA  LL             EE                             PP          PP  CC
SSSSSSSSSSS    CC              AAAAAAAAAAAAA  LL             EEEEEEEEE      -------------   PPPPPPPPPPPP   CC
 SSSSSSSSSSS   CC              AAAAAAAAAAAAA  LL             EEEEEEEEE      -------------   PPPPPPPPPPP    CC
           SS  CC              AA         AA  LL             EE                             PP              CC
           SS  CC              AA         AA  LL             EE                             PP              CC
SS         SS  CC          CC  AA         AA  LL             EE                             PP              CC          CC
SSSSSSSSSSSS   CCCCCCCCCCCCC   AA         AA  LLLLLLLLLLLLL  EEEEEEEEEEEEE                  PP              CCCCCCCCCCCCC
 SSSSSSSSSS     CCCCCCCCCC    AA         AA  LLLLLLLLLLLLL  EEEEEEEEEEEEE                  PP               CCCCCCCCCC


   0000000           11                  //   22222222222    99999999999               //     0000000      33333333333
  000000000         111                  //   2222222222222  9999999999999             //    000000000     3333333333333
 00       00      1111                  //    22         22   99         99            //     00       00   33          33
00         00      11                  //                22   99         99           //      00         00            33
00         00      11                 //                 22   99         99          //       00         00           33
00         00      11                //                  22   9999999999999         //       00         00          333
00         00      11               //                22       999999999999        //        00         00          333
00         00      11              //              22                  99          //         00         00           33
00         00      11             //            22                    99         //          00         00           33
 00       00       11            //           22                      99        //            00       00    33         33
  000000000       11111111      //           2222222222222  9999999999999     //              000000000    3333333333333
   0000000        11111111     //            2222222222222  999999999999    //                0000000      33333333333


     11             11                          0000000      22222222222                    22222222222    33333333333
    111            111                        000000000    2222222222222                  2222222222222  3333333333333
   1111           1111            :::        00       00  22         22        :::       22         22  33          33
     11             11            :::       00         00            22        :::                 22            33
     11             11            :::       00         00            22        :::                 22            33
     11             11                      00         00          22                          22            333
     11             11                      00         00        22                          22              333
     11             11            :::       00         00      22              :::         22                 33
     11             11            :::       00         00    22                :::       22                   33
     11             11            :::        00       00   22                  :::      22                33          33
  11111111       11111111                    000000000   2222222222222                2222222222222  3333333333333
  11111111       11111111                     0000000    2222222222222                2222222222222   33333333333
```

```
 SSSSSSSSSS     CCCCCCCCCC      AAAAAAAA     LL             EEEEEEEEEEEE                 PPPPPPPPPPP     CCCCCCCCCC
SSSSSSSSSSSS   CCCCCCCCCCCC    AAAAAAAAAA    LL             EEEEEEEEEEEE                 PPPPPPPPPPPP   CCCCCCCCCCCC
SS          SS CC          CC  AA          AA  LL             EE                           PP          PP  CC          CC
SS             CC              AA          AA  LL             EE                           PP          PP  CC
SS             CC              AA          AA  LL             EE                           PP          PP  CC
SSSSSSSSSSSS   CC              AAAAAAAAAAAAAA  LL             EEEEEEEEE       -------------PPPPPPPPPPPP  CC
 SSSSSSSSSSSS  CC              AAAAAAAAAAAAAA  LL             EEEEEEEEE       -------------PPPPPPPPPPP   CC
          SS   CC              AA          AA  LL             EE                           PP              CC
          SS   CC              AA          AA  LL             EE                           PP              CC
SS        SS   CC          CC  AA          AA  LL             EE                           PP              CC          CC
SSSSSSSSSSSS   CCCCCCCCCCCCCC  AA          AA  LLLLLLLLLLLLL  EEEEEEEEEEEE                 PP              CCCCCCCCCCCCCC
 SSSSSSSSSS     CCCCCCCCCC    AA          AA  LLLLLLLLLLLLL  EEEEEEEEEEEE                 PP               CCCCCCCCCC
```

```
*******************************************************************************
*******************************************************************************
*******************************************************************************
*****                                                                     *****
*****                  PROGRAM VERIFICATION INFORMATION                   *****
*****                                                                     *****
*****                CODE SYSTEM:  SCALE-PC VERSION:  4.3                 *****
*****                                                                     *****
*******************************************************************************
*******************************************************************************
*****                                                                     *****
*****                                                                     *****
*****              PROGRAM:  CSAS                                         *****
*****                                                                     *****
*****        CREATION DATE:  03/08/96                                     *****
*****                                                                     *****
*****              VOLUME:   Eng                                          *****
*****                                                                     *****
*****              LIBRARY:  M:\SCALE43\WIN_NT\EXE                        *****
*****                                                                     *****
*****                                                                     *****
*****      PRODUCTION CODE:  CSAS                                         *****
*****                                                                     *****
*****              VERSION:  3.1                                          *****
*****                                                                     *****
*****              JOBNAME:  SCALE-PC                                     *****
*****                                                                     *****
*****    DATE OF EXECUTION:  01/29/03                                     *****
*****                                                                     *****
*****    TIME OF EXECUTION:  11:02:23                                     *****
*****                                                                     *****
*****                                                                     *****
*******************************************************************************
*******************************************************************************
*******************************************************************************
```

```
NAC-LWT, BWR, DAMAGED-SMALLER PIN SIZE, NO BASKET


**** PROBLEM PARAMETERS ****

LIB 27GROUPNDF4  LIBRARY
MXX            8 MIXTURES
MSC            8 COMPOSITION SPECIFICATIONS
IZM            2 MATERIAL ZONES
GE  LATTICECELL  GEOMETRY
MORE           0 0/1 DO NOT READ/READ OPTIONAL PARAMETER DATA
MSLN           0 FUEL SOLUTIONS


**** PROBLEM COMPOSITION DESCRIPTION ****

SC  UO2          STANDARD COMPOSITION
MX             1 MIXTURE NO.
VF        0.9500 VOLUME FRACTION
ROTH     10.9600 THEORETICAL DENSITY
NEL            2 NO. ELEMENTS
ICP            1 0/1 MIXTURE/COMPOUND
TEMP       293.0 DEG KELVIN
           92000      1.00 ATOM/MOLECULE
                           92235     5.000 WT%
                           92238    95.000 WT%
            8016      2.00 ATOMS/MOLECULE
END

SC  H2O          STANDARD COMPOSITION
MX             2 MIXTURE NO.
VF        1.0000 VOLUME FRACTION
ROTH      0.9982 THEORETICAL DENSITY
NEL            2 NO. ELEMENTS
ICP            1 0/1 MIXTURE/COMPOUND
TEMP       293.0 DEG KELVIN
            1001      2.00 ATOMS/MOLECULE
            8016      1.00 ATOM/MOLECULE
END

SC  ZIRCALLOY    STANDARD COMPOSITION
```

```
MX             3 MIXTURE NO.
VF        1.0000 VOLUME FRACTION
ROTH      6.5600 THEORETICAL DENSITY
NEL            1 NO. ELEMENTS
ICP            1 0/1 MIXTURE/COMPOUND
TEMP       293.0 DEG KELVIN
            40302      1.00 ATOM/MOLECULE
END

SC  H2O          STANDARD COMPOSITION
MX             4 MIXTURE NO.
VF        1.0000 VOLUME FRACTION
ROTH      0.9982 THEORETICAL DENSITY
NEL            2 NO. ELEMENTS
ICP            1 0/1 MIXTURE/COMPOUND
TEMP       293.0 DEG KELVIN
             1001      2.00 ATOMS/MOLECULE
             8016      1.00 ATOM/MOLECULE
END

SC  H2O          STANDARD COMPOSITION
MX             5 MIXTURE NO.
VF        0.0001 VOLUME FRACTION
ROTH      0.9982 THEORETICAL DENSITY
NEL            2 NO. ELEMENTS
ICP            1 0/1 MIXTURE/COMPOUND
TEMP       293.0 DEG KELVIN
             1001      2.00 ATOMS/MOLECULE
             8016      1.00 ATOM/MOLECULE
END

SC  PB           STANDARD COMPOSITION
MX             6 MIXTURE NO.
VF        1.0000 VOLUME FRACTION
ROTH     11.3440 THEORETICAL DENSITY
NEL            1 NO. ELEMENTS
ICP            1 0/1 MIXTURE/COMPOUND
TEMP       293.0 DEG KELVIN
            82000      1.00 ATOM/MOLECULE
END

SC  H2O          STANDARD COMPOSITION
MX             7 MIXTURE NO.
VF        0.0001 VOLUME FRACTION
ROTH      0.9982 THEORETICAL DENSITY
NEL            2 NO. ELEMENTS
ICP            1 0/1 MIXTURE/COMPOUND
TEMP       293.0 DEG KELVIN
             1001      2.00 ATOMS/MOLECULE
             8016      1.00 ATOM/MOLECULE
END

SC  SS304        STANDARD COMPOSITION
MX             8 MIXTURE NO.
VF        1.0000 VOLUME FRACTION
ROTH      7.9200 THEORETICAL DENSITY
NEL            4 NO. ELEMENTS
ICP            0 0/1 MIXTURE/COMPOUND
TEMP       293.0 DEG KELVIN
            24304    19.000 WT%
            25055     2.000 WT%
            26304    69.500 WT%
            28304     9.500 WT%
END


**** PROBLEM GEOMETRY ****

CTP TRIANGPITCH  CELL TYPE
PITCH     2.1529 CM CENTER TO CENTER SPACING
FUELOD    0.7968 CM FUEL DIAMETER OR SLAB THICKNESS
MFUEL          1 MIXTURE NO. OF FUEL
MMOD           4 MIXTURE NO. OF MODERATOR


ZONE SPECIFICATIONS FOR LATTICECELL GEOMETRY

               ZONE  1 IS FUEL
               ZONE  2 IS MOD
```

```
*********************************************************************************************************************
***                                                                                                               ***
***                            NAC-LWT, BWR, DAMAGED-SMALLER PIN SIZE, NO BASKET                                  ***
***                                                                                                               ***
*********************************************************************************************************************
*********************************************************************************************************************
***                                                                                                               ***
***                              ********** DATA LIBRARY INFORMATION **********                                  ***
***                                                                                                               ***
***          UNIT                                                VOLUME                                           ***
***         NUMBER               DATA SET NAME                   NAME        UNIT FUNCTION                     ***
***         ------               -------------                   ----        -------------                     ***
***                                                                                                               ***
***           89     M:\scale43\DATALIB\FT89F001                              STANDARD COMPOSITION LIBRARY      ***
***                                                                                                               ***
***           82     M:\scale43\DATALIB\FT82F001                              CROSS SECTION LIBRARY             ***
***                                                                                                               ***
***           11     D:\zjr\Lwt\Rods\Crit\DPSZ61\bwr_dpsz_100i_00             SHORT CROSS SECTION LIBRARY       ***
***                                                                                                               ***
***           90     D:\zjr\Lwt\Rods\Crit\DPSZ61\bwr_dpsz_100i_00             INPUT DATA DIRECT ACCESS          ***
***                                                                                                               ***
*********************************************************************************************************************
*********************************************************************************************************************
***                                                                                                               ***
***                                                                                                               ***
***                                    STANDARD COMPOSITION LIBRARY DATA                                          ***
***                                    ---------------------------------                                          ***
***                                                                                                               ***
***            UNIT NUMBER  :  89                                                                                 ***
***                                                                                                               ***
***            DATASET NAME :  M:\scale43\DATALIB\FT89F001                                                        ***
***                                                                                                               ***
***            LIBRARY TITLE:  SCALE-4 STANDARD COMPOSITION LIBRARY                                               ***
***                            637 STANDARD COMPOSITIONS, 490 NUCLIDES                                            ***
***                            90 ELEMENTS WITH VARIABLE ISOTOPIC DISTRBUTIONS.                                   ***
***                                                                                                               ***
***            CREATION DATE:   6/30/95                                                                           ***
***                                                                                                               ***
***                                                                                                               ***
***                                                                                                               ***
***                                      CROSS SECTION LIBRARY DATA                                               ***
***                                     ---------------------------                                               ***
***                                                                                                               ***
***            UNIT NUMBER  :  82                                                                                 ***
***                                                                                                               ***
***            DATASET NAME :  M:\scale43\DATALIB\FT82F001                                                        ***
***                                                                                                               ***
***            LIBRARY TITLE:  SCALE 4.2 - 27 GROUP NEUTRON GROUP LIBRARY                                         ***
***                               BASED ON ENDF-B VERSION 4 DATA                                                  ***
***                                  COMPILED FOR NRC     1/27/89                                               ***
***                                     LAST UPDATED                                          08/12/94  ***
***                                        L.M.PETRIE   -   ORNL                                                  ***
***                                                                                                               ***
***                                                                                                               ***
***                                                                                                               ***
***                                                                                                               ***
*********************************************************************************************************************
*********************************************************************************************************************

                        ........    0 IO'S WERE USED BEFORE READING KENO V DATA    ........

                        ........    0 IO'S WERE USED READING THE KENO V PARAMETER DATA    ........


                       *************** DATA READING COMPLETED ***************

                        ........    0 IO'S WERE USED PREPARING THE KENO V INPUT DATA    ........

                        ........    0 IO'S WERE USED LOADING THE KENO V DATA    ........

                        ........    0 IO'S WERE USED LOADING THE DATA    ........

                        ........    0 IO'S WERE USED CHECKING THE KENO V GEOMETRY DATA    ........
                        *****  RESTART DATA HAS BEEN WRITTEN ON UNIT 95  *****

                        ........    0 IO'S WERE USED WRITING THE KENO V - CSAS DATA    ........

                        ........    0 IO'S WERE USED PROCESSING CSAS INPUT DATA    ........


 CONTROL MODULE CSAS25   IS COMPLETE.
```

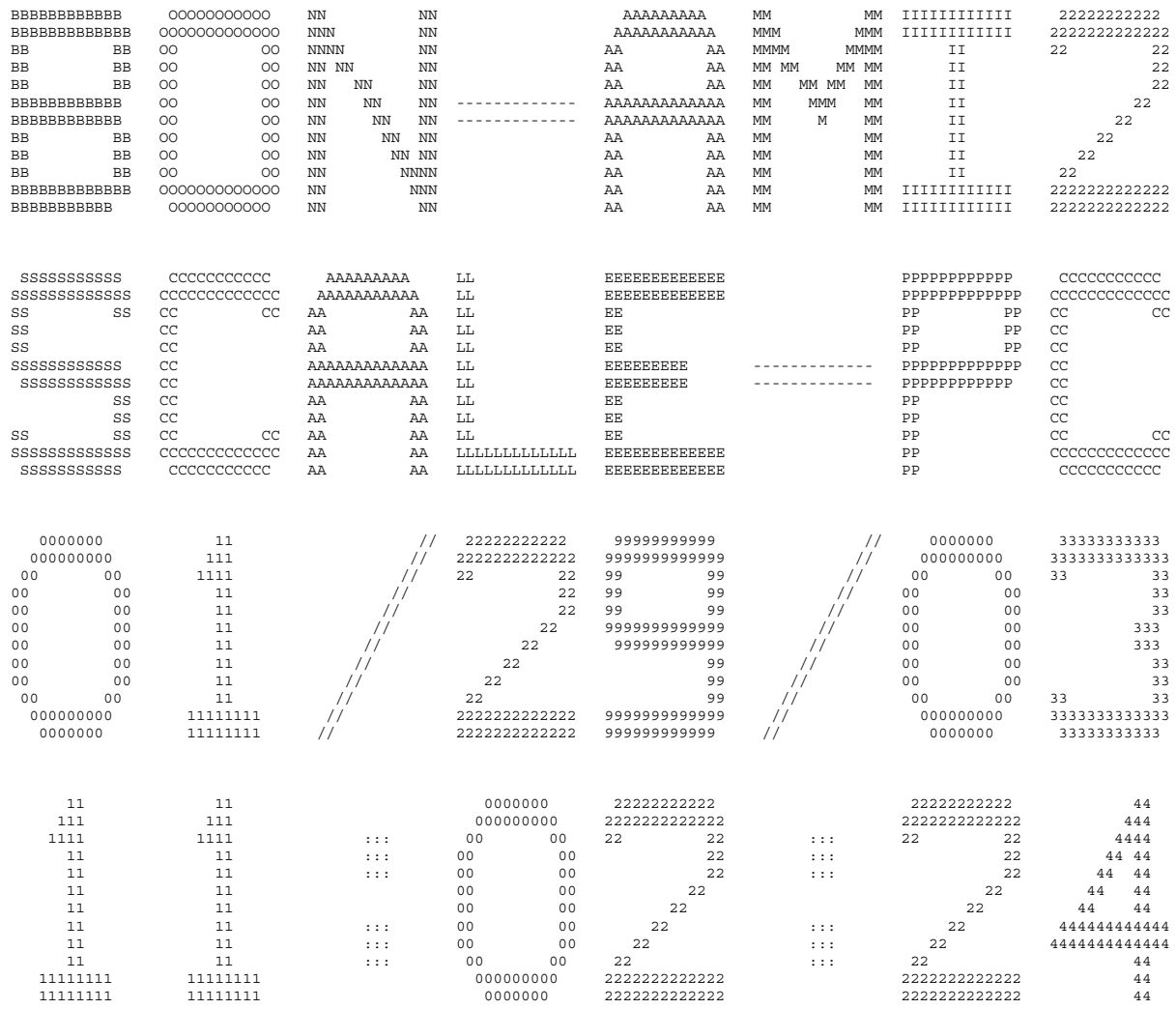

```
  SSSSSSSSSS     CCCCCCCCCC      AAAAAAAA     LL             EEEEEEEEEEEE                 PPPPPPPPPP     CCCCCCCCCC
 SSSSSSSSSSS   CCCCCCCCCCCC    AAAAAAAAAA    LL             EEEEEEEEEEEE                 PPPPPPPPPPP   CCCCCCCCCCCC
 SS          SS CC          CC AA          AA LL             EE                           PP          PP CC          CC
 SS             CC            AA          AA LL             EE                           PP          PP CC
 SS             CC            AA          AA LL             EE                           PP          PP CC
 SSSSSSSSSSS    CC            AAAAAAAAAAAA LL             EEEEEEEEE       -------------PPPPPPPPPPP  CC
  SSSSSSSSSSS   CC            AAAAAAAAAAAA LL             EEEEEEEEE       -------------PPPPPPPPPP   CC
           SS   CC            AA          AA LL             EE                           PP             CC
           SS   CC            AA          AA LL             EE                           PP             CC
 SS        SS   CC          CC AA          AA LL             EE                           PP             CC          CC
 SSSSSSSSSSSS   CCCCCCCCCCCC  AA          AA LLLLLLLLLLLL   EEEEEEEEEEEE                 PP             CCCCCCCCCCCC
  SSSSSSSSSS     CCCCCCCCCC   AA          AA LLLLLLLLLLLL   EEEEEEEEEEEE                 PP              CCCCCCCCCC
```

```
*******************************************************************************
*******************************************************************************
*******************************************************************************
*****                                                                     *****
*****                  PROGRAM VERIFICATION INFORMATION                   *****
*****                                                                     *****
*****                CODE SYSTEM:  SCALE-PC VERSION:  4.3                 *****
*****                                                                     *****
*******************************************************************************
*******************************************************************************
*****                                                                     *****
*****                                                                     *****
*****              PROGRAM:  O0O008                                       *****
*****                                                                     *****
*****        CREATION DATE:  09/15/95                                     *****
*****                                                                     *****
*****              VOLUME:   Eng                                          *****
*****                                                                     *****
*****              LIBRARY:  M:\SCALE43\WIN_NT\EXE                        *****
*****                                                                     *****
*****                                                                     *****
*****      PRODUCTION CODE:  BONAMI                                       *****
*****                                                                     *****
*****              VERSION:  3.0                                          *****
*****                                                                     *****
*****              JOBNAME:  SCALE-PC                                     *****
*****                                                                     *****
*****    DATE OF EXECUTION:  01/29/03                                     *****
*****                                                                     *****
*****    TIME OF EXECUTION:  11:02:24                                     *****
*****                                                                     *****
*****                                                                     *****
*******************************************************************************
*******************************************************************************
*******************************************************************************
```

```
LOGICAL ASSIGNMENTS

MASTER LIBRARY   11
WORKING LIBRARY   0
SCRATCH FILE     18
NEW LIBRARY       1

P R O B L E M   D E S C R I P T I O N

IGR--GEOMETRY (0/1/2/3--INF MED/SLAB/CYL/SPHERE               2

IZM--NUMBER OF ZONES OR MATERIAL REGIONS                      8

MS--MIXING TABLE LENGTH                                      17

IBL--SHIELDED CROSS SECTION EDIT OPTION (0/1--NO/YES)         0

IBR--BONDARENKO FACTOR EDIT OPTION (0/1--NO/YES)              0

ISSOPT--DANCOFF FACTOR OPTION                                 0

CONVERGENCE CRITERION    1.00000E-03

GEOMETRY CORRECTION FACTOR FOR WIGNER RATIONAL APPROXIMATION  1.350E+00

        3Q ARRAY HAS     17 ENTRIES.

        4Q ARRAY HAS     17 ENTRIES.

        5Q ARRAY HAS     17 ENTRIES.

        6Q ARRAY HAS      8 ENTRIES.

        7Q ARRAY HAS      8 ENTRIES.

        8Q ARRAY HAS      8 ENTRIES.

        9Q ARRAY HAS      8 ENTRIES.

       10Q ARRAY HAS     17 ENTRIES.
```

```
       11Q ARRAY HAS      8 ENTRIES.

M I X I N G   T A B L E

ENTRY   MIXTURE   ISOTOPE   NUMBER DENSITY   NEW IDENTIFIER
   1       1        92235     1.17578E-03          1092235
   2       1        92238     2.20577E-02          1092238
   3       1         8016     4.64669E-02          1008016
   4       2         8016     3.33846E-02          2008016
   5       4         8016     3.33846E-02          4008016
   6       5         8016     3.33846E-06          5008016
   7       7         8016     3.33846E-06          7008016
   8       2         1001     6.67692E-02          2001001
   9       4         1001     6.67692E-02          4001001
  10       5         1001     6.67692E-06          5001001
  11       7         1001     6.67692E-06          7001001
  12       3        40302     4.33078E-02          3040302
  13       6        82000     3.29690E-02          6082000
  14       8        24304     1.74286E-02          8024304
  15       8        25055     1.73633E-03          8025055
  16       8        26304     5.93579E-02          8026304
  17       8        28304     7.72070E-03          8028304

GEOMETRY AND MATERIAL DESCRIPTION

ZONE   MIXTURE   OUTER DIMENSION   TEMPERATURE       EXTRA XS   TYPE (0/1--FUEL/MOD)
   1       1          3.98400E-01    2.93000E+02    1.83118E+00             0
   2       4          1.13035E+00    2.93000E+02    0.00000E+00             0
   3       2          6.13035E+00    2.93000E+02    0.00000E+00             0
   4       3          1.11303E+01    2.93000E+02    0.00000E+00             0
   5       5          1.61303E+01    2.93000E+02    0.00000E+00             0
   6       6          2.11303E+01    2.93000E+02    0.00000E+00             0
   7       7          2.61303E+01    2.93000E+02    0.00000E+00             0
   8       8          3.11303E+01    2.93000E+02    0.00000E+00             0
     3698 LOCATIONS OF   100000 AVAILABLE ARE REQUIRED TO MAKE A NEW MASTER CONTAINING THE SELF-SHIELDED VALUES

NO NUCLIDES IN YOUR PROBLEM HAVE BONDARENKO FACTOR DATA**BONAMI WILL COPY FROM LOGICAL 11 TO LOGICAL  1

     SCALE 4.2 - 27 GROUP NEUTRON GROUP LIBRARY
        BASED ON ENDF-B VERSION 4 DATA
           COMPILED FOR NRC     1/27/89
              LAST UPDATED                                                08/12/94
                 L.M.PETRIE   -   ORNL
         TAPE ID                              4321          NUMBER OF NUCLIDES                    17
         NUMBER OF NEUTRON GROUPS               27          NUMBER OF GAMMA GROUPS                 0
         FIRST THERMAL GROUP                    15          LOGICAL UNIT                           1
                                    TABLE OF CONTENTS
        HYDROGEN       ENDF/B-IV MAT 1269/THRM1002             UPDATED 08/12/94        ID   2001001
        HYDROGEN       ENDF/B-IV MAT 1269/THRM1002             UPDATED 08/12/94        ID   4001001
        HYDROGEN       ENDF/B-IV MAT 1269/THRM1002             UPDATED 08/12/94        ID   5001001
        HYDROGEN       ENDF/B-IV MAT 1269/THRM1002             UPDATED 08/12/94        ID   7001001
        OXYGEN-16      ENDF/B-IV MAT 1276                      UPDATED 08/12/94        ID   1008016
        OXYGEN-16      ENDF/B-IV MAT 1276                      UPDATED 08/12/94        ID   2008016
        OXYGEN-16      ENDF/B-IV MAT 1276                      UPDATED 08/12/94        ID   4008016
        OXYGEN-16      ENDF/B-IV MAT 1276                      UPDATED 08/12/94        ID   5008016
        OXYGEN-16      ENDF/B-IV MAT 1276                      UPDATED 08/12/94        ID   7008016
       CR 1191 WT SS-304(1/EST) P-3 293K SP=5+4(42375)'        UPDATED 08/12/94        ID   8024304
        MANGANESE-55   ENDF/B-IV MAT 1197                      UPDATED 08/12/94        ID   8025055
       FE 1192 WT SS-304(1/EST) P-3 293K SP=5+4(42375)'        UPDATED 08/12/94        ID   8026304
       NI 1190 WT SS-304(1/EST) P-3 293K SP=5+4(42375)'        UPDATED 08/12/94        ID   8028304
        ZIRCALLOY      ENDF/B-IV MAT 1284                      UPDATED 08/12/94        ID   3040302
       PB   1288 218NGP 042375 P-3 293K                        UPDATED 08/12/94        ID   6082000
        URANIUM-235    ENDF/B-IV MAT 1261                      UPDATED 08/12/94        ID   1092235
        URANIUM-238    ENDF/B-IV MAT 1262                      UPDATED 08/12/94        ID   1092238

         TAPE COPY USED      0 I/O'S, AND TOOK    0.11 SECONDS
```

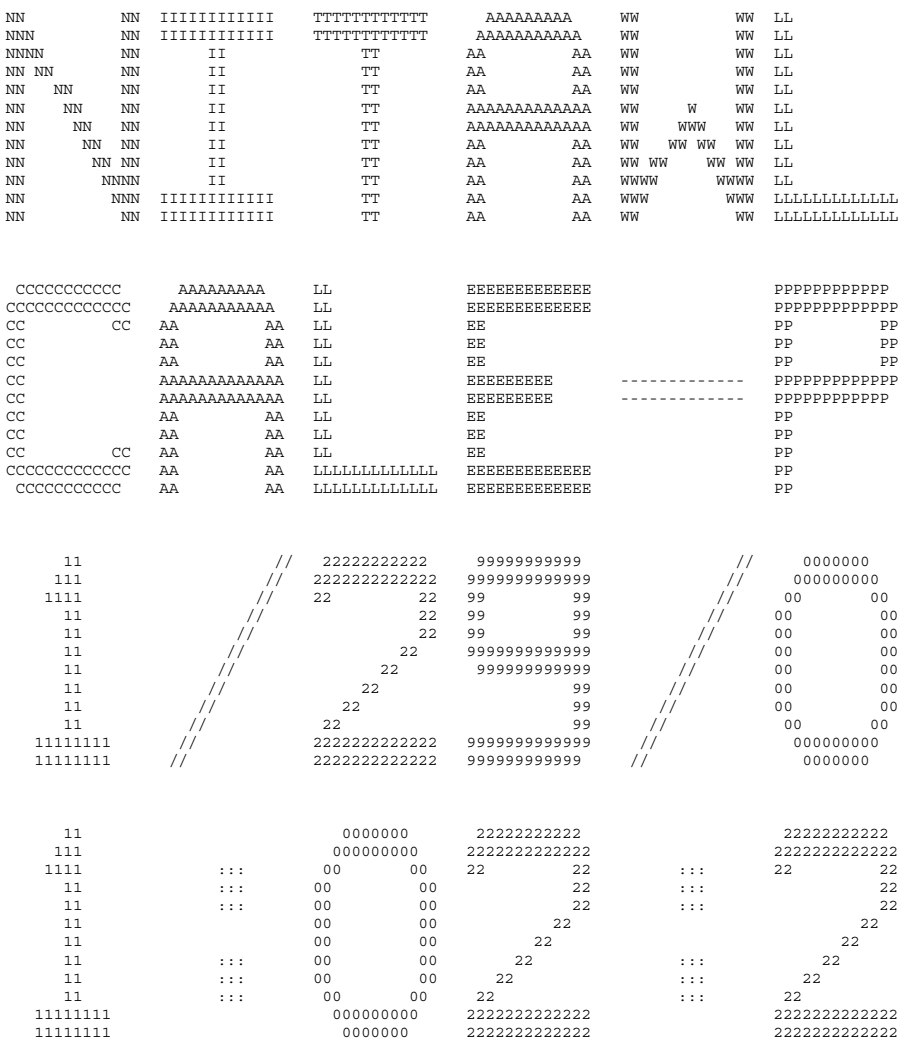
NN NN IIIIIIIIIIII TTTTTTTTTTTT AAAAAAAAA WW WW LL
NNN NN IIIIIIIIIIII TTTTTTTTTTTT AAAAAAAAAAA WW WW LL
NNNN NN II TT AA AA WW WW LL
NN NN NN II TT AA AA WW WW LL
NN NN NN II TT AA AA WW WW LL
NN NN NN II TT AAAAAAAAAAAAA WW W WW LL
NN NN NN II TT AAAAAAAAAAAAA WW WWW WW LL
NN NN NN II TT AA AA WW WW WW WW LL
NN NN NN II TT AA AA WW WW WW LL
NN NNNN II TT AA AA WWWW WWWW LL
NN NNN IIIIIIIIIIII TT AA AA WWW WWW LLLLLLLLLLLL
NN NN IIIIIIIIIIII TT AA AA WW WW LLLLLLLLLLLL
SSSSSSSSSS CCCCCCCCCC AAAAAAAAA LL EEEEEEEEEEEE PPPPPPPPPPP CCCCCCCCCC
SSSSSSSSSSS CCCCCCCCCCCC AAAAAAAAAA LL EEEEEEEEEEEE PPPPPPPPPPPP CCCCCCCCCCCC
SS SS CC CC AA AA LL EE PP PP CC CC
SS CC AA AA LL EE PP PP CC
SS CC AA AA LL EE PP PP CC
SSSSSSSSSSS CC AAAAAAAAAAAAA LL EEEEEEEEE ------------ PPPPPPPPPPPP CC
SSSSSSSSSSS CC AAAAAAAAAAAAA LL EEEEEEEEE ------------ PPPPPPPPPPP CC
SS CC AA AA LL EE PP CC
SS CC AA AA LL EE PP CC
SS SS CC CC AA AA LL EE PP CC CC
SSSSSSSSSSSS CCCCCCCCCCCC AA AA LLLLLLLLLLLL EEEEEEEEEEEE PP CCCCCCCCCCCC
SSSSSSSSSS CCCCCCCCCC AA AA LLLLLLLLLLLL EEEEEEEEEEEE PP CCCCCCCCCC
0000000 11 // 22222222222 99999999999 // 0000000 33333333333
000000000 111 // 2222222222222 9999999999999 // 000000000 3333333333333
00 00 1111 // 22 22 99 99 // 00 00 33 33
00 00 11 // 22 99 99 // 00 00 33
00 00 11 // 22 99 99 // 00 00 33
00 00 11 // 22 9999999999999 // 00 00 333
00 00 11 // 22 999999999999 // 00 00 333
00 00 11 // 22 99 // 00 00 33
00 00 11 // 22 99 // 00 00 33
00 00 11 // 22 99 // 00 00 33 33
000000000 11111111 // 2222222222222 9999999999999 // 000000000 3333333333333
0000000 11111111 // 2222222222222 999999999999 // 0000000 33333333333
11 11 0000000 22222222222 22222222222 5555555555555
111 111 000000000 2222222222222 2222222222222 5555555555555
1111 1111 ::: 00 00 22 22 ::: 22 22 55
11 11 ::: 00 00 22 ::: 22 55
11 11 ::: 00 00 22 ::: 22 55
11 11 00 00 22 22 555555555555
11 11 00 00 22 22 5555555555555
11 11 ::: 00 00 22 ::: 22 55
11 11 ::: 00 00 22 ::: 22 55
11 11 ::: 00 00 22 ::: 22 55 55
11111111 11111111 000000000 2222222222222 2222222222222 5555555555555
11111111 11111111 0000000 2222222222222 2222222222222 55555555555

```
   SSSSSSSSSS     CCCCCCCCCC      AAAAAAAA     LL             EEEEEEEEEEEE                 PPPPPPPPPP     CCCCCCCCCC
  SSSSSSSSSSS   CCCCCCCCCCCC    AAAAAAAAAA    LL             EEEEEEEEEEEE                 PPPPPPPPPPP   CCCCCCCCCCCC
  SS          SS  CC          CC  AA          AA  LL             EE                           PP          PP  CC          CC
  SS              CC              AA          AA  LL             EE                           PP          PP  CC
  SS              CC              AA          AA  LL             EE                           PP          PP  CC
  SSSSSSSSSSS     CC              AAAAAAAAAAAA  LL             EEEEEEEEE       -------------  PPPPPPPPPPP  CC
   SSSSSSSSSSS    CC              AAAAAAAAAAAA  LL             EEEEEEEEE       -------------  PPPPPPPPPP   CC
            SS    CC              AA          AA  LL             EE                           PP           CC
            SS    CC              AA          AA  LL             EE                           PP           CC
  SS          SS  CC          CC  AA          AA  LL             EE                           PP           CC          CC
  SSSSSSSSSSSS    CCCCCCCCCCCC    AA          AA  LLLLLLLLLLLL   EEEEEEEEEEEE                 PP           CCCCCCCCCCCC
   SSSSSSSSSS      CCCCCCCCCC     AA          AA  LLLLLLLLLLLL   EEEEEEEEEEEE                 PP            CCCCCCCCCC
```

```
                    ********************************************************************************
                    ********************************************************************************
                    ********************************************************************************
                    *****                                                                        *****
                    *****                  PROGRAM VERIFICATION INFORMATION                      *****
                    *****                                                                        *****
                    *****                CODE SYSTEM:  SCALE-PC VERSION:  4.3                    *****
                    *****                                                                        *****
                    ********************************************************************************
                    ********************************************************************************
                    *****                                                                        *****
                    *****                                                                        *****
                    *****              PROGRAM:  O0O002                                          *****
                    *****                                                                        *****
                    *****        CREATION DATE:  09/28/95                                        *****
                    *****                                                                        *****
                    *****              VOLUME:   Eng                                             *****
                    *****                                                                        *****
                    *****              LIBRARY:  M:\SCALE43\WIN_NT\EXE                           *****
                    *****                                                                        *****
                    *****                                                                        *****
                    *****      PRODUCTION CODE:  NITAWL                                          *****
                    *****                                                                        *****
                    *****              VERSION:  3.0                                             *****
                    *****                                                                        *****
                    *****              JOBNAME:  SCALE-PC                                        *****
                    *****                                                                        *****
                    *****    DATE OF EXECUTION:  01/29/03                                        *****
                    *****                                                                        *****
                    *****    TIME OF EXECUTION:  11:02:25                                        *****
                    *****                                                                        *****
                    *****                                                                        *****
                    ********************************************************************************
                    ********************************************************************************
                    ********************************************************************************

       -1Q ARRAY HAS      1 ENTRIES.

        0Q ARRAY HAS      9 ENTRIES.

        1Q ARRAY HAS     12 ENTRIES.

SELECT 17 NUCLIDES FROM THE MASTER  LIBRARY ON LOGICAL  1
        0 NUCLIDES FROM THE WORKING LIBRARY ON LOGICAL  2
        0 NUCLIDES FROM THE WORKING LIBRARY ON LOGICAL  3
          TO CREATE THE NEW WORKING LIBRARY ON LOGICAL  4

        4 RESONANCE CALCULATIONS HAVE BEEN REQUESTED
       -1 OUTPUT OPTION FOR AMPX FORMATTED CROSS SECTION DATA
     2001 MAXIMUM NUMBER OF RESONANCE MESH INTERVALS
        2 ORDER OF RESONANCE LEVEL PROCESSING

THE STORAGE ALLOCATED FOR THIS CASE IS    100000 WORDS

        2Q ARRAY HAS     17 ENTRIES.

        3Q ARRAY HAS     60 ENTRIES.

        4Q ARRAY HAS     17 ENTRIES.

 GENERAL INFORMATION CONCERNING CROSS SECTION LIBRARY
   TAPE IDENTIFICATION NUMBER               4321
   NUMBER OF NUCLIDES ON TAPE                 17
   NUMBER OF NEUTRON ENERGY GROUPS            27
   FIRST THERMAL NEUTRON ENERGY GROUP         15
   NUMBER OF GAMMA ENERGY GROUPS               0

   DIRECT ACCESS UNIT NUMBER  9 REQUIRES 117 BLOCKS OF LENGTH  1680 WORDS
 XSDRN TAPE   4321
                      SCALE 4.2 - 27 GROUP NEUTRON GROUP LIBRARY
                         BASED ON ENDF-B VERSION 4 DATA
                            COMPILED FOR NRC     1/27/89
                               LAST UPDATED                                          08/12/94
                                  L.M.PETRIE   -   ORNL

 NUCLIDES FROM XSDRN TAPE
    1     HYDROGEN       ENDF/B-IV MAT 1269/THRM1002            UPDATED 08/12/94     2001001
```

```
    2     HYDROGEN       ENDF/B-IV MAT 1269/THRM1002             UPDATED 08/12/94     4001001
    3     HYDROGEN       ENDF/B-IV MAT 1269/THRM1002             UPDATED 08/12/94     5001001
    4     HYDROGEN       ENDF/B-IV MAT 1269/THRM1002             UPDATED 08/12/94     7001001
    5     OXYGEN-16      ENDF/B-IV MAT 1276                      UPDATED 08/12/94     1008016
    6     OXYGEN-16      ENDF/B-IV MAT 1276                      UPDATED 08/12/94     2008016
    7     OXYGEN-16      ENDF/B-IV MAT 1276                      UPDATED 08/12/94     4008016
    8     OXYGEN-16      ENDF/B-IV MAT 1276                      UPDATED 08/12/94     5008016
    9     OXYGEN-16      ENDF/B-IV MAT 1276                      UPDATED 08/12/94     7008016
   10    CR 1191 WT SS-304(1/EST) P-3 293K SP=5+4(42375)'        UPDATED 08/12/94     8024304
   11     MANGANESE-55   ENDF/B-IV MAT 1197                      UPDATED 08/12/94     8025055
   12    FE 1192 WT SS-304(1/EST) P-3 293K SP=5+4(42375)'        UPDATED 08/12/94     8026304
   13    NI 1190 WT SS-304(1/EST) P-3 293K SP=5+4(42375)'        UPDATED 08/12/94     8028304
   14     ZIRCALLOY      ENDF/B-IV MAT 1284                      UPDATED 08/12/94     3040302
   15    PB   1288 218NGP 042375 P-3 293K                       UPDATED 08/12/94     6082000
   16     URANIUM-235    ENDF/B-IV MAT 1261                      UPDATED 08/12/94     1092235
   17     URANIUM-238    ENDF/B-IV MAT 1262                      UPDATED 08/12/94     1092238

 HYDROGEN       ENDF/B-IV MAT 1269/THRM1002             UPDATED 08/12/94   2001001     TEMPERATURE=   293.00
                                                             PROCESS NUMBER 1007 IS AT TEMPERATURE=   293.00

 HYDROGEN       ENDF/B-IV MAT 1269/THRM1002             UPDATED 08/12/94   4001001     TEMPERATURE=   293.00
                                                             PROCESS NUMBER 1007 IS AT TEMPERATURE=   293.00

 HYDROGEN       ENDF/B-IV MAT 1269/THRM1002             UPDATED 08/12/94   5001001     TEMPERATURE=   293.00
                                                             PROCESS NUMBER 1007 IS AT TEMPERATURE=   293.00

 HYDROGEN       ENDF/B-IV MAT 1269/THRM1002             UPDATED 08/12/94   7001001     TEMPERATURE=   293.00
                                                             PROCESS NUMBER 1007 IS AT TEMPERATURE=   293.00

 OXYGEN-16      ENDF/B-IV MAT 1276                      UPDATED 08/12/94   1008016     TEMPERATURE=   293.00
                                                             PROCESS NUMBER 1007 IS AT TEMPERATURE=   293.00

 OXYGEN-16      ENDF/B-IV MAT 1276                      UPDATED 08/12/94   2008016     TEMPERATURE=   293.00
                                                             PROCESS NUMBER 1007 IS AT TEMPERATURE=   293.00

 OXYGEN-16      ENDF/B-IV MAT 1276                      UPDATED 08/12/94   4008016     TEMPERATURE=   293.00
                                                             PROCESS NUMBER 1007 IS AT TEMPERATURE=   293.00

 OXYGEN-16      ENDF/B-IV MAT 1276                      UPDATED 08/12/94   5008016     TEMPERATURE=   293.00
                                                             PROCESS NUMBER 1007 IS AT TEMPERATURE=   293.00

 OXYGEN-16      ENDF/B-IV MAT 1276                      UPDATED 08/12/94   7008016     TEMPERATURE=   293.00
                                                             PROCESS NUMBER 1007 IS AT TEMPERATURE=   293.00

CR 1191 WT SS-304(1/EST) P-3 293K SP=5+4(42375)'        UPDATED 08/12/94   8024304     TEMPERATURE=   293.00
                                                             PROCESS NUMBER 1007 IS AT TEMPERATURE=   293.00

 MANGANESE-55   ENDF/B-IV MAT 1197                      UPDATED 08/12/94   8025055     TEMPERATURE=   293.00

GEOMETRY HAS BEEN SET TO HOMOGENEOUS AS LBAR IS  0.0000E+00

RESONANCE DATA FOR THIS NUCLIDE

MASS NUMBER (A)          =    54.466              TEMPERATURE(KELVIN)       =   293.000

POTENTIAL SCATTER SIGMA  =     2.590              LUMPED NUCLEAR DENSITY    = 1.7363295E-03

SPIN FACTOR (G)          =    14.448              LUMP DIMENSION (A-BAR)    = 0.0000000E+00

INNER RADIUS             = 0.0000000E+00         DANCOFF CORRECTION (C)    = 0.0000000E+00

THE ABSORBER WILL BE TREATED BY THE NORDHEIM INTEGRAL METHOD.

MASS OF MODERATOR-1    =    55.845              SIGMA(PER ABSORBER ATOM)= 3.4663022E+02

MODERATOR-1 WILL BE TREATED BY THE NORDHEIM INTEGRAL METHOD.

MASS OF MODERATOR-2    =    55.925              SIGMA(PER ABSORBER ATOM)= 1.2557598E+02

MODERATOR-2 WILL BE TREATED BY THE NORDHEIM INTEGRAL METHOD.

THIS RESONANCE MATERIAL WILL BE TREATED AS A 0-DIMENSIONAL OBJECT.

VOLUME FRACTION OF LUMP IN CELL USED TO ACCOUNT FOR SPATIAL SELF-SHIELDING=1.00000

GROUP        RES ABS         RES FISS        RES SCAT
  8      -5.518788E-04    0.000000E+00   -3.944190E-01
  9      -2.797993E-03    0.000000E+00   -2.293471E+00
 10      -3.291452E-01    0.000000E+00   -3.820862E+01
 11      -2.680562E+00    0.000000E+00   -1.159996E+02

EXCESS RESONANCE INTEGRALS

                 RESOLVED

ABSORPTION       3.33719E+00
FISSION          0.00000E+00
                                                             PROCESS NUMBER 1007 IS AT TEMPERATURE=   293.00

FE 1192 WT SS-304(1/EST) P-3 293K SP=5+4(42375)'        UPDATED 08/12/94   8026304     TEMPERATURE=   293.00
                                                             PROCESS NUMBER 1007 IS AT TEMPERATURE=   293.00

NI 1190 WT SS-304(1/EST) P-3 293K SP=5+4(42375)'        UPDATED 08/12/94   8028304     TEMPERATURE=   293.00
                                                             PROCESS NUMBER 1007 IS AT TEMPERATURE=   293.00
```

```
 ZIRCALLOY      ENDF/B-IV MAT 1284                     UPDATED 08/12/94   3040302     TEMPERATURE=   293.00

GEOMETRY HAS BEEN SET TO HOMOGENEOUS AS LBAR IS  0.0000E+00

RESONANCE DATA FOR THIS NUCLIDE

MASS NUMBER (A)          =    90.436               TEMPERATURE(KELVIN)       =   293.000

POTENTIAL SCATTER SIGMA  =     6.385               LUMPED NUCLEAR DENSITY    = 4.3307818E-02

SPIN FACTOR (G)          =     1.079               LUMP DIMENSION (A-BAR)    = 0.0000000E+00

INNER RADIUS             = 0.0000000E+00          DANCOFF CORRECTION (C)    = 0.0000000E+00

THE ABSORBER WILL BE TREATED BY THE NORDHEIM INTEGRAL METHOD.

THIS RESONANCE MATERIAL WILL BE TREATED AS A 0-DIMENSIONAL OBJECT.

VOLUME FRACTION OF LUMP IN CELL USED TO ACCOUNT FOR SPATIAL SELF-SHIELDING=1.00000

GROUP        RES ABS         RES FISS        RES SCAT
  8      -2.531564E-03    0.000000E+00   -2.069429E+00
  9      -7.143981E-02    0.000000E+00   -3.266492E+00
 10      -7.703653E-02    0.000000E+00   -1.746459E+00
 11      -1.954898E-01    0.000000E+00   -8.103043E-01

EXCESS RESONANCE INTEGRALS

                 RESOLVED

ABSORPTION       1.75363E-01
FISSION          0.00000E+00
                                                      PROCESS NUMBER 1007 IS AT TEMPERATURE=   293.00

PB   1288 218NGP 042375 P-3 293K                     UPDATED 08/12/94   6082000     TEMPERATURE=   293.00
                                                      PROCESS NUMBER 1007 IS AT TEMPERATURE=   293.00

 URANIUM-235    ENDF/B-IV MAT 1261                     UPDATED 08/12/94   1092235     TEMPERATURE=   293.00

RESONANCE DATA FOR THIS NUCLIDE

MASS NUMBER (A)          =   233.025               TEMPERATURE(KELVIN)       =   293.000

POTENTIAL SCATTER SIGMA  =    11.500               LUMPED NUCLEAR DENSITY    = 1.1757837E-03

SPIN FACTOR (G)          = 15171.100               LUMP DIMENSION (A-BAR)    = 3.9840001E-01

INNER RADIUS             = 0.0000000E+00          DANCOFF CORRECTION (C)    = 2.8592249E-02

THE ABSORBER WILL BE TREATED BY THE NORDHEIM INTEGRAL METHOD.

MASS OF MODERATOR-1    =    15.991               SIGMA(PER ABSORBER ATOM)= 1.5361255E+02

MODERATOR-1 WILL BE TREATED BY THE NORDHEIM INTEGRAL METHOD.

MASS OF MODERATOR-2    =   238.051               SIGMA(PER ABSORBER ATOM)= 2.3124234E+02

MODERATOR-2 WILL BE TREATED BY THE NORDHEIM INTEGRAL METHOD.

THIS RESONANCE MATERIAL WILL BE TREATED AS A 2-DIMENSIONAL OBJECT.

VOLUME FRACTION OF LUMP IN CELL USED TO ACCOUNT FOR SPATIAL SELF-SHIELDING=1.00000

GROUP        RES ABS         RES FISS        RES SCAT
 12      -3.622922E+00   -2.226327E+00   -8.895820E-02
 13      -1.149924E+01   -5.618038E+00   -2.515855E-01
 14      -8.514027E+00   -5.049669E+00   -5.936050E-02
 15      -4.509439E-04   -3.428886E-04    3.897996E-06

EXCESS RESONANCE INTEGRALS

                 RESOLVED

ABSORPTION       2.00620E+02
FISSION          1.20254E+02
                                                      PROCESS NUMBER 1007 IS AT TEMPERATURE=   293.00

 URANIUM-238    ENDF/B-IV MAT 1262                     UPDATED 08/12/94   1092238     TEMPERATURE=   293.00

RESONANCE DATA FOR THIS NUCLIDE

MASS NUMBER (A)          =   236.006               TEMPERATURE(KELVIN)       =   293.000

POTENTIAL SCATTER SIGMA  =    10.599               LUMPED NUCLEAR DENSITY    = 2.2057686E-02

SPIN FACTOR (G)          =   656.527               LUMP DIMENSION (A-BAR)    = 3.9840001E-01

INNER RADIUS             = 0.0000000E+00          DANCOFF CORRECTION (C)    = 2.8592249E-02

THE ABSORBER WILL BE TREATED BY THE NORDHEIM INTEGRAL METHOD.

MASS OF MODERATOR-1    =    15.991               SIGMA(PER ABSORBER ATOM)= 8.1883087E+00

MODERATOR-1 WILL BE TREATED BY THE NORDHEIM INTEGRAL METHOD.
```

```
MASS OF MODERATOR-2    =   235.044              SIGMA(PER ABSORBER ATOM)= 6.3446152E-01

MODERATOR-2 WILL BE TREATED BY THE NORDHEIM INTEGRAL METHOD.

THIS RESONANCE MATERIAL WILL BE TREATED AS A 2-DIMENSIONAL OBJECT.

VOLUME FRACTION OF LUMP IN CELL USED TO ACCOUNT FOR SPATIAL SELF-SHIELDING=1.00000

GROUP        RES ABS         RES FISS        RES SCAT
  9      -4.049280E-02    0.000000E+00   -4.083463E-01
 10      -1.062502E+00   -1.845288E-05   -6.511882E+00
 11      -9.720816E+00    0.000000E+00   -2.674516E+01
 12      -4.265190E+01    0.000000E+00   -4.960673E+01
 13      -5.341822E+01    0.000000E+00   -1.754942E+01
 14      -1.033681E+02    0.000000E+00   -6.023543E+00
 15      -5.894847E-07    0.000000E+00    1.142021E-06

EXCESS RESONANCE INTEGRALS

                 RESOLVED

ABSORPTION       2.10256E+01
FISSION          5.02353E-04
                                                    PROCESS NUMBER 1007 IS AT TEMPERATURE=   293.00
     THIS XSDRN WORKING TAPE WAS CREATED 01/29/03 AT 11:02:25
     THE TITLE OF THE PARENT CASE IS AS FOLLOWS
     SCALE 4.2 - 27 GROUP NEUTRON GROUP LIBRARY
        BASED ON ENDF-B VERSION 4 DATA
           COMPILED FOR NRC     1/27/89
         TAPE ID                          4321          NUMBER OF NUCLIDES                   17
         NUMBER OF NEUTRON GROUPS           27          NUMBER OF GAMMA GROUPS                0
         FIRST THERMAL GROUP                15          LOGICAL UNIT                          4
                                  TABLE OF CONTENTS
        HYDROGEN       ENDF/B-IV MAT 1269/THRM1002          UPDATED 08/12/94        ID   2001001
        HYDROGEN       ENDF/B-IV MAT 1269/THRM1002          UPDATED 08/12/94        ID   4001001
        HYDROGEN       ENDF/B-IV MAT 1269/THRM1002          UPDATED 08/12/94        ID   5001001
        HYDROGEN       ENDF/B-IV MAT 1269/THRM1002          UPDATED 08/12/94        ID   7001001
        OXYGEN-16      ENDF/B-IV MAT 1276                   UPDATED 08/12/94        ID   1008016
        OXYGEN-16      ENDF/B-IV MAT 1276                   UPDATED 08/12/94        ID   2008016
        OXYGEN-16      ENDF/B-IV MAT 1276                   UPDATED 08/12/94        ID   4008016
        OXYGEN-16      ENDF/B-IV MAT 1276                   UPDATED 08/12/94        ID   5008016
        OXYGEN-16      ENDF/B-IV MAT 1276                   UPDATED 08/12/94        ID   7008016
       CR 1191 WT SS-304(1/EST) P-3 293K SP=5+4(42375)'     UPDATED 08/12/94        ID   8024304
        MANGANESE-55   ENDF/B-IV MAT 1197                   UPDATED 08/12/94        ID   8025055
       FE 1192 WT SS-304(1/EST) P-3 293K SP=5+4(42375)'     UPDATED 08/12/94        ID   8026304
       NI 1190 WT SS-304(1/EST) P-3 293K SP=5+4(42375)'     UPDATED 08/12/94        ID   8028304
        ZIRCALLOY      ENDF/B-IV MAT 1284                   UPDATED 08/12/94        ID   3040302
       PB   1288 218NGP 042375 P-3 293K                     UPDATED 08/12/94        ID   6082000
        URANIUM-235    ENDF/B-IV MAT 1261                   UPDATED 08/12/94        ID   1092235
        URANIUM-238    ENDF/B-IV MAT 1262                   UPDATED 08/12/94        ID   1092238

         TAPE COPY USED      0 I/O'S, AND TOOK    0.05 SECONDS
```

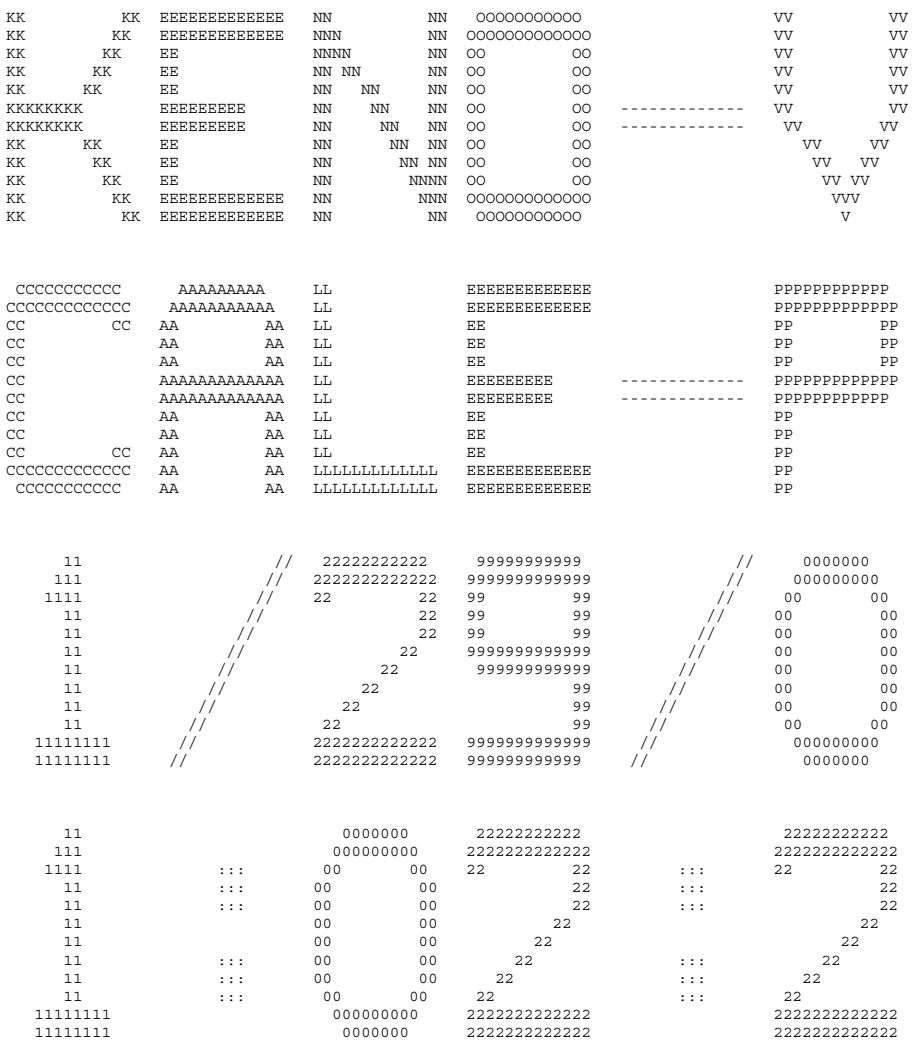

```
 SSSSSSSSSSS    CCCCCCCCCCC     AAAAAAAAA    LL              EEEEEEEEEEEEE                   PPPPPPPPPPPP     CCCCCCCCCCC
SSSSSSSSSSSSS  CCCCCCCCCCCCC   AAAAAAAAAAA   LL              EEEEEEEEEEEEE                   PPPPPPPPPPPPP   CCCCCCCCCCCCC
SS         SS  CC         CC  AA         AA  LL              EE                              PP         PP   CC         CC
SS             CC             AA         AA  LL              EE                              PP         PP   CC
SS             CC             AA         AA  LL              EE                              PP         PP   CC
SSSSSSSSSSSS   CC             AAAAAAAAAAAAA  LL              EEEEEEEEE       -------------   PPPPPPPPPPPPP   CC
 SSSSSSSSSSSS  CC             AAAAAAAAAAAAA  LL              EEEEEEEEE       -------------   PPPPPPPPPPPP    CC
           SS  CC             AA         AA  LL              EE                              PP              CC
           SS  CC             AA         AA  LL              EE                              PP              CC
SS         SS  CC         CC  AA         AA  LL              EE                              PP              CC         CC
SSSSSSSSSSSSS  CCCCCCCCCCCCC  AA         AA  LLLLLLLLLLLLL   EEEEEEEEEEEEE                   PP              CCCCCCCCCCCCC
 SSSSSSSSSSS    CCCCCCCCCCC   AA         AA  LLLLLLLLLLLLL   EEEEEEEEEEEEE                   PP               CCCCCCCCCCC

                        ********************************************************************************
                        ********************************************************************************
                        *****                                                                      *****
                        *****                 PROGRAM VERIFICATION INFORMATION                     *****
                        *****                                                                      *****
                        *****                CODE SYSTEM:  SCALE-PC VERSION:  4.3                  *****
                        *****                                                                      *****
                        ********************************************************************************
                        ********************************************************************************
                        *****                                                                      *****
                        *****                                                                      *****
                        *****             PROGRAM:  O0O009                                         *****
                        *****                                                                      *****
                        *****       CREATION DATE:  03/08/96                                       *****
                        *****                                                                      *****
                        *****             VOLUME:   Eng                                            *****
                        *****                                                                      *****
                        *****             LIBRARY:  M:\SCALE43\WIN_NT\EXE                          *****
                        *****                                                                      *****
                        *****                                                                      *****
                        *****     PRODUCTION CODE:  KENOVA                                         *****
                        *****                                                                      *****
                        *****             VERSION:  3.1                                            *****
                        *****                                                                      *****
                        *****             JOBNAME:  SCALE-PC                                       *****
                        *****                                                                      *****
                        *****   DATE OF EXECUTION:  01/29/03                                       *****
                        *****                                                                      *****
                        *****   TIME OF EXECUTION:  11:02:27                                       *****
                        *****                                                                      *****
                        *****                                                                      *****
                        ********************************************************************************
                        ********************************************************************************
       *******************************************************************************************************************
       ***                                                                                                             ***
       ***                          NAC-LWT, BWR, DAMAGED-SMALLER PIN SIZE, NO BASKET                                  ***
       ***                                                                                                             ***
       *******************************************************************************************************************
       ***                             ******       NUMERIC PARAMETERS       ******                                    ***
       ***                                                                                                             ***
       ***                                                                                                             ***
       ***                 TME         MAXIMUM PROBLEM TIME (MIN)                          ******                      ***
       ***                                                                                                             ***
       ***                 TBA         TIME PER GENERATION (MIN)                             5.00                      ***
       ***                                                                                                             ***
       ***                 GEN         NUMBER OF GENERATIONS                                  803                      ***
       ***                                                                                                             ***
       ***                 NPG         NUMBER PER GENERATION                                 1000                      ***
       ***                                                                                                             ***
       ***                 NSK         NUMBER OF GENERATIONS TO BE SKIPPED                      3                      ***
       ***                                                                                                             ***
       ***                 BEG         BEGINNING GENERATION NUMBER                              1                      ***
       ***                                                                                                             ***
       ***                 RES         GENERATIONS BETWEEN CHECKPOINTS                          0                      ***
       ***                                                                                                             ***
       ***                 X1D         NUMBER OF EXTRA 1-D CROSS SECTIONS                       1                      ***
       ***                                                                                                             ***
       ***                 NBK         NEUTRON BANK SIZE                                     1025                      ***
       ***                                                                                                             ***
       ***                 XNB         EXTRA POSITIONS IN NEUTRON BANK                          0                      ***
       ***                                                                                                             ***
       ***                 NFB         FISSION BANK SIZE                                     1000                      ***
       ***                                                                                                             ***
       ***                 XFB         EXTRA POSITIONS IN FISSION BANK                          0                      ***
       ***                                                                                                             ***
       ***                 WTA         DEFAULT VALUE OF WEIGHT AVERAGE                     0.5000                      ***
       ***                                                                                                             ***
       ***                 WTH         WEIGHT HIGH FOR SPLITTING                           3.0000                      ***
       ***                                                                                                             ***
       ***                 WTL         WEIGHT LOW FOR RUSSIAN ROULETTE                     0.3333                      ***
       ***                                                                                                             ***
       ***                 RND         STARTING RANDOM NUMBER                          BB827100001                     ***
       ***                                                                                                             ***
       ***                 NB8         NUMBER OF D.A. BLOCKS ON UNIT  8                       200                      ***
       ***                                                                                                             ***
       ***                 NL8         LENGTH OF D.A. BLOCKS ON UNIT  8                       512                      ***
       ***                                                                                                             ***
       ***                 ADJ         MODE OF CALCULATION                                FORWARD                      ***
       ***                                                                                                             ***
       ***                             INPUT DATA WRITTEN ON RESTART UNIT                      NO                      ***
       ***                                                                                                             ***
       ***                             BINARY DATA INTERFACE                                  YES                      ***
```

```
***                                                                                                                  ***
***                                                                                                                  ***
**********************************************************************************************************************
```

```
*****************************************************************************************************************
*****************************************************************************************************************
***                                                                                                           ***
***                              NAC-LWT, BWR, DAMAGED-SMALLER PIN SIZE, NO BASKET                            ***
***                                                                                                           ***
*****************************************************************************************************************
***                                  ******      LOGICAL PARAMETERS        ******                             ***
***                                                                                                           ***
***  RUN  EXECUTE PROBLEM AFTER CHECKING DATA    YES            PLT  PLOT PICTURE MAP(S)                  NO ***
***                                                                                                           ***
***  FLX  COMPUTE FLUX                            NO            FDN  COMPUTE FISSION DENSITIES            NO ***
***                                                                                                           ***
***  SMU  COMPUTE AVG UNIT SELF-MULTIPLICATION    NO            NUB  COMPUTE NU-BAR & AVG FISSION GROUP   YES ***
***                                                                                                           ***
***  MKU  COMPUTE MATRIX K-EFF BY UNIT NUMBER     NO            MKP  COMPUTE MATRIX K-EFF BY UNIT LOCATION NO ***
***                                                                                                           ***
***  CKU  COMPUTE COFACTOR K-EFF BY UNIT NUMBER   NO            CKP  COMPUTE COFACTOR K-EFF BY UNIT LOCATION NO ***
***                                                                                                           ***
***  FMU  PRINT FISS PROD MATRIX BY UNIT NUMBER   NO            FMP  PRINT FISS PROD MATRIX BY UNIT LOCATION NO ***
***                                                                                                           ***
***  MKH  COMPUTE MATRIX K-EFF BY HOLE NUMBER     NO            MKA  COMPUTE MATRIX K-EFF BY ARRAY NUMBER  NO ***
***                                                                                                           ***
***  CKH  COMPUTE COFACTOR K-EFF BY HOLE NUMBER   NO            CKA  COMPUTE COFACTOR K-EFF BY ARRAY NUMBER NO ***
***                                                                                                           ***
***  FMH  PRINT FISS PROD MATRIX BY HOLE NUMBER   NO            FMA  PRINT FISS PROD MATRIX BY ARRAY NUMBER NO ***
***                                                                                                           ***
***  HHL  COLLECT MATRIX BY HIGHEST HOLE LEVEL    NO            HAL  COLLECT MATRIX BY HIGHEST ARRAY LEVEL  NO ***
***                                                                                                           ***
***  AMX  PRINT ALL MIXED CROSS SECTIONS          NO            FAR  PRINT FIS. AND ABS. BY REGION         NO ***
***                                                                                                           ***
***  XS1  PRINT 1-D MIXTURE X-SECTIONS            NO            GAS  PRINT FAR BY GROUP                    NO ***
***                                                                                                           ***
***  XS2  PRINT 2-D MIXTURE X-SECTIONS            NO            PAX  PRINT XSEC-ALBEDO CORRELATION TABLES  NO ***
***                                                                                                           ***
***  XAP  PRINT MIXTURE ANGLES & PROBABILITIES    NO            PWT  PRINT WEIGHT AVERAGE ARRAY            NO ***
***                                                                                                           ***
***  PKI  PRINT FISSION SPECTRUM                  NO            PGM  PRINT INPUT GEOMETRY                  NO ***
***                                                                                                           ***
***  P1D  PRINT EXTRA 1-D CROSS SECTIONS          NO            BUG  PRINT DEBUG INFORMATION               NO ***
***                                                                                                           ***
***                                                             TRK  PRINT TRACKING INFORMATION            NO ***
***                                                                                                           ***
***                                                                                                           ***
*****************************************************************************************************************
*****************************************************************************************************************
*****************************************************************************************************************
                                    PARAMETER INPUT COMPLETED

                          ........    0 IO'S WERE USED READING THE PARAMETER DATA      ........

                         *************** DATA READING COMPLETED ***************
                                   NAC-LWT, BWR, DAMAGED-SMALLER PIN SIZE, NO BASKET

                                              MIXING TABLE

                                       NUMBER OF SCATTERING ANGLES =  2
                                   CROSS SECTION MESSAGE THRESHOLD =3.0E-05


MIXTURE =     1          DENSITY(G/CC) =  10.412
   NUCLIDE   ATOM-DENS.   WGT. FRAC.     ZA      AWT             NUCLIDE TITLE
   1008016  4.64669E-02  1.18500E-01    8016    15.9904      OXYGEN-16      ENDF/B-IV MAT 1276                      UPDATED
08/12/94
   1092235  1.17578E-03  4.40750E-02   92235   235.0441      URANIUM-235    ENDF/B-IV MAT 1261                      UPDATED
08/12/94
   1092238  2.20577E-02  8.37425E-01   92238   238.0510      URANIUM-238    ENDF/B-IV MAT 1262                      UPDATED
08/12/94

MIXTURE =     2          DENSITY(G/CC) = 0.99817
   NUCLIDE   ATOM-DENS.   WGT. FRAC.     ZA      AWT             NUCLIDE TITLE
   2001001  6.67692E-02  1.11927E-01    1001     1.0077      HYDROGEN       ENDF/B-IV MAT 1269/THRM1002             UPDATED
08/12/94
   2008016  3.33846E-02  8.88074E-01    8016    15.9904      OXYGEN-16      ENDF/B-IV MAT 1276                      UPDATED
08/12/94

MIXTURE =     3          DENSITY(G/CC) =  6.5600
   NUCLIDE   ATOM-DENS.   WGT. FRAC.     ZA      AWT             NUCLIDE TITLE
   3040302  4.33078E-02  1.00000E+00   40000    91.2196      ZIRCALLOY      ENDF/B-IV MAT 1284                      UPDATED
08/12/94

MIXTURE =     4          DENSITY(G/CC) = 0.99817
   NUCLIDE   ATOM-DENS.   WGT. FRAC.     ZA      AWT             NUCLIDE TITLE
   4001001  6.67692E-02  1.11927E-01    1001     1.0077      HYDROGEN       ENDF/B-IV MAT 1269/THRM1002             UPDATED
08/12/94
   4008016  3.33846E-02  8.88074E-01    8016    15.9904      OXYGEN-16      ENDF/B-IV MAT 1276                      UPDATED
08/12/94

MIXTURE =     5          DENSITY(G/CC) = 0.99817E-04
   NUCLIDE   ATOM-DENS.   WGT. FRAC.     ZA      AWT             NUCLIDE TITLE
   5001001  6.67692E-06  1.11927E-01    1001     1.0077      HYDROGEN       ENDF/B-IV MAT 1269/THRM1002             UPDATED
08/12/94
   5008016  3.33846E-06  8.88074E-01    8016    15.9904      OXYGEN-16      ENDF/B-IV MAT 1276                      UPDATED
08/12/94
```

```
MIXTURE =     6          DENSITY(G/CC) =  11.344
   NUCLIDE   ATOM-DENS.   WGT. FRAC.     ZA      AWT              NUCLIDE TITLE
   6082000  3.29690E-02  1.00000E+00   82000   207.2100     PB   1288 218NGP 042375 P-3 293K                          UPDATED
08/12/94

MIXTURE =     7          DENSITY(G/CC) = 0.99817E-04
   NUCLIDE   ATOM-DENS.   WGT. FRAC.     ZA      AWT              NUCLIDE TITLE
   7001001  6.67692E-06  1.11927E-01    1001     1.0077      HYDROGEN       ENDF/B-IV MAT 1269/THRM1002             UPDATED
08/12/94
   7008016  3.33846E-06  8.88074E-01    8016    15.9904      OXYGEN-16      ENDF/B-IV MAT 1276                      UPDATED
08/12/94

MIXTURE =     8          DENSITY(G/CC) =  7.9200
   NUCLIDE   ATOM-DENS.   WGT. FRAC.     ZA      AWT              NUCLIDE TITLE
   8024304  1.74286E-02  1.90000E-01   24000    51.9957     CR 1191 WT SS-304(1/EST) P-3 293K SP=5+4(42375)'        UPDATED
08/12/94
   8025055  1.73633E-03  1.99999E-02   25055    54.9379      MANGANESE-55   ENDF/B-IV MAT 1197                      UPDATED
08/12/94
   8026304  5.93579E-02  6.95000E-01   26000    55.8447     FE 1192 WT SS-304(1/EST) P-3 293K SP=5+4(42375)'        UPDATED
08/12/94
   8028304  7.72070E-03  9.50001E-02   28000    58.6872     NI 1190 WT SS-304(1/EST) P-3 293K SP=5+4(42375)'        UPDATED
08/12/94


                           2001001     HYDROGEN       ENDF/B-IV MAT 1269/THRM1002             UPDATED 08/12/94
                           4001001     HYDROGEN       ENDF/B-IV MAT 1269/THRM1002             UPDATED 08/12/94
                           5001001     HYDROGEN       ENDF/B-IV MAT 1269/THRM1002             UPDATED 08/12/94
                           7001001     HYDROGEN       ENDF/B-IV MAT 1269/THRM1002             UPDATED 08/12/94
                           1008016     OXYGEN-16      ENDF/B-IV MAT 1276                      UPDATED 08/12/94
                           2008016     OXYGEN-16      ENDF/B-IV MAT 1276                      UPDATED 08/12/94
                           4008016     OXYGEN-16      ENDF/B-IV MAT 1276                      UPDATED 08/12/94
                           5008016     OXYGEN-16      ENDF/B-IV MAT 1276                      UPDATED 08/12/94
                           7008016     OXYGEN-16      ENDF/B-IV MAT 1276                      UPDATED 08/12/94
                           8024304    CR 1191 WT SS-304(1/EST) P-3 293K SP=5+4(42375)'        UPDATED 08/12/94
                           8025055     MANGANESE-55   ENDF/B-IV MAT 1197                      UPDATED 08/12/94
                           8026304    FE 1192 WT SS-304(1/EST) P-3 293K SP=5+4(42375)'        UPDATED 08/12/94
                           8028304    NI 1190 WT SS-304(1/EST) P-3 293K SP=5+4(42375)'        UPDATED 08/12/94
                           3040302     ZIRCALLOY      ENDF/B-IV MAT 1284                      UPDATED 08/12/94
                           6082000    PB   1288 218NGP 042375 P-3 293K                       UPDATED 08/12/94
                           1092235     URANIUM-235    ENDF/B-IV MAT 1261                      UPDATED 08/12/94
                           1092238     URANIUM-238    ENDF/B-IV MAT 1262                      UPDATED 08/12/94

KENO MESSAGE NUMBER K5-222       1 TRANSFERS FOR MIXTURE     2 WERE CORRECTED FOR BAD MOMENTS.

KENO MESSAGE NUMBER K5-222       1 TRANSFERS FOR MIXTURE     4 WERE CORRECTED FOR BAD MOMENTS.

KENO MESSAGE NUMBER K5-222       2 TRANSFERS FOR MIXTURE     5 WERE CORRECTED FOR BAD MOMENTS.

KENO MESSAGE NUMBER K5-222       2 TRANSFERS FOR MIXTURE     7 WERE CORRECTED FOR BAD MOMENTS.

                          ........    0 IO'S WERE USED MIXING CROSS-SECTIONS       ........

                           1-D CROSS SECTION ARRAY ID NUMBERS
                              1  2002  1452    27    18  1018

                          ........    0 IO'S WERE USED PREPARING THE CROSS SECTIONS    ........
          ***********************************************************************************************
          ***                                                                                         ***
          ***          NAC-LWT, BWR, DAMAGED-SMALLER PIN SIZE, NO BASKET                              ***
          ***                                                                                         ***
          ***********************************************************************************************
          ***********************************************************************************************
          ***                                                                                         ***
          ***                                ****** ADDITIONAL INFORMATION ******                     ***
          ***                                                                                         ***
          ***  NUMBER OF ENERGY GROUPS              27       USE LATTICE GEOMETRY                    NO  ***
          ***                                                                                         ***
          ***  NO. OF FISSION SPECTRUM SOURCE GROUP  1       GLOBAL ARRAY NUMBER                      0  ***
          ***                                                                                         ***
          ***  NO. OF SCATTERING ANGLES IN XSECS     2       NUMBER OF UNITS IN THE GLOBAL X DIR.     0  ***
          ***                                                                                         ***
          ***  ENTRIES/NEUTRON IN THE NEUTRON BANK  17       NUMBER OF UNITS IN THE GLOBAL Y DIR.     0  ***
          ***                                                                                         ***
          ***  ENTRIES/NEUTRON IN THE FISSION BANK  10       NUMBER OF UNITS IN THE GLOBAL Z DIR.     0  ***
          ***                                                                                         ***
          ***  NUMBER OF MIXTURES USED               6       USE A GLOBAL REFLECTOR                  YES  ***
          ***                                                                                         ***
          ***  NUMBER OF BIAS ID'S USED              1       USE NESTED HOLES                         NO  ***
          ***                                                                                         ***
          ***  NUMBER OF DIFFERENTIAL ALBEDOS USED   0       NUMBER OF HOLES                         61  ***
          ***                                                                                         ***
          ***  TOTAL INPUT GEOMETRY REGIONS         10       MAXIMUM HOLE NESTING LEVEL               1  ***
          ***                                                                                         ***
          ***  NUMBER OF GEOMETRY REGIONS USED      10       USE NESTED ARRAYS                        NO  ***
          ***                                                                                         ***
          ***  LARGEST GEOMETRY UNIT NUMBER          2       NUMBER OF ARRAYS USED                    0  ***
          ***                                                                                         ***
          ***  LARGEST ARRAY NUMBER                  1       MAXIMUM ARRAY NESTING LEVEL              0  ***
          ***                                                                                         ***
          ***                                                                                         ***
          ***  +X BOUNDARY CONDITION               MIR       -X BOUNDARY CONDITION                   MIR  ***
          ***                                                                                         ***
          ***  +Y BOUNDARY CONDITION               MIR       -Y BOUNDARY CONDITION                   MIR  ***
```

```
***                                                                                                  ***
***  +Z BOUNDARY CONDITION              MIR       -Z BOUNDARY CONDITION                  MIR  ***
***                                                                                                  ***
**********************************************************************************************************
```

```
                                    NAC-LWT, BWR, DAMAGED-SMALLER PIN SIZE, NO BASKET

                MEDIA BIAS      GEOMETRY DESCRIPTION FOR THOSE UNITS UTILIZED IN THIS PROBLEM
REGION           NUM   ID

                                                -----   UNIT     1   -----

LWR FUEL ROD-NO CLAD

  1 CYLINDER         1  1  RADIUS = 0.39840     +Z =  10.000     -Z = -10.000     CENTERLINE IS AT  X = 0.00000      Y = 0.00000

  2 CYLINDER         4  1  RADIUS = 0.40490     +Z =  10.000     -Z = -10.000     CENTERLINE IS AT  X = 0.00000      Y = 0.00000
                                    NAC-LWT, BWR, DAMAGED-SMALLER PIN SIZE, NO BASKET

                MEDIA BIAS      GEOMETRY DESCRIPTION FOR THOSE UNITS UTILIZED IN THIS PROBLEM
REGION           NUM   ID

                                    ******************   GLOBAL   ******************
                                                -----   UNIT     2   -----

  1 CYLINDER         4  1  RADIUS =  9.0166     +Z =  10.000     -Z = -10.000     CENTERLINE IS AT  X = 0.00000      Y = 0.00000

    HOLE NUMBER      1       AT X = 0.00000      Y = 0.00000      Z = 0.00000     IS UNIT NUMBER      1

    HOLE NUMBER      2       AT X =  2.1529      Y = 0.00000      Z = 0.00000     IS UNIT NUMBER      1

    HOLE NUMBER      3       AT X =  1.0764      Y =  1.8645      Z = 0.00000     IS UNIT NUMBER      1

    HOLE NUMBER      4       AT X = -1.0764      Y =  1.8645      Z = 0.00000     IS UNIT NUMBER      1

    HOLE NUMBER      5       AT X = -2.1529      Y = 0.00000      Z = 0.00000     IS UNIT NUMBER      1

    HOLE NUMBER      6       AT X = -1.0764      Y = -1.8645      Z = 0.00000     IS UNIT NUMBER      1

    HOLE NUMBER      7       AT X =  1.0764      Y = -1.8645      Z = 0.00000     IS UNIT NUMBER      1

    HOLE NUMBER      8       AT X =  3.2293      Y = -1.8645      Z = 0.00000     IS UNIT NUMBER      1

    HOLE NUMBER      9       AT X =  4.3058      Y = 0.00000      Z = 0.00000     IS UNIT NUMBER      1

    HOLE NUMBER     10       AT X =  3.2293      Y =  1.8645      Z = 0.00000     IS UNIT NUMBER      1

    HOLE NUMBER     11       AT X =  2.1529      Y =  3.7289      Z = 0.00000     IS UNIT NUMBER      1

    HOLE NUMBER     12       AT X = 0.00000      Y =  3.7289      Z = 0.00000     IS UNIT NUMBER      1

    HOLE NUMBER     13       AT X = -2.1529      Y =  3.7289      Z = 0.00000     IS UNIT NUMBER      1

    HOLE NUMBER     14       AT X = -3.2293      Y =  1.8645      Z = 0.00000     IS UNIT NUMBER      1

    HOLE NUMBER     15       AT X = -4.3058      Y = 0.00000      Z = 0.00000     IS UNIT NUMBER      1

    HOLE NUMBER     16       AT X = -3.2293      Y = -1.8645      Z = 0.00000     IS UNIT NUMBER      1

    HOLE NUMBER     17       AT X = -2.1529      Y = -3.7289      Z = 0.00000     IS UNIT NUMBER      1

    HOLE NUMBER     18       AT X = 0.00000      Y = -3.7289      Z = 0.00000     IS UNIT NUMBER      1

    HOLE NUMBER     19       AT X =  2.1529      Y = -3.7289      Z = 0.00000     IS UNIT NUMBER      1

    HOLE NUMBER     20       AT X =  4.3058      Y = -3.7289      Z = 0.00000     IS UNIT NUMBER      1

    HOLE NUMBER     21       AT X =  5.3822      Y =  1.8645      Z = 0.00000     IS UNIT NUMBER      1

    HOLE NUMBER     22       AT X =  1.0764      Y =  5.5934      Z = 0.00000     IS UNIT NUMBER      1

    HOLE NUMBER     23       AT X = -4.3058      Y =  3.7289      Z = 0.00000     IS UNIT NUMBER      1

    HOLE NUMBER     24       AT X = -5.3822      Y = -1.8645      Z = 0.00000     IS UNIT NUMBER      1

    HOLE NUMBER     25       AT X = -1.0764      Y = -5.5934      Z = 0.00000     IS UNIT NUMBER      1

    HOLE NUMBER     26       AT X =  1.0764      Y = -5.5934      Z = 0.00000     IS UNIT NUMBER      1

    HOLE NUMBER     27       AT X =  4.3058      Y =  3.7289      Z = 0.00000     IS UNIT NUMBER      1

    HOLE NUMBER     28       AT X =  3.2293      Y =  5.5934      Z = 0.00000     IS UNIT NUMBER      1

    HOLE NUMBER     29       AT X = -1.0764      Y =  5.5934      Z = 0.00000     IS UNIT NUMBER      1

    HOLE NUMBER     30       AT X = -4.3058      Y = -3.7289      Z = 0.00000     IS UNIT NUMBER      1

    HOLE NUMBER     31       AT X = -3.2293      Y = -5.5934      Z = 0.00000     IS UNIT NUMBER      1

    HOLE NUMBER     32       AT X =  3.2293      Y = -5.5934      Z = 0.00000     IS UNIT NUMBER      1

    HOLE NUMBER     33       AT X =  5.3822      Y = -1.8645      Z = 0.00000     IS UNIT NUMBER      1

    HOLE NUMBER     34       AT X = -3.2293      Y =  5.5934      Z = 0.00000     IS UNIT NUMBER      1

    HOLE NUMBER     35       AT X = -5.3822      Y =  1.8645      Z = 0.00000     IS UNIT NUMBER      1

    HOLE NUMBER     36       AT X =  6.4587      Y = 0.00000      Z = 0.00000     IS UNIT NUMBER      1
```

```
   HOLE NUMBER     37       AT X = -6.4587      Y = 0.00000      Z = 0.00000     IS UNIT NUMBER      1

   HOLE NUMBER     38       AT X = 0.00000      Y = -7.4578      Z = 0.00000     IS UNIT NUMBER      1

   HOLE NUMBER     39       AT X =  2.1529      Y = -7.4578      Z = 0.00000     IS UNIT NUMBER      1

   HOLE NUMBER     40       AT X =  4.3058      Y = -7.4578      Z = 0.00000     IS UNIT NUMBER      1

   HOLE NUMBER     41       AT X =  5.3822      Y = -5.5934      Z = 0.00000     IS UNIT NUMBER      1

   HOLE NUMBER     42       AT X =  6.4587      Y = -3.7289      Z = 0.00000     IS UNIT NUMBER      1

   HOLE NUMBER     43       AT X =  7.5351      Y = -1.8645      Z = 0.00000     IS UNIT NUMBER      1

   HOLE NUMBER     44       AT X =  8.6116      Y = 0.00000      Z = 0.00000     IS UNIT NUMBER      1

   HOLE NUMBER     45       AT X =  7.5351      Y =  1.8645      Z = 0.00000     IS UNIT NUMBER      1

   HOLE NUMBER     46       AT X =  6.4587      Y =  3.7289      Z = 0.00000     IS UNIT NUMBER      1

   HOLE NUMBER     47       AT X =  5.3822      Y =  5.5934      Z = 0.00000     IS UNIT NUMBER      1

   HOLE NUMBER     48       AT X =  4.3058      Y =  7.4578      Z = 0.00000     IS UNIT NUMBER      1

   HOLE NUMBER     49       AT X =  2.1529      Y =  7.4578      Z = 0.00000     IS UNIT NUMBER      1

   HOLE NUMBER     50       AT X = 0.00000      Y =  7.4578      Z = 0.00000     IS UNIT NUMBER      1

   HOLE NUMBER     51       AT X = -2.1529      Y =  7.4578      Z = 0.00000     IS UNIT NUMBER      1

   HOLE NUMBER     52       AT X = -4.3058      Y =  7.4578      Z = 0.00000     IS UNIT NUMBER      1

   HOLE NUMBER     53       AT X = -5.3822      Y =  5.5934      Z = 0.00000     IS UNIT NUMBER      1

   HOLE NUMBER     54       AT X = -6.4587      Y =  3.7289      Z = 0.00000     IS UNIT NUMBER      1

   HOLE NUMBER     55       AT X = -7.5351      Y =  1.8645      Z = 0.00000     IS UNIT NUMBER      1

   HOLE NUMBER     56       AT X = -8.6116      Y = 0.00000      Z = 0.00000     IS UNIT NUMBER      1

   HOLE NUMBER     57       AT X = -7.5351      Y = -1.8645      Z = 0.00000     IS UNIT NUMBER      1

   HOLE NUMBER     58       AT X = -6.4587      Y = -3.7289      Z = 0.00000     IS UNIT NUMBER      1

   HOLE NUMBER     59       AT X = -5.3822      Y = -5.5934      Z = 0.00000     IS UNIT NUMBER      1

   HOLE NUMBER     60       AT X = -4.3058      Y = -7.4578      Z = 0.00000     IS UNIT NUMBER      1

   HOLE NUMBER     61       AT X = -2.1529      Y = -7.4578      Z = 0.00000     IS UNIT NUMBER      1

 2 CYLINDER         5  1  RADIUS =  16.986     +Z =  10.000     -Z = -10.000     CENTERLINE IS AT  X = 0.00000      Y = 0.00000

 3 CYLINDER         8  1  RADIUS =  18.898     +Z =  10.000     -Z = -10.000     CENTERLINE IS AT  X = 0.00000      Y = 0.00000

 4 CYLINDER         6  1  RADIUS =  33.503     +Z =  10.000     -Z = -10.000     CENTERLINE IS AT  X = 0.00000      Y = 0.00000

 5 CYLINDER         8  1  RADIUS =  36.551     +Z =  10.000     -Z = -10.000     CENTERLINE IS AT  X = 0.00000      Y = 0.00000

 6 CYLINDER         7  1  RADIUS =  49.244     +Z =  10.000     -Z = -10.000     CENTERLINE IS AT  X = 0.00000      Y = 0.00000

 7 CYLINDER         8  1  RADIUS =  49.822     +Z =  10.000     -Z = -10.000     CENTERLINE IS AT  X = 0.00000      Y = 0.00000

 8 CUBOID           5  1      +X =  49.822     -X = -49.822     +Y =  49.822     -Y = -49.822     +Z =  10.000     -Z = -10.000
```

NAC-LWT, BWR, DAMAGED-SMALLER PIN SIZE, NO BASKET
VOLUMES FOR THOSE UNITS UTILIZED IN THIS PROBLEM

UNIT	REGION	GEOMETRY REGION	VOLUME	CUMULATIVE VOLUME
1	1	1	9.97283E+00 CM**3	9.97283E+00 CM**3
	2	2	3.28074E-01 CM**3	1.03009E+01 CM**3
2	1	3	4.47982E+03 CM**3	5.10817E+03 CM**3
	2	4	1.30210E+04 CM**3	1.81291E+04 CM**3
	3	5	4.30932E+03 CM**3	2.24385E+04 CM**3
	4	6	4.80855E+04 CM**3	7.05240E+04 CM**3
	5	7	1.34160E+04 CM**3	8.39400E+04 CM**3
	6	8	6.84274E+04 CM**3	1.52367E+05 CM**3
	7	9	3.59652E+03 CM**3	1.55964E+05 CM**3
	8	10	4.26155E+04 CM**3	1.98579E+05 CM**3

UNIT	USES	REGION	MIXTURE	TOTAL VOLUME
1	61	1	1	6.08343E+02 CM**3
		2	4	2.00125E+01 CM**3
2	1	1	4	4.47982E+03 CM**3
		2	5	1.30210E+04 CM**3
		3	8	4.30932E+03 CM**3
		4	6	4.80855E+04 CM**3
		5	8	1.34160E+04 CM**3
		6	7	6.84274E+04 CM**3

```
                                                7          8         3.59652E+03 CM**3
                                                8          5         4.26155E+04 CM**3


                                                    TOTAL MIXTURE VOLUMES
                                                MIXTURE        TOTAL VOLUME              MASS(G)
                                                    1         6.08343E+02 CM**3        6.33405E+03
                                                    4         4.49984E+03 CM**3        4.49161E+03
                                                    5         5.56365E+04 CM**3        5.55347E+00
                                                    6         4.80855E+04 CM**3        5.45482E+05
                                                    7         6.84274E+04 CM**3        6.83022E+00
                                                    8         2.13218E+04 CM**3        1.68869E+05


      ********************************************************************************************************************************
      ***                                                                                                                          ***
      ***                                          BIASING INFORMATION                                                             ***
      ***                                                                                                                          ***
      ***     A DEFAULT WEIGHT OF    0.500 WILL BE USED FOR ALL BIAS ID'S.                                                         ***
      ***                                                                                                                          ***
      ********************************************************************************************************************************

                              ........    0 IO'S WERE USED IN KENO-V BEFORE TRACKING       ........

                              ........  0.00450 MINUTES WERE USED PROCESSING DATA.        ........

VOLUME FRACTION OF FISSILE MATERIAL IN THE CORE= 3.06347E-03

START TYPE 0 WAS USED.

THE NEUTRONS WERE STARTED UNIFORMLY THROUGHOUT THE ENTIRE VOLUME DEFINED BY THE OUTERMOST GEOMETRY CARD.
THE FLAG TO START NEUTRONS IN THE REFLECTOR WAS TURNED OFF

KENO MESSAGE NUMBER K5-105     ***** WARNING, ONLY  481 INDEPENDENT STARTING POSITIONS WERE GENERATED.  *****

  519 ADDITIONAL STARTING POINTS WERE PICKED FROM THE INITAL DISTRIBUTION.

4.49650 MINUTES WERE REQUIRED FOR STARTING.   TOTAL ELAPSED TIME IS 4.50133 MINUTES.

NAC-LWT, BWR, DAMAGED-SMALLER PIN SIZE, NO BASKET

                 GENERATION     ELAPSED TIME        AVERAGE         AVG K-EFF          MATRIX        MATRIX K-EFF
    GENERATION   K-EFFECTIVE       MINUTES        K-EFFECTIVE       DEVIATION       K-EFFECTIVE       DEVIATION
KENO MESSAGE NUMBER K5-132     WARNING....ONLY  908 INDEPENDENT FISSION POINTS WERE GENERATED
         1       8.45376E-01     4.52667E+00      1.00000E+00      0.00000E+00      0.00000E+00      0.00000E+00
KENO MESSAGE NUMBER K5-132     WARNING....ONLY  897 INDEPENDENT FISSION POINTS WERE GENERATED
         2       8.37583E-01     4.55700E+00      1.00000E+00      0.00000E+00      0.00000E+00      0.00000E+00
KENO MESSAGE NUMBER K5-132     WARNING....ONLY  955 INDEPENDENT FISSION POINTS WERE GENERATED
         3       8.80673E-01     4.58617E+00      8.80673E-01      0.00000E+00      0.00000E+00      0.00000E+00
         4       8.86922E-01     4.61650E+00      8.83798E-01      3.12465E-03      0.00000E+00      0.00000E+00
         5       8.45497E-01     4.64667E+00      8.71031E-01      1.28937E-02      0.00000E+00      0.00000E+00
         6       8.83555E-01     4.67683E+00      8.74162E-01      9.63994E-03      0.00000E+00      0.00000E+00
         7       9.28339E-01     4.70800E+00      8.84997E-01      1.31591E-02      0.00000E+00      0.00000E+00
         8       8.58053E-01     4.73817E+00      8.80507E-01      1.16450E-02      0.00000E+00      0.00000E+00
         9       8.74480E-01     4.76833E+00      8.79646E-01      9.87945E-03      0.00000E+00      0.00000E+00
        10       8.70549E-01     4.79767E+00      8.78509E-01      8.63108E-03      0.00000E+00      0.00000E+00
        11       8.33818E-01     4.82883E+00      8.73543E-01      9.08838E-03      0.00000E+00      0.00000E+00
        12       9.03332E-01     4.85817E+00      8.76522E-01      8.65753E-03      0.00000E+00      0.00000E+00
        13       9.06360E-01     4.88733E+00      8.79234E-01      8.28752E-03      0.00000E+00      0.00000E+00
        14       8.74883E-01     4.91767E+00      8.78872E-01      7.57412E-03      0.00000E+00      0.00000E+00
        15       8.60739E-01     4.94783E+00      8.77477E-01      7.10543E-03      0.00000E+00      0.00000E+00
        16       8.56786E-01     4.97800E+00      8.75999E-01      6.74233E-03      0.00000E+00      0.00000E+00
        17       8.46416E-01     5.00817E+00      8.74027E-01      6.57931E-03      0.00000E+00      0.00000E+00
        18       8.79714E-01     5.03750E+00      8.74382E-01      6.16463E-03      0.00000E+00      0.00000E+00
        19       8.77155E-01     5.06867E+00      8.74545E-01      5.79296E-03      0.00000E+00      0.00000E+00
        20       8.90755E-01     5.09883E+00      8.75446E-01      5.53540E-03      0.00000E+00      0.00000E+00
        21       8.41781E-01     5.12900E+00      8.73674E-01      5.52762E-03      0.00000E+00      0.00000E+00
        22       8.74472E-01     5.15833E+00      8.73714E-01      5.24411E-03      0.00000E+00      0.00000E+00
        23       8.71497E-01     5.18850E+00      8.73608E-01      4.98926E-03      0.00000E+00      0.00000E+00
        24       8.52134E-01     5.21883E+00      8.72632E-01      4.85619E-03      0.00000E+00      0.00000E+00
        25       8.74281E-01     5.24983E+00      8.72704E-01      4.64080E-03      0.00000E+00      0.00000E+00
        26       8.85942E-01     5.28017E+00      8.73256E-01      4.47733E-03      0.00000E+00      0.00000E+00
        27       8.85020E-01     5.30933E+00      8.73726E-01      4.32021E-03      0.00000E+00      0.00000E+00
        28       8.79802E-01     5.34600E+00      8.73960E-01      4.15730E-03      0.00000E+00      0.00000E+00
        29       9.00154E-01     5.37433E+00      8.74930E-01      4.11632E-03      0.00000E+00      0.00000E+00
        30       8.77230E-01     5.40467E+00      8.75012E-01      3.96744E-03      0.00000E+00      0.00000E+00
        31       8.74788E-01     5.43483E+00      8.75004E-01      3.82820E-03      0.00000E+00      0.00000E+00
        32       8.66097E-01     5.46500E+00      8.74707E-01      3.71029E-03      0.00000E+00      0.00000E+00
        33       9.01664E-01     5.49617E+00      8.75577E-01      3.69246E-03      0.00000E+00      0.00000E+00
        34       8.85437E-01     5.52633E+00      8.75885E-01      3.58846E-03      0.00000E+00      0.00000E+00
        35       9.13722E-01     5.55750E+00      8.77032E-01      3.66213E-03      0.00000E+00      0.00000E+00
        36       8.81820E-01     5.58950E+00      8.77173E-01      3.55558E-03      0.00000E+00      0.00000E+00
        37       8.77272E-01     5.62067E+00      8.77175E-01      3.45250E-03      0.00000E+00      0.00000E+00
        38       8.67048E-01     5.65083E+00      8.76894E-01      3.36700E-03      0.00000E+00      0.00000E+00
        39       8.51994E-01     5.68200E+00      8.76221E-01      3.34317E-03      0.00000E+00      0.00000E+00
        40       9.11647E-01     5.71133E+00      8.77153E-01      3.38492E-03      0.00000E+00      0.00000E+00
        41       8.45714E-01     5.74233E+00      8.76347E-01      3.39410E-03      0.00000E+00      0.00000E+00
        42       9.01285E-01     5.77350E+00      8.76971E-01      3.36640E-03      0.00000E+00      0.00000E+00
        43       8.62713E-01     5.80367E+00      8.76623E-01      3.30163E-03      0.00000E+00      0.00000E+00
        44       8.57230E-01     5.83483E+00      8.76161E-01      3.25498E-03      0.00000E+00      0.00000E+00
        45       9.20496E-01     5.86500E+00      8.77192E-01      3.34143E-03      0.00000E+00      0.00000E+00
        46       9.16825E-01     5.89533E+00      8.78093E-01      3.38659E-03      0.00000E+00      0.00000E+00
        47       8.94214E-01     5.92550E+00      8.78451E-01      3.32981E-03      0.00000E+00      0.00000E+00
        48       8.80536E-01     5.95567E+00      8.78497E-01      3.25693E-03      0.00000E+00      0.00000E+00
```

49	9.20884E-01	5.98583E+00	8.79398E-01	3.31203E-03	0.00000E+00	0.00000E+00
50	8.65345E-01	6.01700E+00	8.79106E-01	3.25549E-03	0.00000E+00	0.00000E+00
51	8.61374E-01	6.04717E+00	8.78744E-01	3.20883E-03	0.00000E+00	0.00000E+00
52	9.03797E-01	6.07750E+00	8.79245E-01	3.18367E-03	0.00000E+00	0.00000E+00
53	8.88499E-01	6.10767E+00	8.79426E-01	3.12590E-03	0.00000E+00	0.00000E+00
54	8.80169E-01	6.13783E+00	8.79441E-01	3.06523E-03	0.00000E+00	0.00000E+00
55	8.39095E-01	6.16817E+00	8.78679E-01	3.10170E-03	0.00000E+00	0.00000E+00
56	9.04921E-01	6.19733E+00	8.79165E-01	3.08227E-03	0.00000E+00	0.00000E+00
57	8.69452E-01	6.22767E+00	8.78989E-01	3.03086E-03	0.00000E+00	0.00000E+00
58	8.66438E-01	6.25783E+00	8.78765E-01	2.98467E-03	0.00000E+00	0.00000E+00
59	8.71472E-01	6.28800E+00	8.78637E-01	2.93463E-03	0.00000E+00	0.00000E+00
60	8.70936E-01	6.31817E+00	8.78504E-01	2.88665E-03	0.00000E+00	0.00000E+00
61	8.59501E-01	6.35300E+00	8.78182E-01	2.85552E-03	0.00000E+00	0.00000E+00
62	8.79164E-01	6.38233E+00	8.78198E-01	2.80757E-03	0.00000E+00	0.00000E+00
63	8.97505E-01	6.41350E+00	8.78515E-01	2.77924E-03	0.00000E+00	0.00000E+00
64	8.66248E-01	6.44367E+00	8.78317E-01	2.74120E-03	0.00000E+00	0.00000E+00
65	8.85619E-01	6.47383E+00	8.78433E-01	2.69983E-03	0.00000E+00	0.00000E+00
66	8.67912E-01	6.50400E+00	8.78268E-01	2.66239E-03	0.00000E+00	0.00000E+00
67	9.00522E-01	6.53433E+00	8.78611E-01	2.64337E-03	0.00000E+00	0.00000E+00
68	9.17615E-01	6.56350E+00	8.79202E-01	2.66926E-03	0.00000E+00	0.00000E+00
69	8.36897E-01	6.59383E+00	8.78570E-01	2.70387E-03	0.00000E+00	0.00000E+00
70	8.83156E-01	6.62400E+00	8.78638E-01	2.66467E-03	0.00000E+00	0.00000E+00
71	8.40439E-01	6.65333E+00	8.78084E-01	2.68349E-03	0.00000E+00	0.00000E+00
72	8.57176E-01	6.68350E+00	8.77785E-01	2.66169E-03	0.00000E+00	0.00000E+00
73	9.00485E-01	6.71367E+00	8.78105E-01	2.64334E-03	0.00000E+00	0.00000E+00

.
.
.
.

761	8.95618E-01	2.74152E+01	8.84167E-01	8.22052E-04	0.00000E+00	0.00000E+00
762	9.04177E-01	2.74443E+01	8.84194E-01	8.21392E-04	0.00000E+00	0.00000E+00
763	8.59740E-01	2.74747E+01	8.84161E-01	8.20941E-04	0.00000E+00	0.00000E+00
764	8.96777E-01	2.75048E+01	8.84178E-01	8.20030E-04	0.00000E+00	0.00000E+00
765	8.62650E-01	2.75350E+01	8.84150E-01	8.19441E-04	0.00000E+00	0.00000E+00
766	8.74845E-01	2.75662E+01	8.84138E-01	8.18458E-04	0.00000E+00	0.00000E+00
767	9.18491E-01	2.75955E+01	8.84183E-01	8.18620E-04	0.00000E+00	0.00000E+00
768	8.79583E-01	2.76265E+01	8.84177E-01	8.17573E-04	0.00000E+00	0.00000E+00
769	8.77626E-01	2.76568E+01	8.84168E-01	8.16551E-04	0.00000E+00	0.00000E+00
770	8.90662E-01	2.76870E+01	8.84176E-01	8.15531E-04	0.00000E+00	0.00000E+00
771	8.44109E-01	2.77163E+01	8.84124E-01	8.16134E-04	0.00000E+00	0.00000E+00
772	9.07444E-01	2.77465E+01	8.84155E-01	8.15636E-04	0.00000E+00	0.00000E+00
773	8.93137E-01	2.77767E+01	8.84166E-01	8.14661E-04	0.00000E+00	0.00000E+00
774	8.72167E-01	2.78060E+01	8.84151E-01	8.13754E-04	0.00000E+00	0.00000E+00
775	8.45577E-01	2.78362E+01	8.84101E-01	8.14231E-04	0.00000E+00	0.00000E+00
776	8.58480E-01	2.78655E+01	8.84068E-01	8.13851E-04	0.00000E+00	0.00000E+00
777	8.88107E-01	2.78967E+01	8.84073E-01	8.12817E-04	0.00000E+00	0.00000E+00
778	8.34017E-01	2.79268E+01	8.84008E-01	8.14328E-04	0.00000E+00	0.00000E+00
779	8.79187E-01	2.79570E+01	8.84002E-01	8.13303E-04	0.00000E+00	0.00000E+00
780	8.97408E-01	2.79863E+01	8.84019E-01	8.12440E-04	0.00000E+00	0.00000E+00
781	8.97252E-01	2.80165E+01	8.84036E-01	8.11574E-04	0.00000E+00	0.00000E+00
782	8.57075E-01	2.80467E+01	8.84002E-01	8.11270E-04	0.00000E+00	0.00000E+00
783	8.38060E-01	2.80760E+01	8.83943E-01	8.12363E-04	0.00000E+00	0.00000E+00
784	8.60428E-01	2.81053E+01	8.83913E-01	8.11880E-04	0.00000E+00	0.00000E+00
785	8.86224E-01	2.81365E+01	8.83916E-01	8.10848E-04	0.00000E+00	0.00000E+00
786	8.86131E-01	2.81657E+01	8.83919E-01	8.09818E-04	0.00000E+00	0.00000E+00
787	9.04482E-01	2.81950E+01	8.83945E-01	8.09210E-04	0.00000E+00	0.00000E+00
788	8.67352E-01	2.82262E+01	8.83924E-01	8.08456E-04	0.00000E+00	0.00000E+00
789	8.77743E-01	2.82555E+01	8.83916E-01	8.07466E-04	0.00000E+00	0.00000E+00
790	8.79401E-01	2.82857E+01	8.83910E-01	8.06461E-04	0.00000E+00	0.00000E+00
791	8.92073E-01	2.83150E+01	8.83921E-01	8.05504E-04	0.00000E+00	0.00000E+00
792	8.42610E-01	2.83533E+01	8.83868E-01	8.06182E-04	0.00000E+00	0.00000E+00
793	9.08908E-01	2.83845E+01	8.83900E-01	8.05784E-04	0.00000E+00	0.00000E+00
794	9.13945E-01	2.84147E+01	8.83938E-01	8.05660E-04	0.00000E+00	0.00000E+00
795	8.71704E-01	2.84450E+01	8.83922E-01	8.04791E-04	0.00000E+00	0.00000E+00
796	8.87139E-01	2.84752E+01	8.83927E-01	8.03787E-04	0.00000E+00	0.00000E+00
797	9.24523E-01	2.85063E+01	8.83978E-01	8.04398E-04	0.00000E+00	0.00000E+00
798	9.03145E-01	2.85365E+01	8.84002E-01	8.03747E-04	0.00000E+00	0.00000E+00
799	8.61744E-01	2.85667E+01	8.83974E-01	8.03224E-04	0.00000E+00	0.00000E+00
800	8.82639E-01	2.85978E+01	8.83972E-01	8.02218E-04	0.00000E+00	0.00000E+00
801	8.97474E-01	2.86280E+01	8.83989E-01	8.01392E-04	0.00000E+00	0.00000E+00
802	9.02853E-01	2.86582E+01	8.84013E-01	8.00737E-04	0.00000E+00	0.00000E+00
803	8.68867E-01	2.86893E+01	8.83994E-01	7.99960E-04	0.00000E+00	0.00000E+00

KENO MESSAGE NUMBER K5-123 EXECUTION TERMINATED DUE TO COMPLETION OF THE SPECIFIED NUMBER OF GENERATIONS.

NAC-LWT, BWR, DAMAGED-SMALLER PIN SIZE, NO BASKET

LIFETIME = 1.15441E-04 + OR - 1.79468E-07 GENERATION TIME = 6.46672E-05 + OR - 9.48936E-08
NU BAR = 2.42733E+00 + OR - 3.91487E-05 AVERAGE FISSION GROUP = 2.36688E+01 + OR - 2.79417E-03
ENERGY(EV) OF THE AVERAGE LETHARGY CAUSING FISSION = 6.78645E-02 + OR - 1.70118E-04

NO. OF INITIAL GENERATIONS SKIPPED	AVERAGE K-EFFECTIVE	DEVIATION	67 PER CENT CONFIDENCE INTERVAL	95 PER CENT CONFIDENCE INTERVAL	99 PER CENT CONFIDENCE INTERVAL	NUMBER OF HISTORIES
3	0.88400	+ OR - 0.00080	0.88320 TO 0.88480	0.88240 TO 0.88560	0.88159 TO 0.88640	800000
4	0.88399	+ OR - 0.00080	0.88319 TO 0.88480	0.88239 TO 0.88560	0.88159 TO 0.88640	799000
5	0.88404	+ OR - 0.00080	0.88324 TO 0.88484	0.88244 TO 0.88565	0.88164 TO 0.88645	798000
6	0.88404	+ OR - 0.00080	0.88324 TO 0.88485	0.88244 TO 0.88565	0.88164 TO 0.88645	797000
7	0.88399	+ OR - 0.00080	0.88319 TO 0.88479	0.88238 TO 0.88559	0.88158 TO 0.88639	796000

8	0.88402	+ OR - 0.00080	0.88322 TO 0.88482	0.88242 TO 0.88562	0.88161 TO 0.88643	795000
9	0.88403	+ OR - 0.00080	0.88323 TO 0.88483	0.88243 TO 0.88564	0.88162 TO 0.88644	794000
10	0.88405	+ OR - 0.00080	0.88325 TO 0.88485	0.88244 TO 0.88566	0.88164 TO 0.88646	793000
11	0.88411	+ OR - 0.00080	0.88331 TO 0.88491	0.88251 TO 0.88572	0.88171 TO 0.88652	792000
12	0.88409	+ OR - 0.00080	0.88329 TO 0.88489	0.88248 TO 0.88569	0.88168 TO 0.88650	791000
17	0.88418	+ OR - 0.00080	0.88338 TO 0.88499	0.88257 TO 0.88579	0.88177 TO 0.88660	786000
22	0.88426	+ OR - 0.00081	0.88345 TO 0.88506	0.88264 TO 0.88587	0.88183 TO 0.88668	781000
27	0.88432	+ OR - 0.00081	0.88351 TO 0.88514	0.88270 TO 0.88595	0.88189 TO 0.88676	776000
32	0.88435	+ OR - 0.00082	0.88354 TO 0.88517	0.88272 TO 0.88599	0.88191 TO 0.88680	771000
37	0.88431	+ OR - 0.00082	0.88349 TO 0.88513	0.88266 TO 0.88595	0.88184 TO 0.88677	766000
42	0.88436	+ OR - 0.00082	0.88354 TO 0.88518	0.88272 TO 0.88601	0.88190 TO 0.88683	761000
47	0.88432	+ OR - 0.00082	0.88350 TO 0.88515	0.88268 TO 0.88597	0.88185 TO 0.88679	756000
52	0.88431	+ OR - 0.00083	0.88348 TO 0.88514	0.88266 TO 0.88596	0.88183 TO 0.88679	751000
57	0.88436	+ OR - 0.00083	0.88353 TO 0.88519	0.88271 TO 0.88602	0.88188 TO 0.88685	746000
62	0.88446	+ OR - 0.00083	0.88363 TO 0.88530	0.88280 TO 0.88613	0.88197 TO 0.88696	741000
67	0.88447	+ OR - 0.00084	0.88363 TO 0.88531	0.88280 TO 0.88614	0.88196 TO 0.88698	736000
72	0.88459	+ OR - 0.00084	0.88375 TO 0.88542	0.88292 TO 0.88626	0.88208 TO 0.88710	731000
77	0.88456	+ OR - 0.00084	0.88372 TO 0.88540	0.88289 TO 0.88624	0.88205 TO 0.88707	726000
82	0.88454	+ OR - 0.00084	0.88370 TO 0.88538	0.88286 TO 0.88622	0.88202 TO 0.88706	721000
87	0.88460	+ OR - 0.00085	0.88375 TO 0.88545	0.88291 TO 0.88629	0.88206 TO 0.88714	716000
92	0.88455	+ OR - 0.00085	0.88370 TO 0.88539	0.88285 TO 0.88624	0.88201 TO 0.88708	711000

NAC-LWT, BWR, DAMAGED-SMALLER PIN SIZE, NO BASKET

NO. OF INITIAL GENERATIONS SKIPPED	AVERAGE K-EFFECTIVE	DEVIATION	67 PER CENT CONFIDENCE INTERVAL	95 PER CENT CONFIDENCE INTERVAL	99 PER CENT CONFIDENCE INTERVAL	NUMBER OF HISTORIES
97	0.88453	+ OR - 0.00085	0.88368 TO 0.88538	0.88283 TO 0.88623	0.88198 TO 0.88707	706000
102	0.88458	+ OR - 0.00085	0.88373 TO 0.88544	0.88288 TO 0.88629	0.88202 TO 0.88714	701000
107	0.88454	+ OR - 0.00086	0.88368 TO 0.88539	0.88282 TO 0.88625	0.88196 TO 0.88711	696000
112	0.88448	+ OR - 0.00086	0.88362 TO 0.88534	0.88276 TO 0.88620	0.88190 TO 0.88706	691000
117	0.88453	+ OR - 0.00086	0.88367 TO 0.88539	0.88280 TO 0.88626	0.88194 TO 0.88712	686000
122	0.88440	+ OR - 0.00087	0.88354 TO 0.88527	0.88267 TO 0.88613	0.88180 TO 0.88700	681000
127	0.88446	+ OR - 0.00087	0.88359 TO 0.88533	0.88272 TO 0.88620	0.88185 TO 0.88707	676000
132	0.88446	+ OR - 0.00087	0.88359 TO 0.88534	0.88271 TO 0.88621	0.88184 TO 0.88708	671000
137	0.88452	+ OR - 0.00088	0.88364 TO 0.88540	0.88277 TO 0.88628	0.88189 TO 0.88716	666000
142	0.88450	+ OR - 0.00088	0.88362 TO 0.88538	0.88274 TO 0.88626	0.88186 TO 0.88714	661000
147	0.88442	+ OR - 0.00088	0.88354 TO 0.88531	0.88265 TO 0.88619	0.88177 TO 0.88708	656000
.						
642	0.88538	+ OR - 0.00178	0.88360 TO 0.88716	0.88182 TO 0.88894	0.88004 TO 0.89072	161000
647	0.88504	+ OR - 0.00181	0.88323 TO 0.88685	0.88143 TO 0.88866	0.87962 TO 0.89047	156000
652	0.88545	+ OR - 0.00182	0.88363 TO 0.88727	0.88180 TO 0.88909	0.87998 TO 0.89092	151000
657	0.88593	+ OR - 0.00185	0.88408 TO 0.88778	0.88223 TO 0.88963	0.88038 TO 0.89149	146000
662	0.88551	+ OR - 0.00187	0.88364 TO 0.88737	0.88178 TO 0.88924	0.87991 TO 0.89110	141000
667	0.88551	+ OR - 0.00192	0.88358 TO 0.88743	0.88166 TO 0.88936	0.87974 TO 0.89128	136000
672	0.88579	+ OR - 0.00197	0.88382 TO 0.88777	0.88185 TO 0.88974	0.87988 TO 0.89171	131000
677	0.88515	+ OR - 0.00200	0.88316 TO 0.88715	0.88116 TO 0.88914	0.87916 TO 0.89114	126000
682	0.88487	+ OR - 0.00206	0.88281 TO 0.88693	0.88075 TO 0.88898	0.87870 TO 0.89104	121000
687	0.88419	+ OR - 0.00212	0.88207 TO 0.88631	0.87995 TO 0.88842	0.87783 TO 0.89054	116000
692	0.88499	+ OR - 0.00217	0.88282 TO 0.88717	0.88065 TO 0.88934	0.87847 TO 0.89152	111000
697	0.88424	+ OR - 0.00225	0.88199 TO 0.88649	0.87974 TO 0.88874	0.87749 TO 0.89099	106000
702	0.88430	+ OR - 0.00231	0.88199 TO 0.88660	0.87968 TO 0.88891	0.87738 TO 0.89121	101000

707	0.88423	+ OR - 0.00240	0.88183 TO 0.88663	0.87943 TO 0.88902	0.87704 TO 0.89142	96000
712	0.88351	+ OR - 0.00246	0.88105 TO 0.88597	0.87860 TO 0.88843	0.87614 TO 0.89088	91000
717	0.88344	+ OR - 0.00255	0.88089 TO 0.88600	0.87833 TO 0.88855	0.87578 TO 0.89110	86000
722	0.88327	+ OR - 0.00255	0.88072 TO 0.88583	0.87817 TO 0.88838	0.87561 TO 0.89094	81000
727	0.88329	+ OR - 0.00256	0.88073 TO 0.88585	0.87816 TO 0.88841	0.87560 TO 0.89098	76000
732	0.88370	+ OR - 0.00265	0.88104 TO 0.88635	0.87839 TO 0.88901	0.87573 TO 0.89166	71000
737	0.88308	+ OR - 0.00272	0.88036 TO 0.88580	0.87764 TO 0.88852	0.87492 TO 0.89125	66000
742	0.88201	+ OR - 0.00276	0.87925 TO 0.88477	0.87649 TO 0.88752	0.87373 TO 0.89028	61000
747	0.88043	+ OR - 0.00289	0.87754 TO 0.88333	0.87464 TO 0.88622	0.87175 TO 0.88912	56000
752	0.87991	+ OR - 0.00314	0.87677 TO 0.88305	0.87363 TO 0.88619	0.87050 TO 0.88932	51000
757	0.88013	+ OR - 0.00333	0.87680 TO 0.88346	0.87348 TO 0.88678	0.87015 TO 0.89011	46000
762	0.88029	+ OR - 0.00352	0.87677 TO 0.88380	0.87325 TO 0.88732	0.86973 TO 0.89084	41000
767	0.87998	+ OR - 0.00376	0.87622 TO 0.88374	0.87246 TO 0.88750	0.86871 TO 0.89125	36000

NAC-LWT, BWR, DAMAGED-SMALLER PIN SIZE, NO BASKET

NO. OF INITIAL GENERATIONS SKIPPED	AVERAGE K-EFFECTIVE	DEVIATION	67 PER CENT CONFIDENCE INTERVAL	95 PER CENT CONFIDENCE INTERVAL	99 PER CENT CONFIDENCE INTERVAL	NUMBER OF HISTORIES
772	0.88000	+ OR - 0.00410	0.87590 TO 0.88410	0.87180 TO 0.88820	0.86770 TO 0.89230	31000
777	0.88163	+ OR - 0.00458	0.87705 TO 0.88621	0.87248 TO 0.89078	0.86790 TO 0.89536	26000
782	0.88369	+ OR - 0.00492	0.87877 TO 0.88861	0.87385 TO 0.89352	0.86893 TO 0.89844	21000
787	0.88638	+ OR - 0.00539	0.88099 TO 0.89177	0.87560 TO 0.89716	0.87021 TO 0.90256	16000
792	0.89299	+ OR - 0.00608	0.88692 TO 0.89907	0.88084 TO 0.90515	0.87477 TO 0.91122	11000
797	0.88612	+ OR - 0.00731	0.87881 TO 0.89343	0.87150 TO 0.90074	0.86419 TO 0.90805	6000

NAC-LWT, BWR, DAMAGED-SMALLER PIN SIZE, NO BASKET

PLOT OF AVERAGE K-EFFECTIVE BY GENERATION RUN.
THE LINE REPRESENTS K-EFF = 0.8840 + OR - 0.0008 WHICH OCCURS FOR 803 GENERATIONS RUN.

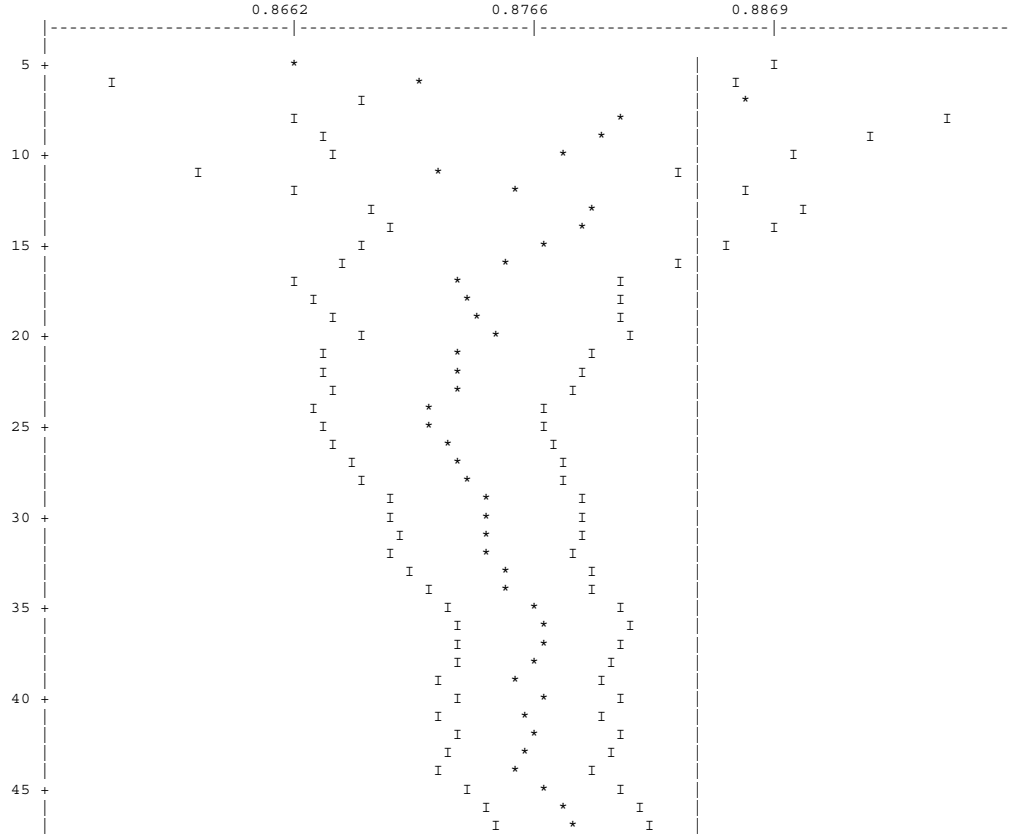

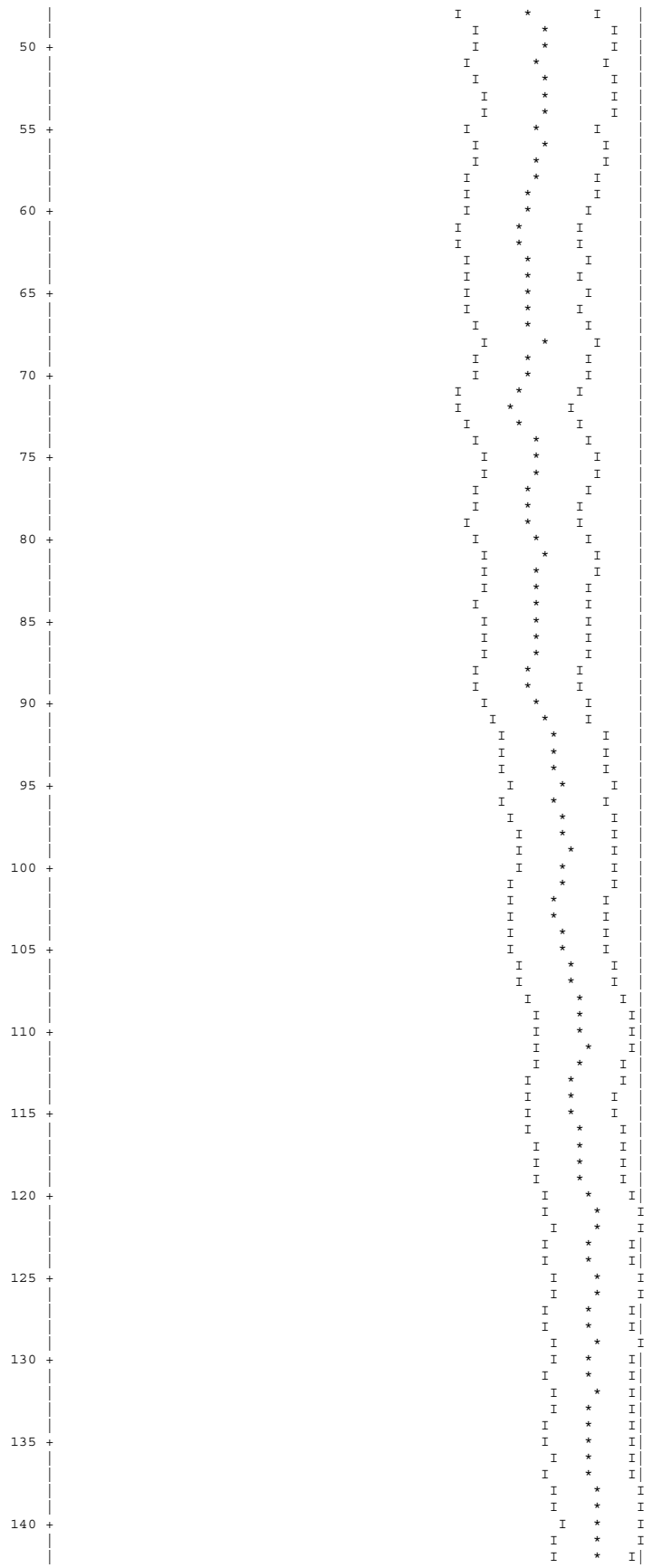

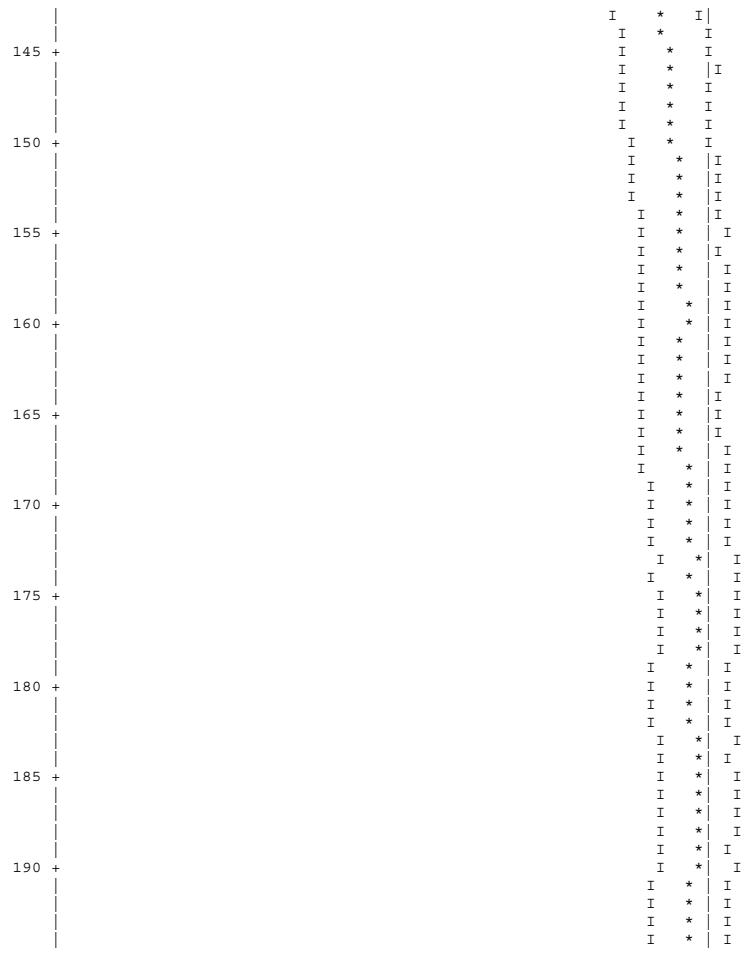

.
.
.
.
.

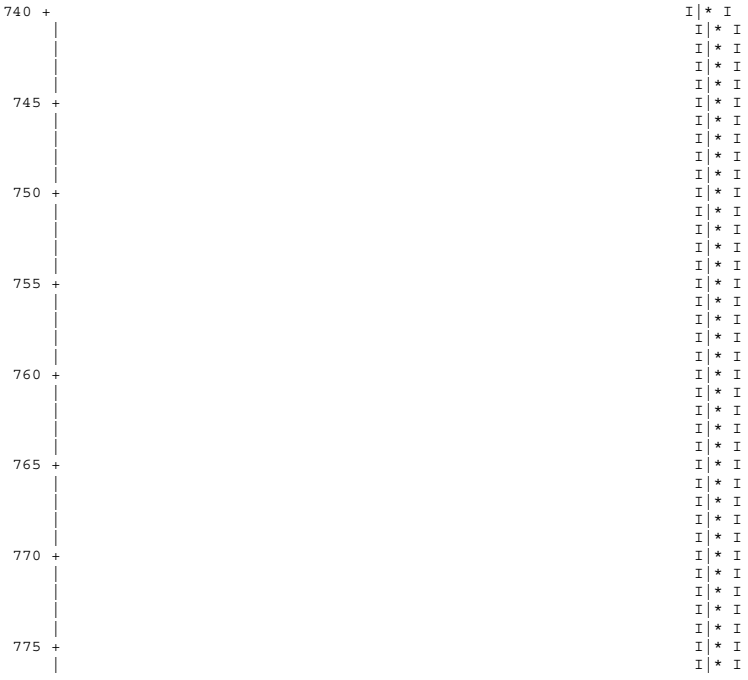


780
785
790
795
800

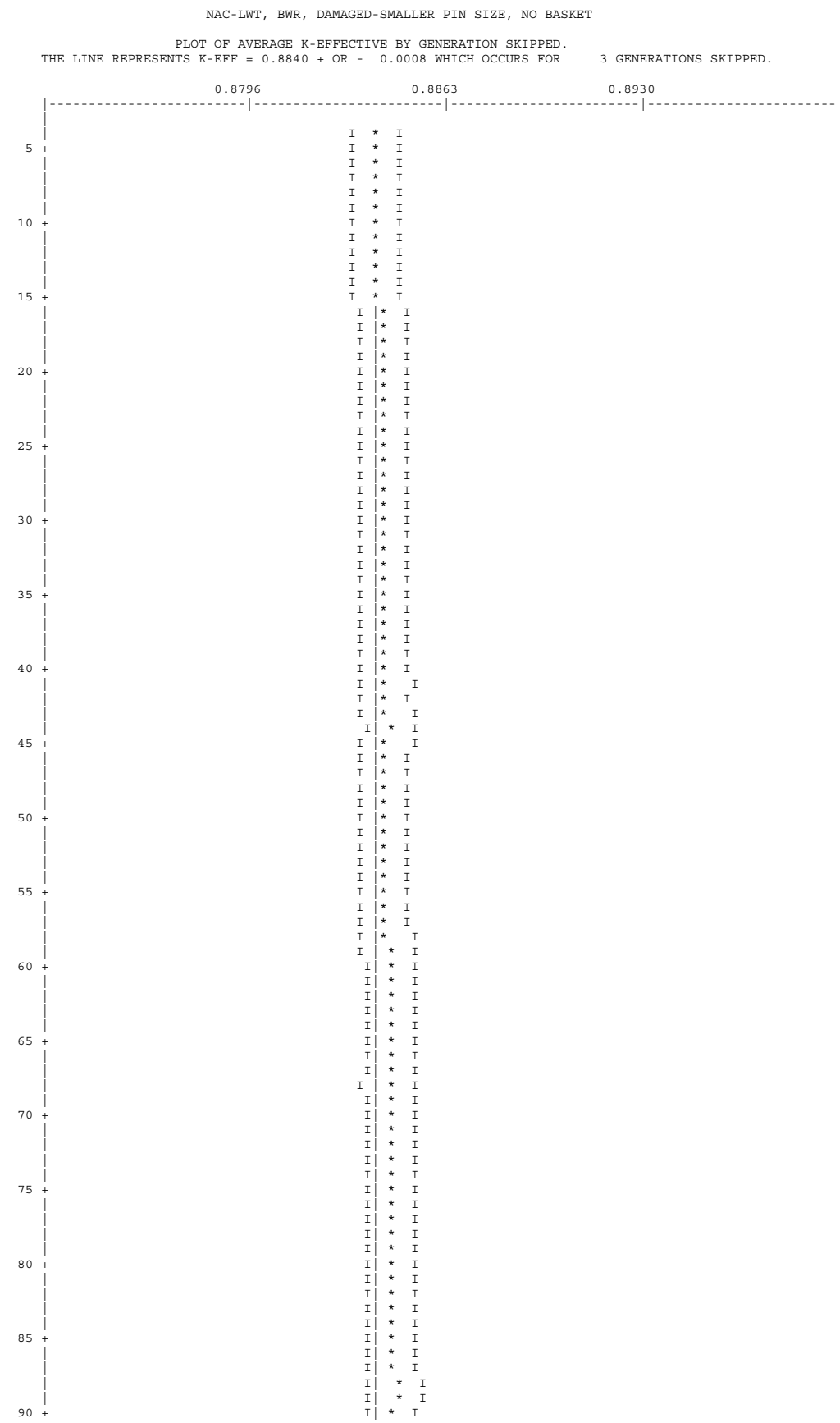
NAC-LWT, BWR, DAMAGED-SMALLER PIN SIZE, NO BASKET
PLOT OF AVERAGE K-EFFECTIVE BY GENERATION SKIPPED.
THE LINE REPRESENTS K-EFF = 0.8840 + OR - 0.0008 WHICH OCCURS FOR 3 GENERATIONS SKIPPED.
0.8796
0.8863
0.8930
5
10
15
20
25
30
35
40
45
50
55
60
65
70
75
80
85
90

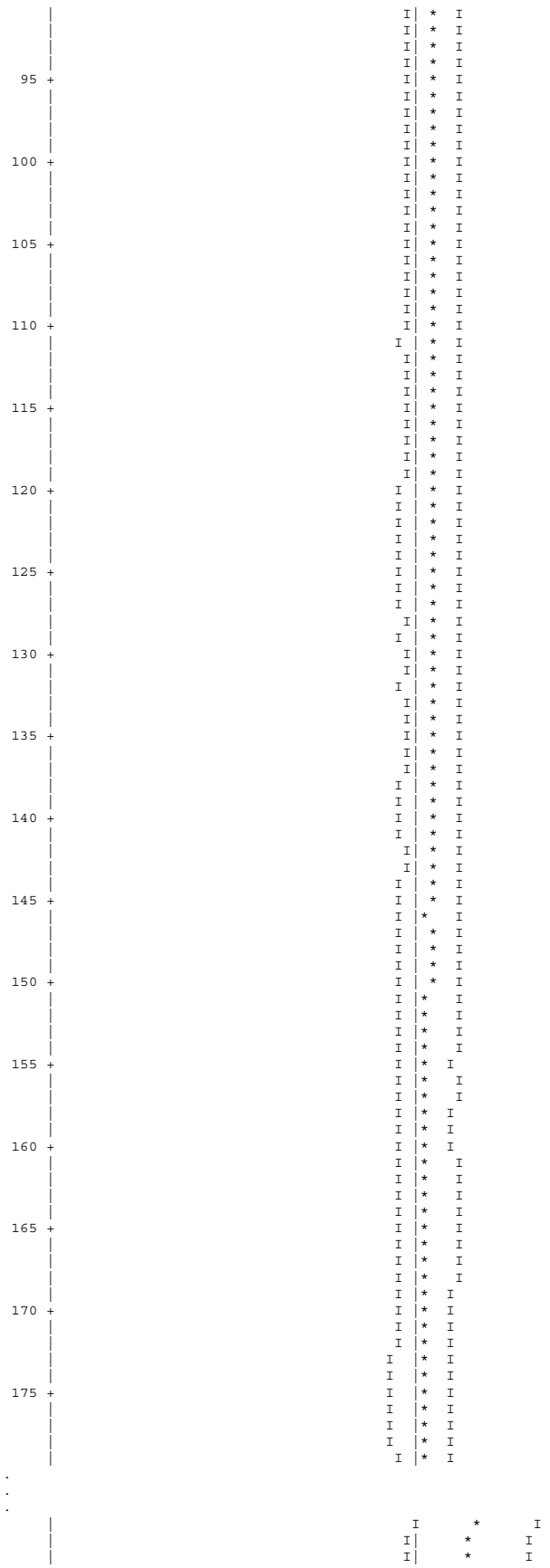

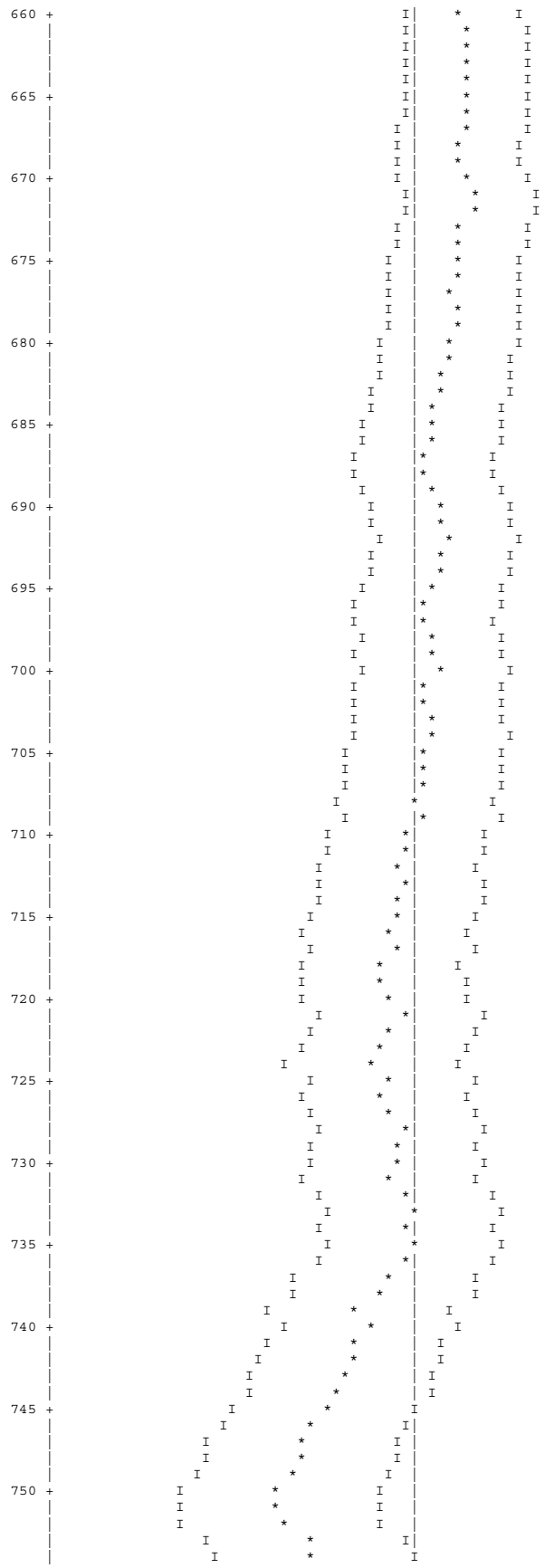

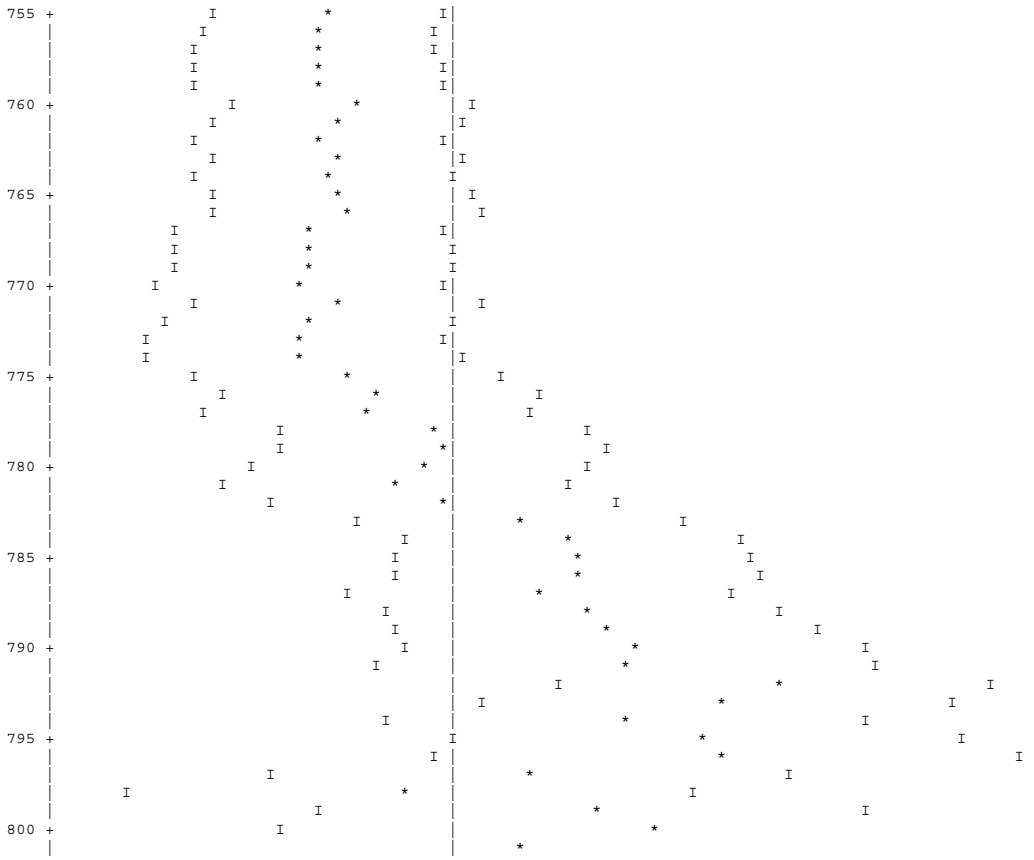

NAC-LWT, BWR, DAMAGED-SMALLER PIN SIZE, NO BASKET

SKIPPING 3 GENERATIONS

GROUP	FISSION FRACTION	UNIT	REGION	FISSIONS	PERCENT DEVIATION	ABSORPTIONS	PERCENT DEVIATION	LEAKAGE	PERCENT DEVIATION
1	0.0022			1.96658E-03	1.7589	1.58278E-03	1.0608	0.00000E+00	0.0000
2	0.0090			7.96142E-03	0.5398	5.30037E-03	0.3750	0.00000E+00	0.0000
3	0.0096			8.52892E-03	0.5386	3.98226E-03	0.4683	0.00000E+00	0.0000
4	0.0040			3.49285E-03	0.6101	1.92198E-03	0.5162	0.00000E+00	0.0000
5	0.0014			1.21726E-03	0.4944	2.01274E-03	0.3204	0.00000E+00	0.0000
6	0.0013			1.12736E-03	0.4022	6.53290E-03	0.2624	0.00000E+00	0.0000
7	0.0013			1.11593E-03	0.3686	1.20121E-02	0.2564	0.00000E+00	0.0000
8	0.0012			1.06475E-03	0.4426	1.03186E-02	0.2874	0.00000E+00	0.0000
9	0.0016			1.45123E-03	0.4863	1.10415E-02	0.2762	0.00000E+00	0.0000
10	0.0036			3.18924E-03	0.4918	2.52182E-02	0.2730	0.00000E+00	0.0000
11	0.0078			6.85543E-03	0.5029	3.20578E-02	0.2575	0.00000E+00	0.0000
12	0.0104			9.21294E-03	0.5644	2.77887E-02	0.3086	0.00000E+00	0.0000
13	0.0100			8.87556E-03	0.5948	3.26728E-02	0.2939	0.00000E+00	0.0000
14	0.0082			7.23419E-03	0.5289	4.57709E-02	0.2864	0.00000E+00	0.0000
15	0.0018			1.57602E-03	0.9421	1.92787E-02	0.3773	0.00000E+00	0.0000
16	0.0012			1.08857E-03	1.2149	1.07028E-02	0.4169	0.00000E+00	0.0000
17	0.0019			1.64785E-03	1.5877	5.63296E-03	0.4683	0.00000E+00	0.0000
18	0.0025			2.21153E-03	1.6749	5.19957E-03	0.5349	0.00000E+00	0.0000
19	0.0032			2.80070E-03	1.3072	8.96525E-03	0.4679	0.00000E+00	0.0000
20	0.0131			1.15860E-02	0.7014	2.84619E-02	0.3722	0.00000E+00	0.0000
21	0.0072			6.40408E-03	1.1817	1.04813E-02	0.5451	0.00000E+00	0.0000

22	0.0185	1.63857E-02	0.7540	2.17849E-02	0.4255	0.00000E+00	0.0000
23	0.0909	8.03774E-02	0.3495	8.51048E-02	0.2295	0.00000E+00	0.0000
24	0.2335	2.06453E-01	0.2134	1.82086E-01	0.1451	0.00000E+00	0.0000
25	0.2127	1.88054E-01	0.2450	1.57630E-01	0.1659	0.00000E+00	0.0000
26	0.2613	2.30964E-01	0.2164	1.90054E-01	0.1541	0.00000E+00	0.0000
27	0.0805	7.11557E-02	0.4296	5.86644E-02	0.3103	0.00000E+00	0.0000
SYSTEM TOTAL =		8.83998E-01	0.0906	1.00226E+00	0.0275	0.00000E+00	0.0000

ELAPSED TIME 28.69033 MINUTES
RANDOM NUMBER= 5C3FF945F3

NAC-LWT, BWR, DAMAGED-SMALLER PIN SIZE, NO BASKET

FREQUENCY FOR GENERATIONS 4 TO 803

```
0.8018 TO 0.8054     *
0.8054 TO 0.8090     *
0.8090 TO 0.8126
0.8126 TO 0.8161     *
0.8161 TO 0.8197     *
0.8197 TO 0.8233     **
0.8233 TO 0.8269
0.8269 TO 0.8304     *
0.8304 TO 0.8340     ****
0.8340 TO 0.8376     ********
0.8376 TO 0.8412     ********
0.8412 TO 0.8447     ***********
0.8447 TO 0.8483     *************
0.8483 TO 0.8519     ***********
0.8519 TO 0.8555     **********************
0.8555 TO 0.8590     ******************
0.8590 TO 0.8626     *********************************
0.8626 TO 0.8662     ************************************
0.8662 TO 0.8698     *******************************************
0.8698 TO 0.8733     ****************************************
0.8733 TO 0.8769     ****************************************
0.8769 TO 0.8805     ************************************************************
0.8805 TO 0.8841     *****************************************
0.8841 TO 0.8876     ***********************************
0.8876 TO 0.8912     *****************************************
0.8912 TO 0.8948     ************************************************
0.8948 TO 0.8984     ************************************************
0.8984 TO 0.9020     *********************************************
0.9020 TO 0.9055     **********************************************
0.9055 TO 0.9091     ***************************
0.9091 TO 0.9127     *********************
0.9127 TO 0.9163     ****************************
0.9163 TO 0.9198     ********************
0.9198 TO 0.9234     ************
0.9234 TO 0.9270     *******
0.9270 TO 0.9306     ********
0.9306 TO 0.9341     ****
0.9341 TO 0.9377     **
0.9377 TO 0.9413     *
0.9413 TO 0.9449     **
0.9449 TO 0.9484
0.9484 TO 0.9520     *
```

NAC-LWT, BWR, DAMAGED-SMALLER PIN SIZE, NO BASKET

FREQUENCY FOR GENERATIONS 204 TO 803

```
0.8018 TO 0.8054     *
0.8054 TO 0.8090     *
0.8090 TO 0.8126
0.8126 TO 0.8161     *
0.8161 TO 0.8197     *
0.8197 TO 0.8233     **
0.8233 TO 0.8269
0.8269 TO 0.8304     *
0.8304 TO 0.8340     ***
0.8340 TO 0.8376     ******
0.8376 TO 0.8412     ******
0.8412 TO 0.8447     *********
0.8447 TO 0.8483     *******
0.8483 TO 0.8519     ********
0.8519 TO 0.8555     ****************
0.8555 TO 0.8590     ************
0.8590 TO 0.8626     **********************
0.8626 TO 0.8662     ******************************
0.8662 TO 0.8698     *********************************
0.8698 TO 0.8733     *********************************
0.8733 TO 0.8769     ***************************
0.8769 TO 0.8805     ***********************************************
0.8805 TO 0.8841     ******************************
0.8841 TO 0.8876     ************************
0.8876 TO 0.8912     ***********************************
0.8912 TO 0.8948     ****************************************
0.8948 TO 0.8984     ************************************
0.8984 TO 0.9020     **********************************
0.9020 TO 0.9055     ************************************
0.9055 TO 0.9091     *********************
0.9091 TO 0.9127     ***************
0.9127 TO 0.9163     ************************
0.9163 TO 0.9198     ***************
0.9198 TO 0.9234     ********
0.9234 TO 0.9270     ****
0.9270 TO 0.9306     *****
0.9306 TO 0.9341     ***
0.9341 TO 0.9377     *
0.9377 TO 0.9413     *
0.9413 TO 0.9449     **
0.9449 TO 0.9484
0.9484 TO 0.9520     *
```

NAC-LWT, BWR, DAMAGED-SMALLER PIN SIZE, NO BASKET

FREQUENCY FOR GENERATIONS 404 TO 803

```
0.8018 TO 0.8054
0.8054 TO 0.8090     *
0.8090 TO 0.8126
0.8126 TO 0.8161
0.8161 TO 0.8197
0.8197 TO 0.8233     **
0.8233 TO 0.8269
0.8269 TO 0.8304     *
0.8304 TO 0.8340     **
0.8340 TO 0.8376     ***
0.8376 TO 0.8412     *****
0.8412 TO 0.8447     ******
0.8447 TO 0.8483     ***
0.8483 TO 0.8519     ****
0.8519 TO 0.8555     ********
0.8555 TO 0.8590     **********
0.8590 TO 0.8626     ****************
0.8626 TO 0.8662     ****************
0.8662 TO 0.8698     ********************
0.8698 TO 0.8733     ***************
0.8733 TO 0.8769     ********************
0.8769 TO 0.8805     **********************************
0.8805 TO 0.8841     ******************
0.8841 TO 0.8876     ***************
0.8876 TO 0.8912     ***********************
0.8912 TO 0.8948     *************************
0.8948 TO 0.8984     ************************
0.8984 TO 0.9020     ***********************
0.9020 TO 0.9055     *******************************
0.9055 TO 0.9091     ****************
0.9091 TO 0.9127     **********
0.9127 TO 0.9163     ******************
0.9163 TO 0.9198     *********
0.9198 TO 0.9234     ****
0.9234 TO 0.9270     ****
0.9270 TO 0.9306     ***
0.9306 TO 0.9341     **
0.9341 TO 0.9377
0.9377 TO 0.9413     *
0.9413 TO 0.9449     **
0.9449 TO 0.9484
0.9484 TO 0.9520
```

NAC-LWT, BWR, DAMAGED-SMALLER PIN SIZE, NO BASKET

FREQUENCY FOR GENERATIONS 604 TO 803

```
0.8018 TO 0.8054
0.8054 TO 0.8090
0.8090 TO 0.8126
0.8126 TO 0.8161
0.8161 TO 0.8197
0.8197 TO 0.8233     *
0.8233 TO 0.8269
0.8269 TO 0.8304     *
0.8304 TO 0.8340     *
0.8340 TO 0.8376     **
0.8376 TO 0.8412     ***
0.8412 TO 0.8447     ***
0.8447 TO 0.8483     **
0.8483 TO 0.8519     ****
0.8519 TO 0.8555     ****
0.8555 TO 0.8590     ******
0.8590 TO 0.8626     ********
0.8626 TO 0.8662     *******
0.8662 TO 0.8698     ********
0.8698 TO 0.8733     ******
0.8733 TO 0.8769     **********
0.8769 TO 0.8805     ****************
0.8805 TO 0.8841     ********
0.8841 TO 0.8876     ******
0.8876 TO 0.8912     ************
0.8912 TO 0.8948     **********
0.8948 TO 0.8984     **************
0.8984 TO 0.9020     ***********
0.9020 TO 0.9055     ************************
0.9055 TO 0.9091     ***********
0.9091 TO 0.9127     **
0.9127 TO 0.9163     ********
0.9163 TO 0.9198     ***
0.9198 TO 0.9234     ***
0.9234 TO 0.9270     **
0.9270 TO 0.9306     **
0.9306 TO 0.9341     **
0.9341 TO 0.9377
0.9377 TO 0.9413
0.9413 TO 0.9449     *
0.9449 TO 0.9484
0.9484 TO 0.9520
```

****
*

```
         CONGRATULATIONS!  YOU HAVE  SUCCESSFULLY TRAVERSED THE PERILOUS PATH THROUGH KENO V IN  28.69033 MINUTES

*****************************************************************************************************************************
*
```

6.6.11 PULSTAR Fuel Elements in the LWT Cask

This section contains a sample output file from the evaluation of PULSTAR fuel elements in the LWT cask. The output file is shown in Figure 6.6.11-1.

Figure 6.6.11-1 Maximum Reactivity PULSTAR Configuration

```
       PRIMARY MODULE ACCESS AND INPUT RECORD ( SCALE DRIVER - 95/03/29 - 09:06:37 )
MODULE CSAS25   WILL BE CALLED
  NAC-LWT INPUT FOR HOMOGENIZED PULSTAR ELEMENTS IN CAN & INTACT ASSEMBLIES
  'MIN BASKET PLATE THICKNESS & OPENING
  '33 GRAMS U-235 PER ELEMENT
  'AXIAL ALTERNATING SHIFT
  '24.1-INCH ACTIVE FUEL HEIGHT
  27GROUPNDF4  LATTICECELL
  UO2       1 DEN=10.38 1.0 293.0 92235 6.5 92238 93.5 END
  ZIRCALLOY 2 1.0 293.0 END
  H2O       3 1.E-20 293.0 END
  AL        4 1.0 293.0 END
  SS304     5 1.0 293.0 END
  PB        6 1.0 293.0 END
  H2O       7 1.E-20 293.0 END
  H2O       8 1.E-20 293.0 END
  H2O       9 1.0 293.0 END
  H2O       10 1.0 293.0 END
  UO2       11 DEN=10.38 0.2592 293.0 92235 6.5 92238 93.5 END
  ZIRCALLOY 11 0.0484 293.0 END
  H2O       11 0.6924 293.0 END
  END COMP
  SQUAREPITCH 1.54178 1.07442 1 3 1.1938 2 1.09982 9 END
  READ PARAM TBA=5 RUN=YES PLT=NO GEN=803 NPG=1000 END PARAM
  READ GEOM
  UNIT 1
  COM='PULSTAR FUEL ELEMENT'
  CYLINDER 1 1 0.5372 63.8810 2.6670
  CYLINDER 9 1 0.5499 63.8810 2.6670
  CYLINDER 2 1 0.5969 66.5480 0.0000
  CUBOID 3 1 2P0.7709 2P0.6668 66.5480 0.0000
  UNIT 5
  COM='DIVIDER CENTER STACK'
  CUBOID 5 1 2P4.2926 0.7112 0.0000 110.49 0
  UNIT 6
  COM='DIVIDER OUTSIDE STACK'
  CUBOID 5 1 2P4.2926 0.6096 0.0000 110.49 0
  'TOP BASKET (CANNED ELEMENTS)
  UNIT 10
  COM='HOMOGENIZED PULSTAR FUEL - TOP OPENING'
  CUBOID 11 1 2P4.1910 2P4.1910 76.2000 0.0000
  CUBOID 3 1 4P4.2926 110.4900 0.0000
  UNIT 11
  COM='HOMOGENIZED PULSTAR FUEL - BOTTOM OPENING'
  CUBOID 11 1 2P4.1910 2P4.1910 76.2000 0.0000
  CUBOID 3 1 4P4.2926 110.4900 0.0000
  UNIT 12
  COM='HOMOGENIZED PULSTAR FUEL - BOTTOM RIGHT'
  CUBOID 11 1 2P4.1910 2P4.1910 76.2000 0.0000
  CUBOID 3 1 4P4.2926 110.4900 0.0000
  UNIT 13
  COM='HOMOGENIZED PULSTAR FUEL - TOP RIGHT'
  CUBOID 11 1 2P4.1910 2P4.1910 76.2000 0.0000
  CUBOID 3 1 4P4.2926 110.4900 0.0000
  UNIT 14
  COM='HOMOGENIZED PULSTAR FUEL - BOTTOM LEFT'
  CUBOID 11 1 2P4.1910 2P4.1910 76.2000 0.0000
  CUBOID 3 1 4P4.2926 110.4900 0.0000
  UNIT 15
  COM='HOMOGENIZED PULSTAR FUEL - TOP LEFT'
  CUBOID 11 1 2P4.1910 2P4.1910 76.2000 0.0000
  CUBOID 3 1 4P4.2926 110.4900 0.0000
  UNIT 16
  COM='HOMOGENIZED PULSTAR FUEL - CENTER OPENING'
  CUBOID 11 1 2P4.1910 2P4.1910 76.2000 0.0000
  CUBOID 3 1 4P4.2926 110.4900 0.0000
  UNIT 20
  COM='CENTER COLUMN OF THREE OPENINGS'
  ARRAY 2 -4.2926 -13.5890 0.0000
  REPLICATE 5 1 4R0.7112 2R0.0 1
  UNIT 21
  COM='LEFT OUTSIDE COLUMN OF TWO OPENINGS'
  ARRAY 4 -4.2926 -8.8900 0.0000
  REPLICATE 5 1 0.0000 0.3048 2R0.3048 2R0.0 1
  UNIT 22
  COM='RIGHT OUTSIDE COLUMN OF TWO OPENINGS'
  ARRAY 3 -4.2926 -8.8900 0.0000
  REPLICATE 5 1 0.3048 0.0000 2R0.3048 2R0.0 1
  UNIT 30
  COM='MTR 7-ASSY BASKET'
  CYLINDER 3 1 17.0500 110.4900 0.0000
  HOLE 20 0.0000 0.0000 0.0000
  HOLE 21 -9.2974 0.0000 0.0000
  HOLE 22 9.2974 0.0000 0.0000
  CYLINDER 5 1 18.8913 110.4900 -1.2700
  CYLINDER 6 1 33.4963 110.4900 -1.2700
  CYLINDER 5 1 36.5443 110.4900 -1.2700
  CYLINDER 7 1 49.2443 110.4900 -1.2700
  CYLINDER 5 1 49.8539 110.4900 -1.2700
  CUBOID 8 1 4P49.8539 110.4900 -1.2700
  'TOP MIDDLE BASKET (INTACT ASSEMBLIES)
```

```
UNIT 110
COM='PULSTAR ASSEMBLY - TOP OPENING'
ARRAY 1 -3.8545 -3.3338 43.9420
CUBOID 2 1 2P4.0069 2P3.4862 110.4900 43.9420
CUBOID 3 1 4P4.2926 110.4900 0.0000
UNIT 111
COM='PULSTAR ASSEMBLY - BOTTOM OPENING'
ARRAY 1 -3.8545 -3.3338 43.9420
CUBOID 2 1 2P4.0069 2P3.4862 110.4900 43.9420
CUBOID 3 1 4P4.2926 110.4900 0.0000
UNIT 112
COM='PULSTAR ASSEMBLY - BOTTOM RIGHT'
ARRAY 1 -3.8545 -3.3338 43.9420
CUBOID 2 1 2P4.0069 2P3.4862 110.4900 43.9420
CUBOID 3 1 4P4.2926 110.4900 0.0000
UNIT 113
COM='PULSTAR ASSEMBLY - TOP RIGHT'
ARRAY 1 -3.8545 -3.3338 43.9420
CUBOID 2 1 2P4.0069 2P3.4862 110.4900 43.9420
CUBOID 3 1 4P4.2926 110.4900 0.0000
UNIT 114
COM='PULSTAR ASSEMBLY - BOTTOM LEFT'
ARRAY 1 -3.8545 -3.3338 43.9420
CUBOID 2 1 2P4.0069 2P3.4862 110.4900 43.9420
CUBOID 3 1 4P4.2926 110.4900 0.0000
UNIT 115
COM='PULSTAR ASSEMBLY - TOP LEFT'
ARRAY 1 -3.8545 -3.3338 43.9420
CUBOID 2 1 2P4.0069 2P3.4862 110.4900 43.9420
CUBOID 3 1 4P4.2926 110.4900 0.0000
UNIT 116
COM='PULSTAR ASSEMBLY - CENTER OPENING'
ARRAY 1 -3.8545 -3.3338 43.9420
CUBOID 2 1 2P4.0069 2P3.4862 110.4900 43.9420
CUBOID 3 1 4P4.2926 110.4900 0.0000
UNIT 120
COM='CENTER COLUMN OF THREE OPENINGS'
ARRAY 12 -4.2926 -13.5890 0.0000
REPLICATE 5 1 4R0.7112 2R0.0 1
UNIT 121
COM='LEFT OUTSIDE COLUMN OF TWO OPENINGS'
ARRAY 14 -4.2926 -8.8900 0.0000
REPLICATE 5 1 0.0000 0.3048 2R0.3048 2R0.0 1
UNIT 122
COM='RIGHT OUTSIDE COLUMN OF TWO OPENINGS'
ARRAY 13 -4.2926 -8.8900 0.0000
REPLICATE 5 1 0.3048 0.0000 2R0.3048 2R0.0 1
UNIT 130
COM='MTR 7-ASSY BASKET'
CYLINDER 3 1 17.0500 110.4900 0.0000
HOLE 120 0.0000 0.0000 0.0000
HOLE 121 -9.2974 0.0000 0.0000
HOLE 122 9.2974 0.0000 0.0000
CYLINDER 5 1 18.8913 110.4900 -1.2700
CYLINDER 6 1 33.4963 110.4900 -1.2700
CYLINDER 5 1 36.5443 110.4900 -1.2700
CYLINDER 7 1 49.2443 110.4900 -1.2700
CYLINDER 5 1 49.8539 110.4900 -1.2700
CUBOID 8 1 4P49.8539 110.4900 -1.2700
'BOTTOM MIDDLE BASKET (INTACT ASSEMBLIES)
UNIT 210
COM='PULSTAR ASSEMBLY - TOP OPENING'
ARRAY 1 -3.8545 -3.3338 0.0000
CUBOID 2 1 2P4.0069 2P3.4862 66.5480 0.0000
CUBOID 3 1 4P4.2926 110.4900 0.0000
UNIT 211
COM='PULSTAR ASSEMBLY - BOTTOM OPENING'
ARRAY 1 -3.8545 -3.3338 0.0000
CUBOID 2 1 2P4.0069 2P3.4862 66.5480 0.0000
CUBOID 3 1 4P4.2926 110.4900 0.0000
UNIT 212
COM='PULSTAR ASSEMBLY - BOTTOM RIGHT'
ARRAY 1 -3.8545 -3.3338 0.0000
CUBOID 2 1 2P4.0069 2P3.4862 66.5480 0.0000
CUBOID 3 1 4P4.2926 110.4900 0.0000
UNIT 213
COM='PULSTAR ASSEMBLY - TOP RIGHT'
ARRAY 1 -3.8545 -3.3338 0.0000
CUBOID 2 1 2P4.0069 2P3.4862 66.5480 0.0000
CUBOID 3 1 4P4.2926 110.4900 0.0000
UNIT 214
COM='PULSTAR ASSEMBLY - BOTTOM LEFT'
ARRAY 1 -3.8545 -3.3338 0.0000
CUBOID 2 1 2P4.0069 2P3.4862 66.5480 0.0000
CUBOID 3 1 4P4.2926 110.4900 0.0000
UNIT 215
COM='PULSTAR ASSEMBLY - TOP LEFT'
ARRAY 1 -3.8545 -3.3338 0.0000
CUBOID 2 1 2P4.0069 2P3.4862 66.5480 0.0000
CUBOID 3 1 4P4.2926 110.4900 0.0000
UNIT 216
COM='PULSTAR ASSEMBLY - CENTER OPENING'
ARRAY 1 -3.8545 -3.3338 0.0000
CUBOID 2 1 2P4.0069 2P3.4862 66.5480 0.0000
CUBOID 3 1 4P4.2926 110.4900 0.0000
```

```
UNIT 220
COM='CENTER COLUMN OF THREE OPENINGS'
ARRAY 22 -4.2926 -13.5890 0.0000
REPLICATE 5 1 4R0.7112 2R0.0 1
UNIT 221
COM='LEFT OUTSIDE COLUMN OF TWO OPENINGS'
ARRAY 24 -4.2926 -8.8900 0.0000
REPLICATE 5 1 0.0000 0.3048 2R0.3048 2R0.0 1
UNIT 222
COM='RIGHT OUTSIDE COLUMN OF TWO OPENINGS'
ARRAY 23 -4.2926 -8.8900 0.0000
REPLICATE 5 1 0.3048 0.0000 2R0.3048 2R0.0 1
UNIT 230
COM='MTR 7-ASSY BASKET'
CYLINDER 3 1 17.0500 110.4900 0.0000
HOLE 220 0.0000 0.0000 0.0000
HOLE 221 -9.2974 0.0000 0.0000
HOLE 222 9.2974 0.0000 0.0000
CYLINDER 5 1 18.8913 110.4900 -1.2700
CYLINDER 6 1 33.4963 110.4900 -1.2700
CYLINDER 5 1 36.5443 110.4900 -1.2700
CYLINDER 7 1 49.2443 110.4900 -1.2700
CYLINDER 5 1 49.8539 110.4900 -1.2700
CUBOID 8 1 4P49.8539 110.4900 -1.2700
'BOTTOM BASKET (CANNED ELEMENTS)
UNIT 310
COM='HOMOGENIZED PULSTAR FUEL - TOP OPENING'
CUBOID 11 1 2P4.1910 2P4.1910 110.4900 34.2900
CUBOID 3 1 4P4.2926 110.4900 0.0000
UNIT 311
COM='HOMOGENIZED PULSTAR FUEL - BOTTOM OPENING'
CUBOID 11 1 2P4.1910 2P4.1910 110.4900 34.2900
CUBOID 3 1 4P4.2926 110.4900 0.0000
UNIT 312
COM='HOMOGENIZED PULSTAR FUEL - BOTTOM RIGHT'
CUBOID 11 1 2P4.1910 2P4.1910 110.4900 34.2900
CUBOID 3 1 4P4.2926 110.4900 0.0000
UNIT 313
COM='HOMOGENIZED PULSTAR FUEL - TOP RIGHT'
CUBOID 11 1 2P4.1910 2P4.1910 110.4900 34.2900
CUBOID 3 1 4P4.2926 110.4900 0.0000
UNIT 314
COM='HOMOGENIZED PULSTAR FUEL - BOTTOM LEFT'
CUBOID 11 1 2P4.1910 2P4.1910 110.4900 34.2900
CUBOID 3 1 4P4.2926 110.4900 0.0000
UNIT 315
COM='HOMOGENIZED PULSTAR FUEL - TOP LEFT'
CUBOID 11 1 2P4.1910 2P4.1910 110.4900 34.2900
CUBOID 3 1 4P4.2926 110.4900 0.0000
UNIT 316
COM='HOMOGENIZED PULSTAR FUEL - CENTER OPENING'
CUBOID 11 1 2P4.1910 2P4.1910 110.4900 34.2900
CUBOID 3 1 4P4.2926 110.4900 0.0000
UNIT 320
COM='CENTER COLUMN OF THREE OPENINGS'
ARRAY 32 -4.2926 -13.5890 0.0000
REPLICATE 5 1 4R0.7112 2R0.0 1
UNIT 321
COM='LEFT OUTSIDE COLUMN OF TWO OPENINGS'
ARRAY 34 -4.2926 -8.8900 0.0000
REPLICATE 5 1 0.0000 0.3048 2R0.3048 2R0.0 1
UNIT 322
COM='RIGHT OUTSIDE COLUMN OF TWO OPENINGS'
ARRAY 33 -4.2926 -8.8900 0.0000
REPLICATE 5 1 0.3048 0.0000 2R0.3048 2R0.0 1
UNIT 330
COM='MTR 7-ASSY BASKET'
CYLINDER 3 1 17.0500 110.4900 0.0000
HOLE 320 0.0000 0.0000 0.0000
HOLE 321 -9.2974 0.0000 0.0000
HOLE 322 9.2974 0.0000 0.0000
CYLINDER 5 1 18.8913 110.4900 -1.2700
CYLINDER 6 1 33.4963 110.4900 -1.2700
CYLINDER 5 1 36.5443 110.4900 -1.2700
CYLINDER 7 1 49.2443 110.4900 -1.2700
CYLINDER 5 1 49.8539 110.4900 -1.2700
CUBOID 8 1 4P49.8539 110.4900 -1.2700
UNIT 40
COM='SIMPLIFIED LID STRUCTURE NAC-LWT'
CYLINDER 5 1 36.5188   13.6775 -14.1351
CYLINDER 8 1 49.8539   13.6775 -14.1351
CUBOID   8 1 4P49.8539 13.6775 -14.1351
UNIT 41
COM='SIMPLIFIED CASK BOTTOM STRUCTURE NAC-LWT'
CYLINDER 6 1 26.3525 2P3.81
CYLINDER 5 1 36.6188 +13.36 -12.7
CYLINDER 8 1 49.8539 +13.36 -12.7
CUBOID   8 1 4P49.8539 +13.36 -12.7
UNIT 42
COM='THIN TOP AND BOTTOM SHELL OF NEUTRON SHIELD - SUBTRACTED FROM LID MODEL'
CYLINDER 5 1 49.8539 0.61 0.0
CUBOID   8 1 4P49.8539 0.61 0.0
UNIT 70
COM='STACK OF 4 BASKETS IN CASK WITH LID AND BOTTOM'
ARRAY  10  -49.8539 -49.8539 0.0
```

```
  GLOBAL UNIT 80
  COM='3 CASKS IN TRIANGULAR PITCH'
  CUBOID   8 1 4P101.0 502.2 0.0
  HOLE 70   0.0  50.0 0.0
  HOLE 70 -50.0 -50.0 0.0
  HOLE 70  50.0 -50.0 0.0
  END GEOM
  READ ARRAY
  ARA=1 NUX=5 NUY=5 NUZ=1 FILL 25R1 END FILL
  ARA=2 NUX=1 NUY=5 NUZ=1 FILL 11 5 16 5 10 END FILL
  ARA=3 NUX=1 NUY=3 NUZ=1 FILL 12 6 13 END FILL
  ARA=4 NUX=1 NUY=3 NUZ=1 FILL 14 6 15 END FILL
  ARA=12 NUX=1 NUY=5 NUZ=1 FILL 111 5 116 5 110 END FILL
  ARA=13 NUX=1 NUY=3 NUZ=1 FILL 112 6 113 END FILL
  ARA=14 NUX=1 NUY=3 NUZ=1 FILL 114 6 115 END FILL
  ARA=22 NUX=1 NUY=5 NUZ=1 FILL 211 5 216 5 210 END FILL
  ARA=23 NUX=1 NUY=3 NUZ=1 FILL 212 6 213 END FILL
  ARA=24 NUX=1 NUY=3 NUZ=1 FILL 214 6 215 END FILL
  ARA=32 NUX=1 NUY=5 NUZ=1 FILL 311 5 316 5 310 END FILL
  ARA=33 NUX=1 NUY=3 NUZ=1 FILL 312 6 313 END FILL
  ARA=34 NUX=1 NUY=3 NUZ=1 FILL 314 6 315 END FILL
  ARA=10 NUX=1 NUY=1 NUZ=8 FILL 41 42 330 230 130 30 42 40 END FILL
  END ARRAY
  READ BOUNDS ALL=H2O END BOUNDS
  READ PLOT
  TTL='X-Y PLOT OF CENTER ELEMENT - FUEL ELEVATION'
  SCR=YES PIC=MAT LPI=10
  UAX=1.0 VDN=-1.0 NAX=1500
  XUL=-5.0 YUL=5.0 ZUL=100.0
  XLR=5.0 YLR=-5.0 ZLR=100.0 END
  TTL='X-Y PLOT OF BASKET - FUEL ELEVATION'
  UAX=1.0 VDN=-1.0 NAX=1500
  XUL=-17.0 YUL=17.0 ZUL=100.0
  XLR=17.0 YLR=-17.0 ZLR=100.0 END
  TTL='X-Y PLOT OF CASK - FUEL ELEVATION'
  UAX=1.0 VDN=-1.0 NAX=1500
  XUL=-65.0 YUL=65.0 ZUL=100.0
  XLR=65.0 YLR=-65.0 ZLR=100.0 END
  TTL='Y-Z (X=0) PLOT OF BOTTOM BASKET - CENTER SECTION'
  VAX=1.0 WDN=-1.0
  XUL=0.0 YUL=-5.0 ZUL=55.0
  XLR=0.0 YLR=5.0 ZLR=50.0 END
  TTL='Y-Z (X=0) PLOT OF BOTTOM BASKET - CENTER FUEL ELEMENT'
  VAX=1.0 WDN=-1.0
  XUL=0.0 YUL=-5.0 ZUL=176.1
  XLR=0.0 YLR=5.0 ZLR=26.6 END
  TTL='Y-Z (X=-2) PLOT OF BOTTOM BASKET'
  VAX=1.0 WDN=-1.0
  XUL=-2.0 YUL=-15.0 ZUL=176.1
  XLR=-2.0 YLR=15.0 ZLR=26.6 END
  TTL='Y-Z (X=-2) PLOT OF CASK - R=17.0'
  LPI=5 NAX=1000
  VAX=1.0 WDN=-1.0
  XUL=-2.0 YUL=-17.0 ZUL=502.0
  XLR=-2.0 YLR=17.0 ZLR=-1.0 END
  TTL='Y-Z (X=-2) PLOT OF CASK - R=51.0'
  VAX=1.0 WDN=-1.0
  XUL=-2.0 YUL=-51.0 ZUL=502.0
  XLR=-2.0 YLR=51.0 ZLR=-1.0 END
  END PLOT
  END DATA

SECONDARY MODULE O0O008   HAS BEEN CALLED.

MODULE O0O008   IS FINISHED. COMPLETION CODE     0. CPU TIME USED     0.77 (SECONDS).

SECONDARY MODULE O0O002   HAS BEEN CALLED.

MODULE O0O002   IS FINISHED. COMPLETION CODE     0. CPU TIME USED     4.77 (SECONDS).

SECONDARY MODULE O0O009   HAS BEEN CALLED.

MODULE O0O009   IS FINISHED. COMPLETION CODE     0. CPU TIME USED   307.04 (SECONDS).

MODULE CSAS25   IS FINISHED. COMPLETION CODE     0. CPU TIME USED   314.94 (SECONDS).
```

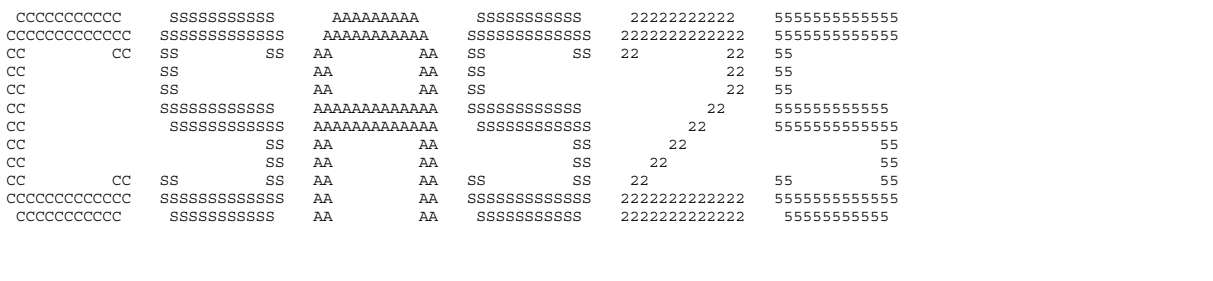

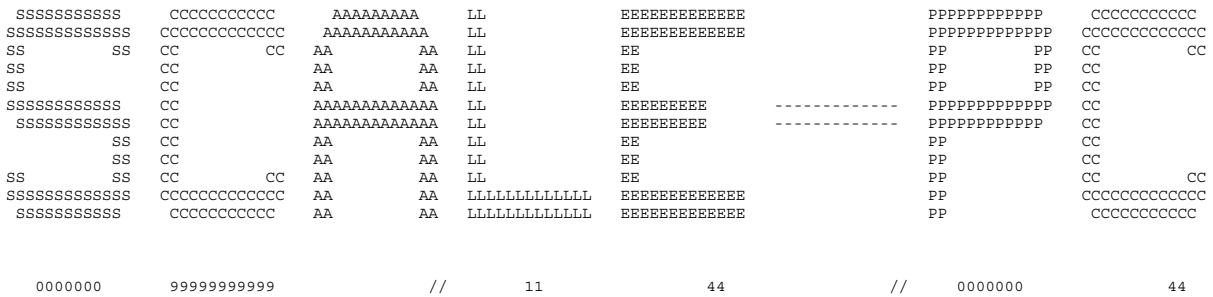

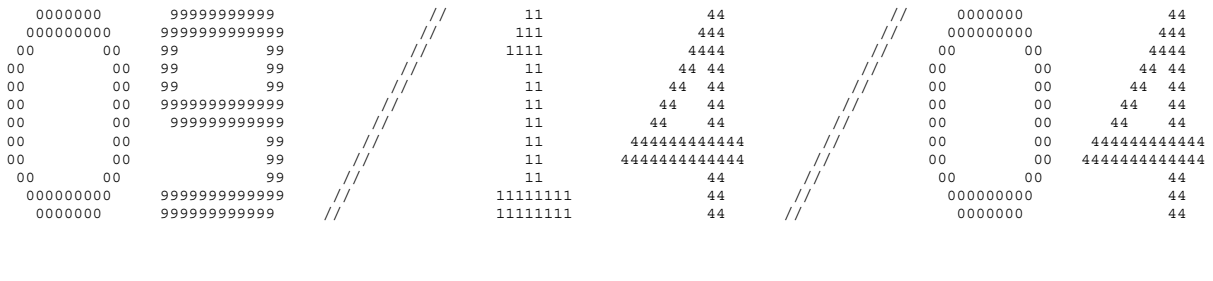

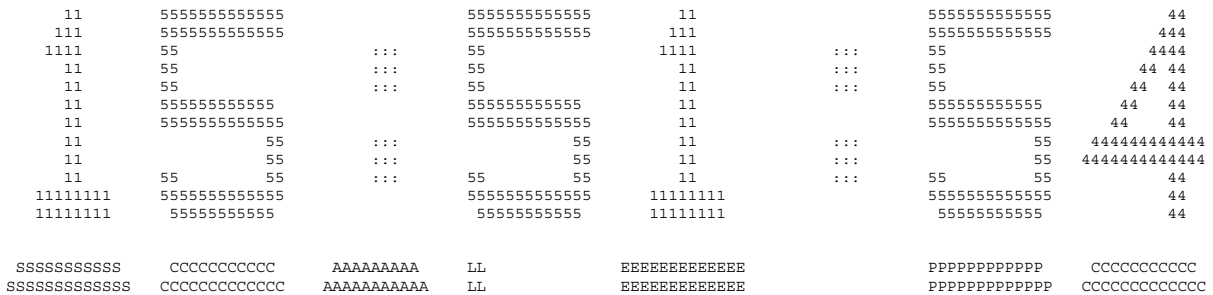

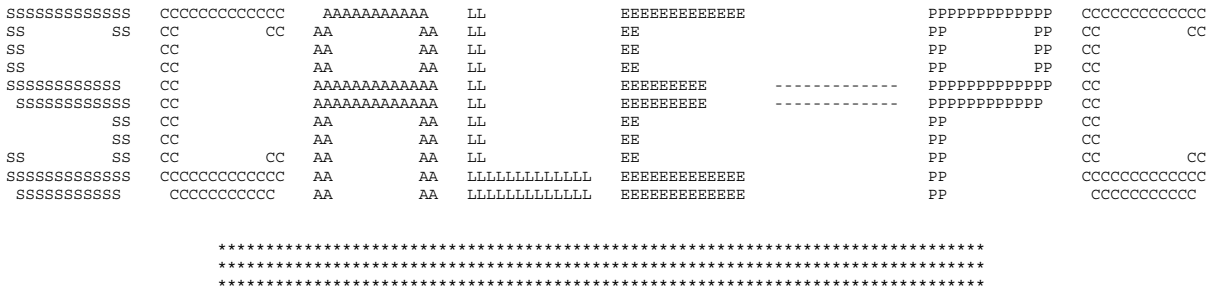

```
**********************************************************************************
**********************************************************************************
**********************************************************************************
*****                                                                        *****
*****                  PROGRAM VERIFICATION INFORMATION                      *****
*****                                                                        *****
*****                 CODE SYSTEM:  SCALE-PC VERSION:  4.3                   *****
*****                                                                        *****
**********************************************************************************
**********************************************************************************
*****                                                                        *****
*****                                                                        *****
*****              PROGRAM:  CSAS                                            *****
*****                                                                        *****
*****        CREATION DATE:  03/08/96                                        *****
*****                                                                        *****
*****              VOLUME:   Eng                                             *****
*****                                                                        *****
*****              LIBRARY:  M:\SCALE43\WIN_NT\EXE                           *****
*****                                                                        *****
*****                                                                        *****
*****      PRODUCTION CODE:  CSAS                                            *****
```

```
                      *****                                                                  *****
                      *****              VERSION:  3.1                                       *****
                       *****              JOBNAME:  SCALE-PC                                  *****
                      *****                                                                  *****
                      *****    DATE OF EXECUTION:  09/14/04                                  *****
                      *****                                                                  *****
                      *****    TIME OF EXECUTION:  15:51:54                                  *****
                      *****                                                                  *****
                      *****                                                                  *****
                      ********************************************************************************
                      ********************************************************************************
                      ********************************************************************************


'MIN BASKET PLATE THICKNESS & OPENING

'33 GRAMS U-235 PER ELEMENT

'AXIAL ALTERNATING SHIFT

'24.1-INCH ACTIVE FUEL HEIGHT

'MIN BASKET PLATE THICKNESS & OPENING

'33 GRAMS U-235 PER ELEMENT

'AXIAL ALTERNATING SHIFT

'24.1-INCH ACTIVE FUEL HEIGHT
    NAC-LWT INPUT FOR HOMOGENIZED PULSTAR ELEMENTS IN CAN & INTACT ASSEMBLIES

    **** PROBLEM PARAMETERS ****

    LIB 27GROUPNDF4  LIBRARY
    MXX            11 MIXTURES
    MSC            13 COMPOSITION SPECIFICATIONS
    IZM             4 MATERIAL ZONES
    GE  LATTICECELL  GEOMETRY
    MORE            0 0/1 DO NOT READ/READ OPTIONAL PARAMETER DATA
    MSLN            0 FUEL SOLUTIONS

    **** PROBLEM COMPOSITION DESCRIPTION ****

    SC  UO2           STANDARD COMPOSITION
    MX              1 MIXTURE NO.
    VF         1.0000 VOLUME FRACTION
    ROTH      10.3800 SPECIFIED DENSITY
    NEL             2 NO. ELEMENTS
    ICP             1 0/1 MIXTURE/COMPOUND
    TEMP        293.0 DEG KELVIN
                92000      1.00 ATOM/MOLECULE
                                92235     6.500 WT%
                                92238    93.500 WT%
                 8016      2.00 ATOMS/MOLECULE
    END

    SC  ZIRCALLOY    STANDARD COMPOSITION
    MX              2 MIXTURE NO.
    VF         1.0000 VOLUME FRACTION
    ROTH       6.5600 THEORETICAL DENSITY
    NEL             1 NO. ELEMENTS
    ICP             1 0/1 MIXTURE/COMPOUND
    TEMP        293.0 DEG KELVIN
                40302      1.00 ATOM/MOLECULE
    END

    SC  H2O           STANDARD COMPOSITION
    MX              3 MIXTURE NO.
    VF         0.0000 VOLUME FRACTION
    ROTH       0.9982 THEORETICAL DENSITY
    NEL             2 NO. ELEMENTS
    ICP             1 0/1 MIXTURE/COMPOUND
    TEMP        293.0 DEG KELVIN
                 1001      2.00 ATOMS/MOLECULE
                 8016      1.00 ATOM/MOLECULE
    END

    SC  AL            STANDARD COMPOSITION
    MX              4 MIXTURE NO.
    VF         1.0000 VOLUME FRACTION
    ROTH       2.7020 THEORETICAL DENSITY
    NEL             1 NO. ELEMENTS
    ICP             1 0/1 MIXTURE/COMPOUND
    TEMP        293.0 DEG KELVIN
                13027      1.00 ATOM/MOLECULE
    END

    SC  SS304         STANDARD COMPOSITION
    MX              5 MIXTURE NO.
    VF         1.0000 VOLUME FRACTION
    ROTH       7.9200 THEORETICAL DENSITY
    NEL             4 NO. ELEMENTS
    ICP             0 0/1 MIXTURE/COMPOUND
    TEMP        293.0 DEG KELVIN
                24304    19.000 WT%
```

```
           25055     2.000 WT%
           26304    69.500 WT%
           28304     9.500 WT%
END
SC  PB           STANDARD COMPOSITION
MX             6 MIXTURE NO.
VF        1.0000 VOLUME FRACTION
ROTH     11.3440 THEORETICAL DENSITY
NEL            1 NO. ELEMENTS
ICP            1 0/1 MIXTURE/COMPOUND
TEMP       293.0 DEG KELVIN
           82000      1.00 ATOM/MOLECULE
END

SC  H2O          STANDARD COMPOSITION
MX             7 MIXTURE NO.
VF        0.0000 VOLUME FRACTION
ROTH      0.9982 THEORETICAL DENSITY
NEL            2 NO. ELEMENTS
ICP            1 0/1 MIXTURE/COMPOUND
TEMP       293.0 DEG KELVIN
            1001      2.00 ATOMS/MOLECULE
            8016      1.00 ATOM/MOLECULE
END

SC  H2O          STANDARD COMPOSITION
MX             8 MIXTURE NO.
VF        0.0000 VOLUME FRACTION
ROTH      0.9982 THEORETICAL DENSITY
NEL            2 NO. ELEMENTS
ICP            1 0/1 MIXTURE/COMPOUND
TEMP       293.0 DEG KELVIN
            1001      2.00 ATOMS/MOLECULE
            8016      1.00 ATOM/MOLECULE
END

SC  H2O          STANDARD COMPOSITION
MX             9 MIXTURE NO.
VF        1.0000 VOLUME FRACTION
ROTH      0.9982 THEORETICAL DENSITY
NEL            2 NO. ELEMENTS
ICP            1 0/1 MIXTURE/COMPOUND
TEMP       293.0 DEG KELVIN
            1001      2.00 ATOMS/MOLECULE
            8016      1.00 ATOM/MOLECULE
END

SC  H2O          STANDARD COMPOSITION
MX            10 MIXTURE NO.
VF        1.0000 VOLUME FRACTION
ROTH      0.9982 THEORETICAL DENSITY
NEL            2 NO. ELEMENTS
ICP            1 0/1 MIXTURE/COMPOUND
TEMP       293.0 DEG KELVIN
            1001      2.00 ATOMS/MOLECULE
            8016      1.00 ATOM/MOLECULE
END

SC  UO2          STANDARD COMPOSITION
MX            11 MIXTURE NO.
VF        0.2592 VOLUME FRACTION
ROTH     10.3800 SPECIFIED DENSITY
NEL            2 NO. ELEMENTS
ICP            1 0/1 MIXTURE/COMPOUND
TEMP       293.0 DEG KELVIN
           92000      1.00 ATOM/MOLECULE
                       92235     6.500 WT%
                       92238    93.500 WT%
            8016      2.00 ATOMS/MOLECULE
END

SC  ZIRCALLOY    STANDARD COMPOSITION
MX            11 MIXTURE NO.
VF        0.0484 VOLUME FRACTION
ROTH      6.5600 THEORETICAL DENSITY
NEL            1 NO. ELEMENTS
ICP            1 0/1 MIXTURE/COMPOUND
TEMP       293.0 DEG KELVIN
           40302      1.00 ATOM/MOLECULE
END

SC  H2O          STANDARD COMPOSITION
MX            11 MIXTURE NO.
VF        0.6924 VOLUME FRACTION
ROTH      0.9982 THEORETICAL DENSITY
NEL            2 NO. ELEMENTS
ICP            1 0/1 MIXTURE/COMPOUND
TEMP       293.0 DEG KELVIN
            1001      2.00 ATOMS/MOLECULE
            8016      1.00 ATOM/MOLECULE
END

**** PROBLEM GEOMETRY ****
CTP SQUAREPITCH  CELL TYPE
PITCH     1.5418 CM CENTER TO CENTER SPACING
```

```
    FUELOD    1.0744 CM FUEL DIAMETER OR SLAB THICKNESS
    MFUEL          1 MIXTURE NO. OF FUEL
    MMOD           3 MIXTURE NO. OF MODERATOR
    CLADOD    1.1938 CM CLAD OUTER DIAMETER
    MCLAD          2 MIXTURE NO. OF CLAD
    GAPOD     1.0998 CM GAP OUTER DIAMETER
    MGAP           9 MIXTURE NO. OF GAP
    ZONE SPECIFICATIONS FOR LATTICECELL GEOMETRY

                  ZONE  1 IS FUEL
                  ZONE  2 IS GAP
                  ZONE  3 IS CLAD
                  ZONE  4 IS MOD
    ********************************************************************************************************************
    ***                                                                                                              ***
    ***                              NAC-LWT INPUT FOR HOMOGENIZED PULSTAR ELEMENTS IN CAN & INTACT ASSEMBLIES        ***
    ***                                                                                                              ***
    ********************************************************************************************************************
    ********************************************************************************************************************
    ***                                                                                                              ***
    ***                                 ********** DATA LIBRARY INFORMATION **********                              ***
    ***                                                                                                              ***
    ***          UNIT                                                VOLUME                                          ***
    ***         NUMBER               DATA SET NAME                   NAME        UNIT FUNCTION                       ***
    ***         ------               -------------                   ----        -------------                       ***
    ***                                                                                                              ***
    ***           89     M:\scale43\DATALIB\FT89F001                                STANDARD COMPOSITION LIBRARY      ***
    ***                                                                                                              ***
    ***           82     M:\scale43\DATALIB\FT82F001                                CROSS SECTION LIBRARY             ***
    ***                                                                                                              ***
    ***           11     W:\Zjr\Lwt\Pulstar\KENOVA\Aych\lwtAych2_xl_r               SHORT CROSS SECTION LIBRARY       ***
    ***                                                                                                              ***
    ***           90     W:\Zjr\Lwt\Pulstar\KENOVA\Aych\lwtAych2_xl_r               INPUT DATA DIRECT ACCESS          ***
    ***                                                                                                              ***
    ********************************************************************************************************************
    ********************************************************************************************************************
    ***                                                                                                              ***
    ***                                                                                                              ***
    ***                                    STANDARD COMPOSITION LIBRARY DATA                                         ***
    ***                                    ---------------------------------                                         ***
    ***                                                                                                              ***
    ***            UNIT NUMBER  :  89                                                                                ***
    ***                                                                                                              ***
    ***            DATASET NAME :  M:\scale43\DATALIB\FT89F001                                                       ***
    ***                                                                                                              ***
    ***            LIBRARY TITLE:  SCALE-4 STANDARD COMPOSITION LIBRARY                                              ***
    ***                            637 STANDARD COMPOSITIONS, 490 NUCLIDES                                           ***
    ***                            90 ELEMENTS WITH VARIABLE ISOTOPIC DISTRBUTIONS.                                  ***
    ***                                                                                                              ***
    ***            CREATION DATE:   6/30/95                                                                          ***
    ***                                                                                                              ***
    ***                                                                                                              ***
    ***                                                                                                              ***
    ***                                      CROSS SECTION LIBRARY DATA                                              ***
    ***                                     ---------------------------                                              ***
    ***                                                                                                              ***
    ***            UNIT NUMBER  :  82                                                                                ***
    ***                                                                                                              ***
    ***            DATASET NAME :  M:\scale43\DATALIB\FT82F001                                                       ***
    ***                                                                                                              ***
    ***            LIBRARY TITLE:  SCALE 4.2 - 27 GROUP NEUTRON GROUP LIBRARY                                        ***
    ***                               BASED ON ENDF-B VERSION 4 DATA                                                 ***
    ***                                  COMPILED FOR NRC     1/27/89                                              ***
    ***                                     LAST UPDATED                                          08/12/94  ***
    ***                                        L.M.PETRIE   -   ORNL                                                 ***
    ***                                                                                                              ***
    ***                                                                                                              ***
    ***                                                                                                              ***
    ***                                                                                                              ***
    ********************************************************************************************************************
    ********************************************************************************************************************

                              ........    0 IO'S WERE USED BEFORE READING KENO V DATA    ........

                              ........    0 IO'S WERE USED READING THE KENO V PARAMETER DATA    ........

'TOP BASKET (CANNED ELEMENTS)

'TOP MIDDLE BASKET (INTACT ASSEMBLIES)

'BOTTOM MIDDLE BASKET (INTACT ASSEMBLIES)

'BOTTOM BASKET (CANNED ELEMENTS)


                             *************** DATA READING COMPLETED ***************

                              ........    0 IO'S WERE USED PREPARING THE KENO V INPUT DATA    ........

                              ........    0 IO'S WERE USED LOADING THE KENO V DATA    ........

                              ........    0 IO'S WERE USED LOADING THE DATA    ........

                              ........    0 IO'S WERE USED CHECKING THE KENO V GEOMETRY DATA    ........
                              *****  RESTART DATA HAS BEEN WRITTEN ON UNIT 95  *****
```

```
                              ........    0 IO'S WERE USED WRITING THE KENO V - CSAS DATA    ........
                              ........    0 IO'S WERE USED PROCESSING CSAS INPUT DATA    ........

 CONTROL MODULE CSAS25   IS COMPLETE.
```

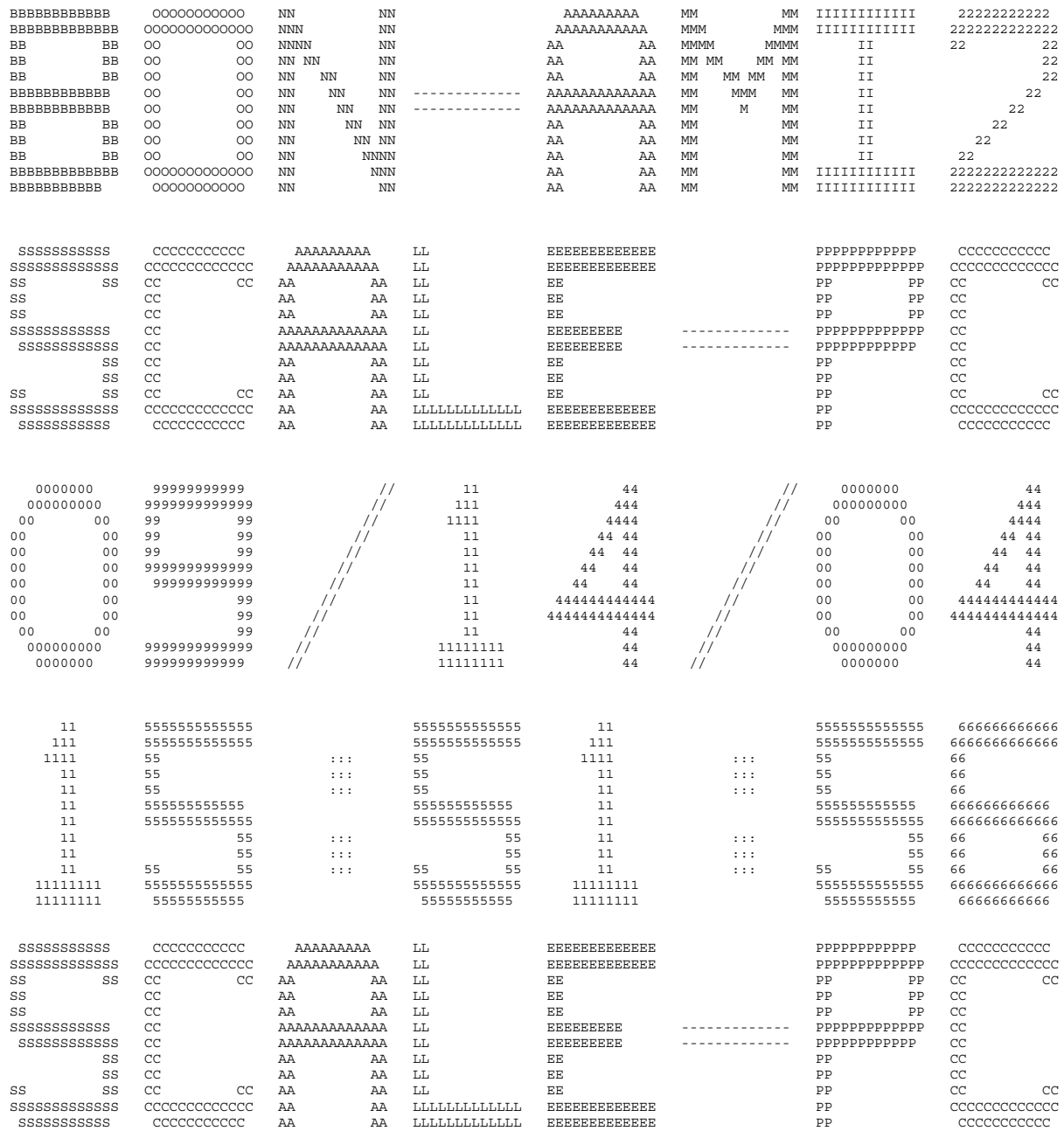
BBBBBBBBBBBB OOOOOOOOOO NN NN AAAAAAAAA MM MM IIIIIIIIIII 22222222222
BBBBBBBBBBBBB OOOOOOOOOOOO NNN NN AAAAAAAAAAA MMM MMM IIIIIIIIIII 2222222222222
BB BB OO OO NNNN NN AA AA MMMM MMMM II 22 22
BB BB OO OO NN NN NN AA AA MM MM MM MM II 22
BB BB OO OO NN NN NN AA AA MM MM MM MM II 22
BBBBBBBBBBBB OO OO NN NN NN AAAAAAAAAAAAA MM MMM MM II 22
BBBBBBBBBBBB OO OO NN NN NN AAAAAAAAAAAAA MM M MM II 22
BB BB OO OO NN NN NN AA AA MM MM II 22
BB BB OO OO NN NN NN AA AA MM MM II 22
BB BB OO OO NN NNNN AA AA MM MM II 22
BBBBBBBBBBBBB OOOOOOOOOOOO NN NNN AA AA MM MM IIIIIIIIIII 2222222222222
BBBBBBBBBB OOOOOOOOOO NN NN AA AA MM MM IIIIIIIIIII 2222222222222
SSSSSSSSSS CCCCCCCCCC AAAAAAAAA LL EEEEEEEEEEEE PPPPPPPPPPP CCCCCCCCCC
SSSSSSSSSSSS CCCCCCCCCCCC AAAAAAAAAAA LL EEEEEEEEEEEE PPPPPPPPPPPP CCCCCCCCCCCC
SS SS CC CC AA AA LL EE PP PP CC CC
SS CC AA AA LL EE PP PP CC
SS CC AA AA LL EE PP PP CC
SSSSSSSSSSSS CC AAAAAAAAAAAAA LL EEEEEEEEE PPPPPPPPPPPP CC
SSSSSSSSSS CC AAAAAAAAAAAAA LL EEEEEEEEE PPPPPPPPPPP CC
SS CC AA AA LL EE PP CC
SS CC AA AA LL EE PP CC
SS SS CC CC AA AA LL EE PP CC CC
SSSSSSSSSSSS CCCCCCCCCCCC AA AA LLLLLLLLLLLL EEEEEEEEEEEE PP CCCCCCCCCCCC
SSSSSSSSSS CCCCCCCCCC AA AA LLLLLLLLLLLL EEEEEEEEEEEE PP CCCCCCCCCC
0000000 99999999999 // 11 44 // 0000000 44
000000000 9999999999999 // 111 444 // 000000000 444
00 00 99 99 // 1111 4444 // 00 00 4444
00 00 99 99 // 11 44 44 // 00 00 44 44
00 00 99 99 // 11 44 44 // 00 00 44 44
00 00 9999999999999 // 11 44 44 // 00 00 44 44
00 00 999999999999 // 11 44 44 // 00 00 44 44
00 00 99 // 11 444444444444 // 00 00 444444444444
00 00 99 // 11 4444444444444 // 00 00 4444444444444
00 00 99 // 11 44 // 00 00 44
000000000 9999999999999 // 11111111 44 // 000000000 44
0000000 999999999999 // 11111111 44 // 0000000 44
11 5555555555555 5555555555555 11 5555555555555 666666666666
111 5555555555555 5555555555555 111 5555555555555 6666666666666
1111 55 ::: 55 1111 ::: 55 66
11 55 ::: 55 11 ::: 55 66
11 55 ::: 55 11 ::: 55 66
11 5555555555555 5555555555555 11 5555555555555 666666666666
11 5555555555555 5555555555555 11 5555555555555 6666666666666
11 55 ::: 55 11 ::: 55 66 66
11 55 ::: 55 11 ::: 55 66 66
11 55 55 ::: 55 55 11 ::: 55 55 66 66
11111111 5555555555555 5555555555555 11111111 5555555555555 6666666666666
11111111 55555555555 55555555555 11111111 55555555555 66666666666
SSSSSSSSSS CCCCCCCCCC AAAAAAAAA LL EEEEEEEEEEEE PPPPPPPPPPP CCCCCCCCCC
SSSSSSSSSSSS CCCCCCCCCCCC AAAAAAAAAAA LL EEEEEEEEEEEE PPPPPPPPPPPP CCCCCCCCCCCC
SS SS CC CC AA AA LL EE PP PP CC CC
SS CC AA AA LL EE PP PP CC
SS CC AA AA LL EE PP PP CC
SSSSSSSSSSSS CC AAAAAAAAAAAAA LL EEEEEEEEE PPPPPPPPPPP CC
SSSSSSSSSS CC AAAAAAAAAAAAA LL EEEEEEEEE PPPPPPPPPPP CC
SS CC AA AA LL EE PP CC
SS CC AA AA LL EE PP CC
SS SS CC CC AA AA LL EE PP CC CC
SSSSSSSSSSSS CCCCCCCCCCCC AA AA LLLLLLLLLLLL EEEEEEEEEEEE PP CCCCCCCCCCCC
SSSSSSSSSS CCCCCCCCCC AA AA LLLLLLLLLLLL EEEEEEEEEEEE PP CCCCCCCCCC

```
                    ********************************************************************************
                    ********************************************************************************
                    ********************************************************************************
                    *****                                                                      *****
                    *****                  PROGRAM VERIFICATION INFORMATION                    *****
                    *****                                                                      *****
                    *****                CODE SYSTEM:  SCALE-PC VERSION:  4.3                  *****
                    *****                                                                      *****
                    ********************************************************************************
                    ********************************************************************************
                    *****                                                                      *****
                    *****                                                                      *****
                    *****              PROGRAM:  O0O008                                        *****
                    *****                                                                      *****
                    *****         CREATION DATE:  09/16/95                                     *****
                    *****                                                                      *****
                    *****              VOLUME:   Eng                                           *****
                    *****                                                                      *****
                    *****              LIBRARY:  M:\SCALE43\WIN_NT\EXE                         *****
                    *****                                                                      *****
                    *****                                                                      *****
                    *****    THIS IS NOT A SCALE-PC CONFIGURATION CONTROLLED CODE              *****
                    *****                                                                      *****
                    *****              JOBNAME:  SCALE-PC                                      *****
                    *****                                                                      *****
                    *****    DATE OF EXECUTION:  09/14/04                                      *****
                    *****                                                                      *****
                    *****    TIME OF EXECUTION:  15:51:56                                      *****
                    *****                                                                      *****
                    ********************************************************************************
                    ********************************************************************************
                    ********************************************************************************


       -1Q ARRAY HAS      1 ENTRIES.

        0Q ARRAY HAS      4 ENTRIES.

        1Q ARRAY HAS      6 ENTRIES.

        2Q ARRAY HAS      2 ENTRIES.
LOGICAL ASSIGNMENTS

MASTER LIBRARY   11
WORKING LIBRARY   0
SCRATCH FILE     18
NEW LIBRARY       1

P R O B L E M   D E S C R I P T I O N

IGR--GEOMETRY (0/1/2/3--INF MED/SLAB/CYL/SPHERE               2

IZM--NUMBER OF ZONES OR MATERIAL REGIONS                     11

MS--MIXING TABLE LENGTH                                      25

IBL--SHIELDED CROSS SECTION EDIT OPTION (0/1--NO/YES)         0

IBR--BONDARENKO FACTOR EDIT OPTION (0/1--NO/YES)              0

ISSOPT--DANCOFF FACTOR OPTION                                 0

CONVERGENCE CRITERION    1.00000E-03

GEOMETRY CORRECTION FACTOR FOR WIGNER RATIONAL APPROXIMATION  1.350E+00

        3Q ARRAY HAS     25 ENTRIES.

        4Q ARRAY HAS     25 ENTRIES.

        5Q ARRAY HAS     25 ENTRIES.

        6Q ARRAY HAS     11 ENTRIES.

        7Q ARRAY HAS     11 ENTRIES.

        8Q ARRAY HAS     11 ENTRIES.

        9Q ARRAY HAS     11 ENTRIES.

       10Q ARRAY HAS     25 ENTRIES.

       11Q ARRAY HAS     11 ENTRIES.

M I X I N G   T A B L E

ENTRY   MIXTURE   ISOTOPE   NUMBER DENSITY   NEW IDENTIFIER
   1       1        92235     1.52378E-03          1092235
   2      11        92235     3.94965E-04         11092235
   3       1        92238     2.16422E-02          1092238
   4      11        92238     5.60966E-03         11092238
   5       1         8016     4.63320E-02          1008016
   6       3         8016     3.33846E-22          3008016
   7       7         8016     3.33846E-22          7008016
   8       8         8016     3.33846E-22          8008016
```

```
   9       9         8016     3.33846E-02          9008016
  10      10         8016     3.33846E-02         10008016
  11      11         8016     3.51247E-02         11008016
  12       2        40302     4.33078E-02          2040302
  13      11        40302     2.09610E-03         11040302
  14       3         1001     6.67692E-22          3001001
  15       7         1001     6.67692E-22          7001001
  16       8         1001     6.67692E-22          8001001
  17       9         1001     6.67692E-02          9001001
  18      10         1001     6.67692E-02         10001001
  19      11         1001     4.62310E-02         11001001
  20       4        13027     6.03066E-02          4013027
  21       5        24304     1.74286E-02          5024304
  22       5        25055     1.73633E-03          5025055
  23       5        26304     5.93579E-02          5026304
  24       5        28304     7.72070E-03          5028304
  25       6        82000     3.29690E-02          6082000

GEOMETRY AND MATERIAL DESCRIPTION

ZONE   MIXTURE   OUTER DIMENSION   TEMPERATURE       EXTRA XS   TYPE (0/1--FUEL/MOD)
   1       1          5.37210E-01    2.93000E+02    3.24169E-02             0
   2       9          5.49910E-01    2.93000E+02    0.00000E+00             0
   3       2          5.96900E-01    2.93000E+02    2.51346E+00             0
   4       3          8.69856E-01    2.93000E+02    0.00000E+00             0
   5       4          5.86986E+00    2.93000E+02    0.00000E+00             0
   6       5          1.08699E+01    2.93000E+02    0.00000E+00             0
   7       6          1.58699E+01    2.93000E+02    0.00000E+00             0
   8       7          2.08699E+01    2.93000E+02    0.00000E+00             0
   9       8          2.58699E+01    2.93000E+02    0.00000E+00             0
  10      10          3.08699E+01    2.93000E+02    0.00000E+00             0
  11      11          3.58699E+01    2.93000E+02    0.00000E+00             0
     4509 LOCATIONS OF   100000 AVAILABLE ARE REQUIRED TO MAKE A NEW MASTER CONTAINING THE SELF-SHIELDED VALUES

NO NUCLIDES IN YOUR PROBLEM HAVE BONDARENKO FACTOR DATA**BONAMI WILL COPY FROM LOGICAL 11 TO LOGICAL  1

COPY      1001   HYDROGEN        FROM LOG 11 TO LOG 18    BONDARENKO TRIGGER 0

COPY      1001   HYDROGEN        FROM LOG 18 TO LOG  1    BONDARENKO TRIGGER 0

COPY      1001   HYDROGEN        FROM LOG 18 TO LOG  1    BONDARENKO TRIGGER 0

COPY      1001   HYDROGEN        FROM LOG 18 TO LOG  1    BONDARENKO TRIGGER 0

COPY      1001   HYDROGEN        FROM LOG 18 TO LOG  1    BONDARENKO TRIGGER 0

COPY      1001   HYDROGEN        FROM LOG 18 TO LOG  1    BONDARENKO TRIGGER 0

COPY      1001   HYDROGEN        FROM LOG 18 TO LOG  1    BONDARENKO TRIGGER 0

COPY      8016   OXYGEN-16       FROM LOG 11 TO LOG 18    BONDARENKO TRIGGER 0

COPY      8016   OXYGEN-16       FROM LOG 18 TO LOG  1    BONDARENKO TRIGGER 0

COPY      8016   OXYGEN-16       FROM LOG 18 TO LOG  1    BONDARENKO TRIGGER 0

COPY      8016   OXYGEN-16       FROM LOG 18 TO LOG  1    BONDARENKO TRIGGER 0

COPY      8016   OXYGEN-16       FROM LOG 18 TO LOG  1    BONDARENKO TRIGGER 0

COPY      8016   OXYGEN-16       FROM LOG 18 TO LOG  1    BONDARENKO TRIGGER 0

COPY      8016   OXYGEN-16       FROM LOG 18 TO LOG  1    BONDARENKO TRIGGER 0

COPY      8016   OXYGEN-16       FROM LOG 18 TO LOG  1    BONDARENKO TRIGGER 0

COPY     13027  AL-27 1193 218 G FROM LOG 11 TO LOG  1    BONDARENKO TRIGGER 0

COPY     24304  CR 1191 WT SS-30 FROM LOG 11 TO LOG  1    BONDARENKO TRIGGER 0

COPY     25055   MANGANESE-55    FROM LOG 11 TO LOG  1    BONDARENKO TRIGGER 0

COPY     26304  FE 1192 WT SS-30 FROM LOG 11 TO LOG  1    BONDARENKO TRIGGER 0

COPY     28304  NI 1190 WT SS-30 FROM LOG 11 TO LOG  1    BONDARENKO TRIGGER 0

COPY     40302   ZIRCALLOY       FROM LOG 11 TO LOG 18    BONDARENKO TRIGGER 0

COPY     40302   ZIRCALLOY       FROM LOG 18 TO LOG  1    BONDARENKO TRIGGER 0

COPY     40302   ZIRCALLOY       FROM LOG 18 TO LOG  1    BONDARENKO TRIGGER 0

COPY     82000  PB   1288 218NGP FROM LOG 11 TO LOG  1    BONDARENKO TRIGGER 0

COPY     92235   URANIUM-235     FROM LOG 11 TO LOG 18    BONDARENKO TRIGGER 0

COPY     92235   URANIUM-235     FROM LOG 18 TO LOG  1    BONDARENKO TRIGGER 0

COPY     92235   URANIUM-235     FROM LOG 18 TO LOG  1    BONDARENKO TRIGGER 0

COPY     92238   URANIUM-238     FROM LOG 11 TO LOG 18    BONDARENKO TRIGGER 0

COPY     92238   URANIUM-238     FROM LOG 18 TO LOG  1    BONDARENKO TRIGGER 0

COPY     92238   URANIUM-238     FROM LOG 18 TO LOG  1    BONDARENKO TRIGGER 0
```

```
 SCALE 4.2 - 27 GROUP NEUTRON GROUP LIBRARY
    BASED ON ENDF-B VERSION 4 DATA
       COMPILED FOR NRC     1/27/89
          LAST UPDATED                                          08/12/94
             L.M.PETRIE   -   ORNL
     TAPE ID                          4321          NUMBER OF NUCLIDES                    25
     NUMBER OF NEUTRON GROUPS           27          NUMBER OF GAMMA GROUPS                 0
     FIRST THERMAL GROUP                15          LOGICAL UNIT                           1
                              TABLE OF CONTENTS
    HYDROGEN       ENDF/B-IV MAT 1269/THRM1002          UPDATED 08/12/94        ID   3001001
    HYDROGEN       ENDF/B-IV MAT 1269/THRM1002          UPDATED 08/12/94        ID   7001001
    HYDROGEN       ENDF/B-IV MAT 1269/THRM1002          UPDATED 08/12/94        ID   8001001
    HYDROGEN       ENDF/B-IV MAT 1269/THRM1002          UPDATED 08/12/94        ID   9001001
    HYDROGEN       ENDF/B-IV MAT 1269/THRM1002          UPDATED 08/12/94        ID  10001001
    HYDROGEN       ENDF/B-IV MAT 1269/THRM1002          UPDATED 08/12/94        ID  11001001
    OXYGEN-16      ENDF/B-IV MAT 1276                   UPDATED 08/12/94        ID   1008016
    OXYGEN-16      ENDF/B-IV MAT 1276                   UPDATED 08/12/94        ID   3008016
    OXYGEN-16      ENDF/B-IV MAT 1276                   UPDATED 08/12/94        ID   7008016
    OXYGEN-16      ENDF/B-IV MAT 1276                   UPDATED 08/12/94        ID   8008016
    OXYGEN-16      ENDF/B-IV MAT 1276                   UPDATED 08/12/94        ID   9008016
    OXYGEN-16      ENDF/B-IV MAT 1276                   UPDATED 08/12/94        ID  10008016
    OXYGEN-16      ENDF/B-IV MAT 1276                   UPDATED 08/12/94        ID  11008016
   AL-27 1193 218 GP 040375(5)                         UPDATED 08/12/94        ID   4013027
   CR 1191 WT SS-304(1/EST) P-3 293K SP=5+4(42375)'    UPDATED 08/12/94        ID   5024304
    MANGANESE-55   ENDF/B-IV MAT 1197                   UPDATED 08/12/94        ID   5025055
   FE 1192 WT SS-304(1/EST) P-3 293K SP=5+4(42375)'    UPDATED 08/12/94        ID   5026304
   NI 1190 WT SS-304(1/EST) P-3 293K SP=5+4(42375)'    UPDATED 08/12/94        ID   5028304
    ZIRCALLOY      ENDF/B-IV MAT 1284                   UPDATED 08/12/94        ID   2040302
    ZIRCALLOY      ENDF/B-IV MAT 1284                   UPDATED 08/12/94        ID  11040302
   PB   1288 218NGP 042375 P-3 293K                    UPDATED 08/12/94        ID   6082000
    URANIUM-235    ENDF/B-IV MAT 1261                   UPDATED 08/12/94        ID   1092235
    URANIUM-235    ENDF/B-IV MAT 1261                   UPDATED 08/12/94        ID  11092235
    URANIUM-238    ENDF/B-IV MAT 1262                   UPDATED 08/12/94        ID   1092238
    URANIUM-238    ENDF/B-IV MAT 1262                   UPDATED 08/12/94        ID  11092238

     TAPE COPY USED      0 I/O'S, AND TOOK    0.17 SECONDS
```

```
NN          NN  IIIIIIIIIIII    TTTTTTTTTTTT      AAAAAAAAA     WW          WW  LL
NNN         NN  IIIIIIIIIIII    TTTTTTTTTTTT     AAAAAAAAAAA    WW          WW  LL
NNNN        NN       II             TT         AA         AA   WW          WW  LL
NN NN       NN       II             TT         AA         AA   WW          WW  LL
NN   NN     NN       II             TT         AA         AA   WW          WW  LL
NN    NN    NN       II             TT         AAAAAAAAAAAAA   WW     W    WW  LL
NN     NN   NN       II             TT         AAAAAAAAAAAAA   WW    WWW   WW  LL
NN      NN  NN       II             TT         AA         AA   WW   WW WW  WW  LL
NN       NN NN       II             TT         AA         AA   WW WW    WW WW  LL
NN        NNNN       II             TT         AA         AA   WWWW      WWWW  LL
NN         NNN  IIIIIIIIIIII        TT         AA         AA   WWW        WWW  LLLLLLLLLLLL
NN          NN  IIIIIIIIIIII        TT         AA         AA   WW          WW  LLLLLLLLLLLL
```

```
 SSSSSSSSSS     CCCCCCCCCC      AAAAAAAAA     LL            EEEEEEEEEEEE                  PPPPPPPPPPP     CCCCCCCCCC
SSSSSSSSSSSS   CCCCCCCCCCCC    AAAAAAAAAAA    LL            EEEEEEEEEEEE                  PPPPPPPPPPPP   CCCCCCCCCCCC
SS         SS  CC          CC  AA         AA  LL            EE                            PP         PP  CC          CC
SS             CC              AA         AA  LL            EE                            PP         PP  CC
SS             CC              AA         AA  LL            EE                            PP         PP  CC
SSSSSSSSSSS    CC              AAAAAAAAAAAAA  LL            EEEEEEEEE      -------------  PPPPPPPPPPPP  CC
 SSSSSSSSSSS   CC              AAAAAAAAAAAAA  LL            EEEEEEEEE      -------------  PPPPPPPPPPP   CC
          SS   CC              AA         AA  LL            EE                            PP            CC
          SS   CC              AA         AA  LL            EE                            PP            CC
SS         SS  CC          CC  AA         AA  LL            EE                            PP            CC          CC
SSSSSSSSSSSS   CCCCCCCCCCCCC   AA         AA  LLLLLLLLLLLLL EEEEEEEEEEEE                  PP            CCCCCCCCCCCCC
 SSSSSSSSSS     CCCCCCCCCC    AA         AA  LLLLLLLLLLLLL EEEEEEEEEEEE                  PP             CCCCCCCCCC
```

```
   0000000       99999999999              //       11              44              //     0000000             44
  000000000     9999999999999            //       111             444             //     000000000           444
 00       00   99          99           //       1111            4444            //     00       00         4444
00         00  99          99          //          11           44 44           //      00         00       44 44
00         00  99          99         //           11          44  44          //       00         00      44  44
00         00  9999999999999        //             11         44   44         //        00         00     44   44
00         00   999999999999      //               11        44    44        //         00         00    44    44
00         00              99    //                11       444444444444    //          00         00   444444444444
00         00              99   //                 11       444444444444   //           00         00  444444444444
 00       00               99  //                  11              44     //             00       00           44
  000000000     9999999999999 //                   11111111        44    //               000000000           44
   0000000      999999999999 //                    11111111        44   //                 0000000            44
```

```
     11       5555555555555                5555555555555       11                   5555555555555   6666666666666
    111       5555555555555                5555555555555      111                   5555555555555  6666666666666
   1111       55                  :::      55                1111            :::    55             66
     11       55                  :::      55                  11            :::    55             66
     11       55                  :::      55                  11            :::    55             66
     11       555555555555                 555555555555        11                   555555555555   666666666666
     11       5555555555555                5555555555555       11                   5555555555555  6666666666666
     11                55         :::                55        11            :::                55  66         66
     11                55         :::                55        11            :::                55  66         66
     11       55       55         :::      55        55        11            :::    55          55  66         66
  11111111    5555555555555                5555555555555   11111111                5555555555555  6666666666666
  11111111     55555555555                  55555555555    11111111                 55555555555   66666666666
```

```
   SSSSSSSSSS     CCCCCCCCCC      AAAAAAAAA     LL             EEEEEEEEEEEE                  PPPPPPPPPPP     CCCCCCCCCC
  SSSSSSSSSSS   CCCCCCCCCCCC    AAAAAAAAAAA    LL             EEEEEEEEEEEE                  PPPPPPPPPPPP   CCCCCCCCCCCC
  SS         SS   CC         CC   AA         AA   LL             EE                            PP         PP   CC         CC
  SS              CC              AA         AA   LL             EE                            PP         PP   CC
  SS              CC              AA         AA   LL             EE                            PP         PP   CC
  SSSSSSSSSSS     CC              AAAAAAAAAAAAA   LL             EEEEEEEEE       -------------   PPPPPPPPPPPP   CC
   SSSSSSSSSSS    CC              AAAAAAAAAAAAA   LL             EEEEEEEEE       -------------   PPPPPPPPPPP    CC
            SS    CC              AA         AA   LL             EE                            PP             CC
            SS    CC              AA         AA   LL             EE                            PP             CC
  SS        SS    CC         CC   AA         AA   LL             EE                            PP             CC         CC
  SSSSSSSSSSS     CCCCCCCCCCCC    AA         AA   LLLLLLLLLLLLL  EEEEEEEEEEEE                  PP             CCCCCCCCCCCC
   SSSSSSSSSS      CCCCCCCCCC     AA         AA   LLLLLLLLLLLLL  EEEEEEEEEEEE                  PP              CCCCCCCCCC

                    ********************************************************************************
                    ********************************************************************************
                    *****                                                                        *****
                    *****                  PROGRAM VERIFICATION INFORMATION                      *****
                    *****                                                                        *****
                    *****                CODE SYSTEM:  SCALE-PC VERSION:  4.3                    *****
                    *****                                                                        *****
                    ********************************************************************************
                    ********************************************************************************
                    *****                                                                        *****
                    *****                                                                        *****
                    *****              PROGRAM:  O0O002                                          *****
                    *****                                                                        *****
                    *****         CREATION DATE:  09/28/95                                       *****
                    *****                                                                        *****
                    *****              VOLUME:   Eng                                             *****
                    *****                                                                        *****
                    *****              LIBRARY:  M:\SCALE43\WIN_NT\EXE                           *****
                    *****                                                                        *****
                    *****                                                                        *****
                    *****      PRODUCTION CODE:  NITAWL                                          *****
                    *****                                                                        *****
                    *****              VERSION:  3.0                                             *****
                    *****                                                                        *****
                    *****              JOBNAME:  SCALE-PC                                        *****
                    *****                                                                        *****
                    *****    DATE OF EXECUTION:  09/14/04                                        *****
                    *****                                                                        *****
                    *****    TIME OF EXECUTION:  15:51:56                                        *****
                    *****                                                                        *****
                    ********************************************************************************
                    ********************************************************************************

       -1Q ARRAY HAS      1 ENTRIES.

        0Q ARRAY HAS      9 ENTRIES.

        1Q ARRAY HAS     12 ENTRIES.

SELECT 25 NUCLIDES FROM THE MASTER  LIBRARY ON LOGICAL  1
        0 NUCLIDES FROM THE WORKING LIBRARY ON LOGICAL  2
        0 NUCLIDES FROM THE WORKING LIBRARY ON LOGICAL  3
          TO CREATE THE NEW WORKING LIBRARY ON LOGICAL  4

        7 RESONANCE CALCULATIONS HAVE BEEN REQUESTED
       -1 OUTPUT OPTION FOR AMPX FORMATTED CROSS SECTION DATA
     2001 MAXIMUM NUMBER OF RESONANCE MESH INTERVALS
        2 ORDER OF RESONANCE LEVEL PROCESSING

THE STORAGE ALLOCATED FOR THIS CASE IS    100000 WORDS

        2Q ARRAY HAS     25 ENTRIES.

        3Q ARRAY HAS    105 ENTRIES.

        4Q ARRAY HAS     25 ENTRIES.

 GENERAL INFORMATION CONCERNING CROSS SECTION LIBRARY
   TAPE IDENTIFICATION NUMBER                4321
   NUMBER OF NUCLIDES ON TAPE                  25
   NUMBER OF NEUTRON ENERGY GROUPS             27
   FIRST THERMAL NEUTRON ENERGY GROUP          15
   NUMBER OF GAMMA ENERGY GROUPS                0

   DIRECT ACCESS UNIT NUMBER  9 REQUIRES 117 BLOCKS OF LENGTH  1680 WORDS
 XSDRN TAPE   4321
                       SCALE 4.2 - 27 GROUP NEUTRON GROUP LIBRARY
                          BASED ON ENDF-B VERSION 4 DATA
                             COMPILED FOR NRC     1/27/89
                                LAST UPDATED                                          08/12/94
                                   L.M.PETRIE   -   ORNL

 NUCLIDES FROM XSDRN TAPE
    1     HYDROGEN       ENDF/B-IV MAT 1269/THRM1002            UPDATED 08/12/94     3001001
    2     HYDROGEN       ENDF/B-IV MAT 1269/THRM1002            UPDATED 08/12/94     7001001
    3     HYDROGEN       ENDF/B-IV MAT 1269/THRM1002            UPDATED 08/12/94     8001001
    4     HYDROGEN       ENDF/B-IV MAT 1269/THRM1002            UPDATED 08/12/94     9001001
    5     HYDROGEN       ENDF/B-IV MAT 1269/THRM1002            UPDATED 08/12/94    10001001
    6     HYDROGEN       ENDF/B-IV MAT 1269/THRM1002            UPDATED 08/12/94    11001001
    7     OXYGEN-16      ENDF/B-IV MAT 1276                     UPDATED 08/12/94     1008016
    8     OXYGEN-16      ENDF/B-IV MAT 1276                     UPDATED 08/12/94     3008016
    9     OXYGEN-16      ENDF/B-IV MAT 1276                     UPDATED 08/12/94     7008016
```

```
   10     OXYGEN-16      ENDF/B-IV MAT 1276                    UPDATED 08/12/94     8008016
   11     OXYGEN-16      ENDF/B-IV MAT 1276                    UPDATED 08/12/94     9008016
   12     OXYGEN-16      ENDF/B-IV MAT 1276                    UPDATED 08/12/94    10008016
   13     OXYGEN-16      ENDF/B-IV MAT 1276                    UPDATED 08/12/94    11008016
   14    AL-27 1193 218 GP 040375(5)                           UPDATED 08/12/94     4013027
   15    CR 1191 WT SS-304(1/EST) P-3 293K SP=5+4(42375)'      UPDATED 08/12/94     5024304
   16     MANGANESE-55   ENDF/B-IV MAT 1197                    UPDATED 08/12/94     5025055
   17    FE 1192 WT SS-304(1/EST) P-3 293K SP=5+4(42375)'      UPDATED 08/12/94     5026304
   18    NI 1190 WT SS-304(1/EST) P-3 293K SP=5+4(42375)'      UPDATED 08/12/94     5028304
   19     ZIRCALLOY      ENDF/B-IV MAT 1284                    UPDATED 08/12/94     2040302
   20     ZIRCALLOY      ENDF/B-IV MAT 1284                    UPDATED 08/12/94    11040302
   21    PB   1288 218NGP 042375 P-3 293K                      UPDATED 08/12/94     6082000
   22     URANIUM-235    ENDF/B-IV MAT 1261                    UPDATED 08/12/94     1092235
   23     URANIUM-235    ENDF/B-IV MAT 1261                    UPDATED 08/12/94    11092235
   24     URANIUM-238    ENDF/B-IV MAT 1262                    UPDATED 08/12/94     1092238
   25     URANIUM-238    ENDF/B-IV MAT 1262                    UPDATED 08/12/94    11092238

 HYDROGEN       ENDF/B-IV MAT 1269/THRM1002            UPDATED 08/12/94   3001001     TEMPERATURE=   293.00
                                                            PROCESS NUMBER 1007 IS AT TEMPERATURE=   293.00

 HYDROGEN       ENDF/B-IV MAT 1269/THRM1002            UPDATED 08/12/94   7001001     TEMPERATURE=   293.00
                                                            PROCESS NUMBER 1007 IS AT TEMPERATURE=   293.00

 HYDROGEN       ENDF/B-IV MAT 1269/THRM1002            UPDATED 08/12/94   8001001     TEMPERATURE=   293.00
                                                            PROCESS NUMBER 1007 IS AT TEMPERATURE=   293.00

 HYDROGEN       ENDF/B-IV MAT 1269/THRM1002            UPDATED 08/12/94   9001001     TEMPERATURE=   293.00
                                                            PROCESS NUMBER 1007 IS AT TEMPERATURE=   293.00

 HYDROGEN       ENDF/B-IV MAT 1269/THRM1002            UPDATED 08/12/94  10001001     TEMPERATURE=   293.00
                                                            PROCESS NUMBER 1007 IS AT TEMPERATURE=   293.00

 HYDROGEN       ENDF/B-IV MAT 1269/THRM1002            UPDATED 08/12/94  11001001     TEMPERATURE=   293.00
                                                            PROCESS NUMBER 1007 IS AT TEMPERATURE=   293.00

 OXYGEN-16      ENDF/B-IV MAT 1276                     UPDATED 08/12/94   1008016     TEMPERATURE=   293.00
                                                            PROCESS NUMBER 1007 IS AT TEMPERATURE=   293.00

 OXYGEN-16      ENDF/B-IV MAT 1276                     UPDATED 08/12/94   3008016     TEMPERATURE=   293.00
                                                            PROCESS NUMBER 1007 IS AT TEMPERATURE=   293.00

 OXYGEN-16      ENDF/B-IV MAT 1276                     UPDATED 08/12/94   7008016     TEMPERATURE=   293.00
                                                            PROCESS NUMBER 1007 IS AT TEMPERATURE=   293.00

 OXYGEN-16      ENDF/B-IV MAT 1276                     UPDATED 08/12/94   8008016     TEMPERATURE=   293.00
                                                            PROCESS NUMBER 1007 IS AT TEMPERATURE=   293.00

 OXYGEN-16      ENDF/B-IV MAT 1276                     UPDATED 08/12/94   9008016     TEMPERATURE=   293.00
                                                            PROCESS NUMBER 1007 IS AT TEMPERATURE=   293.00

 OXYGEN-16      ENDF/B-IV MAT 1276                     UPDATED 08/12/94  10008016     TEMPERATURE=   293.00
                                                            PROCESS NUMBER 1007 IS AT TEMPERATURE=   293.00

 OXYGEN-16      ENDF/B-IV MAT 1276                     UPDATED 08/12/94  11008016     TEMPERATURE=   293.00
                                                            PROCESS NUMBER 1007 IS AT TEMPERATURE=   293.00

AL-27 1193 218 GP 040375(5)                            UPDATED 08/12/94   4013027     TEMPERATURE=   293.00
                                                            PROCESS NUMBER 1007 IS AT TEMPERATURE=   293.00

CR 1191 WT SS-304(1/EST) P-3 293K SP=5+4(42375)'       UPDATED 08/12/94   5024304     TEMPERATURE=   293.00
                                                            PROCESS NUMBER 1007 IS AT TEMPERATURE=   293.00

 MANGANESE-55   ENDF/B-IV MAT 1197                     UPDATED 08/12/94   5025055     TEMPERATURE=   293.00

GEOMETRY HAS BEEN SET TO HOMOGENEOUS AS LBAR IS  0.0000E+00

RESONANCE DATA FOR THIS NUCLIDE

MASS NUMBER (A)          =    54.466              TEMPERATURE(KELVIN)       =   293.000

POTENTIAL SCATTER SIGMA  =     2.590              LUMPED NUCLEAR DENSITY    = 1.7363295E-03

SPIN FACTOR (G)          =    14.448              LUMP DIMENSION (A-BAR)    = 0.0000000E+00

INNER RADIUS             = 0.0000000E+00          DANCOFF CORRECTION (C)    = 0.0000000E+00

THE ABSORBER WILL BE TREATED BY THE NORDHEIM INTEGRAL METHOD.

MASS OF MODERATOR-1    =    55.845              SIGMA(PER ABSORBER ATOM)= 3.4663022E+02

MODERATOR-1 WILL BE TREATED BY THE NORDHEIM INTEGRAL METHOD.

MASS OF MODERATOR-2    =    55.925              SIGMA(PER ABSORBER ATOM)= 1.2557598E+02

MODERATOR-2 WILL BE TREATED BY THE NORDHEIM INTEGRAL METHOD.

THIS RESONANCE MATERIAL WILL BE TREATED AS A 0-DIMENSIONAL OBJECT.

VOLUME FRACTION OF LUMP IN CELL USED TO ACCOUNT FOR SPATIAL SELF-SHIELDING=1.00000

GROUP        RES ABS         RES FISS        RES SCAT
  8      -5.518788E-04    0.000000E+00   -3.944190E-01
  9      -2.797993E-03    0.000000E+00   -2.293471E+00
 10      -3.291452E-01    0.000000E+00   -3.820862E+01
 11      -2.680562E+00    0.000000E+00   -1.159996E+02
```

EXCESS RESONANCE INTEGRALS

```
                 RESOLVED
ABSORPTION       3.33719E+00
FISSION          0.00000E+00
                                                        PROCESS NUMBER 1007 IS AT TEMPERATURE=   293.00

FE 1192 WT SS-304(1/EST) P-3 293K SP=5+4(42375)'        UPDATED 08/12/94   5026304     TEMPERATURE=   293.00
                                                        PROCESS NUMBER 1007 IS AT TEMPERATURE=   293.00

NI 1190 WT SS-304(1/EST) P-3 293K SP=5+4(42375)'        UPDATED 08/12/94   5028304     TEMPERATURE=   293.00
                                                        PROCESS NUMBER 1007 IS AT TEMPERATURE=   293.00

 ZIRCALLOY      ENDF/B-IV MAT 1284                      UPDATED 08/12/94   2040302     TEMPERATURE=   293.00

RESONANCE DATA FOR THIS NUCLIDE

MASS NUMBER (A)          =    90.436               TEMPERATURE(KELVIN)       =   293.000

POTENTIAL SCATTER SIGMA  =     6.385               LUMPED NUCLEAR DENSITY    = 4.3307818E-02

SPIN FACTOR (G)          =     1.079               LUMP DIMENSION (A-BAR)    = 5.9689999E-01

INNER RADIUS             = 5.4991001E-01          DANCOFF CORRECTION (C)    = 7.8146917E-01

THE ABSORBER WILL BE TREATED BY THE NORDHEIM INTEGRAL METHOD.

THIS RESONANCE MATERIAL WILL BE TREATED AS A 2-DIMENSIONAL OBJECT.

VOLUME FRACTION OF LUMP IN CELL USED TO ACCOUNT FOR SPATIAL SELF-SHIELDING=1.00000

GROUP        RES ABS         RES FISS        RES SCAT
  8      -5.981358E-04    0.000000E+00   -4.731437E-01
  9      -3.409349E-02    0.000000E+00   -1.425288E+00
 10      -3.610238E-02    0.000000E+00   -8.147648E-01
 11      -1.129208E-01    0.000000E+00   -5.208245E-01

EXCESS RESONANCE INTEGRALS

                 RESOLVED

ABSORPTION       4.65199E-01
FISSION          0.00000E+00
                                                        PROCESS NUMBER 1007 IS AT TEMPERATURE=   293.00

 ZIRCALLOY      ENDF/B-IV MAT 1284                      UPDATED 08/12/94  11040302     TEMPERATURE=   293.00

GEOMETRY HAS BEEN SET TO HOMOGENEOUS AS LBAR IS  0.0000E+00

RESONANCE DATA FOR THIS NUCLIDE

MASS NUMBER (A)          =    90.436               TEMPERATURE(KELVIN)       =   293.000

POTENTIAL SCATTER SIGMA  =     6.385               LUMPED NUCLEAR DENSITY    = 2.0960984E-03

SPIN FACTOR (G)          =     1.079               LUMP DIMENSION (A-BAR)    = 0.0000000E+00

INNER RADIUS             = 0.0000000E+00          DANCOFF CORRECTION (C)    = 0.0000000E+00

THE ABSORBER WILL BE TREATED BY THE NORDHEIM INTEGRAL METHOD.

MASS OF MODERATOR-1    =     1.008              SIGMA(PER ABSORBER ATOM)= 4.4951505E+02

MODERATOR-1 WILL BE TREATED BY THE NORDHEIM INTEGRAL METHOD.

MASS OF MODERATOR-2    =    24.072              SIGMA(PER ABSORBER ATOM)= 1.0036559E+02

MODERATOR-2 WILL BE TREATED BY THE NORDHEIM INTEGRAL METHOD.

THIS RESONANCE MATERIAL WILL BE TREATED AS A 0-DIMENSIONAL OBJECT.

VOLUME FRACTION OF LUMP IN CELL USED TO ACCOUNT FOR SPATIAL SELF-SHIELDING=1.00000

GROUP        RES ABS         RES FISS        RES SCAT
  8      -8.728580E-05    0.000000E+00   -6.961700E-02
  9      -8.536950E-03    0.000000E+00   -3.447169E-01
 10      -7.519929E-03    0.000000E+00   -1.797771E-01
 11      -3.148421E-02    0.000000E+00   -1.579333E-01

EXCESS RESONANCE INTEGRALS

                 RESOLVED

ABSORPTION       6.97865E-01
FISSION          0.00000E+00
                                                        PROCESS NUMBER 1007 IS AT TEMPERATURE=   293.00

PB   1288 218NGP 042375 P-3 293K                        UPDATED 08/12/94   6082000     TEMPERATURE=   293.00
                                                        PROCESS NUMBER 1007 IS AT TEMPERATURE=   293.00

 URANIUM-235    ENDF/B-IV MAT 1261                      UPDATED 08/12/94   1092235     TEMPERATURE=   293.00

RESONANCE DATA FOR THIS NUCLIDE

MASS NUMBER (A)          =   233.025               TEMPERATURE(KELVIN)       =   293.000

POTENTIAL SCATTER SIGMA  =    11.500               LUMPED NUCLEAR DENSITY    = 1.5237845E-03
```

```
SPIN FACTOR (G)          = 15171.100              LUMP DIMENSION (A-BAR)    = 5.3720999E-01
INNER RADIUS             = 0.0000000E+00          DANCOFF CORRECTION (C)    = 9.6557754E-01

THE ABSORBER WILL BE TREATED BY THE NORDHEIM INTEGRAL METHOD.

MASS OF MODERATOR-1    =    15.991               SIGMA(PER ABSORBER ATOM)= 1.1818631E+02

MODERATOR-1 WILL BE TREATED BY THE NORDHEIM INTEGRAL METHOD.

MASS OF MODERATOR-2    =   238.051               SIGMA(PER ABSORBER ATOM)= 1.7507033E+02

MODERATOR-2 WILL BE TREATED BY THE NORDHEIM INTEGRAL METHOD.

THIS RESONANCE MATERIAL WILL BE TREATED AS A 2-DIMENSIONAL OBJECT.

VOLUME FRACTION OF LUMP IN CELL USED TO ACCOUNT FOR SPATIAL SELF-SHIELDING=1.00000

GROUP        RES ABS         RES FISS        RES SCAT
 12      -1.555963E+01   -9.675939E+00   -2.151408E-01
 13      -3.600886E+01   -1.766607E+01   -4.584523E-01
 14      -2.840306E+01   -1.602412E+01   -2.987270E-02
 15      -4.645758E-03   -3.516320E-03    5.461928E-05

EXCESS RESONANCE INTEGRALS

                 RESOLVED

ABSORPTION       1.28067E+02
FISSION          8.02641E+01
                                                        PROCESS NUMBER 1007 IS AT TEMPERATURE=   293.00

 URANIUM-235    ENDF/B-IV MAT 1261                    UPDATED 08/12/94  11092235     TEMPERATURE=   293.00

GEOMETRY HAS BEEN SET TO HOMOGENEOUS AS LBAR IS  0.0000E+00

RESONANCE DATA FOR THIS NUCLIDE

MASS NUMBER (A)          =   233.025               TEMPERATURE(KELVIN)       =   293.000

POTENTIAL SCATTER SIGMA  =    11.500               LUMPED NUCLEAR DENSITY    = 3.9496494E-04

SPIN FACTOR (G)          = 15171.100               LUMP DIMENSION (A-BAR)    = 0.0000000E+00

INNER RADIUS             = 0.0000000E+00          DANCOFF CORRECTION (C)    = 0.0000000E+00

THE ABSORBER WILL BE TREATED BY THE NORDHEIM INTEGRAL METHOD.

MASS OF MODERATOR-1    =     1.008               SIGMA(PER ABSORBER ATOM)= 2.3855984E+03

MODERATOR-1 WILL BE TREATED BY THE NORDHEIM INTEGRAL METHOD.

MASS OF MODERATOR-2    =    24.751               SIGMA(PER ABSORBER ATOM)= 5.5561206E+02

MODERATOR-2 WILL BE TREATED BY THE NORDHEIM INTEGRAL METHOD.

THIS RESONANCE MATERIAL WILL BE TREATED AS A 0-DIMENSIONAL OBJECT.

VOLUME FRACTION OF LUMP IN CELL USED TO ACCOUNT FOR SPATIAL SELF-SHIELDING=1.00000

GROUP        RES ABS         RES FISS        RES SCAT
 12      -2.393958E+00   -1.469064E+00   -6.167160E-02
 13      -7.766139E+00   -3.800209E+00   -1.755016E-01
 14      -5.629828E+00   -3.356100E+00   -4.021226E-02
 15      -2.967298E-04   -2.254224E-04    2.470951E-06

EXCESS RESONANCE INTEGRALS

                 RESOLVED

ABSORPTION       2.09811E+02
FISSION          1.25281E+02
                                                        PROCESS NUMBER 1007 IS AT TEMPERATURE=   293.00

 URANIUM-238    ENDF/B-IV MAT 1262                    UPDATED 08/12/94   1092238     TEMPERATURE=   293.00

RESONANCE DATA FOR THIS NUCLIDE

MASS NUMBER (A)          =   236.006               TEMPERATURE(KELVIN)       =   293.000

POTENTIAL SCATTER SIGMA  =    10.599               LUMPED NUCLEAR DENSITY    = 2.1642193E-02

SPIN FACTOR (G)          =   656.527               LUMP DIMENSION (A-BAR)    = 5.3720999E-01

INNER RADIUS             = 0.0000000E+00          DANCOFF CORRECTION (C)    = 9.6557754E-01

THE ABSORBER WILL BE TREATED BY THE NORDHEIM INTEGRAL METHOD.

MASS OF MODERATOR-1    =    15.991               SIGMA(PER ABSORBER ATOM)= 8.3212671E+00

MODERATOR-1 WILL BE TREATED BY THE NORDHEIM INTEGRAL METHOD.

MASS OF MODERATOR-2    =   235.044               SIGMA(PER ABSORBER ATOM)= 8.3803099E-01

MODERATOR-2 WILL BE TREATED BY THE NORDHEIM INTEGRAL METHOD.
```

```
THIS RESONANCE MATERIAL WILL BE TREATED AS A 2-DIMENSIONAL OBJECT.

VOLUME FRACTION OF LUMP IN CELL USED TO ACCOUNT FOR SPATIAL SELF-SHIELDING=1.00000
GROUP        RES ABS         RES FISS        RES SCAT
  9      -8.077708E-02    0.000000E+00   -7.508340E-01
 10      -1.511387E+00   -6.826579E-05   -8.800206E+00
 11      -1.072418E+01    0.000000E+00   -2.896896E+01
 12      -4.483370E+01    0.000000E+00   -5.115822E+01
 13      -5.540449E+01    0.000000E+00   -1.743188E+01
 14      -1.076379E+02    0.000000E+00   -5.433709E+00
 15      -8.253445E-05    0.000000E+00    1.604975E-04

EXCESS RESONANCE INTEGRALS
                 RESOLVED

ABSORPTION       6.64320E+00
FISSION          4.16267E-04
                                                        PROCESS NUMBER 1007 IS AT TEMPERATURE=   293.00

 URANIUM-238    ENDF/B-IV MAT 1262                    UPDATED 08/12/94  11092238     TEMPERATURE=   293.00

GEOMETRY HAS BEEN SET TO HOMOGENEOUS AS LBAR IS  0.0000E+00

RESONANCE DATA FOR THIS NUCLIDE

MASS NUMBER (A)          =   236.006               TEMPERATURE(KELVIN)       =   293.000

POTENTIAL SCATTER SIGMA  =    10.599               LUMPED NUCLEAR DENSITY    = 5.6096567E-03

SPIN FACTOR (G)          =   656.527               LUMP DIMENSION (A-BAR)    = 0.0000000E+00

INNER RADIUS             = 0.0000000E+00           DANCOFF CORRECTION (C)    = 0.0000000E+00

THE ABSORBER WILL BE TREATED BY THE NORDHEIM INTEGRAL METHOD.

MASS OF MODERATOR-1    =     1.008               SIGMA(PER ABSORBER ATOM)= 1.6796532E+02

MODERATOR-1 WILL BE TREATED BY THE NORDHEIM INTEGRAL METHOD.

MASS OF MODERATOR-2    =    17.862               SIGMA(PER ABSORBER ATOM)= 2.7631227E+01

MODERATOR-2 WILL BE TREATED BY THE NORDHEIM INTEGRAL METHOD.

THIS RESONANCE MATERIAL WILL BE TREATED AS A 0-DIMENSIONAL OBJECT.

VOLUME FRACTION OF LUMP IN CELL USED TO ACCOUNT FOR SPATIAL SELF-SHIELDING=1.00000

GROUP        RES ABS         RES FISS        RES SCAT
  9      -2.448317E-02    0.000000E+00   -2.558519E-01
 10      -7.653835E-01   -9.584553E-06   -4.906636E+00
 11      -8.693248E+00    0.000000E+00   -2.447922E+01
 12      -4.042473E+01    0.000000E+00   -4.730249E+01
 13      -5.096339E+01    0.000000E+00   -1.676821E+01
 14      -9.847737E+01    0.000000E+00   -5.734400E+00
 15      -3.066651E-07    0.000000E+00    5.920313E-07

EXCESS RESONANCE INTEGRALS
                 RESOLVED

ABSORPTION       3.42804E+01
FISSION          5.17445E-04
                                                        PROCESS NUMBER 1007 IS AT TEMPERATURE=   293.00
     THIS XSDRN WORKING TAPE WAS CREATED 09/14/04 AT 15:51:57
     THE TITLE OF THE PARENT CASE IS AS FOLLOWS
     SCALE 4.2 - 27 GROUP NEUTRON GROUP LIBRARY
        BASED ON ENDF-B VERSION 4 DATA
           COMPILED FOR NRC     1/27/89
         TAPE ID                          4321          NUMBER OF NUCLIDES                   25
         NUMBER OF NEUTRON GROUPS           27          NUMBER OF GAMMA GROUPS                0
         FIRST THERMAL GROUP                15          LOGICAL UNIT                          4
                                  TABLE OF CONTENTS
        HYDROGEN       ENDF/B-IV MAT 1269/THRM1002          UPDATED 08/12/94        ID   3001001
        HYDROGEN       ENDF/B-IV MAT 1269/THRM1002          UPDATED 08/12/94        ID   7001001
        HYDROGEN       ENDF/B-IV MAT 1269/THRM1002          UPDATED 08/12/94        ID   8001001
        HYDROGEN       ENDF/B-IV MAT 1269/THRM1002          UPDATED 08/12/94        ID   9001001
        HYDROGEN       ENDF/B-IV MAT 1269/THRM1002          UPDATED 08/12/94        ID  10001001
        HYDROGEN       ENDF/B-IV MAT 1269/THRM1002          UPDATED 08/12/94        ID  11001001
        OXYGEN-16      ENDF/B-IV MAT 1276                   UPDATED 08/12/94        ID   1008016
        OXYGEN-16      ENDF/B-IV MAT 1276                   UPDATED 08/12/94        ID   3008016
        OXYGEN-16      ENDF/B-IV MAT 1276                   UPDATED 08/12/94        ID   7008016
        OXYGEN-16      ENDF/B-IV MAT 1276                   UPDATED 08/12/94        ID   8008016
        OXYGEN-16      ENDF/B-IV MAT 1276                   UPDATED 08/12/94        ID   9008016
        OXYGEN-16      ENDF/B-IV MAT 1276                   UPDATED 08/12/94        ID  10008016
        OXYGEN-16      ENDF/B-IV MAT 1276                   UPDATED 08/12/94        ID  11008016
       AL-27 1193 218 GP 040375(5)                          UPDATED 08/12/94        ID   4013027
       CR 1191 WT SS-304(1/EST) P-3 293K SP=5+4(42375)'     UPDATED 08/12/94        ID   5024304
        MANGANESE-55   ENDF/B-IV MAT 1197                   UPDATED 08/12/94        ID   5025055
       FE 1192 WT SS-304(1/EST) P-3 293K SP=5+4(42375)'     UPDATED 08/12/94        ID   5026304
       NI 1190 WT SS-304(1/EST) P-3 293K SP=5+4(42375)'     UPDATED 08/12/94        ID   5028304
        ZIRCALLOY      ENDF/B-IV MAT 1284                   UPDATED 08/12/94        ID   2040302
        ZIRCALLOY      ENDF/B-IV MAT 1284                   UPDATED 08/12/94        ID  11040302
       PB   1288 218NGP 042375 P-3 293K                     UPDATED 08/12/94        ID   6082000
        URANIUM-235    ENDF/B-IV MAT 1261                   UPDATED 08/12/94        ID   1092235
        URANIUM-235    ENDF/B-IV MAT 1261                   UPDATED 08/12/94        ID  11092235
```

```
URANIUM-238    ENDF/B-IV MAT 1262                    UPDATED 08/12/94        ID   1092238
URANIUM-238    ENDF/B-IV MAT 1262                    UPDATED 08/12/94        ID  11092238

 TAPE COPY USED      0 I/O'S, AND TOOK    0.11 SECONDS
```

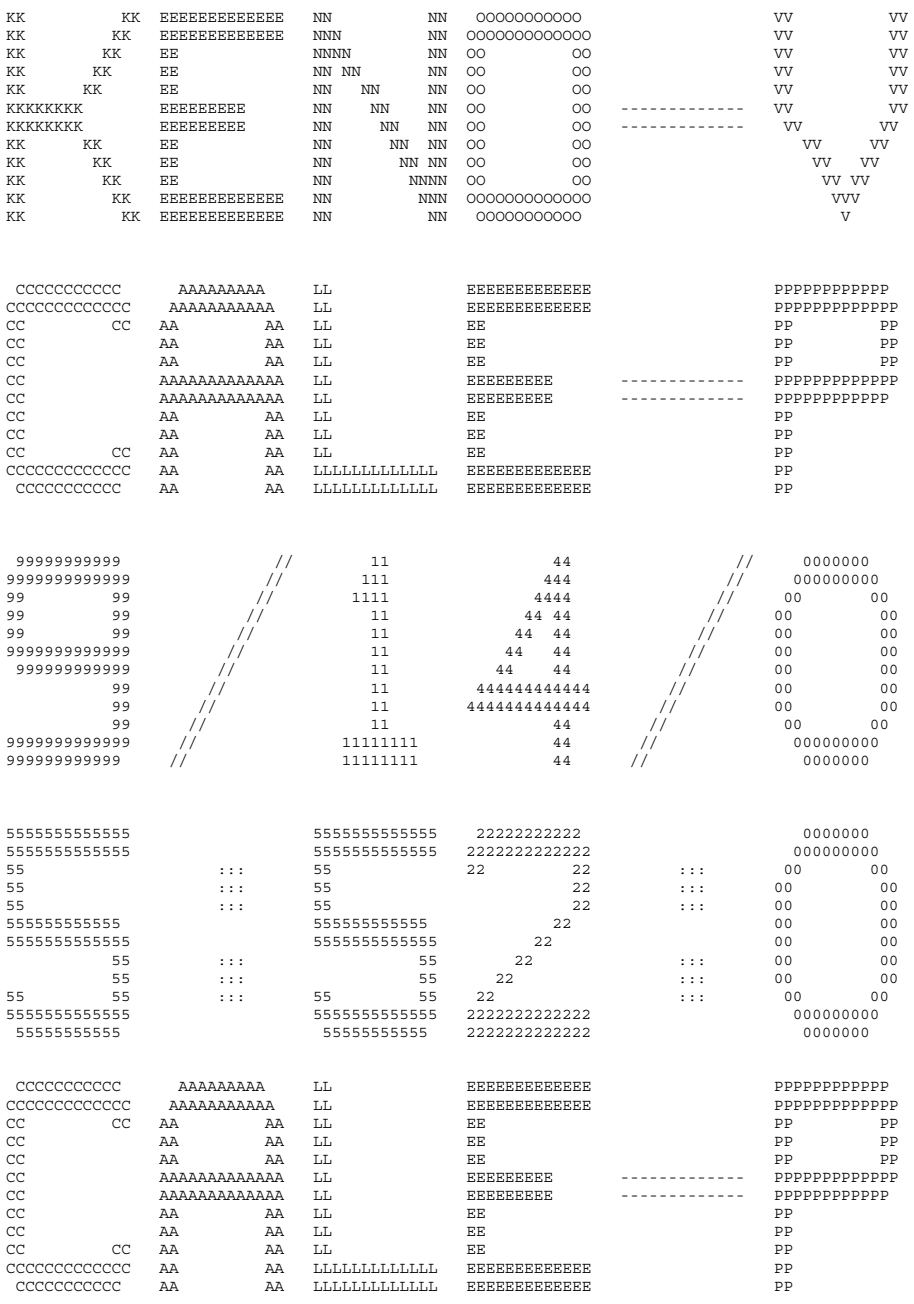
KK KK EEEEEEEEEEEEE NN NN OOOOOOOOOOO VV VV
KK KK EEEEEEEEEEEEE NNN NN OOOOOOOOOOOOO VV VV
KK KK EE NNNN NN OO OO VV VV
KK KK EE NN NN NN OO OO VV VV
KK KK EE NN NN NN OO OO VV VV
KKKKKKKK EEEEEEEEE NN NN NN OO OO VV VV
KKKKKKKK EEEEEEEEE NN NN NN OO OO VV VV
KK KK EE NN NN NN OO OO VV VV
KK KK EE NN NN NN OO OO VV VV
KK KK EE NN NNNN OO OO VV VV
KK KK EEEEEEEEEEEEE NN NNN OOOOOOOOOOOOO VVV
KK KK EEEEEEEEEEEEE NN NN OOOOOOOOOOO V
SSSSSSSSSS CCCCCCCCCC AAAAAAAAA LL EEEEEEEEEEEEE PPPPPPPPPPP CCCCCCCCCC
SSSSSSSSSSSS CCCCCCCCCCCC AAAAAAAAAAA LL EEEEEEEEEEEEE PPPPPPPPPPPP CCCCCCCCCCCC
SS SS CC CC AA AA LL EE PP PP CC CC
SS CC AA AA LL EE PP PP CC
SS CC AA AA LL EE PP PP CC
SSSSSSSSSSSS CC AAAAAAAAAAAAA LL EEEEEEEEE PPPPPPPPPPPP CC
SSSSSSSSSSS CC AAAAAAAAAAAAA LL EEEEEEEEE PPPPPPPPPPP CC
SS CC AA AA LL EE PP CC
SS CC AA AA LL EE PP CC
SS SS CC CC AA AA LL EE PP CC CC
SSSSSSSSSSSS CCCCCCCCCCCC AA AA LLLLLLLLLLLL EEEEEEEEEEEE PP CCCCCCCCCCCC
SSSSSSSSSS CCCCCCCCCC AA AA LLLLLLLLLLLL EEEEEEEEEEEE PP CCCCCCCCCC
0000000 99999999999 // 11 44 // 0000000 44
000000000 9999999999999 // 111 444 // 000000000 444
00 00 99 99 // 1111 4444 // 00 00 4444
00 00 99 99 // 11 44 44 // 00 00 44 44
00 00 99 99 // 11 44 44 // 00 00 44 44
00 00 9999999999999 // 11 44 44 // 00 00 44 44
00 00 999999999999 // 11 44 44 // 00 00 44 44
00 00 99 // 11 444444444444 // 00 00 444444444444
00 00 99 // 11 4444444444444 // 00 00 4444444444444
00 00 99 // 11 44 // 00 00 44
000000000 9999999999999 // 11111111 44 // 000000000 44
0000000 999999999999 // 11111111 44 // 0000000 44
11 5555555555555 5555555555555 22222222222 0000000 11
111 5555555555555 5555555555555 2222222222222 000000000 111
1111 55 ::: 55 22 22 ::: 00 00 1111
11 55 ::: 55 22 ::: 00 00 11
11 55 ::: 55 22 ::: 00 00 11
11 555555555555 555555555555 22 00 00 11
11 5555555555555 5555555555555 22 00 00 11
11 55 ::: 55 22 ::: 00 00 11
11 55 ::: 55 22 ::: 00 00 11
11 55 55 ::: 55 55 22 ::: 00 00 11
11111111 5555555555555 5555555555555 2222222222222 000000000 11111111
11111111 55555555555 55555555555 2222222222222 0000000 11111111
SSSSSSSSSS CCCCCCCCCC AAAAAAAAA LL EEEEEEEEEEEE PPPPPPPPPPP CCCCCCCCCC
SSSSSSSSSSSS CCCCCCCCCCCC AAAAAAAAAAA LL EEEEEEEEEEEE PPPPPPPPPPPP CCCCCCCCCCCC
SS SS CC CC AA AA LL EE PP PP CC CC
SS CC AA AA LL EE PP PP CC
SS CC AA AA LL EE PP PP CC
SSSSSSSSSSSS CC AAAAAAAAAAAAA LL EEEEEEEEE PPPPPPPPPPPP CC
SSSSSSSSSSS CC AAAAAAAAAAAAA LL EEEEEEEEE PPPPPPPPPPP CC
SS CC AA AA LL EE PP CC
SS CC AA AA LL EE PP CC
SS SS CC CC AA AA LL EE PP CC CC
SSSSSSSSSSSS CCCCCCCCCCCC AA AA LLLLLLLLLLLL EEEEEEEEEEEE PP CCCCCCCCCCCC
SSSSSSSSSS CCCCCCCCCC AA AA LLLLLLLLLLLL EEEEEEEEEEEE PP CCCCCCCCCC

```
*******************************************************************************
*******************************************************************************
*******************************************************************************
*****                                                                     *****
*****                  PROGRAM VERIFICATION INFORMATION                   *****
*****                                                                     *****
*****                CODE SYSTEM:  SCALE-PC VERSION:  4.3                 *****
*****                                                                     *****
*******************************************************************************
*******************************************************************************
*****                                                                     *****
*****                                                                     *****
*****              PROGRAM:  O0O009                                       *****
*****                                                                     *****
*****        CREATION DATE:  03/08/96                                     *****
*****                                                                     *****
*****              VOLUME:   Eng                                          *****
*****                                                                     *****
*****              LIBRARY:  M:\SCALE43\WIN_NT\EXE                        *****
*****                                                                     *****
*****                                                                     *****
*****      PRODUCTION CODE:  KENOVA                                       *****
*****                                                                     *****
*****              VERSION:  3.1                                          *****
*****                                                                     *****
*****              JOBNAME:  SCALE-PC                                     *****
*****                                                                     *****
*****    DATE OF EXECUTION:  09/14/04                                     *****
*****                                                                     *****
*****    TIME OF EXECUTION:  15:52:01                                     *****
*****                                                                     *****
*****                                                                     *****
*******************************************************************************
*******************************************************************************
*******************************************************************************
```

```
*****************************************************************************************************************
***                                                                                                           ***
***                                                                                                           ***
***                                                                                                           ***
*****************************************************************************************************************
***                          ******       NUMERIC PARAMETERS       ******                                    ***
***                                                                                                           ***
***                                                                                                           ***
***        TME         MAXIMUM PROBLEM TIME (MIN)                          30.00                          ***
***                                                                                                           ***
***        TBA         TIME PER GENERATION (MIN)                            5.00                          ***
***                                                                                                           ***
***        GEN         NUMBER OF GENERATIONS                                 803                          ***
***                                                                                                           ***
***        NPG         NUMBER PER GENERATION                                1000                          ***
***                                                                                                           ***
***        NSK         NUMBER OF GENERATIONS TO BE SKIPPED                     3                          ***
***                                                                                                           ***
***        BEG         BEGINNING GENERATION NUMBER                             1                          ***
***                                                                                                           ***
***        RES         GENERATIONS BETWEEN CHECKPOINTS                         0                          ***
***                                                                                                           ***
***        X1D         NUMBER OF EXTRA 1-D CROSS SECTIONS                      1                          ***
***                                                                                                           ***
***        NBK         NEUTRON BANK SIZE                                    1025                          ***
***                                                                                                           ***
***        XNB         EXTRA POSITIONS IN NEUTRON BANK                         0                          ***
***                                                                                                           ***
***        NFB         FISSION BANK SIZE                                    1000                          ***
***                                                                                                           ***
***        XFB         EXTRA POSITIONS IN FISSION BANK                         0                          ***
***                                                                                                           ***
***        WTA         DEFAULT VALUE OF WEIGHT AVERAGE                    0.5000                          ***
***                                                                                                           ***
***        WTH         WEIGHT HIGH FOR SPLITTING                          3.0000                          ***
***                                                                                                           ***
***        WTL         WEIGHT LOW FOR RUSSIAN ROULETTE                    0.3333                          ***
***                                                                                                           ***
***        RND         STARTING RANDOM NUMBER                        BB827100001                          ***
***                                                                                                           ***
***        NB8         NUMBER OF D.A. BLOCKS ON UNIT  8                      200                          ***
***                                                                                                           ***
***        NL8         LENGTH OF D.A. BLOCKS ON UNIT  8                      512                          ***
***                                                                                                           ***
***        ADJ         MODE OF CALCULATION                               FORWARD                          ***
***                                                                                                           ***
***                    INPUT DATA WRITTEN ON RESTART UNIT                     NO                          ***
***                                                                                                           ***
***                    BINARY DATA INTERFACE                                 YES                          ***
***                                                                                                           ***
***                                                                                                           ***
*****************************************************************************************************************
*****************************************************************************************************************
```

```
*****************************************************************************************************************************
*****************************************************************************************************************************
***                                                                                                                       ***
***                                                                                                                       ***
*****************************************************************************************************************************
***                                  ******      LOGICAL PARAMETERS        ******                                       ***
***                                                                                                                       ***
***  RUN  EXECUTE PROBLEM AFTER CHECKING DATA    YES            PLT  PLOT PICTURE MAP(S)                        NO  ***
***                                                                                                                       ***
***  FLX  COMPUTE FLUX                            NO            FDN  COMPUTE FISSION DENSITIES                  NO  ***
***                                                                                                                       ***
***  SMU  COMPUTE AVG UNIT SELF-MULTIPLICATION    NO            NUB  COMPUTE NU-BAR & AVG FISSION GROUP      YES  ***
***                                                                                                                       ***
***  MKU  COMPUTE MATRIX K-EFF BY UNIT NUMBER     NO            MKP  COMPUTE MATRIX K-EFF BY UNIT LOCATION    NO  ***
***                                                                                                                       ***
***  CKU  COMPUTE COFACTOR K-EFF BY UNIT NUMBER   NO            CKP  COMPUTE COFACTOR K-EFF BY UNIT LOCATION  NO  ***
***                                                                                                                       ***
***  FMU  PRINT FISS PROD MATRIX BY UNIT NUMBER   NO            FMP  PRINT FISS PROD MATRIX BY UNIT LOCATION  NO  ***
***                                                                                                                       ***
***  MKH  COMPUTE MATRIX K-EFF BY HOLE NUMBER     NO            MKA  COMPUTE MATRIX K-EFF BY ARRAY NUMBER     NO  ***
***                                                                                                                       ***
***  CKH  COMPUTE COFACTOR K-EFF BY HOLE NUMBER   NO            CKA  COMPUTE COFACTOR K-EFF BY ARRAY NUMBER   NO  ***
***                                                                                                                       ***
***  FMH  PRINT FISS PROD MATRIX BY HOLE NUMBER   NO            FMA  PRINT FISS PROD MATRIX BY ARRAY NUMBER   NO  ***
***                                                                                                                       ***
***  HHL  COLLECT MATRIX BY HIGHEST HOLE LEVEL    NO            HAL  COLLECT MATRIX BY HIGHEST ARRAY LEVEL    NO  ***
***                                                                                                                       ***
***  AMX  PRINT ALL MIXED CROSS SECTIONS          NO            FAR  PRINT FIS. AND ABS. BY REGION            NO  ***
***                                                                                                                       ***
***  XS1  PRINT 1-D MIXTURE X-SECTIONS            NO            GAS  PRINT FAR BY GROUP                       NO  ***
***                                                                                                                       ***
***  XS2  PRINT 2-D MIXTURE X-SECTIONS            NO            PAX  PRINT XSEC-ALBEDO CORRELATION TABLES     NO  ***
***                                                                                                                       ***
***  XAP  PRINT MIXTURE ANGLES & PROBABILITIES    NO            PWT  PRINT WEIGHT AVERAGE ARRAY               NO  ***
***                                                                                                                       ***
***  PKI  PRINT FISSION SPECTRUM                  NO            PGM  PRINT INPUT GEOMETRY                     NO  ***
***                                                                                                                       ***
***  P1D  PRINT EXTRA 1-D CROSS SECTIONS          NO            BUG  PRINT DEBUG INFORMATION                  NO  ***
***                                                                                                                       ***
***                                                             TRK  PRINT TRACKING INFORMATION               NO  ***
***                                                                                                                       ***
***                                                                                                                       ***
*****************************************************************************************************************************
*****************************************************************************************************************************
                                    PARAMETER INPUT COMPLETED

                        ........    0 IO'S WERE USED READING THE PARAMETER DATA      ........

                       ************** DATA READING COMPLETED **************
*****************************************************************************************************************************
***                                                                                                                       ***
***                                                                                                                       ***
*****************************************************************************************************************************
*****************************************************************************************************************************
***                                                                                                                       ***
***          UNIT                                                    VOLUME                                           ***
***         NUMBER              DATA SET NAME                        NAME        UNIT FUNCTION                        ***
***         ------              -------------                        ----        -------------                        ***
***                                                                                                                       ***
***      XSC  14     W:\Zjr\Lwt\Pulstar\KENOVA\Aych\lwtAych2_xl_r                MIXED CROSS SECTIONS                 ***
***                                                                                                                       ***
***      ALB  79     M:\scale43\DATALIB\FT79F001                                 INPUT ALBEDOS                        ***
***                                                                                                                       ***
***      WTS  80     M:\scale43\DATALIB\FT80F001                                 INPUT WEIGHTS                        ***
***                                                                                                                       ***
***      SKT  16      UNKNOWN                                                    WRITE SCRATCH DATA                   ***
***                                                                                                                       ***
***      BIN  95     W:\Zjr\Lwt\Pulstar\KENOVA\Aych\lwtAych2_xl_r                BINARY INPUT DATA                    ***
***                                                                                                                       ***
***      RST  95     W:\Zjr\Lwt\Pulstar\KENOVA\Aych\lwtAych2_xl_r                READ RESTART DATA                    ***
***                                                                                                                       ***
***      LIB   4     W:\Zjr\Lwt\Pulstar\KENOVA\Aych\lwtAych2_xl_r                INPUT AMPX WORKING LIBRARY           ***
***                                                                                                                       ***
***             8     W:\Zjr\Lwt\Pulstar\KENOVA\Aych\lwtAych2_xl_r                INPUT DATA DIRECT ACCESS             ***
***                                                                                                                       ***
***             9      UNKNOWN                                                    SUPER GROUPED DIRECT ACCESS          ***
***                                                                                                                       ***
***            10      UNKNOWN                                                    XSEC MIXING DIRECT ACCESS            ***
***                                                                                                                       ***
*****************************************************************************************************************************

                        ........    0 IO'S WERE USED PREPARING INPUT DATA    ........

                         CROSS SECTIONS READ FROM THE AMPX WORKING LIBRARY ON UNIT    4


                                              MIXING TABLE

                                      NUMBER OF SCATTERING ANGLES =  2
                                  CROSS SECTION MESSAGE THRESHOLD =3.0E-05
```

```
MIXTURE =     1          DENSITY(G/CC) =  10.380
   NUCLIDE   ATOM-DENS.   WGT. FRAC.     ZA      AWT             NUCLIDE TITLE
   1008016  4.63320E-02  1.18520E-01    8016    15.9904      OXYGEN-16      ENDF/B-IV MAT 1276                      UPDATED
08/12/94
   1092235  1.52378E-03  5.72962E-02   92235   235.0441      URANIUM-235    ENDF/B-IV MAT 1261                      UPDATED
08/12/94
   1092238  2.16422E-02  8.24184E-01   92238   238.0510      URANIUM-238    ENDF/B-IV MAT 1262                      UPDATED
08/12/94

MIXTURE =     2          DENSITY(G/CC) =  6.5600
   NUCLIDE   ATOM-DENS.   WGT. FRAC.     ZA      AWT             NUCLIDE TITLE
   2040302  4.33078E-02  1.00000E+00   40000    91.2196      ZIRCALLOY      ENDF/B-IV MAT 1284                      UPDATED
08/12/94

MIXTURE =     3          DENSITY(G/CC) = 0.99817E-20
   NUCLIDE   ATOM-DENS.   WGT. FRAC.     ZA      AWT             NUCLIDE TITLE
   3001001  6.67692E-22  1.11927E-01    1001     1.0077      HYDROGEN       ENDF/B-IV MAT 1269/THRM1002             UPDATED
08/12/94
   3008016  3.33846E-22  8.88073E-01    8016    15.9904      OXYGEN-16      ENDF/B-IV MAT 1276                      UPDATED
08/12/94

MIXTURE =     4          DENSITY(G/CC) =  2.7020
   NUCLIDE   ATOM-DENS.   WGT. FRAC.     ZA      AWT             NUCLIDE TITLE
   4013027  6.03066E-02  1.00000E+00   13027    26.9818     AL-27 1193 218 GP 040375(5)                            UPDATED
08/12/94

MIXTURE =     5          DENSITY(G/CC) =  7.9200
   NUCLIDE   ATOM-DENS.   WGT. FRAC.     ZA      AWT             NUCLIDE TITLE
   5024304  1.74286E-02  1.90000E-01   24000    51.9957     CR 1191 WT SS-304(1/EST) P-3 293K SP=5+4(42375)'        UPDATED
08/12/94
   5025055  1.73633E-03  1.99999E-02   25055    54.9379      MANGANESE-55   ENDF/B-IV MAT 1197                      UPDATED
08/12/94
   5026304  5.93579E-02  6.95000E-01   26000    55.8447     FE 1192 WT SS-304(1/EST) P-3 293K SP=5+4(42375)'        UPDATED
08/12/94
   5028304  7.72070E-03  9.50001E-02   28000    58.6872     NI 1190 WT SS-304(1/EST) P-3 293K SP=5+4(42375)'        UPDATED
08/12/94

MIXTURE =     6          DENSITY(G/CC) =  11.344
   NUCLIDE   ATOM-DENS.   WGT. FRAC.     ZA      AWT             NUCLIDE TITLE
   6082000  3.29690E-02  1.00000E+00   82000   207.2100     PB   1288 218NGP 042375 P-3 293K                       UPDATED
08/12/94

MIXTURE =     7          DENSITY(G/CC) = 0.99817E-20
   NUCLIDE   ATOM-DENS.   WGT. FRAC.     ZA      AWT             NUCLIDE TITLE
   7001001  6.67692E-22  1.11927E-01    1001     1.0077      HYDROGEN       ENDF/B-IV MAT 1269/THRM1002             UPDATED
08/12/94
   7008016  3.33846E-22  8.88073E-01    8016    15.9904      OXYGEN-16      ENDF/B-IV MAT 1276                      UPDATED
08/12/94

MIXTURE =     8          DENSITY(G/CC) = 0.99817E-20
   NUCLIDE   ATOM-DENS.   WGT. FRAC.     ZA      AWT             NUCLIDE TITLE
   8001001  6.67692E-22  1.11927E-01    1001     1.0077      HYDROGEN       ENDF/B-IV MAT 1269/THRM1002             UPDATED
08/12/94
   8008016  3.33846E-22  8.88073E-01    8016    15.9904      OXYGEN-16      ENDF/B-IV MAT 1276                      UPDATED
08/12/94

MIXTURE =     9          DENSITY(G/CC) = 0.99817
   NUCLIDE   ATOM-DENS.   WGT. FRAC.     ZA      AWT             NUCLIDE TITLE
   9001001  6.67692E-02  1.11927E-01    1001     1.0077      HYDROGEN       ENDF/B-IV MAT 1269/THRM1002             UPDATED
08/12/94
   9008016  3.33846E-02  8.88074E-01    8016    15.9904      OXYGEN-16      ENDF/B-IV MAT 1276                      UPDATED
08/12/94

MIXTURE =    10          DENSITY(G/CC) = 0.99817
   NUCLIDE   ATOM-DENS.   WGT. FRAC.     ZA      AWT             NUCLIDE TITLE
  10001001  6.67692E-02  1.11927E-01    1001     1.0077      HYDROGEN       ENDF/B-IV MAT 1269/THRM1002             UPDATED
08/12/94
  10008016  3.33846E-02  8.88074E-01    8016    15.9904      OXYGEN-16      ENDF/B-IV MAT 1276                      UPDATED
08/12/94

MIXTURE =    11          DENSITY(G/CC) =  3.6991
   NUCLIDE   ATOM-DENS.   WGT. FRAC.     ZA      AWT             NUCLIDE TITLE
  11001001  4.62310E-02  2.09120E-02    1001     1.0077      HYDROGEN       ENDF/B-IV MAT 1269/THRM1002             UPDATED
08/12/94
  11008016  3.51247E-02  2.52128E-01    8016    15.9904      OXYGEN-16      ENDF/B-IV MAT 1276                      UPDATED
08/12/94
  11040302  2.09610E-03  8.58321E-02   40000    91.2196      ZIRCALLOY      ENDF/B-IV MAT 1284                      UPDATED
08/12/94
  11092235  3.94965E-04  4.16733E-02   92235   235.0441      URANIUM-235    ENDF/B-IV MAT 1261                      UPDATED
08/12/94
  11092238  5.60966E-03  5.99454E-01   92238   238.0510      URANIUM-238    ENDF/B-IV MAT 1262                      UPDATED
08/12/94

                      3001001     HYDROGEN       ENDF/B-IV MAT 1269/THRM1002            UPDATED 08/12/94
                      7001001     HYDROGEN       ENDF/B-IV MAT 1269/THRM1002            UPDATED 08/12/94
                      8001001     HYDROGEN       ENDF/B-IV MAT 1269/THRM1002            UPDATED 08/12/94
                      9001001     HYDROGEN       ENDF/B-IV MAT 1269/THRM1002            UPDATED 08/12/94
                     10001001     HYDROGEN       ENDF/B-IV MAT 1269/THRM1002            UPDATED 08/12/94
                     11001001     HYDROGEN       ENDF/B-IV MAT 1269/THRM1002            UPDATED 08/12/94
                      1008016     OXYGEN-16      ENDF/B-IV MAT 1276                     UPDATED 08/12/94
                      3008016     OXYGEN-16      ENDF/B-IV MAT 1276                     UPDATED 08/12/94
                      7008016     OXYGEN-16      ENDF/B-IV MAT 1276                     UPDATED 08/12/94
                      8008016     OXYGEN-16      ENDF/B-IV MAT 1276                     UPDATED 08/12/94
                      9008016     OXYGEN-16      ENDF/B-IV MAT 1276                     UPDATED 08/12/94
```

```
                          10008016     OXYGEN-16      ENDF/B-IV MAT 1276                    UPDATED 08/12/94
                          11008016     OXYGEN-16      ENDF/B-IV MAT 1276                    UPDATED 08/12/94
                           4013027    AL-27 1193 218 GP 040375(5)                          UPDATED 08/12/94
                           5024304    CR 1191 WT SS-304(1/EST) P-3 293K SP=5+4(42375)'     UPDATED 08/12/94
                           5025055     MANGANESE-55   ENDF/B-IV MAT 1197                   UPDATED 08/12/94
                           5026304    FE 1192 WT SS-304(1/EST) P-3 293K SP=5+4(42375)'     UPDATED 08/12/94
                           5028304    NI 1190 WT SS-304(1/EST) P-3 293K SP=5+4(42375)'     UPDATED 08/12/94
                           2040302     ZIRCALLOY      ENDF/B-IV MAT 1284                    UPDATED 08/12/94
                          11040302     ZIRCALLOY      ENDF/B-IV MAT 1284                    UPDATED 08/12/94
                           6082000    PB   1288 218NGP 042375 P-3 293K                     UPDATED 08/12/94
                           1092235     URANIUM-235    ENDF/B-IV MAT 1261                    UPDATED 08/12/94
                          11092235     URANIUM-235    ENDF/B-IV MAT 1261                    UPDATED 08/12/94
                           1092238     URANIUM-238    ENDF/B-IV MAT 1262                    UPDATED 08/12/94
                          11092238     URANIUM-238    ENDF/B-IV MAT 1262                    UPDATED 08/12/94

KENO MESSAGE NUMBER K5-222       1 TRANSFERS FOR MIXTURE    11 WERE CORRECTED FOR BAD MOMENTS.

KENO MESSAGE NUMBER K5-222       1 TRANSFERS FOR MIXTURE     3 WERE CORRECTED FOR BAD MOMENTS.

KENO MESSAGE NUMBER K5-222       1 TRANSFERS FOR MIXTURE     7 WERE CORRECTED FOR BAD MOMENTS.

KENO MESSAGE NUMBER K5-222       1 TRANSFERS FOR MIXTURE     8 WERE CORRECTED FOR BAD MOMENTS.

KENO MESSAGE NUMBER K5-222       1 TRANSFERS FOR MIXTURE     9 WERE CORRECTED FOR BAD MOMENTS.

KENO MESSAGE NUMBER K5-222       1 TRANSFERS FOR MIXTURE    10 WERE CORRECTED FOR BAD MOMENTS.

                            ........    0 IO'S WERE USED MIXING CROSS-SECTIONS       ........

                             1-D CROSS SECTION ARRAY ID NUMBERS
                                1  2002  1452    27    18  1018

                            ........    0 IO'S WERE USED PREPARING THE CROSS SECTIONS    ........
          ***************************************************************************************************
          ***                                                                                                 ***
          ***                                                                                                 ***
          ***                                                                                                 ***
          ***************************************************************************************************
          ***************************************************************************************************
          ***                                                                                                 ***
          ***                                ****** ADDITIONAL INFORMATION ******                             ***
          ***                                                                                                 ***
          ***  NUMBER OF ENERGY GROUPS              27       USE LATTICE GEOMETRY                    YES   ***
          ***                                                                                                 ***
          ***  NO. OF FISSION SPECTRUM SOURCE GROUP  1       GLOBAL ARRAY NUMBER                       0   ***
          ***                                                                                                 ***
          ***  NO. OF SCATTERING ANGLES IN XSECS     2       NUMBER OF UNITS IN THE GLOBAL X DIR.      0   ***
          ***                                                                                                 ***
          ***  ENTRIES/NEUTRON IN THE NEUTRON BANK  28       NUMBER OF UNITS IN THE GLOBAL Y DIR.      0   ***
          ***                                                                                                 ***
          ***  ENTRIES/NEUTRON IN THE FISSION BANK  21       NUMBER OF UNITS IN THE GLOBAL Z DIR.      0   ***
          ***                                                                                                 ***
          ***  NUMBER OF MIXTURES USED               9       USE A GLOBAL REFLECTOR                  YES   ***
          ***                                                                                                 ***
          ***  NUMBER OF BIAS ID'S USED              1       USE NESTED HOLES                        YES   ***
          ***                                                                                                 ***
          ***  NUMBER OF DIFFERENTIAL ALBEDOS USED   1       NUMBER OF HOLES                          15   ***
          ***                                                                                                 ***
          ***  TOTAL INPUT GEOMETRY REGIONS        139       MAXIMUM HOLE NESTING LEVEL                2   ***
          ***                                                                                                 ***
          ***  NUMBER OF GEOMETRY REGIONS USED     139       USE NESTED ARRAYS                       YES   ***
          ***                                                                                                 ***
          ***  LARGEST GEOMETRY UNIT NUMBER        330       NUMBER OF ARRAYS USED                    14   ***
          ***                                                                                                 ***
          ***  LARGEST ARRAY NUMBER                 34       MAXIMUM ARRAY NESTING LEVEL               3   ***
          ***                                                                                                 ***
          ***                                                                                                 ***
          ***  +X BOUNDARY CONDITION               H2O       -X BOUNDARY CONDITION                   H2O   ***
          ***                                                                                                 ***
          ***  +Y BOUNDARY CONDITION               H2O       -Y BOUNDARY CONDITION                   H2O   ***
          ***                                                                                                 ***
          ***  +Z BOUNDARY CONDITION               H2O       -Z BOUNDARY CONDITION                   H2O   ***
          ***                                                                                                 ***
          ***************************************************************************************************
               ***********************************************************************************************
               ***                                                                                         ***
               ***                    ****** SPACE AND SUPERGROUP INFORMATION ******                       ***
               ***                                                                                         ***
               ***       100000 WORDS IS THE TOTAL SPACE AVAILABLE.                                        ***
               ***                                                                                         ***
               ***        58243 WORDS WERE USED FOR NON-SUPERGROUP STORAGE.                                ***
               ***                                                                                         ***
               ***        41757 WORDS OF STORAGE ARE AVAILABLE FOR SUPERGROUPED DATA.                      ***
               ***                                                                                         ***
               ***        99308 WORDS OF STORAGE ARE AVAILABLE FOR CONSTRUCTING THE SUPERGROUPS.           ***
               ***                                                                                         ***
               ***        41696 WORDS OF STORAGE ARE AVAILABLE TO EACH SUPERGROUP.                         ***
               ***                                                                                         ***
               ***         1640 WORDS ARE NEEDED FOR THE LARGEST GROUP.                                    ***
               ***                                                                                         ***
               ***        60126 WORDS OF STORAGE IS SUFFICIENT TO RUN THIS PROBLEM.                        ***
               ***                                                                                         ***
               ***        76294 WORDS OF STORAGE WILL ALLOW THE PROBLEM TO RUN WITH ONE SUPERGROUP.         ***
               ***                                                                                         ***
               ***        76448 WORDS OF STORAGE WILL BE USED TO RUN THIS PROBLEM.                          ***
```

```
***                                                                                                  ***
*****************************************************************************************************
*****************************************************************************************************
***                                                                                                  ***
```

*** SUPERGROUP	STARTING GROUP	ENDING GROUP	XSEC LENGTH	ALBEDO LENGTH	TOTAL LENGTH	***
*** 1	1	27	3081	544	18122	***

..... 0 IO'S WERE USED IN SUPERGROUPING .....

ARRAY NUMBER	UNITS IN X DIR.	UNITS IN Y DIR.	UNITS IN Z DIR.	NESTING LEVEL
1	5	5	1	3
2	1	5	1	2
3	1	3	1	2
4	1	3	1	2
10	1	1	8	1
12	1	5	1	2
13	1	3	1	2
14	1	3	1	2
22	1	5	1	2
23	1	3	1	2
24	1	3	1	2
32	1	5	1	2
33	1	3	1	2
34	1	3	1	2

..... 0 IO'S WERE USED LOADING THE DATA .....

REGION	MEDIA NUM	BIAS ID	GEOMETRY DESCRIPTION FOR THOSE UNITS UTILIZED IN THIS PROBLEM									
			----- UNIT 1 -----									
PULSTAR FUEL ELEMENT												
1 CYLINDER	1	1	RADIUS = 0.53720	+Z = 63.881	-Z = 2.6670	CENTERLINE IS AT	X = 0.00000	Y = 0.00000				
2 CYLINDER	9	1	RADIUS = 0.54990	+Z = 63.881	-Z = 2.6670	CENTERLINE IS AT	X = 0.00000	Y = 0.00000				
3 CYLINDER	2	1	RADIUS = 0.59690	+Z = 66.548	-Z = 0.00000	CENTERLINE IS AT	X = 0.00000	Y = 0.00000				
4 CUBOID	3	1	+X = 0.77090	-X =-0.77090	+Y = 0.66680	-Y =-0.66680	+Z = 66.548	-Z = 0.00000				
			----- UNIT 5 -----									
DIVIDER CENTER STACK												
1 CUBOID	5	1	+X = 4.2926	-X = -4.2926	+Y = 0.71120	-Y = 0.00000	+Z = 110.49	-Z = 0.00000				
			----- UNIT 6 -----									
DIVIDER OUTSIDE STACK												
1 CUBOID	5	1	+X = 4.2926	-X = -4.2926	+Y = 0.60960	-Y = 0.00000	+Z = 110.49	-Z = 0.00000				
			----- UNIT 10 -----									
HOMOGENIZED PULSTAR FUEL - TOP OPENING												
1 CUBOID	11	1	+X = 4.1910	-X = -4.1910	+Y = 4.1910	-Y = -4.1910	+Z = 76.200	-Z = 0.00000				
2 CUBOID	3	1	+X = 4.2926	-X = -4.2926	+Y = 4.2926	-Y = -4.2926	+Z = 110.49	-Z = 0.00000				
			----- UNIT 11 -----									
HOMOGENIZED PULSTAR FUEL - BOTTOM OPENING												
1 CUBOID	11	1	+X = 4.1910	-X = -4.1910	+Y = 4.1910	-Y = -4.1910	+Z = 76.200	-Z = 0.00000				
2 CUBOID	3	1	+X = 4.2926	-X = -4.2926	+Y = 4.2926	-Y = -4.2926	+Z = 110.49	-Z = 0.00000				
			----- UNIT 12 -----									
HOMOGENIZED PULSTAR FUEL - BOTTOM RIGHT												
1 CUBOID	11	1	+X = 4.1910	-X = -4.1910	+Y = 4.1910	-Y = -4.1910	+Z = 76.200	-Z = 0.00000				
2 CUBOID	3	1	+X = 4.2926	-X = -4.2926	+Y = 4.2926	-Y = -4.2926	+Z = 110.49	-Z = 0.00000				

```
                MEDIA BIAS      GEOMETRY DESCRIPTION FOR THOSE UNITS UTILIZED IN THIS PROBLEM
REGION           NUM   ID

                                              -----   UNIT    13   -----

HOMOGENIZED PULSTAR FUEL - TOP RIGHT

  1 CUBOID          11  1      +X =  4.1910     -X = -4.1910     +Y =  4.1910     -Y = -4.1910     +Z =  76.200     -Z = 0.00000

  2 CUBOID           3  1      +X =  4.2926     -X = -4.2926     +Y =  4.2926     -Y = -4.2926     +Z =  110.49     -Z = 0.00000

                                              -----   UNIT    14   -----

HOMOGENIZED PULSTAR FUEL - BOTTOM LEFT

  1 CUBOID          11  1      +X =  4.1910     -X = -4.1910     +Y =  4.1910     -Y = -4.1910     +Z =  76.200     -Z = 0.00000

  2 CUBOID           3  1      +X =  4.2926     -X = -4.2926     +Y =  4.2926     -Y = -4.2926     +Z =  110.49     -Z = 0.00000

                                              -----   UNIT    15   -----

HOMOGENIZED PULSTAR FUEL - TOP LEFT

  1 CUBOID          11  1      +X =  4.1910     -X = -4.1910     +Y =  4.1910     -Y = -4.1910     +Z =  76.200     -Z = 0.00000

  2 CUBOID           3  1      +X =  4.2926     -X = -4.2926     +Y =  4.2926     -Y = -4.2926     +Z =  110.49     -Z = 0.00000

                                              -----   UNIT    16   -----

HOMOGENIZED PULSTAR FUEL - CENTER OPENING

  1 CUBOID          11  1      +X =  4.1910     -X = -4.1910     +Y =  4.1910     -Y = -4.1910     +Z =  76.200     -Z = 0.00000

  2 CUBOID           3  1      +X =  4.2926     -X = -4.2926     +Y =  4.2926     -Y = -4.2926     +Z =  110.49     -Z = 0.00000

                                        -----   UNIT    20  EXTERNAL TO LATTICE  2   -----

CENTER COLUMN OF THREE OPENINGS

  1 ARRAY NUMBER     2          +X =  4.2926     -X = -4.2926     +Y =  13.589     -Y = -13.589     +Z =  110.49     -Z = 0.00000

  2 CUBOID           5  1      +X =  5.0038     -X = -5.0038     +Y =  14.300     -Y = -14.300     +Z =  110.49     -Z = 0.00000

                                        -----   UNIT    21  EXTERNAL TO LATTICE  4   -----

LEFT OUTSIDE COLUMN OF TWO OPENINGS

  1 ARRAY NUMBER     4          +X =  4.2926     -X = -4.2926     +Y =  8.8900     -Y = -8.8900     +Z =  110.49     -Z = 0.00000

  2 CUBOID           5  1      +X =  4.2926     -X = -4.5974     +Y =  9.1948     -Y = -9.1948     +Z =  110.49     -Z = 0.00000

                MEDIA BIAS      GEOMETRY DESCRIPTION FOR THOSE UNITS UTILIZED IN THIS PROBLEM
REGION           NUM   ID

                                        -----   UNIT    22  EXTERNAL TO LATTICE  3   -----

RIGHT OUTSIDE COLUMN OF TWO OPENINGS

  1 ARRAY NUMBER     3          +X =  4.2926     -X = -4.2926     +Y =  8.8900     -Y = -8.8900     +Z =  110.49     -Z = 0.00000

  2 CUBOID           5  1      +X =  4.5974     -X = -4.2926     +Y =  9.1948     -Y = -9.1948     +Z =  110.49     -Z = 0.00000

                                              -----   UNIT    30   -----

MTR 7-ASSY BASKET

  1 CYLINDER         3  1  RADIUS =  17.050     +Z =  110.49     -Z = 0.00000     CENTERLINE IS AT  X = 0.00000      Y = 0.00000

    HOLE NUMBER      1       AT X = 0.00000      Y = 0.00000      Z = 0.00000     IS UNIT NUMBER     20

    HOLE NUMBER      2       AT X = -9.2974      Y = 0.00000      Z = 0.00000     IS UNIT NUMBER     21

    HOLE NUMBER      3       AT X =  9.2974      Y = 0.00000      Z = 0.00000     IS UNIT NUMBER     22

  2 CYLINDER         5  1  RADIUS =  18.891     +Z =  110.49     -Z = -1.2700     CENTERLINE IS AT  X = 0.00000      Y = 0.00000

  3 CYLINDER         6  1  RADIUS =  33.496     +Z =  110.49     -Z = -1.2700     CENTERLINE IS AT  X = 0.00000      Y = 0.00000

  4 CYLINDER         5  1  RADIUS =  36.544     +Z =  110.49     -Z = -1.2700     CENTERLINE IS AT  X = 0.00000      Y = 0.00000

  5 CYLINDER         7  1  RADIUS =  49.244     +Z =  110.49     -Z = -1.2700     CENTERLINE IS AT  X = 0.00000      Y = 0.00000

  6 CYLINDER         5  1  RADIUS =  49.854     +Z =  110.49     -Z = -1.2700     CENTERLINE IS AT  X = 0.00000      Y = 0.00000

  7 CUBOID           8  1      +X =  49.854     -X = -49.854     +Y =  49.854     -Y = -49.854     +Z =  110.49     -Z = -1.2700
```

```
                                        -----   UNIT    40   -----

SIMPLIFIED LID STRUCTURE NAC-LWT

  1 CYLINDER         5  1  RADIUS =  36.519     +Z =  13.677     -Z = -14.135     CENTERLINE IS AT  X = 0.00000      Y = 0.00000

  2 CYLINDER         8  1  RADIUS =  49.854     +Z =  13.677     -Z = -14.135     CENTERLINE IS AT  X = 0.00000      Y = 0.00000

  3 CUBOID           8  1      +X =  49.854     -X = -49.854     +Y =  49.854     -Y = -49.854     +Z =  13.677     -Z = -14.135

                MEDIA BIAS      GEOMETRY DESCRIPTION FOR THOSE UNITS UTILIZED IN THIS PROBLEM
REGION           NUM   ID

                                        -----   UNIT    41   -----

SIMPLIFIED CASK BOTTOM STRUCTURE NAC-LWT

  1 CYLINDER         6  1  RADIUS =  26.353     +Z =  3.8100     -Z = -3.8100     CENTERLINE IS AT  X = 0.00000      Y = 0.00000

  2 CYLINDER         5  1  RADIUS =  36.619     +Z =  13.360     -Z = -12.700     CENTERLINE IS AT  X = 0.00000      Y = 0.00000

  3 CYLINDER         8  1  RADIUS =  49.854     +Z =  13.360     -Z = -12.700     CENTERLINE IS AT  X = 0.00000      Y = 0.00000

  4 CUBOID           8  1      +X =  49.854     -X = -49.854     +Y =  49.854     -Y = -49.854     +Z =  13.360     -Z = -12.700

                                        -----   UNIT    42   -----

THIN TOP AND BOTTOM SHELL OF NEUTRON SHIELD - SUBTRACTED FROM LID MODEL

  1 CYLINDER         5  1  RADIUS =  49.854     +Z = 0.61000     -Z = 0.00000     CENTERLINE IS AT  X = 0.00000      Y = 0.00000

  2 CUBOID           8  1      +X =  49.854     -X = -49.854     +Y =  49.854     -Y = -49.854     +Z = 0.61000     -Z = 0.00000

                                   -----   UNIT    70  EXTERNAL TO LATTICE 10   -----

STACK OF 4 BASKETS IN CASK WITH LID AND BOTTOM

  1 ARRAY NUMBER    10          +X =  49.854     -X = -49.854     +Y =  49.854     -Y = -49.854     +Z =  502.13     -Z = 0.00000

                                   ******************   GLOBAL   ******************
                                        -----   UNIT    80   -----

3 CASKS IN TRIANGULAR PITCH

  1 CUBOID           8  1      +X =  101.00     -X = -101.00     +Y =  101.00     -Y = -101.00     +Z =  502.20     -Z = 0.00000

    HOLE NUMBER     13       AT X = 0.00000      Y =  50.000      Z = 0.00000     IS UNIT NUMBER     70

    HOLE NUMBER     14       AT X = -50.000      Y = -50.000      Z = 0.00000     IS UNIT NUMBER     70

    HOLE NUMBER     15       AT X =  50.000      Y = -50.000      Z = 0.00000     IS UNIT NUMBER     70

                                   -----   UNIT   110  EXTERNAL TO LATTICE  1   -----

PULSTAR ASSEMBLY - TOP OPENING

  1 ARRAY NUMBER     1          +X =  3.8545     -X = -3.8545     +Y =  3.3342     -Y = -3.3338     +Z =  110.49     -Z =  43.942

  2 CUBOID           2  1      +X =  4.0069     -X = -4.0069     +Y =  3.4862     -Y = -3.4862     +Z =  110.49     -Z =  43.942

  3 CUBOID           3  1      +X =  4.2926     -X = -4.2926     +Y =  4.2926     -Y = -4.2926     +Z =  110.49     -Z = 0.00000

                MEDIA BIAS      GEOMETRY DESCRIPTION FOR THOSE UNITS UTILIZED IN THIS PROBLEM
REGION           NUM   ID

                                   -----   UNIT   111  EXTERNAL TO LATTICE  1   -----

PULSTAR ASSEMBLY - BOTTOM OPENING

  1 ARRAY NUMBER     1          +X =  3.8545     -X = -3.8545     +Y =  3.3342     -Y = -3.3338     +Z =  110.49     -Z =  43.942

  2 CUBOID           2  1      +X =  4.0069     -X = -4.0069     +Y =  3.4862     -Y = -3.4862     +Z =  110.49     -Z =  43.942

  3 CUBOID           3  1      +X =  4.2926     -X = -4.2926     +Y =  4.2926     -Y = -4.2926     +Z =  110.49     -Z = 0.00000

                                   -----   UNIT   112  EXTERNAL TO LATTICE  1   -----

PULSTAR ASSEMBLY - BOTTOM RIGHT

  1 ARRAY NUMBER     1          +X =  3.8545     -X = -3.8545     +Y =  3.3342     -Y = -3.3338     +Z =  110.49     -Z =  43.942

  2 CUBOID           2  1      +X =  4.0069     -X = -4.0069     +Y =  3.4862     -Y = -3.4862     +Z =  110.49     -Z =  43.942

  3 CUBOID           3  1      +X =  4.2926     -X = -4.2926     +Y =  4.2926     -Y = -4.2926     +Z =  110.49     -Z = 0.00000

                                   -----   UNIT   113  EXTERNAL TO LATTICE  1   -----

PULSTAR ASSEMBLY - TOP RIGHT
```

```
  1 ARRAY NUMBER     1         +X =  3.8545     -X = -3.8545     +Y =  3.3342     -Y = -3.3338     +Z =  110.49     -Z =  43.942
  2 CUBOID           2  1      +X =  4.0069     -X = -4.0069     +Y =  3.4862     -Y = -3.4862     +Z =  110.49     -Z =  43.942
  3 CUBOID           3  1      +X =  4.2926     -X = -4.2926     +Y =  4.2926     -Y = -4.2926     +Z =  110.49     -Z = 0.00000

                                      -----   UNIT   114  EXTERNAL TO LATTICE  1   -----

PULSTAR ASSEMBLY - BOTTOM LEFT

  1 ARRAY NUMBER     1         +X =  3.8545     -X = -3.8545     +Y =  3.3342     -Y = -3.3338     +Z =  110.49     -Z =  43.942
  2 CUBOID           2  1      +X =  4.0069     -X = -4.0069     +Y =  3.4862     -Y = -3.4862     +Z =  110.49     -Z =  43.942
  3 CUBOID           3  1      +X =  4.2926     -X = -4.2926     +Y =  4.2926     -Y = -4.2926     +Z =  110.49     -Z = 0.00000

                                      -----   UNIT   115  EXTERNAL TO LATTICE  1   -----

PULSTAR ASSEMBLY - TOP LEFT

  1 ARRAY NUMBER     1         +X =  3.8545     -X = -3.8545     +Y =  3.3342     -Y = -3.3338     +Z =  110.49     -Z =  43.942
  2 CUBOID           2  1      +X =  4.0069     -X = -4.0069     +Y =  3.4862     -Y = -3.4862     +Z =  110.49     -Z =  43.942
  3 CUBOID           3  1      +X =  4.2926     -X = -4.2926     +Y =  4.2926     -Y = -4.2926     +Z =  110.49     -Z = 0.00000

                MEDIA BIAS      GEOMETRY DESCRIPTION FOR THOSE UNITS UTILIZED IN THIS PROBLEM
REGION           NUM   ID

                                      -----   UNIT   116  EXTERNAL TO LATTICE  1   -----

PULSTAR ASSEMBLY - CENTER OPENING

  1 ARRAY NUMBER     1         +X =  3.8545     -X = -3.8545     +Y =  3.3342     -Y = -3.3338     +Z =  110.49     -Z =  43.942
  2 CUBOID           2  1      +X =  4.0069     -X = -4.0069     +Y =  3.4862     -Y = -3.4862     +Z =  110.49     -Z =  43.942
  3 CUBOID           3  1      +X =  4.2926     -X = -4.2926     +Y =  4.2926     -Y = -4.2926     +Z =  110.49     -Z = 0.00000

                                      -----   UNIT   120  EXTERNAL TO LATTICE 12   -----

CENTER COLUMN OF THREE OPENINGS

  1 ARRAY NUMBER    12         +X =  4.2926     -X = -4.2926     +Y =  13.589     -Y = -13.589     +Z =  110.49     -Z = 0.00000
  2 CUBOID           5  1      +X =  5.0038     -X = -5.0038     +Y =  14.300     -Y = -14.300     +Z =  110.49     -Z = 0.00000

                                      -----   UNIT   121  EXTERNAL TO LATTICE 14   -----

LEFT OUTSIDE COLUMN OF TWO OPENINGS

  1 ARRAY NUMBER    14         +X =  4.2926     -X = -4.2926     +Y =  8.8900     -Y = -8.8900     +Z =  110.49     -Z = 0.00000
  2 CUBOID           5  1      +X =  4.2926     -X = -4.5974     +Y =  9.1948     -Y = -9.1948     +Z =  110.49     -Z = 0.00000

                                      -----   UNIT   122  EXTERNAL TO LATTICE 13   -----

RIGHT OUTSIDE COLUMN OF TWO OPENINGS

  1 ARRAY NUMBER    13         +X =  4.2926     -X = -4.2926     +Y =  8.8900     -Y = -8.8900     +Z =  110.49     -Z = 0.00000
  2 CUBOID           5  1      +X =  4.5974     -X = -4.2926     +Y =  9.1948     -Y = -9.1948     +Z =  110.49     -Z = 0.00000

                MEDIA BIAS      GEOMETRY DESCRIPTION FOR THOSE UNITS UTILIZED IN THIS PROBLEM
REGION           NUM   ID

                                          -----   UNIT   130   -----

MTR 7-ASSY BASKET

  1 CYLINDER         3  1  RADIUS =  17.050     +Z =  110.49     -Z = 0.00000     CENTERLINE IS AT  X = 0.00000      Y = 0.00000
    HOLE NUMBER      4       AT X = 0.00000      Y = 0.00000      Z = 0.00000     IS UNIT NUMBER    120
    HOLE NUMBER      5       AT X = -9.2974      Y = 0.00000      Z = 0.00000     IS UNIT NUMBER    121
    HOLE NUMBER      6       AT X =  9.2974      Y = 0.00000      Z = 0.00000     IS UNIT NUMBER    122
  2 CYLINDER         5  1  RADIUS =  18.891     +Z =  110.49     -Z = -1.2700     CENTERLINE IS AT  X = 0.00000      Y = 0.00000
  3 CYLINDER         6  1  RADIUS =  33.496     +Z =  110.49     -Z = -1.2700     CENTERLINE IS AT  X = 0.00000      Y = 0.00000
  4 CYLINDER         5  1  RADIUS =  36.544     +Z =  110.49     -Z = -1.2700     CENTERLINE IS AT  X = 0.00000      Y = 0.00000
  5 CYLINDER         7  1  RADIUS =  49.244     +Z =  110.49     -Z = -1.2700     CENTERLINE IS AT  X = 0.00000      Y = 0.00000
  6 CYLINDER         5  1  RADIUS =  49.854     +Z =  110.49     -Z = -1.2700     CENTERLINE IS AT  X = 0.00000      Y = 0.00000
```

```
 7 CUBOID          8  1      +X =  49.854     -X = -49.854     +Y =  49.854     -Y = -49.854     +Z =  110.49     -Z = -1.2700
```

```
                                    -----   UNIT   210  EXTERNAL TO LATTICE  1   -----
PULSTAR ASSEMBLY - TOP OPENING
  1 ARRAY NUMBER     1         +X =  3.8545     -X = -3.8545     +Y =  3.3342     -Y = -3.3338     +Z =  66.548     -Z = 0.00000
  2 CUBOID           2  1      +X =  4.0069     -X = -4.0069     +Y =  3.4862     -Y = -3.4862     +Z =  66.548     -Z = 0.00000
  3 CUBOID           3  1      +X =  4.2926     -X = -4.2926     +Y =  4.2926     -Y = -4.2926     +Z =  110.49     -Z = 0.00000

                                    -----   UNIT   211  EXTERNAL TO LATTICE  1   -----
PULSTAR ASSEMBLY - BOTTOM OPENING
  1 ARRAY NUMBER     1         +X =  3.8545     -X = -3.8545     +Y =  3.3342     -Y = -3.3338     +Z =  66.548     -Z = 0.00000
  2 CUBOID           2  1      +X =  4.0069     -X = -4.0069     +Y =  3.4862     -Y = -3.4862     +Z =  66.548     -Z = 0.00000
  3 CUBOID           3  1      +X =  4.2926     -X = -4.2926     +Y =  4.2926     -Y = -4.2926     +Z =  110.49     -Z = 0.00000

                MEDIA BIAS      GEOMETRY DESCRIPTION FOR THOSE UNITS UTILIZED IN THIS PROBLEM
REGION           NUM   ID

                                    -----   UNIT   212  EXTERNAL TO LATTICE  1   -----
PULSTAR ASSEMBLY - BOTTOM RIGHT
  1 ARRAY NUMBER     1         +X =  3.8545     -X = -3.8545     +Y =  3.3342     -Y = -3.3338     +Z =  66.548     -Z = 0.00000
  2 CUBOID           2  1      +X =  4.0069     -X = -4.0069     +Y =  3.4862     -Y = -3.4862     +Z =  66.548     -Z = 0.00000
  3 CUBOID           3  1      +X =  4.2926     -X = -4.2926     +Y =  4.2926     -Y = -4.2926     +Z =  110.49     -Z = 0.00000

                                    -----   UNIT   213  EXTERNAL TO LATTICE  1   -----
PULSTAR ASSEMBLY - TOP RIGHT
  1 ARRAY NUMBER     1         +X =  3.8545     -X = -3.8545     +Y =  3.3342     -Y = -3.3338     +Z =  66.548     -Z = 0.00000
  2 CUBOID           2  1      +X =  4.0069     -X = -4.0069     +Y =  3.4862     -Y = -3.4862     +Z =  66.548     -Z = 0.00000
  3 CUBOID           3  1      +X =  4.2926     -X = -4.2926     +Y =  4.2926     -Y = -4.2926     +Z =  110.49     -Z = 0.00000

                                    -----   UNIT   214  EXTERNAL TO LATTICE  1   -----
PULSTAR ASSEMBLY - BOTTOM LEFT
  1 ARRAY NUMBER     1         +X =  3.8545     -X = -3.8545     +Y =  3.3342     -Y = -3.3338     +Z =  66.548     -Z = 0.00000
  2 CUBOID           2  1      +X =  4.0069     -X = -4.0069     +Y =  3.4862     -Y = -3.4862     +Z =  66.548     -Z = 0.00000
  3 CUBOID           3  1      +X =  4.2926     -X = -4.2926     +Y =  4.2926     -Y = -4.2926     +Z =  110.49     -Z = 0.00000

                                    -----   UNIT   215  EXTERNAL TO LATTICE  1   -----
PULSTAR ASSEMBLY - TOP LEFT
  1 ARRAY NUMBER     1         +X =  3.8545     -X = -3.8545     +Y =  3.3342     -Y = -3.3338     +Z =  66.548     -Z = 0.00000
  2 CUBOID           2  1      +X =  4.0069     -X = -4.0069     +Y =  3.4862     -Y = -3.4862     +Z =  66.548     -Z = 0.00000
  3 CUBOID           3  1      +X =  4.2926     -X = -4.2926     +Y =  4.2926     -Y = -4.2926     +Z =  110.49     -Z = 0.00000

                                    -----   UNIT   216  EXTERNAL TO LATTICE  1   -----
PULSTAR ASSEMBLY - CENTER OPENING
  1 ARRAY NUMBER     1         +X =  3.8545     -X = -3.8545     +Y =  3.3342     -Y = -3.3338     +Z =  66.548     -Z = 0.00000
  2 CUBOID           2  1      +X =  4.0069     -X = -4.0069     +Y =  3.4862     -Y = -3.4862     +Z =  66.548     -Z = 0.00000
  3 CUBOID           3  1      +X =  4.2926     -X = -4.2926     +Y =  4.2926     -Y = -4.2926     +Z =  110.49     -Z = 0.00000
```

```
                MEDIA BIAS      GEOMETRY DESCRIPTION FOR THOSE UNITS UTILIZED IN THIS PROBLEM
REGION           NUM   ID

                                        -----   UNIT   220  EXTERNAL TO LATTICE 22   -----

CENTER COLUMN OF THREE OPENINGS

  1 ARRAY NUMBER    22         +X =  4.2926     -X = -4.2926     +Y =  13.589     -Y = -13.589     +Z =  110.49     -Z = 0.00000

  2 CUBOID           5  1      +X =  5.0038     -X = -5.0038     +Y =  14.300     -Y = -14.300     +Z =  110.49     -Z = 0.00000

                                        -----   UNIT   221  EXTERNAL TO LATTICE 24   -----

LEFT OUTSIDE COLUMN OF TWO OPENINGS

  1 ARRAY NUMBER    24         +X =  4.2926     -X = -4.2926     +Y =  8.8900     -Y = -8.8900     +Z =  110.49     -Z = 0.00000

  2 CUBOID           5  1      +X =  4.2926     -X = -4.5974     +Y =  9.1948     -Y = -9.1948     +Z =  110.49     -Z = 0.00000

                                        -----   UNIT   222  EXTERNAL TO LATTICE 23   -----

RIGHT OUTSIDE COLUMN OF TWO OPENINGS

  1 ARRAY NUMBER    23         +X =  4.2926     -X = -4.2926     +Y =  8.8900     -Y = -8.8900     +Z =  110.49     -Z = 0.00000

  2 CUBOID           5  1      +X =  4.5974     -X = -4.2926     +Y =  9.1948     -Y = -9.1948     +Z =  110.49     -Z = 0.00000

                                             -----   UNIT   230   -----

MTR 7-ASSY BASKET

  1 CYLINDER         3  1  RADIUS =  17.050     +Z =  110.49     -Z = 0.00000     CENTERLINE IS AT  X = 0.00000      Y = 0.00000

    HOLE NUMBER      7       AT X = 0.00000      Y = 0.00000      Z = 0.00000     IS UNIT NUMBER    220

    HOLE NUMBER      8       AT X = -9.2974      Y = 0.00000      Z = 0.00000     IS UNIT NUMBER    221

    HOLE NUMBER      9       AT X =  9.2974      Y = 0.00000      Z = 0.00000     IS UNIT NUMBER    222

  2 CYLINDER         5  1  RADIUS =  18.891     +Z =  110.49     -Z = -1.2700     CENTERLINE IS AT  X = 0.00000      Y = 0.00000

  3 CYLINDER         6  1  RADIUS =  33.496     +Z =  110.49     -Z = -1.2700     CENTERLINE IS AT  X = 0.00000      Y = 0.00000

  4 CYLINDER         5  1  RADIUS =  36.544     +Z =  110.49     -Z = -1.2700     CENTERLINE IS AT  X = 0.00000      Y = 0.00000

  5 CYLINDER         7  1  RADIUS =  49.244     +Z =  110.49     -Z = -1.2700     CENTERLINE IS AT  X = 0.00000      Y = 0.00000

  6 CYLINDER         5  1  RADIUS =  49.854     +Z =  110.49     -Z = -1.2700     CENTERLINE IS AT  X = 0.00000      Y = 0.00000

  7 CUBOID           8  1      +X =  49.854     -X = -49.854     +Y =  49.854     -Y = -49.854     +Z =  110.49     -Z = -1.2700

                MEDIA BIAS      GEOMETRY DESCRIPTION FOR THOSE UNITS UTILIZED IN THIS PROBLEM
REGION           NUM   ID

                                             -----   UNIT   310   -----

HOMOGENIZED PULSTAR FUEL - TOP OPENING

  1 CUBOID          11  1      +X =  4.1910     -X = -4.1910     +Y =  4.1910     -Y = -4.1910     +Z =  110.49     -Z =  34.290

  2 CUBOID           3  1      +X =  4.2926     -X = -4.2926     +Y =  4.2926     -Y = -4.2926     +Z =  110.49     -Z = 0.00000

                                             -----   UNIT   311   -----

HOMOGENIZED PULSTAR FUEL - BOTTOM OPENING

  1 CUBOID          11  1      +X =  4.1910     -X = -4.1910     +Y =  4.1910     -Y = -4.1910     +Z =  110.49     -Z =  34.290

  2 CUBOID           3  1      +X =  4.2926     -X = -4.2926     +Y =  4.2926     -Y = -4.2926     +Z =  110.49     -Z = 0.00000

                                             -----   UNIT   312   -----

HOMOGENIZED PULSTAR FUEL - BOTTOM RIGHT

  1 CUBOID          11  1      +X =  4.1910     -X = -4.1910     +Y =  4.1910     -Y = -4.1910     +Z =  110.49     -Z =  34.290

  2 CUBOID           3  1      +X =  4.2926     -X = -4.2926     +Y =  4.2926     -Y = -4.2926     +Z =  110.49     -Z = 0.00000

                                             -----   UNIT   313   -----

HOMOGENIZED PULSTAR FUEL - TOP RIGHT

  1 CUBOID          11  1      +X =  4.1910     -X = -4.1910     +Y =  4.1910     -Y = -4.1910     +Z =  110.49     -Z =  34.290

  2 CUBOID           3  1      +X =  4.2926     -X = -4.2926     +Y =  4.2926     -Y = -4.2926     +Z =  110.49     -Z = 0.00000
```

```
                                        -----   UNIT   314   -----

HOMOGENIZED PULSTAR FUEL - BOTTOM LEFT

  1 CUBOID          11  1      +X =  4.1910     -X = -4.1910     +Y =  4.1910     -Y = -4.1910     +Z =  110.49     -Z =  34.290

  2 CUBOID           3  1      +X =  4.2926     -X = -4.2926     +Y =  4.2926     -Y = -4.2926     +Z =  110.49     -Z = 0.00000

                                        -----   UNIT   315   -----

HOMOGENIZED PULSTAR FUEL - TOP LEFT

  1 CUBOID          11  1      +X =  4.1910     -X = -4.1910     +Y =  4.1910     -Y = -4.1910     +Z =  110.49     -Z =  34.290

  2 CUBOID           3  1      +X =  4.2926     -X = -4.2926     +Y =  4.2926     -Y = -4.2926     +Z =  110.49     -Z = 0.00000

                MEDIA BIAS      GEOMETRY DESCRIPTION FOR THOSE UNITS UTILIZED IN THIS PROBLEM
REGION           NUM   ID

                                        -----   UNIT   316   -----

HOMOGENIZED PULSTAR FUEL - CENTER OPENING

  1 CUBOID          11  1      +X =  4.1910     -X = -4.1910     +Y =  4.1910     -Y = -4.1910     +Z =  110.49     -Z =  34.290

  2 CUBOID           3  1      +X =  4.2926     -X = -4.2926     +Y =  4.2926     -Y = -4.2926     +Z =  110.49     -Z = 0.00000

                                    -----   UNIT   320  EXTERNAL TO LATTICE 32   -----

CENTER COLUMN OF THREE OPENINGS

  1 ARRAY NUMBER    32          +X =  4.2926     -X = -4.2926     +Y =  13.589     -Y = -13.589     +Z =  110.49     -Z = 0.00000

  2 CUBOID           5  1      +X =  5.0038     -X = -5.0038     +Y =  14.300     -Y = -14.300     +Z =  110.49     -Z = 0.00000

                                    -----   UNIT   321  EXTERNAL TO LATTICE 34   -----

LEFT OUTSIDE COLUMN OF TWO OPENINGS

  1 ARRAY NUMBER    34          +X =  4.2926     -X = -4.2926     +Y =  8.8900     -Y = -8.8900     +Z =  110.49     -Z = 0.00000

  2 CUBOID           5  1      +X =  4.2926     -X = -4.5974     +Y =  9.1948     -Y = -9.1948     +Z =  110.49     -Z = 0.00000

                                    -----   UNIT   322  EXTERNAL TO LATTICE 33   -----

RIGHT OUTSIDE COLUMN OF TWO OPENINGS

  1 ARRAY NUMBER    33          +X =  4.2926     -X = -4.2926     +Y =  8.8900     -Y = -8.8900     +Z =  110.49     -Z = 0.00000

  2 CUBOID           5  1      +X =  4.5974     -X = -4.2926     +Y =  9.1948     -Y = -9.1948     +Z =  110.49     -Z = 0.00000

                MEDIA BIAS      GEOMETRY DESCRIPTION FOR THOSE UNITS UTILIZED IN THIS PROBLEM
REGION           NUM   ID

                                        -----   UNIT   330   -----

MTR 7-ASSY BASKET

  1 CYLINDER         3  1  RADIUS =  17.050     +Z =  110.49     -Z = 0.00000     CENTERLINE IS AT  X = 0.00000      Y = 0.00000

    HOLE NUMBER     10       AT X = 0.00000      Y = 0.00000      Z = 0.00000     IS UNIT NUMBER    320

    HOLE NUMBER     11       AT X = -9.2974      Y = 0.00000      Z = 0.00000     IS UNIT NUMBER    321

    HOLE NUMBER     12       AT X =  9.2974      Y = 0.00000      Z = 0.00000     IS UNIT NUMBER    322

  2 CYLINDER         5  1  RADIUS =  18.891     +Z =  110.49     -Z = -1.2700     CENTERLINE IS AT  X = 0.00000      Y = 0.00000

  3 CYLINDER         6  1  RADIUS =  33.496     +Z =  110.49     -Z = -1.2700     CENTERLINE IS AT  X = 0.00000      Y = 0.00000

  4 CYLINDER         5  1  RADIUS =  36.544     +Z =  110.49     -Z = -1.2700     CENTERLINE IS AT  X = 0.00000      Y = 0.00000

  5 CYLINDER         7  1  RADIUS =  49.244     +Z =  110.49     -Z = -1.2700     CENTERLINE IS AT  X = 0.00000      Y = 0.00000

  6 CYLINDER         5  1  RADIUS =  49.854     +Z =  110.49     -Z = -1.2700     CENTERLINE IS AT  X = 0.00000      Y = 0.00000

  7 CUBOID           8  1      +X =  49.854     -X = -49.854     +Y =  49.854     -Y = -49.854     +Z =  110.49     -Z = -1.2700

                -------  UNIT ORIENTATION DESCRIPTION FOR ARRAY   1        -------

Z LAYER   1, X COLUMN   1 TO   5 LEFT TO RIGHT   Y ROW   1 TO   5  BOTTOM TO TOP

 1 1 1 1 1

 1 1 1 1 1

 1 1 1 1 1
```

```
 1 1 1 1 1
 1 1 1 1 1
                -------  UNIT ORIENTATION DESCRIPTION FOR ARRAY   2         -------
Z LAYER   1, X COLUMN   1 TO   1 LEFT TO RIGHT   Y ROW   1 TO   5  BOTTOM TO TOP
 10
  5
 16
  5
 11
                -------  UNIT ORIENTATION DESCRIPTION FOR ARRAY   3         -------
Z LAYER   1, X COLUMN   1 TO   1 LEFT TO RIGHT   Y ROW   1 TO   3  BOTTOM TO TOP
 13
  6
 12
                -------  UNIT ORIENTATION DESCRIPTION FOR ARRAY   4         -------
Z LAYER   1, X COLUMN   1 TO   1 LEFT TO RIGHT   Y ROW   1 TO   3  BOTTOM TO TOP
 15
  6
 14

                -------  UNIT ORIENTATION DESCRIPTION FOR ARRAY  10         -------
Z LAYER   1, X COLUMN   1 TO   1 LEFT TO RIGHT   Y ROW   1 TO   1  BOTTOM TO TOP
  41
Z LAYER   2, X COLUMN   1 TO   1 LEFT TO RIGHT   Y ROW   1 TO   1  BOTTOM TO TOP
  42
Z LAYER   3, X COLUMN   1 TO   1 LEFT TO RIGHT   Y ROW   1 TO   1  BOTTOM TO TOP
 330
Z LAYER   4, X COLUMN   1 TO   1 LEFT TO RIGHT   Y ROW   1 TO   1  BOTTOM TO TOP
 230
Z LAYER   5, X COLUMN   1 TO   1 LEFT TO RIGHT   Y ROW   1 TO   1  BOTTOM TO TOP
 130
Z LAYER   6, X COLUMN   1 TO   1 LEFT TO RIGHT   Y ROW   1 TO   1  BOTTOM TO TOP
  30
Z LAYER   7, X COLUMN   1 TO   1 LEFT TO RIGHT   Y ROW   1 TO   1  BOTTOM TO TOP
  42
Z LAYER   8, X COLUMN   1 TO   1 LEFT TO RIGHT   Y ROW   1 TO   1  BOTTOM TO TOP
  40

                -------  UNIT ORIENTATION DESCRIPTION FOR ARRAY  12         -------
Z LAYER   1, X COLUMN   1 TO   1 LEFT TO RIGHT   Y ROW   1 TO   5  BOTTOM TO TOP
 110
   5
 116
   5
 111
                -------  UNIT ORIENTATION DESCRIPTION FOR ARRAY  13         -------
Z LAYER   1, X COLUMN   1 TO   1 LEFT TO RIGHT   Y ROW   1 TO   3  BOTTOM TO TOP
 113
   6
 112
                -------  UNIT ORIENTATION DESCRIPTION FOR ARRAY  14         -------
Z LAYER   1, X COLUMN   1 TO   1 LEFT TO RIGHT   Y ROW   1 TO   3  BOTTOM TO TOP
```

```
 115
   6
 114
                -------  UNIT ORIENTATION DESCRIPTION FOR ARRAY  22         -------
Z LAYER   1, X COLUMN   1 TO   1 LEFT TO RIGHT   Y ROW   1 TO   5  BOTTOM TO TOP
 210
   5
 216
   5
 211
                -------  UNIT ORIENTATION DESCRIPTION FOR ARRAY  23         -------
Z LAYER   1, X COLUMN   1 TO   1 LEFT TO RIGHT   Y ROW   1 TO   3  BOTTOM TO TOP
 213
   6
 212
                -------  UNIT ORIENTATION DESCRIPTION FOR ARRAY  24         -------
Z LAYER   1, X COLUMN   1 TO   1 LEFT TO RIGHT   Y ROW   1 TO   3  BOTTOM TO TOP
 215
   6
 214
                -------  UNIT ORIENTATION DESCRIPTION FOR ARRAY  32         -------
Z LAYER   1, X COLUMN   1 TO   1 LEFT TO RIGHT   Y ROW   1 TO   5  BOTTOM TO TOP
 310
   5
 316
   5
 311
                -------  UNIT ORIENTATION DESCRIPTION FOR ARRAY  33         -------
Z LAYER   1, X COLUMN   1 TO   1 LEFT TO RIGHT   Y ROW   1 TO   3  BOTTOM TO TOP
 313
   6
 312
                -------  UNIT ORIENTATION DESCRIPTION FOR ARRAY  34         -------
Z LAYER   1, X COLUMN   1 TO   1 LEFT TO RIGHT   Y ROW   1 TO   3  BOTTOM TO TOP
 315
   6
 314
                                VOLUMES FOR THOSE UNITS UTILIZED IN  THIS PROBLEM
                                  GEOMETRY                                CUMULATIVE
                  UNIT    REGION    REGION          VOLUME                  VOLUME

                    1         1         1       5.54974E+01 CM**3       5.54974E+01 CM**3
                              2         2       2.65506E+00 CM**3       5.81525E+01 CM**3
                              3         3       1.63358E+01 CM**3       7.44883E+01 CM**3
                              4         4       6.23440E+01 CM**3       1.36832E+02 CM**3

                    5         1         5       6.74629E+02 CM**3       6.74629E+02 CM**3

                    6         1         6       5.78254E+02 CM**3       5.78254E+02 CM**3

                   10         1         7       5.35365E+03 CM**3       5.35365E+03 CM**3
                              2         8       2.79009E+03 CM**3       8.14374E+03 CM**3

                   11         1         9       5.35365E+03 CM**3       5.35365E+03 CM**3
                              2        10       2.79009E+03 CM**3       8.14374E+03 CM**3

                   12         1        11       5.35365E+03 CM**3       5.35365E+03 CM**3
                              2        12       2.79009E+03 CM**3       8.14374E+03 CM**3

                   13         1        13       5.35365E+03 CM**3       5.35365E+03 CM**3
                              2        14       2.79009E+03 CM**3       8.14374E+03 CM**3

                   14         1        15       5.35365E+03 CM**3       5.35365E+03 CM**3
```

```
            2        16         2.79009E+03 CM**3         8.14374E+03 CM**3

 15         1        17         5.35365E+03 CM**3         5.35365E+03 CM**3
            2        18         2.79009E+03 CM**3         8.14374E+03 CM**3

 16         1        19         5.35365E+03 CM**3         5.35365E+03 CM**3
            2        20         2.79009E+03 CM**3         8.14374E+03 CM**3

SURROUNDING GEOMETRY VOLUMES -  GEOMETRY REGION     21 IS AN ARRAY PLACEMENT BOUNDARY REGION

 20         1        21         2.57805E+04 CM**3         2.57805E+04 CM**3
            2        22         5.84413E+03 CM**3         3.16246E+04 CM**3

SURROUNDING GEOMETRY VOLUMES -  GEOMETRY REGION     23 IS AN ARRAY PLACEMENT BOUNDARY REGION

 21         1        23         1.68657E+04 CM**3         1.68657E+04 CM**3
            2        24         1.19757E+03 CM**3         1.80633E+04 CM**3

SURROUNDING GEOMETRY VOLUMES -  GEOMETRY REGION     25 IS AN ARRAY PLACEMENT BOUNDARY REGION

 22         1        25         1.68657E+04 CM**3         1.68657E+04 CM**3
            2        26         1.19757E+03 CM**3         1.80633E+04 CM**3

 30         1        27         3.31559E+04 CM**3         1.00907E+05 CM**3
            2        28         2.43955E+04 CM**3         1.25303E+05 CM**3
            3        29         2.68637E+05 CM**3         3.93940E+05 CM**3
            4        30         7.49551E+04 CM**3         4.68895E+05 CM**3
            5        31         3.82534E+05 CM**3         8.51429E+05 CM**3
            6        32         2.12103E+04 CM**3         8.72639E+05 CM**3
            7        33         2.38439E+05 CM**3         1.11108E+06 CM**3

 40         1       129         1.16526E+05 CM**3         1.16526E+05 CM**3
            2       130         1.00639E+05 CM**3         2.17165E+05 CM**3
            3       131         5.93381E+04 CM**3         2.76503E+05 CM**3

 41         1       132         1.66245E+04 CM**3         1.66245E+04 CM**3
            2       133         9.31579E+04 CM**3         1.09782E+05 CM**3
            3       134         9.36980E+04 CM**3         2.03480E+05 CM**3
            4       135         5.55989E+04 CM**3         2.59079E+05 CM**3

 42         1       136         4.76297E+03 CM**3         4.76297E+03 CM**3
            2       137         1.30143E+03 CM**3         6.06440E+03 CM**3

SURROUNDING GEOMETRY VOLUMES -  GEOMETRY REGION    138 IS AN ARRAY PLACEMENT BOUNDARY REGION

 70         1       138         4.99202E+06 CM**3         4.99202E+06 CM**3

 80         1       139         5.51570E+06 CM**3         2.04918E+07 CM**3

SURROUNDING GEOMETRY VOLUMES -  GEOMETRY REGION     34 IS AN ARRAY PLACEMENT BOUNDARY REGION

110         1        34         3.42081E+03 CM**3         3.42081E+03 CM**3
            2        35         2.97590E+02 CM**3         3.71840E+03 CM**3
            3        36         4.42534E+03 CM**3         8.14374E+03 CM**3

SURROUNDING GEOMETRY VOLUMES -  GEOMETRY REGION     37 IS AN ARRAY PLACEMENT BOUNDARY REGION

111         1        37         3.42081E+03 CM**3         3.42081E+03 CM**3
            2        38         2.97590E+02 CM**3         3.71840E+03 CM**3
            3        39         4.42534E+03 CM**3         8.14374E+03 CM**3

SURROUNDING GEOMETRY VOLUMES -  GEOMETRY REGION     40 IS AN ARRAY PLACEMENT BOUNDARY REGION

112         1        40         3.42081E+03 CM**3         3.42081E+03 CM**3
            2        41         2.97590E+02 CM**3         3.71840E+03 CM**3
            3        42         4.42534E+03 CM**3         8.14374E+03 CM**3

SURROUNDING GEOMETRY VOLUMES -  GEOMETRY REGION     43 IS AN ARRAY PLACEMENT BOUNDARY REGION

113         1        43         3.42081E+03 CM**3         3.42081E+03 CM**3
            2        44         2.97590E+02 CM**3         3.71840E+03 CM**3
            3        45         4.42534E+03 CM**3         8.14374E+03 CM**3

SURROUNDING GEOMETRY VOLUMES -  GEOMETRY REGION     46 IS AN ARRAY PLACEMENT BOUNDARY REGION

114         1        46         3.42081E+03 CM**3         3.42081E+03 CM**3
            2        47         2.97590E+02 CM**3         3.71840E+03 CM**3
            3        48         4.42534E+03 CM**3         8.14374E+03 CM**3

SURROUNDING GEOMETRY VOLUMES -  GEOMETRY REGION     49 IS AN ARRAY PLACEMENT BOUNDARY REGION

115         1        49         3.42081E+03 CM**3         3.42081E+03 CM**3
            2        50         2.97590E+02 CM**3         3.71840E+03 CM**3
            3        51         4.42534E+03 CM**3         8.14374E+03 CM**3

SURROUNDING GEOMETRY VOLUMES -  GEOMETRY REGION     52 IS AN ARRAY PLACEMENT BOUNDARY REGION

116         1        52         3.42081E+03 CM**3         3.42081E+03 CM**3
            2        53         2.97590E+02 CM**3         3.71840E+03 CM**3
            3        54         4.42534E+03 CM**3         8.14374E+03 CM**3

SURROUNDING GEOMETRY VOLUMES -  GEOMETRY REGION     55 IS AN ARRAY PLACEMENT BOUNDARY REGION

120         1        55         2.57805E+04 CM**3         2.57805E+04 CM**3
            2        56         5.84413E+03 CM**3         3.16246E+04 CM**3
```

```
SURROUNDING GEOMETRY VOLUMES -  GEOMETRY REGION     57 IS AN ARRAY PLACEMENT BOUNDARY REGION

121         1        57         1.68657E+04 CM**3         1.68657E+04 CM**3
            2        58         1.19757E+03 CM**3         1.80633E+04 CM**3

SURROUNDING GEOMETRY VOLUMES -  GEOMETRY REGION     59 IS AN ARRAY PLACEMENT BOUNDARY REGION

122         1        59         1.68657E+04 CM**3         1.68657E+04 CM**3
            2        60         1.19757E+03 CM**3         1.80633E+04 CM**3
130         1        61         3.31559E+04 CM**3         1.00907E+05 CM**3
            2        62         2.43955E+04 CM**3         1.25303E+05 CM**3
            3        63         2.68637E+05 CM**3         3.93940E+05 CM**3
            4        64         7.49551E+04 CM**3         4.68895E+05 CM**3
            5        65         3.82534E+05 CM**3         8.51429E+05 CM**3
            6        66         2.12103E+04 CM**3         8.72639E+05 CM**3
            7        67         2.38439E+05 CM**3         1.11108E+06 CM**3

SURROUNDING GEOMETRY VOLUMES -  GEOMETRY REGION     68 IS AN ARRAY PLACEMENT BOUNDARY REGION
210         1        68         3.42081E+03 CM**3         3.42081E+03 CM**3
            2        69         2.97590E+02 CM**3         3.71840E+03 CM**3
            3        70         4.42534E+03 CM**3         8.14374E+03 CM**3

SURROUNDING GEOMETRY VOLUMES -  GEOMETRY REGION     71 IS AN ARRAY PLACEMENT BOUNDARY REGION

211         1        71         3.42081E+03 CM**3         3.42081E+03 CM**3
            2        72         2.97590E+02 CM**3         3.71840E+03 CM**3
            3        73         4.42534E+03 CM**3         8.14374E+03 CM**3

SURROUNDING GEOMETRY VOLUMES -  GEOMETRY REGION     74 IS AN ARRAY PLACEMENT BOUNDARY REGION

212         1        74         3.42081E+03 CM**3         3.42081E+03 CM**3
            2        75         2.97590E+02 CM**3         3.71840E+03 CM**3
            3        76         4.42534E+03 CM**3         8.14374E+03 CM**3

SURROUNDING GEOMETRY VOLUMES -  GEOMETRY REGION     77 IS AN ARRAY PLACEMENT BOUNDARY REGION

213         1        77         3.42081E+03 CM**3         3.42081E+03 CM**3
            2        78         2.97590E+02 CM**3         3.71840E+03 CM**3
            3        79         4.42534E+03 CM**3         8.14374E+03 CM**3

SURROUNDING GEOMETRY VOLUMES -  GEOMETRY REGION     80 IS AN ARRAY PLACEMENT BOUNDARY REGION

214         1        80         3.42081E+03 CM**3         3.42081E+03 CM**3
            2        81         2.97590E+02 CM**3         3.71840E+03 CM**3
            3        82         4.42534E+03 CM**3         8.14374E+03 CM**3

SURROUNDING GEOMETRY VOLUMES -  GEOMETRY REGION     83 IS AN ARRAY PLACEMENT BOUNDARY REGION

215         1        83         3.42081E+03 CM**3         3.42081E+03 CM**3
            2        84         2.97590E+02 CM**3         3.71840E+03 CM**3
            3        85         4.42534E+03 CM**3         8.14374E+03 CM**3

SURROUNDING GEOMETRY VOLUMES -  GEOMETRY REGION     86 IS AN ARRAY PLACEMENT BOUNDARY REGION

216         1        86         3.42081E+03 CM**3         3.42081E+03 CM**3
            2        87         2.97590E+02 CM**3         3.71840E+03 CM**3
            3        88         4.42534E+03 CM**3         8.14374E+03 CM**3

SURROUNDING GEOMETRY VOLUMES -  GEOMETRY REGION     89 IS AN ARRAY PLACEMENT BOUNDARY REGION

220         1        89         2.57805E+04 CM**3         2.57805E+04 CM**3
            2        90         5.84413E+03 CM**3         3.16246E+04 CM**3

SURROUNDING GEOMETRY VOLUMES -  GEOMETRY REGION     91 IS AN ARRAY PLACEMENT BOUNDARY REGION

221         1        91         1.68657E+04 CM**3         1.68657E+04 CM**3
            2        92         1.19757E+03 CM**3         1.80633E+04 CM**3

SURROUNDING GEOMETRY VOLUMES -  GEOMETRY REGION     93 IS AN ARRAY PLACEMENT BOUNDARY REGION

222         1        93         1.68657E+04 CM**3         1.68657E+04 CM**3
            2        94         1.19757E+03 CM**3         1.80633E+04 CM**3

230         1        95         3.31559E+04 CM**3         1.00907E+05 CM**3
            2        96         2.43955E+04 CM**3         1.25303E+05 CM**3
            3        97         2.68637E+05 CM**3         3.93940E+05 CM**3
            4        98         7.49551E+04 CM**3         4.68895E+05 CM**3
            5        99         3.82534E+05 CM**3         8.51429E+05 CM**3
            6       100         2.12103E+04 CM**3         8.72639E+05 CM**3
            7       101         2.38439E+05 CM**3         1.11108E+06 CM**3

310         1       102         5.35365E+03 CM**3         5.35365E+03 CM**3
            2       103         2.79009E+03 CM**3         8.14374E+03 CM**3

311         1       104         5.35365E+03 CM**3         5.35365E+03 CM**3
            2       105         2.79009E+03 CM**3         8.14374E+03 CM**3

312         1       106         5.35365E+03 CM**3         5.35365E+03 CM**3
            2       107         2.79009E+03 CM**3         8.14374E+03 CM**3

313         1       108         5.35365E+03 CM**3         5.35365E+03 CM**3
            2       109         2.79009E+03 CM**3         8.14374E+03 CM**3

314         1       110         5.35365E+03 CM**3         5.35365E+03 CM**3
```

```
            2       111         2.79009E+03 CM**3         8.14374E+03 CM**3

315         1       112         5.35365E+03 CM**3         5.35365E+03 CM**3
            2       113         2.79009E+03 CM**3         8.14374E+03 CM**3

316         1       114         5.35365E+03 CM**3         5.35365E+03 CM**3
            2       115         2.79009E+03 CM**3         8.14374E+03 CM**3

SURROUNDING GEOMETRY VOLUMES -  GEOMETRY REGION    116 IS AN ARRAY PLACEMENT BOUNDARY REGION

320         1       116         2.57805E+04 CM**3         2.57805E+04 CM**3
            2       117         5.84413E+03 CM**3         3.16246E+04 CM**3
SURROUNDING GEOMETRY VOLUMES -  GEOMETRY REGION    118 IS AN ARRAY PLACEMENT BOUNDARY REGION
321         1       118         1.68657E+04 CM**3         1.68657E+04 CM**3
            2       119         1.19757E+03 CM**3         1.80633E+04 CM**3

SURROUNDING GEOMETRY VOLUMES -  GEOMETRY REGION    120 IS AN ARRAY PLACEMENT BOUNDARY REGION
322         1       120         1.68657E+04 CM**3         1.68657E+04 CM**3
            2       121         1.19757E+03 CM**3         1.80633E+04 CM**3

330         1       122         3.31559E+04 CM**3         1.00907E+05 CM**3
            2       123         2.43955E+04 CM**3         1.25303E+05 CM**3
            3       124         2.68637E+05 CM**3         3.93940E+05 CM**3
            4       125         7.49551E+04 CM**3         4.68895E+05 CM**3
            5       126         3.82534E+05 CM**3         8.51429E+05 CM**3
            6       127         2.12103E+04 CM**3         8.72639E+05 CM**3
            7       128         2.38439E+05 CM**3         1.11108E+06 CM**3

                 UNIT     USES    REGION     MIXTURE        TOTAL VOLUME

                   1      1050         1           1         5.82723E+04 CM**3
                                       2           9         2.78782E+03 CM**3
                                       3           2         1.71526E+04 CM**3
                                       4           3         6.54612E+04 CM**3

                   5        24         1           5         1.61911E+04 CM**3

                   6        24         1           5         1.38781E+04 CM**3

                  10         3         1          11         1.60610E+04 CM**3
                                       2           3         8.37026E+03 CM**3

                  11         3         1          11         1.60610E+04 CM**3
                                       2           3         8.37026E+03 CM**3

                  12         3         1          11         1.60610E+04 CM**3
                                       2           3         8.37026E+03 CM**3

                  13         3         1          11         1.60610E+04 CM**3
                                       2           3         8.37026E+03 CM**3

                  14         3         1          11         1.60610E+04 CM**3
                                       2           3         8.37026E+03 CM**3

                  15         3         1          11         1.60610E+04 CM**3
                                       2           3         8.37026E+03 CM**3

                  16         3         1          11         1.60610E+04 CM**3
                                       2           3         8.37026E+03 CM**3

                  20         3         1                     7.73414E+04 CM**3
                                       2           5         1.75324E+04 CM**3

                  21         3         1                     5.05972E+04 CM**3
                                       2           5         3.59271E+03 CM**3

                  22         3         1                     5.05972E+04 CM**3
                                       2           5         3.59271E+03 CM**3

                  30         3         1           3         9.94676E+04 CM**3
                                       2           5         7.31865E+04 CM**3
                                       3           6         8.05912E+05 CM**3
                                       4           5         2.24865E+05 CM**3
                                       5           7         1.14760E+06 CM**3
                                       6           5         6.36308E+04 CM**3
                                       7           8         7.15318E+05 CM**3

                  40         3         1           5         3.49579E+05 CM**3
                                       2           8         3.01916E+05 CM**3
                                       3           8         1.78014E+05 CM**3

                  41         3         1           6         4.98735E+04 CM**3
                                       2           5         2.79474E+05 CM**3
                                       3           8         2.81094E+05 CM**3
                                       4           8         1.66797E+05 CM**3

                  42         6         1           5         2.85778E+04 CM**3
                                       2           8         7.80859E+03 CM**3

                  70         3         1                     1.49761E+07 CM**3

                  80         1         1           8         5.51570E+06 CM**3

                 110         3         1                     1.02624E+04 CM**3
                                       2           2         8.92769E+02 CM**3
```

```
                    3          3         1.32760E+04 CM**3

111         3       1                    1.02624E+04 CM**3
                    2          2         8.92769E+02 CM**3
                    3          3         1.32760E+04 CM**3

112         3       1                    1.02624E+04 CM**3
                    2          2         8.92769E+02 CM**3
                    3          3         1.32760E+04 CM**3

113         3       1                    1.02624E+04 CM**3
                    2          2         8.92769E+02 CM**3
                    3          3         1.32760E+04 CM**3

114         3       1                    1.02624E+04 CM**3
                    2          2         8.92769E+02 CM**3
                    3          3         1.32760E+04 CM**3

115         3       1                    1.02624E+04 CM**3
                    2          2         8.92769E+02 CM**3
                    3          3         1.32760E+04 CM**3

116         3       1                    1.02624E+04 CM**3
                    2          2         8.92769E+02 CM**3
                    3          3         1.32760E+04 CM**3

120         3       1                    7.73414E+04 CM**3
                    2          5         1.75324E+04 CM**3

121         3       1                    5.05972E+04 CM**3
                    2          5         3.59271E+03 CM**3

122         3       1                    5.05972E+04 CM**3
                    2          5         3.59271E+03 CM**3

130         3       1          3         9.94676E+04 CM**3
                    2          5         7.31865E+04 CM**3
                    3          6         8.05912E+05 CM**3
                    4          5         2.24865E+05 CM**3
                    5          7         1.14760E+06 CM**3
                    6          5         6.36308E+04 CM**3
                    7          8         7.15318E+05 CM**3

210         3       1                    1.02624E+04 CM**3
                    2          2         8.92769E+02 CM**3
                    3          3         1.32760E+04 CM**3

211         3       1                    1.02624E+04 CM**3
                    2          2         8.92769E+02 CM**3
                    3          3         1.32760E+04 CM**3

212         3       1                    1.02624E+04 CM**3
                    2          2         8.92769E+02 CM**3
                    3          3         1.32760E+04 CM**3

213         3       1                    1.02624E+04 CM**3
                    2          2         8.92769E+02 CM**3
                    3          3         1.32760E+04 CM**3

214         3       1                    1.02624E+04 CM**3
                    2          2         8.92769E+02 CM**3
                    3          3         1.32760E+04 CM**3

215         3       1                    1.02624E+04 CM**3
                    2          2         8.92769E+02 CM**3
                    3          3         1.32760E+04 CM**3

216         3       1                    1.02624E+04 CM**3
                    2          2         8.92769E+02 CM**3
                    3          3         1.32760E+04 CM**3

220         3       1                    7.73414E+04 CM**3
                    2          5         1.75324E+04 CM**3

221         3       1                    5.05972E+04 CM**3
                    2          5         3.59271E+03 CM**3

222         3       1                    5.05972E+04 CM**3
                    2          5         3.59271E+03 CM**3

230         3       1          3         9.94676E+04 CM**3
                    2          5         7.31865E+04 CM**3
                    3          6         8.05912E+05 CM**3
                    4          5         2.24865E+05 CM**3
                    5          7         1.14760E+06 CM**3
                    6          5         6.36308E+04 CM**3
                    7          8         7.15318E+05 CM**3

310         3       1         11         1.60610E+04 CM**3
                    2          3         8.37026E+03 CM**3

311         3       1         11         1.60610E+04 CM**3
                    2          3         8.37026E+03 CM**3

312         3       1         11         1.60610E+04 CM**3
```

```
                                        2          3         8.37026E+03 CM**3

                                313     3       1          11         1.60610E+04 CM**3
                                                2          3         8.37026E+03 CM**3

                                314     3       1          11         1.60610E+04 CM**3
                                                2          3         8.37026E+03 CM**3

                                315     3       1          11         1.60610E+04 CM**3
                                                2          3         8.37026E+03 CM**3

                                316     3       1          11         1.60610E+04 CM**3
                                                2          3         8.37026E+03 CM**3

                                320     3       1                     7.73414E+04 CM**3
                                                2          5         1.75324E+04 CM**3
                                321     3       1                     5.05972E+04 CM**3
                                                2          5         3.59271E+03 CM**3

                                322     3       1                     5.05972E+04 CM**3
                                                2          5         3.59271E+03 CM**3

                                330     3       1          3         9.94676E+04 CM**3
                                                2          5         7.31865E+04 CM**3
                                                3          6         8.05912E+05 CM**3
                                                4          5         2.24865E+05 CM**3
                                                5          7         1.14760E+06 CM**3
                                                6          5         6.36308E+04 CM**3
                                                7          8         7.15318E+05 CM**3

                                          TOTAL MIXTURE VOLUMES
                                       MIXTURE        TOTAL VOLUME              MASS(G)
                                           1         5.82723E+04 CM**3        6.04865E+05
                                           2         2.96514E+04 CM**3        1.94513E+05
                                           3         7.66380E+05 CM**3        7.64978E-15
                                           5         2.23330E+06 CM**3        1.76878E+07
                                           6         3.27352E+06 CM**3        3.71348E+07
                                           7         4.59040E+06 CM**3        4.58201E-14
                                           8         9.31260E+06 CM**3        9.29557E-14
                                           9         2.78782E+03 CM**3        2.78272E+03
                                          11         2.24853E+05 CM**3        8.31762E+05

      ***                                      BIASING INFORMATION                                                    ***
      ***                                                                                                             ***
      ***     A DEFAULT WEIGHT OF    0.500 WILL BE USED FOR ALL BIAS ID'S.                                            ***
      *************************************************************************************************************
                              ........    0 IO'S WERE USED IN KENO-V BEFORE TRACKING       ........
                              ........  0.01283 MINUTES WERE USED PROCESSING DATA.        ........

VOLUME FRACTION OF FISSILE MATERIAL IN THE CORE= 1.89052E-02
START TYPE 0 WAS USED.

THE NEUTRONS WERE STARTED WITH A FLAT DISTRIBUTION IN A CUBOID DEFINED BY:
                    +X= 1.01000E+02  -X=-1.01000E+02  +Y= 1.01000E+02  -Y=-1.01000E+02  +Z= 5.02200E+02  -Z= 0.00000E+00
THE FLAG TO START NEUTRONS IN THE REFLECTOR WAS TURNED OFF

2.18000 MINUTES WERE REQUIRED FOR STARTING.   TOTAL ELAPSED TIME IS 2.18667 MINUTES.


                GENERATION     ELAPSED TIME        AVERAGE         AVG K-EFF          MATRIX        MATRIX K-EFF
    GENERATION   K-EFFECTIVE        MINUTES       K-EFFECTIVE       DEVIATION       K-EFFECTIVE       DEVIATION
KENO MESSAGE NUMBER K5-132     WARNING....ONLY  809 INDEPENDENT FISSION POINTS WERE GENERATED
         1       7.20764E-01      2.19533E+00      1.00000E+00      0.00000E+00      0.00000E+00      0.00000E+00
KENO MESSAGE NUMBER K5-132     WARNING....ONLY  942 INDEPENDENT FISSION POINTS WERE GENERATED
         2       8.23482E-01      2.19883E+00      1.00000E+00      0.00000E+00      0.00000E+00      0.00000E+00
KENO MESSAGE NUMBER K5-132     WARNING....ONLY  951 INDEPENDENT FISSION POINTS WERE GENERATED
         3       8.55166E-01      2.20250E+00      8.55166E-01      0.00000E+00      0.00000E+00      0.00000E+00
         4       8.75370E-01      2.20617E+00      8.65268E-01      1.01020E-02      0.00000E+00      0.00000E+00
KENO MESSAGE NUMBER K5-132     WARNING....ONLY  983 INDEPENDENT FISSION POINTS WERE GENERATED
         5       8.34339E-01      2.21083E+00      8.54959E-01      1.18453E-02      0.00000E+00      0.00000E+00
         6       8.47771E-01      2.21450E+00      8.53162E-01      8.56641E-03      0.00000E+00      0.00000E+00
         7       8.45447E-01      2.21717E+00      8.51619E-01      6.81253E-03      0.00000E+00      0.00000E+00
         8       8.70304E-01      2.22183E+00      8.54733E-01      6.37486E-03      0.00000E+00      0.00000E+00
         9       8.45910E-01      2.22550E+00      8.53473E-01      5.53321E-03      0.00000E+00      0.00000E+00
        10       8.40482E-01      2.22817E+00      8.51849E-01      5.05958E-03      0.00000E+00      0.00000E+00
        11       8.87736E-01      2.23183E+00      8.55836E-01      5.98416E-03      0.00000E+00      0.00000E+00
        12       8.51713E-01      2.23550E+00      8.55424E-01      5.36825E-03      0.00000E+00      0.00000E+00
        13       9.21948E-01      2.23917E+00      8.61472E-01      7.75578E-03      0.00000E+00      0.00000E+00
        14       8.45112E-01      2.24283E+00      8.60108E-01      7.21009E-03      0.00000E+00      0.00000E+00
        15       8.62149E-01      2.24650E+00      8.60265E-01      6.63417E-03      0.00000E+00      0.00000E+00
        16       8.53052E-01      2.24933E+00      8.59750E-01      6.16362E-03      0.00000E+00      0.00000E+00
        17       8.67530E-01      2.25300E+00      8.60269E-01      5.76141E-03      0.00000E+00      0.00000E+00
        18       8.56833E-01      2.25750E+00      8.60054E-01      5.39358E-03      0.00000E+00      0.00000E+00
        19       8.87107E-01      2.26117E+00      8.61645E-01      5.31043E-03      0.00000E+00      0.00000E+00
        20       8.84104E-01      2.26483E+00      8.62893E-01      5.15985E-03      0.00000E+00      0.00000E+00
        21       9.03339E-01      2.26750E+00      8.65022E-01      5.32477E-03      0.00000E+00      0.00000E+00
        22       8.55583E-01      2.27117E+00      8.64550E-01      5.07352E-03      0.00000E+00      0.00000E+00
        23       8.45629E-01      2.27483E+00      8.63649E-01      4.90926E-03      0.00000E+00      0.00000E+00
        24       8.56385E-01      2.27850E+00      8.63319E-01      4.69243E-03      0.00000E+00      0.00000E+00
        25       8.71259E-01      2.28217E+00      8.63664E-01      4.49704E-03      0.00000E+00      0.00000E+00
        26       9.12685E-01      2.28583E+00      8.65706E-01      4.76551E-03      0.00000E+00      0.00000E+00
        27       8.43542E-01      2.28950E+00      8.64820E-01      4.65610E-03      0.00000E+00      0.00000E+00
        28       8.84859E-01      2.29317E+00      8.65591E-01      4.53935E-03      0.00000E+00      0.00000E+00
        29       8.96228E-01      2.29600E+00      8.66725E-01      4.51297E-03      0.00000E+00      0.00000E+00
        30       8.47332E-01      2.29967E+00      8.66033E-01      4.40362E-03      0.00000E+00      0.00000E+00
```

31	8.89415E-01	2.30417E+00	8.66839E-01	4.32488E-03	0.00000E+00	0.00000E+00
32	8.36875E-01	2.30700E+00	8.65840E-01	4.29595E-03	0.00000E+00	0.00000E+00
33	8.53170E-01	2.31150E+00	8.65431E-01	4.17512E-03	0.00000E+00	0.00000E+00
34	8.40621E-01	2.31433E+00	8.64656E-01	4.11622E-03	0.00000E+00	0.00000E+00
35	8.82549E-01	2.31800E+00	8.65198E-01	4.02621E-03	0.00000E+00	0.00000E+00
36	8.36297E-01	2.32150E+00	8.64348E-01	3.99742E-03	0.00000E+00	0.00000E+00
37	9.41271E-01	2.32517E+00	8.66546E-01	4.46056E-03	0.00000E+00	0.00000E+00
38	8.54531E-01	2.32883E+00	8.66212E-01	4.34772E-03	0.00000E+00	0.00000E+00
39	8.79939E-01	2.33250E+00	8.66583E-01	4.24482E-03	0.00000E+00	0.00000E+00
40	8.51472E-01	2.33617E+00	8.66186E-01	4.15070E-03	0.00000E+00	0.00000E+00
41	8.91896E-01	2.33983E+00	8.66845E-01	4.09627E-03	0.00000E+00	0.00000E+00
42	9.07719E-01	2.34350E+00	8.67867E-01	4.12124E-03	0.00000E+00	0.00000E+00
43	8.88803E-01	2.34717E+00	8.68377E-01	4.05177E-03	0.00000E+00	0.00000E+00
44	8.97750E-01	2.35083E+00	8.69077E-01	4.01549E-03	0.00000E+00	0.00000E+00
45	8.85392E-01	2.35450E+00	8.69456E-01	3.93931E-03	0.00000E+00	0.00000E+00
46	8.68511E-01	2.35733E+00	8.69435E-01	3.84880E-03	0.00000E+00	0.00000E+00
47	8.36269E-01	2.36100E+00	8.68698E-01	3.83381E-03	0.00000E+00	0.00000E+00
48	8.64056E-01	2.36467E+00	8.68597E-01	3.75090E-03	0.00000E+00	0.00000E+00
49	8.78176E-01	2.36833E+00	8.68801E-01	3.67588E-03	0.00000E+00	0.00000E+00
50	8.51390E-01	2.37200E+00	8.68438E-01	3.61672E-03	0.00000E+00	0.00000E+00
51	8.93813E-01	2.37650E+00	8.68956E-01	3.57979E-03	0.00000E+00	0.00000E+00
52	8.59953E-01	2.38117E+00	8.68776E-01	3.51209E-03	0.00000E+00	0.00000E+00
53	8.79682E-01	2.38467E+00	8.68990E-01	3.44917E-03	0.00000E+00	0.00000E+00
54	8.78173E-01	2.38933E+00	8.69166E-01	3.38680E-03	0.00000E+00	0.00000E+00
55	8.79294E-01	2.39300E+00	8.69357E-01	3.32777E-03	0.00000E+00	0.00000E+00
56	8.87232E-01	2.39750E+00	8.69688E-01	3.28230E-03	0.00000E+00	0.00000E+00
57	8.98351E-01	2.40217E+00	8.70209E-01	3.26394E-03	0.00000E+00	0.00000E+00
58	9.00600E-01	2.40667E+00	8.70752E-01	3.25074E-03	0.00000E+00	0.00000E+00
59	8.46073E-01	2.41033E+00	8.70319E-01	3.22242E-03	0.00000E+00	0.00000E+00
60	8.74956E-01	2.41400E+00	8.70399E-01	3.16739E-03	0.00000E+00	0.00000E+00
61	8.72670E-01	2.41767E+00	8.70438E-01	3.11348E-03	0.00000E+00	0.00000E+00
62	8.67262E-01	2.42133E+00	8.70385E-01	3.06160E-03	0.00000E+00	0.00000E+00
63	9.12934E-01	2.42500E+00	8.71082E-01	3.09074E-03	0.00000E+00	0.00000E+00
64	8.30858E-01	2.42867E+00	8.70433E-01	3.10892E-03	0.00000E+00	0.00000E+00
65	8.70281E-01	2.43233E+00	8.70431E-01	3.05918E-03	0.00000E+00	0.00000E+00
66	8.64499E-01	2.43600E+00	8.70338E-01	3.01243E-03	0.00000E+00	0.00000E+00
67	8.83555E-01	2.43967E+00	8.70542E-01	2.97268E-03	0.00000E+00	0.00000E+00
68	8.73341E-01	2.44333E+00	8.70584E-01	2.92760E-03	0.00000E+00	0.00000E+00
69	8.56942E-01	2.44700E+00	8.70380E-01	2.89075E-03	0.00000E+00	0.00000E+00
70	8.51362E-01	2.44967E+00	8.70101E-01	2.86163E-03	0.00000E+00	0.00000E+00
71	8.44781E-01	2.45433E+00	8.69734E-01	2.84362E-03	0.00000E+00	0.00000E+00
72	8.59084E-01	2.45800E+00	8.69582E-01	2.80683E-03	0.00000E+00	0.00000E+00
73	9.18005E-01	2.46167E+00	8.70264E-01	2.84983E-03	0.00000E+00	0.00000E+00
761	8.61197E-01	4.95717E+00	8.69380E-01	8.25227E-04	0.00000E+00	0.00000E+00
762	8.92065E-01	4.96083E+00	8.69410E-01	8.24681E-04	0.00000E+00	0.00000E+00
763	8.50692E-01	4.96433E+00	8.69385E-01	8.23964E-04	0.00000E+00	0.00000E+00
764	8.85868E-01	4.96717E+00	8.69407E-01	8.23166E-04	0.00000E+00	0.00000E+00
765	8.42081E-01	4.97083E+00	8.69371E-01	8.22866E-04	0.00000E+00	0.00000E+00
766	8.58689E-01	4.97450E+00	8.69357E-01	8.21907E-04	0.00000E+00	0.00000E+00
767	9.05490E-01	4.97817E+00	8.69404E-01	8.22190E-04	0.00000E+00	0.00000E+00
768	8.64580E-01	4.98267E+00	8.69398E-01	8.21140E-04	0.00000E+00	0.00000E+00
769	8.68360E-01	4.98550E+00	8.69396E-01	8.20070E-04	0.00000E+00	0.00000E+00
770	8.65633E-01	4.98917E+00	8.69392E-01	8.19016E-04	0.00000E+00	0.00000E+00
771	8.65426E-01	4.99283E+00	8.69386E-01	8.17967E-04	0.00000E+00	0.00000E+00
772	8.73557E-01	4.99650E+00	8.69392E-01	8.16922E-04	0.00000E+00	0.00000E+00
773	8.85453E-01	4.99917E+00	8.69413E-01	8.16127E-04	0.00000E+00	0.00000E+00
774	8.40495E-01	5.00283E+00	8.69375E-01	8.15930E-04	0.00000E+00	0.00000E+00
775	9.19942E-01	5.00650E+00	8.69441E-01	8.17495E-04	0.00000E+00	0.00000E+00
776	8.19185E-01	5.01017E+00	8.69376E-01	8.19016E-04	0.00000E+00	0.00000E+00
777	8.72182E-01	5.01383E+00	8.69379E-01	8.17966E-04	0.00000E+00	0.00000E+00
778	8.94099E-01	5.01667E+00	8.69411E-01	8.17532E-04	0.00000E+00	0.00000E+00
779	8.76642E-01	5.02033E+00	8.69420E-01	8.16533E-04	0.00000E+00	0.00000E+00
780	8.80966E-01	5.02483E+00	8.69435E-01	8.15617E-04	0.00000E+00	0.00000E+00
781	8.74986E-01	5.02850E+00	8.69442E-01	8.14601E-04	0.00000E+00	0.00000E+00
782	9.05142E-01	5.03217E+00	8.69488E-01	8.14842E-04	0.00000E+00	0.00000E+00
783	8.82577E-01	5.03583E+00	8.69505E-01	8.13971E-04	0.00000E+00	0.00000E+00
784	9.01262E-01	5.03950E+00	8.69546E-01	8.13943E-04	0.00000E+00	0.00000E+00
785	8.39892E-01	5.04217E+00	8.69508E-01	8.13784E-04	0.00000E+00	0.00000E+00
786	8.25676E-01	5.04583E+00	8.69452E-01	8.14666E-04	0.00000E+00	0.00000E+00
787	8.74663E-01	5.04950E+00	8.69458E-01	8.13655E-04	0.00000E+00	0.00000E+00
788	8.53603E-01	5.05317E+00	8.69438E-01	8.12870E-04	0.00000E+00	0.00000E+00
789	8.95869E-01	5.05683E+00	8.69472E-01	8.12530E-04	0.00000E+00	0.00000E+00
790	8.54885E-01	5.06050E+00	8.69453E-01	8.11710E-04	0.00000E+00	0.00000E+00
791	9.17470E-01	5.06417E+00	8.69514E-01	8.12961E-04	0.00000E+00	0.00000E+00
792	9.05597E-01	5.06783E+00	8.69560E-01	8.13215E-04	0.00000E+00	0.00000E+00
793	8.71160E-01	5.07150E+00	8.69562E-01	8.12189E-04	0.00000E+00	0.00000E+00
794	8.92208E-01	5.07517E+00	8.69591E-01	8.11667E-04	0.00000E+00	0.00000E+00
795	8.83034E-01	5.07883E+00	8.69607E-01	8.10820E-04	0.00000E+00	0.00000E+00
796	8.68376E-01	5.08250E+00	8.69606E-01	8.09800E-04	0.00000E+00	0.00000E+00
797	8.56340E-01	5.08617E+00	8.69589E-01	8.08952E-04	0.00000E+00	0.00000E+00
798	8.99654E-01	5.08983E+00	8.69627E-01	8.08818E-04	0.00000E+00	0.00000E+00
799	8.46349E-01	5.09350E+00	8.69598E-01	8.08330E-04	0.00000E+00	0.00000E+00
800	9.03032E-01	5.09717E+00	8.69640E-01	8.08403E-04	0.00000E+00	0.00000E+00
801	8.43871E-01	5.10083E+00	8.69607E-01	8.08035E-04	0.00000E+00	0.00000E+00
802	8.52464E-01	5.10450E+00	8.69586E-01	8.07308E-04	0.00000E+00	0.00000E+00
803	8.76863E-01	5.10817E+00	8.69595E-01	8.06351E-04	0.00000E+00	0.00000E+00

KENO MESSAGE NUMBER K5-123 EXECUTION TERMINATED DUE TO COMPLETION OF THE SPECIFIED NUMBER OF GENERATIONS.

LIFETIME = 2.24743E-04 + OR - 9.75418E-07 GENERATION TIME = 1.91383E-05 + OR - 3.66801E-08
NU BAR = 2.43406E+00 + OR - 4.19565E-05 AVERAGE FISSION GROUP = 2.16647E+01 + OR - 3.35227E-03
ENERGY(EV) OF THE AVERAGE LETHARGY CAUSING FISSION = 2.57117E-01 + OR - 6.83592E-04

NO. OF INITIAL

GENERATIONS SKIPPED	AVERAGE K-EFFECTIVE	DEVIATION	67 PER CENT CONFIDENCE INTERVAL	95 PER CENT CONFIDENCE INTERVAL	99 PER CENT CONFIDENCE INTERVAL	NUMBER OF HISTORIES
3	0.86961	+ OR - 0.00081	0.86881 TO 0.87042	0.86800 TO 0.87123	0.86719 TO 0.87203	800000
4	0.86961	+ OR - 0.00081	0.86880 TO 0.87041	0.86799 TO 0.87122	0.86718 TO 0.87203	799000
5	0.86965	+ OR - 0.00081	0.86884 TO 0.87046	0.86803 TO 0.87127	0.86723 TO 0.87207	798000
6	0.86968	+ OR - 0.00081	0.86887 TO 0.87049	0.86806 TO 0.87129	0.86725 TO 0.87210	797000
7	0.86971	+ OR - 0.00081	0.86890 TO 0.87052	0.86809 TO 0.87133	0.86728 TO 0.87213	796000
8	0.86971	+ OR - 0.00081	0.86890 TO 0.87052	0.86809 TO 0.87133	0.86728 TO 0.87214	795000
9	0.86974	+ OR - 0.00081	0.86893 TO 0.87055	0.86812 TO 0.87136	0.86731 TO 0.87217	794000
10	0.86977	+ OR - 0.00081	0.86896 TO 0.87058	0.86815 TO 0.87140	0.86734 TO 0.87221	793000
11	0.86975	+ OR - 0.00081	0.86894 TO 0.87056	0.86813 TO 0.87137	0.86732 TO 0.87219	792000
12	0.86977	+ OR - 0.00081	0.86896 TO 0.87059	0.86815 TO 0.87140	0.86734 TO 0.87221	791000
17	0.86977	+ OR - 0.00081	0.86896 TO 0.87059	0.86815 TO 0.87140	0.86733 TO 0.87221	786000
22	0.86972	+ OR - 0.00082	0.86891 TO 0.87054	0.86809 TO 0.87136	0.86727 TO 0.87217	781000
27	0.86975	+ OR - 0.00082	0.86893 TO 0.87057	0.86811 TO 0.87139	0.86729 TO 0.87220	776000
32	0.86974	+ OR - 0.00082	0.86892 TO 0.87056	0.86810 TO 0.87138	0.86728 TO 0.87220	771000
37	0.86973	+ OR - 0.00082	0.86892 TO 0.87055	0.86810 TO 0.87137	0.86728 TO 0.87219	766000
42	0.86969	+ OR - 0.00082	0.86886 TO 0.87051	0.86804 TO 0.87133	0.86722 TO 0.87215	761000
47	0.86965	+ OR - 0.00082	0.86882 TO 0.87047	0.86800 TO 0.87130	0.86718 TO 0.87212	756000
52	0.86965	+ OR - 0.00083	0.86882 TO 0.87048	0.86799 TO 0.87131	0.86716 TO 0.87213	751000
57	0.86955	+ OR - 0.00083	0.86872 TO 0.87038	0.86789 TO 0.87121	0.86705 TO 0.87205	746000
62	0.86953	+ OR - 0.00084	0.86869 TO 0.87037	0.86786 TO 0.87120	0.86702 TO 0.87204	741000
67	0.86951	+ OR - 0.00084	0.86867 TO 0.87035	0.86784 TO 0.87119	0.86700 TO 0.87203	736000
72	0.86960	+ OR - 0.00084	0.86875 TO 0.87044	0.86791 TO 0.87128	0.86707 TO 0.87212	731000
77	0.86949	+ OR - 0.00084	0.86865 TO 0.87034	0.86781 TO 0.87118	0.86696 TO 0.87203	726000
82	0.86956	+ OR - 0.00085	0.86872 TO 0.87041	0.86787 TO 0.87126	0.86702 TO 0.87211	721000
87	0.86943	+ OR - 0.00085	0.86858 TO 0.87028	0.86773 TO 0.87113	0.86688 TO 0.87198	716000
92	0.86950	+ OR - 0.00085	0.86864 TO 0.87035	0.86779 TO 0.87120	0.86694 TO 0.87206	711000

NO. OF INITIAL GENERATIONS SKIPPED	AVERAGE K-EFFECTIVE	DEVIATION	67 PER CENT CONFIDENCE INTERVAL	95 PER CENT CONFIDENCE INTERVAL	99 PER CENT CONFIDENCE INTERVAL	NUMBER OF HISTORIES
97	0.86934	+ OR - 0.00085	0.86849 TO 0.87020	0.86764 TO 0.87105	0.86678 TO 0.87190	706000
102	0.86937	+ OR - 0.00086	0.86851 TO 0.87023	0.86766 TO 0.87109	0.86680 TO 0.87195	701000
107	0.86937	+ OR - 0.00086	0.86851 TO 0.87024	0.86765 TO 0.87110	0.86678 TO 0.87196	696000
112	0.86945	+ OR - 0.00087	0.86859 TO 0.87032	0.86772 TO 0.87119	0.86685 TO 0.87206	691000
117	0.86951	+ OR - 0.00087	0.86864 TO 0.87038	0.86777 TO 0.87125	0.86689 TO 0.87212	686000
122	0.86945	+ OR - 0.00087	0.86857 TO 0.87032	0.86770 TO 0.87119	0.86682 TO 0.87207	681000
127	0.86944	+ OR - 0.00088	0.86856 TO 0.87031	0.86768 TO 0.87119	0.86680 TO 0.87207	676000
132	0.86937	+ OR - 0.00088	0.86849 TO 0.87025	0.86761 TO 0.87114	0.86673 TO 0.87202	671000
137	0.86933	+ OR - 0.00089	0.86844 TO 0.87021	0.86755 TO 0.87110	0.86666 TO 0.87199	666000
142	0.86927	+ OR - 0.00089	0.86838 TO 0.87016	0.86749 TO 0.87105	0.86659 TO 0.87194	661000
147	0.86923	+ OR - 0.00090	0.86834 TO 0.87013	0.86744 TO 0.87103	0.86655 TO 0.87192	656000
642	0.87123	+ OR - 0.00178	0.86945 TO 0.87300	0.86768 TO 0.87478	0.86590 TO 0.87656	161000
647	0.87152	+ OR - 0.00181	0.86970 TO 0.87333	0.86789 TO 0.87514	0.86607 TO 0.87696	156000
652	0.87096	+ OR - 0.00185	0.86910 TO 0.87281	0.86725 TO 0.87466	0.86540 TO 0.87652	151000
657	0.87098	+ OR - 0.00190	0.86909 TO 0.87288	0.86719 TO 0.87478	0.86529 TO 0.87668	146000
662	0.87127	+ OR - 0.00193	0.86934 TO 0.87321	0.86741 TO 0.87514	0.86548 TO 0.87707	141000
667	0.87187	+ OR - 0.00197	0.86990 TO 0.87384	0.86793 TO 0.87581	0.86596 TO 0.87779	136000
672	0.87189	+ OR - 0.00198	0.86991 TO 0.87388	0.86792 TO 0.87586	0.86594 TO 0.87784	131000
677	0.87221	+ OR - 0.00205	0.87017 TO 0.87426	0.86812 TO 0.87631	0.86608 TO 0.87835	126000

682	0.87159	+ OR - 0.00202	0.86957 TO 0.87360	0.86755 TO 0.87562	0.86554 TO 0.87763	121000
687	0.87202	+ OR - 0.00206	0.86996 TO 0.87408	0.86790 TO 0.87614	0.86584 TO 0.87821	116000
692	0.87282	+ OR - 0.00212	0.87071 TO 0.87494	0.86859 TO 0.87706	0.86647 TO 0.87918	111000
697	0.87318	+ OR - 0.00219	0.87099 TO 0.87536	0.86881 TO 0.87755	0.86662 TO 0.87974	106000
702	0.87338	+ OR - 0.00226	0.87112 TO 0.87564	0.86886 TO 0.87790	0.86659 TO 0.88016	101000
707	0.87352	+ OR - 0.00235	0.87117 TO 0.87586	0.86882 TO 0.87821	0.86648 TO 0.88056	96000
712	0.87273	+ OR - 0.00243	0.87030 TO 0.87517	0.86787 TO 0.87760	0.86544 TO 0.88003	91000
717	0.87386	+ OR - 0.00242	0.87144 TO 0.87628	0.86902 TO 0.87870	0.86660 TO 0.88112	86000
722	0.87397	+ OR - 0.00254	0.87143 TO 0.87651	0.86889 TO 0.87905	0.86635 TO 0.88158	81000
727	0.87331	+ OR - 0.00267	0.87064 TO 0.87598	0.86796 TO 0.87866	0.86529 TO 0.88133	76000
732	0.87344	+ OR - 0.00281	0.87063 TO 0.87626	0.86781 TO 0.87907	0.86500 TO 0.88189	71000
737	0.87254	+ OR - 0.00281	0.86973 TO 0.87534	0.86693 TO 0.87815	0.86412 TO 0.88095	66000
742	0.87197	+ OR - 0.00302	0.86895 TO 0.87499	0.86593 TO 0.87801	0.86291 TO 0.88103	61000
747	0.87207	+ OR - 0.00326	0.86880 TO 0.87533	0.86554 TO 0.87859	0.86228 TO 0.88185	56000
752	0.87366	+ OR - 0.00342	0.87024 TO 0.87708	0.86682 TO 0.88050	0.86339 TO 0.88393	51000
757	0.87403	+ OR - 0.00369	0.87034 TO 0.87772	0.86665 TO 0.88141	0.86297 TO 0.88510	46000
762	0.87303	+ OR - 0.00381	0.86922 TO 0.87684	0.86541 TO 0.88066	0.86160 TO 0.88447	41000
767	0.87365	+ OR - 0.00408	0.86958 TO 0.87773	0.86550 TO 0.88181	0.86142 TO 0.88588	36000

NO. OF INITIAL GENERATIONS SKIPPED	AVERAGE K-EFFECTIVE	DEVIATION	67 PER CENT CONFIDENCE INTERVAL	95 PER CENT CONFIDENCE INTERVAL	99 PER CENT CONFIDENCE INTERVAL	NUMBER OF HISTORIES
772	0.87464	+ OR - 0.00471	0.86993 TO 0.87936	0.86522 TO 0.88407	0.86050 TO 0.88878	31000
777	0.87603	+ OR - 0.00467	0.87135 TO 0.88070	0.86668 TO 0.88537	0.86201 TO 0.89005	26000
782	0.87356	+ OR - 0.00554	0.86803 TO 0.87910	0.86249 TO 0.88464	0.85696 TO 0.89017	21000
787	0.87630	+ OR - 0.00594	0.87036 TO 0.88224	0.86441 TO 0.88818	0.85847 TO 0.89412	16000
792	0.87212	+ OR - 0.00630	0.86582 TO 0.87843	0.85952 TO 0.88473	0.85321 TO 0.89103	11000
797	0.87037	+ OR - 0.01090	0.85947 TO 0.88128	0.84857 TO 0.89218	0.83766 TO 0.90308	6000

PLOT OF AVERAGE K-EFFECTIVE BY GENERATION RUN.
THE LINE REPRESENTS K-EFF = 0.8696 + OR - 0.0008 WHICH OCCURS FOR 803 GENERATIONS RUN.

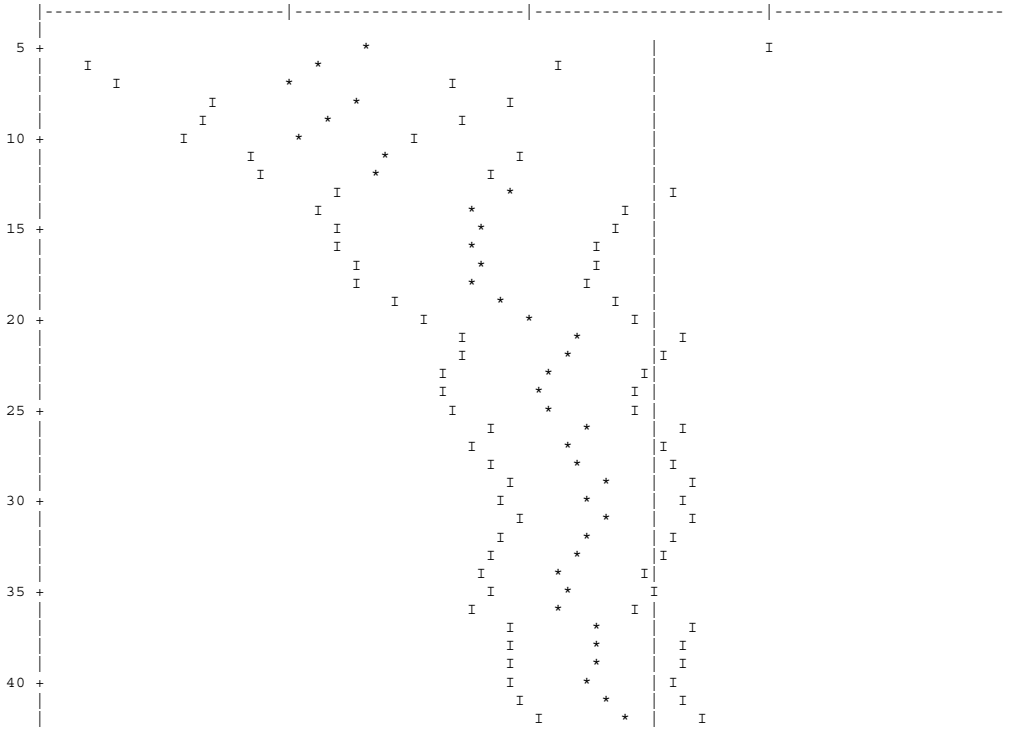

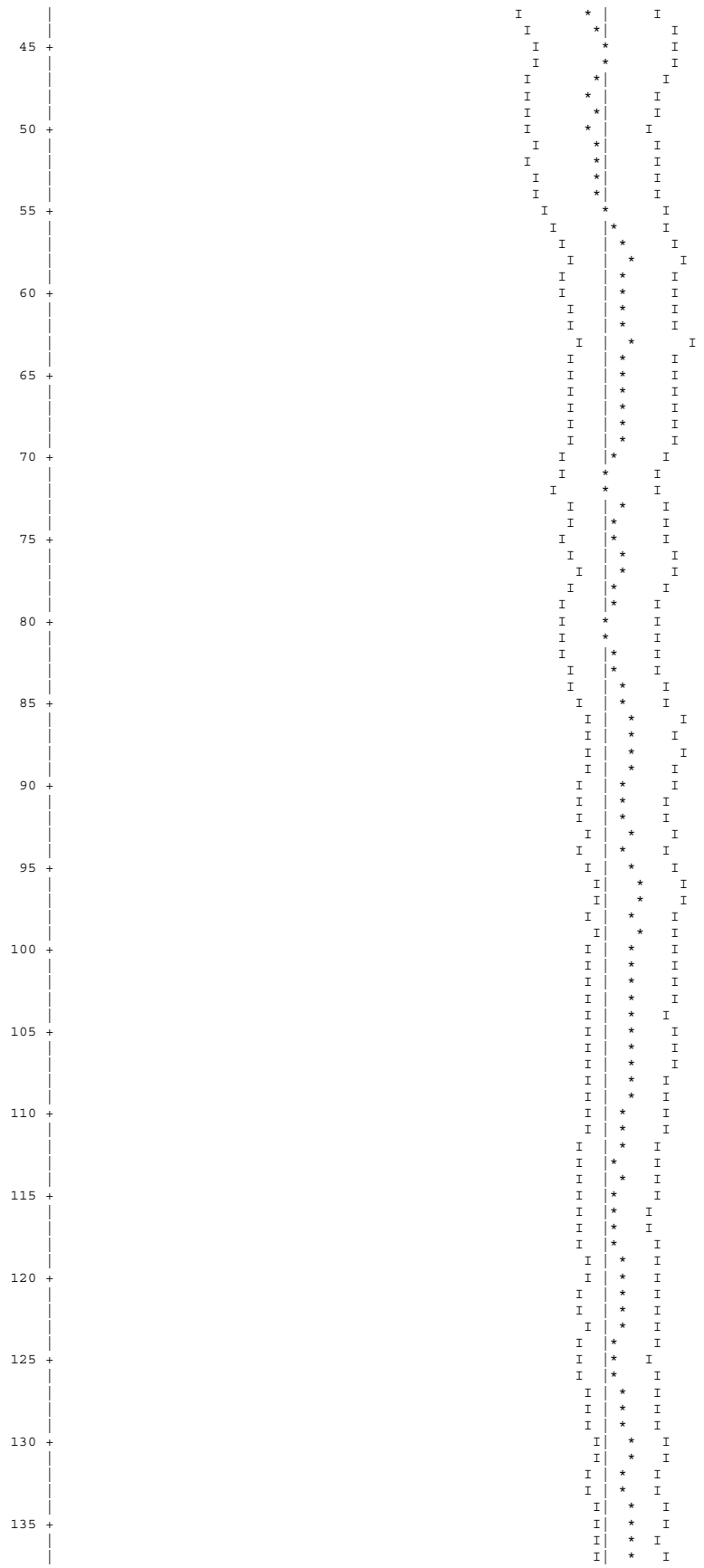

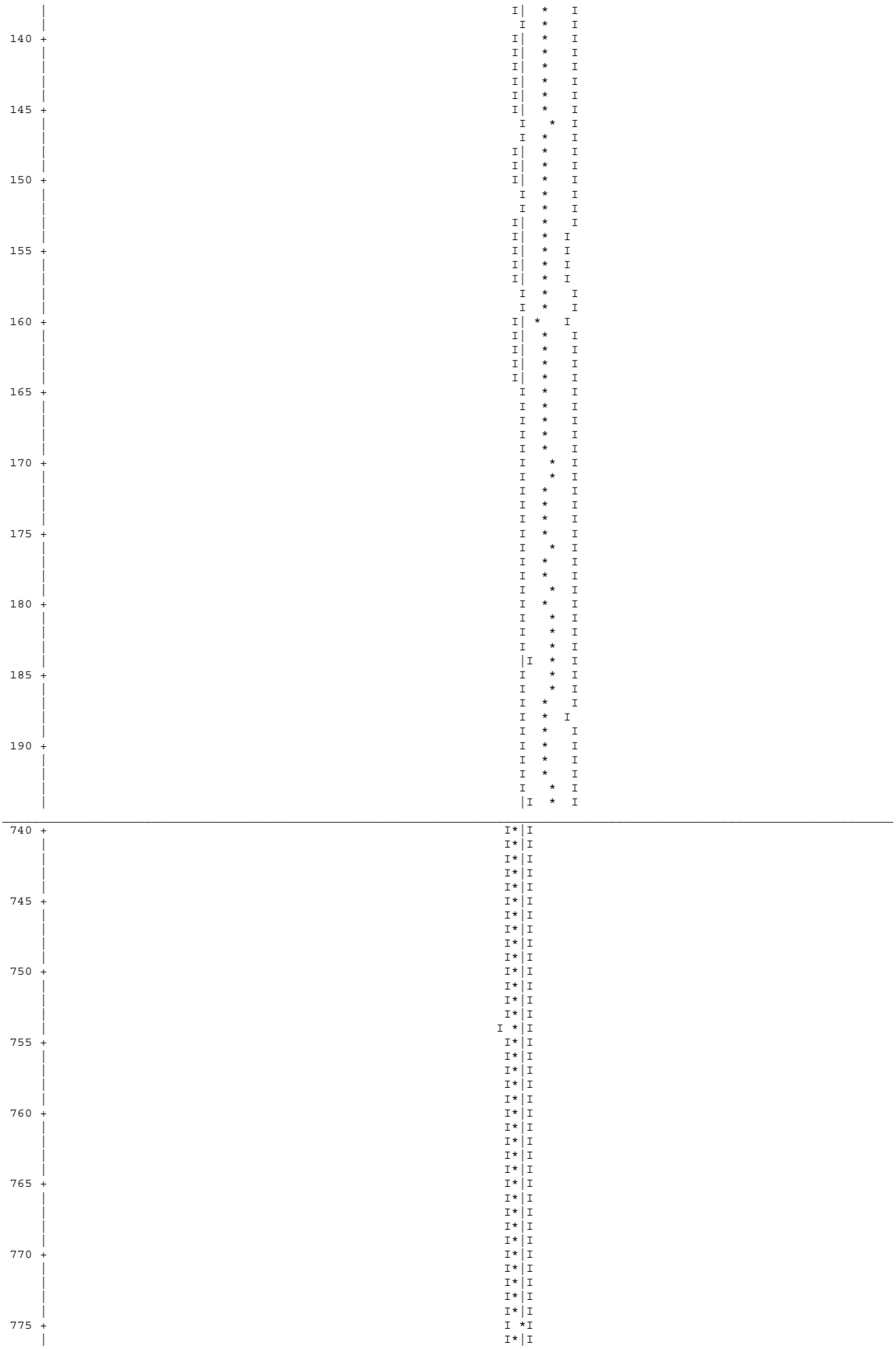



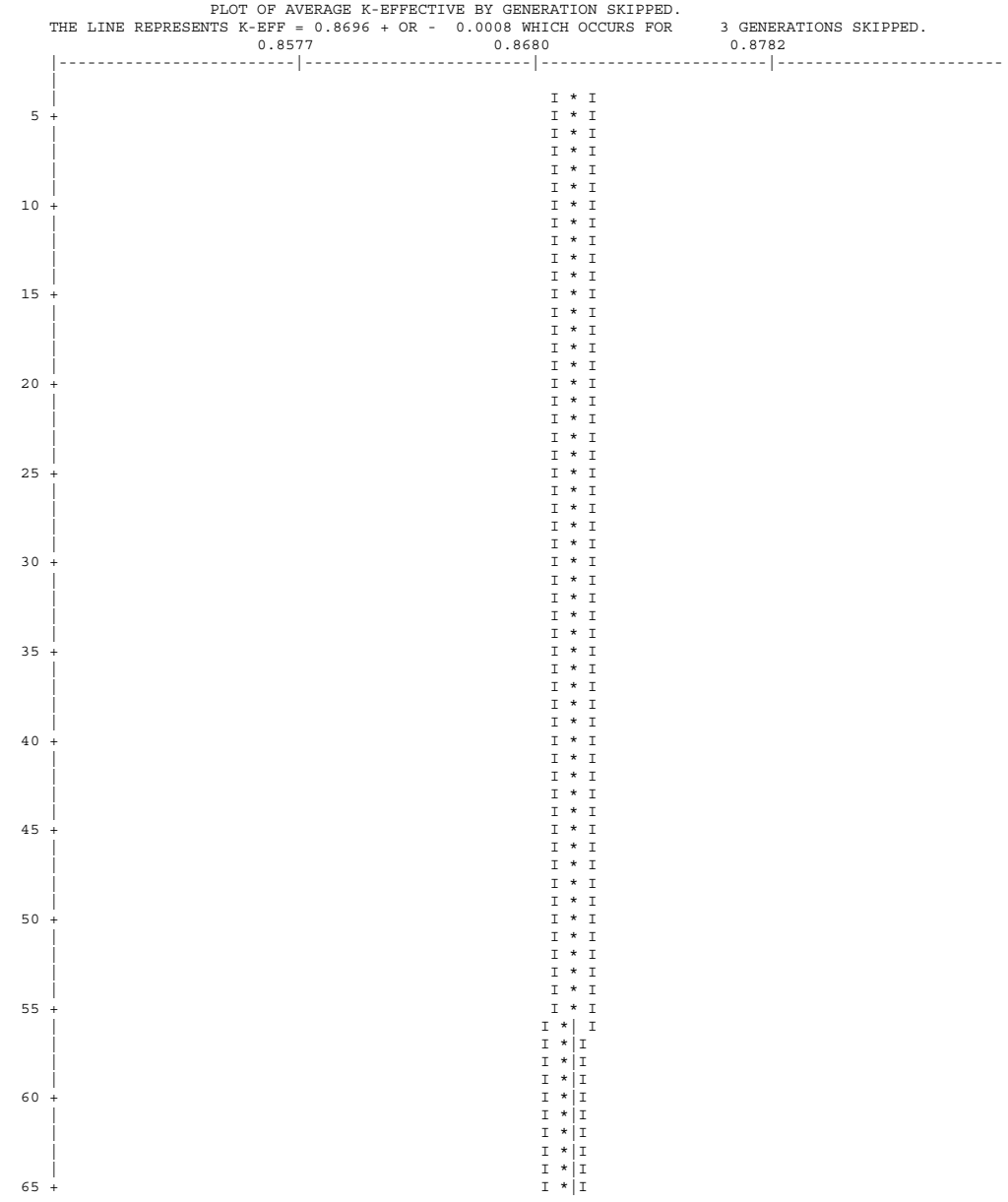
PLOT OF AVERAGE K-EFFECTIVE BY GENERATION SKIPPED.
THE LINE REPRESENTS K-EFF = 0.8696 + OR - 0.0008 WHICH OCCURS FOR 3 GENERATIONS SKIPPED.
0.8577
0.8680
0.8782

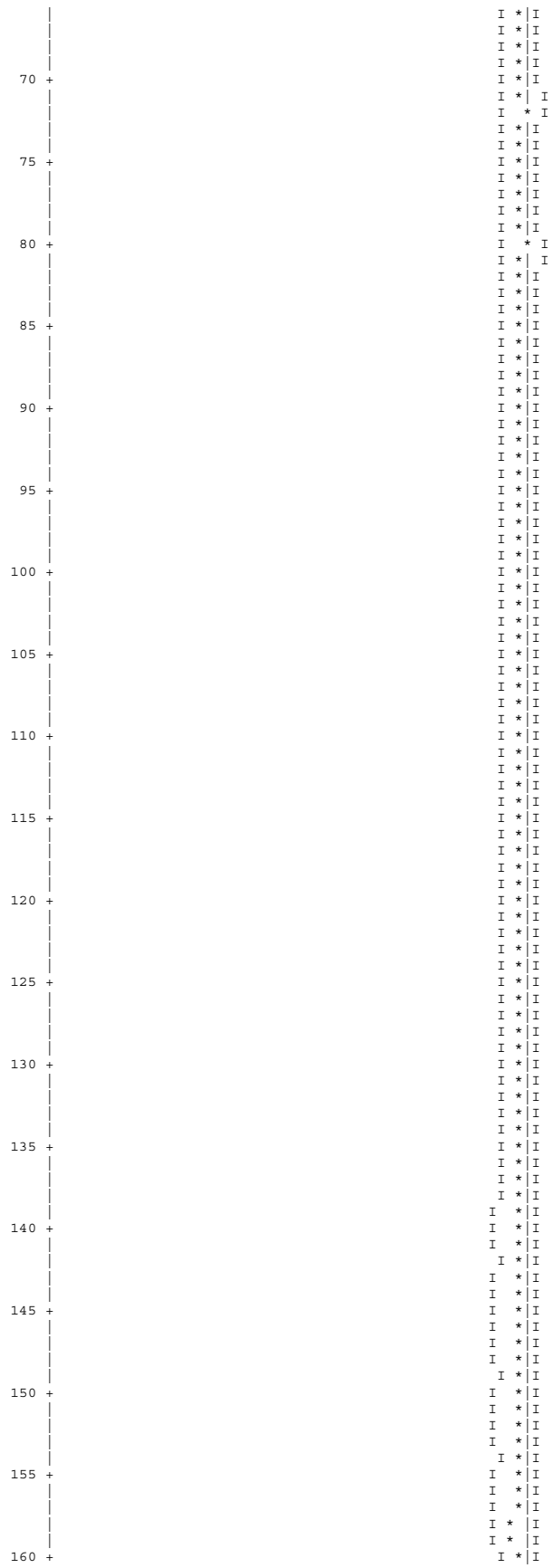

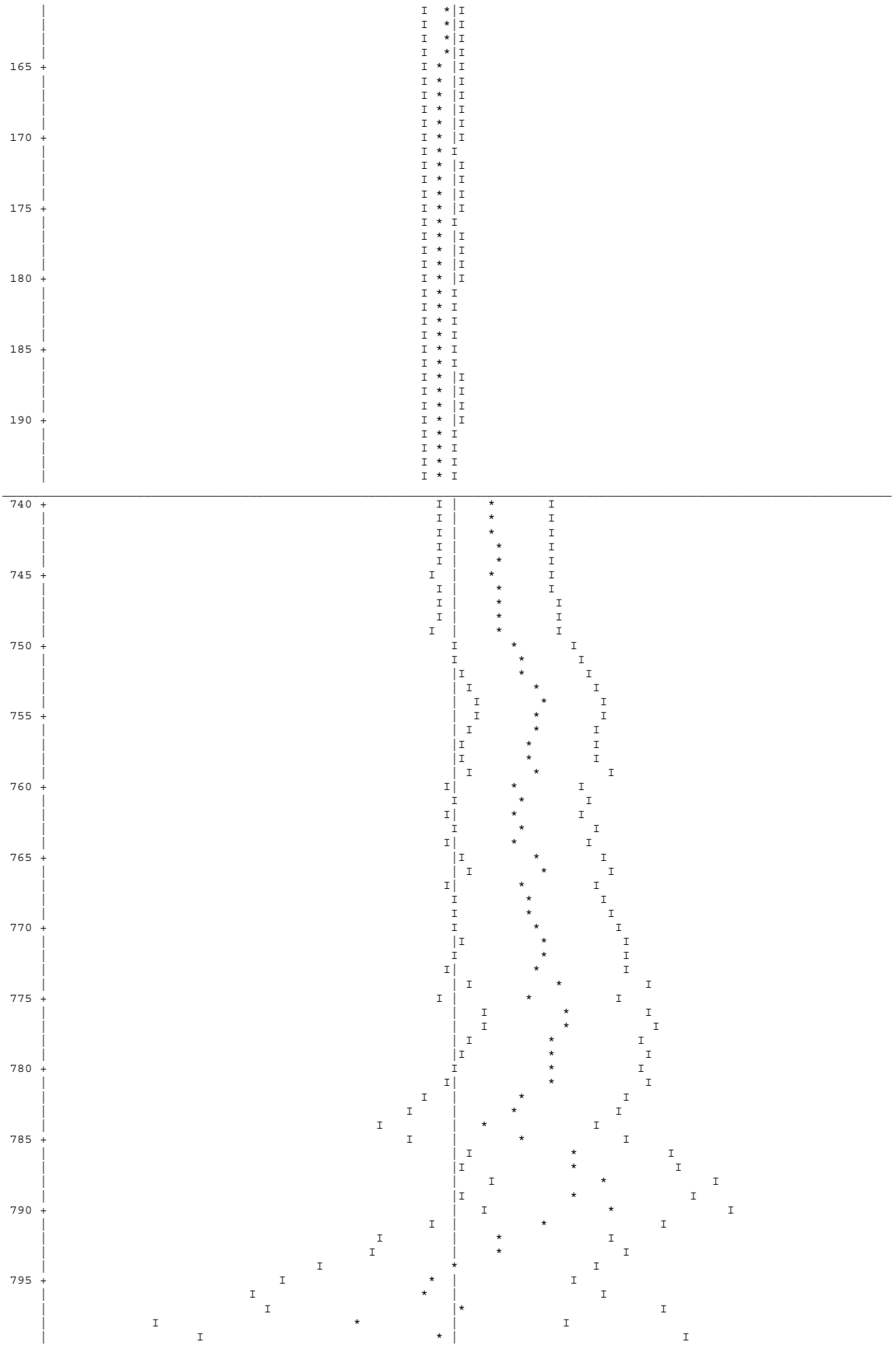

```
 800 +                        *                     I    |
                                                                                                  SKIPPING  3 GENERATIONS

GROUP  FISSION  UNIT   REGION    FISSIONS     PERCENT       ABSORPTIONS    PERCENT         LEAKAGE      PERCENT
      FRACTION                               DEVIATION                   DEVIATION                     DEVIATION
  1     0.0036                 3.16101E-03     1.0708       2.07689E-03     0.9611       0.00000E+00     0.0000
  2     0.0149                 1.29140E-02     0.3253       7.41767E-03     0.2988       0.00000E+00     0.0000
  3     0.0171                 1.48700E-02     0.2519       6.55451E-03     0.2380       0.00000E+00     0.0000
  4     0.0075                 6.50931E-03     0.2913       3.24606E-03     0.2726       0.00000E+00     0.0000
  5     0.0032                 2.79252E-03     0.2354       2.80208E-03     0.2136       0.00000E+00     0.0000

  6     0.0037                 3.25030E-03     0.2309       5.61286E-03     0.2124       0.00000E+00     0.0000
  7     0.0042                 3.63493E-03     0.2597       6.91825E-03     0.2376       0.00000E+00     0.0000
  8     0.0042                 3.67098E-03     0.2411       8.70636E-03     0.2327       0.00000E+00     0.0000
  9     0.0056                 4.87620E-03     0.2244       1.27518E-02     0.2084       0.00000E+00     0.0000
 10     0.0121                 1.04961E-02     0.2204       2.37704E-02     0.1808       0.00000E+00     0.0000

 11     0.0243                 2.10948E-02     0.1815       4.05073E-02     0.1513       0.00000E+00     0.0000
 12     0.0311                 2.70160E-02     0.1737       4.56024E-02     0.1538       0.00000E+00     0.0000
 13     0.0284                 2.46836E-02     0.1721       4.52290E-02     0.1578       0.00000E+00     0.0000
 14     0.0218                 1.89165E-02     0.1629       6.16347E-02     0.1515       0.00000E+00     0.0000
 15     0.0043                 3.76369E-03     0.2554       1.01315E-02     0.3870       0.00000E+00     0.0000

 16     0.0029                 2.53896E-03     0.3287       5.95737E-03     0.4673       0.00000E+00     0.0000
 17     0.0045                 3.89405E-03     0.4239       4.40758E-03     0.4139       0.00000E+00     0.0000
 18     0.0061                 5.28540E-03     0.4146       4.62657E-03     0.3853       0.00000E+00     0.0000
 19     0.0073                 6.35321E-03     0.3296       6.83232E-03     0.3807       0.00000E+00     0.0000
 20     0.0304                 2.64104E-02     0.2043       2.61778E-02     0.2538       0.00000E+00     0.0000

 21     0.0165                 1.43336E-02     0.3200       1.19840E-02     0.3077       0.00000E+00     0.0000
 22     0.0386                 3.35259E-02     0.2289       2.66332E-02     0.2288       0.00000E+00     0.0000
 23     0.1140                 9.91690E-02     0.1555       7.58196E-02     0.1542       0.00000E+00     0.0000
 24     0.1886                 1.63996E-01     0.1480       1.15808E-01     0.1356       0.00000E+00     0.0000
 25     0.1514                 1.31646E-01     0.1596       9.03125E-02     0.1474       0.00000E+00     0.0000

 26     0.1832                 1.59314E-01     0.1740       1.11489E-01     0.1635       0.00000E+00     0.0000
 27     0.0707                 6.14960E-02     0.2729       6.97655E-02     0.2298       0.00000E+00     0.0000

SYSTEM TOTAL =                  8.69613E-01     0.0928       8.32776E-01     0.0524       0.00000E+00     0.0000

THE WEIGHT LOST IN THE ALBEDO PORTION OF THE PROBLEM =   1.6990E-01  + OR -  0.0003

ELAPSED TIME   5.10900 MINUTES
RANDOM NUMBER=       74DA6F694404

                              FREQUENCY FOR GENERATIONS    4 TO  803
0.7930 TO 0.7967     *
0.7967 TO 0.8004
0.8004 TO 0.8040     *
0.8040 TO 0.8077
0.8077 TO 0.8114
0.8114 TO 0.8151     ***
0.8151 TO 0.8187     **
0.8187 TO 0.8224     *******
0.8224 TO 0.8261     *******
0.8261 TO 0.8298     **********
0.8298 TO 0.8334     ***************
0.8334 TO 0.8371     *****************
0.8371 TO 0.8408     *****************
0.8408 TO 0.8445     *************************
0.8445 TO 0.8481     ************************************
0.8481 TO 0.8518     ********************************************
0.8518 TO 0.8555     ************************************
0.8555 TO 0.8592     ************************************************
0.8592 TO 0.8628     ********************************************
0.8628 TO 0.8665     ************************************
0.8665 TO 0.8702     ************************************************************
0.8702 TO 0.8739     *********************************************
0.8739 TO 0.8775     ************************************************************
0.8775 TO 0.8812     ************************************************
0.8812 TO 0.8849     ***********************************
0.8849 TO 0.8886     *********************************************
0.8886 TO 0.8922     ************************************
0.8922 TO 0.8959     *************************
0.8959 TO 0.8996     ************************
0.8996 TO 0.9033     *************************
0.9033 TO 0.9069     ***************
0.9069 TO 0.9106     **********
0.9106 TO 0.9143     ********
0.9143 TO 0.9179     *********
0.9179 TO 0.9216     ****
0.9216 TO 0.9253     *
0.9253 TO 0.9290     **
0.9290 TO 0.9326     *
0.9326 TO 0.9363
0.9363 TO 0.9400     **
0.9400 TO 0.9437     *

                              FREQUENCY FOR GENERATIONS  204 TO  803
0.7930 TO 0.7967
0.7967 TO 0.8004
0.8004 TO 0.8040     *
0.8040 TO 0.8077
0.8077 TO 0.8114
0.8114 TO 0.8151     ***
```

```
0.8151 TO 0.8187     **
0.8187 TO 0.8224     ******
0.8224 TO 0.8261     ******
0.8261 TO 0.8298     **********
0.8298 TO 0.8334     ************
0.8334 TO 0.8371     ***********
0.8371 TO 0.8408     ************
0.8408 TO 0.8445     ************************
0.8445 TO 0.8481     ************************
0.8481 TO 0.8518     ******************************
0.8518 TO 0.8555     *************************
0.8555 TO 0.8592     ************************************
0.8592 TO 0.8628     ******************************************
0.8628 TO 0.8665     *************************
0.8665 TO 0.8702     **********************************
0.8702 TO 0.8739     ************************************
0.8739 TO 0.8775     ******************************************
0.8775 TO 0.8812     ************************************
0.8812 TO 0.8849     *************************
0.8849 TO 0.8886     **********************************
0.8886 TO 0.8922     **********************
0.8922 TO 0.8959     **********************
0.8959 TO 0.8996     ***************
0.8996 TO 0.9033     *****************
0.9033 TO 0.9069     ***************
0.9069 TO 0.9106     *********
0.9106 TO 0.9143     ****
0.9143 TO 0.9179     ******
0.9179 TO 0.9216     *
0.9216 TO 0.9253
0.9253 TO 0.9290     *
0.9290 TO 0.9326     *
0.9326 TO 0.9363
0.9363 TO 0.9400     **
0.9400 TO 0.9437

                          FREQUENCY FOR GENERATIONS  404 TO  803
0.7930 TO 0.7967
0.7967 TO 0.8004
0.8004 TO 0.8040
0.8040 TO 0.8077
0.8077 TO 0.8114
0.8114 TO 0.8151     ***
0.8151 TO 0.8187     **
0.8187 TO 0.8224     ***
0.8224 TO 0.8261     ***
0.8261 TO 0.8298     *******
0.8298 TO 0.8334     *******
0.8334 TO 0.8371     ********
0.8371 TO 0.8408     ********
0.8408 TO 0.8445     *****************
0.8445 TO 0.8481     **************
0.8481 TO 0.8518     **********************
0.8518 TO 0.8555     ******************
0.8555 TO 0.8592     *********************
0.8592 TO 0.8628     **********************
0.8628 TO 0.8665     ******************
0.8665 TO 0.8702     *********************
0.8702 TO 0.8739     **********************
0.8739 TO 0.8775     ******************************
0.8775 TO 0.8812     ********************************
0.8812 TO 0.8849     *********************
0.8849 TO 0.8886     **********************
0.8886 TO 0.8922     *************
0.8922 TO 0.8959     *************
0.8959 TO 0.8996     **********
0.8996 TO 0.9033     ************
0.9033 TO 0.9069     **********
0.9069 TO 0.9106     ******
0.9106 TO 0.9143     *
0.9143 TO 0.9179     ****
0.9179 TO 0.9216     *
0.9216 TO 0.9253
0.9253 TO 0.9290     *
0.9290 TO 0.9326     *
0.9326 TO 0.9363
0.9363 TO 0.9400     **
0.9400 TO 0.9437

                          FREQUENCY FOR GENERATIONS  604 TO  803
0.7930 TO 0.7967
0.7967 TO 0.8004
0.8004 TO 0.8040
0.8040 TO 0.8077
0.8077 TO 0.8114
0.8114 TO 0.8151     *
0.8151 TO 0.8187
0.8187 TO 0.8224     *
0.8224 TO 0.8261     **
0.8261 TO 0.8298     ***
0.8298 TO 0.8334     ***
0.8334 TO 0.8371     ***
0.8371 TO 0.8408     ****
0.8408 TO 0.8445     *********
0.8445 TO 0.8481     *****
```

```
0.8481 TO 0.8518     *******
0.8518 TO 0.8555     ***********
0.8555 TO 0.8592     ************
0.8592 TO 0.8628     *********
0.8628 TO 0.8665     *********
0.8665 TO 0.8702     **********
0.8702 TO 0.8739     *************
0.8739 TO 0.8775     **************
0.8775 TO 0.8812     ***************
0.8812 TO 0.8849     ************
0.8849 TO 0.8886     ****************
0.8886 TO 0.8922     *******
0.8922 TO 0.8959     ********
0.8959 TO 0.8996     ***
0.8996 TO 0.9033     ********
0.9033 TO 0.9069     *****
0.9069 TO 0.9106     ***
0.9106 TO 0.9143
0.9143 TO 0.9179     ***
0.9179 TO 0.9216     *
0.9216 TO 0.9253
0.9253 TO 0.9290     *
0.9290 TO 0.9326     *
0.9326 TO 0.9363
0.9363 TO 0.9400     *
0.9400 TO 0.9437

*****************************************************************************************************************************************
          CONGRATULATIONS!  YOU HAVE  SUCCESSFULLY TRAVERSED THE PERILOUS PATH THROUGH KENO V IN   5.10900 MINUTES
*****************************************************************************************************************************************
```

6.6.12 Spiral Fuel Assemblies in the LWT Cask

This section contains a truncated sample output file from the evaluation of spiral fuel assemblies in the LWT cask. The output file is shown in Figure 6.6.12-1.

Figure 6.6.12-1 Maximum Reactivity Spiral Fuel Assembly Configuration

```
       PRIMARY MODULE ACCESS AND INPUT RECORD ( SCALE DRIVER - 95/03/29 - 09:06:37 )
MODULE CSAS25   WILL BE CALLED
  LWT w/ HIFAR Mark III Fuel, Accident, Radial - In, Axial - Alternating
  ' Basket Configuration
  '  Fuel Tube Thick - Min  Fuel Tube OD - Max
  '  Fuel Tube Height - Min  Fuel Base  Plate - Min
  ' Fuel Plate Configuration  Fuel Plate Thickness - Min  Fuel Plate Clad Thicknes
  '  Active Fuel Length - Min  Fuel Element Height - Nominal
  '  Plate Location - H/U Ratio - Max
  ' Material Description
  '  U235 Fuel Mass - Max  Uranium Weight Fraction - Max
  27GROUPNDF4  LATTICECELL
  'Material Description for LWT Analysis - DIDO HIFAR Mark III Fuel
  URANIUM  1  DEN=0.4084  1.0  293.0  92235 85.0   92238 15.0  END
  AL  1  DEN=0.2957  1.0  293.0      END
  AL  2  1.00  293.0        END
  H2O  3  DEN=0.9998  1.00  293.0      END
  ARBMGLC  0.9437  3  0  1  0
    6012  2  1001  6  8016  2
    4  0.5840          END
  H2O  4  0.4160  293.0        END
  PB  5  1.00  293.0        END
  SS304  6  1.00  293.0         END
  AL  7  1.00  293.0        END
  SS304  8  1.00  293.0         END
  H2O  9  DEN=0.0001  1.00  293.0      END
  END COMP
  SYMMSLABCELL  0.6342  0.1039  1  3  0.1239  2  END

  READ PARAM  TBA=5  TME=90  RUN=YES  PLT=NO
    GEN=1203  NPG=1000        END PARAM
  READ START  XSM=-16.85  XSP=16.85  YSM=16.85  YSP=-16.85
    ZSM=26.67  ZSP=472.14        END START
  READ GEOM
  UNIT  1
  COM='Fueled Annular Sections       Tube  1  '
  'Aluminum Inner
  CYLINDER  3  1  2.9100  59.0750  0.0000
  CYLINDER  2  1  2.911  59.0750  0.0000
  'Fuel Annulus    1
  CYLINDER  3  1  3.0994  59.0750  0.0000
  CYLINDER  2  1  3.1094  59.0750  0.0000
  CYLINDER  1  1  3.2133  59.0750  0.0000
  CYLINDER  2  1  3.2233  59.0750  0.0000
  'Fuel Annulus    2
  CYLINDER  3  1  3.9218  59.0750  0.0000
  CYLINDER  2  1  3.9318  59.0750  0.0000
  CYLINDER  1  1  4.0357  59.0750  0.0000
  CYLINDER  2  1  4.0457  59.0750  0.0000
  'Fuel Annulus    3
  CYLINDER  3  1  4.7442  59.0750  0.0000
  CYLINDER  2  1  4.7542  59.0750  0.0000
  CYLINDER  1  1  4.8581  59.0750  0.0000
  CYLINDER  2  1  4.8681  59.0750  0.0000
  'Aluminum Outer
  CYLINDER  3  1  5.0700  59.0750  0.0000
  CYLINDER  2  1  5.0799  59.0750  0.0000
  UNIT  2
  COM='Axial Clad Sections       Tube  1  '
  'Aluminum Inner
  CYLINDER  3  1  2.9100  0.0005  0.0000
  CYLINDER  2  1  2.911  0.0005  0.0000
  'Clad Axial End Piece    1
  CYLINDER  3  1  3.0994  0.0005  0.0000
  CYLINDER  2  1  3.2233  0.0005  0.0000
  'Clad Axial End Piece    2
  CYLINDER  3  1  3.9218  0.0005  0.0000
  CYLINDER  2  1  4.0457  0.0005  0.0000
  'Clad Axial End Piece    3
  CYLINDER  3  1  4.7442  0.0005  0.0000
  CYLINDER  2  1  4.8681  0.0005  0.0000
  'Aluminum Outer
  CYLINDER  3  1  5.0700  0.0005  0.0000
  CYLINDER  2  1  5.0799  0.0005  0.0000
  UNIT  3
  COM='Fuel Element     Tube  1    '
  CYLINDER  3  1  5.0800  59.0763  0.0000
  HOLE  2  0.0000  0.0000  0.0000
  HOLE  1  0.0000  0.0000  0.0006
  HOLE  2  0.0000  0.0000  59.0757
  UNIT  4
  COM='Basket Fuel Tube - Fuel Down        Radial Shifted toward    0  Degrees'
  CYLINDER  3  1  5.2578  73.0249  0.0000
  HOLE  3  0.0000  0.0000  0.0000
  CYLINDER  6  1  5.57510  73.0249  0.0000
  UNIT  5
  COM='Basket Fuel Tube - Fuel Up        Radial Shifted toward    0  Degrees'
  CYLINDER  3  1  5.2578  73.0249  0.0000
  HOLE  3  0.0000  0.0000  13.9484
  CYLINDER  6  1  5.57510  73.0249  0.0000
  UNIT  6
  COM='Fueled Annular Sections       Tube  2  '
```

```
'Aluminum Inner
CYLINDER  3  1  2.9100  59.0750  0.0000
CYLINDER  2  1  2.911  59.0750  0.0000
'Fuel Annulus    1
CYLINDER  3  1  3.0994  59.0750  0.0000
CYLINDER  2  1  3.1094  59.0750  0.0000
CYLINDER  1  1  3.2133  59.0750  0.0000
CYLINDER  2  1  3.2233  59.0750  0.0000
'Fuel Annulus    2
CYLINDER  3  1  3.9218  59.0750  0.0000
CYLINDER  2  1  3.9318  59.0750  0.0000
CYLINDER  1  1  4.0357  59.0750  0.0000
CYLINDER  2  1  4.0457  59.0750  0.0000
'Fuel Annulus    3
CYLINDER  3  1  4.7442  59.0750  0.0000
CYLINDER  2  1  4.7542  59.0750  0.0000
CYLINDER  1  1  4.8581  59.0750  0.0000
CYLINDER  2  1  4.8681  59.0750  0.0000
'Aluminum Outer
CYLINDER  3  1  5.0700  59.0750  0.0000
CYLINDER  2  1  5.0799  59.0750  0.0000
UNIT  7
COM='Axial Clad Sections       Tube  2  '
'Aluminum Inner
CYLINDER  3  1  2.9100  0.0005  0.0000
CYLINDER  2  1  2.911  0.0005  0.0000
'Clad Axial End Piece    1
CYLINDER  3  1  3.0994  0.0005  0.0000
CYLINDER  2  1  3.2233  0.0005  0.0000
'Clad Axial End Piece    2
CYLINDER  3  1  3.9218  0.0005  0.0000
CYLINDER  2  1  4.0457  0.0005  0.0000
'Clad Axial End Piece    3
CYLINDER  3  1  4.7442  0.0005  0.0000
CYLINDER  2  1  4.8681  0.0005  0.0000
'Aluminum Outer
CYLINDER  3  1  5.0700  0.0005  0.0000
CYLINDER  2  1  5.0799  0.0005  0.0000
UNIT  8
COM='Fuel Element     Tube  2'
CYLINDER  3  1  5.0800  59.0763  0.0000
HOLE  7  0.0000  0.0000  0.0000
HOLE  6  0.0000  0.0000  0.0006
HOLE  7  0.0000  0.0000  59.0757
UNIT  9
COM='Basket Fuel Tube - Fuel Down        Radial Shifted toward    180  Degrees'
CYLINDER  3  1  5.2578  73.0249  0.0000
HOLE  8  -0.1777  0.0000  0.0000
CYLINDER  6  1  5.57510  73.0249  0.0000
UNIT  10
COM='Basket Fuel Tube - Fuel Up        Radial Shifted toward    180  Degrees'
CYLINDER  3  1  5.2578  73.0249  0.0000
HOLE  8  -0.1777  0.0000  13.9484
CYLINDER  6  1  5.57510  73.0249  0.0000
UNIT  11
COM='Fueled Annular Sections       Tube  3  '
'Aluminum Inner
CYLINDER  3  1  2.9100  59.0750  0.0000
CYLINDER  2  1  2.911  59.0750  0.0000
'Fuel Annulus    1
CYLINDER  3  1  3.0994  59.0750  0.0000
CYLINDER  2  1  3.1094  59.0750  0.0000
CYLINDER  1  1  3.2133  59.0750  0.0000
CYLINDER  2  1  3.2233  59.0750  0.0000
'Fuel Annulus    2
CYLINDER  3  1  3.9218  59.0750  0.0000
CYLINDER  2  1  3.9318  59.0750  0.0000
CYLINDER  1  1  4.0357  59.0750  0.0000
CYLINDER  2  1  4.0457  59.0750  0.0000
'Fuel Annulus    3
CYLINDER  3  1  4.7442  59.0750  0.0000
CYLINDER  2  1  4.7542  59.0750  0.0000
CYLINDER  1  1  4.8581  59.0750  0.0000
CYLINDER  2  1  4.8681  59.0750  0.0000
'Aluminum Outer
CYLINDER  3  1  5.0700  59.0750  0.0000
CYLINDER  2  1  5.0799  59.0750  0.0000
UNIT  12
COM='Axial Clad Sections       Tube  3  '
'Aluminum Inner
CYLINDER  3  1  2.9100  0.0005  0.0000
CYLINDER  2  1  2.911  0.0005  0.0000
'Clad Axial End Piece    1
CYLINDER  3  1  3.0994  0.0005  0.0000
CYLINDER  2  1  3.2233  0.0005  0.0000
'Clad Axial End Piece    2
CYLINDER  3  1  3.9218  0.0005  0.0000
CYLINDER  2  1  4.0457  0.0005  0.0000
'Clad Axial End Piece    3
CYLINDER  3  1  4.7442  0.0005  0.0000
CYLINDER  2  1  4.8681  0.0005  0.0000
'Aluminum Outer
CYLINDER  3  1  5.0700  0.0005  0.0000
CYLINDER  2  1  5.0799  0.0005  0.0000
UNIT  13
COM='Fuel Element     Tube  3'
```

```
CYLINDER  3  1  5.0800  59.0763  0.0000
HOLE  12  0.0000  0.0000  0.0000
HOLE  11  0.0000  0.0000  0.0006
HOLE  12  0.0000  0.0000  59.0757
UNIT  14
COM='Basket Fuel Tube - Fuel Down        Radial Shifted toward    240  Degrees'
CYLINDER  3  1  5.2578  73.0249  0.0000
HOLE  13  -0.0889  -0.1539  0.0000
CYLINDER  6  1  5.57510  73.0249  0.0000
UNIT  15
COM='Basket Fuel Tube - Fuel Up        Radial Shifted toward    240  Degrees'
CYLINDER  3  1  5.2578  73.0249  0.0000
HOLE  13  -0.0889  -0.1539  13.9484
CYLINDER  6  1  5.57510  73.0249  0.0000
UNIT  16
COM='Fueled Annular Sections       Tube  4  '
'Aluminum Inner
CYLINDER  3  1  2.9100  59.0750  0.0000
CYLINDER  2  1  2.911  59.0750  0.0000
'Fuel Annulus    1
CYLINDER  3  1  3.0994  59.0750  0.0000
CYLINDER  2  1  3.1094  59.0750  0.0000
CYLINDER  1  1  3.2133  59.0750  0.0000
CYLINDER  2  1  3.2233  59.0750  0.0000
'Fuel Annulus    2
CYLINDER  3  1  3.9218  59.0750  0.0000
CYLINDER  2  1  3.9318  59.0750  0.0000
CYLINDER  1  1  4.0357  59.0750  0.0000
CYLINDER  2  1  4.0457  59.0750  0.0000
'Fuel Annulus    3
CYLINDER  3  1  4.7442  59.0750  0.0000
CYLINDER  2  1  4.7542  59.0750  0.0000
CYLINDER  1  1  4.8581  59.0750  0.0000
CYLINDER  2  1  4.8681  59.0750  0.0000
'Aluminum Outer
CYLINDER  3  1  5.0700  59.0750  0.0000
CYLINDER  2  1  5.0799  59.0750  0.0000
UNIT  17
COM='Axial Clad Sections       Tube  4  '
'Aluminum Inner
CYLINDER  3  1  2.9100  0.0005  0.0000
CYLINDER  2  1  2.911  0.0005  0.0000
'Clad Axial End Piece    1
CYLINDER  3  1  3.0994  0.0005  0.0000
CYLINDER  2  1  3.2233  0.0005  0.0000
'Clad Axial End Piece    2
CYLINDER  3  1  3.9218  0.0005  0.0000
CYLINDER  2  1  4.0457  0.0005  0.0000
'Clad Axial End Piece    3
CYLINDER  3  1  4.7442  0.0005  0.0000
CYLINDER  2  1  4.8681  0.0005  0.0000
'Aluminum Outer
CYLINDER  3  1  5.0700  0.0005  0.0000
CYLINDER  2  1  5.0799  0.0005  0.0000
UNIT  18
COM='Fuel Element     Tube  4'
CYLINDER  3  1  5.0800  59.0763  0.0000
HOLE  17  0.0000  0.0000  0.0000
HOLE  16  0.0000  0.0000  0.0006
HOLE  17  0.0000  0.0000  59.0757
UNIT  19
COM='Basket Fuel Tube - Fuel Down        Radial Shifted toward    300  Degrees'
CYLINDER  3  1  5.2578  73.0249  0.0000
HOLE  18  0.0889  -0.1539  0.0000
CYLINDER  6  1  5.57510  73.0249  0.0000
UNIT  20
COM='Basket Fuel Tube - Fuel Up        Radial Shifted toward    300  Degrees'
CYLINDER  3  1  5.2578  73.0249  0.0000
HOLE  18  0.0889  -0.1539  13.9484
CYLINDER  6  1  5.57510  73.0249  0.0000
UNIT  21
COM='Fueled Annular Sections       Tube  5  '
'Aluminum Inner
CYLINDER  3  1  2.9100  59.0750  0.0000
CYLINDER  2  1  2.911  59.0750  0.0000
'Fuel Annulus    1
CYLINDER  3  1  3.0994  59.0750  0.0000
CYLINDER  2  1  3.1094  59.0750  0.0000
CYLINDER  1  1  3.2133  59.0750  0.0000
CYLINDER  2  1  3.2233  59.0750  0.0000
'Fuel Annulus    2
CYLINDER  3  1  3.9218  59.0750  0.0000
CYLINDER  2  1  3.9318  59.0750  0.0000
CYLINDER  1  1  4.0357  59.0750  0.0000
CYLINDER  2  1  4.0457  59.0750  0.0000
'Fuel Annulus    3
CYLINDER  3  1  4.7442  59.0750  0.0000
CYLINDER  2  1  4.7542  59.0750  0.0000
CYLINDER  1  1  4.8581  59.0750  0.0000
CYLINDER  2  1  4.8681  59.0750  0.0000
'Aluminum Outer
CYLINDER  3  1  5.0700  59.0750  0.0000
CYLINDER  2  1  5.0799  59.0750  0.0000
UNIT  22
COM='Axial Clad Sections       Tube  5  '
'Aluminum Inner
```

```
CYLINDER  3  1  2.9100  0.0005  0.0000
CYLINDER  2  1  2.911  0.0005  0.0000
'Clad Axial End Piece    1
CYLINDER  3  1  3.0994  0.0005  0.0000
CYLINDER  2  1  3.2233  0.0005  0.0000
'Clad Axial End Piece    2
CYLINDER  3  1  3.9218  0.0005  0.0000
CYLINDER  2  1  4.0457  0.0005  0.0000
'Clad Axial End Piece    3
CYLINDER  3  1  4.7442  0.0005  0.0000
CYLINDER  2  1  4.8681  0.0005  0.0000
'Aluminum Outer
CYLINDER  3  1  5.0700  0.0005  0.0000
CYLINDER  2  1  5.0799  0.0005  0.0000
UNIT  23
COM='Fuel Element     Tube  5'
CYLINDER  3  1  5.0800  59.0763  0.0000
HOLE  22  0.0000  0.0000  0.0000
HOLE  21  0.0000  0.0000  0.0006
HOLE  22  0.0000  0.0000  59.0757
UNIT  24
COM='Basket Fuel Tube - Fuel Down        Radial Shifted toward    0  Degrees'
CYLINDER  3  1  5.2578  73.0249  0.0000
HOLE  23  0.1777  0.0000  0.0000
CYLINDER  6  1  5.57510  73.0249  0.0000
UNIT  25
COM='Basket Fuel Tube - Fuel Up        Radial Shifted toward    0  Degrees'
CYLINDER  3  1  5.2578  73.0249  0.0000
HOLE  23  0.1777  0.0000  13.9484
CYLINDER  6  1  5.57510  73.0249  0.0000
UNIT  26
COM='Fueled Annular Sections       Tube  6  '
'Aluminum Inner
CYLINDER  3  1  2.9100  59.0750  0.0000
CYLINDER  2  1  2.911  59.0750  0.0000
'Fuel Annulus    1
CYLINDER  3  1  3.0994  59.0750  0.0000
CYLINDER  2  1  3.1094  59.0750  0.0000
CYLINDER  1  1  3.2133  59.0750  0.0000
CYLINDER  2  1  3.2233  59.0750  0.0000
'Fuel Annulus    2
CYLINDER  3  1  3.9218  59.0750  0.0000
CYLINDER  2  1  3.9318  59.0750  0.0000
CYLINDER  1  1  4.0357  59.0750  0.0000
CYLINDER  2  1  4.0457  59.0750  0.0000
'Fuel Annulus    3
CYLINDER  3  1  4.7442  59.0750  0.0000
CYLINDER  2  1  4.7542  59.0750  0.0000
CYLINDER  1  1  4.8581  59.0750  0.0000
CYLINDER  2  1  4.8681  59.0750  0.0000
'Aluminum Outer
CYLINDER  3  1  5.0700  59.0750  0.0000
CYLINDER  2  1  5.0799  59.0750  0.0000
UNIT  27
COM='Axial Clad Sections       Tube  6  '
'Aluminum Inner
CYLINDER  3  1  2.9100  0.0005  0.0000
CYLINDER  2  1  2.911  0.0005  0.0000
'Clad Axial End Piece    1
CYLINDER  3  1  3.0994  0.0005  0.0000
CYLINDER  2  1  3.2233  0.0005  0.0000
'Clad Axial End Piece    2
CYLINDER  3  1  3.9218  0.0005  0.0000
CYLINDER  2  1  4.0457  0.0005  0.0000
'Clad Axial End Piece    3
CYLINDER  3  1  4.7442  0.0005  0.0000
CYLINDER  2  1  4.8681  0.0005  0.0000
'Aluminum Outer
CYLINDER  3  1  5.0700  0.0005  0.0000
CYLINDER  2  1  5.0799  0.0005  0.0000
UNIT  28
COM='Fuel Element     Tube  6'
CYLINDER  3  1  5.0800  59.0763  0.0000
HOLE  27  0.0000  0.0000  0.0000
HOLE  26  0.0000  0.0000  0.0006
HOLE  27  0.0000  0.0000  59.0757
UNIT  29
COM='Basket Fuel Tube - Fuel Down        Radial Shifted toward    60  Degrees'
CYLINDER  3  1  5.2578  73.0249  0.0000
HOLE  28  0.0889  0.1539  0.0000
CYLINDER  6  1  5.57510  73.0249  0.0000
UNIT  30
COM='Basket Fuel Tube - Fuel Up        Radial Shifted toward    60  Degrees'
CYLINDER  3  1  5.2578  73.0249  0.0000
HOLE  28  0.0889  0.1539  13.9484
CYLINDER  6  1  5.57510  73.0249  0.0000
UNIT  31
COM='Fueled Annular Sections       Tube  7  '
'Aluminum Inner
CYLINDER  3  1  2.9100  59.0750  0.0000
CYLINDER  2  1  2.911  59.0750  0.0000
'Fuel Annulus    1
CYLINDER  3  1  3.0994  59.0750  0.0000
CYLINDER  2  1  3.1094  59.0750  0.0000
CYLINDER  1  1  3.2133  59.0750  0.0000
CYLINDER  2  1  3.2233  59.0750  0.0000
```

```
'Fuel Annulus    2
CYLINDER  3  1  3.9218  59.0750  0.0000
CYLINDER  2  1  3.9318  59.0750  0.0000
CYLINDER  1  1  4.0357  59.0750  0.0000
CYLINDER  2  1  4.0457  59.0750  0.0000
'Fuel Annulus    3
CYLINDER  3  1  4.7442  59.0750  0.0000
CYLINDER  2  1  4.7542  59.0750  0.0000
CYLINDER  1  1  4.8581  59.0750  0.0000
CYLINDER  2  1  4.8681  59.0750  0.0000
'Aluminum Outer
CYLINDER  3  1  5.0700  59.0750  0.0000
CYLINDER  2  1  5.0799  59.0750  0.0000
UNIT  32
COM='Axial Clad Sections       Tube  7  '
'Aluminum Inner
CYLINDER  3  1  2.9100  0.0005  0.0000
CYLINDER  2  1  2.911  0.0005  0.0000
'Clad Axial End Piece    1
CYLINDER  3  1  3.0994  0.0005  0.0000
CYLINDER  2  1  3.2233  0.0005  0.0000
'Clad Axial End Piece    2
CYLINDER  3  1  3.9218  0.0005  0.0000
CYLINDER  2  1  4.0457  0.0005  0.0000
'Clad Axial End Piece    3
CYLINDER  3  1  4.7442  0.0005  0.0000
CYLINDER  2  1  4.8681  0.0005  0.0000
'Aluminum Outer
CYLINDER  3  1  5.0700  0.0005  0.0000
CYLINDER  2  1  5.0799  0.0005  0.0000
UNIT  33
COM='Fuel Element     Tube  7'
CYLINDER  3  1  5.0800  59.0763  0.0000
HOLE  32  0.0000  0.0000  0.0000
HOLE  31  0.0000  0.0000  0.0006
HOLE  32  0.0000  0.0000  59.0757
UNIT  34
COM='Basket Fuel Tube - Fuel Down        Radial Shifted toward    120  Degrees'
CYLINDER  3  1  5.2578  73.0249  0.0000
HOLE  33  -0.0889  0.1539  0.0000
CYLINDER  6  1  5.57510  73.0249  0.0000
UNIT  35
COM='Basket Fuel Tube - Fuel Up        Radial Shifted toward    120  Degrees'
CYLINDER  3  1  5.2578  73.0249  0.0000
HOLE  33  -0.0889  0.1539  13.9484
CYLINDER  6  1  5.57510  73.0249  0.0000
UNIT  36
COM='Basket Bottom Plate Hole '
CYLINDER  3  1  1.27  1.2190  0.0000
UNIT  37
COM='Basket Bottom Plate '
CYLINDER  6  1  16.8466  1.2190  0.0000
HOLE  36  0.0000  0.0000  0.0000
HOLE  36  11.1506  0.0000  0.0000
HOLE  36  5.5753  9.6567  0.0000
HOLE  36  -5.5753  9.6567  0.0000
HOLE  36  -11.1506  0.0000  0.0000
HOLE  36  -5.5753  -9.6567  0.0000
HOLE  36  5.5753  -9.6567  0.0000
UNIT  38
COM='Basket Fuel Down'
CYLINDER  3  1  16.7260  73.0249  0.0000
HOLE  4  0.0000  0.0000  0.0000
HOLE  9  11.1506  0.0000  0.0000
HOLE  14  5.5753  9.6567  0.0000
HOLE  19  -5.5753  9.6567  0.0000
HOLE  24  -11.1506  0.0000  0.0000
HOLE  29  -5.5753  -9.6567  0.0000
HOLE  34  5.5753  -9.6567  0.0000
CYLINDER  3  1  16.8466  73.0249  0.0000
UNIT  39
COM='Basket Fuel Up'
CYLINDER  3  1  16.7260  73.0249  0.0000
HOLE  5  0.0000  0.0000  0.0000
HOLE  10  11.1506  0.0000  0.0000
HOLE  15  5.5753  9.6567  0.0000
HOLE  20  -5.5753  9.6567  0.0000
HOLE  25  -11.1506  0.0000  0.0000
HOLE  30  -5.5753  -9.6567  0.0000
HOLE  35  5.5753  -9.6567  0.0000
CYLINDER  3  1  16.8466  73.0249  0.0000
UNIT  40
COM='Cask Cavity '
CYLINDER  3  1  16.9863  445.4652  0.0000
HOLE  37  0.0000  0.0000  0.0001
HOLE  39  0.0000  0.0000  1.2192
HOLE  37  0.0000  0.0000  74.2443
HOLE  38  0.0000  0.0000  75.4634
HOLE  37  0.0000  0.0000  148.4885
HOLE  39  0.0000  0.0000  149.7076
HOLE  37  0.0000  0.0000  222.7327
HOLE  38  0.0000  0.0000  223.9518
HOLE  37  0.0000  0.0000  296.9769
HOLE  39  0.0000  0.0000  298.1960
HOLE  37  0.0000  0.0000  371.2211
HOLE  38  0.0000  0.0000  372.4402
```

```
 UNIT  41
 COM='Cask Shield Radial Configuration '
 CYLINDER  3  1  16.9863  445.4652  0.0000
 HOLE  40  0.0000  0.0000  0.0000
 CYLINDER  8  1  18.9103  445.4652  0.0000
 CYLINDER  5  1  33.4645  445.4652  0.0000
 CYLINDER  8  1  36.5189  445.4652  0.0000
 CYLINDER  9  1  49.2189  445.4652  0.0000
 CYLINDER  8  1  49.8183  445.4652  0.0000
 CUBOID  9  1  4P49.8183  445.4652  0.0000
 UNIT  42
 COM='LWT Lid '
 CYLINDER  8  1  36.5189  28.5750  0.5994
 CYLINDER  9  1  49.8183  28.5750  0.5994
 CYLINDER  8  1  49.8183  28.5750  0.0000
 CUBOID  9  1  4P49.8183  28.5750  0.0000
 UNIT  43
 COM='LWT Bottom Weldment '
 CYLINDER  5  1  26.3525  16.5100  8.8900
 CYLINDER  8  1  36.5189  26.0706  0.0000
 CYLINDER  9  1  49.8183  26.0706  0.0000
 CYLINDER  8  1  49.8183  26.6700  0.0000
 CUBOID  9  1  4P49.8183  26.6700  0.0000
 GLOBAL UNIT  44
 COM='LWT Cask '
 ARRAY  1  -49.8183  -49.8183  0.0000
 END GEOM
 READ ARRAY
 ARA=1  NUX=1  NUY=1  NUZ=3  FILL  43 41 42  END FILL
 END ARRAY
 READ BOUNDS    ALL=MIRROR    END BOUNDS
 END DATA


**** PROBLEM PARAMETERS ****

LIB 27GROUPNDF4  LIBRARY
MXX            9 MIXTURES
MSC           11 COMPOSITION SPECIFICATIONS
IZM            3 MATERIAL ZONES
GE  LATTICECELL  GEOMETRY
MORE           0 0/1 DO NOT READ/READ OPTIONAL PARAMETER DATA
MSLN           0 FUEL SOLUTIONS

**** PROBLEM COMPOSITION DESCRIPTION ****

SC  URANIUM      STANDARD COMPOSITION
MX             1 MIXTURE NO.
VF        1.0000 VOLUME FRACTION
ROTH      0.4084 SPECIFIED DENSITY
NEL            1 NO. ELEMENTS
ICP            1 0/1 MIXTURE/COMPOUND
TEMP       293.0 DEG KELVIN
           92000      1.00 ATOM/MOLECULE
                         92235    85.000 WT%
                         92238    15.000 WT%
END

SC  AL           STANDARD COMPOSITION
MX             1 MIXTURE NO.
VF        1.0000 VOLUME FRACTION
ROTH      0.2957 SPECIFIED DENSITY
NEL            1 NO. ELEMENTS
ICP            1 0/1 MIXTURE/COMPOUND
TEMP       293.0 DEG KELVIN
           13027      1.00 ATOM/MOLECULE
END

SC  AL           STANDARD COMPOSITION
MX             2 MIXTURE NO.
VF        1.0000 VOLUME FRACTION
ROTH      2.7020 THEORETICAL DENSITY
NEL            1 NO. ELEMENTS
ICP            1 0/1 MIXTURE/COMPOUND
TEMP       293.0 DEG KELVIN
           13027      1.00 ATOM/MOLECULE
END

SC  H2O          STANDARD COMPOSITION
MX             3 MIXTURE NO.
VF        1.0000 VOLUME FRACTION
ROTH      0.9998 SPECIFIED DENSITY
NEL            2 NO. ELEMENTS
ICP            1 0/1 MIXTURE/COMPOUND
TEMP       293.0 DEG KELVIN
            1001      2.00 ATOMS/MOLECULE
            8016      1.00 ATOM/MOLECULE
END

SC  ARBMGLC      STANDARD COMPOSITION
MX             4 MIXTURE NO.
VF        0.5840 VOLUME FRACTION
ROTH      0.9437 SPECIFIED DENSITY
NEL            3 NO. ELEMENTS
ICP            1 0/1 MIXTURE/COMPOUND
            6012      2.00 ATOMS/MOLECULE
```

```
            1001      6.00 ATOMS/MOLECULE
            8016      2.00 ATOMS/MOLECULE
END

SC  H2O          STANDARD COMPOSITION
MX             4 MIXTURE NO.
VF        0.4160 VOLUME FRACTION
ROTH      0.9982 THEORETICAL DENSITY
NEL            2 NO. ELEMENTS
ICP            1 0/1 MIXTURE/COMPOUND
TEMP       293.0 DEG KELVIN
            1001      2.00 ATOMS/MOLECULE
            8016      1.00 ATOM/MOLECULE
END

SC  PB           STANDARD COMPOSITION
MX             5 MIXTURE NO.
VF        1.0000 VOLUME FRACTION
ROTH     11.3440 THEORETICAL DENSITY
NEL            1 NO. ELEMENTS
ICP            1 0/1 MIXTURE/COMPOUND
TEMP       293.0 DEG KELVIN
            82000      1.00 ATOM/MOLECULE
END

SC  SS304        STANDARD COMPOSITION
MX             6 MIXTURE NO.
VF        1.0000 VOLUME FRACTION
ROTH      7.9200 THEORETICAL DENSITY
NEL            4 NO. ELEMENTS
ICP            0 0/1 MIXTURE/COMPOUND
TEMP       293.0 DEG KELVIN
            24304    19.000 WT%
            25055     2.000 WT%
            26304    69.500 WT%
            28304     9.500 WT%
END

SC  AL           STANDARD COMPOSITION
MX             7 MIXTURE NO.
VF        1.0000 VOLUME FRACTION
ROTH      2.7020 THEORETICAL DENSITY
NEL            1 NO. ELEMENTS
ICP            1 0/1 MIXTURE/COMPOUND
TEMP       293.0 DEG KELVIN
            13027      1.00 ATOM/MOLECULE
END

SC  SS304        STANDARD COMPOSITION
MX             8 MIXTURE NO.
VF        1.0000 VOLUME FRACTION
ROTH      7.9200 THEORETICAL DENSITY
NEL            4 NO. ELEMENTS
ICP            0 0/1 MIXTURE/COMPOUND
TEMP       293.0 DEG KELVIN
            24304    19.000 WT%
            25055     2.000 WT%
            26304    69.500 WT%
            28304     9.500 WT%
END

SC  H2O          STANDARD COMPOSITION
MX             9 MIXTURE NO.
VF        1.0000 VOLUME FRACTION
ROTH      0.0001 SPECIFIED DENSITY
NEL            2 NO. ELEMENTS
ICP            1 0/1 MIXTURE/COMPOUND
TEMP       293.0 DEG KELVIN
            1001      2.00 ATOMS/MOLECULE
            8016      1.00 ATOM/MOLECULE
END

**** PROBLEM GEOMETRY ****

CTP SYMMSLABCELL CELL TYPE
PITCH     0.6342 CM CENTER TO CENTER SPACING
FUELOD    0.1039 CM FUEL DIAMETER OR SLAB THICKNESS
MFUEL          1 MIXTURE NO. OF FUEL
MMOD           3 MIXTURE NO. OF MODERATOR
CLADOD    0.1239 CM CLAD OUTER DIAMETER
MCLAD          2 MIXTURE NO. OF CLAD

ZONE SPECIFICATIONS FOR LATTICECELL GEOMETRY

              ZONE  1 IS FUEL
              ZONE  2 IS CLAD
              ZONE  3 IS MOD
```

```
*********************************************************************************************************************
      ***
***
      ***                              LWT W/ HIFAR MARK III FUEL, ACCIDENT, RADIAL - IN, AXIAL - ALTERNATING
***
      ***
***

*********************************************************************************************************************

*********************************************************************************************************************
      ***
***
      ***                                 ********** DATA LIBRARY INFORMATION **********
***
      ***
***
      ***          UNIT                                                VOLUME
***
      ***         NUMBER               DATA SET NAME                   NAME        UNIT FUNCTION
***
      ***         ------               -------------                   ----        -------------
***
      ***
***
      ***           89     M:\scale43\DATALIB\FT89F001                              STANDARD COMPOSITION LIBRARY
***
      ***
***
      ***           82     M:\scale43\DATALIB\FT82F001                              CROSS SECTION LIBRARY
***
      ***
***
      ***           11     K:\HJP\LWT\ANSTO\Crit\HIFAR Mark III_v1.1\Ac             SHORT CROSS SECTION LIBRARY
***
      ***
***
      ***           90     K:\HJP\LWT\ANSTO\Crit\HIFAR Mark III_v1.1\Ac             INPUT DATA DIRECT ACCESS
***
      ***
***

*********************************************************************************************************************

*********************************************************************************************************************
      ***
***
      ***
***
      ***                                    STANDARD COMPOSITION LIBRARY DATA
***
      ***                                    ---------------------------------
***
      ***
***
      ***            UNIT NUMBER  :  89
***
      ***
***
      ***            DATASET NAME :  M:\scale43\DATALIB\FT89F001
***
      ***
***
      ***            LIBRARY TITLE:  SCALE-4 STANDARD COMPOSITION LIBRARY
***
      ***                            637 STANDARD COMPOSITIONS, 490 NUCLIDES
***
      ***                            90 ELEMENTS WITH VARIABLE ISOTOPIC DISTRBUTIONS.
***
      ***
***
      ***            CREATION DATE:   6/30/95
***
      ***
***
      ***
***
      ***
***
      ***                                       CROSS SECTION LIBRARY DATA
***
      ***                                      ----------------------------
***
      ***
***
      ***            UNIT NUMBER  :  82
***
      ***
***
      ***            DATASET NAME :  M:\scale43\DATALIB\FT82F001
***
      ***
***
      ***            LIBRARY TITLE:  SCALE 4.2 - 27 GROUP NEUTRON GROUP LIBRARY
***
```

```
      ***                          BASED ON ENDF-B VERSION 4 DATA
***
      ***                             COMPILED FOR NRC     1/27/89
***
      ***                                LAST UPDATED                                          08/12/94
***
      ***                                   L.M.PETRIE   -   ORNL
***
      ***
***
      ***
***
      ***
***
      ***
***
```

****

****

M I X I N G T A B L E

ENTRY	MIXTURE	ISOTOPE	NUMBER DENSITY	NEW IDENTIFIER
1	1	92235	8.89418E-04	1092235
2	1	92238	1.54974E-04	1092238
3	1	13027	6.59980E-03	1013027
4	2	13027	6.03066E-02	2013027
5	7	13027	6.03066E-02	7013027
6	3	1001	6.68762E-02	3001001
7	4	1001	5.98801E-02	4001001
8	9	1001	6.68896E-06	9001001
9	3	8016	3.34381E-02	3008016
10	4	8016	2.45894E-02	4008016
11	9	8016	3.34448E-06	9008016
12	4	6012	1.07014E-02	4006012
13	5	82000	3.29690E-02	5082000
14	6	24304	1.74286E-02	6024304
15	8	24304	1.74286E-02	8024304
16	6	25055	1.73633E-03	6025055
17	8	25055	1.73633E-03	8025055
18	6	26304	5.93579E-02	6026304
19	8	26304	5.93579E-02	8026304
20	6	28304	7.72070E-03	6028304
21	8	28304	7.72070E-03	8028304

VOLUME FRACTION OF FISSILE MATERIAL IN THE CORE= 3.89437E-03

START TYPE 0 WAS USED.

THE NEUTRONS WERE STARTED WITH A FLAT DISTRIBUTION IN A CUBOID DEFINED BY:
+X= 1.68500E+01 -X=-1.68500E+01 +Y=-1.68500E+01 -Y= 1.68500E+01 +Z= 4.72140E+02 -Z= 2.66700E+01
THE FLAG TO START NEUTRONS IN THE REFLECTOR WAS TURNED OFF

0.72350 MINUTES WERE REQUIRED FOR STARTING. TOTAL ELAPSED TIME IS 0.80000 MINUTES.

GENERATION	GENERATION K-EFFECTIVE	ELAPSED TIME MINUTES	AVERAGE K-EFFECTIVE	AVG K-EFF DEVIATION	MATRIX K-EFFECTIVE	MATRIX K-EFF DEVIATION
KENO MESSAGE NUMBER K5-132		WARNING....ONLY	791 INDEPENDENT FISSION POINTS WERE GENERATED			
1	7.09889E-01	8.01833E-01	1.00000E+00	0.00000E+00	0.00000E+00	0.00000E+00
KENO MESSAGE NUMBER K5-132		WARNING....ONLY	791 INDEPENDENT FISSION POINTS WERE GENERATED			
2	7.07974E-01	8.05500E-01	1.00000E+00	0.00000E+00	0.00000E+00	0.00000E+00
KENO MESSAGE NUMBER K5-132		WARNING....ONLY	818 INDEPENDENT FISSION POINTS WERE GENERATED			
3	7.28123E-01	8.09167E-01	7.28123E-01	0.00000E+00	0.00000E+00	0.00000E+00
4	6.99889E-01	8.12833E-01	7.14006E-01	1.41169E-02	0.00000E+00	0.00000E+00
5	7.45916E-01	8.16500E-01	7.24642E-01	1.34002E-02	0.00000E+00	0.00000E+00
6	7.24359E-01	8.20167E-01	7.24572E-01	9.47566E-03	0.00000E+00	0.00000E+00
7	7.18195E-01	8.23833E-01	7.23296E-01	7.44978E-03	0.00000E+00	0.00000E+00
8	7.14250E-01	8.27500E-01	7.21789E-01	6.26678E-03	0.00000E+00	0.00000E+00
9	7.20630E-01	8.31167E-01	7.21623E-01	5.29899E-03	0.00000E+00	0.00000E+00
10	7.14943E-01	8.34833E-01	7.20788E-01	4.66441E-03	0.00000E+00	0.00000E+00
11	7.40037E-01	8.38500E-01	7.22927E-01	4.63641E-03	0.00000E+00	0.00000E+00
12	7.51910E-01	8.42167E-01	7.25825E-01	5.05936E-03	0.00000E+00	0.00000E+00
13	7.06498E-01	8.45833E-01	7.24068E-01	4.90206E-03	0.00000E+00	0.00000E+00
14	7.52900E-01	8.49500E-01	7.26471E-01	5.07915E-03	0.00000E+00	0.00000E+00
15	6.88658E-01	8.53167E-01	7.23562E-01	5.50359E-03	0.00000E+00	0.00000E+00
16	7.37354E-01	8.56833E-01	7.24547E-01	5.18969E-03	0.00000E+00	0.00000E+00
17	7.21124E-01	8.60500E-01	7.24319E-01	4.83673E-03	0.00000E+00	0.00000E+00
18	7.52855E-01	8.63167E-01	7.26102E-01	4.86318E-03	0.00000E+00	0.00000E+00
19	7.21886E-01	8.66833E-01	7.25854E-01	4.57489E-03	0.00000E+00	0.00000E+00
20	7.15449E-01	8.70500E-01	7.25276E-01	4.35182E-03	0.00000E+00	0.00000E+00
21	7.45817E-01	8.74167E-01	7.26357E-01	4.25600E-03	0.00000E+00	0.00000E+00
22	6.99200E-01	8.77833E-01	7.25000E-01	4.25981E-03	0.00000E+00	0.00000E+00
23	7.23050E-01	8.81500E-01	7.24907E-01	4.05295E-03	0.00000E+00	0.00000E+00
24	7.03529E-01	8.85167E-01	7.23935E-01	3.98463E-03	0.00000E+00	0.00000E+00
25	7.51812E-01	8.88833E-01	7.25147E-01	3.99570E-03	0.00000E+00	0.00000E+00
26	6.72410E-01	8.92500E-01	7.22950E-01	4.41175E-03	0.00000E+00	0.00000E+00
27	7.41152E-01	8.96167E-01	7.23678E-01	4.29379E-03	0.00000E+00	0.00000E+00
28	6.84907E-01	8.99833E-01	7.22187E-01	4.38657E-03	0.00000E+00	0.00000E+00
29	7.62803E-01	9.03500E-01	7.23691E-01	4.48103E-03	0.00000E+00	0.00000E+00
30	7.34032E-01	9.07167E-01	7.24060E-01	4.33379E-03	0.00000E+00	0.00000E+00
31	7.44923E-01	9.10833E-01	7.24780E-01	4.24311E-03	0.00000E+00	0.00000E+00
32	7.49358E-01	9.13500E-01	7.25599E-01	4.18031E-03	0.00000E+00	0.00000E+00
33	7.39990E-01	9.17167E-01	7.26063E-01	4.06978E-03	0.00000E+00	0.00000E+00
34	7.15728E-01	9.20833E-01	7.25740E-01	3.95376E-03	0.00000E+00	0.00000E+00
35	7.13413E-01	9.25500E-01	7.25367E-01	3.85024E-03	0.00000E+00	0.00000E+00
36	7.58703E-01	9.28167E-01	7.26347E-01	3.86182E-03	0.00000E+00	0.00000E+00
37	7.34892E-01	9.31833E-01	7.26591E-01	3.75780E-03	0.00000E+00	0.00000E+00
38	7.94697E-01	9.35500E-01	7.28483E-01	4.11285E-03	0.00000E+00	0.00000E+00
39	7.23480E-01	9.39167E-01	7.28348E-01	4.00243E-03	0.00000E+00	0.00000E+00
40	7.30759E-01	9.42833E-01	7.28411E-01	3.89620E-03	0.00000E+00	0.00000E+00
41	7.34901E-01	9.46500E-01	7.28578E-01	3.79863E-03	0.00000E+00	0.00000E+00
42	7.39935E-01	9.49167E-01	7.28862E-01	3.71331E-03	0.00000E+00	0.00000E+00
43	7.48304E-01	9.52833E-01	7.29336E-01	3.65253E-03	0.00000E+00	0.00000E+00
44	7.17041E-01	9.56500E-01	7.29043E-01	3.57650E-03	0.00000E+00	0.00000E+00
45	7.17662E-01	9.60167E-01	7.28778E-01	3.50235E-03	0.00000E+00	0.00000E+00
46	7.25939E-01	9.63833E-01	7.28714E-01	3.42244E-03	0.00000E+00	0.00000E+00
47	7.47779E-01	9.68500E-01	7.29138E-01	3.37224E-03	0.00000E+00	0.00000E+00
48	7.16671E-01	9.71167E-01	7.28867E-01	3.30923E-03	0.00000E+00	0.00000E+00
49	7.05373E-01	9.74833E-01	7.28367E-01	3.27641E-03	0.00000E+00	0.00000E+00
50	6.93529E-01	9.78500E-01	7.27641E-01	3.28852E-03	0.00000E+00	0.00000E+00
51	7.34499E-01	9.82167E-01	7.27781E-01	3.22375E-03	0.00000E+00	0.00000E+00
52	7.09665E-01	9.85833E-01	7.27419E-01	3.17932E-03	0.00000E+00	0.00000E+00
53	7.51152E-01	9.89500E-01	7.27884E-01	3.15091E-03	0.00000E+00	0.00000E+00
54	7.31311E-01	9.93167E-01	7.27950E-01	3.09043E-03	0.00000E+00	0.00000E+00
55	7.07805E-01	9.96833E-01	7.27570E-01	3.05529E-03	0.00000E+00	0.00000E+00
.						
.						
.						
.						
.						
1185	7.39458E-01	5.71767E+00	7.26398E-01	6.71494E-04	0.00000E+00	0.00000E+00
1186	7.76993E-01	5.72233E+00	7.26441E-01	6.72286E-04	0.00000E+00	0.00000E+00
1187	7.42277E-01	5.72683E+00	7.26455E-01	6.71852E-04	0.00000E+00	0.00000E+00
1188	7.23662E-01	5.73233E+00	7.26452E-01	6.71289E-04	0.00000E+00	0.00000E+00
1189	6.93317E-01	5.73600E+00	7.26424E-01	6.71304E-04	0.00000E+00	0.00000E+00
1190	7.45434E-01	5.73967E+00	7.26440E-01	6.70929E-04	0.00000E+00	0.00000E+00
1191	7.33420E-01	5.74600E+00	7.26446E-01	6.70391E-04	0.00000E+00	0.00000E+00
1192	7.00802E-01	5.75067E+00	7.26425E-01	6.70174E-04	0.00000E+00	0.00000E+00
1193	7.01500E-01	5.75800E+00	7.26404E-01	6.69938E-04	0.00000E+00	0.00000E+00
1194	7.14325E-01	5.76167E+00	7.26394E-01	6.69452E-04	0.00000E+00	0.00000E+00
1195	7.37661E-01	5.76617E+00	7.26403E-01	6.68957E-04	0.00000E+00	0.00000E+00
1196	7.54176E-01	5.77167E+00	7.26426E-01	6.68802E-04	0.00000E+00	0.00000E+00
1197	7.13691E-01	5.77533E+00	7.26416E-01	6.68327E-04	0.00000E+00	0.00000E+00
1198	7.17434E-01	5.78000E+00	7.26408E-01	6.67810E-04	0.00000E+00	0.00000E+00
1199	7.49003E-01	5.78633E+00	7.26427E-01	6.67519E-04	0.00000E+00	0.00000E+00
1200	7.16163E-01	5.79000E+00	7.26418E-01	6.67016E-04	0.00000E+00	0.00000E+00
1201	7.40547E-01	5.79467E+00	7.26430E-01	6.66564E-04	0.00000E+00	0.00000E+00
1202	6.80678E-01	5.80017E+00	7.26392E-01	6.67099E-04	0.00000E+00	0.00000E+00
1203	7.42750E-01	5.80550E+00	7.26406E-01	6.66682E-04	0.00000E+00	0.00000E+00

KENO MESSAGE NUMBER K5-123 EXECUTION TERMINATED DUE TO COMPLETION OF THE SPECIFIED NUMBER OF GENERATIONS.

LIFETIME = 1.12919E-04 + OR - 1.14508E-07 GENERATION TIME = 8.97425E-05 + OR - 1.08694E-07
NU BAR = 2.41917E+00 + OR - 7.72772E-06 AVERAGE FISSION GROUP = 2.45962E+01 + OR - 2.74778E-03
ENERGY(EV) OF THE AVERAGE LETHARGY CAUSING FISSION = 3.03848E-02 + OR - 7.72864E-05

NO. OF INITIAL GENERATIONS SKIPPED	AVERAGE K-EFFECTIVE	DEVIATION	67 PER CENT CONFIDENCE INTERVAL	95 PER CENT CONFIDENCE INTERVAL	99 PER CENT CONFIDENCE INTERVAL	NUMBER OF HISTORIES
3	0.72640	+ OR - 0.00067	0.72574 TO 0.72707	0.72507 TO 0.72774	0.72440 TO 0.72841	1200000
4	0.72643	+ OR - 0.00067	0.72576 TO 0.72709	0.72509 TO 0.72776	0.72442 TO 0.72843	1199000
5	0.72641	+ OR - 0.00067	0.72574 TO 0.72708	0.72507 TO 0.72775	0.72441 TO 0.72841	1198000
6	0.72641	+ OR - 0.00067	0.72574 TO 0.72708	0.72508 TO 0.72775	0.72441 TO 0.72842	1197000
7	0.72642	+ OR - 0.00067	0.72575 TO 0.72709	0.72508 TO 0.72776	0.72441 TO 0.72843	1196000
8	0.72643	+ OR - 0.00067	0.72576 TO 0.72710	0.72509 TO 0.72777	0.72442 TO 0.72844	1195000
9	0.72643	+ OR - 0.00067	0.72576 TO 0.72710	0.72509 TO 0.72777	0.72442 TO 0.72844	1194000
10	0.72644	+ OR - 0.00067	0.72577 TO 0.72711	0.72510 TO 0.72778	0.72443 TO 0.72845	1193000
11	0.72643	+ OR - 0.00067	0.72576 TO 0.72710	0.72509 TO 0.72777	0.72442 TO 0.72844	1192000
12	0.72641	+ OR - 0.00067	0.72574 TO 0.72708	0.72507 TO 0.72775	0.72440 TO 0.72842	1191000
17	0.72643	+ OR - 0.00067	0.72576 TO 0.72710	0.72509 TO 0.72778	0.72441 TO 0.72845	1186000
22	0.72643	+ OR - 0.00067	0.72576 TO 0.72710	0.72508 TO 0.72778	0.72441 TO 0.72845	1181000
27	0.72646	+ OR - 0.00067	0.72579 TO 0.72714	0.72511 TO 0.72781	0.72444 TO 0.72849	1176000
32	0.72643	+ OR - 0.00068	0.72575 TO 0.72710	0.72508 TO 0.72778	0.72440 TO 0.72845	1171000
37	0.72640	+ OR - 0.00068	0.72572 TO 0.72708	0.72504 TO 0.72776	0.72437 TO 0.72843	1166000
42	0.72632	+ OR - 0.00068	0.72564 TO 0.72700	0.72497 TO 0.72768	0.72429 TO 0.72835	1161000
47	0.72630	+ OR - 0.00068	0.72562 TO 0.72698	0.72494 TO 0.72766	0.72426 TO 0.72834	1156000
52	0.72636	+ OR - 0.00068	0.72568 TO 0.72704	0.72500 TO 0.72773	0.72432 TO 0.72841	1151000
57	0.72637	+ OR - 0.00068	0.72569 TO 0.72705	0.72500 TO 0.72774	0.72432 TO 0.72842	1146000
.						
.						
.						
.						
1127	0.72607	+ OR - 0.00255	0.72352 TO 0.72862	0.72097 TO 0.73117	0.71842 TO 0.73372	76000
1132	0.72554	+ OR - 0.00252	0.72302 TO 0.72807	0.72050 TO 0.73059	0.71798 TO 0.73311	71000
1137	0.72634	+ OR - 0.00267	0.72368 TO 0.72901	0.72101 TO 0.73168	0.71834 TO 0.73434	66000
1142	0.72825	+ OR - 0.00270	0.72556 TO 0.73095	0.72286 TO 0.73364	0.72017 TO 0.73634	61000
1147	0.72781	+ OR - 0.00288	0.72493 TO 0.73069	0.72205 TO 0.73356	0.71917 TO 0.73644	56000
1152	0.72812	+ OR - 0.00281	0.72531 TO 0.73093	0.72250 TO 0.73374	0.71969 TO 0.73656	51000
1157	0.72726	+ OR - 0.00306	0.72420 TO 0.73033	0.72114 TO 0.73339	0.71807 TO 0.73645	46000
1162	0.72760	+ OR - 0.00327	0.72433 TO 0.73087	0.72106 TO 0.73415	0.71778 TO 0.73742	41000
1167	0.72818	+ OR - 0.00344	0.72473 TO 0.73162	0.72129 TO 0.73506	0.71784 TO 0.73851	36000
1172	0.72670	+ OR - 0.00377	0.72293 TO 0.73047	0.71917 TO 0.73423	0.71540 TO 0.73800	31000

NO. OF INITIAL GENERATIONS SKIPPED	AVERAGE K-EFFECTIVE	DEVIATION	67 PER CENT CONFIDENCE INTERVAL	95 PER CENT CONFIDENCE INTERVAL	99 PER CENT CONFIDENCE INTERVAL	NUMBER OF HISTORIES
1177	0.72557	+ OR - 0.00416	0.72142 TO 0.72973	0.71726 TO 0.73389	0.71310 TO 0.73805	26000
1182	0.72724	+ OR - 0.00502	0.72222 TO 0.73227	0.71719 TO 0.73729	0.71217 TO 0.74232	21000
1187	0.72279	+ OR - 0.00542	0.71737 TO 0.72820	0.71195 TO 0.73362	0.70654 TO 0.73903	16000
1192	0.72436	+ OR - 0.00676	0.71759 TO 0.73112	0.71083 TO 0.73789	0.70406 TO 0.74465	11000
1197	0.72443	+ OR - 0.01038	0.71405 TO 0.73481	0.70367 TO 0.74518	0.69330 TO 0.75556	6000

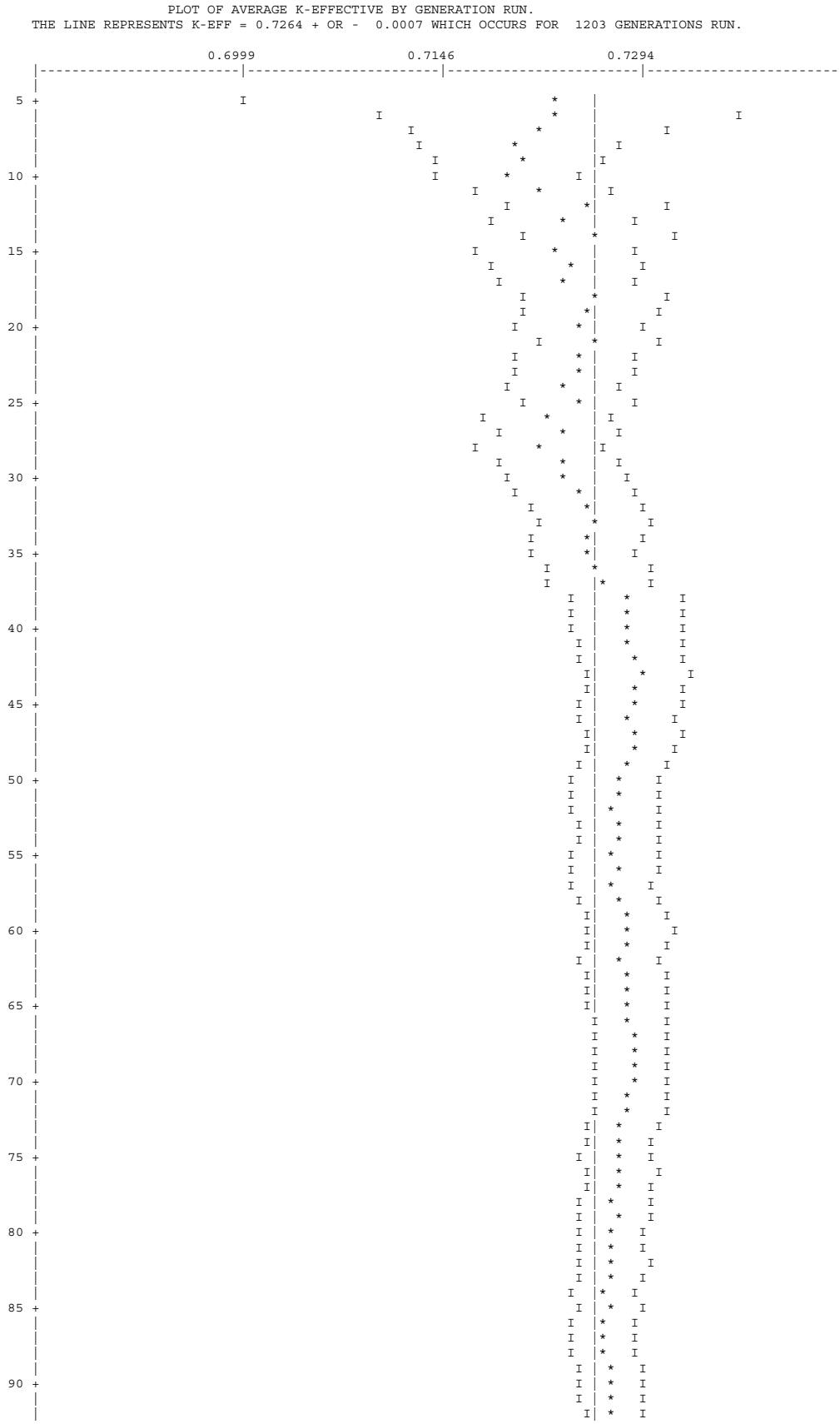
PLOT OF AVERAGE K-EFFECTIVE BY GENERATION RUN.
THE LINE REPRESENTS K-EFF = 0.7264 + OR - 0.0007 WHICH OCCURS FOR 1203 GENERATIONS RUN.
0.6999
0.7146
0.7294
5
10
15
20
25
30
35
40
45
50
55
60
65
70
75
80
85
90

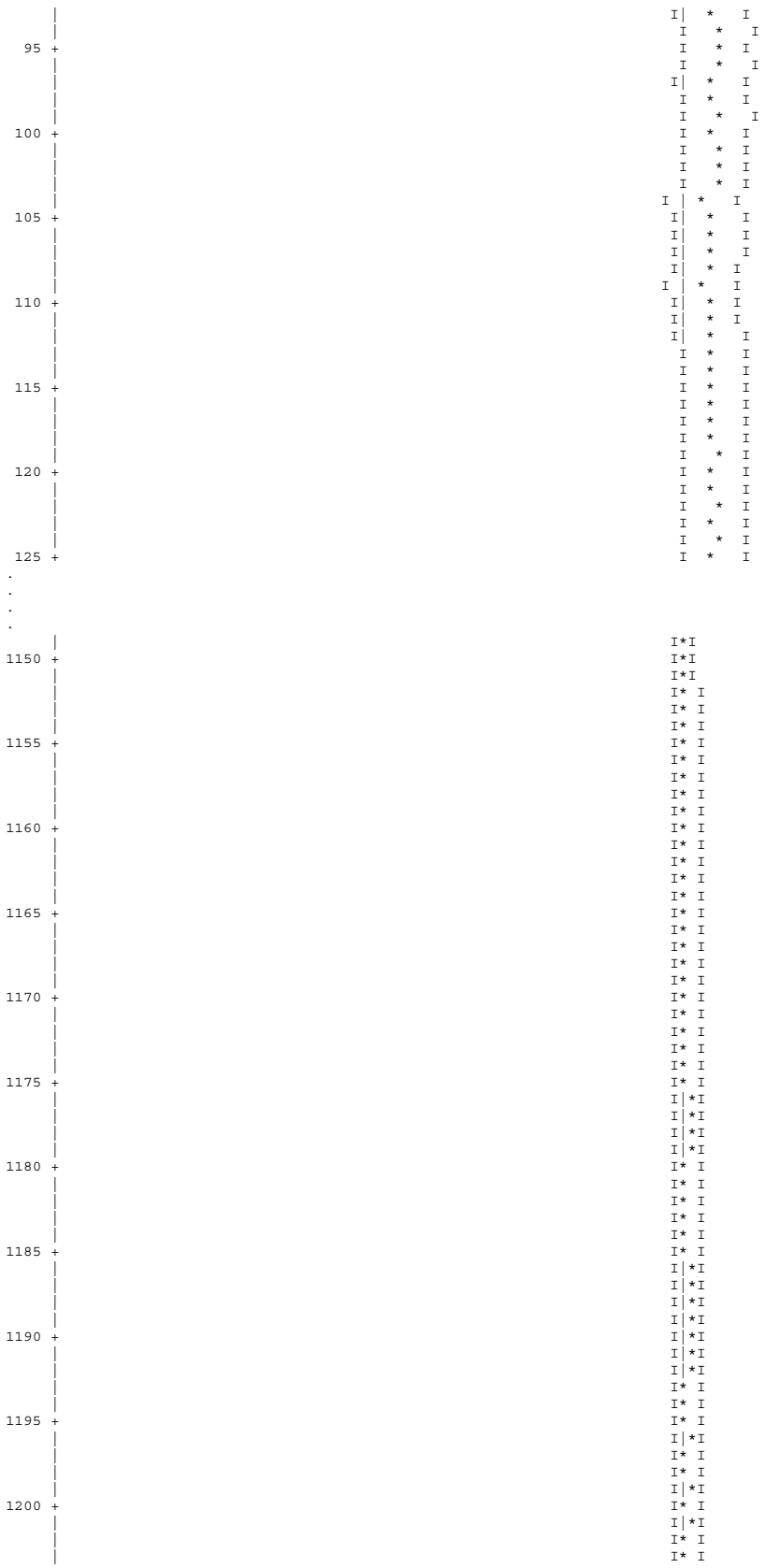

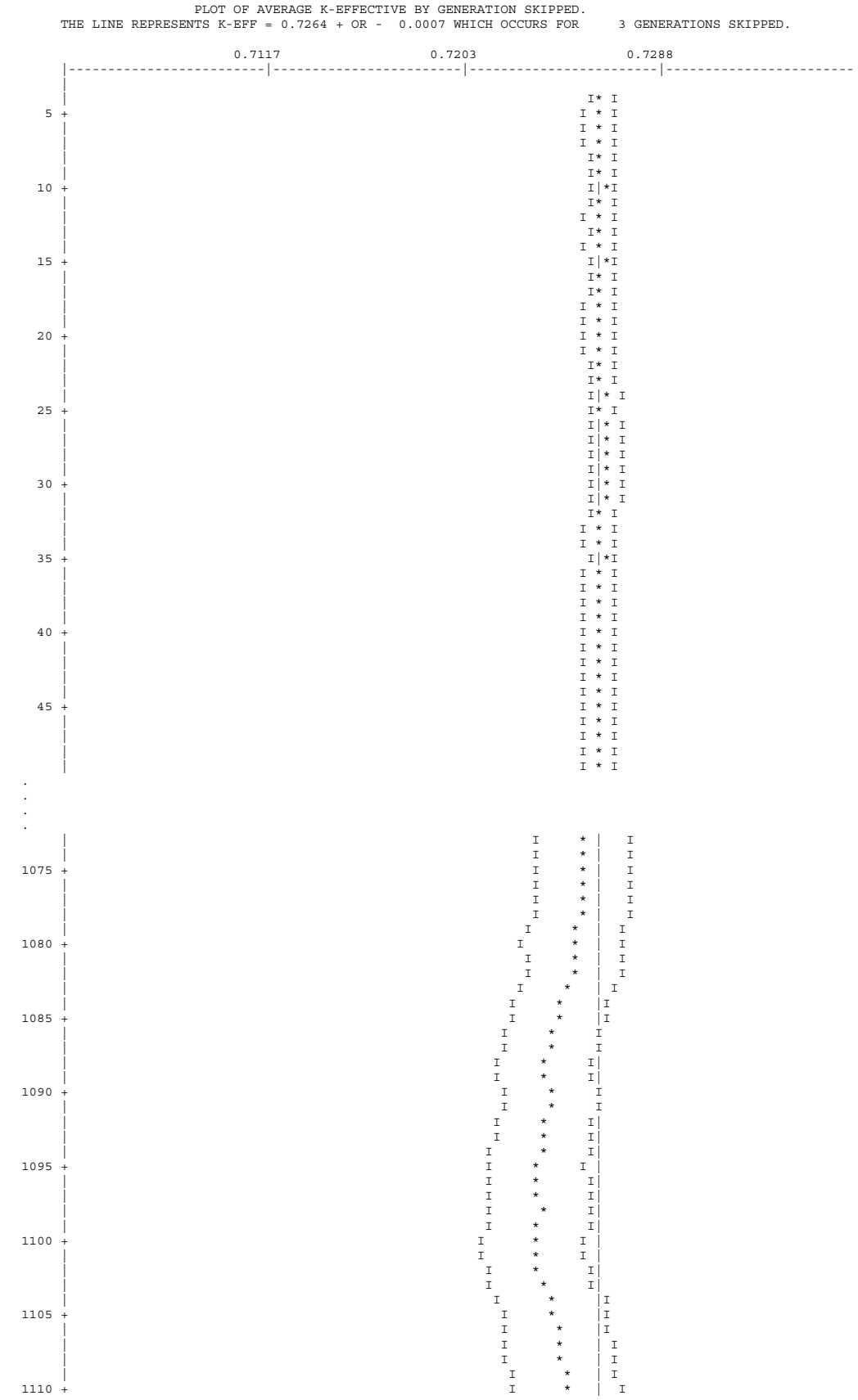
PLOT OF AVERAGE K-EFFECTIVE BY GENERATION SKIPPED.
THE LINE REPRESENTS K-EFF = 0.7264 + OR - 0.0007 WHICH OCCURS FOR 3 GENERATIONS SKIPPED.
0.7117
0.7203
0.7288
5
10
15
20
25
30
35
40
45
1075
1080
1085
1090
1095
1100
1105
1110

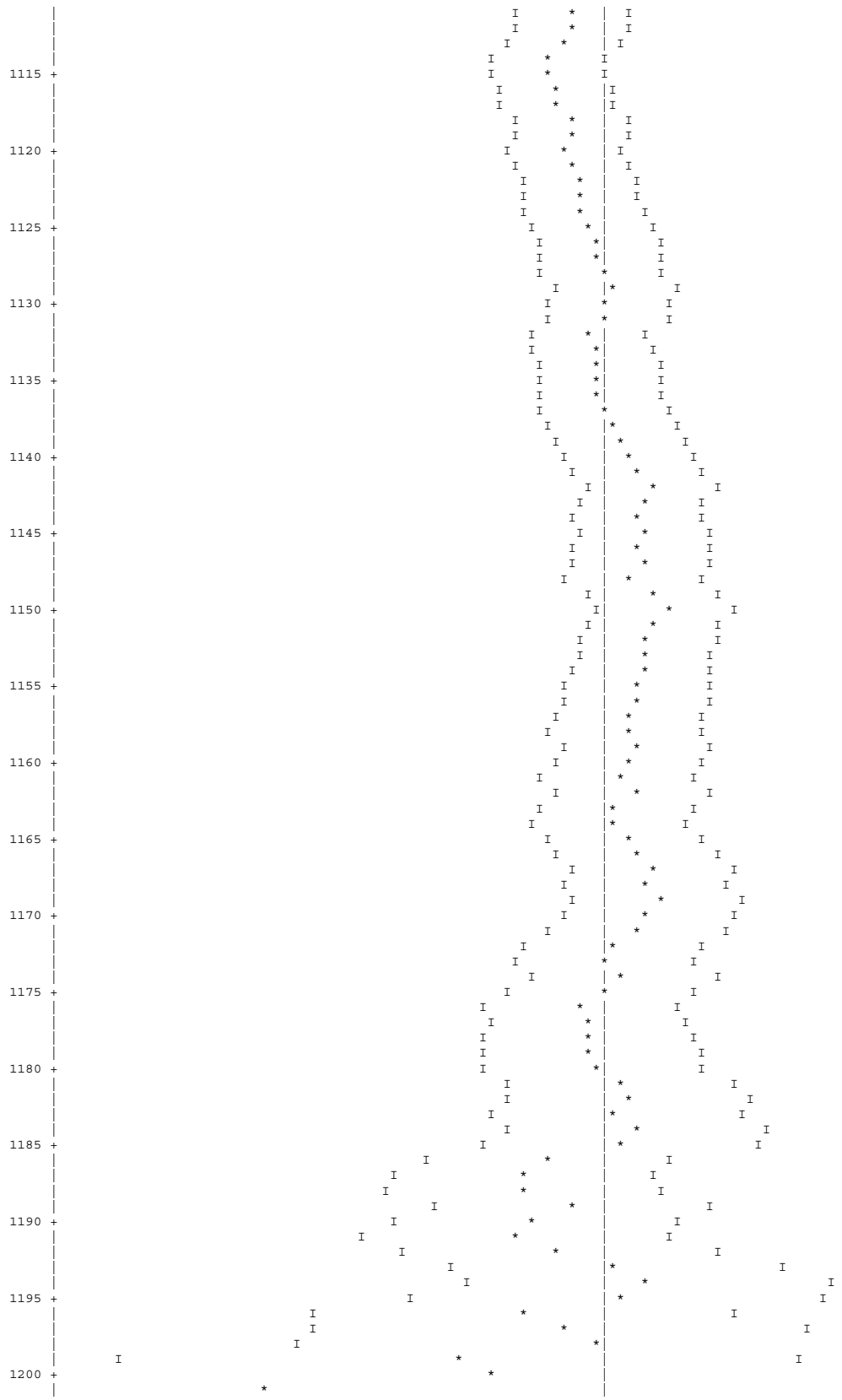
1115
1120
1125
1130
1135
1140
1145
1150
1155
1160
1165
1170
1175
1180
1185
1190
1195
1200

FREQUENCY FOR GENERATIONS 4 TO 1203

```
0.6386 TO 0.6415     *
0.6415 TO 0.6444
0.6444 TO 0.6472
0.6472 TO 0.6501
0.6501 TO 0.6530     *
0.6530 TO 0.6558     **
0.6558 TO 0.6587     **
0.6587 TO 0.6616
0.6616 TO 0.6644     *
0.6644 TO 0.6673     ***
0.6673 TO 0.6702     ****
0.6702 TO 0.6730     ***
0.6730 TO 0.6759     *
0.6759 TO 0.6788     ******
0.6788 TO 0.6816     *********
0.6816 TO 0.6845     *****
0.6845 TO 0.6874     *********
0.6874 TO 0.6902     **********
0.6902 TO 0.6931     ***************
0.6931 TO 0.6960     *************************
0.6960 TO 0.6988     ****************************
0.6988 TO 0.7017     ************************************
0.7017 TO 0.7045     ********************************************
0.7045 TO 0.7074     *********************************************
0.7074 TO 0.7103     ************************************
0.7103 TO 0.7131     ************************************************
0.7131 TO 0.7160     ************************************************************
0.7160 TO 0.7189     ************************************************************
0.7189 TO 0.7217     *********************************************
0.7217 TO 0.7246     ********************************************************************
0.7246 TO 0.7275     ******************************************************************
0.7275 TO 0.7303     ********************************************************
0.7303 TO 0.7332     *******************************************
0.7332 TO 0.7361     ************************************************************************
0.7361 TO 0.7389     ********************************************************
0.7389 TO 0.7418     *******************************************
0.7418 TO 0.7447     ************************************************
0.7447 TO 0.7475     *********************************************
0.7475 TO 0.7504     ************************************
0.7504 TO 0.7533     *********************************************
0.7533 TO 0.7561     ************************
0.7561 TO 0.7590     ********************
0.7590 TO 0.7619     ****************
0.7619 TO 0.7647     ************
0.7647 TO 0.7676     ***************
0.7676 TO 0.7705     ********
0.7705 TO 0.7733     *******
0.7733 TO 0.7762     *********
0.7762 TO 0.7791     **********
0.7791 TO 0.7819     ****
0.7819 TO 0.7848     *
0.7848 TO 0.7877     ***
0.7877 TO 0.7905     ***
0.7905 TO 0.7934     *
0.7934 TO 0.7963     *
```

FREQUENCY FOR GENERATIONS 304 TO 1203

0.6386 TO 0.6415	*
0.6415 TO 0.6444	
0.6444 TO 0.6472	
0.6472 TO 0.6501	
0.6501 TO 0.6530	
0.6530 TO 0.6558	**
0.6558 TO 0.6587	**
0.6587 TO 0.6616	
0.6616 TO 0.6644	*
0.6644 TO 0.6673	**
0.6673 TO 0.6702	***
0.6702 TO 0.6730	**
0.6730 TO 0.6759	*
0.6759 TO 0.6788	*****
0.6788 TO 0.6816	********
0.6816 TO 0.6845	****
0.6845 TO 0.6874	********
0.6874 TO 0.6902	*********
0.6902 TO 0.6931	**********
0.6931 TO 0.6960	**********
0.6960 TO 0.6988	**********
0.6988 TO 0.7017	**********
0.7017 TO 0.7045	**********
0.7045 TO 0.7074	**********
0.7074 TO 0.7103	**********
0.7103 TO 0.7131	**********
0.7131 TO 0.7160	**********
0.7160 TO 0.7189	**********
0.7189 TO 0.7217	**********
0.7217 TO 0.7246	**********
0.7246 TO 0.7275	**********
0.7275 TO 0.7303	**********
0.7303 TO 0.7332	**********
0.7332 TO 0.7361	**********
0.7361 TO 0.7389	**********
0.7389 TO 0.7418	**********
0.7418 TO 0.7447	**********
0.7447 TO 0.7475	**********
0.7475 TO 0.7504	**********
0.7504 TO 0.7533	**********
0.7533 TO 0.7561	**********
0.7561 TO 0.7590	**********
0.7590 TO 0.7619	**********
0.7619 TO 0.7647	*********
0.7647 TO 0.7676	*********
0.7676 TO 0.7705	*******
0.7705 TO 0.7733	******
0.7733 TO 0.7762	*********
0.7762 TO 0.7791	********
0.7791 TO 0.7819	**
0.7819 TO 0.7848	*
0.7848 TO 0.7877	***
0.7877 TO 0.7905	**
0.7905 TO 0.7934	*
0.7934 TO 0.7963	

FREQUENCY FOR GENERATIONS 604 TO 1203

```
0.6386 TO 0.6415     *
0.6415 TO 0.6444
0.6444 TO 0.6472
0.6472 TO 0.6501
0.6501 TO 0.6530
0.6530 TO 0.6558     *
0.6558 TO 0.6587     **
0.6587 TO 0.6616
0.6616 TO 0.6644
0.6644 TO 0.6673     **
0.6673 TO 0.6702     **
0.6702 TO 0.6730     *
0.6730 TO 0.6759
0.6759 TO 0.6788     ****
0.6788 TO 0.6816     ****
0.6816 TO 0.6845     *
0.6845 TO 0.6874     ******
0.6874 TO 0.6902     *****
0.6902 TO 0.6931     *******
0.6931 TO 0.6960     ***************
0.6960 TO 0.6988     ******************
0.6988 TO 0.7017     ********************
0.7017 TO 0.7045     ******************************
0.7045 TO 0.7074     ************************
0.7074 TO 0.7103     ****************
0.7103 TO 0.7131     **************************
0.7131 TO 0.7160     ****************************
0.7160 TO 0.7189     ******************************
0.7189 TO 0.7217     ************************
0.7217 TO 0.7246     ************************************
0.7246 TO 0.7275     ************************
0.7275 TO 0.7303     ******************************
0.7303 TO 0.7332     ******************
0.7332 TO 0.7361     ******************************
0.7361 TO 0.7389     ******************************
0.7389 TO 0.7418     **********************
0.7418 TO 0.7447     ************************
0.7447 TO 0.7475     ********************
0.7475 TO 0.7504     ********************
0.7504 TO 0.7533     ******************
0.7533 TO 0.7561     **********
0.7561 TO 0.7590     ******
0.7590 TO 0.7619     ********
0.7619 TO 0.7647     ******
0.7647 TO 0.7676     *******
0.7676 TO 0.7705     ***
0.7705 TO 0.7733     *****
0.7733 TO 0.7762     ******
0.7762 TO 0.7791     *****
0.7791 TO 0.7819     *
0.7819 TO 0.7848     *
0.7848 TO 0.7877     ***
0.7877 TO 0.7905     **
0.7905 TO 0.7934     *
0.7934 TO 0.7963
```

FREQUENCY FOR GENERATIONS 904 TO 1203

0.6386 TO 0.6415	*
0.6415 TO 0.6444	
0.6444 TO 0.6472	
0.6472 TO 0.6501	
0.6501 TO 0.6530	
0.6530 TO 0.6558	
0.6558 TO 0.6587	**
0.6587 TO 0.6616	
0.6616 TO 0.6644	
0.6644 TO 0.6673	*
0.6673 TO 0.6702	**
0.6702 TO 0.6730	*
0.6730 TO 0.6759	
0.6759 TO 0.6788	***
0.6788 TO 0.6816	***
0.6816 TO 0.6845	*
0.6845 TO 0.6874	***
0.6874 TO 0.6902	****
0.6902 TO 0.6931	***
0.6931 TO 0.6960	*****
0.6960 TO 0.6988	****
0.6988 TO 0.7017	**********
0.7017 TO 0.7045	**********
0.7045 TO 0.7074	**********
0.7074 TO 0.7103	******
0.7103 TO 0.7131	**********
0.7131 TO 0.7160	**********
0.7160 TO 0.7189	**********
0.7189 TO 0.7217	**********
0.7217 TO 0.7246	**********
0.7246 TO 0.7275	********
0.7275 TO 0.7303	**********
0.7303 TO 0.7332	*****
0.7332 TO 0.7361	**********
0.7361 TO 0.7389	**********
0.7389 TO 0.7418	**********
0.7418 TO 0.7447	**********
0.7447 TO 0.7475	**********
0.7475 TO 0.7504	********
0.7504 TO 0.7533	**********
0.7533 TO 0.7561	*****
0.7561 TO 0.7590	***
0.7590 TO 0.7619	*****
0.7619 TO 0.7647	***
0.7647 TO 0.7676	****
0.7676 TO 0.7705	*
0.7705 TO 0.7733	***
0.7733 TO 0.7762	***
0.7762 TO 0.7791	***
0.7791 TO 0.7819	
0.7819 TO 0.7848	
0.7848 TO 0.7877	
0.7877 TO 0.7905	*
0.7905 TO 0.7934	*
0.7934 TO 0.7963	

6.6.13 MOATA Plate Bundles in the LWT Cask

This section contains a truncated sample output file from the evaluation of MOATA plate bundles in the LWT cask. The output file is shown in Figure 6.6.13-1.

Figure 6.6.13-1 Maximum Reactivity MOATA Plate Bundle Configuration

```
        PRIMARY MODULE ACCESS AND INPUT RECORD ( SCALE DRIVER - 95/03/29 - 09:06:37 )
MODULE CSAS25   WILL BE CALLED
  LWT w/ MOATA Mark II Fuel, Accident, Radial - In, Axial - Alternating
  ' Basket Configuration
  '       Fuel Tube OD - Nominal  Fuel Tube Height - Min
  '       Fuel Tube Thick - Min  Fuel Base  Plate - Min
  ' Fuel Plate Configuration
  '       Fuel Plate Width - Max  Fuel Plate Thickness - Nominal
  '       Clad Thickness - Min
  '       Active Fuel Width - Max  Active Fuel Length - Nominal
  '       Fuel Element Height - Min
  ' Spacer/Assembly
  '       Plate Spacer Thickness- Max
  '       Side Plate Thickness - Nominal  Side Plate Width - Nominal
  ' Material Description
  '        U-235 Fuel Mass - Max  Uranium Weight Fraction - Max
  27GROUPNDF4  LATTICECELL
  'Material Description for LWT Analysis - MOATA Mark II Fuel
  URANIUM  1  DEN=0.3093  1.0  293.0  92235 92.0   92238 08.0  END
  AL  1  DEN=0.7718  1.0  293.0      END
  AL  2  1.00  293.0        END
  H2O  3  DEN=0.9998  1.00  293.0      END
  ARBMGLC  0.9437  3  0  1  0
    6012  2  1001  6  8016  2
    4  0.5840          END
  H2O  4  0.4160  293.0        END
  PB  5  1.00  293.0        END
  SS304  6  1.00  293.0        END
  AL  7  1.00  293.0        END
  SS304  8  1.00  293.0        END
  H2O  9  DEN=0.0001  1.00  293.0      END
  END COMP
  SYMMSLABCELL  0.3832  0.1832  1  3  0.2032  2  END

  READ PARAM  TBA=5  TME=90  RUN=YES  PLT=NO
    GEN=1023  NPG=1000        END PARAM
  READ START  XSM=-16.85  XSP=16.85  YSM=16.85  YSP=-16.85
    ZSM=26.67  ZSP=472.14        END START
  READ GEOM
  UNIT  1
  COM='Fuel Plate'
  CUBOID  1  1  2P0.0916  2P3.6608  58.4200  0.0000
  CUBOID  2  1  2P0.1016  2P3.8291  58.4200  0.0000
  CUBOID  3  1  2P0.1916  2P3.9334  58.4200  0.0000
  UNIT  2
  COM='Cavity Material Replacement - Side Plate'
  CUBOID  3  1  2P0.3175  2P3.9334  58.4200  0.0000
  UNIT  3
  COM='Water Gap to Side Plate '
  CUBOID  3  1  2P0.0450  2P3.9334  58.4200  0.0000
  UNIT  4
  COM='Plate Bundle'
  ARRAY  11  -3.4074  -3.9334  0.0000
  UNIT  5
  COM='Fuel Plate'
  CUBOID  1  1  2P3.6608  2P0.0916  58.4200  0.0000
  CUBOID  2  1  2P3.8291  2P0.1016  58.4200  0.0000
  CUBOID  3  1  2P3.9334  2P0.1916  58.4200  0.0000
  UNIT  6
  COM='Cavity Material Replacement - Side Plate'
  CUBOID  3  1  2P3.9334  2P0.3175  58.4200  0.0000
  UNIT  7
  COM='Water Gap to Side Plate'
  CUBOID  3  1  2P3.9334  2P0.0450  58.4200  0.0000
  UNIT  8
  COM='Plate Bundle'
  ARRAY  12  -3.9334  -3.4074  0.0000
  UNIT  9
  COM='Tube 1 - Fuel Down        Radial Shifted toward    0  '
  CYLINDER  3  1  5.2388  73.0240  0.0000
  HOLE  4  0.0000  0.0000  0.0000
  CYLINDER  6  1  5.55525  73.0240  0.0000
  UNIT  10
  COM='Tube 1 - Fuel Up        Radial Shifted toward    0  '
  CYLINDER  3  1  5.2388  73.0240  0.0000
  HOLE  4  0.0000  0.0000  14.6030
  CYLINDER  6  1  5.55525  73.0240  0.0000
  UNIT  11
  COM='Tube 2 - Fuel Down        Radial Shifted toward    180  '
  CYLINDER  3  1  5.2388  73.0240  0.0000
  HOLE  4  -0.0508  0.0000  0.0000
  CYLINDER  6  1  5.55525  73.0240  0.0000
  UNIT  12
  COM='Tube 2 - Fuel Up        Radial Shifted toward    180  '
  CYLINDER  3  1  5.2388  73.0240  0.0000
  HOLE  4  -0.0508  0.0000  14.6030
  CYLINDER  6  1  5.55525  73.0240  0.0000
  UNIT  13
  COM='Tube 3 - Fuel Down        Radial Shifted toward    240  '
  CYLINDER  3  1  5.2388  73.0240  0.0000
  HOLE  8  -0.0164  -0.0298  0.0000
  CYLINDER  6  1  5.55525  73.0240  0.0000
  UNIT  14
```

```
COM='Tube 3 - Fuel Up        Radial Shifted toward    240  '
CYLINDER  3  1  5.2388  73.0240  0.0000
HOLE  8  -0.0164  -0.0298  14.6030
CYLINDER  6  1  5.55525  73.0240  0.0000
UNIT  15
COM='Tube 4 - Fuel Down        Radial Shifted toward    300  '
CYLINDER  3  1  5.2388  73.0240  0.0000
HOLE  8  0.0164  -0.0298  0.0000
CYLINDER  6  1  5.55525  73.0240  0.0000
UNIT  16
COM='Tube 4 - Fuel Up        Radial Shifted toward    300  '
CYLINDER  3  1  5.2388  73.0240  0.0000
HOLE  8  0.0164  -0.0298  14.6030
CYLINDER  6  1  5.55525  73.0240  0.0000
UNIT  17
COM='Tube 5 - Fuel Down        Radial Shifted toward    0  '
CYLINDER  3  1  5.2388  73.0240  0.0000
HOLE  4  0.0508  0.0000  0.0000
CYLINDER  6  1  5.55525  73.0240  0.0000
UNIT  18
COM='Tube 5 - Fuel Up        Radial Shifted toward    0  '
CYLINDER  3  1  5.2388  73.0240  0.0000
HOLE  4  0.0508  0.0000  14.6030
CYLINDER  6  1  5.55525  73.0240  0.0000
UNIT  19
COM='Tube 6 - Fuel Down        Radial Shifted toward    60  '
CYLINDER  3  1  5.2388  73.0240  0.0000
HOLE  8  0.0164  0.0298  0.0000
CYLINDER  6  1  5.55525  73.0240  0.0000
UNIT  20
COM='Tube 6 - Fuel Up        Radial Shifted toward    60  '
CYLINDER  3  1  5.2388  73.0240  0.0000
HOLE  8  0.0164  0.0298  14.6030
CYLINDER  6  1  5.55525  73.0240  0.0000
UNIT  21
COM='Tube 7 - Fuel Down        Radial Shifted toward    120  '
CYLINDER  3  1  5.2388  73.0240  0.0000
HOLE  8  -0.0164  0.0298  0.0000
CYLINDER  6  1  5.55525  73.0240  0.0000
UNIT  22
COM='Tube 7 - Fuel Up        Radial Shifted toward    120  '
CYLINDER  3  1  5.2388  73.0240  0.0000
HOLE  8  -0.0164  0.0298  14.6030
CYLINDER  6  1  5.55525  73.0240  0.0000
UNIT  23
COM='Basket Bottom Plate Hole '
CYLINDER  3  1  1.27  1.2172  0.0000
UNIT  24
COM='Basket Bottom Plate '
CYLINDER  6  1  16.8466  1.2172  0.0000
HOLE  23  0.0000  0.0000  0.0000
HOLE  23  11.1125  0.0000  0.0000
HOLE  23  5.5563  9.6237  0.0000
HOLE  23  -5.5563  9.6237  0.0000
HOLE  23  -11.1125  0.0000  0.0000
HOLE  23  -5.5563  -9.6237  0.0000
HOLE  23  5.5562  -9.6237  0.0000
UNIT  25
COM='Basket Fuel Down'
CYLINDER  3  1  16.6698  73.0240  0.0000
HOLE  9  0.0000  0.0000  0.0000
HOLE  11  11.1125  0.0000  0.0000
HOLE  13  5.5563  9.6237  0.0000
HOLE  15  -5.5563  9.6237  0.0000
HOLE  17  -11.1125  0.0000  0.0000
HOLE  19  -5.5563  -9.6237  0.0000
HOLE  21  5.5562  -9.6237  0.0000
CYLINDER  3  1  16.8466  73.0240  0.0000
UNIT  26
COM='Basket Fuel Up'
CYLINDER  3  1  16.6698  73.0240  0.0000
HOLE  10  0.0000  0.0000  0.0000
HOLE  12  11.1125  0.0000  0.0000
HOLE  14  5.5563  9.6237  0.0000
HOLE  16  -5.5563  9.6237  0.0000
HOLE  18  -11.1125  0.0000  0.0000
HOLE  20  -5.5563  -9.6237  0.0000
HOLE  22  5.5562  -9.6237  0.0000
CYLINDER  3  1  16.8466  73.0240  0.0000
UNIT  27
COM='Cask Cavity '
CYLINDER  3  1  16.9863  445.4652  0.0000
HOLE  24  0.0000  0.0000  0.0010
HOLE  26  0.0000  0.0000  1.2192
HOLE  24  0.0000  0.0000  74.2452
HOLE  25  0.0000  0.0000  75.4634
HOLE  24  0.0000  0.0000  148.4894
HOLE  26  0.0000  0.0000  149.7076
HOLE  24  0.0000  0.0000  222.7336
HOLE  25  0.0000  0.0000  223.9518
HOLE  24  0.0000  0.0000  296.9778
HOLE  26  0.0000  0.0000  298.1960
HOLE  24  0.0000  0.0000  371.2220
HOLE  25  0.0000  0.0000  372.4402
UNIT  28
COM='Cask Shield Radial Configuration '
```

```
      CYLINDER  3  1  16.9863  445.4652  0.0000
      HOLE  27  0.0000  0.0000  0.0000
      CYLINDER  8  1  18.9103  445.4652  0.0000
      CYLINDER  5  1  33.4645  445.4652  0.0000
      CYLINDER  8  1  36.5189  445.4652  0.0000
      CYLINDER  9  1  49.2189  445.4652  0.0000
      CYLINDER  8  1  49.8183  445.4652  0.0000
      CUBOID  9  1  4P49.8183  445.4652  0.0000
      UNIT  29
      COM='LWT Lid '
      CYLINDER  8  1  36.5189  28.5750  0.5994
      CYLINDER  9  1  49.8183  28.5750  0.5994
      CYLINDER  8  1  49.8183  28.5750  0.0000
      CUBOID  9  1  4P49.8183  28.5750  0.0000
      UNIT  30
      COM='LWT Bottom Weldment '
      CYLINDER  5  1  26.3525  16.5100  8.8900
      CYLINDER  8  1  36.5189  26.0706  0.0000
      CYLINDER  9  1  49.8183  26.0706  0.0000
      CYLINDER  8  1  49.8183  26.6700  0.0000
      CUBOID  9  1  4P49.8183  26.6700  0.0000
      GLOBAL UNIT  31
      COM='LWT Cask '
      ARRAY  1  -49.8183  -49.8183  0.0000
      END GEOM
      READ ARRAY
      ARA=1  NUX=1  NUY=1  NUZ=3  FILL  30 28 29  END FILL
      ARA=11  NUX=18  NUY=1  NUZ=1  FILL  2 3 14R1 3 2  END FILL
      ARA=12  NUX=1  NUY=18  NUZ=1  FILL  6 7 14R5 7 6  END FILL
      END ARRAY
      READ BOUNDS    ALL=MIRROR    END BOUNDS
      END DATA

'        U-235 Fuel Mass - Max  Uranium Weight Fraction - Max

'Material Description for LWT Analysis - MOATA Mark II Fuel
    LWT W/ MOATA MARK II FUEL, ACCIDENT, RADIAL - IN, AXIAL - ALTERNATING

    **** PROBLEM PARAMETERS ****

    LIB 27GROUPNDF4  LIBRARY
    MXX            9 MIXTURES
    MSC           11 COMPOSITION SPECIFICATIONS
    IZM            3 MATERIAL ZONES
    GE  LATTICECELL  GEOMETRY
    MORE           0 0/1 DO NOT READ/READ OPTIONAL PARAMETER DATA
    MSLN           0 FUEL SOLUTIONS

    **** PROBLEM COMPOSITION DESCRIPTION ****

    SC  URANIUM      STANDARD COMPOSITION
    MX             1 MIXTURE NO.
    VF        1.0000 VOLUME FRACTION
    ROTH      0.3093 SPECIFIED DENSITY
    NEL            1 NO. ELEMENTS
    ICP            1 0/1 MIXTURE/COMPOUND
    TEMP       293.0 DEG KELVIN
               92000      1.00 ATOM/MOLECULE
                             92235    92.000 WT%
                             92238     8.000 WT%
    END

    SC  AL           STANDARD COMPOSITION
    MX             1 MIXTURE NO.
    VF        1.0000 VOLUME FRACTION
    ROTH      0.7718 SPECIFIED DENSITY
    NEL            1 NO. ELEMENTS
    ICP            1 0/1 MIXTURE/COMPOUND
    TEMP       293.0 DEG KELVIN
               13027      1.00 ATOM/MOLECULE
    END

    SC  AL           STANDARD COMPOSITION
    MX             2 MIXTURE NO.
    VF        1.0000 VOLUME FRACTION
    ROTH      2.7020 THEORETICAL DENSITY
    NEL            1 NO. ELEMENTS
    ICP            1 0/1 MIXTURE/COMPOUND
    TEMP       293.0 DEG KELVIN
               13027      1.00 ATOM/MOLECULE
    END

    SC  H2O          STANDARD COMPOSITION
    MX             3 MIXTURE NO.
    VF        1.0000 VOLUME FRACTION
    ROTH      0.9998 SPECIFIED DENSITY
    NEL            2 NO. ELEMENTS
    ICP            1 0/1 MIXTURE/COMPOUND
    TEMP       293.0 DEG KELVIN
                1001      2.00 ATOMS/MOLECULE
                8016      1.00 ATOM/MOLECULE
    END

    SC  ARBMGLC      STANDARD COMPOSITION
    MX             4 MIXTURE NO.
    VF        0.5840 VOLUME FRACTION
```

```
ROTH      0.9437 SPECIFIED DENSITY
NEL            3 NO. ELEMENTS
ICP            1 0/1 MIXTURE/COMPOUND
            6012      2.00 ATOMS/MOLECULE
            1001      6.00 ATOMS/MOLECULE
            8016      2.00 ATOMS/MOLECULE
END

SC  H2O          STANDARD COMPOSITION
MX             4 MIXTURE NO.
VF        0.4160 VOLUME FRACTION
ROTH      0.9982 THEORETICAL DENSITY
NEL            2 NO. ELEMENTS
ICP            1 0/1 MIXTURE/COMPOUND
TEMP       293.0 DEG KELVIN
            1001      2.00 ATOMS/MOLECULE
            8016      1.00 ATOM/MOLECULE
END

SC  PB           STANDARD COMPOSITION
MX             5 MIXTURE NO.
VF        1.0000 VOLUME FRACTION
ROTH     11.3440 THEORETICAL DENSITY
NEL            1 NO. ELEMENTS
ICP            1 0/1 MIXTURE/COMPOUND
TEMP       293.0 DEG KELVIN
           82000      1.00 ATOM/MOLECULE
END

SC  SS304        STANDARD COMPOSITION
MX             6 MIXTURE NO.
VF        1.0000 VOLUME FRACTION
ROTH      7.9200 THEORETICAL DENSITY
NEL            4 NO. ELEMENTS
ICP            0 0/1 MIXTURE/COMPOUND
TEMP       293.0 DEG KELVIN
           24304    19.000 WT%
           25055     2.000 WT%
           26304    69.500 WT%
           28304     9.500 WT%
END

SC  AL           STANDARD COMPOSITION
MX             7 MIXTURE NO.
VF        1.0000 VOLUME FRACTION
ROTH      2.7020 THEORETICAL DENSITY
NEL            1 NO. ELEMENTS
ICP            1 0/1 MIXTURE/COMPOUND
TEMP       293.0 DEG KELVIN
           13027      1.00 ATOM/MOLECULE
END

SC  SS304        STANDARD COMPOSITION
MX             8 MIXTURE NO.
VF        1.0000 VOLUME FRACTION
ROTH      7.9200 THEORETICAL DENSITY
NEL            4 NO. ELEMENTS
ICP            0 0/1 MIXTURE/COMPOUND
TEMP       293.0 DEG KELVIN
           24304    19.000 WT%
           25055     2.000 WT%
           26304    69.500 WT%
           28304     9.500 WT%
END

SC  H2O          STANDARD COMPOSITION
MX             9 MIXTURE NO.
VF        1.0000 VOLUME FRACTION
ROTH      0.0001 SPECIFIED DENSITY
NEL            2 NO. ELEMENTS
ICP            1 0/1 MIXTURE/COMPOUND
TEMP       293.0 DEG KELVIN
            1001      2.00 ATOMS/MOLECULE
            8016      1.00 ATOM/MOLECULE
END

**** PROBLEM GEOMETRY ****

CTP SYMMSLABCELL CELL TYPE
PITCH     0.3832 CM CENTER TO CENTER SPACING
FUELOD    0.1832 CM FUEL DIAMETER OR SLAB THICKNESS
MFUEL          1 MIXTURE NO. OF FUEL
MMOD           3 MIXTURE NO. OF MODERATOR
CLADOD    0.2032 CM CLAD OUTER DIAMETER
MCLAD          2 MIXTURE NO. OF CLAD

ZONE SPECIFICATIONS FOR LATTICECELL GEOMETRY

               ZONE  1 IS FUEL
               ZONE  2 IS CLAD
               ZONE  3 IS MOD
```

M I X I N G T A B L E

ENTRY	MIXTURE	ISOTOPE	NUMBER DENSITY	NEW IDENTIFIER
1	1	92235	7.29070E-04	1092235
2	1	92238	6.25966E-05	1092238
3	1	13027	1.72260E-02	1013027
4	2	13027	6.03066E-02	2013027
5	7	13027	6.03066E-02	7013027
6	3	1001	6.68762E-02	3001001
7	4	1001	5.98801E-02	4001001
8	9	1001	6.68896E-06	9001001
9	3	8016	3.34381E-02	3008016
10	4	8016	2.45894E-02	4008016
11	9	8016	3.34448E-06	9008016
12	4	6012	1.07014E-02	4006012
13	5	82000	3.29690E-02	5082000
14	6	24304	1.74286E-02	6024304
15	8	24304	1.74286E-02	8024304
16	6	25055	1.73633E-03	6025055
17	8	25055	1.73633E-03	8025055
18	6	26304	5.93579E-02	6026304
19	8	26304	5.93579E-02	8026304
20	6	28304	7.72070E-03	6028304
21	8	28304	7.72070E-03	8028304

VOLUME FRACTION OF FISSILE MATERIAL IN THE CORE= 9.26928E-03

START TYPE 0 WAS USED.

THE NEUTRONS WERE STARTED WITH A FLAT DISTRIBUTION IN A CUBOID DEFINED BY:
+X= 1.68500E+01 -X=-1.68500E+01 +Y=-1.68500E+01 -Y= 1.68500E+01 +Z= 4.72140E+02 -Z= 2.66700E+01
THE FLAG TO START NEUTRONS IN THE REFLECTOR WAS TURNED OFF

0.31133 MINUTES WERE REQUIRED FOR STARTING. TOTAL ELAPSED TIME IS 0.37333 MINUTES.

GENERATION	GENERATION K-EFFECTIVE	ELAPSED TIME MINUTES	AVERAGE K-EFFECTIVE	AVG K-EFF DEVIATION	MATRIX K-EFFECTIVE	MATRIX K-EFF DEVIATION
KENO MESSAGE NUMBER K5-132		WARNING....ONLY	806 INDEPENDENT FISSION POINTS WERE GENERATED			
1	7.31623E-01	3.79000E-01	1.00000E+00	0.00000E+00	0.00000E+00	0.00000E+00
KENO MESSAGE NUMBER K5-132		WARNING....ONLY	740 INDEPENDENT FISSION POINTS WERE GENERATED			
2	6.87897E-01	3.82667E-01	1.00000E+00	0.00000E+00	0.00000E+00	0.00000E+00
KENO MESSAGE NUMBER K5-132		WARNING....ONLY	861 INDEPENDENT FISSION POINTS WERE GENERATED			
3	7.62074E-01	3.85500E-01	7.62074E-01	0.00000E+00	0.00000E+00	0.00000E+00
4	7.55989E-01	3.89167E-01	7.59032E-01	3.04273E-03	0.00000E+00	0.00000E+00
5	7.68824E-01	3.92833E-01	7.62296E-01	3.70674E-03	0.00000E+00	0.00000E+00
6	7.66991E-01	3.96500E-01	7.63469E-01	2.87188E-03	0.00000E+00	0.00000E+00
7	7.59518E-01	4.00167E-01	7.62679E-01	2.36076E-03	0.00000E+00	0.00000E+00
8	7.90893E-01	4.02833E-01	7.67381E-01	5.08200E-03	0.00000E+00	0.00000E+00
9	7.29438E-01	4.06500E-01	7.61961E-01	6.91587E-03	0.00000E+00	0.00000E+00
10	7.25050E-01	4.10167E-01	7.57347E-01	7.56037E-03	0.00000E+00	0.00000E+00
11	7.08347E-01	4.13833E-01	7.51903E-01	8.60810E-03	0.00000E+00	0.00000E+00
12	7.33306E-01	4.17500E-01	7.50043E-01	7.92073E-03	0.00000E+00	0.00000E+00
13	7.41343E-01	4.21167E-01	7.49252E-01	7.20809E-03	0.00000E+00	0.00000E+00
14	7.64793E-01	4.24833E-01	7.50547E-01	6.70629E-03	0.00000E+00	0.00000E+00
15	7.94944E-01	4.27500E-01	7.53962E-01	7.05111E-03	0.00000E+00	0.00000E+00
16	7.52601E-01	4.31167E-01	7.53865E-01	6.52879E-03	0.00000E+00	0.00000E+00
17	7.48314E-01	4.34833E-01	7.53495E-01	6.08923E-03	0.00000E+00	0.00000E+00
18	7.30448E-01	4.38500E-01	7.52054E-01	5.87526E-03	0.00000E+00	0.00000E+00
19	7.60018E-01	4.42167E-01	7.52523E-01	5.53869E-03	0.00000E+00	0.00000E+00
20	7.76509E-01	4.45000E-01	7.53856E-01	5.38927E-03	0.00000E+00	0.00000E+00
21	7.56157E-01	4.48667E-01	7.53977E-01	5.09918E-03	0.00000E+00	0.00000E+00
22	7.48444E-01	4.52333E-01	7.53700E-01	4.84541E-03	0.00000E+00	0.00000E+00
23	7.54437E-01	4.56000E-01	7.53735E-01	4.60904E-03	0.00000E+00	0.00000E+00
24	7.45199E-01	4.59667E-01	7.53347E-01	4.41164E-03	0.00000E+00	0.00000E+00
25	7.03146E-01	4.62333E-01	7.51164E-01	4.74701E-03	0.00000E+00	0.00000E+00
26	7.75307E-01	4.66000E-01	7.52170E-01	4.65492E-03	0.00000E+00	0.00000E+00
27	6.97750E-01	4.69667E-01	7.49994E-01	4.96722E-03	0.00000E+00	0.00000E+00
28	7.50911E-01	4.73333E-01	7.50029E-01	4.77248E-03	0.00000E+00	0.00000E+00
29	7.58368E-01	4.76000E-01	7.50338E-01	4.60270E-03	0.00000E+00	0.00000E+00
30	7.75055E-01	4.79667E-01	7.51220E-01	4.52227E-03	0.00000E+00	0.00000E+00
31	7.59545E-01	4.83333E-01	7.51508E-01	4.37298E-03	0.00000E+00	0.00000E+00
32	7.87068E-01	4.87000E-01	7.52693E-01	4.38783E-03	0.00000E+00	0.00000E+00
33	7.59780E-01	4.90667E-01	7.52921E-01	4.25008E-03	0.00000E+00	0.00000E+00
34	7.30985E-01	4.94333E-01	7.52236E-01	4.17183E-03	0.00000E+00	0.00000E+00
35	7.86816E-01	4.97167E-01	7.53284E-01	4.17701E-03	0.00000E+00	0.00000E+00
36	6.89861E-01	5.00833E-01	7.51418E-01	4.46103E-03	0.00000E+00	0.00000E+00
37	7.51420E-01	5.04500E-01	7.51418E-01	4.33169E-03	0.00000E+00	0.00000E+00
38	7.41461E-01	5.08167E-01	7.51142E-01	4.21873E-03	0.00000E+00	0.00000E+00
39	7.52616E-01	5.11833E-01	7.51182E-01	4.10332E-03	0.00000E+00	0.00000E+00
40	7.87241E-01	5.15500E-01	7.52131E-01	4.10506E-03	0.00000E+00	0.00000E+00
41	7.44746E-01	5.19167E-01	7.51941E-01	4.00290E-03	0.00000E+00	0.00000E+00
42	7.71586E-01	5.21833E-01	7.52432E-01	3.93233E-03	0.00000E+00	0.00000E+00
43	7.13124E-01	5.25500E-01	7.51474E-01	3.95324E-03	0.00000E+00	0.00000E+00
44	7.45383E-01	5.29167E-01	7.51329E-01	3.86069E-03	0.00000E+00	0.00000E+00
45	7.63992E-01	5.32833E-01	7.51623E-01	3.78132E-03	0.00000E+00	0.00000E+00
46	7.50626E-01	5.35667E-01	7.51600E-01	3.69446E-03	0.00000E+00	0.00000E+00
47	7.07328E-01	5.39167E-01	7.50617E-01	3.74304E-03	0.00000E+00	0.00000E+00
48	7.26958E-01	5.42833E-01	7.50102E-01	3.69671E-03	0.00000E+00	0.00000E+00
49	7.42864E-01	5.46500E-01	7.49948E-01	3.62048E-03	0.00000E+00	0.00000E+00
50	7.79316E-01	5.50167E-01	7.50560E-01	3.59668E-03	0.00000E+00	0.00000E+00
51	7.38988E-01	5.53000E-01	7.50324E-01	3.53042E-03	0.00000E+00	0.00000E+00
52	7.57247E-01	5.56667E-01	7.50462E-01	3.46186E-03	0.00000E+00	0.00000E+00
53	7.73838E-01	5.60333E-01	7.50921E-01	3.42411E-03	0.00000E+00	0.00000E+00
54	7.65306E-01	5.64000E-01	7.51197E-01	3.36900E-03	0.00000E+00	0.00000E+00
55	6.97184E-01	5.67667E-01	7.50178E-01	3.45839E-03	0.00000E+00	0.00000E+00
56	7.39188E-01	5.70333E-01	7.49975E-01	3.39984E-03	0.00000E+00	0.00000E+00
57	7.70477E-01	5.74000E-01	7.50348E-01	3.35820E-03	0.00000E+00	0.00000E+00
58	7.52446E-01	5.77667E-01	7.50385E-01	3.29790E-03	0.00000E+00	0.00000E+00
59	7.33142E-01	5.81333E-01	7.50082E-01	3.25362E-03	0.00000E+00	0.00000E+00
60	7.68338E-01	5.84167E-01	7.50397E-01	3.21249E-03	0.00000E+00	0.00000E+00
61	7.65693E-01	5.87833E-01	7.50656E-01	3.16819E-03	0.00000E+00	0.00000E+00
62	7.31627E-01	5.91500E-01	7.50339E-01	3.13105E-03	0.00000E+00	0.00000E+00
.						
.						
.						
.						
977	6.79375E-01	3.81467E+00	7.42792E-01	8.31736E-04	0.00000E+00	0.00000E+00
978	7.04463E-01	3.81833E+00	7.42753E-01	8.31811E-04	0.00000E+00	0.00000E+00
979	7.13813E-01	3.82200E+00	7.42723E-01	8.31486E-04	0.00000E+00	0.00000E+00
980	7.52117E-01	3.82567E+00	7.42733E-01	8.30691E-04	0.00000E+00	0.00000E+00
981	7.98334E-01	3.82933E+00	7.42789E-01	8.31784E-04	0.00000E+00	0.00000E+00
982	7.37944E-01	3.83200E+00	7.42784E-01	8.30949E-04	0.00000E+00	0.00000E+00
983	7.18047E-01	3.83567E+00	7.42759E-01	8.30485E-04	0.00000E+00	0.00000E+00
984	7.10727E-01	3.83933E+00	7.42727E-01	8.30279E-04	0.00000E+00	0.00000E+00
985	7.38439E-01	3.84217E+00	7.42722E-01	8.29446E-04	0.00000E+00	0.00000E+00
986	7.17007E-01	3.84583E+00	7.42696E-01	8.29015E-04	0.00000E+00	0.00000E+00
987	7.68514E-01	3.84950E+00	7.42722E-01	8.28587E-04	0.00000E+00	0.00000E+00
988	7.91476E-01	3.85317E+00	7.42772E-01	8.29222E-04	0.00000E+00	0.00000E+00
989	7.01679E-01	3.85667E+00	7.42730E-01	8.29427E-04	0.00000E+00	0.00000E+00
990	7.59538E-01	3.85950E+00	7.42747E-01	8.28762E-04	0.00000E+00	0.00000E+00
991	7.52235E-01	3.86317E+00	7.42757E-01	8.27979E-04	0.00000E+00	0.00000E+00
992	7.52038E-01	3.86683E+00	7.42766E-01	8.27195E-04	0.00000E+00	0.00000E+00
993	7.53727E-01	3.87050E+00	7.42777E-01	8.26434E-04	0.00000E+00	0.00000E+00
994	7.83910E-01	3.87417E+00	7.42819E-01	8.26641E-04	0.00000E+00	0.00000E+00
995	7.18682E-01	3.87783E+00	7.42794E-01	8.26166E-04	0.00000E+00	0.00000E+00
996	7.48482E-01	3.88050E+00	7.42800E-01	8.25354E-04	0.00000E+00	0.00000E+00
997	7.30613E-01	3.88417E+00	7.42788E-01	8.24615E-04	0.00000E+00	0.00000E+00
998	7.71883E-01	3.88783E+00	7.42817E-01	8.24305E-04	0.00000E+00	0.00000E+00
999	7.54841E-01	3.89150E+00	7.42829E-01	8.23566E-04	0.00000E+00	0.00000E+00

1000	7.30416E-01	3.89433E+00	7.42817E-01	8.22834E-04	0.00000E+00	0.00000E+00
1001	7.37220E-01	3.89800E+00	7.42811E-01	8.22029E-04	0.00000E+00	0.00000E+00
1002	7.71580E-01	3.90167E+00	7.42840E-01	8.21711E-04	0.00000E+00	0.00000E+00
1003	7.45144E-01	3.90533E+00	7.42842E-01	8.20892E-04	0.00000E+00	0.00000E+00
1004	7.55448E-01	3.90900E+00	7.42855E-01	8.20169E-04	0.00000E+00	0.00000E+00
1005	7.41935E-01	3.91167E+00	7.42854E-01	8.19352E-04	0.00000E+00	0.00000E+00
1006	7.23444E-01	3.91533E+00	7.42834E-01	8.18763E-04	0.00000E+00	0.00000E+00
1007	7.76276E-01	3.91900E+00	7.42868E-01	8.18625E-04	0.00000E+00	0.00000E+00
1008	7.75243E-01	3.92267E+00	7.42900E-01	8.18444E-04	0.00000E+00	0.00000E+00
1009	7.63803E-01	3.92533E+00	7.42921E-01	8.17894E-04	0.00000E+00	0.00000E+00
1010	7.56903E-01	3.92900E+00	7.42934E-01	8.17200E-04	0.00000E+00	0.00000E+00
1011	7.09754E-01	3.93267E+00	7.42902E-01	8.17052E-04	0.00000E+00	0.00000E+00
1012	7.80382E-01	3.93633E+00	7.42939E-01	8.17085E-04	0.00000E+00	0.00000E+00
1013	7.59572E-01	3.94000E+00	7.42955E-01	8.16443E-04	0.00000E+00	0.00000E+00
1014	7.02572E-01	3.94367E+00	7.42915E-01	8.16611E-04	0.00000E+00	0.00000E+00
1015	7.05531E-01	3.94733E+00	7.42878E-01	8.16639E-04	0.00000E+00	0.00000E+00
1016	7.59689E-01	3.95017E+00	7.42895E-01	8.16001E-04	0.00000E+00	0.00000E+00
1017	7.54767E-01	3.95383E+00	7.42907E-01	8.15281E-04	0.00000E+00	0.00000E+00
1018	7.52696E-01	3.95750E+00	7.42916E-01	8.14535E-04	0.00000E+00	0.00000E+00
1019	7.33079E-01	3.96117E+00	7.42907E-01	8.13791E-04	0.00000E+00	0.00000E+00
1020	7.23735E-01	3.96483E+00	7.42888E-01	8.13210E-04	0.00000E+00	0.00000E+00
1021	6.93952E-01	3.96850E+00	7.42840E-01	8.13829E-04	0.00000E+00	0.00000E+00
1022	7.26085E-01	3.97217E+00	7.42823E-01	8.13197E-04	0.00000E+00	0.00000E+00
1023	7.84354E-01	3.97583E+00	7.42864E-01	8.13418E-04	0.00000E+00	0.00000E+00

KENO MESSAGE NUMBER K5-123 EXECUTION TERMINATED DUE TO COMPLETION OF THE SPECIFIED NUMBER OF GENERATIONS.

LIFETIME = 9.69309E-05 + OR - 1.11719E-07 GENERATION TIME = 6.01750E-05 + OR - 8.80249E-08
NU BAR = 2.42029E+00 + OR - 8.55604E-06 AVERAGE FISSION GROUP = 2.38131E+01 + OR - 3.65186E-03
ENERGY(EV) OF THE AVERAGE LETHARGY CAUSING FISSION = 5.55885E-02 + OR - 1.61291E-04

NO. OF INITIAL GENERATIONS SKIPPED	AVERAGE K-EFFECTIVE	DEVIATION	67 PER CENT CONFIDENCE INTERVAL	95 PER CENT CONFIDENCE INTERVAL	99 PER CENT CONFIDENCE INTERVAL	NUMBER OF HISTORIES
3	0.74285	+ OR - 0.00081	0.74203 TO 0.74366	0.74122 TO 0.74447	0.74040 TO 0.74529	1020000
4	0.74283	+ OR - 0.00081	0.74202 TO 0.74365	0.74120 TO 0.74446	0.74039 TO 0.74528	1019000
5	0.74281	+ OR - 0.00082	0.74199 TO 0.74362	0.74118 TO 0.74444	0.74036 TO 0.74525	1018000
6	0.74278	+ OR - 0.00082	0.74197 TO 0.74360	0.74115 TO 0.74441	0.74034 TO 0.74523	1017000
7	0.74277	+ OR - 0.00082	0.74195 TO 0.74358	0.74113 TO 0.74440	0.74032 TO 0.74521	1016000
8	0.74272	+ OR - 0.00082	0.74190 TO 0.74353	0.74109 TO 0.74435	0.74027 TO 0.74517	1015000
9	0.74273	+ OR - 0.00082	0.74192 TO 0.74355	0.74110 TO 0.74436	0.74028 TO 0.74518	1014000
10	0.74275	+ OR - 0.00082	0.74193 TO 0.74357	0.74112 TO 0.74438	0.74030 TO 0.74520	1013000
11	0.74278	+ OR - 0.00082	0.74197 TO 0.74360	0.74115 TO 0.74442	0.74033 TO 0.74523	1012000
12	0.74279	+ OR - 0.00082	0.74198 TO 0.74361	0.74116 TO 0.74443	0.74034 TO 0.74525	1011000
17	0.74271	+ OR - 0.00082	0.74189 TO 0.74353	0.74107 TO 0.74435	0.74025 TO 0.74516	1006000
22	0.74265	+ OR - 0.00082	0.74182 TO 0.74347	0.74100 TO 0.74429	0.74018 TO 0.74512	1001000
27	0.74269	+ OR - 0.00082	0.74186 TO 0.74351	0.74104 TO 0.74433	0.74021 TO 0.74516	996000
32	0.74257	+ OR - 0.00083	0.74174 TO 0.74339	0.74091 TO 0.74422	0.74009 TO 0.74504	991000
37	0.74256	+ OR - 0.00083	0.74173 TO 0.74339	0.74091 TO 0.74421	0.74008 TO 0.74504	986000
42	0.74247	+ OR - 0.00083	0.74164 TO 0.74330	0.74082 TO 0.74413	0.73999 TO 0.74496	981000
47	0.74251	+ OR - 0.00083	0.74167 TO 0.74334	0.74084 TO 0.74417	0.74001 TO 0.74500	976000
52	0.74247	+ OR - 0.00083	0.74164 TO 0.74331	0.74080 TO 0.74414	0.73997 TO 0.74498	971000
57	0.74244	+ OR - 0.00084	0.74160 TO 0.74327	0.74076 TO 0.74411	0.73993 TO 0.74495	966000
62	0.74240	+ OR - 0.00084	0.74156 TO 0.74324	0.74072 TO 0.74408	0.73988 TO 0.74492	961000
67	0.74238	+ OR - 0.00084	0.74153 TO 0.74322	0.74069 TO 0.74406	0.73984 TO 0.74491	956000
72	0.74250	+ OR - 0.00084	0.74166 TO 0.74334	0.74081 TO 0.74419	0.73997 TO 0.74503	951000
77	0.74252	+ OR - 0.00085	0.74168 TO 0.74337	0.74083 TO 0.74422	0.73999 TO 0.74506	946000
82	0.74249	+ OR - 0.00085	0.74165 TO 0.74334	0.74080 TO 0.74419	0.73995 TO 0.74503	941000
.						
.						
932	0.74135	+ OR - 0.00275	0.73860 TO 0.74410	0.73585 TO 0.74685	0.73310 TO 0.74960	91000
937	0.74132	+ OR - 0.00282	0.73850 TO 0.74414	0.73569 TO 0.74695	0.73287 TO 0.74977	86000
942	0.74064	+ OR - 0.00285	0.73778 TO 0.74349	0.73493 TO 0.74634	0.73208 TO 0.74920	81000
947	0.74235	+ OR - 0.00293	0.73942 TO 0.74528	0.73650 TO 0.74821	0.73357 TO 0.75113	76000
952	0.74183	+ OR - 0.00307	0.73876 TO 0.74490	0.73569 TO 0.74797	0.73262 TO 0.75103	71000
957	0.74267	+ OR - 0.00325	0.73942 TO 0.74592	0.73617 TO 0.74917	0.73291 TO 0.75243	66000
962	0.74310	+ OR - 0.00348	0.73963 TO 0.74658	0.73615 TO 0.75006	0.73267 TO 0.75354	61000
967	0.74237	+ OR - 0.00373	0.73864 TO 0.74610	0.73491 TO 0.74983	0.73118 TO 0.75356	56000
972	0.74114	+ OR - 0.00389	0.73725 TO 0.74503	0.73336 TO 0.74892	0.72947 TO 0.75281	51000
977	0.74439	+ OR - 0.00393	0.74046 TO 0.74832	0.73653 TO 0.75226	0.73260 TO 0.75619	46000
982	0.74477	+ OR - 0.00402	0.74075 TO 0.74878	0.73674 TO 0.75280	0.73272 TO 0.75681	41000
987	0.74674	+ OR - 0.00428	0.74246 TO 0.75102	0.73819 TO 0.75530	0.73391 TO 0.75957	36000
992	0.74599	+ OR - 0.00449	0.74150 TO 0.75049	0.73700 TO 0.75498	0.73251 TO 0.75947	31000
997	0.74578	+ OR - 0.00501	0.74077 TO 0.75079	0.73577 TO 0.75580	0.73076 TO 0.76080	26000
1002	0.74402	+ OR - 0.00587	0.73814 TO 0.74989	0.73227 TO 0.75577	0.72639 TO 0.76164	21000
1007	0.74263	+ OR - 0.00732	0.73531 TO 0.74995	0.72799 TO 0.75727	0.72067 TO 0.76459	16000
1012	0.73600	+ OR - 0.00861	0.72739 TO 0.74461	0.71878 TO 0.75323	0.71017 TO 0.76184	11000
1017	0.73565	+ OR - 0.01244	0.72321 TO 0.74809	0.71077 TO 0.76053	0.69833 TO 0.77297	6000

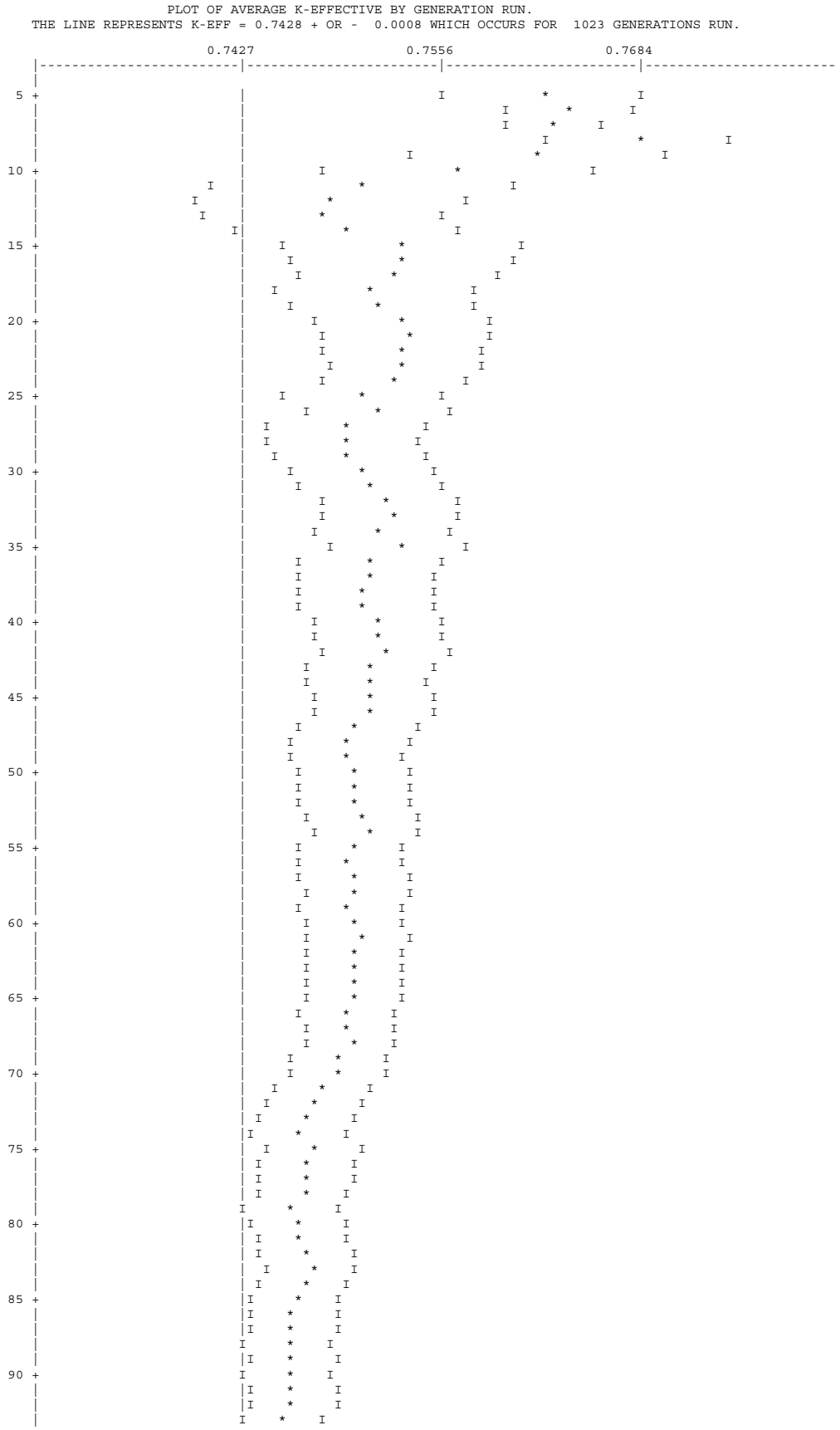
PLOT OF AVERAGE K-EFFECTIVE BY GENERATION RUN.
THE LINE REPRESENTS K-EFF = 0.7428 + OR - 0.0008 WHICH OCCURS FOR 1023 GENERATIONS RUN.
0.7427
0.7556
0.7684



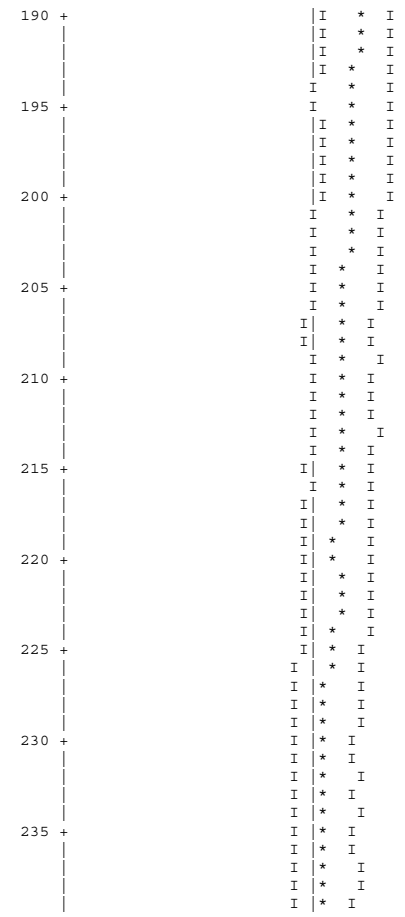

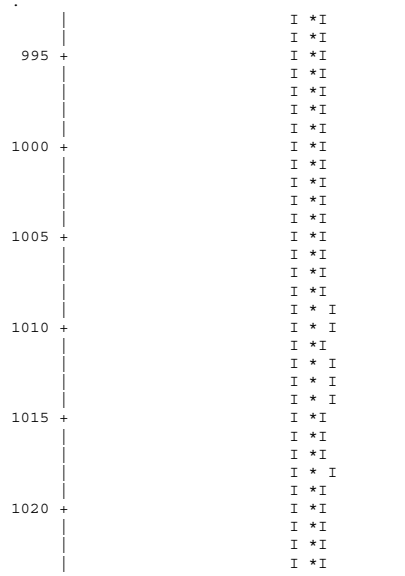

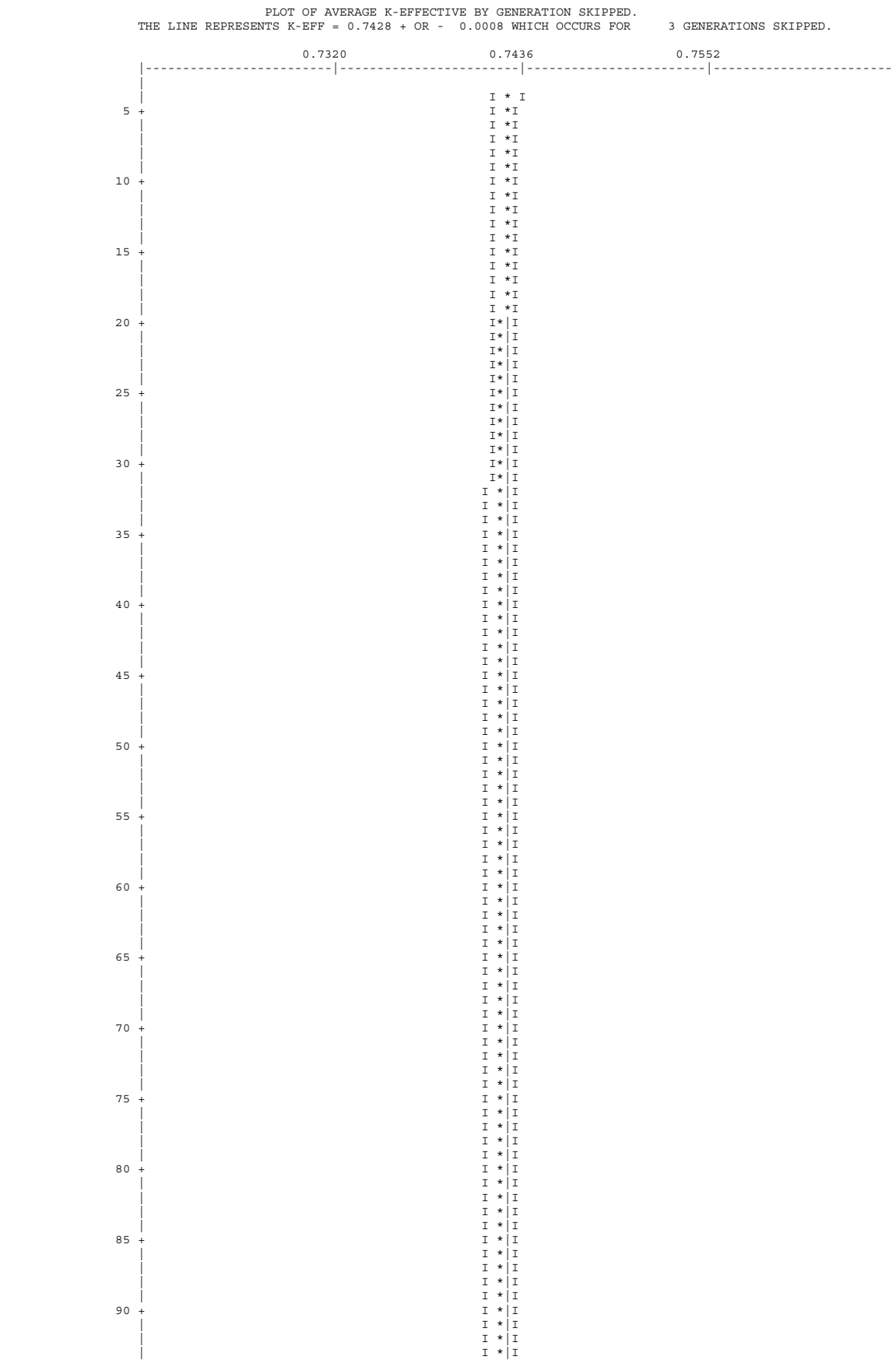
PLOT OF AVERAGE K-EFFECTIVE BY GENERATION SKIPPED.
THE LINE REPRESENTS K-EFF = 0.7428 + OR - 0.0008 WHICH OCCURS FOR 3 GENERATIONS SKIPPED.
0.7320
0.7436
0.7552

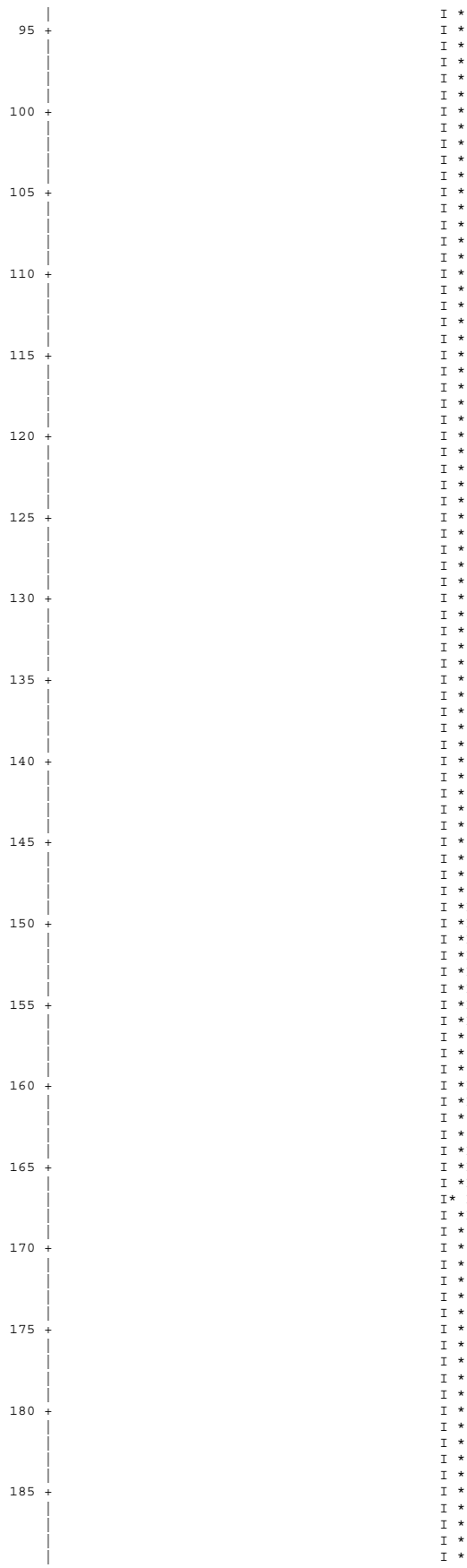
95
100
105
110
115
120
125
130
135
140
145
150
155
160
165
170
175
180
185

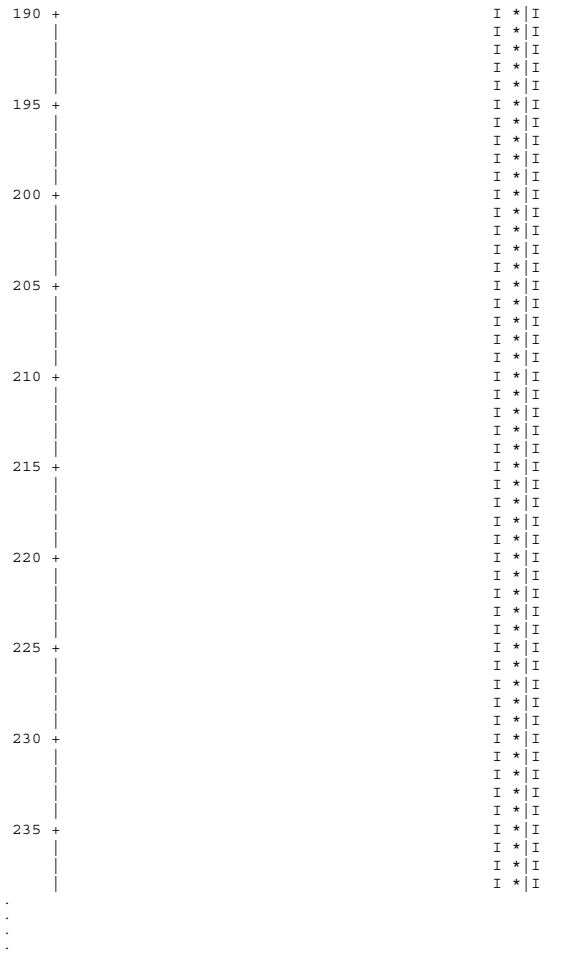

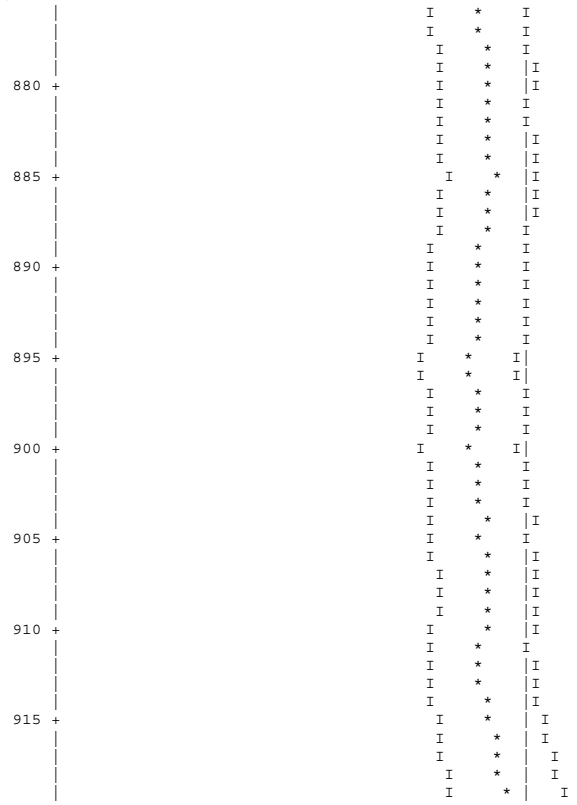

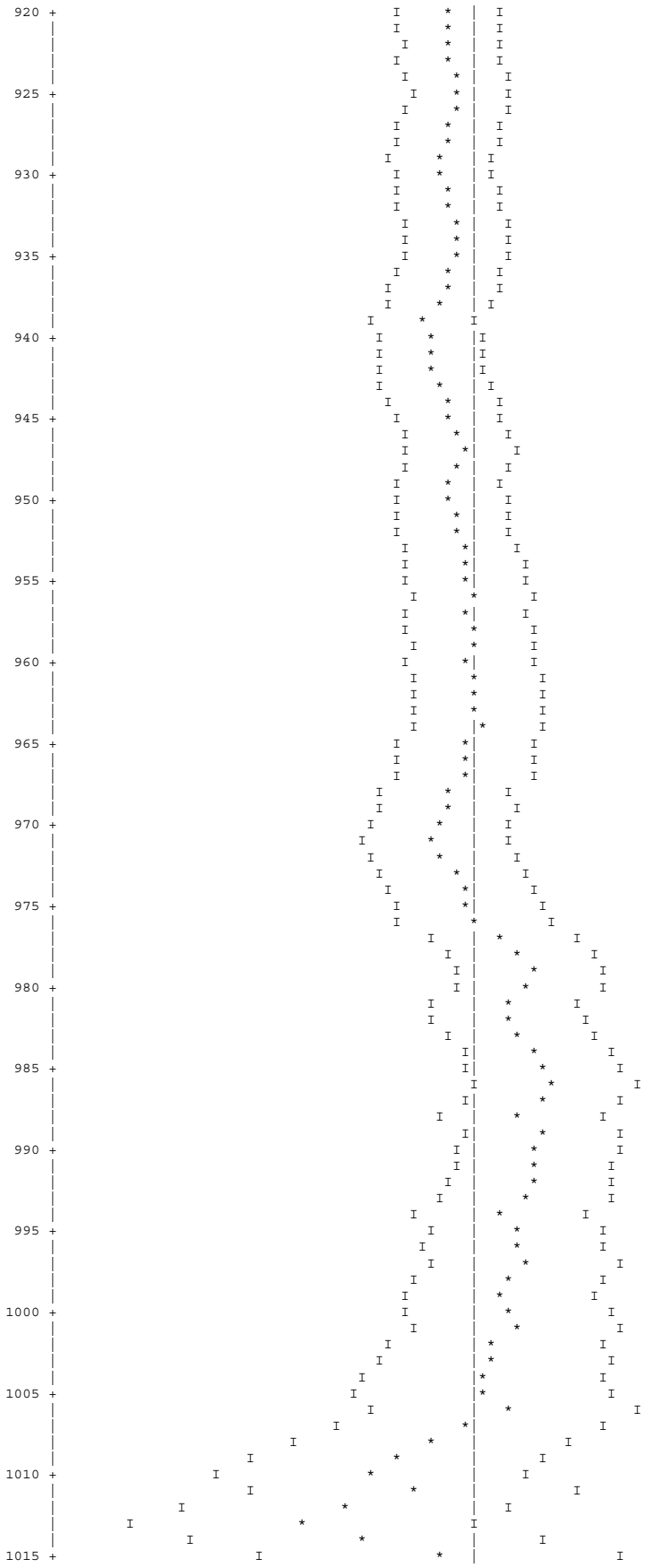
920
925
930
935
940
945
950
955
960
965
970
975
980
985
990
995
1000
1005
1010
1015


1020

SKIPPING 3

GENERATIONS

GROUP	FISSION FRACTION	UNIT	REGION	FISSIONS	PERCENT DEVIATION	ABSORPTIONS	PERCENT DEVIATION	LEAKAGE	PERCENT DEVIATION
1	0.0003			2.19740E-04	2.4717	1.31432E-03	0.8817	0.00000E+00	0.0000
2	0.0015			1.09341E-03	0.7322	3.04811E-03	0.2835	0.00000E+00	0.0000
3	0.0017			1.27237E-03	0.6133	9.33984E-04	0.3950	0.00000E+00	0.0000
4	0.0010			7.40677E-04	0.7926	4.99404E-04	0.5404	0.00000E+00	0.0000
5	0.0013			1.00055E-03	0.6716	9.52746E-04	0.3953	0.00000E+00	0.0000
6	0.0017			1.26781E-03	0.5040	2.77494E-03	0.3459	0.00000E+00	0.0000
7	0.0016			1.21258E-03	0.5687	4.91185E-03	0.3810	0.00000E+00	0.0000
8	0.0016			1.19645E-03	0.8956	4.05080E-03	0.4096	0.00000E+00	0.0000
9	0.0022			1.60512E-03	1.0841	4.23075E-03	0.4270	0.00000E+00	0.0000
10	0.0046			3.40837E-03	0.9865	1.04716E-02	0.4109	0.00000E+00	0.0000
11	0.0100			7.45951E-03	0.8650	1.44686E-02	0.4018	0.00000E+00	0.0000
12	0.0133			9.91099E-03	0.9117	1.33269E-02	0.5005	0.00000E+00	0.0000
13	0.0125			9.27553E-03	0.9477	1.64557E-02	0.4665	0.00000E+00	0.0000
14	0.0109			8.08484E-03	0.9065	2.07470E-02	0.3954	0.00000E+00	0.0000
15	0.0022			1.64837E-03	1.7851	1.03632E-02	0.4465	0.00000E+00	0.0000
16	0.0016			1.15611E-03	2.3160	6.16176E-03	0.5040	0.00000E+00	0.0000
17	0.0024			1.77984E-03	2.5360	3.63968E-03	0.8226	0.00000E+00	0.0000
18	0.0032			2.38678E-03	2.3920	3.54809E-03	0.8982	0.00000E+00	0.0000
19	0.0040			2.97879E-03	1.9978	5.90096E-03	0.6187	0.00000E+00	0.0000
20	0.0173			1.28169E-02	1.0271	2.15421E-02	0.3959	0.00000E+00	0.0000
21	0.0095			7.05344E-03	1.4434	8.85516E-03	0.6566	0.00000E+00	0.0000
22	0.0236			1.75389E-02	0.9264	2.03161E-02	0.4664	0.00000E+00	0.0000
23	0.0997			7.40734E-02	0.4269	9.33826E-02	0.2008	0.00000E+00	0.0000
24	0.2310			1.71624E-01	0.2731	2.15314E-01	0.1242	0.00000E+00	0.0000
25	0.2024			1.50360E-01	0.2927	1.90295E-01	0.1263	0.00000E+00	0.0000
26	0.2502			1.85851E-01	0.2641	2.39684E-01	0.1202	0.00000E+00	0.0000
27	0.0886			6.58290E-02	0.4449	8.46067E-02	0.2090	0.00000E+00	0.0000
SYSTEM TOTAL =				7.42845E-01	0.1096	1.00179E+00	0.0220	0.00000E+00	0.0000

ELAPSED TIME 3.98033 MINUTES

RANDOM NUMBER= 2DAD49504B4B

```
                              FREQUENCY FOR GENERATIONS    4 TO 1023
0.6577 TO 0.6612     *
0.6612 TO 0.6648
0.6648 TO 0.6683
0.6683 TO 0.6719     **
0.6719 TO 0.6754
0.6754 TO 0.6790     **
0.6790 TO 0.6825     **
0.6825 TO 0.6861     ****
0.6861 TO 0.6896     **********
0.6896 TO 0.6931     *****
0.6931 TO 0.6967     ************
0.6967 TO 0.7002     ******************
0.7002 TO 0.7038     *************
0.7038 TO 0.7073     ********************
0.7073 TO 0.7109     *************************
0.7109 TO 0.7144     ************************
0.7144 TO 0.7180     ****************************************
0.7180 TO 0.7215     ************************************
0.7215 TO 0.7251     ***************************************
0.7251 TO 0.7286     ****************************************
0.7286 TO 0.7322     **********************************************
0.7322 TO 0.7357     ***********************************************
0.7357 TO 0.7393     ************************************************
0.7393 TO 0.7428     ************************************************************
0.7428 TO 0.7464     ***********************************************************
0.7464 TO 0.7499     **********************************************
0.7499 TO 0.7534     ************************************************
0.7534 TO 0.7570     *************************************************
0.7570 TO 0.7605     ****************************************
0.7605 TO 0.7641     *********************************
0.7641 TO 0.7676     ****************************************
0.7676 TO 0.7712     ******************************
0.7712 TO 0.7747     *****************************
0.7747 TO 0.7783     *******************************
0.7783 TO 0.7818     *************************
0.7818 TO 0.7854     ********************
0.7854 TO 0.7889     *********
0.7889 TO 0.7925     ******
0.7925 TO 0.7960     *******
0.7960 TO 0.7996     *******
0.7996 TO 0.8031     *****
0.8031 TO 0.8067     *
0.8067 TO 0.8102     ****
0.8102 TO 0.8137     *
0.8137 TO 0.8173     *
0.8173 TO 0.8208
0.8208 TO 0.8244
0.8244 TO 0.8279     *
```

FREQUENCY FOR GENERATIONS 259 TO 1023

```
0.6577 TO 0.6612     *
0.6612 TO 0.6648
0.6648 TO 0.6683
0.6683 TO 0.6719     **
0.6719 TO 0.6754
0.6754 TO 0.6790     **
0.6790 TO 0.6825     **
0.6825 TO 0.6861     ****
0.6861 TO 0.6896     ******
0.6896 TO 0.6931     ***
0.6931 TO 0.6967     *********
0.6967 TO 0.7002     ***********
0.7002 TO 0.7038     ********
0.7038 TO 0.7073     ******************
0.7073 TO 0.7109     **********************
0.7109 TO 0.7144     **************
0.7144 TO 0.7180     ***********************************
0.7180 TO 0.7215     *******************************
0.7215 TO 0.7251     ***********************************
0.7251 TO 0.7286     *******************************
0.7286 TO 0.7322     ***********************************
0.7322 TO 0.7357     *********************************
0.7357 TO 0.7393     ***********************************
0.7393 TO 0.7428     ************************************************
0.7428 TO 0.7464     ****************************************
0.7464 TO 0.7499     ***********************************
0.7499 TO 0.7534     *********************************
0.7534 TO 0.7570     ******************************************
0.7570 TO 0.7605     ****************************
0.7605 TO 0.7641     *************************
0.7641 TO 0.7676     *************************
0.7676 TO 0.7712     ******************
0.7712 TO 0.7747     ************************
0.7747 TO 0.7783     *************************
0.7783 TO 0.7818     **********************
0.7818 TO 0.7854     ********************
0.7854 TO 0.7889     ******
0.7889 TO 0.7925     *****
0.7925 TO 0.7960     *****
0.7960 TO 0.7996     ******
0.7996 TO 0.8031     *****
0.8031 TO 0.8067     *
0.8067 TO 0.8102     **
0.8102 TO 0.8137
0.8137 TO 0.8173     *
0.8173 TO 0.8208
0.8208 TO 0.8244
0.8244 TO 0.8279
```

FREQUENCY FOR GENERATIONS 514 TO 1023

```
0.6577 TO 0.6612
0.6612 TO 0.6648
0.6648 TO 0.6683
0.6683 TO 0.6719     **
0.6719 TO 0.6754
0.6754 TO 0.6790     *
0.6790 TO 0.6825     *
0.6825 TO 0.6861     ***
0.6861 TO 0.6896     ***
0.6896 TO 0.6931     ***
0.6931 TO 0.6967     ******
0.6967 TO 0.7002     *********
0.7002 TO 0.7038     ******
0.7038 TO 0.7073     ***************
0.7073 TO 0.7109     ***************
0.7109 TO 0.7144     ********
0.7144 TO 0.7180     ************************
0.7180 TO 0.7215     ************************
0.7215 TO 0.7251     *************************
0.7251 TO 0.7286     ***********************
0.7286 TO 0.7322     *************************
0.7322 TO 0.7357     *************************
0.7357 TO 0.7393     ***********************
0.7393 TO 0.7428     ****************************
0.7428 TO 0.7464     ******************************
0.7464 TO 0.7499     ***********************
0.7499 TO 0.7534     ****************************
0.7534 TO 0.7570     ********************************
0.7570 TO 0.7605     ******************
0.7605 TO 0.7641     ****************
0.7641 TO 0.7676     ******************
0.7676 TO 0.7712     ***********
0.7712 TO 0.7747     **************
0.7747 TO 0.7783     ******************
0.7783 TO 0.7818     **********
0.7818 TO 0.7854     **************
0.7854 TO 0.7889     ****
0.7889 TO 0.7925     **
0.7925 TO 0.7960     **
0.7960 TO 0.7996     *****
0.7996 TO 0.8031     ****
0.8031 TO 0.8067
0.8067 TO 0.8102     *
0.8102 TO 0.8137
0.8137 TO 0.8173
0.8173 TO 0.8208
0.8208 TO 0.8244
0.8244 TO 0.8279
```

FREQUENCY FOR GENERATIONS 769 TO 1023

```
0.6577 TO 0.6612
0.6612 TO 0.6648
0.6648 TO 0.6683
0.6683 TO 0.6719
0.6719 TO 0.6754
0.6754 TO 0.6790     *
0.6790 TO 0.6825     *
0.6825 TO 0.6861     *
0.6861 TO 0.6896     ***
0.6896 TO 0.6931     *
0.6931 TO 0.6967     **
0.6967 TO 0.7002     **
0.7002 TO 0.7038     ***
0.7038 TO 0.7073     *********
0.7073 TO 0.7109     *******
0.7109 TO 0.7144     ***
0.7144 TO 0.7180     **********
0.7180 TO 0.7215     ************
0.7215 TO 0.7251     ******************
0.7251 TO 0.7286     *************
0.7286 TO 0.7322     *************
0.7322 TO 0.7357     ********
0.7357 TO 0.7393     *******
0.7393 TO 0.7428     *************
0.7428 TO 0.7464     ***************
0.7464 TO 0.7499     *********
0.7499 TO 0.7534     **************
0.7534 TO 0.7570     ****************
0.7570 TO 0.7605     *******
0.7605 TO 0.7641     ********
0.7641 TO 0.7676     *********
0.7676 TO 0.7712     ******
0.7712 TO 0.7747     ********
0.7747 TO 0.7783     **********
0.7783 TO 0.7818     ******
0.7818 TO 0.7854     *******
0.7854 TO 0.7889     ***
0.7889 TO 0.7925     *
0.7925 TO 0.7960
0.7960 TO 0.7996     ***
0.7996 TO 0.8031     ****
0.8031 TO 0.8067
0.8067 TO 0.8102     *
0.8102 TO 0.8137
0.8137 TO 0.8173
0.8173 TO 0.8208
0.8208 TO 0.8244
0.8244 TO 0.8279
```

6.6.14 High Fissile Mass LEU (32 g ^{235}U per Plate) MTR Fuel Elements

This section contains a sample input file for the evaluation of high fissile mass LEU MTR fuel elements. The file contains partially loaded top and bottom baskets containing the high fissile mass LEU MTR fuel elements and filled (seven elements) intermediate baskets containing maximum reactivity HEU MTR fuel elements.

Figure 6.6.14-1 High Fissile Mass LEU MTR Sample Input

```
=CSAS25
LWT MTR INPUT FOR CASK MODEL - PLATES IN CLOSE & PLATES @ FULL PITCH
'MIN BASKET PLATE - COMMENT CARD REFERS TO NOMINAL PLATE SIZE
' TYPE A FUEL - FULL BASKETS
'     23 PLATES - 20 GRAM U-235 PER PLATE
'     0.123 CM PLATE THICKNESS; 6.6 CM FUEL WIDTH; 56 CM FUEL HEIGHT
'     HEU FUEL COMPOSITION 30 WT%U - 94 WT%235U
' TYPE B FUEL - FULL/PARTIAL BASKETS
'     23 PLATES - 32 GRAM U-235 PER PLATE
'     0.115 CM PLATE THICKNESS; 7.3 CM FUEL WIDTH; 56 CM FUEL HEIGHT
'     LEU FUEL COMPOSITION 75 WT%U - 25 WT%235U
'FUEL SHIFT AXIAL ALTERNATING
27GROUPNDF4  LATTICECELL
' TYPE B FUEL - FULL/PARTIAL BASKET FUEL MATERIAL
URANIUM  1 DEN=19.05 0.21915 293 92235 25 92238 75 END
AL       1 DEN=2.702 0.51503 293 END
' CLAD, MODERATOR, AND CASK MATERIALS
AL    2 1.0    293.0 END
H2O   3 1    293.0 END
AL    4 1.0    293.0 END
SS304 5 1.0    293.0 END
PB    6 1.0    293.0 END
H2O   7 1.E-20 293.0 END
H2O   8 1.E-20 293.0 END
H2O   9 1.0    293.0 END
' TYPE A FUEL - FULL BASKET FUEL MATERIAL
URANIUM  10 DEN=19.05 0.0364 293 92235 94 92238 6 END
AL       10 DEN=2.702 0.59889 293 END
' SPACER MATERIAL
AL    11 1.0    293.0 END
END COMP
SYMMSLABCELL 0.3917 0.075 1 3 0.115 2 END
' DANCOFF CORRECTION FACTOR FOR TYPE A FUEL- FULL BASKET FUEL DEFINITION
MORE DATA DAN(10)=0.5119  RES=10 SLAB 0.083 END MORE

READ PARAM TBA=10 RUN=YES PLT=NO GEN=803 NPG=1000 RND=ABCD1234 END PARAM
READ GEOM
'
' FUEL PLATE CELL UNITS - FULL BASKETS - TYPE A FUEL
'
UNIT 1
COM='MIDDLE FUEL PLATE CELL'
CUBOID 10 1 2P3.3000 2P0.0415 58 2
CUBOID 2 1 2P3.3000 2P0.0615 60 0.0
CUBOID 3 1 2P3.3000 2P0.1957 60 0.0
UNIT 2
COM='TOP FUEL PLATE CELL'
CUBOID 10 1 2P3.3000 2P0.0415 58 2
CUBOID 2 1 2P3.3000 2P0.0615 60 0.0
CUBOID 3 1 2P3.3000 0.0615 -0.1957 60 0.0
UNIT 3
COM='BOTTOM FUEL PLATE CELL'
CUBOID 10 1 2P3.3000 2P0.0415 58 2
CUBOID 2 1 2P3.3000 2P0.0615 60 0.0
CUBOID 3 1 2P3.3000 0.1957 -0.0615 60 0.0
'
UNIT 4
COM='SIDE PLATE'
CUBOID 2 1 2P0.2 2P3.75 60 0.0
'
'FUEL PLATE CELL UNITS - FULL/PARTIAL BASKET -  TYPE B FUEL
'
UNIT 5
COM='MIDDLE FUEL PLATE CELL'
CUBOID 1 1 2P3.6500 2P0.0375 56.7 0.7
CUBOID 2 1 2P3.6500 2P0.0575 57.4 0.0
CUBOID 3 1 2P3.6500 2P0.19585 57.4 0.0
UNIT 6
COM='TOP FUEL PLATE CELL'
CUBOID 1 1 2P3.6500 2P0.0375 56.7 0.7
CUBOID 2 1 2P3.6500 2P0.0575 57.4 0.0
CUBOID 3 1 2P3.6500 0.0575 -0.19585 57.4 0.0
UNIT 7
COM='BOTTOM FUEL PLATE CELL'
CUBOID 1 1 2P3.6500 2P0.0375 56.7 0.7
CUBOID 2 1 2P3.6500 2P0.0575 57.4 0.0
CUBOID 3 1 2P3.6500 0.19585 -0.0575 57.4 0.0
'
UNIT 8
COM='SIDE PLATE'
CUBOID 2 1 2P0.2 2P3.75 57.4 0.0
'
' UNITS 10 TO 100 ELEMENTES SHIFTED DOWN IN BASKET
'
'
' BASKET CENTER ROW ARRAY ELEMENTS
'
UNIT 10
COM='FUEL PLATE ARRAY - PLATES IN 5/16 IN. WEB CENTER'
ARRAY  1 -3.3000 -4.3688 0.0
CUBOID 3 1 2P4.3688 2P4.3688 73.152 0.0
HOLE   4 -4.1687 0.0 0.0
HOLE   4  4.1687 0.0 0.0
```

```
REPLICATE 5 1 2R0.3556 4R0.0 1
UNIT 11
COM='FUEL ARRAY PLATES IN 5/16 IN. WEB RIGHT'
ARRAY  1 -3.9686 -4.3688 0.0
CUBOID 3 1 2P4.3688 2P4.3688 73.152 0.0
HOLE   4 -4.1687 0.0 0.0
HOLE   4  4.1687 0.0 0.0
REPLICATE 5 1 2R0.3556 4R0.0 1
UNIT 12
COM='FUEL ARRAY PLATES IN 5/16 IN. WEB LEFT'
ARRAY  1 -2.6314 -4.3688 0.0
CUBOID 3 1 2P4.3688 2P4.3688 73.152 0.0
HOLE   4 -4.1687 0.0 0.0
HOLE   4  4.1687 0.0 0.0
REPLICATE 5 1 2R0.3556 4R0.0 1
'
' BASKET TOP ROW ARRAY ELEMENTS
'
UNIT 20
COM='FUEL ARRAY WITH HALF OF 1/4 IN. PLATE ON RIGHT -  TOP STACK'
ARRAY  1 -2.6314 -4.3688 0.0
CUBOID 3 1 2P4.3688 2P4.3688 73.152 0.0
HOLE   4 -4.1687 0.0 0.0
HOLE   4  4.1687 0.0 0.0
REPLICATE 5 1 0.3048 5R0.0 1
UNIT 21
COM='FUEL ARRAY WITH HALF OF 1/4 IN. PLATE ON LEFT  - TOP STACK'
ARRAY  1 -3.9686 -4.3688 0.0
CUBOID 3 1 2P4.3688 2P4.3688 73.152 0.0
HOLE   4 -4.1687 0.0 0.0
HOLE   4  4.1687 0.0 0.0
REPLICATE 5 1 0.0 0.3048 4R0.0 1
'
' BASKET BOTTOM ROW ARRAY ELEMENTS
'
UNIT 30
COM='FUEL ARRAY WITH HALF OF 1/4 IN. PLATE ON RIGHT -  BOTTOM STACK'
ARRAY  1 -2.6314 -4.3688 0.0
CUBOID 3 1 2P4.3688 2P4.3688 73.152 0.0
HOLE   4 -4.1687 0.0 0.0
HOLE   4  4.1687 0.0 0.0
REPLICATE 5 1 0.3048 5R0.0 1
UNIT 31
COM='FUEL ARRAY WITH HALF OF 1/4 IN. PLATE ON LEFT - BOTTOM STACK'
ARRAY  1 -3.9686 -4.3688 0.0
CUBOID 3 1 2P4.3688 2P4.3688 73.152 0.0
HOLE   4 -4.1687 0.0 0.0
HOLE   4  4.1687 0.0 0.0
REPLICATE 5 1 0.0 0.3048 4R0.0 1
'
' CONSTRUCTION OF BASKET ROWS
'
UNIT 40
COM='2 UNIT ARRAY WITH 1/4 IN. PLATE ON TOP AND SIDES'
ARRAY 2 -9.0428 -4.3688 0.0
REPLICATE 5 1 3R0.3048 0.0 2R0.0 1
UNIT 41
COM='3 UNIT ARRAY WITH REST OF 5/16 WEB'
ARRAY 3 -14.1738 -4.3688 0.0
REPLICATE 5 1 2R0.3556 2R0.7112 2R0.0 1
UNIT 42
COM='2 UNIT ARRAY WITH 1/4 IN. PLATE ON BOTTOM AND SIDES'
ARRAY 4 -9.0428 -4.3688 0.0
REPLICATE 5 1 2R0.3048 0.0 0.3048 2R0.0 1
'
' BASKET UNIT
'
UNIT 50
COM='7 MTR ELEMENTS IN THE LWT'
CYLINDER 3 1 17.0500 73.152 0.0
HOLE 40 0.0 +9.4489 0.0
HOLE 41 0.0  0.0    0.0
HOLE 42 0.0 -9.4489 0.0
CYLINDER 5 1 18.8913   73.152 -1.27
CYLINDER 6 1 33.4963   73.152 -1.27
CYLINDER 5 1 36.5443   73.152 -1.27
CYLINDER 7 1 49.2443   73.152 -1.27
CYLINDER 5 1 49.8539   73.152 -1.27
CUBOID   8 1 4P49.8539 73.152 -1.27
'
' UNITS 110 TO 150 ELEMENTES SHIFTED UP IN BASKET
'
' BASKET CENTER ROW ARRAY ELEMENTS
'
UNIT 110
COM='FUEL PLATE ARRAY - PLATES IN 5/16 IN. WEB CENTER'
ARRAY  1 -3.3000 -4.3688 13.152
CUBOID 3 1 2P4.3688 2P4.3688 73.152 0.0
HOLE   4 -4.1687 0.0 13.152
HOLE   4  4.1687 0.0 13.152
REPLICATE 5 1 2R0.3556 4R0.0 1
UNIT 111
COM='FUEL ARRAY PLATES IN 5/16 IN. WEB RIGHT'
ARRAY  1 -3.9686 -4.3688 13.152
CUBOID 3 1 2P4.3688 2P4.3688 73.152 0.0
HOLE   4 -4.1687 0.0 13.152
HOLE   4  4.1687 0.0 13.152
```

```
REPLICATE 5 1 2R0.3556 4R0.0 1
UNIT 112
COM='FUEL ARRAY PLATES IN 5/16 IN. WEB LEFT'
ARRAY  1 -2.6314 -4.3688 13.152
CUBOID 3 1 2P4.3688 2P4.3688 73.152 0.0
HOLE   4 -4.1687 0.0 13.152
HOLE   4  4.1687 0.0 13.152
REPLICATE 5 1 2R0.3556 4R0.0 1
'
' BASKET TOP ROW ARRAY ELEMENTS
'
UNIT 120
COM='FUEL ARRAY WITH HALF OF 1/4 IN. PLATE ON RIGHT -  TOP STACK'
ARRAY  1 -2.6314 -4.3688 13.152
CUBOID 3 1 2P4.3688 2P4.3688 73.152 0.0
HOLE   4 -4.1687 0.0 13.152
HOLE   4  4.1687 0.0 13.152
REPLICATE 5 1 0.3048 5R0.0 1
UNIT 121
COM='FUEL ARRAY WITH HALF OF 1/4 IN. PLATE ON LEFT - TOP STACK'
ARRAY  1 -3.9686 -4.3688 13.152
CUBOID 3 1 2P4.3688 2P4.3688 73.152 0.0
HOLE   4 -4.1687 0.0 13.152
HOLE   4  4.1687 0.0 13.152
REPLICATE 5 1 0.0 0.3048 4R0.0 1
'
' BASKET BOTTOM ROW ARRAY ELEMENTS
'
UNIT 130
COM='FUEL ARRAY WITH HALF OF 1/4 IN. PLATE ON RIGHT -  BOTTOM STACK'
ARRAY  1 -2.6314 -4.3688 13.152
CUBOID 3 1 2P4.3688 2P4.3688 73.152 0.0
HOLE   4 -4.1687 0.0 13.152
HOLE   4  4.1687 0.0 13.152
REPLICATE 5 1 0.3048 5R0.0 1
UNIT 131
COM='FUEL ARRAY WITH HALF OF 1/4 IN. PLATE ON LEFT - BOTTOM STACK'
ARRAY  1 -3.9686 -4.3688 13.152
CUBOID 3 1 2P4.3688 2P4.3688 73.152 0.0
HOLE   4 -4.1687 0.0 13.152
HOLE   4  4.1687 0.0 13.152
REPLICATE 5 1 0.0 0.3048 4R0.0 1
'
' CONSTRUCTION OF BASKET ROWS
'
UNIT 140
COM='2 UNIT ARRAY WITH 1/4 IN. PLATE ON TOP AND SIDES'
ARRAY 5 -9.0428 -4.3688 0.0
REPLICATE 5 1 3R0.3048 0.0 2R0.0 1
UNIT 141
COM='3 UNIT ARRAY WITH REST OF 5/16 WEB'
ARRAY 6 -14.1738 -4.3688 0.0
REPLICATE 5 1 2R0.3556 2R0.7112 2R0.0 1
UNIT 142
COM='2 UNIT ARRAY WITH 1/4 IN. PLATE ON BOTTOM AND SIDES'
ARRAY 7 -9.0428 -4.3688 0.0
REPLICATE 5 1 2R0.3048 0.0 0.3048 2R0.0 1
'
' BASKET UNIT
'
UNIT 150
COM='7 MTR ELEMENTS IN THE LWT'
CYLINDER 3 1 17.0500 73.152 0.0
HOLE 140 0.0 +9.4489 0.0
HOLE 141 0.0  0.0    0.0
HOLE 142 0.0 -9.4489 0.0
CYLINDER 5 1 18.8913   73.152 -1.27
CYLINDER 6 1 33.4963   73.152 -1.27
CYLINDER 5 1 36.5443   73.152 -1.27
CYLINDER 7 1 49.2443   73.152 -1.27
CYLINDER 5 1 49.8539   73.152 -1.27
CUBOID   8 1 4P49.8539 73.152 -1.27
'
' UNITS 210 TO 250 ELEMENTS SHIFTED DOWN IN BASKET - NO FUEL IN CENTER ROW
'
' BASKET CENTER ROW ARRAY ELEMENTS
'
UNIT 210
COM='FUEL PLATE ARRAY - PLATES IN 5/16 IN. WEB CENTER'
CYLINDER 3 1 3.81 73.152 0.0
CYLINDER 11 1 4.1275 73.152 0.0
CUBOID 3 1 2P4.3688 2P4.3688 73.152 0.0
REPLICATE 5 1 2R0.3556 4R0.0 1
UNIT 211
COM='FUEL ARRAY PLATES IN 5/16 IN. WEB RIGHT'
CYLINDER 3 1 3.81 73.152 0.0
CYLINDER 11 1 4.1275 73.152 0.0
CUBOID 3 1 2P4.3688 2P4.3688 73.152 0.0
REPLICATE 5 1 2R0.3556 4R0.0 1
UNIT 212
COM='FUEL ARRAY PLATES IN 5/16 IN. WEB LEFT'
CYLINDER 3 1 3.81 73.152 0.0
CYLINDER 11 1 4.1275 73.152 0.0
CUBOID 3 1 2P4.3688 2P4.3688 73.152 0.0
REPLICATE 5 1 2R0.3556 4R0.0 1
'
' BASKET TOP ROW ARRAY ELEMENTS
```

```
'
UNIT 220
COM='FUEL ARRAY WITH HALF OF 1/4 IN. PLATE ON RIGHT -  TOP STACK'
ARRAY  11 -3.3314 -4.3688 0.0
CUBOID 3 1 2P4.3688 2P4.3688 73.152 0.0
HOLE   8 -4.1687 0.0 0.0
HOLE   8  4.1687 0.0 0.0
REPLICATE 5 1 0.3048 5R0.0 1
UNIT 221
COM='FUEL ARRAY WITH HALF OF 1/4 IN. PLATE ON LEFT  - TOP STACK'
ARRAY  11 -3.9686 -4.3688 0.0
CUBOID 3 1 2P4.3688 2P4.3688 73.152 0.0
HOLE   8 -4.1687 0.0 0.0
HOLE   8  4.1687 0.0 0.0
REPLICATE 5 1 0.0 0.3048 4R0.0 1
'
' BASKET BOTTOM ROW ARRAY ELEMENTS
'
UNIT 230
COM='FUEL ARRAY WITH HALF OF 1/4 IN. PLATE ON RIGHT -  BOTTOM STACK'
ARRAY  11 -3.3314 -4.3688 0.0
CUBOID 3 1 2P4.3688 2P4.3688 73.152 0.0
HOLE   8 -4.1687 0.0 0.0
HOLE   8  4.1687 0.0 0.0
REPLICATE 5 1 0.3048 5R0.0 1
UNIT 231
COM='FUEL ARRAY WITH HALF OF 1/4 IN. PLATE ON LEFT - BOTTOM STACK'
ARRAY  11 -3.9686 -4.3688 0.0
CUBOID 3 1 2P4.3688 2P4.3688 73.152 0.0
HOLE   8 -4.1687 0.0 0.0
HOLE   8  4.1687 0.0 0.0
REPLICATE 5 1 0.0 0.3048 4R0.0 1
'
' CONSTRUCTION OF BASKET ROWS
'
UNIT 240
COM='2 UNIT ARRAY WITH 1/4 IN. PLATE ON TOP AND SIDES'
ARRAY 12 -9.0428 -4.3688 0.0
REPLICATE 5 1 3R0.3048 0.0 2R0.0 1
UNIT 241
COM='3 UNIT ARRAY WITH REST OF 5/16 WEB'
ARRAY 13 -14.1738 -4.3688 0.0
REPLICATE 5 1 2R0.3556 2R0.7112 2R0.0 1
UNIT 242
COM='2 UNIT ARRAY WITH 1/4 IN. PLATE ON BOTTOM AND SIDES'
ARRAY 14 -9.0428 -4.3688 0.0
REPLICATE 5 1 2R0.3048 0.0 0.3048 2R0.0 1
'
' BASKET UNIT
'
UNIT 250
COM='7 MTR ELEMENTS IN THE LWT'
CYLINDER 3 1 17.0500 73.152 0.0
HOLE 240 0.0 +9.4489 0.0
HOLE 241 0.0  0.0    0.0
HOLE 242 0.0 -9.4489 0.0
CYLINDER 5 1 18.8913   73.152 -1.27
CYLINDER 6 1 33.4963   73.152 -1.27
CYLINDER 5 1 36.5443   73.152 -1.27
CYLINDER 7 1 49.2443   73.152 -1.27
CYLINDER 5 1 49.8539   73.152 -1.27
CUBOID   8 1 4P49.8539 73.152 -1.27
'
' UNITS 310 TO 350 ELEMENTS SHIFTED UP IN BASKET - NO FUEL IN CENTER ROW
'
' BASKET CENTER ROW ARRAY ELEMENTS
'
UNIT 310
COM='FUEL PLATE ARRAY - PLATES IN 5/16 IN. WEB CENTER'
CYLINDER 3 1 3.81 73.152 0.0
CYLINDER 11 1 4.1275 73.152 0.0
CUBOID 3 1 2P4.3688 2P4.3688 73.152 0.0
REPLICATE 5 1 2R0.3556 4R0.0 1
UNIT 311
COM='FUEL ARRAY PLATES IN 5/16 IN. WEB RIGHT'
CYLINDER 3 1 3.81 73.152 0.0
CYLINDER 11 1 4.1275 73.152 0.0
CUBOID 3 1 2P4.3688 2P4.3688 73.152 0.0
REPLICATE 5 1 2R0.3556 4R0.0 1
UNIT 312
COM='FUEL ARRAY PLATES IN 5/16 IN. WEB LEFT'
CYLINDER 3 1 3.81 73.152 0.0
CYLINDER 11 1 4.1275 73.152 0.0
CUBOID 3 1 2P4.3688 2P4.3688 73.152 0.0
REPLICATE 5 1 2R0.3556 4R0.0 1
'
' BASKET TOP ROW ARRAY ELEMENTS
'
UNIT 320
COM='FUEL ARRAY WITH HALF OF 1/4 IN. PLATE ON RIGHT -  TOP STACK'
ARRAY  11 -3.3314 -4.3688 15.752
CUBOID 3 1 2P4.3688 2P4.3688 73.152 0.0
HOLE   8 -4.1687 0.0 15.752
HOLE   8  4.1687 0.0 15.752
REPLICATE 5 1 0.3048 5R0.0 1
UNIT 321
COM='FUEL ARRAY WITH HALF OF 1/4 IN. PLATE ON LEFT - TOP STACK'
```

```
ARRAY  11 -3.9686 -4.3688 15.752
CUBOID 3 1 2P4.3688 2P4.3688 73.152 0.0
HOLE   8 -4.1687 0.0 15.752
HOLE   8  4.1687 0.0 15.752
REPLICATE 5 1 0.0 0.3048 4R0.0 1
'
' BASKET BOTTOM ROW ARRAY ELEMENTS
'
UNIT 330
COM='FUEL ARRAY WITH HALF OF 1/4 IN. PLATE ON RIGHT -  BOTTOM STACK'
ARRAY  11 -3.3314 -4.3688 15.752
CUBOID 3 1 2P4.3688 2P4.3688 73.152 0.0
HOLE   8 -4.1687 0.0 15.752
HOLE   8  4.1687 0.0 15.752
REPLICATE 5 1 0.3048 5R0.0 1
UNIT 331
COM='FUEL ARRAY WITH HALF OF 1/4 IN. PLATE ON LEFT - BOTTOM STACK'
ARRAY  11 -3.9686 -4.3688 15.752
CUBOID 3 1 2P4.3688 2P4.3688 73.152 0.0
HOLE   8 -4.1687 0.0 15.752
HOLE   8  4.1687 0.0 15.752
REPLICATE 5 1 0.0 0.3048 4R0.0 1
'
' CONSTRUCTION OF BASKET ROWS
'
UNIT 340
COM='2 UNIT ARRAY WITH 1/4 IN. PLATE ON TOP AND SIDES'
ARRAY 15 -9.0428 -4.3688 0.0
REPLICATE 5 1 3R0.3048 0.0 2R0.0 1
UNIT 341
COM='3 UNIT ARRAY WITH REST OF 5/16 WEB'
ARRAY 16 -14.1738 -4.3688 0.0
REPLICATE 5 1 2R0.3556 2R0.7112 2R0.0 1
UNIT 342
COM='2 UNIT ARRAY WITH 1/4 IN. PLATE ON BOTTOM AND SIDES'
ARRAY 17 -9.0428 -4.3688 0.0
REPLICATE 5 1 2R0.3048 0.0 0.3048 2R0.0 1
'
' BASKET UNIT
'
UNIT 350
COM='7 MTR ELEMENTS IN THE LWT'
CYLINDER 3 1 17.0500 73.152 0.0
HOLE 340 0.0 +9.4489 0.0
HOLE 341 0.0  0.0    0.0
HOLE 342 0.0 -9.4489 0.0
CYLINDER 5 1 18.8913   73.152 -1.27
CYLINDER 6 1 33.4963   73.152 -1.27
CYLINDER 5 1 36.5443   73.152 -1.27
CYLINDER 7 1 49.2443   73.152 -1.27
CYLINDER 5 1 49.8539   73.152 -1.27
CUBOID   8 1 4P49.8539 73.152 -1.27
'
' CASK LID AND BOTTOM STRUCTURE
'
UNIT 460
COM='SIMPLIFIED LID STRUCTURE NAC-LWT'
CYLINDER 5 1 36.5188   13.6775 -14.1351
CYLINDER 8 1 49.8539   13.6775 -14.1351
CUBOID   8 1 4P49.8539 13.6775 -14.1351
UNIT 461
COM='SIMPLIFIED CASK BOTTOM STRUCTURE NAC-LWT'
CYLINDER 6 1 26.3525 2P3.81
CYLINDER 5 1 36.6188 +13.36 -12.7
CYLINDER 8 1 49.8539 +13.36 -12.7
CUBOID   8 1 4P49.8539 +13.36 -12.7
UNIT 462
COM='THIN TOP AND BOTTOM SHELL OF NEUTRON SHIELD - SUBTRACTED FROM LID MODEL'
CYLINDER 5 1 49.8539 0.61 0.0
CUBOID   8 1 4P49.8539 0.61 0.0
'
' STACK OF BASKETS WITH CASK LID AND BOTTOM
'
GLOBAL UNIT 470
COM='STACK OF 6 BASKETS IN CASK WITH LID AND BOTTOM'
ARRAY  40  -49.8539 -49.8539 0.0
END GEOM
READ ARRAY
'
' ARRAYS FOR TYPE A BASKETS
'
' FUEL ELEMENT PLATE ARRAY
'
ARA=1 NUX=1 NUY=23 NUZ=1 FILL 3 21R1 2 END FILL
'
' ARRAYS OF BASKET OPENINGS (TOP, MIDDLE, BOTTOM)
' PLATES AT BOTTOM OF OPENING
'
ARA=2 NUX=2 NUY=1 NUZ=1 FILL 20 21 END FILL
ARA=3 NUX=3 NUY=1 NUZ=1 FILL 12 10 11 END FILL
ARA=4 NUX=2 NUY=1 NUZ=1 FILL 30 31 END FILL
'
' ARRAYS OF BASKET OPENINGS (TOP, MIDDLE, BOTTOM)
' PLATES AT TOP OF OPENING
'
ARA=5 NUX=2 NUY=1 NUZ=1 FILL 120 121 END FILL
ARA=6 NUX=3 NUY=1 NUZ=1 FILL 112 110 111 END FILL
```

```
ARA=7 NUX=2 NUY=1 NUZ=1 FILL 130 131 END FILL
'
' ARRAYS FOR TYPE B  BASKETS
'
ARA=11 NUX=1 NUY=23 NUZ=1 FILL 7 21R5 6 END FILL
'
' ARRAYS OF BASKET OPENINGS (TOP, MIDDLE, BOTTOM)
' PLATES AT BOTTOM OF OPENING
'
ARA=12 NUX=2 NUY=1 NUZ=1 FILL 220 221 END FILL
ARA=13 NUX=3 NUY=1 NUZ=1 FILL 212 210 211 END FILL
ARA=14 NUX=2 NUY=1 NUZ=1 FILL 230 231 END FILL
'
' ARRAYS OF BASKET OPENINGS (TOP, MIDDLE, BOTTOM)
' PLATES AT TOP OF OPENING
'
ARA=15 NUX=2 NUY=1 NUZ=1 FILL 320 321 END FILL
ARA=16 NUX=3 NUY=1 NUZ=1 FILL 312 310 311 END FILL
ARA=17 NUX=2 NUY=1 NUZ=1 FILL 330 331 END FILL
'
' ARRAY OF BASKETS WITH LID AND BOTTOM
'
ARA=40 NUX=1 NUY=1 NUZ=10 FILL 461 462 350 50 150 50 150 250 462 460 END FILL
END ARRAY
READ BOUNDS ALL=MIR END BOUNDS
READ START NST=0 XSM=-17 XSP=17 YSM=-17 YSP=17 ZSM=25 ZSP=475  END BOUNDS
READ PLOT
TTL='X-Y PLOT OF CENTER ELEMENT - FUEL ELEVATION'
SCR=YES PIC=MAT LPI=10
UAX=1.0 VDN=-1.0 NAX=1500
XUL=-5.0 YUL=5.0 ZUL=150.0
XLR=5.0 YLR=-5.0 ZLR=150.0 END
TTL='X-Y PLOT OF BASKET - FUEL ELEVATION'
UAX=1.0 VDN=-1.0 NAX=1500
XUL=-17.0 YUL=17.0 ZUL=50.0
XLR=17.0 YLR=-17.0 ZLR=50.0 END
TTL='X-Y PLOT OF BASKET - FUEL ELEVATION - MIDDLE BASKET'
UAX=1.0 VDN=-1.0 NAX=1500
XUL=-17.0 YUL=17.0 ZUL=150.0
XLR=17.0 YLR=-17.0 ZLR=150.0 END
TTL='X-Y PLOT OF CASK - FUEL ELEVATION'
UAX=1.0 VDN=-1.0 NAX=1500
XUL=-65.0 YUL=65.0 ZUL=150.0
XLR=65.0 YLR=-65.0 ZLR=150.0 END
TTL='Y-Z (X=0) PLOT OF MIDDLE BASKET - CENTER SECTION'
VAX=1.0 WDN=-1.0
XUL=0.0 YUL=-5.0 ZUL=155.0
XLR=0.0 YLR=5.0 ZLR=150.0 END
TTL='Y-Z (X=0) PLOT OF MIDDLE BASKET - CENTER FUEL ELEMENT'
VAX=1.0 WDN=-1.0
XUL=0.0 YUL=-5.0 ZUL=180.0
XLR=0.0 YLR=5.0 ZLR=100.0 END
TTL='Y-Z (X=-2) PLOT OF MIDDLE BASKET'
VAX=1.0 WDN=-1.0
XUL=-2.0 YUL=-15.0 ZUL=180
XLR=-2.0 YLR=15.0 ZLR=100.00 END
TTL='Y-Z (X=-2) PLOT OF CASK - R=17.0'
LPI=5 NAX=1000
VAX=1.0 WDN=-1.0
XUL=-2.0 YUL=-17.0 ZUL=502.0
XLR=-2.0 YLR=17.0 ZLR=-1.0 END
TTL='Y-Z (X=-2) PLOT OF CASK - R=51.0'
VAX=1.0 WDN=-1.0
XUL=-2.0 YUL=-51.0 ZUL=502.0
XLR=-2.0 YLR=51.0 ZLR=-1.0 END
END PLOT
END DATA
END
```

6.6.15 PWR MOX Fuel Rods

This section contains truncated sample output files from the evaluation of MOX fuel rods in the NAC-LWT cask. The output files are shown in Figure 6.6.15-1 (MOX Services fuel composition in a hexagonal pitch) and Figure 6.6.15-2 (hexagonal pitch ^{241}Pu fuel composition). Included as Figure 6.6.15-3 is the MOX Services fuel composition case containing a square pitch rod lattice (3.8 cm pitch).

Figure 6.6.15-1 Hexagonal Pitch MOX Rods – MOX Services Fuel Composition

```
         Thread Name & Version = MCNP5_RSICC, 1.30

         ._ _   _  ._   ._    |_
         | | |  (_  | |  |_)   _)
                        |
 +---------------------------------------------------------------------+
 |   This program was prepared by the Regents of the University of     |
 |California at Los Alamos National Laboratory (the University) under  |
 |  contract number W-7405-ENG-36 with the U.S. Department of Energy   |
 |(DoE).  The University has certain rights in the program pursuant to|
 |  the contract and the program should not be copied or distributed   |
 | outside your organization.  All rights in the program are reserved  |
 |by the DoE and the University.  Neither the U.S. Government nor the  |
 | University makes any warranty, express or implied, or assumes any   |
 |     liability or responsibility for the use of this software.       |
 +---------------------------------------------------------------------+

1mcnp     version 5     ld=06212004                    10/25/07 21:05:56
 ***********************************************************************                probid =  10/25/07 21:05:56
 name=MS_Acc_NACCoC_c1.00_g0.00_e0.00_d0.01cm_HP_36mm.inp host=amdeng1-it1458

    1-       NAC-LWT Cask - MOX Experiments - Accident Transport Conditions
    2-       C
    3-       C EXCEL File Version: v2.00
    4-       C Run Version: v2.00
    5-       C
    6-       C Fissile Material Type: MOX Services
    7-       C Rod Interior Void Moderator Density: 0.9982 g/cc
    8-       C Canister Interior Moderator Density: 0.9982 g/cc
    9-       C Canister to Cask Gap Moderator Density: 0.0001 g/cc
   10-       C Cask Exterior Moderator Density: 0.0001 g/cc
   11-       C Boundary Condition / Distance:  Reflected / 0.01 cm
   12-       C
   13-       C Fuel Rod Pitch: 3.6 cm
   14-       C Fuel Rod Pitch Cofiguration: Hexagonal
   15-       C Number of Rods: 16
   16-       C
   17-       C Base Fuel Parameters: NACCoC
   18-       C
   19-       c Cells - Fuel Rod - NACCoC
   20-       1 1 -10.555 -1   u=3 $ Fuel
   21-       2 2 -0.9982 -2 +1  u=3 $ Plenum + Fuel to Clad Gap
   22-       3 3 -6.56 -3 +2  u=3 $ Clad + End Plugs
   23-       4 4 -0.9982 +3   u=3 $ Outside Fuel Rod
   24-       C 16 Rods - Hexagonal Pitch
   25-       10 4 -0.9982 -10
   26-                  *trcl=( 0.9000 -1.5588 0.0000 )
   27-                  lat=2 u=2 fill=-7:6 -5:5 0:0
   28-             2 2 2 2 2 2 2 2 2 2 2 2 2 2
   29-             2 2 2 2 2 2 2 2 2 2 2 2 2 2
   30-             2 2 2 2 2 2 2 2 2 2 2 2 2 2
   31-             2 2 2 2 2 2 2 3 2 2 2 2 2 2
   32-             2 2 2 2 2 2 3 3 3 2 2 2 2 2
   33-             2 2 2 2 2 3 3 3 3 3 2 2 2 2
   34-             2 2 2 2 2 3 3 3 3 2 2 2 2 2
   35-             2 2 2 2 2 3 3 3 2 2 2 2 2 2
   36-             2 2 2 2 2 2 2 2 2 2 2 2 2 2
   37-             2 2 2 2 2 2 2 2 2 2 2 2 2 2
   38-             2 2 2 2 2 2 2 2 2 2 2 2 2 2
   39-       C PWR Basket - Cells
   40-       20  4 -0.9982 -20   fill=2  u=1 $ Rod Array Container
   41-       21  5 -0.0001 +20 -21    u=1 $ Basket Cavity
   42-       22  7 -2.7020 -22 +21    u=1 $ Basket Body
   43-       23  5 -0.0001 +22     u=1 $ Outside
   44-       C Cells - LWT Cask Accident Conditions
   45-       40 8 -11.344 -43     u=0 $ BotPb
   46-       41 5 -0.0001 -42 fill=1    u=0 $ Cavity
   47-       42 9 -7.9400 -41 +43     u=0 $ Bottom
   48-       43 9 -7.9400 -40 +41 +45 +48 +42 u=0 $ OuterShell
   49-       44 9 -7.9400 -44 +47 +42   u=0 $ InnerShellTaper
   50-       45 9 -7.9400 -46 +42    u=0 $ InnerShell
   51-       46 8 -11.344 -47 +46    u=0 $ Lead
   52-       47 8 -11.344 -45 +44 +47   u=0 $ LeadTaper
   53-       48 0         -48 +47    u=0 $ LeadGap
   54-       49 6 -0.0001 -49 +40    u=0 $ Gap to Reflector
   55-       50 0          +49    u=0 $ Boundary
   56-
   57-       c Surfaces - Fuel Rod - NACCoC
   58-       1 RCC 0.0000 0.0000 10.5207 0.0000 0.0000 389.8900 0.4781   $ Fuel pellet stack
   59-       2 RCC 0.0000 0.0000 6.3990 0.0000 0.0000 409.4227 0.4876   $ Annulus + Plenum
   60-       3 RCC 0.0000 0.0000 5.0800 0.0000 0.0000 411.8226 0.5588   $ Clad + End-Caps
   61-       c Surfaces - Pitch - NACCoC
   62-       10 RHP 0.0000 0.0000 -1.0000 0.0000 0.0000 454.12 1.8000 0.0000 0.0000 $ Lattice
   63-       C PWR Basket - Surfaces
   64-       20 1 RPP -7.4148 7.4148 -7.4148 7.4148 0.0000 452.1200  $ Array Container
   65-       21 1 RPP -11.2713 11.2713 -11.2713 11.2713 0.0000 452.1200  $ Basket Opening
   66-       22  RCC 0.0000 0.0000 0.0000 0.0000 0.0000 452.1200 16.83512 $ Basket Outer Body
   67-       C Surfaces - LWT Cask Accident Conditions
   68-       40 RCC 0.0000 0.0000 -26.6700 0.0000 0.0000 507.3650 36.5189 $ Lwt Body
   69-       41 RCC 0.0000 0.0000 -26.6700 0.0000 0.0000 26.6700 36.5189 $ Bottom
   70-       42 RCC 0.0000 0.0000 0.0000 0.0000 0.0000 452.1200 16.9863 $ Cavity
```

```
   71-       43 RCC 0.0000 0.0000 -17.7800 0.0000 0.0000 7.6200 26.3525 $ Bottom gamma shield
   72-       44 RCC 0.0000 0.0000 0.0000 0.0000 0.0000 444.5000 20.1740 $ Lead id - taper
   73-       45 RCC 0.0000 0.0000 0.0000 0.0000 0.0000 444.5000 31.5976 $ Lead od - taper
   74-       46 RCC 0.0000 0.0000 13.8176 0.0000 0.0000 416.8648 18.9103 $ Lead id
   75-       47 RCC 0.0000 0.0000 13.8176 0.0000 0.0000 416.8648 33.3271 $ Lead od
   76-       48 RCC 0.0000 0.0000 13.8176 0.0000 0.0000 416.8648 33.4645 $ Lead gap
   77-       *49 RPP -36.5289 36.5289 -36.5289 36.5289 -26.6800 480.7050  $ Container
   78-
   79-       c
   80-       c Materials List
   81-       c
   82-       C MOX Material Composition Fuel
   83-       m1    92235 -5.6994E-03
   84-             92238 -8.0851E-01
   85-             94238 -3.3724E-05
   86-             94239 -6.4076E-02
   87-             94240 -3.0352E-03
   88-             94241 -2.6980E-04
   89-             94242 -3.3724E-05
   90-              8016 -1.1835E-01
   91-       C Rod Interior Void Material
   92-       m2    1001 2
   93-             8016 1
   94-       mt2     lwtr.01
   95-       c Clad Material
   96-       m3 26054 -7.063E-05 24050 -4.179E-05 7014 -4.980E-04
   97-             26056 -1.149E-03 24052 -8.370E-04 7015 -1.981E-06
   98-             26057 -2.702E-05 24053 -9.673E-05
   99-             26058 -3.631E-06 24054 -2.448E-05
  100-             40000 -9.823E-01 50000 -1.500E-02
  101-       C Canister Interior Non-Fuel Space
  102-       m4    1001 2
  103-             8016 1
  104-       mt4     lwtr.01
  105-       C Canister to Cask Gap Material
  106-       m5    1001 2
  107-             8016 1
  108-       mt5     lwtr.01
  109-       C Cask Exterior Material
  110-       m6    1001 2
  111-             8016 1
  112-       mt6     lwtr.01
  113-       c Aluminum
  114-       m7 13027 -1.000E+00
  115-       C Water/Glycol
  116-       m10   1001 -1.03651E-01
 warning. material  10 is not used in the problem.
  117-             8016 -6.75619E-01
  118-             6000 -2.20730E-01
  119-       mt10    lwtr.01
 warning. material  10 is not used in the problem.
  120-       c Lead
  121-       m8 82206 -2.534E-01
  122-             82207 -2.207E-01
  123-             82208 -5.259E-01
  124-       c SS304
  125-       m9 24050 -7.939E-03 26054 -3.927E-02 28058 -6.384E-02
  126-             24052 -1.590E-01 26056 -6.387E-01 28060 -2.543E-02
  127-             24053 -1.838E-02 26057 -1.502E-02 28061 -1.124E-03
  128-             24054 -4.652E-03 26058 -2.019E-03 28062 -3.639E-03
  129-                 28064 -9.623E-04
  130-             25055 -2.000E-02
  131-       C Aluminum Honeycomb Impact Limiter
  132-       m11   13027 -1.0
 warning. material  11 is not used in the problem.
  133-       C Mode
  134-       mode n
  135-       C Cell Importances
  136-       imp:n 1 18r 0
  137-       C
  138-       C Criticality Controls
  139-       kcode 1000 0.80 30 530
  140-       C
  141-       C Starting Source Definition
  142-       sdef cell=41:20:10:1
  143-             erg=d1
  144-             pos=0 0 10.5207
  145-             rad=d2
  146-             axs=0 0 1
  147-             ext=d3
  148-       sp1   -3
  149-       si2 0.0000 0.4781
  150-       sp2 -21 1
  151-       si3 0.0000 389.8900
  152-       sp3 0 1
  153-       C Print Control
  154-       print
  155-       C Random Number Generator
  156-       rand gen=2 seed=19073486328125 stride=152917 hist=1
  157-       c
  158-       c Rotation Matrix
  159-       *TR1 0.0 0.0 0.0 -30 60 90 -120 -30 90 90 90 0  $ z-rotation -30 degrees

1source                                                                                print table 10

 values of defaulted or explicitly defined source variables
```

```
    sur         0.0000E+00
    tme         0.0000E+00
    dir         isotropic
    pos         0.0000E+00   0.0000E+00   1.0521E+01
    x           0.0000E+00
    y           0.0000E+00
    z           0.0000E+00
    axs         0.0000E+00   0.0000E+00   1.0000E+00
    vec         0.0000E+00   0.0000E+00   0.0000E+00
    ccc         0.0000E+00
    nrm         1.0000E+00
    ara         0.0000E+00
    wgt         1.0000E+00
    eff         1.0000E-02
    par         0.0000E+00
    tr          0.0000E+00


 probability distribution   1 for source variable erg
 energy function 3:  watt (fission) spectrum (endf law 10)

     f(e)=c*exp(-e/a)*sinh(sqrt(b*e))
     a = 9.6500E-01     b = 2.2900E+00     c = 4.5270E-01

     the mean of source distribution   1 is  1.9806E+00


 probability distribution   2 for source variable rad
 power law 21:     f(x)=c*abs(x)**k          k = 1.0000E+00


 probability distribution   3 for source variable ext
 unbiased histogram distribution

 source        source           cumulative          probability
  entry         value           probability           of bin

    1       0.00000E+00        0.000000E+00        0.000000E+00
    2       3.89890E+02        1.000000E+00        1.000000E+00

     the mean of source distribution   3 is  1.9494E+02


 order of sampling source variables.
 cel axs rad ext pos erg tme

 comment. total fission nubar data are being used.
1material composition                                                                print table 40

 the sum of the fractions of material    2 was 3.000000E+00

 the sum of the fractions of material    3 was 1.000050E+00

 the sum of the fractions of material    4 was 3.000000E+00

 the sum of the fractions of material    5 was 3.000000E+00

 the sum of the fractions of material    6 was 3.000000E+00

 the sum of the fractions of material    9 was 9.999753E-01

 material
  number     component nuclide, atom fraction

     1           92235, 2.18414E-03      92238, 3.05926E-01      94238, 1.27607E-05      94239, 2.41437E-02
                 94240, 1.13889E-03      94241, 1.00815E-04      94242, 1.25493E-05       8016, 6.66481E-01
     2            1001, 6.66667E-01       8016, 3.33333E-01
 associated thermal s(a,b) data sets:    lwtr.01t
     3           26054, 1.19346E-04      24050, 7.62600E-05       7014, 3.24139E-03      26056, 1.87224E-03
                 24052, 1.46874E-03       7015, 1.20369E-05      26057, 4.32542E-05      24053, 1.66532E-04
                 26058, 5.71247E-06      24054, 4.13652E-05      40000, 9.81436E-01      50000, 1.15166E-02
     4            1001, 6.66667E-01       8016, 3.33333E-01
 associated thermal s(a,b) data sets:    lwtr.01t
     5            1001, 6.66667E-01       8016, 3.33333E-01
 associated thermal s(a,b) data sets:    lwtr.01t
     6            1001, 6.66667E-01       8016, 3.33333E-01
 associated thermal s(a,b) data sets:    lwtr.01t
     7           13027, 1.00000E+00
     8           82206, 2.54963E-01      82207, 2.20987E-01      82208, 5.24050E-01
     9           24050, 8.79087E-03      26054, 4.02643E-02      28058, 6.09419E-02      24052, 1.69300E-01
                 26056, 6.31511E-01      28060, 2.34673E-02      24053, 1.92010E-02      26057, 1.45900E-02
                 28061, 1.02022E-03      24054, 4.76985E-03      26058, 1.92741E-03      28062, 3.24982E-03
                 28064, 8.32505E-04      25055, 2.01337E-02
1material                                                                             print table 40
  number     component nuclide, mass fraction

     1           92235, 5.69936E-03      92238, 8.08504E-01      94238, 3.37237E-05      94239, 6.40755E-02
                 94240, 3.03518E-03      94241, 2.69798E-04      94242, 3.37237E-05       8016, 1.18349E-01
     2            1001, 1.11915E-01       8016, 8.88085E-01
     3           26054, 7.06265E-05      24050, 4.17879E-05       7014, 4.97975E-04      26056, 1.14894E-03
                 24052, 8.36958E-04       7015, 1.98090E-06      26057, 2.70186E-05      24053, 9.67251E-05
                 26058, 3.63082E-06      24054, 2.44788E-05      40000, 9.82251E-01      50000, 1.49992E-02
     4            1001, 1.11915E-01       8016, 8.88085E-01
     5            1001, 1.11915E-01       8016, 8.88085E-01
```

6	1001, 1.11915E-01	8016, 8.88085E-01		
7	13027, 1.00000E+00			
8	82206, 2.53400E-01	82207, 2.20700E-01	82208, 5.25900E-01	
9	24050, 7.93920E-03	26054, 3.92710E-02	28058, 6.38416E-02	24052, 1.59004E-01
	26056, 6.38716E-01	28060, 2.54306E-02	24053, 1.83805E-02	26057, 1.50204E-02
	28061, 1.12403E-03	24054, 4.65211E-03	26058, 2.01905E-03	28062, 3.63909E-03
	28064, 9.62324E-04	25055, 2.00005E-02		

warning. 6 materials had unnormalized fractions. print table 40.

1cell volumes and masses print table 50

cell	atom density	gram density	input volume	calculated volume	mass	pieces	reason volume not calculated
1	7.05663E-02	1.05550E+01	0.00000E+00	2.79982E+02	2.95521E+03	1	
2	1.00128E-01	9.98200E-01	0.00000E+00	2.58267E+01	2.57802E+01	1	
3	4.33411E-02	6.56000E+00	0.00000E+00	9.81838E+01	6.44086E+02	1	
4	1.00128E-01	9.98200E-01	0.00000E+00	0.00000E+00	0.00000E+00	0	infinite
5	1.00128E-01	9.98200E-01	0.00000E+00	5.09690E+03	5.08773E+03	0	
6	1.00128E-01	9.98200E-01	0.00000E+00	9.94289E+04	9.92499E+04	0	
7	1.00309E-05	1.00000E-04	0.00000E+00	1.30324E+05	1.30324E+01	0	
8	6.03063E-02	2.70200E+00	0.00000E+00	0.00000E+00	0.00000E+00	0	asymmetric
9	1.00309E-05	1.00000E-04	0.00000E+00	0.00000E+00	0.00000E+00	0	infinite
40	3.29629E-02	1.13440E+01	0.00000E+00	1.66245E+04	1.88588E+05	1	
41	1.00309E-05	1.00000E-04	0.00000E+00	4.09828E+05	4.09828E+01	1	
42	8.64586E-02	7.94000E+00	0.00000E+00	9.51154E+04	7.55216E+05	1	
43	8.64586E-02	7.94000E+00	0.00000E+00	4.53784E+05	3.60304E+06	1	
44	8.64586E-02	7.94000E+00	0.00000E+00	1.02842E+04	8.16563E+04	2	
45	8.64586E-02	7.94000E+00	0.00000E+00	9.04489E+04	7.18165E+05	1	
46	3.29629E-02	1.13440E+01	0.00000E+00	9.86269E+05	1.11882E+07	1	
47	3.29629E-02	1.13440E+01	0.00000E+00	5.13461E+04	5.82470E+05	2	
48	0.00000E+00	0.00000E+00	0.00000E+00	1.20186E+04	0.00000E+00	1	
49	1.00309E-05	1.00000E-04	0.00000E+00	0.00000E+00	0.00000E+00	0	asymmetric
50	0.00000E+00	0.00000E+00	0.00000E+00	0.00000E+00	0.00000E+00	0	infinite

warning. 2 cells appear to consist of more than one piece.

1surface areas print table 50

surface	input area	calculated area	reason area not calculated
1.1	0.00000E+00	1.17123E+03	
1.2	0.00000E+00	7.18104E-01	
1.3	0.00000E+00	7.18104E-01	
2.1	0.00000E+00	1.25434E+03	
2.2	0.00000E+00	7.46925E-01	
2.3	0.00000E+00	7.46925E-01	
3.1	0.00000E+00	1.44593E+03	
3.2	0.00000E+00	9.80986E-01	
3.3	0.00000E+00	9.80986E-01	
10.1	0.00000E+00	0.00000E+00	not a boundary
10.2	0.00000E+00	0.00000E+00	not a boundary
10.3	0.00000E+00	0.00000E+00	not a boundary
10.4	0.00000E+00	0.00000E+00	not a boundary
10.5	0.00000E+00	0.00000E+00	not a boundary
10.6	0.00000E+00	0.00000E+00	not a boundary
10.7	0.00000E+00	1.12237E+01	
10.8	0.00000E+00	1.12237E+01	
20.1	0.00000E+00	6.70476E+03	
20.2	0.00000E+00	6.70476E+03	
20.3	0.00000E+00	6.70476E+03	
20.4	0.00000E+00	6.70476E+03	
20.5	0.00000E+00	0.00000E+00	asymmetric
20.6	0.00000E+00	0.00000E+00	asymmetric
21.1	0.00000E+00	1.01920E+04	
21.2	0.00000E+00	1.01920E+04	
21.3	0.00000E+00	1.01920E+04	
21.4	0.00000E+00	1.01920E+04	
22.1	0.00000E+00	4.78244E+04	
40.1	0.00000E+00	1.16417E+05	
40.2	0.00000E+00	4.18972E+03	
40.3	0.00000E+00	4.18972E+03	
42.1	0.00000E+00	4.82539E+04	
43.1	0.00000E+00	1.26170E+03	
43.2	0.00000E+00	2.18169E+03	
43.3	0.00000E+00	2.18169E+03	
44.1	0.00000E+00	3.50295E+03	
44.2	0.00000E+00	2.23013E+03	
45.1	0.00000E+00	5.48652E+03	
46.1	0.00000E+00	4.95306E+04	
46.2	0.00000E+00	2.61173E+03	
46.3	0.00000E+00	2.61173E+03	
47.1	0.00000E+00	8.72916E+04	
48.1	0.00000E+00	8.76515E+04	
49.1	0.00000E+00	3.70684E+04	
49.2	0.00000E+00	3.70684E+04	
49.3	0.00000E+00	3.70684E+04	
49.4	0.00000E+00	3.70684E+04	
49.5	0.00000E+00	5.33744E+03	
49.6	0.00000E+00	5.33744E+03	
10010.1	0.00000E+00	9.43871E+02	
10010.2	0.00000E+00	9.43871E+02	
10010.3	0.00000E+00	9.43871E+02	
10010.4	0.00000E+00	9.43871E+02	
10010.5	0.00000E+00	9.43871E+02	
10010.6	0.00000E+00	9.43871E+02	

1cells print table 60

	cell	mat	atom density	gram density	volume	mass	pieces	neutron importance
1	1	1	7.05663E-02	1.05550E+01	2.79982E+02	2.95521E+03	1	1.0000E+00
2	2	2s	1.00128E-01	9.98200E-01	2.58267E+01	2.57802E+01	1	1.0000E+00
3	3	3	4.33411E-02	6.56000E+00	9.81838E+01	6.44086E+02	1	1.0000E+00
4	4	4s	1.00128E-01	9.98200E-01	0.00000E+00	0.00000E+00	0	1.0000E+00
5	10	4s	1.00128E-01	9.98200E-01	5.09690E+03	5.08773E+03	0	1.0000E+00
6	20	4s	1.00128E-01	9.98200E-01	9.94289E+04	9.92499E+04	0	1.0000E+00
7	21	5s	1.00309E-05	1.00000E-04	1.30324E+05	1.30324E+01	0	1.0000E+00
8	22	7	6.03063E-02	2.70200E+00	0.00000E+00	0.00000E+00	0	1.0000E+00
9	23	5s	1.00309E-05	1.00000E-04	0.00000E+00	0.00000E+00	0	1.0000E+00
10	40	8	3.29629E-02	1.13440E+01	1.66245E+04	1.88588E+05	1	1.0000E+00
11	41	5s	1.00309E-05	1.00000E-04	4.09828E+05	4.09828E+01	1	1.0000E+00
12	42	9	8.64586E-02	7.94000E+00	9.51154E+04	7.55216E+05	1	1.0000E+00
13	43	9	8.64586E-02	7.94000E+00	4.53784E+05	3.60304E+06	1	1.0000E+00
14	44	9	8.64586E-02	7.94000E+00	1.02842E+04	8.16563E+04	2	1.0000E+00
15	45	9	8.64586E-02	7.94000E+00	9.04489E+04	7.18165E+05	1	1.0000E+00
16	46	8	3.29629E-02	1.13440E+01	9.86269E+05	1.11882E+07	1	1.0000E+00
17	47	8	3.29629E-02	1.13440E+01	5.13461E+04	5.82470E+05	2	1.0000E+00
18	48	0	0.00000E+00	0.00000E+00	1.20186E+04	0.00000E+00	1	1.0000E+00
19	49	6s	1.00309E-05	1.00000E-04	0.00000E+00	0.00000E+00	0	1.0000E+00
20	50	0	0.00000E+00	0.00000E+00	0.00000E+00	0.00000E+00	0	0.0000E+00
total					2.36097E+06	1.72254E+07		

1surfaces print table 70

	surface	trans	type	surface coefficients			
1	1		rcc				
2	1.1		cz	4.7810000E-01			
3	1.2		pz	4.0041070E+02			
4	1.3		p	0.0000000E+00	0.0000000E+00	-1.0000000E+00	-1.0520700E+01
5	2		rcc				
6	2.1		cz	4.8760000E-01			
7	2.2		pz	4.1582170E+02			
8	2.3		p	0.0000000E+00	0.0000000E+00	-1.0000000E+00	-6.3990000E+00
9	3		rcc				
10	3.1		cz	5.5880000E-01			
11	3.2		pz	4.1690260E+02			
12	3.3		p	0.0000000E+00	0.0000000E+00	-1.0000000E+00	-5.0800000E+00
13	10		rhp				
14	10.1		px	1.8000000E+00			
15	10.2		p	-1.0000000E+00	0.0000000E+00	0.0000000E+00	1.8000000E+00
16	10.3		p	5.0000000E-01	8.6602540E-01	0.0000000E+00	1.8000000E+00
17	10.4		p	-5.0000000E-01	-8.6602540E-01	0.0000000E+00	1.8000000E+00
18	10.5		p	-5.0000000E-01	8.6602540E-01	0.0000000E+00	1.8000000E+00
19	10.6		p	5.0000000E-01	-8.6602540E-01	0.0000000E+00	1.8000000E+00
20	10.7		pz	4.5312000E+02			
21	10.8		p	0.0000000E+00	0.0000000E+00	-1.0000000E+00	1.0000000E+00
22	20		rpp				
23	20.1	1	p	8.6602540E-01	5.0000000E-01	0.0000000E+00	7.4148000E+00
24	20.2	1	p	-8.6602540E-01	-5.0000000E-01	0.0000000E+00	7.4148000E+00
25	20.3	1	p	-5.0000000E-01	8.6602540E-01	0.0000000E+00	7.4148000E+00
26	20.4	1	p	5.0000000E-01	-8.6602540E-01	0.0000000E+00	7.4148000E+00
27	20.5	1	pz	4.5212000E+02			
28	20.6	1	p	0.0000000E+00	0.0000000E+00	-1.0000000E+00	0.0000000E+00
29	21		rpp				
30	21.1	1	p	8.6602540E-01	5.0000000E-01	0.0000000E+00	1.1271300E+01
31	21.2	1	p	-8.6602540E-01	-5.0000000E-01	0.0000000E+00	1.1271300E+01
32	21.3	1	p	-5.0000000E-01	8.6602540E-01	0.0000000E+00	1.1271300E+01
33	21.4	1	p	5.0000000E-01	-8.6602540E-01	0.0000000E+00	1.1271300E+01
36	22		rcc				
37	22.1		cz	1.6835120E+01			
40	40		rcc				
41	40.1		cz	3.6518900E+01			
42	40.2		pz	4.8069500E+02			
43	40.3		p	0.0000000E+00	0.0000000E+00	-1.0000000E+00	2.6670000E+01
44	41		rcc				
48	42		rcc				
49	42.1		cz	1.6986300E+01			
52	43		rcc				
53	43.1		cz	2.6352500E+01			
54	43.2		pz	-1.0160000E+01			
55	43.3		p	0.0000000E+00	0.0000000E+00	-1.0000000E+00	1.7780000E+01
56	44		rcc				
57	44.1		cz	2.0174000E+01			
58	44.2		pz	4.4450000E+02			
60	45		rcc				
61	45.1		cz	3.1597600E+01			
64	46		rcc				
65	46.1		cz	1.8910300E+01			
66	46.2		pz	4.3068240E+02			
67	46.3		p	0.0000000E+00	0.0000000E+00	-1.0000000E+00	-1.3817600E+01
68	47		rcc				
69	47.1		cz	3.3327100E+01			
72	48		rcc				
73	48.1		cz	3.3464500E+01			
76	49	refl.	rpp				
77	49.1	refl.	px	3.6528900E+01			
78	49.2	refl.	p	-1.0000000E+00	0.0000000E+00	0.0000000E+00	3.6528900E+01
79	49.3	refl.	py	3.6528900E+01			
80	49.4	refl.	p	0.0000000E+00	-1.0000000E+00	0.0000000E+00	3.6528900E+01
81	49.5	refl.	pz	4.8070500E+02			
82	49.6	refl.	p	0.0000000E+00	0.0000000E+00	-1.0000000E+00	2.6680000E+01
83	10010		rhp				

```
    84  10010.1       1001   px    2.7000000E+00
    85  10010.2       1001   p    -1.0000000E+00   0.0000000E+00   0.0000000E+00   9.0000000E-01
    86  10010.3       1001   p     5.0000000E-01   8.6602540E-01   0.0000000E+00   9.0003960E-01
    87  10010.4       1001   p    -5.0000000E-01  -8.6602540E-01   0.0000000E+00   2.6999604E+00
    88  10010.5       1001   p    -5.0000000E-01   8.6602540E-01   0.0000000E+00   3.9600581E-05
    89  10010.6       1001   p     5.0000000E-01  -8.6602540E-01   0.0000000E+00   3.5999604E+00
1  identical surfaces                                                                          print table 70

   master surface     identical surfaces

       10.7           10010.7
       10.8           10010.8
       20.5              21.5      22.2      42.2
       20.6              21.6      22.3      41.2      42.3      44.3      45.3
       40.1              41.1
       40.3              41.3
       44.2              45.2
       46.2              47.2      48.2
       46.3              47.3      48.3


   surface coefficients for identical surfaces not used.

         surface     trans  type   surface coefficients

    90  10010.7       1001   pz    4.5312000E+02
    91  10010.8       1001   p     0.0000000E+00   0.0000000E+00  -1.0000000E+00   1.0000000E+00
    34     21.5          1   pz    4.5212000E+02
    38     22.2              pz    4.5212000E+02
    50     42.2              pz    4.5212000E+02
    35     21.6          1   p     0.0000000E+00   0.0000000E+00  -1.0000000E+00   0.0000000E+00
    39     22.3              p     0.0000000E+00   0.0000000E+00  -1.0000000E+00   0.0000000E+00
    46     41.2              pz    0.0000000E+00
    51     42.3              p     0.0000000E+00   0.0000000E+00  -1.0000000E+00   0.0000000E+00
    59     44.3              p     0.0000000E+00   0.0000000E+00  -1.0000000E+00   0.0000000E+00
    63     45.3              p     0.0000000E+00   0.0000000E+00  -1.0000000E+00   0.0000000E+00
    45     41.1              cz    3.6518900E+01
    47     41.3              p     0.0000000E+00   0.0000000E+00  -1.0000000E+00   2.6670000E+01
    62     45.2              pz    4.4450000E+02
    70     47.2              pz    4.3068240E+02
    74     48.2              pz    4.3068240E+02
    71     47.3              p     0.0000000E+00   0.0000000E+00  -1.0000000E+00  -1.3817600E+01
    75     48.3              p     0.0000000E+00   0.0000000E+00  -1.0000000E+00  -1.3817600E+01
1  cell temperatures in mev for the free-gas thermal neutron treatment.                       print table 72

   all non-zero importance cells with materials have a temperature for thermal neutrons of 2.5300E-08 mev.

 ***************************************************
 * Random Number Generator  =                    2 *
 * Random Number Seed       =       19073486328125 *
 * Random Number Multiplier =  9219741426499971445 *
 * Random Number Adder      =                    1 *
 * Random Number Bits Used  =                   63 *
 * Random Number Stride     =               152917 *
 ***************************************************


        5 warning messages so far.
1physical constants                                                                            print table 98


   name                    value     description

   huge      1.0000000000000E+36     infinity
    pie      3.1415926535898E+00     pi
  euler      5.7721566490153E-01     euler constant
 avogad      6.0220434469282E+23     avogadro number (molecules/mole)
  aneut      1.0086649670000E+00     neutron mass (amu)
  avgdn      5.9703109000000E-01     avogadro number/neutron mass (1.e-24*molecules/mole/amu)
  slite      2.9979250000000E+02     speed of light (cm/shake)
 planck      4.1357320000000E-13     planck constant (mev shake)
  fscon      1.3703930000000E+02     inverse fine structure constant h*c/(2*pi*e**2)
 gpt(1)      9.3958000000000E+02     neutron mass (mev)
 gpt(3)      5.1100800000000E-01     electron mass (mev)


 fission q-values:     nuclide    q(mev)   nuclide    q(mev)
                         90232    171.91     91233    175.57
                         92233    180.84     92234    179.45
                         92235    180.88     92236    179.50
                         92237    180.40     92238    181.31
                         92239    180.40     92240    180.40
                         93237    183.67     94238    186.65
                         94239    189.44     94240    186.36
                         94241    188.99     94242    185.98
                         94243    187.48     95241    190.83
                         95242    190.54     95243    190.25
                         96242    190.49     96244    190.49
                         other    180.00


 the following compilation options were used:

     cheap
     dec
     plot
     mcplot
```

```
     xlib
     default datapath: C:\Program Files\LANL\MCNPDATA
                       C:\Progra~1\LANL\MCNPdata
1cross-section tables                                                                                    print table 100

     table    length

                        tables from file actia

   1001.62c    5202  1-h-1 at 293.6K from endf-vi.8 njoy99.50                                          mat 125      12/05/01
   7014.62c   67462  7-n-14 at 293.6K from endf-vi.8 njoy99.50                                         mat 725      12/05/01
   8016.62c  170541  8-o-16 at 293.6K from endf-vi.8 njoy99.50                                         mat 825      12/05/01
  13027.62c   75363  13-al-27 at 293.6K from endf-vi.8 njoy99.50                                       mat1325      12/17/01
  24050.62c  194445  24-cr-50 at 293.6K from endf-vi.8 njoy99.50                                       mat2425      12/20/01
  24052.62c  174773  24-cr-52 at 293.6K from endf-vi.8 njoy99.50                                       mat2431      12/20/01
  24053.62c  147286  24-cr-53 at 293.6K from endf-vi.8 njoy99.50                                       mat2434      12/20/01
  24054.62c  132737  24-cr-54 at 293.6K from endf-vi.8 njoy99.50                                       mat2437      12/20/01
  25055.62c  134565  25-mn-55 at 293.6K from endf/b-vi.8 njoy99.50                                     mat2525      02/11/02
  26054.62c  143370  26-fe-54 at 293.6K from endf-vi.8 njoy99.50                                       mat2625      12/20/01
  26056.62c  230655  26-fe-56 at 293.6K from endf-vi.8 njoy99.50                                       mat2631      12/20/01
  26057.62c  148842  26-fe-57 at 293.6K from endf-vi.8 njoy99.50                                       mat2634      12/20/01
  26058.62c   87569  26-fe-58 at 293.6K from endf-vi.8 njoy99.50                                       mat2637      12/20/01
  28058.62c  235403  28-ni-58 at 293.6K from endf-vi.8 njoy99.50                                       mat2825      12/20/01
  28060.62c  158305  28-ni-60 at 293.6K from endf-vi.8 njoy99.50                                       mat2831      12/20/01
  28061.62c  112032  28-ni-61 at 293.6K from endf-vi.8 njoy99.50                                       mat2834      12/20/01
  28062.62c  104386  28-ni-62 at 293.6K from endf-vi.8 njoy99.50                                       mat2837      12/20/01
  28064.62c   97689  28-ni-64 at 293.6K from endf-vi.8 njoy99.50                                       mat2843      12/20/01

                        tables from file endf66a

   7015.66c   19013  7-n-15 at 293.6K from endf-vi.0 njoy99.50                                        mat 728      07/13/01

                        tables from file endf66b

  40000.66c   98524  40-zr-0 at 293.6K from endf-vi.1 njoy99.50                                       mat4000      07/24/01

                        tables from file endl92

  50000.42c  141628   ENDL library name:  nd920609  LANL/XTM modified:  951222                                 911219
                     temperature = 2.5860E-08 adjusted to 2.5300E-08

                        tables from file endf66c

  82206.66c  219368  82-pb-206 at 293.6K from endf-vi.6 njoy99.50                                       mat8231      08/13/01
  82207.66c  134389  82-pb-207 at 293.6K from endf-vi.6 njoy99.50                                       mat8234      08/13/01
  82208.66c  135105  82-pb-208 at 293.6K from endf-vi.x njoy99.50                                       mat8237      03/16/02
  94238.66c   53256  94-pu-238 at 293.6K from endf-vi.0 njoy99.50       total nu                        mat9434      09/06/01
                     probability tables used from 2.0000E-04 to 1.0000E-02 mev.
  94240.66c  309518  94-pu-240 at 293.6K from endf-vi.2 njoy99.50       total nu                        mat9440      09/06/01
                     probability tables used from 5.7000E-03 to 4.0000E-02 mev.
  94241.66c  126607  94-pu-241 at 293.6K from endf-vi.3 njoy99.50       total nu                        mat9443      09/06/01
                     probability tables used from 3.0000E-04 to 4.0200E-02 mev.
  94242.66c  107114  94-pu-242 at 293.6K from endf-vi.0 njoy99.50       total nu                        mat9446      09/06/01
                     probability tables used from 9.8600E-04 to 1.0000E-02 mev.

                        tables from file t16_2003

  92235.69c  587997  92-u-235 at 293.6K from t16 u235la9d njoy99.50     total nu                        mat9228      07/02/03
                     probability tables used from 2.2500E-03 to 2.5000E-02 mev.
  92238.69c  713320  92-u-238 at 293.6K from t16 u238la8h njoy99.50     total nu                        mat9237      07/02/03
                     probability tables used from 1.0000E-02 to 1.4903E-01 mev.
  94239.69c  506320  94-pu-239 at 293.6K from t16 pu239la7d njoy99.50   total nu                        mat9437      07/02/03
                     probability tables used from 2.5000E-03 to 3.0000E-02 mev.

                        tables from file tmccs

   lwtr.01t   10193  hydrogen in light water at 300 degrees kelvin                          1001     0     010/22/85

  total     5582977

 warning. neutron energy cutoff is below some cross-section tables.

 comment.    1 cross sections modified by free gas thermal treatment.
1assignment of s(a,b) data to nuclides.                                                                  print table 102

       mat        nuclide         s(a,b)
         2       1001.62c       lwtr.01t
         4       1001.62c       lwtr.01t
         5       1001.62c       lwtr.01t
         6       1001.62c       lwtr.01t

 ***************************************************************************************************************
 dump no.    1 on file MS_Acc_NACCoC_c1.00_g0.00_e0.00_d0.01cm_HP_36mm.inpr       nps =           0     coll =             0
ctm =        0.00   nrn =                0


        6 warning messages so far.
1estimated keff results by cycle                                                                         print table 175

 cycle     1    k(collision)  0.662630    prompt removal lifetime(abs)  8.1191E+03    source points generated    844

 cycle     2    k(collision)  0.622585    prompt removal lifetime(abs)  8.6526E+03    source points generated    928

 cycle     3    k(collision)  0.744636    prompt removal lifetime(abs)  8.5012E+03    source points generated   1189

 cycle     4    k(collision)  0.686479    prompt removal lifetime(abs)  7.9407E+03    source points generated    916
```

```
 cycle     5    k(collision)  0.671615    prompt removal lifetime(abs)  8.8591E+03    source points generated    972

 cycle     6    k(collision)  0.675550    prompt removal lifetime(abs)  8.2834E+03    source points generated    999

 cycle     7    k(collision)  0.693864    prompt removal lifetime(abs)  8.1740E+03    source points generated   1052

 cycle     8    k(collision)  0.702859    prompt removal lifetime(abs)  8.6663E+03    source points generated   1006
.
.
.
.
.
  estimator     cycle   526   ave of   496 cycles      combination         simple average    combined average     corr
 k(collision)      0.741770       0.703646 0.0016     k(col/abs)          0.703392 0.0015     0.703372 0.0015   0.7953
 k(absorption)     0.756647       0.703139 0.0016     k(abs/tk ln)        0.703262 0.0016     0.703196 0.0015   0.4218
 k(trk length)     0.717143       0.703386 0.0022     k(tk ln/col)        0.703516 0.0017     0.703605 0.0016   0.5823
 rem life(col)   8.4284E+03     8.4718E+03 0.0017     k(col/abs/tk ln)    0.703390 0.0015     0.703328 0.0015
 rem life(abs)   8.3911E+03     8.4726E+03 0.0016     life(col/abs/tl)  8.4742E+03 0.0015   8.4796E+03 0.0013
 source points generated   1046

  estimator     cycle   527   ave of   497 cycles      combination         simple average    combined average     corr
 k(collision)      0.643842       0.703525 0.0016     k(col/abs)          0.703297 0.0015     0.703275 0.0015   0.7960
 k(absorption)     0.668059       0.703068 0.0016     k(abs/tk ln)        0.703158 0.0016     0.703110 0.0015   0.4250
 k(trk length)     0.634707       0.703247 0.0022     k(tk ln/col)        0.703386 0.0017     0.703482 0.0016   0.5863
 rem life(col)   8.2199E+03     8.4713E+03 0.0017     k(col/abs/tk ln)    0.703280 0.0015     0.703227 0.0015
 rem life(abs)   8.1559E+03     8.4720E+03 0.0016     life(col/abs/tl)  8.4737E+03 0.0015   8.4793E+03 0.0013
 source points generated    869

  estimator     cycle   528   ave of   498 cycles      combination         simple average    combined average     corr
 k(collision)      0.717239       0.703553 0.0016     k(col/abs)          0.703307 0.0015     0.703282 0.0015   0.7956
 k(absorption)     0.699228       0.703060 0.0016     k(abs/tk ln)        0.703150 0.0016     0.703102 0.0015   0.4250
 k(trk length)     0.699455       0.703240 0.0022     k(tk ln/col)        0.703396 0.0017     0.703504 0.0016   0.5860
 rem life(col)   8.7750E+03     8.4719E+03 0.0017     k(col/abs/tk ln)    0.703284 0.0015     0.703229 0.0015
 rem life(abs)   8.6882E+03     8.4724E+03 0.0016     life(col/abs/tl)  8.4741E+03 0.0015   8.4795E+03 0.0013
 source points generated   1119

  estimator     cycle   529   ave of   499 cycles      combination         simple average    combined average     corr
 k(collision)      0.699031       0.703544 0.0016     k(col/abs)          0.703286 0.0015     0.703261 0.0015   0.7954
 k(absorption)     0.686971       0.703028 0.0016     k(abs/tk ln)        0.703156 0.0016     0.703088 0.0015   0.4238
 k(trk length)     0.725578       0.703285 0.0022     k(tk ln/col)        0.703414 0.0017     0.703503 0.0016   0.5854
 rem life(col)   8.4836E+03     8.4719E+03 0.0017     k(col/abs/tk ln)    0.703286 0.0015     0.703216 0.0015
 rem life(abs)   8.6100E+03     8.4727E+03 0.0016     life(col/abs/tl)  8.4744E+03 0.0015   8.4804E+03 0.0013
 source points generated    961

  estimator     cycle   530   ave of   500 cycles      combination         simple average    combined average     corr
 k(collision)      0.702529       0.703542 0.0016     k(col/abs)          0.703276 0.0015     0.703251 0.0015   0.7954
 k(absorption)     0.694516       0.703011 0.0015     k(abs/tk ln)        0.703094 0.0016     0.703049 0.0015   0.4238
 k(trk length)     0.649825       0.703178 0.0022     k(tk ln/col)        0.703360 0.0017     0.703485 0.0016   0.5841
 rem life(col)   8.2172E+03     8.4714E+03 0.0017     k(col/abs/tk ln)    0.703244 0.0015     0.703190 0.0015
 rem life(abs)   8.3284E+03     8.4724E+03 0.0016     life(col/abs/tl)  8.4741E+03 0.0015   8.4802E+03 0.0013
 source points generated   1018

 source distribution written to file MS_Acc_NACCoC_c1.00_g0.00_e0.00_d0.01cm_HP_36mm.inps          cycle =   530
1problem summary (active cycles only)              source particle weight for summary table normalization =       500000.00

      run terminated when   530   kcode cycles were done.
+                                                                                                  10/25/07 21:18:09
      NAC-LWT Cask - MOX Experiments - Accident Transport Conditions                      probid =  10/25/07 21:05:56
0
 neutron creation    tracks      weight        energy           neutron loss        tracks      weight        energy
                                 (per source particle)                                         (per source particle)

 source              500502    1.0000E+00    2.1043E+00         escape                   0    0.            0.
                                                               energy cutoff            0    0.            0.
                                                               time cutoff              0    0.            0.
 weight window            0    0.            0.               weight window            0    0.            0.
 cell importance          0    0.            0.               cell importance          0    0.            0.
 weight cutoff            0    1.0592E-01    4.8768E-06       weight cutoff       500977    1.0547E-01    4.3336E-06
 e or t importance        0    0.            0.               e or t importance        0    0.            0.
 dxtran                   0    0.            0.               dxtran                   0    0.            0.
 forced collisions        0    0.            0.               forced collisions        0    0.            0.
 exp. transform           0    0.            0.               exp. transform           0    0.            0.
 upscattering             0    0.            2.2571E-07       downscattering           0    0.            2.0393E+00
 photonuclear             0    0.            0.               capture                  0    7.5486E-01    3.4580E-02
 (n,xn)                 949    1.6722E-03    1.5347E-03       loss to (n,xn)         474    8.3532E-04    8.0905E-03
 prompt fission           0    0.            0.               loss to fission          0    2.4643E-01    2.3925E-02
 delayed fission          0    0.            0.
     total           501451    1.1076E+00    2.1059E+00           total           501451    1.1076E+00    2.1059E+00

   number of neutrons banked                    501        average time of (shakes)              cutoffs
   neutron tracks per source particle     1.0029E+00         escape            0.0000E+00          tco   1.0000E+33
   neutron collisions per source particle 1.5353E+02         capture           9.4388E+03          eco   0.0000E+00
   total neutron collisions                 76766227         capture or escape 9.4388E+03          wc1  -5.0000E-01
   net multiplication              1.0008E+00 0.0000         any termination   9.7365E+03          wc2  -2.5000E-01

 computer time so far in this run    12.12 minutes           maximum number ever in bank         2
 computer time in mcrun              11.96 minutes           bank overflows to backup file       0
 source particles per minute            4.4359E+04
 random numbers generated                776053288           most random numbers used was       12401 in history      255214

 range of sampled source weights = 8.4104E-01 to 1.1848E+00

 source efficiency = 1.0000  in cell     1

 source efficiency = 0.1042  in cell    10

 source efficiency = 1.0000  in cell    20
```

```
 source efficiency = 1.0000  in cell    41
1neutron  activity in each cell                                                                    print table 126

          cell    tracks entering   population   collisions   collisions * weight (per history)   number weighted energy   flux weighted energy   average track weight (relative)   average track mfp (cm)

     1     1     1255010       500853       588249    9.5138E-01   1.2434E-03   1.1278E+00   9.1668E-01   2.6471E+00
     2     2     1783820       500855        71781    1.0077E-01   4.1502E-04   8.2308E-01   8.3190E-01   1.8137E+00
     3     3     1923591       500862        78833    1.3909E-01   5.6258E-04   8.8063E-01   8.8178E-01   3.8130E+00
     4     4     4738894       500933     23063782    3.3926E+01   1.9840E-04   5.3541E-01   8.2904E-01   1.3620E+00
     5    10     1421751       373841      6076166    8.6070E+00   1.3853E-04   3.5425E-01   7.9418E-01   1.1032E+00
     6    20           0            0            0    0.0000E+00   0.0000E+00   0.0000E+00   0.0000E+00   0.0000E+00
     7    21     1663380       374111         1888    2.7445E-03   4.9624E-04   4.1450E-01   8.2621E-01   1.3160E+04
     8    22     2075969       374082      2123010    3.6862E+00   5.4141E-04   3.4564E-01   8.1935E-01   9.7325E+00
     9    23     2178870       357717           98    1.4370E-04   5.9979E-04   3.0426E-01   8.1703E-01   1.1977E+04
    10    40       26756         5352       105825    1.4813E-01   3.0621E-03   1.0020E-01   7.1747E-01   3.2033E+00
    11    41           0            0            0    0.0000E+00   0.0000E+00   0.0000E+00   0.0000E+00   0.0000E+00
    12    42      117397        15536      1374254    1.8224E+00   2.6104E-03   1.0374E-01   7.2074E-01   2.5082E+00
    13    43     3367057       211757     13287925    1.9309E+01   3.4664E-03   1.7878E-01   7.8829E-01   2.7581E+00
    14    44       42780        15974       147895    2.0621E-01   8.2779E-04   1.6867E-01   7.5443E-01   2.3675E+00
    15    45     2192206       356597      5325642    8.0534E+00   9.0372E-04   3.0289E-01   8.1723E-01   2.5854E+00
    16    46     2661735       296813     24149944    3.7756E+01   1.6531E-03   2.2215E-01   8.0496E-01   3.5572E+00
    17    47       88453        20419       366868    5.3434E-01   1.7669E-03   1.3640E-01   7.4778E-01   3.3059E+00
    18    48     3155968       210444            0    0.0000E+00   2.8143E-03   1.8703E-01   7.9827E-01   0.0000E+00
    19    49     1754788       180075         4067    6.0877E-03   3.8995E-03   1.8293E-01   7.8977E-01   1.0874E+04

    total      30448425      4796221     76766227    1.1525E+02

        print table 128 requires        1067 decimal words of dynamically allocated storage.
1neutron  weight balance in each cell                                                               print table 130

       cell index        1           2           3           4           5           6           7           8           9
      cell number        1           2           3           4          10          20          21          22          23

external events:
         entering  1.2681E+00  3.1938E+00  3.4204E+00  7.9797E+00  2.3195E+00  0.0000E+00  2.7616E+00  3.4266E+00  3.5712E+00
           source  1.0000E+00  0.0000E+00  0.0000E+00  0.0000E+00  0.0000E+00  0.0000E+00  0.0000E+00  0.0000E+00  0.0000E+00
    energy cutoff  0.0000E+00  0.0000E+00  0.0000E+00  0.0000E+00  0.0000E+00  0.0000E+00  0.0000E+00  0.0000E+00  0.0000E+00
      time cutoff  0.0000E+00  0.0000E+00  0.0000E+00  0.0000E+00  0.0000E+00  0.0000E+00  0.0000E+00  0.0000E+00  0.0000E+00
          exiting -1.8832E+00 -3.1934E+00 -3.4192E+00 -7.8425E+00 -2.2857E+00  0.0000E+00 -2.7616E+00 -3.3873E+00 -3.5712E+00
                  ----------  ----------  ----------  ----------  ----------  ----------  ----------  ----------  ----------
            total  3.8488E-01  3.6018E-04  1.1827E-03  1.3724E-01  3.3874E-02  0.0000E+00  6.3609E-06  3.9247E-02  2.1550E-07

variance reduction events:
    weight window  0.0000E+00  0.0000E+00  0.0000E+00  0.0000E+00  0.0000E+00  0.0000E+00  0.0000E+00  0.0000E+00  0.0000E+00
  cell importance  0.0000E+00  0.0000E+00  0.0000E+00  0.0000E+00  0.0000E+00  0.0000E+00  0.0000E+00  0.0000E+00  0.0000E+00
    weight cutoff  2.8229E-05  2.7032E-06 -9.7040E-06 -1.9749E-05 -4.7973E-05  0.0000E+00 -9.9564E-07  5.7430E-05  0.0000E+00
e or t importance  0.0000E+00  0.0000E+00  0.0000E+00  0.0000E+00  0.0000E+00  0.0000E+00  0.0000E+00  0.0000E+00  0.0000E+00
           dxtran  0.0000E+00  0.0000E+00  0.0000E+00  0.0000E+00  0.0000E+00  0.0000E+00  0.0000E+00  0.0000E+00  0.0000E+00
forced collisions  0.0000E+00  0.0000E+00  0.0000E+00  0.0000E+00  0.0000E+00  0.0000E+00  0.0000E+00  0.0000E+00  0.0000E+00
   exp. transform  0.0000E+00  0.0000E+00  0.0000E+00  0.0000E+00  0.0000E+00  0.0000E+00  0.0000E+00  0.0000E+00  0.0000E+00
                  ----------  ----------  ----------  ----------  ----------  ----------  ----------  ----------  ----------
            total  2.8229E-05  2.7032E-06 -9.7040E-06 -1.9749E-05 -4.7973E-05  0.0000E+00 -9.9564E-07  5.7430E-05  0.0000E+00

physical events:
          capture -1.3879E-01 -3.6289E-04 -1.1985E-03 -1.3722E-01 -3.3826E-02  0.0000E+00 -5.3652E-06 -3.9305E-02 -2.1550E-07
            (n,xn)  6.2341E-04  0.0000E+00  5.0860E-05  0.0000E+00  0.0000E+00  0.0000E+00  0.0000E+00  0.0000E+00  0.0000E+00
   loss to (n,xn) -3.1093E-04  0.0000E+00 -2.5430E-05  0.0000E+00  0.0000E+00  0.0000E+00  0.0000E+00  0.0000E+00  0.0000E+00
          fission  0.0000E+00  0.0000E+00  0.0000E+00  0.0000E+00  0.0000E+00  0.0000E+00  0.0000E+00  0.0000E+00  0.0000E+00
  loss to fission -2.4643E-01  0.0000E+00  0.0000E+00  0.0000E+00  0.0000E+00  0.0000E+00  0.0000E+00  0.0000E+00  0.0000E+00
      photonuclear  0.0000E+00  0.0000E+00  0.0000E+00  0.0000E+00  0.0000E+00  0.0000E+00  0.0000E+00  0.0000E+00  0.0000E+00
                  ----------  ----------  ----------  ----------  ----------  ----------  ----------  ----------  ----------
            total -3.8491E-01 -3.6289E-04 -1.1730E-03 -1.3722E-01 -3.3826E-02  0.0000E+00 -5.3652E-06 -3.9305E-02 -2.1550E-07

                  ----------  ----------  ----------  ----------  ----------  ----------  ----------  ----------  ----------
            total  0.0000E+00  0.0000E+00  0.0000E+00  0.0000E+00  0.0000E+00  0.0000E+00  0.0000E+00  0.0000E+00  0.0000E+00


       cell index       10          11          12          13          14          15          16          17          18
      cell number       40          41          42          43          44          45          46          47          48

external events:
         entering  3.8410E-02  0.0000E+00  1.7109E-01  5.3543E+00  6.4450E-02  3.6004E+00  4.2962E+00  1.3246E-01  5.0388E+00
           source  0.0000E+00  0.0000E+00  0.0000E+00  0.0000E+00  0.0000E+00  0.0000E+00  0.0000E+00  0.0000E+00  0.0000E+00
    energy cutoff  0.0000E+00  0.0000E+00  0.0000E+00  0.0000E+00  0.0000E+00  0.0000E+00  0.0000E+00  0.0000E+00  0.0000E+00
      time cutoff  0.0000E+00  0.0000E+00  0.0000E+00  0.0000E+00  0.0000E+00  0.0000E+00  0.0000E+00  0.0000E+00  0.0000E+00
          exiting -3.8338E-02  0.0000E+00 -1.5873E-01 -5.2124E+00 -6.0345E-02 -3.3858E+00 -4.2663E+00 -1.3214E-01 -5.0388E+00
                  ----------  ----------  ----------  ----------  ----------  ----------  ----------  ----------  ----------
            total  7.1248E-05  0.0000E+00  1.2354E-02  1.4185E-01  4.1045E-03  2.1458E-01  2.9932E-02  3.1701E-04  0.0000E+00

variance reduction events:
    weight window  0.0000E+00  0.0000E+00  0.0000E+00  0.0000E+00  0.0000E+00  0.0000E+00  0.0000E+00  0.0000E+00  0.0000E+00
  cell importance  0.0000E+00  0.0000E+00  0.0000E+00  0.0000E+00  0.0000E+00  0.0000E+00  0.0000E+00  0.0000E+00  0.0000E+00
    weight cutoff  5.9575E-07  0.0000E+00 -3.9444E-05  1.7827E-04  8.9663E-06  2.2838E-04  5.6942E-05  7.6461E-06  0.0000E+00
e or t importance  0.0000E+00  0.0000E+00  0.0000E+00  0.0000E+00  0.0000E+00  0.0000E+00  0.0000E+00  0.0000E+00  0.0000E+00
           dxtran  0.0000E+00  0.0000E+00  0.0000E+00  0.0000E+00  0.0000E+00  0.0000E+00  0.0000E+00  0.0000E+00  0.0000E+00
forced collisions  0.0000E+00  0.0000E+00  0.0000E+00  0.0000E+00  0.0000E+00  0.0000E+00  0.0000E+00  0.0000E+00  0.0000E+00
   exp. transform  0.0000E+00  0.0000E+00  0.0000E+00  0.0000E+00  0.0000E+00  0.0000E+00  0.0000E+00  0.0000E+00  0.0000E+00
                  ----------  ----------  ----------  ----------  ----------  ----------  ----------  ----------  ----------
            total  5.9575E-07  0.0000E+00 -3.9444E-05  1.7827E-04  8.9663E-06  2.2838E-04  5.6942E-05  7.6461E-06  0.0000E+00

physical events:
          capture -7.1844E-05  0.0000E+00 -1.2315E-02 -1.4204E-01 -4.1135E-03 -2.1481E-01 -3.0482E-02 -3.2465E-04  0.0000E+00
            (n,xn)  0.0000E+00  0.0000E+00  0.0000E+00  6.9717E-06  0.0000E+00  6.6859E-06  9.8428E-04  0.0000E+00  0.0000E+00
   loss to (n,xn)  0.0000E+00  0.0000E+00  0.0000E+00 -3.4859E-06  0.0000E+00 -3.3429E-06 -4.9214E-04  0.0000E+00  0.0000E+00
```

fission	0.0000E+00	0.0000E+00	0.0000E+00	0.0000E+00	0.0000E+00	0.0000E+00	0.0000E+00	0.0000E+00	0.0000E+00
loss to fission	0.0000E+00	0.0000E+00	0.0000E+00	0.0000E+00	0.0000E+00	0.0000E+00	0.0000E+00	0.0000E+00	0.0000E+00
photonuclear	0.0000E+00	0.0000E+00	0.0000E+00	0.0000E+00	0.0000E+00	0.0000E+00	0.0000E+00	0.0000E+00	0.0000E+00
total	-7.1844E-05	0.0000E+00	-1.2315E-02	-1.4203E-01	-4.1135E-03	-2.1481E-01	-2.9989E-02	-3.2465E-04	0.0000E+00
total	0.0000E+00	0.0000E+00	0.0000E+00	0.0000E+00	0.0000E+00	0.0000E+00	0.0000E+00	0.0000E+00	0.0000E+00

cell index 19
cell number 49 total

external events:		
entering	2.7677E+00	4.9405E+01
source	0.0000E+00	1.0000E+00
energy cutoff	0.0000E+00	0.0000E+00
time cutoff	0.0000E+00	0.0000E+00
exiting	-2.7677E+00	-4.9405E+01
total	9.6082E-07	1.0000E+00

variance reduction events:		
weight window	0.0000E+00	0.0000E+00
cell importance	0.0000E+00	0.0000E+00
weight cutoff	5.0063E-07	4.5179E-04
e or t importance	0.0000E+00	0.0000E+00
dxtran	0.0000E+00	0.0000E+00
forced collisions	0.0000E+00	0.0000E+00
exp. transform	0.0000E+00	0.0000E+00
total	5.0063E-07	4.5179E-04

physical events:		
capture	-1.4614E-06	-7.5486E-01
(n,xn)	0.0000E+00	1.6722E-03
loss to (n,xn)	0.0000E+00	-8.3532E-04
fission	0.0000E+00	0.0000E+00
loss to fission	0.0000E+00	-2.4643E-01
photonuclear	0.0000E+00	0.0000E+00
total	-1.4614E-06	-1.0005E+00
total	0.0000E+00	0.0000E+00

1neutron activity of each nuclide in each cell, per source particle print table 140

cell index	cell name	nuclides	atom fraction	total collisions	collisions * weight	wgt. lost to capture	wgt. gain by fission	wgt. gain by (n,xn)	photons produced	photon wgt produced	avg photon energy
1	1	92235.69c	2.18E-03	13149	1.8238E-02	2.6523E-03	1.3545E-02	0.0000E+00	0	0.0000E+00	0.0000E+00
		92238.69c	3.06E-01	186994	3.3548E-01	2.5440E-02	5.4986E-03	3.0727E-04	0	0.0000E+00	0.0000E+00
		94238.66c	1.28E-05	67	9.7812E-05	7.8916E-05	4.0561E-06	0.0000E+00	0	0.0000E+00	0.0000E+00
		94239.69c	2.41E-02	247900	3.4650E-01	9.9448E-02	2.2599E-01	5.2057E-06	0	0.0000E+00	0.0000E+00
		94240.66c	1.14E-03	7457	1.1940E-02	1.0232E-02	1.0428E-04	0.0000E+00	0	0.0000E+00	0.0000E+00
		94241.66c	1.01E-04	1305	1.8084E-03	4.2713E-04	1.2840E-03	0.0000E+00	0	0.0000E+00	0.0000E+00
		94242.66c	1.25E-05	36	6.0894E-05	3.7138E-05	1.8504E-06	0.0000E+00	0	0.0000E+00	0.0000E+00
		8016.62c	6.66E-01	131341	2.3725E-01	4.7184E-04	0.0000E+00	0.0000E+00	0	0.0000E+00	0.0000E+00
2	2	1001.62c	6.67E-01	66694	9.2467E-02	3.5248E-04	0.0000E+00	0.0000E+00	0	0.0000E+00	0.0000E+00
		8016.62c	3.33E-01	5087	8.3067E-03	1.0409E-05	0.0000E+00	0.0000E+00	0	0.0000E+00	0.0000E+00
3	3	26054.62c	1.19E-04	4	7.4446E-06	8.2238E-07	0.0000E+00	0.0000E+00	0	0.0000E+00	0.0000E+00
		24050.62c	7.63E-05	8	1.1117E-05	5.2938E-06	0.0000E+00	0.0000E+00	0	0.0000E+00	0.0000E+00
		7014.62c	3.24E-03	270	4.2214E-04	2.9134E-05	0.0000E+00	0.0000E+00	0	0.0000E+00	0.0000E+00
		26056.62c	1.87E-03	172	2.7365E-04	1.5704E-05	0.0000E+00	0.0000E+00	0	0.0000E+00	0.0000E+00
		24052.62c	1.47E-03	60	1.0627E-04	4.4084E-06	0.0000E+00	0.0000E+00	0	0.0000E+00	0.0000E+00
		7015.66c	1.20E-05	1	2.0715E-06	4.3673E-12	0.0000E+00	0.0000E+00	0	0.0000E+00	0.0000E+00
		26057.62c	4.33E-05	3	5.7570E-06	2.7967E-09	0.0000E+00	0.0000E+00	0	0.0000E+00	0.0000E+00
		24053.62c	1.67E-04	20	3.0965E-05	7.3217E-06	0.0000E+00	0.0000E+00	0	0.0000E+00	0.0000E+00
		26058.62c	5.71E-06	1	1.4554E-06	3.1973E-07	0.0000E+00	0.0000E+00	0	0.0000E+00	0.0000E+00
		24054.62c	4.14E-05	1	2.0725E-06	6.0645E-10	0.0000E+00	0.0000E+00	0	0.0000E+00	0.0000E+00
		40000.66c	9.81E-01	77568	1.3693E-01	1.0679E-03	0.0000E+00	2.5430E-05	0	0.0000E+00	0.0000E+00
		50000.42c	1.15E-02	725	1.2911E-03	6.7541E-05	0.0000E+00	0.0000E+00	0	0.0000E+00	0.0000E+00
4	4	1001.62c	6.67E-01	21628102	3.1581E+01	1.3528E-01	0.0000E+00	0.0000E+00	0	0.0000E+00	0.0000E+00
		8016.62c	3.33E-01	1435680	2.3453E+00	1.9355E-03	0.0000E+00	0.0000E+00	0	0.0000E+00	0.0000E+00
5	10	1001.62c	6.67E-01	5707107	8.0275E+00	3.3538E-02	0.0000E+00	0.0000E+00	0	0.0000E+00	0.0000E+00
		8016.62c	3.33E-01	369059	5.7955E-01	2.8754E-04	0.0000E+00	0.0000E+00	0	0.0000E+00	0.0000E+00
6	20	1001.62c	6.67E-01	0	0.0000E+00	0.0000E+00	0.0000E+00	0.0000E+00	0	0.0000E+00	0.0000E+00
		8016.62c	3.33E-01	0	0.0000E+00	0.0000E+00	0.0000E+00	0.0000E+00	0	0.0000E+00	0.0000E+00
7	21	1001.62c	6.67E-01	1732	2.5018E-03	5.3619E-06	0.0000E+00	0.0000E+00	0	0.0000E+00	0.0000E+00
		8016.62c	3.33E-01	156	2.4270E-04	3.2713E-09	0.0000E+00	0.0000E+00	0	0.0000E+00	0.0000E+00
8	22	13027.62c	1.00E+00	2123010	3.6862E+00	3.9305E-02	0.0000E+00	0.0000E+00	0	0.0000E+00	0.0000E+00
9	23	1001.62c	6.67E-01	88	1.2864E-04	2.1542E-07	0.0000E+00	0.0000E+00	0	0.0000E+00	0.0000E+00
		8016.62c	3.33E-01	10	1.5062E-05	8.2269E-11	0.0000E+00	0.0000E+00	0	0.0000E+00	0.0000E+00
10	40	82206.66c	2.55E-01	25173	3.4731E-02	2.7307E-05	0.0000E+00	0.0000E+00	0	0.0000E+00	0.0000E+00
		82207.66c	2.21E-01	23283	3.2961E-02	4.1971E-05	0.0000E+00	0.0000E+00	0	0.0000E+00	0.0000E+00
		82208.66c	5.24E-01	57369	8.0440E-02	2.5667E-06	0.0000E+00	0.0000E+00	0	0.0000E+00	0.0000E+00

11	41	1001.62c	6.67E-01	0	0.0000E+00	0.0000E+00	0.0000E+00	0.0000E+00	0	0.0000E+00	0.0000E+00
		8016.62c	3.33E-01	0	0.0000E+00	0.0000E+00	0.0000E+00	0.0000E+00	0	0.0000E+00	0.0000E+00
12	42	24050.62c	8.79E-03	22634	3.5886E-02	5.0283E-04	0.0000E+00	0.0000E+00	0	0.0000E+00	0.0000E+00
		26054.62c	4.03E-02	43963	7.0549E-02	4.1183E-04	0.0000E+00	0.0000E+00	0	0.0000E+00	0.0000E+00
		28058.62c	6.09E-02	185596	2.3990E-01	1.0944E-03	0.0000E+00	0.0000E+00	0	0.0000E+00	0.0000E+00
		24052.62c	1.69E-01	95848	1.4109E-01	7.2604E-04	0.0000E+00	0.0000E+00	0	0.0000E+00	0.0000E+00
		26056.62c	6.32E-01	808702	1.0013E+00	6.0096E-03	0.0000E+00	0.0000E+00	0	0.0000E+00	0.0000E+00
		28060.62c	2.35E-02	27885	4.6516E-02	2.8672E-04	0.0000E+00	0.0000E+00	0	0.0000E+00	0.0000E+00
		24053.62c	1.92E-02	65788	9.9650E-02	1.2037E-03	0.0000E+00	0.0000E+00	0	0.0000E+00	0.0000E+00
		26057.62c	1.46E-02	17938	2.8790E-02	2.1264E-04	0.0000E+00	0.0000E+00	0	0.0000E+00	0.0000E+00
		28061.62c	1.02E-03	1327	1.8701E-03	1.6196E-05	0.0000E+00	0.0000E+00	0	0.0000E+00	0.0000E+00
		24054.62c	4.77E-03	3571	5.5204E-03	1.2960E-05	0.0000E+00	0.0000E+00	0	0.0000E+00	0.0000E+00
		26058.62c	1.93E-03	1926	3.0589E-03	2.7125E-05	0.0000E+00	0.0000E+00	0	0.0000E+00	0.0000E+00
		28062.62c	3.25E-03	14955	2.2767E-02	1.4098E-04	0.0000E+00	0.0000E+00	0	0.0000E+00	0.0000E+00
		28064.62c	8.33E-04	1172	2.0355E-03	5.1368E-06	0.0000E+00	0.0000E+00	0	0.0000E+00	0.0000E+00
		25055.62c	2.01E-02	82949	1.2342E-01	1.6648E-03	0.0000E+00	0.0000E+00	0	0.0000E+00	0.0000E+00
13	43	24050.62c	8.79E-03	224394	3.7208E-01	5.8811E-03	0.0000E+00	0.0000E+00	0	0.0000E+00	0.0000E+00
		26054.62c	4.03E-02	457333	7.7117E-01	4.8990E-03	0.0000E+00	0.0000E+00	0	0.0000E+00	0.0000E+00
		28058.62c	6.09E-02	1729500	2.4409E+00	1.3150E-02	0.0000E+00	0.0000E+00	0	0.0000E+00	0.0000E+00
		24052.62c	1.69E-01	1032660	1.6563E+00	8.0696E-03	0.0000E+00	0.0000E+00	0	0.0000E+00	0.0000E+00
		26056.62c	6.32E-01	7735666	1.0652E+01	7.0255E-02	0.0000E+00	1.5751E-06	0	0.0000E+00	0.0000E+00
		28060.62c	2.35E-02	284768	4.9380E-01	3.3119E-03	0.0000E+00	0.0000E+00	0	0.0000E+00	0.0000E+00
		24053.62c	1.92E-02	635953	1.0153E+00	1.4020E-02	0.0000E+00	0.0000E+00	0	0.0000E+00	0.0000E+00
		26057.62c	1.46E-02	187135	3.1564E-01	2.2517E-03	0.0000E+00	1.9108E-06	0	0.0000E+00	0.0000E+00
		28061.62c	1.02E-03	13567	2.0961E-02	1.7693E-04	0.0000E+00	0.0000E+00	0	0.0000E+00	0.0000E+00
		24054.62c	4.77E-03	37002	6.1565E-02	1.1488E-04	0.0000E+00	0.0000E+00	0	0.0000E+00	0.0000E+00
		26058.62c	1.93E-03	19846	3.3234E-02	2.9139E-04	0.0000E+00	0.0000E+00	0	0.0000E+00	0.0000E+00
		28062.62c	3.25E-03	144771	2.3200E-01	1.7147E-03	0.0000E+00	0.0000E+00	0	0.0000E+00	0.0000E+00
		28064.62c	8.33E-04	12360	2.2167E-02	6.2663E-05	0.0000E+00	0.0000E+00	0	0.0000E+00	0.0000E+00
		25055.62c	2.01E-02	772970	1.2215E+00	1.7836E-02	0.0000E+00	0.0000E+00	0	0.0000E+00	0.0000E+00
14	44	24050.62c	8.79E-03	2257	3.6357E-03	1.7986E-04	0.0000E+00	0.0000E+00	0	0.0000E+00	0.0000E+00
		26054.62c	4.03E-02	4235	6.9394E-03	1.3937E-04	0.0000E+00	0.0000E+00	0	0.0000E+00	0.0000E+00
		28058.62c	6.09E-02	19754	2.6772E-02	3.8375E-04	0.0000E+00	0.0000E+00	0	0.0000E+00	0.0000E+00
		24052.62c	1.69E-01	10363	1.5850E-02	2.0913E-04	0.0000E+00	0.0000E+00	0	0.0000E+00	0.0000E+00
		26056.62c	6.32E-01	90447	1.1985E-01	2.1525E-03	0.0000E+00	0.0000E+00	0	0.0000E+00	0.0000E+00
		28060.62c	2.35E-02	2541	4.3191E-03	8.9712E-05	0.0000E+00	0.0000E+00	0	0.0000E+00	0.0000E+00
		24053.62c	1.92E-02	6508	1.0115E-02	4.1602E-04	0.0000E+00	0.0000E+00	0	0.0000E+00	0.0000E+00
		26057.62c	1.46E-02	1792	2.9469E-03	5.7133E-05	0.0000E+00	0.0000E+00	0	0.0000E+00	0.0000E+00
		28061.62c	1.02E-03	113	1.6337E-04	2.9738E-06	0.0000E+00	0.0000E+00	0	0.0000E+00	0.0000E+00
		24054.62c	4.77E-03	329	5.3342E-04	2.5471E-06	0.0000E+00	0.0000E+00	0	0.0000E+00	0.0000E+00
		26058.62c	1.93E-03	182	2.8460E-04	4.0371E-06	0.0000E+00	0.0000E+00	0	0.0000E+00	0.0000E+00
		28062.62c	3.25E-03	1520	2.4171E-03	5.6784E-05	0.0000E+00	0.0000E+00	0	0.0000E+00	0.0000E+00
		28064.62c	8.33E-04	111	1.9873E-04	2.0767E-07	0.0000E+00	0.0000E+00	0	0.0000E+00	0.0000E+00
		25055.62c	2.01E-02	7743	1.2184E-02	4.1947E-04	0.0000E+00	0.0000E+00	0	0.0000E+00	0.0000E+00
15	45	24050.62c	8.79E-03	81095	1.3624E-01	9.6184E-03	0.0000E+00	0.0000E+00	0	0.0000E+00	0.0000E+00
		26054.62c	4.03E-02	163277	2.8221E-01	6.7571E-03	0.0000E+00	0.0000E+00	0	0.0000E+00	0.0000E+00
		28058.62c	6.09E-02	685869	1.0095E+00	2.0192E-02	0.0000E+00	0.0000E+00	0	0.0000E+00	0.0000E+00
		24052.62c	1.69E-01	396986	6.5384E-01	9.5378E-03	0.0000E+00	0.0000E+00	0	0.0000E+00	0.0000E+00
		26056.62c	6.32E-01	3259168	4.7321E+00	1.1291E-01	0.0000E+00	3.3429E-06	0	0.0000E+00	0.0000E+00
		28060.62c	2.35E-02	92241	1.6289E-01	4.6046E-03	0.0000E+00	0.0000E+00	0	0.0000E+00	0.0000E+00
		24053.62c	1.92E-02	232819	3.7911E-01	2.3610E-02	0.0000E+00	0.0000E+00	0	0.0000E+00	0.0000E+00
		26057.62c	1.46E-02	66241	1.1455E-01	2.6634E-03	0.0000E+00	0.0000E+00	0	0.0000E+00	0.0000E+00
		28061.62c	1.02E-03	5093	8.0726E-03	1.8482E-04	0.0000E+00	0.0000E+00	0	0.0000E+00	0.0000E+00
		24054.62c	4.77E-03	12749	2.1779E-02	1.3347E-04	0.0000E+00	0.0000E+00	0	0.0000E+00	0.0000E+00
		26058.62c	1.93E-03	6698	1.1451E-02	2.0600E-04	0.0000E+00	0.0000E+00	0	0.0000E+00	0.0000E+00
		28062.62c	3.25E-03	51276	8.5061E-02	3.1530E-03	0.0000E+00	0.0000E+00	0	0.0000E+00	0.0000E+00
		28064.62c	8.33E-04	3626	6.6497E-03	8.9188E-05	0.0000E+00	0.0000E+00	0	0.0000E+00	0.0000E+00
		25055.62c	2.01E-02	268504	4.4997E-01	2.1151E-02	0.0000E+00	0.0000E+00	0	0.0000E+00	0.0000E+00
16	46	82206.66c	2.55E-01	5804104	8.9875E+00	6.8570E-03	0.0000E+00	6.0193E-05	0	0.0000E+00	0.0000E+00
		82207.66c	2.21E-01	5361381	8.4381E+00	2.2860E-02	0.0000E+00	1.4604E-04	0	0.0000E+00	0.0000E+00
		82208.66c	5.24E-01	12984459	2.0331E+01	7.6484E-04	0.0000E+00	2.8591E-04	0	0.0000E+00	0.0000E+00
17	47	82206.66c	2.55E-01	88291	1.2688E-01	7.9354E-05	0.0000E+00	0.0000E+00	0	0.0000E+00	0.0000E+00
		82207.66c	2.21E-01	80596	1.1838E-01	2.3687E-04	0.0000E+00	0.0000E+00	0	0.0000E+00	0.0000E+00
		82208.66c	5.24E-01	197981	2.8908E-01	8.4289E-06	0.0000E+00	0.0000E+00	0	0.0000E+00	0.0000E+00
19	49	1001.62c	6.67E-01	3648	5.4226E-03	1.4610E-06	0.0000E+00	0.0000E+00	0	0.0000E+00	0.0000E+00
		8016.62c	3.33E-01	419	6.6504E-04	3.9930E-10	0.0000E+00	0.0000E+00	0	0.0000E+00	0.0000E+00
total				76766227	1.1525E+02	7.5486E-01	2.4643E-01	8.3688E-04	0	0.0000E+00	0.0000E+00

total over all cells by nuclide	total collisions	collisions * weight	wgt. lost to capture	wgt. gain by fission	wgt. gain by (n,xn)	photons produced	photon wgt produced	avg photon energy
1001.62c	27407371	3.9709E+01	1.6918E-01	0.0000E+00	0.0000E+00	0	0.0000E+00	0.0000E+00
7014.62c	270	4.2214E-04	2.9134E-05	0.0000E+00	0.0000E+00	0	0.0000E+00	0.0000E+00
7015.66c	1	2.0715E-06	4.3673E-12	0.0000E+00	0.0000E+00	0	0.0000E+00	0.0000E+00
8016.62c	1941752	3.1714E+00	2.7053E-03	0.0000E+00	0.0000E+00	0	0.0000E+00	0.0000E+00
13027.62c	2123010	3.6862E+00	3.9305E-02	0.0000E+00	0.0000E+00	0	0.0000E+00	0.0000E+00
24050.62c	330388	5.4785E-01	1.6187E-02	0.0000E+00	0.0000E+00	0	0.0000E+00	0.0000E+00
24052.62c	1535917	2.4672E+00	1.8547E-02	0.0000E+00	0.0000E+00	0	0.0000E+00	0.0000E+00
24053.62c	941088	1.5042E+00	3.9257E-02	0.0000E+00	0.0000E+00	0	0.0000E+00	0.0000E+00
24054.62c	53652	8.9400E-02	2.6385E-04	0.0000E+00	0.0000E+00	0	0.0000E+00	0.0000E+00
25055.62c	1132166	1.8071E+00	4.1071E-02	0.0000E+00	0.0000E+00	0	0.0000E+00	0.0000E+00
26054.62c	668812	1.1309E+00	1.2208E-02	0.0000E+00	0.0000E+00	0	0.0000E+00	0.0000E+00
26056.62c	11894155	1.6506E+01	1.9134E-01	0.0000E+00	4.9180E-06	0	0.0000E+00	0.0000E+00
26057.62c	273109	4.6193E-01	5.1849E-03	0.0000E+00	1.9108E-06	0	0.0000E+00	0.0000E+00
26058.62c	28653	4.8030E-02	5.2887E-04	0.0000E+00	0.0000E+00	0	0.0000E+00	0.0000E+00
28058.62c	2620719	3.7171E+00	3.4821E-02	0.0000E+00	0.0000E+00	0	0.0000E+00	0.0000E+00
28060.62c	407435	7.0753E-01	8.2929E-03	0.0000E+00	0.0000E+00	0	0.0000E+00	0.0000E+00
28061.62c	20100	3.1067E-02	3.8093E-04	0.0000E+00	0.0000E+00	0	0.0000E+00	0.0000E+00

```
              28062.62c              212522  3.4224E-01  5.0655E-03  0.0000E+00  0.0000E+00           0  0.0000E+00  0.0000E+00
              28064.62c               17269  3.1051E-02  1.5720E-04  0.0000E+00  0.0000E+00           0  0.0000E+00  0.0000E+00
              40000.66c               77568  1.3693E-01  1.0679E-03  0.0000E+00  2.5430E-05           0  0.0000E+00  0.0000E+00
              50000.42c                 725  1.2911E-03  6.7541E-05  0.0000E+00  0.0000E+00           0  0.0000E+00  0.0000E+00
              82206.66c             5917568  9.1491E+00  6.9637E-03  0.0000E+00  6.0193E-05           0  0.0000E+00  0.0000E+00
              82207.66c             5465260  8.5894E+00  2.3138E-02  0.0000E+00  1.4604E-04           0  0.0000E+00  0.0000E+00
              82208.66c            13239809  2.0700E+01  7.7584E-04  0.0000E+00  2.8591E-04           0  0.0000E+00  0.0000E+00
              92235.69c               13149  1.8238E-02  2.6523E-03  1.3545E-02  0.0000E+00           0  0.0000E+00  0.0000E+00
              92238.69c              186994  3.3548E-01  2.5440E-02  5.4986E-03  3.0727E-04           0  0.0000E+00  0.0000E+00
              94238.66c                  67  9.7812E-05  7.8916E-05  4.0561E-06  0.0000E+00           0  0.0000E+00  0.0000E+00
              94239.69c              247900  3.4650E-01  9.9448E-02  2.2599E-01  5.2057E-06           0  0.0000E+00  0.0000E+00
              94240.66c                7457  1.1940E-02  1.0232E-02  1.0428E-04  0.0000E+00           0  0.0000E+00  0.0000E+00
              94241.66c                1305  1.8084E-03  4.2713E-04  1.2840E-03  0.0000E+00           0  0.0000E+00  0.0000E+00
              94242.66c                  36  6.0894E-05  3.7138E-05  1.8504E-06  0.0000E+00           0  0.0000E+00  0.0000E+00
1keff results for: NAC-LWT Cask - MOX Experiments - Accident Transport Conditions                    probid =  10/25/07
21:05:56


 the initial fission neutron source distribution was generated from a general sdef source description.
 the criticality problem was scheduled to skip  30 cycles and run a total of  530 cycles with nominally     1000 neutrons per
cycle.
 this problem has run  30 inactive cycles with    29983 neutron histories and  500 active cycles with      500502 neutron
histories.


 this calculation has completed the requested number of keff cycles using a total of      530485 fission neutron source
histories.
 all cells with fissionable material were sampled and had fission neutron source points.


 the results of the w test for normality applied to the individual collision, absorption, and track-length keff cycle values are:

          the k( collision) cycle values appear normally distributed at the 95 percent confidence level
          the k(absorption) cycle values appear normally distributed at the 95 percent confidence level
          the k(trk length) cycle values appear normally distributed at the 95 percent confidence level


 ------------------------------------------------------------------------------------------------------------------------------
---
 |
|
 | the final estimated combined collision/absorption/track-length keff = 0.70319 with an estimated standard deviation of 0.00102
|
 |
|
 | the estimated 68, 95, & 99 percent keff confidence intervals are 0.70216 to 0.70422, 0.70115 to 0.70523, and 0.70048 to
0.70590 |
 |
|
 | the final combined (col/abs/tl) prompt removal lifetime = 8.4802E-05 seconds with an estimated standard deviation of 1.0633E-
07 |
 |
|
 | the average neutron energy causing fission = 9.7087E-02 mev
|
 | the energy corresponding to the average neutron lethargy causing fission = 1.2505E-07 mev
|
 |
|
 | the percentages of fissions caused by neutrons in the thermal, intermediate, and fast neutron ranges are:
|
 |         (<0.625 ev):  91.72%         (0.625 ev - 100 kev):   4.76%          (>100 kev):   3.52%
|
 |
|
 | the average fission neutrons produced per neutron absorbed (capture + fission) in all cells with fission = 1.8263E+00
|
 | the average fission neutrons produced per neutron absorbed (capture + fission) in all the geometry cells = 7.0264E-01
|
 |
|
 | the average number of neutrons produced per fission = 2.855
|
 |
|
 ------------------------------------------------------------------------------------------------------------------------------
---


 the estimated average keffs, one standard deviations, and 68, 95, and 99 percent confidence intervals are:

       keff estimator       keff     standard deviation      68% confidence        95% confidence        99% confidence
corr

            collision     0.70354         0.00111          0.70243 to 0.70465    0.70133 to 0.70575    0.70061 to 0.70648
           absorption     0.70301         0.00109          0.70192 to 0.70410    0.70084 to 0.70518    0.70013 to 0.70589
         track length     0.70318         0.00152          0.70165 to 0.70470    0.70014 to 0.70621    0.69915 to 0.70720
           col/absorp     0.70325         0.00104          0.70221 to 0.70430    0.70117 to 0.70533    0.70049 to 0.70601
0.7954
          abs/trk len     0.70305         0.00104          0.70201 to 0.70409    0.70098 to 0.70512    0.70031 to 0.70579
0.4238
          col/trk len     0.70349         0.00109          0.70239 to 0.70458    0.70130 to 0.70567    0.70059 to 0.70638
0.5841
       col/abs/trk len     0.70319         0.00102          0.70216 to 0.70422    0.70115 to 0.70523    0.70048 to 0.70590
```

if the largest of each keff occurred on the next cycle, the keff results and 68, 95, and 99 percent confidence intervals would be:

keff estimator	keff	standard deviation	68% confidence	95% confidence	99% confidence
collision	0.70369	0.00112	0.70257 to 0.70481	0.70146 to 0.70592	0.70073 to 0.70664
absorption	0.70314	0.00110	0.70205 to 0.70424	0.70096 to 0.70532	0.70025 to 0.70604
track length	0.70339	0.00154	0.70186 to 0.70493	0.70034 to 0.70645	0.69934 to 0.70745
col/abs/trk len	0.70334	0.00103	0.70231 to 0.70437	0.70128 to 0.70540	0.70061 to 0.70607

the estimated average prompt removal lifetimes, one standard deviations, and 68, 95, and 99 percent confidence intervals are (sec):

estimator	lifetime	std. dev.	68% confidence	95% confidence	99% confidence	corr
collision	8.47143E-05	1.42417E-07	8.4572E-05 to 8.4857E-05	8.4431E-05 to 8.4998E-05	8.4338E-05 to 8.5091E-05	
absorption	8.47241E-05	1.37731E-07	8.4586E-05 to 8.4862E-05	8.4450E-05 to 8.4998E-05	8.4360E-05 to 8.5088E-05	
track length	8.47846E-05	1.07925E-07	8.4677E-05 to 8.4893E-05	8.4570E-05 to 8.5000E-05	8.4499E-05 to 8.5070E-05	
col/absorp	8.47240E-05	1.37879E-07	8.4586E-05 to 8.4862E-05	8.4449E-05 to 8.4999E-05	8.4360E-05 to 8.5088E-05	0.9665
abs/trk len	8.48024E-05	1.06263E-07	8.4696E-05 to 8.4909E-05	8.4591E-05 to 8.5014E-05	8.4522E-05 to 8.5083E-05	0.8746
col/trk len	8.47991E-05	1.06906E-07	8.4692E-05 to 8.4906E-05	8.4586E-05 to 8.5012E-05	8.4517E-05 to 8.5082E-05	0.8399
col/abs/trk len	8.48016E-05	1.06329E-07	8.4695E-05 to 8.4908E-05	8.4590E-05 to 8.5013E-05	8.4521E-05 to 8.5083E-05	

absorption estimates of prompt lifetimes (sec):

	escape	capture	fission	removal
fraction	0.00000E+00	7.53886E-01	2.46114E-01	1.00000E+00
lifetime(abs)	0.00000E+00	1.12383E-04	3.44248E-04	8.47241E-05
lifetime(c/a/t)	0.00000E+00	1.12486E-04	3.44563E-04	8.48016E-05

1average keff results summed over 10 cycles each to form 50 batch values of keff print table 178

batch number	start cycle	end cycle	keff estimators by batch k(coll)	k(abs)	k(track)	average keff estimators and deviations k(coll)	st dev	k(abs)	st dev	k(track)	st dev	col/abs/tl k(c/a/t)	st dev
1	31	40	0.69464	0.70858	0.69703								
2	41	50	0.69991	0.69995	0.71175	0.69728	0.00264	0.70427	0.00431	0.70439	0.00736		
3	51	60	0.69908	0.70175	0.71143	0.69788	0.00164	0.70343	0.00263	0.70674	0.00485		
4	61	70	0.70512	0.70586	0.70015	0.69969	0.00215	0.70404	0.00195	0.70509	0.00381	0.70399	0.00052
5	71	80	0.70990	0.71146	0.70550	0.70173	0.00263	0.70552	0.00212	0.70517	0.00295	0.70603	0.00173
6	81	90	0.70562	0.70888	0.70384	0.70238	0.00225	0.70608	0.00182	0.70495	0.00242	0.70627	0.00132
7	91	100	0.69488	0.69474	0.70383	0.70131	0.00218	0.70446	0.00223	0.70479	0.00205	0.70515	0.00189
8	101	110	0.70672	0.69958	0.71642	0.70198	0.00201	0.70385	0.00203	0.70624	0.00229	0.70565	0.00159
9	111	120	0.70039	0.70157	0.69025	0.70181	0.00178	0.70360	0.00181	0.70447	0.00269	0.70369	0.00169
10	121	130	0.70465	0.70223	0.69620	0.70209	0.00162	0.70346	0.00162	0.70364	0.00255	0.70323	0.00141
11	131	140	0.70238	0.70619	0.69735	0.70212	0.00146	0.70371	0.00149	0.70307	0.00237	0.70321	0.00127
12	141	150	0.70607	0.70232	0.71159	0.70245	0.00137	0.70359	0.00136	0.70378	0.00228	0.70344	0.00115
13	151	160	0.70037	0.70040	0.70984	0.70229	0.00127	0.70335	0.00128	0.70424	0.00215	0.70340	0.00107
14	161	170	0.72037	0.71651	0.71747	0.70358	0.00175	0.70429	0.00151	0.70519	0.00220	0.70471	0.00143
15	171	180	0.69433	0.69238	0.70387	0.70296	0.00174	0.70349	0.00162	0.70510	0.00205	0.70426	0.00148
16	181	190	0.70269	0.70088	0.69643	0.70295	0.00163	0.70333	0.00152	0.70456	0.00199	0.70381	0.00139
17	191	200	0.70976	0.70864	0.70773	0.70335	0.00158	0.70364	0.00146	0.70475	0.00188	0.70410	0.00132
18	201	210	0.70393	0.71074	0.69819	0.70338	0.00149	0.70404	0.00143	0.70438	0.00181	0.70423	0.00125
19	211	220	0.70859	0.70134	0.70737	0.70365	0.00144	0.70389	0.00136	0.70454	0.00172	0.70417	0.00117
20	221	230	0.69003	0.68724	0.68572	0.70297	0.00152	0.70306	0.00154	0.70360	0.00188	0.70321	0.00143
21	231	240	0.69404	0.69697	0.70617	0.70255	0.00151	0.70277	0.00149	0.70372	0.00180	0.70307	0.00138
22	241	250	0.70290	0.70303	0.70274	0.70256	0.00144	0.70278	0.00142	0.70368	0.00171	0.70307	0.00131
23	251	260	0.69744	0.70080	0.69572	0.70234	0.00139	0.70270	0.00136	0.70333	0.00167	0.70288	0.00127
24	261	270	0.68944	0.68842	0.69940	0.70180	0.00144	0.70210	0.00143	0.70317	0.00161	0.70253	0.00130
25	271	280	0.71173	0.70875	0.69470	0.70220	0.00144	0.70237	0.00140	0.70283	0.00158	0.70256	0.00123
26	281	290	0.69046	0.69795	0.68252	0.70175	0.00145	0.70220	0.00136	0.70205	0.00171	0.70218	0.00125

```
     27    291    300     0.69890  0.70547  0.69782       0.70164 0.00140   0.70232 0.00131   0.70189 0.00165       0.70221
0.00121
     28    301    310     0.72067  0.71493  0.72845       0.70232 0.00151   0.70277 0.00134   0.70284 0.00185       0.70287
0.00131
     29    311    320     0.71248  0.71290  0.70837       0.70267 0.00150   0.70312 0.00134   0.70303 0.00180       0.70318
0.00130
     30    321    330     0.70552  0.71034  0.68928       0.70277 0.00145   0.70336 0.00132   0.70257 0.00180       0.70322
0.00126
 ------------------------------------------------------------------------------------------------------------------------------
---
     31    331    340     0.70673  0.70583  0.72029       0.70290 0.00141   0.70344 0.00128   0.70314 0.00183       0.70344
0.00124
     32    341    350     0.71397  0.70181  0.72231       0.70324 0.00141   0.70339 0.00124   0.70374 0.00187       0.70352
0.00119
     33    351    360     0.69317  0.69015  0.70837       0.70294 0.00140   0.70299 0.00126   0.70388 0.00182       0.70330
0.00119
     34    361    370     0.70051  0.70177  0.69207       0.70287 0.00136   0.70295 0.00123   0.70353 0.00180       0.70316
0.00116
     35    371    380     0.72093  0.70273  0.70370       0.70338 0.00142   0.70295 0.00119   0.70354 0.00174       0.70307
0.00112
     36    381    390     0.70896  0.71222  0.71827       0.70354 0.00139   0.70320 0.00119   0.70395 0.00174       0.70338
0.00114
     37    391    400     0.70283  0.69897  0.68309       0.70352 0.00135   0.70309 0.00116   0.70339 0.00179       0.70316
0.00113
     38    401    410     0.71038  0.71680  0.71233       0.70370 0.00132   0.70345 0.00118   0.70362 0.00176       0.70351
0.00114
     39    411    420     0.70453  0.69894  0.71991       0.70372 0.00129   0.70333 0.00116   0.70404 0.00176       0.70351
0.00112
     40    421    430     0.71224  0.71442  0.70680       0.70393 0.00128   0.70361 0.00116   0.70411 0.00172       0.70375
0.00111
 ------------------------------------------------------------------------------------------------------------------------------
---
     41    431    440     0.71180  0.70908  0.70762       0.70412 0.00126   0.70374 0.00114   0.70419 0.00168       0.70388
0.00109
     42    441    450     0.69886  0.70084  0.70113       0.70400 0.00123   0.70368 0.00112   0.70412 0.00164       0.70380
0.00107
     43    451    460     0.70033  0.69292  0.70745       0.70391 0.00121   0.70343 0.00112   0.70420 0.00160       0.70366
0.00106
     44    461    470     0.70894  0.70544  0.69422       0.70403 0.00119   0.70347 0.00109   0.70397 0.00158       0.70365
0.00103
     45    471    480     0.70260  0.70505  0.69236       0.70400 0.00116   0.70351 0.00107   0.70371 0.00157       0.70361
0.00101
     46    481    490     0.69987  0.69934  0.69771       0.70391 0.00114   0.70342 0.00105   0.70358 0.00154       0.70351
0.00099
     47    491    500     0.70292  0.70173  0.71993       0.70389 0.00111   0.70338 0.00103   0.70393 0.00154       0.70356
0.00097
     48    501    510     0.69558  0.69375  0.68100       0.70371 0.00110   0.70318 0.00103   0.70345 0.00159       0.70332
0.00099
     49    511    520     0.69737  0.69503  0.71016       0.70358 0.00109   0.70301 0.00102   0.70359 0.00156       0.70322
0.00097
     50    521    530     0.70154  0.70293  0.68301       0.70354 0.00107   0.70301 0.00100   0.70318 0.00158       0.70313
0.00096


 average keff results summed over  20 cycles each to form 25 batch values of keff

  batch  start    end     keff estimators by batch              average keff estimators and deviations              col/abs/tl
keff
 number  cycle  cycle     k(coll)  k(abs)  k(track)       k(coll)  st dev    k(abs)  st dev   k(track) st dev       k(c/a/t) st
dev

      1     31     50     0.69728  0.70427  0.70439
      2     51     70     0.70210  0.70381  0.70579       0.69969 0.00241   0.70404 0.00023   0.70509 0.00070
      3     71     90     0.70776  0.71017  0.70467       0.70238 0.00303   0.70608 0.00205   0.70495 0.00043
      4     91    110     0.70080  0.69716  0.71013       0.70198 0.00218   0.70385 0.00266   0.70624 0.00133       0.70631
0.00037
      5    111    130     0.70252  0.70190  0.69323       0.70209 0.00169   0.70346 0.00210   0.70364 0.00280       0.70281
0.00204
      6    131    150     0.70423  0.70425  0.70447       0.70245 0.00143   0.70359 0.00172   0.70378 0.00229       0.70309
0.00154
      7    151    170     0.71037  0.70846  0.71366       0.70358 0.00165   0.70429 0.00161   0.70519 0.00240       0.70431
0.00181
      8    171    190     0.69851  0.69663  0.70015       0.70295 0.00157   0.70333 0.00169   0.70456 0.00217       0.70344
0.00178
      9    191    210     0.70685  0.70969  0.70296       0.70338 0.00145   0.70404 0.00165   0.70438 0.00192       0.70383
0.00158
     10    211    230     0.69931  0.69429  0.69654       0.70297 0.00136   0.70306 0.00177   0.70360 0.00189       0.70311
0.00148
 ------------------------------------------------------------------------------------------------------------------------------
---
     11    231    250     0.69847  0.70000  0.70446       0.70256 0.00129   0.70278 0.00162   0.70368 0.00171       0.70287
0.00138
     12    251    270     0.69344  0.69461  0.69756       0.70180 0.00140   0.70210 0.00163   0.70317 0.00164       0.70228
0.00149
     13    271    290     0.70110  0.70335  0.68861       0.70175 0.00129   0.70220 0.00150   0.70205 0.00188       0.70186
0.00137
     14    291    310     0.70978  0.71020  0.71314       0.70232 0.00133   0.70277 0.00150   0.70284 0.00191       0.70245
0.00143
     15    311    330     0.70900  0.71162  0.69883       0.70277 0.00131   0.70336 0.00152   0.70257 0.00180       0.70275
0.00138
     16    331    350     0.71035  0.70382  0.72130       0.70324 0.00132   0.70339 0.00142   0.70374 0.00205       0.70337
0.00137
     17    351    370     0.69684  0.69596  0.70022       0.70287 0.00129   0.70295 0.00141   0.70353 0.00194       0.70300
0.00135
     18    371    390     0.71494  0.70748  0.71099       0.70354 0.00139   0.70320 0.00135   0.70395 0.00187       0.70342
0.00133
```

```
     19    391    410     0.70660  0.70788  0.69771       0.70370 0.00133   0.70345 0.00130   0.70362 0.00180       0.70352
0.00126
     20    411    430     0.70839  0.70668  0.71336       0.70393 0.00128   0.70361 0.00124   0.70411 0.00178       0.70376
0.00122
 ------------------------------------------------------------------------------------------------------------------------
---
     21    431    450     0.70533  0.70496  0.70437       0.70400 0.00122   0.70368 0.00118   0.70412 0.00169       0.70381
0.00116
     22    451    470     0.70464  0.69918  0.70084       0.70403 0.00116   0.70347 0.00115   0.70397 0.00162       0.70369
0.00112
     23    471    490     0.70124  0.70219  0.69504       0.70391 0.00112   0.70342 0.00110   0.70358 0.00159       0.70355
0.00108
     24    491    510     0.69925  0.69774  0.70046       0.70371 0.00109   0.70318 0.00108   0.70345 0.00153       0.70335
0.00106
     25    511    530     0.69946  0.69898  0.69658       0.70354 0.00106   0.70301 0.00105   0.70318 0.00150       0.70317
0.00103


 average keff results summed over  25 cycles each to form 20 batch values of keff

  batch  start    end     keff estimators by batch              average keff estimators and deviations              col/abs/tl
keff
 number  cycle  cycle     k(coll)  k(abs)  k(track)       k(coll)  st dev    k(abs)  st dev   k(track) st dev       k(c/a/t) st
dev

      1     31     55     0.69657  0.70340  0.70573
      2     56     80     0.70689  0.70764  0.70461       0.70173 0.00516   0.70552 0.00212   0.70517 0.00056
      3     81    105     0.70330  0.70294  0.70696       0.70225 0.00303   0.70466 0.00150   0.70577 0.00068
      4    106    130     0.70161  0.69985  0.69725       0.70209 0.00215   0.70346 0.00160   0.70364 0.00218       0.70307
0.00279
      5    131    155     0.70351  0.70440  0.70454       0.70238 0.00169   0.70365 0.00125   0.70382 0.00170       0.70330
0.00181
      6    156    180     0.70590  0.70272  0.71151       0.70296 0.00150   0.70349 0.00104   0.70510 0.00189       0.70355
0.00140
      7    181    205     0.70925  0.70930  0.70200       0.70386 0.00155   0.70432 0.00121   0.70466 0.00166       0.70439
0.00124
      8    206    230     0.69675  0.69424  0.69617       0.70297 0.00161   0.70306 0.00164   0.70360 0.00178       0.70322
0.00165
      9    231    255     0.69816  0.69762  0.70089       0.70244 0.00152   0.70246 0.00157   0.70330 0.00160       0.70281
0.00153
     10    256    280     0.70007  0.70157  0.69860       0.70220 0.00138   0.70237 0.00140   0.70283 0.00151       0.70247
0.00138
 ------------------------------------------------------------------------------------------------------------------------
---
     11    281    305     0.69993  0.70605  0.69500       0.70199 0.00126   0.70270 0.00131   0.70212 0.00154       0.70230
0.00127
     12    306    330     0.71128  0.71058  0.70758       0.70277 0.00139   0.70336 0.00137   0.70257 0.00148       0.70296
0.00134
     13    331    355     0.70623  0.70055  0.71508       0.70303 0.00131   0.70314 0.00128   0.70353 0.00166       0.70325
0.00123
     14    356    380     0.70789  0.70037  0.70362       0.70338 0.00126   0.70295 0.00120   0.70354 0.00154       0.70318
0.00113
     15    381    405     0.70582  0.70761  0.70172       0.70354 0.00118   0.70326 0.00116   0.70342 0.00144       0.70335
0.00106
     16    406    430     0.70975  0.70893  0.71445       0.70393 0.00117   0.70361 0.00114   0.70411 0.00151       0.70379
0.00110
     17    431    455     0.70786  0.70519  0.71145       0.70416 0.00112   0.70370 0.00107   0.70454 0.00149       0.70397
0.00106
     18    456    480     0.70116  0.70015  0.68966       0.70400 0.00107   0.70351 0.00103   0.70371 0.00163       0.70369
0.00104
     19    481    505     0.70176  0.70044  0.70559       0.70388 0.00102   0.70334 0.00099   0.70381 0.00154       0.70357
0.00099
     20    506    530     0.69715  0.69667  0.69113       0.70354 0.00103   0.70301 0.00100   0.70318 0.00159       0.70324
0.00101


 average keff results summed over  50 cycles each to form 10 batch values of keff

  batch  start    end     keff estimators by batch              average keff estimators and deviations              col/abs/tl
keff
 number  cycle  cycle     k(coll)  k(abs)  k(track)       k(coll)  st dev    k(abs)  st dev   k(track) st dev       k(c/a/t) st
dev

      1     31     80     0.70173  0.70552  0.70517
      2     81    130     0.70245  0.70140  0.70211       0.70209 0.00036   0.70346 0.00206   0.70364 0.00153
      3    131    180     0.70471  0.70356  0.70803       0.70296 0.00090   0.70349 0.00119   0.70510 0.00171
      4    181    230     0.70300  0.70177  0.69909       0.70297 0.00063   0.70306 0.00095   0.70360 0.00193       0.70287
0.00055
      5    231    280     0.69911  0.69960  0.69975       0.70220 0.00092   0.70237 0.00101   0.70283 0.00168       0.70213
0.00111
      6    281    330     0.70561  0.70832  0.70129       0.70277 0.00094   0.70336 0.00129   0.70257 0.00140       0.70271
0.00120
      7    331    380     0.70706  0.70046  0.70935       0.70338 0.00100   0.70295 0.00117   0.70354 0.00153       0.70322
0.00106
      8    381    430     0.70779  0.70827  0.70808       0.70393 0.00103   0.70361 0.00121   0.70411 0.00144       0.70384
0.00113
      9    431    480     0.70451  0.70267  0.70056       0.70400 0.00091   0.70351 0.00107   0.70371 0.00133       0.70380
0.00099
     10    481    530     0.69946  0.69855  0.69836       0.70354 0.00093   0.70301 0.00108   0.70318 0.00130       0.70336
0.00104


 average keff results summed over 100 cycles each to form  5 batch values of keff
```

batch number	start cycle	end cycle	keff estimators by batch k(coll)	k(abs)	k(track)	average keff estimators and deviations k(coll)	st dev	k(abs)	st dev	k(track)	st dev	col/abs/tl k(c/a/t)	st dev
1	31	130	0.70209	0.70346	0.70364								
2	131	230	0.70385	0.70266	0.70356	0.70297	0.00088	0.70306	0.00040	0.70360	0.00004		
3	231	330	0.70236	0.70396	0.70052	0.70277	0.00055	0.70336	0.00038	0.70257	0.00103		
4	331	430	0.70742	0.70436	0.70872	0.70393	0.00123	0.70361	0.00037	0.70411	0.00170	0.70359	0.00063
5	431	530	0.70198	0.70061	0.69946	0.70354	0.00103	0.70301	0.00066	0.70318	0.00161	0.70330	0.00075

average keff results summed over 125 cycles each to form 4 batch values of keff

batch number	start cycle	end cycle	keff estimators by batch k(coll)	k(abs)	k(track)	average keff estimators and deviations k(coll)	st dev	k(abs)	st dev	k(track)	st dev	col/abs/tl k(c/a/t)	st dev
1	31	155	0.70238	0.70365	0.70382								
2	156	280	0.70202	0.70109	0.70183	0.70220	0.00018	0.70237	0.00128	0.70283	0.00099		
3	281	405	0.70623	0.70503	0.70460	0.70354	0.00135	0.70326	0.00115	0.70342	0.00082		
4	406	530	0.70354	0.70227	0.70246	0.70354	0.00095	0.70301	0.00085	0.70318	0.00063	0.70379	0.00031

average keff results summed over 250 cycles each to form 2 batch values of keff

batch number	start cycle	end cycle	keff estimators by batch k(coll)	k(abs)	k(track)	average keff estimators and deviations k(coll)	st dev	k(abs)	st dev	k(track)	st dev
1	31	280	0.70220	0.70237	0.70283						
2	281	530	0.70488	0.70365	0.70353	0.70354	0.00134	0.70301	0.00064	0.70318	0.00035

1average individual and combined collision/absorption/track-length keff results for 10 different batch sizes

cycles per keff batch	number of intervals k batches	average keff estimators and deviations k(col) st dev	k(abs) st dev	k(trk) st dev	normality co/ab/trk	average k(c/a/t) k(c/a/t) st dev	k(c/a/t) confidence 95% confidence	99% confidence
1	500	0.7035 0.0011	0.7030 0.0011	0.7032 0.0015	95/95/95	0.70319 0.00102	0.70115-0.70523	0.70048-0.70590
2	250	0.7035 0.0011	0.7030 0.0010	0.7032 0.0016	95/95/95	0.70319 0.00101	0.70119-0.70520	0.70054-0.70585
4	125	0.7035 0.0010	0.7030 0.0010	0.7032 0.0015	99/95/95	0.70316 0.00096	0.70125-0.70507	0.70063-0.70570
5	100	0.7035 0.0010	0.7030 0.0010	0.7032 0.0016	95/95/95	0.70315 0.00096	0.70125-0.70506	0.70063-0.70568
10	50	0.7035 0.0011	0.7030 0.0010	0.7032 0.0016	95/95/95	0.70313 0.00096	0.70121-0.70506	0.70057-0.70570
20	25	0.7035 0.0011	0.7030 0.0010	0.7032 0.0015	95/95/95	0.70317 0.00103	0.70102-0.70531	0.70025-0.70608
25	20	0.7035 0.0010	0.7030 0.0010	0.7032 0.0016	95/95/95	0.70324 0.00101	0.70110-0.70537	0.70031-0.70616
50	10	0.7035 0.0009	0.7030 0.0011	0.7032 0.0013	95/95/95	0.70336 0.00104	0.70091-0.70581	0.69973-0.70699
100	5	0.7035 0.0010	0.7030 0.0007	0.7032 0.0016	95/95/95	0.70330 0.00075	0.70010-0.70651	0.69591-0.71070
125	4	0.7035 0.0010	0.7030 0.0009	0.7032 0.0006	95/95/95	0.70379 0.00031	0.69989-0.70769	0.68426-0.72332

1individual and average keff estimator results by cycle

keff cycle	neutron histories	keff estimators by cycle k(coll)	k(abs)	k(track)	average keff estimators and deviations k(coll)	st dev	k(abs)	st dev	k(track)	st dev	average k(c/a/t) k(c/a/t)	st dev	fom
1	1000	0.66263	0.67157	0.66002									
2	844	0.62259	0.63335	0.60633									
3	928	0.74464	0.73878	0.73698									
4	1189	0.68648	0.69320	0.71005									
5	916	0.67162	0.67449	0.66605									
6	972	0.67555	0.69125	0.65326									
7	999	0.69386	0.68906	0.66118									
8	1052	0.70286	0.67585	0.73216									
9	1006	0.69990	0.70969	0.76966									
10	1024	0.69455	0.70359	0.71872									
11	992	0.71945	0.72461	0.77486									
12	1044	0.74157	0.74571	0.71944									
13	1026	0.71667	0.70198	0.67162									
14	971	0.68381	0.69304	0.65735									
15	972	0.67127	0.68589	0.70914									
16	980	0.70348	0.68749	0.72402									
17	1075	0.67107	0.68658	0.63445									
18	942	0.69601	0.70231	0.71773									
19	1027	0.70549	0.71679	0.64485									
20	1045	0.77572	0.74148	0.75166									
21	1103	0.69297	0.68583	0.72338									
22	898	0.67206	0.66187	0.67595									

```
    23         949 | 0.71079  0.69071  0.73845  |
    24        1052 | 0.68395  0.66337  0.74105  |
    25         970 | 0.68790  0.69966  0.67099  |
    26        1010 | 0.70855  0.69614  0.70095  |
    27        1009 | 0.67223  0.64488  0.68232  |
    28         973 | 0.73330  0.74610  0.69315  |
    29        1080 | 0.69622  0.71162  0.68492  |
    30         935 | 0.73041  0.69416  0.74775  |
 -------------------  begin active keff cycles  ----------------------------------------------------------------------------------------
---
    31        1047 | 0.71428  0.73079  0.71371  |
    32         971 | 0.69249  0.71990  0.70235  |  0.70338 0.01089   0.72534 0.00544   0.70803 0.00568  |
    33         981 | 0.69778  0.70563  0.66827  |  0.70151 0.00656   0.71877 0.00728   0.69478 0.01365  |
    34         994 | 0.68924  0.69195  0.69822  |  0.69845 0.00556   0.71207 0.00846   0.69564 0.00969  |  0.69375 0.01721
8655
    35         994 | 0.68162  0.70872  0.64083  |  0.69508 0.00547   0.71140 0.00658   0.68468 0.01329  |  0.69941 0.01388
10969
    36         977 | 0.71544  0.70426  0.72827  |  0.69847 0.00561   0.71021 0.00551   0.69194 0.01306  |  0.70431 0.00742
33097
    37        1037 | 0.73287  0.74246  0.72458  |  0.70339 0.00683   0.71481 0.00655   0.69660 0.01198  |  0.70980 0.01000
16163
    38        1015 | 0.69058  0.70612  0.77117  |  0.70179 0.00612   0.71373 0.00577   0.70593 0.01395  |  0.70945 0.00924
16573
    39         956 | 0.66418  0.66719  0.62670  |  0.69761 0.00683   0.70856 0.00726   0.69712 0.01513  |  0.70110 0.01044
10967
    40         956 | 0.66792  0.70877  0.69622  |  0.69464 0.00679   0.70858 0.00649   0.69703 0.01353  |  0.70301 0.00977
11412
 ----------------------------------------------------------------------------------------------------------------------------------
.
.
.
.
----------------------------------------------------------------------------------------------------------------------------------------------
--
   511         928 | 0.75910  0.74259  0.75416  |  0.70383 0.00113   0.70326 0.00111   0.70356 0.00154  |  0.70348 0.00104
20679
   512        1183 | 0.67984  0.69205  0.72746  |  0.70378 0.00113   0.70324 0.00111   0.70361 0.00154  |  0.70346 0.00104
20711
   513         882 | 0.68107  0.68076  0.70320  |  0.70373 0.00113   0.70319 0.00111   0.70361 0.00153  |  0.70342 0.00104
20724
   514        1007 | 0.69072  0.68108  0.70462  |  0.70370 0.00112   0.70315 0.00111   0.70361 0.00153  |  0.70339 0.00104
20741
   515        1027 | 0.64762  0.66328  0.62331  |  0.70359 0.00113   0.70306 0.00111   0.70344 0.00154  |  0.70328 0.00104
20556
   516         932 | 0.68972  0.68472  0.71744  |  0.70356 0.00113   0.70303 0.00111   0.70347 0.00153  |  0.70326 0.00104
20586
   517        1052 | 0.74062  0.71731  0.75135  |  0.70364 0.00113   0.70305 0.00111   0.70357 0.00153  |  0.70331 0.00104
20573
   518        1053 | 0.70672  0.69771  0.68843  |  0.70364 0.00112   0.70304 0.00110   0.70354 0.00153  |  0.70330 0.00104
20612
   519         938 | 0.67005  0.67215  0.67557  |  0.70357 0.00112   0.70298 0.00110   0.70348 0.00153  |  0.70323 0.00104
20571
   520         937 | 0.70825  0.71869  0.75603  |  0.70358 0.00112   0.70301 0.00110   0.70359 0.00153  |  0.70327 0.00104
20596
 ----------------------------------------------------------------------------------------------------------------------------------------------
---
   521        1058 | 0.71063  0.71456  0.63479  |  0.70360 0.00112   0.70304 0.00110   0.70345 0.00153  |  0.70327 0.00103
20634
   522        1009 | 0.68556  0.69318  0.65900  |  0.70356 0.00112   0.70302 0.00110   0.70336 0.00153  |  0.70323 0.00103
20648
   523         969 | 0.67996  0.70849  0.66781  |  0.70351 0.00112   0.70303 0.00110   0.70329 0.00153  |  0.70321 0.00103
20690
   524         978 | 0.72088  0.70570  0.70327  |  0.70355 0.00111   0.70303 0.00109   0.70329 0.00153  |  0.70322 0.00103
20730
   525        1035 | 0.71400  0.70193  0.73850  |  0.70357 0.00111   0.70303 0.00109   0.70336 0.00153  |  0.70324 0.00103
20767
   526        1006 | 0.74177  0.75665  0.71714  |  0.70365 0.00111   0.70314 0.00110   0.70339 0.00152  |  0.70333 0.00103
20676
   527        1046 | 0.64384  0.66806  0.63471  |  0.70353 0.00112   0.70307 0.00110   0.70325 0.00153  |  0.70323 0.00103
20527
   528         869 | 0.71724  0.69923  0.69946  |  0.70355 0.00112   0.70306 0.00109   0.70324 0.00152  |  0.70323 0.00103
20572
   529        1119 | 0.69903  0.68697  0.72558  |  0.70354 0.00111   0.70303 0.00109   0.70328 0.00152  |  0.70322 0.00103
20601
   530         961 | 0.70253  0.69452  0.64982  |  0.70354 0.00111   0.70301 0.00109   0.70318 0.00152  |  0.70319 0.00102
20625
 ----------------------------------------------------------------------------------------------------------------------------------------------
---


  the largest active cycle keffs by estimator are:                                  the smallest active cycle keffs by estimator
are:

                  collision 0.77667 on cycle 250                                                collision 0.63361 on cycle 397
                absorption 0.76931 on cycle 201                                               absorption 0.63388 on cycle 510
              track length 0.81127 on cycle 331                                             track length 0.60593 on cycle 445
1plot of the estimated col/abs/track-length keff one standard deviation interval versus cycle number (| = final keff =  0.70319)

    cycle   active 0.69                          0.70                              0.71                              0.72
   number   cycles  |-----------------------------|---------------------------------|---------------------------------|
       40       10  |        (--------------------------------k-------------------------------)                        |
       45       15  |                     (-----------------k-|--------------)                                          |
       50       20  |                   (--------------k-------|------)                                                 |
       55       25  |                   (------------k---------|--)                                                     |
       60       30  |                  (-------------k---------|---)                                                    |
       65       35  |                     (-----------k---------|--)                                                    |
       70       40  |                           (----------k---|------)                                                 |
```

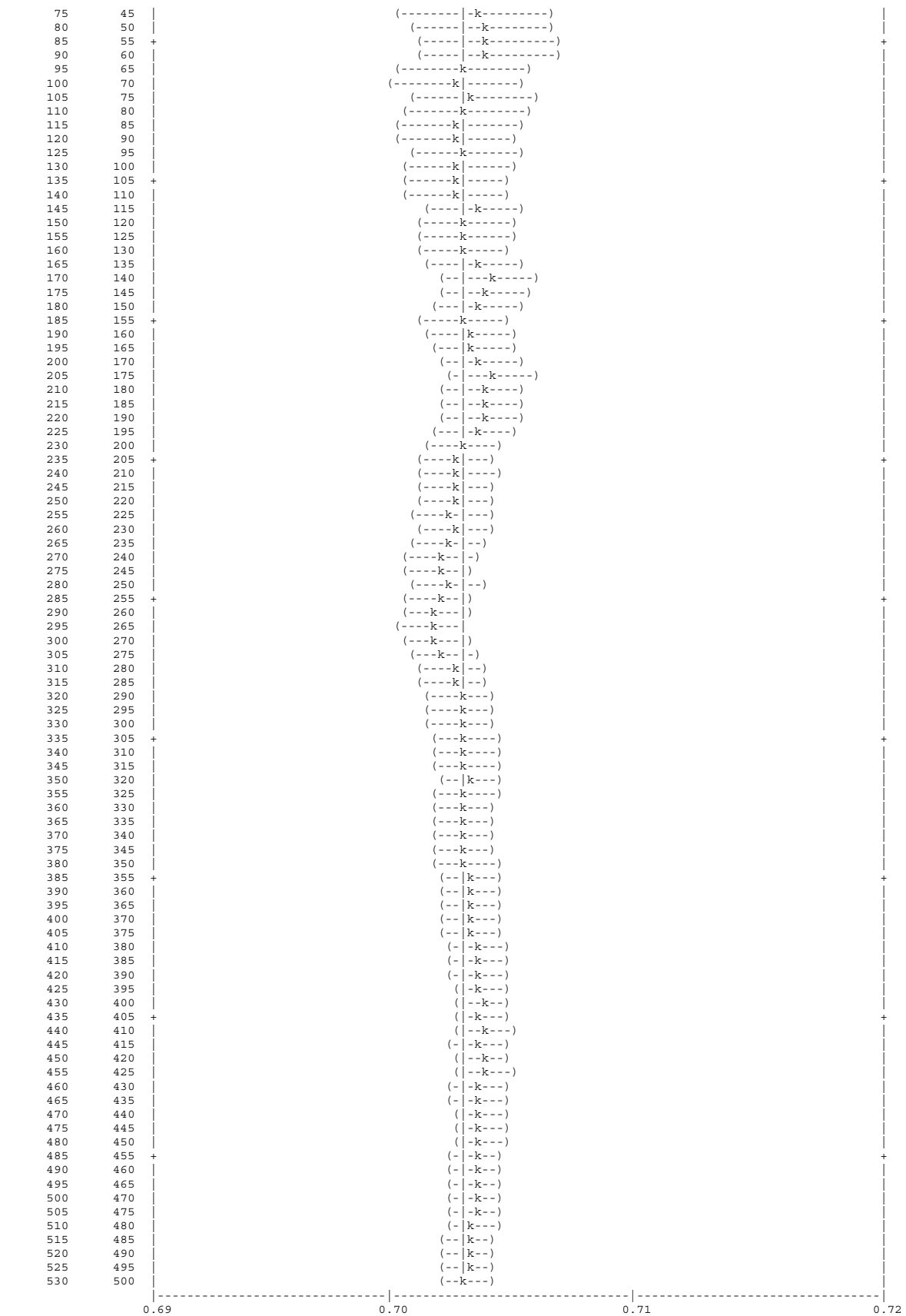

1individual and collision/absorption/track-length keffs for different numbers of inactive cycles skipped for fission source settling

```
   skip  active     active    average keff estimators and deviations     normality average k(c/a/t)   k(c/a/t) confidence
intervals
  cycles cycles   neutrons  k(col) st dev  k(abs) st dev  k(trk) st dev  co/ab/tl  k(c/a/t) st dev   95% confidence   99%
confidence

     0    530       530485| 0.7032 0.0011  0.7026 0.0011  0.7030 0.0015 |95/95/95| 0.70281 0.00101  0.70081-0.70482  0.70015-
0.70547
     1    529       529485| 0.7033 0.0011  0.7026 0.0011  0.7030 0.0015 |95/95/95| 0.70288 0.00101  0.70088-0.70488  0.70022-
0.70554
     2    528       528641| 0.7034 0.0011  0.7028 0.0011  0.7032 0.0015 |95/95/95| 0.70303 0.00100  0.70104-0.70502  0.70039-
0.70566
     3    527       527713| 0.7034 0.0011  0.7027 0.0011  0.7032 0.0015 |95/95/95| 0.70296 0.00100  0.70097-0.70495  0.70033-
0.70559
     4    526       526524| 0.7034 0.0011  0.7027 0.0011  0.7031 0.0015 |95/95/95| 0.70298 0.00100  0.70099-0.70497  0.70034-
0.70562
     5    525       525608| 0.7034 0.0011  0.7028 0.0011  0.7032 0.0015 |95/95/95| 0.70304 0.00100  0.70105-0.70503  0.70040-
0.70568
     6    524       524636| 0.7035 0.0011  0.7028 0.0011  0.7033 0.0015 |95/95/95| 0.70308 0.00100  0.70109-0.70507  0.70044-
0.70572
     7    523       523637| 0.7035 0.0011  0.7028 0.0011  0.7034 0.0015 |95/95/95| 0.70311 0.00100  0.70112-0.70511  0.70047-
0.70576
     8    522       522585| 0.7035 0.0011  0.7029 0.0011  0.7033 0.0015 |95/95/95| 0.70313 0.00100  0.70113-0.70513  0.70048-
0.70578
     9    521       521579| 0.7035 0.0011  0.7029 0.0011  0.7032 0.0015 |95/95/95| 0.70310 0.00100  0.70110-0.70510  0.70045-
0.70576
    10    520       520555| 0.7035 0.0011  0.7029 0.0011  0.7032 0.0015 |95/95/95| 0.70310 0.00101  0.70110-0.70511  0.70044-
0.70576
 ------------------------------------------------------------------------------------------------------------------------------
---
    11    519       519563| 0.7035 0.0011  0.7028 0.0011  0.7030 0.0015 |95/95/95| 0.70305 0.00101  0.70104-0.70505  0.70038-
0.70571
    12    518       518519| 0.7034 0.0011  0.7027 0.0011  0.7030 0.0015 |95/95/95| 0.70297 0.00101  0.70097-0.70498  0.70031-
0.70563
    13    517       517493| 0.7034 0.0011  0.7027 0.0011  0.7031 0.0015 |95/95/95| 0.70298 0.00101  0.70097-0.70499  0.70031-
0.70564
    14    516       516522| 0.7035 0.0011  0.7028 0.0011  0.7032 0.0015 |95/95/95| 0.70301 0.00101  0.70100-0.70502  0.70035-
0.70568
    15    515       515550| 0.7035 0.0011  0.7028 0.0011  0.7031 0.0015 |95/95/95| 0.70305 0.00101  0.70104-0.70506  0.70038-
0.70572
    16    514       514570| 0.7035 0.0011  0.7028 0.0011  0.7031 0.0015 |95/95/95| 0.70306 0.00101  0.70104-0.70508  0.70038-
0.70573
    17    513       513495| 0.7036 0.0011  0.7028 0.0011  0.7032 0.0015 |95/95/95| 0.70312 0.00101  0.70110-0.70514  0.70044-
0.70580
    18    512       512553| 0.7036 0.0011  0.7028 0.0011  0.7032 0.0015 |95/95/95| 0.70312 0.00102  0.70110-0.70514  0.70044-
0.70580
    19    511       511526| 0.7036 0.0011  0.7028 0.0011  0.7033 0.0015 |95/95/95| 0.70312 0.00102  0.70109-0.70515  0.70043-
0.70581
    20    510       510481| 0.7034 0.0011  0.7027 0.0011  0.7032 0.0015 |95/95/95| 0.70303 0.00101  0.70101-0.70505  0.70035-
0.70571
 ------------------------------------------------------------------------------------------------------------------------------
---
.
.
.
.
.
 ------------------------------------------------------------------------------------------------------------------------------
---
   475     55        55110| 0.6995 0.0033  0.6991 0.0032  0.6982 0.0046 |95/95/95| 0.69904 0.00308  0.69285-0.70523  0.69079-
0.70729
   480     50        50070| 0.6995 0.0034  0.6986 0.0034  0.6984 0.0049 |95/95/95| 0.69873 0.00330  0.69209-0.70538  0.68986-
0.70761
   485     45        45025| 0.6998 0.0038  0.6990 0.0037  0.6998 0.0053 |95/95/95| 0.69932 0.00362  0.69201-0.70663  0.68955-
0.70909
   490     40        40100| 0.6994 0.0039  0.6984 0.0038  0.6985 0.0056 |95/95/95| 0.69858 0.00374  0.69100-0.70617  0.68842-
0.70875
   495     35        34999| 0.6989 0.0043  0.6970 0.0041  0.6955 0.0062 |95/95/95| 0.69704 0.00414  0.68861-0.70547  0.68571-
0.70838
   500     30        29990| 0.6982 0.0049  0.6972 0.0046  0.6914 0.0068 |95/95/95| 0.69647 0.00484  0.68655-0.70640  0.68307-
0.70987
   505     25        25031| 0.6972 0.0057  0.6967 0.0053  0.6911 0.0079 |95/95/95| 0.69586 0.00554  0.68436-0.70735  0.68023-
0.71148
   510     20        19989| 0.6995 0.0066  0.6990 0.0052  0.6966 0.0092 |95/95/95| 0.69852 0.00542  0.68707-0.70996  0.68279-
0.71424
   515     15        14962| 0.7021 0.0066  0.7013 0.0055  0.6946 0.0104 |95/95/95| 0.70061 0.00608  0.68736-0.71386  0.68203-
0.71919
   520     10        10050| 0.7015 0.0085  0.7029 0.0072  0.6830 0.0122 |95/95/95| 0.69931 0.00934  0.67722-0.72141  0.66662-
0.73201
 ------------------------------------------------------------------------------------------------------------------------------
---
   525      5         5001| 0.7009 0.0161  0.7011 0.0149  0.6853 0.0182 |95/95/95| 0.69614 0.02351  0.59496-0.79732  0.46277-
0.92951
   527      3         2949| 0.7063 0.0056  0.6936 0.0036  0.6916 0.0222 |
   528      2         2080| 0.7008 0.0017  0.6907 0.0038  0.6877 0.0379 |


 the minimum estimated standard deviation for the col/abs/tl keff estimator occurs with   3 inactive cycles and  527 active
cycles.


 the first active half of the problem skips 30 cycles and uses 250 active cycles; the second half skips 280 and uses 250 cycles.
 the col/abs/trk-len keff, one standard deviation, and 68, 95, and 99 percent intervals for each active half of the problem are:

             problem        keff      standard deviation       68% confidence         95% confidence         99% confidence

           first half     0.70239          0.00143           0.70096 to 0.70381     0.69954 to 0.70523     0.69862 to 0.70616
```

```
          second half     0.70385         0.00147           0.70238 to 0.70532     0.70092 to 0.70678     0.69997 to 0.70773
         final result     0.70319         0.00102           0.70216 to 0.70422     0.70115 to 0.70523     0.70048 to 0.70590

 the first and second half values of k(collision/absorption/track length) appear to be the same at the 68 percent confidence
level.
1plot of the estimated col/abs/track-length keff one standard deviation interval by active cycle number (| = final keff =
0.70319)

 inactive   active 0.68                          0.69                          0.70                          0.71
   cycles   cycles  |-----------------------------|-----------------------------|-------------------------------|
        0      530  |                                                          (---k|-)                        |
        5      525  |                                                           (--k|--)                       |
       10      520  |                                                           (---k--)                       |
       15      515  |                                                           (--k|--)                       |
       20      510  |                                                           (--k|--)                       |
       25      505  |                                                           (---k--)                       |
       30      500  *                                                           (---k--)                      *
       35      495  |                                                           (---k--)                       |
       40      490  |                                                           (---k--)                       |
       45      485  +                                                           (---k--)                      +
       50      480  |                                                           (---k--)                       |
       55      475  |                                                           (---k---)                      |
       60      470  |                                                           (---k--)                       |
       65      465  |                                                           (---k---)                      |
       70      460  |                                                           (---k--)                       |
       75      455  |                                                           (--k|--)                       |
       80      450  |                                                           (--k|--)                       |
       85      445  |                                                          (---k|--)                       |
       90      440  |                                                          (---k|--)                       |
       95      435  +                                                           (--k|--)                      +
      100      430  |                                                           (--k|--)                       |
      105      425  |                                                          (---k|--)                       |
      110      420  |                                                           (--k|--)                       |
      115      415  |                                                           (--k|--)                       |
      120      410  |                                                           (---k--)                       |
      125      405  |                                                           (--k|--)                       |
      130      400  |                                                           (---k---)                      |
      135      395  |                                                           (---k--)                       |
      140      390  |                                                           (---k---)                      |
      145      385  +                                                          (---k|--)                      +
      150      380  |                                                           (---k---)                      |
      155      375  |                                                          (----k---)                      |
      160      370  |                                                           (---k---)                      |
      165      365  |                                                          (---k|--)                       |
      170      360  |                                                         (---k-|-)                        |
      175      355  |                                                         (----k|--)                       |
      180      350  |                                                          (---k|--)                       |
      185      345  |                                                           (---k---)                      |
      190      340  |                                                          (---k|---)                      |
      195      335  +                                                          (---k|--)                      +
      200      330  |                                                         (----k|--)                       |
      205      325  |                                                        (----k-|-)                        |
      210      320  |                                                         (---k-|--)                       |
      215      315  |                                                         (---k-|--)                       |
      220      310  |                                                         (---k-|--)                       |
      225      305  |                                                         (----k|--)                       |
      230      300  |                                                          (----k---)                      |
      235      295  |                                                            (---|k---)                    |
      240      290  |                                                            (---k----)                   |
      245      285  +                                                           (---|k---)                    +
      250      280  |                                                           (---k----)                    |
      255      275  |                                                            (--|k----)                   |
      260      270  |                                                           (---|k---)                    |
      265      265  |                                                            (--|-k---)                   |
      270      260  |                                                              (-|--k---)                 |
      275      255  |                                                              (-|--k----)                |
      280      250  |                                                             (--|-k----)                 |
      285      245  |                                                              (-|--k----)                |
      290      240  |                                                              (-|--k----)                |
      295      235  +                                                               (|---k----)              +
      300      230  |                                                              (-|--k----)                |
      305      225  |                                                             (--|-k----)                 |
      310      220  |                                                            (---|k----)                  |
      315      215  |                                                            (---|k----)                  |
      320      210  |                                                          (-----k----)                    |
      325      205  |                                                          (-----k----)                    |
      330      200  |                                                          (----k|----)                   |
      335      195  |                                                         (----k-|---)                    |
      340      190  |                                                         (----k-|---)                    |
      345      185  +                                                         (-----k|---)                   +
      350      180  |                                                        (-----k-|---)                    |
      355      175  |                                                         (-----k|----)                   |
      360      170  |                                                          (-----k-----)                  |
      365      165  |                                                          (-----k-----)                  |
      370      160  |                                                          (-----k-----)                  |
      375      155  |                                                         (-----k|-----)                  |
      380      150  |                                                         (------k-----)                  |
      385      145  |                                                       (-----k--|---)                    |
      390      140  |                                                       (------k-|---)                    |
      395      135  +                                                      (------k--|---)                   +
      400      130  |                                                        (------k|-----)                  |
      405      125  |                                                      (------k--|---)                    |
      410      120  |                                                    (------k----|-)                      |
      415      115  |                                                   (-------k----|-)                     |
      420      110  |                                                   (------k-----|-)                     |
      425      105  |                                                 (------k------) |                     |
      430      100  |                                                (------k-------) |                     |
```

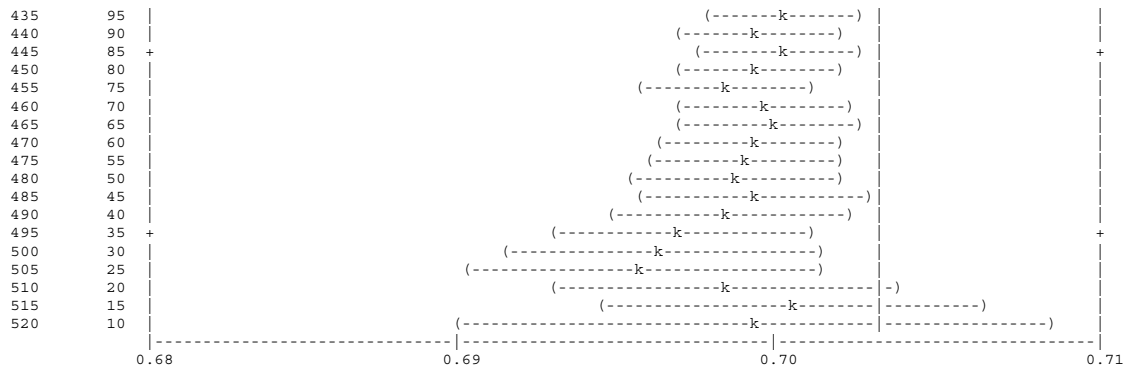


```
 ********************************************************************************************************************************
 dump no.    2 on file MS_Acc_NACCoC_c1.00_g0.00_e0.00_d0.01cm_HP_36mm.inpr       nps =      530485     coll =       76766227
ctm =       11.96   nrn =         776053288


         6 warning messages so far.


 run terminated when   530   kcode cycles were done.

 computer time =   12.12 minutes

 mcnp     version 5     06212004                    10/25/07 21:18:09                    probid =  10/25/07 21:05:56
```

Figure 6.6.15-2 Hexagonal Pitch MOX Rods – ^{241}Pu Fuel Composition

```
         Thread Name & Version = MCNP5_RSICC, 1.30
                                    _
         ._ _    _  ._   ._   |_
         | | |  (_  | |  |_)   _)
                        |
 +---------------------------------------------------------------------+
 |   This program was prepared by the Regents of the University of     |
 |California at Los Alamos National Laboratory (the University) under  |
 |  contract number W-7405-ENG-36 with the U.S. Department of Energy   |
 |(DoE).  The University has certain rights in the program pursuant to|
 |  the contract and the program should not be copied or distributed   |
 | outside your organization.  All rights in the program are reserved  |
 |by the DoE and the University.  Neither the U.S. Government nor the  |
 | University makes any warranty, express or implied, or assumes any   |
 |     liability or responsibility for the use of this software.       |
 +---------------------------------------------------------------------+

1mcnp     version 5     ld=06212004                    10/25/07 23:04:59
 ***********************************************************************                probid =  10/25/07 23:04:59
 name=P1_Acc_NACCoC_c1.00_g0.00_e0.00_d0.01cm_HP_36mm.inp host=amdeng2-it1459

    1-       NAC-LWT Cask - MOX Experiments - Accident Transport Conditions
    2-       C
    3-       C EXCEL File Version: v2.00
    4-       C Run Version: v2.00
    5-       C
    6-       C Fissile Material Type: All Pu-241
    7-       C Rod Interior Void Moderator Density: 0.9982 g/cc
    8-       C Canister Interior Moderator Density: 0.9982 g/cc
    9-       C Canister to Cask Gap Moderator Density: 0.0001 g/cc
   10-       C Cask Exterior Moderator Density: 0.0001 g/cc
   11-       C Boundary Condition / Distance:  Reflected / 0.01 cm
   12-       C
   13-       C Fuel Rod Pitch: 3.6 cm
   14-       C Fuel Rod Pitch Cofiguration: Hexagonal
   15-       C Number of Rods: 16
   16-       C
   17-       C Base Fuel Parameters: NACCoC
   18-       C
   19-       c Cells - Fuel Rod - NACCoC
   20-       1 1 -10.554 -1   u=3 $ Fuel
   21-       2 2 -0.9982 -2 +1  u=3 $ Plenum + Fuel to Clad Gap
   22-       3 3 -6.56 -3 +2  u=3 $ Clad + End Plugs
   23-       4 4 -0.9982 +3   u=3 $ Outside Fuel Rod
   24-       C 16 Rods - Hexagonal Pitch
   25-       10 4 -0.9982 -10
   26-                  *trcl=( 0.9000 -1.5588 0.0000 )
   27-                  lat=2 u=2 fill=-7:6 -5:5 0:0
   28-              2 2 2 2 2 2 2 2 2 2 2 2 2 2
   29-              2 2 2 2 2 2 2 2 2 2 2 2 2 2
   30-              2 2 2 2 2 2 2 2 2 2 2 2 2 2
   31-              2 2 2 2 2 2 2 3 2 2 2 2 2 2
   32-              2 2 2 2 2 2 3 3 3 2 2 2 2 2
   33-              2 2 2 2 2 3 3 3 3 3 2 2 2 2
   34-              2 2 2 2 2 3 3 3 3 2 2 2 2 2
   35-              2 2 2 2 2 3 3 3 2 2 2 2 2 2
   36-              2 2 2 2 2 2 2 2 2 2 2 2 2 2
   37-              2 2 2 2 2 2 2 2 2 2 2 2 2 2
   38-              2 2 2 2 2 2 2 2 2 2 2 2 2 2
   39-       C PWR Basket - Cells
   40-       20  4 -0.9982 -20   fill=2  u=1 $ Rod Array Container
   41-       21  5 -0.0001 +20 -21    u=1 $ Basket Cavity
   42-       22  7 -2.7020 -22 +21    u=1 $ Basket Body
   43-       23  5 -0.0001 +22     u=1 $ Outside
   44-       C Cells - LWT Cask Accident Conditions
   45-       40 8 -11.344 -43     u=0 $ BotPb
   46-       41 5 -0.0001 -42 fill=1    u=0 $ Cavity
   47-       42 9 -7.9400 -41 +43    u=0 $ Bottom
   48-       43 9 -7.9400 -40 +41 +45 +48 +42 u=0 $ OuterShell
   49-       44 9 -7.9400 -44 +47 +42   u=0 $ InnerShellTaper
   50-       45 9 -7.9400 -46 +42    u=0 $ InnerShell
   51-       46 8 -11.344 -47 +46    u=0 $ Lead
   52-       47 8 -11.344 -45 +44 +47   u=0 $ LeadTaper
   53-       48 0         -48 +47    u=0 $ LeadGap
   54-       49 6 -0.0001 -49 +40    u=0 $ Gap to Reflector
   55-       50 0          +49    u=0 $ Boundary
   56-
   57-       c Surfaces - Fuel Rod - NACCoC
   58-       1 RCC 0.0000 0.0000 10.5207 0.0000 0.0000 389.8900 0.4781   $ Fuel pellet stack
   59-       2 RCC 0.0000 0.0000 6.3990 0.0000 0.0000 409.4227 0.4876   $ Annulus + Plenum
   60-       3 RCC 0.0000 0.0000 5.0800 0.0000 0.0000 411.8226 0.5588   $ Clad + End-Caps
   61-       c Surfaces - Pitch - NACCoC
   62-       10 RHP 0.0000 0.0000 -1.0000 0.0000 0.0000 454.12 1.8000 0.0000 0.0000 $ Lattice
   63-       C PWR Basket - Surfaces
   64-       20 1 RPP -7.4148 7.4148 -7.4148 7.4148 0.0000 452.1200  $ Array Container
   65-       21 1 RPP -11.2713 11.2713 -11.2713 11.2713 0.0000 452.1200  $ Basket Opening
   66-       22  RCC 0.0000 0.0000 0.0000 0.0000 0.0000 452.1200 16.83512 $ Basket Outer Body
   67-       C Surfaces - LWT Cask Accident Conditions
   68-       40 RCC 0.0000 0.0000 -26.6700 0.0000 0.0000 507.3650 36.5189 $ Lwt Body
   69-       41 RCC 0.0000 0.0000 -26.6700 0.0000 0.0000 26.6700 36.5189 $ Bottom
   70-       42 RCC 0.0000 0.0000 0.0000 0.0000 0.0000 452.1200 16.9863 $ Cavity
```

```
   71-       43 RCC 0.0000 0.0000 -17.7800 0.0000 0.0000 7.6200 26.3525 $ Bottom gamma shield
   72-       44 RCC 0.0000 0.0000 0.0000 0.0000 0.0000 444.5000 20.1740 $ Lead id - taper
   73-       45 RCC 0.0000 0.0000 0.0000 0.0000 0.0000 444.5000 31.5976 $ Lead od - taper
   74-       46 RCC 0.0000 0.0000 13.8176 0.0000 0.0000 416.8648 18.9103 $ Lead id
   75-       47 RCC 0.0000 0.0000 13.8176 0.0000 0.0000 416.8648 33.3271 $ Lead od
   76-       48 RCC 0.0000 0.0000 13.8176 0.0000 0.0000 416.8648 33.4645 $ Lead gap
   77-       *49 RPP -36.5289 36.5289 -36.5289 36.5289 -26.6800 480.7050  $ Container
   78-
   79-       c
   80-       c Materials List
   81-       c
   82-       C MOX Material Composition Fuel
   83-       m1    92235 -5.7210E-03
   84-             92238 -8.1157E-01
   85-             94238 -6.4417E-10
   86-             94239 -6.4417E-10
   87-             94240 -6.4417E-10
   88-             94241 -6.4417E-02
   89-             94242 -6.4417E-10
   90-              8016 -1.1829E-01
   91-       C Rod Interior Void Material
   92-       m2    1001 2
   93-             8016 1
   94-       mt2     lwtr.01
   95-       c Clad Material
   96-       m3 26054 -7.063E-05 24050 -4.179E-05 7014 -4.980E-04
   97-             26056 -1.149E-03 24052 -8.370E-04 7015 -1.981E-06
   98-             26057 -2.702E-05 24053 -9.673E-05
   99-             26058 -3.631E-06 24054 -2.448E-05
  100-             40000 -9.823E-01 50000 -1.500E-02
  101-       C Canister Interior Non-Fuel Space
  102-       m4    1001 2
  103-             8016 1
  104-       mt4     lwtr.01
  105-       C Canister to Cask Gap Material
  106-       m5    1001 2
  107-             8016 1
  108-       mt5     lwtr.01
  109-       C Cask Exterior Material
  110-       m6    1001 2
  111-             8016 1
  112-       mt6     lwtr.01
  113-       c Aluminum
  114-       m7 13027 -1.000E+00
  115-       C Water/Glycol
  116-       m10   1001 -1.03651E-01
 warning. material  10 is not used in the problem.
  117-             8016 -6.75619E-01
  118-             6000 -2.20730E-01
  119-       mt10    lwtr.01
 warning. material  10 is not used in the problem.
  120-       c Lead
  121-       m8 82206 -2.534E-01
  122-             82207 -2.207E-01
  123-             82208 -5.259E-01
  124-       c SS304
  125-       m9 24050 -7.939E-03 26054 -3.927E-02 28058 -6.384E-02
  126-             24052 -1.590E-01 26056 -6.387E-01 28060 -2.543E-02
  127-             24053 -1.838E-02 26057 -1.502E-02 28061 -1.124E-03
  128-             24054 -4.652E-03 26058 -2.019E-03 28062 -3.639E-03
  129-                 28064 -9.623E-04
  130-             25055 -2.000E-02
  131-       C Aluminum Honeycomb Impact Limiter
  132-       m11   13027 -1.0
 warning. material  11 is not used in the problem.
  133-       C Mode
  134-       mode n
  135-       C Cell Importances
  136-       imp:n 1 18r 0
  137-       C
  138-       C Criticality Controls
  139-       kcode 1000 0.80 30 530
  140-       C
  141-       C Starting Source Definition
  142-       sdef cell=41:20:10:1
  143-             erg=d1
  144-             pos=0 0 10.5207
  145-             rad=d2
  146-             axs=0 0 1
  147-             ext=d3
  148-       sp1   -3
  149-       si2 0.0000 0.4781
  150-       sp2 -21 1
  151-       si3 0.0000 389.8900
  152-       sp3 0 1
  153-       C Print Control
  154-       print
  155-       C Random Number Generator
  156-       rand gen=2 seed=19073486328125 stride=152917 hist=1
  157-       c
  158-       c Rotation Matrix
  159-       *TR1 0.0 0.0 0.0 -30 60 90 -120 -30 90 90 90 0  $ z-rotation -30 degrees

1source                                                                                print table 10

 values of defaulted or explicitly defined source variables
```

```
   sur        0.0000E+00
   tme        0.0000E+00
   dir        isotropic
   pos        0.0000E+00   0.0000E+00   1.0521E+01
   x          0.0000E+00
   y          0.0000E+00
   z          0.0000E+00
   axs        0.0000E+00   0.0000E+00   1.0000E+00
   vec        0.0000E+00   0.0000E+00   0.0000E+00
   ccc        0.0000E+00
   nrm        1.0000E+00
   ara        0.0000E+00
   wgt        1.0000E+00
   eff        1.0000E-02
   par        0.0000E+00
   tr         0.0000E+00


 probability distribution   1 for source variable erg
 energy function 3:  watt (fission) spectrum (endf law 10)

     f(e)=c*exp(-e/a)*sinh(sqrt(b*e))
     a = 9.6500E-01     b = 2.2900E+00     c = 4.5270E-01

     the mean of source distribution   1 is  1.9806E+00



 probability distribution   2 for source variable rad
 power law 21:     f(x)=c*abs(x)**k          k = 1.0000E+00



 probability distribution   3 for source variable ext
 unbiased histogram distribution

 source        source           cumulative          probability
  entry         value           probability           of bin

    1       0.00000E+00        0.000000E+00        0.000000E+00
    2       3.89890E+02        1.000000E+00        1.000000E+00

     the mean of source distribution   3 is  1.9494E+02


 order of sampling source variables.
 cel axs rad ext pos erg tme

 comment. total fission nubar data are being used.
1material composition                                                                    print table 40

 the sum of the fractions of material    2 was 3.000000E+00

 the sum of the fractions of material    3 was 1.000050E+00

 the sum of the fractions of material    4 was 3.000000E+00

 the sum of the fractions of material    5 was 3.000000E+00

 the sum of the fractions of material    6 was 3.000000E+00

 the sum of the fractions of material    9 was 9.999753E-01

 material
  number     component nuclide, atom fraction

     1           92235, 2.19354E-03      92238, 3.07241E-01      94238, 2.43869E-10      94239, 2.42846E-10
                 94240, 2.41833E-10      94241, 2.40826E-02      94242, 2.39829E-10       8016, 6.66483E-01
     2            1001, 6.66667E-01       8016, 3.33333E-01
 associated thermal s(a,b) data sets:    lwtr.01t
     3           26054, 1.19346E-04      24050, 7.62600E-05       7014, 3.24139E-03      26056, 1.87224E-03
                 24052, 1.46874E-03       7015, 1.20369E-05      26057, 4.32542E-05      24053, 1.66532E-04
                 26058, 5.71247E-06      24054, 4.13652E-05      40000, 9.81436E-01      50000, 1.15166E-02
     4            1001, 6.66667E-01       8016, 3.33333E-01
 associated thermal s(a,b) data sets:    lwtr.01t
     5            1001, 6.66667E-01       8016, 3.33333E-01
 associated thermal s(a,b) data sets:    lwtr.01t
     6            1001, 6.66667E-01       8016, 3.33333E-01
 associated thermal s(a,b) data sets:    lwtr.01t
     7           13027, 1.00000E+00
     8           82206, 2.54963E-01      82207, 2.20987E-01      82208, 5.24050E-01
     9           24050, 8.79087E-03      26054, 4.02643E-02      28058, 6.09419E-02      24052, 1.69300E-01
                 26056, 6.31511E-01      28060, 2.34673E-02      24053, 1.92010E-02      26057, 1.45900E-02
                 28061, 1.02022E-03      24054, 4.76985E-03      26058, 1.92741E-03      28062, 3.24982E-03
                 28064, 8.32505E-04      25055, 2.01337E-02
1material                                                                                print table 40
  number     component nuclide, mass fraction

     1           92235, 5.72101E-03      92238, 8.11572E-01      94238, 6.44171E-10      94239, 6.44171E-10
                 94240, 6.44171E-10      94241, 6.44171E-02      94242, 6.44171E-10       8016, 1.18290E-01
     2            1001, 1.11915E-01       8016, 8.88085E-01
     3           26054, 7.06265E-05      24050, 4.17879E-05       7014, 4.97975E-04      26056, 1.14894E-03
                 24052, 8.36958E-04       7015, 1.98090E-06      26057, 2.70186E-05      24053, 9.67251E-05
                 26058, 3.63082E-06      24054, 2.44788E-05      40000, 9.82251E-01      50000, 1.49992E-02
     4            1001, 1.11915E-01       8016, 8.88085E-01
```

```
     5            1001, 1.11915E-01       8016, 8.88085E-01
     6            1001, 1.11915E-01       8016, 8.88085E-01
     7           13027, 1.00000E+00
     8           82206, 2.53400E-01      82207, 2.20700E-01      82208, 5.25900E-01
     9           24050, 7.93920E-03      26054, 3.92710E-02      28058, 6.38416E-02      24052, 1.59004E-01
                 26056, 6.38716E-01      28060, 2.54306E-02      24053, 1.83805E-02      26057, 1.50204E-02
                 28061, 1.12403E-03      24054, 4.65211E-03      26058, 2.01905E-03      28062, 3.63909E-03
                 28064, 9.62324E-04      25055, 2.00005E-02

 warning.   6 materials had unnormalized fractions. print table 40.
1cell volumes and masses                                                                        print table 50

        cell     atom          gram          input       calculated                            reason volume
                density       density        volume        volume         mass       pieces    not calculated

     1     1  7.05243E-02   1.05540E+01   0.00000E+00   2.79982E+02   2.95493E+03      1
     2     2  1.00128E-01   9.98200E-01   0.00000E+00   2.58267E+01   2.57802E+01      1
     3     3  4.33411E-02   6.56000E+00   0.00000E+00   9.81838E+01   6.44086E+02      1
     4     4  1.00128E-01   9.98200E-01   0.00000E+00   0.00000E+00   0.00000E+00      0      infinite
     5    10  1.00128E-01   9.98200E-01   0.00000E+00   5.09690E+03   5.08773E+03      0
     6    20  1.00128E-01   9.98200E-01   0.00000E+00   9.94289E+04   9.92499E+04      0
     7    21  1.00309E-05   1.00000E-04   0.00000E+00   1.30324E+05   1.30324E+01      0
     8    22  6.03063E-02   2.70200E+00   0.00000E+00   0.00000E+00   0.00000E+00      0      asymmetric
     9    23  1.00309E-05   1.00000E-04   0.00000E+00   0.00000E+00   0.00000E+00      0      infinite
    10    40  3.29629E-02   1.13440E+01   0.00000E+00   1.66245E+04   1.88588E+05      1
    11    41  1.00309E-05   1.00000E-04   0.00000E+00   4.09828E+05   4.09828E+01      1
    12    42  8.64586E-02   7.94000E+00   0.00000E+00   9.51154E+04   7.55216E+05      1
    13    43  8.64586E-02   7.94000E+00   0.00000E+00   4.53784E+05   3.60304E+06      1
    14    44  8.64586E-02   7.94000E+00   0.00000E+00   1.02842E+04   8.16563E+04      2
    15    45  8.64586E-02   7.94000E+00   0.00000E+00   9.04489E+04   7.18165E+05      1
    16    46  3.29629E-02   1.13440E+01   0.00000E+00   9.86269E+05   1.11882E+07      1
    17    47  3.29629E-02   1.13440E+01   0.00000E+00   5.13461E+04   5.82470E+05      2
    18    48  0.00000E+00   0.00000E+00   0.00000E+00   1.20186E+04   0.00000E+00      1
    19    49  1.00309E-05   1.00000E-04   0.00000E+00   0.00000E+00   0.00000E+00      0      asymmetric
    20    50  0.00000E+00   0.00000E+00   0.00000E+00   0.00000E+00   0.00000E+00      0      infinite

 warning.    2 cells appear to consist of more than one piece.
1surface areas                                                                                  print table 50

        surface    input      calculated    reason area
                   area          area       not calculated

     2      1.1  0.00000E+00   1.17123E+03
     3      1.2  0.00000E+00   7.18104E-01
     4      1.3  0.00000E+00   7.18104E-01
     6      2.1  0.00000E+00   1.25434E+03
     7      2.2  0.00000E+00   7.46925E-01
     8      2.3  0.00000E+00   7.46925E-01
    10      3.1  0.00000E+00   1.44593E+03
    11      3.2  0.00000E+00   9.80986E-01
    12      3.3  0.00000E+00   9.80986E-01
    14     10.1  0.00000E+00   0.00000E+00   not a boundary
    15     10.2  0.00000E+00   0.00000E+00   not a boundary
    16     10.3  0.00000E+00   0.00000E+00   not a boundary
    17     10.4  0.00000E+00   0.00000E+00   not a boundary
    18     10.5  0.00000E+00   0.00000E+00   not a boundary
    19     10.6  0.00000E+00   0.00000E+00   not a boundary
    20     10.7  0.00000E+00   1.12237E+01
    21     10.8  0.00000E+00   1.12237E+01
    23     20.1  0.00000E+00   6.70476E+03
    24     20.2  0.00000E+00   6.70476E+03
    25     20.3  0.00000E+00   6.70476E+03
    26     20.4  0.00000E+00   6.70476E+03
    27     20.5  0.00000E+00   0.00000E+00   asymmetric
    28     20.6  0.00000E+00   0.00000E+00   asymmetric
    30     21.1  0.00000E+00   1.01920E+04
    31     21.2  0.00000E+00   1.01920E+04
    32     21.3  0.00000E+00   1.01920E+04
    33     21.4  0.00000E+00   1.01920E+04
    37     22.1  0.00000E+00   4.78244E+04
    41     40.1  0.00000E+00   1.16417E+05
    42     40.2  0.00000E+00   4.18972E+03
    43     40.3  0.00000E+00   4.18972E+03
    49     42.1  0.00000E+00   4.82539E+04
    53     43.1  0.00000E+00   1.26170E+03
    54     43.2  0.00000E+00   2.18169E+03
    55     43.3  0.00000E+00   2.18169E+03
    57     44.1  0.00000E+00   3.50295E+03
    58     44.2  0.00000E+00   2.23013E+03
    61     45.1  0.00000E+00   5.48652E+03
    65     46.1  0.00000E+00   4.95306E+04
    66     46.2  0.00000E+00   2.61173E+03
    67     46.3  0.00000E+00   2.61173E+03
    69     47.1  0.00000E+00   8.72916E+04
    73     48.1  0.00000E+00   8.76515E+04
    77     49.1  0.00000E+00   3.70684E+04
    78     49.2  0.00000E+00   3.70684E+04
    79     49.3  0.00000E+00   3.70684E+04
    80     49.4  0.00000E+00   3.70684E+04
    81     49.5  0.00000E+00   5.33744E+03
    82     49.6  0.00000E+00   5.33744E+03
    84  10010.1  0.00000E+00   9.43871E+02
    85  10010.2  0.00000E+00   9.43871E+02
    86  10010.3  0.00000E+00   9.43871E+02
    87  10010.4  0.00000E+00   9.43871E+02
    88  10010.5  0.00000E+00   9.43871E+02
    89  10010.6  0.00000E+00   9.43871E+02
```

```
1cells                                                                                                  print table 60

                    atom        gram                                          neutron
        cell  mat   density     density     volume       mass      pieces importance

     1     1    1  7.05243E-02 1.05540E+01 2.79982E+02 2.95493E+03     1  1.0000E+00
     2     2    2s 1.00128E-01 9.98200E-01 2.58267E+01 2.57802E+01     1  1.0000E+00
     3     3    3  4.33411E-02 6.56000E+00 9.81838E+01 6.44086E+02     1  1.0000E+00
     4     4    4s 1.00128E-01 9.98200E-01 0.00000E+00 0.00000E+00     0  1.0000E+00
     5    10    4s 1.00128E-01 9.98200E-01 5.09690E+03 5.08773E+03     0  1.0000E+00
     6    20    4s 1.00128E-01 9.98200E-01 9.94289E+04 9.92499E+04     0  1.0000E+00
     7    21    5s 1.00309E-05 1.00000E-04 1.30324E+05 1.30324E+01     0  1.0000E+00
     8    22    7  6.03063E-02 2.70200E+00 0.00000E+00 0.00000E+00     0  1.0000E+00
     9    23    5s 1.00309E-05 1.00000E-04 0.00000E+00 0.00000E+00     0  1.0000E+00
    10    40    8  3.29629E-02 1.13440E+01 1.66245E+04 1.88588E+05     1  1.0000E+00
    11    41    5s 1.00309E-05 1.00000E-04 4.09828E+05 4.09828E+01     1  1.0000E+00
    12    42    9  8.64586E-02 7.94000E+00 9.51154E+04 7.55216E+05     1  1.0000E+00
    13    43    9  8.64586E-02 7.94000E+00 4.53784E+05 3.60304E+06     1  1.0000E+00
    14    44    9  8.64586E-02 7.94000E+00 1.02842E+04 8.16563E+04     2  1.0000E+00
    15    45    9  8.64586E-02 7.94000E+00 9.04489E+04 7.18165E+05     1  1.0000E+00
    16    46    8  3.29629E-02 1.13440E+01 9.86269E+05 1.11882E+07     1  1.0000E+00
    17    47    8  3.29629E-02 1.13440E+01 5.13461E+04 5.82470E+05     2  1.0000E+00
    18    48    0  0.00000E+00 0.00000E+00 1.20186E+04 0.00000E+00     1  1.0000E+00
    19    49    6s 1.00309E-05 1.00000E-04 0.00000E+00 0.00000E+00     0  1.0000E+00
    20    50    0  0.00000E+00 0.00000E+00 0.00000E+00 0.00000E+00     0  0.0000E+00

 total                                    2.36097E+06 1.72254E+07
1surfaces                                                                                               print table 70

         surface     trans  type   surface coefficients

     1      1               rcc
     2      1.1             cz    4.7810000E-01
     3      1.2             pz    4.0041070E+02
     4      1.3             p     0.0000000E+00   0.0000000E+00  -1.0000000E+00  -1.0520700E+01
     5      2               rcc
     6      2.1             cz    4.8760000E-01
     7      2.2             pz    4.1582170E+02
     8      2.3             p     0.0000000E+00   0.0000000E+00  -1.0000000E+00  -6.3990000E+00
     9      3               rcc
    10      3.1             cz    5.5880000E-01
    11      3.2             pz    4.1690260E+02
    12      3.3             p     0.0000000E+00   0.0000000E+00  -1.0000000E+00  -5.0800000E+00
    13     10               rhp
    14     10.1             px    1.8000000E+00
    15     10.2             p    -1.0000000E+00   0.0000000E+00   0.0000000E+00   1.8000000E+00
    16     10.3             p     5.0000000E-01   8.6602540E-01   0.0000000E+00   1.8000000E+00
    17     10.4             p    -5.0000000E-01  -8.6602540E-01   0.0000000E+00   1.8000000E+00
    18     10.5             p    -5.0000000E-01   8.6602540E-01   0.0000000E+00   1.8000000E+00
    19     10.6             p     5.0000000E-01  -8.6602540E-01   0.0000000E+00   1.8000000E+00
    20     10.7             pz    4.5312000E+02
    21     10.8             p     0.0000000E+00   0.0000000E+00  -1.0000000E+00   1.0000000E+00
    22     20               rpp
    23     20.1          1  p     8.6602540E-01   5.0000000E-01   0.0000000E+00   7.4148000E+00
    24     20.2          1  p    -8.6602540E-01  -5.0000000E-01   0.0000000E+00   7.4148000E+00
    25     20.3          1  p    -5.0000000E-01   8.6602540E-01   0.0000000E+00   7.4148000E+00
    26     20.4          1  p     5.0000000E-01  -8.6602540E-01   0.0000000E+00   7.4148000E+00
    27     20.5          1  pz    4.5212000E+02
    28     20.6          1  p     0.0000000E+00   0.0000000E+00  -1.0000000E+00   0.0000000E+00
    29     21               rpp
    30     21.1          1  p     8.6602540E-01   5.0000000E-01   0.0000000E+00   1.1271300E+01
    31     21.2          1  p    -8.6602540E-01  -5.0000000E-01   0.0000000E+00   1.1271300E+01
    32     21.3          1  p    -5.0000000E-01   8.6602540E-01   0.0000000E+00   1.1271300E+01
    33     21.4          1  p     5.0000000E-01  -8.6602540E-01   0.0000000E+00   1.1271300E+01
    36     22               rcc
    37     22.1             cz    1.6835120E+01
    40     40               rcc
    41     40.1             cz    3.6518900E+01
    42     40.2             pz    4.8069500E+02
    43     40.3             p     0.0000000E+00   0.0000000E+00  -1.0000000E+00   2.6670000E+01
    44     41               rcc
    48     42               rcc
    49     42.1             cz    1.6986300E+01
    52     43               rcc
    53     43.1             cz    2.6352500E+01
    54     43.2             pz   -1.0160000E+01
    55     43.3             p     0.0000000E+00   0.0000000E+00  -1.0000000E+00   1.7780000E+01
    56     44               rcc
    57     44.1             cz    2.0174000E+01
    58     44.2             pz    4.4450000E+02
    60     45               rcc
    61     45.1             cz    3.1597600E+01
    64     46               rcc
    65     46.1             cz    1.8910300E+01
    66     46.2             pz    4.3068240E+02
    67     46.3             p     0.0000000E+00   0.0000000E+00  -1.0000000E+00  -1.3817600E+01
    68     47               rcc
    69     47.1             cz    3.3327100E+01
    72     48               rcc
    73     48.1             cz    3.3464500E+01
    76     49   refl.       rpp
    77     49.1 refl.       px    3.6528900E+01
    78     49.2 refl.       p    -1.0000000E+00   0.0000000E+00   0.0000000E+00   3.6528900E+01
    79     49.3 refl.       py    3.6528900E+01
    80     49.4 refl.       p     0.0000000E+00  -1.0000000E+00   0.0000000E+00   3.6528900E+01
    81     49.5 refl.       pz    4.8070500E+02
    82     49.6 refl.       p     0.0000000E+00   0.0000000E+00  -1.0000000E+00   2.6680000E+01
```

```
    83  10010               rhp
    84  10010.1       1001  px    2.7000000E+00
    85  10010.2       1001  p    -1.0000000E+00   0.0000000E+00   0.0000000E+00   9.0000000E-01
    86  10010.3       1001  p     5.0000000E-01   8.6602540E-01   0.0000000E+00   9.0003960E-01
    87  10010.4       1001  p    -5.0000000E-01  -8.6602540E-01   0.0000000E+00   2.6999604E+00
    88  10010.5       1001  p    -5.0000000E-01   8.6602540E-01   0.0000000E+00   3.9600581E-05
    89  10010.6       1001  p     5.0000000E-01  -8.6602540E-01   0.0000000E+00   3.5999604E+00
1  identical surfaces                                                                    print table 70

   master surface     identical surfaces

       10.7           10010.7
       10.8           10010.8
       20.5              21.5      22.2      42.2
       20.6              21.6      22.3      41.2      42.3      44.3      45.3
       40.1              41.1
       40.3              41.3
       44.2              45.2
       46.2              47.2      48.2
       46.3              47.3      48.3


   surface coefficients for identical surfaces not used.

         surface     trans  type   surface coefficients

    90  10010.7       1001   pz    4.5312000E+02
    91  10010.8       1001   p     0.0000000E+00   0.0000000E+00  -1.0000000E+00   1.0000000E+00
    34     21.5          1   pz    4.5212000E+02
    38     22.2              pz    4.5212000E+02
    50     42.2              pz    4.5212000E+02
    35     21.6          1   p     0.0000000E+00   0.0000000E+00  -1.0000000E+00   0.0000000E+00
    39     22.3              p     0.0000000E+00   0.0000000E+00  -1.0000000E+00   0.0000000E+00
    46     41.2              pz    0.0000000E+00
    51     42.3              p     0.0000000E+00   0.0000000E+00  -1.0000000E+00   0.0000000E+00
    59     44.3              p     0.0000000E+00   0.0000000E+00  -1.0000000E+00   0.0000000E+00
    63     45.3              p     0.0000000E+00   0.0000000E+00  -1.0000000E+00   0.0000000E+00
    45     41.1              cz    3.6518900E+01
    47     41.3              p     0.0000000E+00   0.0000000E+00  -1.0000000E+00   2.6670000E+01
    62     45.2              pz    4.4450000E+02
    70     47.2              pz    4.3068240E+02
    74     48.2              pz    4.3068240E+02
    71     47.3              p     0.0000000E+00   0.0000000E+00  -1.0000000E+00  -1.3817600E+01
    75     48.3              p     0.0000000E+00   0.0000000E+00  -1.0000000E+00  -1.3817600E+01
1  cell temperatures in mev for the free-gas thermal neutron treatment.                  print table 72

   all non-zero importance cells with materials have a temperature for thermal neutrons of 2.5300E-08 mev.

 ************************************************
 * Random Number Generator  =                 2 *
 * Random Number Seed       =       19073486328125 *
 * Random Number Multiplier =  9219741426499971445 *
 * Random Number Adder      =                   1 *
 * Random Number Bits Used  =                  63 *
 * Random Number Stride     =              152917 *
 ************************************************


        5 warning messages so far.
1physical constants                                                                    print table 98


   name                    value     description

   huge      1.0000000000000E+36     infinity
     pie     3.1415926535898E+00     pi
  euler      5.7721566490153E-01     euler constant
 avogad      6.0220434469282E+23     avogadro number (molecules/mole)
  aneut      1.0086649670000E+00     neutron mass (amu)
  avgdn      5.9703109000000E-01     avogadro number/neutron mass (1.e-24*molecules/mole/amu)
  slite      2.9979250000000E+02     speed of light (cm/shake)
 planck      4.1357320000000E-13     planck constant (mev shake)
  fscon      1.3703930000000E+02     inverse fine structure constant h*c/(2*pi*e**2)
 gpt(1)      9.3958000000000E+02     neutron mass (mev)
 gpt(3)      5.1100800000000E-01     electron mass (mev)


 fission q-values:     nuclide    q(mev)   nuclide    q(mev)
                         90232    171.91     91233    175.57
                         92233    180.84     92234    179.45
                         92235    180.88     92236    179.50
                         92237    180.40     92238    181.31
                         92239    180.40     92240    180.40
                         93237    183.67     94238    186.65
                         94239    189.44     94240    186.36
                         94241    188.99     94242    185.98
                         94243    187.48     95241    190.83
                         95242    190.54     95243    190.25
                         96242    190.49     96244    190.49
                         other    180.00


 the following compilation options were used:

     cheap
     dec
     plot
```

```
     mcplot
     xlib
     default datapath: C:\Program Files\LANL\MCNPDATA
                       C:\Progra~1\LANL\MCNPdata
1cross-section tables                                                                    print table 100

     table    length

                       tables from file actia

   1001.62c    5202  1-h-1 at 293.6K from endf-vi.8 njoy99.50                          mat 125      12/05/01
   7014.62c   67462  7-n-14 at 293.6K from endf-vi.8 njoy99.50                         mat 725      12/05/01
   8016.62c  170541  8-o-16 at 293.6K from endf-vi.8 njoy99.50                         mat 825      12/05/01
  13027.62c   75363  13-al-27 at 293.6K from endf-vi.8 njoy99.50                       mat1325      12/17/01
  24050.62c  194445  24-cr-50 at 293.6K from endf-vi.8 njoy99.50                       mat2425      12/20/01
  24052.62c  174773  24-cr-52 at 293.6K from endf-vi.8 njoy99.50                       mat2431      12/20/01
  24053.62c  147286  24-cr-53 at 293.6K from endf-vi.8 njoy99.50                       mat2434      12/20/01
  24054.62c  132737  24-cr-54 at 293.6K from endf-vi.8 njoy99.50                       mat2437      12/20/01
  25055.62c  134565  25-mn-55 at 293.6K from endf/b-vi.8 njoy99.50                     mat2525      02/11/02
  26054.62c  143370  26-fe-54 at 293.6K from endf-vi.8 njoy99.50                       mat2625      12/20/01
  26056.62c  230655  26-fe-56 at 293.6K from endf-vi.8 njoy99.50                       mat2631      12/20/01
  26057.62c  148842  26-fe-57 at 293.6K from endf-vi.8 njoy99.50                       mat2634      12/20/01
  26058.62c   87569  26-fe-58 at 293.6K from endf-vi.8 njoy99.50                       mat2637      12/20/01
  28058.62c  235403  28-ni-58 at 293.6K from endf-vi.8 njoy99.50                       mat2825      12/20/01
  28060.62c  158305  28-ni-60 at 293.6K from endf-vi.8 njoy99.50                       mat2831      12/20/01
  28061.62c  112032  28-ni-61 at 293.6K from endf-vi.8 njoy99.50                       mat2834      12/20/01
  28062.62c  104386  28-ni-62 at 293.6K from endf-vi.8 njoy99.50                       mat2837      12/20/01
  28064.62c   97689  28-ni-64 at 293.6K from endf-vi.8 njoy99.50                       mat2843      12/20/01

                       tables from file endf66a

   7015.66c   19013  7-n-15 at 293.6K from endf-vi.0 njoy99.50                        mat 728      07/13/01

                       tables from file endf66b

  40000.66c   98524  40-zr-0 at 293.6K from endf-vi.1 njoy99.50                       mat4000      07/24/01

                       tables from file endl92

  50000.42c  141628   ENDL library name:  nd920609  LANL/XTM modified:  951222                          911219
                     temperature = 2.5860E-08 adjusted to 2.5300E-08

                       tables from file endf66c

  82206.66c  219368  82-pb-206 at 293.6K from endf-vi.6 njoy99.50                      mat8231      08/13/01
  82207.66c  134389  82-pb-207 at 293.6K from endf-vi.6 njoy99.50                      mat8234      08/13/01
  82208.66c  135105  82-pb-208 at 293.6K from endf-vi.x njoy99.50                      mat8237      03/16/02
  94238.66c   53256  94-pu-238 at 293.6K from endf-vi.0 njoy99.50       total nu       mat9434      09/06/01
                     probability tables used from 2.0000E-04 to 1.0000E-02 mev.
  94240.66c  309518  94-pu-240 at 293.6K from endf-vi.2 njoy99.50       total nu       mat9440      09/06/01
                     probability tables used from 5.7000E-03 to 4.0000E-02 mev.
  94241.66c  126607  94-pu-241 at 293.6K from endf-vi.3 njoy99.50       total nu       mat9443      09/06/01
                     probability tables used from 3.0000E-04 to 4.0200E-02 mev.
  94242.66c  107114  94-pu-242 at 293.6K from endf-vi.0 njoy99.50       total nu       mat9446      09/06/01
                     probability tables used from 9.8600E-04 to 1.0000E-02 mev.

                       tables from file t16_2003

  92235.69c  587997  92-u-235 at 293.6K from t16 u235la9d njoy99.50     total nu       mat9228      07/02/03
                     probability tables used from 2.2500E-03 to 2.5000E-02 mev.
  92238.69c  713320  92-u-238 at 293.6K from t16 u238la8h njoy99.50     total nu       mat9237      07/02/03
                     probability tables used from 1.0000E-02 to 1.4903E-01 mev.
  94239.69c  506320  94-pu-239 at 293.6K from t16 pu239la7d njoy99.50   total nu       mat9437      07/02/03
                     probability tables used from 2.5000E-03 to 3.0000E-02 mev.

                       tables from file tmccs

   lwtr.01t   10193  hydrogen in light water at 300 degrees kelvin                1001     0     010/22/85

  total     5582977

 warning. neutron energy cutoff is below some cross-section tables.

 comment.    1 cross sections modified by free gas thermal treatment.
1assignment of s(a,b) data to nuclides.                                                  print table 102

       mat        nuclide         s(a,b)
         2       1001.62c       lwtr.01t
         4       1001.62c       lwtr.01t
         5       1001.62c       lwtr.01t
         6       1001.62c       lwtr.01t


1estimated keff results by cycle                                                        print table 175

 cycle     1    k(collision)  0.773576    prompt removal lifetime(abs)  7.9159E+03    source points generated    986

 cycle     2    k(collision)  0.761973    prompt removal lifetime(abs)  8.7479E+03    source points generated   1002

 cycle     3    k(collision)  0.792952    prompt removal lifetime(abs)  8.6388E+03    source points generated   1019

 cycle     4    k(collision)  0.798553    prompt removal lifetime(abs)  8.0609E+03    source points generated   1013

 cycle     5    k(collision)  0.846007    prompt removal lifetime(abs)  8.0978E+03    source points generated   1058

 cycle     6    k(collision)  0.778445    prompt removal lifetime(abs)  8.7756E+03    source points generated    927
```

```
 cycle     7    k(collision)  0.852315    prompt removal lifetime(abs)  8.2963E+03    source points generated   1086

 cycle     8    k(collision)  0.776196    prompt removal lifetime(abs)  8.4369E+03    source points generated    916
.
.
.
.
.
  estimator     cycle   526   ave of   496 cycles      combination         simple average    combined average     corr
 k(collision)      0.813156       0.812679 0.0016     k(col/abs)          0.811904 0.0015     0.811535 0.0015   0.8154
 k(absorption)     0.811817       0.811128 0.0015     k(abs/tk ln)        0.811770 0.0015     0.811387 0.0014   0.4631
 k(trk length)     0.745849       0.812412 0.0021     k(tk ln/col)        0.812546 0.0017     0.812633 0.0016   0.6279
 rem life(col)   8.6684E+03     8.3853E+03 0.0016     k(col/abs/tk ln)    0.812073 0.0015     0.811477 0.0014
 rem life(abs)   8.6270E+03     8.3849E+03 0.0016     life(col/abs/tl)  8.3888E+03 0.0014   8.3982E+03 0.0012
 source points generated   1039

  estimator     cycle   527   ave of   497 cycles      combination         simple average    combined average     corr
 k(collision)      0.809185       0.812672 0.0016     k(col/abs)          0.811898 0.0015     0.811530 0.0015   0.8154
 k(absorption)     0.809090       0.811124 0.0015     k(abs/tk ln)        0.811777 0.0015     0.811387 0.0014   0.4630
 k(trk length)     0.821169       0.812430 0.0021     k(tk ln/col)        0.812551 0.0017     0.812630 0.0016   0.6278
 rem life(col)   8.0102E+03     8.3845E+03 0.0016     k(col/abs/tk ln)    0.812075 0.0015     0.811477 0.0014
 rem life(abs)   8.0245E+03     8.3841E+03 0.0016     life(col/abs/tl)  8.3881E+03 0.0014   8.3977E+03 0.0012
 source points generated   1005

  estimator     cycle   528   ave of   498 cycles      combination         simple average    combined average     corr
 k(collision)      0.821391       0.812690 0.0016     k(col/abs)          0.811905 0.0015     0.811532 0.0015   0.8153
 k(absorption)     0.809602       0.811121 0.0015     k(abs/tk ln)        0.811753 0.0015     0.811376 0.0014   0.4629
 k(trk length)     0.790409       0.812386 0.0021     k(tk ln/col)        0.812538 0.0017     0.812636 0.0016   0.6272
 rem life(col)   7.9693E+03     8.3837E+03 0.0016     k(col/abs/tk ln)    0.812066 0.0015     0.811468 0.0014
 rem life(abs)   8.0772E+03     8.3835E+03 0.0016     life(col/abs/tl)  8.3875E+03 0.0014   8.3975E+03 0.0012
 source points generated   1027

  estimator     cycle   529   ave of   499 cycles      combination         simple average    combined average     corr
 k(collision)      0.788892       0.812642 0.0016     k(col/abs)          0.811869 0.0015     0.811499 0.0015   0.8154
 k(absorption)     0.798522       0.811096 0.0015     k(abs/tk ln)        0.811733 0.0015     0.811352 0.0014   0.4630
 k(trk length)     0.804736       0.812370 0.0021     k(tk ln/col)        0.812506 0.0017     0.812594 0.0016   0.6271
 rem life(col)   8.4590E+03     8.3839E+03 0.0016     k(col/abs/tk ln)    0.812036 0.0015     0.811442 0.0014
 rem life(abs)   8.4459E+03     8.3837E+03 0.0016     life(col/abs/tl)  8.3878E+03 0.0014   8.3979E+03 0.0012
 source points generated    969

  estimator     cycle   530   ave of   500 cycles      combination         simple average    combined average     corr
 k(collision)      0.864442       0.812746 0.0016     k(col/abs)          0.811973 0.0015     0.811603 0.0015   0.8166
 k(absorption)     0.862854       0.811199 0.0015     k(abs/tk ln)        0.811816 0.0015     0.811450 0.0014   0.4642
 k(trk length)     0.843483       0.812433 0.0021     k(tk ln/col)        0.812589 0.0017     0.812690 0.0016   0.6276
 rem life(col)   8.0058E+03     8.3831E+03 0.0016     k(col/abs/tk ln)    0.812126 0.0015     0.811537 0.0014
 rem life(abs)   8.0790E+03     8.3830E+03 0.0016     life(col/abs/tl)  8.3872E+03 0.0014   8.3977E+03 0.0012
 source points generated   1088

 source distribution written to file P1_Acc_NACCoC_c1.00_g0.00_e0.00_d0.01cm_HP_36mm.inps        cycle =   530
1problem summary (active cycles only)              source particle weight for summary table normalization =       500000.00

      run terminated when   530   kcode cycles were done.
+                                                                                                    10/25/07 23:17:01
      NAC-LWT Cask - MOX Experiments - Accident Transport Conditions                        probid =  10/25/07 23:04:59
0
 neutron creation    tracks      weight        energy            neutron loss        tracks      weight        energy
                                 (per source particle)                                          (per source particle)

 source              500798    1.0000E+00    2.0304E+00          escape                   0    0.            0.
                                                                 energy cutoff            0    0.            0.
                                                                 time cutoff              0    0.            0.
 weight window            0    0.            0.                weight window            0    0.            0.
 cell importance          0    0.            0.                cell importance          0    0.            0.
 weight cutoff            0    1.0507E-01    4.7424E-06        weight cutoff       501256    1.0507E-01    4.2477E-06
 e or t importance        0    0.            0.                e or t importance        0    0.            0.
 dxtran                   0    0.            0.                dxtran                   0    0.            0.
 forced collisions        0    0.            0.                forced collisions        0    0.            0.
 exp. transform           0    0.            0.                exp. transform           0    0.            0.
 upscattering             0    0.            2.2358E-07        downscattering           0    0.            1.9694E+00
 photonuclear             0    0.            0.                capture                  0    7.2325E-01    3.3293E-02
 (n,xn)                 914    1.5938E-03    1.3448E-03        loss to (n,xn)         456    7.9510E-04    7.6641E-03
 prompt fission           0    0.            0.                loss to fission          0    2.7755E-01    2.1466E-02
 delayed fission          0    0.            0.
     total           501712    1.1067E+00    2.0318E+00            total           501712    1.1067E+00    2.0318E+00

   number of neutrons banked                   487        average time of (shakes)              cutoffs
   neutron tracks per source particle     1.0034E+00          escape            0.0000E+00          tco   1.0000E+33
   neutron collisions per source particle 1.5178E+02          capture           9.5720E+03          eco   0.0000E+00
   total neutron collisions                75888898          capture or escape 9.5720E+03          wc1  -5.0000E-01
   net multiplication              1.0008E+00 0.0000         any termination   9.6263E+03          wc2  -2.5000E-01

 computer time so far in this run    11.91 minutes           maximum number ever in bank         2
 computer time in mcrun              11.75 minutes           bank overflows to backup file       0
 source particles per minute            4.5171E+04
 random numbers generated                769937194           most random numbers used was       12106 in history      314654

 range of sampled source weights = 8.5106E-01 to 1.1655E+00

 source efficiency = 1.0000  in cell     1

 source efficiency = 0.1042  in cell    10

 source efficiency = 1.0000  in cell    20

 source efficiency = 1.0000  in cell    41
1neutron  activity in each cell                                                          print table 126
```

cell	tracks entering	population	collisions	collisions * weight (per history)	number weighted energy	flux weighted energy	average track weight (relative)	average track mfp (cm)
1	1241569	501146	586077	9.5153E-01	1.3646E-03	1.1014E+00	9.2286E-01	2.6348E+00
2	1753661	501152	72734	1.0239E-01	4.0488E-04	7.9744E-01	8.3249E-01	1.7794E+00
3	1892568	501155	78060	1.3835E-01	5.6811E-04	8.5842E-01	8.8595E-01	3.7904E+00
4	4675755	501209	22767197	3.3677E+01	1.9441E-04	5.2073E-01	8.3143E-01	1.3415E+00
5	1405445	371543	6018259	8.5610E+00	1.3456E-04	3.4232E-01	7.9570E-01	1.0857E+00
6	0	0	0	0.0000E+00	0.0000E+00	0.0000E+00	0.0000E+00	0.0000E+00
7	1643189	371205	1813	2.6501E-03	4.8443E-04	4.0398E-01	8.2611E-01	1.3004E+04
8	2050981	371181	2086136	3.6199E+00	5.2913E-04	3.3678E-01	8.1901E-01	9.7847E+00
9	2153778	354933	90	1.4430E-04	5.8421E-04	2.9581E-01	8.1614E-01	1.1843E+04
10	25792	5252	101677	1.4356E-01	3.2300E-03	1.0644E-01	7.2359E-01	3.2337E+00
11	0	0	0	0.0000E+00	0.0000E+00	0.0000E+00	0.0000E+00	0.0000E+00
12	115694	15185	1342637	1.7759E+00	2.6306E-03	1.0677E-01	7.2112E-01	2.5371E+00
13	3325425	208962	13169115	1.9143E+01	3.4252E-03	1.7553E-01	7.8816E-01	2.7485E+00
14	42149	15682	143930	2.0099E-01	8.1919E-04	1.6869E-01	7.5553E-01	2.3693E+00
15	2163315	353876	5282663	7.9853E+00	8.7776E-04	2.9482E-01	8.1629E-01	2.5676E+00
16	2626045	293982	23873147	3.7303E+01	1.6270E-03	2.1773E-01	8.0445E-01	3.5473E+00
17	87444	20018	361275	5.2806E-01	1.8325E-03	1.3891E-01	7.5094E-01	3.3232E+00
18	3117979	207568	0	0.0000E+00	2.7619E-03	1.8387E-01	7.9764E-01	0.0000E+00
19	1731775	177414	4088	6.0903E-03	3.8532E-03	1.7945E-01	7.8941E-01	1.0816E+04
total	30052564	4771463	75888898	1.1414E+02				

1neutron weight balance in each cell print table 130

cell index	1	2	3	4	5	6	7	8	9
cell number	1	2	3	4	10	20	21	22	23
external events:									
entering	1.2512E+00	3.1557E+00	3.3816E+00	7.8956E+00	2.2976E+00	0.0000E+00	2.7283E+00	3.3845E+00	3.5279E+00
source	1.0000E+00	0.0000E+00	0.0000E+00	0.0000E+00	0.0000E+00	0.0000E+00	0.0000E+00	0.0000E+00	0.0000E+00
energy cutoff	0.0000E+00	0.0000E+00	0.0000E+00	0.0000E+00	0.0000E+00	0.0000E+00	0.0000E+00	0.0000E+00	0.0000E+00
time cutoff	0.0000E+00	0.0000E+00	0.0000E+00	0.0000E+00	0.0000E+00	0.0000E+00	0.0000E+00	0.0000E+00	0.0000E+00
exiting	-1.8614E+00	-3.1553E+00	-3.3804E+00	-7.7598E+00	-2.2640E+00	0.0000E+00	-2.7283E+00	-3.3455E+00	-3.5279E+00
total	3.8978E-01	3.6619E-04	1.1670E-03	1.3572E-01	3.3608E-02	0.0000E+00	6.9143E-06	3.9023E-02	1.3065E-07
variance reduction events:									
weight window	0.0000E+00	0.0000E+00	0.0000E+00	0.0000E+00	0.0000E+00	0.0000E+00	0.0000E+00	0.0000E+00	0.0000E+00
cell importance	0.0000E+00	0.0000E+00	0.0000E+00	0.0000E+00	0.0000E+00	0.0000E+00	0.0000E+00	0.0000E+00	0.0000E+00
weight cutoff	1.1135E-04	3.7032E-06	1.9991E-06	4.5624E-05	-1.5941E-05	0.0000E+00	-1.4890E-06	-4.0693E-05	0.0000E+00
e or t importance	0.0000E+00	0.0000E+00	0.0000E+00	0.0000E+00	0.0000E+00	0.0000E+00	0.0000E+00	0.0000E+00	0.0000E+00
dxtran	0.0000E+00	0.0000E+00	0.0000E+00	0.0000E+00	0.0000E+00	0.0000E+00	0.0000E+00	0.0000E+00	0.0000E+00
forced collisions	0.0000E+00	0.0000E+00	0.0000E+00	0.0000E+00	0.0000E+00	0.0000E+00	0.0000E+00	0.0000E+00	0.0000E+00
exp. transform	0.0000E+00	0.0000E+00	0.0000E+00	0.0000E+00	0.0000E+00	0.0000E+00	0.0000E+00	0.0000E+00	0.0000E+00
total	1.1135E-04	3.7032E-06	1.9991E-06	4.5624E-05	-1.5941E-05	0.0000E+00	-1.4890E-06	-4.0693E-05	0.0000E+00
physical events:									
capture	-1.1266E-01	-3.6990E-04	-1.1822E-03	-1.3576E-01	-3.3593E-02	0.0000E+00	-5.4253E-06	-3.8983E-02	-1.3065E-07
(n,xn)	6.2734E-04	0.0000E+00	2.6371E-05	0.0000E+00	0.0000E+00	0.0000E+00	0.0000E+00	0.0000E+00	0.0000E+00
loss to (n,xn)	-3.1285E-04	0.0000E+00	-1.3185E-05	0.0000E+00	0.0000E+00	0.0000E+00	0.0000E+00	0.0000E+00	0.0000E+00
fission	0.0000E+00	0.0000E+00	0.0000E+00	0.0000E+00	0.0000E+00	0.0000E+00	0.0000E+00	0.0000E+00	0.0000E+00
loss to fission	-2.7755E-01	0.0000E+00	0.0000E+00	0.0000E+00	0.0000E+00	0.0000E+00	0.0000E+00	0.0000E+00	0.0000E+00
photonuclear	0.0000E+00	0.0000E+00	0.0000E+00	0.0000E+00	0.0000E+00	0.0000E+00	0.0000E+00	0.0000E+00	0.0000E+00
total	-3.8989E-01	-3.6990E-04	-1.1690E-03	-1.3576E-01	-3.3593E-02	0.0000E+00	-5.4253E-06	-3.8983E-02	-1.3065E-07
total	0.0000E+00	0.0000E+00	0.0000E+00	0.0000E+00	0.0000E+00	0.0000E+00	0.0000E+00	0.0000E+00	0.0000E+00

cell index	10	11	12	13	14	15	16	17	18
cell number	40	41	42	43	44	45	46	47	48
external events:									
entering	3.7341E-02	0.0000E+00	1.6904E-01	5.2877E+00	6.3487E-02	3.5504E+00	4.2362E+00	1.3150E-01	4.9768E+00
source	0.0000E+00	0.0000E+00	0.0000E+00	0.0000E+00	0.0000E+00	0.0000E+00	0.0000E+00	0.0000E+00	0.0000E+00
energy cutoff	0.0000E+00	0.0000E+00	0.0000E+00	0.0000E+00	0.0000E+00	0.0000E+00	0.0000E+00	0.0000E+00	0.0000E+00
time cutoff	0.0000E+00	0.0000E+00	0.0000E+00	0.0000E+00	0.0000E+00	0.0000E+00	0.0000E+00	0.0000E+00	0.0000E+00
exiting	-3.7270E-02	0.0000E+00	-1.5693E-01	-5.1469E+00	-5.9514E-02	-3.3370E+00	-4.2065E+00	-1.3116E-01	-4.9768E+00
total	7.0996E-05	0.0000E+00	1.2111E-02	1.4074E-01	3.9735E-03	2.1336E-01	2.9727E-02	3.4420E-04	0.0000E+00
variance reduction events:									
weight window	0.0000E+00	0.0000E+00	0.0000E+00	0.0000E+00	0.0000E+00	0.0000E+00	0.0000E+00	0.0000E+00	0.0000E+00
cell importance	0.0000E+00	0.0000E+00	0.0000E+00	0.0000E+00	0.0000E+00	0.0000E+00	0.0000E+00	0.0000E+00	0.0000E+00
weight cutoff	-2.4210E-06	0.0000E+00	9.0859E-05	-3.1358E-04	-1.0418E-05	1.3278E-04	2.2441E-05	-1.8057E-05	0.0000E+00
e or t importance	0.0000E+00	0.0000E+00	0.0000E+00	0.0000E+00	0.0000E+00	0.0000E+00	0.0000E+00	0.0000E+00	0.0000E+00
dxtran	0.0000E+00	0.0000E+00	0.0000E+00	0.0000E+00	0.0000E+00	0.0000E+00	0.0000E+00	0.0000E+00	0.0000E+00
forced collisions	0.0000E+00	0.0000E+00	0.0000E+00	0.0000E+00	0.0000E+00	0.0000E+00	0.0000E+00	0.0000E+00	0.0000E+00
exp. transform	0.0000E+00	0.0000E+00	0.0000E+00	0.0000E+00	0.0000E+00	0.0000E+00	0.0000E+00	0.0000E+00	0.0000E+00
total	-2.4210E-06	0.0000E+00	9.0859E-05	-3.1358E-04	-1.0418E-05	1.3278E-04	2.2441E-05	-1.8057E-05	0.0000E+00
physical events:									
capture	-6.8575E-05	0.0000E+00	-1.2202E-02	-1.4044E-01	-3.9631E-03	-2.1350E-01	-3.0195E-02	-3.2989E-04	0.0000E+00
(n,xn)	0.0000E+00	0.0000E+00	0.0000E+00	1.4057E-05	0.0000E+00	2.9429E-05	8.8912E-04	7.4907E-06	0.0000E+00
loss to (n,xn)	0.0000E+00	0.0000E+00	0.0000E+00	-7.0285E-06	0.0000E+00	-1.4715E-05	-4.4358E-04	-3.7454E-06	0.0000E+00
fission	0.0000E+00	0.0000E+00	0.0000E+00	0.0000E+00	0.0000E+00	0.0000E+00	0.0000E+00	0.0000E+00	0.0000E+00
loss to fission	0.0000E+00	0.0000E+00	0.0000E+00	0.0000E+00	0.0000E+00	0.0000E+00	0.0000E+00	0.0000E+00	0.0000E+00
photonuclear	0.0000E+00	0.0000E+00	0.0000E+00	0.0000E+00	0.0000E+00	0.0000E+00	0.0000E+00	0.0000E+00	0.0000E+00
total	-6.8575E-05	0.0000E+00	-1.2202E-02	-1.4043E-01	-3.9631E-03	-2.1349E-01	-2.9750E-02	-3.2614E-04	0.0000E+00

```
                ----------  ----------  ----------  ----------  ----------  ----------  ----------  ----------  ----------
            total  0.0000E+00  0.0000E+00  0.0000E+00  0.0000E+00  0.0000E+00  0.0000E+00  0.0000E+00  0.0000E+00  0.0000E+00


       cell index       19
      cell number       49       total

 external events:
          entering  2.7311E+00  4.8806E+01
            source  0.0000E+00  1.0000E+00
     energy cutoff  0.0000E+00  0.0000E+00
       time cutoff  0.0000E+00  0.0000E+00
           exiting -2.7311E+00 -4.8806E+01
                   ----------  ----------
             total  1.4036E-06  1.0000E+00

 variance reduction events:
     weight window  0.0000E+00  0.0000E+00
   cell importance  0.0000E+00  0.0000E+00
     weight cutoff  0.0000E+00  6.1524E-06
 e or t importance  0.0000E+00  0.0000E+00
             dxtran  0.0000E+00  0.0000E+00
 forced collisions  0.0000E+00  0.0000E+00
    exp. transform  0.0000E+00  0.0000E+00
                   ----------  ----------
             total  0.0000E+00  6.1524E-06

 physical events:
           capture -1.4036E-06 -7.2325E-01
            (n,xn)  0.0000E+00  1.5938E-03
    loss to (n,xn)  0.0000E+00 -7.9510E-04
           fission  0.0000E+00  0.0000E+00
   loss to fission  0.0000E+00 -2.7755E-01
      photonuclear  0.0000E+00  0.0000E+00
                   ----------  ----------
             total -1.4036E-06 -1.0000E+00

                   ----------  ----------
             total  0.0000E+00  0.0000E+00
```

1neutron activity of each nuclide in each cell, per source particle print table 140

cell index	cell name	nuclides	atom fraction	total collisions	collisions * weight	wgt. lost to capture	wgt. gain by fission	wgt. gain by (n,xn)	photons produced	photon wgt produced	avg photon energy
1	1	92235.69c	2.19E-03	11604	1.6516E-02	2.3773E-03	1.2018E-02	1.2382E-06	0	0.0000E+00	0.0000E+00
		92238.69c	3.07E-01	182793	3.3056E-01	2.3571E-02	5.1778E-03	2.8296E-04	0	0.0000E+00	0.0000E+00
		94238.66c	2.44E-10	0	0.0000E+00	0.0000E+00	0.0000E+00	0.0000E+00	0	0.0000E+00	0.0000E+00
		94239.69c	2.43E-10	0	0.0000E+00	0.0000E+00	0.0000E+00	0.0000E+00	0	0.0000E+00	0.0000E+00
		94240.66c	2.42E-10	0	0.0000E+00	0.0000E+00	0.0000E+00	0.0000E+00	0	0.0000E+00	0.0000E+00
		94241.66c	2.41E-02	261894	3.6794E-01	8.6289E-02	2.6036E-01	3.0294E-05	0	0.0000E+00	0.0000E+00
		94242.66c	2.40E-10	0	0.0000E+00	0.0000E+00	0.0000E+00	0.0000E+00	0	0.0000E+00	0.0000E+00
		8016.62c	6.66E-01	129786	2.3652E-01	4.2088E-04	0.0000E+00	0.0000E+00	0	0.0000E+00	0.0000E+00
2	2	1001.62c	6.67E-01	67564	9.4009E-02	3.5973E-04	0.0000E+00	0.0000E+00	0	0.0000E+00	0.0000E+00
		8016.62c	3.33E-01	5170	8.3772E-03	1.0168E-05	0.0000E+00	0.0000E+00	0	0.0000E+00	0.0000E+00
3	3	26054.62c	1.19E-04	8	1.3417E-05	2.1703E-06	0.0000E+00	0.0000E+00	0	0.0000E+00	0.0000E+00
		24050.62c	7.63E-05	8	1.5666E-05	3.9708E-06	0.0000E+00	0.0000E+00	0	0.0000E+00	0.0000E+00
		7014.62c	3.24E-03	267	4.4474E-04	2.3671E-05	0.0000E+00	0.0000E+00	0	0.0000E+00	0.0000E+00
		26056.62c	1.87E-03	192	3.0462E-04	2.1713E-05	0.0000E+00	0.0000E+00	0	0.0000E+00	0.0000E+00
		24052.62c	1.47E-03	61	1.1116E-04	3.5581E-06	0.0000E+00	0.0000E+00	0	0.0000E+00	0.0000E+00
		7015.66c	1.20E-05	1	2.0596E-06	1.1114E-12	0.0000E+00	0.0000E+00	0	0.0000E+00	0.0000E+00
		26057.62c	4.33E-05	9	1.5459E-05	1.0398E-06	0.0000E+00	0.0000E+00	0	0.0000E+00	0.0000E+00
		24053.62c	1.67E-04	32	4.9398E-05	9.4886E-06	0.0000E+00	0.0000E+00	0	0.0000E+00	0.0000E+00
		26058.62c	5.71E-06	0	0.0000E+00	0.0000E+00	0.0000E+00	0.0000E+00	0	0.0000E+00	0.0000E+00
		24054.62c	4.14E-05	2	4.1326E-06	3.8278E-08	0.0000E+00	0.0000E+00	0	0.0000E+00	0.0000E+00
		40000.66c	9.81E-01	76724	1.3605E-01	1.0591E-03	0.0000E+00	1.3185E-05	0	0.0000E+00	0.0000E+00
		50000.42c	1.15E-02	756	1.3400E-03	5.7434E-05	0.0000E+00	0.0000E+00	0	0.0000E+00	0.0000E+00
4	4	1001.62c	6.67E-01	21345331	3.1346E+01	1.3390E-01	0.0000E+00	0.0000E+00	0	0.0000E+00	0.0000E+00
		8016.62c	3.33E-01	1421866	2.3311E+00	1.8663E-03	0.0000E+00	0.0000E+00	0	0.0000E+00	0.0000E+00
5	10	1001.62c	6.67E-01	5653062	7.9858E+00	3.3326E-02	0.0000E+00	0.0000E+00	0	0.0000E+00	0.0000E+00
		8016.62c	3.33E-01	365197	5.7522E-01	2.6681E-04	0.0000E+00	0.0000E+00	0	0.0000E+00	0.0000E+00
6	20	1001.62c	6.67E-01	0	0.0000E+00	0.0000E+00	0.0000E+00	0.0000E+00	0	0.0000E+00	0.0000E+00
		8016.62c	3.33E-01	0	0.0000E+00	0.0000E+00	0.0000E+00	0.0000E+00	0	0.0000E+00	0.0000E+00
7	21	1001.62c	6.67E-01	1675	2.4240E-03	5.4231E-06	0.0000E+00	0.0000E+00	0	0.0000E+00	0.0000E+00
		8016.62c	3.33E-01	138	2.2604E-04	2.2451E-09	0.0000E+00	0.0000E+00	0	0.0000E+00	0.0000E+00
8	22	13027.62c	1.00E+00	2086136	3.6199E+00	3.8983E-02	0.0000E+00	0.0000E+00	0	0.0000E+00	0.0000E+00
9	23	1001.62c	6.67E-01	83	1.3264E-04	1.3062E-07	0.0000E+00	0.0000E+00	0	0.0000E+00	0.0000E+00
		8016.62c	3.33E-01	7	1.1663E-05	2.8285E-11	0.0000E+00	0.0000E+00	0	0.0000E+00	0.0000E+00
10	40	82206.66c	2.55E-01	24516	3.4087E-02	2.7874E-05	0.0000E+00	0.0000E+00	0	0.0000E+00	0.0000E+00
		82207.66c	2.21E-01	22486	3.2056E-02	3.8462E-05	0.0000E+00	0.0000E+00	0	0.0000E+00	0.0000E+00
		82208.66c	5.24E-01	54675	7.7416E-02	2.2389E-06	0.0000E+00	0.0000E+00	0	0.0000E+00	0.0000E+00
11	41	1001.62c	6.67E-01	0	0.0000E+00	0.0000E+00	0.0000E+00	0.0000E+00	0	0.0000E+00	0.0000E+00
		8016.62c	3.33E-01	0	0.0000E+00	0.0000E+00	0.0000E+00	0.0000E+00	0	0.0000E+00	0.0000E+00
12	42	24050.62c	8.79E-03	21758	3.4511E-02	4.7860E-04	0.0000E+00	0.0000E+00	0	0.0000E+00	0.0000E+00
		26054.62c	4.03E-02	42532	6.8094E-02	4.1345E-04	0.0000E+00	0.0000E+00	0	0.0000E+00	0.0000E+00

		28058.62c	6.09E-02	181784	2.3443E-01	1.0840E-03	0.0000E+00	0.0000E+00	0	0.0000E+00	0.0000E+00
		24052.62c	1.69E-01	93120	1.3676E-01	6.9642E-04	0.0000E+00	0.0000E+00	0	0.0000E+00	0.0000E+00
		26056.62c	6.32E-01	791641	9.7764E-01	6.0022E-03	0.0000E+00	0.0000E+00	0	0.0000E+00	0.0000E+00
		28060.62c	2.35E-02	26722	4.4624E-02	2.8130E-04	0.0000E+00	0.0000E+00	0	0.0000E+00	0.0000E+00
		24053.62c	1.92E-02	64103	9.6929E-02	1.1944E-03	0.0000E+00	0.0000E+00	0	0.0000E+00	0.0000E+00
		26057.62c	1.46E-02	17618	2.8309E-02	2.0807E-04	0.0000E+00	0.0000E+00	0	0.0000E+00	0.0000E+00
		28061.62c	1.02E-03	1322	1.8890E-03	1.4576E-05	0.0000E+00	0.0000E+00	0	0.0000E+00	0.0000E+00
		24054.62c	4.77E-03	3470	5.4180E-03	9.0993E-06	0.0000E+00	0.0000E+00	0	0.0000E+00	0.0000E+00
		26058.62c	1.93E-03	1803	2.8359E-03	2.7057E-05	0.0000E+00	0.0000E+00	0	0.0000E+00	0.0000E+00
		28062.62c	3.25E-03	14741	2.2397E-02	1.4380E-04	0.0000E+00	0.0000E+00	0	0.0000E+00	0.0000E+00
		28064.62c	8.33E-04	1134	1.9718E-03	6.5208E-06	0.0000E+00	0.0000E+00	0	0.0000E+00	0.0000E+00
		25055.62c	2.01E-02	80889	1.2014E-01	1.6420E-03	0.0000E+00	0.0000E+00	0	0.0000E+00	0.0000E+00
13	43	24050.62c	8.79E-03	221175	3.6703E-01	5.7475E-03	0.0000E+00	0.0000E+00	0	0.0000E+00	0.0000E+00
		26054.62c	4.03E-02	451871	7.6283E-01	4.7802E-03	0.0000E+00	0.0000E+00	0	0.0000E+00	0.0000E+00
		28058.62c	6.09E-02	1715612	2.4243E+00	1.2971E-02	0.0000E+00	0.0000E+00	0	0.0000E+00	0.0000E+00
		24052.62c	1.69E-01	1019845	1.6356E+00	7.9758E-03	0.0000E+00	1.8340E-06	0	0.0000E+00	0.0000E+00
		26056.62c	6.32E-01	7666679	1.0557E+01	6.9499E-02	0.0000E+00	2.0166E-06	0	0.0000E+00	0.0000E+00
		28060.62c	2.35E-02	283261	4.9171E-01	3.2930E-03	0.0000E+00	0.0000E+00	0	0.0000E+00	0.0000E+00
		24053.62c	1.92E-02	630863	1.0081E+00	1.3984E-02	0.0000E+00	1.5387E-06	0	0.0000E+00	0.0000E+00
		26057.62c	1.46E-02	185000	3.1223E-01	2.2263E-03	0.0000E+00	1.6393E-06	0	0.0000E+00	0.0000E+00
		28061.62c	1.02E-03	13468	2.0832E-02	1.7934E-04	0.0000E+00	0.0000E+00	0	0.0000E+00	0.0000E+00
		24054.62c	4.77E-03	36356	6.0531E-02	1.2171E-04	0.0000E+00	0.0000E+00	0	0.0000E+00	0.0000E+00
		26058.62c	1.93E-03	19406	3.2608E-02	2.6030E-04	0.0000E+00	0.0000E+00	0	0.0000E+00	0.0000E+00
		28062.62c	3.25E-03	144976	2.3288E-01	1.6922E-03	0.0000E+00	0.0000E+00	0	0.0000E+00	0.0000E+00
		28064.62c	8.33E-04	12230	2.1954E-02	7.1773E-05	0.0000E+00	0.0000E+00	0	0.0000E+00	0.0000E+00
		25055.62c	2.01E-02	768373	1.2152E+00	1.7635E-02	0.0000E+00	0.0000E+00	0	0.0000E+00	0.0000E+00
14	44	24050.62c	8.79E-03	2269	3.6509E-03	1.8711E-04	0.0000E+00	0.0000E+00	0	0.0000E+00	0.0000E+00
		26054.62c	4.03E-02	4128	6.7625E-03	1.1885E-04	0.0000E+00	0.0000E+00	0	0.0000E+00	0.0000E+00
		28058.62c	6.09E-02	19305	2.6369E-02	3.6453E-04	0.0000E+00	0.0000E+00	0	0.0000E+00	0.0000E+00
		24052.62c	1.69E-01	9781	1.5040E-02	1.7043E-04	0.0000E+00	0.0000E+00	0	0.0000E+00	0.0000E+00
		26056.62c	6.32E-01	87969	1.1668E-01	2.1107E-03	0.0000E+00	0.0000E+00	0	0.0000E+00	0.0000E+00
		28060.62c	2.35E-02	2542	4.3148E-03	8.3706E-05	0.0000E+00	0.0000E+00	0	0.0000E+00	0.0000E+00
		24053.62c	1.92E-02	6286	9.7393E-03	4.0739E-04	0.0000E+00	0.0000E+00	0	0.0000E+00	0.0000E+00
		26057.62c	1.46E-02	1769	2.9096E-03	5.1876E-05	0.0000E+00	0.0000E+00	0	0.0000E+00	0.0000E+00
		28061.62c	1.02E-03	127	1.8882E-04	4.4798E-06	0.0000E+00	0.0000E+00	0	0.0000E+00	0.0000E+00
		24054.62c	4.77E-03	325	5.1374E-04	2.4205E-06	0.0000E+00	0.0000E+00	0	0.0000E+00	0.0000E+00
		26058.62c	1.93E-03	178	2.8855E-04	2.4763E-06	0.0000E+00	0.0000E+00	0	0.0000E+00	0.0000E+00
		28062.62c	3.25E-03	1408	2.2061E-03	5.8112E-05	0.0000E+00	0.0000E+00	0	0.0000E+00	0.0000E+00
		28064.62c	8.33E-04	92	1.6133E-04	2.3044E-06	0.0000E+00	0.0000E+00	0	0.0000E+00	0.0000E+00
		25055.62c	2.01E-02	7751	1.2164E-02	3.9874E-04	0.0000E+00	0.0000E+00	0	0.0000E+00	0.0000E+00
15	45	24050.62c	8.79E-03	80564	1.3531E-01	9.5234E-03	0.0000E+00	0.0000E+00	0	0.0000E+00	0.0000E+00
		26054.62c	4.03E-02	160789	2.7759E-01	6.8030E-03	0.0000E+00	0.0000E+00	0	0.0000E+00	0.0000E+00
		28058.62c	6.09E-02	681315	1.0027E+00	2.0061E-02	0.0000E+00	0.0000E+00	0	0.0000E+00	0.0000E+00
		24052.62c	1.69E-01	391001	6.4399E-01	9.4778E-03	0.0000E+00	1.6111E-06	0	0.0000E+00	0.0000E+00
		26056.62c	6.32E-01	3234714	4.6943E+00	1.1239E-01	0.0000E+00	8.7451E-06	0	0.0000E+00	0.0000E+00
		28060.62c	2.35E-02	91514	1.6155E-01	4.5728E-03	0.0000E+00	0.0000E+00	0	0.0000E+00	0.0000E+00
		24053.62c	1.92E-02	231983	3.7789E-01	2.3538E-02	0.0000E+00	0.0000E+00	0	0.0000E+00	0.0000E+00
		26057.62c	1.46E-02	64846	1.1199E-01	2.6033E-03	0.0000E+00	0.0000E+00	0	0.0000E+00	0.0000E+00
		28061.62c	1.02E-03	5128	8.0158E-03	2.0266E-04	0.0000E+00	0.0000E+00	0	0.0000E+00	0.0000E+00
		24054.62c	4.77E-03	12710	2.1748E-02	1.3227E-04	0.0000E+00	4.3583E-06	0	0.0000E+00	0.0000E+00
		26058.62c	1.93E-03	6657	1.1330E-02	1.9784E-04	0.0000E+00	0.0000E+00	0	0.0000E+00	0.0000E+00
		28062.62c	3.25E-03	51037	8.4785E-02	3.0676E-03	0.0000E+00	0.0000E+00	0	0.0000E+00	0.0000E+00
		28064.62c	8.33E-04	3627	6.6572E-03	7.6507E-05	0.0000E+00	0.0000E+00	0	0.0000E+00	0.0000E+00
		25055.62c	2.01E-02	266778	4.4741E-01	2.0862E-02	0.0000E+00	0.0000E+00	0	0.0000E+00	0.0000E+00
16	46	82206.66c	2.55E-01	5741763	8.8860E+00	6.7912E-03	0.0000E+00	6.4064E-05	0	0.0000E+00	0.0000E+00
		82207.66c	2.21E-01	5300449	8.3363E+00	2.2654E-02	0.0000E+00	1.2740E-04	0	0.0000E+00	0.0000E+00
		82208.66c	5.24E-01	12830935	2.0081E+01	7.5043E-04	0.0000E+00	2.5407E-04	0	0.0000E+00	0.0000E+00
17	47	82206.66c	2.55E-01	86445	1.2471E-01	8.9207E-05	0.0000E+00	1.9156E-06	0	0.0000E+00	0.0000E+00
		82207.66c	2.21E-01	79902	1.1779E-01	2.3046E-04	0.0000E+00	0.0000E+00	0	0.0000E+00	0.0000E+00
		82208.66c	5.24E-01	194928	2.8556E-01	1.0224E-05	0.0000E+00	1.8298E-06	0	0.0000E+00	0.0000E+00
19	49	1001.62c	6.67E-01	3653	5.3988E-03	1.4029E-06	0.0000E+00	0.0000E+00	0	0.0000E+00	0.0000E+00
		8016.62c	3.33E-01	435	6.9146E-04	6.3757E-10	0.0000E+00	0.0000E+00	0	0.0000E+00	0.0000E+00
total				75888898	1.1414E+02	7.2325E-01	2.7755E-01	7.9870E-04	0	0.0000E+00	0.0000E+00

total over all cells by nuclide	total collisions	collisions * weight	wgt. lost to capture	wgt. gain by fission	wgt. gain by (n,xn)	photons produced	photon wgt produced	avg photon energy
1001.62c	27071368	3.9433E+01	1.6759E-01	0.0000E+00	0.0000E+00	0	0.0000E+00	0.0000E+00
7014.62c	267	4.4474E-04	2.3671E-05	0.0000E+00	0.0000E+00	0	0.0000E+00	0.0000E+00
7015.66c	1	2.0596E-06	1.1114E-12	0.0000E+00	0.0000E+00	0	0.0000E+00	0.0000E+00
8016.62c	1922599	3.1521E+00	2.5641E-03	0.0000E+00	0.0000E+00	0	0.0000E+00	0.0000E+00
13027.62c	2086136	3.6199E+00	3.8983E-02	0.0000E+00	0.0000E+00	0	0.0000E+00	0.0000E+00
24050.62c	325774	5.4051E-01	1.5941E-02	0.0000E+00	0.0000E+00	0	0.0000E+00	0.0000E+00
24052.62c	1513808	2.4315E+00	1.8324E-02	0.0000E+00	3.4452E-06	0	0.0000E+00	0.0000E+00
24053.62c	933267	1.4927E+00	3.9133E-02	0.0000E+00	1.5387E-06	0	0.0000E+00	0.0000E+00
24054.62c	52863	8.8215E-02	2.6554E-04	0.0000E+00	4.3583E-06	0	0.0000E+00	0.0000E+00
25055.62c	1123791	1.7949E+00	4.0537E-02	0.0000E+00	0.0000E+00	0	0.0000E+00	0.0000E+00
26054.62c	659328	1.1153E+00	1.2118E-02	0.0000E+00	0.0000E+00	0	0.0000E+00	0.0000E+00
26056.62c	11781195	1.6346E+01	1.9002E-01	0.0000E+00	1.0762E-05	0	0.0000E+00	0.0000E+00
26057.62c	269242	4.5546E-01	5.0906E-03	0.0000E+00	1.6393E-06	0	0.0000E+00	0.0000E+00
26058.62c	28044	4.7062E-02	4.8768E-04	0.0000E+00	0.0000E+00	0	0.0000E+00	0.0000E+00
28058.62c	2598016	3.6878E+00	3.4481E-02	0.0000E+00	0.0000E+00	0	0.0000E+00	0.0000E+00
28060.62c	404039	7.0220E-01	8.2308E-03	0.0000E+00	0.0000E+00	0	0.0000E+00	0.0000E+00
28061.62c	20045	3.0926E-02	4.0105E-04	0.0000E+00	0.0000E+00	0	0.0000E+00	0.0000E+00
28062.62c	212162	3.4226E-01	4.9617E-03	0.0000E+00	0.0000E+00	0	0.0000E+00	0.0000E+00
28064.62c	17083	3.0744E-02	1.5711E-04	0.0000E+00	0.0000E+00	0	0.0000E+00	0.0000E+00
40000.66c	76724	1.3605E-01	1.0591E-03	0.0000E+00	1.3185E-05	0	0.0000E+00	0.0000E+00
50000.42c	756	1.3400E-03	5.7434E-05	0.0000E+00	0.0000E+00	0	0.0000E+00	0.0000E+00
82206.66c	5852724	9.0448E+00	6.9083E-03	0.0000E+00	6.5980E-05	0	0.0000E+00	0.0000E+00

```
              82207.66c             5402837  8.4862E+00  2.2923E-02  0.0000E+00  1.2740E-04           0  0.0000E+00  0.0000E+00
              82208.66c            13080538  2.0444E+01  7.6289E-04  0.0000E+00  2.5590E-04           0  0.0000E+00  0.0000E+00
              92235.69c               11604  1.6516E-02  2.3773E-03  1.2018E-02  1.2382E-06           0  0.0000E+00  0.0000E+00
              92238.69c              182793  3.3056E-01  2.3571E-02  5.1778E-03  2.8296E-04           0  0.0000E+00  0.0000E+00
              94238.66c                   0  0.0000E+00  0.0000E+00  0.0000E+00  0.0000E+00           0  0.0000E+00  0.0000E+00
              94239.69c                   0  0.0000E+00  0.0000E+00  0.0000E+00  0.0000E+00           0  0.0000E+00  0.0000E+00
              94240.66c                   0  0.0000E+00  0.0000E+00  0.0000E+00  0.0000E+00           0  0.0000E+00  0.0000E+00
              94241.66c              261894  3.6794E-01  8.6289E-02  2.6036E-01  3.0294E-05           0  0.0000E+00  0.0000E+00
              94242.66c                   0  0.0000E+00  0.0000E+00  0.0000E+00  0.0000E+00           0  0.0000E+00  0.0000E+00
1keff results for: NAC-LWT Cask - MOX Experiments - Accident Transport Conditions                        probid =  10/25/07
23:04:59


 the initial fission neutron source distribution was generated from a general sdef source description.
 the criticality problem was scheduled to skip  30 cycles and run a total of  530 cycles with nominally     1000 neutrons per
cycle.
 this problem has run  30 inactive cycles with    30072 neutron histories and  500 active cycles with      500798 neutron
histories.


 this calculation has completed the requested number of keff cycles using a total of      530870 fission neutron source
histories.
 all cells with fissionable material were sampled and had fission neutron source points.


 the results of the w test for normality applied to the individual collision, absorption, and track-length keff cycle values are:

          the k( collision) cycle values appear normally distributed at the 95 percent confidence level
          the k(absorption) cycle values appear normally distributed at the 95 percent confidence level
          the k(trk length) cycle values appear normally distributed at the 95 percent confidence level


 ------------------------------------------------------------------------------------------------------------------------------
---
 |
|
 | the final estimated combined collision/absorption/track-length keff = 0.81154 with an estimated standard deviation of 0.00116
|
 |
|
 | the estimated 68, 95, & 99 percent keff confidence intervals are 0.81038 to 0.81269, 0.80923 to 0.81384, and 0.80848 to
0.81459 |
 |
|
 | the final combined (col/abs/tl) prompt removal lifetime = 8.3977E-05 seconds with an estimated standard deviation of 1.0227E-
07 |
 |
|
 | the average neutron energy causing fission = 7.7342E-02 mev
|
 | the energy corresponding to the average neutron lethargy causing fission = 1.3304E-07 mev
|
 |
|
 | the percentages of fissions caused by neutrons in the thermal, intermediate, and fast neutron ranges are:
|
 |         (<0.625 ev):  89.17%         (0.625 ev - 100 kev):   7.97%          (>100 kev):   2.86%
|
 |
|
 | the average fission neutrons produced per neutron absorbed (capture + fission) in all cells with fission = 2.0828E+00
|
 | the average fission neutrons produced per neutron absorbed (capture + fission) in all the geometry cells = 8.1209E-01
|
 |
|
 | the average number of neutrons produced per fission = 2.928
|
 |
|
 ------------------------------------------------------------------------------------------------------------------------------
---


 the estimated average keffs, one standard deviations, and 68, 95, and 99 percent confidence intervals are:

        keff estimator       keff     standard deviation      68% confidence        95% confidence        99% confidence
corr

             collision     0.81275         0.00130          0.81144 to 0.81405    0.81015 to 0.81534    0.80930 to 0.81619
            absorption     0.81120         0.00119          0.81001 to 0.81239    0.80883 to 0.81357    0.80805 to 0.81435
          track length     0.81243         0.00169          0.81074 to 0.81412    0.80907 to 0.81579    0.80797 to 0.81689
            col/absorp     0.81160         0.00118          0.81042 to 0.81279    0.80925 to 0.81396    0.80848 to 0.81472
0.8166
           abs/trk len     0.81145         0.00115          0.81030 to 0.81260    0.80916 to 0.81374    0.80841 to 0.81449
0.4642
           col/trk len     0.81269         0.00128          0.81141 to 0.81397    0.81013 to 0.81525    0.80930 to 0.81608
0.6276
       col/abs/trk len     0.81154         0.00116          0.81038 to 0.81269    0.80923 to 0.81384    0.80848 to 0.81459


 if the largest of each keff occurred on the next cycle, the keff results and 68, 95, and 99 percent confidence intervals would
be:

        keff estimator       keff     standard deviation      68% confidence        95% confidence        99% confidence

             collision     0.81294         0.00132          0.81162 to 0.81426    0.81032 to 0.81556    0.80947 to 0.81642
```

```
           absorption     0.81135         0.00120          0.81015 to 0.81255    0.80896 to 0.81374    0.80818 to 0.81452
         track length     0.81269         0.00170          0.81098 to 0.81439    0.80929 to 0.81608    0.80819 to 0.81719
      col/abs/trk len     0.81169         0.00117          0.81053 to 0.81286    0.80937 to 0.81402    0.80861 to 0.81478


 the estimated average prompt removal lifetimes, one standard deviations, and 68, 95, and 99 percent confidence intervals are
(sec):

       estimator      lifetime     std. dev.         68% confidence           95% confidence           99% confidence
corr

       collision   8.38310E-05   1.35781E-07    8.3695E-05 to 8.3967E-05 8.3561E-05 to 8.4102E-05 8.3472E-05 to 8.4190E-05
      absorption   8.38304E-05   1.31414E-07    8.3699E-05 to 8.3962E-05 8.3569E-05 to 8.4092E-05 8.3483E-05 to 8.4178E-05
    track length   8.39544E-05   1.02540E-07    8.3852E-05 to 8.4057E-05 8.3750E-05 to 8.4159E-05 8.3684E-05 to 8.4225E-05
      col/absorp   8.38305E-05   1.31533E-07    8.3699E-05 to 8.3962E-05 8.3568E-05 to 8.4092E-05 8.3483E-05 to 8.4178E-05
0.9641
     abs/trk len   8.39766E-05   1.02177E-07    8.3874E-05 to 8.4079E-05 8.3773E-05 to 8.4180E-05 8.3707E-05 to 8.4247E-05
0.8463
     col/trk len   8.39708E-05   1.02352E-07    8.3868E-05 to 8.4073E-05 8.3767E-05 to 8.4175E-05 8.3700E-05 to 8.4241E-05
0.8149
 col/abs/trk len   8.39767E-05   1.02267E-07    8.3874E-05 to 8.4079E-05 8.3773E-05 to 8.4180E-05 8.3706E-05 to 8.4247E-05

 absorption estimates of prompt lifetimes (sec):

                             escape        capture        fission        removal

           fraction    0.00000E+00    7.22671E-01    2.77329E-01    1.00000E+00
       lifetime(abs)   0.00000E+00    1.16001E-04    3.02278E-04    8.38304E-05
     lifetime(c/a/t)   0.00000E+00    1.16203E-04    3.02805E-04    8.39767E-05

1average keff results summed over  10 cycles each to form 50 batch values of keff                      print table 178

  batch  start    end     keff estimators by batch              average keff estimators and deviations              col/abs/tl
keff
 number  cycle  cycle     k(coll)  k(abs)  k(track)       k(coll)  st dev    k(abs)  st dev   k(track) st dev       k(c/a/t) st
dev

      1     31     40     0.82966  0.83432  0.81935
      2     41     50     0.81388  0.81282  0.81550       0.82177 0.00789   0.82357 0.01075   0.81743 0.00193
      3     51     60     0.81591  0.81479  0.81007       0.81981 0.00496   0.82065 0.00686   0.81497 0.00269
      4     61     70     0.82413  0.82314  0.81926       0.82089 0.00367   0.82127 0.00489   0.81605 0.00218       0.81694
0.00574
      5     71     80     0.82191  0.82228  0.81994       0.82110 0.00285   0.82147 0.00379   0.81683 0.00186       0.81825
0.00362
      6     81     90     0.81341  0.81903  0.80153       0.81982 0.00265   0.82107 0.00312   0.81428 0.00297       0.81800
0.00617
      7     91    100     0.81570  0.80876  0.80207       0.81923 0.00232   0.81931 0.00317   0.81253 0.00306       0.81900
0.00447
      8    101    110     0.82256  0.81550  0.81347       0.81964 0.00205   0.81883 0.00279   0.81265 0.00265       0.81916
0.00422
      9    111    120     0.82739  0.81588  0.82961       0.82050 0.00200   0.81850 0.00248   0.81453 0.00300       0.82101
0.00377
     10    121    130     0.81189  0.80694  0.79886       0.81964 0.00199   0.81735 0.00250   0.81297 0.00311       0.82178
0.00370
 ------------------------------------------------------------------------------------------------------------------------
---
     11    131    140     0.81512  0.81798  0.81439       0.81923 0.00184   0.81741 0.00226   0.81310 0.00282       0.82030
0.00312
     12    141    150     0.81892  0.80779  0.81619       0.81921 0.00168   0.81660 0.00222   0.81335 0.00258       0.82018
0.00294
     13    151    160     0.81253  0.80385  0.81782       0.81869 0.00163   0.81562 0.00226   0.81370 0.00240       0.81873
0.00276
     14    161    170     0.82293  0.81659  0.81584       0.81900 0.00154   0.81569 0.00210   0.81385 0.00223       0.81876
0.00269
     15    171    180     0.81782  0.81307  0.81272       0.81892 0.00144   0.81552 0.00196   0.81378 0.00208       0.81870
0.00256
     16    181    190     0.81490  0.80501  0.83582       0.81867 0.00137   0.81486 0.00195   0.81515 0.00238       0.81813
0.00211
     17    191    200     0.80059  0.80287  0.80113       0.81760 0.00167   0.81416 0.00196   0.81433 0.00238       0.81579
0.00232
     18    201    210     0.80941  0.79895  0.80353       0.81715 0.00164   0.81331 0.00203   0.81373 0.00233       0.81600
0.00240
     19    211    220     0.81458  0.82191  0.81115       0.81701 0.00155   0.81376 0.00197   0.81359 0.00220       0.81590
0.00210
     20    221    230     0.79879  0.80440  0.80211       0.81610 0.00173   0.81330 0.00193   0.81302 0.00217       0.81416
0.00206
 ------------------------------------------------------------------------------------------------------------------------
---
     21    231    240     0.82474  0.82558  0.81525       0.81651 0.00170   0.81388 0.00193   0.81312 0.00207       0.81450
0.00204
     22    241    250     0.80621  0.81448  0.80174       0.81604 0.00169   0.81391 0.00184   0.81261 0.00204       0.81398
0.00192
     23    251    260     0.80096  0.81176  0.80767       0.81539 0.00174   0.81381 0.00176   0.81239 0.00196       0.81344
0.00172
     24    261    270     0.81023  0.80779  0.80387       0.81517 0.00168   0.81356 0.00170   0.81204 0.00191       0.81322
0.00170
     25    271    280     0.82492  0.81865  0.82710       0.81556 0.00166   0.81377 0.00165   0.81264 0.00193       0.81362
0.00168
     26    281    290     0.80925  0.81282  0.80933       0.81532 0.00161   0.81373 0.00158   0.81251 0.00186       0.81349
0.00160
     27    291    300     0.81000  0.80975  0.80467       0.81512 0.00156   0.81358 0.00153   0.81222 0.00181       0.81331
0.00156
     28    301    310     0.79874  0.79355  0.81099       0.81454 0.00162   0.81287 0.00164   0.81218 0.00174       0.81258
0.00155
     29    311    320     0.81086  0.81598  0.80630       0.81441 0.00156   0.81298 0.00158   0.81197 0.00169       0.81254
0.00149
```

```
     30    321    330     0.80031  0.80718  0.80098       0.81394 0.00158   0.81278 0.00154   0.81161 0.00168       0.81215
0.00145
 ------------------------------------------------------------------------------------------------------------------------
---
     31    331    340     0.80388  0.79876  0.81420       0.81362 0.00156   0.81233 0.00156   0.81169 0.00162       0.81188
0.00140
     32    341    350     0.81724  0.82617  0.81614       0.81373 0.00152   0.81276 0.00157   0.81183 0.00158       0.81229
0.00138
     33    351    360     0.83520  0.81845  0.85451       0.81438 0.00161   0.81293 0.00153   0.81312 0.00200       0.81299
0.00149
     34    361    370     0.80886  0.80069  0.80539       0.81422 0.00157   0.81257 0.00153   0.81290 0.00196       0.81279
0.00150
     35    371    380     0.81531  0.81537  0.82615       0.81425 0.00152   0.81265 0.00149   0.81328 0.00194       0.81301
0.00145
     36    381    390     0.81009  0.80545  0.81262       0.81413 0.00149   0.81245 0.00146   0.81326 0.00188       0.81287
0.00142
     37    391    400     0.81143  0.80964  0.80847       0.81406 0.00145   0.81238 0.00142   0.81313 0.00184       0.81279
0.00138
     38    401    410     0.82492  0.81788  0.80537       0.81435 0.00144   0.81252 0.00139   0.81292 0.00180       0.81280
0.00136
     39    411    420     0.80586  0.80407  0.81463       0.81413 0.00142   0.81231 0.00137   0.81297 0.00175       0.81263
0.00133
     40    421    430     0.80978  0.79689  0.81285       0.81402 0.00139   0.81192 0.00139   0.81296 0.00171       0.81250
0.00133
 ------------------------------------------------------------------------------------------------------------------------
---
     41    431    440     0.80815  0.81161  0.81895       0.81388 0.00136   0.81191 0.00136   0.81311 0.00167       0.81253
0.00128
     42    441    450     0.79458  0.80377  0.79193       0.81342 0.00140   0.81172 0.00134   0.81261 0.00171       0.81208
0.00128
     43    451    460     0.81535  0.81672  0.81120       0.81346 0.00137   0.81184 0.00131   0.81257 0.00167       0.81215
0.00125
     44    461    470     0.80700  0.81373  0.79954       0.81332 0.00135   0.81188 0.00128   0.81228 0.00166       0.81206
0.00122
     45    471    480     0.79961  0.80600  0.81020       0.81301 0.00135   0.81175 0.00126   0.81223 0.00162       0.81191
0.00118
     46    481    490     0.80546  0.79821  0.80770       0.81285 0.00133   0.81145 0.00127   0.81213 0.00159       0.81171
0.00119
     47    491    500     0.82768  0.80894  0.82950       0.81316 0.00134   0.81140 0.00124   0.81250 0.00160       0.81175
0.00117
     48    501    510     0.79942  0.80020  0.81243       0.81288 0.00134   0.81117 0.00124   0.81250 0.00156       0.81156
0.00115
     49    511    520     0.81145  0.80954  0.81694       0.81285 0.00132   0.81113 0.00121   0.81259 0.00153       0.81157
0.00113
     50    521    530     0.80779  0.81443  0.80466       0.81275 0.00129   0.81120 0.00119   0.81243 0.00151       0.81156
0.00110


 average keff results summed over  20 cycles each to form 25 batch values of keff

  batch  start    end     keff estimators by batch              average keff estimators and deviations              col/abs/tl
keff
 number  cycle  cycle     k(coll)  k(abs)  k(track)       k(coll)  st dev    k(abs)  st dev   k(track) st dev       k(c/a/t) st
dev

      1     31     50     0.82177  0.82357  0.81743
      2     51     70     0.82002  0.81897  0.81466       0.82089 0.00088   0.82127 0.00230   0.81605 0.00138
      3     71     90     0.81766  0.82066  0.81074       0.81982 0.00119   0.82107 0.00135   0.81428 0.00194
      4     91    110     0.81913  0.81213  0.80777       0.81964 0.00086   0.81883 0.00243   0.81265 0.00213       0.82491
0.00351
      5    111    130     0.81964  0.81141  0.81424       0.81964 0.00067   0.81735 0.00240   0.81297 0.00168       0.82164
0.00234
      6    131    150     0.81702  0.81289  0.81529       0.81921 0.00070   0.81660 0.00209   0.81335 0.00142       0.81897
0.00199
      7    151    170     0.81773  0.81022  0.81683       0.81900 0.00063   0.81569 0.00199   0.81385 0.00130       0.81868
0.00149
      8    171    190     0.81636  0.80904  0.82427       0.81867 0.00063   0.81486 0.00191   0.81515 0.00172       0.81847
0.00100
      9    191    210     0.80500  0.80091  0.80233       0.81715 0.00162   0.81331 0.00229   0.81373 0.00208       0.81685
0.00310
     10    211    230     0.80668  0.81316  0.80663       0.81610 0.00179   0.81330 0.00205   0.81302 0.00199       0.81400
0.00245
 ------------------------------------------------------------------------------------------------------------------------
---
     11    231    250     0.81547  0.82003  0.80849       0.81604 0.00162   0.81391 0.00195   0.81261 0.00185       0.81404
0.00220
     12    251    270     0.80559  0.80977  0.80577       0.81517 0.00171   0.81356 0.00181   0.81204 0.00178       0.81292
0.00199
     13    271    290     0.81708  0.81574  0.81822       0.81532 0.00158   0.81373 0.00168   0.81251 0.00171       0.81341
0.00181
     14    291    310     0.80437  0.80165  0.80783       0.81454 0.00166   0.81287 0.00178   0.81218 0.00162       0.81242
0.00178
     15    311    330     0.80558  0.81158  0.80364       0.81394 0.00166   0.81278 0.00166   0.81161 0.00161       0.81191
0.00166
     16    331    350     0.81056  0.81246  0.81517       0.81373 0.00157   0.81276 0.00155   0.81183 0.00152       0.81217
0.00147
     17    351    370     0.82203  0.80957  0.82995       0.81422 0.00155   0.81257 0.00147   0.81290 0.00178       0.81256
0.00144
     18    371    390     0.81270  0.81041  0.81938       0.81413 0.00146   0.81245 0.00139   0.81326 0.00172       0.81267
0.00133
     19    391    410     0.81817  0.81376  0.80692       0.81435 0.00140   0.81252 0.00132   0.81292 0.00166       0.81265
0.00129
     20    411    430     0.80782  0.80048  0.81374       0.81402 0.00137   0.81192 0.00139   0.81296 0.00157       0.81232
0.00130
 ------------------------------------------------------------------------------------------------------------------------
---
```

```
     21    431    450     0.80137  0.80769  0.80544       0.81342 0.00143   0.81172 0.00133   0.81261 0.00154       0.81189
0.00121
     22    451    470     0.81117  0.81523  0.80537       0.81332 0.00137   0.81188 0.00128   0.81228 0.00150       0.81185
0.00114
     23    471    490     0.80253  0.80211  0.80895       0.81285 0.00139   0.81145 0.00130   0.81213 0.00145       0.81149
0.00112
     24    491    510     0.81355  0.80457  0.82096       0.81288 0.00133   0.81117 0.00127   0.81250 0.00143       0.81149
0.00108
     25    511    530     0.80962  0.81198  0.81080       0.81275 0.00128   0.81120 0.00122   0.81243 0.00137       0.81151
0.00102


 average keff results summed over  25 cycles each to form 20 batch values of keff

  batch  start    end     keff estimators by batch              average keff estimators and deviations              col/abs/tl
keff
 number  cycle  cycle     k(coll)  k(abs)  k(track)       k(coll)  st dev    k(abs)  st dev   k(track) st dev       k(c/a/t) st
dev

      1     31     55     0.82053  0.82250  0.81285
      2     56     80     0.82167  0.82044  0.82080       0.82110 0.00057   0.82147 0.00103   0.81683 0.00397
      3     81    105     0.81838  0.81434  0.80979       0.82019 0.00096   0.81909 0.00245   0.81448 0.00328
      4    106    130     0.81800  0.81211  0.80842       0.81964 0.00087   0.81735 0.00246   0.81297 0.00277       0.82224
0.00032
      5    131    155     0.81447  0.81041  0.81672       0.81861 0.00124   0.81596 0.00236   0.81372 0.00227       0.81922
0.00207
      6    156    180     0.82046  0.81331  0.81407       0.81892 0.00106   0.81552 0.00198   0.81378 0.00186       0.81883
0.00216
      7    181    205     0.80757  0.80137  0.81314       0.81730 0.00185   0.81350 0.00262   0.81368 0.00157       0.81729
0.00252
      8    206    230     0.80773  0.81189  0.80835       0.81610 0.00200   0.81330 0.00228   0.81302 0.00152       0.81355
0.00221
      9    231    255     0.81254  0.81725  0.80802       0.81571 0.00181   0.81374 0.00206   0.81246 0.00145       0.81295
0.00186
     10    256    280     0.81428  0.81405  0.81423       0.81556 0.00162   0.81377 0.00184   0.81264 0.00131       0.81313
0.00159
 ------------------------------------------------------------------------------------------------------------------------
---
     11    281    305     0.80535  0.80546  0.80570       0.81463 0.00174   0.81301 0.00183   0.81201 0.00134       0.81211
0.00165
     12    306    330     0.80631  0.81025  0.80721       0.81394 0.00173   0.81278 0.00168   0.81161 0.00129       0.81160
0.00145
     13    331    355     0.81434  0.81294  0.82462       0.81397 0.00159   0.81279 0.00155   0.81261 0.00155       0.81274
0.00144
     14    356    380     0.81786  0.81084  0.82194       0.81425 0.00150   0.81265 0.00144   0.81328 0.00158       0.81291
0.00138
     15    381    405     0.81727  0.81240  0.81194       0.81445 0.00141   0.81264 0.00134   0.81319 0.00148       0.81288
0.00131
     16    406    430     0.80757  0.80117  0.80963       0.81402 0.00139   0.81192 0.00145   0.81296 0.00140       0.81260
0.00138
     17    431    455     0.80436  0.80922  0.80511       0.81345 0.00142   0.81176 0.00137   0.81250 0.00139       0.81203
0.00128
     18    456    480     0.80551  0.81151  0.80762       0.81301 0.00141   0.81175 0.00129   0.81223 0.00134       0.81185
0.00116
     19    481    505     0.81200  0.80345  0.81795       0.81296 0.00134   0.81131 0.00130   0.81253 0.00130       0.81180
0.00112
     20    506    530     0.80872  0.80907  0.81054       0.81275 0.00129   0.81120 0.00123   0.81243 0.00124       0.81169
0.00105


 average keff results summed over  50 cycles each to form 10 batch values of keff

  batch  start    end     keff estimators by batch              average keff estimators and deviations              col/abs/tl
keff
 number  cycle  cycle     k(coll)  k(abs)  k(track)       k(coll)  st dev    k(abs)  st dev   k(track) st dev       k(c/a/t) st
dev

      1     31     80     0.82110  0.82147  0.81683
      2     81    130     0.81819  0.81322  0.80911       0.81964 0.00145   0.81735 0.00412   0.81297 0.00386
      3    131    180     0.81746  0.81186  0.81539       0.81892 0.00111   0.81552 0.00300   0.81378 0.00237
      4    181    230     0.80765  0.80663  0.81075       0.81610 0.00292   0.81330 0.00307   0.81302 0.00184       0.81410
0.00461
      5    231    280     0.81341  0.81565  0.81112       0.81556 0.00233   0.81377 0.00243   0.81264 0.00147       0.81288
0.00269
      6    281    330     0.80583  0.80786  0.80646       0.81394 0.00250   0.81278 0.00221   0.81161 0.00158       0.81120
0.00232
      7    331    380     0.81610  0.81189  0.82328       0.81425 0.00213   0.81265 0.00187   0.81328 0.00214       0.81255
0.00226
      8    381    430     0.81242  0.80678  0.81079       0.81402 0.00186   0.81192 0.00178   0.81296 0.00188       0.81238
0.00219
      9    431    480     0.80494  0.81037  0.80636       0.81301 0.00193   0.81175 0.00158   0.81223 0.00181       0.81170
0.00170
     10    481    530     0.81036  0.80626  0.81424       0.81275 0.00174   0.81120 0.00152   0.81243 0.00163       0.81151
0.00155


 average keff results summed over 100 cycles each to form  5 batch values of keff

  batch  start    end     keff estimators by batch              average keff estimators and deviations              col/abs/tl
keff
 number  cycle  cycle     k(coll)  k(abs)  k(track)       k(coll)  st dev    k(abs)  st dev   k(track) st dev       k(c/a/t) st
dev

      1     31    130     0.81964  0.81735  0.81297
```

```
      2    131    230     0.81256  0.80924  0.81307       0.81610 0.00354   0.81330 0.00405   0.81302 0.00005
      3    231    330     0.80962  0.81175  0.80879       0.81394 0.00297   0.81278 0.00240   0.81161 0.00141
      4    331    430     0.81426  0.80934  0.81703       0.81402 0.00210   0.81192 0.00190   0.81296 0.00168       0.81086
0.00109
      5    431    530     0.80765  0.80831  0.81030       0.81275 0.00207   0.81120 0.00164   0.81243 0.00141       0.81084
0.00058


 average keff results summed over 125 cycles each to form  4 batch values of keff

  batch  start    end     keff estimators by batch              average keff estimators and deviations              col/abs/tl
keff
 number  cycle  cycle     k(coll)  k(abs)  k(track)       k(coll)  st dev    k(abs)  st dev   k(track) st dev       k(c/a/t) st
dev

      1     31    155     0.81861  0.81596  0.81372
      2    156    280     0.81252  0.81157  0.81156       0.81556 0.00305   0.81377 0.00219   0.81264 0.00108
      3    281    405     0.81223  0.81038  0.81428       0.81445 0.00208   0.81264 0.00170   0.81319 0.00083
      4    406    530     0.80763  0.80689  0.81017       0.81275 0.00225   0.81120 0.00187   0.81243 0.00095       0.80866
0.00201


 average keff results summed over 250 cycles each to form  2 batch values of keff

  batch  start    end     keff estimators by batch              average keff estimators and deviations
 number  cycle  cycle     k(coll)  k(abs)  k(track)       k(coll)  st dev    k(abs)  st dev   k(track) st dev

      1     31    280     0.81556  0.81377  0.81264
      2    281    530     0.80993  0.80863  0.81223       0.81275 0.00282   0.81120 0.00257   0.81243 0.00021
1average individual and combined collision/absorption/track-length keff results for 10 different batch sizes

 cycles per  number of    average keff estimators and deviations      normality  average k(c/a/t)    k(c/a/t) confidence
intervals
 keff batch  k batches  k(col) st dev  k(abs) st dev  k(trk) st dev   co/ab/trk  k(c/a/t) st dev    95% confidence    99%
confidence

       1        500  |  0.8127 0.0013  0.8112 0.0012  0.8124 0.0017  |95/95/95|  0.81154 0.00116   0.80923-0.81384   0.80848-
0.81459
       2        250  |  0.8127 0.0013  0.8112 0.0012  0.8124 0.0016  |95/95/95|  0.81152 0.00115   0.80924-0.81381   0.80849-
0.81456
       4        125  |  0.8127 0.0012  0.8112 0.0011  0.8124 0.0016  |95/95/95|  0.81150 0.00104   0.80943-0.81356   0.80876-
0.81424
       5        100  |  0.8127 0.0013  0.8112 0.0011  0.8124 0.0016  |95/95/95|  0.81156 0.00109   0.80939-0.81373   0.80868-
0.81444
      10         50  |  0.8127 0.0013  0.8112 0.0012  0.8124 0.0015  |95/95/no|  0.81156 0.00110   0.80935-0.81378   0.80861-
0.81452
      20         25  |  0.8127 0.0013  0.8112 0.0012  0.8124 0.0014  |95/95/95|  0.81151 0.00102   0.80939-0.81363   0.80863-
0.81439
      25         20  |  0.8127 0.0013  0.8112 0.0012  0.8124 0.0012  |95/95/95|  0.81169 0.00105   0.80946-0.81391   0.80863-
0.81475
      50         10  |  0.8127 0.0017  0.8112 0.0015  0.8124 0.0016  |95/95/95|  0.81151 0.00155   0.80785-0.81518   0.80610-
0.81693
     100          5  |  0.8127 0.0021  0.8112 0.0016  0.8124 0.0014  |95/95/95|  0.81084 0.00058   0.80835-0.81333   0.80510-
0.81658
     125          4  |  0.8127 0.0023  0.8112 0.0019  0.8124 0.0010  |95/95/95|  0.80866 0.00201   0.78307-0.83424   0.68049-
0.93682
 ------------------------------------------------------------------------------------------------------------------------------------
---
1individual and average keff estimator results by cycle

  keff     neutron    keff estimators by cycle          average keff estimators and deviations               average k(c/a/t)
 cycle   histories   k(coll)  k(abs)  k(track)     k(coll)  st dev    k(abs)  st dev   k(track) st dev    k(c/a/t)  st dev    fom

     1        1000 | 0.77358  0.79932  0.74740  |
     2         986 | 0.76197  0.79060  0.75265  |
     3        1002 | 0.79295  0.77210  0.82091  |
     4        1019 | 0.79855  0.80426  0.80619  |
     5        1013 | 0.84601  0.85820  0.82484  |
     6        1058 | 0.77844  0.75337  0.72031  |
     7         927 | 0.85231  0.84192  0.83283  |
     8        1086 | 0.77620  0.80320  0.77936  |
     9         916 | 0.79294  0.79449  0.78476  |
    10        1021 | 0.81179  0.81686  0.82052  |
 ------------------------------------------------------------------------------------------------------------------------------------
---
    11        1034 | 0.77867  0.78231  0.75394  |
    12         960 | 0.81982  0.81026  0.73652  |
    13        1046 | 0.80821  0.82129  0.79494  |
    14         986 | 0.78548  0.78599  0.78331  |
    15         966 | 0.85796  0.85715  0.80780  |
    16        1101 | 0.79257  0.77507  0.78607  |
    17         912 | 0.82974  0.83238  0.82775  |
    18        1038 | 0.80387  0.79760  0.88017  |
    19         966 | 0.81923  0.79387  0.86437  |
    20        1014 | 0.82715  0.80886  0.80226  |
 ------------------------------------------------------------------------------------------------------------------------------------
---
    21        1014 | 0.82259  0.85874  0.80640  |
    22         992 | 0.86693  0.86026  0.84444  |
    23        1050 | 0.84547  0.83464  0.84392  |
    24         963 | 0.76921  0.78385  0.77723  |
    25         914 | 0.86921  0.85248  0.88038  |
    26        1121 | 0.80505  0.83543  0.81121  |
    27         939 | 0.83546  0.81099  0.88213  |
    28        1027 | 0.80724  0.82815  0.77292  |
```

```
    29         976 | 0.83872  0.81914  0.85585  |
    30        1025 | 0.79872  0.80144  0.84044  |
 -------------------  begin active keff cycles  ----------------------------------------------------------------------------------
---
    31         985 | 0.79769  0.81254  0.77994  |
    32        1003 | 0.78199  0.79373  0.78218  |  0.78984 0.00785   0.80313 0.00940   0.78106 0.00112  |
    33         999 | 0.82857  0.82168  0.80760  |  0.80275 0.01368   0.80931 0.00823   0.78991 0.00887  |
    34        1051 | 0.82903  0.85712  0.80382  |  0.80932 0.01170   0.82127 0.01329   0.79339 0.00717  |  0.78247 0.01718
14266
    35        1009 | 0.83682  0.82981  0.86441  |  0.81482 0.01060   0.82298 0.01044   0.80759 0.01525  |  0.81913 0.01641
14997
    36        1023 | 0.84764  0.83567  0.83147  |  0.82029 0.01024   0.82509 0.00878   0.81157 0.01307  |  0.82250 0.01228
22601
    37        1023 | 0.82213  0.82044  0.81896  |  0.82055 0.00866   0.82443 0.00745   0.81263 0.01110  |  0.82202 0.00976
30546
    38         974 | 0.83130  0.84804  0.85184  |  0.82190 0.00762   0.82738 0.00710   0.81753 0.01079  |  0.82559 0.00890
32910
    39        1015 | 0.82956  0.84174  0.80362  |  0.82275 0.00677   0.82897 0.00646   0.81598 0.00964  |  0.82631 0.00820
34663
    40         969 | 0.89183  0.88243  0.84970  |  0.82966 0.00919   0.83432 0.00787   0.81935 0.00926  |  0.82988 0.00961
23195
 ----------------------------------------------------------------------------------------------------------------------------------
---
.
.
.
.
.
 ----------------------------------------------------------------------------------------------------------------------------------
---
   511        1007 | 0.81678  0.82585  0.81586  |  0.81288 0.00132   0.81120 0.00120   0.81251 0.00170  |  0.81156 0.00116
30004
   512        1001 | 0.76297  0.75270  0.73827  |  0.81278 0.00132   0.81108 0.00121   0.81235 0.00171  |  0.81144 0.00117
29684
   513         943 | 0.80793  0.79311  0.77191  |  0.81277 0.00132   0.81104 0.00120   0.81227 0.00170  |  0.81140 0.00117
29688
   514        1074 | 0.84159  0.85901  0.82520  |  0.81283 0.00131   0.81114 0.00121   0.81230 0.00170  |  0.81149 0.00117
29623
   515        1059 | 0.79077  0.77557  0.83553  |  0.81278 0.00131   0.81106 0.00121   0.81234 0.00170  |  0.81145 0.00117
29618
   516         943 | 0.83794  0.82702  0.82522  |  0.81284 0.00131   0.81110 0.00120   0.81237 0.00170  |  0.81148 0.00116
29655
   517        1087 | 0.80995  0.82004  0.78851  |  0.81283 0.00131   0.81112 0.00120   0.81232 0.00169  |  0.81148 0.00116
29721
   518         968 | 0.89895  0.87356  0.93949  |  0.81301 0.00132   0.81124 0.00121   0.81258 0.00171  |  0.81162 0.00117
29252
   519        1102 | 0.78411  0.80850  0.85787  |  0.81295 0.00132   0.81124 0.00120   0.81268 0.00171  |  0.81163 0.00117
29329
   520         875 | 0.76352  0.75999  0.77152  |  0.81285 0.00132   0.81113 0.00121   0.81259 0.00171  |  0.81153 0.00117
29162
 ----------------------------------------------------------------------------------------------------------------------------------
---
   521         989 | 0.80518  0.81700  0.80918  |  0.81283 0.00131   0.81115 0.00120   0.81258 0.00170  |  0.81154 0.00117
29234
   522        1062 | 0.82496  0.84155  0.83930  |  0.81286 0.00131   0.81121 0.00120   0.81264 0.00170  |  0.81160 0.00117
29242
   523        1036 | 0.82159  0.83155  0.85448  |  0.81287 0.00131   0.81125 0.00120   0.81272 0.00170  |  0.81165 0.00116
29266
   524         975 | 0.75715  0.77727  0.77199  |  0.81276 0.00131   0.81118 0.00120   0.81264 0.00170  |  0.81157 0.00116
29207
   525         920 | 0.77191  0.78500  0.76597  |  0.81268 0.00131   0.81113 0.00120   0.81255 0.00170  |  0.81150 0.00116
29183
   526        1036 | 0.81316  0.81182  0.74585  |  0.81268 0.00131   0.81113 0.00120   0.81241 0.00170  |  0.81148 0.00116
29223
   527        1039 | 0.80919  0.80909  0.82117  |  0.81267 0.00131   0.81112 0.00119   0.81243 0.00170  |  0.81148 0.00116
29277
   528        1005 | 0.82139  0.80960  0.79041  |  0.81269 0.00130   0.81112 0.00119   0.81239 0.00169  |  0.81147 0.00116
29327
   529        1027 | 0.78889  0.79852  0.80474  |  0.81264 0.00130   0.81110 0.00119   0.81237 0.00169  |  0.81144 0.00115
29371
   530         969 | 0.86444  0.86285  0.84348  |  0.81275 0.00130   0.81120 0.00119   0.81243 0.00169  |  0.81154 0.00116
29242
 ----------------------------------------------------------------------------------------------------------------------------------
---

  the largest active cycle keffs by estimator are:                                  the smallest active cycle keffs by estimator
are:

                  collision 0.91061 on cycle 312                                                  collision 0.73198 on cycle 226
                 absorption 0.88814 on cycle 312                                                 absorption 0.72474 on cycle 226
               track length 0.93949 on cycle 518                                               track length 0.71577 on cycle 390
1plot of the estimated col/abs/track-length keff one standard deviation interval versus cycle number (| = final keff =  0.81154)

    cycle   active 0.81                          0.82                            0.83                                0.84
   number   cycles  |----------------------------|-------------------------------|-----------------------------------|
       40       10  |   |                          (-------------------------------k-------------------------------) |
       45       15  |   |                  (-------------------------k-------------------------)                     |
       50       20  |   |        (-----------------------k-----------------------)                                   |
       55       25  |   |   (--------------------k--------------------)                                              |
       60       30  |   |     (-----------------k----------------)                                                   |
       65       35  |   |            (---------------k----------------)                                              |
       70       40  |   |            (--------------k-------------)                                                  |
       75       45  |   |               (-------------k-------------)                                                 |
       80       50  |   |              (-------------k------------)                                                   |
       85       55  +   |             (------------k------------)                                                    +
       90       60  |   |             (-----------k-----------)                                                      |
```

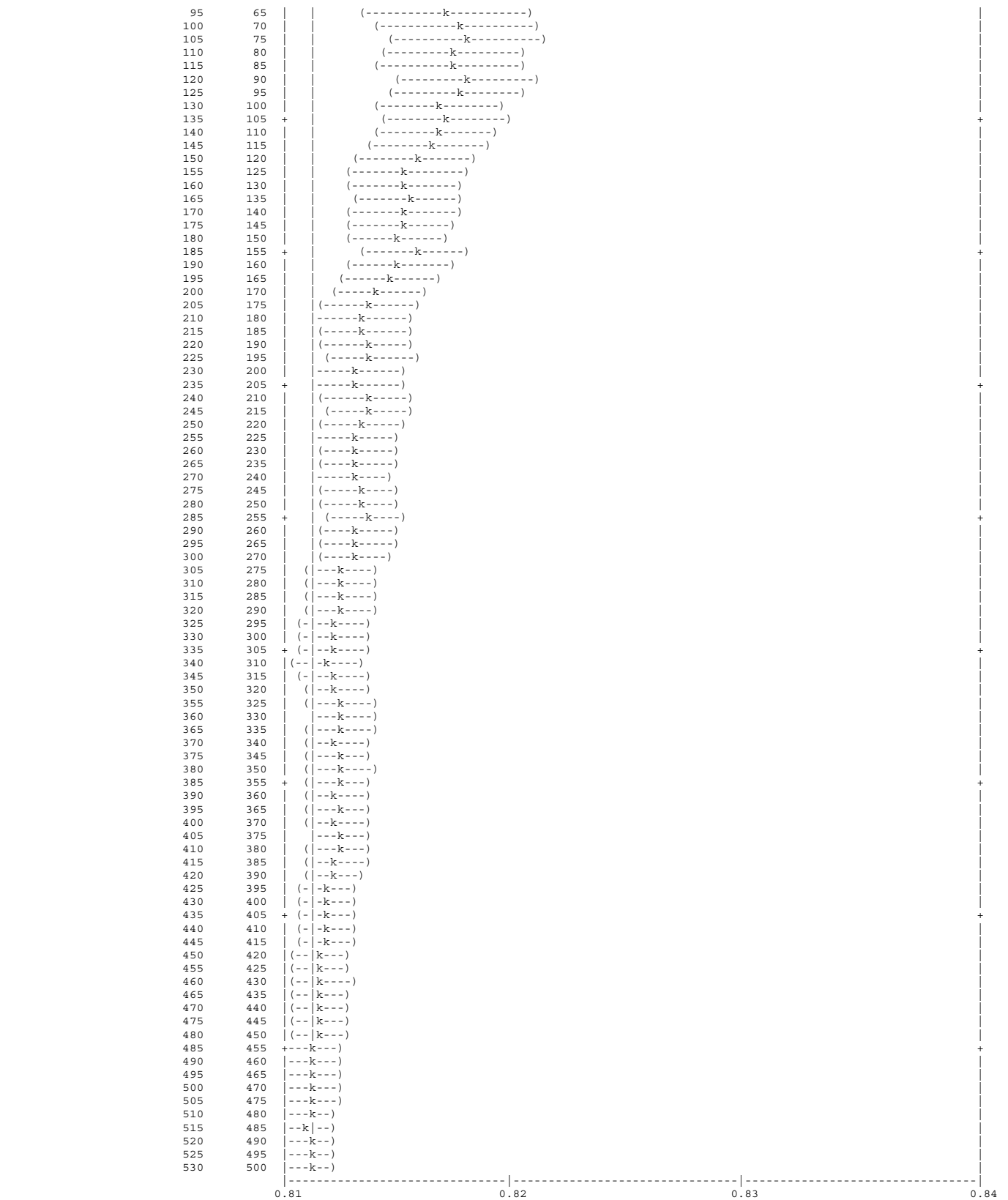

1individual and collision/absorption/track-length keffs for different numbers of inactive cycles skipped for fission source settling

skip active active average keff estimators and deviations normality average k(c/a/t) k(c/a/t) confidence intervals

```
  cycles cycles   neutrons  k(col) st dev  k(abs) st dev  k(trk) st dev  co/ab/tl  k(c/a/t) st dev   95% confidence   99%
confidence

     0    530       530870| 0.8127 0.0013  0.8113 0.0012  0.8122 0.0017 |95/95/95| 0.81157 0.00113  0.80932-0.81381  0.80859-
0.81454
     1    529       529870| 0.8128 0.0013  0.8113 0.0012  0.8123 0.0017 |95/95/95| 0.81162 0.00113  0.80937-0.81386  0.80864-
0.81459
     2    528       528884| 0.8129 0.0013  0.8114 0.0012  0.8124 0.0016 |95/95/95| 0.81168 0.00113  0.80943-0.81393  0.80870-
0.81466
     3    527       527882| 0.8129 0.0013  0.8114 0.0012  0.8124 0.0017 |95/95/95| 0.81173 0.00113  0.80948-0.81398  0.80875-
0.81471
     4    526       526863| 0.8130 0.0013  0.8114 0.0012  0.8124 0.0017 |95/95/95| 0.81175 0.00113  0.80949-0.81400  0.80876-
0.81473
     5    525       525850| 0.8129 0.0013  0.8114 0.0012  0.8124 0.0017 |95/95/95| 0.81167 0.00113  0.80941-0.81392  0.80868-
0.81465
     6    524       524792| 0.8130 0.0013  0.8115 0.0012  0.8126 0.0017 |95/95/95| 0.81177 0.00113  0.80952-0.81401  0.80879-
0.81474
     7    523       523865| 0.8129 0.0013  0.8114 0.0012  0.8125 0.0017 |95/95/95| 0.81172 0.00113  0.80947-0.81396  0.80874-
0.81469
     8    522       522779| 0.8129 0.0013  0.8114 0.0012  0.8126 0.0017 |95/95/95| 0.81175 0.00113  0.80950-0.81400  0.80877-
0.81473
     9    521       521863| 0.8130 0.0013  0.8115 0.0012  0.8126 0.0017 |95/95/95| 0.81179 0.00113  0.80953-0.81404  0.80880-
0.81477
    10    520       520842| 0.8130 0.0013  0.8114 0.0012  0.8126 0.0017 |95/95/95| 0.81177 0.00113  0.80952-0.81403  0.80878-
0.81477
 ------------------------------------------------------------------------------------------------------------------------------
---
    11    519       519808| 0.8131 0.0013  0.8115 0.0012  0.8127 0.0017 |95/95/95| 0.81184 0.00113  0.80959-0.81410  0.80885-
0.81484
    12    518       518848| 0.8130 0.0013  0.8115 0.0012  0.8129 0.0017 |95/95/95| 0.81187 0.00113  0.80961-0.81413  0.80887-
0.81487
    13    517       517802| 0.8131 0.0013  0.8115 0.0012  0.8129 0.0017 |95/95/95| 0.81186 0.00114  0.80960-0.81413  0.80886-
0.81487
    14    516       516816| 0.8131 0.0013  0.8115 0.0012  0.8130 0.0017 |95/95/95| 0.81191 0.00114  0.80965-0.81418  0.80891-
0.81492
    15    515       515850| 0.8130 0.0013  0.8114 0.0012  0.8130 0.0017 |95/95/95| 0.81184 0.00114  0.80958-0.81411  0.80884-
0.81485
    16    514       514749| 0.8131 0.0013  0.8115 0.0012  0.8130 0.0017 |95/95/95| 0.81190 0.00114  0.80964-0.81417  0.80890-
0.81491
    17    513       513837| 0.8130 0.0013  0.8115 0.0012  0.8130 0.0017 |95/95/95| 0.81187 0.00114  0.80959-0.81414  0.80885-
0.81488
    18    512       512799| 0.8130 0.0013  0.8115 0.0012  0.8129 0.0017 |95/95/95| 0.81186 0.00114  0.80959-0.81414  0.80885-
0.81488
    19    511       511833| 0.8130 0.0013  0.8115 0.0012  0.8128 0.0017 |95/95/95| 0.81187 0.00114  0.80959-0.81415  0.80885-
0.81489
    20    510       510819| 0.8130 0.0013  0.8115 0.0012  0.8128 0.0017 |95/95/95| 0.81187 0.00115  0.80959-0.81416  0.80885-
0.81490
 ------------------------------------------------------------------------------------------------------------------------------
---
.
.
.
.
 ------------------------------------------------------------------------------------------------------------------------------
---
   475     55        55160| 0.8091 0.0040  0.8061 0.0037  0.8134 0.0053 |95/95/95| 0.80765 0.00368  0.80025-0.81504  0.79780-
0.81750
   480     50        50124| 0.8104 0.0043  0.8063 0.0039  0.8142 0.0058 |95/95/95| 0.80785 0.00405  0.79971-0.81599  0.79698-
0.81871
   485     45        45138| 0.8117 0.0047  0.8075 0.0042  0.8169 0.0058 |95/95/95| 0.80926 0.00443  0.80032-0.81820  0.79731-
0.82121
   490     40        40182| 0.8116 0.0051  0.8083 0.0044  0.8159 0.0064 |95/95/95| 0.80894 0.00466  0.79949-0.81839  0.79628-
0.82160
   495     35        35116| 0.8117 0.0056  0.8094 0.0049  0.8181 0.0071 |95/95/95| 0.81015 0.00517  0.79962-0.82067  0.79600-
0.82429
   500     30        30049| 0.8062 0.0056  0.8081 0.0053  0.8113 0.0074 |95/95/95| 0.80779 0.00552  0.79646-0.81911  0.79250-
0.82308
   505     25        25133| 0.8087 0.0064  0.8091 0.0061  0.8105 0.0086 |95/95/95| 0.80898 0.00634  0.79583-0.82214  0.79110-
0.82687
   510     20        20117| 0.8096 0.0078  0.8120 0.0073  0.8108 0.0104 |95/95/95| 0.81175 0.00785  0.79518-0.82833  0.78898-
0.83452
   515     15        15033| 0.8115 0.0097  0.8156 0.0077  0.8153 0.0125 |95/95/95| 0.81902 0.00788  0.80185-0.83620  0.79494-
0.84311
   520     10        10058| 0.8078 0.0095  0.8144 0.0081  0.8047 0.0114 |95/95/95| 0.82210 0.01244  0.79269-0.85152  0.77857-
0.86564
 ------------------------------------------------------------------------------------------------------------------------------
---
   525      5         5076| 0.8194 0.0125  0.8184 0.0114  0.8011 0.0164 |95/99/95| 0.81633 0.01852  0.73663-0.89603  0.63251-
1.00015
   527      3         3001| 0.8249 0.0219  0.8237 0.0199  0.8129 0.0159 |
   528      2         1996| 0.8267 0.0378  0.8307 0.0322  0.8241 0.0194 |

 the minimum estimated standard deviation for the col/abs/tl keff estimator occurs with   0 inactive cycles and  530 active
cycles.

 the first active half of the problem skips 30 cycles and uses 250 active cycles; the second half skips 280 and uses 250 cycles.
 the col/abs/trk-len keff, one standard deviation, and 68, 95, and 99 percent intervals for each active half of the problem are:

             problem        keff     standard deviation       68% confidence         95% confidence         99% confidence

           first half     0.81362         0.00164           0.81198 to 0.81526     0.81035 to 0.81688     0.80929 to 0.81794
          second half     0.80936         0.00164           0.80771 to 0.81100     0.80608 to 0.81263     0.80501 to 0.81370
         final result     0.81154         0.00116           0.81038 to 0.81269     0.80923 to 0.81384     0.80848 to 0.81459

 the first and second half values of k(collision/absorption/track length) appear to be the same at the 95 percent confidence
level.
```

```
1plot of the estimated col/abs/track-length keff one standard deviation interval by active cycle number (| = final keff =
0.81154)

 inactive   active 0.80                  0.81                  0.82                  0.83                  0.84
   cycles   cycles  |---------------------|---------------------|---------------------|---------------------|
        0      530  |                       (-k--)                                                            |
        5      525  |                       (-|k-)                                                            |
       10      520  |                       (-|k--)                                                           |
       15      515  |                       (-|k--)                                                           |
       20      510  |                       (-|k--)                                                           |
       25      505  |                       (-|k-)                                                            |
       30      500  *                      (--k--)                                                           *
       35      495  |                      (--k--)                                                            |
       40      490  |                     (--k|-)                                                             |
       45      485  +                     (--k|-)                                                             +
       50      480  |                     (--k|-)                                                             |
       55      475  |                     (--k|-)                                                             |
       60      470  |                     (--k|-)                                                             |
       65      465  |                     (--k|-)                                                             |
       70      460  |                    (--k-|)                                                              |
       75      455  |                    (--k-|)                                                              |
       80      450  |                    (--k-|)                                                              |
       85      445  |                    (--k-|)                                                              |
       90      440  |                   (---k-|)                                                              |
       95      435  +                    (--k-|)                                                              +
      100      430  |                    (--k-|)                                                              |
      105      425  |                   (--k--|                                                               |
      110      420  |                   (--k--|                                                               |
      115      415  |                   (--k--|                                                               |
      120      410  |                   (--k--|                                                               |
      125      405  |                   (--k--|                                                               |
      130      400  |                   (--k--|                                                               |
      135      395  |                  (---k--|                                                               |
      140      390  |                  (---k--|                                                               |
      145      385  +                  (---k--|                                                               +
      150      380  |                  (---k--|                                                               |
      155      375  |                  (---k--|                                                               |
      160      370  |                  (---k--|                                                               |
      165      365  |                  (--k---|                                                               |
      170      360  |                  (--k---|                                                               |
      175      355  |                  (--k--)|                                                               |
      180      350  |                  (--k--)|                                                               |
      185      345  |                 (--k---)|                                                               |
      190      340  |                 (---k--)|                                                               |
      195      335  +                  (--k---|                                                               +
      200      330  |                  (---k--|                                                               |
      205      325  |                   (--k--|)                                                              |
      210      320  |                   (--k--|)                                                              |
      215      315  |                  (---k--|)                                                              |
      220      310  |                  (---k--|                                                               |
      225      305  |                 (---k---|                                                               |
      230      300  |                  (---k--|)                                                              |
      235      295  |                  (---k--|                                                               |
      240      290  |                 (---k---|                                                               |
      245      285  +                 (--k---)|                                                               +
      250      280  |                 (---k--)|                                                               |
      255      275  |                 (---k---|                                                               |
      260      270  |                 (---k---|                                                               |
      265      265  |                 (---k---|                                                               |
      270      260  |                 (---k---|                                                               |
      275      255  |                (---k---)|                                                               |
      280      250  |                (---k---)|                                                               |
      285      245  |               (---k---) |                                                               |
      290      240  |               (----k---)|                                                               |
      295      235  +               (---k----)|                                                               +
      300      230  |               (----k---)|                                                               |
      305      225  |                (----k---|                                                               |
      310      220  |                (----k---|                                                               |
      315      215  |                (----k---|                                                               |
      320      210  |                (---k----|                                                               |
      325      205  |                 (----k--|)                                                              |
      330      200  |                (----k---|)                                                              |
      335      195  |                (----k---|)                                                              |
      340      190  |                 (----k--|-)                                                             |
      345      185  +                (---k----|                                                               +
      350      180  |               (----k----|                                                               |
      355      175  |              (----k----)|                                                               |
      360      170  |             (----k----) |                                                               |
      365      165  |              (----k----)|                                                               |
      370      160  |              (----k----)|                                                               |
      375      155  |             (----k-----)|                                                               |
      380      150  |             (----k----) |                                                               |
      385      145  |            (----k-----) |                                                               |
      390      140  |             (----k-----)|                                                               |
      395      135  +            (----k-----) |                                                               +
      400      130  |            (-----k-----)|                                                               |
      405      125  |           (-----k-----)  |                                                               |
      410      120  |           (-----k-----)  |                                                               |
      415      115  |           (-----k-----)  |                                                               |
      420      110  |           (-----k------) |                                                               |
      425      105  |            (-----k------|                                                               |
      430      100  |           (------k------|                                                               |
      435       95  |           (------k------|                                                               |
      440       90  |          (------k------)|                                                               |
      445       85  +          (-------k------|                                                               +
      450       80  |           (-------k-----|-)                                                             |
```

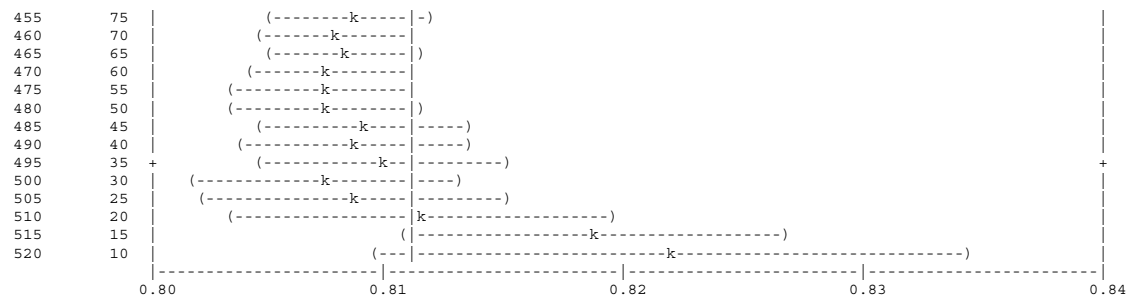


```
 ************************************************************************************************************************
 dump no.    2 on file P1_Acc_NACCoC_c1.00_g0.00_e0.00_d0.01cm_HP_36mm.inpr     nps =      530870     coll =       75888898
ctm =       11.75   nrn =         769937194


         6 warning messages so far.


 run terminated when   530   kcode cycles were done.

 computer time =   11.91 minutes

 mcnp     version 5     06212004                    10/25/07 23:17:01                    probid =  10/25/07 23:04:59
```

Figure 6.6.15-3 Square Pitch MOX Rods – MOX Services Fuel Composition

```
NAC-LWT Cask - MOX Experiments - Accident Transport Conditions
C
C EXCEL File Version: v2.00
C Run Version: v2.00
C
C Fissile Material Type: MOX Services
C Rod Interior Void Moderator Density: 0.9982 g/cc
C Canister Interior Moderator Density: 0.9982 g/cc
C Canister to Cask Gap Moderator Density: 0.9982 g/cc
C Cask Exterior Moderator Density: 0.0001 g/cc
C Boundary Condition / Distance:  Reflected / 0.01 cm
C
C Fuel Rod Pitch: 3.8 cm
C Fuel Rod Pitch Cofiguration: Square
C Number of Rods: 16
C
C Base Fuel Parameters: NACCoC
C
c Cells - Fuel Rod - NACCoC
1 1 -10.555 -1   u=3 $ Fuel
2 2 -0.9982 -2 +1  u=3 $ Plenum + Fuel to Clad Gap
3 3 -6.56 -3 +2  u=3 $ Clad + End Plugs
4 4 -0.9982 +3   u=3 $ Outside Fuel Rod
C 16 Rods - Square Pitch
10 4 -0.9982 -10
           *trcl=( 1.9000 1.9000 0.0000 )
           lat=1 u=2 fill=-3:3 -3:3 0:0
      2 2 2 2 2 2
      2 3 3 3 3 2 2
      2 3 3 3 3 2 2
      2 3 3 3 3 2 2
      2 3 3 3 3 2 2
      2 2 2 2 2 2 2
      2 2 2 2 2 2 2
C PWR Basket - Cells
20  4 -0.9982 -20   fill=2  u=1 $ Rod Array Container
21  5 -0.9982 +20 -21    u=1 $ Basket Cavity
22  7 -2.7020 -22 +21    u=1 $ Basket Body
23  5 -0.9982 +22     u=1 $ Outside
C Cells - LWT Cask Accident Conditions
40 8 -11.344 -43     u=0 $ BotPb
41 5 -0.9982 -42 fill=1    u=0 $ Cavity
42 9 -7.9400 -41 +43    u=0 $ Bottom
43 9 -7.9400 -40 +41 +45 +48 +42 u=0 $ OuterShell
44 9 -7.9400 -44 +47 +42   u=0 $ InnerShellTaper
45 9 -7.9400 -46 +42    u=0 $ InnerShell
46 8 -11.344 -47 +46    u=0 $ Lead
47 8 -11.344 -45 +44 +47   u=0 $ LeadTaper
48 0         -48 +47    u=0 $ LeadGap
49 6 -0.0001 -49 +40    u=0 $ Gap to Reflector
50 0          +49    u=0 $ Boundary

c Surfaces - Fuel Rod - NACCoC
1 RCC 0.0000 0.0000 10.5207 0.0000 0.0000 389.8900 0.4781   $ Fuel pellet stack
2 RCC 0.0000 0.0000 6.3990 0.0000 0.0000 409.4227 0.4876   $ Annulus + Plenum
3 RCC 0.0000 0.0000 5.0800 0.0000 0.0000 411.8226 0.5588   $ Clad + End-Caps
c Surfaces - Pitch - NACCoC
10 RPP -1.9000 1.9000 -1.9000 1.9000 -1.0000 453.12    $ Lattice Cell Boundaries
C PWR Basket - Surfaces
20  RPP -6.9294 6.9294 -6.9294 6.9294 0.0000 452.1200  $ Array Container
21  RPP -11.2713 11.2713 -11.2713 11.2713 0.0000 452.1200  $ Basket Opening
22  RCC 0.0000 0.0000 0.0000 0.0000 0.0000 452.1200 16.83512 $ Basket Outer Body
C Surfaces - LWT Cask Accident Conditions
40 RCC 0.0000 0.0000 -26.6700 0.0000 0.0000 507.3650 36.5189 $ Lwt Body
41 RCC 0.0000 0.0000 -26.6700 0.0000 0.0000 26.6700 36.5189 $ Bottom
42 RCC 0.0000 0.0000 0.0000 0.0000 0.0000 452.1200 16.9863 $ Cavity
43 RCC 0.0000 0.0000 -17.7800 0.0000 0.0000 7.6200 26.3525 $ Bottom gamma shield
44 RCC 0.0000 0.0000 0.0000 0.0000 0.0000 444.5000 20.1740 $ Lead id - taper
45 RCC 0.0000 0.0000 0.0000 0.0000 0.0000 444.5000 31.5976 $ Lead od - taper
46 RCC 0.0000 0.0000 13.8176 0.0000 0.0000 416.8648 18.9103 $ Lead id
47 RCC 0.0000 0.0000 13.8176 0.0000 0.0000 416.8648 33.3271 $ Lead od
48 RCC 0.0000 0.0000 13.8176 0.0000 0.0000 416.8648 33.4645 $ Lead gap
*49 RPP -36.5289 36.5289 -36.5289 36.5289 -26.6800 480.7050  $ Container

c
c Materials List
c
C MOX Material Composition Fuel
m1     92235 -5.6994E-03
       92238 -8.0851E-01
       94238 -3.3724E-05
       94239 -6.4076E-02
       94240 -3.0352E-03
       94241 -2.6980E-04
       94242 -3.3724E-05
        8016 -1.1835E-01
C Rod Interior Void Material
m2     1001 2
       8016 1
mt2      lwtr.01
```

```
c Clad Material
m3 26054 -7.063E-05 24050 -4.179E-05 7014 -4.980E-04
      26056 -1.149E-03 24052 -8.370E-04 7015 -1.981E-06
      26057 -2.702E-05 24053 -9.673E-05
      26058 -3.631E-06 24054 -2.448E-05
      40000 -9.823E-01 50000 -1.500E-02
C Canister Interior Non-Fuel Space
m4    1001 2
      8016 1
mt4     lwtr.01
C Canister to Cask Gap Material
m5    1001 2
      8016 1
mt5     lwtr.01
C Cask Exterior Material
m6    1001 2
      8016 1
mt6     lwtr.01
c Aluminum
m7 13027 -1.000E+00
C Water/Glycol
m10   1001 -1.03651E-01
      8016 -6.75619E-01
      6000 -2.20730E-01
mt10    lwtr.01
c Lead
m8 82206 -2.534E-01
      82207 -2.207E-01
      82208 -5.259E-01
c SS304
m9 24050 -7.939E-03 26054 -3.927E-02 28058 -6.384E-02
      24052 -1.590E-01 26056 -6.387E-01 28060 -2.543E-02
      24053 -1.838E-02 26057 -1.502E-02 28061 -1.124E-03
      24054 -4.652E-03 26058 -2.019E-03 28062 -3.639E-03
          28064 -9.623E-04
      25055 -2.000E-02
C Aluminum Honeycomb Impact Limiter
m11   13027 -1.0
C Mode
mode n
C Cell Importances
imp:n 1 18r 0
C
C Criticality Controls
kcode 1000 0.80 30 530
C
C Starting Source Definition
sdef cell=41:20:10:1
      erg=d1
      pos=0 0 10.5207
      rad=d2
      axs=0 0 1
      ext=d3
sp1   -3
si2 0.0000 0.4781
sp2 -21 1
si3 0.0000 389.8900
sp3 0 1
C Print Control
print
C Random Number Generator
rand gen=2 seed=19073486328125 stride=152917 hist=1
c
c Rotation Matrix
*TR1 0.0 0.0 0.0 -30 60 90 -120 -30 90 90 90 0  $ z-rotation -30 degrees
```

6.6.16 ANSTO/DIDO Combined Basket Payload

This section contains input and output files from the evaluation of the combined DIDO and ANSTO fuel models. These files are shown in Figure 6.6.16-1.

Figure 6.6.16-1 Combined DIDO and ANSTO Basket Sample Input/Output

```
      PRIMARY MODULE ACCESS AND INPUT RECORD ( SCALE DRIVER - 95/03/29 - 09:06:37 )
MODULE CSAS25   WILL BE CALLED
  LWT 5 DIDO with DIDO, 1 ANSTO with Moata load
  '
  27GROUPNDF4 LATTICECELL

  'Material Description for DIDO HEU Fuel
  URANIUM  1  DEN=0.4450  1.00  293.0  92235 94.0   92238 06.0  END
  AL       1  DEN=1.4568  1.00  293.0      END
  AL       2             1.00  293.0      END
  H2O      3  DEN=0.9998  1.00  293.0      END

  'Material Description for MOATA Mark II Fuel
  URANIUM  11  DEN=0.3093  1.00  293.0  92235 92.0   92238 08.0  END
  AL       11  DEN=0.7718  1.00  293.0      END
  AL       12             1.00  293.0      END
  H2O      13  DEN=0.9998  1.00  293.0      END

  'Material Description for DIDO HIFAR Mark III Fuel
  URANIUM  21  DEN=0.4084  1.00  293.0  92235 85.0   92238 15.0  END
  AL       21  DEN=0.2957  1.00  293.0      END
  AL       22             1.00  293.0      END
  H2O      23  DEN=0.9998  1.00  293.0      END

  'General Material Description
  H2O      4  DEN=0.9998  1.00  293.0      END
  PB       5              1.00  293.0      END
  SS304    6              1.00  293.0      END
  AL       7              1.00  293.0      END
  SS304    8              1.00  293.0      END
  H2O      9  DEN=0.0001  1.00  293.0      END
  H2O      10 DEN=0.9998  1.00  293.0      END

  END COMP

  'Used to find the Dancoff factor for Mark II fuel:
  'SYMMSLABCELL  0.3832  0.1832  11  13  0.2032  12  END

  'Used to find the Dancoff factor for Mark III fuel:
  'SYMMSLABCELL  0.6342  0.1039  21  23  0.1239  22  END

  SYMMSLABCELL  1.0000  0.0800  1  3  0.1300  2  END
  MORE DATA
  RES=11  SLAB 0.1832  DAN(11)=0.44644913
  RES=21  SLAB 0.1039  DAN(21)=0.30363533  END

  READ PARAM
  TBA=5  TME=90  RUN=YES  GEN=1203  NPG=1000
  END PARAM

  READ START
  XSM=-16.85  XSP=16.85  YSM=16.85  YSP=-16.85  ZSM=26.67  ZSP=473.35
  END START

  READ GEOM
  UNIT  1
      COM='DIDO Fueled Annular Sections DIDO Tube  1  Loose'
  '   DIDO Fuel Annulus    1
      CYLINDER  3  1  3.0300  58.7500  0.0000  ORIGIN  0.0000  0.0000
      CYLINDER  2  1  3.0550  58.7500  0.0000  ORIGIN  0.0000  0.0000
      CYLINDER  1  1  3.1350  58.7500  0.0000  ORIGIN  0.0000  0.0000
      CYLINDER  2  1  3.1600  58.7500  0.0000  ORIGIN  0.0000  0.0000
  '   DIDO Fuel Annulus    2
      CYLINDER  3  1  3.5300  58.7500  0.0000  ORIGIN  0.0000  0.0000
      CYLINDER  2  1  3.5550  58.7500  0.0000  ORIGIN  0.0000  0.0000
      CYLINDER  1  1  3.6350  58.7500  0.0000  ORIGIN  0.0000  0.0000
      CYLINDER  2  1  3.6600  58.7500  0.0000  ORIGIN  0.0000  0.0000
  '   DIDO Fuel Annulus    3
      CYLINDER  3  1  4.0300  58.7500  0.0000  ORIGIN  0.0000  0.0000
      CYLINDER  2  1  4.0550  58.7500  0.0000  ORIGIN  0.0000  0.0000
      CYLINDER  1  1  4.1350  58.7500  0.0000  ORIGIN  0.0000  0.0000
      CYLINDER  2  1  4.1600  58.7500  0.0000  ORIGIN  0.0000  0.0000
  '   DIDO Fuel Annulus    4
      CYLINDER  3  1  4.5300  58.7500  0.0000
      CYLINDER  2  1  4.5550  58.7500  0.0000
      CYLINDER  1  1  4.6350  58.7500  0.0000
      CYLINDER  2  1  4.6599  58.7500  0.0000
  UNIT  2
      COM='DIDO Axial Clad Sections DIDO Tube  1  Loose'
  '   DIDO Clad Axial End Piece    1
      CYLINDER  3  1  3.0300  1.3750  0.0000  ORIGIN  0.0000  0.0000
      CYLINDER  2  1  3.1600  1.3750  0.0000  ORIGIN  0.0000  0.0000
  '   DIDO Clad Axial End Piece    2
      CYLINDER  3  1  3.5300  1.3750  0.0000  ORIGIN  0.0000  0.0000
      CYLINDER  2  1  3.6600  1.3750  0.0000  ORIGIN  0.0000  0.0000
  '   DIDO Clad Axial End Piece    3
      CYLINDER  3  1  4.0300  1.3750  0.0000  ORIGIN  0.0000  0.0000
      CYLINDER  2  1  4.1600  1.3750  0.0000  ORIGIN  0.0000  0.0000
  '   DIDO Clad Axial End Piece    4
      CYLINDER  3  1  4.5300  1.3750  0.0000
      CYLINDER  2  1  4.6599  1.3750  0.0000
  UNIT  3
      COM='DIDO Fuel Element DIDO Tube  1'
```

```
    CYLINDER  3  1  4.6600  61.5000  0.0000
    HOLE  2  0.0000  0.0000  0.0000
    HOLE  1  0.0000  0.0000  1.3750
    HOLE  2  0.0000  0.0000  60.1250
UNIT  4
    COM='DIDO Basket Fuel Tube - Fuel Down        Radial Centered'
    CYLINDER  4  1  5.0927  73.1773  0.0000
    HOLE  3  0.0000  0.0000  0.0000
    CYLINDER  6  1  5.3974  73.1773  0.0000
UNIT  5
    COM='DIDO Basket Fuel Tube - Fuel Up        Radial Centered'
    CYLINDER  4  1  5.0927  73.1773  0.0000
    HOLE  3  0.0000  0.0000  11.6772
    CYLINDER  6  1  5.3974  73.1773  0.0000
UNIT  6
    COM='DIDO Basket Bottom Plate Hole'
    CYLINDER  4  1  1.27  1.2698  0.0000
UNIT  7
    COM='DIDO Basket Bottom Plate'
    CYLINDER  6  1  16.8466  1.2698  0.0000
    HOLE  6  0.0000  0.0000  0.0000
    HOLE  6  10.7950  0.0000  0.0000
    HOLE  6  5.3975  9.3487  0.0000
    HOLE  6  -5.3975  9.3487  0.0000
    HOLE  6  -10.7950  0.0000  0.0000
    HOLE  6  -5.3975  -9.3487  0.0000
    HOLE  6  5.3975  -9.3487  0.0000
UNIT  8
    COM='DIDO Heat Transfer Bar / Rod'
    CYLINDER  7  1  0.3165  73.1773  0.0000
UNIT  9
    COM='DIDO Basket Fuel Down'
    CYLINDER  4  1  16.1926  73.1773  0.0000
    HOLE  4  0.0000  0.0000  0.0000
    HOLE  4  10.7950  0.0000  0.0000
    HOLE  8  4.9493  2.8575  0.0000
    HOLE  8  4.6024  3.3881  0.0000
    HOLE  8  5.2354  2.2917  0.0000
    HOLE  4  5.3975  9.3487  0.0000
    HOLE  8  0.0000  5.7150  0.0000
    HOLE  8  -0.6330  5.6798  0.0000
    HOLE  8  0.6330  5.6798  0.0000
    HOLE  4  -5.3975  9.3487  0.0000
    HOLE  8  -4.9493  2.8575  0.0000
    HOLE  8  -5.2354  2.2917  0.0000
    HOLE  8  -4.6024  3.3881  0.0000
    HOLE  4  -10.7950  0.0000  0.0000
    HOLE  8  -4.9493  -2.8575  0.0000
    HOLE  8  -4.6024  -3.3881  0.0000
    HOLE  8  -5.2354  -2.2917  0.0000
    HOLE  4  -5.3975  -9.3487  0.0000
    HOLE  8  0.0000  -5.7150  0.0000
    HOLE  8  0.6330  -5.6798  0.0000
    HOLE  8  -0.6330  -5.6798  0.0000
    HOLE  4  5.3975  -9.3487  0.0000
    HOLE  8  4.9493  -2.8575  0.0000
    HOLE  8  5.2354  -2.2917  0.0000
    HOLE  8  4.6024  -3.3881  0.0000
    CYLINDER  6  1  16.6688  73.1773  0.0000
    CYLINDER  4  1  16.8466  73.1773  0.0000
UNIT  10
    COM='DIDO Basket Fuel Up'
    CYLINDER  4  1  16.1926  73.1773  0.0000
    HOLE  5  0.0000  0.0000  0.0000
    HOLE  5  10.7950  0.0000  0.0000
    HOLE  8  4.9493  2.8575  0.0000
    HOLE  8  4.6024  3.3881  0.0000
    HOLE  8  5.2354  2.2917  0.0000
    HOLE  5  5.3975  9.3487  0.0000
    HOLE  8  0.0000  5.7150  0.0000
    HOLE  8  -0.6330  5.6798  0.0000
    HOLE  8  0.6330  5.6798  0.0000
    HOLE  5  -5.3975  9.3487  0.0000
    HOLE  8  -4.9493  2.8575  0.0000
    HOLE  8  -5.2354  2.2917  0.0000
    HOLE  8  -4.6024  3.3881  0.0000
    HOLE  5  -10.7950  0.0000  0.0000
    HOLE  8  -4.9493  -2.8575  0.0000
    HOLE  8  -4.6024  -3.3881  0.0000
    HOLE  8  -5.2354  -2.2917  0.0000
    HOLE  5  -5.3975  -9.3487  0.0000
    HOLE  8  0.0000  -5.7150  0.0000
    HOLE  8  0.6330  -5.6798  0.0000
    HOLE  8  -0.6330  -5.6798  0.0000
    HOLE  5  5.3975  -9.3487  0.0000
    HOLE  8  4.9493  -2.8575  0.0000
    HOLE  8  5.2354  -2.2917  0.0000
    HOLE  8  4.6024  -3.3881  0.0000
    CYLINDER  6  1  16.6688  73.1773  0.0000
    CYLINDER  4  1  16.8466  73.1773  0.0000

UNIT  101
    COM='Mark II Fuel Plate'
    CUBOID  11  1  2P0.0916  2P3.6608  58.4200  0.0000
    CUBOID  12  1  2P0.1016  2P3.8291  58.4200  0.0000
    CUBOID  13  1  2P0.1916  2P3.9334  58.4200  0.0000
UNIT  102
```

```
    COM='Mark II Fuel Cavity Material Replacement - Side Plate'
    CUBOID  13  1  2P0.3175  2P3.9334  58.4200  0.0000
UNIT  103
    COM='Mark II Fuel Water Gap to Side Plate'
    CUBOID  13  1  2P0.0450  2P3.9334  58.4200  0.0000
UNIT  104
    COM='Mark II Plate Bundle'
    ARRAY  111  -3.4074  -3.9334  0.0000
UNIT  105
    COM='Mark II Fuel Plate'
    CUBOID  11  1  2P3.6608  2P0.0916  58.4200  0.0000
    CUBOID  12  1  2P3.8291  2P0.1016  58.4200  0.0000
    CUBOID  13  1  2P3.9334  2P0.1916  58.4200  0.0000
UNIT  106
    COM='Mark II Fuel Cavity Material Replacement - Side Plate'
    CUBOID  13  1  2P3.9334  2P0.3175  58.4200  0.0000
UNIT  107
    COM='Mark II Fuel Water Gap to Side Plate'
    CUBOID  13  1  2P3.9334  2P0.0450  58.4200  0.0000
UNIT  108
    COM='Mark II Plate Bundle'
    ARRAY  112  -3.9334  -3.4074  0.0000
UNIT  109
    COM='Mark II Tube 1 - Fuel Down        Radial Shifted toward    0  '
    CYLINDER  13  1  5.2388  73.0240  0.0000
    HOLE  104  0.0000  0.0000  0.0000
    CYLINDER  6  1  5.55525  73.0240  0.0000
UNIT  111
    COM='Mark II Tube 2 - Fuel Down        Radial Shifted toward    180  '
    CYLINDER  13  1  5.2388  73.0240  0.0000
    HOLE  104  -0.0508  0.0000  0.0000
    CYLINDER  6  1  5.55525  73.0240  0.0000
UNIT  113
    COM='Mark II Tube 3 - Fuel Down        Radial Shifted toward    240  '
    CYLINDER  13  1  5.2388  73.0240  0.0000
    HOLE  108  -0.0164  -0.0298  0.0000
    CYLINDER  6  1  5.55525  73.0240  0.0000
UNIT  115
    COM='Mark II Tube 4 - Fuel Down        Radial Shifted toward    300  '
    CYLINDER  13  1  5.2388  73.0240  0.0000
    HOLE  108  0.0164  -0.0298  0.0000
    CYLINDER  6  1  5.55525  73.0240  0.0000
UNIT  117
    COM='Mark II Tube 5 - Fuel Down        Radial Shifted toward    0  '
    CYLINDER  13  1  5.2388  73.0240  0.0000
    HOLE  104  0.0508  0.0000  0.0000
    CYLINDER  6  1  5.55525  73.0240  0.0000
UNIT  119
    COM='Mark II Tube 6 - Fuel Down        Radial Shifted toward    60  '
    CYLINDER  13  1  5.2388  73.0240  0.0000
    HOLE  108  0.0164  0.0298  0.0000
    CYLINDER  6  1  5.55525  73.0240  0.0000
UNIT  121
    COM='Mark II Tube 7 - Fuel Down        Radial Shifted toward    120  '
    CYLINDER  13  1  5.2388  73.0240  0.0000
    HOLE  108  -0.0164  0.0298  0.0000
    CYLINDER  6  1  5.55525  73.0240  0.0000

UNIT  201
    COM='Mark III Fueled Annular Sections       Tube  1  '
'   Mark III Aluminum Inner
    CYLINDER  23  1  2.9100  59.0750  0.0000
    CYLINDER  22  1  2.911  59.0750  0.0000
'   Mark III Fuel Annulus    1
    CYLINDER  23  1  3.0994  59.0750  0.0000
    CYLINDER  22  1  3.1094  59.0750  0.0000
    CYLINDER  21  1  3.2133  59.0750  0.0000
    CYLINDER  22  1  3.2233  59.0750  0.0000
'   Mark III Fuel Annulus    2
    CYLINDER  23  1  3.9218  59.0750  0.0000
    CYLINDER  22  1  3.9318  59.0750  0.0000
    CYLINDER  21  1  4.0357  59.0750  0.0000
    CYLINDER  22  1  4.0457  59.0750  0.0000
'   Mark III Fuel Annulus    3
    CYLINDER  23  1  4.7442  59.0750  0.0000
    CYLINDER  22  1  4.7542  59.0750  0.0000
    CYLINDER  21  1  4.8581  59.0750  0.0000
    CYLINDER  22  1  4.8681  59.0750  0.0000
'   Mark III Aluminum Outer
    CYLINDER  23  1  5.0700  59.0750  0.0000
    CYLINDER  22  1  5.0799  59.0750  0.0000
UNIT  202
    COM='Mark III Axial Clad Sections       Tube  1  '
'   Mark III Aluminum Inner
    CYLINDER  23  1  2.9100  0.0005  0.0000
    CYLINDER  22  1  2.911  0.0005  0.0000
'   Mark III Clad Axial End Piece    1
    CYLINDER  23  1  3.0994  0.0005  0.0000
    CYLINDER  22  1  3.2233  0.0005  0.0000
'   Mark III Clad Axial End Piece    2
    CYLINDER  23  1  3.9218  0.0005  0.0000
    CYLINDER  22  1  4.0457  0.0005  0.0000
'   Mark III Clad Axial End Piece    3
    CYLINDER  23  1  4.7442  0.0005  0.0000
    CYLINDER  22  1  4.8681  0.0005  0.0000
'   Mark III Aluminum Outer
    CYLINDER  23  1  5.0700  0.0005  0.0000
```

```
    CYLINDER  22  1  5.0799  0.0005  0.0000
UNIT  203
    COM='Mark III Fuel Element     Tube  1 '
    CYLINDER  23  1  5.0800  59.0763  0.0000
    HOLE  202  0.0000  0.0000  0.0000
    HOLE  201  0.0000  0.0000  0.0006
    HOLE  202  0.0000  0.0000  59.0757
UNIT  204
    COM='Mark III Basket Fuel Tube - Fuel Down Radial Shift toward 0 Deg'
    CYLINDER  4  1  5.2578  73.0249  0.0000
    HOLE  203  0.0000  0.0000  0.0000
    CYLINDER  6  1  5.57510  73.0249  0.0000
UNIT  206
    COM='Mark III Fueled Annular Sections       Tube  2  '
'   Mark III Aluminum Inner
    CYLINDER  23  1  2.9100  59.0750  0.0000
    CYLINDER  22  1  2.911  59.0750  0.0000
'   Mark III Fuel Annulus    1
    CYLINDER  23  1  3.0994  59.0750  0.0000
    CYLINDER  22  1  3.1094  59.0750  0.0000
    CYLINDER  21  1  3.2133  59.0750  0.0000
    CYLINDER  22  1  3.2233  59.0750  0.0000
'   Mark III Fuel Annulus    2
    CYLINDER  23  1  3.9218  59.0750  0.0000
    CYLINDER  22  1  3.9318  59.0750  0.0000
    CYLINDER  21  1  4.0357  59.0750  0.0000
    CYLINDER  22  1  4.0457  59.0750  0.0000
'   Mark III Fuel Annulus    3
    CYLINDER  23  1  4.7442  59.0750  0.0000
    CYLINDER  22  1  4.7542  59.0750  0.0000
    CYLINDER  21  1  4.8581  59.0750  0.0000
    CYLINDER  22  1  4.8681  59.0750  0.0000
'   Mark III Aluminum Outer
    CYLINDER  23  1  5.0700  59.0750  0.0000
    CYLINDER  22  1  5.0799  59.0750  0.0000
UNIT  207
    COM='Mark III Axial Clad Sections       Tube  2  '
'   Mark III Aluminum Inner
    CYLINDER  23  1  2.9100  0.0005  0.0000
    CYLINDER  22  1  2.911  0.0005  0.0000
'   Mark III Clad Axial End Piece    1
    CYLINDER  23  1  3.0994  0.0005  0.0000
    CYLINDER  22  1  3.2233  0.0005  0.0000
'   Mark III Clad Axial End Piece    2
    CYLINDER  23  1  3.9218  0.0005  0.0000
    CYLINDER  22  1  4.0457  0.0005  0.0000
'   Mark III Clad Axial End Piece    3
    CYLINDER  23  1  4.7442  0.0005  0.0000
    CYLINDER  22  1  4.8681  0.0005  0.0000
'   Mark III Aluminum Outer
    CYLINDER  23  1  5.0700  0.0005  0.0000
    CYLINDER  22  1  5.0799  0.0005  0.0000
UNIT  208
    COM='Mark III Fuel Element     Tube  2'
    CYLINDER  23  1  5.0800  59.0763  0.0000
    HOLE  207  0.0000  0.0000  0.0000
    HOLE  206  0.0000  0.0000  0.0006
    HOLE  207  0.0000  0.0000  59.0757
UNIT  209
    COM='Mark III Basket Fuel Tube - Fuel Down  Radial Shift toward 180 Deg'
    CYLINDER  4  1  5.2578  73.0249  0.0000
    HOLE  208  -0.1777  0.0000  0.0000
    CYLINDER  6  1  5.57510  73.0249  0.0000
UNIT  211
    COM='Mark III Fueled Annular Sections       Tube  3  '
'   Mark III Aluminum Inner
    CYLINDER  23  1  2.9100  59.0750  0.0000
    CYLINDER  22  1  2.911  59.0750  0.0000
'   Mark III Fuel Annulus    1
    CYLINDER  23  1  3.0994  59.0750  0.0000
    CYLINDER  22  1  3.1094  59.0750  0.0000
    CYLINDER  21  1  3.2133  59.0750  0.0000
    CYLINDER  22  1  3.2233  59.0750  0.0000
'   Mark III Fuel Annulus    2
    CYLINDER  23  1  3.9218  59.0750  0.0000
    CYLINDER  22  1  3.9318  59.0750  0.0000
    CYLINDER  21  1  4.0357  59.0750  0.0000
    CYLINDER  22  1  4.0457  59.0750  0.0000
'   Mark III Fuel Annulus    3
    CYLINDER  23  1  4.7442  59.0750  0.0000
    CYLINDER  22  1  4.7542  59.0750  0.0000
    CYLINDER  21  1  4.8581  59.0750  0.0000
    CYLINDER  22  1  4.8681  59.0750  0.0000
'   Mark III Aluminum Outer
    CYLINDER  23  1  5.0700  59.0750  0.0000
    CYLINDER  22  1  5.0799  59.0750  0.0000
UNIT  212
    COM='Mark III Axial Clad Sections       Tube  3  '
'   Mark III Aluminum Inner
    CYLINDER  23  1  2.9100  0.0005  0.0000
    CYLINDER  22  1  2.911  0.0005  0.0000
'   Mark III Clad Axial End Piece    1
    CYLINDER  23  1  3.0994  0.0005  0.0000
    CYLINDER  22  1  3.2233  0.0005  0.0000
'   Mark III Clad Axial End Piece    2
    CYLINDER  23  1  3.9218  0.0005  0.0000
    CYLINDER  22  1  4.0457  0.0005  0.0000
```

```
'   Mark III Clad Axial End Piece    3
    CYLINDER  23  1  4.7442  0.0005  0.0000
    CYLINDER  22  1  4.8681  0.0005  0.0000
'   Mark III Aluminum Outer
    CYLINDER  23  1  5.0700  0.0005  0.0000
    CYLINDER  22  1  5.0799  0.0005  0.0000
UNIT  213
    COM='Mark III Fuel Element     Tube  3'
    CYLINDER  23  1  5.0800  59.0763  0.0000
    HOLE  212  0.0000  0.0000  0.0000
    HOLE  211  0.0000  0.0000  0.0006
    HOLE  212  0.0000  0.0000  59.0757
UNIT  214
    COM='Mark III Basket Fuel Tube - Fuel Down  Radial Shift toward 240 Deg'
    CYLINDER  4  1  5.2578  73.0249  0.0000
    HOLE  213  -0.0889  -0.1539  0.0000
    CYLINDER  6  1  5.57510  73.0249  0.0000
UNIT  216
    COM='Mark III Fueled Annular Sections       Tube  4  '
'   Mark III Aluminum Inner
    CYLINDER  23  1  2.9100  59.0750  0.0000
    CYLINDER  22  1  2.911  59.0750  0.0000
'   Mark III Fuel Annulus    1
    CYLINDER  23  1  3.0994  59.0750  0.0000
    CYLINDER  22  1  3.1094  59.0750  0.0000
    CYLINDER  21  1  3.2133  59.0750  0.0000
    CYLINDER  22  1  3.2233  59.0750  0.0000
'   Mark III Fuel Annulus    2
    CYLINDER  23  1  3.9218  59.0750  0.0000
    CYLINDER  22  1  3.9318  59.0750  0.0000
    CYLINDER  21  1  4.0357  59.0750  0.0000
    CYLINDER  22  1  4.0457  59.0750  0.0000
'   Mark III Fuel Annulus    3
    CYLINDER  23  1  4.7442  59.0750  0.0000
    CYLINDER  22  1  4.7542  59.0750  0.0000
    CYLINDER  21  1  4.8581  59.0750  0.0000
    CYLINDER  22  1  4.8681  59.0750  0.0000
'   Mark III Aluminum Outer
    CYLINDER  23  1  5.0700  59.0750  0.0000
    CYLINDER  22  1  5.0799  59.0750  0.0000
UNIT  217
    COM='Mark III Axial Clad Sections       Tube  4  '
'   Mark III Aluminum Inner
    CYLINDER  23  1  2.9100  0.0005  0.0000
    CYLINDER  22  1  2.911  0.0005  0.0000
'   Mark III Clad Axial End Piece    1
    CYLINDER  23  1  3.0994  0.0005  0.0000
    CYLINDER  22  1  3.2233  0.0005  0.0000
'   Mark III Clad Axial End Piece    2
    CYLINDER  23  1  3.9218  0.0005  0.0000
    CYLINDER  22  1  4.0457  0.0005  0.0000
'   Mark III Clad Axial End Piece    3
    CYLINDER  23  1  4.7442  0.0005  0.0000
    CYLINDER  22  1  4.8681  0.0005  0.0000
'   Mark III Aluminum Outer
    CYLINDER  23  1  5.0700  0.0005  0.0000
    CYLINDER  22  1  5.0799  0.0005  0.0000
UNIT  218
    COM='Mark III Fuel Element     Tube  4'
    CYLINDER  23  1  5.0800  59.0763  0.0000
    HOLE  217  0.0000  0.0000  0.0000
    HOLE  216  0.0000  0.0000  0.0006
    HOLE  217  0.0000  0.0000  59.0757
UNIT  219
    COM='Mark III Basket Fuel Tube - Fuel Down  Radial Shift toward 300 Deg'
    CYLINDER  4  1  5.2578  73.0249  0.0000
    HOLE  218  0.0889  -0.1539  0.0000
    CYLINDER  6  1  5.57510  73.0249  0.0000
UNIT  221
    COM='Mark III Fueled Annular Sections       Tube  5  '
'   Mark III Aluminum Inner
    CYLINDER  23  1  2.9100  59.0750  0.0000
    CYLINDER  22  1  2.911  59.0750  0.0000
'   Mark III Fuel Annulus    1
    CYLINDER  23  1  3.0994  59.0750  0.0000
    CYLINDER  22  1  3.1094  59.0750  0.0000
    CYLINDER  21  1  3.2133  59.0750  0.0000
    CYLINDER  22  1  3.2233  59.0750  0.0000
'   Mark III Fuel Annulus    2
    CYLINDER  23  1  3.9218  59.0750  0.0000
    CYLINDER  22  1  3.9318  59.0750  0.0000
    CYLINDER  21  1  4.0357  59.0750  0.0000
    CYLINDER  22  1  4.0457  59.0750  0.0000
'   Mark III Fuel Annulus    3
    CYLINDER  23  1  4.7442  59.0750  0.0000
    CYLINDER  22  1  4.7542  59.0750  0.0000
    CYLINDER  21  1  4.8581  59.0750  0.0000
    CYLINDER  22  1  4.8681  59.0750  0.0000
'   Mark III Aluminum Outer
    CYLINDER  23  1  5.0700  59.0750  0.0000
    CYLINDER  22  1  5.0799  59.0750  0.0000
UNIT  222
    COM='Mark III Axial Clad Sections       Tube  5  '
'   Mark III Aluminum Inner
    CYLINDER  23  1  2.9100  0.0005  0.0000
    CYLINDER  22  1  2.911  0.0005  0.0000
'   Mark III Clad Axial End Piece    1
```

```
    CYLINDER  23  1  3.0994  0.0005  0.0000
    CYLINDER  22  1  3.2233  0.0005  0.0000
'   Mark III Clad Axial End Piece    2
    CYLINDER  23  1  3.9218  0.0005  0.0000
    CYLINDER  22  1  4.0457  0.0005  0.0000
'   Mark III Clad Axial End Piece    3
    CYLINDER  23  1  4.7442  0.0005  0.0000
    CYLINDER  22  1  4.8681  0.0005  0.0000
'   Mark III Aluminum Outer
    CYLINDER  23  1  5.0700  0.0005  0.0000
    CYLINDER  22  1  5.0799  0.0005  0.0000
UNIT  223
    COM='Mark III Fuel Element     Tube  5'
    CYLINDER  23  1  5.0800  59.0763  0.0000
    HOLE  222  0.0000  0.0000  0.0000
    HOLE  221  0.0000  0.0000  0.0006
    HOLE  222  0.0000  0.0000  59.0757
UNIT  224
    COM='Mark III Basket Fuel Tube - Fuel Down  Radial Shift toward 0 Deg'
    CYLINDER  4  1  5.2578  73.0249  0.0000
    HOLE  223  0.1777  0.0000  0.0000
    CYLINDER  6  1  5.57510  73.0249  0.0000
UNIT  226
    COM='Mark III Fueled Annular Sections       Tube  6  '
'   Mark III Aluminum Inner
    CYLINDER  23  1  2.9100  59.0750  0.0000
    CYLINDER  22  1  2.911  59.0750  0.0000
'   Mark III Fuel Annulus    1
    CYLINDER  23  1  3.0994  59.0750  0.0000
    CYLINDER  22  1  3.1094  59.0750  0.0000
    CYLINDER  21  1  3.2133  59.0750  0.0000
    CYLINDER  22  1  3.2233  59.0750  0.0000
'   Mark III Fuel Annulus    2
    CYLINDER  23  1  3.9218  59.0750  0.0000
    CYLINDER  22  1  3.9318  59.0750  0.0000
    CYLINDER  21  1  4.0357  59.0750  0.0000
    CYLINDER  22  1  4.0457  59.0750  0.0000
'   Mark III Fuel Annulus    3
    CYLINDER  23  1  4.7442  59.0750  0.0000
    CYLINDER  22  1  4.7542  59.0750  0.0000
    CYLINDER  21  1  4.8581  59.0750  0.0000
    CYLINDER  22  1  4.8681  59.0750  0.0000
'   Mark III Aluminum Outer
    CYLINDER  23  1  5.0700  59.0750  0.0000
    CYLINDER  22  1  5.0799  59.0750  0.0000
UNIT  227
    COM='Mark III Axial Clad Sections       Tube  6  '
'   Mark III Aluminum Inner
    CYLINDER  23  1  2.9100  0.0005  0.0000
    CYLINDER  22  1  2.911  0.0005  0.0000
'   Mark III Clad Axial End Piece    1
    CYLINDER  23  1  3.0994  0.0005  0.0000
    CYLINDER  22  1  3.2233  0.0005  0.0000
'   Mark III Clad Axial End Piece    2
    CYLINDER  23  1  3.9218  0.0005  0.0000
    CYLINDER  22  1  4.0457  0.0005  0.0000
'   Mark III Clad Axial End Piece    3
    CYLINDER  23  1  4.7442  0.0005  0.0000
    CYLINDER  22  1  4.8681  0.0005  0.0000
'   Mark III Aluminum Outer
    CYLINDER  23  1  5.0700  0.0005  0.0000
    CYLINDER  22  1  5.0799  0.0005  0.0000
UNIT  228
    COM='Mark III Fuel Element     Tube  6'
    CYLINDER  23  1  5.0800  59.0763  0.0000
    HOLE  227  0.0000  0.0000  0.0000
    HOLE  226  0.0000  0.0000  0.0006
    HOLE  227  0.0000  0.0000  59.0757
UNIT  229
    COM='Mark III Basket Fuel Tube - Fuel Down  Radial Shift toward 60 Deg'
    CYLINDER  4  1  5.2578  73.0249  0.0000
    HOLE  228  0.0889  0.1539  0.0000
    CYLINDER  6  1  5.57510  73.0249  0.0000
UNIT  231
    COM='Mark III Fueled Annular Sections       Tube  7'
'   Mark III Aluminum Inner
    CYLINDER  23  1  2.9100  59.0750  0.0000
    CYLINDER  22  1  2.911  59.0750  0.0000
'   Mark III Fuel Annulus    1
    CYLINDER  23  1  3.0994  59.0750  0.0000
    CYLINDER  22  1  3.1094  59.0750  0.0000
    CYLINDER  21  1  3.2133  59.0750  0.0000
    CYLINDER  22  1  3.2233  59.0750  0.0000
'   Mark III Fuel Annulus    2
    CYLINDER  23  1  3.9218  59.0750  0.0000
    CYLINDER  22  1  3.9318  59.0750  0.0000
    CYLINDER  21  1  4.0357  59.0750  0.0000
    CYLINDER  22  1  4.0457  59.0750  0.0000
'   Mark III Fuel Annulus    3
    CYLINDER  23  1  4.7442  59.0750  0.0000
    CYLINDER  22  1  4.7542  59.0750  0.0000
    CYLINDER  21  1  4.8581  59.0750  0.0000
    CYLINDER  22  1  4.8681  59.0750  0.0000
'   Mark III Aluminum Outer
    CYLINDER  23  1  5.0700  59.0750  0.0000
    CYLINDER  22  1  5.0799  59.0750  0.0000
UNIT  232
```

```
    COM='Mark III Axial Clad Sections       Tube  7  '
'   Mark III Aluminum Inner
    CYLINDER  23  1  2.9100  0.0005  0.0000
    CYLINDER  22  1  2.911  0.0005  0.0000
'   Mark III Clad Axial End Piece    1
    CYLINDER  23  1  3.0994  0.0005  0.0000
    CYLINDER  22  1  3.2233  0.0005  0.0000
'   Mark III Clad Axial End Piece    2
    CYLINDER  23  1  3.9218  0.0005  0.0000
    CYLINDER  22  1  4.0457  0.0005  0.0000
'   Mark III Clad Axial End Piece    3
    CYLINDER  23  1  4.7442  0.0005  0.0000
    CYLINDER  22  1  4.8681  0.0005  0.0000
'   Mark III Aluminum Outer
    CYLINDER  23  1  5.0700  0.0005  0.0000
    CYLINDER  22  1  5.0799  0.0005  0.0000
UNIT  233
    COM='Mark III Fuel Element     Tube  7'
    CYLINDER  23  1  5.0800  59.0763  0.0000
    HOLE  232  0.0000  0.0000  0.0000
    HOLE  231  0.0000  0.0000  0.0006
    HOLE  232  0.0000  0.0000  59.0757
UNIT  234
    COM='Mark III Basket Fuel Tube - Fuel Down  Radial Shift toward 120 Deg'
    CYLINDER  4  1  5.2578  73.0249  0.0000
    HOLE  233  -0.0889  0.1539  0.0000
    CYLINDER  6  1  5.57510  73.0249  0.0000

UNIT  301
    COM='DIDO Fueled Annular Sections ANSTO Tube  1  Loose'
'   DIDO Fuel Annulus    1
    CYLINDER  3  1  3.0300  58.7500  0.0000  ORIGIN  0.0000  0.0000
    CYLINDER  2  1  3.0550  58.7500  0.0000  ORIGIN  0.0000  0.0000
    CYLINDER  1  1  3.1350  58.7500  0.0000  ORIGIN  0.0000  0.0000
    CYLINDER  2  1  3.1600  58.7500  0.0000  ORIGIN  0.0000  0.0000
'   DIDO Fuel Annulus    2
    CYLINDER  3  1  3.5300  58.7500  0.0000  ORIGIN  0.0000  0.0000
    CYLINDER  2  1  3.5550  58.7500  0.0000  ORIGIN  0.0000  0.0000
    CYLINDER  1  1  3.6350  58.7500  0.0000  ORIGIN  0.0000  0.0000
    CYLINDER  2  1  3.6600  58.7500  0.0000  ORIGIN  0.0000  0.0000
'   DIDO Fuel Annulus    3
    CYLINDER  3  1  4.0300  58.7500  0.0000  ORIGIN  0.0000  0.0000
    CYLINDER  2  1  4.0550  58.7500  0.0000  ORIGIN  0.0000  0.0000
    CYLINDER  1  1  4.1350  58.7500  0.0000  ORIGIN  0.0000  0.0000
    CYLINDER  2  1  4.1600  58.7500  0.0000  ORIGIN  0.0000  0.0000
'   DIDO Fuel Annulus    4
    CYLINDER  3  1  4.5300  58.7500  0.0000
    CYLINDER  2  1  4.5550  58.7500  0.0000
    CYLINDER  1  1  4.6350  58.7500  0.0000
    CYLINDER  2  1  4.6599  58.7500  0.0000
UNIT  302
    COM='DIDO Axial Clad Sections ANSTO Tube  1  Loose'
'   DIDO Clad Axial End Piece    1
    CYLINDER  3  1  3.0300  1.3750  0.0000  ORIGIN  0.0000  0.0000
    CYLINDER  2  1  3.1600  1.3750  0.0000  ORIGIN  0.0000  0.0000
'   DIDO Clad Axial End Piece    2
    CYLINDER  3  1  3.5300  1.3750  0.0000  ORIGIN  0.0000  0.0000
    CYLINDER  2  1  3.6600  1.3750  0.0000  ORIGIN  0.0000  0.0000
'   DIDO Clad Axial End Piece    3
    CYLINDER  3  1  4.0300  1.3750  0.0000  ORIGIN  0.0000  0.0000
    CYLINDER  2  1  4.1600  1.3750  0.0000  ORIGIN  0.0000  0.0000
'   DIDO Clad Axial End Piece    4
    CYLINDER  3  1  4.5300  1.3750  0.0000
    CYLINDER  2  1  4.6599  1.3750  0.0000
UNIT  303
    COM='DIDO Fuel Element ANSTO Tube  1'
    CYLINDER  3  1  5.0800  61.5000  0.0000
    HOLE  302  0.0000  0.0000  0.0000
    HOLE  301  0.0000  0.0000  1.3750
    HOLE  302  0.0000  0.0000  60.1250
UNIT  304
    COM='ANSTO Basket DIDO Fuel Tube - Fuel Down'
    CYLINDER  4  1  5.2578  73.0249  0.0000
    HOLE  303  0.0000  0.0000  0.0000
    CYLINDER  6  1  5.57510  73.0249  0.0000

UNIT  305
    COM='Mark II Fuel Plate With Can'
    CUBOID  11  1  2P0.0916  2P3.6608  58.4200  0.0000
    CUBOID  12  1  2P0.1016  2P3.8291  58.4200  0.0000
    CUBOID  10  1  2P0.2200  2P3.8311  58.4200  0.0000
UNIT  306
    COM='Mark II Plate Bundle With Can'
    ARRAY  311  -3.0869  -3.8311  0.0000
UNIT  307
    COM='Mark II Fuel Plate With Can'
    CUBOID  11  1  2P3.6608  2P0.0916  58.4200  0.0000
    CUBOID  12  1  2P3.8291  2P0.1016  58.4200  0.0000
    CUBOID  10  1  2P3.9334  2P0.2070  58.4200  0.0000
UNIT  308
    COM='Mark II Plate Bundle With Can'
    ARRAY  312  -3.9334  -2.8500  0.0000
UNIT  309
    COM='Mark II Tube 1 - Fuel Down - In DFC - Radial Centered'
    CYLINDER  10  1  4.9200  70.0000  0.0000
    HOLE  306  0.0000  0.0000  0.0000
    CYLINDER  7  1  5.0800  70.0000  0.0000
```

```
    CYLINDER  4  1  5.2388  73.0240  0.0000
    CYLINDER  6  1  5.55525  73.0240  0.0000
UNIT  310
    COM='Mark II Tube 1 - Fuel Down - In DFC - Radial Centered'
    CYLINDER  10  1  4.9200  70.0000  0.0000
    HOLE  308  0.0000  0.0000  0.0000
    CYLINDER  7  1  5.0800  70.0000  0.0000
    CYLINDER  4  1  5.2388  73.0240  0.0000
    CYLINDER  6  1  5.55525  73.0240  0.0000

UNIT  311
    COM='Mark III Fuel Plate'
    CUBOID  21  1  2P0.0735  2P3.0000  58.4200  0.0000
    CUBOID  23  1  2P0.3875  2P3.0010  58.4200  0.0000
UNIT  312
    COM='Mark III Plate Bundle'
    ARRAY  321  -3.8750  -3.0000  0.0000
UNIT  313
    COM='Mark III Fuel Plate'
    CUBOID  21  1  2P3.0000  2P0.0735  58.4200  0.0000
    CUBOID  23  1  2P3.0010  2P0.3875  58.4200  0.0000
UNIT  314
    COM='Mark III Plate Bundle'
    ARRAY  322  -3.0000  -3.8750  0.0000
UNIT  315
    COM='Mark III Tube 1 - Fuel Down - In DFC -  Radial Centered'
    CYLINDER  10  1  4.9200  70.0000  0.0000
    HOLE  312  0.0000  0.0000  0.0000
    CYLINDER  7  1  5.0800  70.0000  0.0000
    CYLINDER  4  1  5.2388  73.0240  0.0000
    CYLINDER  6  1  5.55525  73.0240  0.0000

UNIT  316
    COM='DIDO Fueled Annular Sections ANSTO Tube  1  Loose'
'   DIDO Fuel Annulus    1
    CYLINDER  10  1  3.0300  58.7500  0.0000  ORIGIN  0.0000  0.0000
    CYLINDER  2  1  3.0550  58.7500  0.0000  ORIGIN  0.0000  0.0000
    CYLINDER  1  1  3.1350  58.7500  0.0000  ORIGIN  0.0000  0.0000
    CYLINDER  2  1  3.1600  58.7500  0.0000  ORIGIN  0.0000  0.0000
'   DIDO Fuel Annulus    2
    CYLINDER  10  1  3.5300  58.7500  0.0000  ORIGIN  0.0000  0.0000
    CYLINDER  2  1  3.5550  58.7500  0.0000  ORIGIN  0.0000  0.0000
    CYLINDER  1  1  3.6350  58.7500  0.0000  ORIGIN  0.0000  0.0000
    CYLINDER  2  1  3.6600  58.7500  0.0000  ORIGIN  0.0000  0.0000
'   DIDO Fuel Annulus    3
    CYLINDER  10  1  4.0300  58.7500  0.0000  ORIGIN  0.0000  0.0000
    CYLINDER  2  1  4.0550  58.7500  0.0000  ORIGIN  0.0000  0.0000
    CYLINDER  1  1  4.1350  58.7500  0.0000  ORIGIN  0.0000  0.0000
    CYLINDER  2  1  4.1600  58.7500  0.0000  ORIGIN  0.0000  0.0000
'   DIDO Fuel Annulus    4
    CYLINDER  10  1  4.5300  58.7500  0.0000
    CYLINDER  2  1  4.5550  58.7500  0.0000
    CYLINDER  1  1  4.6350  58.7500  0.0000
    CYLINDER  2  1  4.6599  58.7500  0.0000
UNIT  317
    COM='DIDO Axial Clad Sections ANSTO Tube  1  Loose'
'   DIDO Clad Axial End Piece    1
    CYLINDER  10  1  3.0300  1.3750  0.0000  ORIGIN  0.0000  0.0000
    CYLINDER  2  1  3.1600  1.3750  0.0000  ORIGIN  0.0000  0.0000
'   DIDO Clad Axial End Piece    2
    CYLINDER  10  1  3.5300  1.3750  0.0000  ORIGIN  0.0000  0.0000
    CYLINDER  2  1  3.6600  1.3750  0.0000  ORIGIN  0.0000  0.0000
'   DIDO Clad Axial End Piece    3
    CYLINDER  10  1  4.0300  1.3750  0.0000  ORIGIN  0.0000  0.0000
    CYLINDER  2  1  4.1600  1.3750  0.0000  ORIGIN  0.0000  0.0000
'   DIDO Clad Axial End Piece    4
    CYLINDER  10  1  4.5300  1.3750  0.0000
    CYLINDER  2  1  4.6599  1.3750  0.0000
UNIT  318
    COM='DIDO Fuel Element ANSTO Tube  1'
    CYLINDER  10  1  4.9200  70.0000  0.0000
    HOLE  317  0.0000  0.0000  0.0000
    HOLE  316  0.0000  0.0000  1.3750
    HOLE  317  0.0000  0.0000  60.1250
    CYLINDER  7  1  5.0800  70.0000  0.0000
UNIT  319
    COM='ANSTO Basket DIDO Fuel Tube - Fuel Down'
    CYLINDER  4  1  5.2578  73.0249  0.0000
    HOLE  318  0.0000  0.0000  0.0000
    CYLINDER  6  1  5.57510  73.0249  0.0000

UNIT  320
    COM='Empty ANSTO Basket Tube'
    CYLINDER  4  1  5.2578  73.0249  0.0000
    CYLINDER  6  1  5.5751  73.0249  0.0000

UNIT  321
    COM='Mark II Fuel Plate Cut 7 cm'
    CUBOID  11  1  2P0.0916  2P3.6608  51.4200  0.0000
    CUBOID  12  1  2P0.1016  2P3.8291  51.4200  0.0000
    CUBOID  13  1  2P0.2450  2P3.9334  51.4200  0.0000
UNIT  322
    COM='Mark II Plate Bundle Cut 7 cm'
    ARRAY  313  -3.4074  -3.9334  0.0000
UNIT  323
    COM='Mark II Fuel Plate Cut 7 cm'
    CUBOID  11  1  2P3.6608  2P0.0916  51.4200  0.0000
```

```
    CUBOID  12  1  2P3.8291  2P0.1016  51.4200  0.0000
    CUBOID  13  1  2P3.9334  2P0.2450  51.4200  0.0000
UNIT  324
    COM='Mark II Plate Bundle Cut 7 cm'
    ARRAY  314  -3.9334  -3.4074  0.0000
UNIT  325
    COM='Mark II Tube 1 - Fuel Down - Cut 7 cm - Radial Centered'
    CYLINDER  4  1  5.2388  73.0240  0.0000
    HOLE  322  0.0000  0.0000  0.0000
    CYLINDER  6  1  5.55525  73.0240  0.0000
UNIT  326
    COM='Mark II Tube 1 - Fuel Down - Cut 7 cm - Radial Centered'
    CYLINDER  4  1  5.2388  73.0240  0.0000
    HOLE  324  0.0000  0.0000  0.0000
    CYLINDER  6  1  5.55525  73.0240  0.0000

UNIT  327
    COM='Mark II Fuel Plate With Can - Cut'
    CUBOID  11  1  2P0.0916  2P3.6608  29.2100  0.0000
    CUBOID  12  1  2P0.1016  2P3.8291  29.2100  0.0000
    CUBOID  10  1  2P0.1100  2P3.8311  29.2100  0.0000
UNIT  328
    COM='Mark II Plate Bundle With Can - Cut'
    ARRAY  315  -3.0800  -3.8311  0.0000
UNIT  329
    COM='Mark II Fuel Plate With Can'
    CUBOID  11  1  2P3.6608  2P0.0916  51.4200  0.0000
    CUBOID  12  1  2P3.8291  2P0.1016  51.4200  0.0000
    CUBOID  10  1  2P3.9334  2P0.2070  51.4200  0.0000
UNIT  330
    COM='Mark II Plate Bundle With Can - Cut'
    ARRAY  316  -3.9334  -2.8500  0.0000
UNIT  331
    COM='Mark II Tube 1 - Fuel Down - In DFC - Cut - Radial Centered'
    CYLINDER  10  1  4.9200  70.0000  0.0000
    HOLE  328  0.0000  0.0000  0.0000
    CYLINDER  7  1  5.0800  70.0000  0.0000
    CYLINDER  4  1  5.2388  73.0240  0.0000
    CYLINDER  6  1  5.55525  73.0240  0.0000
UNIT  332
    COM='Mark II Tube 1 - Fuel Down - In DFC - Cut - Radial Centered'
    CYLINDER  10  1  4.9200  70.0000  0.0000
    HOLE  330  0.0000  0.0000  0.0000
    CYLINDER  7  1  5.0800  70.0000  0.0000
    CYLINDER  4  1  5.2388  73.0240  0.0000
    CYLINDER  6  1  5.55525  73.0240  0.0000

UNIT  333
    COM='Mark II Fuel Plate'
    CUBOID  11  1  2P0.0916  2P3.6608  58.4200  0.0000
    CUBOID  12  1  2P0.1016  2P3.8291  58.4200  0.0000
    CUBOID  13  1  2P0.2668  2P3.8311  58.4200  0.0000
UNIT  334
    COM='Mark II Left Outer Fuel Plate'
    CUBOID  11  1  2P0.0916  2P3.6608  58.4200  0.0000
    CUBOID  12  1  2P0.1016  2P3.8291  58.4200  0.0000
    CUBOID  13  1  0.2668  -0.1016  2P3.8311  58.4200  0.0000
UNIT  335
    COM='Mark II Right Outer Fuel Plate'
    CUBOID  11  1  2P0.0916  2P3.6608  58.4200  0.0000
    CUBOID  12  1  2P0.1016  2P3.8291  58.4200  0.0000
    CUBOID  13  1  0.1016  -0.2668  2P3.8311  58.4200  0.0000
UNIT  336
    COM='Mark II Plate Bundle'
    ARRAY  317  -3.5700  -3.8311  0.0000


UNIT  337
    COM='Mark III Left Fuel Plate'
    CUBOID  21  1  2P0.0735  2P3.0000  58.4200  0.0000
    CUBOID  23  1  0.4685  -0.0735  2P3.0010  58.4200  0.0000
UNIT  338
    COM='Mark III Right Fuel Plate'
    CUBOID  21  1  2P0.0735  2P3.0000  58.4200  0.0000
    CUBOID  23  1  0.0735  -0.4685  2P3.0010  58.4200  0.0000
UNIT  339
    COM='Mark III Fuel Plate'
    CUBOID  21  1  2P0.0735  2P3.0000  58.4200  0.0000
    CUBOID  23  1  2P0.4685  2P3.0010  58.4200  0.0000
UNIT  340
    COM='Mark III Plate Bundle'
    ARRAY  319  -4.2900  -3.0000  0.0000
UNIT  341
    COM='Mark III Tube 1 - Fuel Down        Radial Centered'
    CYLINDER  4  1  5.2388  73.0240  0.0000
    HOLE  340  0.0000  0.0000  0.0000
    CYLINDER  6  1  5.55525  73.0240  0.0000
UNIT  342
    COM='Mark III Tube 2 - Fuel Down        Shifted Toward 180'
    CYLINDER  4  1  5.2388  73.0240  0.0000
    HOLE  340  -0.0012  0.0000  0.0000
    CYLINDER  6  1  5.55525  73.0240  0.0000
UNIT  343
    COM='Mark III Tube 3 - Fuel Down        Shifted Toward 240'
    CYLINDER  4  1  5.2388  73.0240  0.0000
    HOLE  340  0.0000  -0.0005  0.0000
    CYLINDER  6  1  5.55525  73.0240  0.0000
```

```
UNIT  344
    COM='Mark III Tube 4 - Fuel Down        Shifted Toward 300'
    CYLINDER  4  1  5.2388  73.0240  0.0000
    HOLE  340  0.0000  -0.0005  0.0000
    CYLINDER  6  1  5.55525  73.0240  0.0000
UNIT  345
    COM='Mark III Tube 5 - Fuel Down        Shifted Toward 0'
    CYLINDER  4  1  5.2388  73.0240  0.0000
    HOLE  340  0.0012  0.0000  0.0000
    CYLINDER  6  1  5.55525  73.0240  0.0000
UNIT  346
    COM='Mark III Tube 6 - Fuel Down        Shifted Toward 60'
    CYLINDER  4  1  5.2388  73.0240  0.0000
    HOLE  340  0.0000  0.0005  0.0000
    CYLINDER  6  1  5.55525  73.0240  0.0000
UNIT  347
    COM='Mark III Tube 7 - Fuel Down        Shifted Toward 120'
    CYLINDER  4  1  5.2388  73.0240  0.0000
    HOLE  340  0.0000  0.0005  0.0000
    CYLINDER  6  1  5.55525  73.0240  0.0000

UNIT  348
    COM='Mark II Tube 1 - Fuel Down        Radial Centered'
    CYLINDER  4  1  5.2388  73.0240  0.0000
    HOLE  336  0.0000  0.0000  0.0000
    CYLINDER  6  1  5.55525  73.0240  0.0000
UNIT  349
    COM='Mark II Tube 2 - Fuel Down        Shifted Toward 180'
    CYLINDER  4  1  5.2388  73.0240  0.0000
    HOLE  336  0.0000  0.0000  0.0000
    CYLINDER  6  1  5.55525  73.0240  0.0000
UNIT  350
    COM='Mark II Tube 3 - Fuel Down        Shifted Toward 240'
    CYLINDER  4  1  5.2388  73.0240  0.0000
    HOLE  336  0.0000  0.0000  0.0000
    CYLINDER  6  1  5.55525  73.0240  0.0000
UNIT  351
    COM='Mark II Tube 4 - Fuel Down        Shifted Toward 300'
    CYLINDER  4  1  5.2388  73.0240  0.0000
    HOLE  336  0.0000  0.0000  0.0000
    CYLINDER  6  1  5.55525  73.0240  0.0000
UNIT  352
    COM='Mark II Tube 5 - Fuel Down        Shifted Toward 0'
    CYLINDER  4  1  5.2388  73.0240  0.0000
    HOLE  336  0.0000  0.0000  0.0000
    CYLINDER  6  1  5.55525  73.0240  0.0000
UNIT  353
    COM='Mark II Tube 6 - Fuel Down        Shifted Toward 60'
    CYLINDER  4  1  5.2388  73.0240  0.0000
    HOLE  336  0.0000  0.0000  0.0000
    CYLINDER  6  1  5.55525  73.0240  0.0000
UNIT  354
    COM='Mark II Tube 7 - Fuel Down        Shifted Toward 120'
    CYLINDER  4  1  5.2388  73.0240  0.0000
    HOLE  336  0.0000  0.0000  0.0000
    CYLINDER  6  1  5.55525  73.0240  0.0000

UNIT  401
    COM='ANSTO Basket Fuel Down'
    CYLINDER  4  1  16.7260  73.0249  0.0000
    HOLE  348    0.0000   0.0000  0.0000
    HOLE  349   11.1506   0.0000  0.0000
    HOLE  350    5.5753   9.6567  0.0000
    HOLE  351   -5.5753   9.6567  0.0000
    HOLE  352  -11.1506   0.0000  0.0000
    HOLE  353   -5.5753  -9.6567  0.0000
    HOLE  354    5.5753  -9.6567  0.0000
    CYLINDER  4  1  16.8466  73.0249  0.0000
UNIT 402
    COM='ANSTO Basket Bottom Plate Hole'
    CYLINDER  4  1  1.27  1.2172  0.0000
UNIT 403
    COM='Basket Bottom Plate '
    CYLINDER  6  1  16.8466  1.2172  0.0000
    HOLE  402  0.0000  0.0000  0.0000
    HOLE  402  11.1125  0.0000  0.0000
    HOLE  402  5.5563  9.6237  0.0000
    HOLE  402  -5.5563  9.6237  0.0000
    HOLE  402  -11.1125  0.0000  0.0000
    HOLE  402  -5.5563  -9.6237  0.0000
    HOLE  402  5.5562  -9.6237  0.0000
UNIT  404
    COM='Cask Cavity '
    CYLINDER  4  1  16.9863  446.6844  0.0000
    HOLE  7    0.0000  0.0000  0.0001
    HOLE  10   0.0000  0.0000  1.2700
    HOLE  7    0.0000  0.0000  74.4475
    HOLE  9    0.0000  0.0000  75.7174
    HOLE  7    0.0000  0.0000  148.8949
    HOLE  10   0.0000  0.0000  150.1648
    HOLE  7    0.0000  0.0000  223.3423
    HOLE  9    0.0000  0.0000  224.6122
    HOLE  7    0.0000  0.0000  297.7897
    HOLE  10   0.0000  0.0000  299.0596
    HOLE  403  0.0000  0.0000  372.2371
    HOLE  401  0.0000  0.0000  373.4548
UNIT  405
```

```
    COM='Cask Shield Radial Configuration'
    CYLINDER  4  1  16.9863  446.6844  0.0000
    HOLE  404  0.0000  0.0000  0.0000
    CYLINDER  8  1  18.9103  446.6844  0.0000
    CYLINDER  5  1  33.4645  446.6844  0.0000
    CYLINDER  8  1  36.5189  446.6844  0.0000
    CYLINDER  9  1  49.2189  446.6844  0.0000
    CYLINDER  8  1  49.8183  446.6844  0.0000
    CUBOID  9  1  4P49.8183  446.6844  0.0000
UNIT  406
    COM='LWT Lid '
    CYLINDER  8  1  36.5189  28.5750  0.5994
    CYLINDER  9  1  49.8183  28.5750  0.5994
    CYLINDER  8  1  49.8183  28.5750  0.0000
    CUBOID  9  1  4P49.8183  28.5750  0.0000
UNIT  407
    COM='LWT Bottom Weldment '
    CYLINDER  5  1  26.3525  16.5100  8.8900
    CYLINDER  8  1  36.5189  26.0706  0.0000
    CYLINDER  9  1  49.8183  26.0706  0.0000
    CYLINDER  8  1  49.8183  26.6700  0.0000
    CUBOID  9  1  4P49.8183  26.6700  0.0000
Global UNIT  408
    COM='LWT Cask '
    ARRAY  401  -49.8183  -49.8183  0.0000
END GEOM

READ ARRAY
ARA=111  NUX=18  NUY=1   NUZ=1  FILL  102  103  14R101  103  102  END FILL
ARA=112  NUX=1   NUY=18  NUZ=1  FILL  106  107  14R105  107  106  END FILL
ARA=311  NUX=14  NUY=1   NUZ=1  FILL  14R305  END FILL
ARA=312  NUX=1   NUY=14  NUZ=1  FILL  14R307  END FILL
ARA=313  NUX=14  NUY=1   NUZ=1  FILL  14R321  END FILL
ARA=314  NUX=1   NUY=14  NUZ=1  FILL  14R323  END FILL
ARA=315  NUX=28  NUY=1   NUZ=1  FILL  28R327  END FILL
ARA=316  NUX=1   NUY=14  NUZ=1  FILL  14R329  END FILL
ARA=317  NUX=14  NUY=1   NUZ=1  FILL  334  12R333  335  END FILL
ARA=319  NUX=10  NUY=1   NUZ=1  FILL  337   8R339  338  END FILL
ARA=320  NUX=1   NUY=10  NUZ=1  FILL  10R341  END FILL
ARA=321  NUX=10  NUY=1   NUZ=1  FILL  10R311  END FILL
ARA=322  NUX=1   NUY=10  NUZ=1  FILL  10R313  END FILL
ARA=401  NUX=1   NUY=1   NUZ=3  FILL  407 405 406  END FILL
END ARRAY

READ BOUNDS    ALL=MIRROR    END BOUNDS

READ PLOT
PLT=no
TTL='X-Y PLOT OF CENTER ELEMENT - FUEL ELEVATION'
SCR=YES  PIC=MAT  LPI=10
UAX=1.0  VDN=-1.0  NAX=1500
XUL=-5.4  YUL=5.4  ZUL=57.4
XLR=5.4  YLR=-5.4  ZLR=57.4  END
TTL='X-Y PLOT OF BASKET - FUEL ELEVATION'
SCR=YES  PIC=MAT  LPI=10
UAX=1.0  VDN=-1.0  NAX=1500
XUL=-17.0  YUL=17.0  ZUL=57.4
XLR=17.0  YLR=-17.0  ZLR=57.4  END
TTL='X-Y PLOT OF CASK - FUEL ELEVATION'
SCR=YES  PIC=MAT  LPI=10
UAX=1.0  VDN=-1.0  NAX=1500
XUL=-49.8  YUL=49.8  ZUL=57.4
XLR=49.8  YLR=-49.8  ZLR=57.4  END
TTL='X-Z PLOT OF BOTTOM BASKET - CENTER FUEL ELEMENT CROSS SECTION'
SCR=YES  PIC=MAT  LPI=10
UAX=1.0  WDN=-1.0  NAX=1500
XUL=-5.4  YUL=0.0  ZUL=77.4
XLR=5.4  YLR=0.0  ZLR=57.4  END
TTL='X-Z PLOT OF BOTTOM BASKET - CENTER FUEL ELEMENT ROW'
SCR=YES  PIC=MAT  LPI=10
UAX=1.0  WDN=-1.0  NAX=1500
XUL=-17.0  YUL=0.0  ZUL=101.1
XLR=17.0  YLR=0.0  ZLR=26.7  END
TTL='Y-Z (X=0) PLOT OF BOTTOM BASKET'
SCR=YES  PIC=MAT  LPI=10
VAX=1.0  WDN=-1.0  NAX=1500
XUL=0.0  YUL=-17.0  ZUL=101.1
XLR=0.0  YLR=17.0  ZLR=26.7  END
TTL='X-Z PLOT OF BOTTOM BASKET - TOP FUEL ELEMENT ROW'
SCR=YES  PIC=MAT  LPI=10
UAX=1.0  WDN=-1.0  NAX=1500
XUL=-17.0  YUL=9.3  ZUL=101.1
XLR=17.0  YLR=9.3  ZLR=26.7  END
TTL='X-Z  PLOT OF CASK CAVITY'
SCR=YES  PIC=MAT  LPI=5
UAX=1.0  WDN=-1.0  NAX=1500
XUL=-17.0  YUL=0.0  ZUL=474.4
XLR=17.0  YLR=0.0  ZLR=25.7  END
TTL='X-Z  PLOT OF CASK '
SCR=YES  PIC=MAT  LPI=5
UAX=1.0  WDN=-1.0  NAX=1500
XUL=-49.8  YUL=0.0  ZUL=502.9
XLR=49.8  YLR=0.0  ZLR=0.0  END

'Plots of TOP BASKET fuel
TTL='X-Y PLOT OF CENTER ELEMENT - TOP FUEL ELEVATION'
SCR=YES  PIC=MAT  LPI=10
```

```
   UAX=1.0  VDN=-1.0  NAX=1500
   XUL=-5.4  YUL=5.4  ZUL=435
   XLR=5.4  YLR=-5.4  ZLR=435  END
   TTL='X-Y PLOT OF BASKET - TOP FUEL ELEVATION'
   SCR=YES  PIC=MAT  LPI=10
   UAX=1.0  VDN=-1.0  NAX=1500
   XUL=-17.0  YUL=17.0  ZUL=435
   XLR=17.0  YLR=-17.0  ZLR=435  END
   TTL='X-Y PLOT OF CASK - TOP FUEL ELEVATION'
   SCR=YES  PIC=MAT  LPI=10
   UAX=1.0  VDN=-1.0  NAX=1500
   XUL=-49.8  YUL=49.8  ZUL=435
   XLR=49.8  YLR=-49.8  ZLR=435  END

   END PLOT
   END DATA

SECONDARY MODULE O0O0008   HAS BEEN CALLED.

MODULE O0O0008   IS FINISHED. COMPLETION CODE     0. CPU TIME USED     0.33 (SECONDS).

SECONDARY MODULE O0O0002   HAS BEEN CALLED.

MODULE O0O0002   IS FINISHED. COMPLETION CODE     0. CPU TIME USED     1.98 (SECONDS).

SECONDARY MODULE O0O0009   HAS BEEN CALLED.

MODULE O0O0009   IS FINISHED. COMPLETION CODE     0. CPU TIME USED   305.16 (SECONDS).

MODULE CSAS25   IS FINISHED. COMPLETION CODE     0. CPU TIME USED   308.57 (SECONDS).
```

```
*******************************************************************************
*******************************************************************************
*******************************************************************************
*****                                                                     *****
*****                  PROGRAM VERIFICATION INFORMATION                   *****
*****                                                                     *****
*****                 CODE SYSTEM:  SCALE-PC VERSION:  4.3                *****
*****                                                                     *****
*******************************************************************************
*******************************************************************************
*****                                                                     *****
*****                                                                     *****
*****              PROGRAM:  CSAS                                         *****
*****                                                                     *****
*****        CREATION DATE:  03/08/96                                     *****
*****                                                                     *****
*****              VOLUME:   Eng                                          *****
*****                                                                     *****
*****              LIBRARY:  M:\SCALE43\WIN_NT\EXE                        *****
*****                                                                     *****
*****                                                                     *****
*****      PRODUCTION CODE:  CSAS                                         *****
*****                                                                     *****
*****              VERSION:  3.1                                          *****
*****                                                                     *****
*****              JOBNAME:  SCALE-PC                                     *****
*****                                                                     *****
*****    DATE OF EXECUTION:  08/05/08                                     *****
*****                                                                     *****
*****    TIME OF EXECUTION:  16:15:53                                     *****
*****                                                                     *****
*****                                                                     *****
*******************************************************************************
*******************************************************************************
*******************************************************************************
```

```
*******************************************************************************
*******************************************************************************
*******************************************************************************
*****                                                                     *****
*****                  PROGRAM VERIFICATION INFORMATION                   *****
*****                                                                     *****
*****                 CODE SYSTEM:  SCALE-PC VERSION:  4.3                *****
*****                                                                     *****
*******************************************************************************
*******************************************************************************
*****                                                                     *****
*****                                                                     *****
*****              PROGRAM:  O0O0008                                      *****
*****                                                                     *****
*****        CREATION DATE:  09/16/95                                     *****
*****                                                                     *****
*****              VOLUME:   Eng                                          *****
*****                                                                     *****
*****              LIBRARY:  M:\SCALE43\WIN_NT\EXE                        *****
*****                                                                     *****
*****                                                                     *****
*****    THIS IS NOT A SCALE-PC CONFIGURATION CONTROLLED CODE             *****
*****                                                                     *****
```

```
                      *****              JOBNAME:  SCALE-PC                                  *****
                      *****                                                                  *****
                      *****    DATE OF EXECUTION:  08/05/08                                  *****
                      *****                                                                  *****
                      *****    TIME OF EXECUTION:  16:15:53                                  *****
                      *****                                                                  *****
                      *****                                                                  *****
                      ************************************************************************
                      ************************************************************************
                      ************************************************************************

P R O B L E M   D E S C R I P T I O N

IGR--GEOMETRY (0/1/2/3--INF MED/SLAB/CYL/SPHERE              1

IZM--NUMBER OF ZONES OR MATERIAL REGIONS                    23

MS--MIXING TABLE LENGTH                                     34

IBL--SHIELDED CROSS SECTION EDIT OPTION (0/1--NO/YES)        0

IBR--BONDARENKO FACTOR EDIT OPTION (0/1--NO/YES)             0

ISSOPT--DANCOFF FACTOR OPTION                                0

CONVERGENCE CRITERION    1.00000E-03

GEOMETRY CORRECTION FACTOR FOR WIGNER RATIONAL APPROXIMATION  1.000E+00

M I X I N G   T A B L E

ENTRY   MIXTURE   ISOTOPE   NUMBER DENSITY   NEW IDENTIFIER
   1       1        92235     1.07174E-03          1092235
   2      11        92235     7.29070E-04         11092235
   3      21        92235     8.89418E-04         21092235
   4       1        92238     6.75448E-05          1092238
   5      11        92238     6.25966E-05         11092238
   6      21        92238     1.54974E-04         21092238
   7       1        13027     3.25147E-02          1013027
   8       2        13027     6.03066E-02          2013027
   9      11        13027     1.72260E-02         11013027
  10      12        13027     6.03066E-02         12013027
  11      21        13027     6.59980E-03         21013027
  12      22        13027     6.03066E-02         22013027
  13       7        13027     6.03066E-02          7013027
  14       3         1001     6.68762E-02          3001001
  15      13         1001     6.68762E-02         13001001
  16      23         1001     6.68762E-02         23001001
  17       4         1001     6.68762E-02          4001001
  18       9         1001     6.68896E-06          9001001
  19      10         1001     6.68762E-02         10001001
  20       3         8016     3.34381E-02          3008016
  21      13         8016     3.34381E-02         13008016
  22      23         8016     3.34381E-02         23008016
  23       4         8016     3.34381E-02          4008016
  24       9         8016     3.34448E-06          9008016
  25      10         8016     3.34381E-02         10008016
  26       5        82000     3.29690E-02          5082000
  27       6        24304     1.74286E-02          6024304
  28       8        24304     1.74286E-02          8024304
  29       6        25055     1.73633E-03          6025055
  30       8        25055     1.73633E-03          8025055
  31       6        26304     5.93579E-02          6026304
  32       8        26304     5.93579E-02          8026304
  33       6        28304     7.72070E-03          6028304
  34       8        28304     7.72070E-03          8028304

GEOMETRY AND MATERIAL DESCRIPTION

ZONE   MIXTURE   OUTER DIMENSION   TEMPERATURE       EXTRA XS   TYPE (0/1--FUEL/MOD)
   1       1         4.00000E-02    2.93000E+02    3.70526E+00             0
   2       2         6.50000E-02    2.93000E+02    0.00000E+00             0
   3       3         5.00000E-01    2.93000E+02    0.00000E+00             0
   4       4         5.50000E+00    2.93000E+02    0.00000E+00             0
   5       5         1.05000E+01    2.93000E+02    0.00000E+00             0
   6       6         1.55000E+01    2.93000E+02    0.00000E+00             0
   7       7         2.05000E+01    2.93000E+02    0.00000E+00             0
   8       8         2.55000E+01    2.93000E+02    0.00000E+00             0
   9       9         3.05000E+01    2.93000E+02    0.00000E+00             0
  10      10         3.55000E+01    2.93000E+02    0.00000E+00             0
  11      11         4.05000E+01    2.93000E+02    1.21399E+00             0
  12      12         4.55000E+01    2.93000E+02    0.00000E+00             0
  13      13         5.05000E+01    2.93000E+02    0.00000E+00             0
  14      14         5.55000E+01   -2.93000E+02    0.00000E+00             0
  15      15         6.05000E+01   -2.93000E+02    0.00000E+00             0
  16      16         6.55000E+01   -2.93000E+02    0.00000E+00             0
  17      17         7.05000E+01   -2.93000E+02    0.00000E+00             0
  18      18         7.55000E+01   -2.93000E+02    0.00000E+00             0
  19      19         8.05000E+01   -2.93000E+02    0.00000E+00             0
  20      20         8.55000E+01   -2.93000E+02    0.00000E+00             0
  21      21         9.05000E+01    2.93000E+02    2.35338E+00             0
  22      22         9.55000E+01    2.93000E+02    0.00000E+00             0
  23      23         1.00500E+02    2.93000E+02    0.00000E+00             0

                      ************************************************************************
                      ************************************************************************
                      ************************************************************************
```

```
                      *****                                                                *****
                      *****                  PROGRAM VERIFICATION INFORMATION              *****
                      *****                                                                *****
                      *****                CODE SYSTEM:  SCALE-PC VERSION:  4.3            *****
                      *****                                                                *****
                      ********************************************************************************
                      ********************************************************************************
                      *****                                                                *****
                      *****                                                                *****
                      *****             PROGRAM:  O0O002                                   *****
                      *****                                                                *****
                      *****        CREATION DATE:  09/28/95                                *****
                      *****                                                                *****
                      *****             VOLUME:   Eng                                      *****
                      *****                                                                *****
                      *****             LIBRARY:  M:\SCALE43\WIN_NT\EXE                    *****
                      *****                                                                *****
                      *****                                                                *****
                      *****      PRODUCTION CODE:  NITAWL                                  *****
                      *****                                                                *****
                      *****             VERSION:  3.0                                      *****
                      *****                                                                *****
                      *****             JOBNAME:  SCALE-PC                                 *****
                      *****                                                                *****
                      *****    DATE OF EXECUTION:  08/05/08                                *****
                      *****                                                                *****
                      *****    TIME OF EXECUTION:  16:15:54                                *****
                      *****                                                                *****
                      *****                                                                *****
                      ********************************************************************************
                      ********************************************************************************
                      ********************************************************************************


       -1Q ARRAY HAS      1 ENTRIES.

        0Q ARRAY HAS      9 ENTRIES.

        1Q ARRAY HAS     12 ENTRIES.

SELECT 34 NUCLIDES FROM THE MASTER  LIBRARY ON LOGICAL  1
        0 NUCLIDES FROM THE WORKING LIBRARY ON LOGICAL  2
        0 NUCLIDES FROM THE WORKING LIBRARY ON LOGICAL  3
          TO CREATE THE NEW WORKING LIBRARY ON LOGICAL  4

        8 RESONANCE CALCULATIONS HAVE BEEN REQUESTED
       -1 OUTPUT OPTION FOR AMPX FORMATTED CROSS SECTION DATA
     2001 MAXIMUM NUMBER OF RESONANCE MESH INTERVALS
        2 ORDER OF RESONANCE LEVEL PROCESSING

THE STORAGE ALLOCATED FOR THIS CASE IS    100000 WORDS

        2Q ARRAY HAS     34 ENTRIES.

        3Q ARRAY HAS    120 ENTRIES.

        4Q ARRAY HAS     34 ENTRIES.

 GENERAL INFORMATION CONCERNING CROSS SECTION LIBRARY
   TAPE IDENTIFICATION NUMBER                4321
   NUMBER OF NUCLIDES ON TAPE                  34
   NUMBER OF NEUTRON ENERGY GROUPS             27
   FIRST THERMAL NEUTRON ENERGY GROUP          15
   NUMBER OF GAMMA ENERGY GROUPS                0

   DIRECT ACCESS UNIT NUMBER  9 REQUIRES 117 BLOCKS OF LENGTH  1680 WORDS
 XSDRN TAPE   4321
                       SCALE 4.2 - 27 GROUP NEUTRON GROUP LIBRARY
                          BASED ON ENDF-B VERSION 4 DATA
                             COMPILED FOR NRC     1/27/89
                                LAST UPDATED                                          08/12/94
                                   L.M.PETRIE   -   ORNL

 NUCLIDES FROM XSDRN TAPE
    1     HYDROGEN       ENDF/B-IV MAT 1269/THRM1002            UPDATED 08/12/94     3001001
    2     HYDROGEN       ENDF/B-IV MAT 1269/THRM1002            UPDATED 08/12/94    13001001
    3     HYDROGEN       ENDF/B-IV MAT 1269/THRM1002            UPDATED 08/12/94    23001001
    4     HYDROGEN       ENDF/B-IV MAT 1269/THRM1002            UPDATED 08/12/94     4001001
    5     HYDROGEN       ENDF/B-IV MAT 1269/THRM1002            UPDATED 08/12/94     9001001
    6     HYDROGEN       ENDF/B-IV MAT 1269/THRM1002            UPDATED 08/12/94    10001001
    7     OXYGEN-16      ENDF/B-IV MAT 1276                     UPDATED 08/12/94     3008016
    8     OXYGEN-16      ENDF/B-IV MAT 1276                     UPDATED 08/12/94    13008016
    9     OXYGEN-16      ENDF/B-IV MAT 1276                     UPDATED 08/12/94    23008016
   10     OXYGEN-16      ENDF/B-IV MAT 1276                     UPDATED 08/12/94     4008016
   11     OXYGEN-16      ENDF/B-IV MAT 1276                     UPDATED 08/12/94     9008016
   12     OXYGEN-16      ENDF/B-IV MAT 1276                     UPDATED 08/12/94    10008016
   13    AL-27 1193 218 GP 040375(5)                            UPDATED 08/12/94     1013027
   14    AL-27 1193 218 GP 040375(5)                            UPDATED 08/12/94     2013027
   15    AL-27 1193 218 GP 040375(5)                            UPDATED 08/12/94    11013027
   16    AL-27 1193 218 GP 040375(5)                            UPDATED 08/12/94    12013027
   17    AL-27 1193 218 GP 040375(5)                            UPDATED 08/12/94    21013027
   18    AL-27 1193 218 GP 040375(5)                            UPDATED 08/12/94    22013027
   19    AL-27 1193 218 GP 040375(5)                            UPDATED 08/12/94     7013027
   20    CR 1191 WT SS-304(1/EST) P-3 293K SP=5+4(42375)'       UPDATED 08/12/94     6024304
   21    CR 1191 WT SS-304(1/EST) P-3 293K SP=5+4(42375)'       UPDATED 08/12/94     8024304
   22     MANGANESE-55   ENDF/B-IV MAT 1197                     UPDATED 08/12/94     6025055
   23     MANGANESE-55   ENDF/B-IV MAT 1197                     UPDATED 08/12/94     8025055
```

```
   24    FE 1192 WT SS-304(1/EST) P-3 293K SP=5+4(42375)'        UPDATED 08/12/94     6026304
   25    FE 1192 WT SS-304(1/EST) P-3 293K SP=5+4(42375)'        UPDATED 08/12/94     8026304
   26    NI 1190 WT SS-304(1/EST) P-3 293K SP=5+4(42375)'        UPDATED 08/12/94     6028304
   27    NI 1190 WT SS-304(1/EST) P-3 293K SP=5+4(42375)'        UPDATED 08/12/94     8028304
   28    PB   1288 218NGP 042375 P-3 293K                        UPDATED 08/12/94     5082000
   29     URANIUM-235    ENDF/B-IV MAT 1261                     UPDATED 08/12/94     1092235
   30     URANIUM-235    ENDF/B-IV MAT 1261                     UPDATED 08/12/94    11092235
   31     URANIUM-235    ENDF/B-IV MAT 1261                     UPDATED 08/12/94    21092235
   32     URANIUM-238    ENDF/B-IV MAT 1262                     UPDATED 08/12/94     1092238
   33     URANIUM-238    ENDF/B-IV MAT 1262                     UPDATED 08/12/94    11092238
   34     URANIUM-238    ENDF/B-IV MAT 1262                     UPDATED 08/12/94    21092238

 HYDROGEN       ENDF/B-IV MAT 1269/THRM1002             UPDATED 08/12/94   3001001     TEMPERATURE=   293.00
                                                             PROCESS NUMBER 1007 IS AT TEMPERATURE=   293.00

 HYDROGEN       ENDF/B-IV MAT 1269/THRM1002             UPDATED 08/12/94  13001001     TEMPERATURE=   293.00
                                                             PROCESS NUMBER 1007 IS AT TEMPERATURE=   293.00

 HYDROGEN       ENDF/B-IV MAT 1269/THRM1002             UPDATED 08/12/94  23001001     TEMPERATURE=   293.00
                                                             PROCESS NUMBER 1007 IS AT TEMPERATURE=   293.00

 HYDROGEN       ENDF/B-IV MAT 1269/THRM1002             UPDATED 08/12/94   4001001     TEMPERATURE=   293.00
                                                             PROCESS NUMBER 1007 IS AT TEMPERATURE=   293.00

 HYDROGEN       ENDF/B-IV MAT 1269/THRM1002             UPDATED 08/12/94   9001001     TEMPERATURE=   293.00
                                                             PROCESS NUMBER 1007 IS AT TEMPERATURE=   293.00

 HYDROGEN       ENDF/B-IV MAT 1269/THRM1002             UPDATED 08/12/94  10001001     TEMPERATURE=   293.00
                                                             PROCESS NUMBER 1007 IS AT TEMPERATURE=   293.00

 OXYGEN-16      ENDF/B-IV MAT 1276                      UPDATED 08/12/94   3008016     TEMPERATURE=   293.00
                                                             PROCESS NUMBER 1007 IS AT TEMPERATURE=   293.00

 OXYGEN-16      ENDF/B-IV MAT 1276                      UPDATED 08/12/94  13008016     TEMPERATURE=   293.00
                                                             PROCESS NUMBER 1007 IS AT TEMPERATURE=   293.00

 OXYGEN-16      ENDF/B-IV MAT 1276                      UPDATED 08/12/94  23008016     TEMPERATURE=   293.00
                                                             PROCESS NUMBER 1007 IS AT TEMPERATURE=   293.00

 OXYGEN-16      ENDF/B-IV MAT 1276                      UPDATED 08/12/94   4008016     TEMPERATURE=   293.00
                                                             PROCESS NUMBER 1007 IS AT TEMPERATURE=   293.00

 OXYGEN-16      ENDF/B-IV MAT 1276                      UPDATED 08/12/94   9008016     TEMPERATURE=   293.00
                                                             PROCESS NUMBER 1007 IS AT TEMPERATURE=   293.00

 OXYGEN-16      ENDF/B-IV MAT 1276                      UPDATED 08/12/94  10008016     TEMPERATURE=   293.00
                                                             PROCESS NUMBER 1007 IS AT TEMPERATURE=   293.00

AL-27 1193 218 GP 040375(5)                            UPDATED 08/12/94   1013027     TEMPERATURE=   293.00
                                                             PROCESS NUMBER 1007 IS AT TEMPERATURE=   293.00

AL-27 1193 218 GP 040375(5)                            UPDATED 08/12/94   2013027     TEMPERATURE=   293.00
                                                             PROCESS NUMBER 1007 IS AT TEMPERATURE=   293.00

AL-27 1193 218 GP 040375(5)                            UPDATED 08/12/94  11013027     TEMPERATURE=   293.00
                                                             PROCESS NUMBER 1007 IS AT TEMPERATURE=   293.00

AL-27 1193 218 GP 040375(5)                            UPDATED 08/12/94  12013027     TEMPERATURE=   293.00
                                                             PROCESS NUMBER 1007 IS AT TEMPERATURE=   293.00

AL-27 1193 218 GP 040375(5)                            UPDATED 08/12/94  21013027     TEMPERATURE=   293.00
                                                             PROCESS NUMBER 1007 IS AT TEMPERATURE=   293.00

AL-27 1193 218 GP 040375(5)                            UPDATED 08/12/94  22013027     TEMPERATURE=   293.00
                                                             PROCESS NUMBER 1007 IS AT TEMPERATURE=   293.00

AL-27 1193 218 GP 040375(5)                            UPDATED 08/12/94   7013027     TEMPERATURE=   293.00
                                                             PROCESS NUMBER 1007 IS AT TEMPERATURE=   293.00

CR 1191 WT SS-304(1/EST) P-3 293K SP=5+4(42375)'       UPDATED 08/12/94   6024304     TEMPERATURE=   293.00
                                                             PROCESS NUMBER 1007 IS AT TEMPERATURE=   293.00

CR 1191 WT SS-304(1/EST) P-3 293K SP=5+4(42375)'       UPDATED 08/12/94   8024304     TEMPERATURE=   293.00
                                                             PROCESS NUMBER 1007 IS AT TEMPERATURE=   293.00

 MANGANESE-55   ENDF/B-IV MAT 1197                     UPDATED 08/12/94   6025055     TEMPERATURE=   293.00

GEOMETRY HAS BEEN SET TO HOMOGENEOUS AS LBAR IS  0.0000E+00

RESONANCE DATA FOR THIS NUCLIDE

MASS NUMBER (A)          =    54.466              TEMPERATURE(KELVIN)       =   293.000

POTENTIAL SCATTER SIGMA  =     2.590              LUMPED NUCLEAR DENSITY    = 1.7363295E-03

SPIN FACTOR (G)          =    14.448              LUMP DIMENSION (A-BAR)    = 0.0000000E+00

INNER RADIUS             = 0.0000000E+00          DANCOFF CORRECTION (C)    = 0.0000000E+00

THE ABSORBER WILL BE TREATED BY THE NORDHEIM INTEGRAL METHOD.

MASS OF MODERATOR-1    =    55.845              SIGMA(PER ABSORBER ATOM)= 3.4663022E+02

MODERATOR-1 WILL BE TREATED BY THE NORDHEIM INTEGRAL METHOD.

MASS OF MODERATOR-2    =    55.925              SIGMA(PER ABSORBER ATOM)= 1.2557598E+02
```

```
MODERATOR-2 WILL BE TREATED BY THE NORDHEIM INTEGRAL METHOD.

THIS RESONANCE MATERIAL WILL BE TREATED AS A 0-DIMENSIONAL OBJECT.

VOLUME FRACTION OF LUMP IN CELL USED TO ACCOUNT FOR SPATIAL SELF-SHIELDING=1.00000

GROUP        RES ABS         RES FISS        RES SCAT
  8      -5.518788E-04    0.000000E+00   -3.944190E-01
  9      -2.797993E-03    0.000000E+00   -2.293471E+00
 10      -3.291452E-01    0.000000E+00   -3.820862E+01
 11      -2.680562E+00    0.000000E+00   -1.159996E+02

EXCESS RESONANCE INTEGRALS

                 RESOLVED

ABSORPTION       3.33719E+00
FISSION          0.00000E+00
                                                        PROCESS NUMBER 1007 IS AT TEMPERATURE=   293.00

 MANGANESE-55   ENDF/B-IV MAT 1197                     UPDATED 08/12/94   8025055     TEMPERATURE=   293.00

GEOMETRY HAS BEEN SET TO HOMOGENEOUS AS LBAR IS  0.0000E+00

RESONANCE DATA FOR THIS NUCLIDE

MASS NUMBER (A)          =    54.466               TEMPERATURE(KELVIN)       =   293.000

POTENTIAL SCATTER SIGMA  =     2.590               LUMPED NUCLEAR DENSITY    = 1.7363295E-03

SPIN FACTOR (G)          =    14.448               LUMP DIMENSION (A-BAR)    = 0.0000000E+00

INNER RADIUS             = 0.0000000E+00          DANCOFF CORRECTION (C)    = 0.0000000E+00

THE ABSORBER WILL BE TREATED BY THE NORDHEIM INTEGRAL METHOD.

MASS OF MODERATOR-1    =    55.845               SIGMA(PER ABSORBER ATOM)= 3.4663022E+02

MODERATOR-1 WILL BE TREATED BY THE NORDHEIM INTEGRAL METHOD.

MASS OF MODERATOR-2    =    55.925               SIGMA(PER ABSORBER ATOM)= 1.2557598E+02

MODERATOR-2 WILL BE TREATED BY THE NORDHEIM INTEGRAL METHOD.

THIS RESONANCE MATERIAL WILL BE TREATED AS A 0-DIMENSIONAL OBJECT.

VOLUME FRACTION OF LUMP IN CELL USED TO ACCOUNT FOR SPATIAL SELF-SHIELDING=1.00000

GROUP        RES ABS         RES FISS        RES SCAT
  8      -5.518788E-04    0.000000E+00   -3.944190E-01
  9      -2.797993E-03    0.000000E+00   -2.293471E+00
 10      -3.291452E-01    0.000000E+00   -3.820862E+01
 11      -2.680562E+00    0.000000E+00   -1.159996E+02

EXCESS RESONANCE INTEGRALS

                 RESOLVED

ABSORPTION       3.33719E+00
FISSION          0.00000E+00
                                                        PROCESS NUMBER 1007 IS AT TEMPERATURE=   293.00

FE 1192 WT SS-304(1/EST) P-3 293K SP=5+4(42375)'        UPDATED 08/12/94   6026304     TEMPERATURE=   293.00
                                                             PROCESS NUMBER 1007 IS AT TEMPERATURE=   293.00

FE 1192 WT SS-304(1/EST) P-3 293K SP=5+4(42375)'        UPDATED 08/12/94   8026304     TEMPERATURE=   293.00
                                                             PROCESS NUMBER 1007 IS AT TEMPERATURE=   293.00

NI 1190 WT SS-304(1/EST) P-3 293K SP=5+4(42375)'        UPDATED 08/12/94   6028304     TEMPERATURE=   293.00
                                                             PROCESS NUMBER 1007 IS AT TEMPERATURE=   293.00

NI 1190 WT SS-304(1/EST) P-3 293K SP=5+4(42375)'        UPDATED 08/12/94   8028304     TEMPERATURE=   293.00
                                                             PROCESS NUMBER 1007 IS AT TEMPERATURE=   293.00

PB   1288 218NGP 042375 P-3 293K                        UPDATED 08/12/94   5082000     TEMPERATURE=   293.00
                                                             PROCESS NUMBER 1007 IS AT TEMPERATURE=   293.00

 URANIUM-235    ENDF/B-IV MAT 1261                     UPDATED 08/12/94   1092235     TEMPERATURE=   293.00

RESONANCE DATA FOR THIS NUCLIDE

MASS NUMBER (A)          =   233.025               TEMPERATURE(KELVIN)       =   293.000

POTENTIAL SCATTER SIGMA  =    11.500               LUMPED NUCLEAR DENSITY    = 1.0717391E-03

SPIN FACTOR (G)          = 15171.100               LUMP DIMENSION (A-BAR)    = 7.9999998E-02

INNER RADIUS             = 0.0000000E+00          DANCOFF CORRECTION (C)    = 1.4650537E-01

THE ABSORBER WILL BE TREATED BY THE NORDHEIM INTEGRAL METHOD.

MASS OF MODERATOR-1    =    26.982               SIGMA(PER ABSORBER ATOM)= 4.0851063E+01

MODERATOR-1 WILL BE TREATED BY THE NORDHEIM INTEGRAL METHOD.

MASS OF MODERATOR-2    =   238.051               SIGMA(PER ABSORBER ATOM)= 7.7685082E-01
```

```
MODERATOR-2 WILL BE TREATED BY THE NORDHEIM INTEGRAL METHOD.

THIS RESONANCE MATERIAL WILL BE TREATED AS A 1-DIMENSIONAL OBJECT.

VOLUME FRACTION OF LUMP IN CELL USED TO ACCOUNT FOR SPATIAL SELF-SHIELDING=1.00000

GROUP        RES ABS         RES FISS        RES SCAT
 12      -1.704016E+00   -1.048080E+00   -4.398005E-02
 13      -5.163832E+00   -2.530548E+00   -1.177652E-01
 14      -3.723215E+00   -2.202300E+00   -2.809409E-02
 15      -2.244852E-04   -1.708981E-04    1.529968E-06

EXCESS RESONANCE INTEGRALS

                 RESOLVED

ABSORPTION       2.15992E+02
FISSION          1.28685E+02
                                                    PROCESS NUMBER 1007 IS AT TEMPERATURE=   293.00

 URANIUM-235    ENDF/B-IV MAT 1261                    UPDATED 08/12/94  11092235     TEMPERATURE=   293.00

RESONANCE DATA FOR THIS NUCLIDE

MASS NUMBER (A)          =   233.025               TEMPERATURE(KELVIN)       =   293.000

POTENTIAL SCATTER SIGMA  =    11.500               LUMPED NUCLEAR DENSITY    = 7.2906964E-04

SPIN FACTOR (G)          = 15171.100               LUMP DIMENSION (A-BAR)    = 1.8320000E-01

INNER RADIUS             = 0.0000000E+00           DANCOFF CORRECTION (C)    = 4.4644913E-01

THE ABSORBER WILL BE TREATED BY THE NORDHEIM INTEGRAL METHOD.

MASS OF MODERATOR-1    =    26.982               SIGMA(PER ABSORBER ATOM)= 3.1814728E+01

MODERATOR-1 WILL BE TREATED BY THE NORDHEIM INTEGRAL METHOD.

MASS OF MODERATOR-2    =   238.051               SIGMA(PER ABSORBER ATOM)= 1.0583184E+00

MODERATOR-2 WILL BE TREATED BY THE NORDHEIM INTEGRAL METHOD.

THIS RESONANCE MATERIAL WILL BE TREATED AS A 1-DIMENSIONAL OBJECT.

VOLUME FRACTION OF LUMP IN CELL USED TO ACCOUNT FOR SPATIAL SELF-SHIELDING=1.00000

GROUP        RES ABS         RES FISS        RES SCAT
 12      -3.443092E+00   -2.117629E+00   -8.826129E-02
 13      -1.008169E+01   -4.926846E+00   -2.272950E-01
 14      -7.340443E+00   -4.320512E+00   -5.476373E-02
 15      -4.198233E-04   -3.196314E-04    3.368596E-06

EXCESS RESONANCE INTEGRALS

                 RESOLVED

ABSORPTION       2.03902E+02
FISSION          1.22076E+02
                                                    PROCESS NUMBER 1007 IS AT TEMPERATURE=   293.00

 URANIUM-235    ENDF/B-IV MAT 1261                    UPDATED 08/12/94  21092235     TEMPERATURE=   293.00

RESONANCE DATA FOR THIS NUCLIDE

MASS NUMBER (A)          =   233.025               TEMPERATURE(KELVIN)       =   293.000

POTENTIAL SCATTER SIGMA  =    11.500               LUMPED NUCLEAR DENSITY    = 8.8941806E-04

SPIN FACTOR (G)          = 15171.100               LUMP DIMENSION (A-BAR)    = 1.0390000E-01

INNER RADIUS             = 0.0000000E+00           DANCOFF CORRECTION (C)    = 3.0363533E-01

THE ABSORBER WILL BE TREATED BY THE NORDHEIM INTEGRAL METHOD.

MASS OF MODERATOR-1    =    26.982               SIGMA(PER ABSORBER ATOM)= 9.9916658E+00

MODERATOR-1 WILL BE TREATED BY THE NORDHEIM INTEGRAL METHOD.

MASS OF MODERATOR-2    =   238.051               SIGMA(PER ABSORBER ATOM)= 2.1477635E+00

MODERATOR-2 WILL BE TREATED BY THE NORDHEIM INTEGRAL METHOD.

THIS RESONANCE MATERIAL WILL BE TREATED AS A 1-DIMENSIONAL OBJECT.

VOLUME FRACTION OF LUMP IN CELL USED TO ACCOUNT FOR SPATIAL SELF-SHIELDING=1.00000

GROUP        RES ABS         RES FISS        RES SCAT
 12      -2.174708E+00   -1.338090E+00   -5.598649E-02
 13      -6.530482E+00   -3.199709E+00   -1.485872E-01
 14      -4.716246E+00   -2.786873E+00   -3.558919E-02
 15      -2.805605E-04   -2.136031E-04    2.053226E-06

EXCESS RESONANCE INTEGRALS

                 RESOLVED

ABSORPTION       2.12660E+02
```

```
FISSION          1.26857E+02
                                                        PROCESS NUMBER 1007 IS AT TEMPERATURE=   293.00

 URANIUM-238    ENDF/B-IV MAT 1262                    UPDATED 08/12/94   1092238     TEMPERATURE=   293.00

RESONANCE DATA FOR THIS NUCLIDE

MASS NUMBER (A)          =   236.006               TEMPERATURE(KELVIN)       =   293.000

POTENTIAL SCATTER SIGMA  =    10.599               LUMPED NUCLEAR DENSITY    = 6.7544795E-05

SPIN FACTOR (G)          =   656.527               LUMP DIMENSION (A-BAR)    = 7.9999998E-02

INNER RADIUS             = 0.0000000E+00           DANCOFF CORRECTION (C)    = 1.4650537E-01

THE ABSORBER WILL BE TREATED BY THE NORDHEIM INTEGRAL METHOD.

MASS OF MODERATOR-1    =    26.982               SIGMA(PER ABSORBER ATOM)= 6.4818732E+02

MODERATOR-1 WILL BE TREATED BY THE NORDHEIM INTEGRAL METHOD.

MASS OF MODERATOR-2    =   235.044               SIGMA(PER ABSORBER ATOM)= 1.8885783E+02

MODERATOR-2 WILL BE TREATED BY THE NORDHEIM INTEGRAL METHOD.

THIS RESONANCE MATERIAL WILL BE TREATED AS A 1-DIMENSIONAL OBJECT.

VOLUME FRACTION OF LUMP IN CELL USED TO ACCOUNT FOR SPATIAL SELF-SHIELDING=1.00000

GROUP        RES ABS         RES FISS        RES SCAT
  9      -1.303381E-04    0.000000E+00   -1.468809E-03
 10      -6.994279E-03   -3.886728E-08   -5.076653E-02
 11      -3.286570E-01    0.000000E+00   -1.049223E+00
 12      -3.090056E+00    0.000000E+00   -3.705011E+00
 13      -3.566053E+00    0.000000E+00   -1.183352E+00
 14      -6.549177E+00    0.000000E+00   -3.855168E-01
 15      -4.152076E-09    0.000000E+00    3.744929E-09

EXCESS RESONANCE INTEGRALS

                 RESOLVED

ABSORPTION       2.57170E+02
FISSION          5.33631E-04
                                                        PROCESS NUMBER 1007 IS AT TEMPERATURE=   293.00

 URANIUM-238    ENDF/B-IV MAT 1262                    UPDATED 08/12/94  11092238     TEMPERATURE=   293.00

RESONANCE DATA FOR THIS NUCLIDE

MASS NUMBER (A)          =   236.006               TEMPERATURE(KELVIN)       =   293.000

POTENTIAL SCATTER SIGMA  =    10.599               LUMPED NUCLEAR DENSITY    = 6.2596569E-05

SPIN FACTOR (G)          =   656.527               LUMP DIMENSION (A-BAR)    = 1.8320000E-01

INNER RADIUS             = 0.0000000E+00           DANCOFF CORRECTION (C)    = 4.4644913E-01

THE ABSORBER WILL BE TREATED BY THE NORDHEIM INTEGRAL METHOD.

MASS OF MODERATOR-1    =    26.982               SIGMA(PER ABSORBER ATOM)= 3.7054990E+02

MODERATOR-1 WILL BE TREATED BY THE NORDHEIM INTEGRAL METHOD.

MASS OF MODERATOR-2    =   235.044               SIGMA(PER ABSORBER ATOM)= 1.3862970E+02

MODERATOR-2 WILL BE TREATED BY THE NORDHEIM INTEGRAL METHOD.

THIS RESONANCE MATERIAL WILL BE TREATED AS A 1-DIMENSIONAL OBJECT.

VOLUME FRACTION OF LUMP IN CELL USED TO ACCOUNT FOR SPATIAL SELF-SHIELDING=1.00000

GROUP        RES ABS         RES FISS        RES SCAT
  9      -3.620582E-04    0.000000E+00   -4.064494E-03
 10      -1.913557E-02   -1.082530E-07   -1.386904E-01
 11      -8.633477E-01    0.000000E+00   -2.746832E+00
 12      -7.765469E+00    0.000000E+00   -9.294101E+00
 13      -9.083701E+00    0.000000E+00   -3.011560E+00
 14      -1.674567E+01    0.000000E+00   -9.847641E-01
 15      -5.750381E-09    0.000000E+00    6.853097E-09

EXCESS RESONANCE INTEGRALS

                 RESOLVED

ABSORPTION       2.32087E+02
FISSION          5.33513E-04
                                                        PROCESS NUMBER 1007 IS AT TEMPERATURE=   293.00

 URANIUM-238    ENDF/B-IV MAT 1262                    UPDATED 08/12/94  21092238     TEMPERATURE=   293.00

RESONANCE DATA FOR THIS NUCLIDE

MASS NUMBER (A)          =   236.006               TEMPERATURE(KELVIN)       =   293.000

POTENTIAL SCATTER SIGMA  =    10.599               LUMPED NUCLEAR DENSITY    = 1.5497355E-04
```

```
SPIN FACTOR (G)          =   656.527              LUMP DIMENSION (A-BAR)    = 1.0390000E-01

INNER RADIUS             = 0.0000000E+00          DANCOFF CORRECTION (C)    = 3.0363533E-01

THE ABSORBER WILL BE TREATED BY THE NORDHEIM INTEGRAL METHOD.

MASS OF MODERATOR-1    =    26.982               SIGMA(PER ABSORBER ATOM)= 5.7343777E+01

MODERATOR-1 WILL BE TREATED BY THE NORDHEIM INTEGRAL METHOD.

MASS OF MODERATOR-2    =   235.044               SIGMA(PER ABSORBER ATOM)= 6.8310303E+01

MODERATOR-2 WILL BE TREATED BY THE NORDHEIM INTEGRAL METHOD.

THIS RESONANCE MATERIAL WILL BE TREATED AS A 1-DIMENSIONAL OBJECT.

VOLUME FRACTION OF LUMP IN CELL USED TO ACCOUNT FOR SPATIAL SELF-SHIELDING=1.00000

GROUP        RES ABS         RES FISS        RES SCAT
  9      -4.686594E-04    0.000000E+00   -5.222821E-03
 10      -2.346429E-02   -1.449519E-07   -1.687880E-01
 11      -9.533950E-01    0.000000E+00   -3.024348E+00
 12      -8.307403E+00    0.000000E+00   -9.952425E+00
 13      -9.787482E+00    0.000000E+00   -3.248145E+00
 14      -1.810307E+01    0.000000E+00   -1.065493E+00
 15      -6.534871E-09    0.000000E+00    8.378668E-09

EXCESS RESONANCE INTEGRALS

                 RESOLVED

ABSORPTION       2.28848E+02
FISSION          5.33451E-04
                                                PROCESS NUMBER 1007 IS AT TEMPERATURE=   293.00

                    ********************************************************************************
                    ********************************************************************************
                    ********************************************************************************
                    *****                                                                      *****
                    *****                  PROGRAM VERIFICATION INFORMATION                    *****
                    *****                                                                      *****
                    *****                CODE SYSTEM:  SCALE-PC VERSION:  4.3                  *****
                    *****                                                                      *****
                    ********************************************************************************
                    ********************************************************************************
                    *****                                                                      *****
                    *****                                                                      *****
                    *****              PROGRAM:  O0O009                                        *****
                    *****                                                                      *****
                    *****        CREATION DATE:  03/08/96                                      *****
                    *****                                                                      *****
                    *****              VOLUME:   Eng                                           *****
                    *****                                                                      *****
                    *****              LIBRARY:  M:\SCALE43\WIN_NT\EXE                         *****
                    *****                                                                      *****
                    *****                                                                      *****
                    *****      PRODUCTION CODE:  KENOVA                                        *****
                    *****                                                                      *****
                    *****              VERSION:  3.1                                           *****
                    *****                                                                      *****
                    *****              JOBNAME:  SCALE-PC                                      *****
                    *****                                                                      *****
                    *****    DATE OF EXECUTION:  08/05/08                                      *****
                    *****                                                                      *****
                    *****    TIME OF EXECUTION:  16:15:56                                      *****
                    *****                                                                      *****
                    *****                                                                      *****
                    ********************************************************************************
                    ********************************************************************************
                    ********************************************************************************

   ***************************************************************************************************************************
   ***                                                                                                                     ***
   ***                                                                                                                     ***
   ***                                                                                                                     ***
   ***************************************************************************************************************************
   ***                                ******       NUMERIC PARAMETERS       ******                                     ***
   ***                                                                                                                     ***
   ***                                                                                                                     ***
   ***                  TME         MAXIMUM PROBLEM TIME (MIN)                        90.00                            ***
   ***                                                                                                                     ***
   ***                  TBA         TIME PER GENERATION (MIN)                          5.00                            ***
   ***                                                                                                                     ***
   ***                  GEN         NUMBER OF GENERATIONS                             1203                             ***
   ***                                                                                                                     ***
   ***                  NPG         NUMBER PER GENERATION                             1000                             ***
   ***                                                                                                                     ***
   ***                  NSK         NUMBER OF GENERATIONS TO BE SKIPPED                  3                             ***
   ***                                                                                                                     ***
   ***                  BEG         BEGINNING GENERATION NUMBER                          1                             ***
   ***                                                                                                                     ***
   ***                  RES         GENERATIONS BETWEEN CHECKPOINTS                      0                             ***
   ***                                                                                                                     ***
   ***                  X1D         NUMBER OF EXTRA 1-D CROSS SECTIONS                   1                             ***
   ***                                                                                                                     ***
   ***                  NBK         NEUTRON BANK SIZE                                 1025                             ***
```

```
***                                                                                                                  ***
***                    XNB         EXTRA POSITIONS IN NEUTRON BANK                        0                      ***
***                                                                                                                  ***
***                    NFB         FISSION BANK SIZE                                   1000                      ***
***                                                                                                                  ***
***                    XFB         EXTRA POSITIONS IN FISSION BANK                        0                      ***
***                                                                                                                  ***
***                    WTA         DEFAULT VALUE OF WEIGHT AVERAGE                   0.5000                      ***
***                                                                                                                  ***
***                    WTH         WEIGHT HIGH FOR SPLITTING                         3.0000                      ***
***                                                                                                                  ***
***                    WTL         WEIGHT LOW FOR RUSSIAN ROULETTE                   0.3333                      ***
***                                                                                                                  ***
***                    RND         STARTING RANDOM NUMBER                       BB827100001                      ***
***                                                                                                                  ***
***                    NB8         NUMBER OF D.A. BLOCKS ON UNIT  8                   200                      ***
***                                                                                                                  ***
***                    NL8         LENGTH OF D.A. BLOCKS ON UNIT  8                   512                      ***
***                                                                                                                  ***
***                    ADJ         MODE OF CALCULATION                             FORWARD                      ***
***                                                                                                                  ***
***                                INPUT DATA WRITTEN ON RESTART UNIT                   NO                      ***
***                                                                                                                  ***
***                                BINARY DATA INTERFACE                               YES                      ***
***                                                                                                                  ***
***                                                                                                                  ***
********************************************************************************************************************
********************************************************************************************************************
********************************************************************************************************************
********************************************************************************************************************
***                                                                                                                  ***
***                                                                                                                  ***
***                                                                                                                  ***
********************************************************************************************************************
***                              ******      LOGICAL PARAMETERS        ******                                    ***
***                                                                                                                  ***
***  RUN  EXECUTE PROBLEM AFTER CHECKING DATA    YES          PLT  PLOT PICTURE MAP(S)                      NO  ***
***                                                                                                                  ***
***  FLX  COMPUTE FLUX                            NO          FDN  COMPUTE FISSION DENSITIES                NO  ***
***                                                                                                                  ***
***  SMU  COMPUTE AVG UNIT SELF-MULTIPLICATION    NO          NUB  COMPUTE NU-BAR & AVG FISSION GROUP       YES  ***
***                                                                                                                  ***
***  MKU  COMPUTE MATRIX K-EFF BY UNIT NUMBER     NO          MKP  COMPUTE MATRIX K-EFF BY UNIT LOCATION    NO  ***
***                                                                                                                  ***
***  CKU  COMPUTE COFACTOR K-EFF BY UNIT NUMBER   NO          CKP  COMPUTE COFACTOR K-EFF BY UNIT LOCATION  NO  ***
***                                                                                                                  ***
***  FMU  PRINT FISS PROD MATRIX BY UNIT NUMBER   NO          FMP  PRINT FISS PROD MATRIX BY UNIT LOCATION  NO  ***
***                                                                                                                  ***
***  MKH  COMPUTE MATRIX K-EFF BY HOLE NUMBER     NO          MKA  COMPUTE MATRIX K-EFF BY ARRAY NUMBER     NO  ***
***                                                                                                                  ***
***  CKH  COMPUTE COFACTOR K-EFF BY HOLE NUMBER   NO          CKA  COMPUTE COFACTOR K-EFF BY ARRAY NUMBER   NO  ***
***                                                                                                                  ***
***  FMH  PRINT FISS PROD MATRIX BY HOLE NUMBER   NO          FMA  PRINT FISS PROD MATRIX BY ARRAY NUMBER   NO  ***
***                                                                                                                  ***
***  HHL  COLLECT MATRIX BY HIGHEST HOLE LEVEL    NO          HAL  COLLECT MATRIX BY HIGHEST ARRAY LEVEL    NO  ***
***                                                                                                                  ***
***  AMX  PRINT ALL MIXED CROSS SECTIONS          NO          FAR  PRINT FIS. AND ABS. BY REGION            NO  ***
***                                                                                                                  ***
***  XS1  PRINT 1-D MIXTURE X-SECTIONS            NO          GAS  PRINT FAR BY GROUP                       NO  ***
***                                                                                                                  ***
***  XS2  PRINT 2-D MIXTURE X-SECTIONS            NO          PAX  PRINT XSEC-ALBEDO CORRELATION TABLES     NO  ***
***                                                                                                                  ***
***  XAP  PRINT MIXTURE ANGLES & PROBABILITIES    NO          PWT  PRINT WEIGHT AVERAGE ARRAY               NO  ***
***                                                                                                                  ***
***  PKI  PRINT FISSION SPECTRUM                  NO          PGM  PRINT INPUT GEOMETRY                     NO  ***
***                                                                                                                  ***
***  P1D  PRINT EXTRA 1-D CROSS SECTIONS          NO          BUG  PRINT DEBUG INFORMATION                  NO  ***
***                                                                                                                  ***
***                                                          TRK  PRINT TRACKING INFORMATION               NO  ***
***                                                                                                                  ***
***                                                                                                                  ***
********************************************************************************************************************
********************************************************************************************************************
********************************************************************************************************************
                                    PARAMETER INPUT COMPLETED


                        ........    0 IO'S WERE USED READING THE PARAMETER DATA      ........

                      ************** DATA READING COMPLETED **************
********************************************************************************************************************
***                                                                                                                  ***
***                                                                                                                  ***
***                                                                                                                  ***
********************************************************************************************************************
********************************************************************************************************************
***                                                                                                                  ***
***          UNIT                                                VOLUME                                          ***
***         NUMBER              DATA SET NAME                    NAME        UNIT FUNCTION                       ***
***         ------              -------------                    ----        -------------                       ***
***                                                                                                                  ***
***      XSC  14     D:\RAA\LWT ANSTO input\f_12_P_5336\FT14F001               MIXED CROSS SECTIONS              ***
***                                                                                                                  ***
***      ALB  79     M:\scale43\DATALIB\FT79F001                               INPUT ALBEDOS                     ***
***                                                                                                                  ***
***      WTS  80     M:\scale43\DATALIB\FT80F001                               INPUT WEIGHTS                     ***
```

```
***                                                                                                                  ***
***      SKT  16      UNKNOWN                                                 WRITE SCRATCH DATA                     ***
***                                                                                                                  ***
***      BIN  95     D:\RAA\LWT ANSTO input\f_12_P_5336\FT95F001               BINARY INPUT DATA                      ***
***                                                                                                                  ***
***      RST  95     D:\RAA\LWT ANSTO input\f_12_P_5336\FT95F001               READ RESTART DATA                      ***
***                                                                                                                  ***
***      LIB   4     D:\RAA\LWT ANSTO input\f_12_P_5336\FT04F001               INPUT AMPX WORKING LIBRARY             ***
***                                                                                                                  ***
***            8     D:\RAA\LWT ANSTO input\f_12_P_5336\FT08F001               INPUT DATA DIRECT ACCESS               ***
***                                                                                                                  ***
***            9      UNKNOWN                                                 SUPER GROUPED DIRECT ACCESS            ***
***                                                                                                                  ***
***           10      UNKNOWN                                                 XSEC MIXING DIRECT ACCESS              ***
***                                                                                                                  ***
**********************************************************************************************************************

                        ........    0 IO'S WERE USED PREPARING INPUT DATA    ........

                         CROSS SECTIONS READ FROM THE AMPX WORKING LIBRARY ON UNIT    4


                                              MIXING TABLE

                                        NUMBER OF SCATTERING ANGLES =  2
                                     CROSS SECTION MESSAGE THRESHOLD =3.0E-05

MIXTURE =     1          DENSITY(G/CC) =  1.9018
   NUCLIDE   ATOM-DENS.   WGT. FRAC.     ZA      AWT             NUCLIDE TITLE
   1013027  3.25147E-02  7.66011E-01   13027    26.9818     AL-27 1193 218 GP 040375(5)                              UPDATED
08/12/94
   1092235  1.07174E-03  2.19950E-01   92235   235.0441      URANIUM-235    ENDF/B-IV MAT 1261                       UPDATED
08/12/94
   1092238  6.75448E-05  1.40393E-02   92238   238.0510      URANIUM-238    ENDF/B-IV MAT 1262                       UPDATED
08/12/94

MIXTURE =     2          DENSITY(G/CC) =  2.7020
   NUCLIDE   ATOM-DENS.   WGT. FRAC.     ZA      AWT             NUCLIDE TITLE
   2013027  6.03066E-02  1.00000E+00   13027    26.9818     AL-27 1193 218 GP 040375(5)                              UPDATED
08/12/94

MIXTURE =     3          DENSITY(G/CC) = 0.99977
   NUCLIDE   ATOM-DENS.   WGT. FRAC.     ZA      AWT             NUCLIDE TITLE
   3001001  6.68762E-02  1.11927E-01    1001     1.0077      HYDROGEN       ENDF/B-IV MAT 1269/THRM1002              UPDATED
08/12/94
   3008016  3.34381E-02  8.88074E-01    8016    15.9904      OXYGEN-16      ENDF/B-IV MAT 1276                       UPDATED
08/12/94

MIXTURE =     4          DENSITY(G/CC) = 0.99977
   NUCLIDE   ATOM-DENS.   WGT. FRAC.     ZA      AWT             NUCLIDE TITLE
   4001001  6.68762E-02  1.11927E-01    1001     1.0077      HYDROGEN       ENDF/B-IV MAT 1269/THRM1002              UPDATED
08/12/94
   4008016  3.34381E-02  8.88074E-01    8016    15.9904      OXYGEN-16      ENDF/B-IV MAT 1276                       UPDATED
08/12/94

MIXTURE =     5          DENSITY(G/CC) =  11.344
   NUCLIDE   ATOM-DENS.   WGT. FRAC.     ZA      AWT             NUCLIDE TITLE
   5082000  3.29690E-02  1.00000E+00   82000   207.2100     PB   1288 218NGP 042375 P-3 293K                         UPDATED
08/12/94

MIXTURE =     6          DENSITY(G/CC) =  7.9200
   NUCLIDE   ATOM-DENS.   WGT. FRAC.     ZA      AWT             NUCLIDE TITLE
   6024304  1.74286E-02  1.90000E-01   24000    51.9957     CR 1191 WT SS-304(1/EST) P-3 293K SP=5+4(42375)'         UPDATED
08/12/94
   6025055  1.73633E-03  1.99999E-02   25055    54.9379      MANGANESE-55   ENDF/B-IV MAT 1197                       UPDATED
08/12/94
   6026304  5.93579E-02  6.95000E-01   26000    55.8447     FE 1192 WT SS-304(1/EST) P-3 293K SP=5+4(42375)'         UPDATED
08/12/94
   6028304  7.72070E-03  9.50001E-02   28000    58.6872     NI 1190 WT SS-304(1/EST) P-3 293K SP=5+4(42375)'         UPDATED
08/12/94

MIXTURE =     7          DENSITY(G/CC) =  2.7020
   NUCLIDE   ATOM-DENS.   WGT. FRAC.     ZA      AWT             NUCLIDE TITLE
   7013027  6.03066E-02  1.00000E+00   13027    26.9818     AL-27 1193 218 GP 040375(5)                              UPDATED
08/12/94

MIXTURE =     8          DENSITY(G/CC) =  7.9200
   NUCLIDE   ATOM-DENS.   WGT. FRAC.     ZA      AWT             NUCLIDE TITLE
   8024304  1.74286E-02  1.90000E-01   24000    51.9957     CR 1191 WT SS-304(1/EST) P-3 293K SP=5+4(42375)'         UPDATED
08/12/94
   8025055  1.73633E-03  1.99999E-02   25055    54.9379      MANGANESE-55   ENDF/B-IV MAT 1197                       UPDATED
08/12/94
   8026304  5.93579E-02  6.95000E-01   26000    55.8447     FE 1192 WT SS-304(1/EST) P-3 293K SP=5+4(42375)'         UPDATED
08/12/94
   8028304  7.72070E-03  9.50001E-02   28000    58.6872     NI 1190 WT SS-304(1/EST) P-3 293K SP=5+4(42375)'         UPDATED
08/12/94

MIXTURE =     9          DENSITY(G/CC) = 0.99997E-04
   NUCLIDE   ATOM-DENS.   WGT. FRAC.     ZA      AWT             NUCLIDE TITLE
   9001001  6.68896E-06  1.11927E-01    1001     1.0077      HYDROGEN       ENDF/B-IV MAT 1269/THRM1002              UPDATED
08/12/94
   9008016  3.34448E-06  8.88074E-01    8016    15.9904      OXYGEN-16      ENDF/B-IV MAT 1276                       UPDATED
08/12/94
```

```
MIXTURE =    10          DENSITY(G/CC) = 0.99977
   NUCLIDE   ATOM-DENS.   WGT. FRAC.     ZA      AWT              NUCLIDE TITLE
  10001001  6.68762E-02  1.11927E-01    1001     1.0077      HYDROGEN       ENDF/B-IV MAT 1269/THRM1002             UPDATED
08/12/94
  10008016  3.34381E-02  8.88074E-01    8016    15.9904      OXYGEN-16      ENDF/B-IV MAT 1276                      UPDATED
08/12/94

MIXTURE =    11          DENSITY(G/CC) =  1.0811
   NUCLIDE   ATOM-DENS.   WGT. FRAC.     ZA      AWT              NUCLIDE TITLE
  11013027  1.72260E-02  7.13902E-01   13027    26.9818     AL-27 1193 218 GP 040375(5)                            UPDATED
08/12/94
  11092235  7.29070E-04  2.63210E-01   92235   235.0441      URANIUM-235    ENDF/B-IV MAT 1261                      UPDATED
08/12/94
  11092238  6.25966E-05  2.28878E-02   92238   238.0510      URANIUM-238    ENDF/B-IV MAT 1262                      UPDATED
08/12/94

MIXTURE =    12          DENSITY(G/CC) =  2.7020
   NUCLIDE   ATOM-DENS.   WGT. FRAC.     ZA      AWT              NUCLIDE TITLE
  12013027  6.03066E-02  1.00000E+00   13027    26.9818     AL-27 1193 218 GP 040375(5)                            UPDATED
08/12/94

MIXTURE =    13          DENSITY(G/CC) = 0.99977
   NUCLIDE   ATOM-DENS.   WGT. FRAC.     ZA      AWT              NUCLIDE TITLE
  13001001  6.68762E-02  1.11927E-01    1001     1.0077      HYDROGEN       ENDF/B-IV MAT 1269/THRM1002             UPDATED
08/12/94
  13008016  3.34381E-02  8.88074E-01    8016    15.9904      OXYGEN-16      ENDF/B-IV MAT 1276                      UPDATED
08/12/94

MIXTURE =    21          DENSITY(G/CC) = 0.70410
   NUCLIDE   ATOM-DENS.   WGT. FRAC.     ZA      AWT              NUCLIDE TITLE
  21013027  6.59980E-03  4.19969E-01   13027    26.9818     AL-27 1193 218 GP 040375(5)                            UPDATED
08/12/94
  21092235  8.89418E-04  4.93027E-01   92235   235.0441      URANIUM-235    ENDF/B-IV MAT 1261                      UPDATED
08/12/94
  21092238  1.54974E-04  8.70047E-02   92238   238.0510      URANIUM-238    ENDF/B-IV MAT 1262                      UPDATED
08/12/94

MIXTURE =    22          DENSITY(G/CC) =  2.7020
   NUCLIDE   ATOM-DENS.   WGT. FRAC.     ZA      AWT              NUCLIDE TITLE
  22013027  6.03066E-02  1.00000E+00   13027    26.9818     AL-27 1193 218 GP 040375(5)                            UPDATED
08/12/94

MIXTURE =    23          DENSITY(G/CC) = 0.99977
   NUCLIDE   ATOM-DENS.   WGT. FRAC.     ZA      AWT              NUCLIDE TITLE
  23001001  6.68762E-02  1.11927E-01    1001     1.0077      HYDROGEN       ENDF/B-IV MAT 1269/THRM1002             UPDATED
08/12/94
  23008016  3.34381E-02  8.88074E-01    8016    15.9904      OXYGEN-16      ENDF/B-IV MAT 1276                      UPDATED
08/12/94
```

```
    3001001     HYDROGEN       ENDF/B-IV MAT 1269/THRM1002             UPDATED 08/12/94
   13001001     HYDROGEN       ENDF/B-IV MAT 1269/THRM1002             UPDATED 08/12/94
   23001001     HYDROGEN       ENDF/B-IV MAT 1269/THRM1002             UPDATED 08/12/94
    4001001     HYDROGEN       ENDF/B-IV MAT 1269/THRM1002             UPDATED 08/12/94
    9001001     HYDROGEN       ENDF/B-IV MAT 1269/THRM1002             UPDATED 08/12/94
   10001001     HYDROGEN       ENDF/B-IV MAT 1269/THRM1002             UPDATED 08/12/94
    3008016     OXYGEN-16      ENDF/B-IV MAT 1276                      UPDATED 08/12/94
   13008016     OXYGEN-16      ENDF/B-IV MAT 1276                      UPDATED 08/12/94
   23008016     OXYGEN-16      ENDF/B-IV MAT 1276                      UPDATED 08/12/94
    4008016     OXYGEN-16      ENDF/B-IV MAT 1276                      UPDATED 08/12/94
    9008016     OXYGEN-16      ENDF/B-IV MAT 1276                      UPDATED 08/12/94
   10008016     OXYGEN-16      ENDF/B-IV MAT 1276                      UPDATED 08/12/94
    1013027    AL-27 1193 218 GP 040375(5)                            UPDATED 08/12/94
    2013027    AL-27 1193 218 GP 040375(5)                            UPDATED 08/12/94
   11013027    AL-27 1193 218 GP 040375(5)                            UPDATED 08/12/94
   12013027    AL-27 1193 218 GP 040375(5)                            UPDATED 08/12/94
   21013027    AL-27 1193 218 GP 040375(5)                            UPDATED 08/12/94
   22013027    AL-27 1193 218 GP 040375(5)                            UPDATED 08/12/94
    7013027    AL-27 1193 218 GP 040375(5)                            UPDATED 08/12/94
    6024304    CR 1191 WT SS-304(1/EST) P-3 293K SP=5+4(42375)'       UPDATED 08/12/94
    8024304    CR 1191 WT SS-304(1/EST) P-3 293K SP=5+4(42375)'       UPDATED 08/12/94
    6025055     MANGANESE-55   ENDF/B-IV MAT 1197                     UPDATED 08/12/94
    8025055     MANGANESE-55   ENDF/B-IV MAT 1197                     UPDATED 08/12/94
    6026304    FE 1192 WT SS-304(1/EST) P-3 293K SP=5+4(42375)'       UPDATED 08/12/94
    8026304    FE 1192 WT SS-304(1/EST) P-3 293K SP=5+4(42375)'       UPDATED 08/12/94
    6028304    NI 1190 WT SS-304(1/EST) P-3 293K SP=5+4(42375)'       UPDATED 08/12/94
    8028304    NI 1190 WT SS-304(1/EST) P-3 293K SP=5+4(42375)'       UPDATED 08/12/94
    5082000    PB   1288 218NGP 042375 P-3 293K                       UPDATED 08/12/94
    1092235     URANIUM-235    ENDF/B-IV MAT 1261                     UPDATED 08/12/94
   11092235     URANIUM-235    ENDF/B-IV MAT 1261                     UPDATED 08/12/94
   21092235     URANIUM-235    ENDF/B-IV MAT 1261                     UPDATED 08/12/94
    1092238     URANIUM-238    ENDF/B-IV MAT 1262                     UPDATED 08/12/94
   11092238     URANIUM-238    ENDF/B-IV MAT 1262                     UPDATED 08/12/94
   21092238     URANIUM-238    ENDF/B-IV MAT 1262                     UPDATED 08/12/94
```

VOLUMES FOR THOSE UNITS UTILIZED IN THIS PROBLEM

UNIT	REGION	GEOMETRY REGION	VOLUME	CUMULATIVE VOLUME
1	1	1	1.69451E+03 CM**3	1.69451E+03 CM**3
	2	2	2.80775E+01 CM**3	1.72258E+03 CM**3
	3	3	9.13984E+01 CM**3	1.81398E+03 CM**3
	4	4	2.90465E+01 CM**3	1.84303E+03 CM**3

	5	5	4.56862E+02 CM**3	2.29989E+03 CM**3
	6	6	3.26919E+01 CM**3	2.33258E+03 CM**3
	7	7	1.06164E+02 CM**3	2.43875E+03 CM**3
	8	8	3.36606E+01 CM**3	2.47241E+03 CM**3
	9	9	5.25153E+02 CM**3	2.99756E+03 CM**3
	10	10	3.73052E+01 CM**3	3.03487E+03 CM**3
	11	11	1.20930E+02 CM**3	3.15580E+03 CM**3
	12	12	3.82744E+01 CM**3	3.19407E+03 CM**3
	13	13	5.93444E+02 CM**3	3.78751E+03 CM**3
	14	14	4.19194E+01 CM**3	3.82943E+03 CM**3
	15	15	1.35695E+02 CM**3	3.96513E+03 CM**3
	16	16	4.27173E+01 CM**3	4.00785E+03 CM**3
2	1	17	3.96586E+01 CM**3	3.96586E+01 CM**3
	2	18	3.47606E+00 CM**3	4.31347E+01 CM**3
	3	19	1.06925E+01 CM**3	5.38272E+01 CM**3
	4	20	4.03762E+00 CM**3	5.78648E+01 CM**3
	5	21	1.22908E+01 CM**3	7.01557E+01 CM**3
	6	22	4.59916E+00 CM**3	7.47548E+01 CM**3
	7	23	1.38891E+01 CM**3	8.86439E+01 CM**3
	8	24	5.15671E+00 CM**3	9.38006E+01 CM**3
3	1	25	1.79337E-01 CM**3	4.19563E+03 CM**3
4	1	26	1.76679E+03 CM**3	5.96242E+03 CM**3
	2	27	7.34815E+02 CM**3	6.69723E+03 CM**3
5	1	28	1.76679E+03 CM**3	5.96242E+03 CM**3
	2	29	7.34815E+02 CM**3	6.69723E+03 CM**3
6	1	30	6.43417E+00 CM**3	6.43417E+00 CM**3
7	1	31	1.08713E+03 CM**3	1.13216E+03 CM**3
8	1	32	2.30289E+01 CM**3	2.30289E+01 CM**3
9	1	33	1.29829E+04 CM**3	6.02781E+04 CM**3
	2	34	3.59751E+03 CM**3	6.38756E+04 CM**3
	3	35	1.36994E+03 CM**3	6.52455E+04 CM**3
10	1	36	1.29829E+04 CM**3	6.02781E+04 CM**3
	2	37	3.59751E+03 CM**3	6.38756E+04 CM**3
	3	38	1.36994E+03 CM**3	6.52455E+04 CM**3
333	1	379	7.83597E+01 CM**3	7.83597E+01 CM**3
	2	380	1.25503E+01 CM**3	9.09101E+01 CM**3
	3	381	1.47943E+02 CM**3	2.38853E+02 CM**3
334	1	382	7.83597E+01 CM**3	7.83597E+01 CM**3
	2	383	1.25503E+01 CM**3	9.09101E+01 CM**3
	3	384	7.39952E+01 CM**3	1.64905E+02 CM**3
335	1	385	7.83597E+01 CM**3	7.83597E+01 CM**3
	2	386	1.25503E+01 CM**3	9.09101E+01 CM**3
	3	387	7.39952E+01 CM**3	1.64905E+02 CM**3

SURROUNDING GEOMETRY VOLUMES - GEOMETRY REGION 388 IS AN ARRAY PLACEMENT BOUNDARY REGION

336	1	388	3.19605E+03 CM**3	3.19605E+03 CM**3
348	1	410	3.10016E+03 CM**3	6.29621E+03 CM**3
	2	411	7.83619E+02 CM**3	7.07983E+03 CM**3
349	1	412	3.10016E+03 CM**3	6.29621E+03 CM**3
	2	413	7.83619E+02 CM**3	7.07983E+03 CM**3
350	1	414	3.10016E+03 CM**3	6.29621E+03 CM**3
	2	415	7.83619E+02 CM**3	7.07983E+03 CM**3
351	1	416	3.10016E+03 CM**3	6.29621E+03 CM**3
	2	417	7.83619E+02 CM**3	7.07983E+03 CM**3
352	1	418	3.10016E+03 CM**3	6.29621E+03 CM**3
	2	419	7.83619E+02 CM**3	7.07983E+03 CM**3
353	1	420	3.10016E+03 CM**3	6.29621E+03 CM**3
	2	421	7.83619E+02 CM**3	7.07983E+03 CM**3
354	1	422	3.10016E+03 CM**3	6.29621E+03 CM**3
	2	423	7.83619E+02 CM**3	7.07983E+03 CM**3
401	1	424	1.46220E+04 CM**3	6.41808E+04 CM**3
	2	425	9.28867E+02 CM**3	6.51097E+04 CM**3
402	1	426	6.16764E+00 CM**3	6.16764E+00 CM**3
403	1	427	1.04209E+03 CM**3	1.08527E+03 CM**3
404	1	428	6.81699E+03 CM**3	4.04900E+05 CM**3
405	1	429	0.00000E+00 CM**3	4.04900E+05 CM**3
	2	430	9.69190E+04 CM**3	5.01819E+05 CM**3
	3	431	1.06970E+06 CM**3	1.57152E+06 CM**3
	4	432	2.99966E+05 CM**3	1.87148E+06 CM**3
	5	433	1.52801E+06 CM**3	3.39950E+06 CM**3
	6	434	8.33038E+04 CM**3	3.48280E+06 CM**3
	7	435	9.51639E+05 CM**3	4.43444E+06 CM**3

```
406         1       436         1.17210E+05 CM**3         1.17210E+05 CM**3
            2       437         1.00916E+05 CM**3         2.18126E+05 CM**3
            3       438         4.67352E+03 CM**3         2.22799E+05 CM**3
            4       439         6.08776E+04 CM**3         2.83677E+05 CM**3

407         1       440         1.66245E+04 CM**3         1.66245E+04 CM**3
            2       441         9.26041E+04 CM**3         1.09229E+05 CM**3
            3       442         9.40439E+04 CM**3         2.03273E+05 CM**3
            4       443         4.67353E+03 CM**3         2.07946E+05 CM**3
            5       444         5.68191E+04 CM**3         2.64765E+05 CM**3

SURROUNDING GEOMETRY VOLUMES -  GEOMETRY REGION    445 IS AN ARRAY PLACEMENT BOUNDARY REGION

408         1       445         4.98288E+06 CM**3         4.98288E+06 CM**3


                    UNIT     USES    REGION     MIXTURE        TOTAL VOLUME

                      1        35         1           3         5.93077E+04 CM**3
                                            2           2         9.82713E+02 CM**3
                                            3           1         3.19895E+03 CM**3
                                            4           2         1.01663E+03 CM**3
                                            5           3         1.59902E+04 CM**3
                                            6           2         1.14422E+03 CM**3
                                            7           1         3.71573E+03 CM**3
                                            8           2         1.17812E+03 CM**3
                                            9           3         1.83804E+04 CM**3
                                           10           2         1.30568E+03 CM**3
                                           11           1         4.23255E+03 CM**3
                                           12           2         1.33960E+03 CM**3
                                           13           3         2.07705E+04 CM**3
                                           14           2         1.46718E+03 CM**3
                                           15           1         4.74934E+03 CM**3
                                           16           2         1.49510E+03 CM**3

                      2        70         1           3         2.77610E+03 CM**3
                                            2           2         2.43324E+02 CM**3
                                            3           3         7.48477E+02 CM**3
                                            4           2         2.82633E+02 CM**3
                                            5           3         8.60358E+02 CM**3
                                            6           2         3.21941E+02 CM**3
                                            7           3         9.72238E+02 CM**3
                                            8           2         3.60970E+02 CM**3

                      3        35         1           3         6.27678E+00 CM**3

                      4        14         1           4         2.47351E+04 CM**3
                                            2           6         1.02874E+04 CM**3

                      5        21         1           4         3.71026E+04 CM**3
                                            2           6         1.54311E+04 CM**3

                      6        35         1           4         2.25196E+02 CM**3

                      7         5         1           6         5.43563E+03 CM**3

                      8        90         1           7         2.07260E+03 CM**3

                      9         2         1           4         2.59659E+04 CM**3
                                            2           6         7.19502E+03 CM**3
                                            3           4         2.73988E+03 CM**3

                     10         3         1           4         3.89488E+04 CM**3
                                            2           6         1.07925E+04 CM**3
                                            3           4         4.10981E+03 CM**3

                    333        84         1          11         6.58222E+03 CM**3
                                            2          12         1.05423E+03 CM**3
                                            3          13         1.24272E+04 CM**3

                    334         7         1          11         5.48518E+02 CM**3
                                            2          12         8.78522E+01 CM**3
                                            3          13         5.17967E+02 CM**3

                    335         7         1          11         5.48518E+02 CM**3
                                            2          12         8.78522E+01 CM**3
                                            3          13         5.17967E+02 CM**3

                    336         7         1                     2.23723E+04 CM**3

                    348         1         1           4         3.10016E+03 CM**3
                                            2           6         7.83619E+02 CM**3

                    349         1         1           4         3.10016E+03 CM**3
                                            2           6         7.83619E+02 CM**3

                    350         1         1           4         3.10016E+03 CM**3
                                            2           6         7.83619E+02 CM**3

                    351         1         1           4         3.10016E+03 CM**3
                                            2           6         7.83619E+02 CM**3

                    352         1         1           4         3.10016E+03 CM**3
                                            2           6         7.83619E+02 CM**3
```

```
                                    353         1       1          4         3.10016E+03 CM**3
                                                        2          6         7.83619E+02 CM**3

                                    354         1       1          4         3.10016E+03 CM**3
                                                        2          6         7.83619E+02 CM**3

                                    401         1       1          4         1.46220E+04 CM**3
                                                        2          4         9.28867E+02 CM**3

                                    402         7       1          4         4.31735E+01 CM**3

                                    403         1       1          6         1.04209E+03 CM**3

                                    404         1       1          4         6.81699E+03 CM**3

                                    405         1       1          4         0.00000E+00 CM**3
                                                        2          8         9.69190E+04 CM**3
                                                        3          5         1.06970E+06 CM**3
                                                        4          8         2.99966E+05 CM**3
                                                        5          9         1.52801E+06 CM**3
                                                        6          8         8.33038E+04 CM**3
                                                        7          9         9.51639E+05 CM**3

                                    406         1       1          8         1.17210E+05 CM**3
                                                        2          9         1.00916E+05 CM**3
                                                        3          8         4.67352E+03 CM**3
                                                        4          9         6.08776E+04 CM**3

                                    407         1       1          5         1.66245E+04 CM**3
                                                        2          8         9.26041E+04 CM**3
                                                        3          9         9.40439E+04 CM**3
                                                        4          8         4.67353E+03 CM**3
                                                        5          9         5.68191E+04 CM**3

                                    408         1       1                    4.98288E+06 CM**3


                                          TOTAL MIXTURE VOLUMES
                                       MIXTURE        TOTAL VOLUME              MASS(G)
                                          1         1.58966E+04 CM**3        3.02321E+04
                                          2         1.11381E+04 CM**3        3.00952E+04
                                          3         1.19812E+05 CM**3        1.19785E+05
                                          4         1.77939E+05 CM**3        1.77899E+05
                                          5         1.08632E+06 CM**3        1.23233E+07
                                          6         5.56691E+04 CM**3        4.40900E+05
                                          7         2.07260E+03 CM**3        5.60017E+03
                                          8         6.99350E+05 CM**3        5.53885E+06
                                          9         2.79231E+06 CM**3        2.79223E+02
                                         11         7.67925E+03 CM**3        8.30204E+03
                                         12         1.22993E+03 CM**3        3.32327E+03
                                         13         1.34631E+04 CM**3        1.34601E+04


      ********************************************************************************************************************************
      ***                                                                                                                          ***
      ***                                          BIASING INFORMATION                                                             ***
      ***                                                                                                                          ***
      ***     A DEFAULT WEIGHT OF    0.500 WILL BE USED FOR ALL BIAS ID'S.                                                         ***
      ***                                                                                                                          ***
      ********************************************************************************************************************************

                                .........    0 IO'S WERE USED IN KENO-V BEFORE TRACKING       .........

                                .........  0.00367 MINUTES WERE USED PROCESSING DATA.        .........

VOLUME FRACTION OF FISSILE MATERIAL IN THE CORE= 4.73136E-03

START TYPE 0 WAS USED.

THE NEUTRONS WERE STARTED WITH A FLAT DISTRIBUTION IN A CUBOID DEFINED BY:
                     +X= 1.68500E+01  -X=-1.68500E+01  +Y=-1.68500E+01  -Y= 1.68500E+01  +Z= 4.73350E+02  -Z= 2.66700E+01


                  GENERATION     ELAPSED TIME        AVERAGE         AVG K-EFF          MATRIX        MATRIX K-EFF
    GENERATION    K-EFFECTIVE       MINUTES       K-EFFECTIVE       DEVIATION       K-EFFECTIVE       DEVIATION
KENO MESSAGE NUMBER K5-132     WARNING....ONLY  827 INDEPENDENT FISSION POINTS WERE GENERATED
         1       7.50359E-01      5.93167E-01      1.00000E+00      0.00000E+00      0.00000E+00      0.00000E+00
KENO MESSAGE NUMBER K5-132     WARNING....ONLY  860 INDEPENDENT FISSION POINTS WERE GENERATED
         2       7.82334E-01      5.96833E-01      1.00000E+00      0.00000E+00      0.00000E+00      0.00000E+00
KENO MESSAGE NUMBER K5-132     WARNING....ONLY  875 INDEPENDENT FISSION POINTS WERE GENERATED
         3       7.83747E-01      6.01333E-01      7.83747E-01      0.00000E+00      0.00000E+00      0.00000E+00
         4       7.45056E-01      6.05000E-01      7.64402E-01      1.93453E-02      0.00000E+00      0.00000E+00
         5       8.19328E-01      6.08667E-01      7.82710E-01      2.14466E-02      0.00000E+00      0.00000E+00
         6       8.47645E-01      6.12333E-01      7.98944E-01      2.22152E-02      0.00000E+00      0.00000E+00
         7       7.94256E-01      6.17000E-01      7.98006E-01      1.72333E-02      0.00000E+00      0.00000E+00
         8       8.09936E-01      6.20667E-01      7.99995E-01      1.42107E-02      0.00000E+00      0.00000E+00
         9       7.71958E-01      6.24333E-01      7.95989E-01      1.26605E-02      0.00000E+00      0.00000E+00
        10       7.74480E-01      6.28000E-01      7.93301E-01      1.12892E-02      0.00000E+00      0.00000E+00
        11       8.11229E-01      6.31667E-01      7.95293E-01      1.01535E-02      0.00000E+00      0.00000E+00
        12       8.29979E-01      6.36167E-01      7.98761E-01      9.72141E-03      0.00000E+00      0.00000E+00
        13       7.63073E-01      6.39833E-01      7.95517E-01      9.37277E-03      0.00000E+00      0.00000E+00
        14       8.03280E-01      6.43500E-01      7.96164E-01      8.58055E-03      0.00000E+00      0.00000E+00
        15       8.34718E-01      6.47167E-01      7.99130E-01      8.43174E-03      0.00000E+00      0.00000E+00
        16       7.79338E-01      6.50833E-01      7.97716E-01      7.93325E-03      0.00000E+00      0.00000E+00
        17       7.93468E-01      6.55333E-01      7.97433E-01      7.39088E-03      0.00000E+00      0.00000E+00
        18       7.71581E-01      6.59000E-01      7.95817E-01      7.09983E-03      0.00000E+00      0.00000E+00
```

19	8.34116E-01	6.62667E-01	7.98070E-01	7.03937E-03	0.00000E+00	0.00000E+00
20	8.09109E-01	6.66333E-01	7.98683E-01	6.66505E-03	0.00000E+00	0.00000E+00
21	7.92570E-01	6.71000E-01	7.98361E-01	6.31271E-03	0.00000E+00	0.00000E+00
22	7.75841E-01	6.74667E-01	7.97235E-01	6.09371E-03	0.00000E+00	0.00000E+00
23	8.25693E-01	6.78333E-01	7.98590E-01	5.95257E-03	0.00000E+00	0.00000E+00
24	8.13923E-01	6.82000E-01	7.99287E-01	5.71818E-03	0.00000E+00	0.00000E+00
25	8.14694E-01	6.86500E-01	7.99957E-01	5.50482E-03	0.00000E+00	0.00000E+00
26	7.65619E-01	6.90167E-01	7.98527E-01	5.46121E-03	0.00000E+00	0.00000E+00
27	7.77418E-01	6.93833E-01	7.97682E-01	5.30583E-03	0.00000E+00	0.00000E+00
28	7.64078E-01	6.97500E-01	7.96390E-01	5.25897E-03	0.00000E+00	0.00000E+00
29	8.07263E-01	7.01167E-01	7.96792E-01	5.07644E-03	0.00000E+00	0.00000E+00
30	7.78546E-01	7.04833E-01	7.96141E-01	4.93499E-03	0.00000E+00	0.00000E+00
31	7.81461E-01	7.08500E-01	7.95635E-01	4.78861E-03	0.00000E+00	0.00000E+00
32	7.91193E-01	7.13000E-01	7.95486E-01	4.62861E-03	0.00000E+00	0.00000E+00
33	8.64093E-01	7.16667E-01	7.97700E-01	4.99397E-03	0.00000E+00	0.00000E+00
34	8.21471E-01	7.20333E-01	7.98442E-01	4.89212E-03	0.00000E+00	0.00000E+00
35	8.04735E-01	7.24000E-01	7.98633E-01	4.74539E-03	0.00000E+00	0.00000E+00
36	7.80656E-01	7.27667E-01	7.98104E-01	4.63397E-03	0.00000E+00	0.00000E+00
37	7.99842E-01	7.31333E-01	7.98154E-01	4.49990E-03	0.00000E+00	0.00000E+00
38	7.88168E-01	7.36000E-01	7.97877E-01	4.38190E-03	0.00000E+00	0.00000E+00
39	8.41407E-01	7.39667E-01	7.99053E-01	4.42123E-03	0.00000E+00	0.00000E+00
40	7.72077E-01	7.43333E-01	7.98343E-01	4.36148E-03	0.00000E+00	0.00000E+00

.
.
.
.

1182	8.31447E-01	5.00367E+00	8.09463E-01	7.36443E-04	0.00000E+00	0.00000E+00
1183	8.14944E-01	5.00733E+00	8.09468E-01	7.35834E-04	0.00000E+00	0.00000E+00
1184	8.34418E-01	5.01100E+00	8.09489E-01	7.35514E-04	0.00000E+00	0.00000E+00
1185	7.81893E-01	5.01467E+00	8.09465E-01	7.35262E-04	0.00000E+00	0.00000E+00
1186	8.35161E-01	5.01833E+00	8.09487E-01	7.34962E-04	0.00000E+00	0.00000E+00
1187	8.09147E-01	5.02200E+00	8.09487E-01	7.34341E-04	0.00000E+00	0.00000E+00
1188	8.55458E-01	5.02567E+00	8.09526E-01	7.34745E-04	0.00000E+00	0.00000E+00
1189	7.93934E-01	5.02933E+00	8.09512E-01	7.34243E-04	0.00000E+00	0.00000E+00
1190	8.42446E-01	5.03300E+00	8.09540E-01	7.34148E-04	0.00000E+00	0.00000E+00
1191	7.91687E-01	5.03667E+00	8.09525E-01	7.33684E-04	0.00000E+00	0.00000E+00
1192	8.02959E-01	5.04117E+00	8.09520E-01	7.33088E-04	0.00000E+00	0.00000E+00
1193	8.37834E-01	5.04483E+00	8.09543E-01	7.32858E-04	0.00000E+00	0.00000E+00
1194	8.27174E-01	5.04850E+00	8.09558E-01	7.32393E-04	0.00000E+00	0.00000E+00
1195	8.29739E-01	5.05217E+00	8.09575E-01	7.31974E-04	0.00000E+00	0.00000E+00
1196	8.09184E-01	5.05583E+00	8.09575E-01	7.31361E-04	0.00000E+00	0.00000E+00
1197	8.45144E-01	5.05950E+00	8.09605E-01	7.31354E-04	0.00000E+00	0.00000E+00
1198	7.82475E-01	5.06317E+00	8.09582E-01	7.31095E-04	0.00000E+00	0.00000E+00
1199	8.24244E-01	5.06683E+00	8.09594E-01	7.30586E-04	0.00000E+00	0.00000E+00
1200	8.19320E-01	5.07050E+00	8.09602E-01	7.30021E-04	0.00000E+00	0.00000E+00
1201	7.87654E-01	5.07417E+00	8.09584E-01	7.29642E-04	0.00000E+00	0.00000E+00
1202	8.18055E-01	5.07783E+00	8.09591E-01	7.29068E-04	0.00000E+00	0.00000E+00
1203	8.37256E-01	5.08150E+00	8.09614E-01	7.28825E-04	0.00000E+00	0.00000E+00

KENO MESSAGE NUMBER K5-123 EXECUTION TERMINATED DUE TO COMPLETION OF THE SPECIFIED NUMBER OF GENERATIONS.

LIFETIME = 9.36018E-05 + OR - 1.03393E-07 GENERATION TIME = 6.57371E-05 + OR - 8.96054E-08
NU BAR = 2.41961E+00 + OR - 5.68813E-06 AVERAGE FISSION GROUP = 2.41990E+01 + OR - 2.98182E-03
ENERGY(EV) OF THE AVERAGE LETHARGY CAUSING FISSION = 4.07645E-02 + OR - 1.06361E-04

NO. OF INITIAL GENERATIONS SKIPPED	AVERAGE K-EFFECTIVE	DEVIATION	67 PER CENT CONFIDENCE INTERVAL	95 PER CENT CONFIDENCE INTERVAL	99 PER CENT CONFIDENCE INTERVAL	NUMBER OF HISTORIES
3	0.80964	+ OR - 0.00073	0.80891 TO 0.81036	0.80818 TO 0.81109	0.80745 TO 0.81182	1200000
4	0.80969	+ OR - 0.00073	0.80896 TO 0.81042	0.80823 TO 0.81114	0.80751 TO 0.81187	1199000
5	0.80968	+ OR - 0.00073	0.80895 TO 0.81041	0.80822 TO 0.81114	0.80750 TO 0.81187	1198000
6	0.80965	+ OR - 0.00073	0.80892 TO 0.81038	0.80819 TO 0.81111	0.80747 TO 0.81183	1197000
7	0.80966	+ OR - 0.00073	0.80893 TO 0.81039	0.80821 TO 0.81112	0.80748 TO 0.81185	1196000
8	0.80966	+ OR - 0.00073	0.80893 TO 0.81039	0.80820 TO 0.81112	0.80747 TO 0.81185	1195000
9	0.80969	+ OR - 0.00073	0.80896 TO 0.81042	0.80824 TO 0.81115	0.80751 TO 0.81188	1194000
10	0.80972	+ OR - 0.00073	0.80899 TO 0.81045	0.80826 TO 0.81118	0.80754 TO 0.81191	1193000
11	0.80972	+ OR - 0.00073	0.80899 TO 0.81045	0.80826 TO 0.81118	0.80753 TO 0.81191	1192000
12	0.80971	+ OR - 0.00073	0.80897 TO 0.81044	0.80824 TO 0.81117	0.80751 TO 0.81190	1191000
17	0.80977	+ OR - 0.00073	0.80904 TO 0.81050	0.80831 TO 0.81123	0.80757 TO 0.81196	1186000
22	0.80982	+ OR - 0.00073	0.80909 TO 0.81056	0.80836 TO 0.81129	0.80763 TO 0.81202	1181000
27	0.80987	+ OR - 0.00073	0.80913 TO 0.81060	0.80840 TO 0.81134	0.80766 TO 0.81207	1176000
32	0.80998	+ OR - 0.00074	0.80924 TO 0.81071	0.80851 TO 0.81145	0.80777 TO 0.81218	1171000
37	0.80996	+ OR - 0.00074	0.80922 TO 0.81069	0.80849 TO 0.81143	0.80775 TO 0.81217	1166000

.
.
.
.

1177	0.81530	+ OR - 0.00452	0.81078 TO 0.81982	0.80626 TO 0.82434	0.80174 TO 0.82886	26000
1182	0.81810	+ OR - 0.00475	0.81335 TO 0.82285	0.80860 TO 0.82760	0.80385 TO 0.83235	21000

1187	0.81904	+ OR - 0.00559	0.81344 TO 0.82463	0.80785 TO 0.83022	0.80226 TO 0.83581	16000
1192	0.81983	+ OR - 0.00602	0.81380 TO 0.82585	0.80778 TO 0.83187	0.80176 TO 0.83789	11000
1197	0.81150	+ OR - 0.00883	0.80267 TO 0.82033	0.79383 TO 0.82917	0.78500 TO 0.83800	6000

PLOT OF AVERAGE K-EFFECTIVE BY GENERATION RUN.
THE LINE REPRESENTS K-EFF = 0.8096 + OR - 0.0007 WHICH OCCURS FOR 1203 GENERATIONS RUN.

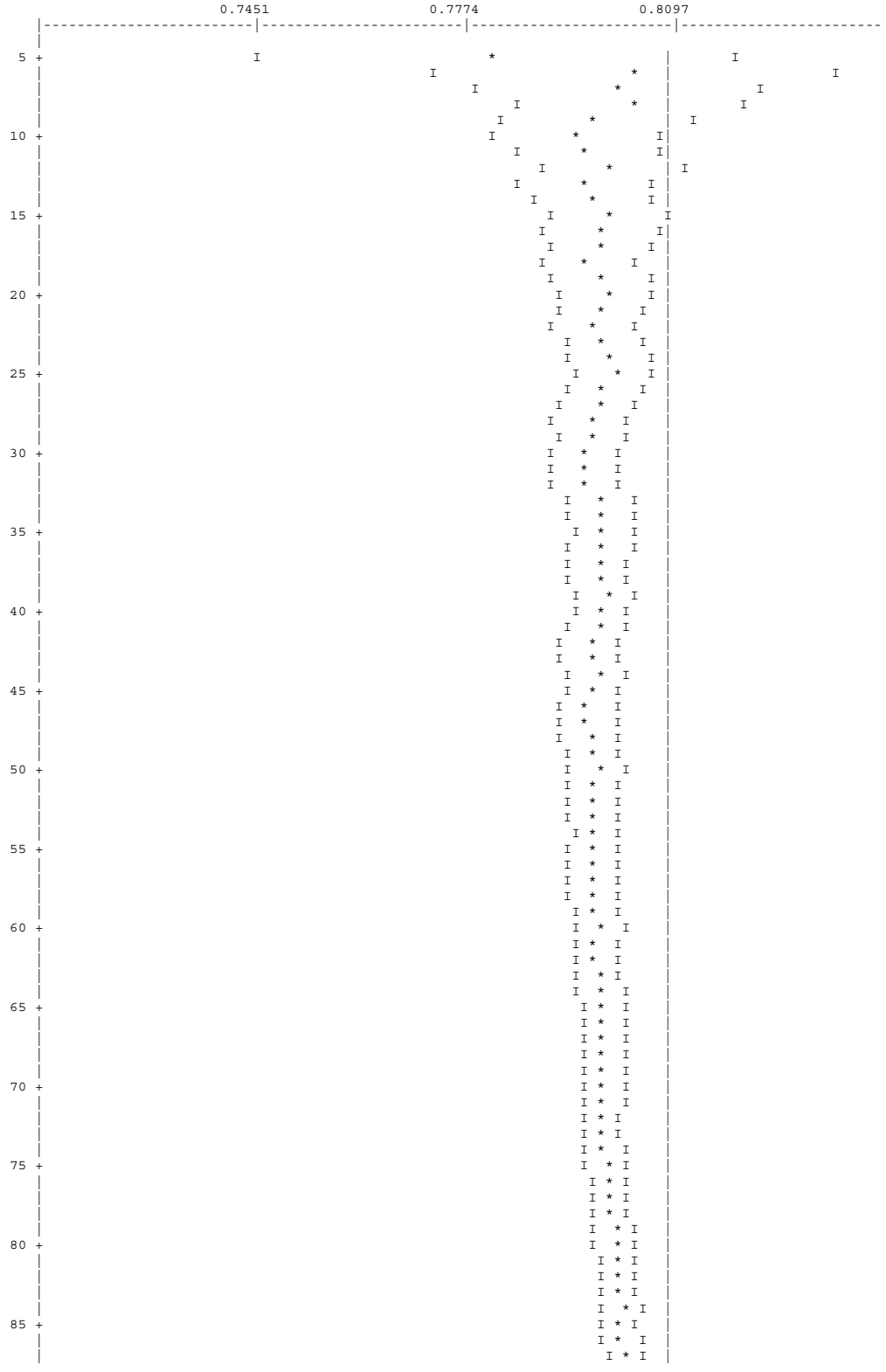

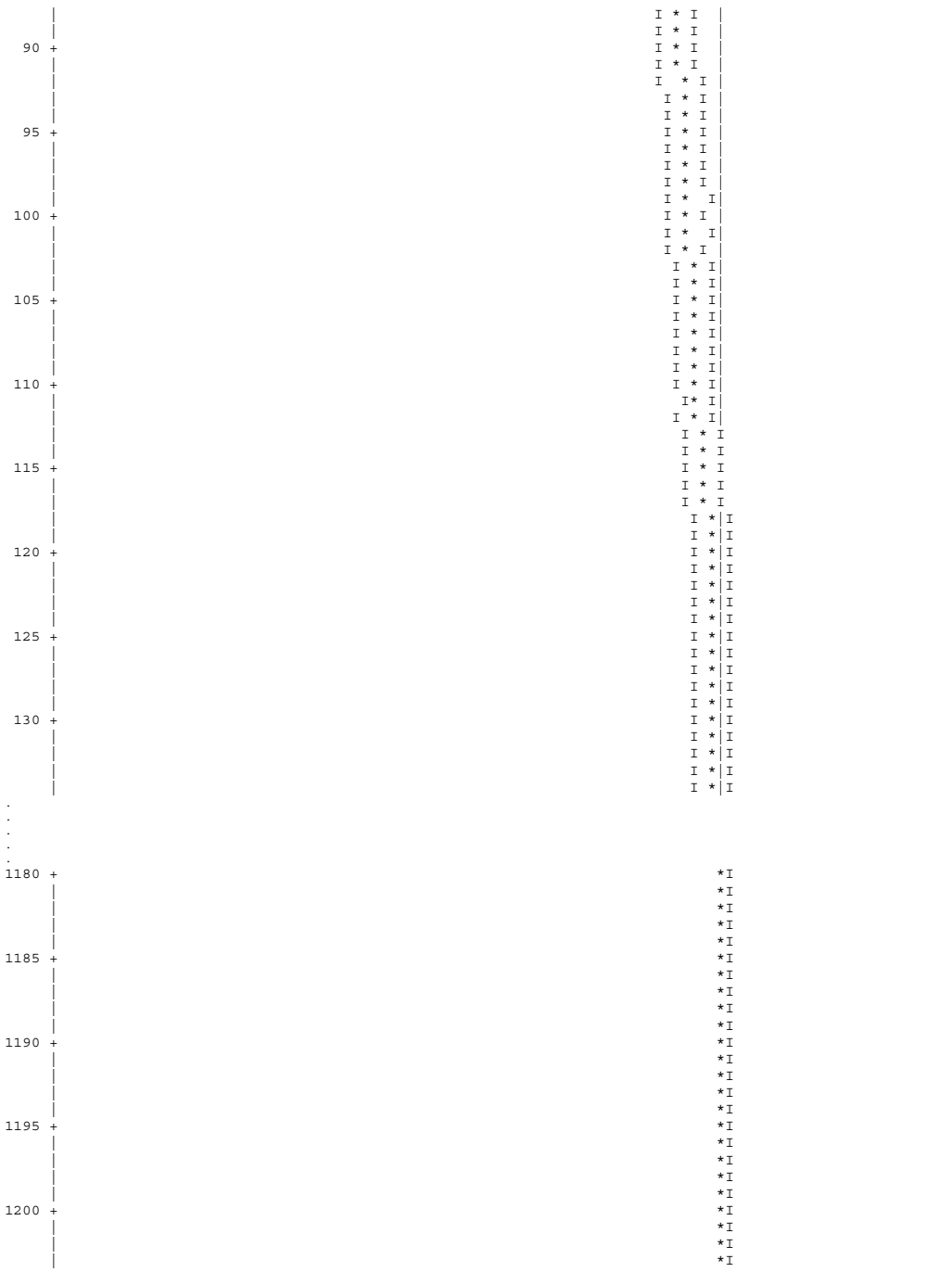

PLOT OF AVERAGE K-EFFECTIVE BY GENERATION SKIPPED.
THE LINE REPRESENTS K-EFF = 0.8097 + OR - 0.0007 WHICH OCCURS FOR 4 GENERATIONS SKIPPED.

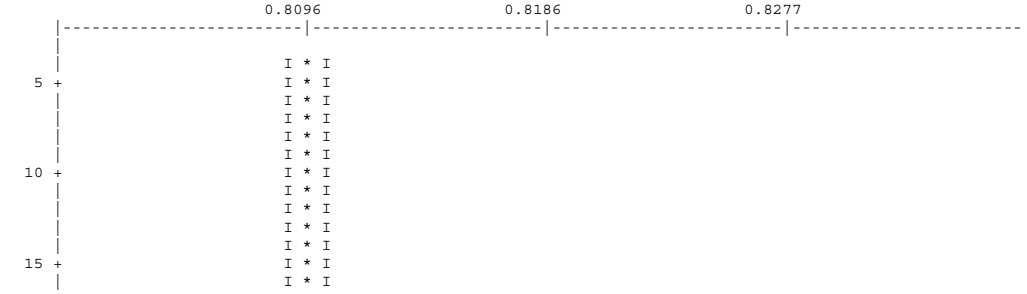

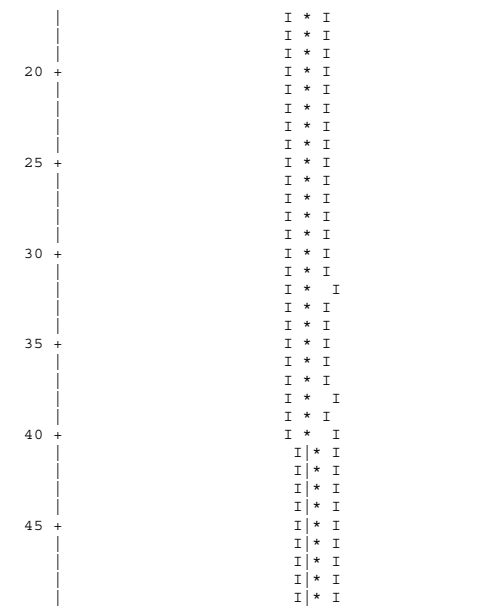

.
.
.
.

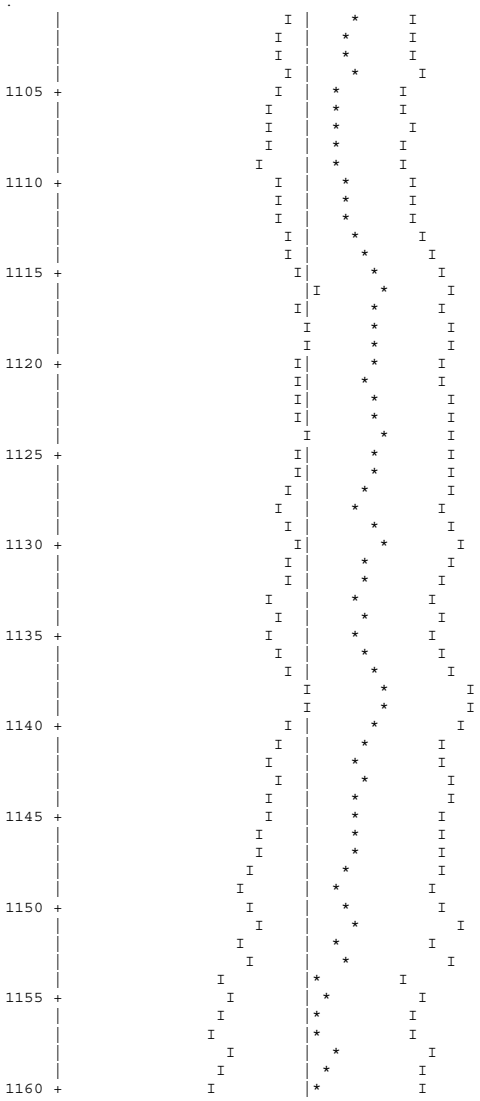

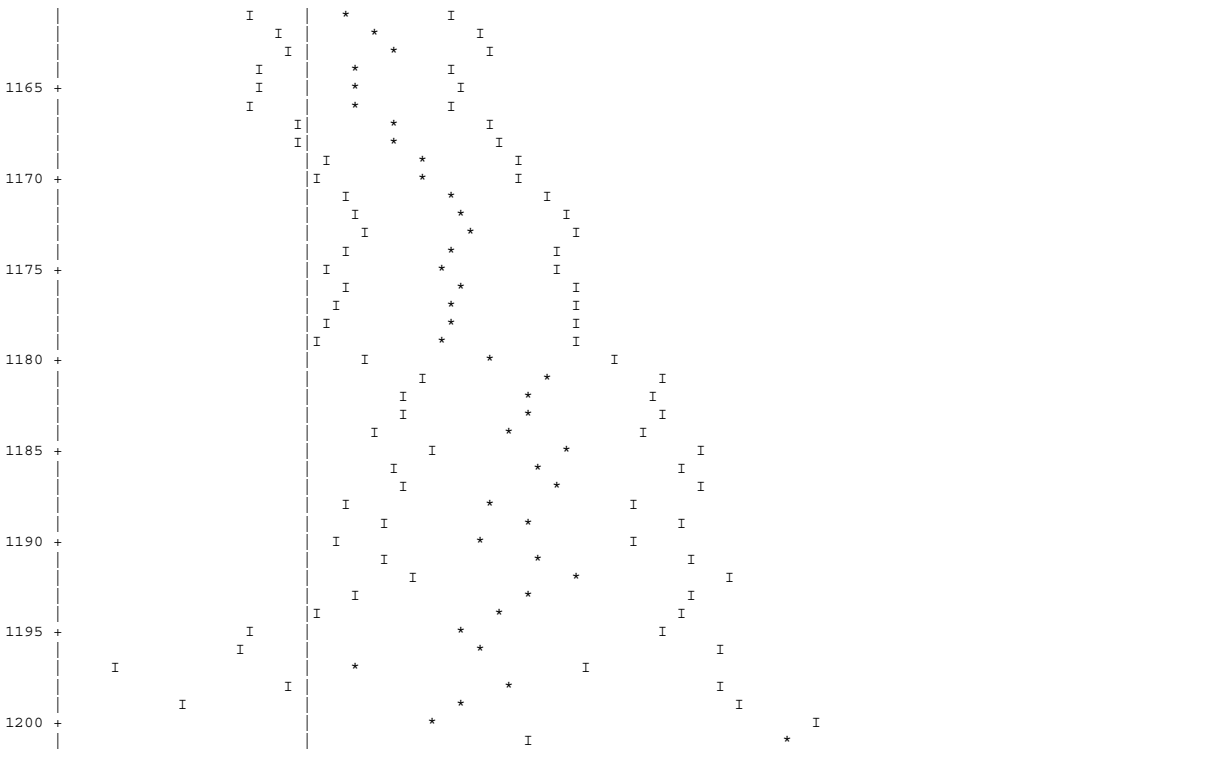

SKIPPING 3 GENERATIONS

FREQUENCY FOR GENERATIONS 4 TO 1203

```
0.7286 TO 0.7319     *
0.7319 TO 0.7351
0.7351 TO 0.7384     *
0.7384 TO 0.7416     *
0.7416 TO 0.7449
0.7449 TO 0.7481     ***
0.7481 TO 0.7514     *****
0.7514 TO 0.7546     *******
0.7546 TO 0.7578     ******
0.7578 TO 0.7611     *******
0.7611 TO 0.7643     *************
0.7643 TO 0.7676     ***********
0.7676 TO 0.7708     *****************
0.7708 TO 0.7741     ****************************
0.7741 TO 0.7773     ********************
0.7773 TO 0.7806     ***********************************
0.7806 TO 0.7838     ***********************************
0.7838 TO 0.7871     ****************************************
0.7871 TO 0.7903     ******************************************
0.7903 TO 0.7936     *********************************************
0.7936 TO 0.7968     ************************************************
0.7968 TO 0.8001     ************************************************************
0.8001 TO 0.8033     ****************************************************************
0.8033 TO 0.8066     ************************************************
0.8066 TO 0.8098     ****************************************************************
0.8098 TO 0.8130     ************************************************************************
0.8130 TO 0.8163     ************************************************************
0.8163 TO 0.8195     ************************************************************
0.8195 TO 0.8228     ************************************************************
0.8228 TO 0.8260     ****************************************************************
0.8260 TO 0.8293     ************************************************
0.8293 TO 0.8325     ****************************************
0.8325 TO 0.8358     ***********************************
0.8358 TO 0.8390     *********************************
0.8390 TO 0.8423     ****************************
0.8423 TO 0.8455     ********************
0.8455 TO 0.8488     ****************
0.8488 TO 0.8520     ***************
0.8520 TO 0.8553     ************
0.8553 TO 0.8585     *************
0.8585 TO 0.8617     ****
0.8617 TO 0.8650     *********
0.8650 TO 0.8682     ***
0.8682 TO 0.8715     ***
0.8715 TO 0.8747     ***
0.8747 TO 0.8780     ***
0.8780 TO 0.8812
0.8812 TO 0.8845     *
0.8845 TO 0.8877     *
0.8877 TO 0.8910     *
0.8910 TO 0.8942
```

```
0.8942 TO 0.8975
0.8975 TO 0.9007     *
0.9007 TO 0.9040     *
0.9040 TO 0.9072
0.9072 TO 0.9105
0.9105 TO 0.9137
0.9137 TO 0.9169
0.9169 TO 0.9202     *

                              FREQUENCY FOR GENERATIONS  304 TO 1203
0.7286 TO 0.7319     *
0.7319 TO 0.7351
0.7351 TO 0.7384     *
0.7384 TO 0.7416     *
0.7416 TO 0.7449
0.7449 TO 0.7481     *
0.7481 TO 0.7514     ****
0.7514 TO 0.7546     *****
0.7546 TO 0.7578     ***
0.7578 TO 0.7611     *****
0.7611 TO 0.7643     ***********
0.7643 TO 0.7676     *********
0.7676 TO 0.7708     *********
0.7708 TO 0.7741     ******************
0.7741 TO 0.7773     **************
0.7773 TO 0.7806     *************************
0.7806 TO 0.7838     *************************
0.7838 TO 0.7871     *************************
0.7871 TO 0.7903     ********************************
0.7903 TO 0.7936     ********************************
0.7936 TO 0.7968     ********************************
0.7968 TO 0.8001     *********************************************
0.8001 TO 0.8033     *********************************************
0.8033 TO 0.8066     ************************************
0.8066 TO 0.8098     *************************************************
0.8098 TO 0.8130     ***********************************************************
0.8130 TO 0.8163     ************************************************
0.8163 TO 0.8195     *********************************************
0.8195 TO 0.8228     *********************************************
0.8228 TO 0.8260     *************************************************
0.8260 TO 0.8293     ***************************************
0.8293 TO 0.8325     ********************************
0.8325 TO 0.8358     ***************************
0.8358 TO 0.8390     ************************
0.8390 TO 0.8423     *********************
0.8423 TO 0.8455     ******************
0.8455 TO 0.8488     *********
0.8488 TO 0.8520     **********
0.8520 TO 0.8553     ************
0.8553 TO 0.8585     ***********
0.8585 TO 0.8617     ****
0.8617 TO 0.8650     *******
0.8650 TO 0.8682     **
0.8682 TO 0.8715     ***
0.8715 TO 0.8747     **
0.8747 TO 0.8780     ***
0.8780 TO 0.8812
0.8812 TO 0.8845     *
0.8845 TO 0.8877
0.8877 TO 0.8910     *
0.8910 TO 0.8942
0.8942 TO 0.8975
0.8975 TO 0.9007
0.9007 TO 0.9040     *
0.9040 TO 0.9072
0.9072 TO 0.9105
0.9105 TO 0.9137
0.9137 TO 0.9169
0.9169 TO 0.9202     *

                              FREQUENCY FOR GENERATIONS  604 TO 1203
0.7286 TO 0.7319
0.7319 TO 0.7351
0.7351 TO 0.7384     *
0.7384 TO 0.7416
0.7416 TO 0.7449
0.7449 TO 0.7481     *
0.7481 TO 0.7514     **
0.7514 TO 0.7546     ****
0.7546 TO 0.7578     ***
0.7578 TO 0.7611     **
0.7611 TO 0.7643     ******
0.7643 TO 0.7676     ****
0.7676 TO 0.7708     ******
0.7708 TO 0.7741     *************
0.7741 TO 0.7773     ***********
0.7773 TO 0.7806     ******************
0.7806 TO 0.7838     *****************
0.7838 TO 0.7871     ****************
0.7871 TO 0.7903     ********************
0.7903 TO 0.7936     ************************
0.7936 TO 0.7968     *************************
0.7968 TO 0.8001     ************************
0.8001 TO 0.8033     *************************
0.8033 TO 0.8066     ************************
```

```
0.8066 TO 0.8098     **********************************
0.8098 TO 0.8130     ************************************
0.8130 TO 0.8163     *************************
0.8163 TO 0.8195     ****************************
0.8195 TO 0.8228     ****************************
0.8228 TO 0.8260     **********************************
0.8260 TO 0.8293     ****************************
0.8293 TO 0.8325     ******************
0.8325 TO 0.8358     ****************
0.8358 TO 0.8390     ******************
0.8390 TO 0.8423     **************
0.8423 TO 0.8455     **************
0.8455 TO 0.8488     *****
0.8488 TO 0.8520     *******
0.8520 TO 0.8553     *********
0.8553 TO 0.8585     ********
0.8585 TO 0.8617     ***
0.8617 TO 0.8650     *******
0.8650 TO 0.8682     **
0.8682 TO 0.8715     ***
0.8715 TO 0.8747     **
0.8747 TO 0.8780     ***
0.8780 TO 0.8812
0.8812 TO 0.8845     *
0.8845 TO 0.8877
0.8877 TO 0.8910     *
0.8910 TO 0.8942
0.8942 TO 0.8975
0.8975 TO 0.9007
0.9007 TO 0.9040     *
0.9040 TO 0.9072
0.9072 TO 0.9105
0.9105 TO 0.9137
0.9137 TO 0.9169
0.9169 TO 0.9202     *

                          FREQUENCY FOR GENERATIONS  904 TO 1203
0.7286 TO 0.7319
0.7319 TO 0.7351
0.7351 TO 0.7384     *
0.7384 TO 0.7416
0.7416 TO 0.7449
0.7449 TO 0.7481     *
0.7481 TO 0.7514     *
0.7514 TO 0.7546     ***
0.7546 TO 0.7578     **
0.7578 TO 0.7611     *
0.7611 TO 0.7643     **
0.7643 TO 0.7676     ***
0.7676 TO 0.7708     ****
0.7708 TO 0.7741     ******
0.7741 TO 0.7773     ******
0.7773 TO 0.7806     *********
0.7806 TO 0.7838     *********
0.7838 TO 0.7871     *******
0.7871 TO 0.7903     ************
0.7903 TO 0.7936     *************
0.7936 TO 0.7968     ************
0.7968 TO 0.8001     ********
0.8001 TO 0.8033     *************
0.8033 TO 0.8066     **********
0.8066 TO 0.8098     ****************
0.8098 TO 0.8130     *************
0.8130 TO 0.8163     ***********
0.8163 TO 0.8195     ***************
0.8195 TO 0.8228     ************
0.8228 TO 0.8260     ***************
0.8260 TO 0.8293     *************
0.8293 TO 0.8325     **********
0.8325 TO 0.8358     ***********
0.8358 TO 0.8390     **************
0.8390 TO 0.8423     ***********
0.8423 TO 0.8455     **********
0.8455 TO 0.8488     **
0.8488 TO 0.8520     ***
0.8520 TO 0.8553     ****
0.8553 TO 0.8585     *****
0.8585 TO 0.8617     **
0.8617 TO 0.8650     ****
0.8650 TO 0.8682
0.8682 TO 0.8715
0.8715 TO 0.8747     *
0.8747 TO 0.8780     ***
0.8780 TO 0.8812
0.8812 TO 0.8845
0.8845 TO 0.8877
0.8877 TO 0.8910     *
0.8910 TO 0.8942
0.8942 TO 0.8975
0.8975 TO 0.9007
0.9007 TO 0.9040
0.9040 TO 0.9072
0.9072 TO 0.9105
0.9105 TO 0.9137
0.9137 TO 0.9169
0.9169 TO 0.9202     *
```

6.6.17 SLOWPOKE Fuel MCNP Input

This section contains sample input files from the evaluation of SLOWPOKE fuel elements in the LWT cask. The input files are shown in Figures 6.6.17-1 and 6.6.17-2.

Figure 6.6.17-1 Maximum Reactivity Input for Undamaged SLOWPOKE Fuel

```
NAC-LWT Cask - Accident Transport Conditions
C SlowPoke Fuel - Fuel in Aluminum Tubes
C Fuel Assembly Cells
1  1  -3.4570  -1  2  -3      u=8  $ Fuel Meat
2  2  -2.7000  -4  1  +2  -3    u=8  $ Clad
3  2  -2.7000  -5  3        u=8  $ Top Cap
4  2  -2.7000  -5  -2        u=8  $ Bottom Cap
5  3  -0.9982  #1 #2 #3 #4          u=8  $ Outside Rod
C Canister Related Cells
c Aluminum Tubes - Centerered
31  3  -0.9982  -31          u=7  $ Tube ID
32  5  -2.7000  -32  +31        u=7  $ Tube OD
33  3  -0.9982  32          u=7  $ Outside Tube
c Tube array
41  3  -0.9982  -33  +34  -35  +36      $ Tube Array
       trcl=(0 0 0.635)      lat=1  u=6  fill=-3:3 -3:3 0:0
       6  6  6  6  6  6  6
       6  7  7  7  7  7  6
       6  7  7  7  7  7  6
       6  7  7  7  7  7  6
       6  7  7  7  7  7  6
       6  7  7  7  7  7  6
       6  6  6  6  6  6  6
51  5  -2.7000  -38  -37        u=5  $ Base Plate for Array
52  3  -0.9982  -41  fill=8  trcl = ( -2.6834 2.6834 0.6351 )      u=5  $ Fuel Rod 1
53  like  52  but  fill=8  trcl = ( -1.4134 2.6834 0.6351 )      u=5  $ Fuel Rod 2
54  like  52  but  fill=8  trcl = ( 0.0000 2.7429 0.6351 )      u=5  $ Fuel Rod 3
55  like  52  but  fill=8  trcl = ( 1.4134 2.6834 0.6351 )      u=5  $ Fuel Rod 4
56  like  52  but  fill=8  trcl = ( 2.6834 2.6834 0.6351 )      u=5  $ Fuel Rod 5
57  like  52  but  fill=8  trcl = ( -2.6834 1.4134 0.6351 )      u=5  $ Fuel Rod 6
58  like  52  but  fill=8  trcl = ( -1.4134 1.4134 0.6351 )      u=5  $ Fuel Rod 7
59  like  52  but  fill=8  trcl = ( 0.0000 1.4729 0.6351 )      u=5  $ Fuel Rod 8
60  like  52  but  fill=8  trcl = ( 1.4134 1.4134 0.6351 )      u=5  $ Fuel Rod 9
61  like  52  but  fill=8  trcl = ( 2.6834 1.4134 0.6351 )      u=5  $ Fuel Rod 10
62  like  52  but  fill=8  trcl = ( -2.7429 0.0000 0.6351 )      u=5  $ Fuel Rod 11
63  like  52  but  fill=8  trcl = ( -1.4729 0.0000 0.6351 )      u=5  $ Fuel Rod 12
64  like  52  but  fill=8  trcl = ( 0.0000 0.0000 0.6351 )      u=5  $ Fuel Rod 13
65  like  52  but  fill=8  trcl = ( 1.4729 0.0000 0.6351 )      u=5  $ Fuel Rod 14
66  like  52  but  fill=8  trcl = ( 2.7429 0.0000 0.6351 )      u=5  $ Fuel Rod 15
67  like  52  but  fill=8  trcl = ( -2.6834 -1.4134 0.6351 )      u=5  $ Fuel Rod 16
68  like  52  but  fill=8  trcl = ( -1.4134 -1.4134 0.6351 )      u=5  $ Fuel Rod 17
69  like  52  but  fill=8  trcl = ( 0.0000 -1.4729 0.6351 )      u=5  $ Fuel Rod 18
70  like  52  but  fill=8  trcl = ( 1.4134 -1.4134 0.6351 )      u=5  $ Fuel Rod 19
71  like  52  but  fill=8  trcl = ( 2.6834 -1.4134 0.6351 )      u=5  $ Fuel Rod 20
72  like  52  but  fill=8  trcl = ( -2.6834 -2.6834 0.6351 )      u=5  $ Fuel Rod 21
73  like  52  but  fill=8  trcl = ( -1.4134 -2.6834 0.6351 )      u=5  $ Fuel Rod 22
74  like  52  but  fill=8  trcl = ( 0.0000 -2.7429 0.6351 )      u=5  $ Fuel Rod 23
75  like  52  but  fill=8  trcl = ( 1.4134 -2.6834 0.6351 )      u=5  $ Fuel Rod 24
76  like  52  but  fill=8  trcl = ( 2.6834 -2.6834 0.6351 )      u=5  $ Fuel Rod 25
77  3  -0.9982  -38  +37
              #52 #53 #54 #55 #56 #57 #58 #59 #60 #61 #62 #63 #64 #65
              #66 #67 #68 #69 #70 #71 #72 #73 #74 #75 #76
              fill=6          u=5  $ Tube Array Arround Fuel Rods
78  3  -0.9982  +38          u=5  $ Tube Array Exterior
c Canister for four tube arrays
81  5  -2.7000  -40  +39        u=4  $ Can Base and Shell
82  3  -0.9982  -38  fill=5  trcl = ( 0.0000 0.0000 0.9652 )      u=4  $ Tube Assy 1
83  like  82  but  fill=5  trcl = ( 0.0000 0.0000 25.0952 )      u=4  $ Tube Assy 2
84  like  82  but  fill=5  trcl = ( 0.0000 0.0000 49.2252 )      u=4  $ Tube Assy 3
85  like  82  but  fill=5  trcl = ( 0.0000 0.0000 73.3552 )      u=4  $ Tube Assy 4
86  3  -0.9982  -39  #82 #83 #84 #85         u=4  $ Canister Cavity
87  4  -0.0001  40          u=4  $ Canister Exterior
C Cells - MTR 7 Element Basket
91  6  -7.9400  -91  +94 +95 +96 +97 +98 +99 +100        u=3  $ Base plate
92  6  -7.9400  -92  +101 +105        u=3  $ Support plate
93  6  -7.9400  -93  +101 +105        u=3  $ Support plate
94  6  -7.9400  -101  +102  #91 #92 #93       u=3  $ Center column
95  6  -7.9400  -103  #91 #92 #93         u=3  $ Center divider upper
96  6  -7.9400  -104  #91 #92 #93         u=3  $ Center divider lower
97  6  -7.9400  -105  +106  +101  #91 #92 #93     u=3  $ Small side
98  6  -7.9400  -107  #91 #92 #93         u=3  $ Left divider
99  6  -7.9400  -108  #91 #92 #93         u=3  $ Right divider
100  4  -0.0001  #91 #92 #93 #94 #95 #96 #97 #98 #99          u=3  $ Cask Cavity Material
C Cells - Basket Cell Opening
151  4  -0.0001  -151  fill=4  trcl = ( -9.3503 4.5222 1.2700 )      u=2  $ UL
152  like  151  but    trcl = ( -9.3503 -4.5222 1.2700 )      u=2  $ LL
153  like  151  but    trcl = ( 9.3503 4.5222 1.2700 )      u=2  $ UR
154  like  151  but    trcl = ( 9.3503 -4.5222 1.2700 )      u=2  $ LR
155  4  -0.0001  #151 #152 #153 #154         fill=3  u=2  $ Basket Materials
C Cells - LWT Cavity
201  4  -0.0001  -201  fill=3  ( 0.0000 0.0000 3.8100 )      u=1
202  4  -0.0001  -202  fill=3  ( 0.0000 0.0000 115.5700 )      u=1
203  4  -0.0001  -203  fill=2  ( 0.0000 0.0000 227.3300 )      u=1
204  4  -0.0001  -204  fill=2  ( 0.0000 0.0000 339.0900 )      u=1
205  4  -0.0001  #201 #202 #203 #204          u=1
C Cells - LWT Cask Accident Conditions
301  7  -11.344  -304            $ BotPb
302  4  -0.0001  -303  fill=1          $ Cavity
303  6  -7.9400  -302  +304          $ Bottom
304  6  -7.9400  -301  +302  +306  +309  +303    $ OuterShell
305  6  -7.9400  -305  +308  +303        $ InnerShellTaper
306  6  -7.9400  -307  +303          $ InnerShell
307  7  -11.344  -308  +307          $ Lead
```

```
308  7  -11.344  -306  +305  +308        $ LeadTaper
309  0           -309  +308          $ LeadGap
310  9  -0.0001  +301  -310          $ Gap To Reflector
311  0           +310            $ Outside

C Fuel Assembly Surfaces
1  CZ  0.2110              $ Fuel Meat
2  PZ  0.4150              $ Lower Meat Elevation
3  PZ  22.4150              $ Upper Meat Elevation
4  CZ  0.2620              $ Clad
5  RCC  0.0000  0.0000  0.0000  0.0000  0.0000  22.8300  0.3051  $ Rod Outline
C Canister Surfaces
c Aluminum Tubes
31  CZ  0.5080              $ Tube ID
32  CZ  0.6350              $ Tube OD
33  PX  0.6350
34  PX  -0.6350
35  PY  0.6350
36  PY  -0.6350              $ Tube Pitch Box
c Tube array base and outer envelope
37  PZ   0.6351              $ Base Plate Top Elevation
38  RPP  -3.1750  3.1750  -3.1750  3.1750  0.0000  24.1300    $ Tube Container
c Canister for four tube arrays
39  RPP  -3.5560  3.5560  -3.5560  3.5560  0.9652  100.1776    $ Can Cavity
40  RPP  -4.1910  4.1910  -4.1910  4.1910  0.0000  101.1428    $ Can Outer
41  RCC  0.0000  0.0000  0.0000  0.0000  0.0000  22.8300  0.3050  $ Rod Outline
C Surfaces - MTR 7 Element Basket
91  RCC  0.0000  0.0000  0.0000  0.0000  0.0000  1.2700  16.8466  $ Base plate
92  RCC  0.0000  0.0000  52.0700  0.0000  0.0000  1.2700  16.8466  $ Support plate
93  RCC  0.0000  0.0000  104.1400  0.0000  0.0000  1.2700  16.8466  $ Support plate
94  CZ  1.2700              $ Hole CC
95  C/Z  0.0000  9.5250  1.2700          $ Hole UC
96  C/Z  0.0000  -9.5250  1.2700          $ Hole LC
97  C/Z  -9.5250  4.6990  1.2700          $ Hole UL
98  C/Z  -9.5250  -4.6990  1.2700          $ Hole LL
99  C/Z  9.5250  4.6990  1.2700          $ Hole UR
100  C/Z  9.5250  -4.6990  1.2700          $ Hole LR
101  RPP  -5.1604  5.1604  -14.6939  14.6939  1.2700  111.7600    $ Center column outer
102  RPP  -4.3667  4.3667  -13.9002  13.9002  1.2700  111.7600    $ Center column inner
103  RPP  -4.3667  4.3667  4.3688  5.1626  1.2700  111.7600    $ Center divider upper
104  RPP  -4.3667  4.3667  -5.1626  -4.3688  1.2700  111.7600    $ Center divider lower
105  RPP  -14.1986  14.1986  -9.3599  9.3599  1.2700  111.7600    $ Small side outer
106  RPP  -13.8938  13.8938  -9.0551  9.0551  1.2700  111.7600    $ Small side inner
107  RPP  -13.8938  -5.1604  -0.3175  0.3175  1.2700  111.7600    $ Left divider
108  RPP  5.1604  13.8938  -0.3175  0.3175  1.2700  111.7600    $ Right divider
C Surfaces - Basket Cell Opening
151  RPP  -4.1909  4.1911  -4.1909  4.1911  1.2700  111.7600    $ Opening in Basket
C Surfaces - LWT Cavity
201  RCC  0.0000  0.0000  3.8100  0.0000  0.0000  111.7600  16.8467  $ Basket
202  RCC  0.0000  0.0000  115.5700  0.0000  0.0000  111.7600  16.8467  $ Basket
203  RCC  0.0000  0.0000  227.3300  0.0000  0.0000  111.7600  16.8467  $ Basket
204  RCC  0.0000  0.0000  339.0900  0.0000  0.0000  111.7600  16.8467  $ Basket
C Surfaces - LWT Cask Accident Conditions
301  RCC  0.0000  0.0000  -26.6700  0.0000  0.0000  507.3650  36.5189  $ Lwt
302  RCC  0.0000  0.0000  -26.6700  0.0000  0.0000  26.6700  36.5189  $ Bottom
303  RCC  0.0000  0.0000  0.0000  0.0000  0.0000  452.1200  16.9863  $ Cavity
304  RCC  0.0000  0.0000  -17.7800  0.0000  0.0000  7.6200  26.3525  $ Bottom gamma shield
305  RCC  0.0000  0.0000  0.0000  0.0000  0.0000  444.5000  20.1740  $ Lead id - taper
306  RCC  0.0000  0.0000  0.0000  0.0000  0.0000  444.5000  31.5976  $ Lead od - taper
307  RCC  0.0000  0.0000  13.8176  0.0000  0.0000  416.8648  18.9103  $ Lead id
308  RCC  0.0000  0.0000  13.8176  0.0000  0.0000  416.8648  33.3271  $ Lead od
309  RCC  0.0000  0.0000  13.8176  0.0000  0.0000  416.8648  33.4645  $ Lead gap
*310  RCC  0.0000  0.0000  -27.1700  0.0000  0.0000  508.3650  37.0189  $ Container

C
C Materials List
C
C - U-Al
m1  92235  -2.6400E-01
       92238  -1.3000E-02
       13027  -7.2300E-01
C Aluminum / Clad
m2  13027  -1.0
C Canister Water
m3  1001  6.6667E-01  8016  3.3333E-01
mt3  lwtr.01
C Cask Cavity Water
m4  1001  6.6667E-01  8016  3.3333E-01
mt4  lwtr.01
C Aluminum
m5  13027  -1.0
C Stainless Steel 304
m6  26000  -0.695  24000  -0.190  28000  -0.095
       25055  -0.020
C Lead
m7  82000  -1.0
C Aluminum Honeycomb Impact Limiter
m8  13027  -1.0
C Water/Glycol - Cask Neutron Shield
m10  1001  -1.03651E-01  8016  -6.75619E-01  6000  -2.20730E-01
C Cask Exterior (Water at Various Densities)
m9  1001  6.6667E-01  8016  3.3333E-01
mt9  lwtr.01
C
C Cell Importances
imp:n 1 73r 0
```

```
c
c Criticality Controls
c
kcode  2000  1.00  30  530
c
c Source Distribution for Initial Generation
SDEF  CEL=  302:D4:D5:D6:D7:-1
       ERG=  D1
       POS=  0.0000  0.00  0.4150
       RAD=  D2
       AXS=  0.00  0.00  1.00
       EXT=  D3
C - Neutron Source Energy Source Distribution
#          SP1
       -3
C - Uniform Radial Distribution in Fuel Rod
#  SI2  SP2
       0.0000  -21
       0.2110  1
C - Axial Source Profile
#  SI3  SP3
       0  0.0
       22  1.0
C - Two Baskets With Fuel in Cask
#     SI4         SP4
            l         d
       203  1
       204  1
C - Four Openings in Basket with Fuel
#     SI5         SP5
            l         d
       151  1
       152  1
       153  1
       154  1
C - Four Tube Arrays per Canister
#     SI6         SP6
            l         d
       82  1
       83  1
       84  1
       85  1
C - 25 Fuel Rods
#     SI7         SP7
            l         d
       52  1
       53  1
       54  1
       55  1
       56  1
       57  1
       58  1
       59  1
       60  1
       61  1
       62  1
       63  1
       64  1
       65  1
       66  1
       67  1
       68  1
       69  1
       70  1
       71  1
       72  1
       73  1
       74  1
       75  1
       76  1
C Print Control
prdmp  -30 -60 1 2
print
C Random Number Generator
rand  gen=2  1.90735E+13  stride=152917  hist=1
```

Figure 6.6.17-2 Maximum Reactivity Input for Damaged SLOWPOKE Fuel

```
NAC-LWT Cask - Accident Transport Conditions
C SlowPoke Fuel - Fuel in Aluminum Tubes
C Canister Related Cells
c Aluminum Tubes - Centerered
31  1  -1.2795  -31          u=7  $ Tube ID
32  5  -2.7000  -32  +31        u=7  $ Tube OD
33  1  -1.2795  32          u=7  $ Outside Tube
c Tube array
41  1  -1.2795  -33  +34  -35  +36      $ Tube Array
       trcl=(0 0 0.635)      lat=1  u=6  fill=-3:3 -3:3 0:0
       6  6  6  6  6  6  6
       6  7  7  7  7  7  6
       6  7  7  7  7  7  6
       6  7  7  7  7  7  6
       6  7  7  7  7  7  6
       6  7  7  7  7  7  6
       6  6  6  6  6  6  6
51  5  -2.7000  -38  -37        u=5  $ Base Plate for Array
52  1  -1.2795  -38  +37
            fill=6          u=5  $ Tube Array Arround Fuel Rods
53  1  -1.2795  +38          u=5  $ Tube Array Exterior
c Canister for four tube arrays
81  5  -2.7000  -40  +39        u=4  $ Can Base and Shell
82  1  -1.2795  -38  fill=5  trcl = ( 0.0000 0.0000 0.9652 )      u=4  $ Tube Assy 1
83  like  82  but  fill=5  trcl = ( 0.0000 0.0000 25.0952 )      u=4  $ Tube Assy 2
84  like  82  but  fill=5  trcl = ( 0.0000 0.0000 49.2252 )      u=4  $ Tube Assy 3
85  like  82  but  fill=5  trcl = ( 0.0000 0.0000 73.3552 )      u=4  $ Tube Assy 4
86  1  -1.2795  -39  #82 #83 #84 #85         u=4  $ Canister Cavity
87  4  -0.0001  40          u=4  $ Canister Exterior
C Cells - MTR 7 Element Basket
91  6  -7.9400  -91  +94 +95 +96 +97 +98 +99 +100        u=3  $ Base plate
92  6  -7.9400  -92  +101 +105        u=3  $ Support plate
93  6  -7.9400  -93  +101 +105        u=3  $ Support plate
94  6  -7.9400  -101  +102  #91 #92 #93       u=3  $ Center column
95  6  -7.9400  -103  #91 #92 #93         u=3  $ Center divider upper
96  6  -7.9400  -104  #91 #92 #93         u=3  $ Center divider lower
97  6  -7.9400  -105  +106  +101  #91 #92 #93     u=3  $ Small side
98  6  -7.9400  -107  #91 #92 #93         u=3  $ Left divider
99  6  -7.9400  -108  #91 #92 #93         u=3  $ Right divider
100  4  -0.0001  #91 #92 #93 #94 #95 #96 #97 #98 #99           u=3  $ Cask Cavity Material
C Cells - Basket Cell Opening
151  4  -0.0001  -151  fill=4  trcl = ( -9.3503 4.5222 1.2700 )      u=2  $ UL
152  like  151  but    trcl = ( -9.3503 -4.5222 1.2700 )      u=2  $ LL
153  like  151  but    trcl = ( 9.3503 4.5222 1.2700 )      u=2  $ UR
154  like  151  but    trcl = ( 9.3503 -4.5222 1.2700 )      u=2  $ LR
155  4  -0.0001  #151 #152 #153 #154         fill=3  u=2  $ Basket Materials
C Cells - LWT Cavity
201  4  -0.0001  -201  fill=3  ( 0.0000 0.0000 3.8100 )      u=1
202  4  -0.0001  -202  fill=3  ( 0.0000 0.0000 115.5700 )      u=1
203  4  -0.0001  -203  fill=2  ( 0.0000 0.0000 227.3300 )      u=1
204  4  -0.0001  -204  fill=2  ( 0.0000 0.0000 339.0900 )      u=1
205  4  -0.0001  #201 #202 #203 #204           u=1
C Cells - LWT Cask Accident Conditions
301  7  -11.344  -304            $ BotPb
302  4  -0.0001  -303  fill=1          $ Cavity
303  6  -7.9400  -302  +304          $ Bottom
304  6  -7.9400  -301  +302  +306  +309  +303    $ OuterShell
305  6  -7.9400  -305  +308  +303        $ InnerShellTaper
306  6  -7.9400  -307  +303          $ InnerShell
307  7  -11.344  -308  +307          $ Lead
308  7  -11.344  -306  +305  +308        $ LeadTaper
309  0           -309  +308          $ LeadGap
310  9  -0.0001  +301  -310          $ Gap To Reflector
311  0           +310            $ Outside

C Canister Surfaces
c Aluminum Tubes
31  CZ  0.5080              $ Tube ID
32  CZ  0.6350              $ Tube OD
33  PX  0.6350
34  PX  -0.6350
35  PY  0.6350
36  PY  -0.6350              $ Tube Pitch Box
c Tube array base and outer envelope
37  PZ   0.6351              $ Base Plate Top Elevation
38  RPP  -3.1750  3.1750  -3.1750  3.1750  0.0000  24.1300    $ Tube Container
c Canister for four tube arrays
39  RPP  -3.5560  3.5560  -3.5560  3.5560  0.9652  100.1776    $ Can Cavity
40  RPP  -4.1910  4.1910  -4.1910  4.1910  0.0000  101.1428    $ Can Outer
41  RCC  0.0000  0.0000  0.0000  0.0000  0.0000  22.8300  0.3050  $ Rod Outline
C Surfaces - MTR 7 Element Basket
91  RCC  0.0000  0.0000  0.0000  0.0000  0.0000  1.2700  16.8466  $ Base plate
92  RCC  0.0000  0.0000  52.0700  0.0000  0.0000  1.2700  16.8466  $ Support plate
93  RCC  0.0000  0.0000  104.1400  0.0000  0.0000  1.2700  16.8466  $ Support plate
94  CZ  1.2700              $ Hole CC
95  C/Z  0.0000  9.5250  1.2700          $ Hole UC
96  C/Z  0.0000  -9.5250  1.2700          $ Hole LC
97  C/Z  -9.5250  4.6990  1.2700          $ Hole UL
98  C/Z  -9.5250  -4.6990  1.2700          $ Hole LL
99  C/Z  9.5250  4.6990  1.2700          $ Hole UR
100  C/Z  9.5250  -4.6990  1.2700          $ Hole LR
101  RPP  -5.1604  5.1604  -14.6939  14.6939  1.2700  111.7600    $ Center column outer
102  RPP  -4.3667  4.3667  -13.9002  13.9002  1.2700  111.7600    $ Center column inner
```

```
103  RPP  -4.3667  4.3667  4.3688  5.1626  1.2700  111.7600    $ Center divider upper
104  RPP  -4.3667  4.3667  -5.1626  -4.3688  1.2700  111.7600    $ Center divider lower
105  RPP  -14.1986  14.1986  -9.3599  9.3599  1.2700  111.7600    $ Small side outer
106  RPP  -13.8938  13.8938  -9.0551  9.0551  1.2700  111.7600    $ Small side inner
107  RPP  -13.8938  -5.1604  -0.3175  0.3175  1.2700  111.7600    $ Left divider
108  RPP  5.1604  13.8938  -0.3175  0.3175  1.2700  111.7600    $ Right divider
C Surfaces - Basket Cell Opening
151  RPP  -4.1909  4.1911  -4.1909  4.1911  1.2700  111.7600    $ Opening in Basket
C Surfaces - LWT Cavity
201  RCC  0.0000  0.0000  3.8100  0.0000  0.0000  111.7600  16.8467  $ Basket
202  RCC  0.0000  0.0000  115.5700  0.0000  0.0000  111.7600  16.8467  $ Basket
203  RCC  0.0000  0.0000  227.3300  0.0000  0.0000  111.7600  16.8467  $ Basket
204  RCC  0.0000  0.0000  339.0900  0.0000  0.0000  111.7600  16.8467  $ Basket
C Surfaces - LWT Cask Accident Conditions
301  RCC  0.0000  0.0000  -26.6700  0.0000  0.0000  507.3650  36.5189  $ Lwt
302  RCC  0.0000  0.0000  -26.6700  0.0000  0.0000  26.6700  36.5189  $ Bottom
303  RCC  0.0000  0.0000  0.0000  0.0000  0.0000  452.1200  16.9863  $ Cavity
304  RCC  0.0000  0.0000  -17.7800  0.0000  0.0000  7.6200  26.3525  $ Bottom gamma shield
305  RCC  0.0000  0.0000  0.0000  0.0000  0.0000  444.5000  20.1740  $ Lead id - taper
306  RCC  0.0000  0.0000  0.0000  0.0000  0.0000  444.5000  31.5976  $ Lead od - taper
307  RCC  0.0000  0.0000  13.8176  0.0000  0.0000  416.8648  18.9103  $ Lead id
308  RCC  0.0000  0.0000  13.8176  0.0000  0.0000  416.8648  33.3271  $ Lead od
309  RCC  0.0000  0.0000  13.8176  0.0000  0.0000  416.8648  33.4645  $ Lead gap
*310  RCC  0.0000  0.0000  -27.1700  0.0000  0.0000  508.3650  37.0189  $ Container

C
C Materials List
C
C - U-Al_H2O
m1  92235  -5.7000E-02  1001  -7.5000E-02
       92238  -3.0000E-03  8016  -6.0400E-01
       13027  -2.6100E-01
C Aluminum / Clad
m2  13027  -1.0
C Canister Water
m3  1001  6.6667E-01  8016  3.3333E-01
mt3  lwtr.01
C Cask Cavity Water
m4  1001  6.6667E-01  8016  3.3333E-01
mt4  lwtr.01
C Aluminum
m5  13027  -1.0
C Stainless Steel 304
m6  26000  -0.695  24000  -0.190  28000  -0.095
       25055  -0.020
C Lead
m7  82000  -1.0
C Aluminum Honeycomb Impact Limiter
m8  13027  -1.0
C Water/Glycol - Cask Neutron Shield
m10  1001  -1.03651E-01  8016  -6.75619E-01  6000  -2.20730E-01
C Cask Exterior (Water at Various Densities)
m9  1001  6.6667E-01  8016  3.3333E-01
mt9  lwtr.01
C
C Cell Importances
imp:n 1 43r 0
c
c Criticality Controls
c
kcode  2000  1.00  30  530
c
c Source Distribution for Initial Generation
SDEF  CEL=  302:D4:D5:D6
       ERG=  D1
       POS=  0.0000  0.00  0.4150
       RAD=  D2
       AXS=  0.00  0.00  1.00
       EXT=  D3
C - Neutron Source Energy Source Distribution
#          SP1
       -3
C - Uniform Radial Distribution in Fuel Rod
#  SI2  SP2
       0.0000  -21
       3.5560  1
C - Axial Source Profile
#  SI3  SP3
       0  0.0
       100  1.0
C - Two Baskets With Fuel in Cask
#     SI4         SP4
          l         d
       203  1
       204  1
C - Four Openings in Basket with Fuel
#     SI5         SP5
          l         d
       151  1
       152  1
       153  1
       154  1
C - Four Tube Arrays per Canister
#     SI6         SP6
          l         d
       82  1
```

```
       83  1
       84  1
       85  1
C Print Control
prdmp  -30 -60 1 2
print
C Random Number Generator
rand  gen=2  1.90735E+13  stride=152917  hist=1
```

6.6.18 HEUNL in the LWT Cask

This section contains a sample (truncated) output file from the evaluation of HEUNL in the LWT cask. The output file is shown in Figure 6.6.18-1.

Figure 6.6.18-1 Maximum Reactivity HEUNL Configuration

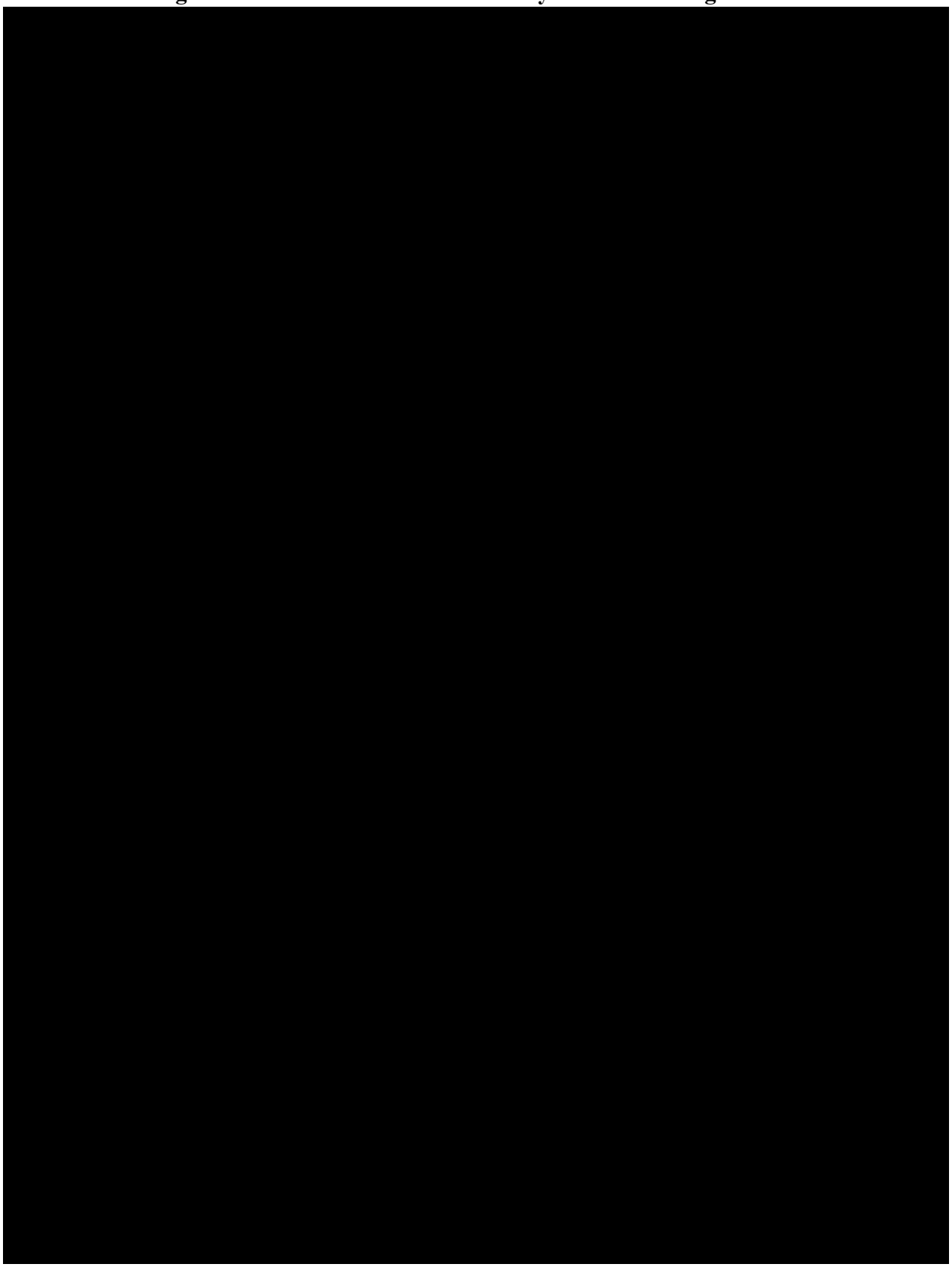

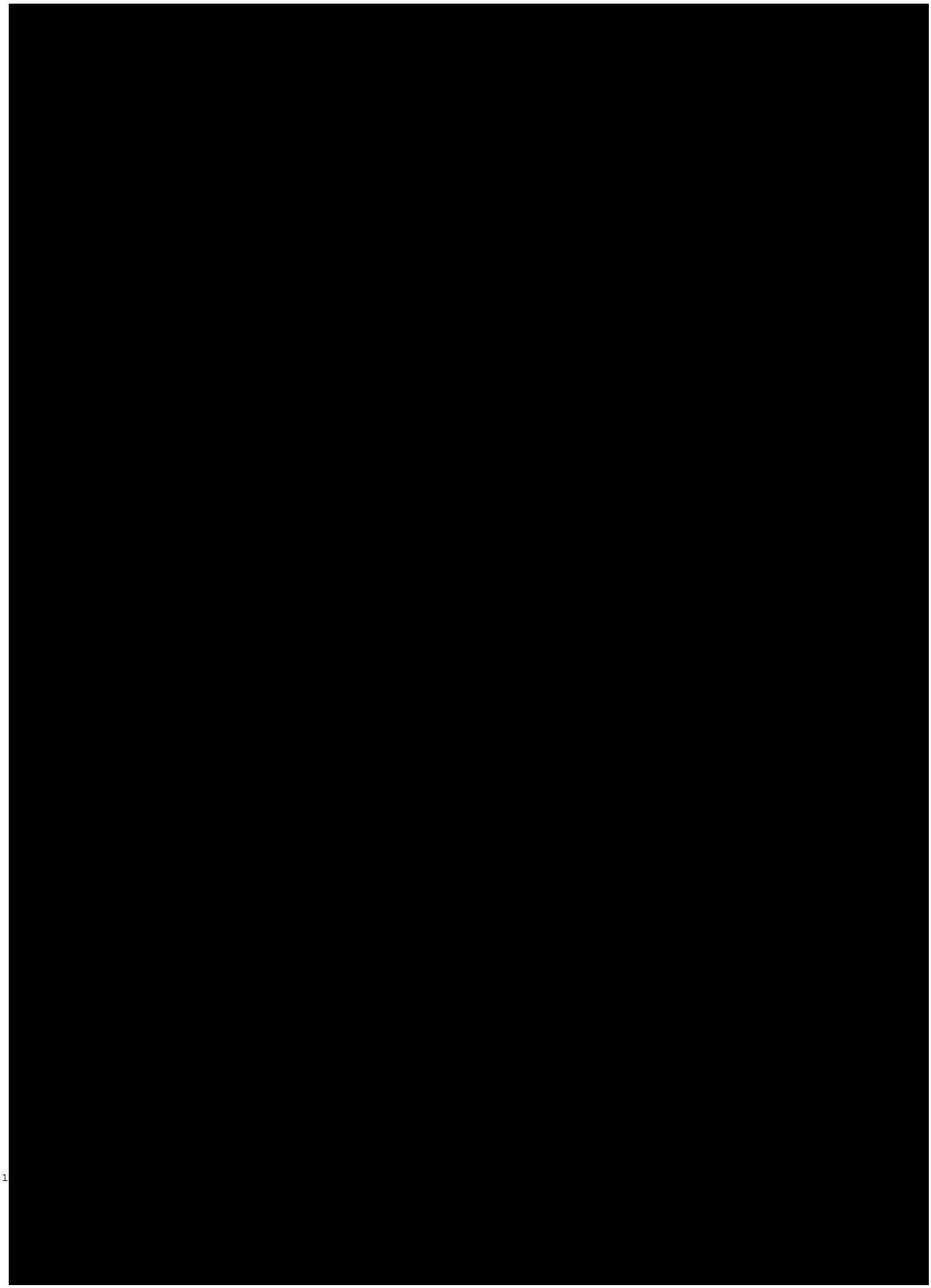

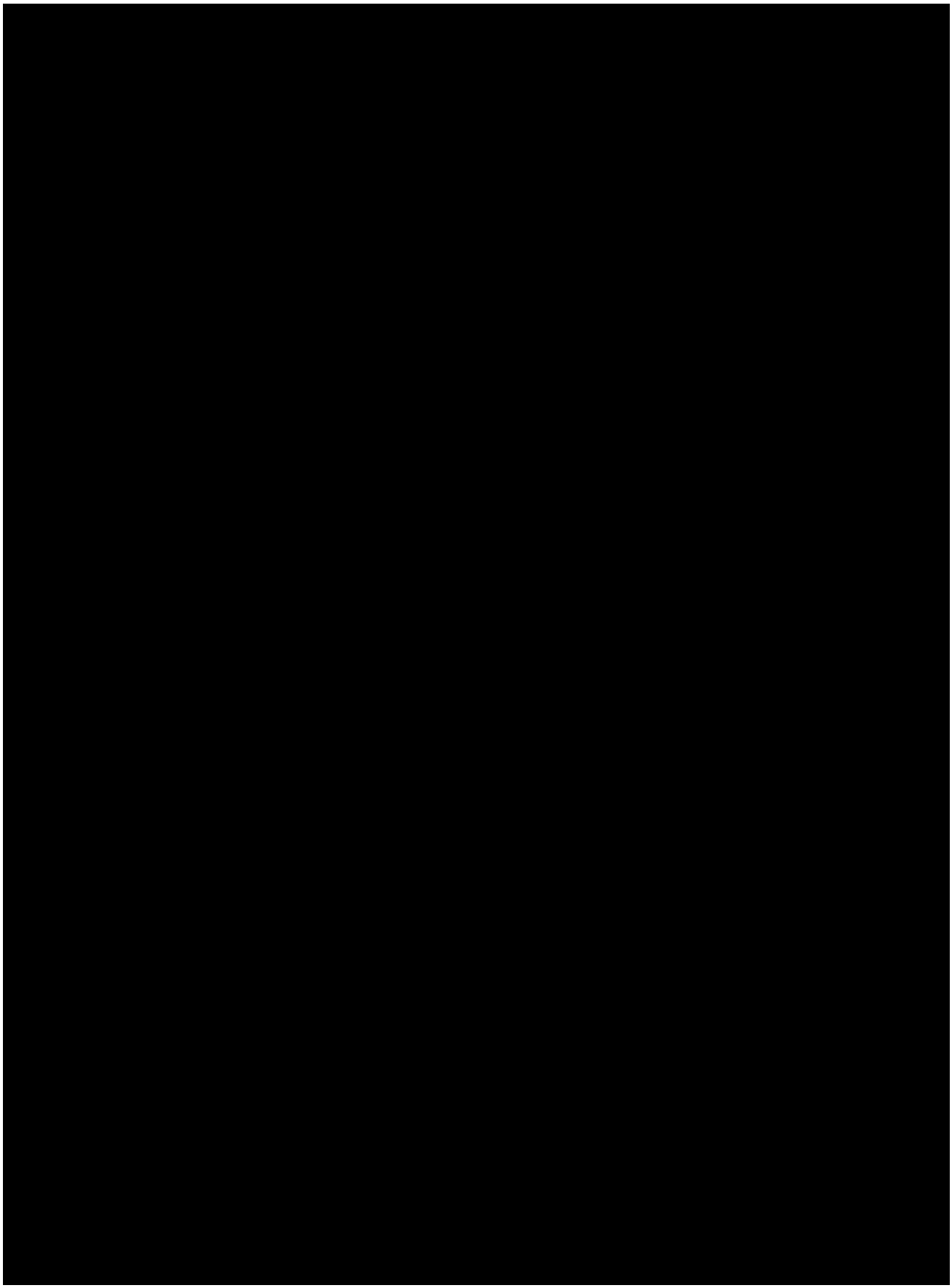

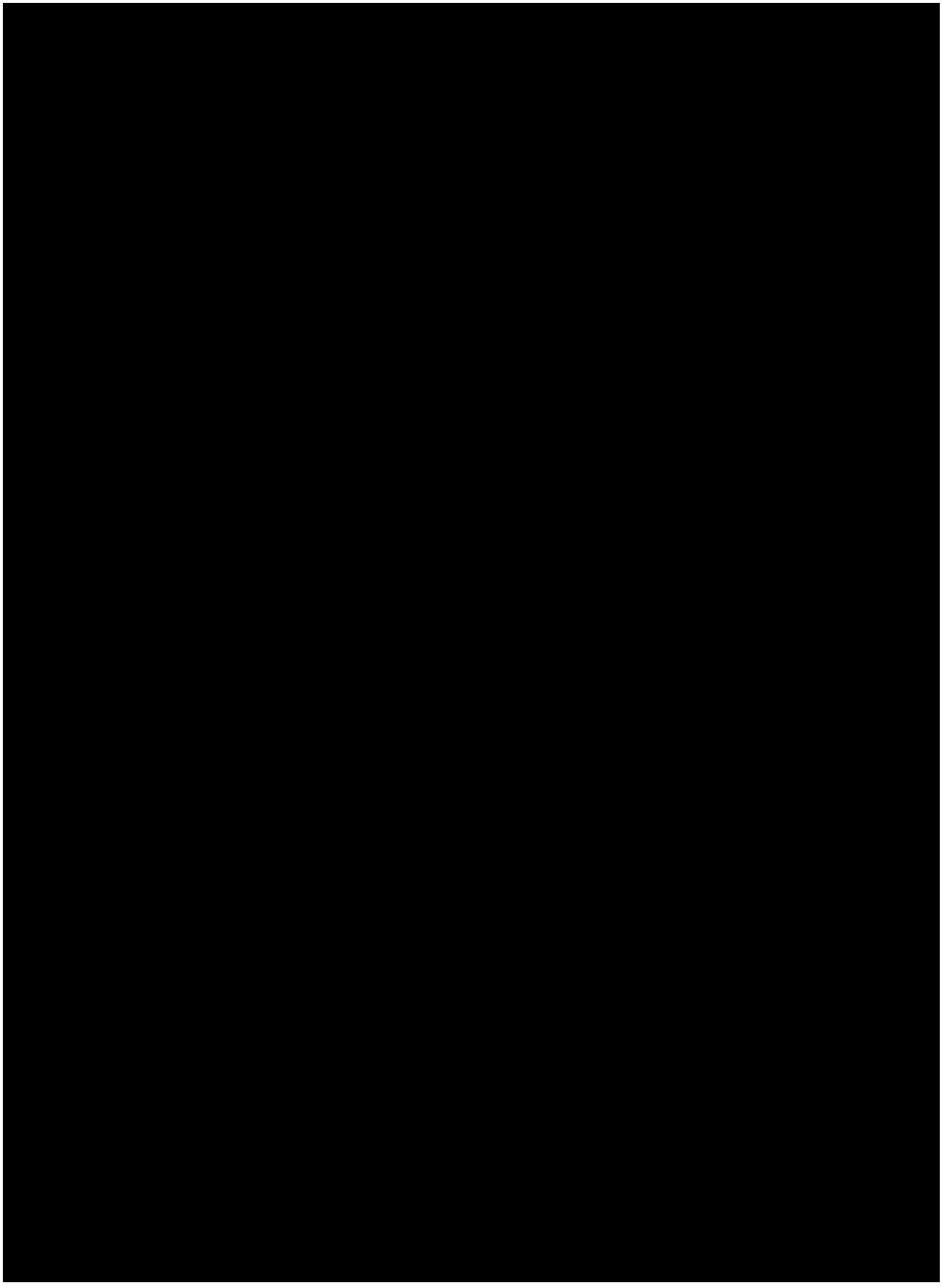

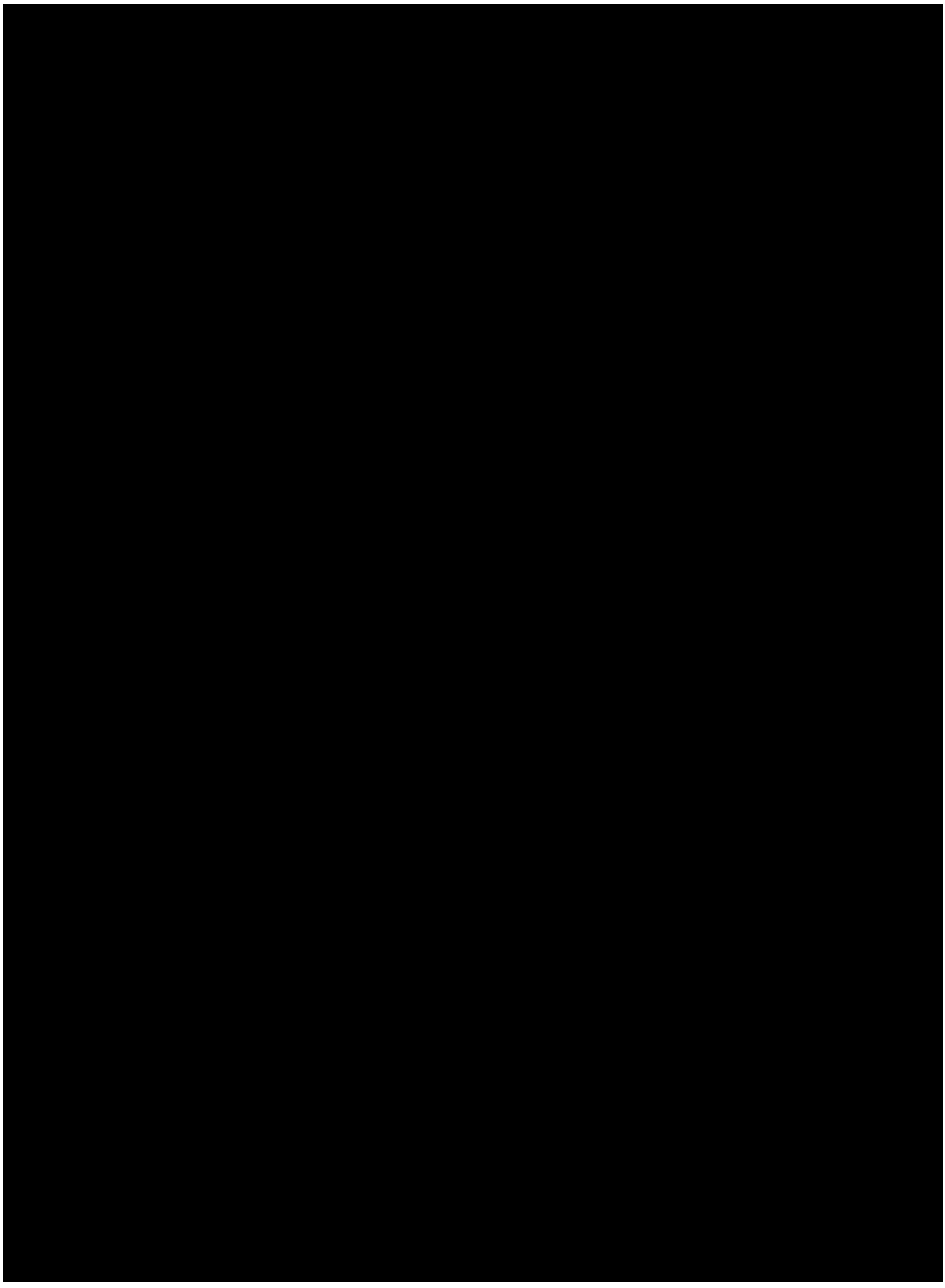

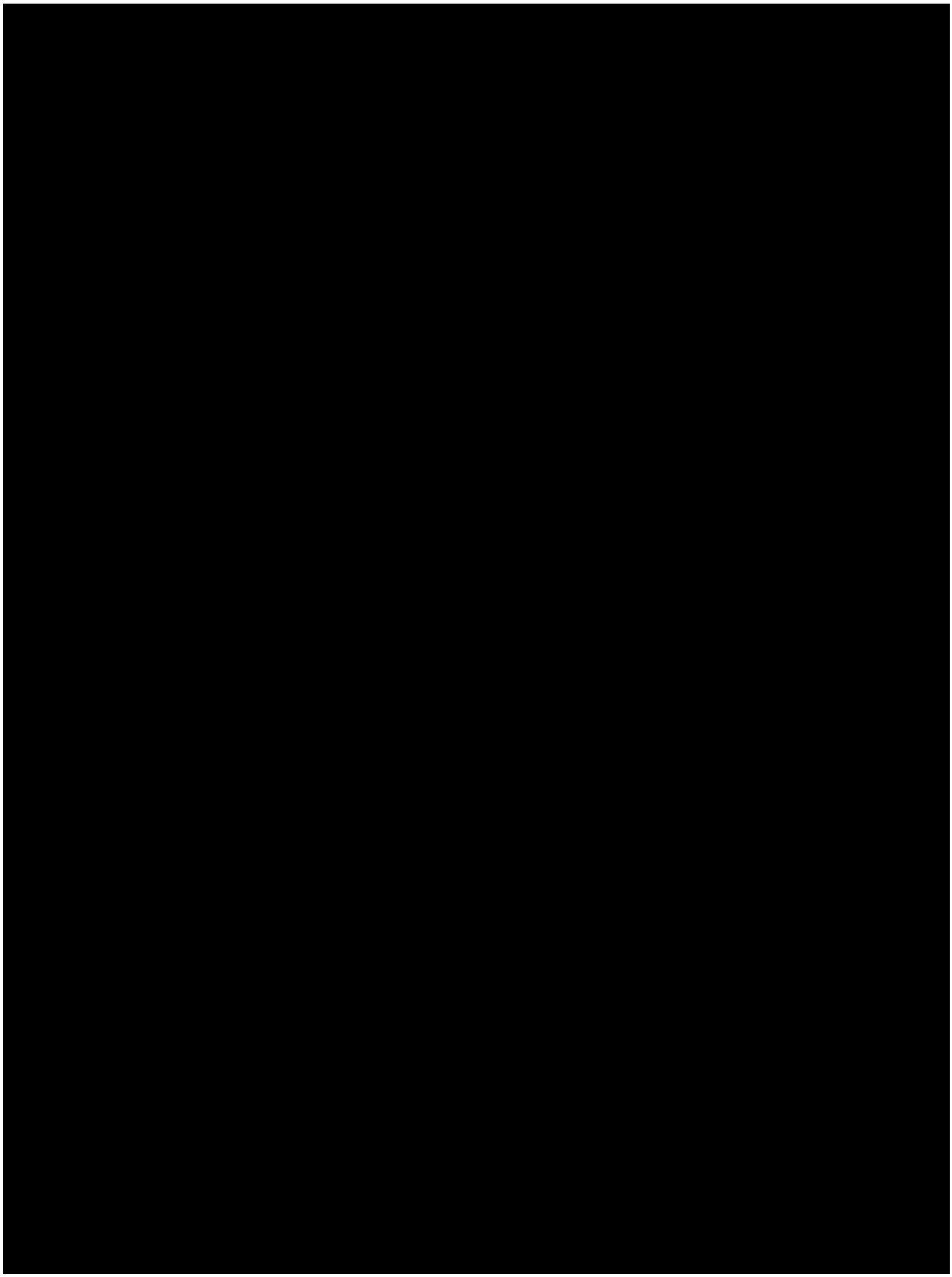

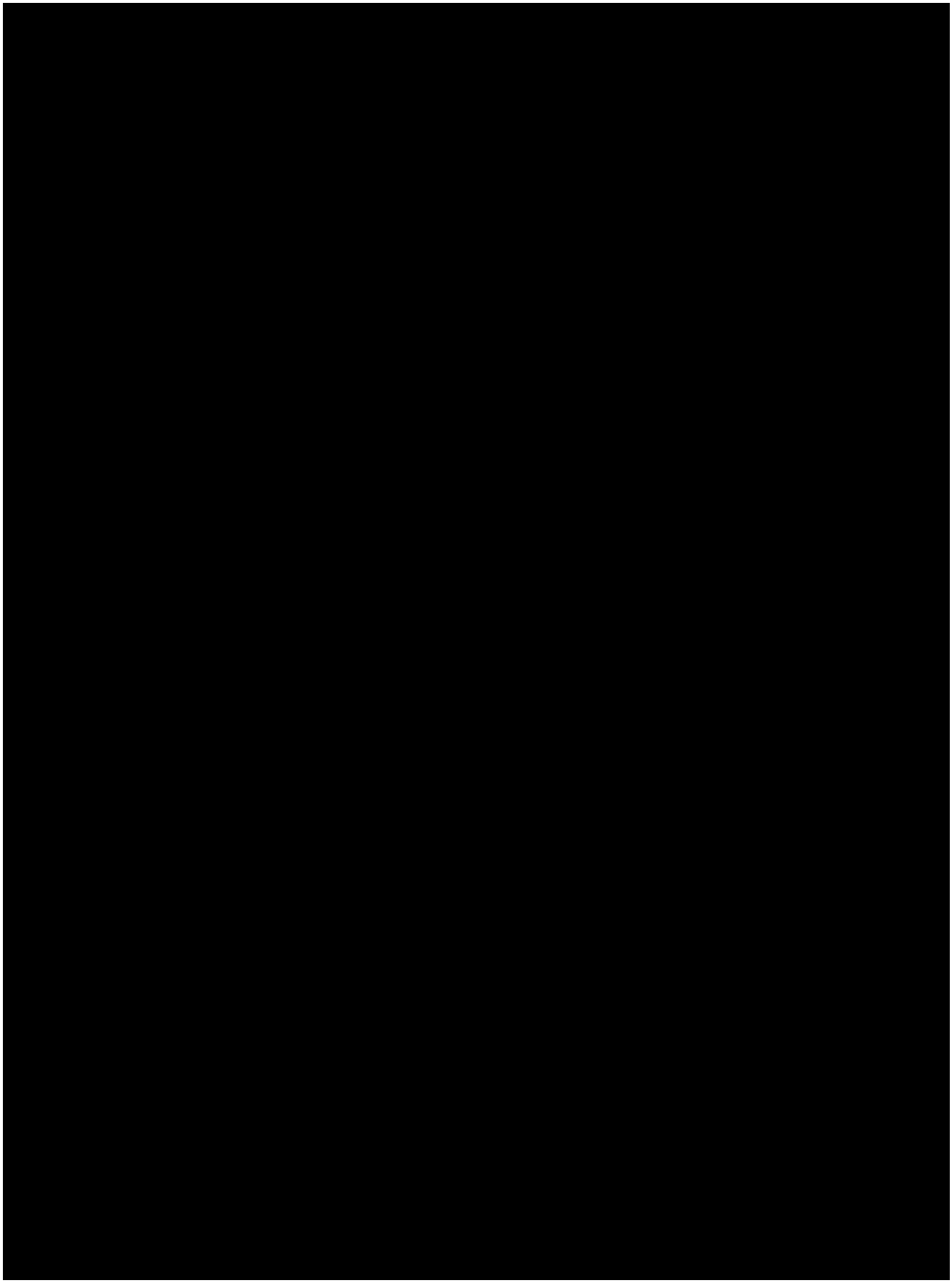

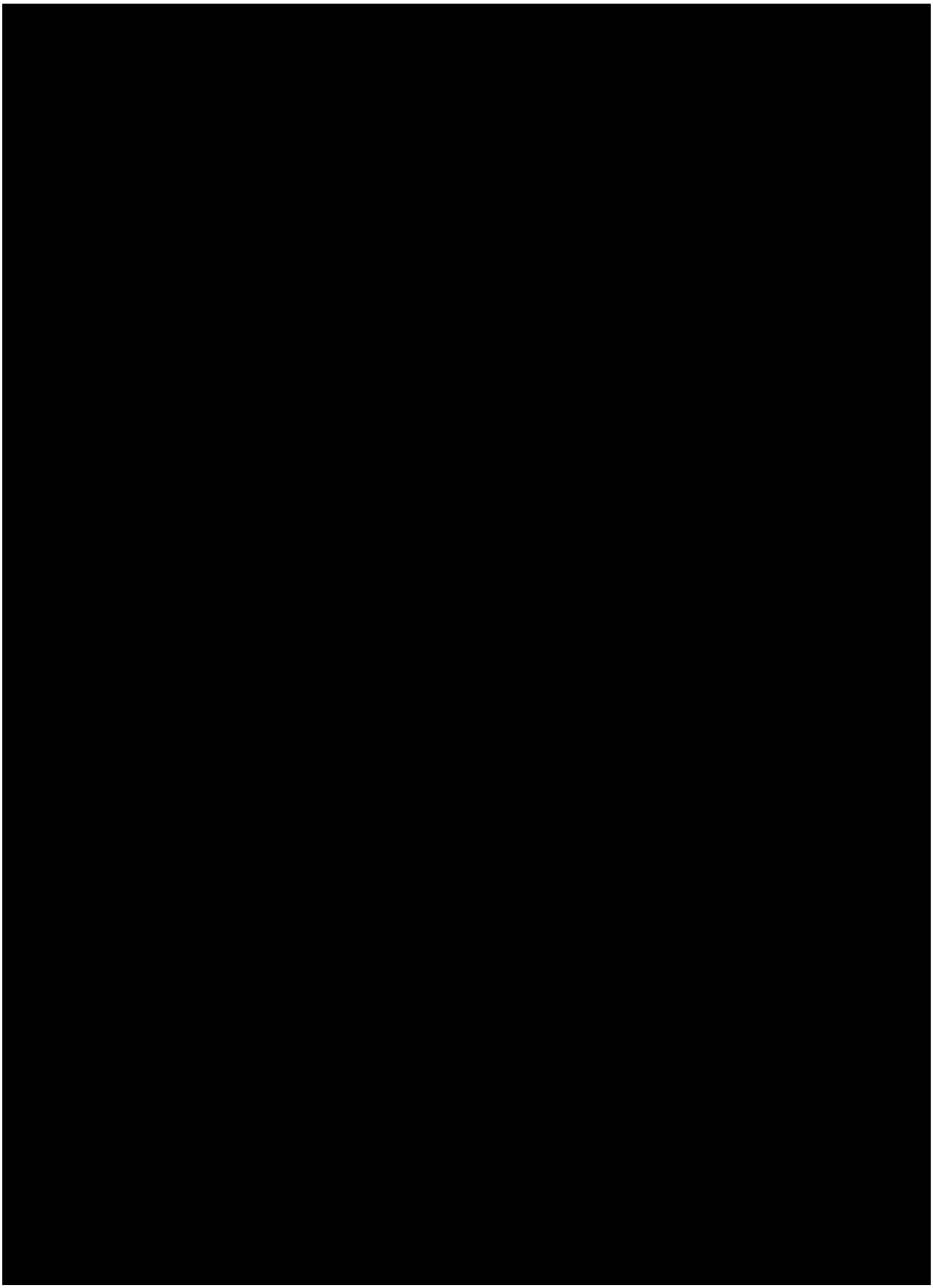

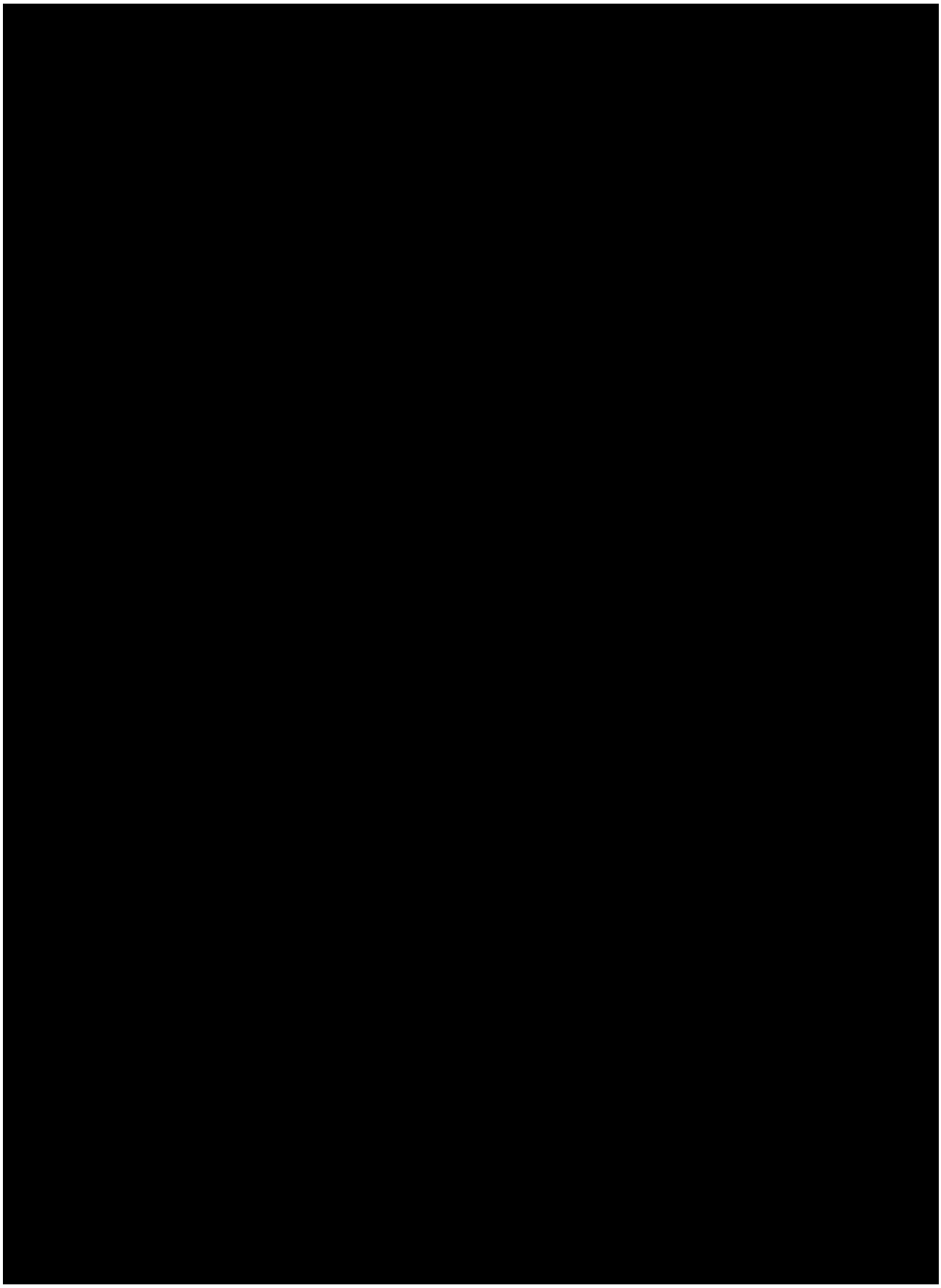

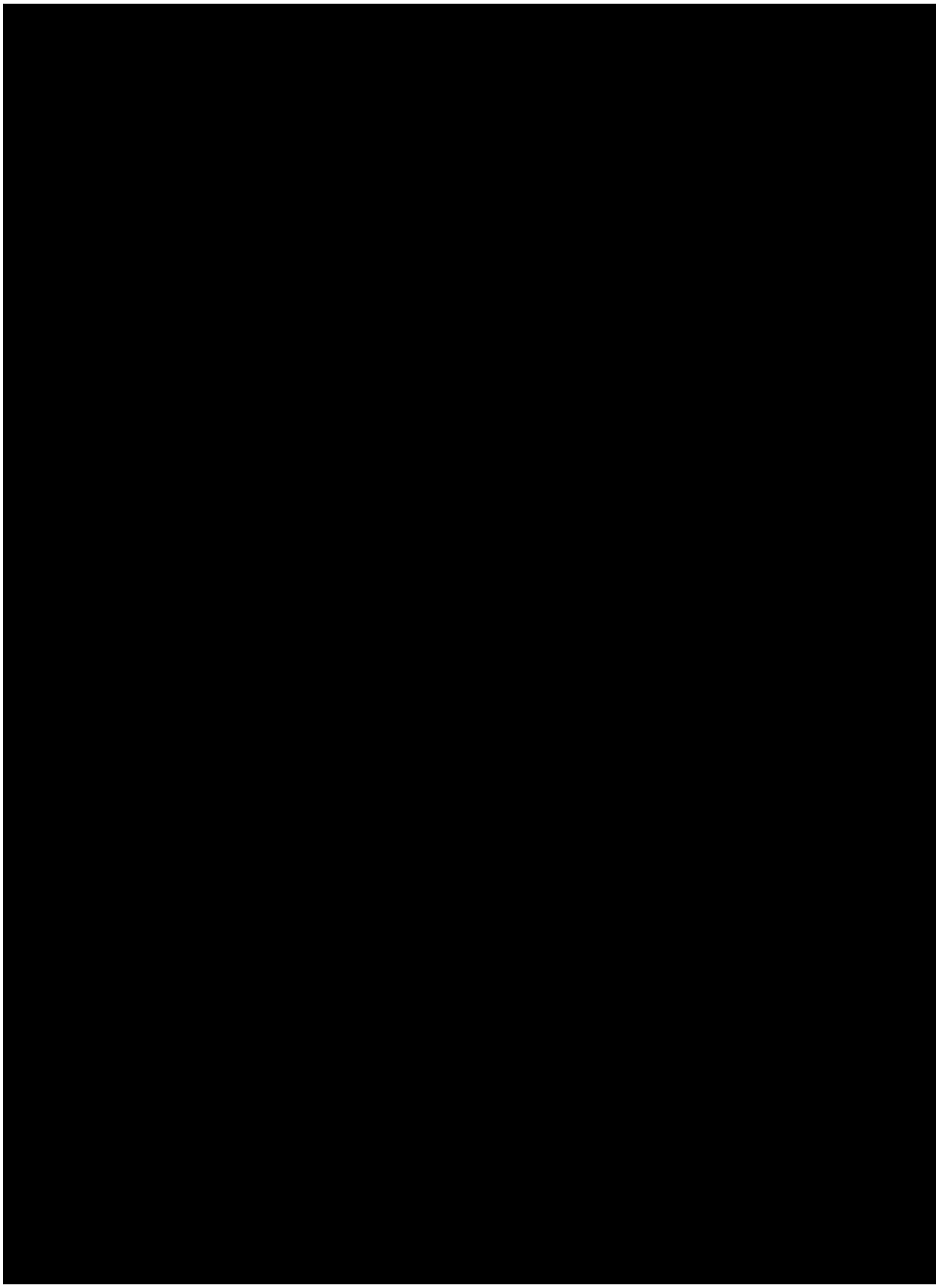

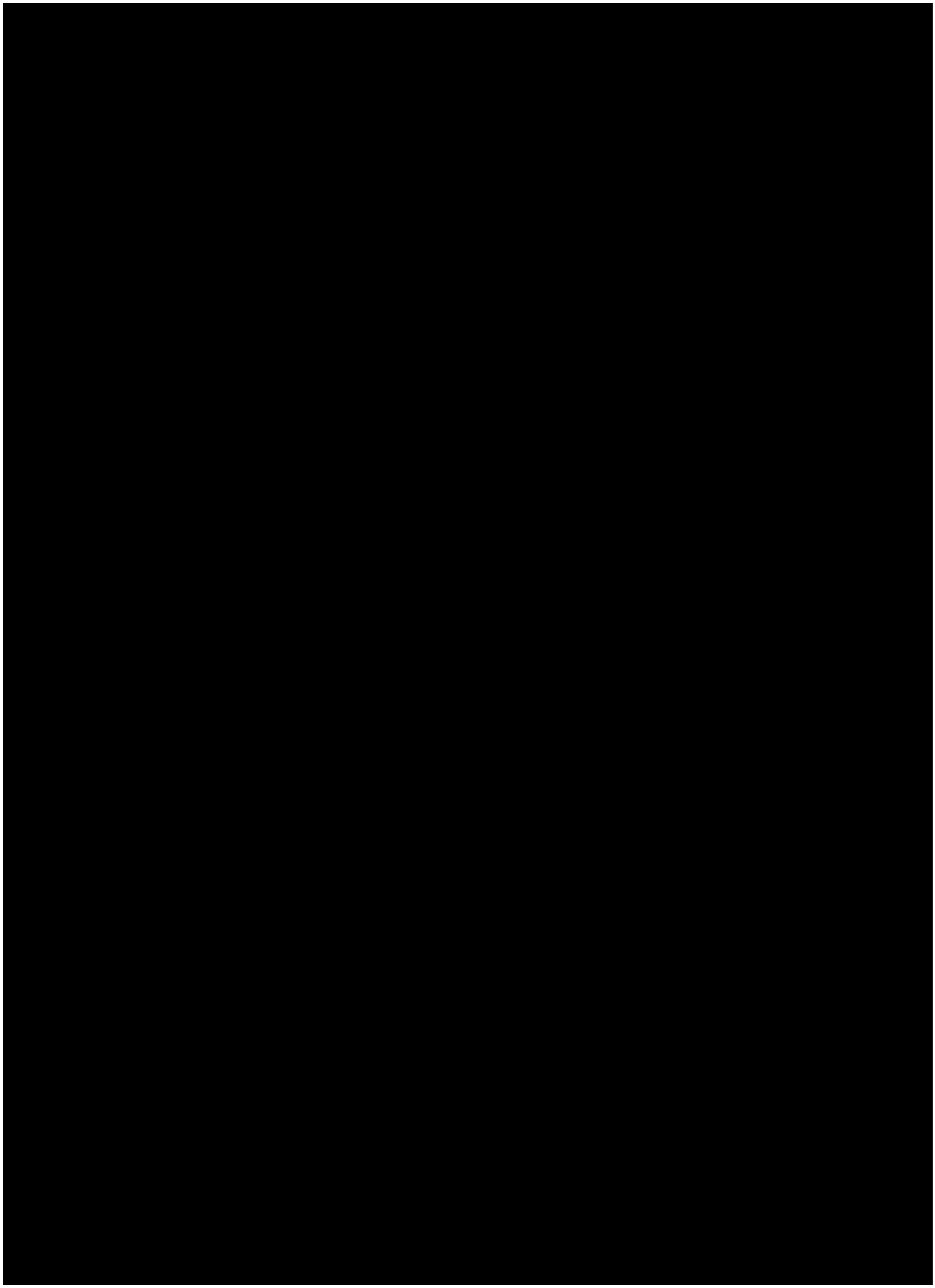

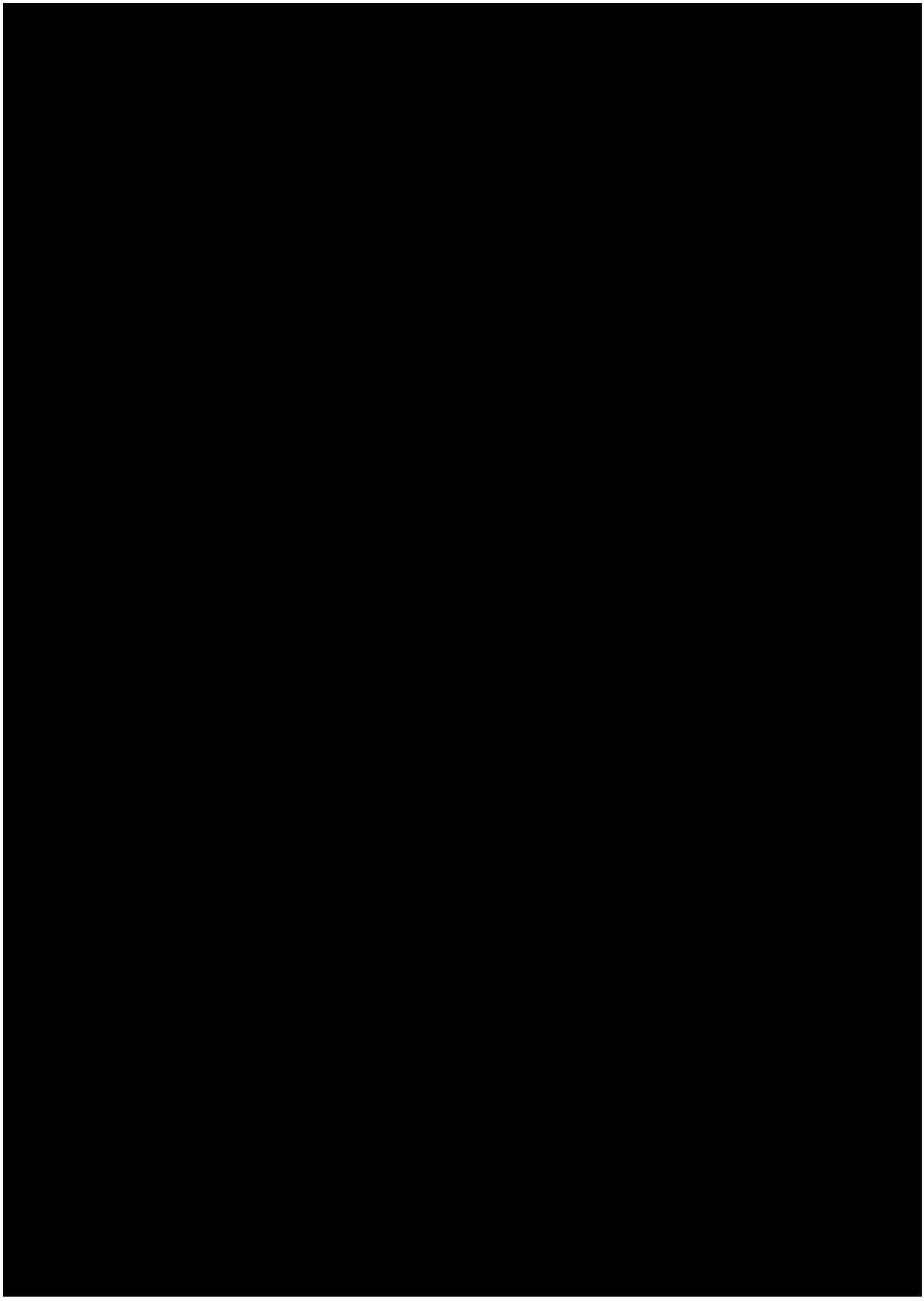

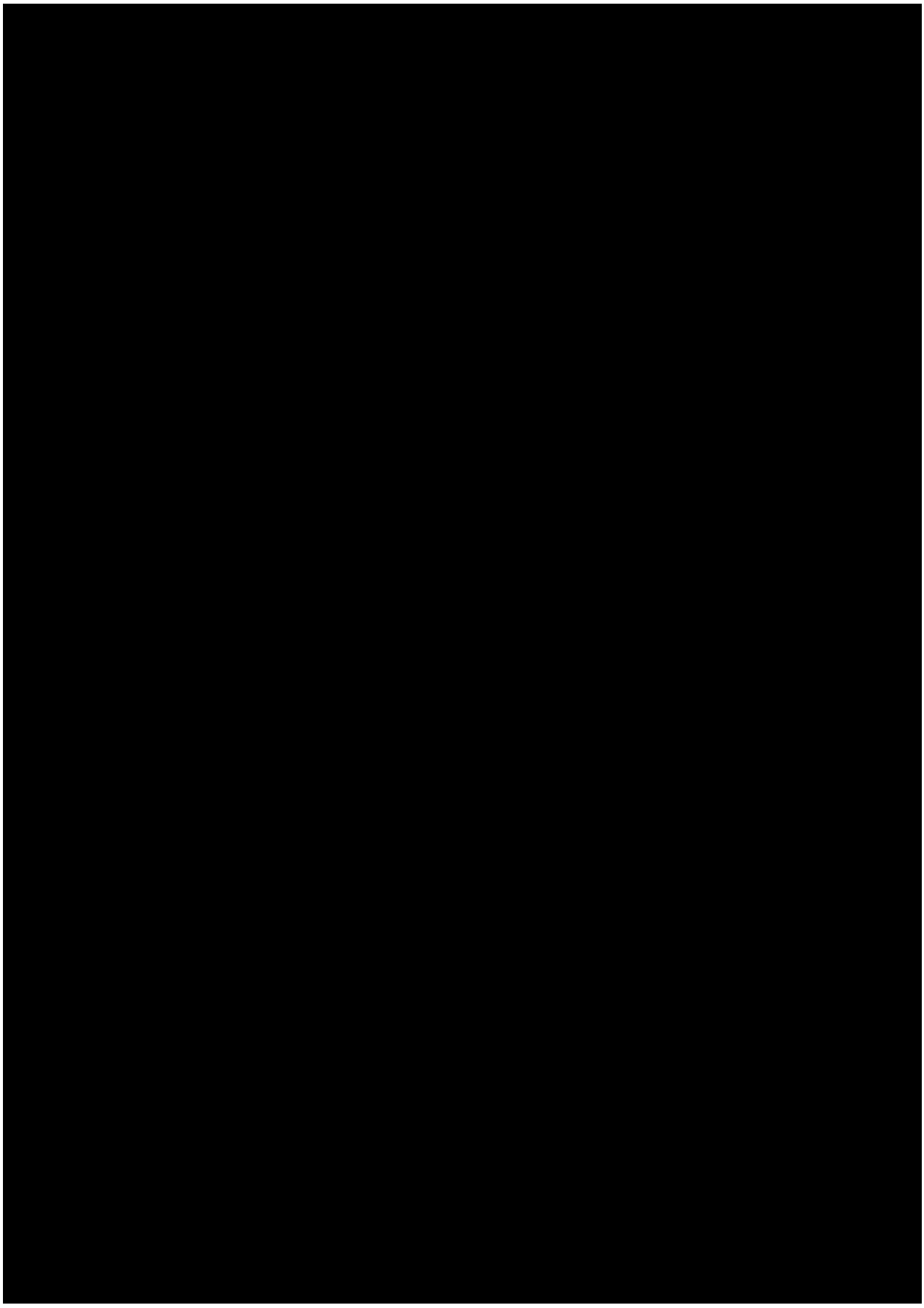

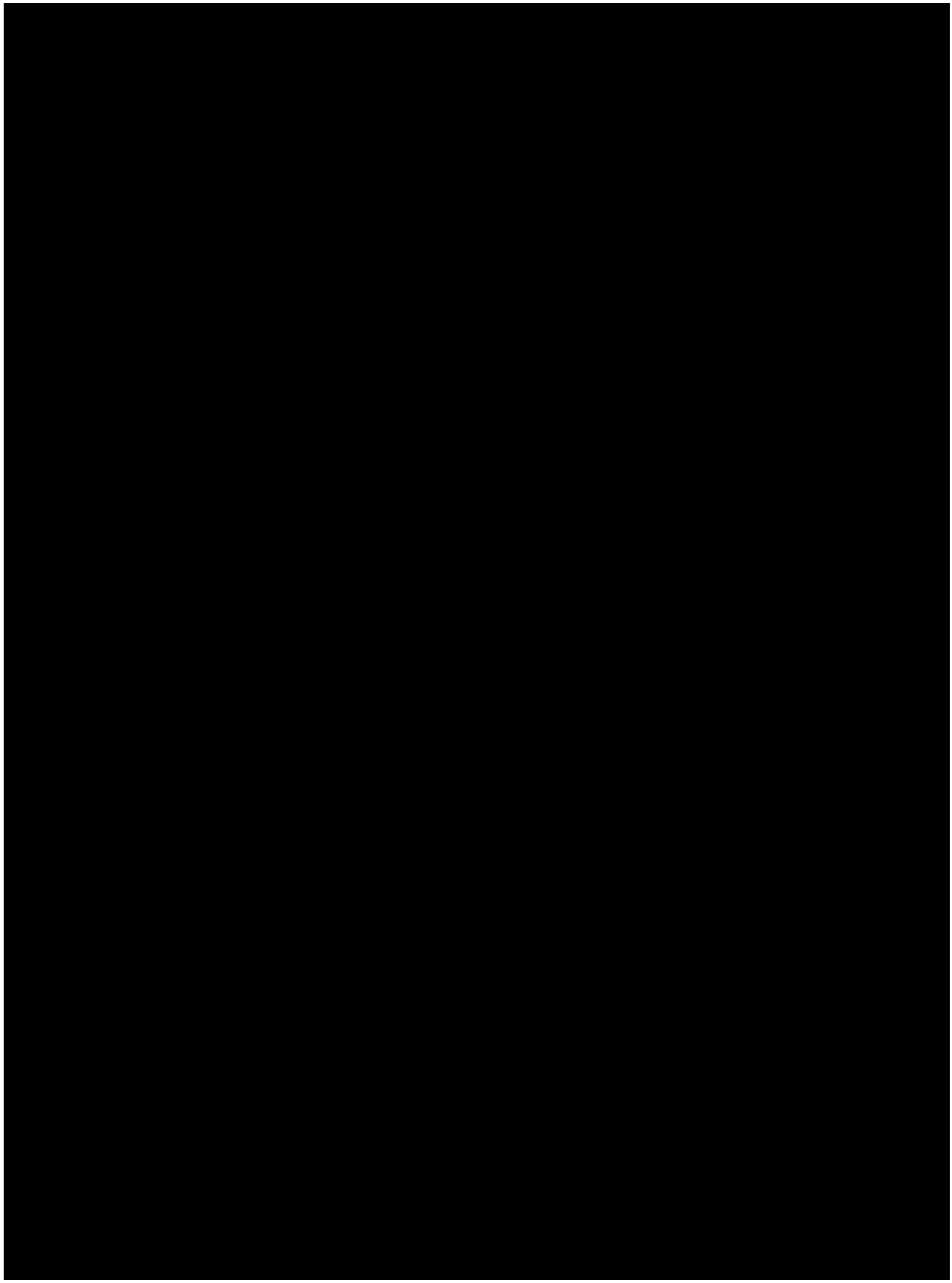

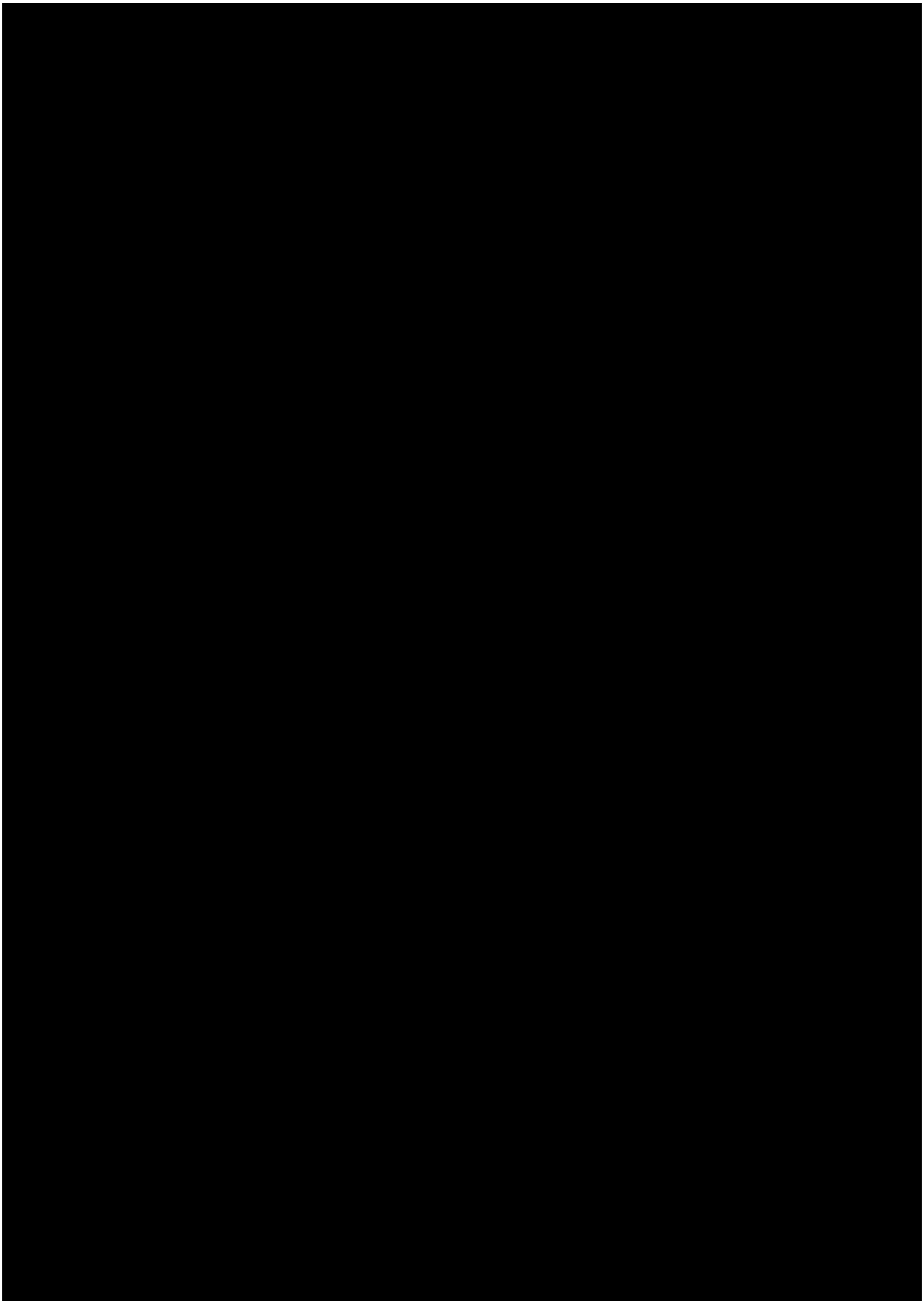

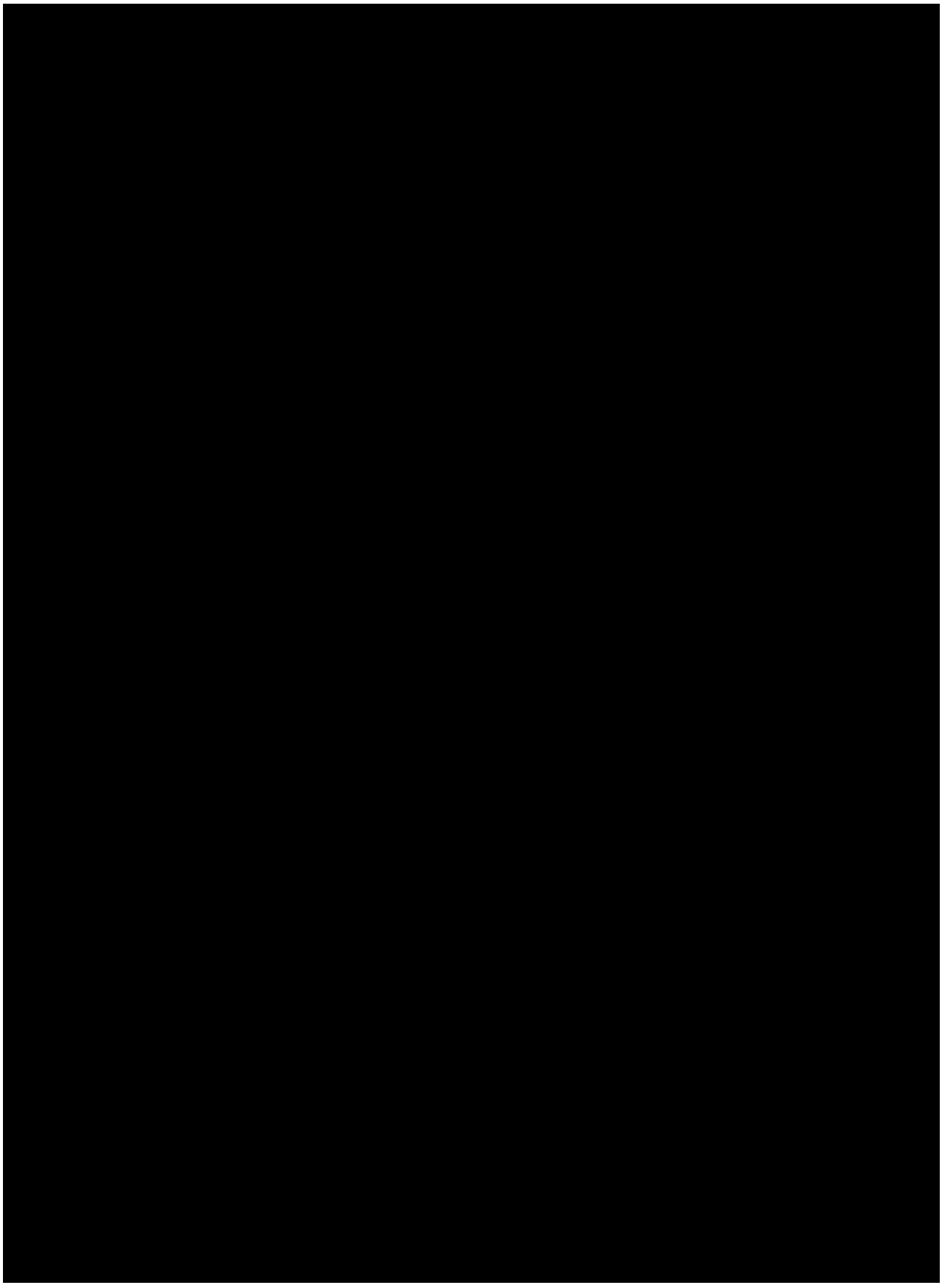

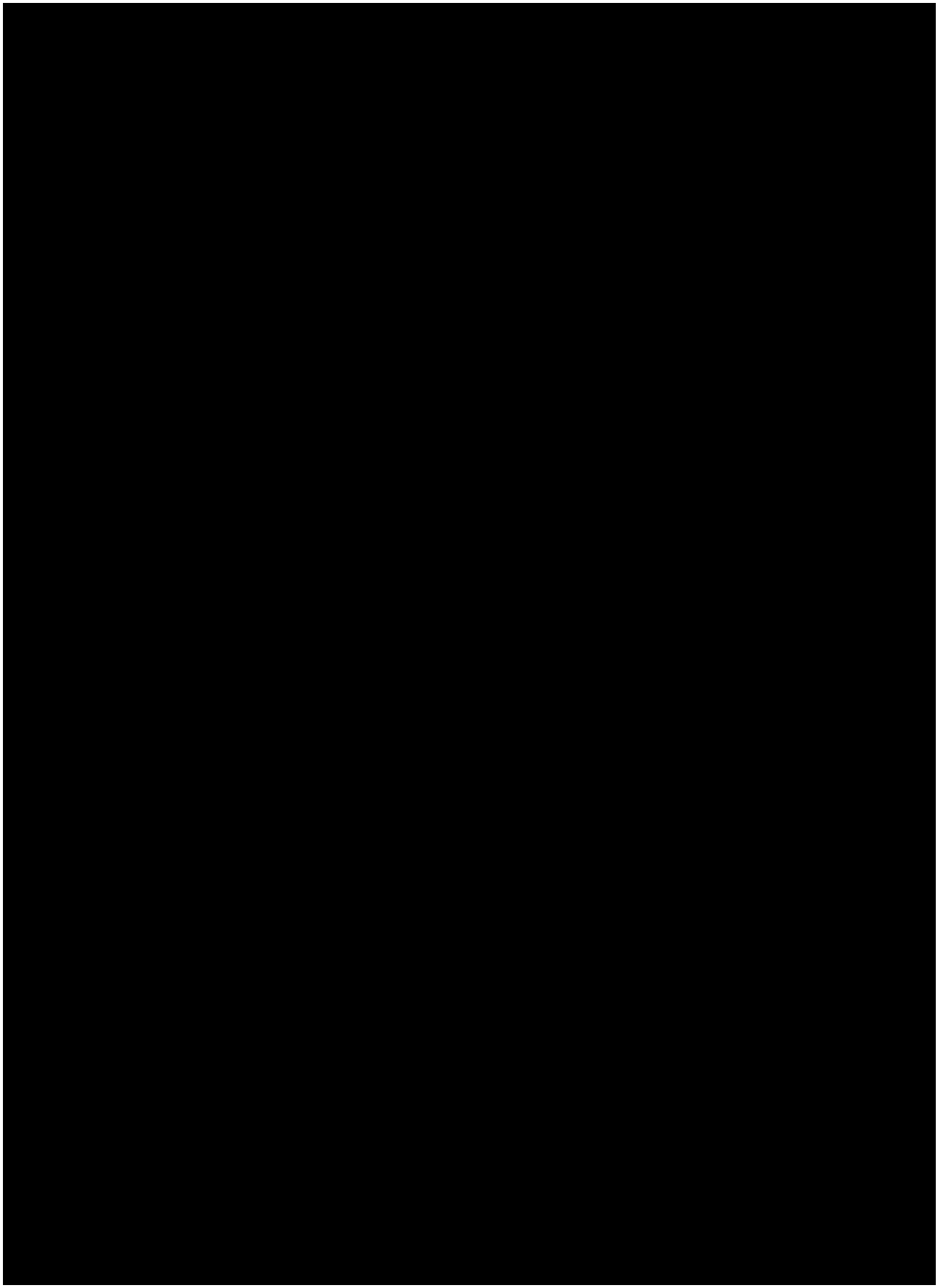

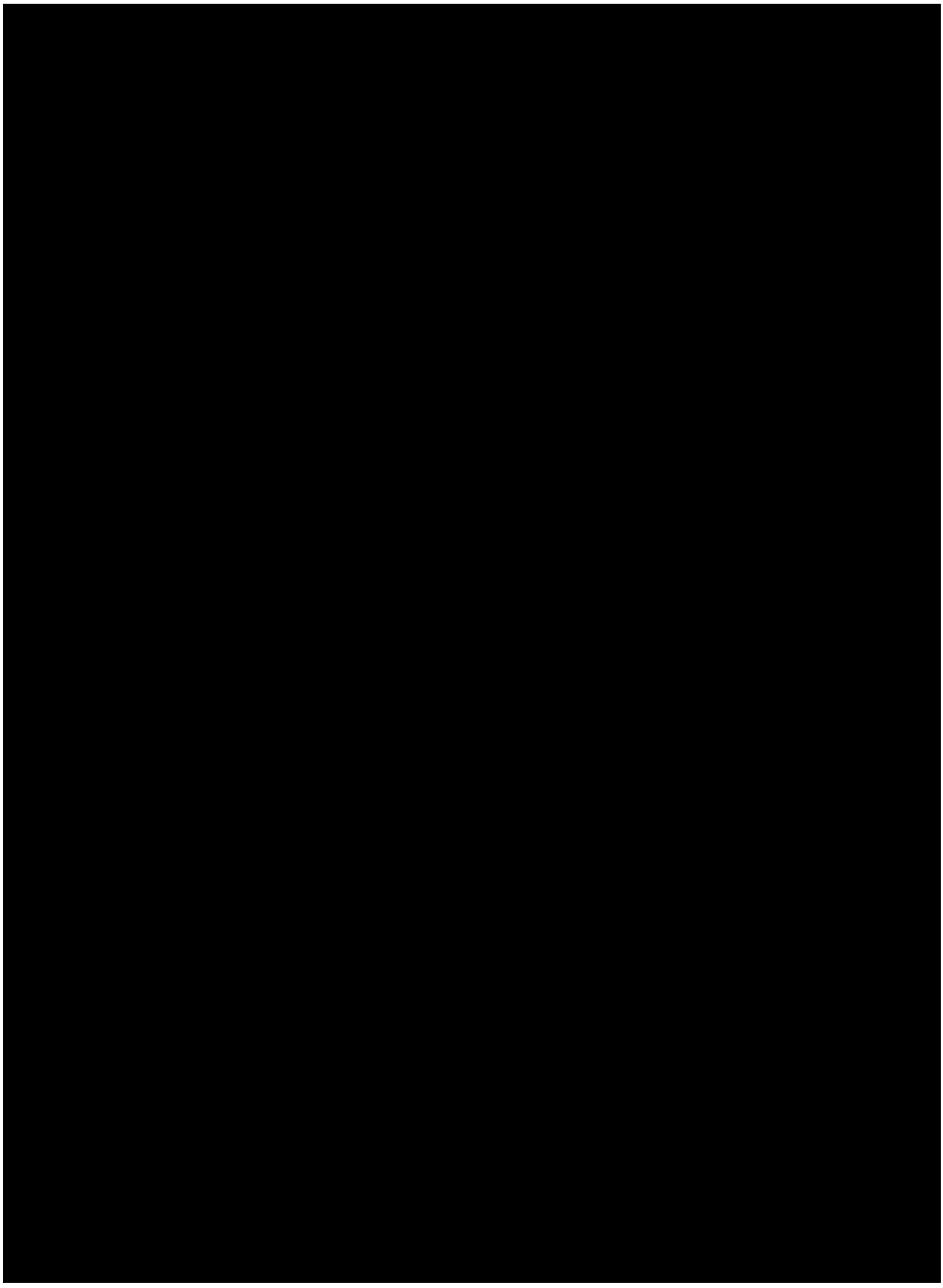

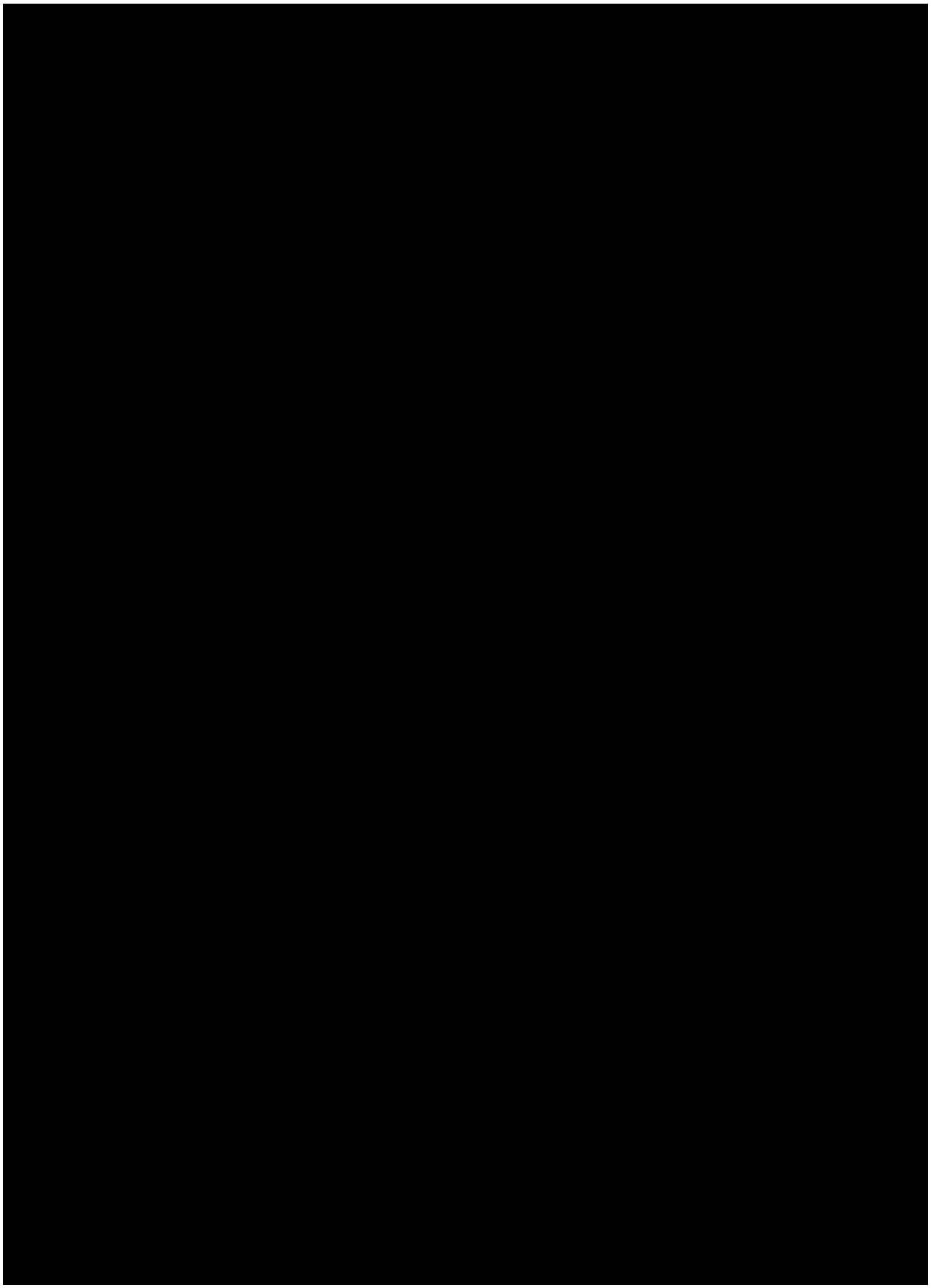

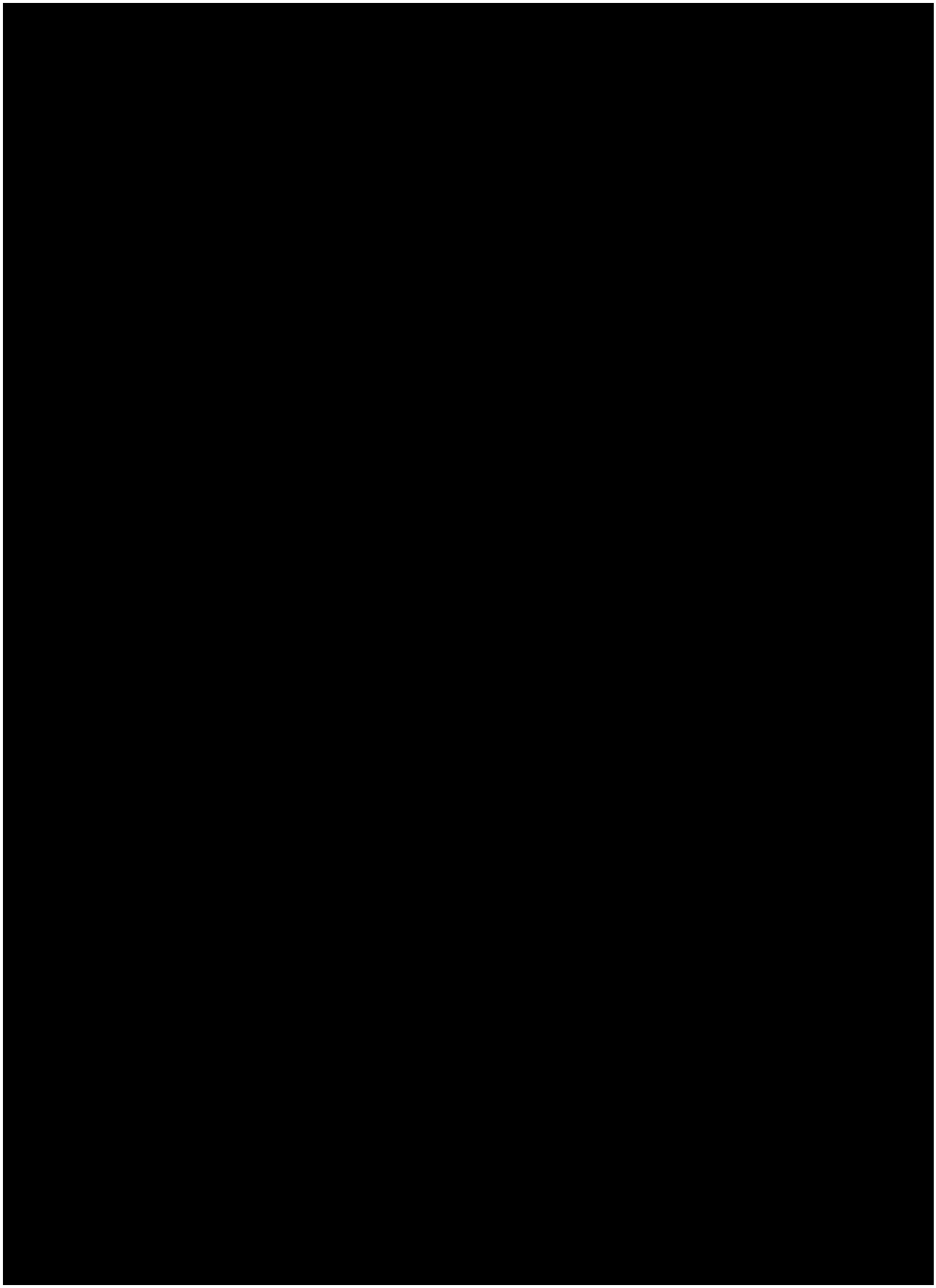

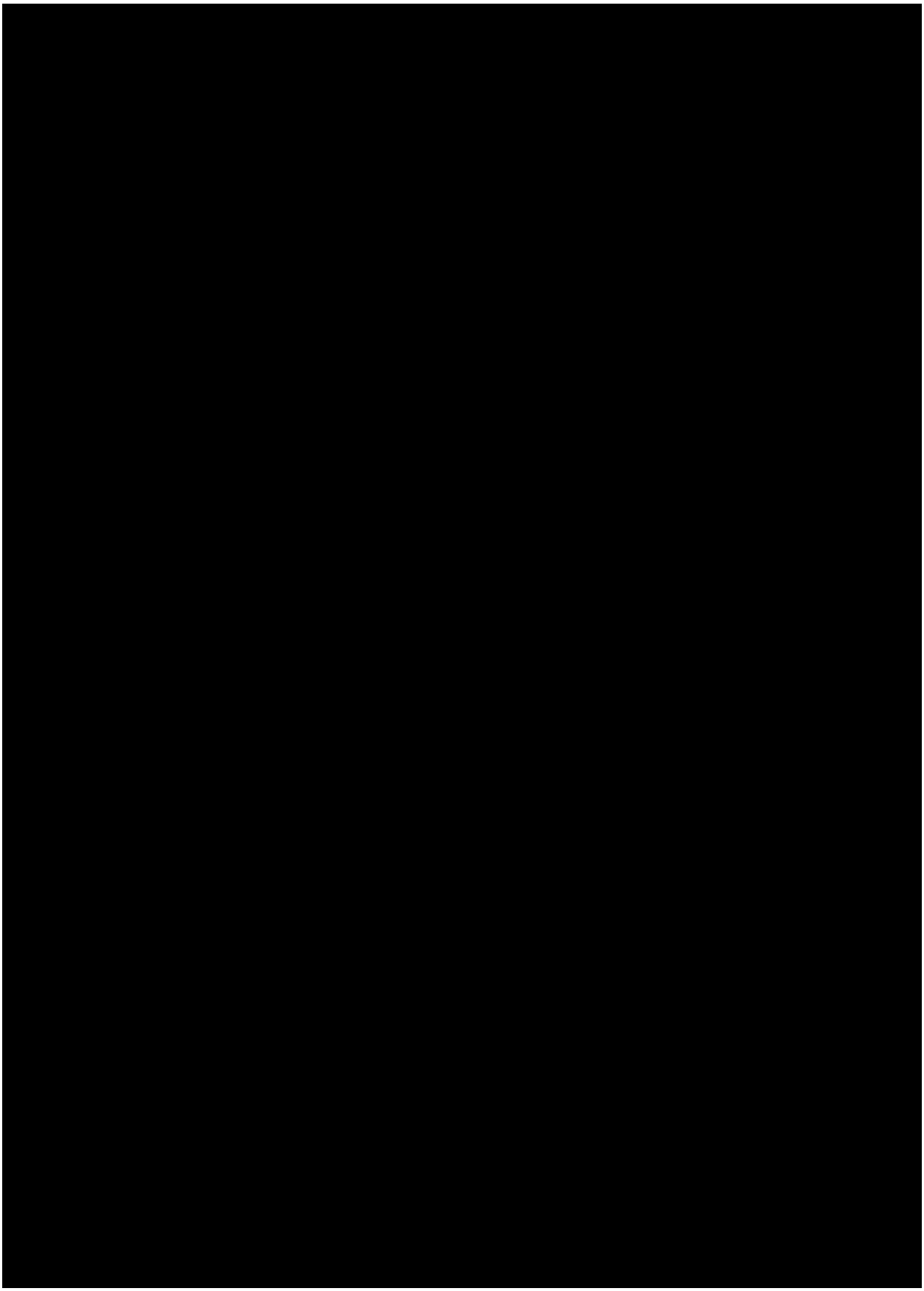

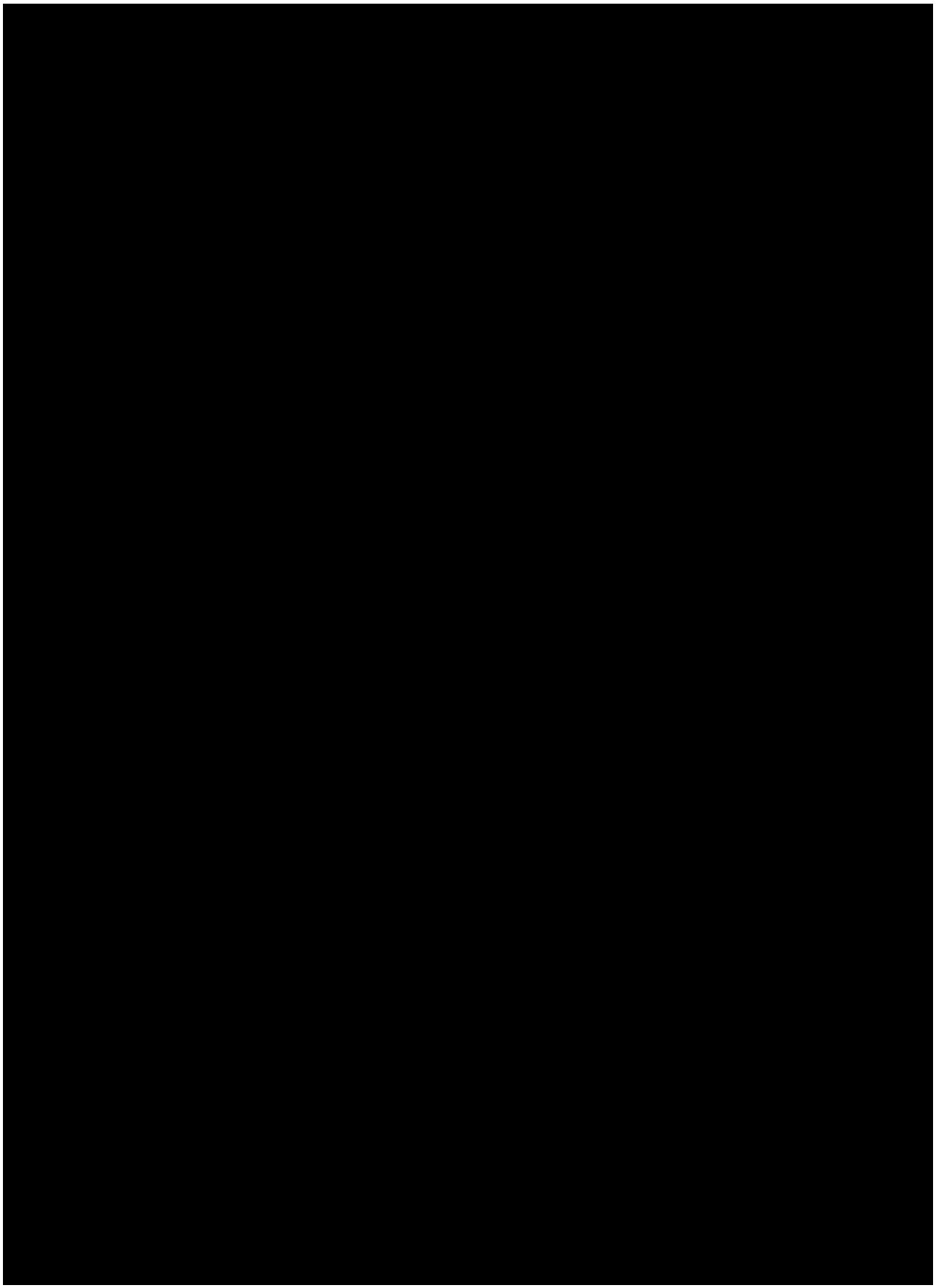

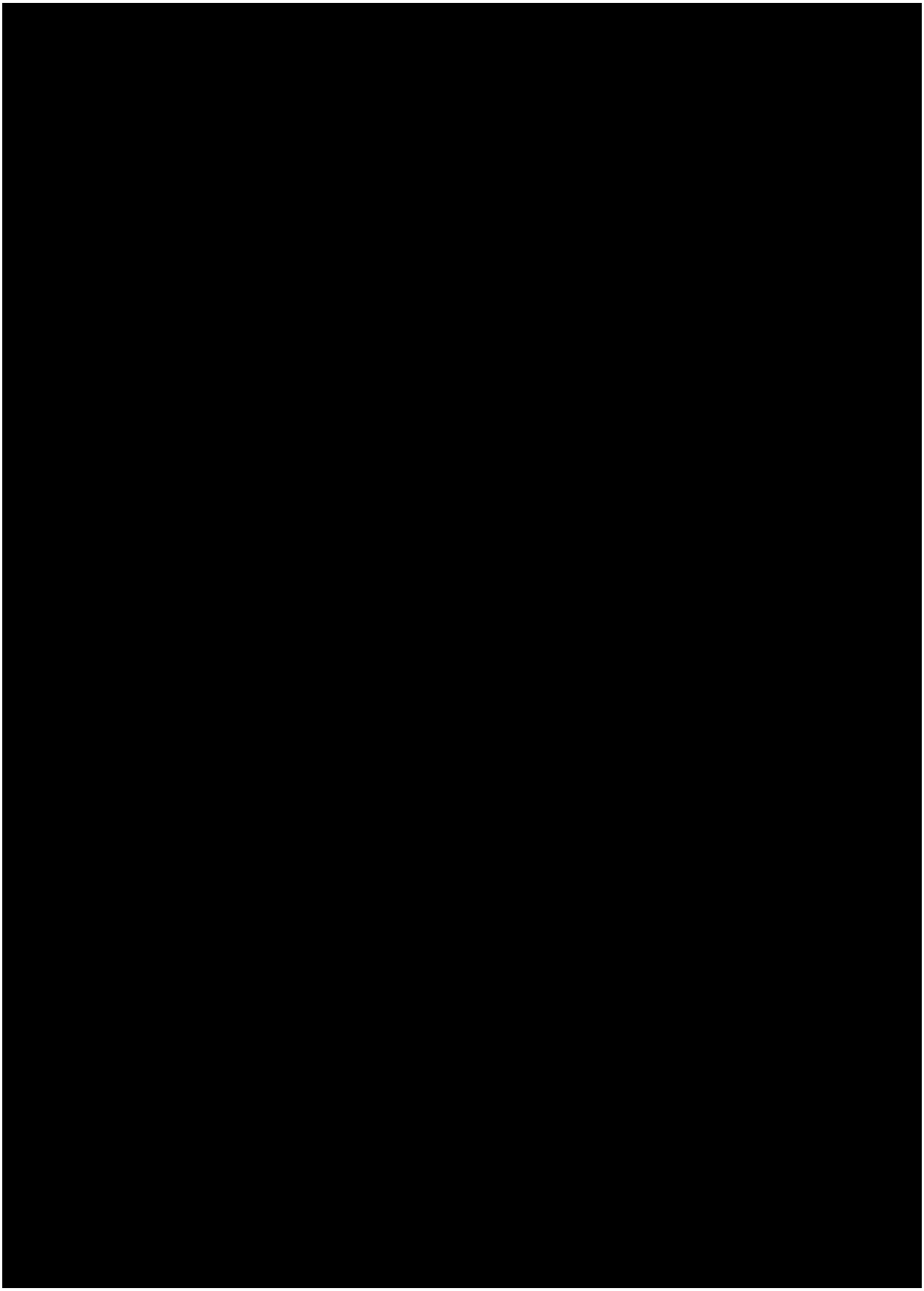

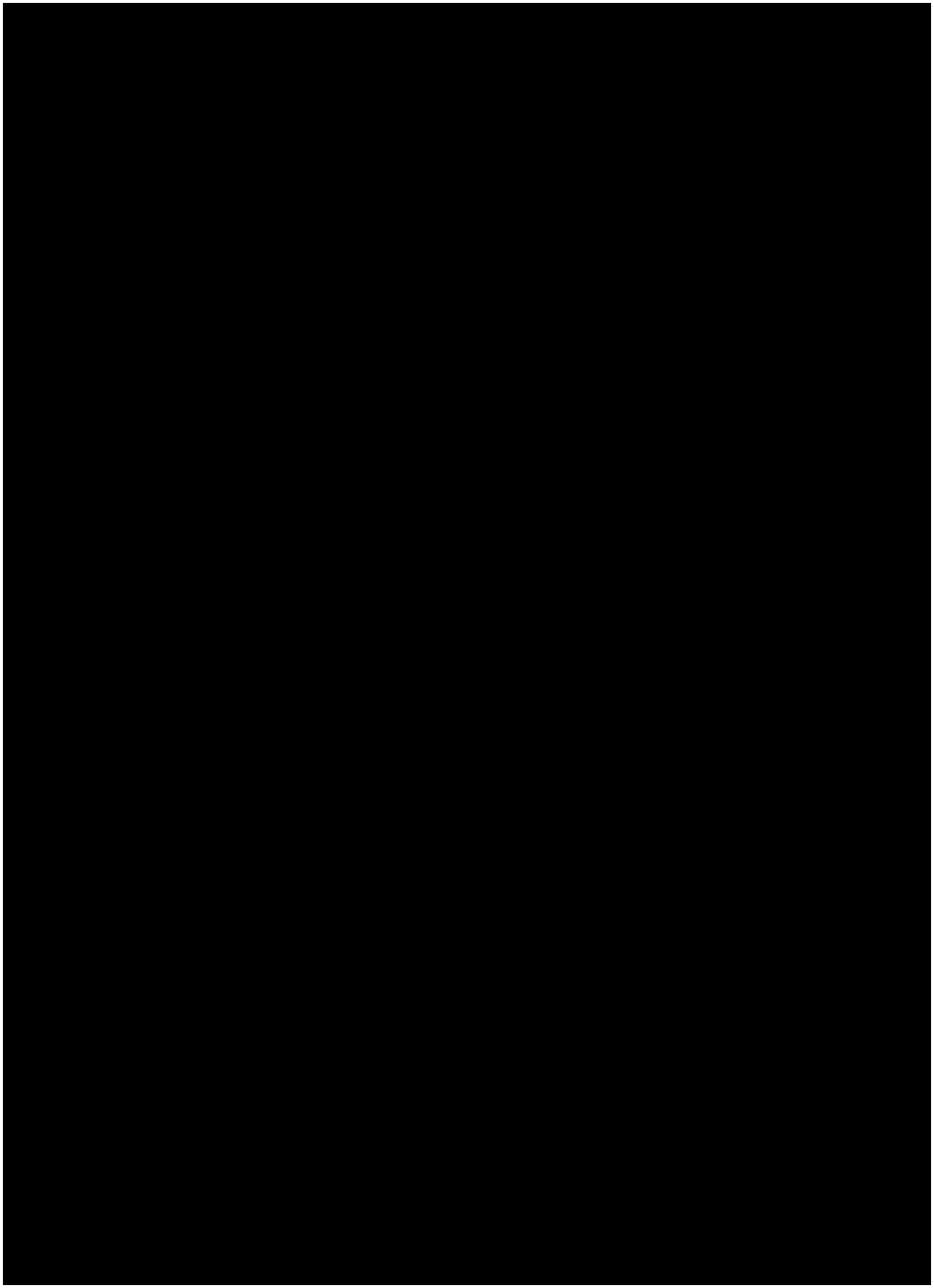

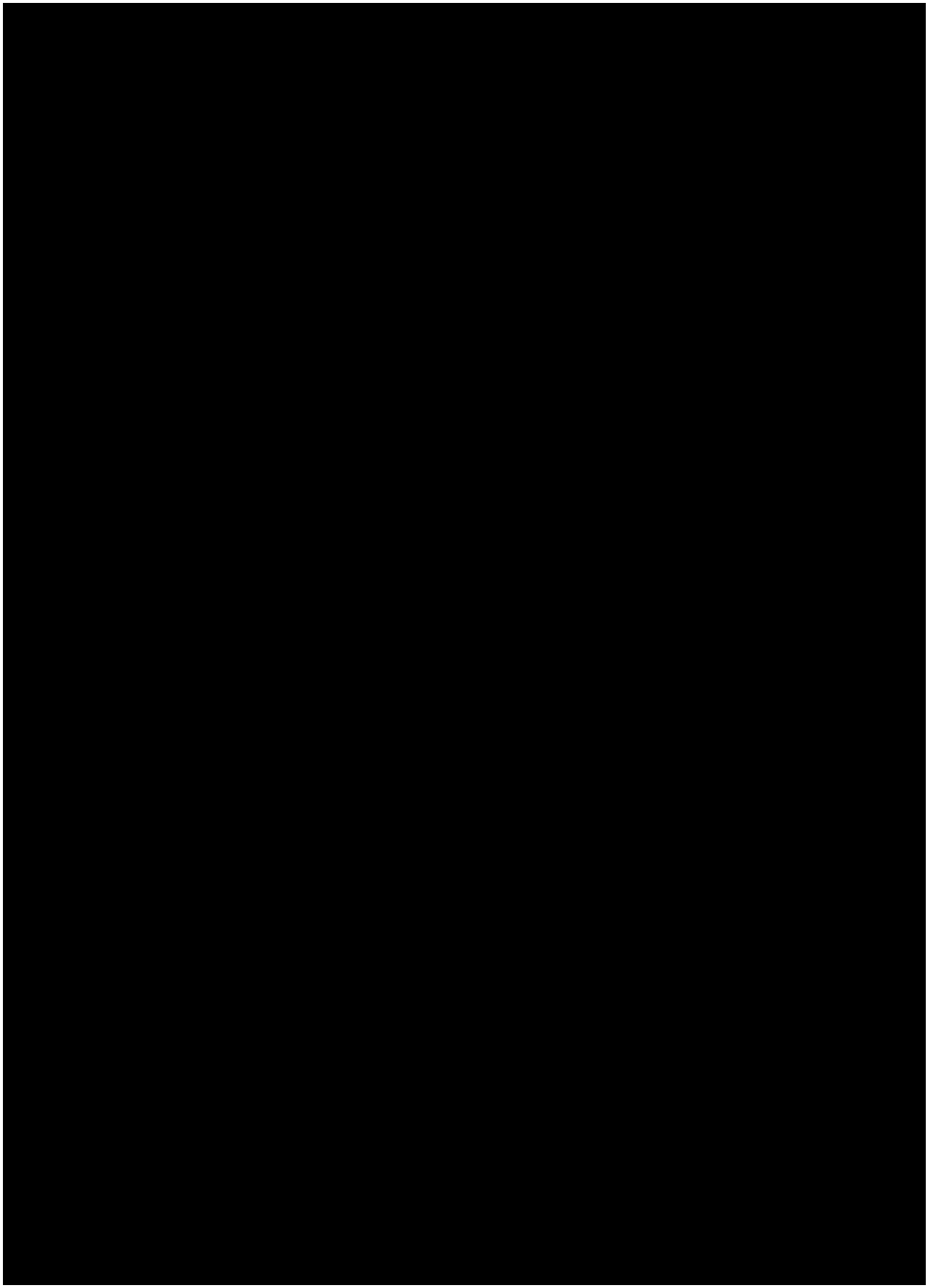

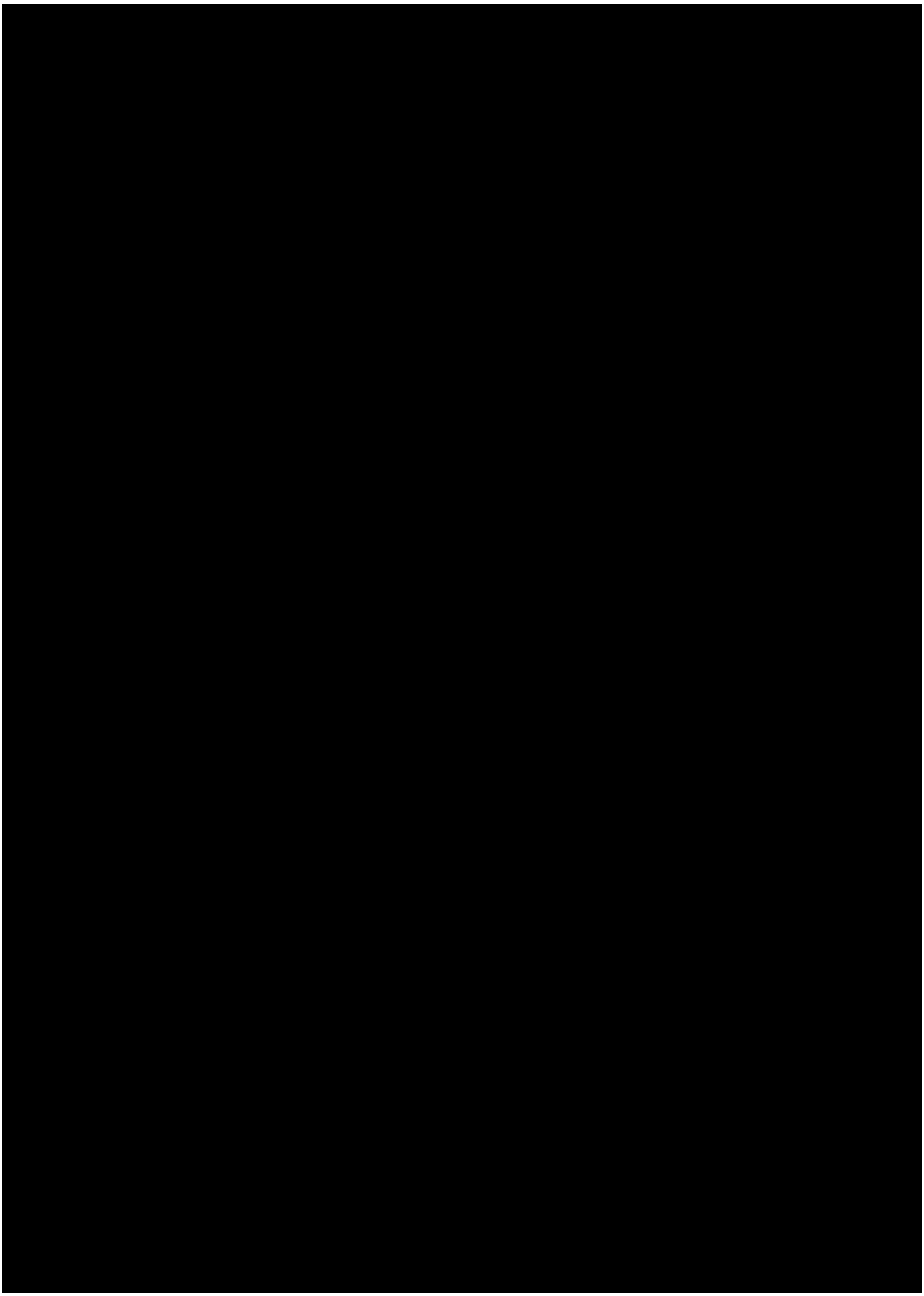

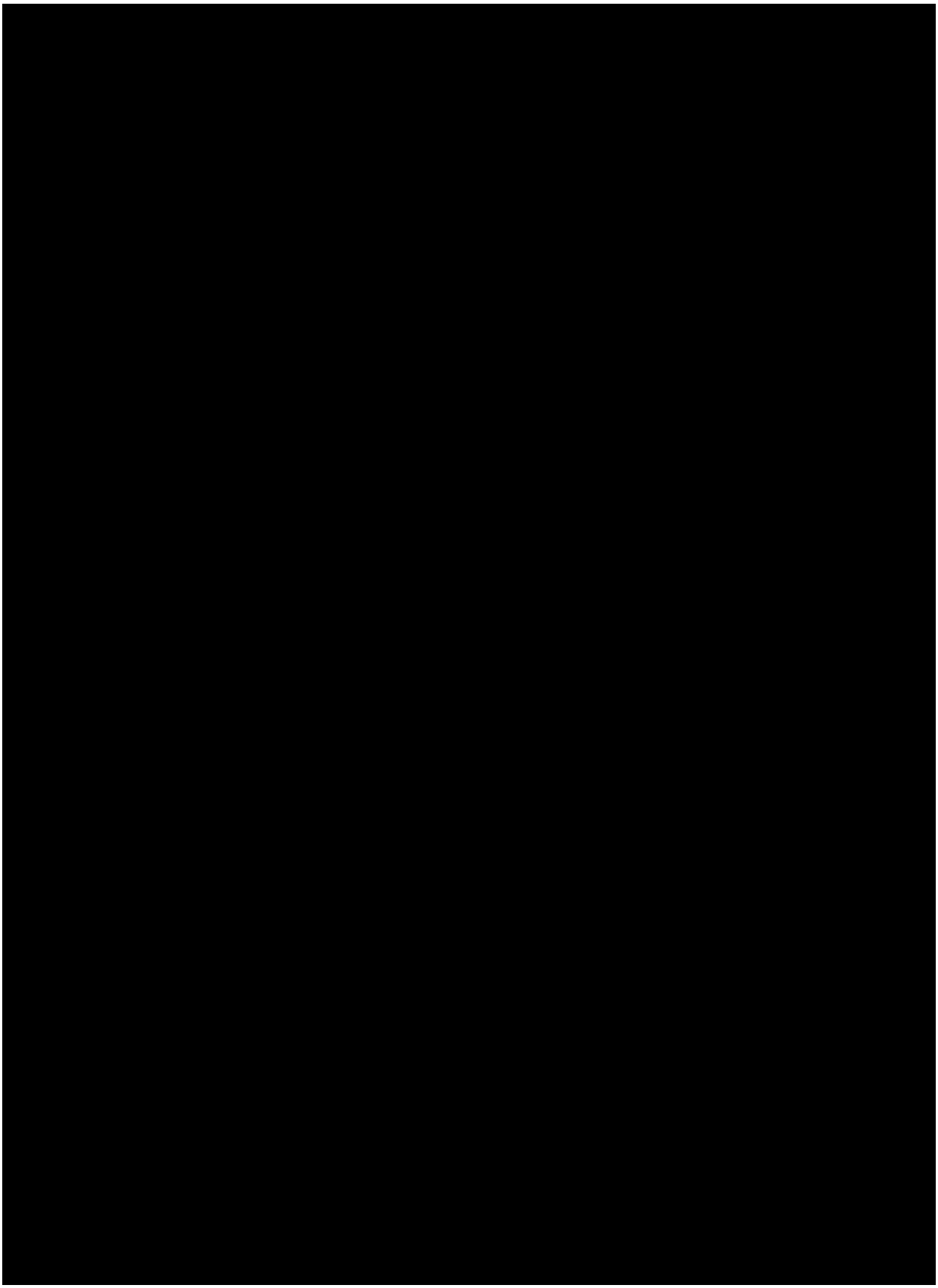

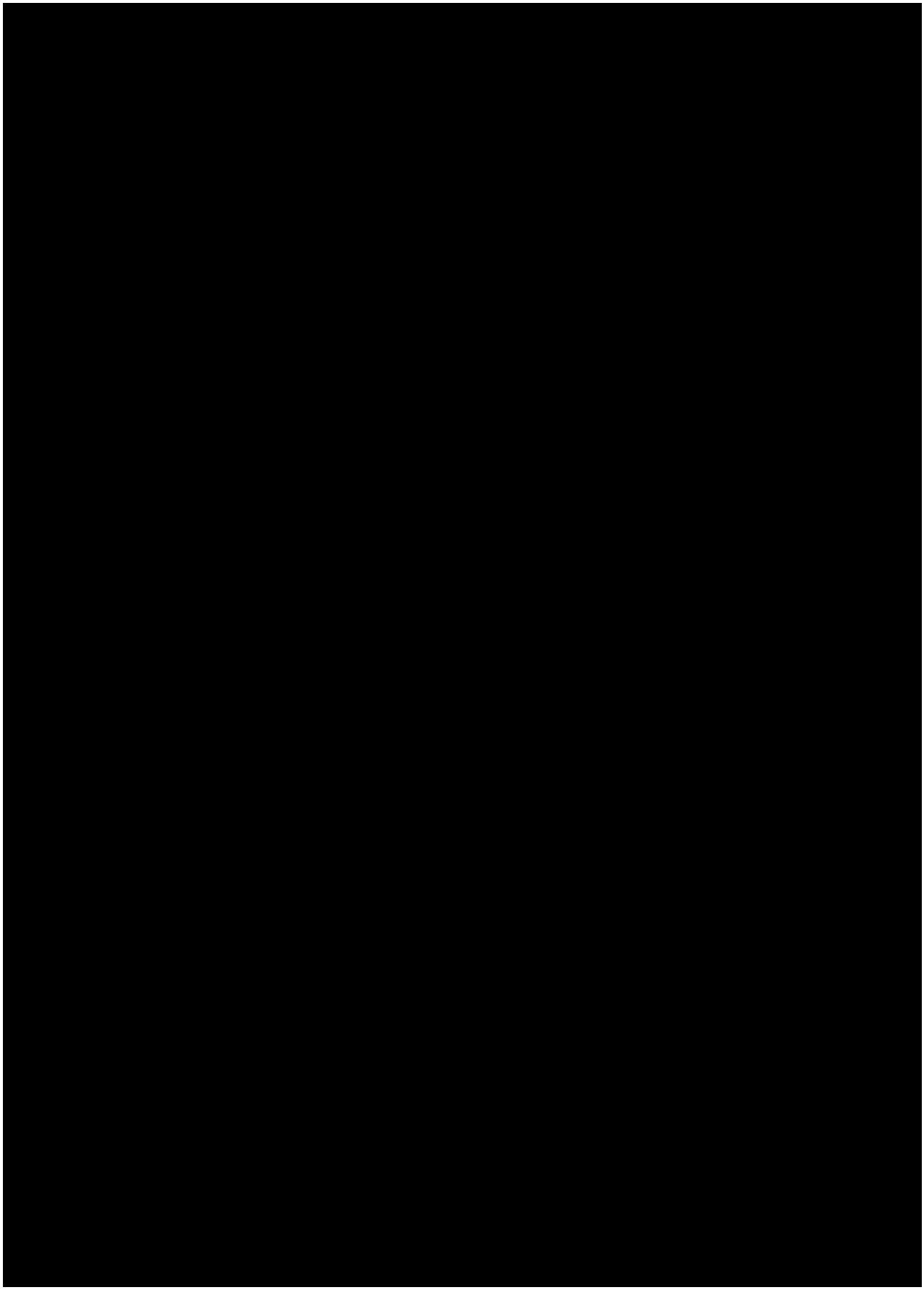

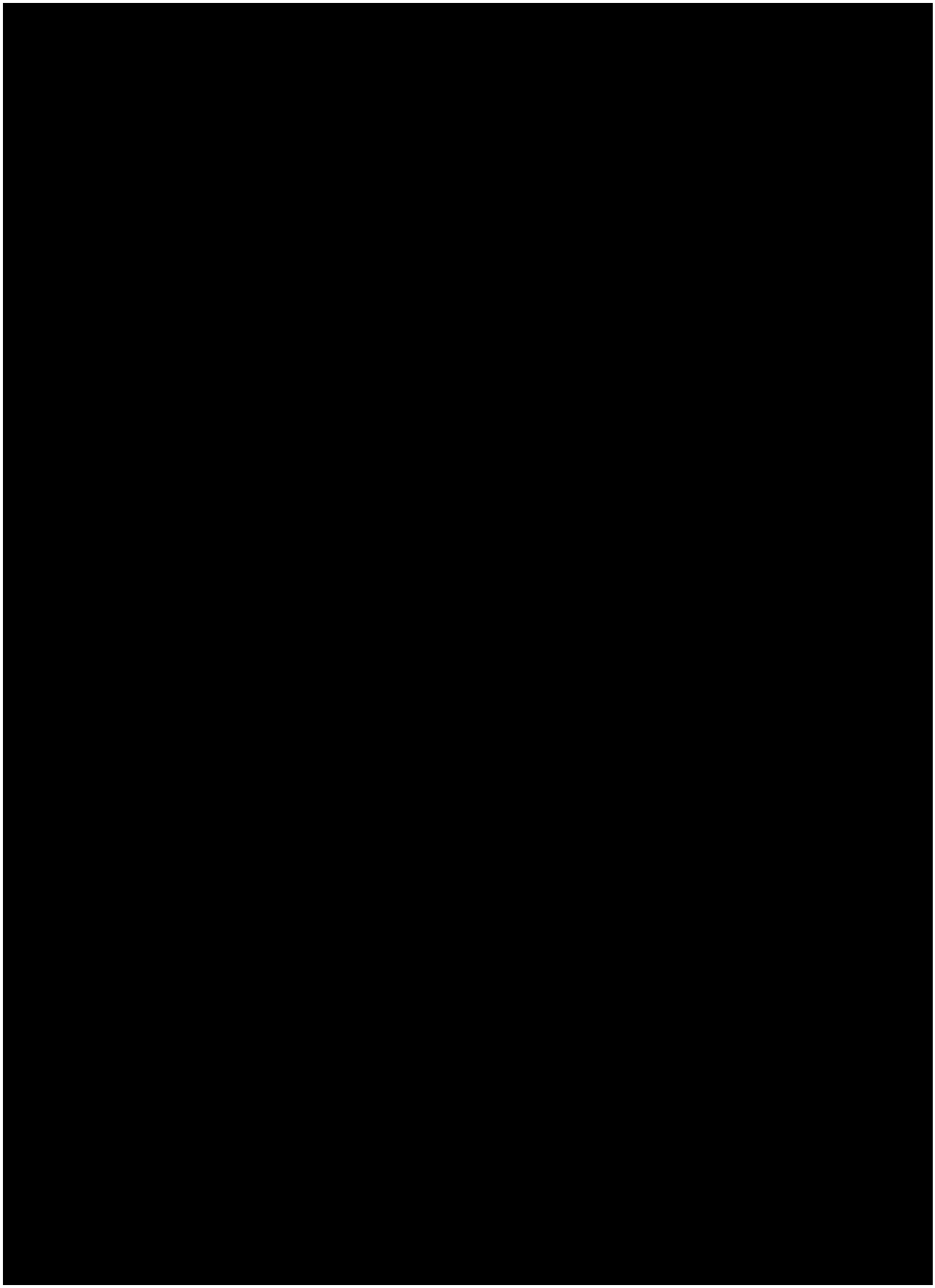

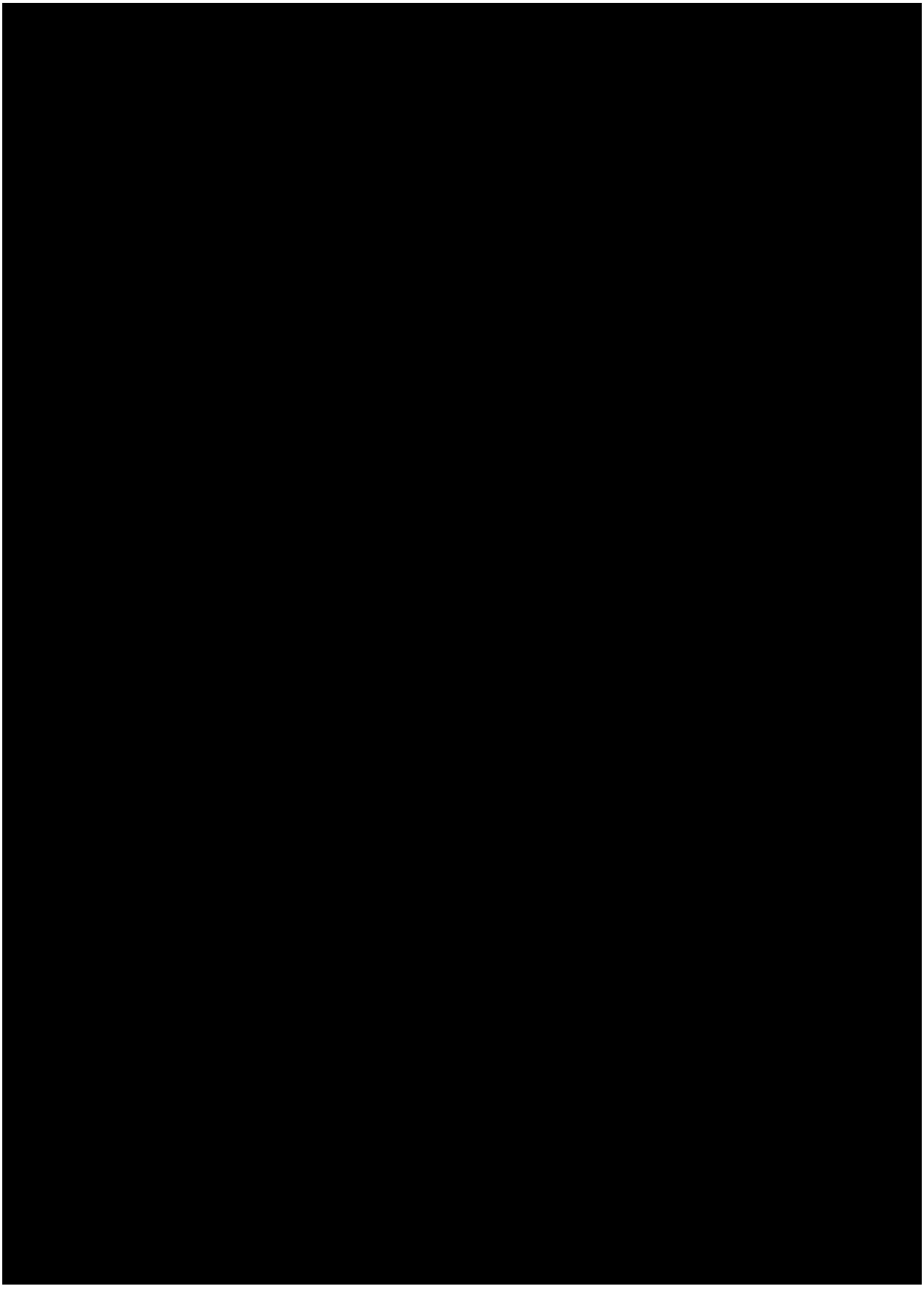

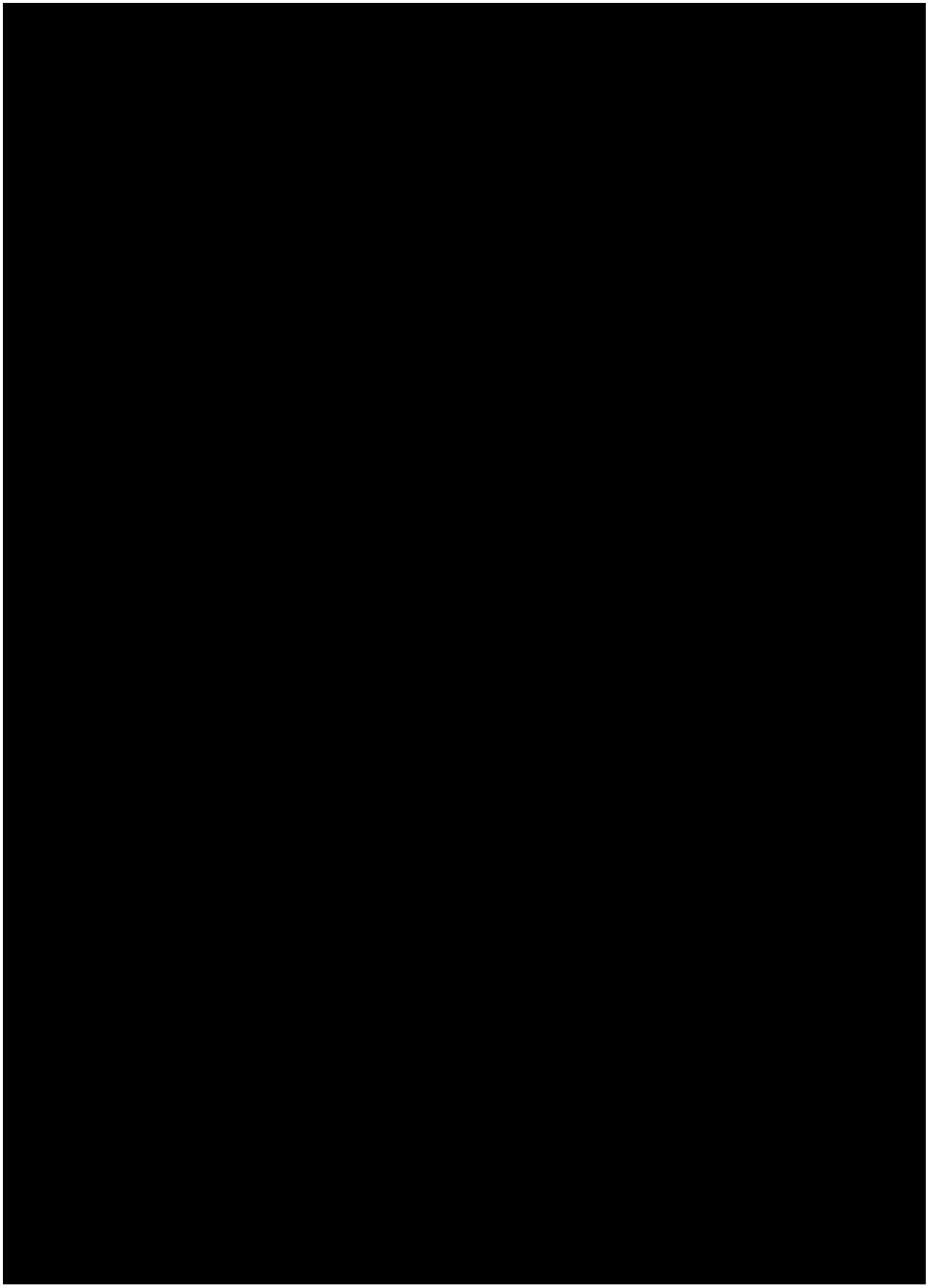

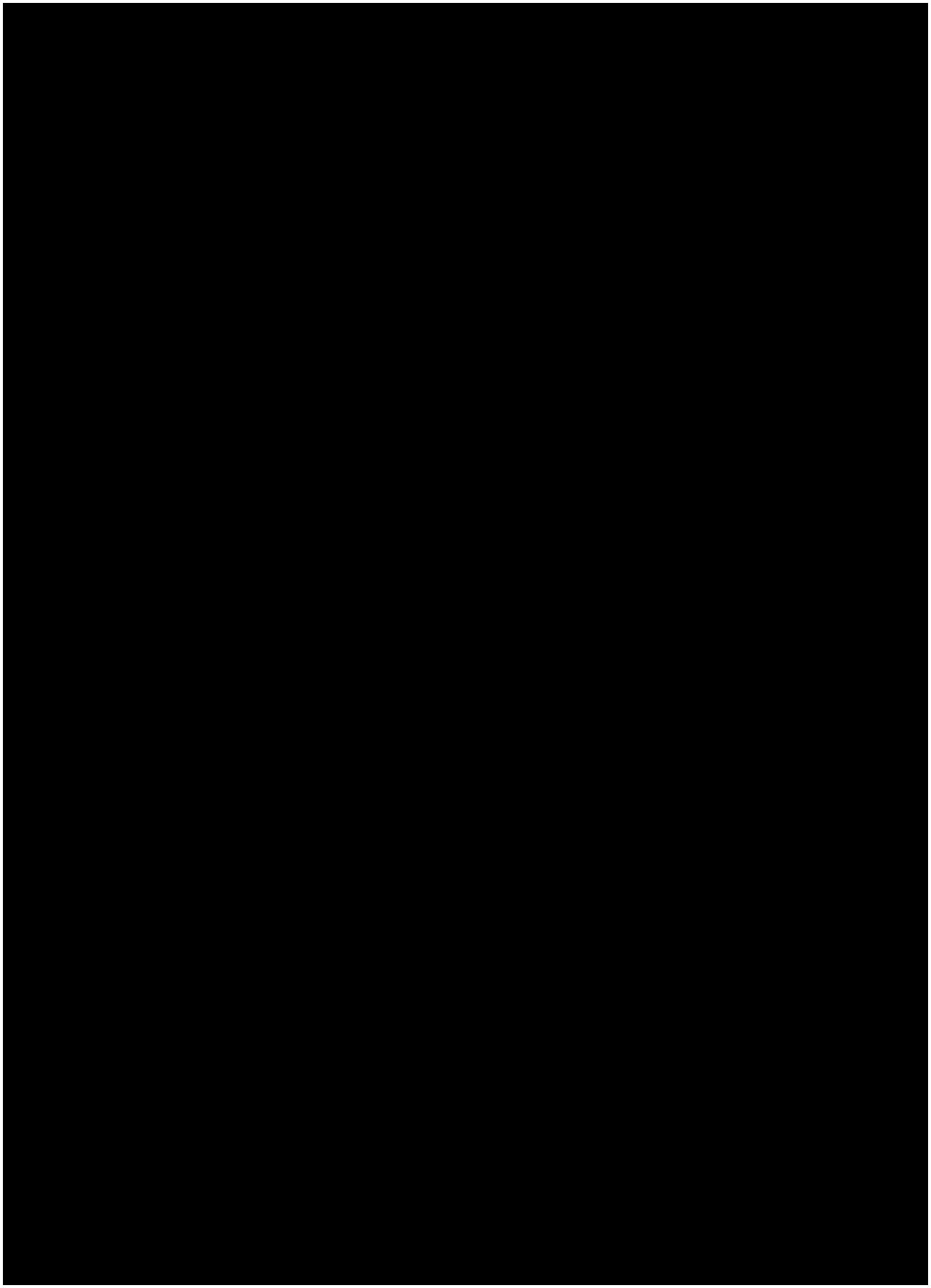

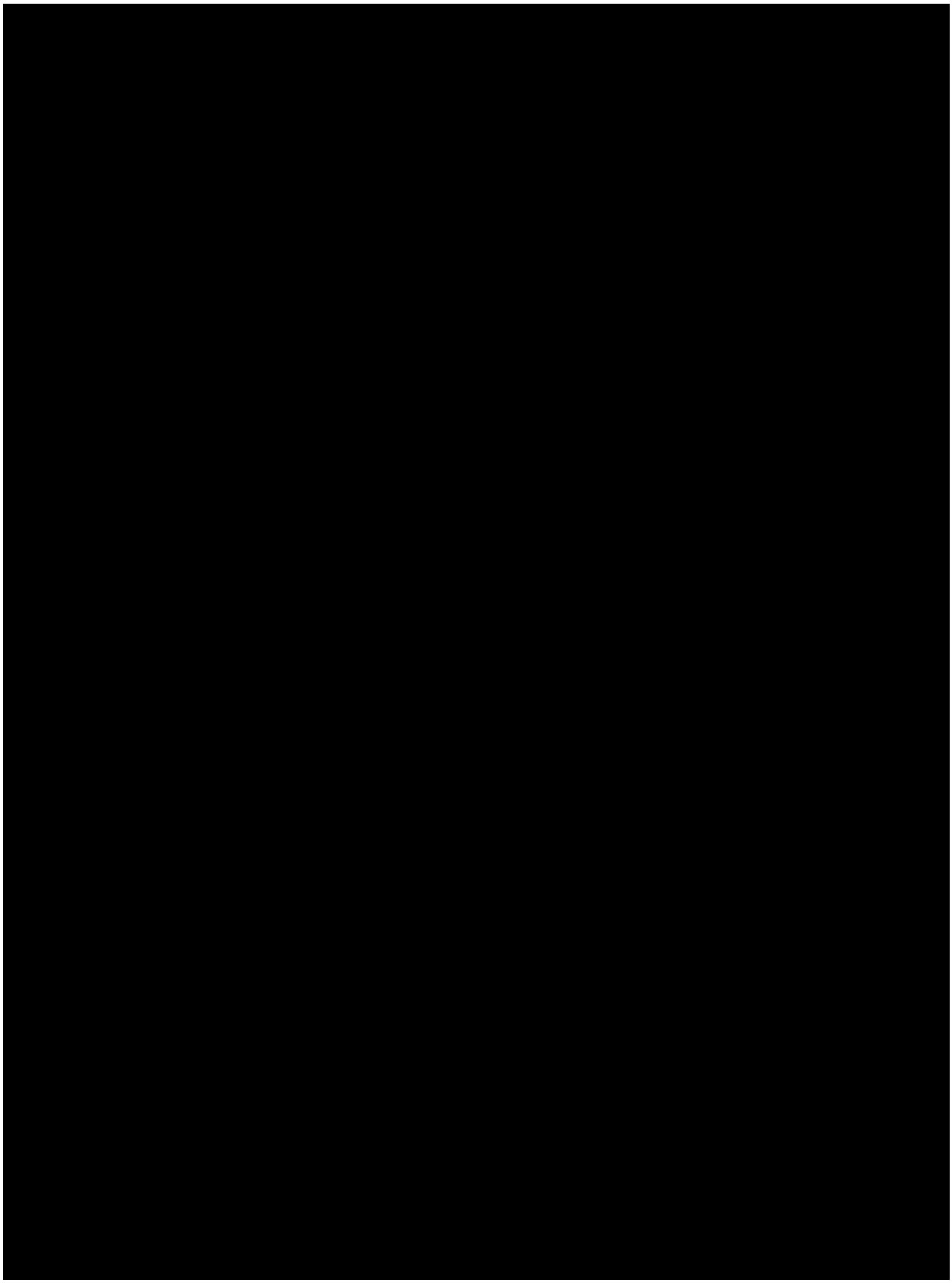

6.6.19 SLOWPOKE Fuel Core MCNP Input

This section contains a sample input file from the evaluation of a SLOWPOKE fuel core in the LWT cask. The input file is shown in Figure 6.6.19-1.

Figure 6.6.19-1 Maximum Reactivity Input for the SLOWPOKE Fuel Core Payload

```
NAC-LWT Cask - Accident Transport Conditions
C SlowPoke Fuel - Core Configuration
C Fuel Rod Cells
1  1  -3.4785  -1  +3  -4      u=3  $ Fuel Meat
2  2  -2.7020  -2  +1  +3  -4    u=3  $ Clad
3  2  -2.7020  -5 : -6          u=3  $ Lower Stud
4  2  -2.7020  -7          u=3  $ Upper Stud
5  3  -0.9982  #1 #2 #3 #4           u=3  $ Outside Rod
C Fuel Core Array Cell
10  3  -0.9982  -10  u=2  lat=2  fill=-15:15 -15:15 0:0    $ Core Array
       2 2 2 2 2 2 2 2 2 2 2 2 2 2 2 2 2 2 2 2 2 2 2 2 2 2 2 2 2
       2 2 2 2 2 2 2 2 2 2 2 2 2 2 2 2 2 2 2 2 2 2 2 2 2 2 2 2 2
       2 2 2 2 2 2 2 2 2 2 2 2 2 2 2 2 2 2 2 2 2 2 2 2 2 2 2 2 2
       2 2 2 2 2 2 2 2 2 2 2 2 2 2 2 2 2 2 2 2 2 2 2 2 2 2 2 2 2
       2 2 2 2 2 2 2 2 2 2 2 2 2 2 2 2 2 2 2 2 2 2 2 2 2 2 2 2 2
       2 2 2 2 2 2 2 2 2 2 2 2 2 2 2 2 2 2 3 3 3 3 3 2 2 2 2 2 2
       2 2 2 2 2 2 2 2 2 2 2 2 2 2 2 2 2 3 3 3 3 3 3 3 3 2 2 2 2
       2 2 2 2 2 2 2 2 2 2 2 2 2 2 2 2 3 3 3 3 3 3 3 3 3 2 2 2 2
       2 2 2 2 2 2 2 2 2 2 2 2 2 2 2 3 3 3 3 3 3 3 3 3 3 3 2 2 2
       2 2 2 2 2 2 2 2 2 2 2 2 2 2 3 3 3 3 3 3 3 3 3 3 3 3 2 2 2
       2 2 2 2 2 2 2 2 2 2 2 2 2 3 3 3 3 3 3 3 3 3 3 3 3 3 2 2 2
       2 2 2 2 2 2 2 2 2 2 2 2 2 3 3 3 3 3 3 3 3 3 3 3 3 3 2 2 2
       2 2 2 2 2 2 2 2 2 2 2 2 3 3 3 3 3 3 3 3 3 3 3 3 3 3 2 2 2
       2 2 2 2 2 2 2 2 2 2 2 2 3 3 3 3 3 3 3 3 3 3 3 3 3 3 2 2 2
       2 2 2 2 2 2 2 2 2 2 2 3
```

```
C Aluminum / Clad
m2  13027.62c  -1.0
C Canister Water
m3  1001.62c  6.6667E-01  8016.62c  3.3333E-01
mt3  lwtr.60t
C Cask Cavity Water
m4  1001.62c  6.6667E-01  8016.62c  3.3333E-01
mt4  lwtr.60t
C Stainless Steel 304
m5  6000.66c  -8.0000E-04  14000.60c  -1.0000E-02  15031.66c  -4.5000E-04
       24000.50c  -1.9000E-01  25055.62c  -2.0000E-02  26000.55c  -6.8375E-01
       28000.50c  -9.5000E-02
C Lead
m6  82000.50c  -1.0
C Aluminum Honeycomb Impact Limiter
m7  13027.62c  -1.0
C Water/Glycol - Cask Neutron Shield
m9  1001.62c  -1.03171E-01  6000.66c  -2.14392E-01    8016.62c  -6.82437E-01
C Cask Exterior (Water at Various Densities)
m8  1001.62c  6.6667E-01  8016.62c  3.3333E-01
mt8  lwtr.60t
C
C Cell Importances
imp:n 1 19r 0
c
c Criticality Controls
c
kcode  2000  1.00  300  1000
c
c Source Distribution for Initial Generation
ksrc  -2.6834  0.0000  422.2623
       0.0000  2.3239  422.2623
       0.0000  -2.3239  422.2623
       2.6834  0.0000  422.2623
C Print Control
print
C Random Number Generator
rand  GEN=2  SEED=461360
```

Table of Contents

7 OPERATING PROCEDURES 7.1-1

7.1 Procedures for Loading Packages 7.1-2
7.1.1 Procedures for Wet Loading of LWR Fuel Assemblies and Canistered LWR Fuel Rods 7.1-3
7.1.2 Procedures for Dry Loading of Metallic Fuel 7.1-7
7.1.3 Procedures for Loading Metallic Fuel and Filters Containing Severely Damaged Metallic Fuel into Damaged Fuel Canisters 7.1-10
7.1.4 Procedures for Dry Loading of DIDO, Spiral, MOATA and MTR Fuel Elements in Basket Modules into the NAC-LWT Cask 7.1-12
7.1.5 MTR General and Preferential Loading Procedures 7.1-17
7.1.6 Procedure for Dry Loading of TRIGA Fuel Basket Modules and GA IFM Modules into the NAC-LWT Cask 7.1-35
7.1.7 Procedure for Loading TRIGA Damaged Fuel or Fuel Debris into a TRIGA Sealed Damaged Fuel Can (DFC) 7.1-40
7.1.8 Procedure for Wet Loading of PWR/BWR Fuel Rods or TPBARs into the PWR/BWR Transport Canister 7.1-41
7.1.9 Procedure for Wet Loading of TPBAR Consolidation Canister or PWR/BWR Rod Transport Canister into the NAC-LWT Cask 7.1-43
7.1.10 Procedure for the Dry Loading of PULSTAR Fuel Into the NAC-LWT Cask 7.1-46
7.1.11 Procedure for Dry Loading of TPBAR Waste Container 7.1-50
7.1.12 Procedure for Wet Loading PWR MOX Fuel Rods in a Transport Canister Into the NAC-LWT Cask 7.1-52
7.1.13 Procedures for Dry Loading of MTR-28 Basket Modules Containing SLOWPOKE Fuel Canisters into the NAC-LWT Cask 7.1-56
7.1.14 Procedure for the Dry Loading of NRU/NRX Fuel Into the NAC-LWT Cask 7.1-61
7.1.15 Procedure for the Dry Loading of EFN Rods, Moly Targets and Booster Rods Into the NAC-LWT Cask. 7.1-65
7.1.16 Procedure for Loading AECL SLOWPOKE Fuel Rod Contents Into the SLOWPOKE Fuel Canister 7.1-70
7.1.17 Procedure for the Dry Loading of HEUNL Contents into the NAC-LWT Cask 7.1-71
7.1.18 Procedures for the Vertical Filling of HEUNL Contents into HEUNL Containers 7.1-77
7.1.19 Procedure for the Dry Loading of AECL SLOWPOKE Fuel Core into the NAC-LWT Cask 7.1-81

Table of Contents (Continued)

7.1.20 Procedure for the Dry Loading of WESF Capsules in the Capsules Container Assembly into the NAC-LWT Cask 7.1-86
7.1.21 Procedure for the Dry Loading of BUP-500 Capsules into the NAC-LWT Cask 7.1-90
7.1.22 Procedure for the Dry Loading of LANL MOX Fuel Rods 7.1-94
7.1.23 Procedure for the Dry Loading of WESF Capsules in the UCS into the NAC-LWT Cask 7.1-99

7.2 Procedures for Unloading Package 7.2-1
7.2.1 Procedures for Wet Unloading of LWR Fuel and PWR, PWR MOX and BWR Fuel Rods in Transport Canisters 7.2-1
7.2.2 Procedures for Wet Unloading of Metallic Fuel 7.2-3
7.2.3 Procedure for Wet Unloading of MTR, TRIGA, DIDO, ANSTO, PULSTAR, or SLOWPOKE Fuel Basket Contents 7.2-5
7.2.4 Procedure for Dry Unloading of MTR, TRIGA, DIDO, ANSTO, PULSTAR, SLOWPOKE, SrF_2, NRU/NRX, EFN, Moly, or Booster Fuel Contents 7.2-8
7.2.5 Procedure for Dry Unloading of TPBAR Contents 7.2-9
7.2.6 Procedure for Dry Unloading of PWR/BWR/MOX Fuel Rod Contents 7.2-11
7.2.7 Procedure for Unloading of HEUNL Contents 7.2-13
7.2.8 Procedures for Preparing Empty HEUNL Containers for Return Shipment 7.2-17
7.2.9 Procedure for the Dry Unloading of LANL MOX Fuel Rods 7.2-18

List of Figures

Figure 7.1-1 MTR Fuel Basket Module Loading Pattern (Top View) 7.1-23
Figure 7.1-2 LEU MTR Fuel Basket Loading Guidelines for 30 W Uniform Loading – Maximum 470 grams ^{235}U 7.1-24
Figure 7.1-3 MEU MTR Fuel Basket Loading Guidelines for 30 W Uniform Loading 7.1-25
Figure 7.1-4 HEU MTR Fuel Basket Loading Guidelines for 30 W Uniform Loading – Maximum 380 grams ^{235}U 7.1-26
Figure 7.1-5 HEU MTR Fuel Basket Loading Guidelines for 30 W Uniform Loading – Maximum 460 grams ^{235}U 7.1-27
Figure 7.1-6 HEU MTR Fuel Basket Loading Guidelines for Preferential Loading – Maximum 380 grams ^{235}U 7.1-28
Figure 7.1-7 HEU MTR Fuel Basket Loading Guidelines for Preferential Loading – Maximum 460 grams ^{235}U 7.1-29
Figure 7.1-8 DIDO LEU Cooling Time vs. Fuel Burnup Basket Module Loading Guidelines for Uniform Loading 7.1-30
Figure 7.1-9 DIDO MEU Cooling Time vs. Fuel Burnup Basket Module Loading Guidelines for Uniform Loading 7.1-31
Figure 7.1-10 DIDO HEU Cooling Time vs. Fuel Burnup Basket Module Loading Guidelines for Uniform Loading 7.1-32
Figure 7.1-11 Bounding DIDO Element Minimum Cool Time vs. wt % ^{235}U Depletion 7.1-33
Figure 7.1-12 LEU MTR Fuel Basket Loading Guidelines for 30 W Uniform Loading - Maximum 640 grams ^{235}U 7.1-33
Figure 7.1-13 LEU MTR Fuel Basket Loading Guidelines for 40 W Preferential Loading - Maximum 490 grams ^{235}U 7.1-34

7 OPERATING PROCEDURES

This chapter describes the generic operating procedures for loading, unloading and preparing the NAC-LWT package for transport. These procedures shall be implemented to ensure the package is used in accordance with Certificate of Compliance (CoC) No. 9225 for the NAC-LWT packaging.

These procedures are based on generic site conditions and assume that the package arrives at the handling site with the appropriate internals installed in the cask. Additional operations and/or modifications (i.e., sequence of operations, use of parallel operations, etc.) to these procedures to address site-specific conditions may be required for each user's facility. These additional operations and/or modifications will be documented in site-specific procedures.

In addition, site-specific procedures may incorporate signoffs for activities or operational sequences as they are performed. Oversight organizations, such as Quality Assurance or Quality Control, may participate in certain package handling operations. The use of signoffs can assist the user in assuring that critical steps are not overlooked, that the package is handled in accordance with the CoC and Safety Analysis Report (SAR), and that appropriate records are retained as required by 10 CFR 71.91.

The NAC-LWT package is designed and certified to transport numerous fissile and radioactive contents, as described in the CoC, as a Type B(U)F-96 package. Certain radioactive contents, as described in the CoC, are required to be transported in a NAC-LWT assembled and tested in a leaktight containment configuration. The leaktight containment can be provided by either the Alternate port cover design with a Viton O-ring seal or by the Alternate B port cover design with a metallic seal.

The NAC-LWT is also certified for the transport of Tritium Producing Burnable Absorber Rod (TPBAR) contents, as described in the CoC, as a Type B(M)-96 package. NAC-LWT cask units designated for the transport of TPBAR contents require both leaktight containment and a high-pressure capable containment barrier. NAC-LWT casks for the leaktight transport of TPBAR contents shall be configured with Alternate B vent and drain port covers in accordance with the license drawings, and subjected to the additional hydrostatic test per the requirements of Section 8.1.2.

NAC-LWT casks for the transport of HEUNL contents shall be configured with Alternate vent and drain port covers in accordance with the license drawings. [redacted]

consideration of a hypothetical release of HEUNL material from the containers' and the Viton seals' compatibility with the HEUNL nitrate solution.

Loaded shipments received at U.S. Department of Energy (DOE) facilities shall be receipt surveyed and monitored in accordance with DOE regulations. As required, the shipper will be notified of any survey or shipping discrepancy and the shipper will ensure appropriate regulatory notifications are completed.

When the package is handled in accordance with the procedures provided herein, and is loaded within the conditions of the CoC and the SAR, the resulting occupational exposures will be maintained as low as reasonably achievable (ALARA), as required by 10 CFR 20.

7.1 Procedures for Loading Packages

For the shipment of loaded packages, the cavity shall be dry, the contents and nameplate package identification, corresponding to the contents, shall be verified as correct, and the other applicable conditions of the Certificate of Compliance (CoC) shall be verified as met. Site-specific procedures for dry handling, when required, and loading of fuel assemblies and other authorized contents will be prepared to incorporate the dry transfer system components required to safely and efficiently load the NAC-LWT at each loading facility. Dry loading and transfer procedures are not specifically described in the individual loading procedures due to facility and required equipment variations. Content configurations may require spacers, baskets, basket inserts, canisters, etc., to support and/or control the content geometry during transport. The transport configurations identifying the specific contents and components required are specified in the license drawings. Solid, irradiated and contaminated hardware will generally be loaded wet utilizing the procedure guidance of Section 7.1.1. Alternatively, the solid, irradiated and contaminated hardware can be loaded dry utilizing dry loading procedures (i.e., per Section 7.1.2) modified to the requirements of the dry loading facilities.

Two port cover designs are available for use. The alternate port cover has an O-ring along the barrel and a Viton® O-ring on the inner end of the port cover. The alternate port cover was developed to provide a leaktight containment boundary and to facilitate ease of installation. The second port cover design is the Alternate B port cover that has two face seals on the inner end of the port cover. The Alternate B port cover was developed to provide a high-pressure and leaktight containment boundary and is required to be installed for the transport of TPBAR contents. Both the Alternate and Alternate B port covers provide the capability to establish a leaktight containment boundary and, therefore, the two port cover designs can be used interchangeably for authorized contents not requiring a high-pressure containment boundary capability, except that Alternate port covers are required to be used for the transport of HEUNL contents as specified on the License Drawing and in the operating procedures.

The alternate port cover bolts are torqued to 100 ± 10 inch-pounds. The Alternate B port cover bolts are torqued to 285 ± 15 inch-pounds to ensure compression of the metallic containment O-ring seal.

As required for the specific contents, applicable procedures will specify the use of the Alternate B port covers. In these loading procedures, the Alternate B port cover helium leakage rate testing is described. For other content loading procedures, either port cover design can be used. However, if the Alternate B port covers are used, the metallic O-ring seal will be replaced for each transport following component removal and the helium maintenance leakage rate test is required to be performed.

For cask loading operations performed under water or when water is introduced into the cask cavity, the cask cavity is required to be blown down to remove the cavity water, vacuum dried, verified as dry, and helium backfilled prior to final closure and leakage testing. The cavity is vacuum dried by attaching a vacuum pump to the vent and/or drain port and evacuating the cavity to a pressure of less than 10 torr (13 mbar), and continuing to vacuum pump for an additional 15 minutes. If the cavity pressure rise is less than 5 torr (6.7 mbar) during a 10-minute isolation and hold period, there is no free water in the cavity and the cask cavity is verified as dry. Final containment closure and leakage testing operations in preparation for transport can proceed. If the pressure rise is >5 torr (6.7 mbar), the vacuum drying will be continued until the dryness verification criteria are met. The successful performance of the dryness verification and backfilling the cavity with helium ensures that there is no free water in the cavity and oxidation of the cask's contents is precluded. When the cask is loaded in a dry cell or under other conditions where no water is introduced into the cask cavity, the procedure sequences for cavity blow down, vacuum drying and dryness verification can be eliminated and the loading sequence can proceed directly to final closure, containment boundary leakage testing and helium backfill operations.

7.1.1 Procedures for Wet Loading of LWR Fuel Assemblies and Canistered LWR Fuel Rods

The procedures for wet loading the NAC-LWT with LWR fuel are as follows:

1. Perform a receipt inspection of the empty cask and trailer/ISO container, inspecting for transport damage.
2. Position the trailer in the designated cask unloading area. Set the trailer brakes and chock the wheels to prevent unintended movement. If site-specific conditions exist that require the trailer to move to allow the cask to be uprighted on its rotation trunnions, release brakes and remove the chocks when required to complete uprighting operations. If an ISO container is used, it may be removed from the trailer and secured in the unloading area.

3. Remove the personnel barrier or the roof and roof cross-members from the ISO container.

   Note: Verify that the package nameplate displays the correct package identification number in accordance with the CoC.

4. Perform a Health Physics survey of the cask and adjacent surfaces of the trailer.

   Note: A receiving survey of the cask and transporter must be performed as soon as practicable after arrival at the site to assure compliance with 10 CFR 20, 10 CFR 71.87(i) and 10 CFR 71.47, and to assure timely reporting of any reportable noncompliance.

5. Remove the top and bottom impact limiters.
6. Remove the cask tie-down strap.
7. Using the lifting yoke with the guides removed, engage the lifting trunnions. Raise the cask to vertical by rotating the cask rotation sockets on the rear cask supports, moving the crane and/or trailer as required to keep the lift yoke engaged to the trunnions and the cask engaged in the rear supports. When the cask is fully vertical, lift the cask from the supports and remove it from the trailer/container.
8. Place the cask in the cask preparation area or other designated location. Disengage the lifting yoke. Clean cask surfaces of road dirt as required for entry into the spent fuel pool.
9. Visually inspect the neutron shield tank fill, drain and level inspection plugs for signs of neutron shield fluid leakage.
10. Remove the vent and drain valve port covers. Prior to reinstallation of the port covers, carefully inspect the valve port cover O-ring seals and, if the O-rings show any damage, replace them with approved spares. Ensure that the replacement O-rings are properly installed and seated. Visually inspect the valved quick-disconnect nipples and replace them, if necessary.

    Note: For Alternate B port covers, replace the metallic O-ring with an approved spare prior to reinstallation.

11. Remove closure lid bolts. Attach the lid lift slings to the closure lid. Remove the closure lid and set it on a support that is suitable for radiological control and for maintaining the cleanliness of the closure lid. Prior to reinstallation of the lid, carefully inspect the Teflon O-ring seal in the underside of the closure lid and, if it shows any damage, replace it. Remove the metallic O-ring and replace it with an approved spare. Ensure that the replacement O-rings are properly installed and seated. Inspect the lid bolts and replace any that are damaged.
12. Visually inspect the inner cavity for foreign material or damage. Install or verify the presence of the proper drain tube and basket assembly.
13. Fill the cask cavity with clean water.
14. Install lift yoke arm guides and remote actuation component on the cask lifting yoke.
15. Engage the cask lifting yoke with the cask lifting trunnions and pick up the cask. Carefully lower the cask to the bottom of the cask loading area. Rinse the cask surfaces with clean water to minimize cask surface contamination.

16. Disengage the lifting yoke from the cask and remove the yoke from the pool, if necessary, to provide fuel loading clearance.
17. Identify the fuel assembly(ies) or canistered LWR fuel rods to be loaded. Verify the identified materials comply with the content conditions and authorized quantities as specified in the CoC.
18. Pick up the fuel assembly or transport canister containing individual fuel rods, using the required grapple system.

    Note: See Section 7.1.8 procedures for instructions for loading and preparing PWR or BWR rods and nonfuel-bearing components in a transport canister.
19. Position the fuel contents over the cask and carefully lower them into the cask to avoid damage to the cask sealing surfaces. Confirm that the fuel assembly (or transport canister and insert, or material container) is fully seated, then release the grapple from the fuel assembly (or transport canister and insert) and raise the grapple to the full up position. Repeat this step as necessary to load multiple assemblies or containers (if required).
20. Position the cask lifting yoke over the cask closure lid. Attach the slings to the closure lid and cask lifting yoke. Lower the yoke over the cask.
21. Position the closure lid over the cask and slowly lower it into place using the cask and lid match marks as guides. Visually confirm that the closure lid is seated.
22. Lower the cask handling yoke to slack the closure lid cables. Engage the cask lifting trunnions with the yoke and begin lifting.

    Note: Visually verify the yoke engagement before lifting the cask.
23. Raise the cask until the lid is slightly above the surface of the pool. At the option of the licensee/user, a number of closure lid bolts (i.e., 4 to 12) may be installed hand tight.
24. Raise the cask clear of the pool, rinsing the yoke and cask with clean water.
25. Transfer the cask to the decontamination pit or other work area. Remove the yoke and lid lift slings.
26. Install and tighten the 12 closure lid bolts to 260 ± 20 ft-lb in three passes, using the torque sequence stamped on the closure lid.
27. At the option of the licensee/user, a 25 to 50 gallon clean water flush of the cask cavity may be performed by connecting a valved, clean water line to the drain valve and a valved drain line to the vent valve. After the cavity flushing is completed, if performed, disconnect the water supply and drain lines.
28. Connect a gas supply line to the vent valve and the drain line to the drain valve.
29. Open the nitrogen or helium gas supply valve and pressurize the cask cavity (< 30 psig) to force any residual water out the drain line. Continue to supply pressurized gas to the cask for a minimum of five minutes after the last residual free water discharges from the drain. Remove the drain and gas supply lines and attach a vacuum drying system (VDS) to the vent.
30. Evacuate the cask cavity to less than or equal to 10 torr (13 mbar) and continue vacuum pumping for a minimum of 15 minutes.
31. At the end of the vacuum pumping period, isolate the cask cavity from the vacuum pump and stop the vacuum pump. Monitor the cask cavity pressure for a minimum of

10 minutes. If the pressure rise is less than 5 torr (6.7 mbar), the cavity is verified as dry of free water. If the pressure rise is >5 torr (6.7 mbar), repeat vacuum drying until the dryness verification results are satisfactory.

32. Backfill the cask cavity with helium to 0 psig (1 atmosphere, absolute), +1, -0 psi and disconnect the VDS from the vent valve.
33. Perform a helium leakage test of the closure lid containment O-ring using a Helium Mass Spectrometer Leak Detector (He MSLD) in accordance with the procedural requirements of Section 8.1.3.1, Steps 3 through 10.
34. Install the vent and drain alternate port covers and torque the bolts to 100 ±10 inch-pounds.
35. If an alternate port cover containment O-ring seal was replaced, perform a helium leakage test on the affected port cover using a He MSLD in accordance with the requirements of Section 8.1.3.2.2.
36. If the alternate port cover containment seal was inspected and accepted for reuse, perform a gas pressure drop leakage test on the affected port cover as follows.
    a. Install a pressure test fixture to the port cover test port, including a calibrated pressure gauge with a minimum sensitivity of 0.25 psi.
    b. Pressurize the port cover seal annulus to 15 psig, +1, -0 psi.
    c. Isolate the gas supply and observe the pressure gauge for a minimum of five minutes.
    d. The acceptance criterion for the test is no measurable drop in pressure during the minimum test time. An acceptable test assures that the minimum assembly verification leakage test sensitivity is achieved.

    Note: Alternate B port covers, if used, require the satisfactory completion of a helium maintenance leakage rate test. Install the Alternate B port cover and perform the maintenance leakage rate test per the requirements of Section 8.1.3.3.2.
37. Decontaminate the cask surfaces. Survey the cask for surface contamination and radiation dose rates.

    Note: Ensure compliance with 10 CFR 71.87(i) and 10 CFR 71.47.
38. Remove lift yoke arm guides. Engage the cask lifting yoke to the lifting trunnions.
39. Lift the cask and position the cask rotation sockets in the rear rotation trunnions of the rear support structure. Carefully lower the cask to the horizontal transport orientation resting on the front saddle by moving the crane and/or the trailer as required to maintain cask engagement to the rear supports.
40. Disengage the lifting yoke from the lifting trunnions and remove it from the area.
41. Install the cask tie-down strap. Install the top and bottom impact limiters.
42. Install tamper-indicating device (TID) to an attachment point on the top impact limiter.
43. Install ISO container bracing and lid or personnel barrier.
44. Complete radiation and contamination surveys of the external surfaces of the package and record the data. Ensure removable contamination and radiation dose rate survey results comply with the limits specified in 10 CFR 71.87(i) and (j).

45. Measure the dose rate in millirems per hour at one meter from the package surface to determine the Transport Index (TI). Indicate the TI on the Radioactive Material labels applied to the package in accordance with 49 CFR 172, Subpart E.
46. Determine the appropriate Criticality Safety Index (CSI) assigned to the package contents in accordance with the CoC, and indicate the correct CSI on the Fissile Material label applied to the package per 49 CFR 172, Subpart E.
47. Apply appropriate placards to the transport vehicle in accordance with 49 CFR 172, Subpart F.
48. Complete the shipping documents and provide the carrier with instructions regarding the requirements for maintaining an exclusive use shipment.

7.1.2 Procedures for Dry Loading of Metallic Fuel

The procedures for dry loading the package with metallic fuel are as follows:

1. Perform a receipt inspection of the empty cask and trailer/ISO container, inspecting for transport damage.
2. Position the trailer in the designated cask unloading area. Set the trailer brakes and chock the wheels to prevent unintended movement. If site-specific conditions exist that require the trailer to move to allow the cask to be uprighted on its rotation trunnions, release brakes and remove the chocks when required to complete uprighting operations. If an ISO container is used, it may be removed from the trailer and secured in the unloading area.
3. Remove the roof from the ISO container and open the front and rear ISO doors. Remove roof cross-members, if installed.

   Note: Verify that the package nameplate displays the correct package identification number in accordance with the CoC.
4. Perform a Health Physics survey of the cask and adjacent surfaces of the container.

   Note: A receiving survey of the cask and transporter must be performed as soon as practicable after arrival at the site to ensure compliance with 10 CFR 20, 10 CFR 71.87(i) and 10 CFR 71.47, and to ensure timely reporting of any reportable noncompliance.
5. Remove the top and bottom impact limiters.
6. Remove the cask tie-down strap.
7. Using the lifting yoke with the guides removed, engage the lifting trunnions. Raise the cask to vertical by rotating the cask rotation sockets on the rear cask supports, moving the crane and/or trailer as required to keep the lift yoke engaged to the trunnions and the cask engaged in the rear supports. When the cask is fully vertical, lift the cask from the supports and remove it from the trailer/container.
8. Place the cask in the dry loading stand. Disengage the lifting yoke.
9. Remove the vent and drain valve port covers. Prior to reinstallation of the port covers, carefully inspect the O-rings and, if the O-rings show any damage, replace them with approved spares. Ensure that the replacement O-rings are properly installed and seated. Visually inspect the valved quick-disconnect nipples and replace them, if necessary.

Note: For Alternate B port covers, replace the metallic O-ring with an approved spare prior to reinstallation.

10. Remove closure lid bolts. Attach the lid lift slings to the closure lid. Remove the closure lid and set it on a support that is suitable for radiological control and for maintaining the cleanliness of the closure lid. Prior to reinstallation of the lid, carefully inspect the Teflon O-ring seal in the underside of the closure lid and, if it shows any damage, replace it. Remove the metallic O-ring and replace it with an approved spare. Ensure that the replacement O-rings are properly installed and seated. Inspect the lid bolts and replace any that are damaged.
11. Visually inspect the inner cavity for foreign material or damage. Install, or verify the presence of the proper drain tube assembly and basket, as required.
12. Install the required dry transfer system components to the top of the cask.
13. Position the shielded transfer cask system components for fuel loading, as appropriate.
14. Identify the fuel to be loaded and verify that the fuel contents comply with the content conditions and authorized quantities as specified in the CoC. Up to five sound metallic fuel rods may be placed in an unsealed canister. Damaged rods may be placed in a sealed 2.75-inch or 4.0-inch failed fuel canister (FFC). Up to 10 filters containing oxide powder from severely damaged metallic fuel rods may be placed in one FFC. The FFC(s) containing filters may be loaded with up to two FFCs containing failed fuel rods to fill the three–element basket. The FFCs must be vacuum dried and sealed as described in Section 7.1.3.
15. Load the shielded transfer cask with the selected fuel contents.
16. Place the shielded transfer cask, containing a fuel canister, onto the dry transfer system components positioned on the top of the cask.
17. Lower the fuel canister from the transfer cask into the shipping cask.
18. Repeat the loading and transfer of fuel canisters until the approved cask loading plan is completed.
19. Install the closure lid onto the cask. Visually verify that the lid is properly seated.
20. Remove the dry transfer system components from the top of the cask.
21. Install and tighten the 12 closure lid bolts to 260 ± 20 ft-lb in three passes, using the torque sequence stamped on the closure lid.
22. This step applies only if the cask contains damaged metallic fuel or severely damaged metallic fuel.
    a. Attach the vacuum pump to the cask vent valve.
    b. Evacuate the cask cavity to ≤ 10 torr (13 mbar) and maintain for a minimum of 15 minutes.
    c. Stop the vacuum pump and monitor pressure for a minimum of 10 minutes. If the pressure rise is less than 5 torr (6.5 mbar), the cask is adequately dried for shipment. If not, repeat vacuum drying and pressure rise verification.
    d. Remove the vacuum pump and backfill the cask cavity with helium to 1 atmosphere (absolute) +1, -0 psi.
    e. Remove the gas supply line.

23. Perform the helium mass spectrometer leakage rate test on the cask lid in accordance with the requirements of Section 8.1.3.1, Steps 3 through 10.
24. Install the vent and drain alternate port covers and torque the bolts to 100 ±10 inch-pounds.
25. If an alternate port cover containment O-ring seal was replaced, perform a helium leakage test on the affected port cover using a He MSLD in accordance with the requirements of Section 8.1.3.2.2.
26. If the alternate port cover containment seal was inspected and accepted for reuse, perform a gas pressure drop leakage test on the affected port cover as follows.
    a. Install a pressure test fixture to the port cover test port, including a calibrated pressure gauge with a minimum sensitivity of 0.25 psi.
    b. Pressurize the port cover seal annulus to 15 psig, +1, -0 psi.
    c. Isolate the gas supply and observe the pressure gauge for a minimum of five minutes.
    d. The acceptance criterion for the test is no measurable drop in pressure during the minimum test time. An acceptable test assures that the minimum assembly verification leakage test sensitivity is achieved.

    Note: Alternate B port covers, if used, require the satisfactory completion of a helium maintenance leakage rate test. Install the Alternate B port cover and perform the maintenance leakage rate test per the requirements of Section 8.1.3.3.2.
27. Decontaminate the cask. Survey the cask for surface contamination and radiation dose rates.

    Note: Ensure compliance with 10 CFR 71.87(i) and 10 CFR 71.47.
28. Remove lift yoke arm guides. Engage the cask lifting yoke to the lifting trunnions.
29. Lift the cask and position the cask rotation sockets in the rear rotation trunnions of the rear support structure. Carefully lower the cask to the horizontal transport orientation resting on the front saddle by moving the crane and/or the trailer as required to maintain cask engagement to the rear supports.
30. Disengage the lifting yoke from the lifting trunnions and remove it from the area.
31. Install the cask tie-down strap. Install the top and bottom impact limiters.
32. Install a TID to an attachment point on the top impact limiter.
33. Install ISO container bracing and lid or personnel barrier.
34. Complete radiation and contamination surveys of the external surfaces of the package and record the data. Ensure removable contamination and radiation dose rate survey results comply with the limits specified in 10 CFR 71.87(i) and (j).
35. Measure the dose rate in millirems per hour at one meter from the package surface to determine the Transport Index (TI). Indicate the TI on the Radioactive Material labels applied to the package in accordance with 49 CFR 172, Subpart E.
36. Determine the appropriate Criticality Safety Index (CSI) assigned to the package contents in accordance with the CoC, and indicate the correct CSI on the Fissile Material label applied to the package per 49 CFR 172, Subpart E.

37. Apply appropriate placards to the transport vehicle in accordance with 49 CFR 172, Subpart F.
38. Complete the shipping documents and provide the carrier with instructions regarding the requirements for maintaining an exclusive use shipment.

7.1.3 Procedures for Loading Metallic Fuel and Filters Containing Severely Damaged Metallic Fuel into Damaged Fuel Canisters

7.1.3.1 Small Diameter Canisters (Damaged Metallic Fuel)

1. Examine the small diameter failed fuel canister (FFC) and check it for damage.
2. Place the FFC inside the containment barrier portion of the pool. Position the FFC in the failed rod loading station.
3. After verifying the accountability records, place the designated failed fuel rod into the FFC. If the rod is broken into two or more pieces, verify that the lid thread and seal area is not fouled during rod insertion.
4. When the can is loaded, install the lid using the FFC Lid Installation Tool.
5. Using the FFC handling tool, move the loaded FFC through the containment barrier door and place the FFC horizontally into the upender.
6. Operate the hand winch to move the FFC to the vertical position.
7. Torque the FFC lid to 100 ± 10 ft-lb for the small canister.
8. Connect the nitrogen supply line to the vent valve.
9. Open nitrogen supply valve and pressurize the FFC to force out the water. Blow gas through the FFC for at least 5 minutes after the first visible bubbles appear. Remove the gas supply line.
10. Invert the FFC in the upender and install the pipe plug.
11. Reinvert the FFC in the upender.
12. Attach the vacuum pump to the FFC vent valve. Evacuate the FFC to a pressure below 25 torr (33 mbar) for a minimum of 15 minutes. Remove the vacuum pump and backfill with nitrogen.
13. Remove the FFC from the upender and place it into temporary storage.

7.1.3.2 Large Diameter Canisters (Damaged Metallic Fuel)

1. Examine the large diameter FFC and check it for damage.
2. Place the FFC inside the containment barrier portion of the pool. Position the FFC in the failed rod loading station.
3. This step is to be used when loading up to three uncanned or canned fuel rods into the large diameter canister. After verifying the accountability records, remove the ceramic filter from the top of the original failed rod can. Position the can plug with aluminum screen onto the open can. Install the plug.
4. Verify the accountability records for the fuel to be loaded.

5. Place the designated fuel into the FFC. If the rod is broken into two or more pieces, verify that the lid thread and seal area is not fouled during rod or can insertion. If more than one failed rod is to be installed, repeat steps 3 through 5.
6. After the canister is loaded with fuel, install the lid using the FFC Lid Installation Tool.
7. Using the FFC handling tool, move the loaded FFC through the containment barrier door and place the FFC horizontally into the upender.
8. Operate the hand winch to move the FFC to the vertical position.
9. Torque the FFC lid to 130 ± 10 ft-lb for the large canister.
10. Connect the nitrogen supply line to the vent valve.
11. Open the nitrogen supply valve and pressurize the FFC to force out the water. Blow gas through the FFC for at least 5 minutes after the first visible traces of bubbles appear. Remove the gas supply line.
12. Invert the FFC in the upender and install the pipe plug.
13. Reinvert the FFC in the upender.
14. Attach the vacuum pump to the FFC vent valve. Evacuate the FFC to a pressure below 25 torr (33 mbar) for a minimum of 15 minutes. Remove the vacuum pump and backfill with nitrogen.
15. Remove the FFC from the upender and place it into temporary storage.

7.1.3.3 Large Diameter Canisters (Severely Damaged Metallic Fuel)

1. Examine the large diameter FFC and check it for damage.
2. Place the FFC inside the containment barrier portion of the pool. Position the FFC in the failed rod loading station.
3. Verify the accountability records for the fuel in the filter set (up to 10 filters) to be loaded into the FFC.
4. After verifying the accountability records, load the filter set into the FFC and place aluminum wool on top of the last filter.
5. Verify that the lid thread and seal area is not fouled during insertion of the filter set.
6. After the canister is loaded with fuel, insert the lid using the FFC Lid Installation Tool.
7. Using the FFC handling tool, move the loaded FFC through the containment barrier door and place the FFC horizontally into the upender.
8. Operate the hand winch to move the FFC to the vertical position.
9. Torque the FFC lid to 130 ± 10 ft-lb for the large canister.
10. Connect the nitrogen supply line to the vent valve.
11. Open the nitrogen supply valve and pressurize the FFC to force out the water. Continue to blow gas through the FFC for at least 5 minutes after the first visible traces of bubbles appear. Remove the gas supply line.
12. Invert the FFC in the upender and install the pipe plug.
13. Reinvert the FFC in the upender.

14. Attach the vacuum pump to the FFC vent valve. Evacuate the FFC to a pressure below 25 torr (33 mbar) for a minimum of 15 minutes. Remove the vacuum pump and backfill with nitrogen.
15. Remove the FFC from the upender and place it into temporary storage.

7.1.4 Procedures for Dry Loading of DIDO, Spiral, MOATA and MTR Fuel Elements in Basket Modules into the NAC-LWT Cask

This procedure presents the steps for dry loading of fuel basket modules into the NAC-LWT cask using a transfer cask, which can contain various types of aluminum clad reactor fuel elements such as MTR, DIDO, spiral and plate assemblies (i.e., MOATA elements). Aluminum clad fuel elements shall be transported in a leaktight NAC-LWT cask. The design, materials, use and function of the various modular fuel basket assemblies such as MTR, DIDO and ANSTO are similar, and all can be loaded into the NAC-LWT utilizing these procedures.

The modular fuel basket assemblies all consist of three types of modules: a base module, intermediate modules, and a top module. Each basket module contains seven fuel element locations, consisting of a center cell and six peripheral cells. The top basket module interfaces with the cask lid to limit the axial movement of the basket assembly. The base module interfaces with the bottom of the cask cavity. The base and intermediate modules are provided with guide pins to provide for and maintain the proper alignment between basket modules. Each of the basket module types is provided with a guide bar assembly to provide for the proper interface of the basket assembly with the drain tube assembly.

Depending on the fuel type, the basket assembly may consist of 4, 5 or 6 modules, with a varying number of intermediate modules. For the DIDO, MOATA and spiral fuel types, the DIDO basket assembly, the ANSTO basket assembly (the basket assembly identification for MOATA and spiral fuel types) and the ANSTO-DIDO combination basket assemblies consist of a top module, four intermediate modules and a base module. For the ANSTO-DIDO combination basket assembly, the top module is an ANSTO module and the remaining five modules are DIDO modules.

In the case of MTR fuel elements, the basket assembly can include 2, 3 or 4 intermediate modules, depending on the length and conditions of the fuel contents. Axial fuel spacers and plates may be used as dunnage to axially position the MTR fuel elements in the basket module to facilitate fuel unloading operations. Degraded clad of MTR elements shall be limited to a maximum of 5% of fuel element surface area.

The fuel content condition (i.e., heat load, fissile mass, minimum cool time, etc.) limits for the various fuel types are discussed or referenced in the following paragraphs.

MTR fuel elements shall be selected and loaded in accordance with the MTR General and Preferential Loading Procedures in Section 7.1.5. The MTR plate canister, if required, shall be loaded in accordance with Section 7.1.4.1.

DIDO fuel elements shall meet the following loading conditions:

- The maximum decay heat for DIDO fuel shall not exceed 25 W per element and 1.05 kW per loaded DIDO basket assembly when a top spacer is utilized (see NAC Drawing No. 315-40-113).
- The maximum decay heat for DIDO fuel elements loaded in a DIDO top module without a lid spacer installed shall not exceed 18 W per element.
- The maximum decay heat load for DIDO fuel elements loaded into an ANSTO top basket module with or without a damaged fuel can (DFC) shall not exceed 10 W.
- The heat load for each DIDO fuel element shall be verified by use of cool time versus burnup (MWd/MTU) curves in Figure 7.1-8 (LEU fuel), Figure 7.1-9 (MEU fuel), and Figure 7.1-10 (HEU fuel) or by use of minimum cool time versus ^{235}U depletion curves in Figure 7.1-11 (generic for LEU, MEU and HEU fuels), or by facility decay heat calculations. Note that significantly lower uranium content for a loaded assembly compared to the design basis assembly may result in a loaded assembly calculated burnup higher than that included in Figure 7.1-8 through Figure 7.1-10. Use of Figure 7.1-11 ^{235}U depletion curves is required for fuel assemblies in this category.
- Spiral, MOATA and DIDO fuel elements with corrosion and/or mechanically damaged cladding (i.e., degraded ANSTO fuel elements) may be loaded, provided that the total surface area of through-clad corrosion and/or mechanical damage does not exceed 5% per element, and the elements, or disassembled plates, are placed in an ANSTO DFC in the upper ANSTO basket module of an ANSTO basket assembly or ANSTO-DIDO combination basket assembly.

Spiral, MOATA and DIDO fuel elements shall meet the content conditions specified in the CoC for loading into the ANSTO basket assembly and the ANSTO-DIDO combination basket assembly. In ANSTO basket assemblies, full spiral fuel loads or mixed spiral, MOATA and DIDO fuel loads are authorized. DIDO fuel elements are limited to loading into the top ANSTO basket module. MOATA, spiral and DIDO fuel elements with degraded cladding or disassembled elements shall be placed into damaged fuel cans (DFCs) prior to loading into an ANSTO top basket module. DFCs containing MOATA, spiral or DIDO fuel elements may be loaded into the top ANSTO module of either an ANSTO basket assembly or an ANSTO-DIDO combination basket assembly. The maximum heat load of spiral or DIDO fuel elements to be placed in DFCs is 10 W per element. The procedures for loading degraded clad or disassembled MOATA, spiral or DIDO fuel elements in DFCs prior to loading into the basket modules are provided in Section 7.1.4.2. The remaining basket modules in the ANSTO basket assembly may

only be loaded with intact MOATA and/or spiral fuel elements. The remaining basket modules in the ANSTO-DIDO combination basket may only be loaded with intact DIDO fuel elements.

The procedures for loading the NAC-LWT cask with MTR, DIDO or ANSTO fuel baskets in a dry configuration or using a dry transfer system are as follows:

1. Perform a receipt inspection of the empty cask and trailer/ISO container, inspecting for transport damage.
2. Position the trailer in the designated cask unloading area. Set the trailer brakes and chock the wheels to prevent unintended movement. If site-specific conditions exist that require the trailer to move to allow the cask to be uprighted on its rotation trunnions, release brakes and remove the chocks when required to complete uprighting operations. If an ISO container is used, it may be removed from the trailer and secured in the unloading area.
3. Remove the personnel barrier or the roof and roof cross-members from the ISO container.

Note: Verify that the package nameplate displays the correct package identification number in accordance with the CoC.

4. Perform a Health Physics survey of the cask and adjacent surfaces of the trailer.

   Note: A receiving survey of the cask and transporter must be performed as soon as practicable after arrival at the site to assure compliance with 10 CFR 20, 10 CFR 71.87(i) and 10 CFR 71.47, and to assure timely reporting of any reportable noncompliance.

5. Remove the top and bottom impact limiters.
6. Remove the cask tie-down strap.
7. Using the lifting yoke with the guides removed, engage the lifting trunnions. Raise the cask to vertical by rotating the cask rotation sockets on the rear cask supports, moving the crane and/or trailer as required to keep the lift yoke engaged to the trunnions and the cask engaged in the rear supports. When the cask is fully vertical, lift the cask from the supports and remove it from the trailer/container.
8. Place the cask onto the dry loading station/stand. Disengage the lifting yoke and move clear.
9. Visually inspect the neutron shield tank fill, drain and level inspection plugs for signs of neutron shield fluid leakage.
10. Remove the vent and drain valve port covers. Prior to reinstallation of the port covers, carefully inspect the O-ring seals and, if the O-rings show any damage, replace them with approved spares. Ensure that the replacement O-rings are properly installed and seated. Visually inspect the valved quick-disconnect nipples and replace them, if necessary.

    Note: For Alternate B port covers, replace the metallic O-ring with an approved spare prior to reinstallation.

11. Remove closure lid bolts. Attach the lid lift slings to the closure lid. Remove the closure lid and set it on a support that is suitable for radiological control and for maintaining the cleanliness of the closure lid. Prior to reinstallation of the lid, carefully

inspect the Teflon O-ring seal in the underside of the closure lid and, if it shows any damage, replace it. Remove the metallic O-ring and replace it with an approved spare. Ensure that the replacement O-rings are properly installed and seated. Inspect the lid bolts and replace any that are damaged.

12. Visually inspect the inner cavity for foreign material or damage. Install or verify presence of a proper drain tube including drain tube alignment ring, as required.
13. Install the required dry transfer system components on the top of the cask.
14. Position the shielded transfer cask system components for fuel loading, as appropriate.
15. Identify the fuel to be loaded into each fuel basket module. Fuel elements loaded into each basket and/or module shall comply with the approved content conditions specified in Condition 5.(b)(1) and 5.(b)(2) of CoC No. 9225. Specific guidance on fuel selection, use of loading diagrams and preferential loading procedures is provided in Section 7.1.5. Perform an independent verification of the loading diagrams and fuel loading operations per Section 7.1.5.3. MTR plate canister loading shall be in accordance with Section 7.1.4.1 and ANSTO DFC loading shall be in accordance with Section 7.1.4.2.

    Note: If a basket module is to be loaded with a LEU MTR fuel element having ^{235}U content >490 g (>23.5 g ^{235}U per plate), cell block spacers, as shown on Drawing 315-40-085, shall be installed in basket module cell positions 1, 2 and 3 to prevent inadvertent loading of more than four LEU MTR fuel elements.

    Note: For the loading of HEU MTR fuel elements having ^{235}U content >380 g, a minimum of 2.0 cm of nonfuel hardware and /or spacer plates shall be provided at both ends of the fuel element to meet criticality control analysis requirements.
16. Load the shielded transfer cask and basket module with the selected fuel contents.
17. Place the shielded transfer cask containing a loaded fuel basket module onto the dry transfer system components positioned on the top of the cask.
18. Lower the loaded basket module from the transfer cask into the shipping cask.
19. Repeat the loading and transfer of loaded basket modules until the approved cask loading plan is completed.
20. Install the closure lid onto the cask using the dry transfer system. Visually verify that the lid is properly seated.
21. Remove the dry transfer system components from the top of the cask.
22. Install and tighten the 12 closure bolts to 260 ± 20 ft-lb in three passes, using the sequence stamped on the lid.
23. Connect a gas supply line to the vent valve and the drain line to the drain valve.
24. Open the air, nitrogen or helium gas supply valve and pressurize the cask cavity (< 30 psig) to force any residual water out the drain line. Continue to supply pressurized gas to the cask for a minimum of five minutes after the last residual free water discharges from the drain. Remove the drain and gas supply lines and attach a vacuum drying system (VDS) to the vent.
25. Evacuate the cask cavity to less than or equal to 10 torr (13 mbar) and continue vacuum pumping for a minimum of 15 minutes.

26. At the end of the vacuum pumping period, isolate the cask cavity from the vacuum pump and stop the vacuum pump. Monitor the cask cavity pressure for a minimum of 10 minutes. If the pressure rise is less than 5 torr (6.7 mbar), the cavity is verified as dry of free water. If pressure rise is >5 torr (6.7 mbar), repeat vacuum drying until the dryness verification results are satisfactory.
27. Backfill the cask cavity with helium to 0 psig (1 atmosphere, absolute), +1, -0 psi and disconnect the VDS from the vent valve.
28. Perform a helium leakage test of the closure lid containment O-ring using a Helium Mass Spectrometer Leak Detector (He MSLD) in accordance with the procedural requirements of Section 8.1.3.1, Steps 3 through 10.
29. Install the vent and drain alternate port covers and torque the bolts to 100 ±10 inch-pounds.
30. If an alternate port cover containment O-ring seal was replaced, perform a helium leakage test on the affected port cover using a He MSLD in accordance with the requirements of 8.1.3.2.2.
31. If the alternate port cover containment seal was inspected and accepted for reuse, perform a gas pressure drop leakage test on the affected port cover as follows.
    a. Install a pressure test fixture to the port cover test port including a calibrated pressure gauge with a minimum sensitivity of 0.25 psi.
    b. Pressurize the port cover seal annulus to 15 psig, +1, -0 psi.
    c. Isolate the gas supply and observe the pressure gauge for a minimum of five minutes.
    d. The acceptance criterion for the test is no measurable drop in pressure during the minimum test time. An acceptable test assures that the minimum assembly verification leakage test sensitivity is achieved.

    Note: Alternate B port covers, if used, require the satisfactory completion of a helium maintenance leakage rate test to confirm a leaktight seal condition for each loaded transport. Install the Alternate B port cover and perform the maintenance leakage rate test per the requirements of Section 8.1.3.3.2.
32. Decontaminate the cask surfaces. Survey the cask for surface contamination and radiation dose rates.

    Note: Ensure compliance with 10 CFR 71.87(i) and 10 CFR 71.47
33. Remove lift yoke arm guides. Engage the cask lifting yoke to the lifting trunnions.
34. Lift the cask and position the cask rotation sockets in the rear rotation trunnions of the rear support structure. Carefully lower the cask to the horizontal transport orientation resting on the front saddle by moving the crane and/or the trailer as required to maintain cask engagement to the rear supports.
35. Disengage the lifting yoke from the lifting trunnions and remove it from the area.
36. Install the cask tie-down strap. Install the top and bottom impact limiters.
37. Install a TID to an attachment point on the top impact limiter.
38. Install ISO container bracing and lid, or personnel barrier.

39. Complete radiation and contamination surveys of the external surfaces of the package and record the data. Ensure removable contamination and radiation dose rate survey results comply with the limits specified in 10 CFR 71.87(i) and (j).
40. Measure the dose rate in millirems per hour at one meter from the package surface to determine the Transport Index (TI). Indicate the TI on the Radioactive Material labels applied to the package in accordance with 49 CFR 172, Subpart E.
41. Determine the appropriate Criticality Safety Index (CSI) assigned to the package contents in accordance with the CoC, and indicate the correct CSI on the Fissile Material label applied to the package per 49 CFR 172, Subpart E.
42. Apply appropriate placards to the transport vehicle in accordance with 49 CFR 172, Subpart F.
43. Complete the shipping documents and provide the carrier with instructions regarding the requirements for maintaining an exclusive use shipment.

7.1.4.1 Procedure for Loading MTR Fuel Plates into MTR Plate Canister

1. Examine the MTR plate canister and inspect for damage. Visually verify that one end of the canister is installed, the six associated bolts are installed and the other end is removed.
2. Place the can in the loading fixture.
3. Load the fuel plates into the canister. Verify that the number of fuel plates in the canister is no more than the maximum number of plates in an intact MTR fuel element of its type.
4. Install the lid and lid bolts.

7.1.4.2 Procedure for Loading MOATA, Spiral and DIDO Fuel Elements into ANSTO Damaged Fuel Can (DFC)

1. Examine the ANSTO DFC per Figure 1.2.3-18, and inspect for damage. Visually verify that the bottom ring with aluminum mesh screen is installed in the base of the DFC tube.
2. Place the DFC in a facility loading fixture.
3. Load the MOATA fuel plates, spiral fuel plates or DIDO fuel plates/element into the DFC. Ensure that the fuel elements or plates loaded into the DFC comply with the fuel quantity and heat load conditions of the CoC.
4. Install the lid with aluminum mesh screen and rotate the lid into the locked position.
5. At the appropriate point in the NAC-LWT cask loading process, load the loaded DFC into the top ANSTO fuel basket module.
6. Position loaded ANSTO module onto the ANSTO basket assembly or the ANSTO-DIDO combination basket assembly.

7.1.5 MTR General and Preferential Loading Procedures

Up to 42 LEU, MEU, and HEU MTR fuel elements may be loaded into the NAC-LWT MTR Fuel Basket, i.e., 7 fuel elements per basket module × 6 basket modules per fuel basket, except

for LEU MTR fuel elements with greater than 490 g ^{235}U (or greater than 23.5 g ^{235}U per plate), which are limited to 4 elements per basket module as detailed in the following paragraphs. Each MTR basket module has 7 fuel element positions. The MTR basket module loading diagram presented in Figure 7.1-1 has a center position (Position 1), two exterior positions (Positions 2 and 3) that are in line with the center position, and four exterior positions (Positions 4, 5, 6, and 7) that are adjacent to the center row positions. The basket module's fuel element locations are specifically identified to ensure loading of each location with the appropriate fuel element. Ensuring MTR fuel loadings are performed in strict accordance with the procedures presented herein will ensure that the MTR fuel content conditions of the CoC are met and that the analyses presented in this SAR are bounding.

MTR fuel elements are selected for loading into specific fuel element locations based on the decay heat of each individual fuel element at the time of loading. Figure 7.1-2 through Figure 7.1-5 and Figure 7.1-12 through Figure 7.1-13 are provided to assist in determining the acceptability of a MTR fuel element for loading in a 30 W uniform loading pattern depending on enrichment (i.e., LEU, MEU or HEU) or ^{235}U content (i.e. 380 or 460 grams). For determining the acceptability of higher heat load HEU fuel elements, Figure 7.1-6 and Figure 7.1-7 are provided for 380 and 460 grams of ^{235}U, respectively. For determining the acceptability of higher heat load LEU fuel elements, Figure 7.1-13 is provided for 490 grams of ^{235}U. Curves are provided in this figure at 10, 20, 30, and 40 W maximum heat load for maximum flexibility in the preferentially loaded basket. The use of the fuel element cool time versus fuel burnup figures are described in Section 7.1.5.4. LEU MTR fuel elements with a ^{235}U content greater than 23.5 grams per plate (490 g ^{235}U per element), but not exceeding 32 grams ^{235}U per plate (640 g ^{235}U per element), are restricted to baskets containing a maximum of four fuel elements (or an equivalent number of fuel plates per opening). The four element per basket module is in effect even if only one LEU MTR assembly exceeds 23.5 grams ^{235}U per plate (490 g ^{235}U per element). Specific basket locations and restrictions for the high load LEU elements are described in Section 7.1.5.1.

The procedural steps and sequence to ensure the MTR fuel loading and content condition limits are met are: 1) determine ^{235}U content weight per element; 2) determine fuel element decay heat load per Section 7.1.5.4; 3) determine basket module loading position for each element and overall basket loading pattern; and 4) individual basket module loading and assembly of the fuel basket in the NAC-LWT. Each of these steps shall be independently verified.

Attention to the overall cask loading pattern allows the decay heat load of the cask to be maintained as uniform, as is practical, and within CoC total heat load limits. Loading diagrams for each individual module and the complete cask assembly shall be developed and used during the basket module and cask loading operations. After the decay heat load of each of the MTR

fuel elements to be loaded and transported is calculated or determined and verified, the loading and content considerations of Sections 7.1.5.1 through 7.1.5.3 shall be met or complied with to establish the final acceptable loading pattern and sequence.

7.1.5.1 General Loading Requirements

1. The maximum decay heat load per MTR fuel basket module shall not exceed 210 W and the maximum decay heat load per cask (package) shall not exceed 1.26 kW. A MTR fuel element with a decay heat greater than 120 W shall not be loaded. The minimum allowed cool time for an MTR element/plate shall be 90 days.
2. LEU, MEU and HEU MTR fuel elements with decay heat not exceeding 30 W per element may be loaded in any basket module fuel element location in any combination.
3. HEU MTR fuel elements with decay heats exceeding 30 W shall be preferentially loaded in a basket module in decreasing decay heat order according to the loading diagram in Figure 7.1-1, with the highest heat load element loaded in fuel location one. Fuel elements with heat loads of up to 120 W shall only be loaded in the center fuel element location of any MTR fuel basket module. The decay heat of the fuel element in either of the two fuel element locations (i.e., number 2 or 3), in line with the center fuel element location of a MTR fuel basket module, shall not exceed 70 W.
4. LEU MTR fuel elements (or canistered fuel plates) with a 235U content greater than 23.5 g per plate (>490 g 235U per element), and not exceeding 32 g per plate (≤ 640 g 235U per element), shall only be loaded into basket positions 4, 5, 6 and 7 shown in Figure 7.1-1. In order to ensure that baskets containing the high fissile mass LEU MTR elements (>23.5 g 235U per plate, >490 g 235U per element) will not be loaded with fuel elements (or fuel plates) in basket opening positions 1, 2 and 3, a cell block spacer shall be installed in each of these three basket openings. The cell block spacer, as shown on Drawing 315-40-085, is of sufficient height and diameter to ensure that LEU MTR fuel elements are prevented from being placed in these openings. The capacity limitation of a maximum of four MTR fuel elements per module is in effect even if a single LEU MTR fuel elements (or canistered fuel plates) having >23.5 g 235U per plate (>490 g 235U per element) is to be loaded.
5. LEU MTR fuel elements with decay heats exceeding 30 W shall be preferentially loaded in a basket module in decreasing decay heat order according to the loading diagram in Figure 7.1-1. The total decay heat load of any individual basket with 40 W preferentially loaded assemblies is 210 W.
6. An MTR plate canister may be loaded into any fuel basket module fuel element location. The contents of each plate canister shall be limited to the number of fuel plates, dimensions and masses of an equivalent intact MTR fuel element.
7. MTR fuel elements with corrosion and/or mechanically damaged cladding may be loaded, provided that the total surface area of through-clad corrosion and/or mechanical damage does not exceed 5% of the elements cross-sectional area.

7.1.5.2 Determination of Basket Module Loading Pattern

1. Perform an evaluation of the full inventory of fuel elements to be loaded into the NAC-LWT cask(s) and develop an overall loading plan that minimizes overall dose rates to minimize general population dose and operator dose. The loading of LEU MTR fuel elements with greater than 23.5 g ^{235}U per plate (>490 g ^{235}U per element) shall be governed by the loading restrictions in item 4 of Section 7.1.5.1, and cell block spacers shall be placed in basket loading positions 1, 2 and 3 to prevent inadvertent loading of more than four high fissile mass LEU MTR elements.
2. Select up to seven MTR fuel elements to be loaded in a basket module meeting the general loading requirements of Section 7.1.5.1. Identify if spacers or spacer plates are required to properly position the MTR elements axially in the basket module.
3. Rank the fuel elements in order of decreasing decay heat load from 1 to 7. (i.e., the assembly with the highest decay heat is designated number 1.)
4. Generate loading diagrams for each basket module based on Figure 7.1-1, by placing the numbered assemblies in the matching numbered basket module positions, except that fuel elements ranked 4,5,6 or 7 may be loaded in any of the outer (i.e., 4-7) basket module positions.
5. Repeat steps 1 through 4 for all of the basket modules to be loaded.
6. Independently verify the basket module loading diagrams.
7. The loading diagrams shall be used to direct the loading of the basket modules per Section 7.1.5.3.

Once the basket module loading charts are complete, they are used to direct the loading of the basket modules.

7.1.5.3 Basket Loading Procedure

1. Locate the MTR fuel element to be loaded into the basket module per the loading diagram prepared for that module type (i.e., base, intermediate or top).
2. Independently verify the element identification.
3. Load the element into the predetermined fuel basket module fuel element location using the loading diagram. Ensure spacers are installed in positions 1, 2 and 3 of any basket module containing a high fissile mass LEU MTR element (>23.5 g ^{235}U per plate, >490 g ^{235}U per element).
4. Independently verify that the fuel element and spacer loading in the basket module complies with the loading diagram.
5. Repeat steps 1 through 4 until all identified fuel elements have been loaded into basket modules in compliance with the loading diagrams.

7.1.5.4 Estimating Assembly Decay Heat

When the decay heat of a fuel element is not known, the assembly burnup (MWd/MTU) and cooling time (years) can be used to define the allowable basket module positions using Figure 7.1-2 through Figure 7.1-7 and Figure 7.1-12 through Figure 7.1-13, depending on fuel enrichment (i.e., LEU, MEU or HEU) or ^{235}U content.

When using the load curves, placing the data point above a curve results in the fuel element being acceptable for loading at the heat load for which the curve was generated. Fuel elements with characteristics locating the point below the curve results in the fuel element not being acceptable for loading at the heat load for which the curve was generated. Uncertainties associated with burnup/depletion assignment for use with the load curves must be taken into account. Should an element be near the minimum load time determined by the load curves, or maximum burnup applicable to the curve, uncertainties in reading the curves must be taken into account.

HEU MTR fuel elements may be loaded with heat loads greater than 30 W. HEU elements exceeding 30 W shall be preferentially loaded, and Figure 7.1-6 and Figure 7.1-7 identify the appropriate cooling times and burnup limits for 120 W, 70 W and 20 W HEU elements, having a ^{235}U mass of up to 380 grams and a ^{235}U mass of up to 460 grams, respectively. The following steps are used to develop the appropriate loading patterns.

1. Locate the point on Figure 7.1-6 or Figure 7.1-7 for the fuel element burnup and cooling time, and ^{235}U content.
2. If the located point is above the 20 W line, there are no restrictions on fuel element placement in the basket module.
3. If the located point is between the 20 W and 70 W lines, the element is loaded as a 70 W element.
4. If the located point is between the 70 W and 120 W lines, the element is loaded as a 120 W element.
5. If the located point is below the 120 W line, the element shall not be loaded in the NAC-LWT cask.
6. The maximum total decay heat load for a preferentially loaded basket module shall not exceed 210 W and 1.26 kW for a loaded NAC-LWT cask.
7. Each shipper shall ensure that the Certificate of Compliance maximum decay heat load limits of 210 W per basket module and 1.26 kW per cask are not exceeded.

LEU MTR fuel elements may be loaded with heat loads greater than 30 W. LEU elements exceeding 30 W but not exceeding 40 W shall be preferentially loaded, and Figure 7.1-13 identifies the appropriate cooling times and burnup limits for 40 W, 30 W, 20 W and 10 W LEU elements, having a ^{235}U mass of up to 490 grams (up to 23.5 ^{235}U gram per plate). The following steps are used to develop the appropriate loading patterns.

1. Locate the point on Figure 7.1-13 for the fuel element burnup and cooling time.
2. If the located point is above the 10 W line, there are no restrictions on fuel element placement in the basket module.
3. If the located point is between the 10 W and 20 W lines, the element is loaded as a 20 W element. If the located point is above the 20 W line and beyond the 10 W line (i.e., element has a higher depletion than plotted for the 10 W line) the element is loaded as a 20 W element.

4. If the located point is between the 20 W and 30 W lines, the element is loaded as a 30 W element.
5. If the located point is between the 30 W and 40 W lines, the element is loaded as a 40 W element.
6. If the located point is below the 40 W line, the element shall not be loaded in the NAC-LWT cask.
7. The maximum total decay heat load for a LEU preferentially loaded basket module shall not exceed 210 W and 1.26 kW for a loaded NAC-LWT cask.
8. Each shipper shall ensure that the Certificate of Compliance maximum decay heat load limits of 210 W per basket module and 1.26 kW per cask are not exceeded.

Figure 7.1-1 MTR Fuel Basket Module Loading Pattern (Top View)

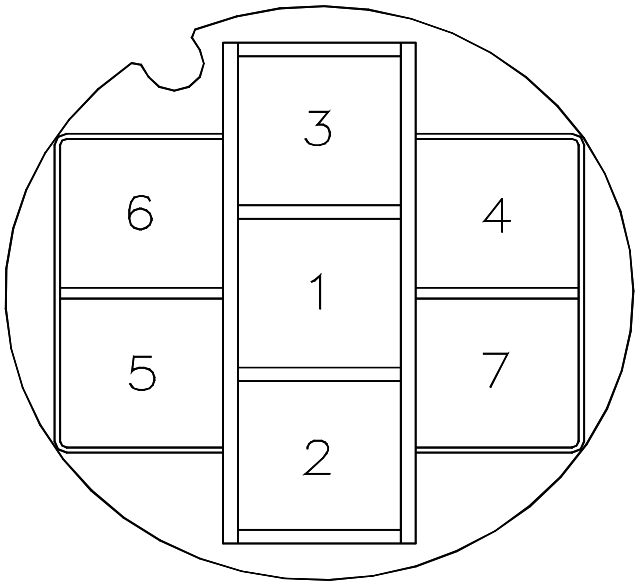

Loading Diagram

Figure 7.1-2 LEU MTR Fuel Basket Loading Guidelines for 30 W Uniform Loading – Maximum 470 grams ^{235}U

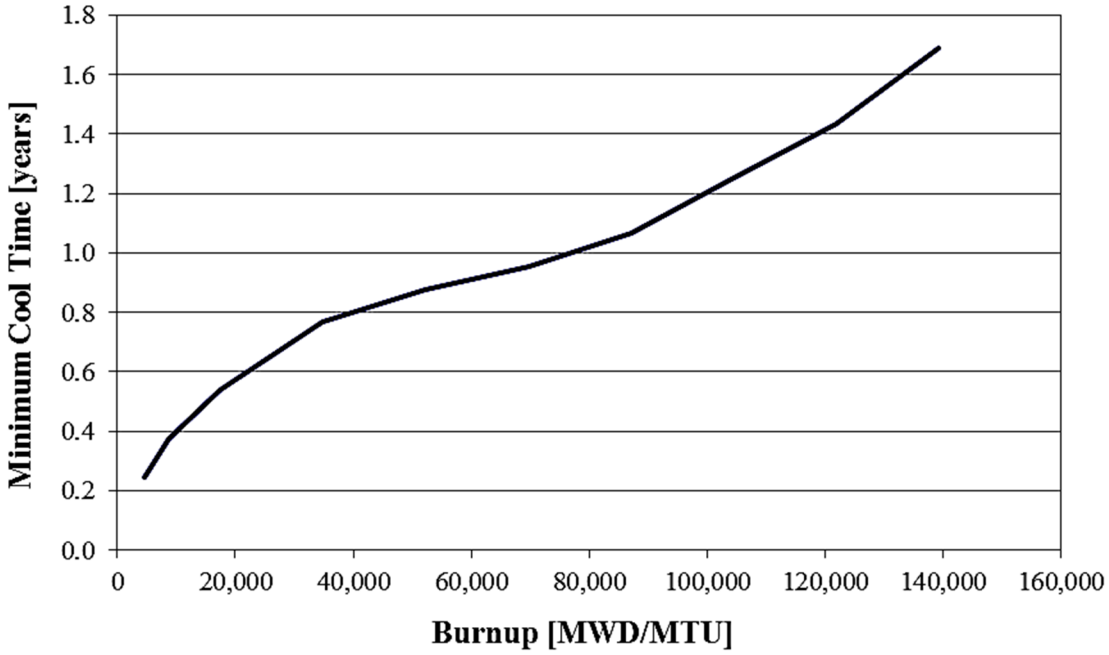

Figure 7.1-3 MEU MTR Fuel Basket Loading Guidelines for 30 W Uniform Loading

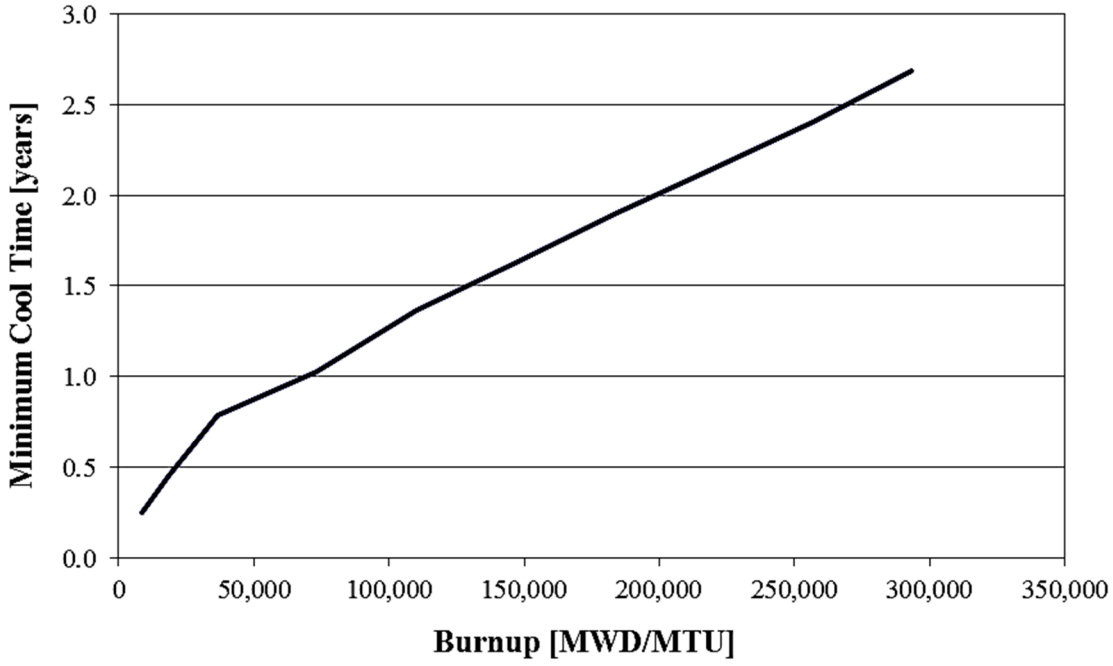

Figure 7.1-4 HEU MTR Fuel Basket Loading Guidelines for 30 W Uniform Loading – Maximum 380 grams ^{235}U

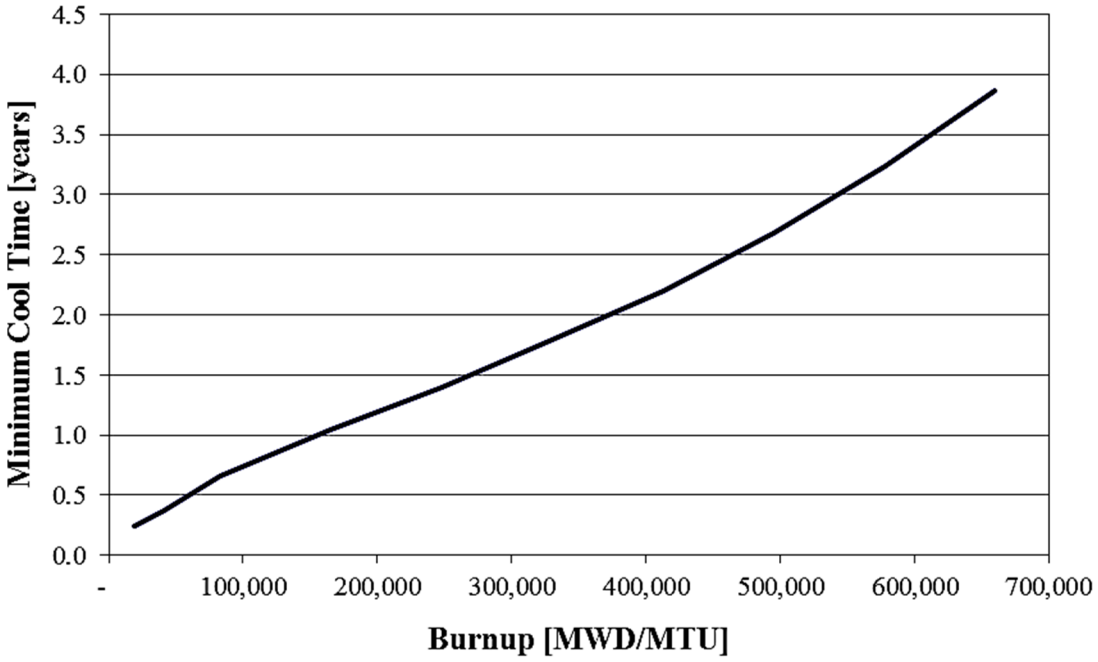

Figure 7.1-5 HEU MTR Fuel Basket Loading Guidelines for 30 W Uniform Loading – Maximum 460 grams ^{235}U

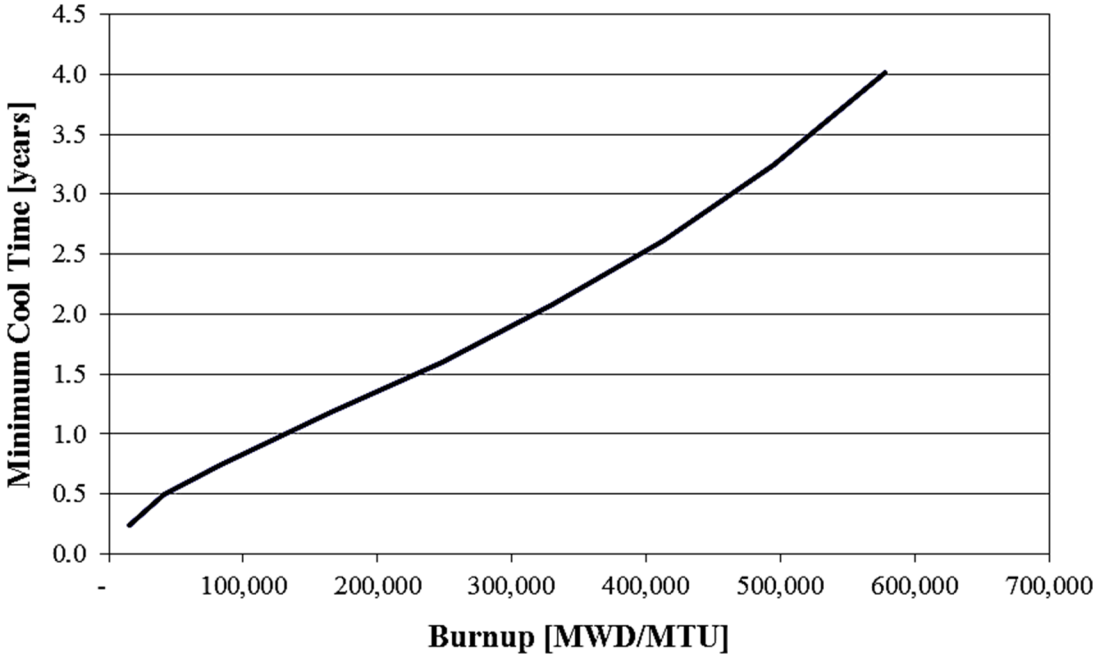

Figure 7.1-6 HEU MTR Fuel Basket Loading Guidelines for Preferential Loading – Maximum 380 grams ^{235}U

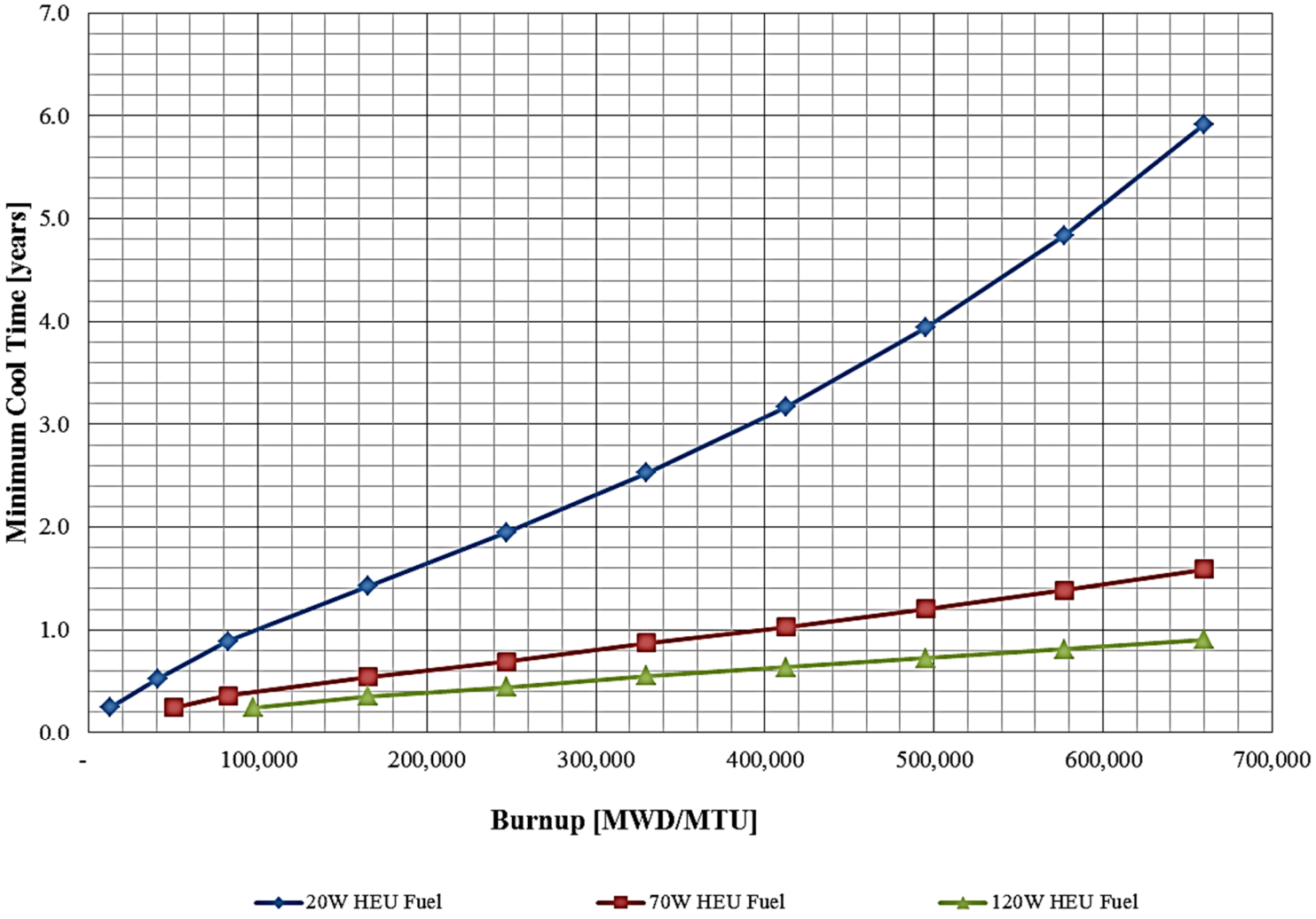

Figure 7.1-7 HEU MTR Fuel Basket Loading Guidelines for Preferential Loading – Maximum 460 grams ^{235}U

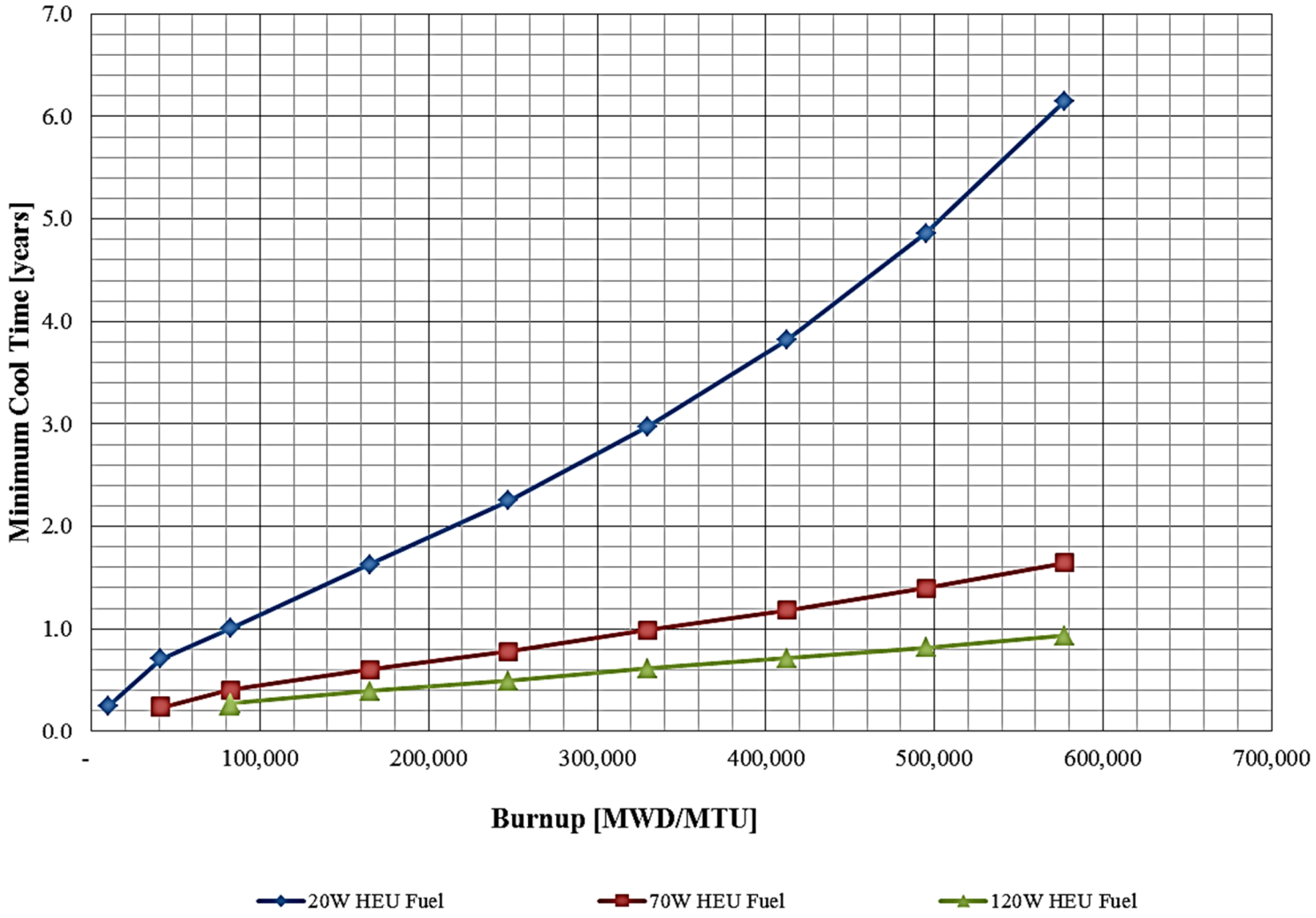

Figure 7.1-8 DIDO LEU Cooling Time vs. Fuel Burnup Basket Module Loading Guidelines for Uniform Loading

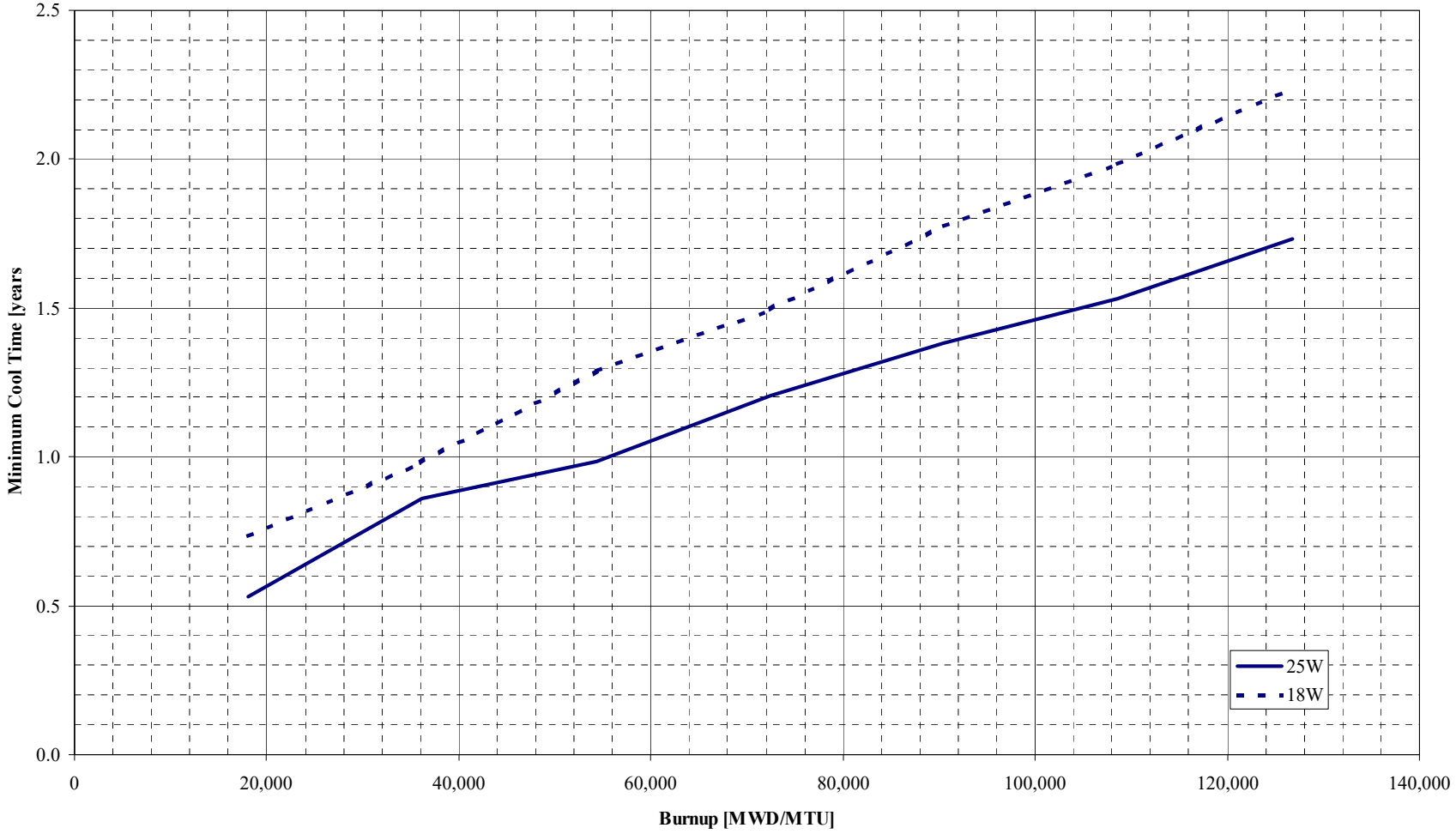

Figure 7.1-9 DIDO MEU Cooling Time vs. Fuel Burnup Basket Module Loading Guidelines for Uniform Loading

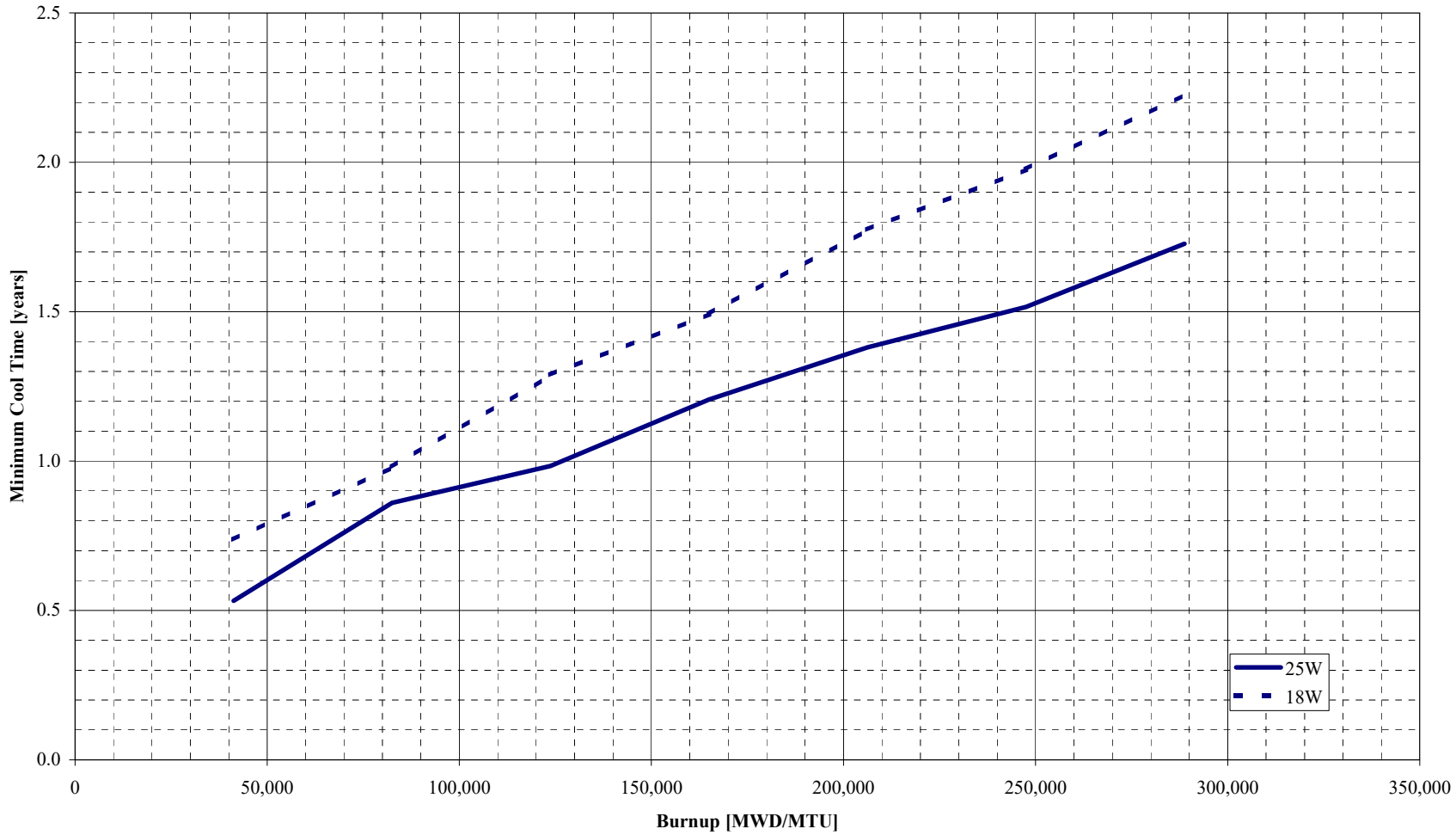

Figure 7.1-10 DIDO HEU Cooling Time vs. Fuel Burnup Basket Module Loading Guidelines for Uniform Loading

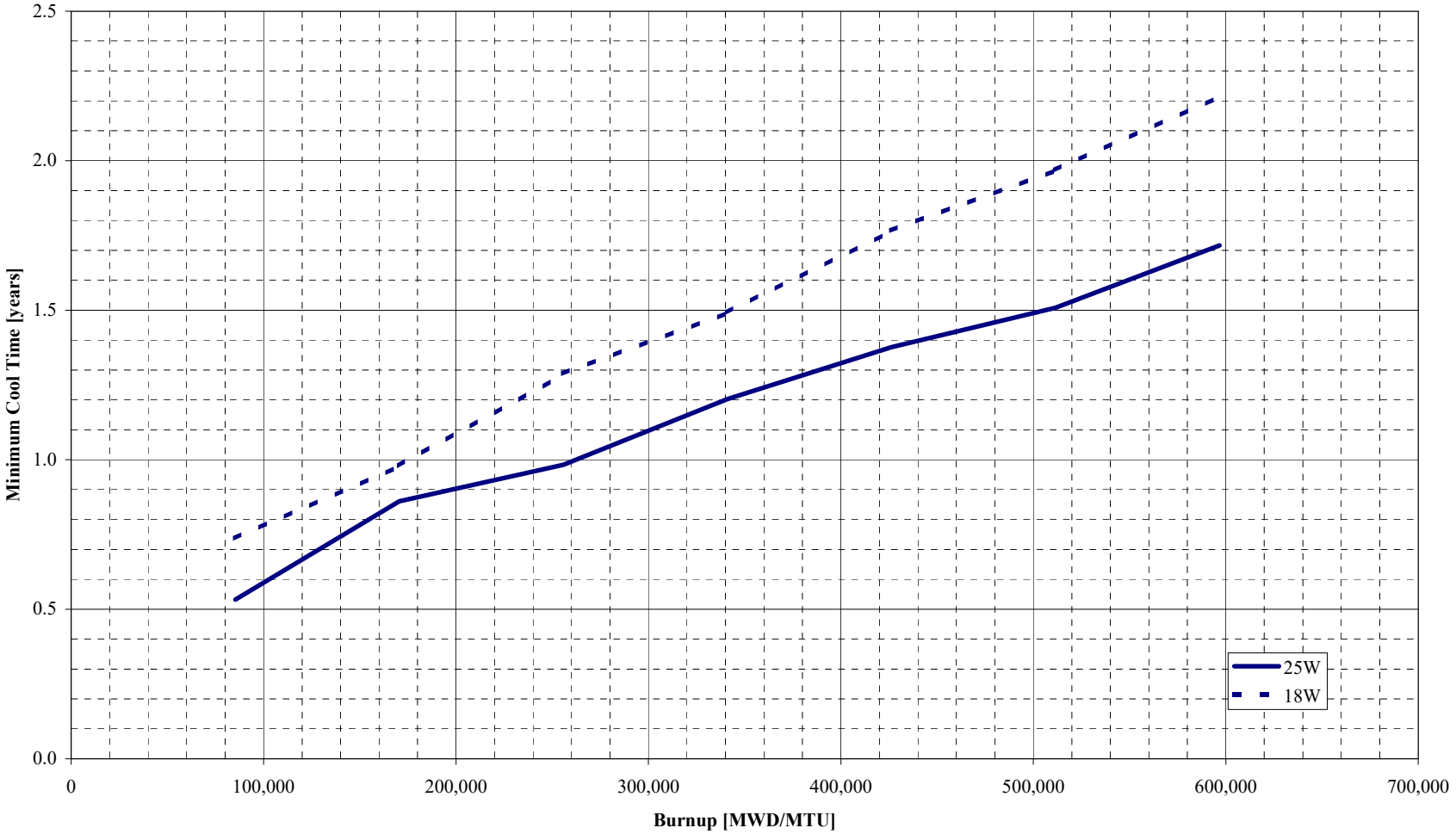

Figure 7.1-11 Bounding DIDO Element Minimum Cool Time vs. wt % ^{235}U Depletion

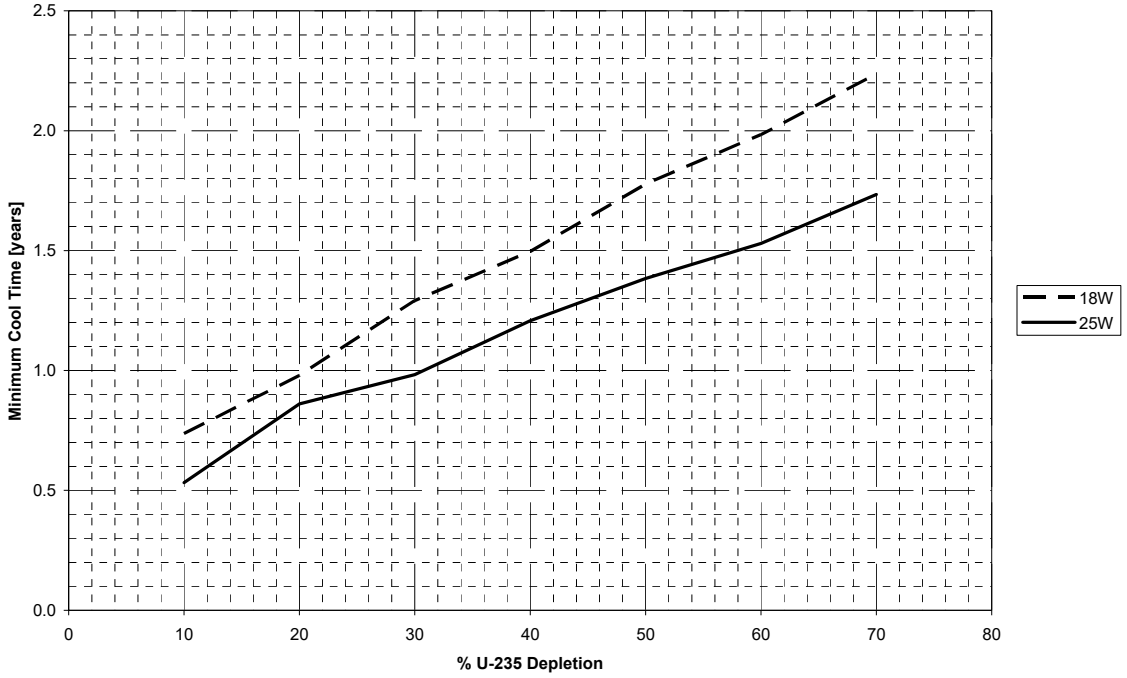

Figure 7.1-12 LEU MTR Fuel Basket Loading Guidelines for 30 W Uniform Loading - Maximum 640 grams ^{235}U

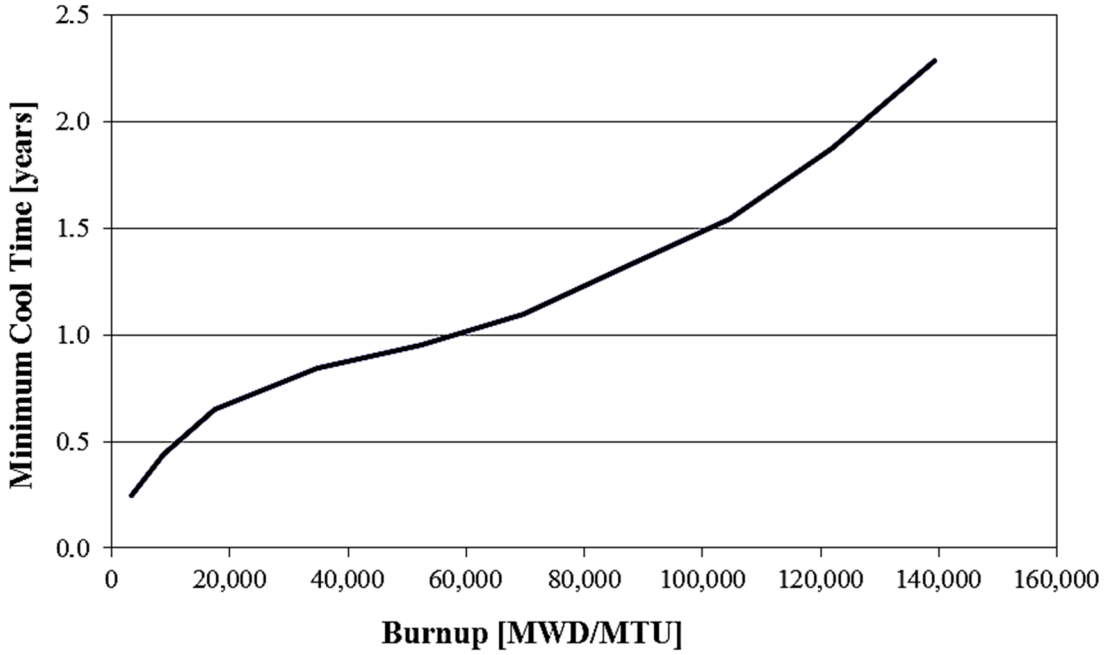

Figure 7.1-13 LEU MTR Fuel Basket Loading Guidelines for 40 W Preferential Loading - Maximum 490 grams ^{235}U

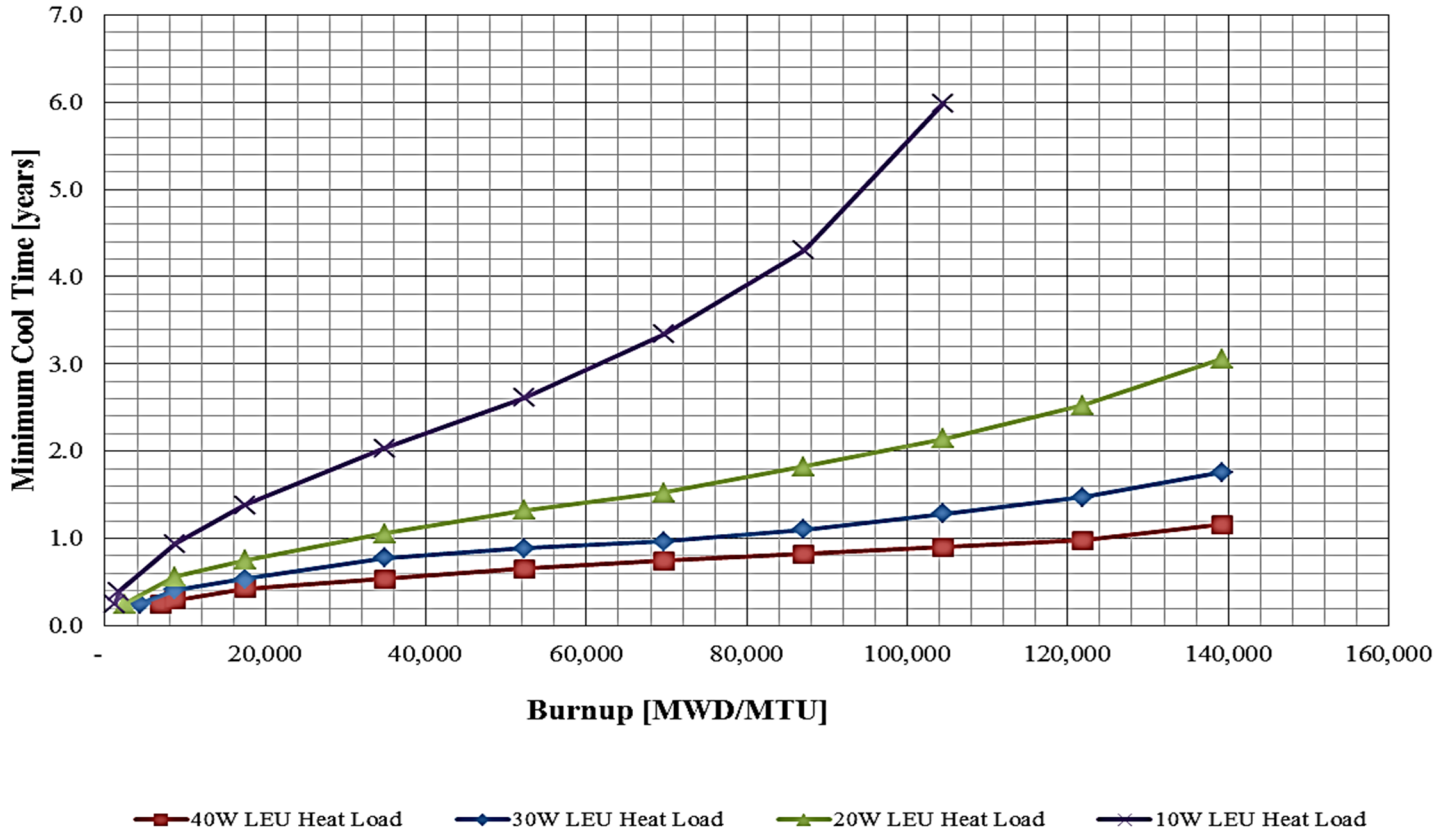

Note: Maximum burnup allowed is 139.3 GWd/MTU and minimum cool time is 90 days

7.1.6 Procedure for Dry Loading of TRIGA Fuel Basket Modules and GA IFM Modules into the NAC-LWT Cask

This procedure presents the steps for dry loading, using a transfer cask, of the nonpoisoned or poisoned TRIGA fuel basket modules into the NAC-LWT. For transport, five TRIGA fuel basket modules, consisting of a top module, a base module, and three intermediate modules must be loaded into the NAC-LWT. An alternative loading option is available for the poisoned TRIGA basket modules. This configuration, Configuration 2, consists of 1 base module and 4 intermediate modules. A spacer attached to the underside of the NAC-LWT lid is used with Configuration 2. Each basket module consists of seven cells, a center cell, and six peripheral cells. The center cell of the nonpoisoned basket design is blocked and cannot be loaded. Each unblocked cell may contain up to four TRIGA fuel elements, or up to 16 TRIGA fuel cluster rods within a fuel rod insert placed into the cell prior to loading. The maximum decay heat load of any TRIGA fuel element is 7.5 watts, while the maximum decay heat load of a TRIGA fuel cluster rod is 1.875 watts. An alternative loading option is available for the General Atomics (GA) Irradiated Fuel Material (IFM) Fuel Handling Units (FHU). This configuration consists of one GA IFM top module and one GA IFM spacer. The GA IFM top module, based on the TRIGA basket design, has two canister storage tubes that hold the GA IFM FHU.

TRIGA fuel elements may be transported directly in the basket module cell, or in a sealed damaged fuel can (DFC). TRIGA fuel cluster rods may be transported within the fuel rod insert in a basket cell, or a sealed DFC. The sealed DFCs fit in a module cell. The sealed DFC holds up to two equivalent TRIGA elements as damaged fuel or fuel debris, or up to six equivalent TRIGA fuel cluster rods as damaged rods or fuel debris. Damaged TRIGA fuel and fuel debris are contained in sealed DFCs.

When loading TRIGA fuel elements directly into the basket cells of a TRIGA basket module, the fuel elements may be loaded with either 4 elements per cell, or one element per cell, without shoring. If a basket cell is loaded with 2 or 3 intact elements, dummy rods will be inserted as necessary to fill the remaining space in the cell.

Each nonpoisoned basket module may contain up to 24 TRIGA fuel elements for a total of 120 elements, up to 96 TRIGA fuel cluster rods for a total of 480 rods per basket assembly, or a mixed loading in separate cells of the basket module of TRIGA fuel elements and TRIGA fuel cluster rods.

For the loading of the following TRIGA fuel elements, a maximum of three intact fuel elements are authorized for loading in each cell of a nonpoisoned top or bottom basket module. A dummy TRIGA spacer tube, as shown on Drawing No. 315-40-085, shall be inserted into the open

position prior to fuel element loading to ensure that the maximum number of three TRIGA fuel elements is not exceeded:

- TRIGA Stainless Steel (SS) LEU fuel elements having > 169 g ^{235}U < 275 g ^{235}U; or
- TRIGA SS HEU fuel elements having > 138 g ^{235}U < 175 g ^{235}U

The licensee's approved fuel loading plan shall ensure compliance with all fuel loading restrictions.

Each poisoned basket module may contain up to 28 TRIGA fuel elements for a total of 140 elements, or up to 112 TRIGA fuel cluster rods for a total of 560 rods per basket assembly.

Damaged TRIGA fuel elements and cluster rods and fuel debris are required to be loaded into sealed DFCs. The sealed DFCs are provided in two lengths. The short sealed DFC may be used in the base or top basket module. The long sealed DFC may be used in only the top module. The sealed DFCs are vacuum dried prior to loading into a TRIGA fuel basket (see sealed DFC loading procedure in Section 7.1.7).

There are two separate GA IFM FHU designs. One FHU is designed to hold research reactor fuel and the other is designed to hold High-Temperature Gas-Cooled Reactor fuel pellets. Each FHU consists of a sealed inner canister within a sealed outer canister. Each FHU contains irradiated fuel materials as described in Chapter 1. When loading the GA IFM FHUs, each individual sealed FHU will be loaded separately into a single GA IFM basket. This single basket containing two GA IFM FHUs and a spacer will comprise the entire cask load. Loading of the GA IFM basket into the NAC-LWT cask will utilize the TRIGA dry configuration loading procedure that is described in the following paragraphs.

TRIGA fuel elements that can be loaded into the cask are limited to a maximum decay heat of 7.5 watts per element, as discussed in Section 1.2.3. The decay heat load of the element must be calculated, and verified to be equal to or less than 7.5 watts per element prior to loading. TRIGA fuel cluster rods that can be loaded into the cask are limited to a maximum decay heat of 1.875 watts per element, as discussed in Section 1.2.3 (by reference to Table 5.1.1). The decay heat load of the fuel cluster rod must be calculated, and verified to be equal to or less than 1.875 watts per element prior to loading.

The procedure for loading the package with TRIGA fuel in a dry configuration is as follows:

1. Perform a receipt inspection of the empty cask and trailer/ISO container, inspecting for transport damage.
2. Position the trailer in the designated cask unloading area. Set the trailer brakes and chock the wheels to prevent unintended movement. If site-specific conditions exist that require the trailer to move to allow the cask to be uprighted on its rotation trunnions, release brakes and remove the chocks when required to complete uprighting

operations. If an ISO container is used, it may be removed from the trailer and secured in the unloading area.

3. Remove the personnel barrier or the roof and roof cross-members from the ISO container.

   Note: Verify that the package nameplate displays the correct package identification number in accordance with the CoC.

4. Perform a Health Physics survey of the cask and adjacent surfaces of the trailer.

   Note: A receiving survey of the cask and transporter must be performed as soon as practicable after arrival at the site to assure compliance with 10 CFR 20, 10 CFR 71.87(i) and 10 CFR 71.47, and to assure timely reporting of any reportable noncompliance.

5. Remove the top and bottom impact limiters.
6. Remove the cask tie-down strap.
7. Using the lifting yoke with the guides removed, engage the lifting trunnions. Raise the cask to vertical by rotating the cask rotation sockets on the rear cask supports, moving the crane and/or trailer as required to keep the lift yoke engaged to the trunnions and the cask engaged in the rear supports. When the cask is fully vertical, lift the cask from the supports and remove it from the trailer/container.
8. Place the cask onto the dry loading station. Disengage the lifting yoke and move clear.
9. Visually inspect the neutron shield tank fill, drain and level inspection plugs for signs of neutron shield fluid leakage.
10. Remove the vent and drain valve port covers. Prior to reinstallation of the port covers, carefully inspect the O-rings and, if the O-rings show any damage, replace them with approved spares. Ensure that the replacement O-rings are properly installed and seated. Visually inspect the valve quick-disconnect nipples and replace them, if necessary.

    Note: For Alternate B port covers, replace the metallic O-ring with an approved spare prior to reinstallation.

11. Remove closure lid bolts. Attach the lid lift slings to the closure lid. Remove the closure lid and set it on a support that is suitable for radiological control and for maintaining the cleanliness of the closure lid. Prior to reinstallation of the lid, carefully inspect the Teflon O-ring seal in the underside of the closure lid and, if it shows any damage, replace it. Remove the metallic O-ring and replace it with an approved spare. Ensure that the replacement O-rings are properly installed and seated. Inspect the lid bolts and replace any that are damaged.
12. Visually inspect the inner cavity for foreign material or damage. Install, or verify the presence of the proper drain tube and drain alignment ring.
13. Install the required dry transfer system components on the top of the cask.
14. Position the shielded transfer cask system components for fuel loading, as appropriate.
15. Identify the TRIGA fuel basket modules to be loaded. Modular baskets consisting of one base unit, three intermediate units, and one top unit, may be loaded into the cask cavity. The base unit must be the first unit loaded and the top unit must be the last unit loaded. The intermediate modules may be loaded in any of the other loading

operations. If the poisoned basket Configuration 2 is used, ensure that the TRIGA spacer is bolted and torqued to 40 ft-lbs to the underside of the NAC-LWT lid. If TRIGA fuel cluster rods are to be transported, ensure that fuel rod inserts are placed into each cell location that will contain fuel cluster rods. For the GA IFM basket load, install the GA IFM spacer, shown on NAC drawing 315-40-123, prior to inserting the loaded GA IFM top module.

Notes:
a. When utilizing nonpoisoned TRIGA baskets, visually verify that the center blocking plate is welded in place on each basket module.
b. When utilizing poisoned TRIGA baskets, visually inspect each cell of each basket module for foreign material or damage and verify the presence of the neutron poison material (borated stainless steel plates) as shown on NAC Drawings 315-40-080, -081, and -082.
c. When utilizing the GA IFM top module, follow the TRIGA loading procedure below, noting that this is a single basket load.

16. Identify the TRIGA fuel elements and TRIGA fuel cluster rods to be loaded into each fuel basket module. Fuel elements and rods to be loaded into each basket module shall comply with the applicable approved content conditions specified in Condition 5.(b)(1) and 5.(b)(2) of CoC No. 9225.

    If a top or bottom basket module cell is to be loaded with a TRIGA LEU SS fuel element having > 169 g ^{235}U, or a TRIGA HEU SS fuel element > 138 g ^{235}U, a dummy TRIGA spacer tube, as shown on NAC Drawing 315-40-085, shall be preinstalled in the module cell prior to fuel loading to prevent inadvertent loading of more than three high ^{235}U content TRIGA fuel elements per cell. High ^{235}U content TRIGA fuel elements are further restricted to loading in the top and bottom basket modules of a nonpoisoned basket only.
17. Perform an independent verification that the TRIGA fuel elements, fuel cluster rods and dummy TRIGA spacer tubes loaded in the basket module comply with the approved loading plan and the CoC content conditions including fuel parameters, heat load, enrichment, minimum cooling period, etc.
18. Load a TRIGA fuel basket module into the shielded transfer cask.
19. Place the shielded transfer cask containing the loaded basket module onto the dry transfer system components positioned on the top of the cask.
20. Lower the fuel basket from the shielded transfer cask into the shipping cask.
21. Repeat the loading and transfer of loaded basket modules until the approved cask loading plan is completed.
22. Install the closure lid onto the cask. Visually verify that the lid is properly seated.
23. Remove the dry transfer system components from the top of the cask.
24. Install and tighten the 12 closure bolts to 260 ± 20 ft-lbs in three passes, using the torque sequence stamped on the closure lid.
25. Connect a gas supply line to the vent valve and the drain line to the drain valve.
26. Open the air, nitrogen or helium gas supply valve and pressurize the cask cavity (< 30 psig) to force any residual water out the drain line. Continue to supply pressurized gas to the cask for a minimum of five minutes after the last residual free

water discharges from the drain. Remove the drain and gas supply lines and attach a vacuum drying system (VDS) to the vent.

27. Evacuate the cask cavity to less than or equal to 10 torr (13 mbar) and continue vacuum pumping for a minimum of 15 minutes.
28. At the end of the vacuum pumping period, isolate the cask cavity from the vacuum pump and stop the vacuum pump. Monitor the cask cavity pressure for a minimum of ten minutes. If the pressure rise is less than 5 torr (6.7 mbar), the cavity is verified as dry of free water. If pressure rise is >5 torr (6.7 mbar), repeat vacuum drying until the dryness verification results are satisfactory.
29. Backfill the cask cavity with helium to 0 psig (1 atmosphere, absolute), +1, -0 psi and disconnect the VDS from the vent valve.
30. Perform a helium leakage test of the closure lid containment O-ring using a Helium Mass Spectrometer Leak Detector (He MSLD) in accordance with the procedural requirements of Section 8.1.3.1, Steps 3 through 10.
31. Install the vent and drain alternate port covers and torque the bolts to 100 ±10 inch-pounds.
32. If an alternate port cover containment O-ring seal was replaced, perform a helium leakage test on the affected port cover using a He MSLD in accordance with the requirements of 8.1.3.2.2.
33. If the alternate port cover containment seal was inspected and accepted for reuse, perform a gas pressure drop leakage test on the affected port cover as follows.
    a. Install a pressure test fixture to the port cover test port including a calibrated pressure gauge with a minimum sensitivity of 0.25 psi.
    b. Pressurize the port cover seal annulus to 15 psig, +1, -0 psi.
    c. Isolate the gas supply and observe the pressure gauge for a minimum of five minutes.
    d. The acceptance criterion for the test is no measurable drop in pressure during the minimum test time. An acceptable test assures that the minimum assembly verification leakage test sensitivity is achieved.

    Note: Alternate B port covers, if used, shall have a helium maintenance leakage rate test performed to confirm a leaktight containment closure. Install the Alternate B port cover and perform the maintenance leakage rate test per the requirements of Section 8.1.3.3.2.
34. Decontaminate the cask surfaces. Survey the cask for surface contamination and radiation dose rates.

    Note: Ensure compliance with 10 CFR 71.87(i) and 10 CFR 71.47.
35. Engage the cask lifting yoke to the lifting trunnions.
36. Lift the cask and position the cask rotation sockets in the rear rotation trunnions of the rear support structure. Carefully lower the cask to the horizontal transport orientation resting on the front saddle by moving the crane and/or the trailer as required to maintain cask engagement to the rear supports.

37. Disengage the lifting yoke from the lifting trunnions and remove it from the area. Install the cask tie-down strap. Install the top and bottom impact limiters. Install a TID to an attachment point on the top impact limiter.
38. Install ISO container bracing and lid, or personnel barrier.
39. Complete radiation and contamination surveys of the external surfaces of the package and record the data. Ensure removable contamination and radiation dose rate survey results comply with the limits specified in 10 CFR 71.87(i) and (j).
40. Measure the dose rate in millirems per hour at one meter from the package surface to determine the Transport Index (TI). Indicate the TI on the Radioactive Material labels applied to the package in accordance with 49 CFR 172, Subpart E.
41. Determine the appropriate Criticality Safety Index (CSI) assigned to the package contents in accordance with the CoC, and indicate the correct CSI on the Fissile Material label applied to the package per 49 CFR 172, Subpart E.
42. Apply appropriate placards to the transport vehicle in accordance with 49 CFR 172, Subpart F.
43. Complete the shipping documents and provide the carrier with instructions regarding the requirements for maintaining an exclusive use shipment.

7.1.7 Procedure for Loading TRIGA Damaged Fuel or Fuel Debris into a TRIGA Sealed Damaged Fuel Can (DFC)

1. Examine the sealed damaged fuel can (DFC) body and inspect for damage. Verify that the lid sealing surface is clean and free of defects. Visually verify that the drain plug seal is installed and the drain plug is partially threaded into the drain plug adapter to allow for draining.
2. Lower the DFC into the pool and position it for fuel loading.
3. Load the damaged TRIGA fuel cluster rods or fuel debris into the DFC. Verify that no more than the equivalent of 2 design base fuel elements, or 6 fuel cluster rods, as damaged fuel or fuel debris are loaded into the sealed DFC as specified in the CoC. Visually verify that there is no debris in the lid sealing surface and thread areas.
4. Examine the DFC lid and inspect for damage. Visually verify that the sealing surface is clean and free of defects. Lubricate the lid bolts, install the lid seal and verify that the lid valve is in the open position and the valve lock set screw is retracted.
5. Attach the testing hose to the lid test connection and ensure that the fitting is properly seated.
6. Install the lid and torque the lid bolts to 150 ± 10 inch-pound.

   Note: Torque any two diametrically opposed bolts first, then torque the remaining two bolts. Complete the torque sequence by verifying the torque of all four bolts in a clockwise direction.
7. Pressurize the sealed DFC with air or helium to 5-15 psig to remove the water. Continue the purge for at least 5 minutes after bubbles appear from the base of the DFC.
8. Access and torque the DFC drain plug to 50 ± 2 ft-lbs.

9. Evacuate the DFC to a pressure below 10 torr (13 mbar) and continue vacuum pumping for 10 minutes.
10. Stop and isolate the vacuum pump and monitor the DFC vacuum pressure for a minimum of 10 minutes. If the pressure rise is <5 torr (6.7 mbar) in 10 minutes, the DFC is verified as dry of free water. If the pressure rise is >5 torr (6.7 mbar) in 10 minutes or less, the DFC is not considered dry of free water. Repeat vacuum drying and pressure rise testing until the dryness verification results are satisfactory.
11. Backfill the DFC with helium to a pressure of 1 atmosphere (0 psig), +1, -0 psi.
12. Shut and lock the lid diaphragm valve. The DFC is now sealed, dried and backfilled.
13. Disconnect the testing hose from the lid test connection.
14. The sealed DFC is now ready for loading into a TRIGA basket module.

7.1.8 Procedure for Wet Loading of PWR/BWR Fuel Rods or TPBARs into the PWR/BWR Transport Canister

For the shipment of PWR and BWR fuel rods and nonfuel-bearing components (e.g., PWR guide tubes or BWR water rods), the PWR/BWR transport canister has three configurations: sealed canister, screened canister, and free-flow canister. All three canister configurations may be used to contain either intact or damaged fuel rods, or a combination of both damaged and intact fuel rods. The loaded transport canisters are loaded into the NAC-LWT cask containing a LWT PWR basket assembly with an appropriate bottom weldment spacer. For transport canisters containing any damaged fuel rod contents, a can and an insert spacer are required to be installed and bolted to the underside of the closure lid to limit the axial movement of the canister. The use of the can and insert spacer requires the use of the PWR basket assembly fitted with the Alternate B spacer. Transport canisters containing intact rods may be placed in any of the three types of PWR basket assemblies. For the transport of a mixed loading of PWR or BWR fuel rods with nonfuel-bearing components, a modified 5×5 insert with 21 fuel rod locations and a larger tube position for the larger diameter nonfuel-bearing component (up to a nominal diameter of 1.3 inches) is required to be used with the PWR/BWR transport canister.

For the shipment of TPBARs, only the screened or free flow PWR/BWR Rod Transport Canister containing the 5 × 5 rod insert may be used.

Upon completion of loading the transport canister, the canister and the insert spacer are loaded, either together or individually, into the basket assembly in a manner similar to loading a PWR assembly.

1. If the transport canister is to be shipped in a sealed configuration, verify the five drain plugs are installed and torqued to 50 ± 2 foot-pound. If the transport canister is to be shipped in the free flow configuration, verify the five drain plugs are not installed. If the transport canister is to be shipped in the screened configuration, verify the screened plugs are installed and torqued to 50 ± 2 foot-pound in the bottom of the canister.

2. Lower the transport canister (and insert) into the fuel pool for loading.
3. Load the spent fuel rods into the transport canister in accordance with site-specific procedures. Separate failed fuel rod capsules may be used to contain either intact or damaged fuel rods within the canister. The capsules are intended to limit dispersal of radioactive material to the canister internals. Visually upon completion of loading, verify that there is no debris on the lid sealing surface and threaded areas.
4. Using the appropriate lid (sealed, screened or free-flow), examine and inspect for damage. Visually verify that the sealing surface is clean and free of defects. Lubricate the lid bolts.
5. Install the lid and torque the lid bolts to 35 ± 5 inch-pound.

   Note: Torque any two diametrically opposed bolts first, then torque the remaining six bolts. Complete the torque sequence by verifying the torque of all eight bolts in a clockwise direction.
6. If the transport canister is being shipped in either the screened or free-flow configuration, it is now ready for shipment. To ship PWR and BWR rods and nonfuel-bearing components, the transport canister shall be loaded into the NAC-LWT cask in accordance with Section 7.1.1, Procedures for Wet Loading of LWR Fuel Assemblies and Canistered LWR Fuel Rods. To ship TPBARs, the transport canister shall be loaded in accordance with Section 7.1.9, Procedure for Wet Loading of TPBAR Consolidation Canister or PWR/BWR Rod Transport Canister into the NAC-LWT Cask. If the transport canister is being shipped in the sealed configuration, complete steps 7-14 of this section.
7. Connect vent and drain lines to the respective quick-disconnect fittings on the sealed transport canister lid. The drain hose discharge should be directed to the plant drain system for radiological wastewater or another appropriate collection point.
8. Pressurize and purge the transport canister using helium. (Caution do not exceed 25 psig. while dewatering the transport canister.) Secure the purge once no fluid is observed exiting the discharge for at least 10 minutes.
9. Connect the vent line to a suitable vacuum pump. Maintain connection of drain line to the can, but isolate the line to allow vacuum drying of the sealed failed fuel can.
10. Evacuate the can to a pressure below 10 torr (13 mbar) and continue vacuum pumping for 10 minutes.
11. Stop and isolate the vacuum pump and monitor the cask cavity vacuum pressure for a minimum of 10 minutes. If the pressure rise is less than 5 torr (6.7 mbar), the cavity is verified as dry of free water. If the pressure rise is >5 torr (6.7 mbar), repeat vacuum drying until the dryness verification results are satisfactory.
12. Backfill the transport canister cavity with helium to 1 atmosphere (absolute), +1, -0 psi.
13. Disconnect the vent and drain lines from the transport canister.
14. The sealed transport canister is now ready for shipment and may be loaded into the NAC-LWT cask in accordance with Section 7.1.1.

7.1.9 Procedure for Wet Loading of TPBAR Consolidation Canister or PWR/BWR Rod Transport Canister into the NAC-LWT Cask

This section describes the procedures for loading the NAC-LWT with a TPBAR consolidation canister or with a screened or free flow PWR/BWR Rod Transport Canister. The consolidation canister can contain up to 300 TPBARs, three of which may be prefailed. Dunnage (i.e., spacer grids, stainless steel tubes, etc.) may be used in consolidation canisters containing fewer than 300 TPBARs. The total weight and volume of the contents (i.e., dunnage and reduced number of TPBARs) must be less than, or equal to, the weight and volume of the full load of 300 TPBARs.

The PWR/BWR Rod Transport Canister may contain up to 25 TPBARs.

Appropriate radiological controls and procedures addressing tritium shall be utilized by the licensee, including appropriate personnel monitoring for tritium exposure.

NAC-LWT casks to be used to transport the TPBAR consolidation canisters shall be configured as shown on Drawing No. 315-40-128, including Alternate B port covers. NAC-LWT casks to be used to transport a PWR/BWR Rod Transport Canister shall be configured as shown on Drawing No. 315-40-104, Assembly 95, including Alternate B port covers.

1. Perform a receiving survey of the empty cask and inspect for damage. Verify, by cask serial number, that the cask is approved for TPBAR shipment.
2. Position a trailer in the designated cask unloading area. Set the trailer brakes and chock the wheels to prevent unintended movement. If site-specific conditions exist that require the trailer to move to allow the cask to be uprighted on its rotation trunnions, release brakes and remove the chocks when required to complete uprighting operations. If an ISO is used, it may be removed from the trailer and secured in the unloading area.
3. Remove the roof from the ISO container and open the front and rear ISO doors. Remove roof cross-members, if installed.

Note: Verify that the package nameplate displays the package identification number, USA/9225/B(M)-96, as required by the CoC for TPBAR contents.

4. Perform a Health Physics survey of the cask and adjacent surfaces of the trailer.

   Note: A receiving survey of the cask and transporter must be performed as soon as practical after arrival at the site to assure compliance with 10 CFR 71.87(i) and 10 CFR 71.47, and to assure timely reporting of any reportable noncompliance.

5. Remove the top and bottom impact limiters.
6. Remove the cask tie-down strap.
7. Using the lifting yoke with the guides removed, engage the lifting trunnions. Raise the cask to vertical by rotating the cask rotation sockets on the rear cask supports, moving the crane and/or trailer as required to keep the lift yoke engaged to the trunnions and the cask engaged in the rear supports. When the cask is fully vertical, lift the cask from the supports and remove it from the trailer/container.

8. Place the cask in the decontamination pit or other designated area. Disengage the lifting yoke. Clean cask surfaces of road dirt as required for entry into the spent fuel pool.
9. Visually inspect the neutron shield tank fill, drain and level inspection plugs for signs of neutron shield fluid leakage.
10. Remove the Alternate B vent and drain valve port covers. Prior to reinstallation of the port covers, replace the metallic O-ring seal with an approved spare and inspect the Viton® O-ring seal for each port cover. If the Viton® O-ring shows any damage, replace it. Ensure that the replacement O-rings are properly installed and seated. Store the port covers to protect the seal surfaces. Visually inspect the valved quick-disconnect nipples and replace them, if necessary.
11. Remove closure lid bolts. Attach the lid lift slings to the closure lid. Remove the closure lid and set it on a support that is suitable for radiological control and for maintaining the cleanliness of the closure lid. Prior to reinstallation of the lid, carefully inspect the Teflon O-ring seal in the underside of the closure lid. If the O-ring shows any damage, replace it. Remove the metallic O-ring and replace it with an approved spare. Ensure that the replacement O-rings are properly installed and seated. Inspect the lid bolts and replace any that are damaged. Ensure that the TPBAR spacer is installed on the bottom of the cask lid for consolidation canister transports and not damaged when the lid is set down.
12. Visually inspect the inner cavity for foreign material or damage. Install or verify the presence of the standard drain tube and the TPBAR basket assembly (Drawing No. 315-40-10, Assembly 96 or Assembly 95) for loading of the consolidation canister; or the standard drain tube, TPBAR basket assembly (Drawing No. 315-40-10, Assembly 95), and the PWR Insert (Drawing No. 315-40-105, Assembly 99) for the loading of the PWR/BWR Rod Transport Canister containing TPBARs.

    Note: The PWR inset may be installed during the placement of the loaded PWR/BWR Rod Transport Canister into the NAC-LWT cask.

13 Fill the cask cavity with clean water. Install lift yoke arm guides and remote actuation components on the cask lifting yoke.
14. Engage the cask lifting yoke with the cask lifting trunnions and pick up the cask. Carefully lower the cask to the bottom of the cask loading area while spraying the cask down with clean water.
15. Disengage the lifting yoke from the cask and remove the yoke from the pool.
16. Identify the TPBAR consolidation canister or the PWR/BWR Rod Transport Canister containing TPBARs to be loaded.
17. Pick up the consolidation canister or the PWR/BWR Rod Transport Canister using the required grapple system.
18. Position the container over the cask and then carefully lower it into the cask to avoid damage to the cask sealing surfaces. Orient the consolidation canister bail so that it is aligned with the drain tube location. Confirm that the container is fully seated, then release and raise the grapple to the full up position.
19. Position the cask lifting yoke over the cask closure lid. Attach the slings to the closure lid and cask lifting yoke. Lower the yoke over the cask.

20. Position the closure lid over the cask and slowly lower it into place. For the consolidation canister, ensure the bail is properly aligned to the TPBAR spacer on the bottom of the lid. Use the cask and lid match marks as guides to properly align the lid. Visually confirm that the closure lid is seated.
21. Lower the cask handling yoke to slack the closure lid cables. Engage the lift yoke to the lifting trunnions and begin lifting.

    Note: Visually verify the yoke engagement before lifting the cask.
22. Raise the cask until the lid is slightly above the surface of the pool. At the option of the licensee/user, a number of closure lid bolts (4 to 12) may be installed hand tight.
23. Raise the cask clear of the pool, rinsing the yoke and cask with clean water.
24. Transfer the cask to the decontamination pit or other work area. Remove the yoke and lid lift slings.
25. Install and tighten the 12 closure lid bolts to 260 ± 20 ft-lb in three passes, using the torque sequence stamped on the closure lid.
26. At the option of the licensee/user, a 25 to 50 gallon clean water flush of the cask cavity may be performed by connecting a valved clean water line to the drain valve and a valved drain line to the vent valve. After the cavity flushing is completed, if performed, disconnect the water supply and drain lines.
27. Connect a gas supply line to the vent valve and the drain line to the drain valve.
28. Open the air, nitrogen or helium gas supply valve and pressurize the cask cavity (<30 psig) to force out the water. Continue to supply pressurized gas to the cask for a minimum of five minutes after the last residual free water discharges from the drain line. Remove the drain and gas supply lines and attach a vacuum drying system (VDS) to the cask vent valve.
29. Evacuate the cask cavity to a vacuum pressure of less than 10 torr (13 mbar) and continue vacuum pumping for a minimum of 15 minutes.
30. At the end of the vacuum pumping period, isolate the cask cavity from the vacuum pump and stop the pump. Monitor the cask cavity pressure for a minimum of ten (10) minutes. If the pressure rise is less than 5 torr (6.7 mbar), the cavity is verified as dry of free water. If the pressure rise >5 torr (6.7 mbar), repeat vacuum drying until the dryness verification results are satisfactory.
31. Backfill the cask cavity with helium to 0 psig (1 atmosphere, absolute), +1, -0 psi. Disconnect the VDS.
32. Perform the helium leakage test of the closure lid containment O-ring using a Helium Mass Spectrometer Leak Detector (He MSLD) in accordance with the requirements of Section 8.1.3.1, Steps 3 through 10.
33. Install and helium leakage test the Alternate B vent and drain port covers to leaktight criteria in accordance with Section 8.1.3.3.2.
34. Decontaminate the cask. Survey the cask for surface contamination and radiation dose rates.

    Note: Ensure compliance with 10 CFR 71.87(i) and 10 CFR 71.47.
35. Remove lift yoke arm guides. Engage the cask lifting yoke to the lifting trunnions.

36. Lift the cask and position the cask rotation sockets in the rear rotation trunnions of the rear support structure. Carefully lower the cask to the horizontal transport orientation resting on the front saddle by moving the crane and/or trailer, as required, to maintain cask engagement to the rear supports.
37. Disengage the cask lifting yoke from the cask lifting trunnions and remove it from the area.
38. Install the cask tie-down strap. Install the top and bottom impact limiters.
39. Install a TID to an attachment point of the top impact limiter.
40. Install roof cross-members, close ISO container doors, and replace ISO container roof.
41. Complete radiation and contamination surveys of the external surfaces of the package and record the data. Ensure removable contamination and radiation dose rate survey results comply with the limits specified in 10 CFR 71.87(i) and (j).
42. Measure the dose rate in millirems per hour at one meter from the package surface to determine the Transport Index (TI). Indicate the TI on the Radioactive Material labels applied to the package in accordance with 49 CFR 172, Subpart E.
43. Determine the appropriate Criticality Safety Index (CSI) assigned to the package contents in accordance with the CoC, and indicate the correct CSI on the Fissile Material label applied to the package per 49 CFR 172, Subpart E.
44. Apply appropriate placards to the transport vehicle in accordance with 49 CFR 172, Subpart F.
45. Complete the shipping documents and provide the carrier with instructions regarding the requirements for maintaining an exclusive use shipment.

7.1.10 Procedure for the Dry Loading of PULSTAR Fuel Into the NAC-LWT Cask

This section describes the procedures for loading the NAC-LWT cask with intact PULSTAR fuel assemblies, intact PULSTAR fuel rods in fuel rod inserts, and intact or damaged PULSTAR fuel assemblies, fuel rods, fuel debris, and nonfuel components of PULSTAR fuel assemblies in either sealed or screened PULSTAR cans. Up to 28 PULSTAR fuel assemblies, rod inserts, and sealed or screened cans can be loaded in the 28 MTR (four module × seven cells/module) basket assembly. The 28 MTR basket assembly consists of a base module, two intermediate modules, and a top module.

Damaged PULSTAR fuel assemblies, damaged fuel rods, fuel debris, and nonfuel components of fuel assemblies are required to be loaded in either a sealed failed fuel or screened PULSTAR can. Intact PULSTAR fuel rods may be loaded into either one of the cans at the option of the licensee. The PULSTAR cans are limited to being loaded in any cell in either the top or the base module. The top and base basket modules can also contain intact PULSTAR fuel assemblies and fuel rod inserts containing intact PULSTAR fuel rods.

The NAC-LWT cask will be loaded dry, utilizing a transfer cask for loading each of the four basket modules. The basket modules will be preloaded with the PULSTAR fuel contents. The damaged fuel cans will be preloaded, closed, drained and dried, if applicable, prior to loading in either the top or base basket module. The PULSTAR cans shall be loaded and prepared for transport in accordance with the applicable steps of Section 7.1.7.

The NAC-LWT dry PULSTAR fuel loading and preparation for transport procedures are as follows.

1. Perform a receipt inspection of the empty cask and trailer/ISO container, inspecting for transport damage.
2. Position the trailer in the designated cask unloading area. Set the trailer brakes and chock the wheels to prevent unintended movement. If site-specific conditions exist that require the trailer to move to allow the cask to be uprighted on its rotation trunnions, release brakes and remove the chocks when required to complete uprighting operations. If an ISO container is used, it may be removed from the trailer and secured in the unloading area.
3. Remove the lid/top of the ISO container and remove any bracing.

   Note: Verify that the package nameplate displays the correct package identification number in accordance with the CoC.
4. Perform a Health Physics survey of the cask and adjacent surfaces of the trailer.

   Note: A receiving survey of the cask and transporter must be performed as soon as practical after arrival at the site to assure compliance with 10 CFR 71.87(i) and 10 CFR 71.47, and to assure timely reporting of any reportable noncompliance.
5. Remove the top and bottom impact limiters.
6. Remove the cask tie-down strap.
7. Using the lifting yoke with the guides removed, engage the lifting trunnions. Raise the cask to vertical by rotating the cask rotation sockets on the rear cask supports, moving the crane and/or trailer as required to keep the lift yoke engaged to the trunnions and the cask engaged in the rear supports. When the cask is fully vertical, lift the cask from the supports and remove it from the trailer/container.
8. Place the cask into the dry loading station.
9. Disengage the lift yoke.
10. Visually inspect the neutron shield tank fill, drain and level inspection plugs for signs of neutron shield fluid leakage.
11. Remove the vent and drain port covers. Prior to reinstallation of the port covers, carefully inspect the port cover O-ring seals and, if the O-rings show any damage, replace them with approved spares. Ensure that the replacement O-rings are properly installed and seated. Visually inspect the vent and drain quick-disconnect nipples and replace them, if necessary.

    Note: For Alternate B port covers, replace the metallic O-ring with an approved spare prior to reinstallation.

12. Remove closure lid bolts. Attach the lid lift slings to the closure lid. Remove the closure lid and set it on a support that is suitable for radiological control and for maintaining the cleanliness of the closure lid. Prior to reinstallation of the lid, carefully inspect the Teflon O-ring seal in the underside of the closure lid. If the O-ring shows any damage, replace it. Remove the metallic O-ring and replace it with an approved spare. Ensure that the replacement O-rings are properly installed and seated. Inspect the lid bolts and replace any that are damaged.
13. Visually inspect the cask cavity for foreign material or damage. Clean as necessary. Install or verify the presence of a correct drain tube assembly including alignment ring.
14. Install the required dry transfer system components to the top of the cask.
15. Position the shielded transfer cask components for basket module loading, as appropriate.
16. Identify the PULSTAR fuel assemblies, fuel rod holders, and fuel cans to be loaded, and verify that the PULSTAR fuel contents comply with the authorized content, heat load and quantity conditions of the CoC. Four basket modules (e.g., one base module, two intermediate modules, and a top module) constitute the 28 MTR basket assembly. Spacers will be used as provided to position the PULSTAR fuel contents, as required.
17. Each module is capable of containing up to seven intact fuel assemblies, fuel rod inserts or a PULSTAR fuel can. Fuel cans are restricted to being loaded into the top and base modules, where the cans may be loaded with intact fuel assemblies or fuel rod holders without loading preference. There are no limitations on loading location for intact fuel assemblies or fuel rod holders in any of the four basket modules.

    The base module is loaded into the cask first, followed by the two intermediate modules and the top module is loaded last.
18. Load the shielded transfer cask with the loaded base basket module.
19. Place the shielded transfer cask containing the base module unit onto the dry transfer system components positioned on the top of the cask.
20. Lower the fuel basket from the transfer cask into the NAC-LWT cask cavity.
21. Repeat the loading and transfer of loaded basket modules until the approved cask loading plan is completed.
22. Install the closure lid onto the cask using the dry transfer system. Visually verify that the lid is properly seated.
23. Remove the dry transfer cask system components from the top of the cask.
24. Install and torque the 12 closure lid bolts to 260 ± 20 ft-lb in three passes using the torquing sequence stamped on the lid.
25. Connect a gas supply line to the vent valve and a drain line to the drain valve.
26. Open the nitrogen or helium gas supply valve and pressurize the cask cavity (< 30 psig) to force any residual water out the drain line. Continue to supply pressurized gas to the cask for a minimum of five minutes after the last residual free water discharges form the drain. Remove the drain and gas supply lines and attach a vacuum drying system (VDS) to the vent.

27. Evacuate the cask cavity to less than or equal to 10 torr (13 mbar) and continue vacuum pumping for a minimum of 15 minutes.
28. At the end of the vacuum pumping period, isolate the cask cavity from the vacuum pump and stop the vacuum pump, and monitor the cask cavity pressure for a minimum of 10 minutes. If the pressure rise is less than 5 torr (6.7 torr), the cavity is verified dry of free water. If the pressure rise is >5 torr (6.7 mbar), continue vacuum drying until the dryness verification is completed satisfactorily.
29. Backfill the cask cavity with helium to 0 psig (1 atmosphere, absolute), +1, -0 psi. Disconnect the VDS from the vent valve.
30. Perform the helium leakage test of the closure lid containment O-ring using a Helium Mass Spectrometer Leak Detector (He MSLD) in accordance with the requirements of Section 8.1.3.1, Steps 3 through 10.
31. Install the vent and drain alternate port covers and torque the bolts to 100 ±10 inch-pounds.
32. If an alternate port cover containment O-ring seal was replaced, perform a helium leakage test on the affected port cover using a He MSLD in accordance with the requirements of Section 8.1.3.2.2.
33. If the alternate port cover containment seal was inspected and accepted for reuse, perform an air pressure drop leakage test on the affected port cover as follows.
    a. Install a pressure test fixture to the port cover test port, including a calibrated pressure gauge with a minimum sensitivity of 0.25 psi.
    b. Pressurize the port cover seal annulus to 15 psig, +1, -0 psi.
    c. Isolate the gas supply and observe the pressure gauge for a minimum of five minutes.
    d. The acceptance criterion for the test is no measurable drop in pressure during the minimum test time. An acceptable test assures that the minimum assembly verification leakage test sensitivity is achieved.

    Note: Alternate B port covers, if used, require the satisfactory completion of a helium maintenance leakage rate test for each loaded transport. Install the Alternate B port cover and perform the maintenance leakage rate test per the requirements of 8.1.3.3.2.
34. Decontaminate the cask. Survey the cask for surface contamination and radiation dose rates.

    Note: Ensure compliance with 10 CFR 71.87(i) and 10 CFR 71.47.
35. Engage the cask lifting yoke to the lifting trunnions.
36. Lift the cask and position the cask rotation sockets in the rear rotation trunnions of the rear support structure. Carefully lower the cask to the horizontal transport orientation resting on the front saddle by moving the crane and/or the trailer as required to maintain cask engagement to the rear supports.
37. Disengage the lifting yoke from the lifting trunnions and remove it from the area.
38. Install the cask tie-down strap. Install the top and bottom impact limiters.
39. Install a TID to an attachment point on the top impact limiter.

40. Install ISO container bracing and lid.
41. Complete radiation and contamination surveys of the external surfaces of the package and record the data. Ensure removable contamination and radiation dose rate survey results comply with the limits specified in 10 CFR 71.87(i) and (j).
42. Measure the dose rate in millirems per hour at one meter from the package surface to determine the Transport Index (TI). Indicate the TI on the Radioactive Material labels applied to the package in accordance with 49 CFR 172, Subpart E.
43. Determine the appropriate Criticality Safety Index (CSI) assigned to the package contents in accordance with the Certificate of Compliance, and indicate the correct CSI on the Fissile Material label applied to the package per 49 CFR 172, Subpart E.
44. Apply appropriate placards to the transport vehicle in accordance with 49 CFR 172, Subpart F.
45. Complete the shipping documents and provide the carrier with instructions regarding the requirements for maintaining an exclusive use shipment.

7.1.11 Procedure for Dry Loading of TPBAR Waste Container

This section describes the procedure for the loading of a TPBAR Waste Container into a NAC-LWT cask in a dry loading facility. Appropriate radiological controls and procedures addressing tritium shall be utilized by the licensee, including appropriate monitoring for tritium exposure.

NAC-LWT casks to be used for the transport of TPBARs shall be configured as shown on Drawing No. 315-40-128, including Alternate B port covers.

1. Perform a receiving survey of the ISO and trailer, and inspect for damage.
2. Position the trailer in the designated cask unloading area. Set the trailer brakes and chock the wheels to prevent unintended movement. If site-specific conditions exist that require the trailer to move to allow the cask to be uprighted on its rotation trunnions, release the
brakes and remove the chocks when required to complete the uprighting operations. If necessary, the ISO container may be removed from the trailer and secured in the unloading area.
3. Licensees shall receive and survey the package for radiation and removable contamination (for both gross beta-gamma and tritium) per 10 CFR 20 and 49 CFR 173. Record the survey results. If radiation or contamination levels exceed the limits of 49 CFR 173.441 or 173.443, respectively, the licensee shall notify the shipper and ensure the appropriate notifications are completed.
4. Remove the roof from the ISO container and open the front and rear ISO doors. Remove the ISO roof cross members, if installed.
5. Remove the top and bottom impact limiters.
6. Remove the cask tie-down strap. Complete the radiation and contamination surveys of the package as additional surfaces become accessible. Clean the cask surfaces as required for entry into the dry loading facility.
7. Using the cask lifting yoke with lift yoke arm guides removed, engage the lifting trunnions of the front end of the cask. Raise the cask to a vertical position on the rear

cask supports, moving the crane and/or trailer, as required, to keep the cask engaged in the rear cask supports and the crane cable vertical. When the cask is vertical, block the trailer wheels and lift the cask from the container.

8. Place the cask in a transfer cart or a loading fixture. Disengage the lifting yoke.
9. Remove the Alternate B vent and drain valve port covers. Replace the metallic seal with an approved spare and inspect the Viton® O-ring seal on each cover. If the Viton® O-ring shows any damage, replace it. Ensure the replacement O-rings are properly installed and seated. Store the port cover to protect the seal surfaces. Visually inspect the vent and drain valved quick-disconnect nipples and replace, if necessary.
10. Loosen and remove all closure lid bolts.
11. Attach the lid removal fixture to the closure lid.
12. Use a transfer cart or loading fixture and move the cask into the loading position.
13. Remove the closure lid and set it on a support that is suitable for radiological control and for maintaining the cleanliness of the closure lid. Carefully inspect the Teflon O-ring seal in the underside of the closure lid. If the O-ring shows any damage, replace it. Remove the metallic O-ring and replace it with an approved spare. Ensure the replacement O-rings are properly installed and seated. Inspect the lid bolts and replace any that are damaged. Verify that the TPBAR spacer is installed on the bottom of the cask lid and not damaged when the lid is set down.
14. Install the seal surface protector in the lid cavity, if required.
15. Load the TPBAR Waste Container into the TPBAR basket positioned in the cask cavity using the required grapple or handling system. Verify the contents of the Waste Container comply with the CoC content conditions.
16. Remove the cask seal surface protector, if used, and install the cask closure lid.
17. Use the transfer cart or loading fixture and remove the cask from the loading area.
18. Inspect, install and tighten all 12 closure lid bolts to 260 ± 20 ft-lbs in three passes using the torque sequence indicated on the closure lid.
19. Connect a vacuum pump to the cask vent valve.
20. Perform the helium mass spectrometer maintenance leakage rate test on the cask lid to leaktight criteria in accordance with the requirements of Section 8.1.3.1, Steps 3 through 10.
21. Following successful completion of the helium backfill and helium leak testing of the lid seal, monitor the cavity volume for tritium and record the results.

    Note: Tritium monitoring system shall have a minimum sensitivity of 5×10^{-3} micro curies/cc.

22. Install Alternate B port covers on the vent and drain openings and torque each port cover bolt to 285 ± 15 in-lbs. Perform a helium leakage rate test on each port cover to leaktight criteria in accordance with Section 8.1.3.3.2.
23. Decontaminate the cask. Survey the cask surface for gross beta-gamma and tritium removable contamination levels, and radiation dose rates.

    Note: Removable contamination levels and radiation levels shall comply with 49 CFR 173.443 and 173.441, respectively.

24. Using the cask lifting yoke with the guide arms removed, lift and position the cask in the rear cask supports on the ISO/trailer. Engage the trunnion pockets in the bottom end of the cask with the rotation trunnions. Lower the cask to rest on the front tiedown saddle, moving the crane, and/or trailer, as required, to keep the crane cables vertical. Disengage the cask lifting yoke from the cask lifting trunnions and set it aside.
25. Install and attach the cask tiedown strap. Install the cask top and bottom impact limiters.
26. Install a TID to an attachment point on the top impact limiter.
27. Install roof cross members, close ISO container doors, and replace ISO container roof.
28. Complete a Health Physics survey on the external surface of the package and record the results. Complete dose rate measurements at the cask surface, at 1 meter from the cask surface, and at 2 meters from the vertical plane of the side of the transport vehicle. The maximum dose rate at 1 meter from the cask is the transport index (TI). Ensure compliance with 10 CFR 71.87(i) and observe the following criteria.
    - If the dose rate is less than 2 mSv/h (200 mrem/hr) at all accessible points on the external surface of the cask, and the TI is less than 10, the package must meet the requirements of 10 CFR 71.47 (a).
    - If the dose rate is greater than 2 mSv/h (200 mrem/hr), but is less than 10 mSv/h (1000 mrem/hr) at any point on the external surface of the package, or the TI is greater than 10, the package must be shipped as "exclusive use" and meet the requirements of 10 CFR 71.47 (b), (c) and (d). If the dose rate and shipping requirements of 10 CFR 71.47 (b), (1), (2), (3) and (4) cannot be met, the package cannot be shipped.

    Note: 10 CFR 71.47 (c) and (d) require the shipper to provide the carrier with written instructions for maintenance of the exclusive use shipment. The instructions must be included with the shipping paper information. The instructions must be sufficient so that, when followed, they cause the carrier to avoid actions that unnecessarily delay delivery or unnecessarily result in increased radiation levels or radiation exposures to transport workers or members of the general public.

    - If the dose rate is > 10 mSv/h (1000 mrem/hr) at any point on the external surface of the cask, the cask exceeds the limits of 10 CFR 71.47 and cannot be shipped.
29. Complete the shipping document, carrier instructions (if required), and apply appropriate placards and labels.

7.1.12 Procedure for Wet Loading PWR MOX Fuel Rods in a Transport Canister Into the NAC-LWT Cask

PWR MOX fuel rods (or combinations of PWR MOX and UO_2 PWR fuel rods) are required to be loaded into a screened or free flow PWR/BWR Rod Transport Canister prior to loading into the NAC-LWT cask for transport. Although a maximum quantity of 16 MOX fuel rods may be shipped, it is required that the 5 × 5 rod insert be used to position the rods in the transport canister (i.e., the 4 × 4 insert is not authorized for use for the transport of MOX fuel rods).

In order to satisfy the increased potential for release of significant quantities of radioactive materials, and as recommended by NUREG-1617, Supplement 1, the NAC-LWT cask assembly specified for the transport of PWR MOX fuel rods contained in a transport canister provides a leaktight containment boundary.

The screened or free flow transport canister with a 5 × 5 rod insert will be loaded with up to 16 PWR MOX fuel rods (or a combination of up to 16 PWR MOX and UO_2 PWR fuel rods). In addition to the 16 PWR MOX fuel rods, up to 9 zirconium alloy-based burnable poison rods (BPRs) may be loaded into the unused insert openings.

NAC-LWT casks to be used for the transport of MOX fuel rods shall be configured as shown on Drawing No. 315-40-104, Assembly 97.

1. Perform a receiving survey of the empty cask and inspect for damage.
2. Position a trailer in the designated cask unloading area. Set the trailer brakes and chock the wheels to prevent unintended movement. If site-specific conditions exist that require the trailer to move to allow the cask to be uprighted on its rotation trunnions, release brakes and remove the chocks when required to complete uprighting operations. If an ISO is used, it may be removed from the trailer and secured in the unloading area.
3. Remove the roof from the ISO container and open the front and rear ISO doors. Remove roof cross-members, if installed.

   Note: Verify that the package nameplate displays the package identification number, USA/9225/B(U)F-96, as required by the CoC for PWR MOX fuel rods.
4. Perform a Health Physics survey of the cask and adjacent surfaces of the trailer.

   Note: A receiving survey of the cask and transporter must be performed as soon as practical after arrival at the site to assure compliance with 10 CFR 71.87(i) and 10 CFR 71.47, and to assure timely reporting of any reportable noncompliance.
5. Remove the top and bottom impact limiters.
6. Remove the cask tie-down strap.
7. Using the lifting yoke with the guides removed, engage the lifting trunnions. Raise the cask to vertical by rotating the cask rotation sockets on the rear cask supports, moving the crane and/or trailer as required to maintain the lift yoke engaged to the trunnions and the cask engaged in the rear supports. When the cask is fully vertical, lift the cask from the supports and remove it from the trailer/container.
8. Place the cask in the decontamination pit or other designated area. Disengage the lifting yoke. Clean cask surfaces of road dirt, as required, for entry into the spent fuel pool.
9. Visually inspect the neutron shield tank fill, drain and level inspection plugs for signs of neutron shield fluid leakage.
10. Remove the vent and drain valve port covers. Prior to reinstallation of the port covers, carefully inspect the valve port cover O-ring seals and, if the O-rings show any

damage, replace them with approved spares. Ensure that the replacement O-rings are properly installed and seated. Visually inspect the valved quick-disconnect nipples and replace them, if necessary.

Note: For Alternate B port covers, replace the metallic O-ring with an approved spare prior to reinstallation.

11. Remove closure lid bolts. Attach the lid lift slings to the closure lid. Remove the closure lid and set it on a support that is suitable for radiological control and for maintaining the cleanliness of the closure lid. Prior to reinstallation of the lid, carefully inspect the Teflon O-ring seal in the underside of the closure lid. If the O-ring shows any damage, replace it. Remove the metallic O-ring and replace it with an approved spare. Ensure that the replacement O-ring(s) is properly installed and seated. Inspect the lid bolts and replace any that are damaged. Ensure that the Rod Transport Canister spacer is not damaged when the lid is set down.
12. Visually inspect the inner cavity for foreign material or damage. Install or verify the presence of the drain tube and the PWR basket assembly.
13 Fill the cask cavity with clean water. Install lift yoke arm guides and remote actuation components on the cask lifting yoke.
14. Engage the cask lifting yoke with the cask lifting trunnions and pick up the cask. Carefully lower the cask to the bottom of the cask loading area while spraying the cask down with clean water.
15. Disengage the lifting yoke from the cask and remove the yoke from the pool.
16. Identify the PWR/BWR Rod Transport Canister to be loaded and verify that a 5 × 5 rod insert is located in the canister.
17. Identify the PWR MOX fuel rods (and standard PWR rods and BPRs, as applicable) to be loaded into the PWR/BWR Rod Transport Canister. Verify that the fuel rods and BPRs comply with the content type, form, heat load, minimum cooling time and quantity conditions of the NAC-LWT CoC. Load the screened or free flow PWR/BWR transport canister with up to 16 PWR MOX fuel rods, a combination of MOX and standard PWR rods, and up to 9 BPRs in the open tube locations in the 5 × 5 insert. Perform an independent verification of the fuel rod selection and loading process.
18. Install the transport canister lid and torque the lid bolts to 35 ± 5 inch-pounds.
19. Position the loaded PWR/BWR Rod Transport Canister over the cask and then carefully lower it into the cask to avoid damage to the cask sealing surfaces. Note that the transport canister may be loaded into the cask with the PWR basket insert.
20. Position the cask lifting yoke over the cask closure lid. Attach the slings to the closure lid and cask lifting yoke. Lower the yoke over the cask.
21. Position the closure lid over the cask and verify that the appropriate lid spacer is installed per the approved PWR MOX fuel rod transport arrangement in Drawing 315-40-104, Section 1.4. Lower the closure lid into the lid recess using the lid match marks as guides to align the lid. Visually confirm that the closure lid is flush with the top of the cask and properly seated.
22. Lower the cask handling yoke to slack the closure lid cables. Engage the lift yoke to the lifting trunnions and begin lifting the cask.

Note: Visually verify the yoke engagement before lifting the cask.

23. Raise the cask until the lid is slightly above the surface of the pool. At the option of the licensee/user, a number of closure lid bolts (4 to 12) may be installed hand tight.
24. Raise the cask clear of the pool, rinsing the yoke and cask with clean water and transfer the cask to the decontamination pit or other work area. Remove the yoke and lid lift slings.
25. Install and tighten the 12 closure lid bolts to 260 ± 20 ft-lb in three passes, using the torque sequence stamped on the closure lid.
26. At the option of the licensee/user, a 25 to 50 gallon clean water flush of the cask cavity may be performed by connecting a valved clean water line to the drain valve and a valved drain line to the vent valve. After the cavity flushing is completed, if performed, disconnect the water supply and drain lines.
27. Connect a nitrogen or helium gas supply line to the vent valve and the drain line to the drain valve.
28. Open the nitrogen or helium gas supply valve and pressurize the cask cavity (<30 psig) to force out the water. Continue to supply pressurized helium to the cask for a minimum of five minutes after the last residual free water discharges from the drain line. Remove the drain and gas supply lines and attach a vacuum drying system (VDS) to the cask vent valve.
29. Evacuate the cask cavity to a vacuum pressure of less than 10 torr (13 mbar) and continue vacuum pumping for a minimum of 15 minutes.
30. At the end of the vacuum pumping period, isolate the cask cavity from the vacuum pump and stop the pump. Monitor the cask cavity pressure for a minimum of 10 minutes. If the pressure rise is less than 5 torr (6.7 mbar), the cavity is verified as dry of free water. If the pressure rise is greater than 5 torr (6.7 mbar), repeat vacuum drying until the dryness verification results are satisfactory.
31. Backfill the cask cavity with helium to 0 psig (1 atmosphere, absolute), +2, -0 psi. Disconnect the VDS.
32. Perform the helium leakage test of the closure lid containment O-ring using a Helium Mass Spectrometer Leak Detector (He MSLD) in accordance with the requirements of Section 8.1.3.1, Steps 6 through 10.
33. Install the vent and drain port covers and torque the bolts to 100 ± 10 inch-pounds.
34. If an alternate port cover containment O-ring seal was replaced, perform a helium leakage test on the affected port cover using a He MSLD in accordance with the requirements of Section 8.1.3.2.2.
35. If the alternate port cover containment seal was inspected and accepted for reuse, perform a gas pressure drop leakage test on the affected port cover as follows.
    a. Install a pressure test fixture to the port cover test port, including a calibrated pressure gauge with a minimum sensitivity of 0.25 psi.
    b. Pressurize the port cover seal annulus to 15 psig, +1, -0 psi.
    c. Isolate the gas supply and observe the pressure gauge for a minimum of five minutes.

d. The acceptance criterion for the test is no measurable drop in pressure during the minimum test time. An acceptable test assures that the minimum assembly verification leakage test sensitivity is achieved.

Note: Alternate B port covers, if used, require the satisfactory completion of a helium maintenance leakage rate test to confirm a leaktight seal condition for each loaded transport. Install the Alternate B port cover and perform the maintenance leakage rate test per the requirements of Section 8.1.3.3.2.

36. Decontaminate the cask. Survey the cask for surface contamination and radiation dose rates.

    Note: Ensure compliance with 10 CFR 71.87(i) and 10 CFR 71.47.

37. Remove lift yoke arm guides. Engage the cask lifting yoke to the lifting trunnions.
38. Lift the cask and position the cask rotation sockets in the rear rotation trunnions of the rear support structure. Carefully lower the cask to the horizontal transport orientation resting on the front saddle by moving the crane and/or trailer, as required, to maintain cask engagement to the rear supports.
39. Disengage the cask lifting yoke from the cask lifting trunnions and remove it from the area.
40. Install the cask tie-down strap. Install the top and bottom impact limiters.
41. Install a TID to an attachment point on the top impact limiter.
42. Install roof cross-members, close ISO container doors, and replace ISO container roof.
43. Complete radiation and contamination surveys of the external surfaces of the package and record the data. Ensure removable contamination and radiation dose rate survey results comply with the limits specified in 10 CFR 71.87(i) and (j).
44 Measure the dose rate in millirems per hour at one meter from the package surface to determine the Transport Index (TI). Indicate the TI on the Radioactive Material labels applied to the package in accordance with 49 CFR 172, Subpart E.
45. Determine the appropriate Criticality Safety Index (CSI) assigned to the package contents in accordance with the CoC, and indicate the correct CSI on the Fissile Material label applied to the package per 49 CFR 172, Subpart E.
46. Apply appropriate placards to the transport vehicle in accordance with 49 CFR 172, Subpart F.
47. Complete the shipping documents and provide the carrier with instructions regarding the requirements for maintaining an exclusive use shipment.

7.1.13 Procedures for Dry Loading of MTR-28 Basket Modules Containing SLOWPOKE Fuel Canisters into the NAC-LWT Cask

This section presents the steps for dry loading, using a transfer cask, of the MTR-28 basket modules containing SLOWPOKE Fuel Canisters into the NAC-LWT cask. For transport, two MTR-28 basket modules, consisting of a top module and upper intermediate module, and two empty MTR-28 modules (lower intermediate and bottom modules) must be loaded into the NAC-LWT cask. Only the top and upper intermediate MTR-28 basket modules can each contain up to a maximum of four (4) SLOWPOKE Fuel Canisters. The three central fuel cells of these

two modules are blocked with cell block spacers. Therefore, the maximum payload for a single NAC-LWT cask is a maximum of eight SLOWPOKE Fuel Canisters. The two empty lower MTR-28 basket modules are used to ensure proper axial positioning of the complete basket assembly in the NAC-LWT cavity.

For the transport of SLOWPOKE Fuel Canisters, the NAC-LWT package shall be assembled for transport and identified as specified on NAC License Drawing 315-40-158.

The maximum decay heat load of a single SLOWPOKE Fuel Canister is 0.625 Watts and the maximum package decay heat load is 5 Watts.

The procedure for loading the NAC-LWT package with AECL SLOWPOKE Fuel Rods in a dry configuration is as follows:

1. Perform a receiving survey of the ISO and trailer, and inspect for damage. The cask user shall verify by reference to the NAC provided Certificate of Conformance(s) that the identified NAC-LWT cask and associated lift yoke are within the allowable annual maintenance period specified on the certificate(s) prior to loading and release for transport.
2. Position the trailer in the designated cask unloading area. Level the trailer. Set the trailer brakes and chock the wheels to prevent unintended movement. If site-specific conditions exist that require the trailer to move to allow the cask to be uprighted on its rotation trunnions, release the brakes, and remove the chocks when required to complete the uprighting operations. Prior to cask removal, the ISO container may be removed from the trailer and secured in the unloading area, if required.
3. Licensees shall receive and survey the NAC-LWT cask for radiation and removable contamination (for both gross beta-gamma and alpha) per 10 CFR 20 and 49 CFR 173. Open the ISO container front and/or rear doors and record the survey results. If radiation or contamination levels exceed the limits of 49 CFR 173.441 or 173.443, respectively, the user/licensee shall notify the shipper, NAC, and ensure the appropriate notifications are completed.
4. Undo tiedowns and remove the roof from the ISO container. Remove the ISO roof cross members, if installed.
5. Remove the top and bottom impact limiters; collect any TIDs that may be present.
6. Remove the cask tie-down strap. Complete the radiation and contamination surveys of the cask as additional surfaces become accessible. Clean the cask surfaces, as required.
7. Remove the Alt. vent valve port cover. Store the Alt port cover to protect the seal surfaces. Visually inspect the vent valve quick-disconnect nipple and replace if necessary. Prior to installation, inspect the Viton® O-ring seal on the Alt. port cover, and if the O-ring shows any damage, replace it.
8. Install the cask lifting yoke to a crane of sufficient capacity in accordance with the user facilities' heavy lifting program and engage the two lifting trunnions at the front end of the cask. Raise and rotate the cask to a vertical position on the rear cask

supports, moving the crane and/or trailer, as required, to maintain the cask engaged in the rear cask supports. When the cask is vertical, lift the cask from the ISO container.

9. Move and place the cask on a base plate, if required. Connect the base plate to the cask's attachment points using chains and take up slack with the tensioners. Disengage the lifting yoke.
10. Loosen and remove all closure lid bolts. Prior to installation, inspect the lid bolts and replace any that are damaged.
11. Remove the closure lid and set it on a support that is suitable for radiological control and for maintaining the cleanliness of the closure lid. Prior to installation, carefully inspect the Teflon O-ring seal in the underside of the closure lid. If the O-ring shows any damage, replace it. Remove the metallic O-ring from the groove and discard. Clean and visually inspect the groove and lid recess seating surfaces for cleanliness, damage, or degradation. If the groove and lid recess seating surfaces are acceptable, install a new metallic O-ring with an approved spare. Ensure the replacement O-rings are properly installed and seated.
12. Visually inspect the inner cavity for foreign material, free water, or damage. Note deficiencies and correct as required. Remove any shipping dunnage as necessary. Clean all accessible surfaces to include lid sealing surface. Install, or verify the presence of the drain tube and drain alignment ring.
13. Install the LWT internal shield ring.
14. Lift and install the Dry Transfer System (DTS) transfer cask adapter onto the cask. Attach the four retention clamps around the LWT lift trunnions.
15. Verify the proper installation, or install, the empty bottom and lower intermediate MTR-28 basket modules.
16. Identify the top and upper intermediate MTR-28 basket modules to be loaded with SLOWPOKE Fuel Canisters. The mandatory basket module loading sequence is as follows: load or verify installed empty bottom and lower intermediate MTR-28 basket modules; load upper intermediate basket module containing up to four (4) SLOWPOKE Fuel Canisters; and, finally, load the top basket module containing up to four (4) SLOWPOKE Fuel Canisters. The top and upper intermediate MTR-28 basket modules shall each have three (3) cell block spacers installed in the three central fuel cells to prevent inadvertent fuel canister loading. All transports shall consist of all four MTR-28 basket modules assembled in accordance with the mandatory loading sequence.
17. For the initial SLOWPOKE Fuel Canister basket module loading, place the upper intermediate basket module in the Intermediate Transfer System (ITS) inner shield.
18. Move the ITS inner shield into position in the hot cell for the transfer of the loaded SLOWPOKE Fuel Canisters (loaded in accordance with the procedures of Section 7.1.14).
19. Lift the SLOWPOKE Fuel Canister using the handle and lower the Fuel Canister into one of the open (unblocked) fuel cells of the MTR-28 basket module in the ITS inner shield. Disengage the Fuel Canister handling tool. Repeat as required to load up to four (4) SLOWPOKE Fuel Canisters into the basket module.
20. Install the inner shield lid.

21. Move the ITS inner shield assembly containing the loaded MTR-28 basket module to the pre-staged transfer system location.
22. Lift the inner shield assembly containing the loaded MTR-28 basket module and place it through the ITS shield assembly adapter and into the outer shield of the ITS.
23. Disengage the inner shield lid. Lift and remove the inner shield lid through the shield assembly adapter and close the shield assembly adapter gate.
24. Place the DTS transfer cask onto the ITS shield assembly adapter.
25. Open the DTS transfer cask gate.
26. Open the ITS shield assembly adapter gate.
27. Lower the transfer cask grapple into the ITS and engage the MTR-28 basket module.
28. Retract grapple and loaded MTR-28 basket module into the transfer cask.
29. Close the DTS transfer cask shield gate.
30. Lift the DTS transfer cask and place it on the cask adapter assembly positioned on top of the NAC-LWT cask.
31. Open the cask adapter shield gate.
32. Open the DTS transfer shield cask gate and lower the loaded MTR-28 basket module into the NAC-LWT cask cavity.
33. Disengage grapple and retract back into the transfer cask.

    Note: Grapple release can be verified by checking cable for tension.
34. Verify grapple is fully retracted.

    Note: Indication will be physical indicator attached to cable.
35. Close cask adapter shield gate.
36. Repeat steps 17-35 for the top MTR-28 basket module.
37. Perform an independent verification that the loaded AECL fuel rod contents loaded are in full compliance with the NAC-LWT CoC content conditions.
38. Install shield plug and remove shield ring/plug assembly through the cask adapter.
39. Carefully lower the closure lid into position through the cask adapter and visually verify that it is properly seated.
40. Inspect and install lid bolts hand tight.
41. Remove four retention clamps from the cask trunnions and carefully remove transfer cask adapter and position for subsequent decontamination.
42. Tighten all 12 closure lid bolts to 260 ± 20 ft-lbs in three passes using the torque sequence indicated on the closure lid.

    Note: If water was introduced to cask cavity during dry loading operations (due to weather conditions, i.e. snow rain, etc), the NAC LWT cask may be "blown-down" using compressed air or gas in the vertical orientation.

    Note: At the option of the user, the NAC-LWT cask can be placed in a horizontal position in the ISO at this point in the procedure in accordance with Step 49.
43. Connect a vacuum pump to the cask vent valve and evacuate the cask cavity to less than or equal to 10 torr (13 mbar) and continue vacuum pumping for a minimum of 15 minutes.

44. At the end of the vacuum pumping period, isolate the cask cavity from the vacuum pump and stop the vacuum pump. Monitor the cask cavity pressure for a minimum of 10 minutes. If the pressure rise is less than 5 torr (6.7 mbar), the cavity is verified as dry of free water. If the pressure rise is greater than 5 torr (6.7 mbar), repeat the vacuum drying until the dryness verification results are satisfactory.
45. Backfill the cask cavity with helium to 0 psig (1 atmosphere, absolute), +1, -0 psi and disconnect the VDS from the vent valve.
46. Perform a helium leakage rate test of the closure lid containment O-ring using a Helium Mass Spectrometer Leak Detector in accordance with the procedural requirements of Section 8.1.3.1, Steps 3 through 10.
47. Install Alt. port cover in the vent port and torque each port cover bolt to 100, +10,-0 in-lbs.
48. Survey the cask surface for gross beta-gamma and tritium removable contamination levels, and radiation dose rates. Decontaminate the cask, if required.

    Note: Removable contamination levels and radiation levels shall comply with 49 CFR 173.443 and 173.441, respectively.
49. Using the cask lifting yoke, lift, and position the cask in the rear cask supports on the ISO/trailer. Engage the trunnion pockets in the bottom end of the cask with the rotation trunnions. Lower the cask to rest on the front tie-down saddle, moving the crane, and/or trailer, as required. Disengage the cask lifting yoke from the cask lifting trunnions and set it aside.
50. Install and attach the cask tie-down strap. Install the cask top and bottom impact limiters.
51. Install a tamper-indicating seal to one of the top impact limiter ball lock pins.
52. Install roof cross-members, if used; replace ISO container roof and close ISO container doors.
53. Complete a Health Physics survey on the external surface of the package and record the results. Complete dose rate measurements at the cask surface, at 1 meter from the cask surface, and at 2 meters from the vertical plane of the side of the transport vehicle. The maximum dose rate at 1 meter from the cask is the transport index (TI). Ensure compliance with 10 CFR 71.87(i) and observe the following criteria.

- If the dose rate is less than 2 mSv/h (200 mrem/hr) at all accessible points on the external surface of the cask, and the TI is less than 10, the package meets the requirements of 10 CFR 71.47 (a).
- If the dose rate is greater than 2 mSv/h (200 mrem/hr), but is less than 10 mSv/h (1000 mrem/hr) at any point on the external surface of the package, or the TI is greater than 10, the package must be shipped as “exclusive use” and meet the requirements of 10 CFR 71.47 (b), (c) and (d). If the dose rate and shipping requirements of 10 CFR 71.47 (b), (1), (2), (3) and (4) cannot be met, the package cannot be shipped.

Note: 10 CFR 71.47 (c) and (d) require the shipper to provide the carrier with written instructions for maintenance of the exclusive use shipment. The instructions must be included with the shipping paper information. The instructions must be sufficient so that, when followed, they cause the carrier to avoid actions that unnecessarily delay delivery or unnecessarily result in increased radiation levels or radiation exposures to transport workers or members of the general public.

- If the dose rate is > 10 mSv/h (1000 mrem/hr) at any point on the external surface of the cask, the cask exceeds the limits of 10 CFR 71.47 and cannot be shipped.

54. Complete the shipping document, carrier instructions (if required), and apply appropriate placards and labels.

7.1.14 Procedure for the Dry Loading of NRU/NRX Fuel Into the NAC-LWT Cask

This section describes the procedures for loading the NAC-LWT cask with NRU or NRX fuel assemblies/rods. Up to a maximum of 18 undamaged and/or damaged NRU or NRX fuel assemblies or the equivalent number of loose fuel rods may be loaded into an NRU/NRX basket assembly (one basket × 18 cells/basket). The NRU/NRX basket assembly consists of a NRU/NRX basket with 18 fuel cell openings and a bolted lid, and a bottom basket spacer to position the basket at the top of the cask cavity.

All NRX fuel assemblies/rods are required to be placed into a fuel assembly/rod caddy assembly within each basket cell. Loose NRU fuel rods may also be placed into fuel caddy assemblies for handling.

NRU and NRX fuel types shall not be loaded in the same basket (e.g., only a single fuel type is to be loaded into a NAC-LWT packaging).

The maximum decay heat load of a loaded NRU/NRX basket shall be ≤640 Watts.

The maximum content weight (fuel rods, fuel caddy assembly and dunnage) per basket cell shall be ≤ 20 lbs.

The NAC-LWT cask will be loaded dry, utilizing a transfer cask to place each loaded NRU/NRX basket into the NAC-LWT cask cavity. The bottom basket spacer will be preloaded into the cask cavity prior to loading a NRU/NRX fuel basket.

The procedure for dry-loading and preparation for transport of the NAC-LWT with NRU/NRX fuel is as follows:

1. Perform a receiving survey of the ISO and trailer, and inspect for damage. The cask user shall verify by reference to the NAC provided Certificate(s) of Conformance that the identified NAC-LWT cask and associated lift yoke are within the allowable annual

maintenance period specified on the certificate(s) prior to loading and release for transport.

2. Position the trailer in the designated cask unloading area. Level the trailer. Set the trailer brakes and chock the wheels to prevent unintended movement. If site-specific conditions exist that require the trailer to move to allow the cask to be uprighted on its rotation trunnions, release the brakes, and remove the chocks when required to complete the uprighting operations. Prior to cask removal, the ISO container may be removed from the trailer and secured in the unloading area, if required.

   Note: Lifting loaded containers from the top corner fitting with forces applied other than vertically is not permitted; use of an approved container lifting spreader, frame or bottom lift container slings is required.

3. Licensees shall receive and survey the NAC-LWT cask for radiation and removable contamination (for both gross beta-gamma and alpha) per 10 CFR 20 and 49 CFR 173. Open the ISO container front and/or rear doors and record the survey results. If radiation or contamination levels exceed the limits of 49 CFR 173.441 or 173.443, respectively, the user/licensee shall notify the shipper, NAC, and ensure the appropriate notifications are completed.

   Note: Verify that the package nameplate displays the correct package identification number in accordance with the CoC.

4. Remove the roof from the ISO container and cross members, if installed.
5. Remove the top and bottom impact limiters, and remove any TIDs that may be present.
6. Remove the cask tie-down strap. Complete the radiation and contamination surveys of the cask as additional surfaces become accessible. Clean the cask surfaces, as required.
7. Remove the alternate vent and drain port covers. Store the alternate port covers to protect the seal surfaces. Visually inspect the vent valve quick-disconnect nipples and replace if necessary. Prior to installation, inspect the Viton® O-ring seals on the alternate port covers, and if any O-ring shows any damage, replace it.
8. Install the cask lifting yoke with the guides removed to a crane of sufficient capacity in accordance with the user facilities' heavy lifting program and engage the two lifting trunnions at the front end of the cask. Raise and rotate the cask to a vertical position on the rear cask supports, moving the crane and/or trailer, as required, to maintain the cask engaged in the rear cask supports. When the cask is vertical, lift the cask from the ISO container.
9. Move and place the cask on a base plate, if required, at the intended loading station. Connect the base plate to the cask's attachment points using chains and take up slack with the tensioners. Disengage the lifting yoke.
10. Visually inspect the neutron shield tank fill, drain, and level inspection plugs for signs of neutron shield fluid leakage. If leakage is detected or suspected, verify shield tank fluid level and correct, as required.
11. Loosen and remove all closure lid bolts. Prior to installation, inspect the lid bolts and replace any that are damaged.

12. Attach lid lifting slings, or equivalent lid removal fixture, to the closure lid. Remove the closure lid and set it on a support that is suitable for radiological control and for maintaining the cleanliness of the closure lid. Prior to installation, carefully inspect the Teflon O-ring seal in the underside of the closure lid. If the O-ring shows any damage, replace it. Remove the metallic O-ring from the groove and discard. Clean and visually inspect the groove and lid recess seating surfaces for cleanliness, damage, or degradation. If the groove and lid recess seating surfaces are acceptable, install a new metallic O-ring with an approved spare. Ensure the replacement O-rings are properly installed and seated.
13. Visually inspect the inner cavity for foreign material, free water, or damage. Note deficiencies and correct as required. Remove any shipping dunnage as necessary. Clean all accessible surfaces, including the lid sealing surface. Install, or verify the presence of the drain tube and drain alignment ring.
14. Verify the proper installation of, or install, the NRU/NRX bottom basket spacer.
15. Install the required dry transfer system components on the top of the cask.
16. Position the Dry Transfer System (DTS) components for fuel loading, as appropriate.
17. Identify the NRU or NRX fuel assemblies/rods to be loaded, and verify that they comply with the authorized content, heat load and quantity conditions of the CoC.
18. Load the basket module with up to 18 fuel assemblies or the equivalent number or fuel rods of either undamaged and/or damaged NRU or NRX fuel (NRU and NRX fuel types shall not be loaded in the same basket). All NRX fuel assemblies/rods are required to be placed into fuel rod caddy assemblies within each basket cell, while loose NRU fuel rods may also be placed into caddies for handling.
19. Perform an independent verification of the fuel selection and loading process.
20. Install the NRU/NRX basket lid assembly and torque bolts to 20 +/- 2 ft-lbs.
21. Load the shielded transfer cask with the loaded basket.
22. Place the transfer cask containing the basket onto the dry transfer system components positioned on the top of the cask.
23. Lower the loaded NRU/NRX fuel basket from the transfer cask into the NAC-LWT cask cavity.
24. Remove the transfer cask from the dry transfer system adapter.
25. Using the dry transfer system adapter components, install temporary shield plug. Remove shield ring/plug assembly through the dry transfer system adapter.
26. Install the closure lid onto the cask using the dry transfer system. Visually verify that the lid is properly seated.
27. Install lid bolts hand tight.
28. Remove dry transfer system components from the top of the cask.
29. Tighten all 12 closure lid bolts to 260 ± 20 ft-lbs in three passes using the torque sequence indicated on the closure lid.
30. Connect a gas supply line to the vent valve and the drain line to the drain valve.

31. Open the air, nitrogen, or helium gas supply valve and pressurize the cask cavity (< 30 psig) to force any residual water out the drain line. Continue to supply pressurized gas to the cask for a minimum of five minutes after the last residual free water discharges from the drain. Remove the drain and gas supply lines and attach a vacuum drying system (VDS) to the vent.

    Note: At the option of the user, the NAC-LWT cask can be placed in a horizontal position in the ISO at this point in the procedure in accordance with Step 40.

32. Connect the Vacuum Drying System (VDS) to the cask vent valve and evacuate the cask cavity by vacuum pump to less than or equal to 10 torr (13 mbar) and continue vacuum pumping for a minimum of 15 minutes.

33. At the end of the evacuation period, isolate the cask cavity from the vacuum pump and monitor the cask cavity pressure for a minimum of 10 minutes. If the pressure rise is less than 5 torr (6.7 mbar), the cavity is verified as dry of free water. If the pressure rise is greater than 5 torr (6.7 mbar), resume vacuum drying until the dryness verification results are satisfactory.

34. Backfill the cask cavity with helium to 0 psig (1 atmosphere, absolute), +1, -0 psi and disconnect the VDS from the vent valve.

35. Perform a helium leakage test of the closure lid containment O-ring using a Helium Mass Spectrometer Leak Detector (MSLD) in accordance with the requirements of SAR Section 8.1.3.1.

36. Install the vent and drain alternate port covers and torque the bolts to 100 ±10 inch-pounds.

37. If an alternate port cover containment O-ring seal was replaced, perform a helium leakage test on the affected port cover using a He MSLD in accordance with the requirements of SAR Section 8.1.3.2.2.

38. If the alternate port cover containment seal was inspected and accepted for reuse, perform an air pressure drop leakage test on the affected port cover as follows.

    a. Install a pressure test fixture to the port cover test port, including a calibrated pressure gauge with a minimum sensitivity of 0.25 psi.

    b. Pressurize the port cover seal annulus to 15 psig, +1, -0 psi.

    c. Isolate the gas supply and observe the pressure gauge for a minimum of five minutes.

    d. The acceptance criterion for the test is no measurable drop in pressure during the minimum test time. An acceptable test assures that the minimum assembly verification leakage test sensitivity is achieved.

39. Survey the cask surface for removable contamination and radiation dose rates. Decontaminate the cask, if required.

    Note: Removable contamination levels and radiation levels shall comply with 49 CFR 173.443 and 173.441, respectively.

40. Using the cask lifting yoke with guides removed, lift and position the cask in the rear cask supports on the ISO/trailer. Engage the trunnion pockets in the bottom end of the cask with the rotation trunnions. Lower the cask to rest on the front tie-down saddle, moving the crane, and/or trailer, as required.
41. Disengage the cask lifting yoke from the cask lifting trunnions and set it aside.
42. Install and attach the cask tie-down strap. Install the cask top and bottom impact limiters.
43. Install a TID to one of the top impact limiter ball lock pins. Record TID identification number on the loading/shipping documentation.
44. Install roof cross-members, if used and replace ISO container roof.
45. Complete a Health Physics survey on the external surfaces of the package and record the results. Complete dose rate measurements at the package surface, at 1 meter from the package surface, and at 2 meters from the vertical plane of the side of the transport vehicle. The maximum dose rate at 1 meter from the package is the transport index (TI). Ensure compliance with 10 CFR 71.87(i) and observe the following criteria.
    a. If the dose rate is less than 2 mSv/h (200 mrem/hr) at all accessible points on the external surface of the package, and the TI is less than 10, the package meets the requirements of 10 CFR 71.47 (a).
    b. If the dose rate is greater than 2 mSv/h (200 mrem/hr), but is less than 10 mSv/h (1000 mrem/hr) at any point on the external surface of the package, or the TI is greater than 10, the package must be shipped as "exclusive use" and meet the requirements of 10 CFR 71.47 (b), (c) and (d). If the dose rate and shipping requirements of 10 CFR 71.47 (b), (1), (2), (3) and (4) cannot be met, the package cannot be shipped.
    c. If the dose rate is > 10 mSv/h (1000 mrem/hr) at any point on the external surface of the package, the package exceeds the limits of 10 CFR 71.47 and cannot be shipped.
46. Determine the appropriate Criticality Safety Index (CSI) assigned to the package contents in accordance with the CoC, and indicate the correct CSI on the Fissile Material label applied to the package per 49 CFR 172, Subpart E.
47. Complete the shipping documents, carrier instructions (as required), and apply appropriate placards and labels.

7.1.15 Procedure for the Dry Loading of EFN Rods, Moly Targets and Booster Rods Into the NAC-LWT Cask

This section describes the procedures for loading the NAC-LWT cask with EFN rods, Moly targets, or Booster rods. Up to a maximum of 18 NRU/NRX caddies may be loaded with undamaged and/or damaged EFN Rods, Moly Targets, or Booster rods. One single fuel type may be loaded into one NRU/NRX caddy. One caddy may be loaded into one NRU/NRX basket fuel tube (one basket × 18 cells/basket). The NRU/NRX basket assembly consists of the NRU/NRX basket with 18 fuel cell openings and a bolted lid, and a bottom basket spacer to position the basket at the top of the cask cavity.

EFN and Moly targets may be loaded together into a single package. Booster rods may not be mixed with EFN or Moly rods.

The maximum decay heat load of a basket loaded with EFN rods shall be ≤144 Watts. The maximum decay heat load of a basket loaded with both EFN rods and Moly targets shall be ≤101 Watts. The maximum decay heat load of a basket loaded with Booster rods shall be ≤4 Watts.

The maximum content weight (fuel rods/targets, fuel caddy assembly and dunnage) per basket cell shall be ≤ 20 lbs.

The NAC-LWT cask will be loaded dry, utilizing a transfer cask to place each loaded NRU/NRX basket into the NAC-LWT cask cavity. The bottom basket spacer will be preloaded into the cask cavity prior to loading the NRU/NRX fuel basket.

The procedure for dry-loading and preparation for transport of the NAC-LWT with EFN rods, Moly targets and Booster rods is as follows:

1. Perform a receiving survey of the ISO and trailer and inspect for damage. The cask user shall verify by reference to the NAC provided Certificate(s) of Conformance that the identified NAC-LWT cask and associated lift yoke are within the allowable annual maintenance period specified on the certificate(s) prior to loading and release for transport.
2. Position the trailer in the designated cask unloading area. Level the trailer. Set the trailer brakes and chock the wheels to prevent unintended movement. If site-specific conditions exist that require the trailer to move to allow the cask to be uprighted on its rotation trunnions, release the brakes, and remove the chocks when required to complete the uprighting operations. Prior to cask removal, the ISO container may be removed from the trailer and secured in the unloading area, if required.

   Note: Lifting loaded containers from the top corner fitting with forces applied other than vertically is not permitted; use of an approved container lifting spreader, frame or bottom lift container slings is required.
3. Licensees shall receive and survey the NAC-LWT cask for radiation and removable contamination (for both gross beta-gamma and alpha) per 10 CFR 20 and 49 CFR 173. Open the ISO container front and/or rear doors and record the survey results. If radiation or contamination levels exceed the limits of 49 CFR 173.441 or 173.443, respectively, the user/licensee shall notify the shipper, NAC, and ensure the appropriate notifications are completed.

   Note: Verify that the package nameplate displays the correct package identification number in accordance with the CoC.
4. Remove the roof from the ISO container and cross members, if installed.
5. Remove the top and bottom impact limiters and remove any TIDs that may be present.
6. Remove the cask tie-down strap. Complete the radiation and contamination surveys of the cask as additional surfaces become accessible. Clean the cask surfaces, as required.

7. Remove the alternate vent and drain port covers. Store the alternate port covers to protect the seal surfaces. Visually inspect the vent valve quick-disconnect nipples and replace if necessary. Prior to installation, inspect the Viton® O-ring seals on the alternate port covers, and if any O-ring shows any damage, replace it.
8. Install the cask lifting yoke with the guides removed to a crane of sufficient capacity in accordance with the user facilities' heavy lifting program and engage the two lifting trunnions at the front end of the cask. Raise and rotate the cask to a vertical position on the rear cask supports, moving the crane and/or trailer, as required, to maintain the cask engaged in the rear cask supports. When the cask is vertical, lift the cask from the ISO container.
9. Move and place the cask on a base plate, if required, at the intended loading station. Connect the base plate to the cask's attachment points using chains and take up slack with the tensioners. Disengage the lifting yoke.
10. Visually inspect the neutron shield tank fill, drain, and level inspection plugs for signs of neutron shield fluid leakage. If leakage is detected or suspected, verify shield tank fluid level and correct, as required.
11. Loosen and remove all closure lid bolts. Prior to installation, inspect the lid bolts and replace any that are damaged.
12. Attach lid lifting slings, or equivalent lid removal fixture, to the closure lid. Remove the closure lid and set it on a support that is suitable for radiological control and for maintaining the cleanliness of the closure lid. Prior to installation, carefully inspect the Teflon O-ring seal in the underside of the closure lid. If the O-ring shows any damage, replace it. Remove the metallic O-ring from the groove and discard. Clean and visually inspect the groove and lid recess seating surfaces for cleanliness, damage, or degradation. If the groove and lid recess seating surfaces are acceptable, install a new metallic O-ring with an approved spare. Ensure the replacement O-rings are properly installed and seated.
13. Visually inspect the inner cavity for foreign material, free water, or damage. Note deficiencies and correct as required. Remove any shipping dunnage as necessary. Clean all accessible surfaces, including the lid sealing surface. Install, or verify the presence of the drain tube and drain alignment ring.
14. Verify the proper installation of, or install, the NRU/NRX bottom basket spacer.
15. Install the required dry transfer system components on the top of the cask.
16. Position the Dry Transfer System (DTS) components for fuel loading, as appropriate.
17. Identify the EFN, Moly, or Booster rods/targets to be loaded, and verify that they comply with the authorized content, heat load and quantity conditions of the CoC.
18. Load either undamaged and/or damaged EFN, Moly, or Booster rods/targets into fuel rod caddy assemblies.

    Note: Caddies with rods/targets or segments/fragments thereof smaller than 6 inches in length shall have caddy plugs installed.
19. Insert the caddy plug in the caddy after it has been loaded for all caddies loaded with rods/targets or segments/fragments thereof smaller than 6 inches in length.

20. Load the basket module with up to 18 fuel rod caddies of EFN, Moly, or Booster rods/targets.

    Note: EFN rods and Moly targets may be loaded in the same basket, but Booster rods shall not be loaded in the same basket as either EFN rods or Moly targets.

    Note: In a mixed loads EFN rods are limited to basket peripheral locations.

21. Perform an independent verification of the fuel selection and loading process.
22. Install the NRU/NRX basket lid assembly and torque bolts to 20 +/- 2 ft-lbs.
23. Load the shielded transfer cask with the loaded basket.
24. Place the transfer cask containing the basket onto the dry transfer system components positioned on the top of the cask.
25. Lower the loaded NRU/NRX fuel basket from the transfer cask into the NAC-LWT cask cavity.
26. Remove the transfer cask from the dry transfer system adapter.
27. Using the dry transfer system adapter components, install temporary shield plug. Remove shield ring/plug assembly through the dry transfer system adapter.
28. Install the closure lid onto the cask using the dry transfer system. Visually verify that the lid is properly seated.
29. Install lid bolts hand tight.
30. Remove dry transfer system components from the top of the cask.
31. Tighten all 12 closure lid bolts to 260 ± 20 ft-lbs in three passes using the torque sequence indicated on the closure lid.
32. Connect a gas supply line to the vent valve and the drain line to the drain valve.
33. Open the air, nitrogen, or helium gas supply valve and pressurize the cask cavity (< 30 psig) to force any residual water out the drain line. Continue to supply pressurized gas to the cask for a minimum of five minutes after the last residual free water discharges from the drain. Remove the drain and gas supply lines and attach a vacuum drying system (VDS) to the vent.

    Note: At the option of the user, the NAC-LWT cask can be placed in a horizontal position in the ISO at this point in the procedure in accordance with Step 42.

34. Connect the Vacuum Drying System (VDS) to the cask vent valve and evacuate the cask cavity by vacuum pump to less than or equal to 10 torr (13 mbar) and continue vacuum pumping for a minimum of 15 minutes.
35. At the end of the evacuation period, isolate the cask cavity from the vacuum pump and monitor the cask cavity pressure for a minimum of 10 minutes. If the pressure rise is less than 5 torr (6.7 mbar), the cavity is verified as dry of free water. If the pressure rise is greater than 5 torr (6.7 mbar), resume vacuum drying until the dryness verification results are satisfactory.
36. Backfill the cask cavity with helium to 0 psig (1 atmosphere, absolute), +1, -0 psi and disconnect the VDS from the vent valve.
37. Perform a helium leakage test of the closure lid containment O-ring using a Helium Mass Spectrometer Leak Detector (MSLD) in accordance with the requirements of SAR Section 8.1.3.1.

38. Install the vent and drain alternate port covers and torque the bolts to 100 ±10 inch-pounds.
39. If an alternate port cover containment O-ring seal was replaced, perform a helium leakage test on the affected port cover using a He MSLD in accordance with the requirements of SAR Section 8.1.3.2.2.
40. If the alternate port cover containment seal was inspected and accepted for reuse, perform an air pressure drop leakage test on the affected port cover as follows.
    a. Install a pressure test fixture to the port cover test port, including a calibrated pressure gauge with a minimum sensitivity of 0.25 psi.
    b. Pressurize the port cover seal annulus to 15 psig, +1, -0 psi.
    c. Isolate the gas supply and observe the pressure gauge for a minimum of five minutes.
    d. The acceptance criterion for the test is no measurable drop in pressure during the minimum test time. An acceptable test assures that the minimum assembly verification leakage test sensitivity is achieved.
41. Survey the cask surface for removable contamination and radiation dose rates. Decontaminate the cask, if required.

    Note: Removable contamination levels and radiation levels shall comply with 49 CFR 173.443 and 173.441, respectively.
42. Using the cask lifting yoke with guides removed, lift and position the cask in the rear cask supports on the ISO/trailer. Engage the trunnion pockets in the bottom end of the cask with the rotation trunnions. Lower the cask to rest on the front tie-down saddle, moving the crane, and/or trailer, as required.
43. Disengage the cask lifting yoke from the cask lifting trunnions and set it aside.
44. Install and attach the cask tie-down strap. Install the cask top and bottom impact limiters.
45. Install a TID to one of the top impact limiter ball lock pins. Record TID identification number on the loading/shipping documentation.
46. Install roof cross-members, if used and replace ISO container roof.
47. Complete a Health Physics survey on the external surfaces of the package and record the results. Complete dose rate measurements at the package surface, at 1 meter from the package surface, and at 2 meters from the vertical plane of the side of the transport vehicle. The maximum dose rate at 1 meter from the package is the transport index (TI). Ensure compliance with 10 CFR 71.87(i) and observe the following criteria.
    a. If the dose rate is less than 2 mSv/h (200 mrem/hr) at all accessible points on the external surface of the package, and the TI is less than 10, the package meets the requirements of 10 CFR 71.47 (a).
    b. If the dose rate is greater than 2 mSv/h (200 mrem/hr), but is less than 10 mSv/h (1000 mrem/hr) at any point on the external surface of the package, or the TI is greater than 10, the package must be shipped as “exclusive use” and meet the requirements of 10 CFR 71.47 (b), (c) and (d). If the dose rate and shipping requirements of 10 CFR 71.47 (b), (1), (2), (3) and (4) cannot be met, the package cannot be shipped.

c. If the dose rate is > 10 mSv/h (1000 mrem/hr) at any point on the external surface of the package, the package exceeds the limits of 10 CFR 71.47 and cannot be shipped.

48. Determine the appropriate Criticality Safety Index (CSI) assigned to the package contents in accordance with the CoC, and indicate the correct CSI on the Fissile Material label applied to the package per 49 CFR 172, Subpart E.
49. Complete the shipping documents, carrier instructions (as required), and apply appropriate placards and labels.

7.1.16 Procedure for Loading AECL SLOWPOKE Fuel Rod Contents Into the SLOWPOKE Fuel Canister

The following general procedures provide guidance for the loading of AECL SLOWPOKE fuel rod contents into individual fuel can inserts, which are then subsequently placed into a SLOWPOKE Fuel Canister. The Fuel Canister is subsequently loaded into a MTR-28 upper intermediate or top basket module for dry transferred into the NAC-LWT cask using the Dry Transfer System (DTS).

The SLOWPOKE Fuel Canister includes a welded fuel canister body into which four (4) 5 x 5 inserts (assembled of 0.40 inch nominal internal diameter insert tubes for intact SLOWPOKE Fuel Rods) and/or four (4) 4 x 4 inserts (assembled of 0.53 inch nominal internal diameter insert tubes for damaged SLOWPOKE Fuel Rods) are stacked to allow for the placement of up to 100 fuel rods in each SLOWPOKE Fuel Canister. The Fuel Canister is closed by a lockable, spring-loaded lid assembly, which incorporates a lid handle for loaded Fuel Canister handling. The lid assembly incorporates two lid latch bolts with lock washers and torque to 30 ± 5 in-lbs, which prevent inadvertent lid removal during shipment and handling. The SLOWPOKE Fuel Canister is provided with an aluminum bottom screened opening and two upper side aluminum screened openings to allow for the self-draining of the Fuel Canister if stored in water at the receiving facility prior to final processing. Each of the insert tubes is notched at the base of the tube to facilitate draining of each insert tube through the bottom screened opening. The screened openings and tight fitting lid retains fuel debris and minimizes the potential for release of fuel debris from the SLOWPOKE Fuel Canister to the NAC-LWT internal cavity.

The SLOWPOKE Fuel Canisters are visually inspected, load tested, and the welds examined following fabrication prior to acceptance for use. The AECL SLOWPOKE fuel rod contents shall be verified as meeting the quantity, decay heat and fissile content limits of the NRC Certificate of Compliance (CoC) prior to loading. The radioactive materials to be loaded in each SLOWPOKE Fuel Canister shall be identified and recorded as part of the packaging manifest for the cask shipment. Independent confirmation of the identification and location of the radioactive materials shall be made during the loading operations.

The procedure for loading AECL SLOWPOKE fuel rod contents into the Fuel Canister is as follows:

1. Verify the specific AECL SLOWPOKE Fuel Rod contents to be loaded into the 5 x 5 or 4 x 4 canister insert meet the content condition limits of the CoC for quantity, maximum mass, maximum decay heat, maximum fissile content and waste form. Damaged fuel rods shall be placed in 4 x 4 rod insert assemblies, as required.
2. Verify the SLOWPOKE Fuel Canister and insert assemblies comply with the requirements of NAC Drawing 315-40-156.
3. Visually inspect the Fuel Canister, Lid and rod insert assemblies and verify the components condition do not show signs of damage—e.g., bulging or buckling, breaching, and does not have rips, tears, holes or pointed dents that could affect packaging or transport operations. Record the SLOWPOKE Fuel Canister serial number and the results of the visual inspection on the Cask Loading Report.
4. Position the appropriate 5 x 5 or 4 x 4 insert assembly in the hot cell.
5. Individually load the AECL SLOWPOKE fuel rods into the designated insert assembly.
6. After completion of loading the designated fuel rods, lift and place the loaded fuel rod insert into the SLOWPOKE Fuel Canister.
7. Repeat Steps 5 through 7 until a total of four (4) fuel rod insert assemblies are loaded and positioned in the SLOWPOKE Fuel Canister.
8. With the spring plunger in the unlocked position, insert the self-locking lid assembly into the top of the Fuel Canister. Torque the two lid latch bolts and lock washers to 30 ± 5 inch-pounds.
9. Lift the filled SLOWPOKE Fuel Canister and place it into the MTR-28 upper intermediate or top basket module per the procedures in 7.1.13.

7.1.17 Procedure for the Dry Loading of HEUNL Contents into the NAC-LWT Cask

This section describes the procedural steps required to load and prepare the NAC-LWT cask for transport with HEUNL contents. Four HEUNL containers are to be loaded into a NAC-LWT, configured as shown on Drawing No. 315-40-180, using empty HEUNL containers as spacers if four (4) filled HEUNL containers are not loaded into the cask.

Depending on facility capabilities and/or site restrictions, the HEUNL containers shall be filled and prepared for transport in accordance with the operating procedures in Section 7.1.17. The filled and tested HEUNL containers will then be loaded in the NAC-LWT cask in either a vertical or horizontal orientation utilizing a facility-specific Dry Transfer and Loading System. The operating procedures in this section are based on the vertical and horizontal loading of the HEUNL containers into the NAC-LWT cask cavity.

7.1.17.1 Vertical Dry Loading of HEUNL Containers into the NAC-LWT

1. Perform a receiving survey of the cask ISO container and inspect for damage.
2. Open the front and rear ISO doors and perform a Health Physics survey of the cask and adjacent surfaces of the trailer for radiation and removable contamination per 10 CFR 20 and 49 CFR 173. If radiation or contamination levels exceed the limits of 49 CFR 173.441 or 173.443, respectively, the user/licensee shall notify the shipper, NAC, and ensure the appropriate notifications are completed.

   Note: Verify that the package nameplate displays the package identification number, in accordance with the CoC.
3. Remove the roof from the ISO container. Remove roof cross-members, if installed.
4. Remove the top impact limiter and tamper indicating device (TID), if installed.
5. Remove the bottom impact limiter.
6. Remove the cask tie-down strap.
7. Using the lifting yoke with the guides removed, engage the lifting trunnions. Raise the cask to vertical by rotating the cask rotation sockets on the rear cask supports, moving the crane and/or trailer as required to maintain the lift yoke engaged to the trunnions and the cask engaged in the rear supports. When the cask is fully vertical, lift the cask from the supports and remove it from the trailer/container.
8. Place the cask in a cask baseplate or other designated loading area. Disengage the lifting yoke. Clean cask surfaces of road dirt, as required.
9. Visually inspect the neutron shield tank fill, drain and level inspection plugs for signs of neutron shield fluid leakage. If leakage is detected, verify shield tank fluid level and correct, as required.
10. Remove the vent and drain valve port covers. Prior to reinstallation of the port covers, carefully inspect the valve port cover O-ring seals. If the O-rings show any damage, replace them with approved spares. Ensure that the replacement O-rings are properly installed and seated. Visually inspect the valved quick-disconnect nipples and replace them, if necessary.
11. Loosen and remove all closure lid bolts.
12. Attach the lid removal rigging to the closure lid.
13. Remove the closure lid and set it on a support that is suitable for radiological control and for maintaining the cleanliness of the closure lid. Carefully inspect the Teflon O-ring seal in the underside of the closure lid. If the O-ring shows any damage, replace it. Remove the metallic O-ring and replace it with an approved spare. Ensure the replacement O-rings are properly installed and seated. Inspect the lid bolts and replace any that are damaged.
14. Remove the four empty HEUNL containers and place them into the facility for loading of HEUNL material in accordance with Section 7.1.17, if the received NAC-LWT cask contained empty containers.
15. Verify that the HEUNL Container Spacer is installed properly in the bottom of the cask cavity. If required, install or verify the presence of the HEUNL container guide. Visually inspect the inner cavity for foreign material or damage. Clean all accessible surfaces, including the lid sealing surface.

16. Install the seal surface protector in the lid cavity, if required.
17. Load the first HEUNL container into the cask cavity using the vertical Dry Transfer System and utilizing the HEUNL container guide to align and rotationally orient the HEUNL container within the cask cavity.
18. Record and verify the identification number of the HEUNL container and independently verify the HEUNL contents comply with the CoC content conditions.
19. Repeat the loading and independent verification of the HEUNL containers into the cask cavity until four (4) HEUNL containers are loaded into the cask. If required, an empty HEUNL container shall be loaded to bring the total number of HEUNL containers in the cask cavity to four.
20. Remove the cask seal surface protector, if used, and install the cask closure lid.
21. Inspect, install and tighten all 12 closure lid bolts to 260 ± 20 ft-lbs in three passes using the torque sequence indicated on the closure lid.
22. Connect a vacuum pump to the cask vent valve.
23. Perform the helium mass spectrometer maintenance leakage test on the closure lid to leaktight criteria in accordance with the requirements of Section 8.1.3.1, Steps 3 through 10.
24. Install alternate port covers on the vent and drain openings and torque each port cover bolt to 100 ± 10 inch-pounds.
25. If an alternate port cover containment O-ring seal was replaced, perform a helium leakage test on the affected port cover using a He MSLD in accordance with the requirements of Section 8.1.3.2.2.
26. If the alternate port cover containment seal was inspected and accepted for reuse, perform a gas pressure drop leakage test on the port cover as follows.
    a. Install a pressure test fixture to the port cover test port, including a calibrated pressure gauge with a minimum sensitivity of 0.25 psi.
    b. Pressurize the port cover seal annulus to 15 psig, +1, -0 psi.
    c. Isolate the gas supply and observe the pressure gauge for a minimum of five minutes.
    d. The acceptance criterion for the test is no measurable drop in pressure during the minimum test time. An acceptable test assures that the minimum assembly verification leakage test sensitivity is achieved.
27. Decontaminate the cask. Survey the cask for surface contamination and radiation dose rates and decontaminate the cask as required.

    Note: Removable contamination levels and radiation levels shall comply with 49 CFR 173.443 and 173.441, respectively.
28. Using the cask lifting yoke with the guide arms removed, lift and position the cask in the rear cask supports on the ISO/trailer. Engage the trunnion pockets in the bottom end of the cask with the rotation trunnions. Lower the cask to rest on the front tiedown saddle, moving the crane, and/or trailer, as required, to keep the crane cables vertical. Disengage the cask lifting yoke from the cask lifting trunnions and set it aside.

29. Install and attach the cask tie-down strap. Install the cask top and bottom impact limiters.
30. Install a TID to an attachment point on the top impact limiter.
31. Install roof cross-members; close ISO container doors, and replace ISO container roof.
32. Complete a Health Physics survey on the external surfaces of the package and record the results. Complete dose rate measurements at the package surface, at 1 meter from the package surface, and at 2 meters from the vertical plane of the side of the transport vehicle. The maximum dose rate at 1 meter from the package is the transport index (TI). Ensure compliance with 10 CFR 71.87(i) and observe the following criteria.
    a. If the dose rate is less than 2 mSv/h (200 mrem/hr) at all accessible points on the external surface of the package, and the TI is less than 10, the package meets the requirements of 10 CFR 71.47 (a).
    b. If the dose rate is greater than 2 mSv/h (200 mrem/hr), but is less than 10 mSv/h (1000 mrem/hr) at any point on the external surface of the package, or the TI is greater than 10, the package must be shipped as "exclusive use" and meet the requirements of 10 CFR 71.47 (b), (c) and (d). If the dose rate and shipping requirements of 10 CFR 71.47 (b), (1), (2), (3) and (4) cannot be met, the package cannot be shipped.

        Note: 10 CFR 71.47 (c) and (d) require the shipper to provide the carrier with written instructions for maintenance of the exclusive use shipment. The instructions must be sufficient so that, when followed, they cause the carrier to avoid actions that unnecessarily delay delivery or unnecessarily result in increased radiation levels or radiation exposures to transport workers or members of the general public.

    c. If the dose rate is > 10 mSv/h (1000 mrem/hr) at any point on the external surface of the cask, the cask exceeds the limits of 10 CFR 71.47 and cannot be shipped.
33. Complete the shipping documents, carrier instructions (if required), and apply appropriate placards and labels.

7.1.17.2 Horizontal Dry Loading of HEUNL Containers into the NAC-LWT

1. Perform a receiving survey of the cask ISO container and inspect for damage.
2. Open the front and rear ISO doors and perform a Health Physics survey of the cask and adjacent surfaces of the trailer for radiation and removable contamination per 10 CFR 20 and 49 CFR 173. If radiation or contamination levels exceed the limits of 49 CFR 173.441 or 173.443, respectively, the user/licensee shall notify the shipper, NAC, and ensure the appropriate notifications are completed.

    Note: Verify that the package nameplate displays the package identification number in accordance with the CoC.
3. Remove the roof from the ISO container. Remove roof cross-members, if installed, as required to remove the top impact limiter.
4. Remove the top impact limiter and tamper indicating device (TID), if installed.

5. Attach the horizontal lid removal tool to the closure lid. Remove closure lid bolts. Remove the closure lid and set it on a support that is suitable for radiological control and for maintaining the cleanliness of the closure lid. Prior to reinstallation of the lid, carefully inspect the Teflon O-ring seal in the underside of the closure lid. If the O-ring shows any damage, replace it. Remove the metallic O-ring and replace it with an approved spare. Ensure that the replacement O-ring(s) is properly installed and seated. Inspect the lid bolts and replace any that are damaged.
6. Remove the four empty HEUNL containers and place them into the facility for loading of HEUNL material in accordance with Section 7.1.14, if the received NAC-LWT cask contained empty containers.
7. Visually inspect the inner cavity for foreign material or damage. Clean all accessible surfaces, including the lid sealing surface.
8. If required, install or verify the presence of the HEUNL container guide.
9. Visually inspect the neutron shield tank fill, drain and level inspection plugs for signs of neutron shield fluid leakage. If leakage is detected, verify shield tank fluid level and correct, as required.
10. Remove the vent and drain valve port covers. Prior to reinstallation of the port covers, carefully inspect the valve port cover O-ring seals. If the O-rings show any damage, replace them with approved spares. Ensure that the replacement O-rings are properly installed and seated. Visually inspect the valved quick-disconnect nipples and replace them, if necessary.
11. Install the seal surface protector in the lid cavity, if required.
12. Install or verify the HEUNL container spacer is secured to the bottom HEUNL container. Load the first HEUNL container into the cask cavity using a horizontal Dry Transfer System.
13. Record and verify the identification number of the HEUNL container and independently verify the HEUNL contents comply with the CoC content conditions.
14. Repeat the loading and independent verification of the HEUNL containers into the cask cavity until four (4) HEUNL containers are loaded into the cask. If required, an empty HEUNL container shall be loaded to bring the total number of HEUNL containers in the cask cavity to four.
15. Remove the cask seal surface protector, if used,
16. Position the closure lid in the cask using the lid match marks as guides to align the lid. Visually confirm that the closure lid is flush with the top of the cask and properly seated. Install lid bolts hand tight and remove the horizontal tool.
17. Tighten the 12 closure lid bolts to 260 ± 20 ft-lb in three passes, using the torque sequence stamped on the closure lid.
18. Connect a vacuum pump to the cask vent valve.
19. Perform the helium leakage test of the closure lid containment O-ring using a Helium Mass Spectrometer Leak Detector (He MSLD) in accordance with the requirements of Section 8.1.3.1.
20. Install the vent and drain port covers and torque the bolts to 100 ± 10 inch-pounds.

21. If an alternate port cover containment O-ring seal was replaced, perform a helium leakage test on the affected port cover using an MSLD in accordance with the requirements of Section 8.1.3.2.2.
22. If the alternate port cover containment seal was inspected and accepted for reuse, perform a gas pressure drop leakage test on the port cover as follows.
    a. Install a pressure test fixture to the port cover test port, including a calibrated pressure gauge with a minimum sensitivity of 0.25 psi.
    b. Pressurize the port cover seal annulus to 15 psig, +1, -0 psi.
    c. Isolate the gas supply and observe the pressure gauge for a minimum of five minutes.
    d. The acceptance criterion for the test is no measurable drop in pressure during the minimum test time. An acceptable test assures that the minimum assembly verification leakage test sensitivity is achieved.
23. Decontaminate the cask. Survey the cask for surface contamination and radiation dose rates and decontaminate the cask as required.

    Note: Removable contamination levels and radiation levels shall comply with 49 CFR 173.443 and 173.441, respectively.
24. Verify the correct installation of the cask tie-down strap. Install the top impact limiter and verify the correct installation of the bottom impact limiter.
25. Install a TID to one of the top impact limiter ball lock pins.
26. Replace roof cross-members if installed, and replace ISO container roof.

    Complete a Health Physics survey on the external surfaces of the package and record the results. Complete dose rate measurements at the package surface, at 1 meter from the package surface, and at 2 meters from the vertical plane of the side of the transport vehicle. The maximum dose rate at 1 meter from the package is the transport index (TI). Ensure compliance with 10 CFR 71.87(i) and observe the following criteria.
    a. If the dose rate is less than 2 mSv/h (200 mrem/hr) at all accessible points on the external surface of the package, and the TI is less than 10, the package meets the requirements of 10 CFR 71.47 (a).
    b. If the dose rate is greater than 2 mSv/h (200 mrem/hr), but is less than 10 mSv/h (1000 mrem/hr) at any point on the external surface of the package, or the TI is greater than 10, the package must be shipped as “exclusive use” and meet the requirements of 10 CFR 71.47 (b), (c) and (d). If the dose rate and shipping requirements of 10 CFR 71.47 (b), (1), (2), (3) and (4) cannot be met, the package cannot be shipped.
    c. If the dose rate is > 10 mSv/h (1000 mrem/hr) at any point on the external surface of the package, the package exceeds the limits of 10 CFR 71.47 and cannot be shipped.
27. Determine the appropriate Criticality Safety Index (CSI) assigned to the package contents in accordance with the CoC, and indicate the correct CSI on the Fissile Material label applied to the package per 49 CFR 172, Subpart E.

28. Complete the shipping documents, carrier instructions (as required), and apply appropriate placards and labels.

7.1.18 Procedures for the Vertical Filling of HEUNL Contents into HEUNL Containers

This section describes the procedural steps required to load and prepare a HEUNL Container for transport in a NAC-LWT cask. Four HEUNL containers, as shown on Drawing 315-40-181 are to be loaded into a NAC-LWT, using empty HEUNL containers as spacers if four (4) filled HEUNL containers are not loaded into the cask. The total fill time and lifetime for utilization of a HEUNL container is limited by the CoC to 15 months. The total fill time is determined by recording the date of filling of the HEUNL container with material, recording the date that the HEUNL material is emptied/flushed from the container and tracking the cumulative time the HEUNL container is filled. This allowable fill duration is identified as "HEUNL Container Content Fill Time" and is controlled utilizing a HEUNL Container Fill Log for each individual HEUNL container maintained for its identification number. Each HEUNL Container Fill Log shall record the actual "HEUNL Container Content Fill Time" for each loaded transport based on date and time of filling and emptying of HEUNL material from the HEUNL container, replacement of any removable components, and the results of all loading and unloading inspections and tests. In addition, each NAC-LWT transport is controlled to limit the total transport duration from time of cask loading to ≤ 3 months. Verification will be performed prior to filling to ensure that the filled HEUNL container does not violate the HEUNL container total fill time if the maximum transport duration is applied (e.g., no HEUNL container shall be filled if the total "HEUNL Container Content Fill Time" is > 12 months).

7.1.18.1 Preparation of HEUNL Container Prior to Filling

The HEUNL container must be filled with HEUNL material with the container positioned in a vertical orientation, disconnect valves up. The following steps and procedures shall be performed on each empty HEUNL container prior to filling:

1. Record the HEUNL container identification number in the HEUNL Container Fill Log.
2. Confirm that a minimum of 3 months of HEUNL Container Content Fill Time remains for the container.
3. Remove the HEUNL container lid bolts and remove the lid.
4. Visually inspect the installed Viton inner and outer O-rings and lid bolts for damage. If damage to the inner O-ring is identified the container shall be taken out of service until the inner O-ring seal can be replaced and the helium pressure boundary verification test of the replaced seal is performed in accordance with Section 8.1.4.4.C.3. (Note that the non-pressure boundary outer O-ring seal and lid screws

can be replaced without the need to re-perform the containment maintenance leakage test.) The component replacement and testing shall be recorded in the HEUNL Container Fill Log.

5. Store the HEUNL container lid and bolts for later installation following HEUNL material filling.
6. Verify the fill/drain & vent (Type I container) or vent/drain & fill (Type II container) quick disconnect valves are operational and undamaged, including verification of sealing at container interface to quick disconnect nipple and nipple poppet. The verification of the quick disconnect sealing will be performed by a vacuum pressure rise test utilizing the fill system interface device and will confirm no detected leakage past the nipple to container interface or nipple poppet valve when tested to a sensitivity of at least 1×10^{-3} ref-cm^3/sec. If damage to the drain/fill & vent or vent/drain & fill quick disconnect valves is identified, the valves and seals will be replaced. The quick disconnect valve visual leakage testing inspection results, and component replacements, shall be recorded in the HEUNL Container Fill Log.
7. Visually inspect the externals of the empty HEUNL container for transport and corrosion damage, and record any identified issues for further evaluation prior to filling (for previously filled HEUNL containers only).
8. Empty HEUNL containers that are confirmed as acceptable may be released for filling.
9. Lift and place the empty HEUNL container into the appropriate vertical filling system.

7.1.18.2 Filling of HEUNL Container

1. Ensure accepted HEUNL container is properly positioned in the vertical HEUNL material filling station.
2. Allow the HEUNL container to reach an acceptable temperature for material filling of between 60°F and 90°F as verified with a surface pyrometer or equivalent instrument. Record the container surface temperature in the HEUNL Container Fill Log.
3. Connect HEUNL material fill line to the fill/drain (Type I) or fill (Type II) quick disconnect valve and the HEUNL material vent line to the vent (Type I) or vent/drain (Type II) quick disconnect valve.
4. Verify that the minimum liquid temperature of HEUNL material is ≥ 68° F (20° C) and, if acceptable, initiate the HEUNL material filling process until discharge of liquid material from the vent line. Follow liquid filling process with air/inert gas purge to clear fill and vent lines. Vent container to atmospheric pressure. Close/disconnect the fill and vent lines. Note the height of the vent/siphon line ensures that a minimum void volume of 1 gallon is achieved when following this procedure.

Note: For the last HEUNL filling operation, sufficient HEUNL material may not be available to completely fill the container such that material discharges from the vent line (Type I) or vent/drain (Type II). The loading and transport of a partially filled HEUNL container is authorized.

Note: All pre-shipment leakage testing procedures of the HEUNL container pressure boundary shall be performed in accordance with written procedures prepared and approved by personnel certified by the American Society of Nondestructive Testing (ASNT) as a Level III examiner for leakage testing. All leakage test results shall be documented.

5. [redacted]

6. Remotely install the HEUNL container closure lid. Apply Never-Seez to the closure lid screws and torque them to 20, +/-0.5 ft-lbs.

7. If the container closure lid plug was removed to test the quick disconnect valves, reinstall the plug and torque to 60, ± 6 in-lbs and perform a vacuum pressure rise preshipment leakage test of the lid plug and seal as follows:

Note: It is not necessary to perform this preshipment leakage test if the lid port plug has not been removed since the last completed assembly leak test or was tested prior to filling the canister. The requirement for performance of the preshipment leakage test is to be confirmed using the HEUNL Container Fill Log.

a. Verify lid plug and seal has been torqued to 60, ± 6 in-lbs.

b. Install a vacuum test bell and leak test system over the plug.

c. Leak test system to include a vacuum pump, isolation and vent valves, and calibrated vacuum gauge with minimum readability of 5 torr. The test equipment volume and the readability of the vacuum gauge shall be selected to ensure a preshipment leakage test sensitivity of $\leq 1 \times 10^{-3}$ ref-cm^3/sec per ANSI N14.5-1997 is achieved.

d. Start vacuum test system by starting the vacuum pump.

e. Close vent valve.

f. Open vacuum pump isolation valve and evacuate the leak test bell volume until vacuum pressure as read on the vacuum gauge is $\leq$ 10 torr.

g. Isolate and turn off vacuum pump. Record test starting time and vacuum pressure.

h. Observe vacuum pressure gauge for pressure rise for a minimum of 10 minutes.

i. At the end of the minimum 10 minute test period, record the final vacuum pressure and test time completion. If the change in vacuum pressure is less than the readability of the vacuum gauge, the preshipment leakage test confirms that there is no detected leakage when tested to a sensitivity of $\leq 1 \times 10^{-3}$ ref-cm^3/sec.

j. Record the time and results of the satisfactory completion of the lid port leakage test in the HEUNL Container Fill Log.

k. If test is not acceptable, remove the port plug and seal, inspect, clean and reinstall plug, and repeat step 7.a. through 7.j. If satisfactory leakage results are not achieved after retesting, the container shall be emptied and taken out of service until the port plug can be replaced and helium pressure boundary verification testing of a new seal and/or plug can be performed.

l. Record the time and results of the satisfactory completion of the closure lid plug assembly verification test in the HEUNL Container Fill Log.

8. Upon satisfactory completion of the closure lid plug vacuum pressure rise test, if required, remove the vacuum test bell and system.

9. Perform preshipment gas pressure drop leakage test of the closure lid O-ring seals to confirm the integrity of the container closure lid inner O-ring seal as follows:

a. Remove the container closure lid interseal test plug and install a pressure test fixture to the lid test port, including a calibrated pressure gauge with a minimum sensitivity of 0.25 psi. The test equipment volume and the readability of the pressure gauge shall be selected to ensure a preshipment leakage test sensitivity of $\leq 1 \times 10^{-3}$ ref-cm^3/sec per ANSI N14.5-1997 is achieved.

b. Pressurize the closure lid seal annulus to 15 psig, +1, -0 psi with air, helium or nitrogen gas.

c. Isolate the gas supply and observe the pressure gauge for a pressure drop for a minimum of ten (10) minutes.

d. At the end of the minimum 10 minute test period, record the final pressure and test time completion. If the change in pressure is less than the test gauge sensitivity, the preshipment leakage test confirms that there is no detectable leakage past the inner seal when tested to a sensitivity of $\leq 1 \times 10^{-3}$ ref-cm^3/sec.

e. If test is not acceptable, remove the container closure lid screws and container closure lid, inspect and clean the container closure lid O-ring seals and container seating surfaces, and repeat steps 9.a. through 9.d. If satisfactory leakage results are not achieved after retesting, the container shall be emptied and taken out of service until the lid O-ring seals can be replaced and helium pressure boundary verification testing of a new lid O-ring seals or seal surface repairs can be performed.

f. Upon satisfactory completion of the container closure lid O-ring seal pressure drop preshipment test, remove the pressure test system and reinstall the container closure lid interseal test plug and torque the specified value.

g. Record the time and results of the satisfactory completion of the closure lid O-ring seal preshipment verification test in the HEUNL Container Fill Log.

10. The HEUNL container is now satisfactorily loaded with HEUNL material, properly closed and tested, and ready for placement into a vertical or horizontal Dry Transfer and Loading System for loading into the NAC-LWT cask in accordance with the procedures of Section 7.1.16.

11. Record the date and time of HEUNL container filling and closure in the HEUNL Container Fill Log.

7.1.19 Procedure for the Dry Loading of AECL SLOWPOKE Fuel Core into the NAC-LWT Cask

This section describes the procedures for loading the NAC-LWT cask with a SLOWPOKE fuel core. One SLOWPOKE fuel core assembly can be loaded into a SLOWPOKE fuel core basket. The SLOWPOKE basket assembly consists of a basket weldment with one cylindrical opening and a bolted lid. The SLOWPOKE basket assembly is designed to sit atop a stack of five MTR-42 baskets (one base basket and four intermediate baskets) to position the SLOWPOKE basket assembly at the top of the cask cavity.

The SLOWPOKE fuel core is required to be intact and placed into a SLOWPOKE basket assembly. Loose SLOWPOKE fuel rods are addressed in Section 7.1.15.

The maximum decay heat load of a loaded SLOWPOKE basket shall be $\leq$ 45 Watts.

The maximum content weight per basket shall be $\leq$ 15 lbs.

The NAC-LWT cask will be loaded dry, utilizing a transfer cask to place the loaded SLOWPOKE basket into the NAC-LWT cask cavity. The five empty MTR-42 baskets will be preloaded into the cask cavity prior to loading the SLOWPOKE fuel basket.

The procedure for dry-loading and preparation for transport of the NAC-LWT with a SLOWPOKE fuel core is as follows:

1. Perform a receiving survey of the ISO and trailer, and inspect for damage. The cask user shall verify by reference to the NAC provided Certificate(s) of Conformance that

the identified NAC-LWT cask and associated lift yoke are within the allowable annual maintenance period specified on the certificate(s) prior to loading and release for transport.

2. Position the trailer in the designated cask unloading area. Level the trailer. Set the trailer brakes and chock the wheels to prevent unintended movement. If site-specific conditions exist that require the trailer to move to allow the cask to be uprighted on its rotation trunnions, release the brakes, and remove the chocks when required to complete the uprighting operations. Prior to cask removal, the ISO container may be removed from the trailer and secured in the unloading area, if required.

   Note: Lifting loaded containers from the top corner fitting with forces applied other than vertically is not permitted; use of an approved container lifting spreader, frame or bottom lift container slings is required.

3. Licensees shall receive and survey the NAC-LWT cask for radiation and removable contamination (for both gross beta-gamma and alpha) per 10 CFR 20 and 49 CFR 173. Open the ISO container front and/or rear doors and record the survey results. If radiation or contamination levels exceed the limits of 49 CFR 173.441 or 173.443, respectively, the user/licensee shall notify the shipper, NAC, and ensure the appropriate notifications are completed.

   Note: Verify that the package nameplate displays the correct package identification number in accordance with the CoC.

4. Remove the roof from the ISO container and cross members, if installed.
5. Remove the top and bottom impact limiters, and remove any TIDs that may be present.
6. Remove the cask tie-down strap. Complete the radiation and contamination surveys of the cask as additional surfaces become accessible. Clean the cask surfaces, as required.
7. Remove the alternate vent and drain port covers. Store the alternate port covers to protect the seal surfaces. Visually inspect the vent valve quick-disconnect nipples and replace if necessary. Prior to installation, inspect the Viton® O-ring seals on the alternate port covers, and if any O-ring shows any damage, replace it.
8. Install the cask lifting yoke with the guides removed to a crane of sufficient capacity in accordance with the user facilities' heavy lifting program and engage the two lifting trunnions at the front end of the cask. Raise and rotate the cask to a vertical position on the rear cask supports, moving the crane and/or trailer, as required, to maintain the cask engaged in the rear cask supports. When the cask is vertical, lift the cask from the ISO container.
9. Move and place the cask on a base plate, if required, at the intended loading station. Connect the base plate to the cask's attachment points using chains and take up slack with the tensioners. Disengage the lifting yoke.

10. Visually inspect the neutron shield tank fill, drain, and level inspection plugs for signs of neutron shield fluid leakage. If leakage is detected or suspected, verify shield tank fluid level and correct, as required.
11. Loosen and remove all closure lid bolts. Prior to installation, inspect the lid bolts and replace any that are damaged.
12. Attach lid lifting slings, or equivalent lid removal fixture, to the closure lid. Remove the closure lid and set it on a support that is suitable for radiological control and for maintaining the cleanliness of the closure lid. Prior to installation, carefully inspect the Teflon O-ring seal in the underside of the closure lid. If the O-ring shows any damage, replace it. Remove the metallic O-ring from the groove and discard. Clean and visually inspect the groove and lid recess seating surfaces for cleanliness, damage, or degradation. If the groove and lid recess seating surfaces are acceptable, install a new metallic O-ring with an approved spare. Ensure the replacement O-rings are properly installed and seated.
13. Visually inspect the inner cavity for foreign material, free water, or damage. Note deficiencies and correct as required. Remove any shipping dunnage as necessary. Clean all accessible surfaces, including the lid sealing surface. Install, or verify the presence of the drain tube and drain alignment ring.
14. Verify the proper installation of, or install, the five empty MTR-42 baskets.
15. Install the required dry transfer system components on the top of the cask.
16. Position the Dry Transfer System (DTS) components for fuel loading, as appropriate.
17. Identify the SLOWPOKE fuel core to be loaded, and verify that it complies with the authorized content, heat load and quantity conditions of the CoC.
18. Place the SLOWPOKE basket weldment in the Intermediate Transfer System (ITS) inner shield.
19. Move the ITS inner shield into position near the reactor for the transfer of the loaded SLOWPOKE fuel core.
20. Lift the SLOWPOKE fuel core out of the reactor using site supplied tooling and equipment and place it into the SLOWPOKE fuel core basket weldment in the ITS inner shield. Disengage the fuel core handling tooling.
21. Install the SLOWPOKE basket lid assembly and torque the lid bolts to 60 +/- 10 in-lbs.
22. Install the inner shield lid.
23. Move the ITS inner shield assembly containing the loaded SLOWPOKE basket assembly to the pre-staged transfer system location.
24. Lift the inner shield assembly containing the loaded SLOWPOKE basket assembly and place it through the ITS shield assembly adapter and into the outer shield of the ITS.

25. Disengage the inner shield lid. Lift and remove the inner shield lid through the shield assembly adapter and close the shield assembly adapter gate.
26. Place the DTS transfer cask onto the ITS shield assembly adapter.
27. Open the DTS transfer cask gate.
28. Open the ITS shield assembly adapter gate.
29. Lower the transfer cask grapple into the ITS and engage the SLOWPOKE basket assembly.
30. Retract grapple and loaded SLOWPOKE basket assembly into the transfer cask.
31. Close the DTS transfer cask shield gate.
32. Lift the DTS transfer cask and place it on the cask adapter assembly positioned on top of the NAC-LWT cask.
33. Open the cask adapter shield gate.
34. Open the DTS transfer shield cask gate and lower the loaded SLOWPOKE basket assembly into the NAC-LWT cask cavity.
35. Disengage grapple and retract back into the transfer cask.

    Note: Grapple release can be verified by checking cable for tension.
36. Verify grapple is fully retracted.

    Note: Indication will be physical indicator attached to cable.
37. Close cask adapter shield gate.
38. Remove the transfer cask from the dry transfer system adapter.
39. Using the dry transfer system adapter components, install temporary shield plug. Remove shield ring/plug assembly through the dry transfer system adapter.
40. Install the closure lid onto the cask using the dry transfer system. Visually verify that the lid is properly seated.
41. Install lid bolts hand tight.
42. Remove dry transfer system components from the top of the cask.
43. Tighten all 12 closure lid bolts to 260 ± 20 ft-lbs in three passes using the torque sequence indicated on the closure lid.
44. Connect a gas supply line to the vent valve and the drain line to the drain valve.
45. Open the air, nitrogen, or helium gas supply valve and pressurize the cask cavity (< 30 psig) to force any residual water out the drain line. Continue to supply pressurized gas to the cask for a minimum of five minutes after the last residual free water discharges from the drain. Remove the drain and gas supply lines and attach a vacuum drying system (VDS) to the vent.

    Note: At the option of the user, the NAC-LWT cask can be placed in a horizontal position in the ISO at this point in the procedure in accordance with Step 40.

46. Connect the Vacuum Drying System (VDS) to the cask vent valve and evacuate the cask cavity by vacuum pump to less than or equal to 10 torr (13 mbar) and continue vacuum pumping for a minimum of 15 minutes.
47. At the end of the evacuation period, isolate the cask cavity from the vacuum pump and monitor the cask cavity pressure for a minimum of 10 minutes. If the pressure rise is less than 5 torr (6.7 mbar), the cavity is verified as dry of free water. If the pressure rise is greater than 5 torr (6.7 mbar), resume vacuum drying until the dryness verification results are satisfactory.
48. Backfill the cask cavity with helium to 0 psig (1 atmosphere, absolute), +1, -0 psi and disconnect the VDS from the vent valve.
49. Perform a helium leakage test of the closure lid containment O-ring using a Helium Mass Spectrometer Leak Detector (MSLD) in accordance with the requirements of SAR Section 8.1.3.1.
50. Install the vent and drain alternate port covers and torque the bolts to 100 ±10 inch-pounds.
51. If an alternate port cover containment O-ring seal was replaced, perform a helium leakage test on the affected port cover using a He MSLD in accordance with the requirements of SAR Section 8.1.3.2.2.
52. If the alternate port cover containment seal was inspected and accepted for reuse, perform an air pressure drop leakage test on the affected port cover as follows.
    a. Install a pressure test fixture to the port cover test port, including a calibrated pressure gauge with a minimum sensitivity of 0.25 psi.
    b. Pressurize the port cover seal annulus to 15 psig, +1, -0 psi.
    c. Isolate the gas supply and observe the pressure gauge for a minimum of five minutes.
    d. The acceptance criterion for the test is no measurable drop in pressure during the minimum test time. An acceptable test assures that the minimum assembly verification leakage test sensitivity is achieved.
53. Survey the cask surface for removable contamination and radiation dose rates. Decontaminate the cask, if required.

    Note: Removable contamination levels and radiation levels shall comply with 49 CFR 173.443 and 173.441, respectively.
54. Using the cask lifting yoke with guides removed, lift and position the cask in the rear cask supports on the ISO/trailer. Engage the trunnion pockets in the bottom end of the cask with the rotation trunnions. Lower the cask to rest on the front tie-down saddle, moving the crane, and/or trailer, as required.
55. Disengage the cask lifting yoke from the cask lifting trunnions and set it aside.
56. Install and attach the cask tie-down strap. Install the cask top and bottom impact limiters.

57. Install a TID to one of the top impact limiter ball lock pins. Record TID identification number on the loading/shipping documentation.
58. Install roof cross-members, if used and replace ISO container roof.
59. Complete a Health Physics survey on the external surfaces of the package and record the results. Complete dose rate measurements at the package surface, at 1 meter from the package surface, and at 2 meters from the vertical plane of the side of the transport vehicle. The maximum dose rate at 1 meter from the package is the transport index (TI). Ensure compliance with 10 CFR 71.87(i) and observe the following criteria.
    a. If the dose rate is less than 2 mSv/h (200 mrem/hr) at all accessible points on the external surface of the package, and the TI is less than 10, the package meets the requirements of 10 CFR 71.47 (a).
    b. If the dose rate is greater than 2 mSv/h (200 mrem/hr), but is less than 10 mSv/h (1000 mrem/hr) at any point on the external surface of the package, or the TI is greater than 10, the package must be shipped as "exclusive use" and meet the requirements of 10 CFR 71.47 (b), (c) and (d). If the dose rate and shipping requirements of 10 CFR 71.47 (b), (1), (2), (3) and (4) cannot be met, the package cannot be shipped.
    c. If the dose rate is > 10 mSv/h (1000 mrem/hr) at any point on the external surface of the package, the package exceeds the limits of 10 CFR 71.47 and cannot be shipped.
60. Determine the appropriate Criticality Safety Index (CSI) assigned to the package contents in accordance with the CoC, and indicate the correct CSI on the Fissile Material label applied to the package per 49 CFR 172, Subpart E.
61. Complete the shipping documents, carrier instructions (as required), and apply appropriate placards and labels.

7.1.20 Procedure for the Dry Loading of WESF Capsules in the Capsules Container Assembly into the NAC-LWT Cask

This section describes the procedures for loading the NAC-LWT cask with WESF capsules using the capsules container assembly. Up to a maximum of 18 WESF capsules may be loaded into the LWT.

The WESF capsules must be loaded in the capsules container assembly must be loaded within the WESF basket assembly and the LWT WESF lid spacer must be installed on the lid.

The maximum decay heat load of the WESF capsules is per shipment or a maximum combined heat load ≤ 2400Watts.

The maximum combined content weight of the WESF capsules is ≤ 396 lbs.

The NAC-LWT cask will be loaded dry, utilizing a transfer cask to place each loaded WESF capsules container assemblies into the basket assembly within the NAC-LWT cask cavity.

The procedure for dry-loading and preparation for transport of the NAC-LWT with WESF capsules is as follows:

1. Perform a receiving survey of the ISO and trailer and inspect for damage. The cask user shall verify by reference to the NAC provided Certificate(s) of Conformance that the identified NAC-LWT cask and associated lift yoke are within the allowable annual maintenance period specified on the certificate(s) prior to loading and release for transport.
2. Position the trailer in the designated cask unloading area. Level the trailer. Set the trailer brakes and chock the wheels to prevent unintended movement. If site-specific conditions exist that require the trailer to move to allow the cask to be uprighted on its rotation trunnions, release the brakes, and remove the chocks when required to complete the uprighting operations. Prior to cask removal, the ISO container may be removed from the trailer and secured in the unloading area, if required.

   Note: Lifting loaded containers from the top corner fitting with forces applied other than vertically is not permitted; use of an approved container lifting spreader, frame or bottom lift container slings is required.
3. Licensees shall receive and survey the NAC-LWT cask for radiation and removable contamination (for both gross beta-gamma and alpha) per 10 CFR 20 and 49 CFR 173. Open the ISO container front and/or rear doors and record the survey results. If radiation or contamination levels exceed the limits of 49 CFR 173.441 or 173.443, respectively, the user/licensee shall notify the shipper, NAC, and ensure the appropriate notifications are completed.

   Note: Verify that the package nameplate displays the correct package identification number in accordance with the CoC.
4. Remove the roof from the ISO container and cross members, if installed.
5. Remove the top and bottom impact limiters and remove any TIDs that may be present.
6. Remove the cask tie-down strap. If required, remove the rear wedges and front spacer. Complete the radiation and contamination surveys of the cask as additional surfaces become accessible. Decontaminate the cask surfaces, as required.
7. Remove the alternate vent and drain port covers. Store the alternate port covers to protect the seal surfaces. Visually inspect the vent valve quick-disconnect nipples and replace if necessary. Prior to installation, inspect the Viton® O-ring seals on the alternate port covers, and if any O-ring shows any damage, replace it.
8. Install the cask lifting yoke with the guides removed to a crane of sufficient capacity in accordance with the user facilities' heavy lifting program and engage the two lifting trunnions at the front end of the cask. Raise and rotate the cask to a vertical position on the rear cask supports, moving the crane and/or trailer, as required, to maintain the cask engaged in the rear cask supports. When the cask is vertical, lift the cask from the ISO container.
9. Move and place the cask on a base plate, if required, at the intended loading station. Connect the base plate to the cask's attachment points using chains and take up slack with the tensioners. Disengage the lifting yoke.

10. Visually inspect the neutron shield tank fill, drain, and level inspection plugs for signs of neutron shield fluid leakage. If leakage is detected or suspected, verify shield tank fluid level and correct, as required.
11. Loosen and remove all closure lid bolts. Prior to installation, inspect the lid bolts and replace any that are damaged.
12. Attach lid lifting slings, or equivalent lid removal fixture, to the closure lid. Remove the closure lid and set it on a support that is suitable for radiological control and for maintaining the cleanliness of the closure lid. Prior to installation, carefully inspect the Teflon O-ring seal in the underside of the closure lid. If the O-ring shows any damage, replace it. Remove the metallic O-ring from the groove and discard. Clean and visually inspect the groove and lid recess seating surfaces for cleanliness, damage, or degradation. If the groove and lid recess seating surfaces are acceptable, install a new metallic O-ring with an approved spare. Ensure the replacement O-rings are properly installed and seated.
13. Verify the gap between the WESF lid spacer and the top WESF capsule assembly will be between 0.5 to 0.8 inches.
14. Visually inspect the WESF basket assembly inner cavity for foreign material, free water, or damage. Note deficiencies and correct as required. Remove any shipping dunnage as necessary. Clean all accessible surfaces, including the lid sealing surface. Install, or verify the presence of the drain line, and WESF basket assembly.
15. Install the required dry transfer system components on the top of the cask.
16. Position the Dry Transfer System (DTS) components for loading, as appropriate.
17. Identify the WESF capsules to be loaded, and verify that they comply with the authorized content, heat load and quantity conditions of the CoC.
18. Load up to 3 WESF capsules into a WESF capsules container assembly.
19. Perform an independent verification of the material selection and loading process.
20. Load the shielded transfer cask with the loaded capsules container assembly.
21. Place the transfer cask containing the capsules container assembly onto the dry transfer system components positioned on the top of the cask.
22. Lower the loaded WESF capsules container assembly from the transfer cask into the basket within the NAC-LWT cask cavity.
23. Remove the transfer cask from the dry transfer system adapter.
24. Repeat steps 18 through 23 until a total of 6 WESF capsules container assembly are installed.
25. Remove shield ring components, if required.
26. Verify the WESF lid spacer is installed to the closure lid and, if applicable, the WESF lid spacer shim are installed. Verify all WESF lid spacer bolts are torqued to 200 ± 20 in-lbs.
27. Install the closure lid onto the cask using the dry transfer system. Visually verify that the lid is properly seated.
28. Install lid bolts hand tight.
29. Remove dry transfer system components from the top of the cask.

30. Tighten all 12 closure lid bolts to 260 ± 20 ft-lbs in three passes using the torque sequence indicated on the closure lid.
31. If free liquid is expected in the cask cavity, connect a gas supply line to the vent valve and the drain line to the drain valve. If no free liquid is expected, proceed to step 33.
32. Open the nitrogen gas supply valve and pressurize the cask cavity (< 30 psig) to force any residual water out the drain line. Continue to supply pressurized gas to the cask for a minimum of five minutes after the last residual free water discharges from the drain. Remove the drain and gas supply lines and attach a vacuum drying system (VDS) to the vent.

    Note: At the option of the user, the NAC-LWT cask can be placed in a horizontal position in the ISO at this point in the procedure in accordance with Step 41.
33. Connect the Vacuum Drying System (VDS) to the cask vent valve and evacuate the cask cavity by vacuum pump to less than or equal to 10 torr (13 mbar) and continue vacuum pumping for a minimum of 15 minutes.
34. At the end of the evacuation period, isolate the cask cavity from the vacuum pump and monitor the cask cavity pressure for a minimum of 10 minutes. If the pressure rise is less than 5 torr (6.7 mbar), the cavity is verified as dry of free water. If the pressure rise is greater than 5 torr (6.7 mbar), resume vacuum drying until the dryness verification results are satisfactory.
35. Backfill the cask cavity with helium to 0 psig (1 atmosphere, absolute), +1, -0 psi and disconnect the VDS from the vent valve.
36. Perform a helium leakage test of the closure lid containment O-ring using a Helium Mass Spectrometer Leak Detector (MSLD) in accordance with the requirements of SAR Section 8.1.3.1.
37. Install the vent and drain alternate port covers and torque the bolts to 100 ±10 inch-pounds.
38. If an alternate port cover containment O-ring seal was replaced, perform a helium leakage test on the affected port cover using a He MSLD in accordance with the requirements of SAR Section 8.1.3.2.2.
39. If the alternate port cover containment seal was inspected and accepted for reuse, perform an air pressure drop leakage test on the affected port cover as follows.
    a. Install a pressure test fixture to the port cover test port, including a calibrated pressure gauge with a minimum sensitivity of 0.25 psi.
    b. Pressurize the port cover seal annulus to 15 psig, +1, -0 psi.
    c. Isolate the gas supply and observe the pressure gauge for a minimum of 5 minutes.
    d. The acceptance criterion for the test is no measurable drop in pressure during the minimum test time. An acceptable test assures that the minimum assembly verification leakage test sensitivity is achieved.
40. Survey the cask surface for removable contamination and radiation dose rates. Decontaminate the cask, if required.

    Note: Removable contamination levels and radiation levels shall comply with 49 CFR 173.443 and 173.441, respectively.

41. Using the cask lifting yoke with guides removed, lift and position the cask in the rear cask supports on the ISO/trailer. Engage the trunnion pockets in the bottom end of the cask with the rotation trunnions. Lower the cask to rest on the front tie-down saddle, moving the crane, and/or trailer, as required.
42. Disengage the cask lifting yoke from the cask lifting trunnions and set it aside.
43. Install and attach the cask tie-down strap. If required, install the rear wedges and front spacer. Install the cask top and bottom impact limiters.
44. Install a TID to one of the top impact limiter ball lock pins. Record TID identification number on the loading/shipping documentation.
45. Install roof cross-members, if used and replace ISO container roof.
46. Complete a Health Physics survey on the external surfaces of the package and record the results. Complete dose rate measurements at the package surface, at 1 meter from the package surface, and at 2 meters from the vertical plane of the side of the transport vehicle. The maximum dose rate at 1 meter from the package is the transport index (TI). Ensure compliance with 10 CFR 71.87(i) and observe the following criteria.
    a. If the dose rate is less than 2 mSv/h (200 mrem/hr) at all accessible points on the external surface of the package, and the TI is less than 10, the package meets the requirements of 10 CFR 71.47 (a).
    b. If the dose rate is greater than 2 mSv/h (200 mrem/hr), but is less than 10 mSv/h (1000 mrem/hr) at any point on the external surface of the package, or the TI is greater than 10, the package must be shipped as "exclusive use" and meet the requirements of 10 CFR 71.47 (b), (c) and (d). If the dose rate and shipping requirements of 10 CFR 71.47 (b), (1), (2), (3) and (4) cannot be met, the package cannot be shipped.
    c. If the dose rate is > 10 mSv/h (1000 mrem/hr) at any point on the external surface of the package, the package exceeds the limits of 10 CFR 71.47 and cannot be shipped.
47. Determine the appropriate Criticality Safety Index (CSI) assigned to the package contents in accordance with the CoC, and indicate the correct CSI on the Fissile Material label applied to the package per 49 CFR 172, Subpart E.
48. Complete the shipping documents, carrier instructions (as required), and apply appropriate placards and labels.

7.1.21 Procedure for the Dry Loading of BUP-500 Capsules into the NAC-LWT Cask

This section describes the procedures for loading the NAC-LWT cask with BUP-500 capsules. A maximum of 2 BUP-500 capsules may be loaded into the LWT. The BUP-500 capsules must be loaded into the BUP-500 basket assembly within the NAC-LWT cavity. One spacer must be installed prior to any capsules' loading and at least one spacer must be installed after any loaded capsule. The NAC-LWT cask will be loaded dry, utilizing a hot cell.

The maximum decay heat load of a basket loaded with BUP-500 capsules shall be ≤ 2200 Watts.

The maximum combined content weight of the BUP-500 capsules is ≤ 300 lbs.

The procedure for dry-loading and preparation for transport of the NAC-LWT with BUP-500 capsules is as follows:

1. Perform a receiving survey of the ISO and trailer and inspect for damage. The cask user shall verify by reference to the NAC provided Certificate(s) of Conformance that the identified NAC-LWT cask and associated lift yoke are within the allowable annual maintenance period specified on the certificate(s) prior to loading and release for transport.
2. Position the trailer in the designated cask unloading area. Level the trailer. Set the trailer brakes and chock the wheels to prevent unintended movement. If site-specific conditions exist that require the trailer to move to allow the cask to be uprighted on its rotation trunnions, release the brakes, and remove the chocks when required to complete the uprighting operations. Prior to cask removal, the ISO container may be removed from the trailer and secured in the unloading area, if required.

   Note: Lifting loaded containers from the top corner fitting with forces applied other than vertically is not permitted; use of an approved container lifting spreader, frame or bottom lift container slings is required.
3. Licensees shall receive and survey the NAC-LWT cask for radiation and removable contamination (for both gross beta-gamma and alpha) per 10 CFR 20 and 49 CFR 173. Open the ISO container front and/or rear doors and record the survey results. If radiation or contamination levels exceed the limits of 49 CFR 173.441 or 173.443, respectively, the user/licensee shall notify the shipper, NAC, and ensure the appropriate notifications are completed.

   Note: Verify that the package nameplate displays the correct package identification number in accordance with the CoC.
4. Remove the roof from the ISO container and cross members, if installed.
5. Remove the top and bottom impact limiters and remove any TIDs that may be present.
6. Remove the cask tie-down strap. If required, remove the rear wedges and front spacer. Complete the radiation and contamination surveys of the cask as additional surfaces become accessible. Decontaminate the cask surfaces, as required.
7. Remove the alternate vent and drain port covers. Store the alternate port covers to protect the seal surfaces. Visually inspect the vent valve quick-disconnect nipples and replace if necessary. Prior to installation, inspect the Viton® O-ring seals on the alternate port covers, and if any O-ring shows any damage, replace it.
8. Install the cask lifting yoke with the guides removed to a crane of sufficient capacity in accordance with the user facilities' heavy lifting program and engage the two lifting trunnions at the front end of the cask. Raise and rotate the cask to a vertical position on the rear cask supports, moving the crane and/or trailer, as required, to maintain the cask engaged in the rear cask supports. When the cask is vertical, lift the cask from the ISO container.
9. Place the cask in the cell transfer cart or unloading fixture. Disengage the lifting yoke.

10. Visually inspect the neutron shield tank fill, drain, and level inspection plugs for signs of neutron shield fluid leakage. If leakage is detected or suspected, verify shield tank fluid level and correct, as required.
11. Attach the horizontal lid removal tool.
12. Loosen and remove the 12 closure lid bolts. Prior to installation, inspect the lid bolts and replace any that are damaged.
13. Using the hot cell transfer cart or loading fixture, move the cask into the loading position.
14. Remove the closure lid and set it on a support that is suitable for radiological control and for maintaining the cleanliness of the closure lid. Prior to installation, carefully inspect the Teflon O-ring seal in the underside of the closure lid. If the O-ring shows any damage, replace it. Remove the metallic O-ring from the groove and discard. Clean and visually inspect the groove and lid recess seating surfaces for cleanliness, damage, or degradation. If the groove and lid recess seating surfaces are acceptable, install a new metallic O-ring with an approved spare. Ensure the replacement O-rings are properly installed and seated..
15. Visually inspect the BUP-500 basket assembly inner cavity for foreign material, free water, or damage. Note deficiencies and correct as required. Remove any shipping dunnage as necessary. Clean all accessible surfaces, including the lid sealing surface. Install, or verify the presence of the drain line (is using), the PWR basket assembly, and one BUP500 cavity spacer.
16. Install the seal surface protector in the lid cavity, if required.
17. Identify the BUP-500 capsule(s) to be loaded, and verify that they comply with the authorized content, heat load and quantity conditions of the CoC.
18. Ensure a long BUP-500 cavity spacer has been installed.
19. Load a BUP-500 capsule or a short BUP-500 cavity spacer, followed by a long BUP-500 cavity spacer.
20. Repeat step 19.
21. Remove the cask seal surface protector, if installed, and replace the cask lid, visually verifying that the lid is properly seated.
22. Install lid bolts hand tight.
23. Install and tighten all 12 closure lid bolts to 260 ± 20 ft-lbs in three passes using the torque sequence indicated on the closure lid.
24. Remove the horizontal lid removal tool.
25. Perform an independent verification of the loaded material selection and loading process.
26. Connect the Vacuum Drying System (VDS) to the cask vent valve and evacuate the cask cavity by vacuum pump to less than or equal to 10 torr (13 mbar) and continue vacuum pumping for a minimum of 15 minutes.
27. At the end of the evacuation period, isolate the cask cavity from the vacuum pump and monitor the cask cavity pressure for a minimum of 10 minutes. If the pressure rise is less than 5 torr (6.7 mbar), the cavity is verified as dry of free water. If the pressure

rise is greater than 5 torr (6.7 mbar), resume vacuum drying until the dryness verification results are satisfactory.

28. Backfill the cask cavity with helium to 0 psig (1 atmosphere, absolute), +1, -0 psi and disconnect the VDS from the vent valve.
29. Perform a helium leakage test of the closure lid containment O-ring using a Helium Mass Spectrometer Leak Detector (MSLD) in accordance with the requirements of SAR Section 8.1.3.1.
30. Install the vent and drain alternate port covers and torque the bolts to 100 ±10 inch-pounds.
31. If an alternate port cover containment O-ring seal was replaced, perform a helium leakage test on the affected port cover using a He MSLD in accordance with the requirements of SAR Section 8.1.3.2.2.
32. If the alternate port cover containment seal was inspected and accepted for reuse, perform an air pressure drop leakage test on the affected port cover as follows.
    a. Install a pressure test fixture to the port cover test port, including a calibrated pressure gauge with a minimum sensitivity of 0.25 psi.
    b. Pressurize the port cover seal annulus to 15 psig, +1, -0 psi.
    c. Isolate the gas supply and observe the pressure gauge for a minimum of five minutes.
    d. The acceptance criterion for the test is no measurable drop in pressure during the minimum test time. An acceptable test assures that the minimum assembly verification leakage test sensitivity is achieved.
33. Survey the cask surface for removable contamination and radiation dose rates. Decontaminate the cask, if required.

    Note: Removable contamination levels and radiation levels shall comply with 49 CFR 173.443 and 173.441, respectively.
34. Using the cask lifting yoke with guides removed, lift and position the cask in the rear cask supports on the ISO/trailer. Engage the trunnion pockets in the bottom end of the cask with the rotation trunnions. Lower the cask to rest on the front tie-down saddle, moving the crane, and/or trailer, as required.
35. Disengage the cask lifting yoke from the cask lifting trunnions and set it aside.
36. Install and attach the cask tie-down strap. If required, install the rear wedges and front space. Install the cask top and bottom impact limiters.
37. Install a TID to one of the top impact limiter ball lock pins. Record TID identification number on the loading/shipping documentation.
38. Install roof cross-members, if used and replace ISO container roof.
39. Complete a Health Physics survey on the external surfaces of the package and record the results. Complete dose rate measurements at the package surface, at 1 meter from the package surface, and at 2 meters from the vertical plane of the side of the transport vehicle. The maximum dose rate at 1 meter from the package is the transport index (TI). Ensure compliance with 10 CFR 71.87(i) and observe the following criteria.

d. If the dose rate is less than 2 mSv/h (200 mrem/hr) at all accessible points on the external surface of the package, and the TI is less than 10, the package meets the requirements of 10 CFR 71.47 (a).

e. If the dose rate is greater than 2 mSv/h (200 mrem/hr), but is less than 10 mSv/h (1000 mrem/hr) at any point on the external surface of the package, or the TI is greater than 10, the package must be shipped as "exclusive use" and meet the requirements of 10 CFR 71.47 (b), (c) and (d). If the dose rate and shipping requirements of 10 CFR 71.47 (b), (1), (2), (3) and (4) cannot be met, the package cannot be shipped.

f. If the dose rate is > 10 mSv/h (1000 mrem/hr) at any point on the external surface of the package, the package exceeds the limits of 10 CFR 71.47 and cannot be shipped.

40. Determine the appropriate Criticality Safety Index (CSI) assigned to the package contents in accordance with the CoC, and indicate the correct CSI on the Fissile Material label applied to the package per 49 CFR 172, Subpart E.

41. Complete the shipping documents, carrier instructions (as required), and apply appropriate placards and labels.

7.1.22 Procedure for the Dry Loading of LANL MOX Fuel Rods

This section describes the procedures for loading the NAC-LWT cask with LANL MOX Fuel Rods. The LANL MOX Fuel Rods are required to be loaded into Transfer Tubes prior to being loaded into the PWR/BWR Rod Transport Canister. The PWR Fuel Basket Assembly will contain the PWR insert, PWR/BWR Rod Transport Canister, Transfer Tubes, Fuel Rods, and Transfer Tube spacers, as required. The PWR Fuel Basket Assembly may contain a Divider Plate. The PWR/BWR Rod Transport Canister, 315-40-098, Assembly 96, 97, 98 or 99 is used without the corresponding internal inserts, 315-40-098, items 7, 8 or 19. Any of the 315-40-098 assemblies may be used.

The maximum decay head load of a loaded Canister shall be ≤ 25 Watts.

The maximum content weight per basket shall be 1,479 lbs. See Table 2.2.1-1 for details.

LANL MOX Fuel Rods variants include the following rod types: PNNL, Exxon, UO2, ROD1063, 530-000, and NIS5. Fuel rods of different types may NOT be placed into a single Transfer Tube, however different rod types are allowed within the same package, subject to the limitations in Table 1.2-20. Only one 530-000 type fuel rod may be loaded in a given package, which can include other transfer tubes loaded with other fuel rod types.

The Transfer Tubes consist of the Transfer Tube weldment, tube bottom end spacer, specified LANL MOX fuel rod(s), Transfer Tube Spacer (as required), and final tube top end spacer. Transfer Tube Spacers are required at the top and bottom end of each tube except for Transfer

Tubes being used as spacers, which may be completely empty. Spacers may be used to separate the contents but are not required. A measurement shall be taken of the Top End Spacer to verify it can sit below the top of the Transfer Tube Weldment by greater than or equal to 0.5 inch. The Transfer Tubes shall be arranged up to a 16-tube configuration. Empty Transfer Tubes may be loaded to act as spacers if desired to obtain a full 16-tube complement for the shipment.

The PWR/BWR Transport Canister and optional Divider Plate will be preloaded into the NAC-LWT prior to loading of the loaded Transfer Tubes. The Transfer Tubes with LANL MOX Fuel Rods will be loaded with the required stack-up of Tube End Spacers, Fuel Rods, and Transfer Tube Spacers per the specific loading plan for the approved contents. The Transfer Tubes will then be placed into the NAC-LWT individually filling each section of the divider plate. Transfer Tubes may be loaded without fuel rods and considered spacers in the event of a partially loaded shipment.

The procedure for dry loading the Transfer Tubes is as follows:

1. Perform a receiving survey of the ISO and trailer and inspect for damage. The cask user shall verify by reference to the NAC provided Certificate(s) of Conformance that the identified NAC-LWT cask and associated lift yoke are within the allowable annual maintenance period specified on the certificate(s) prior to loading and release for transport.
2. Position the trailer in the designated cask unloading area. Level the trailer. Set the trailer brakes and chock the wheels to prevent unintended movement.
3. Licensees shall receive and survey the NAC-LWT cask for radiation and removable contamination (for both gross beta-gamma and alpha) per 10 CFR 20 and 49 CFR 173. Open the ISO container front and/or rear doors and record the survey results. If radiation or contamination levels exceed the limits of 49 CFR 173.441 or 173.443, respectively, the user/licensee shall notify the shipper, NAC, and ensure the appropriate notifications are completed.

   Note: Verify that the package nameplate displays the correct package identification number in accordance with the CoC.
4. Complete the radiation and contamination surveys of the cask as additional surfaces become accessible. Clean the cask surfaces, as required.
5. Remove the roof from the ISO container and cross members, if installed.
6. If installed, ensure the TIDs match the shipment documentation.
7. Remove any TIDs that may be present and remove the top impact limiter.
8. Remove the vent and drain port covers. Prior to reinstallation of the port covers, carefully inspect the port cover O-ring seals and, if the O-rings show any damage, replace them with approved spares. Ensure that the replacement O-rings are properly installed and seated. Visually inspect the vent and drain quick-disconnect nipples and replace them, if necessary.

   Note: For Alternate B port covers, replace the metallic O-ring with an approved spare prior to reinstallation.

9. Visually inspect the neutron shield tank fill, drain, and level inspection plugs for signs of neutron shield fluid leakage. If leakage is detected or suspected, verify shield tank fluid level and correct, as required.
10. Inspect the Horizontal Lid Removal Tool and hex head screws to ensure there is no damage. Replace any bolts that are damaged prior to attaching the Horizontal Lid Removal Tool to the LWT Lid.
11. Attach the rigging to the rear lift lug of the Horizontal Lid Removal Tool and position next to the NAC-LWT Lid.
12. Install the Horizontal Lid Removal Tool to the LWT Lid
13. Remove the rigging from the rear lift lug and attach the rigging to the Horizontal Lid Removal Tool center Lift Lug.
14. Loosen and remove all closure lid bolts.

    Note: Prior to installation, inspect the lid bolts and replace any that are damaged.
15. Remove the closure lid and set it on a support that is suitable for radiological control and for maintaining the cleanliness of the closure lid. Prior to installation, carefully inspect the Teflon O-ring seal in the underside of the closure lid. If the O-ring shows any damage, replace it. Remove the metallic O-ring from the groove and discard. Clean and visually inspect the groove and lid recess seating surfaces for cleanliness, damage, or degradation. If the groove and lid recess seating surfaces are acceptable, install a new metallic O-ring with an approved spare. Ensure the replacement O-rings are properly installed and seated.
16. Visually inspect the inner cavity for foreign material, free water, or damage. Note deficiencies and correct as required.
17. Remove any shipping dunnage as necessary.
18. Clean all accessible surfaces, including the lid sealing surface.
19. Verify the PWR Fuel Basket assembly, PWR Insert, and PWR/BWR Rod Transport Canister are properly installed and no damaged occurred during transport.
    a. If the Divider Plate is used, ensure it is properly installed and no damaged occurred during transport.
20. Loosen all PWR/BWR Rod Transport Canister lid bolts and ensure disengagement from the rod canister.
21. Remove PWR/BWR Rod Transport Canister lid.
22. Ensure the specific loading configuration for the shipment and contents to be loaded comply with the NAC-LWT CoC.
23. Ensure the LANL MOX Fuel Rods are in their specified location within the Transfer Tubes prior to inserting them into the NAC-LWT.

    Note: Criticality requirements govern the proper configuration of Transfer Tubes in the NAC-LWT cask and fuel tubes within the Transfer Tubes. See Table 1.2-20 for limitations. Ensure the correct fuel rods, end spacers, and tube spacers are placed in the approved loading configuration. See Step 25 for Top End Spacer minimum clearance length within the Transfer Tube Weldments.
24. Insert each Transfer Tube into the NAC-LWT per specific loading configuration one by one (up to16 Transfer Tubes). Either with fuel rods or without.

25. Once the Transfer Tubes are loaded for shipment, ensure the Top End Spacer sits below the top of the Transfer Tube Weldments by greater than or equal to 0.5 inch for all Transfer Tube Weldments containing fuel rods.

    Note: If the Top End Spacers are sitting less than 0.5 inch below the Transfer Tube Weldments, the loading configuration of the fuel rods within the Transfer Tube Weldment(s) shall be reconfigured to ensure the 0.5 inch or greater clearance distance is met.

26. Install the rod canister lid and torque to 35 ± 5 in-lbs.
27. Install the closure lid onto the cask using the Horizontal Lid Removal Tool. Ensure the rigging is attached to the center Lift Lug of the Horizontal Lid Removal Tool prior to lifting
28. Visually verify that the lid is properly seated.
29. Install lid bolts hand tight.
30. Remove the rigging from the center Lift Lug and attach to the Rear Lift Lug prior to unbolting the Horizontal Lid Removal Tool.
31. Unbolt the Horizontal Lid Removal Tool and remove from the closure lid.
32. Tighten all 12 closure lid bolts to 260 ± 20 ft-lbs in three passes using the torque sequence indicated on the closure lid.
33. Connect the Vacuum Drying System (VDS) to the cask vent valve and evacuate the cask cavity by vacuum pump to less than or equal to 10 torr (13 mbar) and continue vacuum pumping for a minimum of 15 minutes.
34. At the end of the evacuation period, isolate the cask cavity from the vacuum pump and monitor the cask cavity pressure for a minimum of 10 minutes. If the pressure rise is less than 5 torr (6.7 mbar), the cavity is verified as dry of free water. If the pressure rise is greater than 5 torr (6.7 mbar), resume vacuum drying until the dryness verification results are satisfactory.
35. Backfill the cask cavity with helium to 0 psig (1 atmosphere, absolute), +1, -0 psi and disconnect the VDS from the vent valve.
36. Perform a helium leakage test of the closure lid containment O-ring using a Helium Mass Spectrometer Leak Detector (MSLD) in accordance with the requirements of SAR Section 8.1.3.1.
37. Install the vent and drain alternate port covers and torque the bolts to 100 ±10 inch-pounds.
38. If an alternate port cover containment O-ring seal was replaced, perform a helium leakage test on the affected port cover using a Helium MSLD in accordance with the requirements of SAR Section 8.1.3.2.2.
39. If the alternate port cover containment seal was inspected and accepted for reuse, perform a gas pressure drop leakage test on the affected port cover as follows.
    a. Install a pressure test fixture to the port cover test port, including a calibrated pressure gauge with a minimum sensitivity of 0.25 psi.
    b. Pressurize the port cover seal annulus to 15 psig, +1, -0 psi.
    c. Isolate the gas supply and observe the pressure gauge for a minimum of five minutes.

d. The acceptance criterion for the test is no measurable drop in pressure during the minimum test time. An acceptable test assures that the minimum assembly verification leakage test sensitivity is achieved.

40. Survey the cask surface for removable contamination and radiation dose rates. Decontaminate the cask, if required.

    Note: Removable contamination levels and radiation levels shall comply with 49 CFR 173.443 and 173.441, respectively.

41. Verify the correct installation of the cask tie-down strap. Install the top impact limiter and verify the correct installation of the bottom impact limiter.

42. Install a TID to one of the top impact limiter ball lock pins. Record TID identification number on the loading/shipping documentation.

43. Install roof cross-members, if used and replace ISO container roof.

44. Complete a Health Physics survey on the external surfaces of the package and record the results. Complete dose rate measurements at the package surface, at 1 meter from the package surface, and at 2 meters from the vertical plane of the side of the transport vehicle. The maximum dose rate at 1 meter from the package is the transport index (TI). Ensure compliance with 10 CFR 71.87(i) and observe the following criteria.

    a. If the dose rate is less than 2 mSv/h (200 mrem/hr) at all accessible points on the external surface of the package, and the TI is less than 10, the package meets the requirements of 10 CFR 71.47 (a).

    b. If the dose rate is greater than 2 mSv/h (200 mrem/hr), but is less than 10 mSv/h (1000 mrem/hr) at any point on the external surface of the package, or the TI is greater than 10, the package must be shipped as "exclusive use" and meet the requirements of 10 CFR 71.47 (b), (c) and (d). If the dose rate and shipping requirements of 10 CFR 71.47 (b), (1), (2), (3) and (4) cannot be met, the package cannot be shipped.

    c. If the dose rate is > 10 mSv/h (1000 mrem/hr) at any point on the external surface of the package, the package exceeds the limits of 10 CFR 71.47 and cannot be shipped.

45. Determine the appropriate Criticality Safety Index (CSI) assigned to the package contents in accordance with the CoC, and indicate the correct CSI on the Fissile Material label applied to the package per 49 CFR 172, Subpart E.

46. Complete the shipping documents, carrier instructions (as required), and apply appropriate placards and labels.

7.1.23 Procedure for the Dry Loading of WESF Capsules in the UCS into the NAC-LWT Cask

This section describes the procedures for loading the NAC-LWT cask with WESF capsules using the UCS. Up to a maximum of 18 WESF capsules may be loaded into the LWT. Three (3) UCSs are loaded in the LWT. Up to two (2) UCS spacer assemblies may be used in lieu of UCSs.

The WESF capsules loaded in a UCS must be loaded within the UCS basket assembly and the UCS LWT lid spacer must be installed.

The maximum decay heat load of the WESF capsules is per shipment or a maximum combined heat load ≤ 2400Watts.

The maximum combined content weight of the WESF capsules is ≤ 396 lbs.

The NAC-LWT cask will be loaded dry, utilizing a transfer cask to place each loaded UCS into the basket assembly within the NAC-LWT cask cavity.

The procedure for dry-loading and preparation for transport of the NAC-LWT with WESF capsules in a UCS is as follows:

1. Perform a receiving survey of the ISO and trailer and inspect for damage. The cask user shall verify by reference to the NAC provided Certificate(s) of Conformance that the identified NAC-LWT cask and associated lift yoke are within the allowable annual maintenance period specified on the certificate(s) prior to loading and release for transport.
2. Position the trailer in the designated trailer unloading area. Level the trailer. Set the trailer brakes and chock the wheels to prevent unintended movement. If site-specific conditions exist that require the trailer to move to allow the cask to be uprighted on its rotation trunnions, release the brakes, and remove the chocks when required to complete the uprighting operations. Prior to cask removal, the ISO container may be removed from the trailer and secured in the unloading area, if required.
   Note: Lifting loaded containers from the top corner fitting with forces applied other than vertically is not permitted; use of an approved container lifting spreader, frame or bottom lift container slings is required.
3. Licensees shall receive and survey the NAC-LWT cask for radiation and removable contamination (for both gross beta-gamma and alpha) per 10 CFR 20 and 49 CFR 173. Open the ISO container front and/or rear doors and record the survey results. If radiation or contamination levels exceed the limits of 49 CFR 173.441 or 173.443, respectively, the user/licensee shall notify the shipper, NAC, and ensure the appropriate notifications are completed.
   Note: Verify that the package nameplate displays the correct package identification number in accordance with the CoC.

4. Remove the roof from the ISO container and cross members, if installed.
5. Remove the top and bottom impact limiters and remove any TIDs that may be present.
6. Remove the cask tie-down strap. If required, remove the rear wedges and front spacer. Complete the radiation and contamination surveys of the cask as additional surfaces become accessible. Decontaminate the cask surfaces, as required.
7. Remove the alternate vent and drain port covers. Store the alternate port covers to protect the seal surfaces. Visually inspect the vent valve quick-disconnect nipples and replace if necessary. Prior to installation, inspect the Viton® O-ring seals on the alternate port covers, and if any O-ring shows any damage, replace it.
8. Install the cask lifting yoke with the guides removed to a crane of sufficient capacity in accordance with the user facilities' heavy lifting program and engage the two lifting trunnions at the front end of the cask. Raise and rotate the cask to a vertical position on the rear cask supports, moving the crane and/or trailer, as required, to maintain the cask engaged in the rear cask supports. When the cask is vertical, lift the cask from the ISO container.
9. Move and place the cask on a base plate, if required, at the intended loading station. Connect the base plate to the cask's attachment points using chains and take up slack with the tensioners. Disengage the lifting yoke.
10. Visually inspect the neutron shield tank fill, drain, and level inspection plugs for signs of neutron shield fluid leakage. If leakage is detected or suspected, verify shield tank fluid level and correct, as required.
11. Loosen and remove all closure lid bolts. Prior to installation, inspect the lid bolts and replace any that are damaged.
12. Attach lid lifting slings, or equivalent lid removal fixture, to the closure lid. Remove the closure lid and set it on a support that is suitable for radiological control and for maintaining the cleanliness of the closure lid. Prior to installation, carefully inspect the Teflon O-ring seal in the underside of the closure lid. If the O-ring shows any damage, replace it. Remove the metallic O-ring from the groove and discard. Clean and visually inspect the groove and lid recess seating surfaces for cleanliness, damage, or degradation. If the groove and lid recess seating surfaces are acceptable, install a new metallic O-ring with an approved spare. Ensure the replacement O-rings are properly installed and seated.
13. Visually inspect the UCS basket assembly inner cavity for foreign material, free water, or damage. Note deficiencies and correct as required. Remove any shipping dunnage as necessary. Clean all accessible surfaces, including the lid sealing surface. Install, or verify the presence of the drain line, and UCS basket assembly.
14. Install the required dry transfer system components on the top of the cask.
15. Position the Dry Transfer System (DTS) components for loading, as appropriate.
16. Identify the WESF capsules to be loaded, and verify that they comply with the authorized content, heat load, and quantity conditions of the CoC.
17. Load up to 6 WESF capsules into a UCS.
18. Perform an independent verification of the material selection and loading process.
19. Load the shielded transfer cask with the loaded UCS or UCS spacer assembly.

20. Place the transfer cask containing the UCS or UCS spacer assembly onto the dry transfer system components positioned on the top of the cask.
21. Lower the loaded UCS or UCS spacer assembly from the transfer cask into the basket within the NAC-LWT cask cavity.
22. Remove the transfer cask from the dry transfer system adapter.
23. Repeat steps 17 through 22 until a total of 3 UCSs, or 1 or more UCSs with up to 2 UCS spacer assemblies, are installed.
24. Remove shield ring components, if required.
25. Verify the UCS LWT lid spacer is bolted to the closure lid. Verify all lid spacer bolts are torqued to 200 ± 20 in-lbs.
26. Install the closure lid onto the cask. Visually verify that the lid is properly seated.
27. Install lid bolts hand tight.
28. Remove dry transfer system components from the top of the cask.
29. Tighten all 12 closure lid bolts to 260 ± 20 ft-lbs in three passes using the torque sequence indicated on the closure lid.
30. Connect a helium gas supply line to the vent valve, a vent line to the drain valve, and purge helium into the cask cavity. Remove the vent line and gas supply line.
31. Connect the Vacuum Drying System (VDS) to the cask vent valve and evacuate the cask cavity by vacuum pump to less than or equal to 10 torr (13 mbar) and continue vacuum pumping for a minimum of 15 minutes.
32. At the end of the evacuation period, isolate the cask cavity from the vacuum pump and monitor the cask cavity pressure for a minimum of 10 minutes. If the pressure rise is less than 5 torr (6.7 mbar), the cavity is verified as dry of free water. If the pressure rise is greater than 5 torr (6.7 mbar), resume vacuum drying until the dryness verification results are satisfactory.
33. Backfill the cask cavity with helium to 0 psig (+1, -0 psig) and disconnect the VDS from the vent valve.
34. Perform a helium leakage test of the closure lid containment O-ring using a Helium Mass Spectrometer Leak Detector (MSLD) in accordance with the requirements of SAR Section 8.1.3.1.
35. Install the vent and drain alternate port covers and torque the bolts to 100 ±10 inch-pounds.
36. If an alternate port cover containment O-ring seal was replaced, perform a helium leakage test on the affected port cover using a He MSLD in accordance with the requirements of SAR Section 8.1.3.2.2.
37. If the alternate port cover containment seal was inspected and accepted for reuse, perform an air pressure drop leakage test on the affected port cover as follows.
    a. Install a pressure test fixture to the port cover test port, including a calibrated pressure gauge with a minimum sensitivity of 0.25 psi.
    b. Pressurize the port cover seal annulus to 15 psig, +1, -0 psi.
    c. Isolate the gas supply and observe the pressure gauge for a minimum of 5 minutes.

d. The acceptance criterion for the test is no measurable drop in pressure during the minimum test time. An acceptable test assures that the minimum assembly verification leakage test sensitivity is achieved.

38. Survey the cask surface for removable contamination and radiation dose rates. Decontaminate the cask, if required.

    Note: Removable contamination levels and radiation levels shall comply with 49 CFR 173.443 and 173.441, respectively.

39. Using the cask lifting yoke with guides removed, lift and position the cask in the rear cask supports on the ISO/trailer. Engage the trunnion pockets in the bottom end of the cask with the rotation trunnions. Lower the cask to rest on the front tie-down saddle, moving the crane, and/or trailer, as required.
40. Disengage the cask lifting yoke from the cask lifting trunnions and set it aside.
41. Install and attach the cask tie-down strap. If required, install the rear wedges and front spacer. Install the cask top and bottom impact limiters.
42. Install a TID to one of the top impact limiter ball lock pins. Record TID identification number on the loading/shipping documentation.
43. Install roof cross-members, if used and replace ISO container roof.
44. Complete a Health Physics survey on the external surfaces of the package and record the results. Complete dose rate measurements at the package surface, at 1 meter from the package surface, and at 2 meters from the vertical plane of the side of the transport vehicle. The maximum dose rate at 1 meter from the package is the transport index (TI). Ensure compliance with 10 CFR 71.87(i) and observe the following criteria.
    a. If the dose rate is less than 2 mSv/h (200 mrem/hr) at all accessible points on the external surface of the package, and the TI is less than 10, the package meets the requirements of 10 CFR 71.47 (a).
    b. If the dose rate is greater than 2 mSv/h (200 mrem/hr), but is less than 10 mSv/h (1000 mrem/hr) at any point on the external surface of the package, or the TI is greater than 10, the package must be shipped as “exclusive use” and meet the requirements of 10 CFR 71.47 (b), (c) and (d). If the dose rate and shipping requirements of 10 CFR 71.47 (b), (1), (2), (3) and (4) cannot be met, the package cannot be shipped.
    c. If the dose rate is > 10 mSv/h (1000 mrem/hr) at any point on the external surface of the package, the package exceeds the limits of 10 CFR 71.47 and cannot be shipped.
45. Determine the appropriate Criticality Safety Index (CSI) assigned to the package contents in accordance with the CoC, and indicate the correct CSI on the Fissile Material label applied to the package per 49 CFR 172, Subpart E.
46. Complete the shipping documents, carrier instructions (as required), and apply appropriate placards and labels.

7.2 Procedures for Unloading Package

In general, the procedure for unloading the package is the reverse of that presented for loading the package (Section 7.1). Specific generic procedures are provided in this section for the wet and dry unloading of various authorized contents from the NAC-LWT cask. As required to accommodate specific facilities and equipment, site-specific procedures shall be prepared and utilized for the unloading operations as appropriate to the contents.

7.2.1 Procedures for Wet Unloading of LWR Fuel and PWR, PWR MOX and BWR Fuel Rods in Transport Canisters

The procedures for unloading the package are as follows:

1. Perform a receipt inspection of the cask and trailer/ISO container, inspecting for transport damage.
2. Position the trailer in the designated cask unloading area. Set the trailer brakes and chock the wheels to prevent unintended movement. If site-specific conditions exist that require the trailer to move to allow the cask to be uprighted on its rotation trunnions, release brakes and remove the chocks when required to complete uprighting operations. If an ISO container is used, it may be removed from the trailer and secured in the unloading area.
3. Remove the lid/top of the ISO container and remove any bracing, or the personnel barrier.

   Note: Verify that the package nameplate displays the correct package identification number in accordance with the CoC.
4. Licensees shall monitor the package for radioactive contamination and radiation levels in accordance with 10 CFR 20.1906. If contamination levels exceed 10 CFR 71.87(i) or radiation levels exceed the limits of 10 CFR 71.47, the licensee shall notify the NRC Operations Center.
5. Verify the TID identification number on the top impact limiter and confirm tampering with the package did not occur.
6. Remove the top and bottom impact limiters.
7. Remove the cask tie-down strap.
8. Using the lifting yoke with the guides removed, engage the lifting trunnions. Raise the cask to vertical by rotating the cask rotation sockets on the rear cask supports, moving the crane and/or trailer as required to keep the lift yoke engaged to the trunnions and the cask engaged in the rear supports. When the cask is fully vertical, lift the cask from the supports and remove it from the trailer/container.
9. Place the cask in the decontamination pit or other designated area. Disengage the lifting yoke. Clean cask surfaces of road dirt as required for entry into the spent fuel pool.

10. Remove the vent and drain valve port covers. Connect a pressure gauge and isolation valve assembly to the cask vent valve.
11. Connect vent and clean water fill lines to the vent and drain valves.
12. Open the water supply valve to allow water to slowly enter the cask cavity.

    Note: The hot gases exiting from the vent valve could be highly radioactive. The exhaust gases must, therefore, be routed to an off-gas process system. The cask cavity does not contain a relief valve; therefore, any system for cooling down the package must be provided with a pressure relief device set so that the maximum pressure in the cask cavity does not exceed 100 psig. Coolant flow rates should be controlled to avoid thermal shock to the cask internals.
13. Continue the filling procedure until the cask cavity is filled with water. Remove fill and vent lines.
14. Loosen and remove the closure lid bolts. At the option of licensee/user, some bolts (i.e., 4-12) may be left installed hand tight for the cask movement to the spent fuel pool.
15. Engage the cask lifting yoke (with slings, yoke arm guides and remote actuation system components attached) with the cask lifting trunnions and connect the closure lid to the lifting yoke slings.
16. Position the cask over the spent fuel pool and lower the cask until the top of the cask is at an elevation that permits access to the closure lid bolts.
17. Remove any remaining closure lid bolts.
18. Carefully lower the cask to rest on the bottom of the cask unloading area while spraying the cask's exterior surfaces with clean water to minimize contamination.
19. Disengage the lifting yoke from the cask and slowly raise the yoke until the closure lid is raised clear of the cask. Remove the yoke from the vicinity of the cask to provide clearance for unloading the cask.
20. Unload the contents of the cask cavity (i.e., fuel assemblies or Rod Transport Canister containing PWR or BWR fuel rods and nonfuel-bearing components, if applicable) using the required grapple system. Verify that the unloaded contents conform to the contents described in the cask loading report. Place the fuel assemblies or transport canisters into storage or prepare them for further processing.
21. Position the cask lifting yoke with the cask closure lid over the cask cavity and slowly lower it into place using the cask and closure lid match marks as guides. Visually confirm that the closure lid is seated.
22. Engage the cask lifting yoke with the cask trunnions and raise the cask.

    Note: Verify yoke engagement before lifting the cask.
23. Raise the cask until the lid is slightly above the surface of the pool. At the option of the licensee/user, several of the closure lid bolts (i.e., 4-12) may be installed hand tight.

24. Raise the cask clear of the pool, rinsing the yoke and cask with clean water.
25. Transfer the cask to the decontamination pit or other work area. Remove the yoke and lid lift slings.
26. Install and tighten all 12 closure lid bolts to 260 ± 20 ft-lb in three passes, using the torque sequence stamped on the closure lid.
27. At the option of the licensee/user, a 25 to 50 gallon clean water flush of the cask cavity may be performed by connecting a valved, clean water line to the drain valve and a valved drain line to the vent valve. After the cavity flushing is completed, if performed, disconnect the water supply and drain lines.
28. Connect a gas (air, nitrogen or helium) supply line to the vent valve and the drain line to the drain valve.
29. Open the gas supply valve and pressurize the cask cavity (<30 psig) to force out the water. Continue to supply gas to the cask cavity for a minimum of five minutes after the last residual free water discharges from the drain line.
30. Remove the gas supply and drain lines.
31. Install the alternate port covers over the vent and drain valves and tighten the port cover bolts to 100 ± 10 inch-pounds. For Alternate B port covers, install and torque the high-strength bolts to 285 ± 15 inch-pounds.

    Note: It is not necessary to inspect or replace the port cover seals. Seal inspection and replacement, if required, will be performed prior to the next loaded transport.

7.2.2 Procedures for Wet Unloading of Metallic Fuel

The procedure for unloading the metallic fuel from the package in a spent fuel pool is as follows.

1. Perform a receipt inspection of the cask and trailer/ISO container, inspecting for transport damage.
2. Position the trailer in the designated cask unloading area. Set the trailer brakes and chock the wheels to prevent unintended movement. If site-specific conditions exist that require the trailer to move to allow the cask to be uprighted on its rotation trunnions, release brakes and remove the chocks when required to complete uprighting operations. If an ISO container is used, it may be removed from the trailer and secured in the unloading area.
3. Remove the lid/top of the ISO container and remove any bracing, or the personnel barrier.

    Note: Verify that the package nameplate displays the correct package identification number in accordance with the CoC.

4. Licensees shall monitor the package for radioactive contamination and radiation levels in accordance with 10 CFR 20.1906. If contamination levels exceed 10 CFR 71.87(i) or radiation levels exceed the limits of 10 CFR 71.47, the licensee shall notify the NRC Operations Center.

5. Verify the TID identification number on the top impact limiter to confirm tampering with the package did not occur.
6. Remove the top and bottom impact limiters.
7. Remove the cask tie-down strap.
8. Using the lifting yoke with the guides removed, engage the lifting trunnions. Raise the cask to vertical by rotating the cask rotation sockets on the rear cask supports, moving the crane and/or trailer as required to keep the lift yoke engaged to the trunnions and the cask engaged in the rear supports. When the cask is fully vertical, lift the cask from the supports and remove it from the trailer/container.
9. Place the cask in the decontamination pit or other designated area. Disengage the lifting yoke. Clean cask surfaces of road dirt as required for entry into the spent fuel pool.
10. Remove the vent valve and drain valve port covers. Connect a pressure gauge and isolation valve assembly to the cask vent valve. Open the isolation valve and record the internal pressure reading (if any). Using a suitable air line and the gauge/valve assembly, vent the cask cavity to an off-gas handling unit.
11. Connect vent and clean water fill lines to the vent and drain valves.
12. Open the water supply valve to allow water to slowly enter the cask cavity.

    Note: The hot gases exiting from the vent valve could be highly radioactive. The exhaust gases must, therefore, be routed to an off-gas process system. The cask cavity does not contain a relief valve; therefore, any system for cooling down the package must be provided with a pressure relief device set so that the maximum pressure in the cask cavity does not exceed 100 psig. Coolant flow rates should be controlled to avoid thermal shock to the cask internals.

13. Continue the filling procedure until the cask cavity is filled with water. Remove fill and vent lines.
14. Loosen and remove the 12 closure lid bolts. At the option of licensee/user, some bolts (i.e., 4-12) may be left installed hand tight for the cask movement to the spent fuel pool.
15. Engage the cask lifting yoke (with slings, lift yoke arm guides and remote actuation system components attached) with the cask lifting trunnions and connect the closure lid to the lifting yoke slings.
16. Position the cask over the spent fuel pool and lower the cask until the top of the cask is at an elevation, which permits access to the closure lid bolts.
17. Remove any remaining closure lid bolts, inspect and store.
18. Carefully lower the cask to rest on the bottom of the cask unloading area while spraying the exterior surfaces of the cask with clean water to minimize contamination.
19. Disengage the lifting yoke from the cask and slowly raise the yoke until the closure lid is raised clear of the cask. Remove the yoke from the vicinity of the cask to provide clearance for unloading the cask.

    Note: Closure lid may be brought out of the pool and later assembled to the empty cask.

20. Unload the contents of the cask cavity using the required grapple system.
21. Position the cask lifting yoke with the cask closure lid over the cask cavity and slowly lower it into place using the cask and closure lid match marks as guides. Visually confirm that the closure lid is seated.
22. Engage the cask lifting yoke with the cask trunnions and raise the cask.
23. Raise the cask until the lid is slightly above the surface of the pool. At the option of the licensee/user, several of the closure lid bolts (i.e., 4-12) may be installed hand tight.
24. Raise the cask clear of the pool, rinsing the yoke and cask with clean water.
25. Transfer the cask to the decontamination pit or other work area. Remove the yoke and lid lift slings.
26. Install and tighten the 12 closure lid bolts to 260 ± 20 ft-lb in three passes, using the torque sequence stamped on the closure lid.
27. At the option of the licensee/user, a 25 to 50 gallon clean water flush of the cask cavity may be performed by connecting a valved, clean water line to the drain valve and a valved drain line to the vent valve. After the cavity flushing is completed, if performed, disconnect the water supply and drain lines.
28. Connect a gas (air, nitrogen or helium) supply line to the vent valve and the drain line to the drain valve.
29. Open the gas supply valve and pressurize the cask cavity (<30 psig) to force out the water. Continue to supply gas to the cask cavity for a minimum of five minutes after the last residual free water discharges from the drain line.
30. Remove the gas supply and drain lines.
31. Install the alternate port covers over the vent and drain valves and tighten the port cover bolts to 100 ± 10 in-lb. For Alternate B port covers, install and torque the high-strength bolts to 285 ± 15 inch-pound.

    Note: It is not necessary to inspect or replace the port cover seals. Seal inspection and replacement, if required, will be performed prior to the next loaded transport.

7.2.3 Procedure for Wet Unloading of MTR, TRIGA, DIDO, ANSTO, PULSTAR, or SLOWPOKE Fuel Basket Contents

The procedure for the unloading of MTR, TRIGA, DIDO, ANSTO, ANSTO-DIDO, PULSTAR, or SLOWPOKE fuel basket contents from the package in a spent fuel pool is as follows:

1. Perform a receiving survey of the cask and inspect for transport damage.
2. Position the trailer in the designated cask unloading area. Set the trailer brakes and chock the wheels to prevent unintended movement. If site-specific conditions exist that require the trailer to move to allow the cask to be uprighted on its rotation trunnions, release the brakes and remove the chocks when required to complete the uprighting operations. If an ISO container is used, it may be removed from the trailer and secured in the loading area.

3. Remove the roof from the ISO container, and open the front and rear ISO doors. Remove roof cross-members, if installed.

   Note: Verify that the package nameplate displays the correct package identification number in accordance with the CoC.

4. Licensees shall monitor the package for radioactive contamination and radiation levels in accordance with 10 CFR 20.1906. If contamination levels exceed 10 CFR 71.87(i) or radiation levels exceed the limits of 10 CFR 71.47, the licensee shall notify the NRC Operations Center.
5. Verify the TID identification number on the top impact limiter to confirm tampering with the package did not occur.
6. Remove the top and bottom impact limiters.
7. Remove the cask tie-down strap.
8. Using the cask lifting yoke with left yoke arm guides removed, engage the lifting trunnions of the front end of the cask. Raise the cask to a vertical position on the rear cask support, moving the crane as necessary to keep the cask engaged in the rear rotation supports and the crane cable vertical. When the cask is vertical, lift the cask from the container supports.
9. Place the cask in the decontamination pit or other site designated area. Disengage the lifting yoke. Clean cask surfaces of road dirt as required for entry into the spent fuel pool.
10. Remove the vent valve and drain valve port covers. Connect a pressure gauge and isolation valve assembly to the cask vent valve. Open the isolation valve and record the internal pressure reading (if any). Using a suitable air line and the gauge/valve assembly, vent the cask cavity to an off-gas handling unit.
11. Connect vent and clean water fill lines to the vent and drain valves.
12. Open the water supply valve to allow water to slowly enter the cask cavity.

    Note: Gases or steam exiting the vent may be radioactive. The vent line should be routed to an off-gas process system or a HEPA filter. The system for cooling down the package shall contain a pressure relief device set to ensure that the cask internal pressure is maintained below 100 psig. Coolant flow rates are to be controlled to avoid thermal shock to the fuel contents.

13. Continue the filling procedure until the cask cavity is filled with water. Remove fill and vent lines.
14. Loosen and remove the 12 closure lid bolts. At the option of licensee/user, some bolts (i.e., 4-12) may be left installed hand tight for the cask movement to the spent fuel pool.
15. Engage the cask lifting yoke (with slings, yoke arm guides and remote actuation system components attached) with the cask lifting trunnions and connect the closure lid to the lifting yoke slings.
16. Position the cask over the spent fuel storage pool and lower the cask until the top of the cask is at an elevation which allows access for the removal of the closure lid bolts.
17. Remove any remaining closure lid bolts, inspect and store.

18. Carefully lower the cask to rest on the bottom of the cask unloading area while spraying the exterior surfaces of the cask with clean water to minimize contamination. Disengage the lifting yoke from the lifting trunnions and slowly raise the yoke until the closure lid is raised clear of the cask. Remove the yoke from the vicinity of the cask to provide for clearance for unloading the cask.

    Note: The closure lid may be brought out of the pool and later assembled to the empty cask.

19. Unload the MTR, TRIGA, DIDO, spiral, MOATA plate, PULSTAR, or SLOWPOKE fuel assemblies, plate canisters or fuel canisters from the top basket module using the appropriate grapple or handling system. As required, remove empty basket modules from the cask cavity to allow access to the next basket module. Continue fuel unloading operations until all fuel assemblies, plate canisters, fuel canisters and empty basket modules are removed from the cavity. Alternatively, each basket module containing fuel assemblies, plate canisters or fuel canisters may be unloaded from the cask cavity and stored in the spent fuel pool. Continue unloading until all basket modules have been removed.
20. Position the cask lifting yoke with guide arms and remote actuation components installed over the cask closure lid. Attach the slings to the cask closure lid and cask lifting yoke.
21. Position the cask lifting yoke and closure lid over the cask cavity and slowly lower it into place using the cask and closure lid match marks as guides. Visually confirm that the closure lid is seated.

    Note: The closure lid may be installed separately after the empty cask is removed from the spent fuel pool.

22. Engage the cask lifting yoke with the cask trunnions and raise the cask.
23. Raise the cask until the lid is slightly above the surface of the pool. At the option of the licensee/user, several of the closure lid bolts (i.e., 4-12) may be installed hand tight.
24. Raise the cask clear of the pool, rinsing the yoke and cask with clean water.
25. Transfer the cask to the decontamination pit or other work area. Remove the yoke and lid lift slings.
26. Install and tighten four closure lid bolts to 100 ± 10 ft-lb using the torque sequence stamped on the closure lid.
27. At the option of the licensee/user, a 25 to 50 gallon clean water flush of the cask cavity may be performed by connecting a valved, clean water line to the drain valve and a valved drain line to the vent valve. After the cavity flushing is completed, if performed, disconnect the water supply and drain lines.
28. Connect a gas (air, nitrogen or helium) supply line to the vent valve and the drain line to the drain valve.
29. Open the gas supply valve and pressurize the cask cavity (<30 psig) to force out the water. Continue to supply gas to the cask cavity for a minimum of five minutes after the last residual free water discharges from the drain line.
30. Remove the gas supply and water drain lines.

31. Remove the four closure lid bolts and lift the lid clear of the cask.

    Note: It is not necessary to inspect or replace the closure lid metallic seal. A new metallic seal will be installed and tested prior to the next loaded transport.

32. Remove the drain tube assembly and drain tube alignment ring from the cask cavity.

33. Reinstall the closure lid and install the 12 closure lid bolts. Torque the bolts to 260 ± 20 ft-lbs in three passes using the torque sequence indicated in the closure lid.

34. Install the alternate port covers over the vent and drain valves and tighten the port cover bolts to 100 ± 10 in-lb. For Alternate B port covers, install and torque the high-strength bolts to 285 ± 15 inch-pound.

    Note: It is not necessary to inspect or replace the port cover seals. Seal inspection and replacement, if required, will be performed prior to the next loaded transport.

7.2.4 Procedure for Dry Unloading of MTR, TRIGA, DIDO, ANSTO, PULSTAR, SLOWPOKE, SrF_2, NRU/NRX, EFN, Moly, and Booster Rod Fuel Contents

This section describes the procedure for unloading of MTR, TRIGA, DIDO, ANSTO, ANSTO-DIDO, PULSTAR, SLOWPOKE, SrF_2, NRU/NRX, EFN, Moly, or Booster fuel basket contents from the NAC-LWT in a cell or a dry unloading fixture.

1. Perform a receiving survey of the cask and inspect for transport damage.
2. Position the trailer in the designated cask unloading area. Set the trailer brakes and chock the wheels to prevent unintended movement. If site-specific conditions exist that require the trailer to move to allow the cask to be uprighted on its rotation trunnions, release the brakes and remove the chocks when required to complete the uprighting operations. If an ISO container is used, the ISO container may be removed from the trailer and secured in the unloading area.
3. Remove the roof from the ISO container and open the front and rear ISO doors. Remove roof cross members, if installed.

   Note: Verify that the package nameplate displays the correct package identification number in accordance with the CoC.

4. Licensees shall monitor the package for radioactive contamination and radiation levels in accordance with 10 CFR 20.1906. If contamination levels exceed 10 CFR 71.87(i) or radiation levels exceed the limits of 10 CFR 71.47, the licensee shall notify the NRC Operations Center.
5. Verify the TID identification number on the top impact limiter to confirm tampering with the package did not occur. Remove TID.
6. Remove the top and bottom impact limiters.
7. Remove the cask tie-down strap. Clean the cask surfaces as required for entry into the hot cell.
8. Using the cask lifting yoke with lift yoke arm guides removed, engage the lifting trunnions of the front end of the cask. Raise the cask to a vertical position on the rear

cask support, moving the crane and/or trailer, as required, to keep the cask engaged in the rear rotation supports and the crane cable vertical. When the cask is vertical, block the trailer wheels and lift the cask from the container.

9. Place the cask in the cell transfer cart or unloading fixture. Disengage the lifting yoke.
10. Remove the vent valve port cover.
11. Connect vent line to the vent valve.

    Note: The hot gases exiting from the vent may be highly radioactive and the exhaust gas should be routed to an off-gas process system or to a HEPA filter.
12. Allow the cask to vent. Remove vent line.
13. Loosen and remove the 12 closure lid bolts. Visually inspect and store the bolts.
14. Attach the lid removal fixture.
15. Using the hot cell transfer cart or unloading fixture, move the cask into the unloading position.
16. Remove the cask lid.

    Note: It is not necessary to inspect or replace the closure lid metallic seal. A new metallic seal will be installed and tested prior to the next loaded shipment.
17. Install the seal surface protector in the lid cavity, if required.
18. Unload the MTR, TRIGA, DIDO, ANSTO, PULSTAR, SLOWPOKE, SrF_2, NRU/NRX, EFN, Moly, or Booster fuel basket modules from the cask cavity using the required grapple or dry transfer handling system.
19. Remove the cask seal surface protector, if installed, and replace the cask lid.
20. Using the cell transfer cart or unloading fixture, remove the cask.
21. Remove the lid from the cask and remove the drain tube and drain tube alignment ring, if required.
22. Replace the cask lid and remove the lid removal fixture.
23. Install and tighten all 12 closure lid bolts to 260 ± 20 ft-lbs in three passes using the torque sequence indicated on the closure lid.
24. Install the port covers over the vent and drain valves and tighten the port cover bolts to 100 ±10 inch-pounds. For Alternate B port covers, install and torque the high-strength bolts to 285 ±10 inch-pounds.

    Note: It is not necessary to inspect or replace the port cover seals. Seal inspection replacement and leak testing will be performed prior to the next loaded transport.

7.2.5 Procedure for Dry Unloading of TPBAR Contents

This section describes the procedure for the unloading of a consolidation canister, a PWR/BWR Rod Transport Canister or waste container that contains TPBARs from the NAC-LWT in a dry unloading facility.

1. Perform a receiving survey of the ISO container and trailer, and inspect for damage.

2. Position the trailer in the designated cask unloading area. Set the trailer brakes and chock the wheels to prevent unintended movement. If site-specific conditions exist that require the trailer to move to allow the cask to be uprighted on its rotation trunnions, release the brakes and remove the chocks when required to complete the uprighting operations. If necessary, the ISO container may be removed from the trailer and secured in the unloading area.
3. Licensees shall receive and survey the package for radiation and removable contamination (for both gross beta-gamma and tritium) per 10 CFR 20 and 49 CFR 173. Record the survey results. If radiation or contamination levels exceed the limits of 49 CFR 173.441 or 173.443, respectively, the licensee shall notify the shipper and ensure the appropriate notifications are completed.
4. Remove the roof from the ISO container and open the front and rear ISO doors. Remove the ISO roof cross members, if installed.
5. Verify the TID identification number on the top impact limiter to confirm tampering with the package did not occur.
6. Remove the top and bottom impact limiters.
7. Remove the cask tie-down strap. Complete the radiation and contamination surveys of the package as additional surfaces become accessible. Clean the cask surfaces as required for entry into the dry unloading facility.
8. Using the cask lifting yoke with lift yoke arm guides removed; engage the lifting trunnions of the front end of the cask. Raise the cask to a vertical position on the rear cask support, moving the crane and/or trailer, as required, to keep the cask engaged in the rear rotation supports and the crane cable vertical. When the cask is vertical, block the trailer wheels and lift the cask from the container.
9. Place the cask in a transfer cart or an unloading fixture. Disengage the lifting yoke.
10. Remove the vent valve port covers.
11. Remove the drain valve port cover
12. Connect a tritium monitoring system to the vent and drain quick-disconnect valves, and operate the device in accordance with the manufacturer's instructions. The tritium monitoring system shall have a minimum sensitivity of 5×10^{-3} micro curie/cc.
13. Monitor the cavity gas for tritium. If the gas sample measurement indicates a tritium gas concentration greater than 1×10^{-2} micro curie/cc, the cask internals must be decontaminated after unloading is completed and prior to subsequent use in transporting non-TPBAR contents.

    Note: The gases exiting from the cavity may be radioactive and contaminated with tritium, and at an elevated temperature. Cavity gases should be controlled per the site requirements.
14. Vent the cask cavity. Remove the gas lines and monitoring system from the vent and drain valves.
15. Loosen and remove all closure lid bolts.
16. Attach the lid removal fixture.
17. Use a transfer cart or unloading fixture and move the cask into the unloading position.

18. Remove the cask lid.

    Note: Replacement of the closure lid metallic seal is not required. A new metallic seal will be installed and leak tested prior to the next loaded shipment.

19. Install the seal surface protector in the lid cavity, if required.
20. Unload the TPBAR contents from the cask cavity using the required grapple or handling system.
21. Using the transfer cart or unloading fixture, remove the cask from the unloading area.
22. Collect an ambient air sample near the cask cavity opening. If the measured tritium gas concentration exceeds 1×10^{-2} micro curie/cc, the cask cavity must be decontaminated after unloading and prior to subsequent use in transporting non-TPBAR contents.
23. Survey the accessible inside surfaces of the cask cavity and internal components (i.e., upper 2 feet) for tritium contamination. If measured tritium removable contamination is greater than $2.2 \times 10^{+4}$ dpm/100 cm^2, the cask must be decontaminated after unloading is completed and prior to subsequent use in transporting non-TPBAR contents.

    Note: If significantly higher tritium contamination levels and the need for repeated decontamination become indicative of residual tritium contamination in the crystalline structure of the cask interior with potential for weeping, NAC will notify the NRC of the condition and its action.

24. Remove the cask seal surface protector, if used, and install the cask lid.
25. Inspect, install and tighten all 12 closure lid bolts to 260 ± 20 ft-lbs in three passes using the torque sequence indicated on the closure lid.

    Note: Replacement of the vent and drain port cover metallic seals is not required. New metallic seals will be installed and leak tested prior to the next loaded shipment.

26. Install the port covers on the vent and drain ports and torque the port cover bolts to 285 ± 15 inch-pounds.

7.2.6 Procedure for Dry Unloading of PWR/BWR/MOX Fuel Rod Contents

This section describes the procedure for the unloading of a PWR/BWR Rod Transport Canister from the NAC-LWT cask in a dry unloading facility.

1. Perform a receiving survey of the ISO container and trailer, and inspect for damage.
2. Position the trailer in the designated cask unloading area. Set the trailer brakes and chock the wheels to prevent unintended movement. If site-specific conditions exist that require the trailer to move to allow the cask to be uprighted on its rotation trunnions, release the brakes and remove the chocks when required to complete the uprighting operations. If necessary, the ISO container may be removed from the trailer and secured in the unloading area.
3. Licensees shall receive and survey the package for radiation and removable contamination per 10 CFR 20 and 49 CFR 173. Record the survey results. If radiation or contamination levels exceed the limits of 49 CFR 173.441 or 173.443, respectively,

the licensee shall notify the shipper and ensure the appropriate notifications are completed.

4. Remove the roof from the ISO container and open the front and rear ISO doors. Remove the ISO roof cross members, if installed.
5. Verify the TID identification number on the top impact limiter to confirm tampering of the package did not occur.
6. Remove the top and bottom impact limiters.
7. Remove the cask tie-down straps. Complete the radiation and contamination surveys of the package as additional surfaces become accessible. Clean the cask surfaces as required for entry into the dry unloading facility.
8. Using the cask lifting yoke with lift yoke arm guides removed, engage the lifting trunnions of the front end of the cask. Raise the cask to a vertical position on the rear cask support, moving the crane and/or trailer, as required, to keep the cask engaged in the rear rotation supports and the crane cable vertical. When the cask is vertical, block the trailer wheels and lift the cask from the container.
9. Place the cask in a transfer cart or an unloading fixture. Disengage the lifting yoke.
10. Remove the vent and drain valve port covers.
11. Connect the vent line with pressure gauge and isolation valve to the vent port quick disconnect coupling.

    Note: At the discretion of the receiving facility, a gas sample may be taken prior to cavity venting to determine if leakage from the fuel rods occurred during transport.

    Note: The gases exiting from the cavity may be radioactive and at an elevated temperature and pressure. Cavity gases should be controlled and vented to radioactive gas treatment systems per site requirements.
12. Vent the cask cavity. Remove the vent line from the vent valves.
13. Attach the lid removal fixture.
14. Loosen and remove all closure lid bolts.
15. Use the transfer cart or unloading fixture and move the cask into the unloading position.
16. Remove the cask lid.

    Note: Replacement of the closure lid metallic seal is not required. A new metallic seal will be installed and leak tested prior to the next loaded shipment.
17. Install the seal surface protector in the lid cavity, if required.
18. Unload the PWR/BWR Rod Transport Canister and/or its contents, including PWR, PWR MOX or BWR fuel rods and nonfuel-bearing components, if applicable, using the appropriate grapple or handling system.
19. Using the transfer cart or unloading fixture, remove the cask from the unloading area.
20. Remove the cask seal surface protector, if used, and install the cask lid.
21. Inspect, install and tighten all 12 closure lid bolts to 260 ± 20 ft-lbs in three passes using the torque sequence indicated on the closure lid.

Note: Inspection or replacement of the vent and drain port cover metallic seals is not required. New metallic seals will be installed and leak tested prior to the next loaded shipment.

22. Install the port covers on the vent and drain ports and torque the port cover bolts to 100 ± 10 inch-pounds for the alternate port covers or 285 ± 15 inch-pounds for the Alternate B port covers.

7.2.7 Procedure for Unloading of HEUNL Contents

This section describes the procedural steps required to unload the HEUNL containers and prepare the empty NAC-LWT cask for transport. Four HEUNL containers are to be unloaded from a NAC-LWT, configured as shown on Drawing No. 315-40-180, using either a vertical or horizontal facility-specific Dry Transfer and Unloading System. If four filled HEUNL containers were not loaded, empty HEUNL containers were installed as spacers and are also required to be unloaded.

Depending on facility capabilities and/or site restrictions, the HEUNL containers shall be emptied and prepared for return transport either vertically or horizontally in accordance with the operating procedures in Section 7.2.8. The emptied HEUNL containers will then be placed into the NAC-LWT cask in either a vertical or horizontal orientation for return shipment to the loading facility.

7.2.7.1 Vertical Dry Unloading of Filled HEUNL Containers from the NAC-LWT

1. Perform a receiving survey of the cask ISO container and inspect for damage.
2. Open the front and rear ISO doors and perform a Health Physics survey of the cask and adjacent surfaces of the trailer for radiation and removable contamination per 10 CFR 20 and 49 CFR 173. If radiation or contamination levels exceed the limits of 49 CFR 173.441 or 173.443, respectively, the user/licensee shall notify the shipper, NAC, and ensure the appropriate notifications are completed.

   Note: Verify that the package nameplate displays the package identification number in accordance with the CoC.
3. Remove the roof from the ISO container. Remove roof cross-members, if installed.
4. Remove the top impact limiter and tamper indicating device (TID). Verify no tampering with seal has occurred during transport.
5. Remove the bottom impact limiter.
6. Remove the cask tie-down strap.
7. Using the lifting yoke with the guides removed, engage the lifting trunnions. Raise the cask to vertical by rotating the cask rotation sockets on the rear cask supports, moving the crane and/or trailer as required to maintain the lift yoke engaged to the trunnions and the cask engaged in the rear supports. When the cask is fully vertical, lift the cask from the supports and remove it from the trailer/container.

8. Place the cask in a cask baseplate or other designated loading area. Disengage the lifting yoke. Clean cask surfaces of road dirt, as required.
9. Visually inspect the neutron shield tank fill, drain and level inspection plugs for signs of neutron shield fluid leakage. If leakage is detected, verify shield tank fluid level and correct, as required.
10. Remove the Alternate vent and drain valve port covers. Visually inspect the vent and drain valved quick-disconnect nipples and replace them, if necessary.

    Note: It is not necessary to inspect or replace the Alternate port cover seals. Seal inspection replacement and leak testing will be performed prior to the next loaded transport.
11. Connect cask cavity pressure monitoring system to the cask's vent port quick disconnect. System will include a pressure gauge, isolation valve and connections to radioactive off-gas system.
12. If cask cavity pressure exceeds 15.0 psia, record the pressure and vent the cavity to the radioactive off-gas system prior to closure lid removal.
13. Attach the lid removal rigging to the closure lid
14. Loosen and remove all closure lid bolts.
15. Remove the closure lid and set it on a support that is suitable for radiological control and for maintaining the cleanliness of the closure lid.

    Note: It is not necessary to inspect or replace the closure lid metallic seal. A new metallic seal will be installed and tested prior to the next loaded shipment.
16. Install the seal surface protector in the lid cavity, if required.
17. Unload the first HEUNL container from the cask cavity using the vertical Dry Transfer and Unloading System.
18. Record and verify the identification number of the HEUNL container.
19. Place loaded HEUNL containers into site specified shielded interim storage positions for subsequent draining.
20. Repeat the unloading and independent verification of the HEUNL containers from the cask cavity until four (4) HEUNL containers are unloaded from the cask. If required, empty HEUNL container(s) may have been loaded to bring the total number of HEUNL containers in the cask cavity to four.
21. Verify that a HEUNL container spacer is secured to the bottom of the HEUNL container. If not, install the HEUNL container spacer.
22. Load four empty HEUNL containers properly closed in accordance with the procedures provided in Section 7.2.8.
23. Remove the cask seal surface protector, if used, and install the cask closure lid.
24. Inspect, install and tighten all 12 closure lid bolts to 260 ± 20 ft-lbs in three passes using the torque sequence indicated on the closure lid.
25. Install Alternate port covers over the vent and drain openings and torque each port cover bolt to 100 ±10 inch-pounds.

26. Decontaminate the cask. Survey the cask surface for removable contamination levels and radiation dose rates.

    Note: Removable contamination levels and radiation levels shall comply with 49 CFR 173.443 and 173.441, respectively.

27. Using the cask lifting yoke with the guide arms removed, lift and position the cask in the rear cask supports on the ISO/trailer. Engage the trunnion pockets in the bottom end of the cask with the rotation trunnions. Lower the cask to rest on the front tie-down saddle, moving the crane, and/or trailer, as required, to keep the crane cables vertical. Disengage the cask lifting yoke from the cask lifting trunnions and set it aside.
28. Install and attach the cask tie-down strap. Install the cask top and bottom impact limiters.
29. Re-install roof cross members, close ISO container doors, and replace ISO container roof.
30. Complete a Health Physics survey on the external surface of the packaging and record the results.

    Note: Removable contamination levels and radiation levels shall comply with 49 CFR 173.443 and 173.441, respectively.

31. Complete the shipping document, carrier instructions (if required), and apply appropriate placards and labels.

7.2.7.2 Horizontal Dry Unloading of Filled HEUNL Containers from the NAC-LWT

1. Perform a receiving survey of the cask ISO container and inspect for damage.
2. Open the front and rear ISO doors and perform a Health Physics survey of the cask and adjacent surfaces of the trailer for radiation and removable contamination per 10 CFR 20 and 49 CFR 173. If radiation or contamination levels exceed the limits of 49 CFR 173.441 or 173.443, respectively, the user/licensee shall notify the shipper, NAC, and ensure the appropriate notifications are completed.

    Note: Verify that the package nameplate displays the package identification number in accordance with the CoC.

3. Remove the roof from the ISO container. Remove roof cross-members, if installed, as required to remove the top impact limiter.
4. Remove the top impact limiter and tamper indicating device (TID). Verify no tampering with seal has occurred during transport.
5. Visually inspect the neutron shield tank fill, drain and level inspection plugs for signs of neutron shield fluid leakage. If leakage is detected, verify shield tank fluid level and correct, as required.
6. Remove the Alternate vent and drain valve port covers. Visually inspect the valved quick-disconnect nipples and replace them, if necessary.

Note: It is not necessary to inspect or replace the Alternate port cover seals. Seal inspection replacement and leak testing will be performed prior to the next loaded transport.

7. Connect cask cavity pressure monitoring system to the cask's vent port quick disconnect. System will include a pressure gauge, isolation valve and connections to radioactive off-gas system.
8. If cask cavity pressure exceeds 15.0 psia, record the pressure and vent the cavity to the radioactive off-gas system prior to closure lid removal.
9. Attach the horizontal lid removal tool to the closure lid.
10. Remove closure lid bolts.
11. Remove the closure lid and set it on a support that is suitable for radiological control and for maintaining the cleanliness of the closure lid.

    Note: It is not necessary to inspect or replace the closure lid metallic seal. A new metallic seal will be installed and tested prior to the next loaded shipment.
12. Unload the first filled HEUNL container from the cask cavity using a horizontal Dry Transfer and Unloading System.
13. Record and verify the identification number of the filled HEUNL container.
14. Place filled HEUNL containers into site specified shielded interim storage positions for subsequent draining.
15. Repeat the unloading and independent verification of the HEUNL containers from the cask cavity until four (4) HEUNL containers are unloaded from the cask. If required, empty HEUNL container(s) may have been loaded to bring the total number of HEUNL containers in the cask cavity to four.
16. Verify that a HEUNL container spacer is secured to the bottom HEUNL container. If not, install the HEUNL container spacer.
17. Load four empty HEUNL containers properly closed in accordance with the procedures provided in Section 7.2.8.
18. Position the closure lid in the cask using the lid match marks as guides to align the lid. Visually confirm that the closure lid is flush with the top of the cask and properly seated. Install lid bolts hand tight and remove the horizontal tool.
19. Tighten the 12 closure lid bolts to 260 ± 20 ft-lb in three passes, using the torque sequence stamped on the closure lid.
20. Install the Alternate vent and drain port covers and torque the bolts to 100 ± 10 inch-pounds.
21. Decontaminate the cask. Survey the cask for surface contamination and radiation dose rates and decontaminate the cask as required.

    Note: Removable contamination levels and radiation levels shall comply with 49 CFR 173.443 and 173.441, respectively.
22. Verify the correct installation of the cask tie-down strap. Install the top impact limiter and verify the correct installation of the bottom impact limiter.
23. Replace roof cross-members, close ISO container doors and install ISO container roof.

24. Complete a Health Physics survey on the external surface of the packaging and record the results.

    Note: Removable contamination levels and radiation levels shall comply with 49 CFR 173.443 and 173.441, respectively.

25. Complete the shipping documents and apply appropriate placards and labels.

7.2.8 Procedures for Preparing Empty HEUNL Containers for Return Shipment

Following the unloading of the HEUNL containers, after transport in a NAC-LWT cask, subsequent operations to remove the HEUNL material from the containers shall be performed. Prior to emptying an HEUNL container, the container temperature will be confirmed to be at an acceptable temperature (between 40°F and 100°F) for HEUNL material removal, as verified with a surface pyrometer or equivalent instrument.

As noted previously, the total fill time and lifetime for utilization of a HEUNL container is limited by the CoC to a total of ≤ 15 months. Total fill time is determined by recording the date of filling of the HEUNL container with material, recording the date that the HEUNL material is emptied/flushed from the container and tracking the cumulative time the HEUNL container is filled. This allowable fill duration is identified as "HEUNL Container Content Fill Time" and is controlled utilizing a HEUNL Container Fill Log for each individual HEUNL container maintained for its identification number. Each HEUNL Container Fill Log shall record the actual "HEUNL Container Content Fill Time" for each loaded transport based on date and time of filling and draining of HEUNL material and the results of all filling and draining inspections and tests.

The HEUNL container shall be emptied of HEUNL material in accordance with site developed procedures. The operating procedures prepared for the emptying of the HEUNL material from the containers shall include appropriate verification that the approved operating procedures are appropriate for the HEUNL container type (either Type I for vertical unloading or Type II for horizontal unloading).

Continued processing of the HEUNL containers for return shipment and for re-filling shall include a flushing sequence with demineralized water or ≤ 0.5 M nitric acid in which any residual contents can be declared as having insignificant radioactive and corrosive properties. Prior to return shipment of empty HEUNL containers to the facility for filling, the empty container shall be verified as having an HEUNL Container Content Fill Time of ≤ 12 months.

7.2.9 Procedure for the Dry Unloading of LANL MOX Fuel Rods

This section describes the procedural steps required to unload the Transfer Tubes and prepare the empty NAC-LWT cask for transport. Up to sixteen (16) Transfer Tubes are to be unloaded from a NAC-LWT, configured as shown on Drawing No. 315-40-188, using a horizontal configuration. Empty Transfer Tubes may have been loaded as spacers. These Transfer Tubes may be left in the cask if present, and if they do not contain any fuel rods in preparation for a loaded or empty shipment.

Depending on facility capabilities and/or site restrictions, the fuel rods and spacers in the Transfer Tubes shall be removed and prepared for return transport horizontally in accordance with the operating procedures below. The Transfer Tubes may be reused and loaded back into the NAC-LWT for an empty shipment, as required.

1. Perform a receiving survey of the ISO container and trailer and inspect for damage.
2. Position the trailer in the designated cask unloading area. Set the trailer brakes and chock the wheels to prevent unintended movement. If necessary, the ISO container may be removed from the trailer and secured in the unloading area.
3. Licensees shall receive and survey the package for radiation and removable contamination per 10 CFR 20 and 49 CFR 173. Record the survey results. If radiation or contamination levels exceed the limits of 49 CFR 173.441 or 173.443, respectively, the licensee shall notify the shipper and ensure the appropriate notifications are completed.
4. Remove the roof from the ISO container and open the front and rear ISO doors. Remove the ISO roof cross members, if installed.
5. Verify the TID identification number on the top impact limiter to confirm tampering of the package did not occur.
6. Record TID number of package unloading report and remove TID.
7. Remove the top impact limiter.
8. Complete the radiation and contamination surveys of the package as additional surfaces become accessible. Clean the cask surfaces as required for entry into the dry unloading facility.

   Note: Steps 9 to 11 will be governed by site of facility requirements for venting/purging cavity gases. If venting of the NAC LWT is not required by the receiving site of facility, proceed to step 12.
9. Remove the vent port cover.
10. Connect the vent line with pressure gauge and isolation valve to the vent port quick disconnect coupling.

    Note: At the discretion of the receiving facility, a gas sample may be taken prior to cavity venting to determine if leakage from the fuel rods occurred during transport.

Note: The gases exiting from the cavity may be radioactive and at an elevated temperature and pressure. Cavity gases should be controlled and vented to radioactive gas treatment systems per site requirements.

11. Vent the cask cavity. Remove the vent line from the vent valves.
12. Inspect the Horizontal Lid Removal Tool and hex head screws to ensure there is no damage. Replace any bolts that are damaged prior to attaching the Horizontal Lid Removal Tool to the LWT Lid.
13. Attach the rigging to the rear lift lug of the Horizontal Lid Removal Tool and position next to the NAC-LWT Lid.
14. Install the Horizontal Lid Removal Tool to the LWT Lid.
15. Remove the rigging from the rear lift lug and attach the rigging to the Horizontal Lid Removal Tool center Lift Lug.
16. Loosen and remove all closure lid bolts.
17. Remove the closure lid and set it on a support that is suitable for radiological control and for maintaining the cleanliness of the closure lid.
18. Loosen all PWR/BWR Rod Transport Canister lid bolts and ensure disengagement from the rod canister.
19. Remove PWR/BWR Rod Transport Canister lid.
20. Unload the Transfer Tubes with fuel rods individually.
21. Inspect the outside of each Transfer Tube for damage.
22. Install the rod canister lid and torque to 35 ± 5 in-lbs.
23. Install the closure lid onto the cask using the Horizontal Lid Removal Tool. Ensure the rigging is attached to the center Lift Lug prior to lifting
24. Visually verify that the lid is properly seated.
25. Install lid bolts hand tight.
26. Remove the rigging from the center Lift Lug and attach to the Rear Lift Lug prior to unbolting the Horizontal Lid Removal Tool.
27. Unbolt the Horizontal Lid Removal Tool and remove from the closure lid.
28. Inspect, install and tighten all 12 closure lid bolts to 260 ± 20 ft-lbs in three passes using the torque sequence indicated on the closure lid.

    Note: Inspection or replacement of metallic seals is not required. New metallic seals will be installed and leak tested prior to the next loaded shipment, as required.

29. If port covers were removed, install the port covers on the vent and drain ports and torque the port cover bolts to 100 ± 10 inch-pounds for the alternate port covers or 285 ± 15 inch-pounds for the Alternate B port covers.
30. Decontaminate the cask. Survey the cask for surface contamination and radiation dose rates and decontaminate the cask, as required.

    Note: Removable contamination levels and radiation levels shall comply with 49 CFR 173.443 and 173.441, respectively.

31. Verify the correct installation of the cask tie-down strap. Install the top impact limiter and verify the correct installation of the bottom impact limiter.
32. Replace roof cross-members, close ISO container doors and install ISO container roof.
33. Complete a Health Physics survey on the external surface of the packaging and record the results.

    Note: Removable contamination levels and radiation levels shall comply with 49 CFR 173.443 and 173.441, respectively.
34. Complete the shipping documents and apply appropriate placards and labels.

Table of Contents

8 ACCEPTANCE TESTS AND MAINTENANCE PROGRAM 8.1-1

8.1 Acceptance Tests 8.1-1
8.1.1 Visual Inspection 8.1-1
8.1.2 Structural and Pressure Tests 8.1-2
8.1.3 Leak Tests 8.1-3
8.1.4 Component Tests 8.1-7
8.1.5 Tests for Shielding Integrity 8.1-13
8.1.6 Thermal Acceptance Tests 8.1-13
8.1.7 Neutron Absorber Tests 8.1-14

8.2 Maintenance Program 8.2-1
8.2.1 Authorized Repairs 8.2-2

8.3 Appendix 8.3-1
8.3.1 General Description 8.3-1
8.3.2 Preparation 8.3-1
8.3.3 Pouring Procedure 8.3-2
8.3.4 Cooling Process 8.3-2

List of Figures

Figure 8.3-1 Lead Pour Configuration 8.3-3
Figure 8.3-2 Allowable Height Difference 8.3-4

List of Tables

Table 8.2-1 Maintenance Program Schedule 8.2-4

8 ACCEPTANCE TESTS AND MAINTENANCE PROGRAM

This chapter discusses the acceptance test and maintenance program to be used for the NAC-LWT cask, in compliance with 10 CFR 71, Subpart H.

Where required, specific procedures for testing will be developed in conjunction with the cask fabricator, in accordance with an approved Quality Assurance program.

8.1 Acceptance Tests

This section discusses the tests to be performed prior to first use of the cask.

Two leaktight port cover designs are available for use. The alternate port cover has a face seal containment boundary Viton® O-ring seal and a secondary test boundary O-ring seal on the barrel of the port cover. The alternate port cover was developed to provide a leaktight configuration and to facilitate operations in the field. The Alternate B port cover has two face seals on the inner end of the port cover, one metallic containment boundary seal and one Viton® test boundary seal. The Alternate B port cover was developed to provide a high pressure containment boundary for TPBAR contents. The Alternate B port covers utilize higher strength bolts and a higher installed torque value. Both port cover designs provide a leaktight containment boundary.

To simplify the testing procedures below, when "port cover" or "port cover O-ring" is mentioned, it is intended to mean the port cover which has been chosen for that specific fabrication or cask configuration, either the alternate or the Alternate B and their respective O-rings. The different testing procedures are described in the applicable sections.

8.1.1 Visual Inspection

All components making up the cask lid, body, and baskets are to be visually inspected. This inspection verifies that all items are properly cleaned, free of nicks, gouges and damage, and are assembled in accordance with the license drawings. Each item is compared to the appropriate drawing to verify that it is in the correct orientation, position, and location.

All dirt, oil residue, metal chips or other forms of debris are removed by appropriate cleaning methods. Any entrapped water is removed. Any component found to deviate from its drawing is re-installed, replaced, or otherwise reworked as necessary in order to bring it into conformance.

Acceptance criteria require complete cask cleanliness, that foreign objects are removed, and that nicks or gouges that might preclude sealing or cask closure are not permitted. Valve and system components are visually inspected for leaks during pressure checks. Leaks are not permitted. Any case of noncompliance shall be corrected prior to final acceptance. All welds are visually

inspected in accordance with the methods of Article 9, Section V of the "ASME Boiler and Pressure Vessel Code." The acceptance criteria are in accordance with part NB-4424, Section III, and parts UW-35 or UW-36, Section VIII, of the "ASME Boiler and Pressure Vessel Code."

8.1.2 Structural and Pressure Tests

Following completion of fabrication, a hydrostatic test is performed on the cask cavity in accordance with the "ASME Boiler and Pressure Vessel Code," Section III, Subsection NB, Article NB-6000, to 209 (+5/-0) psig. This test is performed in accordance with a procedure prepared by the fabricator and approved by NAC International (NAC). For casks intended for transport of TPBARs, an additional post-fabrication hydrostatic test is performed as follows:

[redacted]

The test requirements and acceptance criteria for both tests are described below.

The cask cavity is hydrostatically tested using demineralized water. The test is conducted with the closure lid and valve port covers installed in accordance with the cask handling procedure for loaded casks, but with the quick-disconnect valves removed. During these two 30-minute pressure tests (conducted alternately with one port cover installed and the other removed for access to the cavity), an inspection is made to detect any visual or other evidence of leakage. Any evidence of leakage, including drop of gauge pressure, is cause for rejection.

Following the hydrostatic test, the cask cavity, lid, and port covers are dried and made ready for visual and dye penetrant testing (PT) inspections.

The cask cavity (containment boundary including lid and port covers) is visually inspected. All accessible welds within the cask cavity are examined by PT in accordance with ASME Code, Section V, Article 6, with acceptance criteria in accordance with ASME Code, Section III, Subsection NB, Article NB-5350. Any evidence of cracking, permanent deformation, or exceeding of material yield strength is cause for rejection.

Following completion of the fabrication pressure test or the post fabrication TPBAR-required pressure test, the cask containment boundary is leakage tested in accordance with the requirements of Section 8.1.3.

The neutron shield tank and the expansion tank are hydrostatically tested simultaneously, since they are joined by a siphon tube. The test is in accordance with the "ASME Boiler and Pressure

Vessel Code," Section VIII, Division 1, to 248 (+5/-0) psig (165 psig maximum hypothetical accident pressure × 1.5). The neutron shield relief valve is replaced by a plug during the test. All tank seams and joints are inspected for evidence of leakage. The pressure is monitored by use of a pressure gauge. Any evidence of leakage or drop in pressure is cause for rejection. All accessible welds on the neutron shield structure are PT examined following the hydrostatic test.

Each of the two pairs of the cask lift trunnions is load tested. The load test is performed for one pair and, then, repeated for the other pair.

The test consists of applying a vertical load of 159,375 lbs + 3,000 lbs, -0 lbs (300 % of the maximum service load), to each trunnion pair. The load is applied in a vertical direction and equally distributed between the two trunnions.

This test may be carried out by the use of calibrated hydraulic rams combined with a beam, or the cask lifting yoke, and appropriate dead weight attached to the trunnion pair. The load is held for a minimum of 10 minutes.

Following the load test, all welds and material are visually inspected for plastic deformation and cracking and liquid penetrant inspected in accordance with the "ASME Boiler and Pressure Vessel Code," Section V, Article 6, and Section III, Division I, Subsection NF, Article NF-5350, as called for in ANSI N14.6-1993.

Any evidence of permanent deformation or any evidence of cracking, galling, or exceeding of yield strength is cause for rejection of that item.

The rotation sockets at the lower end of the cask are not load tested, being monolithic steel block with a suitably machined opening. Prior to first use, each socket is visually inspected for cleanliness and signs of deformation or other unsuitability. Accessible welds are inspected in accordance with the standards for the cask trunnions.

8.1.3 Leak Tests

The cask containment boundary is subjected to a fabrication leakage rate test, as described in the sections below, to verify containment following fabrication. The test is performed using helium inside the cask cavity and a helium mass spectrometer connected to the test port of the lid or one of the port covers. The mass spectrometer has a minimum sensitivity such that it is capable of detecting a leak rate of at least 1×10^{-9} ref cm^3/sec and is calibrated before and after the test with a standard having a known leak rate between 4×10^{-7} and 1×10^{-9} ref cm^3/sec. The procedure is performed between 40°F and 125°F and is temperature corrected. New O-rings are to be used. The basic procedures for the cask lid and for the vent and drain port covers are provided in the following sections.

A required maintenance leakage rate test adheres to the criteria listed above and follows the replacement of any containment component or seal. Containment components having single-use metallic containment seals (i.e., closure lid and Alternate B port covers) require a maintenance leakage rate test prior to each loaded transport if the component is removed. All containment components shall be subjected to a periodic leakage rate test annually while the cask is in service, or prior to returning the cask to service if the period since the last leakage rate test exceeds 12 months. The acceptance criteria for the fabrication, maintenance, and periodic leakage rate tests appear in the following sections.

8.1.3.1 Closure Lid Leakage Rate Test

The following procedure shall be used to perform the fabrication, maintenance, periodic and pre-shipment leakage rate tests on the closure lid. Steps 1 and 2 are not performed for the pre-shipment leakage rate test performed during cask loading operations as described in Chapter 7.

1. Remove the vent and drain port covers and install the closure lid fitted with a new metallic seal on the cask body.
2. Install the 12 lid bolts and torque them to 260 ± 20 ft-lb in three passes, using the torque sequence stamped on the lid.
3. Connect the vacuum pump to the vent valve and evacuate the cask cavity to a pressure ≤100 torr (130 mbar).
4. Backfill the cask cavity with 99.9% (minimum) pure helium to atmospheric pressure.
5. Re-evacuate the cask cavity to a pressure of ≤ 100 torr (130 mbar) and perform final backfill of cask cavity with 99.9% (minimum) pure helium to a pressure of 0 psig, + 2, -0 psig.

   Note: This backfill method ensures a minimum helium concentration in the cask cavity of > 98%.

6. Remove the test port plug from the lid.
7. Connect a helium mass spectrometer leak detector (MSLD) to the cask lid test port. Start the helium MSLD.

   Note: The specific test procedure depends on the helium MSLD used. The test commences when a vacuum is pulled on the test port by the MSLD and the MSLD is placed in the "test" mode.

8. Monitor the test leakage rate until the leakage rate is stable or a minimum of 30 seconds.
9. The acceptance criterion for the closure lid helium leakage test for the NAC-LWT is that the measured leakage rate shall be $\leq 2 \times 10^{-7}$ cm^3/s (helium) (i.e., leaktight per ANSI N14.5-1997 under the test conditions).
10. Remove helium MSLD from test port plug and reinstall port plug and torque to 60 ± 6 inch-pounds.

8.1.3.2 Alternate Port Cover Leakage Rate Tests

8.1.3.2.1 Fabrication and Periodic Leakage Rate Tests

The following procedure shall be used to perform the fabrication and periodic leakage rate tests on the alternate port covers.

1. If the port cover leakage rate tests are not performed immediately following the closure lid leakage rate test of Section 8.1.3.1, evacuate the cask cavity to ≤ 100 torr (130 mbar) and backfill to atmospheric pressure with 99.9% (minimum) pure helium. Reevacuate to ≤ 100 torr (130 mbar) and perform the final helium backfill to atmospheric pressure.
2. Install new O-rings on the port cover.
3. Remove the port valve (either vent or drain valve) and install the port cover.
4. Install and torque the port cover bolts to 100 ± 10 inch-pounds.
5. Remove the test port plug from the port cover.
6. Connect a helium MSLD to the test port. Start the helium MSLD.
7. Monitor the test leakage rate until the leakage rate is stable or for a minimum of 30 seconds.
8. The acceptance criterion for the helium leakage rate test shall be $\leq 2 \times 10^{-7}$ cm^3/s (helium) (i.e., leaktight per ANSI N14.5-1997 under the test conditions).
9. Remove helium MSLD from the test port and reinstall port plug and torque to 60 ± 6 inch-pounds.
10. Repeat Steps 1 through 8 for the second port cover.

8.1.3.2.2 Maintenance Leakage Rate Test

The following procedure shall be used to perform the maintenance leakage rate test on the alternate port covers following the field replacement of a port cover Viton O-ring containment face seal during cask loading operations.

1. Replace the affected seal(s).
2. Insert port cover in a plastic test bag and seal the bag to the cask body around the port opening using suitable tape.
3. Evacuate test bag and backfill with 99.9% (minimum) pure helium to one atmosphere absolute.
4. Reevacuate test bag and perform final helium backfill to one atmosphere absolute.
5. Without breaking the seal of the plastic bag to the cask body, insert the port cover into the port opening and hand tighten the bolts.
6. Torque the bolts to 100 ± 10 inch-pounds. Remove the plastic bag.
7. Remove the test port plug from the port plug.

8. Attach helium MSLD to the port cover test port and evacuate the volume between the seals.
9. Monitor the test leakage rate until stable or for a minimum of 30 seconds.
10. The test is acceptable if the measured leakage rate is $\leq 2 \times 10^{-7}$ cm^3/s (helium) (i.e., leaktight per ANSI N14.5-1997 under the test conditions).
11. Remove helium MSLD from test port and reinstall the test port plug and torque to 60 ± 6 inch-pounds.

8.1.3.3 Alternate B Port Cover Leakage Rate Tests

8.1.3.3.1 Fabrication and Periodic Leakage Rate Tests

The following test procedure shall be used to perform the fabrication and periodic leakage rate tests for the Alternate B port cover. For NAC-LWT casks to be used to transport TPBARs, the fabrication leakage rate test shall be performed immediately following the post-fabrication

[redacted]

1. If the Alternate B port cover leakage rate tests are not performed immediately after the closure lid leakage rate test in Section 8.1.3.1, evacuate the cask cavity to ≤ 100 torr (130 mbar) and perform the final helium backfill to atmospheric pressure with 99.9% (minimum) pure helium. Reevacuate to ≤ 100 torr (130 mbar) and perform final helium backfill to atmospheric pressure.
2. Install the new metallic O-ring on the Alternate B port cover.
3. Remove the port nipple (either vent or drain valve) and install the Alternate B port cover.
4. Install and torque the port cover bolts to 285 ± 15 inch-pounds.
5. Remove the test port plug from the port cover.
6. Connect a helium MSLD to the test port. Start the helium MSLD.
7. Monitor the test leakage rate until the leakage rate is stable or for a minimum of 30 seconds.
8. The test is acceptable if the measured leakage rate is $\leq 2 \times 10^{-7}$cm^3/s (helium) (i.e., leaktight per ANSI N14.5-1997 under the test conditions).
9. Remove helium MSLD from the test port and reinstall the test port plug and torque to 60 ± 6 inch-pounds.
10. Repeat Steps 1 through 8 for the second Alternate B port cover.

8.1.3.3.2 Maintenance and Preshipment Leakage Rate Tests

The following maintenance leakage rate test procedure for the Alternate B port cover is used after metallic O-ring replacement during each cask loading operation if the port cover is removed, or if another containment component of an Alternate B port cover is replaced.

1. Replace metallic seal.
2. Insert Alternate B port cover in plastic test bag and seal to cask body around port opening with suitable tape.
3. Evacuate test bag and backfill with 99.9% (minimum) pure helium to one atmosphere absolute.
4. Reevacuate test bag and perform final helium backfill to one atmosphere absolute.
5. Without breaking seal of plastic bag to the cask body, insert the Alternate B port cover into the port opening and tighten bolts hand tight.
6. Remove plastic bag and torque bolts to 285 ± 15 inch-pounds.
7. Remove test port plug from the Alternate B port cover.
8. Attach helium mass spectrometer to the Alternate B port cover test port and evacuate the volume between the seals.
9. Monitor the leakage rate test until stable or a minimum of 30 seconds.
10. The test is acceptable if the measured leakage rate is $\leq 2 \times 10^{-7}$ cm^3/s (helium) (i.e., leaktight per ANSI N14.5-1997 under test conditions).
11. Repeat Steps 1 through 10 for the second Alternate B port cover.

8.1.4 Component Tests

Tests performed on individual components are designed to ensure that the components meet the design requirements for correct operation of the cask system.

Acceptance criteria are functions of the purpose of the component being tested.

8.1.4.1 Valves, Pressure Relief Device, and Fluid Transport Devices

Overpressurization protection is afforded the neutron shield tank in the form of a relief valve that is designed to open at 165 psig (plus or minus 10 percent), and reseat. The relief valve is removed from the cask and hydraulically pressure tested using a calibrated system to verify relief valve opening and closing pressures. Failure to operate within tolerance is cause for rejection. Rejected valves are rebuilt or replaced and retested prior to use.

The cask cavity does not contain overpressurization protection because the maximum pressures developed in the worst case (fuel or TPBAR rupture) are well below the structural capability of the cask structure, lid, port covers, and seals.

The cask ports for vent/drain operations (two ports) contain valved quick disconnect fittings. These valves do not require testing to verify valved operation, because no credit is taken for these valves in the cask analyses. The valves provide a convenient method of attaching lines and fixtures, but serve no safety-related function.

The NAC-LWT cask package does not use rupture disks.

A siphon tube is used to connect the neutron shield tank to the neutron shield expansion tank. The tube is a passive device and allows expanding fluid to enter the expansion tank and returns the fluid as the liquid cools. It contains no moving parts and cannot be inspected after installation. The tube will be inspected for cleanliness and to verify that its passage is free of debris and clear prior to installation.

8.1.4.2 Gaskets

Cask closure lid and port cover O-rings will be hydrostatically pressure tested to verify suitability for use and for operation in the Maximum Normal Operating Pressure (MNOP) condition. The O-rings are arranged in pairs with an annulus between them. The annulus is connected by a drilled passageway to a test port. In the acceptance test, each of the three O-ring sets (one closure lid set, one vent port cover set, and one drain port cover set) is pressurized to 209 (+5/-0) psig for 30 minutes. [redacted] (one with the vent cover installed and one with the drain port cover installed). Loss of pressure or any other sign of leakage is cause for rejection.

8.1.4.3 Sealed Canisters

Prior to underwater application of sealed canisters, each design shall be qualified by testing to demonstrate the ability of the canister to be vacuum dried and to stay sealed during subsequent underwater handling and storage. The qualification tests performed will simulate underwater vacuum drying and subsequent handling/storage. Acceptance criteria include no residual water in, or water ingress to, the sealed canister.

8.1.4.4 HEUNL Container

A. Visual and NDE Inspections

Following completion of fabrication, the structural welds of the HEUNL container will be visually and non-destructively examined as indicated on the License Drawings. The structural welds shall be examined by dye-penetrant examination (PT) and ultrasonic examination (UT) in accordance with ASME Code, Section V, Articles 1, 5 and 6, respectively with acceptance criteria in accordance with ASME Code, Section III, Subsection NB, Articles NB-5350 NB-5330, respectively.

B. Pressure Testing

The pressure retaining boundary of the HEUNL container shall be qualified by hydrostatic test prior to first use following fabrication. The pressure boundary of the HEUNL container is defined as the container shell, top end cap, bottom end cap, container lid, lid plug and O-ring seal, and container lid inner O-ring seal. As described in Chapter 2, the HEUNL container pressure boundary is designed, fabricated, examined, and tested in accordance with the requirements of the ASME Code, Section III, Subsection NB, to the maximum practical extent.

A hydrostatic test will be performed in accordance with the ASME Code Section III, Subsection NB, Article NB-6200, to 140 +10/-0 psig (1.25 × 100 psi = 125 psi ≈ 140 psig). The test requirements and acceptance criteria for the tests are described below.

The HEUNL container is hydrostatically tested using demineralized water in the vertical (disconnect side up) orientation. The test is performed with the quick disconnect valves removed, and the container lid installed with the inner circumferential O-ring installed and the test port plug between the inner and outer O-rings removed. The pressure test system will be installed in the container lid plug hole to allow container filling, venting and application of the hydrostatic pressure. The HEUNL container shall be pressurized and the hydrostatic pressure shall be maintained for a minimum of 10 minutes. Following the 10 minute minimum hold period a visual inspection of the container to detect any evidence of leakage or structural deformation shall be performed while the pressure is maintained. Any evidence of leakage of the HEUNL container is cause for rejection. Following completion of the visual inspection, the container pressure is vented. Rejected HEUNL containers that are repaired shall be retested to the original test criteria prior to acceptance.

[redacted]



C. Leakage Testing

C.1 Fabrication Acceptance Leakage Testing

At the completion of the pressure boundary hydrostatic testing and post-test inspections, each HEUNL container shall be leakage tested in accordance with the requirements and approved methods of ANSI N14.5-1997 to confirm the total leakage rate is less than, or equal to, 1×10^{-7} ref. cm^3/s (i.e., leaktight). The sensitivity of the test shall be one-half of the acceptance test criteria as specified in ANSI N14.5-1997.

The HEUNL container will be assembled with the container lid and inner O-ring seal installed and the fill/drain and vent quick disconnect valved nipples removed. A test envelope will be installed around the assembled HEUNL container enclosing all of the pressure boundary welds, base metal plates, and the container lid. The vacuum system shall be connected to the lid plug opening for evacuation of the container volume to a pressure of ≤ 10 torr. After the container is evacuated, the test envelope will be filled with 99.95% (minimum) pure helium to an acceptable test concentration. The percentage of helium gas in the test envelope shall be accounted for in the determination of the test sensitivity. A mass spectrometer leak detector (MSLD) will be used to sample the evacuated volume for helium.

If helium leakage is detected, the area of leakage shall be identified, repaired and re-examined in accordance with the ASME Code, Section III, Subsection NB, NB-4450 or NB-4130, as appropriate. Following repair, the complete helium leakage test shall be re-performed to the original test acceptance criteria.

In order to ensure the integrity of the HEUNL container lid port plug and O-ring seal (port opening used for evacuation of container for helium leakage test of the pressure boundary), a helium leakage test of the lid port plug and seal is performed. The evacuated HEUNL container is filled with 99.95% (minimum) pure helium, and the port plug and seal are installed and torqued. A test cover is installed over the top of the port plug and the test cover volume is evacuated to a low pressure by a helium MSLD system. The leakage test of the port plug is in accordance with the evacuated envelope method as described in ANSI N14.5. The leakage test is to confirm that the leakage rate for the port plug is $\leq 1\times10^{-7}$ ref. cm^3/s (i.e., leaktight). The sensitivity of the test shall be one-half of the acceptance test criteria as specified in ANSI N14.5-1997. The concentration of helium gas in the HEUNL container shall be accounted for in the determination of the test sensitivity.

If leakage is detected, the area of leakage shall be identified, repaired and re-examined, and the plug O-ring seal replaced. Following repair and seal replacement, the helium leak test shall be re-performed to the original test acceptance criteria.

Leakage testing of the HEUNL container pressure boundary shall be performed in accordance with written procedures prepared and approved by personnel certified by the American Society of Nondestructive Testing (ASNT) as a Level III examiner for leakage testing. All leakage test results shall be documented.

C.2 Periodic Leakage Testing

In accordance with ANSI N14.5-1997, if an HEUNL container has been in service longer than 12 calendar months from time of initial loading, the container lid inner O-ring and port plug O-ring seals shall be replaced and periodic helium leakage rate tests of the replaced container lid O-ring seals shall be performed prior to returning the HEUNL container to service. The HEUNL container shall be emptied, flushed, dried, and the O-ring seals replaced. Following O-ring seal replacement, a helium leakage test of the replaced O-ring seal is performed prior to returning the container to service.

Following seal replacement, the HEUNL container shall be reassembled with the lid port plug removed. A helium supply shall be connected to the lid through the lid port opening and the volume under the installed container lid is filled with 99.95% (minimum) pure helium, and the port plug with a new O-ring seal is re-installed. The leakage test of the container lid inner O-ring seal is in accordance with the evacuated envelope method as described in ANSI N14.5. The volume between the container lid inner and outer O-ring seals is evacuated through the O-ring test port opening to a low pressure (approximately ≤ 1 torr) by a helium MSLD system. The acceptance criteria for the periodic leakage test is to confirm that the leakage rate for the container lid inner O-ring seal is $\leq 1\times10^{-7}$ ref. cm^3/s (i.e., leaktight). The sensitivity of the test

shall be one-half of the acceptance test criteria as specified in ANSI N14.5-1997. The concentration of helium gas in the HEUNL container shall be accounted for in the determination of the test sensitivity.

Following completion of the container lid inner O-ring test, a test cover is installed over the top of the port plug and the test cover volume is evacuated to a low pressure by a helium MSLD system. The leakage test of the port plug is in accordance with the evacuated envelope method as described in ANSI N14.5. The leakage test is to confirm that the leakage rate for the port plug is $\leq 1\times10^{-7}$ ref. cm^3/s (i.e., leaktight). The sensitivity of the test shall be one-half of the acceptance test criteria as specified in ANSI N14.5-1997. The concentration of helium gas in the HEUNL container shall be accounted for in the determination of the test sensitivity.

If leakage is detected, the area of leakage shall be identified, and the plug O-ring seal replaced. Following seal replacement, the helium leak test shall be re-performed to the original test acceptance criteria.

Periodic leakage testing of the HEUNL container pressure boundary O-ring seals shall be performed in accordance with written procedures prepared and approved by personnel certified by the American Society of Nondestructive Testing (ASNT) as a Level III examiner for leakage testing. All leakage test results shall be documented.

C.3 Maintenance Leakage Testing

Field replacement of the lid pressure boundary O-ring seals and/or repair of the HEUNL container pressure boundary components shall require the performance of maintenance leakage rate testing of the replaced seal(s) or of the entire HEUNL container pressure boundary depending on the extent of the replacements and/or repairs completed.

HEUNL container lid inner O-ring and port plug O-ring seals identified as leaking or damaged during operational use shall require the HEUNL container to be emptied, flushed and dried, and the applicable seal replaced. Following O-ring seal replacement, helium leakage testing of the replaced O-ring seal(s) is performed prior to returning the container to service. O-ring helium leakage testing shall be performed in accordance with the procedures specified in Section 8.1.4.4, C.2.

In addition, if in-service inspection identifies damage or leakage of an HEUNL container boundary pressure due to container lid and/or shell assembly damage, the HEUNL container shall be emptied, flushed and dried, and the appropriate repairs completed in accordance with approved written procedures. Following HEUNL container repairs, the helium leakage test of the HEUNL container pressure boundary shall be re-performed in accordance with the leakage test procedures specified in Section 8.1.4.4, C.1.

Leakage testing of the HEUNL container pressure boundary shall be performed in accordance with written procedures prepared and approved by personnel certified by the American Society of Nondestructive Testing (ASNT) as a Level III examiner for leakage testing. All leakage test results shall be documented.

8.1.4.5 Miscellaneous

The cask impact limiter structures contain a two-part, aluminum honeycomb that is fabricated to have dynamic crush strengths of 3,500 psi. (plus 5 percent, minus 10 percent) and 250 psi (plus 10 percent, minus 10 percent), respectively. Sample lots of honeycomb material are subjected to dynamic crush testing to verify the crush strength of the impact limiter material. A dynamic crush strength of a sample outside of the allowable variation is cause for rejection of the batch lot of honeycomb material.

8.1.5 Tests for Shielding Integrity

A gamma scan inspection of all steel and lead shielding is conducted in order to verify shielding integrity. This inspection is performed on the cask body, including the cask bottom.

The test is conducted by continuous scanning or probing over 100 percent of all accessible surfaces, using a 3-inch detector and a ^{60}Co source of sufficient strength to produce a count rate that equals or exceeds three times the background count rate.

Scan path spacing is 2.5 inches. Scan speed is 4.5 feet-per-minute or less. All probing is on a 2-inch grid pattern (when using a 3-inch detector) and the count time is a minimum of one minute.

Acceptance is based on a lead and steel mock-up, where the material thicknesses are equivalent to the minimum thicknesses specified by the drawings. The lead and steel mock-up is produced using the same pouring technique as that approved for the cask.

Any area that produces a count rate over that established by the mock-up is considered rejected and must be corrected and retested prior to use.

Test equipment is checked before and after each use to ensure that shield test results are accurate.

8.1.6 Thermal Acceptance Tests

8.1.6.1 Thermal Test

A heat transfer acceptance test is conducted to test the integrity of the lead/stainless steel interface and to establish the heat rejection capability of the cask. The test is conducted with the

neutron shield tank full[1] and the pressurized water reactor (PWR) basket located in the dry cask cavity.

The cask is internally heated at a rate of 8,500 BTU per hour (± 1,000 BTU per hour). A minimum of 12 internal and 12 external temperatures on the cask are measured with thermocouples. A test closure lid is used to allow penetrations for electric heaters and thermocouples. The steady state heat rate, transient cask temperatures, and ambient temperature are recorded. The test is conducted with the cask 3 feet (approximately) above the ground, horizontal and in still air.

8.1.6.2 Retest

If any equipment should fail during the test, such that the test must be aborted, the test is repeated.

8.1.6.3 Heat Source

The heat source for the thermal test is an electrical heater (cal-rod type) with an active length of 144 to 150 inches and is capable of generating at least 2.5 kilowatts.

8.1.7 Neutron Absorber Tests

8.1.7.1 General

Neutron absorber material in the form of borated stainless steel sheets is used in the TRIGA poison basket modules. After manufacturing, test samples from each batch of neutron absorber (poison) sheets shall be tested using neutron absorption techniques to verify the presence, proper distribution, and minimum weight percent of enriched boron. The tests shall be performed in accordance with approved written procedures.

8.1.7.2 Preparation of Samples for Spectroscopic Examination

Detailed written procedures to perform neutron absorption tests of each batch of neutron absorber sheets shall be established by the manufacturer and approved by NAC. For each batch of neutron absorber sheets, a sample shall be taken from each sheet. The samples shall be indelibly marked and recorded for identification.

At least 2 percent of the sheets in a batch shall be tested using a grid pattern of locations covering the entire surface of the sheet. Each of the remaining sheets in a batch shall be tested at one random location to ensure the presence of boron.

[1] The neutron shield tank is filled with a liquid consisting of 58 weight percent ethylene glycol, 39 weight percent demineralized water and 3 weight percent potassium tetraborate ($K_2B_4O_7$).

8.1.7.3 Neutron Absorption Test Performance

An approved facility with a neutron source and neutron detection capability shall be selected to perform the described tests. The tests will assure that the neutron absorption capacity of the material tested is equal to, or higher than, the given reference value and will verify the uniformity of boron distribution of a batch of neutron absorber sheets. The principle of measurement of neutron absorption is that the presence of boron results in a slowing down of neutron flux between the neutron sources, the reflector, and the neutron detector – depending on the material thickness and boron content.

Typical test equipment will consist of a neutron source/neutron detector, a reflector, and a counting instrument. The test equipment is calibrated using approved reference sheet(s), whose ^{10}B content has been checked and verified by an independent method such as chemical analysis. The highest permissible counting rate is determined from the neutron counting rates of the reference sheet(s), which should be ground to the minimum allowable plate thickness. This calibration process shall be repeated daily (at least once every 24 hours) while tests are being performed.

8.1.7.4 Acceptance Criteria

The neutron absorption test shall be considered acceptable if the neutron count determined for each test specimen is less than or equal to the highest permissible neutron count rate determined from the reference sheet(s). The poison sheets shall have a minimum of 1.04 weight-percent enriched boron content, with ^{10}B being a minimum of 93.88 atom percent. Any specimen not meeting the acceptance criteria for maximum neutron count shall be rejected and all of the sheets from that lot shall be similarly rejected.

8.2 Maintenance Program

Each NAC-LWT cask is subjected to a series of tests and inspections prior to each loaded shipment and annually, as shown in the Maintenance Program Schedule (Table 8.2-1).

Prior to each loaded transport, the metallic O-rings of the closure lid and Alternate B port covers, if used, are replaced. The O-ring seals of the alternate port covers are inspected and replaced as necessary. The cask cavity, trunnions, and all removable components (i.e., closure lid, port covers, attachment bolts, impact limiters, etc.) are visually inspected for damage. Impact Limiter attachment lugs (gusset tabs) are visually inspected for damage and or excessive wear to the hole. Following loading, the closure lid and port covers are installed and the bolting torqued. Leakage rate tests are performed on the closure lid and port covers as detailed in the cask loading procedures of Chapter 7.1.

The completion of the annual maintenance and test program is required for each NAC-LWT cask while it is in service. The completion of the annual maintenance is documented on an annual inspection certification document. Each NAC-LWT cask must have a current annual certification before it can be used. The required annual cask maintenance test program is performed during or before the calendar month in which the annual program is due, but it is required to be performed no later than 30 days following the due date. During periods when the cask is not in use, the annual maintenance program may be deferred provided that the annual maintenance is completed and documented prior to the cask's next use.

[redacted]

Helium leakage rate testing to the leaktight criteria of ANSI N14.5-1997 is performed on the closure lid, and alternate and Alternate B port cover containment seals.

The annual maintenance program certification documentation shall specifically identify that a NAC-LWT packaging has been qualified by testing for TPBAR contents.

Engineering approval is required prior to making any repairs of damaged areas or areas that need refurbishing as a result of normal wear and tear. All such repairs shall be fully documented in accordance with NAC's approved Quality Assurance program. The replacement of valves, fittings, seals, thread fasteners, or use of calibrated pressure gauges are considered normal maintenance and do not require engineering approval.

Testing of the cask shielding and heat rejection capabilities is conducted during original packaging acceptance testing. The structures that provide shielding and heat rejection are

passive and do not require verification during routine use of the package. Consequently, the efficiency of these systems is not tested during the annual maintenance program. Radiation surveys conducted at the time of cask loading provide verification of continued shielding effectiveness.

Testing of the neutron absorber material utilized in TRIGA poisoned basket modules are conducted prior to fabrication of the basket modules. The neutron absorber material is in the form of borated stainless steel sheets that are visually inspected for wear or damage prior to each use, and do not require routine maintenance.

Following unloading after transport, each HEUNL container shall be visually inspected for damage prior to refilling. Following filling, the HEUNL container fill/drain and vent valves and the HEUNL closure lid seal shall be independently tested to verify proper closure prior to loading in the NAC-LWT cask, in accordance with the operating procedures in Section 7.1.17. Replacement of HEUNL container lid inner O-ring seal or container lid port plug and/or O-ring seal shall require emptying of the container and helium leakage testing of the replaced component in accordance with the procedures described in Section 8.1.4.4.C.3.

Each HEUNL container in service shall be leak tested annually in accordance with the requirements of ANSI N14.5 every twelve (12) months from the point it returned to service, or prior to returning the container to service. Prior to the performance of the helium leak testing of the closure lid inner O-ring and lid port plug seal, the O-rings shall be replaced with approved spares in accordance with Table 8.2-1. Following O-ring seal replacement, the closure lid inner and lid port plug O-ring seals will be leak tested in accordance with the periodic leak testing requirements of Section 8.1.4.4.C.2.

The fill/drain and vent quick disconnect valved nipples and associated seals, and the lid outer O-ring seal shall be replaced annually (every 12 months or prior to returning an HEUNL container to service) in accordance with the Maintenance Table 8.2-1.

8.2.1 Authorized Repairs

Repairs are authorized to correct cracks and blemishes resulting from normal wear and tear of the components of the NAC-LWT packaging. Performance of authorized repairs will result in an as-licensed configuration. The specific weld repair procedure for the impact limiter attachment lugs is described in Section 8.2.1.1.

8.2.1.1 Impact Limiter Attachment Lug Repairs

Impact limiter lugs shall be visually examined prior to each transport to ensure that the impact limiters can be attached to the NAC-LWT cask body in accordance with the Transport Cask

Assembly drawings presented in Chapter 1. During annual NAC-LWT packaging maintenance, the impact limiter attachment lugs and the welds sealing the impact limiter shell to the lugs are visually examined with acceptance criteria in accordance with ANSI/AWS Code D1.2, Paragraph 8.8.1. If defects in the impact limiter shell-to-lug welds or in the lug base material are identified, the weld is repaired in accordance with the applicable License Drawing requirements.

Defects in the shell-to-lug weld are removed by grinding, and the shell is rewelded to the lug. If the lug base material has a defect or is broken in two pieces, the lug base material is prepared to allow completion of a full-penetration weld. The weld repairs shall be performed by qualified welders utilizing approved welding procedures prepared, approved and qualified in accordance with ASME Code, Section IX, or ANSI/AWS D1.2. Approved lug repair welding procedures will validate that the axial load path minimum yield strength and ultimate strength of the completed repair will be 10.0 ksi and 20.0 ksi , respectively, or greater, and that the maximum temperature in the base lug material local (within 0.5 inch) to the weld repaired is maintained less than 350ºF during the welding process. Following shell-to-lug weld repairs or completion of the full-penetration welding of the lug base material, the weld shall be examined by liquid penetrant examination in accordance with ASME Code, Section V, Article 6, or ANSI/AWS D1.2. Weld acceptance criteria for the liquid penetrant examination shall be in accordance with the ASME Code, Section VIII, Division 1, Appendix 8, or ANSI/AWS D1.2, Paragraph 6.17, as applicable.

Inspection and weld repair documentation shall be maintained as part of the maintenance records for the specific NAC-LWT packaging.

Table 8.2-1 Maintenance Program Schedule

Cask Cavity (Including Port Cover and Lid Seals)	
Annually	Visual Inspection Lid and Port Cover Seal Replacement Periodic Helium Leak Tests (per Section 8.1.3)
Valve Port Covers	
Each Loaded Shipment	Visual Inspection Air Pressure Drop Test at 15 +1/-0 psig (Alternate port covers) Maintenance Helium Leakage Testing (Alternate B port covers) Seal Replacement as Necessary[1]
Drain Line Gasket	
Each Shipment Annually	Seal Replacement as Necessary Seal Replacement
Water Jacket and Expansion Tank	
Annually Each Shipment	Visual Inspection Check Fluid Level, Specific Gravity, and Boron Concentration[2] Visually Inspect Fill, Drain and Inspection Port Plugs for Leakage
Cask Lid Bolts	
Each Shipment Long Term Maintenance	Visually Inspect for Damage and Replace, as required. Bolt replacement upon reaching 20-year life or 550 operational cycles.

[1] Helium leak testing (per Section 8.1.3.2.2) is required following replacement of alternate port cover containment (i.e., face) O-ring seals. For Alternate B port covers, seal replacement and leak testing are required for each shipment per the requirements specified in the Operating Procedures in Chapter 7 and Section 8.1.3.3.2.

[2] The neutron shield fluid must be verified to contain greater than 1.0 wt % boron and the specific gravity must be such that the solution does not freeze at temperatures above -40°F.

Table 8.2-1 Maintenance Program Schedule (Continued)

Water Jacket Relief Valve	
Annually	Replace With New Pre-set Valve, or Verify Opening and Reseating Pressure (Allowable variation is ± 10 psig of Nominal Valve Opening Pressure, 165 psig)
Fasteners, Valved Nipples, Washers, Reusable O-rings, and Helicoils	
Each Shipment	Inspect and Replace as necessary
Lid and Alternate B Port Cover Metallic O-rings	
Each Loaded Shipment	Replace and perform helium leakage rate testing to the criteria specified in Section 8.1.3.
HEUNL Container	
Each Loaded Shipment	Test fill/drain and vent quick disconnect valves. Flush with demineralized water or ≤ 0.5 M nitric acid and visually inspect HEUNL container for damage following discharge of contents and prior to return to service. Perform preshipment leakage test on closure lid inner O-ring seal and lid plug O-ring seal to verify pressure boundary assembly integrity.
After Inner Lid O-ring Seal Replacement or Port Plug and/or O-ring Seal Replacement, or Pressure Boundary Component Replacement or Repair	The container to be emptied and a maintenance helium leakage test to leak tight criteria shall be performed on the replaced seal, or replaced or repaired component.
Annually Every 12 Months or Prior to Returning the Container to Service	The container to be emptied, the inner lid and lid port plug O-ring seals replaced and a periodic helium leakage test to leak tight criteria shall be performed on the closure lid inner O-ring and lid port plug O-ring seals. Replace the container lid outer O-ring seal. Replace fill/drain and vent quick disconnect valved nipples and associated seals

Table 8.2-1 Maintenance Program Schedule (Continued)

HEUNL Container (continued)	
After 15 Months of "HEUNL Container Content Fill Time" Usage	Each HEUNL shall be replaced and appropriately disposed of following achieving a total "HEUNL Container Content Fill Time" approaching 15 months. No HEUNL container shall be loaded for transport if ≤ 3 months are remaining from the 15 month "HEUNL Container Content Fill Time" life limit. [redacted] Independent of the remaining service life of an HEUNL container, any HEUNL container exposed to accident conditions shall be recovered, unloaded and replaced/disposed.
Following Accident Conditions of Transport	Independent of the remaining service life of an HEUNL container, any HEUNL container exposed to accident conditions of transport shall be recovered, unloaded and replaced/disposed.

8.3 Appendix

This appendix describes the lead pour procedure used to create the lead wall between the inner and outer shells of the LWT cask. This lead wall provides the gamma shielding in the cask and is subject to tests verifying its shielding integrity.

8.3.1 General Description

Basically, this procedure consists of pouring molten lead in the annular space between the inner and outer shells followed by the controlled cooling of the lead. Electrical heaters and gas burners are used to heat the cask body prior to and during the lead pour. To cool the lead in a controlled manner, water is sprayed on the cask surfaces while simultaneously switching off the electrical heaters and gas burners.

The lead used in this procedure complies with the ASTM Standard B29, chemical copper grade.

8.3.2 Preparation

The cask must be placed in the vertical position (Figure 8.3-1) for the lead pour. It must also be perfectly level and stable.

Stiffening bars are placed inside the cask to prevent distortion of the cask body assembly as a result of the expansion and/or shrinkage expected during the pouring and cooling of the lead. An auxiliary ring is welded on the upper edge of the outer shell to be used as a guide in reaching the required level of lead. This ring is later removed by machining.

The cask body is checked for cleanliness, especially inside the annular space, but also on all outer surfaces. It is important to remove any foreign matter that when heated might be harmful to the surface material.

A Dimensional Verification of the cask body is performed, especially checking the tolerances of the annular space between the inner and outer shells.

The cask body is heated by using a combination of electrical resistances arranged inside the cask and gas burners as rings located at spaced levels surrounding the outer surface of the cask. Prior to the lead pour, the top flange area of the cask is heated with hand burners to approximately 572°F (300°C).

The actual temperatures of the cask walls are measured by thermocouples attached to the inner and outer surfaces of the cask. In addition, the temperature is also measured at random by

contact thermocouples. The temperatures are monitored during the complete operation and recorded on charts.

8.3.3 Pouring Procedure

Approximately 27,533 pounds of lead per cask is melted in the appropriate kettles and kept at a temperature in the range of 698°F (370°C) to 790°F (421°C).

The cask body is heated in a steady and uniform manner at a rate not exceeding 90°F per hour (50°C/hour). Once the cask body reaches the holding temperature of 550°F to 650°F (288°C – 343°C) and this temperature appears stabilized, the lead pouring can begin. Note that particular attention must be given to the method and procedure of heating to ensure that the cask surface does not reach 800°F (427°C) maximum during heating or pouring.

The lead pour should not be interrupted and should take as short a time as possible. The pouring is carried out by using filling tubes of different lengths that are changed in the course of the pouring as the level of molten lead rises in the cask. The open end of the filling tubes is kept below the surface of the lead pool during pouring.

The lead is checked during pouring using steel rods to ensure no solidification occurs.

8.3.4 Cooling Process

Once the required level of lead is reached, it is again checked using steel rods to ensure that no solidification has started anywhere in the molten lead volume.

The cooling is controlled by simultaneously turning off the inside electrical heaters and the gas burners outside the cask. This process begins by switching off the heating band at the lowest end of the cask (while keeping the rest of the heaters and burners on) and continues progressively upwards as the solidification of the lead progresses. Water is injected into the gas burners (rings) and then sprayed on the outside surface of the cask to regulate and accelerate the cooling.

During the solidification, the lead is checked using steel rods to ensure that the difference in height in any part of the solid surface of the annular space is not greater than 2 inches (Figure 8.3-2). To meet this requirement, the heaters and burners (sprayers) must be regulated as necessary. The top surface should be kept molten until the rest of the cask has solidified.

Figure 8.3-1 Lead Pour Configuration

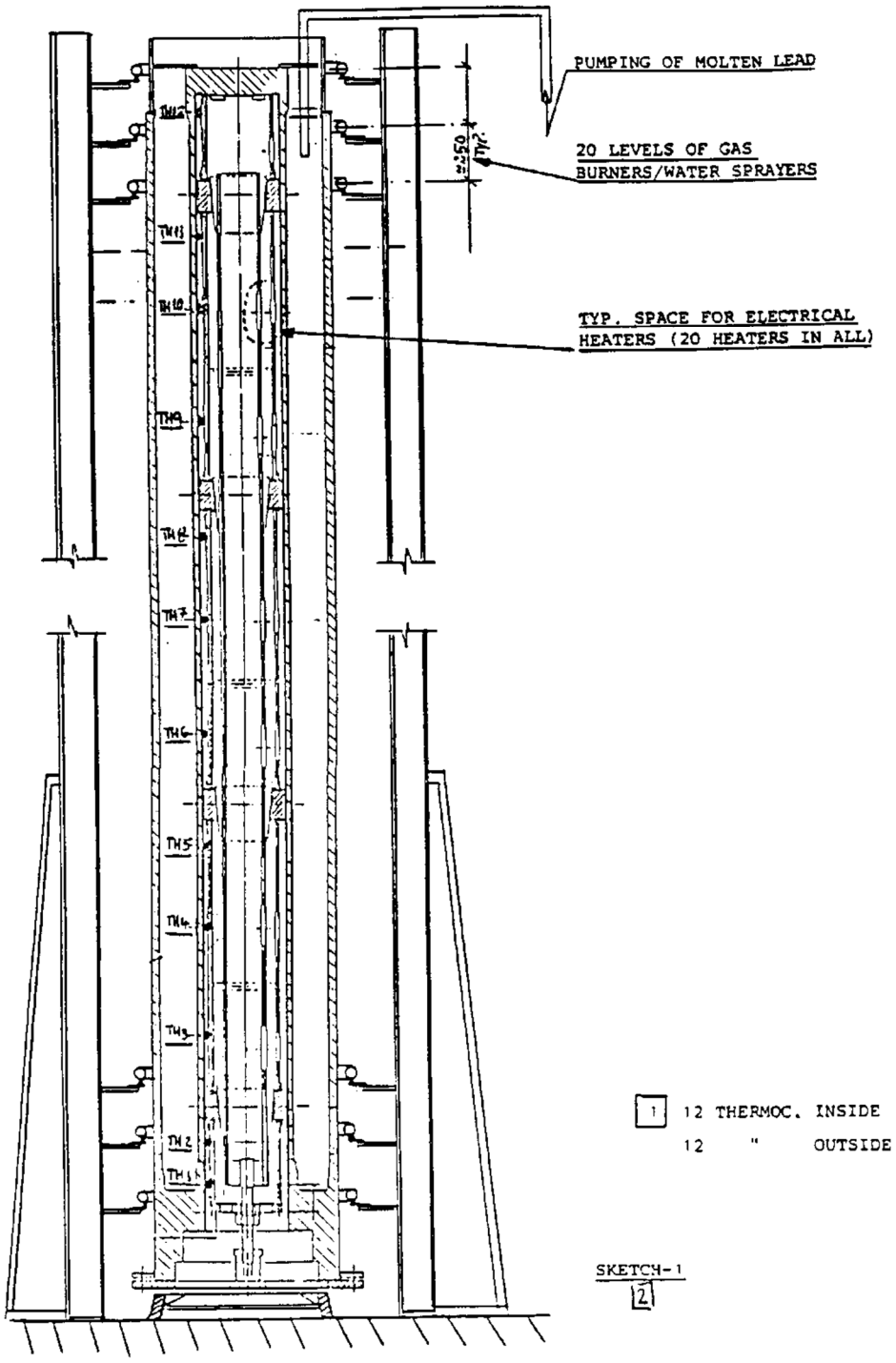

Figure 8.3-2 Allowable Height Difference

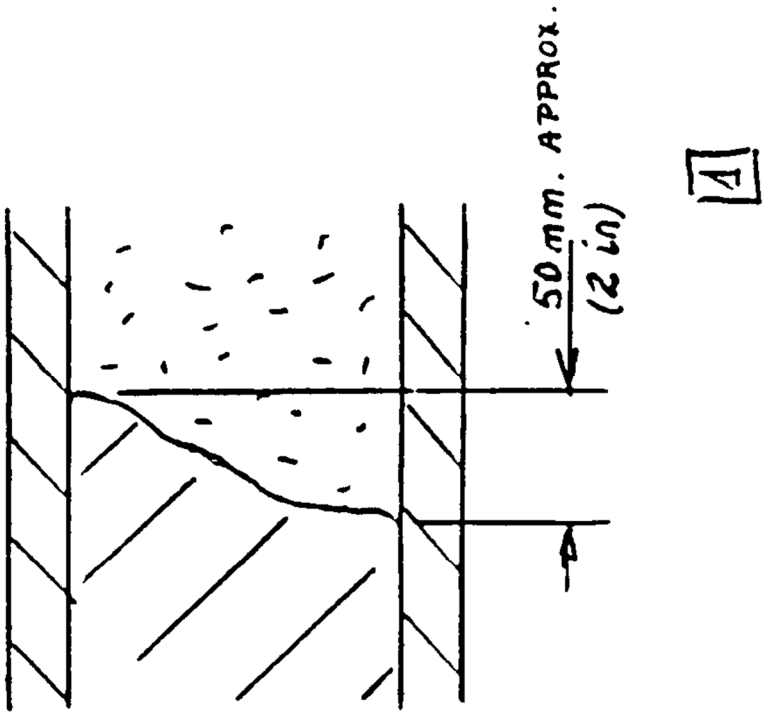

Table of Contents

9 REFERENCES 9-1

9 REFERENCES

"AISC Manual of Steel Construction," 8th Edition, The American Institute of Steel Construction, Inc., 1990.

Alcoa Aluminum Handbook, Pittsburgh, PA, Aluminum Company of America, 1959.

"Aluminum Construction Manual," 2nd Edition, Section 3, The Aluminum Association, Washington, D.C., 1972.

"Annual Book of ASTM Standards," Section 3, Volume 03.01, American Society for Testing and Materials, 1986.

"'ANSYS' Computer Code for Large-Scale General Purpose Engineering Analysis," Swanson Analysis Systems, Inc., Houston, PA.

"ASME Boiler and Pressure Vessel Code," Section III, Subsection NG – Core Support Structures and Subsection NH – Class 1 – Components in Elevated Temperature Service, The American Society of Mechanical Engineers, 1995 with Addenda through 1997.

Baker, E.H., L. Kovalevsky, and F.L. Rish, Structural Analysis of Shells, New York, McGraw-Hill Book Co., December 1966.

Bates, O.K., "Thermal Conductivities of Aqueous Ethylene Glycol Solutions," St. Lawrence University, Canton, NY.

Baumeister, T. and L.S. Marks, Standard Handbook for Mechanical Engineers, 7th Edition, New York, McGraw-Hill Book Co., December 1966.

BAW-246, "NULIF – A Neutron Spectrum Generator, Few-Group Constant Calculator, and Depletion Code," Babcock & Wilcox, August 1976.

Bevington, P.R., Data Reduction and Error Analysis for the Physical Sciences, New York, McGraw-Hill Book Company.

Biggs, J.M., Introduction to Structural Dynamics, New York, McGraw-Hill Book Co., 1964.

Blake, A., "Charts Simplify Calculations for Moments and Deflections of Circular Arches," Machine Design, Cleveland, Penton Publishing Co., December 25, 1958.

Blodgett, O.W., Design of Welded Structures, Cleveland, James F. Lincoln Arc Welding Foundation, 1972.

Book of Standards, Part 7, American Society for Testing and Materials, 1970.

Bruhn, E.F., Analysis and Design of Flight Vehicle Structures, 1st Edition, Cincinnati, Tri-State Offset, Co., 1965.

Bucholz, J.A., "Scoping Design Analyses for Optimized Shipping Casks Containing 1-, 2-, 3-, 5-, 7-, or 10-year old PWR Spent Fuel," Oak Ridge National Laboratory, ORNL/CSD/TM-149, January 1983.

Bucholz, J.A., "XSDOSE: A Module for Calculating Fluxes and Dose Rates at Points Outside A Shield," Vol. 2, Sect. F4 of SCALE-4, August 1981.

Bucholz, J.A., et. Al., "SAS1: A One-Dimensional Shielding Analysis Module."

Cain, V.R. and R.E. Malenfant, "QAD-CG, The Combinatorial Geometry Version of the QAD-P5A Point Kernam Shielding Code," Bechtel Power Corporation, July 1977.

CCC-545, "SCALE-4, A Modular Code System for Performing Standardized Computer Analysis of Licensing Evaluation," ORNL, June 1990.

Chun, R., M. Witte, and M. Schwartz, "Dynamic Impact Effects on Spent Fuel Assemblies," UCID-21246, Lawrence Livermore National Laboratory, October 1987.

"Coefficient of Cubical Expansion for Glycol, Water, and Glycol-Water Solutions," E.I. du Pont de Nemours & Co., Inc., Wilmington, DE, 1963.

Cook, I. And R.S. Peckover, "Effective Thermal Conductivity of Debris Beds," Post Accident Debris Cooling, Proceedings of the Fifth Post Accident Heat Removal Information Exchange Meeting, 40-45, 1982.

Cragoe, C.S., "Properties of Ethylene Glycol and Its Aqueous Solutions," National Bureau of Standards.

DOE/ET/34014-10, "Extended Fuel Burnup Demonstration Program," U.S. Department of Energy, September 1983.

Ebner, M. A., "Stability of Uranium-Zirconium Hydride Spent Fuel in Wet Storage," INEL Report MAE-03-94, July, 1994.

Gallagher, C., "NL Industries Internal Test Report on Tensile Properties of Chemical Lead at Elevated Temperatures," Central Research Laboratory, Highstown, NJ, February 1976.

General Atomics Report UZR-28, "Uranium-Zirconium Hydride Fuels for TRIGA Reactors," 1997.

Gerard, G. and H. Becker, "Handbook of Structural Stability," Part III, TN3783, National Advisory Committee for Aeronautics, 1957.

Greene, N.M., J.L. Lucius, L.M. Petrie, W.E. Ford III, J.E. White, and R.Q. Wright, "AMPX – A Modular Code System for Generating Multigroup Neutron-Gamma Libraries from ENDF/B," ORNL/TM-3706, Oak Ridge National Laboratory, March 1976.

Greene, N.M. and L.M. Petrie, "XSDRNPM-S: A One-Dimensional Discrete Ordinates Code for Transport Analysis," Vol. 2, Sect. F3 of SCALE-4, January 1983.

Handbook of Chemistry and Physics, 49th Edition, Cleveland, OH, The Chemical Rubber Company, 1968.

Hermann, O.W. and R.M. Westfall, "ORIGEN-S: SCALE System Module to Calculate Fuel Depletion, Actinide Transmutation, Fission Product Buildup and Decay and Associated Radiation Source Terms," Vol. 2, Sect. F7 of SCALE-4, February 1989.

Hermann, O.W., "SAS2(H): A Coupled One-Dimensional Depletion and Shielding Analysis Code," Vol. 1, Sect. S2 of SCALE-4, June 1990.

IAEA Transportation Safety Standards (TS-R-1), "Regulations for the Safe Transport of Radioactive Material," June 2000.

Johnson, E.B. and R.K. Reedy, "Critical Experiments with SPERT-D Fuel Elements," ORNL-TM-1207, July 14, 1965.

Jordan, W.C., N.F. Landers, and L.M. Petrie, "Validation of KENO-Va Comparison with Critical Experiments," ORNL/CSD/TM-238, December 1986.

Juvinall, R.C., Stress, Strain, and Strength, New York, McGraw-Hill Book Co., 1967.

Kinsey, R., "Data Formats and Procedures for the Evaluated Nuclear Data File, ENDF," ENDF-102, Second Edition, Brookhaven National Laboratory, 1979.

Kreith, F., Principles of Heat Transfer,2nd Edition, Scranton, PA, International Textbook Company, 1965.

Manual of Steel Construction, 8th Edition, New York, American Institute of Steel Construction, Inc., 1990.

Mark's Standard Handbook for Mechanical Engineers, 9th Edition, McGraw-Hill Book Company, New York.

Merritt, F.S., Standard Handbook for Civil Engineers, McGraw-Hill Book Company, New York, 1968.

Metals Handbook, 9th Edition, American Society of Metals.

MIL-HDBK-5A, "Metallic Materials and Elements for Aerospace Vehicle Structures," Department of Defense, February 1966.

MIL-HDBK-5C, "Metallic Materials and Elements for Aerospace Vehicle Structures," Department of Defense, December 1978.

MIL-HDBK-5E, "Metallic Materials and Elements for Aerospace Vehicle Structures," Department of Defense, May 1989.

MIL-HDBK-5G, "Metallic Materials and Elements for Aerospace Vehicle Structures," Department of Defense, November 1994.

Nelms, H.A., "Effects of Jacket Physical Properties and Curvature on Puncture Resistance," Structural Analysis of Shipping Casks, Volume 3, ORNL/TM-1312, Oak Ridge National Laboratory, June 1968.

"Nuclear Systems Materials Handbook," Volume 1, Revision 1, Hanford Engineering Development Laboratories, Richland, WA, March 10, 1976.

NUREG-0612, "Control of Heavy Loads at Nuclear Power Plants," U.S. Nuclear Regulatory Commission, July 1980.

NUREG-1617, Supplement 1, "Standard Review Plan for Transportation Packages for MOX Spent Nuclear Fuel," U.S. Nuclear Regulatory Commission, September 2005.

NUREG/CR-0733, "Critical Separation Between Sub-Critical Clusters of 4.29 w/o U^{235} Enriched UO_2 Rods in Water with Fixed Neutron Poisons," S.R. Bierman, B.M. Durst, E.D. Clayton, Battelle Pacific Northwest Laboratories, May 1978.

NUREG/CR-0200, Volume 2, Section F2, "SCALE-2 NITAWL-S, Resonance Self-Shielding by the Nordheim Method," N. M. Green and L. M. Petrie, Oak Ridge National Laboratory, October 1981.

NUREG/CR-6361, "Criticality Benchmark Guide for Light-Water-Reactor Fuel in Transportation and Storage Packages," U.S. Nuclear Regulatory Commission, March 1997.

NUREG/CR-6487, Anderson, B.L., Carlson, R.W., and Fisher, L.E., "Containment Analysis for Type B Packages Used to Transport Various Contents," Lawrence Livermore Laboratory, 1996.

NUREG/CR-0200, Volume 2, Section F3, "SCALE-2 XSDRNMP-S, A One Dimensional Discrete Ordinates Program for Transport Analysis," R.M. Westfall, L.M. Petrie, N.M. Greene, J.L. Lucius, Oak Ridge National Laboratory, June 1983.

NUREG/CR-0481, "An Assessment of Stress-Strain Data Suitable for Finite-Element Elastic-Plastic Analysis of Shipping Containers," H.J. Rack and G.A. Knorovsky, Sandia Laboratories, SAND77-1872, September 1978.

NUREG/CR-0796 PNL-2827, "Criticality Experiments with Sub-Critical Clusters of 2.35 and 4.29 w/o U^{235} Enriched $U0_2$ Rods in Water with Uranium or Lead Reflecting Wal1s," S.R. Bierman, B.M. Durst, E.D. Clayton, Battelle Pacific Northwest Laboratories, April 1979.

Paxton, H.C., Critical Dimensions of Systems Containing U^{235}, Pu^{239}, and U^{233}," TID-7028, June 1964.

Peery, D.J., Aircraft Structures, New York, McGraw-Hill Book Company, 1950.

Petrie, L.M. and N.F. Cross, "KENO-IV: An Improved Monte Carlo Criticality Program," ORNL-4938, Oak Ridge National Laboratory, November 1975.

PNL-2438, "Critical Separation Between Sub-Critical Clusters of 2.35 w/o U^{235} Enriched UO_2, Rods in Water with Fixed Neutron Poisons," S.R. Bierman, E.D. Clayton, B.M. Durst, Battelle Pacific Northwest Laboratories, October 1977.

Radiological Health Handbook, U.S. Department of Health, Education and Welfare, Rockville, MD, January 1970.

"Regulations for the Safe Transport of Radioactive Materials," Safety Series No. 6, Revised Edition, International Atomic Energy Agency, 1973.

"Research and Advanced Development Applied Mechanics," Volume 1, Engineering Data Sheets, Avco Corporation, 1962.

Resnick, R. and D. Halliday, Physics, 3rd Edition, Part 1, New York, John Wiley & Sons, 1977.

Roark, R.J., Formulas for Stress and Strain, 4th Edition, New York, McGraw-Hill, Inc., 1965.

Roark, R.J., and W.C. Young, Formulas for Stress and Strain, 5th Edition, New York, McGraw-Hill, Inc., 1975; 6th Edition, 1989.

Roddy, J.W., H.C. Claiborne, R.C. Ashline, P.J. Johnson, B.T. Rhyne, "Physical and Decay Characteristics of Commercial LWR Spent Fuel," ORNL/TM-9591/Vl-Rl, Oak Ridge National Laboratory, January 1986.

"Safety Analysis Report for the NLI-1/2 Spent Fuel Shipping Cask," Nuclear Assurance Corporation, USA/9010/B()F, December 12, 1985.

Schaeffer, N.M., Reactor Engineering for Nuclear Engineers, Springfield, VA, 1984.

"Screw-Thread Standards for Federal Services," U.S. Department of Commerce, 1957.

Shamban TFE O-Ring Seals, Spec. 22-53, Part No. S11214-460, W.S. Shamban & Co., Fort Wayne, IN, 1966.

Shappert, L.B., "Cask Designer's Guide: A Guide for the Design, Fabrication, and Operation of Shipping Casks for Nuclear Applications," ORNL-NSIC-68, Oak Ridge National Laboratories, February 1970.

Shappert, L.B., and W.D. Box, "The Drop Test Facility at the Oak Ridge National Laboratory: A Facility Available to Private Industry," Oak Ridge National Laboratory, Oak Ridge, TN.

Shigley, J.E., Mechanical Engineering Design, 3rd Edition, New York, McGraw-Hill, Inc., 1977.

Shigley, J.E., and C.R. Mischke, Standard Handbook of Machine Design, New York, 1986.

Singer, F.L., Strength of Materials, New York, Harper & Brothers, 1951.

"Table Speeds Calculation of Strength of Threads," Product Engineering, November 27, 1961.

Tang, J.S. "SAS4: A Monte Carlo Cask Shielding Analysis Module Using An Automated Biasing Procedure," March 1989.

"Test Plan: LWT Quarter-Scale Model Drop Tests," Document No. 315-P-01. Nuclear Assurance Corporation, May 31, 1988.

Tietz, T.E., "Determination of the Mechanical Properties of High Purity Lead and a 0.058% Copper-Lead Alloy," Stanford Research Institute, Menlo Park, CA, WADC Technical Report 57-695, ASTIA Document No. 151165, April 1958.

Timoshenko, S., Strength of Materials, 3rd Edition, New York, R. E. Krieger Publishing Co., 1976.

Timoshenko, S., Theory of Plates and Shells, 1st Edition, New York, McGraw-Hill Book Co., 1940.

Timoshenko and Gere, Theory of Elastic Stability, 2nd Edition, New York, McGraw-Hill, Inc., 1961.

Timoshenko, S. and Young, Theory of Structures, New York, McGraw-Hill Book Co., 1965.

Turner, W.D., D.C. Elrod, and I.I. Simon-Tov, "HEATING 5 - An IBM 360 Heat Conduction Program," Oak Ridge National Laboratory, ORNL/CSD/TM-15, March 1977.

Williamson, R.A. and R.R. Alvy, "Impact Effect of Fragments Striking Structural Elements," Holmes and Harver, Inc., 1973.

Childs, K.W., HEATING 7.2 User's Manual, Oak Ridge National Laboratory, ORNL/NUREG/CSD-2/V2/R5, September 1995.

Avallone, E. and T. Baumeister, Marks' Standard Handbook for Mechanical Engineers, 9th Edition, New York, McGraw-Hill Book Company, 1987.

"SCALE 4.3 Modular Code System for Performing Standardized Computer Analyses for Licensing Evaluation for Workstations and Personal Computers," CCC-545, September 1995.

Herman, O.W., "SAS2H: A Coupled One-Dimensional Depletion and Shielding Analysis Module," and C.V. Parks, ORNL/NUREG/CSD-2/V1/R5, Volume 1, Section S2, September. 1995.

Tang, S., "SAS4: A Monte Carlo Cask Shielding Analysis Module Using an Automated Biasing Procedure," ORNL/NUREG/CSD-2/V1/R5, Volume 1, Section S4, September, 1995.

Bucholz, J.A., Landers, N.F., and Petrie, L.M., ORNL/NUREG/CSD-2/V3/R5, Section M7, "The Material Information Processor For Scale," September 1995.

Greene, M., Westfall, R.M., and L.M. Petrie, ORNL/NUREG/CSD-2/V2/R5, "NITAWL-II: Scale System Module For Performing Resonance Shielding And Working Library Production" September 1995.

Jordan, W.C., ORNL/NUREG/CSD-2/V3/R5, Section M4, "Scale Cross-Section Libraries," September 1995.

Landers, N. F., and Petrie L.M, ORNL/NUREG/CSD-2/V1/R5, Section C4, "CSAS: Control Module For Enhanced Criticality Safety Analysis Sequences," September 1995.

Mele, Ravink and Trkov, "TRIGA Mark II Benchmark Experiment, Part I Steady State Operation," Jozef Stefan Institute, Nuclear Technology, Vol. 105, January 1994.

Petrie L.M., and Landers, N.F., ORNL/NUREG/CSD-2/V2/R5, Section F11, "KENO-Va: An Improved Monte Carlo Criticality Program with Supergrouping," September 1995.

Tomsio, M., "Characterization of Triga Fuel," ORNL/Sub/86-22047/3, GA-C18542, Oak Ridge National Laboratory, Oak Ridge, Tennessee, October 1986.

Krieth, F., and Bohn, M.S., "Principals of Heat Transfer," 5th Edition, West Publishing Company, 1993.

Incropera, F.P., and DeWitt, D.P., "Fundamentals of Heat and Mass Transfer," 4th Edition, John Wiley and Sons, 1996.

Owen, D.B., "Factors for One-Sided Tolerance Limits and for Variables Sampling Plans," SCR-607, 1963.

ANSI N14.5-1997, "American National Standard for Radioactive Materials - Leakage Tests on Packages for Shipment," American National Standards Institute, 1997.

ANSI/ANS - 8.1-1983, "Nuclear Criticality Safety in Operations with Fissionable Materials Outside Reactors."

ANSI/ANS - 8.17-1984, "Criticality Safety Criteria for the Handling, Storage, and Transportation of LWR Fuel Outside Reactors."

Bierman, S.R., Clayton, E.D., "Criticality Experiments with Subcritical Clusters of 2.35 w/o and 4.31 w/o ^{235}U Enriched UO_2 Rods in Water at a Water-to-Fuel Volume Ratio of 1.6," NUREG/CR-1547, July 1980.

Baldwin, N.M., Hoovler, G.S., Eng, R.L., and Welfare, F.G., "Critical Experiments Supporting Close Proximity Water Storage of Power Reactor Fuel," B&W-1484-7, July 1979.

Bierman, S.R., and E.D. Clayton, "Criticality Experiments with Subcritical Clusters of 2.35 w/o and 4.31 w/o ^{235}U Enriched UO_2 Rods in Water with Steel Reflecting Walls," Nuclear Technology, Volume 54, pp. 131-144, August 1981.

Bierman, S.R., Durst, B.M., and Clayton, E.D., "Criticality Experiments with Subcritical Clusters of 2.35 and 4.31 w/o ^{235}U Enriched UO_2 Rods in Water with Uranium or Lead Reflecting Walls," NUREG/CR-0796, April 1979.

Bierman, S.R., "Criticality Experiments to Provide Benchmark Data on Neutron Flux Traps," PNL-6205/UC-714, June 1988.

Manaranche, J.C. et al, "Dissolution and Storage Experiment with 4.75 w/o ^{235}U Enriched UO_2 Rods," Nuclear Technology, Volume 50, September 1980.

Machinery's Handbook, 25th Edition, Industrial Press, Inc., New York, NY, 1996.

BISCO Products Data, "FPC Fireblock Silicone Foam," BISCO Products, Inc., Park Ridge, IL, February 1988.

Letter from Rogers Corporation, Bisco Materials Unit, dated February 2, 1999, from Daniel J. Kubrick.

Interim Staff Guidance-11 (ISG-11), Revision 3, "Cladding Considerations for the Transportation and Storage of Spent Fuel," U.S. Nuclear Regulatory Commission, November 2003.

Holometrix Micromet test report NCN-2, dated May 2000.

Ugural, A.C. and Fenster, S.K., "Advanced Strength and Applied Elasticity," Second Edition, Elsevier Science Publishing Company, New York, New York, 1987.

NAC Specification 315-S-09, "O-Ring Temperature Testing for the LWT Alternate Port Cover," Revision 0, February 2000.

"HTGR/RERTR Fuel Materials Characterization and Packaging Report," PC-00384/1, General Atomics, San Diego, CA, April 2002.

UNIFRAX Product Specifications, Fiberfrax® Ceramic Fiber Paper, C-1423, Unifrax Corporation, Niagara Falls, NY, June 1996.

LLNL Report UCRL-53441, "Review of Hydrogen Isotope Permeability Through Materials"

RSIC Computer Code Collection, *ORIGEN2.1; Isotope Generation and Depletion Code – Matrix Exponential Method,* CCC-371, Oak Ridge National Laboratory, Oak Ridge TN, 1996.

Y.K. Sakamoto and M. Sugisaki, "Fusion Science and Technology," Vol. 41, pp 912-914, May 2002.

"Aluminum Standards and Data," Table 2.2, The Aluminum Association, Washington, DC, 1997.

Blake, Alexander, "Practical Stress Analysis in Engineering Design," 2nd Edition, Marcel Dekker Inc., New York, 1990.

ORNL/TM-12667, "Validation of the SCALE System for PWR Spent Fuel Isotopic Composition Analyses," Oak Ridge National Laboratory, March 1995.

ORNL/TM-13317, "An Extension of the Validation of SCALE (SAS2H) Isotopic Prediction for PWR Spent Fuel," Oak Ridge National Laboratory, September 1996.

NUREG/CR-6798, "Isotopic Analysis of High Burnup PWR Spent Fuel Samples from the Takahama-3 Reactor," US Nuclear Regulatory Commission, January 2003.

ORNL/TM-13315, "Validation of SCALE (SAS2H) Isotopic Predictions for BWR Spent Fuel," Oak Ridge National Laboratory, September 1998.

ORNL/TM-13687, "Prediction of the Isotopic Composition of UO_2 Fuel from a BWR: Analysis of the DU1 Sample from the Dodewaard Reactor," Oak Ridge National Laboratory, October 1998.

Westinghouse Savannah River Company, WSRC-TR-98-00317, "Bases for Containment Analysis for Transportation of Aluminum-Based Spent Nuclear Fuel," October 1998.

ASME Boiler and Pressure Vessel Code, Section V, "Nondestructive Examination," American Society of Mechanical Engineers, New York, NY, 2001 Edition with 2003 Addenda.

ASME Boiler and Pressure Vessel Code, Section VIII, "Rules for Construction of Pressure Vessels," American Society of Mechanical Engineers, New York, NY, 2001 Edition with 2003 Addenda.

ASME Boiler and Pressure Vessel Code, Section IX, "Qualification Standard for Welding and Brazing Procedures, Welders, Brazers, and Welding and Brazing Operators," American Society of Mechanical Engineers, New York, NY, 2001 Edition with 2003 Addenda.

AWS D1.2, "Structural Welding Code–Aluminum," The American Welding Society, Miami, FL, 2003.

Request for DOE Exemption and DOE Certificate of Compliance for the Shipment of a Single, Large Radioisotope Thermoelectric Generator (RTG) for One-Way Transport and Disposal – BUP-500

Cask Storage System (CSS) Functional Design Criteria (Project W-135) (CHPRC-02622 Revision 10)

Thermal Analysis of a Dry Storage Concept for Capsule Dry Storage Project (WMP-16940, Revision 0)

S.D. Wix, Proceedings Volume 2, The 11th International Conference on the Packaging and Transportation of Radioactive Materials (PATRAM'95), pp 672.

NUREG/CR-6322, "Buckling Analysis of Spent Fuel Basket," Lawrence Livermore National Laboratory, Livermore, CA, 1995

ASME Boiler and Pressure Vessel Code, Appendix F, "Rules for Evaluation of Service Loadings with Level D Service Limits," 1995 Edition with 1997 Addenda.

ASME SA-276, "Specification for Stainless Steel Bars and Shapes", ASME Boiler & Pressure Vessel Code, Section II, Part A, The American Society of Mechanical Engineers, New York, 2010.