HOLTEC PALISADES

27780 Blue Star Highway, Covert, MI 49043

PNP 2026-018 10 CFR 50.36a

March 25, 2026

U.S. Nuclear Regulatory Commission
ATTN: Document Control Desk
Washington, DC 20555-0001

Palisades Nuclear Plant
Docket No. 50-255
Renewed Facility Operating License No. DPR-20

Subject: Annual Radioactive Effluent Release Report

In accordance with the requirements of Title 10 of the Code of Federal Regulations Part 50 (10 CFR 50), Section 36a, *Technical specifications on effluents from nuclear power reactors*, subparagraph (a)(2), 10 CFR 50.36a(a)(2), Holtec Palisades, LLC is submitting the 2025 Annual Radioactive Effluent Release Report (ARERR) for Palisades Nuclear Plant (PNP). The 10 CFR 50.36a(a)(2) requirements are listed in PNP Technical Specification (TS) 5.6.3. Additionally, PNP TS 5.5.1 requires that any changes made to the Offsite Dose Calculation Manual (ODCM) be included in the ARERR.

The letter Enclosure contains the PNP 2025 ARERR. The Enclosure Attachment contains PNP ODCM Revision 36 which was issued during the reporting period.

The PNP ARERR provides a summary of the quantities of radioactive liquid and gaseous effluent releases and solid radioactive waste processed during the period of January 1, 2025, through December 31, 2025.

This letter contains no new and no revised regulatory commitments.

Should you have any questions or require additional information, please contact me at (269) 764-2375.

Respectfully,

Kami J. Miller

Digitally signed by Kami J. Miller
DN: cn=Kami J. Miller, c=US, o=Holtec Palisades, email=kmiller1@holtec.com
Date: 2026.03.25 09:00:25 -04'00'

Kami Miller
Director, Regulatory
Holtec Palisades

Enclosure: Annual Radioactive Effluent Release Report

Enclosure Attachment: Offsite Dose Calculation Manual (ODCM) Revision 36

cc: NRC Region III Regional Administrator
NRC Senior Resident Inspector – Palisades Nuclear Plant
NRC NMSS Project Manager – Palisades Nuclear Plant
American Nuclear Insurers (ANI)

Enclosure

PNP 2026-018

Annual Radioactive Effluent Release Report

(30 Pages Follow)

Plant: Palisades Nuclear Plant	Page 1 of 30
	YEAR: 2025
Document Number: PNP 2026-018	
Annual Radioactive Effluent Release Report	



TABLE OF CONTENTS

1.0 INTRODUCTION 3

2.0 SUPPLEMENTAL INFORMATION.....3

3.0 GASEOUS EFFLUENTS.....13

4.0 LIQUID EFFLUENTS 16

5.0 SOLID WASTE SUMMARY 19

6.0 DIRECT DOSE 22

7.0 RADIOLOGICAL IMPACT TO MAN 24

ATTACHMENTS

Attachment 1: - NON-REMP Groundwater Monitoring Results (NEI 07-07) 26

1.0 INTRODUCTION

Palisades Energy is a shutdown single unit Combustion Engineering Pressurized Water Reactor (PWR) located in Van Buren County's Covert Township on Lake Michigan. The plant operated from 1973 until May 2022 when it was permanently shutdown and sold to Holtec Decommissioning International on June 28th, 2022. The plant rests on over 400 acres located 5-miles south of the city of South Haven, Michigan. This report is a summary of the radiological effluent data in accordance with Technical Specification (TS) 5.6.3 for the 2025 calendar year. Both liquid and gaseous radiological effluents are released in accordance with the Offsite Dose Calculation Manual (ODCM). All releases in the reporting period were well below the defined limits in the ODCM.

1.1 Executive Summary

Gaseous and liquid radioactive nuclides in the plant's effluents were monitored and recorded throughout the year and a dose to the public was routinely calculated to ensure compliance with regulatory limits. Monitored pathways and methodologies as well as regulatory limits are described below. The calculated Whole Body dose to a member of the public located hypothetically at the site boundary in 2025 was 2.21E-01 mrem/yr, which was 0.88% of the limit of 25.0 mrem/yr from all sources of the uranium fuel cycle, and 2.06E-01 mrem/yr which is 0.27% of the annual limit for the thyroid of 75.0 mrem/yr (Table 13). The Radioactive Environmental Monitoring Program (REMP) sample results and conclusions for 2025 support the results and conclusions of the Radioactive Effluent Controls (REC) program in that there were no impacts to the public or environment from the Palisades plant in 2025.

2.0 SUPPLEMENTAL INFORMATION

2.1 Regulatory Limits

The ODCM contains the limits to which Palisades must adhere. Because of the "as low as reasonably achievable" (ALARA) philosophy at Palisades, actions are taken to reduce the amount of radiation released to the environment. Liquid and gaseous release data show that the dose from Palisades is considerably below the ODCM limits. This data reveals that the radioactive effluents have an overall minimal dose contribution to the surrounding environment. The following are the limits required by the ODCM:

1. Fission and activation gases:

    a. Dose rates due to noble gas effluents released in gaseous form from the site to areas at and beyond the site boundary shall be limited to the following:

        - ≤ 500 mrem/year to the total body
        - ≤ 3000 mrem/year to the skin

b. Air dose due to noble gases released in gaseous effluents to areas at and beyond the site boundary shall be limited to the following:

1) Quarterly

- ≤ 5 mrad/qtr gamma
- ≤ 10 mrad/qtr beta

2) Yearly

- ≤ 10 mrad/yr gamma
- ≤ 20 mrad/yr beta

2. Iodine, tritium, and all radionuclides in particulate form with half-lives greater than 8 days.

a. The dose rate for Iodine-131, Iodine-133, tritium, and all radionuclides in particulate form with half-lives greater than 8 days in gaseous effluents released to areas at and beyond the site boundary shall be limited to the following:

- ≤ 1500 mrem/yr to any organ

b. The dose to a MEMBER OF THE PUBLIC from Iodine-131, Iodine-133, tritium, and all radionuclides in particulate form with half-lives greater than 8 days in gaseous effluents released to areas at and beyond the site boundary shall be limited to the following:

1) Quarterly

- ≤ 7.5 mrem/qtr to any organ

2) Yearly

- ≤ 15 mrem/yr to any organ

3. Liquid Effluents Dose

a. The dose or dose commitment to a MEMBER OF THE PUBLIC from radioactive materials in liquid effluents released to unrestricted areas shall be limited to the following:

1) Quarterly

- ≤ 1.5 mrem/qtr total body
- ≤ 5 mrem/qtr to any organ

2) Yearly

- ≤ 3 mrem/yr total body
- ≤ 10 mrem/yr to any organ

4. Total Dose (40CFR190)

   a. The annual (calendar year) dose or dose commitment to any MEMBER OF THE PUBLIC due to releases of radioactivity and to radiation from all sources of the uranium fuel cycle shall be limited to the following:

   - ≤ 25 mrem/yr, Total Body or any Organ except Thyroid.
   - ≤ 75 mrem/yr, Thyroid

2.2 Maximum Permissible Concentrations

1. Fission & Activation Gases, Iodines, and Particulates with Half Lives > Eight (8) Days

   The above limits (section 2.1.1 and 2.1.2) are provided to ensure that radioactive material discharged in gaseous effluents will not result in the exposure of an individual in an unrestricted area to annual average concentrations exceeding the limits of 10 CFR 20, Appendix B, Table 2, Column 1.

2. Liquid Effluents

   The concentration of radioactive material released shall be limited to ten times the concentration specified in 10 CFR 20, Appendix B, Table 2, Column 2, for radionuclides other than dissolved or entrained noble gases. For dissolved or entrained noble gases, the total concentration released shall be limited to 2.0E-04 microCurie/ml.

2.3 Average Energy

The average energy ($\bar{E}$) of the radionuclide mixture in releases of fission and activation gases as defined in Regulatory Guide 1.21, Appendix B, Section A.3 is not applicable because the limits used for gaseous releases are based on calculated dose to members of the public.

2.4 Measurements & Approximations of Total Radioactivity

Palisades' gamma spectroscopy system uses 0.25 keV per channel with a range of 0-2000 keV. All analyses are performed to achieve the required lower limit of detection as specified in Palisades' Offsite Dose Calculation Manual (ODCM).

a. Fission and Activation Gases

Noble gas activity is continuously monitored via a beta scintillation detector on the main stack release point. Additional radiation monitors are located upstream for all likely radiological pathways. Data is reviewed and quantified weekly in accordance with the ODCM.

b. Airborne Iodine

ODCM Revision 36 (June 2025) reinstated continuous iodine sampling when the licensing changed from decommissioning to operating (Aug 2025). Cartridges are exchanged and analyzed weekly in accordance with the ODCM for iodine isotopic activity.

c. Airborne Particulates (with half-lives > 8 days)

Particulates are continuously collected on a filter paper via an isokinetic sampling assembly on the main stack release point. Filters are exchanged and analyzed weekly in accordance with the ODCM for gamma isotopic activity.

d. Airborne Tritium

Gaseous tritium effluent is calculated monthly in accordance with the ODCM considering spent fuel pool evaporation rate. When the reactor head is removed and the reactor cavity is flooded, reactor cavity evaporation rate is also factored into this calculation.

e. Airborne Carbon-14

Carbon-14 release values are calculated using the methodology included in the EPRI Technical Report 1021106, using the normalized Carbon-14 production rate of 3.9 Ci/GW_tyr (Curie per gigawatt-thermal-year), a gaseous release fraction of 98%, a Carbon-14 carbon dioxide fraction of 30%, a reactor power rating of 2565.4 MW_{th}, and equivalent full power operation of zero days.

f. Airborne Sr-89 and Sr-90

A composite, made up of each weekly stack filter paper, is analyzed on a quarterly frequency for the radionuclide Sr-89 and Sr-90.

g. Airborne Gross Alpha

A composite, made up of each weekly stack filter paper, is analyzed on a monthly frequency for gross alpha activity.

h. Liquid Gamma Emitters

Continuous effluent pathways are sampled by a compositor approximately each hour. Weekly, the composite sample for each continuous release pathway is analyzed for gamma emitters. Additionally, a monthly grab sample from each continuous effluent pathway is analyzed for gamma emitters. Each processed liquid radiological batch tank is sampled after adequate mixing for a representative sample and analyzed for gamma emitters prior to release.

i. Liquid Tritium, Gross Alpha Activity, and Gross Beta Activity

Continuous effluent pathways are sampled by a compositor approximately each hour. Monthly, a composite sample for each continuous release pathway is analyzed for tritium and gross alpha activity. Service water effluent is also composited and analyzed monthly for gross beta activity. Each processed liquid radiological batch tank is sampled after adequate mixing for a representative sample and analyzed for tritium prior to release. Each processed liquid radiological batch is analyzed as a monthly composite for tritium and gross alpha activity.

j. Liquid Sr-89, Sr-90, Ni-63, and Fe-55

Quarterly, a composite from each continuous effluent pathway and a composite of processed liquid radiological batches are analyzed for Sr-89, Sr-90, Ni-63, and Fe-55.

k. Estimated Total Error Present

Estimates of measurement and analytical error for gaseous and liquid effluents are calculated as follows:

$$E_T = \sqrt{[(E_1)^2 + (E_2)^2 + \ldots (E_n)^2]}$$

Where:

E_T = total percent error

$E_1 \ldots E_n$ = percent error due to calibration standards, laboratory analysis, instruments, sample flow, etc.

2.5 Batch Releases

A batch release as defined by the ODCM is the discharge of wastes of a discrete volume, meaning that it has a defined start time and stop time.

1. Liquid

   a. Number of batch releases: 35

   b. total time period for batch releases: 273.75 hours

   c. Maximum time period for a batch release: 35.50 hours

   d. Average time period for a batch release: 7.82 hours

   e. Minimum time period for a batch release: 1.68 hours

2. Gaseous

   a. Number of batch releases: 1

   b. Total time period for batch releases: 1.82 hours

   c. Maximum time period for a batch release: 1.82 hours

   d. Average time period for a batch release: 1.82 hours

   e. Minimum time period for a batch release: 1.82 hours

2.6 Continuous Releases

A continuous release is an essentially uninterrupted release of gaseous or liquid effluent for extended periods during normal operation of the facility where the volume of radioactive waste is non-discrete and there is input flow during the release.

1. Liquid

   a. Palisades continuously monitors one common continuous release discharge point (the mixing basin) using radiation monitors and sample analysis in accordance with Palisades ODCM. The major input pathways to the mixing basin include the service water effluent, turbine building sump effluent, and processed liquid radiological effluent. All major input pathways are also continuously monitored using radiation monitors and/or sample analysis in accordance with Palisades ODCM. Palisades contracts an independent laboratory to perform redundant and specialized analysis.

2. Gaseous

   a. Palisades continuously monitors one common continuous release discharge point (the plant stack) using radiation monitors and sample analysis in accordance with Palisades ODCM. The major input pathways to the plant stack include the auxiliary building and containment building. Major input pathways are continuously monitored using radiation monitors and/or sample analysis in accordance with Palisades ODCM. Palisades contracts an independent laboratory to perform redundant and specialized analysis.

2.7 Abnormal Releases

1. Gaseous

   a. Number of releases: 0

2. Liquid

   a. Number of releases: 0

2.8 Non-routine, Planned Discharges

1. Non-routine planned releases are those that are not monitored by plant installed process monitors but are monitored by other means and routinely evaluated for activity. There were no liquid non-routine releases in 2025 but there were twenty-five (25) non-routine gaseous releases. The areas routinely monitored include the Hot Machine Shop, East Radwaste, SIRW Tank Vent, Black Bag Room, and from work areas set up outside the primary RCA. These gaseous releases consisted of particulates and were calculated, accounted for, and included in the Section 3.0 Tables under each quarter that they were released.

2.9 Land Use Census Changes

1. The 2025 Land Use Census resulted in no changes to critical receptor locations (i.e. routes of exposure). The critical garden is within 1 mile of the plant in the SSE sector. The critical livestock is within 3 miles of the plant in the ESE sector. The critical resident is conservatively assumed to be at the site boundary, but the nearest resident is physically located 0.48 miles in the SSW sector. The critical receptors are used in conjunction with meteorological data to model dose consequence of Palisades' effluent.

2.10 Effluent Monitor Instrument Inoperability

1. The Circulating Water Discharge Monitor (RIA-1323) was placed out of service after attempting to calibrate in August 2024 and failed to return to normal readings after the electrical signal simulating a source was removed from the detector. Also, the low flow alarm light did not come on and the Control Room did not receive an annunciation as expected. Attempts to resolve this issue failed and it remains out of service as of December 31, 2025.

2. Radwaste Discharge Monitor (RIA-1049) was out of service due to unexplained rising background counts on March 12, 2025 and returned to service on May 22, 2025. It was taken OOS again on June 16, 2025 for the same issue and returned to service on September 26, 2025. During that time, liquid radwaste waste batch releases were performed per Action 1 of Table 1-4 of the ODCM. The monitor was removed, thoroughly cleaned, recalibrated, and returned to service.

3. A and B Main Steam Line Monitors were calibrated in October 2025 and placed in-service but failed the quarterly functional check in November. A Main Steam Line Monitor (RIA-2324) had an audible alarm that failed to activate upon a Warn or High alarm, and B Main Steam Line Monitor failed due to having the wrong setpoints for the Warn and High alarms. Work requests were submitted to correct these issues but remain OOS as of December 31, 2025.

2.11 Offsite Dose Calculation Manual (ODCM) Changes

Revision 36 was issued June 2025 and included many changes to support returning to an operating license in August 2025 and to support plant operation anticipated first quarter 2026. Major changes included:

1. The addition of effluent monitors Condenser Evacuation System Noble Gas Activity Monitor (RIA-0631), Stack Gas Effluent System Hi Range Noble Gas Monitor (RIA-2327), Main Steam Safety and Dump Valve Discharge Line Gross Gamma Activity Monitors (RIA-2323 and 2324), and Stack Effluent System Iodine sampling.

2. Note "i" was added to Tables 1-3 and 1-7, which stated that sampling was not required when defueled technical specifications were implemented.

3. Particulate Iodine and Broadleaf vegetation were added back into the Radiological Environmental Monitoring Program (REMP), maps were updated and air sample location 12 at the Emergency Operating Facility (EOF) in Benton Harbor was added, which became the new control location in December 2024.

4. Removed the Service Water and Turbine Building Compositors from Table 1-4, Radioactive Liquid Effluent Monitoring Instrumentation to better align with NUREG 1302, which states that the radiation monitors or the compositors need to be listed.

2.12 Process Control Program (PCP) Changes

1. No major radwaste system modifications (as defined in the ODCM) were implemented in 2025.

2. Procedure Process Control Program (EN-RW-105) governing the PCP in 2025 was updated to a new format and is now RP-415. No other changes have been made.

2.13 NON-REMP Groundwater Monitoring Results (NEI 07-07)

Groundwater is routinely sampled onsite in support of the Groundwater Protection Initiative (GPI). These samples are not part of the Radiological Environmental Monitoring Program. Palisades has 23 groundwater monitoring wells (which have the prefix "MW"), and 16 temporary wells (which have the prefix "TW") to provide additional monitoring in strategic locations. Additional details and sample results are contained in Attachment 1. No detectable gamma isotopes or tritium was observed in 2025 from any of the monitoring or temporary wells.

Palisades continues to implement the GPI in accordance with NEI 07-07 with the goal of prompt identification and correction of leaks from plant systems or outside tanks and piping.

All outdoor tanks as described in the ODCM were maintained within the ODCM limit of less than 1,000 times the effluent concentration (EC), excluding tritium and noble gases, as listed in 10 CFR Part 20, Appendix B, Table 2, Column 2.

2.14 Errata/Corrections to Previous ARERRs

1. None

2.15 Notes for Tables 1 through Table 12

1. The “annual total” column for all Tables in this report may not be equal to exactly the sum of the four quarters due to rounding differences and the three significant figure format for reporting.

2. The annual dose values may not be equal to the sum of the four quarters due to different critical receptors and critical age groups between different quarters.

3. Table notation “NA” means “not applicable”

4. Table notation “NS” means “not sampled”

3.0 GASEOUS EFFLUENTS

3.1 Gaseous Effluent and Waste Disposal Report

Table 1, Gaseous Effluents - Summation of All Releases

A. Fission and Activation Gases	Units	Quarter 1	Quarter 2	Quarter 3	Quarter 4	Annual	Uncertainty (%)
1. Total Release	Ci	3.69E+00	2.82E+00	6.30E-01	2.76E-01	7.42E+00	1.11E+01
2. Average Release Rate	µCi/s	4.75E-01	3.59E-01	7.93E-02	3.47E-02	2.37E-01	
B. Total Iodines	Units	Quarter 1	Quarter 2	Quarter 3	Quarter 4	Annual	Uncertainty (%)
1. Total Release	Ci	NS	NS	<LLD	<LLD	<LLD	1.11E+01
2. Average Release Rate	µCi/s	N/A	N/A	N/A	N/A	N/A	
C. Particulates	Units	Quarter 1	Quarter 2	Quarter 3	Quarter 4	Annual	Uncertainty (%)
1. Total Release	Ci	2.62E-06	1.35E-07	3.99E-06	3.64E-06	1.04E-05	1.11E+01
2. Average Release Rate	µCi/s	3.36E-07	1.72E-08	5.02E-07	4.58E-07	3.28E-07	
D. Tritium	Units	Quarter 1	Quarter 2	Quarter 3	Quarter 4	Annual	Uncertainty (%)
1. Total Release	Ci	1.41E+00	7.45E-01	7.21E-01	9.40E-01	3.82E+00	1.25E+01
2. Average Release Rate	µCi/s	1.81E-01	9.48E-02	9.07E-02	1.18E-01	1.21E-01	
E. Gross Alpha	Units	Quarter 1	Quarter 2	Quarter 3	Quarter 4	Annual	Uncertainty (%)
1. Total Release	Ci	<LLD	<LLD	<LLD	<LLD	<LLD	N/A
2. Average Release Rate	µCi/s	N/A	N/A	N/A	N/A	N/A	
F. Carbon-14	Units	Quarter 1	Quarter 2	Quarter 3	Quarter 4	Annual	Uncertainty (%)
1. Total Release	Ci	N/A	N/A	N/A	N/A	N/A	N/A
2. Average Release Rate	µCi/s	N/A	N/A	N/A	N/A	N/A	

Table 2 Gaseous Effluents - Ground Level - Batch Mode

Radionuclide Released	Units	Quarter 1	Quarter 2	Quarter 3	Quarter 4	Annual
Fission Gases						
Ar-41	Ci	<LLD	<LLD	<LLD	<LLD	<LLD
Kr-85	Ci	1.66E-04	<LLD	<LLD	<LLD	1.66E-04
Kr-85m	Ci	<LLD	<LLD	<LLD	<LLD	<LLD
Kr-87	Ci	<LLD	<LLD	<LLD	<LLD	<LLD
Kr-88	Ci	<LLD	<LLD	<LLD	<LLD	<LLD
Xe-133	Ci	<LLD	<LLD	<LLD	<LLD	<LLD
Xe-135	Ci	<LLD	<LLD	<LLD	<LLD	<LLD
Xe-135m	Ci	<LLD	<LLD	<LLD	<LLD	<LLD
Xe-138	Ci	<LLD	<LLD	<LLD	<LLD	<LLD
Total for Period	Ci	1.66E-04	0.00E+00	0.00E+00	0.00E+00	1.66E-04
Iodines						
I-131	Ci	NS	NS	NS	NS	NS
I-133	Ci	NS	NS	NS	NS	NS
I-135	Ci	NS	NS	NS	NS	NS
Total for Period	Ci	0.00E+00	0.00E+00	0.00E+00	0.00E+00	0.00E+00
Particulates						
Co-58	Ci	<LLD	<LLD	<LLD	<LLD	<LLD
Co-60	Ci	<LLD	<LLD	<LLD	<LLD	<LLD
Sr-89	Ci	<LLD	<LLD	<LLD	<LLD	<LLD
Sr-90	Ci	<LLD	<LLD	<LLD	<LLD	<LLD
Cs-134	Ci	<LLD	<LLD	<LLD	<LLD	<LLD
Cs-137	Ci	<LLD	<LLD	<LLD	<LLD	<LLD
Total for Period	Ci	0.00E+00	0.00E+00	0.00E+00	0.00E+00	0.00E+00
Tritium						
H-3	Ci	<LLD	<LLD	<LLD	<LLD	<LLD
Gross Alpha						
Alpha	Ci	<LLD	<LLD	<LLD	<LLD	<LLD
Carbon-14						
C-14	Ci	N/A	N/A	N/A	N/A	N/A

NS - Not Sampled

Table 3 Gaseous Effluents - Ground Level - Continuous Mode

Radionuclide Released	Units	Quarter 1	Quarter 2	Quarter 3	Quarter 4	Annual
Fission Gases						
Ar-41	Ci	<LLD	<LLD	<LLD	<LLD	<LLD
Kr-85	Ci	3.69E+00	2.82E+00	6.30E-01	2.76E-01	7.42E+00
Kr-85m	Ci	<LLD	<LLD	<LLD	<LLD	<LLD
Kr-87	Ci	<LLD	<LLD	<LLD	<LLD	<LLD
Kr-88	Ci	<LLD	<LLD	<LLD	<LLD	<LLD
Xe-133	Ci	<LLD	<LLD	<LLD	<LLD	<LLD
Xe-135	Ci	<LLD	<LLD	<LLD	<LLD	<LLD
Xe-135m	Ci	<LLD	<LLD	<LLD	<LLD	<LLD
Xe-138	Ci	<LLD	<LLD	<LLD	<LLD	<LLD
Total for Period	Ci	3.69E+00	2.82E+00	6.30E-01	2.76E-01	7.42E+00
Iodines						
I-131	Ci	NS	NS	<LLD	<LLD	<LLD
I-133	Ci	NS	NS	<LLD	<LLD	<LLD
I-135	Ci	NS	NS	<LLD	<LLD	<LLD
Total for Period	Ci	0.00E+00	0.00E+00	0.00E+00	0.00E+00	0.00E+00
Particulates						
Co-58	Ci	<LLD	<LLD	<LLD	<LLD	<LLD
Co-60	Ci	2.58E-06	1.35E-07	3.97E-06	3.64E-06	1.03E-05
Sr-89	Ci	<LLD	<LLD	<LLD	<LLD	<LLD
Sr-90	Ci	<LLD	<LLD	<LLD	<LLD	<LLD
Cd-109	Ci	<LLD	<LLD	1.84E-07	<LLD	1.84E-07
Ag-110m	Ci	<LLD	<LLD	<LLD	<LLD	0.00E+00
Cs-134	Ci	<LLD	<LLD	<LLD	<LLD	<LLD
Cs-137	Ci	3.47E-08	<LLD	2.17E-08	<LLD	5.64E-08
Total for Period	Ci	2.61E-06	1.35E-07	4.18E-06	3.64E-06	1.06E-05
Tritium						
H-3	Ci	1.41E+00	7.45E-01	7.21E-01	9.40E-01	3.82E+00
Gross Alpha						
Alpha	Ci	<LLD	<LLD	<LLD	<LLD	<LLD
Carbon-14						
C-14	Ci	N/A	N/A	N/A	N/A	N/A

NS - Not Sampled

4.0 LIQUID EFFLUENTS

4.1 Liquid Effluent and Waste Disposal Report

Table 4 - Liquid Effluents - Summation of All Releases

A. Fission and Activation Products	Units	Quarter 1	Quarter 2	Quarter 3	Quarter 4	Annual	Uncertainty (%)
1. Total Release	Ci	2.15E-03	5.19E-02	6.87E-03	4.13E-03	1.32E-02	5.55E+01
2. Average Diluted Concentration	µCi/mL	7.31E-10	1.74E-08	2.28E-09	1.37E-09	1.10E-09	
B. Tritium	Units	Quarter 1	Quarter 2	Quarter 3	Quarter 4	Annual	Uncertainty (%)
1. Total Release	Ci	1.16E-01	3.11E+00	1.32E+00	8.92E-01	5.44E+00	1.03E+01
2. Average Diluted Concentration	µCi/mL	3.93E-09	1.04E-12	4.48E-08	3.03E-08	1.85E-07	
C. Dissolved and Entrained Gases	Units	Quarter 1	Quarter 2	Quarter 3	Quarter 4	Annual	Uncertainty (%)
1. Total Release	Ci	N/A	N/A	N/A	N/A	N/A	N/A
2. Average Diluted Concentration	µCi/mL	N/A	N/A	N/A	N/A	N/A	
D. Gross Alpha	Units	Quarter 1	Quarter 2	Quarter 3	Quarter 4	Annual	Uncertainty (%)
1. Total Release	Ci	<LLD	1.38E-04	3.58E-05	<LLD	1.74E-04	N/A
2. Average Diluted Concentration	µCi/mL	N/A	4.63E-17	1.19E-17	N/A	5.82E-17	
E. Volume of Liquid Released (Before Dilution)	L	1.86E+04	9.89E+05	1.15E+06	1.76E+06	3.92E+06	
F. Volume of Dilution Water Used	L	2.94E+09	2.98E+09	3.01E+09	3.01E+09	1.19E+10	

Table 5 - Liquid Effluents - Batch Mode

Radionuclide Released	Units	Quarter 1	Quarter 2	Quarter 3	Quarter 4	Annual
Fission and Activation Gases						
Cr-51	Ci	<LLD	<LLD	<LLD	<LLD	<LLD
Mn-54	Ci	1.52E-05	1.17E-04	5.49E-06	<LLD	1.37E-04
Fe-55	Ci	5.97E-04	7.92E-03	1.07E-03	4.77E-04	1.96E-03
Ni-63	Ci	4.91E-05	5.38E-03	6.59E-04	4.48E-03	1.97E-04
Fe-59	Ci	<LLD	<LLD	<LLD	<LLD	<LLD
Co-57	Ci	<LLD	<LLD	<LLD	<LLD	<LLD
Co-58	Ci	<LLD	<LLD	<LLD	<LLD	<LLD
Co-60	Ci	1.41E-03	3.08E-02	2.89E-03	1.29E-03	3.64E-02
Zn-65	Ci	<LLD	<LLD	<LLD	<LLD	<LLD
Sr-89	Ci	<LLD	<LLD	<LLD	<LLD	<LLD
Sr-90	Ci	<LLD	1.81E-05	<LLD	<LLD	1.81E-05
Nb-95	Ci	<LLD	<LLD	<LLD	<LLD	<LLD
Zr-95	Ci	<LLD	<LLD	<LLD	<LLD	<LLD
Nb-97	Ci	<LLD	4.66E-06	<LLD	<LLD	4.66E-06
Ag-108m	Ci	1.56E-05	6.63E-04	4.34E-04	2.00E-04	1.31E-03
Ag-110m	Ci	5.79E-05	3.37E-03	1.58E-03	6.28E-04	5.63E-03
Sb-125	Ci	<LLD	3.58E-03	2.08E-04	8.74E-04	4.66E-03
I-131	Ci	<LLD	<LLD	<LLD	<LLD	<LLD
I-133	Ci	<LLD	<LLD	<LLD	<LLD	<LLD
Cs-134	Ci	<LLD	<LLD	<LLD	<LLD	<LLD
Cs-137	Ci	<LLD	<LLD	<LLD	1.14E-03	1.14E-03
La-140	Ci	<LLD	<LLD	2.21E-06	<LLD	2.21E-06
Total for Period	Ci	2.15E-03	5.19E-02	6.85E-03	4.13E-03	6.50E-02
Tritium						
H-3	Ci	1.16E-01	3.11E+00	1.32E+00	8.92E-01	5.44E+00
Gross Alpha						
Alpha	Ci	<LLD	1.38E-04	3.58E-05	<LLD	1.74E-04
Entrained Gases						
Xe-133	Ci	<LLD	<LLD	<LLD	<LLD	<LLD
Xe-135	Ci	<LLD	<LLD	<LLD	<LLD	<LLD
Total for Period	Ci	0.00E+00	0.00E+00	0.00E+00	0.00E+00	0.00E+00

Table 6 - Liquid Effluents - Continuous Mode

Radionuclide Released	Units	Quarter 1	Quarter 2	Quarter 3	Quarter 4	Annual
Fission and Activation Gases						
Cr-51	Ci	<LLD	<LLD	<LLD	<LLD	<LLD
Mn-54	Ci	<LLD	<LLD	<LLD	<LLD	<LLD
Fe-55	Ci	<LLD	<LLD	<LLD	<LLD	<LLD
Fe-59	Ci	<LLD	<LLD	<LLD	<LLD	<LLD
Co-57	Ci	<LLD	<LLD	<LLD	<LLD	<LLD
Co-58	Ci	<LLD	<LLD	<LLD	<LLD	<LLD
Co-60	Ci	<LLD	<LLD	2.22E-05	<LLD	2.22E-05
Sr-89	Ci	<LLD	<LLD	<LLD	<LLD	<LLD
Sr-90	Ci	<LLD	<LLD	<LLD	<LLD	<LLD
Nb-95	Ci	<LLD	<LLD	<LLD	<LLD	<LLD
Zn-65	Ci	<LLD	<LLD	<LLD	<LLD	<LLD
Ag-110m	Ci	<LLD	<LLD	<LLD	<LLD	<LLD
I-131	Ci	<LLD	<LLD	<LLD	<LLD	<LLD
I-133	Ci	<LLD	<LLD	<LLD	<LLD	<LLD
Cs-134	Ci	<LLD	<LLD	<LLD	<LLD	<LLD
Cs-137	Ci	<LLD	4.02E-06	<LLD	<LLD	4.02E-06
	Ci					
Total for Period	Ci	0.00E+00	4.02E-06	2.22E-05	0.00E+00	2.62E-05
Tritium						
H-3	Ci	<LLD	<LLD	<LLD	2.24E-03	2.24E-03
Gross Alpha						
Alpha	Ci	<LLD	<LLD	<LLD	<LLD	<LLD
Entrained Gases						
Xe-133	Ci	<LLD	<LLD	<LLD	<LLD	<LLD
Xe-135	Ci	<LLD	<LLD	<LLD	<LLD	<LLD
Total for Period	Ci	0.00E+00	0.00E+00	0.00E+00	0.00E+00	0.00E+00

5.0 SOLID WASTE SUMMARY

5.1 Solid Waste Shipped Offsite for Burial or Disposal (Not Irradiated Fuel)

5.1.1 Types of Waste

Table 7, Types of Solid Waste Summary

Types of Waste	Total Quantity (m^3)	Total Activity (Ci)	Est. Total Error (%)
a. Spent resins, filter sludges, evaporator bottoms, etc.	2.74E+01	1.29E+02	25
b. Dry compressible waste, contaminated equip, etc.	9.29E+02	4.48E-01	25
c. Irradiated components, control rods, etc.	2.33E-01	4.90E-01	25
d. Other (sludge, used oil, water, etc.)	1.87E+02	2.04E-04	25

5.1.2 Estimate of major nuclide composition (by waste type) only >1% [Note 1] are reported.

Table 8, Major Nuclides

Major Nuclide Composition	%	Curies
a. Spent resins, filter sludges, evaporator bottoms, etc.		
Waste Class A		
H-3	1.19	1.04E-02
C-14	2.59	2.28E-02
Co-60	58.26	5.11E-01
Ni-63	27.64	2.42E-01
Ag-110m	2.28	2.00E-02
Cd-109	2.88	2.53E-02
Sb-125	3.09	2.71E-02
Waste Class B		
Fe-55	5.3	6.77E+00
Co-60	58.29	7.44E+01
Ni-63	23.83	3.04E+01

Table 8, Major Nuclides

Ag-110m	3.44	4.39E+00
Cd-109	5.89	7.52E+00
b. Dry compressible waste, contaminated equip, etc.		
Fe-55	30.11	1.35E-01
Co-60	55.5	2.48E-01
Ni-63	11.79	5.28E-02
c. Irradiated components, control rods, etc.		
Fe-55	16.03	7.84E-02
Co-60	39.68	1.94E-01
Ni-63	42.96	2.10E-01
d. Other (sludge, used oil, water, etc.)		
H-3	78.01	1.59E-04
Co-60	21.99	4.49E-05

[Note 1] – “Major" radionuclide is equivalent to a “principle” radionuclide, i.e. greater than 1 percent of total activity.

5.2 Solid Waste Disposition

Table 9, Solid Waste Disposition

Number of Shipments	Mode of Transportation	Destination
11	FLMCO, LLC	Perma-Fix Northwest Richland, Inc. 2025 Battelle Boulevard
2	Interstate Ventures	Waste Control Specialists LLC (CWF) Compact Waste Disposal Facility
20	Interstate Ventures	Waste Control Specialists/TSD Facility 9998 W. State HWY. 176
2	Landstar	Waste Control Specialists/TSD Facility 9998 W. State HWY. 176

Table 10, Irradiated Fuel Shipments Disposition

Number of Shipments	Mode of Transportation	Destination
0	NA	NA

6.0 DIRECT DOSE

6.1 Independent Spent Fuel Storage Installation (ISFSI)

1. The Palisades site has two ISFSIs. One ISFSI is located inside the Plant's Protected Area (PA) and is used to store the Energy Solutions VSC-24 Ventilated Storage Cask System. This consists of the Mult-Assembly Sealed Basket (MSB) stored in a Ventilated Concrete Cask (VCC) and transferred in a MSB Transfer Cask (MTC). The "New" ISFSI pad is constructed at a remote protected area located inside the Owner Controlled Area (OCA). Dry cask operations are conducted under a general license in accordance with Subpart K of Title 10 of the Code of Federal Regulations, Part 72,(10 CFR 72), "Licensing Requirements for the Independent Storage of Spent Nuclear Fuel, High-Level Radioactive Waste, and Reactor-Related Greater Than Class C Waste."

   Radiation surveys around the ISFSI pad are routinely performed and dose is measured with dosimeters mounted to the PA fence around the pad and read semi-annually. Dose received from radiation emitted from the spent fuel is considered direct dose and its contribution to the nearest resident was evaluated per 40 CFR 190.

2. The Palisades Nuclear Plant is located on Lake Michigan and is surrounded by protected sand dunes that provide natural shielding from direct dose. The "Old" ISFSI pad located inside the plant's PA and is surrounded on three sides by sand dunes that extend above the height of the dry casks with the fourth side being Lake Michigan. This topography shields the nearest resident, that reside approximately 4600 ft on the other side of the dune, from direct radiation emitted from this pad thus making the contribution from direct radiation negligible.

   The "New" ISFSI pad located in the OCA sits at a slightly higher elevation than the "Old" pad, but the same dunes that shields the "Old" pad extends around the resident and provides shielding from the "New" pad as well. Historical dose rates measured at the fence measuring a maximum of 1000 mrem/yr at 50 feet was used to calculate a maximum possible dose. The dose from this configuration calculated to approximately 0.11 mrem/yr with no shielding or occupancy factors applied. As such, the direct dose contribution from the "New" ISFSI pad is also negligible.

Figure 1: Topography Around Palisades Nuclear Power Plant



7.0 RADIOLOGICAL IMPACT TO MAN

7.1 10CFR Part50, Appendix I Evaluation

Table12, Dose Assessment

	Quarter 1	Quarter 2	Quarter 3	Quarter 4	Annual
Liquid Effluent Dose Limit, Total Body	1.5 mrem	1.5 mrem	1.5 mrem	1.5 mrem	3 mrem
Total Body Dose (mrem)	**7.31E-03**	**1.60E-01**	**1.67E-02**	**2.48E-02**	**2.09E-01**
% of Limit	4.87E-01	1.07E-01	1.11E+00	1.65E+00	6.96E+00
Liquid Effluent Dose Limit, Any Organ	5 mrem	5 mrem	5 mrem	5 mrem	10 mrem
Maximum Organ Dose (mrem)	**7.51E-03**	**1.64E-01**	**1.71E-02**	**4.61E-02**	**2.35E-01**
% of Limit	1.50E-01	3.28E-02	3.42E-01	9.22E-01	2.35E+00
Gaseous Effluent Dose Limit, Gamma Air	5 mrad	5 mrad	5 mrad	5 mrad	10 mrad
Gamma Air Dose (mrad)	**4.73E-06**	**3.64E-06**	**8.14E-07**	**3.57E-07**	**9.54E-06**
% of Limit	9.46E-05	7.28E-05	1.63E-05	7.14E-06	9.54E-05
Gaseous Effluent Dose Limit, Beta Air	10 mrad	10 mrad	10 mrad	10 mrad	20 mrad
Beta Air Dose (mrad)	**5.36E-04**	**4.13E-04**	**9.23E-05**	**4.04E-05**	**1.08E-03**
% of Limit	5.36E-03	4.13E-03	9.23E-04	4.04E-04	5.41E-03
Gaseous Effluent Organ Dose Limit (Iodine, Tritium, Particulates with > 8 day half-life)	7.5 mrem	7.5 mrem	7.5 mrem	7.5 mrem	15 mrem
Gaseous Effluent Organ Dose (Iodine, Tritium, Particulates with > 8 day half-life) (mrem)	**5.64E-03**	**8.11E-04**	**4.08E-04**	**7.09E-04**	**7.57E-03**
% of Limit	7.52E-02	1.08E-02	5.44E-03	9.45E-03	5.05E-02

7.2 40CFR Part 190 Evaluation for an Individual in the Unrestricted Area

Table 13, EPA 40 CFR PART 190 Evaluation

	Whole Body	Thyroid	Any Other Organ
Dose Limit	25 mrem/yr	75 mrem/yr	25 mrem/yr
Gaseous Dose	1.19E-02	1.19E-02	7.57E-03
Liquid Dose	2.09E-01	1.94E-01	2.35E-01
Direct Dose	NA	NA	NA
Total	2.21E-01	2.06E-01	2.42E-01
% of Limit	0.88%	0.27%	0.97%

Liquid dose, gaseous dose including C14, direct shine from each unit, ISFSI and any other nuclear power related facility within 5 miles of the station are considered when calculating dose compliance with 40 CFR 190.

Attachment 1:

NON-REMP Groundwater Monitoring Results (NEI 07-07)

1.0. Groundwater Monitoring Program Activities

The groundwater monitoring program at Palisades began in 2008 with well sampling on a rotating monthly basis. There are currently twenty-three (23) permanent monitoring wells (MW) and sixteen (16) temporary wells (TW). The temporary wells were installed in areas of suspected and confirmed release to help monitor the effectiveness of repairs and more quickly detect future releases. Permanent monitoring wells are sampled quarterly per site procedure COP-35 for gamma and tritium activity.

Several releases have been detected beginning in 2015 to present and are as listed.

1. February 26, 2015, tritium was detected in TW-7 and a leak was identified as originating from the Turbine Building drain tank line.

2. March 2015, tritium was detected in MW-2 and MW-11. It was believed that the Turbine Building drain tank line leak from the previous month had migrated to these wells and this was not a new release.

3. November 2016, tritium was detected in MW-11 and promptly identified as originating from T-91 Utility Water Storage Tank. The tank and associated piping were repaired.

4. September 2020, Operations observed lowering water level in T-2 Condensate Storage Tank. The investigation identified a failure/leak in a buried condensate pipe return. The pipe was taken out of service and rerouted above ground.

5. July 2021, increasing tritium concentrations were detected in the courtyard between the Turbine Building boiler room and the Feed Water Purity Building. The site lined the interior of the section of buried pipe between M-950, Service Building Boiler room downstream approximately 200 feet toward the boiler room sump.

6. February 2022, tritium was detected in two onsite wells with a maximum of 32,254 pCi/L at MW-2. Flow was isolated to T-20, T-38, and T-927 Condensate Receiver Tanks (CRTs) to the CRT T-2. Further testing results showed substantial decreases in tritium concentration following isolation.

7. May 2022, tritium was detected in a water sample from the 1C Bus Sump. The source was determined to be a leak in a buried pipe associated with the T-91 Utility Water Storage Tank recirculation line or the T-87 to T-91 transfer line. The site has taken this system out of service.

Attachment 1:

NON-REMP Groundwater Monitoring Results (NEI 07-07)

2.0. Hydrogeologic Data

An Updated Hydrogeologic Investigation Report was performed in September 2023 as an update to the 2018 report. The report concluded that there are no new releases based on the most recent groundwater sampling results and the remaining or residual concentrations of tritium where leaks have occurred should continue to decrease over time. The recommendation is that the site continue to conduct the routine monitoring of selected sample locations in order to monitor the reduction in tritium concentrations over time.

3.0. Groundwater Sampling Results and Trends

All of the monitoring wells (MW) were sampled each quarter and a select number of temporary wells were sampled with the results listed below. No wells sampled and analyzed in 2025 resulted in tritium or principle gamma emitter activity above the minimum detectable activity (MDA).

	3/11/25	6/9/25	8/28/25	9/22/25	9/29/25	9/30/25	10/20/25	10/21/25
MW1A	<636	<604				<746		<677
MW1	<644	<595				<703		<660
MW2	<650	<683			<773		<664	
MW3	<616	<621	<653				<651	
MW3A	<657	<763	<700				<661	
MW4	<615	<611	<659					<647
MW5	<640	<577	<653					<623
MW6	<600	<631			<686		<652	
MW7	<614	<576			<678		<657	
MW8	<606	<576	<651					<624
MW9	<612	<595		<714				<658
MW9A	<621	<594		<656				<673
MW10	<625	<597		<645		<661		<663
MW11	<658	<580	<660					<642
MW-12	<628	<631			<689		<651	
MW-13	<611	<628	<656					<630
MW14	<643	<634		<702				<1050
MW15	<683	<784		<811				<715
MW16	<647	<610		<733				<709
MW17	<628	<<604	<928					<705
MW18	<616	<592		<653				<678
MW19	<610	<608		<657				<669
MW20	<661	<606		<766				<699

Attachment 1:

NON-REMP Groundwater Monitoring Results (NEI 07-07)

	3/11/25	6/9/25	8/28/25	9/22/25	9/29/25	9/30/25	10/20/25	10/21/25
TW1					<697			
TW2								
TW3		<581			<679			
TW4			<659					
TW5			<661					
TW6			<675					
TW7	<611	<615	<651					
TW9	<611	<608	<664				<656	
TW10	<612	<612	<654					
TW11					<683			
TW13	<610						<649	
TW14								
TW15					<696			
TW16								
TW17					<688			
TW18								

Instruments (Tricarb 4910 and Gamma Spectroscopy detector 4) continue to operate at the capabilities needed to support the Groundwater Protection Program. Environmental lower limits of detection (LLD) as defined in the Off-site Dose Calculation Manual (ODCM) are being met and verified at least annually. Both instruments also participate in an Interlaboratory Comparison Program for the analysis they perform.

4.0. Quantification of Spill, Leaks or Other Sources of Contamination

As observed in the 2023 Updated Hydrogeologic Investigation Report and as evidenced in the monitoring sample results over the last 12 months, there are no new leaks or spills. As the groundwater moves toward Lake Michigan (east to west), we can expect to see residual contamination migrate around the site in the vadose layer towards the lake and decreasing in concentration.

5.0. Determination of Changes Needed

No new changes identified at this time.

6.0. Recommendations

Recommend continued monitoring for new leaks that may develop as the site continues to perform activities that utilize underground piping

Attachment 1:

NON-REMP Groundwater Monitoring Results (NEI 07-07)

Figure 2: Monitoring Wells Map



Attachment 1: **Page 5 of 5**

NON-REMP Groundwater Monitoring Results (NEI 07-07)

Figure 3: Monitoring and Temporary Wells Map

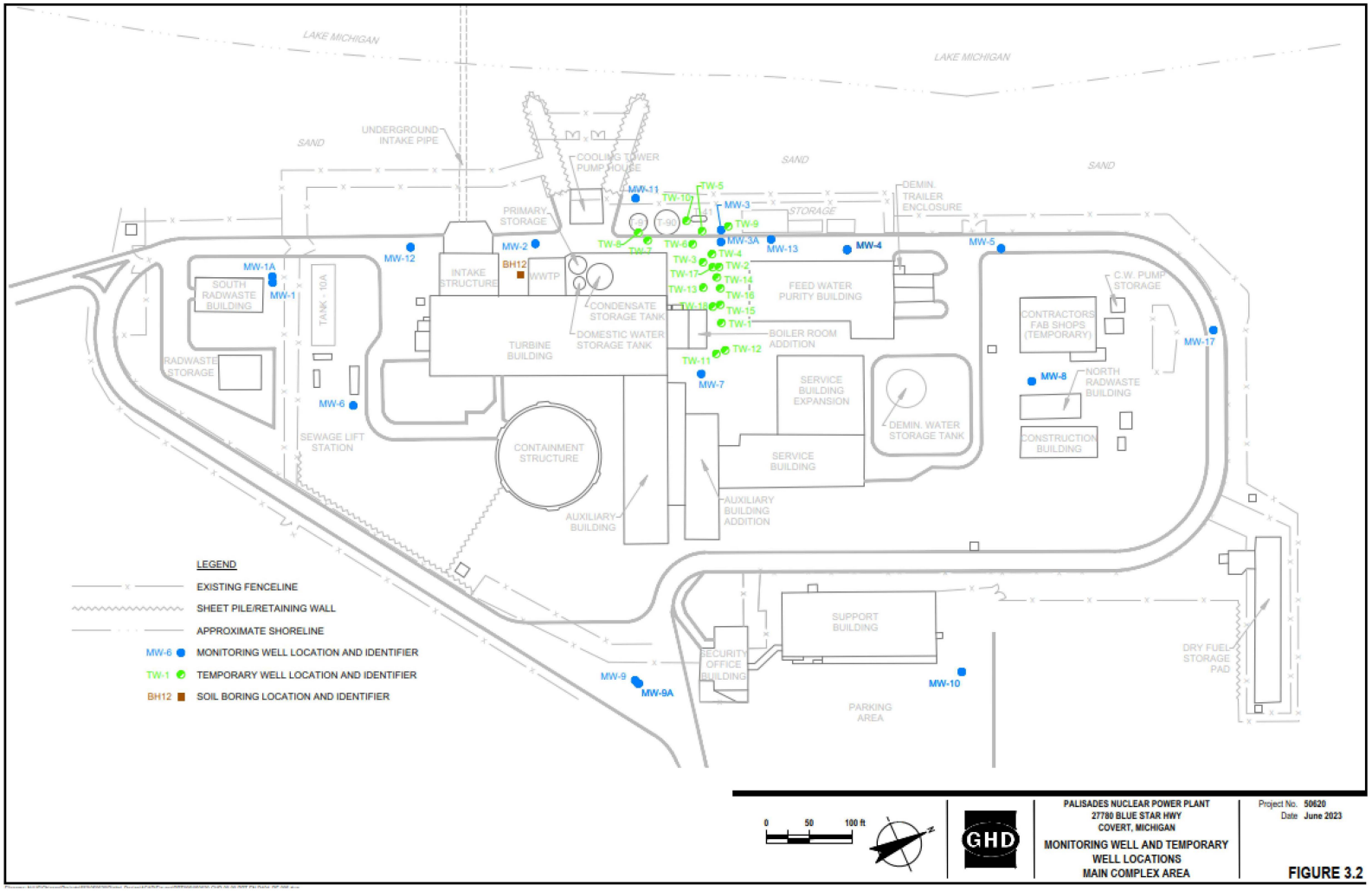

Enclosure Attachment

PNP 2026-018

Offsite Dose Calculation Manual (ODCM) Revision 36

(154 Pages Follow)

PALISADES NUCLEAR PLANT
OFFSITE DOSE CALCULATION MANUAL

TITLE: OFFSITE DOSE CALCULATION MANUAL

Process Applicability Exclusion	☐

L. Meeks	**/**	**2/24/2025**
Procedure Sponsor		**Date**
Michael Ginzel	**/**	**3/4/2025**
Technical Reviewer		**Date**
Jeff Borah	**/**	**5/1/2025**
General Manager Plant Operations		**Date**

Table of Contents

I INTRODUCTION 1-1
II DEFINITIONS 1-2
III COMMITMENTS 1-8
1.0 PROCEDURAL AND SURVEILLANCE REQUIREMENTS AND BASES 1-9
1.1 GASEOUS EFFLUENT CONTROLS 1-9
1.1.1 Radioactive Gaseous Effluent Monitoring Instrumentation 1-9
1.1.2 Gaseous Effluents Dose Rate 1-14
1.1.3 Noble Gases Dose 1-16
1.1.4 I-131, I-133, Tritium, and Particulate Dose 1-18
1.1.5 Waste Gas System 1-22
1.2 LIQUID EFFLUENT CONTROLS 1-23
1.2.1 Radioactive Liquid Effluent Monitoring Instrumentation 1-23
1.2.2 Liquid Effluents Concentration 1-28
1.2.3 Liquid Effluent Dose 1-32
1.3 TOTAL DOSE 1-34
1.4 RADIOLOGICAL ENVIRONMENTAL MONITORING 1-36
1.4.1 The Radiological Environmental Monitoring Program 1-36
1.5 SIRW OR TEMPORARY LIQUID STORAGE TANK 1-54
1.6 SURVEILLANCE REQUIREMENT TIME INTERVALS 1-56
1.7 SEALED SOURCE CONTAMINATION 1-57
2.0 REPORTING REQUIREMENTS 2-1
2.1 RADIOLOGICAL EFFLUENT RELEASE REPORT 2-1
2.2 RADIOLOGICAL ENVIRONMENTAL OPERATING REPORTING REQUIREMENTS 2-2
2.2.1 Annual Radiological Environmental Monitoring Report 2-2
2.2.2 Non-routine Reports 2-3
3.0 MAJOR MODIFICATIONS TO RADIOACTIVE LIQUID AND WASTE GAS SYSTEMS 3-1
3.1 LICENSEE MODIFICATIONS 3-1
3.2 DEFINITION OF MAJOR RADWASTE SYSTEM MODIFICATION 3-1

Table of Contents

3.2.1 Purpose 3-1
3.2.2 Definition 3-2
3.3 ONSITE GROUND WATER MONITORING 3-2
4.0 GASEOUS EFFLUENTS 4-1
4.1 GASEOUS EFFLUENT CALCULATIONS 4-1
4.1.1 Dose Rate Limits 4-1
4.1.2 Dose Rate Calculations 4-2
4.2 ALARM/TRIP SETPOINT METHODOLOGY 4-4
4.2.1 Monitor Response 4-4
4.3 APPENDIX I DOSE CALCULATIONS 4-5
4.3.1 Unrestricted Area Noble Gas Air Dose 4-5
4.3.2 Radioiodine, Tritium and Particulate Organ Dose to a Member of the Public 4-7
4.4 WASTE GAS SYSTEM OPERATION 4-26
4.4.1 System Description 4-26
4.4.2 Determination of Satisfactory Operation 4-26
4.5 RELEASE RATE FOR OFFSITE EC 4-26
4.6 PARTICULATE AND IODINE SAMPLING 4-27
4.7 NOBLE GAS SAMPLING 4-27
4.8 TRITIUM SAMPLING 4-27
5.0 LIQUID EFFLUENTS 5-1
5.1 LIQUID EFFLUENT CALCULATIONS 5-1
5.1.1 Liquid Effluent Concentration Limits 5-1
5.1.2 Liquid Rad Monitor Setpoint Determination 5-4
5.1.3 Adjustments To Setpoints 5-6
5.2 APPENDIX I DOSE CALCULATIONS 5-9
5.2.1 RETS Requirement 5-9
5.2.2 Liquid Effluent Organ Dose to a Member of the Public 5-9
5.2.3 Release Analysis 5-11
5.3 OPERABILITY OF LIQUID RADWASTE EQUIPMENT 5-11
5.4 RELEASE RATE FOR OFFSITE EC (50 MREM/YR) 5-11

Table of Contents

6.0 URANIUM FUEL CYCLE DOSE 6-1
6.1 ASSUMPTIONS 6-1
6.2 URANIUM FUEL CYCLE DOSE CALCULATIONS 6-1
6.2.1 Direct Radiation Dose to a Member of the Public 6-2
6.2.2 Organ Dose to a Member of the Public From Noble Gases ... 6-2
6.2.3 Organ Dose to a Member of the Public Due to Radioiodines, Tritium, and Particulates Released to the Atmosphere 6-3
6.2.4 Total Uranium Fuel Cycle Dose 6-4
7.0 REFERENCES AND DATA 7-1
7.1 REFERENCE DOCUMENTS 7-1
7.2 TRANSFER AND BIOACCUMULATION FACTORS 7-2
7.3 DOSE FACTORS 7-4
7.4 METEOROLOGICAL DATA 7-37

Table of Contents

Tables

TABLE 1-1 RADIOACTIVE GASEOUS EFFLUENT MONITORING INSTRUMENTATION....1-10
TABLE 1-2 RADIOACTIVE GASEOUS EFFLUENT MONITORING INSTRUMENTATION SURVEILLANCE REQUIREMENTS....1-12
TABLE 1-3 RADIOACTIVE GASEOUS WASTE SAMPLING AND ANALYSIS PROGRAM....1-20
TABLE 1-4 RADIOACTIVE LIQUID EFFLUENT MONITORING INSTRUMENTATION....1-24
TABLE 1-5 RADIOACTIVE LIQUID EFFLUENT MONITORING INSTRUMENTATION SURVEILLANCE REQUIREMENTS....1-26
TABLE 1-6 RADIOACTIVE LIQUID WASTE SAMPLING AND ANALYSIS PROGRAM....1-30
TABLE 1-7 RADIOLOGICAL ENVIRONMENTAL MONITORING PROGRAM....1-40
TABLE 1-8 REPORTING LEVELS FOR RADIOACTIVITY CONCENTRATIONS IN ENVIRONMENTAL SAMPLES....1-44
TABLE 1-9 DETECTION CAPABILITIES FOR ENVIRONMENTAL SAMPLE ANALYSIS[A]....1-45
TABLE 1-10 REMP PROGRAM LOCATIONS, TLD....1-49
TABLE 1-11 REMP PROGRAM LOCATIONS, AIR SAMPLE STATIONS....1-53
TABLE 2-1 ENVIRONMENTAL RADIOLOGICAL MONITORING PROGRAM SUMMARY....2-4
TABLE 4-1 X/Q AND D/Q AT LOCATIONS OF INTEREST....4-19
TABLE 4-2 PARAMETERS USED IN GASEOUS EFFLUENT DOSE CALCULATIONS....4-20
TABLE 5-1 TYPICAL LIQUID RELEASE ALLOCATION FRACTIONS*....5-6
TABLE 5-2 PARAMETERS USED IN LIQUID EFFLUENT DOSE CALCULATIONS....5-11
TABLE 7-1 TRANSFER FACTORS....7-2
TABLE 7-2 FRESHWATER BIOACCUMULATION FACTORS....7-3
TABLE 7-3 NOBLE GAS IMMERSION DOSE FACTORS....7-4
TABLE 7-4 ADULT - POTABLE WATER AND FISH INGESTION (A_{IT})....7-5
TABLE 7-5 GROUND PLANE EXPOSURE - ALL AGE GROUPS ($R_{AI(GP)J}$)....7-7
TABLE 7-6 INHALATION EXPOSURE - INFANT AGE GROUP ($R_{AI(IN)J}$)....7-9
TABLE 7-7 INHALATION EXPOSURE - CHILD AGE GROUP ($R_{AI(IN)J}$)....7-11
TABLE 7-8 INHALATION EXPOSURE - TEEN AGE GROUP ($R_{AI(IN)J}$)....7-13
TABLE 7-9 INHALATION EXPOSURE - ADULT AGE GROUP ($R_{AI(IN)J}$)....7-15
TABLE 7-10 VEGETATION INGESTION - CHILD AGE GROUP ($R_{AI(VG)J}$)....7-17
TABLE 7-11 VEGETATION INGESTION - TEEN AGE GROUP ($R_{AI(VG)J}$)....7-19
TABLE 7-12 VEGETATION INGESTION - ADULT AGE GROUP ($R_{AI(VG)J}$)....7-21
TABLE 7-13 MILK INGESTION - INFANT AGE GROUP ($R_{AI(MI)J}$)....7-23
TABLE 7-14 MILK INGESTION - CHILD AGE GROUP ($R_{AI(MI)J}$)....7-25
TABLE 7-15 MILK INGESTION - TEEN AGE GROUP ($R_{AI(MI)J}$)....7-27

Table of Contents

TABLE 7-16 MILK INGESTION - ADULT AGE GROUP ($R_{AI(MI)J}$).....7-29
TABLE 7-17 MEAT INGESTION - CHILD AGE GROUP ($R_{AI(ME)J}$) 7-31
TABLE 7-18 MEAT INGESTION - TEEN AGE GROUP ($R_{AI(ME)J}$).....7-33
TABLE 7-19 MEAT INGESTION - ADULT AGE GROUP ($R_{AI(ME)J}$) 7-35
TABLE 7-20 PALISADES 10 YEAR X/Q - D/Q DATA 7-37

Table of Contents

Figures

FIGURE 1.0-1 REMP OUTER RING TLDS.....1-48
FIGURE 1.0-2 REMP INNER RING TLDS.....1-49
FIGURE 1.0-3 REMP AIR SAMPLE LOCATIONS.....1-50
FIGURE 4.0-1 GASEOUS EFFLUENT FLOW PATHS.....4-1
FIGURE 5.0-1 PALISADES SITE BOUNDARY.....5-12
FIGURE 5.0-2 LIQUID EFFLUENT FLOW PATHS.....5-13

APPENDIXES

APPENDIX B REQUEST TO RETAIN SOIL IN ACCORDANCE WITH 10CFR 20.302
REVISION 0

I INTRODUCTION

The NRC, through 10 CFR Part 50.36a, requires implementation of Technical Specifications on effluents from nuclear power plants. NRC Generic Letter 89-01, dated January 31, 1989, allowed relocation of the existing procedural requirements from the Technical Specifications (implemented in Amendment 85, November 9, 1984). The relocated procedural requirements related to gaseous and liquid effluents, total dose, environmental monitoring program, and associated procedural reporting requirements follow below. Programmatic controls are retained in the Administrative Controls section of the Technical Specifications to satisfy the regulatory requirements of 10 CFR Part 50.36a. The Technical Specifications programmatic controls include requirements for the establishment, implementation, maintenance, and changes to the Offsite Dose Calculation Manual (ODCM) as well as record retention and reporting requirements.

II DEFINITIONS

ABNORMAL DISCHARGE

The unplanned or uncontrolled emission of an effluent (ie, containing plant-related, licensed radioactive material) into the UNRESTRICTED AREA.

ABNORMAL RELEASE

The unplanned or uncontrolled emission of an effluent (ie, containing plant-related, licensed radioactive material).

ACTION

ACTION shall be that part of a Control which prescribes measures required under designated conditions.

ANTICIPATED OPERATIONAL OCCURRENCES

ANTICIPATED OPERATIONAL OCCURRENCES mean those conditions of normal operation which are expected to occur one or more times during the life of the nuclear power unit and include but are not limited to loss of power to all recirculation pumps, tripping of the turbine generator set, isolation of the main condenser, and loss of all offsite power.

BATCH RELEASE

A BATCH RELEASE is the discharge of wastes of a discrete volume. Prior to sampling for analyses, each liquid batch shall be isolated and thoroughly mixed to ensure representative sampling.

CHANNEL CALIBRATION

A Channel Calibration shall be the adjustment, as necessary, of the channel output such that it responds with the necessary range and accuracy to known values of the parameter which the channel monitors. The Channel Calibration shall encompass the entire channel including the sensor and alarm and/or trip functions, and shall include the Channel Function Test. The Channel Calibration may be performed by any series of sequential, overlapping, or total channel steps such that the entire channel is calibrated.

CHANNEL CHECK

A Channel Check shall be the qualitative assessment of channel behavior during operation by observation. This determination shall include, where possible, comparison of the channel indication and/or status with other indications and/or status derived from independent instrumentation channels measuring the same parameter.

CHANNEL FUNCTIONAL TEST

A Channel Functional Test shall be:

1. Analog channels - the injection of a simulated signal into the channel as close to the sensor as practicable to verify operability including alarm and/or trip functions.

2. Bistable channels - the injection of a simulated signal into the sensor to verify operability including alarm and/or trip functions.

CONTINUOUS RELEASE

An essentially uninterrupted release of gaseous or liquid effluent for extended periods during normal operation of the facility where the volume of radioactive waste is non-discrete and there is input flow during the release.

CONTROLLED DISCHARGE

A radioactive discharge is considered to be "controlled" if (1) the discharge was conducted in accordance with methods and without exceeding any of the limits, outlined in the ODCM, or (2) if one or more of the following three items are true:

1. The radioactive discharge had an associated, pre-planned method of radioactivity monitoring that ensured the discharge was properly accounted and was within the limits set by 10 CFR Part 20 and 10 CFR Part 50.

2. The radioactive discharge had an associated, pre-planned method of termination (and associated termination criteria) that ensured the discharge was properly accounted and was within the limits set by 10 CFR Part 20 and 10 CFR Part 50.

3. The radioactive discharge had an associated, pre-planned method of adjusting, modulating, or altering the flow rate (or the rate of release of radioactive material) that ensured the discharge was properly accounted and was within the limits set by 10 CFR Part 20 and 10 CFR Part 50.

CONTROLLED RELEASE

A radioactive release is considered to be "controlled" if (1) the release was conducted in accordance with methods and without exceeding any of the limits, outlined in the ODCM, or (2) if one or more of the following three items are true:

1. The radioactive release had an associated, pre-planned method of radioactivity monitoring that ensured the release was properly accounted and was within the limits set by 10 CFR Part 20 and 10 CFR Part 50.

2. The radioactive release has an associated, pre-planned method of termination (and associated termination criteria) that ensured the release was properly accounted and was within the limits set by 10 CFR Part 20 and 10 CFR Part 50.

3. The radioactive release had an associated, pre-planned method of adjusting, modulating, or altering the flow rate (or the rate of release of radioactive material) that ensured the release was properly accounted and was within the limits set by 10 CFR Part 20 and 10 CFR Part 50.

CRITICAL ORGAN

That organ, which has been determined to be the maximum exposed organ based on an effluent pathway analysis, thereby ensuring the dose and dose rate limitations to any other organ will not be exceeded.

CRITICAL RECEPTOR

Represents that MEMBER OF THE PUBLIC in the UNRESTRICTED AREA who as a result of the combination of age group and existing local dose exposure pathways has the potential to receive the highest dose.

DOSE EQUIVALENT I-131

The DOSE EQUIVALENT I-131 is that concentration of I^{131} (µCi/gram) that alone would produce the same thyroid dose as the quantity and isotopic mixture of I^{131}, I^{132}, I^{133}, I^{134}, and I^{135} actually present. The dose conversion factors used for this calculation are those listed in Table 2.1 of EPA Federal Guidance Report No 11, "Limiting Values of Radionuclide Intake and Air Concentration and Dose Conversion Factors for Inhalation, Submersion, and Ingestion," EPA-520/ 1-88-020, September 1988. Alternately, dose conversion factors from Tables E-7 to E-14 of NRC Regulatory Guide 1.109, Revision 1, may be used.

EFFLUENT DISCHARGE

The portion of an EFFLUENT RELEASE that reaches an UNRESTRICTED AREA.

EFFLUENT RELEASE

The emission of an effluent.

FREQUENCY NOTATIONS

NOTATION	FREQUENCY
S-Once per shift	At least once per 12 hours
D-Daily	At least once per 24 hours
W-Weekly	At least once per 7 days
M-Monthly	At least once per 31 days
Q-Quarterly	At least once per 92 days
SA-Semi-annually	At least once per 184 days
R-Refueling	At least once per 18 months
P-Prior to release	Completed prior to each batch release
NA-Not applicable	Not applicable

Note:

- Frequencies are allowed a maximum extension of 25 percent.
- Extension of 25 percent shall not be used to perform less surveillance tests over a period than defined by the frequency notation.

GASEOUS RADWASTE TREATMENT SYSTEM

Any system designed and installed to reduce radioactive gaseous effluents by collecting primary coolant system off gases from the primary system and providing for delay or holdup for the purpose of reducing the total radioactivity prior to release to the environment.

GASPAR II

An NRC computer code that calculates doses from releases to the atmosphere for the purposes of demonstrating compliance with 10 CFR Part 50, App I. GASPAR II implements the methodology of Regulatory Guide 1.109 and can be used as an alternate means of calculating App I doses.

GROUND WATER

All water in the surface soil, the subsurface soil, or any other subsurface water. GROUND WATER is simply water in the ground regardless of its quality, including saline, brackish, or fresh water. GROUND WATER can be moisture in the ground that is above the regional water table in the unsaturated (or vadose) zone, or GROUND WATER can be at and below the water table in the saturated zone.

ISFSI

Independent Spent Fuel Storage Installation.

LADTAP II

An NRC computer code that calculates doses from releases to the hydrosphere for the purposes of demonstrating compliance with 10 CFR Part 50, App I. LADTAP II implements the methodology of Regulatory Guide 1.109 and can be used as an alternate means of calculating App I doses.

LIQUID WASTE MANAGEMENT SYSTEM

A LIQUID WASTE MANAGEMENT SYSTEM is any system designed and installed to reduce radioactive materials in liquid effluents by systematic collection, retention, and processing prior to release.

LOWER LIMIT OF DETECTION (LLD)

The smallest concentration of radioactive material in a sample that will yield a net count, above system background, that will be detected with a 95% probability with only 5% probability of falsely concluding that a blank observation represents a "real" signal. The LLD is defined as an *a priori* (before the fact) limit representing the capability of a measurement system and not as an *a posteriori* (after the fact) limit for a particular measurement.

MAXIMUM EXPOSED INDIVIDUAL

Individuals characterized as maximum with regard to food consumption, occupancy, and other usage of the region in the vicinity of the plant site. As such, they represent individuals with habits that are considered to be reasonable deviations from the average for the population in general. Additionally, in physiological or metabolic respects, the maximum exposed individuals are assumed to have those characteristics that represent the averages for their corresponding age group in the general population.

MEMBER OF THE PUBLIC

Any individual except when that individual is receiving an occupational dose. Also excluded from this category are persons who enter the site to service equipment or to make deliveries.

OPERABLE (OPERABILITY)

A system, subsystem, train, component, or device shall be OPERABLE or have OPERABILITY when it is capable of performing its specified function(s), and when all necessary attendant instrumentation, controls, electrical power, cooling or seal water, lubrication or other auxiliary equipment that are required for the system, subsystem, train, component, or device to perform its function(s) are also capable of performing their related support function(s).

OFFSITE DOSE CALCULATION MANUAL

As defined by the Plant Technical Specifications, the Offsite Dose Calculation Manual (ODCM) shall contain the methodology and parameters used in the calculation of offsite doses resulting from radioactive gaseous and liquid effluents, in the calculation of gaseous and liquid effluent monitoring alarm/trip setpoints, and in the conduct of the Radiological Environmental Monitoring Program. The ODCM shall also contain: 1) the Radioactive Effluent Controls and Radiological Environmental Monitoring Programs required by the Technical Specifications, and 2) descriptions of the information that should be included in the Annual Radiological Environmental Operating and Radioactive Effluent Release Reports required by the Technical Specifications.

PROCESS CONTROL PROGRAM

Shall contain the current formula, sampling, analyses, tests, and determinations to be made to ensure that the processing and packaging of solid radioactive wastes based on demonstrated processing of actual or simulated wet solid wastes will be accomplished in such a way as to assure compliance with 10 CFR Part 20, 10 CFR Part 71 and Federal and State regulations and other requirements governing the disposal of the radioactive waste.

SITE BOUNDARY

That line beyond which the land is neither owned nor otherwise controlled by the licensee. See FIGURE 5.0-1.

SOURCE CHECK

A source check shall be the qualitative assessment of channel response when the channel sensor is exposed to a radioactive source.

UNRESTRICTED AREA

Any area at or beyond the Site Boundary, access to which is not controlled by the licensee for purposes of protection of individuals from exposure to radiation and radioactive materials or, any area within the Site Boundary used for residential quarters or for industrial, commercial, institutional, and/or recreational purposes.

VENTILATION EXHAUST TREATMENT SYSTEM

Any system designed and installed to reduce gaseous radioiodine or radioactive material in particulate form in effluents by passing ventilation or vent exhaust gases through charcoal absorbers and/or HEPA filters for the purpose of removing iodines or particulates from the gaseous exhaust stream prior to the release to the environment. Such a system is not considered to have any effect on noble gas effluents. Engineered Safety Feature (ESF) atmospheric cleanup systems are not considered to be ventilation exhaust treatment system components.

III COMMITMENTS

CMT 032011147 - NRC Bulletin 80-10 Response, Steam Generator Radiation Monitors and Compensatory Actions

CMT 912000891 - Change Process for the ODCM Appendix B

1.0 PROCEDURAL AND SURVEILLANCE REQUIREMENTS AND BASES

1.1 GASEOUS EFFLUENT CONTROLS

1.1.1 Radioactive Gaseous Effluent Monitoring Instrumentation

CONTROL

1.1.1.1 The radioactive gaseous effluent monitoring instrumentation channels shown in Table 1-1 shall be operable with their alarm/trip setpoints set to ensure that the limits of Control 1.1.2.1 are not exceeded. The alarm/trip setpoints of these channels shall be determined and adjusted in accordance with the methodology and parameters in the ODCM.

Action

a. With a radioactive gaseous effluent monitoring instrumentation channel alarm/trip setpoint less conservative than required by the above requirement, without delay, suspend the release of radioactive gaseous effluents monitored by the affected channel or declare the channel inoperable or change the setpoint so it is acceptably conservative.

b. With less than the minimum number of radioactive gaseous effluent monitoring instrumentation channels operable, take the action shown in Table 1-1. Exert best efforts to return the instruments to operable status within 30 days and, if unsuccessful, explain in the next Annual Radioactive Effluent Release Report why the inoperability was not corrected in a timely manner.

Surveillance Requirements

Each radioactive gaseous effluent monitoring instrumentation channel shall be demonstrated operable by performance of the Channel Check, Source Check, Channel Calibration, and Channel Functional Test operations at the frequencies shown in Table 1-2.

Bases

The radioactive gaseous effluent instrumentation is provided to monitor and control, as applicable, the releases of radioactive materials in gaseous effluents during actual or potential releases of gaseous effluents. The alarm/trip setpoints for these instruments shall be calculated and adjusted in accordance with the methodology and parameters in the ODCM to ensure that the alarm/trip will occur prior to exceeding the limits of Control 1.1.2.1.

The operability and use of this instrumentation are consistent with the requirements of General Design Criteria 60, 63, and 64 of Appendix A to 10 CFR Part 50.

TABLE 1-1 RADIOACTIVE GASEOUS EFFLUENT MONITORING INSTRUMENTATION

Instrument	Minimum Operable Channels	Applicability	Action
1. **WASTE GAS HOLDUP SYSTEM**			
a. Noble Gas Activity Monitor (RIA-1113) Providing Alarm and Automatic Termination of Release	(1)	At All Times	1
2. **CONDENSER EVACUATION SYSTEM**			
a. Noble Gas Activity Monitor (RIA-0631)	(1)	Above 210°F Modes 1, 2, 3, 4	3
b. Evacuation Flow Indicator (FI-0631 or FI-0632)	(1)***	Above 210°F Modes 1, 2, 3, 4	3
3. **STACK GAS EFFLUENT SYSTEM**			
a. Noble Gas Activity Monitor (RIA-2326)*	(1)	At All Times	3
b. Iodine/Particulate/Sampler/Monitor (RIA-2325)	(1)	At All Times	6
c. Sampler Flow Rate Monitor (FI-2346)	(1)	At All Times	2
d. Hi Range Noble Gas (RIA-2327)*	(1)	Above 210°F Modes 1, 2, 3, 4	4
4. **STEAM GENERATOR BLOWDOWN VENT SYSTEM**			
a. Noble Gas Activity Monitor (RIA-2320)	(1)	Above 210°F Modes 1, 2, 3, 4	3
5. **MAIN STEAM SAFETY AND DUMP VALVE DISCHARGE LINE**			
a. Gross Gamma Activity Monitor* (RIA-2323 and RIA-2324)	1 per Main Steam Line	Above 325°F Modes 1, 2, 3	4
6. **ENGINEERED SAFEGUARDS PUMP ROOM VENTILATION HIGH RADIATION SYSTEM**			
a. Noble Gas Activity Monitor ** (RIA-1810 and RIA-1811)	1 per Room	Above 210°F Modes 1, 2, 3, 4	5

* Setpoints for these instruments are exempt from 1.1.2.1 limits but are governed by Emergency Implementing Procedures or Operating procedures.

** Setpoints for these instruments are exempt from 1.1.2.1 limits but are governed by Technical Specifications SR 3.3.10.3.

*** Documentation of operability not required.

TABLE 1-1 RADIOACTIVE GASEOUS EFFLUENT MONITORING INSTRUMENTATION (CONTINUED)

ACTION STATEMENTS

ACTION 1 With the number of channels operable less than required by the Minimum Operable Channels requirements, the contents of the tank(s) may be released to the environment provided that prior to initiating the release:

a. At least two independent samples of the tank's contents are analyzed and

b. At least two technically qualified members of the facility staff independently verify the release rate calculations and discharge valve line up;

Otherwise, suspend release of radioactive effluents via this pathway.

ACTION 2 With the number of channels operable less than required by the Minimum Operable Channels requirement, effluent releases via this pathway may continue provided the flow rate is estimated at least once per 24 hours.

ACTION 3 With the number of channels operable less than required by the Minimum Operable Channels requirement, effluent releases via this pathway may continue provided grab samples are taken at least once per 12 hours and these samples are analyzed for gross activity within 24 hours.

ACTION 4 With the number of operable channels less than required by the Minimum Operable Channels requirements, initiate the preplanned alternate method of monitoring the appropriate parameter(s), within 72 hours, and:

a. Either restore the inoperable channel(s) to operable status within 7 days of the event or

b. Prepare and submit a Special Report to the NRC within 30 days following the event outlining the actions taken, the cause of the inoperability, and the plans and schedule for restoring the system to operable status.

ACTION 5 If either channel fails low or is otherwise inoperable, the ventilation dampers associated with that channel shall be closed immediately and action shall be taken to have the affected channel repaired. The dampers associated with the channel shall not be opened until the affected channel has been declared operable.

(Reference Technical Specifications LCO 3.3.10.)

ACTION 6 With the number of channels operable less than required by the Minimum Operable Channels requirement, effluent releases via the affected pathway may continue provided samples are continuously collected with auxiliary sampling equipment as required in Table 1-3.

TABLE 1-2 RADIOACTIVE GASEOUS EFFLUENT MONITORING INSTRUMENTATION SURVEILLANCE REQUIREMENTS

Instrument	Channel Check	Source Check	Channel Calibration	Channel Functional Test	Modes in Which Surveillance Required
1. **WASTE GAS HOLDUP SYSTEM**					
a. Noble Gas Activity Monitor-Providing Alarm and Automatic Termination of Release (RIA-1113)	D(4)	P	R(3)	Q(1)(2)	*
2. **CONDENSER EVACUATION SYSTEM**					
a. Noble Gas Activity Monitor (RIA-0631)	D	M	R(3)	Q(2)	Above 210°F
b. Evacuation Flow Indicator (FI-0631 or FI-0632)	***	***	***	***	Modes 1, 2, 3, 4
3. **STACK GAS EFFLUENT SYSTEM**					
a. Noble Gas Activity Monitor (RIA-2326)	D	M	R(3)	Q(2)	*
b. Iodine Particulate Sampler/Monitor (RIA-2325)	W	M**	R(3)**	NA	*
c. Sampler Flow Rate Monitor (FI -2346)	D	NA	R	NA	*
d. Hi Range Noble Gas (RIA-2327)	D	M	R(3)	Q(2)	Above 210°F Modes 1, 2, 3, 4
4. **STEAM GENERATOR BLOWDOWN VENT SYSTEM**					
a. Noble Gas Activity Monitor (RIA-2320)	D	M	R(3)	Q(2)	Above 210°F Modes 1, 2, 3, 4
5. **MAIN STEAM SAFETY AND DUMP VALVE DISCHARGE LINE**					
a. Gross Gamma Activity Monitor (RIA- 2323 or RIA-2324)	D	M	R(3)	Q(2)	Above 325°F Modes 1, 2, 3
6. **ENGINEERED SAFEGUARDS PUMP ROOM VENTILATION HIGH RADIATION SYSTEM**					
a. Noble Gas Activity Monitor (RIA-1810 or RIA-1811) (Technical Specifications SR 3.3.10 and SR 3.7.13.1)	12 hours	31 days	18 months(3)	31 days(1)(2)	Above 210°F Modes 1, 2, 3, 4

TABLE 1-2 RADIOACTIVE GASEOUS EFFLUENT MONITORING INSTRUMENTATION SURVEILLANCE REQUIREMENTS (CONTINUED)

* At all times other than when the line is valved out and locked.

** Sampler not applicable

*** This type of Flowmeter doesn't have any surveillance requirements.

TABLE NOTATIONS

(1) The Channel Functional Test shall also demonstrate that automatic isolation of this pathway occurs if instrument indicates measured levels above the alarm/trip setpoint.

(2) The Channel Functional Test shall also demonstrate that Control Room alarm annunciation occurs if either of the following conditions exists.

a. Instrument indicates measured levels above the alarm setpoint (not applicable for Item 3.d, Hi Range Noble Gas).

b. Circuit failure.

(3) The Channel Calibration shall be performed using one or more of the reference standards traceable to the National Institute of Standards and Technology or using standards that have been obtained from suppliers that participate in measurement assurance activities with NIST. These standards shall permit calibrating the system over its intended range of energy and measurement range.

For subsequent Channel Calibration, sources that have been related to the primary calibration may be used.

(4) Channel Check shall be made at least once per 24 hours on days on which continuous or batch releases are made.

1.1.2 Gaseous Effluents Dose Rate

CONTROL

1.1.2.1 The dose rate due to radioactive materials released in gaseous effluents from the site to areas at and beyond the Site Boundary (see FIGURE 5.0-1) shall be limited to the following:

a. For noble gases: Less than or equal to 500 mrems/yr to the total body and less than or equal to 3000 mrems/yr to the skin, and

b. For Iodine-131, for Iodine-133, for tritium, and for all radionuclides in particulate form with half-lives greater than 8 days: Less than or equal to 1500 mrems/yr to any organ.

Action

With the dose rate(s) averaged over a period of one hour exceeding the above limits, without delay, restore the release rate to within the above limit(s).

Surveillance Requirements

a. The dose rate due to noble gases in gaseous effluents shall be determined to be within the above limits in accordance with the methodology and parameters in the ODCM.

b. The dose rate due to Iodine-131, Iodine-133, tritium, and all radionuclides in particulate form with half-lives greater than 8 days in gaseous effluents shall be determined to be within the above limits of in accordance with the methodology and parameters in the ODCM by obtaining representative samples and performing analyses in accordance with the sampling and analysis program specified in Table 1-3.

Bases

This specification provides reasonable assurance that radioactive material discharged in gaseous effluents will not result in the exposure of a Member of the Public in an Unrestricted Area, either within or beyond the Site Boundary, excess of the design objectives of 10 CFR Part 50, Appendix I. This specification is provided to ensure that gaseous effluents from all units on the site will be appropriately controlled. It provides operational flexibility for releasing gaseous effluents to satisfy the Section II.B.1.A and II.C design objectives of 10 CFR Part 50. For Members of the Public who may at times be within the Site Boundary, the occupancy of the Member of the Public will usually be sufficiently low to compensate for any increase in the atmospheric diffusion factor above that for the Site Boundary. Equations for calculations for such Members of the Public, with the appropriate occupancy factors, shall be given in the ODCM. The specified release rate limits restrict, at all times, the corresponding dose rate above background to a Member of the Public at or beyond the Site Boundary to less than or equal to 500 mrems/yr to the total body or less than or equal to 3000 mrem/year to the skin. These release rate limits also restrict, at all times, the corresponding thyroid dose rate above background to a child via the inhalation pathway to less than or equal to 1500 mrem/yr. This specification does not affect the requirement to comply with the annual limitation of 10 CFR Part 20.1301(a).

The required detection capabilities for radioactive materials in gaseous waste samples are tabulated in terms of the lower limits of detection (LLDs). Detailed discussion of the LLD and other detection limits can be found in HASL Procedures Manual, HASL-300, Currie, LA, "Limits for Qualitative Detection and Quantitative Determination - Application to Radiochemistry," Anal Chem 40, 586-93 (1968), and Hartwell, JK, "Detection Limits for Radioanalytical Counting Techniques," Atlantic Richfield Hanford Company Report ARH-SA-215 (June 1975).

1.1.3 Noble Gases Dose

CONTROL

1.1.3.1 The air dose due to noble gases released in gaseous effluents to areas at and beyond the Site Boundary (see FIGURE 5.0-1) shall be limited to the following:

a. During any calendar quarter: Less than or equal to 5 mrads for gamma radiation and less than or equal to 10 mrads for beta radiation, and

b. During any calendar year: Less than or equal to 10 mrads for gamma radiation and less than or equal to 20 mrads for beta radiation.

Action

With the calculated air dose from radioactive noble gases in gaseous effluents exceeding any of the above limits, prepare and submit to the NRC within 30 days a Special Report that identifies the cause(s) for exceeding the limit(s) and defines the corrective actions that have been taken to reduce the releases and the proposed corrective actions to be taken to assure that subsequent releases will be in compliance with the above limits.

Surveillance Requirements

Cumulative dose contributions for the current calendar quarter and current calendar year for noble gases shall be determined in accordance with the methodology and parameters in the ODCM at least once per 31 days.

Bases

This requirement is provided to implement the requirements of Sections II.B, III.A, and IV.A of Appendix I, 10 CFR Part 50. The limiting Condition for Operation implements the guides set forth in Section II.B of Appendix I. The Action statements provide the required operating flexibility and at the same time implement the guides set forth in Section IV.A of Appendix I to assure that the releases of radioactive material in gaseous effluents to Unrestricted Areas will be kept "as low as is reasonably achievable." The Surveillance Requirements implement the requirements in Section III.A of Appendix I that conformance with the guides of Appendix I be shown by calculational procedures based on models and data such that the actual exposure of a Member of the Public through appropriate pathways is unlikely to be substantially underestimated. The dose calculation methodology and parameters established in the ODCM for calculating the doses due to the actual release rates of radioactive noble gases in gaseous effluents are consistent with the methodology provided in Regulatory Guide 1.109, "Calculation of Annual Doses to Man from Routine Releases of Reactor Effluents for the Purpose of Evaluating Compliance with 10 CFR Part 50, Appendix I," Revision 1, October 1977 and Regulatory Guide 1.111, "Methods for Estimating Atmospheric Transport and Dispersion of Gaseous Effluents in Routine Releases from Light-Water-Cooled Reactors," Revision 1, July 1977. The ODCM equations provided for determining the air doses at and beyond the Site Boundary are based upon the historical average atmospheric conditions.

1.1.4 I-131, I-133, Tritium, and Particulate Dose

CONTROL

1.1.4.1 The dose to a Member of the Public from Iodine-131, Iodine-133, tritium, and all radionuclides in particulate form with half-lives greater than 8 days in gaseous effluents released, from each reactor unit, to areas at and beyond the Site Boundary (see FIGURE 5.0-1) shall be limited to the following:

a. During any calendar quarter: Less than or equal to 7.5 mrems to any organ and

b. During any calendar year: Less than or equal to 15 mrems to any organ.

Action

With the calculated dose from the release of Iodine-131, Iodine-133, tritium, and radionuclides in particulate form with half-lives greater than 8 days, in gaseous effluents exceeding any of the above limits, prepare and submit to the NRC within 30 days a Special Report that identifies the cause(s) for exceeding the limit and define(s) the corrective actions that have been taken to reduce the releases and the proposed corrective actions to be taken to assure that subsequent releases will be in compliance with the above limits.

Surveillance Requirements

Cumulative dose contributions for the current calendar quarter and current calendar year for Iodine-131, Iodine-133, tritium, and radionuclides in particulate form with half-lives greater than 8 days shall be determined in accordance with the methodology and parameters in the ODCM at least once per 31 days.

Bases

This requirement is provided to implement the requirements of Sections II.C, III.A, and IV.A of Appendix I, 10 CFR Part 50. The requirements are the guides set forth in Section II.C of Appendix I. The Action statements provide the required operating flexibility and at the same time implement the guides set forth in Section IV.A of Appendix I to assure that the releases of radioactive materials in gaseous effluents to Unrestricted Areas will be kept "as low as is reasonably achievable." The ODCM calculational methods specified in the Surveillance Requirements implement the requirements in Section III.A of Appendix I that conformance with the guides of Appendix I be shown by calculational procedures based on models and data, such that the actual exposure of a Member of the Public through appropriate pathways is unlikely to be substantially underestimated. The ODCM calculational methodology and parameters for calculating the doses due to the actual release rates of the subject materials are consistent with the methodology provided in Regulatory Guide 1.109, "Calculation of Annual Doses to Man From Routine Releases of Reactor Effluents for the Purpose of Evaluating Compliance With 10 CFR Part 50, Appendix I," Revision 1, October 1977 and Regulatory Guide 1.111, "Methods for Estimating Atmospheric Transport and Dispersion of Gaseous Effluents in Routine Releases From Light-Water-Cooled Reactors," Revision 1, July 1977. These equations also provide for determining the actual doses based upon the historical average atmospheric conditions. The release rate requirements for Iodine-131, Iodine-133, tritium, and radionuclides in particulate form with half-lives greater than 8 days are dependent upon the existing radionuclide pathways to man, in areas at and beyond the Site Boundary. The pathways that were examined in the development of these calculations were: 1) individual inhalation of airborne radionuclides, 2) deposition of radionuclides onto green leafy vegetation with subsequent consumption by man, 3) deposition onto grassy areas where milk animals and meat producing animals graze with consumption of the milk and meat by man, and 4) deposition on the ground with subsequent exposure of man.

TABLE 1-3 RADIOACTIVE GASEOUS WASTE SAMPLING AND ANALYSIS PROGRAM

Gaseous Release Type	Sampling Frequency	Minimum Analysis Frequency	Type of Activity Analysis	Lower Limit Detection (LLD)[a] (µCi/ml)
A. Waste Gas Storage Tank	P Each Tank Grab Sample	P Each Tank	Principal Gamma Emitters[b]	1×10^{-4}
B. Containment PURGE	P Each PURGE Grab Sample	P Each PURGE	Principal Gamma Emitters[b]	1×10^{-4}
C. Stack Gas Effluent	Continuous[c,i]	W[d,e,i] Charcoal Sample	I-131, I-133[g]	1×10^{-12}
	Continuous[c]	W[d,e] Particulate Sample	Principal Gamma Emitters[b]	1×10^{-11}
	Continuous[c]	Q Composite Particulate Sample	Sr-89, Sr-90	1×10^{-11}
	Continuous	M Composite Particulate Sample	Gross Alpha	1×10^{-11}
	Continuous[c]	Noble Gas Monitor	Noble Gases Gross Beta or Gamma	1×10^{-6}
	Grab Sample	NA[h]	Noble Gas	1×10^{-4}
D. Condenser Evacuation System	Continuous	Noble Gas Monitor	Noble Gases	1×10^{-6}
	Grab Sample	W[f]	Principal Gamma Emitters[b]	1×10^{-4}

TABLE 1-3 RADIOACTIVE GASEOUS WASTE SAMPLING AND ANALYSIS PROGRAM (CONTINUED)

TABLE NOTATIONS

a. The LLD is defined in Table 1-9, note C.

b. The principal gamma emitters for which the LLD specification applies exclusively are the following radionuclides: Kr-87, Kr-88, Xe-133, Xe-133m, Xe-135, and Xe-138 for gaseous emissions and Mn-54, Fe-59, Co-58, Co-60, Zn-65, Mo-99, Cs-134, Cs-137, Ce-141, and Ce-144 for particulate emissions. This list does not mean that only these nuclides are to be considered. Other gamma peaks that are identifiable, together with those of the above nuclides, shall also be analyzed and reported in the Radioactive Effluent Release Report.

c. The ratio of the sample flow rate to the sample stream flow rate shall be known for the time period covered by each dose or dose rate calculation made in accordance with Controls 1.1.2.1, 1.1.3.1, and 1.1.4.1.

d. Samples shall be changed at least once per 7 days and analyses shall be completed within 48 hours after changing or after removal from sampler.

e. With channels operable on iodine monitor RIA 2325 less than required per Control 1.1.1.1, sampling shall also be performed at least once per 24 hours for at least 7 days following each shutdown, start-up or Thermal Power change exceeding 15 percent of Rated Thermal Power in one hour and analyses shall be completed within 48 hours of changing. When samples collected for 24 hours are analyzed, the corresponding LLDs may be increased by a factor of 10.

   This requirement does not apply if:

   1) analysis shows that the Dose Equivalent I-131 concentration in the primary coolant has not increased more than a factor of 3 and

   2) the noble gas monitor shows that effluent activity has not increased more than a factor of 3.

f. Obtain and analyze a gas sample weekly for noble gas quantification.

g. Sample analysis requirement includes I-133; however, there is no required LLD for I-133.

h. This sample refers to the compensatory noble gas grab sample under Action 3 in Table 1-1 Section 3.a.

i. Not required when defueled technical specifications are implemented.

1.1.5 Waste Gas System

CONTROL

1.1.5.1 When gaseous waste exceeds a Xe-133 concentration of 1E-05 µCi/cc, the Waste Gas Decay Tank System shall be used to reduce radioactive gaseous effluents by holding gaseous waste collected by the system for a minimum of 15 days.

Action

a. If a waste gas decay tank is required to be released with less than 15 days holdup time, the system waste gas tank contents shall be evaluated and the waste gas decay tank with the lowest dose consequence shall be released.

b. Gaseous waste may be discharged directly from the waste gas surge tank through a high-efficiency filter or from a waste gas decay tank with less than 15 days of holdup directly to the stack for a period not to exceed 7 days if the holdup system equipment is not available and the release rates meet Controls 1.1.2.1, 1.1.3.1, and 1.1.4.1.

Surveillance Requirements

Not Applicable.

Bases

The requirement that the appropriate portions of these systems be used, when specified, provides reasonable assurance that the releases of radioactive materials in gaseous effluents will be kept "as low as is reasonably achievable" by meeting the design objectives given in Section II.D of Appendix I to 10 CFR Part 50.It is expected that releases of radioactive materials in effluents shall be kept at small fractions of the limits specified in 20.1302 of 10 CFR Part 20. At the same time the licensee is permitted the flexibility of operation, compatible with considerations of health and safety, to assure that the public is provided a dependable source of power even under unusual operating conditions which may temporarily result in releases higher than such small fractions, but still within the limits specified in Controls 1.1.2.1, 1.1.3.1, and 1.1.4.1.

1.2 LIQUID EFFLUENT CONTROLS

1.2.1 Radioactive Liquid Effluent Monitoring Instrumentation

CONTROL

1.2.1.1 The radioactive liquid effluent monitoring instrumentation channels shown in Table 1-4 shall be operable with their alarm/trip setpoints set to ensure that the limits of 1.2.2.1 are not exceeded. The alarm/trip setpoints of these channels shall be determined and adjusted in accordance with the methodology and parameters in the Offsite Dose Calculation Manual (ODCM).

Action

a. With a radioactive liquid effluent monitoring instrumentation channel alarm/trip setpoint less conservative than required by the above specification, without delay suspend the release of radioactive liquid effluents monitored by the affected channel or declare the channel inoperable or change the setpoint so it is acceptably conservative.

b. With less than the minimum number of radioactive liquid effluent monitoring instrumentation channels Operable, take the Action shown in Table 1-4. Exert best efforts to return the instruments to Operable status within 30 days and, if unsuccessful, explain in the next Radioactive Effluent Release Report why the inoperability was not corrected in a timely manner.

Surveillance Requirements

Each radioactive liquid effluent monitoring instrumentation channel shall be demonstrated Operable by performance of the Channel Check, Source Check, Channel Calibration, and Channel Functional Test operations at the frequencies shown in Table 1-5.

Bases

The radioactive liquid effluent instrumentation is provided to monitor and control, as applicable, the releases of radioactive materials in liquid effluents during actual or potential releases of liquid effluents. The alarm/trip setpoints for these instruments shall be calculated and adjusted in accordance with the methodology and parameters in the ODCM to ensure that the alarm/trip will occur prior to exceeding 10 times the limits of 10 CFR Part 20. The Operability and use of this instrumentation is consistent with the requirements of General Design Criteria 60, 63, and 64 of Appendix A to 10 CFR Part 50.

TABLE 1-4 RADIOACTIVE LIQUID EFFLUENT MONITORING INSTRUMENTATION

Instrument	Minimum Operable Channels	Applicability	Action
1. **GROSS RADIOACTIVITY MONITORS PROVIDING ALARM AND AUTOMATIC TERMINATION OF RELEASE**			
a. Liquid Radwaste Effluent Line (RIA-1049)	(1)	For Effluent Releases	1
b. Steam Generator Blowdown Effluent Line (RIA-0707)	(1)	For Effluent Releases	2
2. **GROSS BETA OR GAMMA RADIOACTIVE MONITORS PROVIDING ALARM BUT NOT PROVIDING AUTOMATIC TERMINATION OF RELEASE**			
a. Service Water System Effluent Line (RIA-0833)	(1)	For Effluent Releases	3
b. Turbine Building (Floor Drains) Sumps Effluent Line (RIA-5211)	(1)	For Effluent Releases	3
3. **FLOW RATE MEASUREMENT DEVICES**			
a. Liquid Radwaste Effluent Line (FIC-1050 or FIC-1051)	(1)	For Effluent Releases	4

TABLE 1-4 RADIOACTIVE LIQUID EFFLUENT MONITORING INSTRUMENTATION TABLE (CONTINUED)

TABLE NOTATIONS

ACTION 1 With the number of channels operable less than required by the Minimum Operable Channels requirement, effluent releases may continue provided that prior to initiating a release:

a. At least two independent samples are analyzed in accordance with requirements and

b. At least two technically qualified members of the Facility Staff independently verify the release rate calculations and discharge line valving;

Otherwise, suspend release of radioactive effluents via this pathway.

ACTION 2 With the number of channels operable less than required by the Minimum Operable Channels requirement, effluent releases via this pathway may continue provided grab samples are analyzed for radioactivity at a lower limit of detection as specified in Table 1-9 Note c. for principle gamma emitters and I-131 at least once per 12 hours.

NOTE: The Steam Generator blowdown monitor is normally used in a clean-up closed loop system instead of as an effluent monitor. The action statement only applies when the monitor is used as an effluent monitor.

ACTION 3 With the number of channels operable less than required by the Minimum Operable Channels requirement, effluent releases via this pathway may continue provided that, at least once per 24 hours, grab samples are collected and analyzed for radioactivity at a lower limit of detection as specified in Table 1-6 for principal gamma emitters and I-131.

ACTION 4 With the number of channels operable less than required by the Minimum Operable Channels requirement, effluent releases via this pathway may continue provided the flow rate is estimated at least once per 4 hours during actual releases. Pump performance curves or tank levels may be used to estimate flow.

TABLE 1-5 RADIOACTIVE LIQUID EFFLUENT MONITORING INSTRUMENTATION SURVEILLANCE REQUIREMENTS

Instrument	Channel Check	Source Check	Channel Calibration	Channel Functional Test
1. **GROSS RADIOACTIVITY MONITORS PROVIDING ALARM AND AUTOMATIC TERMINATION OF RELEASE**				
a. Liquid Radwaste Effluent Line (RIA-1049)	P	P	R(3)	Q(1)(2)
b. Steam Generator Blowdown Effluent Line (RIA-0707)	D	M	R(3)	Q(1)(2)
2. **GROSS GAMMA OR GAMMA RADIOACTIVITY MONITORS PROVIDING ALARM BUT NOT PROVIDING AUTOMATIC TERMINATION OF RELEASE**				
a. Service Water System Effluent Line (RIA-0833)	D	M	R(3)	Q(2)
b. Turbine Building (Floor Drains) Sumps Effluent Line (RIA-5211)	D	M	R(3)	Q(2)
3. **FLOW RATE MEASUREMENT DEVICES (5)**				
a. Liquid Radwaste Effluent Line (FIC-1050 or FIC-1051)	D(4)	NA	R	NA
4. **TURBINE SUMP EFFLUENT COMPOSITOR (M-1051)**	D(4)	NA	NA	NA
5. **SERVICE WATER SYSTEM EFFLUENT COMPOSITE SAMPLER (M1052)**	D(4)	NA	NA	NA
6. **TURBINE SUMP TOTALIZER (FQI-5210)**	NA	NA	R(5)	NA

TABLE 1-5 RADIOACTIVE LIQUID EFFLUENT MONITORING INSTRUMENTATION SURVEILLANCE REQUIREMENTS (CONTINUED)

TABLE NOTATIONS

(1) The Channel Functional Test shall also demonstrate that automatic isolation of this pathway occurs if instrument indicates measured levels above the alarm/trip setpoint.

(2) The Channel Functional Test shall also demonstrate that Control Room alarm annunciation occurs if either of the following conditions exists:

a. Instrument indicates measured levels above the alarm setpoint.

b. Circuit failure.

(3) The Channel Calibration shall be performed using one or more of the reference standards traceable to the National Institute of Standards and Technology or using standards that have been obtained from suppliers that participate in measurement assurance activities with NIST. These standards shall permit calibrating the system over its intended range of energy and measurement range.
For subsequent Channel Calibration, sources that have been related to the primary calibration may be used.

(4) Channel Check shall consist of verifying indication of flow during periods of releases. Channel Check shall be made at least once per 24 hours on days on which continuous or batch releases are made.

(5) Turbine Sump Totalizer is replaced at least once per 18 months. Calibration is performed by the factory.

(6) Typically, both FIC 1050 and FIC 1051 are maintained calibrated and functional since they operate at different ranges. Only the FIC being used for the effluent release is required to be functional.

1.2.2 Liquid Effluents Concentration

CONTROL

1.2.2.1 The concentration of radioactive material released in liquid effluents to Unrestricted Areas shall be limited to 10 times the concentrations specified in 10 CFR Part 20, Appendix B, Table 2, Column 2 for radionuclides other than dissolved or entrained noble gases. For dissolved or entrained noble gases, the concentration shall be limited to 2×10^{-4} microCuries/ml total activity.

Action

With the concentration of radioactive material released in liquid effluents to Unrestricted Areas exceeding the above limits, without delay, restore the concentration to within the above limits.

Surveillance Requirements

a. Radioactive liquid wastes shall be sampled and analyzed according to the sampling and analysis program of Table 1-6.

b. The results of the radioactivity analysis shall be used in accordance with the methodology and parameters in the ODCM to assure that the concentrations at the point of release are maintained within the limits of 1.2.2.1 above.

Bases

This specification is provided to ensure that the concentration of radioactive materials released in liquid waste effluents to Unrestricted Areas will be less than 10 times the concentration levels specified in 10 CFR Part 20, Appendix B, Table 2, Column 2. The specification provides operational flexibility for releasing liquid effluents in concentrations to follow the Section II.A and II.C design objectives of Appendix I to 10 CFR Part 50. This limitation provides reasonable assurance that the levels of radioactive materials in bodies of water in Unrestricted Areas will result in exposures within (1) the Section II.A design objectives of Appendix I, 10 CFR Part 50, to a Member of the Public and (2) restrictions authorized by 10 CFR Part 20.1301(e). The concentration limit for dissolved or entrained noble gases is based upon the assumption that Xe-135 is the controlling radioisotope and its effluent concentration in air (submersion) was converted to an equivalent concentration in water using the methods described in International Commission on Radiological Protection (ICRP) Publication 2.

The required detection capabilities for radioactive materials in liquid waste samples are tabulated in terms of the lower limits of detection (LLDs). Detailed discussion of the LLD and other detection limits can be found in HASL Procedures Manual, HASL-300, Currie, LA, "Limits for Qualitative Detection and Quantitative Determination - Application to Radiochemistry," Anal Chem 40, 586-93 (1968), and Hartwell, JK, "Detection Limits for Radioanalytical Counting Techniques," Atlantic Richfield Hanford Company Report ARH-SA-215 (June 1975).

TABLE 1-6 RADIOACTIVE LIQUID WASTE SAMPLING AND ANALYSIS PROGRAM

Liquid Release Type	Sampling Frequency	Minimum Analysis Frequency	Type of Activity Analysis	Lower Limit Detection (LLD)[a] (µCi/ml)
A. Batch Waste Release Tanks[b]	P Each Batch	P Each Batch	Principal Gamma Emitters[c] I-131	5×10^{-7} 1×10^{-6}
	P One Batch/Month	M	Dissolved and Entrained Gases (Gamma Emitters)	1×10^{-5}
	P Each Batch	M Composite[d]	H-3 Gross Alpha	1×10^{-5} 1×10^{-7}
	P Each Batch	Q Composite[d]	Sr-89, Sr-90 Fe-55, Ni-63	5×10^{-8} 1×10^{-6}
B. Continuous Releases[e] (Turbine Sump, Steam Generator Blowdown, and Service Water)	Continuous[f]	W Composite[f]	Principal Gamma Emitters[c] I-131	5×10^{-7} 1×10^{-6}
	M Grab Sample	M	Dissolved and Entrained Gases (Gamma Emitters)	1×10^{-5}
	Continuous[f]	M Composite[f]	H-3 Gross Alpha Gross Beta (service water only)	1×10^{-5} 1×10^{-7} 1×10^{-7}
	Continuous[f]	Q Composite[f]	Sr-89, Sr-90 Fe-55 Ni-63	5×10^{-8} 1×10^{-6}

TABLE 1-6 RADIOACTIVE LIQUID WASTE SAMPLING AND ANALYSIS PROGRAM (CONTINUED)

TABLE NOTATIONS

a. The LLD is defined in Table 1-9, note c.

b. A batch release is the discharge of liquid wastes of a discrete volume. Prior to sampling for analyses, each batch shall be isolated and then thoroughly mixed to assure representative sampling.

c. The principal gamma emitters for which the LLD specification applies exclusively are the following radionuclides: Mn-54, Fe-59, Co-58, Co-60, Zn-65, Mo-99, Cs-134, Cs-137, Ce-141. A LLD of 5×10^{-6} µCi/ml is acceptable for Ce-144 because of low gamma yields. This list does not mean that only these nuclides are to be considered. Other gamma peaks that are identifiable, together with those of the above nuclides, shall also be analyzed and reported in the Annual Radioactive Effluent Release Report.

d. A composite sample is one in which the quantity of liquid sampled is proportional to the quantity of liquid waste discharged and in which the method of sampling employed results in a specimen that is representative of the liquids released.

e. A continuous release is the discharge of liquid wastes of a nondiscrete volume; eg, from a volume of a system that has an input flow during the continuous release.

f. To be representative of the quantities and concentrations of radioactive materials in liquid effluents, samples shall be collected in a series of aliquots of constant volume collected at regular time intervals and combined to form a single sample. Prior to analyses, all samples taken for the composite shall be thoroughly mixed in order for the composite sample to be representative of the effluent release.

1.2.3 Liquid Effluent Dose

CONTROL

1.2.3.1 The dose or dose commitment to a Member of the Public from radioactive materials in liquid effluents released from each reactor unit to Unrestricted Areas shall be limited:

a. During any calendar quarter to less than or equal to 1.5 mrems to the total body and to less than or equal to 5 mrems to any organ and

b. During any calendar year to less than or equal to 3 mrems to the total body and to less than or equal to 10 mrems to any organ.

Action

With the calculated dose from the release of radioactive materials in liquid effluents exceeding any of the above limits, prepare and submit to the NRC within 30 days a Special Report that identifies the cause(s) for exceeding the limit(s) and defines the corrective actions that have been taken to reduce the releases and the proposed corrective actions to be taken to assure that subsequent releases will be in compliance with the above limits. This Special Report shall also include the results of radiological analyses of the drinking water source.

Surveillance Requirements

Cumulative dose contributions from liquid effluents for the current calendar quarter and the current calendar year shall be determined in accordance with the methodology and parameters in the ODCM at least once every 31 days.

Bases

This requirement is provided to implement the requirements of Sections II.A, III.A, and IV.A of Appendix I, 10 CFR Part 50. The Limiting Condition for Operation implements the guides set forth in Section II.A of Appendix I. The Action statements provide the required operating flexibility and at the same time implement the guides set forth in Section IV.A of Appendix I to assure that the releases of radioactive material in liquid effluents to Unrestricted Areas will be kept "as low as is reasonably achievable." Also, for freshwater sites with drinking water supplies that can be potentially affected by Plant operations, there is reasonable assurance that the operation of the facility will not result in radionuclide concentrations in the finished drinking water that are in excess of the requirements of 40 CFR Part 141. The dose calculation methodology and parameters in the ODCM implement the requirements in Section III.A of Appendix I that conformance with the guides of Appendix I be shown by calculational procedures based on models and data, such that the actual exposure of a Member of the Public through appropriate pathways is unlikely to be substantially underestimated. The equations specified in the ODCM for calculating the doses due to the actual release rates of radioactive materials in liquid effluents are consistent with the methodology provided in Regulatory Guide 1.109, "Calculation of Annual Doses to Man From Routine Releases of Reactor Effluents for the Purpose of Evaluating Compliance with 10 CFR Part 50, Appendix I," Revision 1, October 1977 and Regulatory Guide 1.113, "Estimating Aquatic Dispersion of Effluents From Accidental and Routine Reactor Releases for the Purpose of Implementing Appendix I," April 1977.

1.3 TOTAL DOSE

CONTROL

1.3.1.1 The annual (calendar year) dose or dose commitment to any Member of the Public due to releases of radioactivity and to radiation from uranium fuel cycle sources shall be limited to less than or equal to 25 mrems to the total body or any organ, except the thyroid, which shall be limited to less than or equal to 75 mrems.

Action

With the calculated doses from the release of radioactive materials in liquid or gaseous effluents exceeding twice the limits of 1.1.3.1a, 1.1.3.1b, 1.1.4.1a, 1.1.4.1b, 1.2.3.1a, or 1.2.3.1b, calculations should be made including C-14 and direct radiation contributions from the reactor units and from outside storage tanks to determine whether the above limits of Control 1.3.1.1 have been exceeded. If such is the case, prepare and submit to the NRC within 30 days a Special Report that defines the corrective action to be taken to reduce subsequent releases to prevent recurrence of exceeding the above limits and includes the schedule for achieving conformance with the above limits. This Special Report, as defined in 10 CFR Part 20.2203, shall include an analysis that estimates the radiation exposure (dose) to a Member of the Public from uranium fuel cycle sources, including all effluent pathways and direct radiation, for the calendar year that includes the release(s) covered by this report. It shall also describe levels of radiation and concentrations of radioactive material involved and the cause of the exposure levels or concentrations. If the estimated dose(s) exceeds the above limits, and if the release condition resulting in violation of 40 CFR Part 190 has not already been corrected, the Special Report shall include a request for a variance in accordance with the provisions of 40 CFR Part 190. Submittal of the report is considered a timely request and a variance is granted until staff action on the request is complete.

Surveillance Requirements

Cumulative dose contributions from liquid and gaseous effluents shall be determined in accordance with Sections 4.3.1, 4.3.2, and 5.2.2. Alternately Section 6.2.2 may be used to calculate noble gas organ dose.

The doses from liquid and gaseous effluents may also be determined by the GASPAR II and LADTAP II codes as documented in NUREG 4013 (LADTAP II) and NUREG 4653 (GASPAR II).

Cumulative dose contributions from direct radiation from the reactor units and from radwaste storage tanks shall be determined in accordance with the methodology and parameters in the ODCM. This requirement is applicable only under conditions set forth in the Action of Control 1.3.1.1 above.

Bases

This requirement is provided to meet the dose limitations of 40 CFR Part 190 that have been incorporated into 10 CFR Part 20 by 46 FR 18525. It also requires the preparation and submittal of a Special Report whenever the calculated doses from Plant generated radioactive effluents and direct radiation exceed 25 mrems to the total body or any organ, except for thyroid, which shall be limited to less than or equal to 75 mrems. The Special Report will describe a course of action that should result in the limitation of the annual dose to a Member of the Public to within the 40 CFR Part 190 limits. For the purposes of the Special Report, it may be assumed that the dose commitment to the Member of the Public from other uranium fuel cycle sources is negligible, with the exception that dose contributions from other nuclear fuel cycle facilities at the same site or within a radius of 8 km must be considered. If the dose to any Member of the Public is estimated to exceed the requirements of 40 CFR Part 190, the Special Report with a request for a variance (provided the release conditions resulting in violation of 40 CFR Part 190 have not already been corrected), in accordance with the provisions of 40 CFR Part 190.11 and 10 CFR Part 20.2203, is considered to be a timely request and fulfills the requirements of 40 CFR Part 190 until NRC staff action is completed. The variance only relates to the limits of 40 CFR Part 190 and does not apply in any way to the other requirements for dose limitation of 10 CFR Part 20. An individual is not considered a Member of the Public during any period in which he/she is engaged in carrying out any operation that is part of the nuclear fuel cycle.

1.4 RADIOLOGICAL ENVIRONMENTAL MONITORING

1.4.1 The Radiological Environmental Monitoring Program

CONTROL

1.4.1.1 The radiological environmental monitoring program shall be conducted as specified in Table 1-7.

Action

a. With the radiological environmental monitoring program not being conducted as specified in Table 1-7, prepare and submit to the Commission, in the Annual Radiological Environmental Operating Report a description of the reasons for not conducting the program as required and the plans for preventing a recurrence.

With samples unavailable from one or more of the locations required by Table 1-7, identify new locations for obtaining replacement samples and add them to the radiological environmental monitoring program within 30 days. The specific locations from which samples were unavailable may then be deleted from the monitoring program.

b. With the level of radioactivity as the result of Plant effluents in an environmental sampling medium at a specified location exceeding the reporting levels of Table 1-8 when averaged over any calendar quarter, prepare and submit to the Commission within 30 days a Special Report that identifies the cause(s) for exceeding the calendar year limit(s) of Controls 1.1.3.1, 1.1.4.1, and 1.2.3.1 and defines the corrective actions to be taken to reduce radioactive effluents. When more than one of the radionuclides in Table 1-8 are detected in the sampling medium, this report shall be submitted if:

$$\frac{Concentration\ (1)}{Reporting\ Level\ (1)} + \frac{Concentration(2)}{Reporting\ Level\ (2)} + \frac{Concentration\ (i)}{Reporting\ Level\ (i)} \geq 1.0 \quad \textbf{(1.0-1)}$$

When radionuclides other than those in Table 1-8 are detected and are the result of Plant effluents, this report shall be submitted if the potential annual dose to a Member of the Public is equal to or greater than the calendar year limits of Controls 1.1.3.1, 1.1.4.1, and 1.2.3.1. This report is not required if the measured level of radioactivity was not the result of Plant effluents; however, in such an event, the condition shall be reported and described in the Annual Radiological Environmental Operating Report.

Surveillance Requirements

a. The radiological environmental monitoring samples shall be collected pursuant to Table 1-7 and shall be analyzed pursuant to the requirements of Table 1-7 and the detection capabilities required by Table 1-9.

b. A land use census shall be conducted to validate the critical meat and milk location, within a distance of 8 km (5 miles), for the purpose of accurate offsite dose calculations.

c. The land use census shall be conducted during the growing season at least once per 12 months using that information that will provide the best results, such as by a door-to-door survey, aerial survey, or by consulting local agriculture authorities.

d. The results of the land use census shall be included in the Annual Radiological Environmental Operating Report and shall be retained as a record.

e. Analyses shall be performed on radioactive materials supplied as part of an Interlaboratory Comparison Program that has been approved by the NRC.

f. A summary of the results obtained as part of the above required Interlaboratory Comparison Program shall be included in the Annual Radiological Environmental Operating Report.

Bases

a. Monitoring Program

The radiological environmental monitoring program provides representative measurements of radiation and of radioactive materials in those exposure pathways and for those radionuclides that lead to the highest potential radiation exposures of Members of the Public resulting from the station operation. This monitoring program implements Section IV.B.2 of Appendix I to 10 CFR Part 50 and thereby supplements the radiological effluent monitoring program by verifying that the measurable concentrations of radioactive materials and levels of radiation are not higher than expected on the basis of the effluent measurements and the modeling of the environmental exposure pathways. Guidance for this monitoring program is provided by the Radiological Assessment Branch Technical Position on Environmental Monitoring. The initially specified monitoring program will be effective for at least the first three years of commercial operation. Following this period, program changes may be initiated based on operational experience.

The required detection capabilities for environmental sample analyses are tabulated in terms of the lower limits of detection (LLDs). The LLDs required by Table 1-9 are considered optimum for routine environmental measurements in industrial laboratories.

Detailed discussion of the LLD, and other detection limits, can be found in HASL Procedures Manual, HASL-300, Currie, LA, "Limits for Qualitative Detection and Quantitative Determination - Application to Radiochemistry," Anal Chem 40, 586-92 (1968), and Hartwell, JK, "Detection Limits for Radioanalytical Counting Techniques," Atlantic Richfield Hanford Company Report ARH-SA-15 (June 1975).

b. Land Use Census:

This requirement is provided to ensure that changes in the use of areas at and beyond the site boundary are identified and that modifications to the radiological environmental monitoring program are made if required by results of this census. The best information from the door-to-door survey, from aerial survey or from consulting with local agricultural authorities shall be used. This census satisfies the requirements of Section IV.B.3 of Appendix I to 10 CFR Part 50.

c. Interlaboratory Comparison Program:

The requirement for participation in an approved Interlaboratory Comparison Program is provided to ensure that independent checks on the precision and accuracy of the measurements of radioactive material in environmental sample matrices are performed as part of the quality assurance program for environmental monitoring in order to demonstrate that the results are valid for the purposes of Section IV.B.2 of Appendix I to 10 CFR Part 50.

TABLE 1-7 RADIOLOGICAL ENVIRONMENTAL MONITORING PROGRAM

Exposure Pathway and/or Sample	Number of Representative Samples and Sample Locations[a]	Sampling and Collection Frequency	Type and Frequency of Analysis
1. **DIRECT RADIATION**[b]	21 routine monitoring stations either with two or more dosimeters or with one instrument for measuring and recording dose rate continuously, placed as follows: One on site TLD in the vicinity of the Plant. An inner ring of stations, one in each overland meteorological sector (9) in the general area of the Site Boundary and one additional location near the State Park camping area in the NE sector. An outer ring of stations, one in each overland meteorological sector (9) within the 12 km range from the site. One control TLD between 25 and 55 miles from the site.	Quarterly	Gamma dose quarterly
2. **AIRBORNE** Radioiodine[i] and Particulates	Samples from 6 locations. 4 samples from within 6 km of the Site Boundary in different sectors (2.5 km-SSW, 5.8 km-ESE, 0.7 km-SSE, and 1.0 km-NE). 1 sample from the vicinity of a community having the highest calculated annual average ground level D/Q (Covert-6.2 km-SE). 1 sample from a control location in the least prevalent wind direction[c] (Grand Rapids 82 km-NE)[h].	Continuous sample operation with sample collection weekly or more frequently if required by dust loading.	Radioiodine Canister: I-131 analysis weekly for each filter change. Particulate Sampler: Gross beta radioactivity analysis following filter change[d]. Gamma isotopic[e] analysis on quarterly composite.

Exposure Pathway and/or Sample	Number of Representative Samples and Sample Locations[a]	Sampling and Collection Frequency	Type and Frequency of Analysis
3. **WATERBORNE**			
a. Lake (surface)	Facility lake water inlet.	Composite sample over 1-month period[f].	Gamma isotopic[e] and tritium analyses monthly.
b. Lake (drinking)	1 sample of South Haven drinking water supply.	Composite sample over 1-month period[f].	Gamma isotopic[e], gross beta, and tritium analyses monthly.
	1 sample from a control location (Ludington Pumped Storage 201 km N).	Composite sample over 1-month period[f].	Gamma isotopic[e], gross beta, and tritium analyses monthly.
d. Sediment from shoreline	1 sample from between north boundary and Van Buren State Park beach, approximately ½ mile north of the Plant discharge.	Semiannually	Gamma isotopic[e] analysis semiannually.

Exposure Pathway and/or Sample	Number of Representative Samples and Sample Locations[a]	Sampling and Collection Frequency	Type and Frequency of Analysis
4. **INGESTION**			
a. Milk[i]	Samples from milking animals in 3 locations between 5-8 km distance.	Monthly	Gamma isotopic[e] and I-131 analyses monthly.
	1 sample from milking animals at a control location, 15-30 km distance.	Monthly	Gamma isotopic[e] and I-131 analyses monthly.
b. Broad leaf vegetation[i]	Samples of 3 different kinds of broad leaf vegetation grown nearest each of two different offsite locations of highest predicted annual average ground level D/Q if milk sample is not performed, (SE or SSE sectors near site).	Monthly during growing season	Gamma isotopic[e] and I-131 analyses.
	1 sample of each of the similar broad leaf vegetation grown 15-30 km distance in the least prevalent wind direction if milk sampling is not performed. (NNE or NE sectors.)	Monthly during growing season	Gamma isotopic[e] and I-131 analyses.
c. Fish	Sample 2 species of commercially and/or recreationally important species in vicinity of Plant discharge area. 1 sample of same species in areas not influenced by Plant discharge.	Sample in season or semiannually if they are not seasonal.	Gamma isotopic[e] analysis
d. Food Products	Currently there are no crops being irrigated with water affected by plant discharges.		

TABLE 1-7 RADIOLOGICAL ENVIRONMENTAL MONITORING PROGRAM (CONTINUED)

TABLE NOTATIONS

a. Deviations are permitted from the required sampling schedule if specimens are unobtainable due to hazardous conditions, seasonal unavailability, malfunction of automatic sampling equipment and other legitimate reasons. If specimens are unobtainable due to sampling equipment malfunction, every effort shall be made to complete corrective action prior to the end of the next sampling period. All deviations from the sampling schedule shall be documented in the Annual Radiological Environmental Operating Report. It is recognized that, at times, it may not be possible or practicable to continue to obtain samples of the media of choice at the most desired location or time. In these instances, suitable alternative media and locations may be chosen for the particular pathway in question and appropriate substitutions made within 30 days in the radiological environmental monitoring program.

b. One or more instruments, such as a pressurized ion chamber, for measuring and recording dose rate continuously may be used in place, or in addition to, integrating dosimeters. For the purposes of this table, a thermoluminescent dosimeter (TLD) is considered to be one phosphor; two or more phosphors or phosphor readout zones in a packet are considered as two or more dosimeters.

c. The purpose of this sample is to obtain background information. If it is not practical to establish control locations in accordance with the distance and wind direction criteria, other sites (such as Grand Rapids) that provide valid background data may be substituted.

d. Airborne particulate sample filters shall be analyzed for gross beta radioactivity 24 hours or more after sampling to allow for radon and thoron daughter decay. If gross beta activity in air particulate samples is greater than ten times the yearly mean of control samples, gamma isotopic analysis shall be performed on the individual samples.

e. Gamma isotopic analysis means the identification and quantification of gamma-emitting radionuclides that may be attributable to the effluents from the facility.

f. A composite sample is one in which the quantity (aliquot) of liquid samples is proportional to the quantity of liquid discharged and in which the method of sampling employed results in a specimen that is representative of the liquid released (continuous composites or daily grab composites which meet these criteria are acceptable).

g. If harvest occurs more than once a year, sampling shall be performed during each discrete harvest.

h. The Control Air sample results from Cook Nuclear Plant, except Coloma, may be used as a backup of the Grand Rapids control.

i. Not required when defueled technical specifications are implemented.

TABLE 1-8 REPORTING LEVELS FOR RADIOACTIVITY CONCENTRATIONS IN ENVIRONMENTAL SAMPLES

Analysis	Water (pCi/l)	Airborne Particulates or Gases (pCi/m^3)	Fish (pCi/kg, Wet)	Milk (pCi/l)	Food Products (pCi/kg, Wet)
H-3	20,000*				
Mn-54	1,000		30,000		
Fe-59	400		10,000		
Co-58	1,000		30,000		
Co-60	300		10,000		
Zn-65	300		20,000		
Zr-Nb-95	400				
I-131	2**	0.9		3	100
Cs-134	30	10	1,000	60	1,000
Cs-137	50	20	2,000	70	2,000
Ba-La-140	200			300	

* For drinking water samples. This is 40 CFR Part 141 value. If no drinking water pathway exists, a value of 30,000 pCi/l may be used.

** If no drinking water pathway exists, a value of 15 pCi/l may be used.

TABLE 1-9 DETECTION CAPABILITIES FOR ENVIRONMENTAL SAMPLE ANALYSIS[a]

Lower Limit of Detection (LLD)[bc]

Analysis	Water (pCi/l)	Airborne Particulates or Gases (pCi/m3)	Fish (pCi/kg, Wet)	Milk (pCi/l)	Food Products (pCi/kg, Wet)	Sediment (pCi/kg, Dry)
Gross Beta	4	0.01				
H-3	2,000*					
Mn-54	15		130			
Fe-59	30		260			
Co-58	15		130			
Co-60	15		130			
Zn-65	30		260			
Zr-95[d]	30					
Nb-95	15					
I-131	1**	0.07		1	60	
Cs-134	15	0.05	130	15	60	150
Cs-137	18	0.06	150	18	80	180
Ba-140[d]	60			60		
La-140	15			15		

* If no drinking water pathway exists, a value of 3,000 pCi/l may be used.
** If no drinking water pathway exists, a value of 15 pCi/l may be used

TABLE 1-9 DETECTION CAPABILITIES FOR ENVIRONMENTAL SAMPLE ANALYSIS (CONTINUED)

TABLE NOTATIONS

a. This list does not mean that only these nuclides are to be considered. Other peaks that are identifiable, together with those of the above nuclides, shall also be analyzed and reported in the Annual Radiological Environmental Operating Report.

b. Required detection capabilities for thermoluminescent dosimeters used for environmental measurements are given in Regulatory Guide 4.13.

c. The LLD is defined as the smallest concentration of radioactive material in a sample that will yield a net count, above system background, that will be detected with 95% probability with only 5% probability of falsely concluding that a blank observation represents a "real" signal.

The LLD is defined as:

$$LLD = \frac{2.71 + 4.66\ s_b}{E\ V\ 2.22\ \ Y\ exp(-\lambda_i \Delta t)}$$

WHERE:

LLD	=	The "a priori" lower limit of detection as defined above (as pCi per unit mass or volume). Current literature defines the LLD as the detection capability for the instrumentation only and the MDC, the minimum detectable concentration, as the detection capability for a given instrument procedure and type of sample.
4.66	=	The Gaussian statistic based on 95% probability of detection.
2.71	=	Term that may be used to account for minor deviations of the Poisson distribution from the Gaussian.
s_b	=	The standard deviation of the background counting rate or the counting rate of a blank sample as appropriate sample time (in counts per minute).
E	=	The counting efficiency (in counts per disintegration).
V	=	The sample size (in units of mass or volume).
2.22	=	The number of transformations per minute per picocurie.
Y	=	The fractional radiochemical yield, when applicable.
λ_i	=	The radioactive decay constant for radionuclide "i".
Δt	=	The elapsed time between midpoint of sample collection and time of counting.

TABLE 1-9 DETECTION CAPABILITIES FOR ENVIRONMENTAL SAMPLE ANALYSIS (CONTINUED)

Typical values of E, V, Y, and Δt should be used in the calculation.

It should be recognized that the LLD is defined as an "a priori" (before the fact) limit representing the capability of a measurement system and not as an "a posteriori" (after the fact) limit for a particular measurement. Analyses shall be performed in such a manner that the stated LLDs will be achieved under routine conditions. Occasionally background fluctuations, unavoidable small sample sizes, the presence of interfering nuclides, or other uncontrollable circumstances may render these LLDs unachievable. In such cases, the contributing factors shall be identified and described in the Annual Radiological Environmental Operating Report.

d. The LLD for Ba-140 and Zr-95 is based upon the Radiological Assessment Branch Technical Position Revision 1 of Regulatory Guide 4.8. Regulatory Guide 4.8, NUREG 1301, and Palisades' FSAR lists Ba-140 and La-140 as a single nuclide ie "BaLa140" or "Ba-La-140", and the corresponding LLD as 15 pCi/L. Similarly Zr-95 and Nb-95 are listed as a single nuclide ie "ZrNb95" or "Zr-Nb-95". The Branch Technical Position of Regulatory Guide 4.8 is more specific and used widely in the nuclear industry. This guidance lists the nuclide separately with values matching those in Table 1-9.

Figure 1.0-1 REMP OUTER RING TLDS

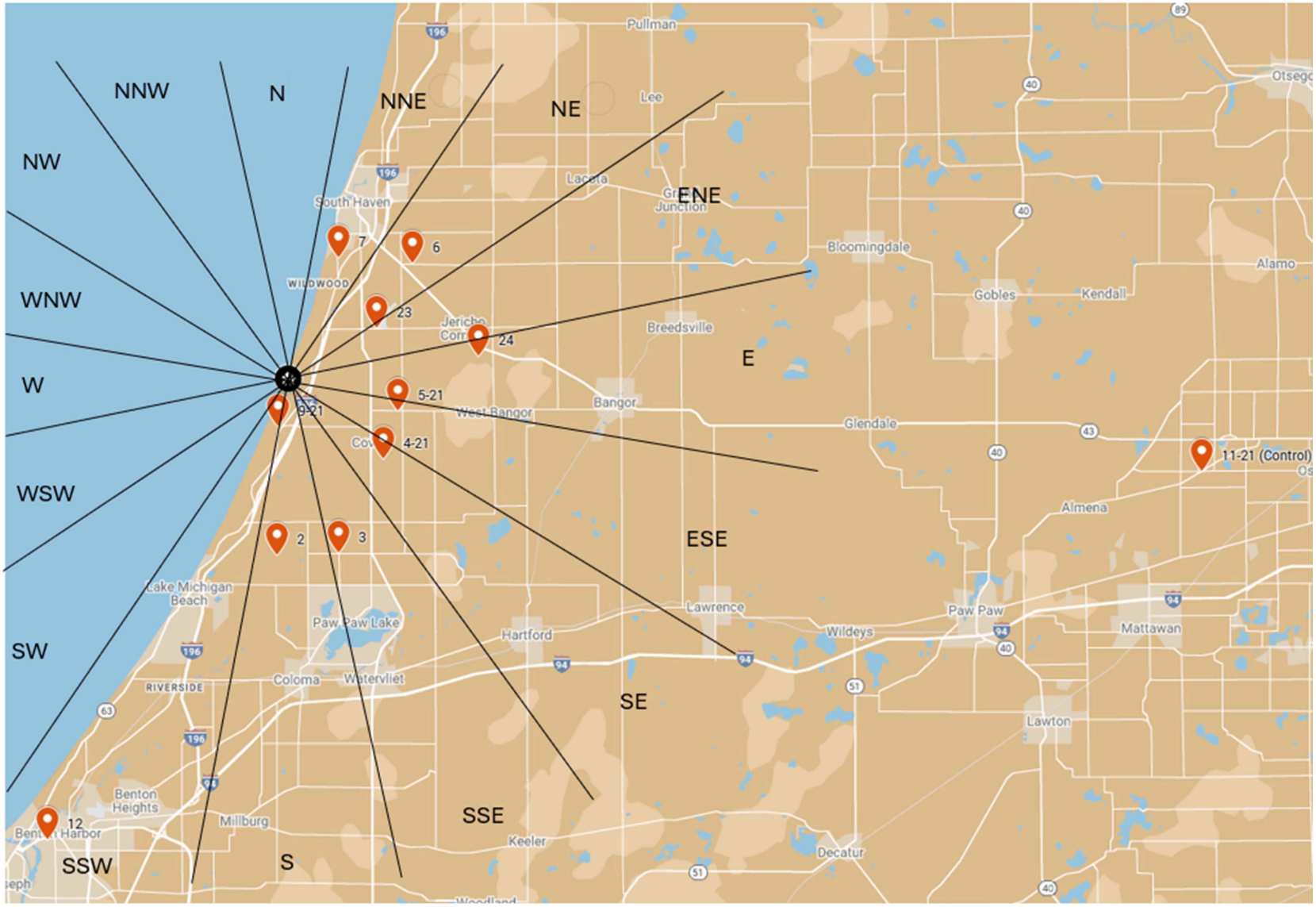

FIGURE 1.0-2 REMP INNER RING TLDS

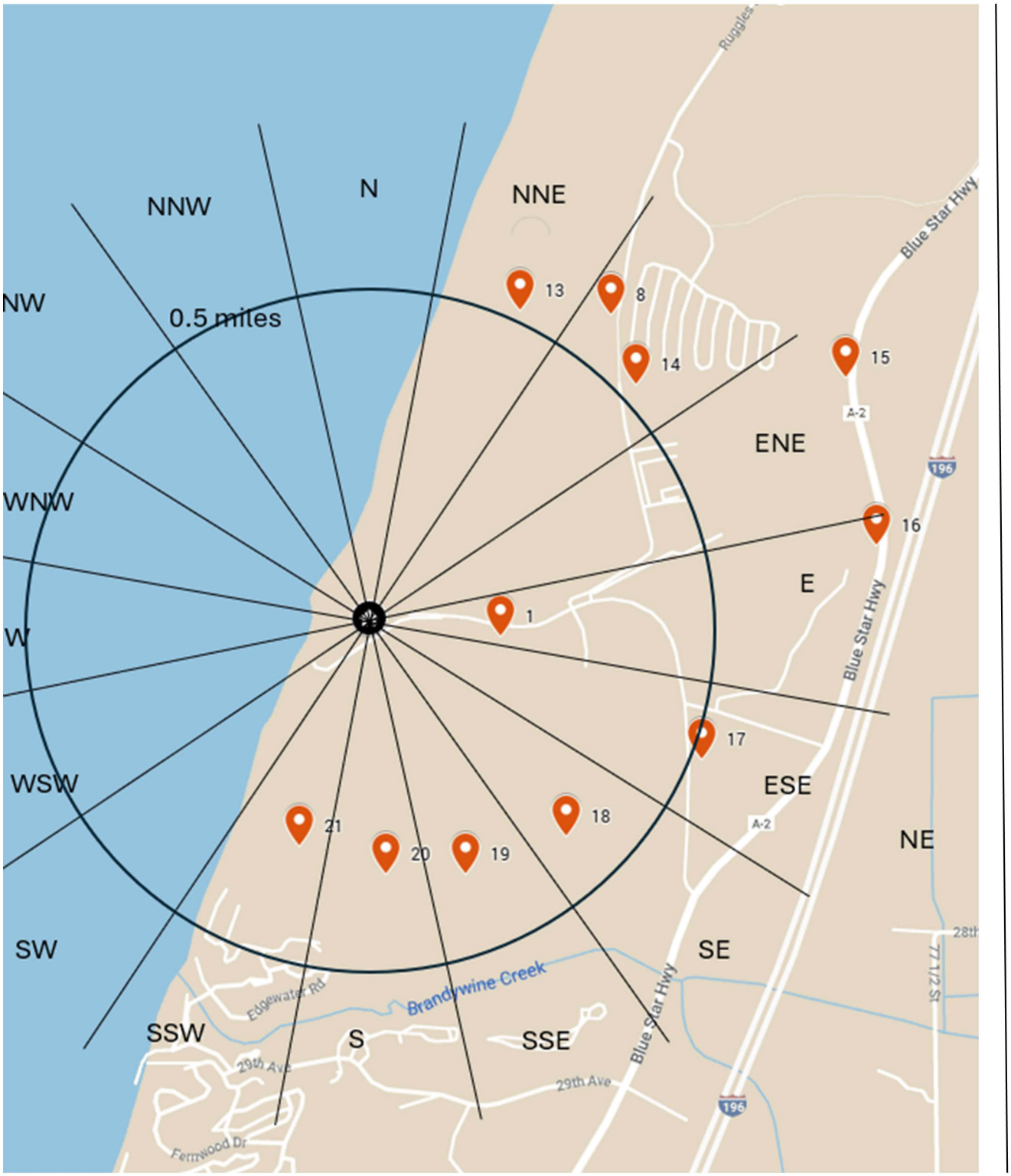

FIGURE 1.0-3 REMP AIR SAMPLE LOCATIONS

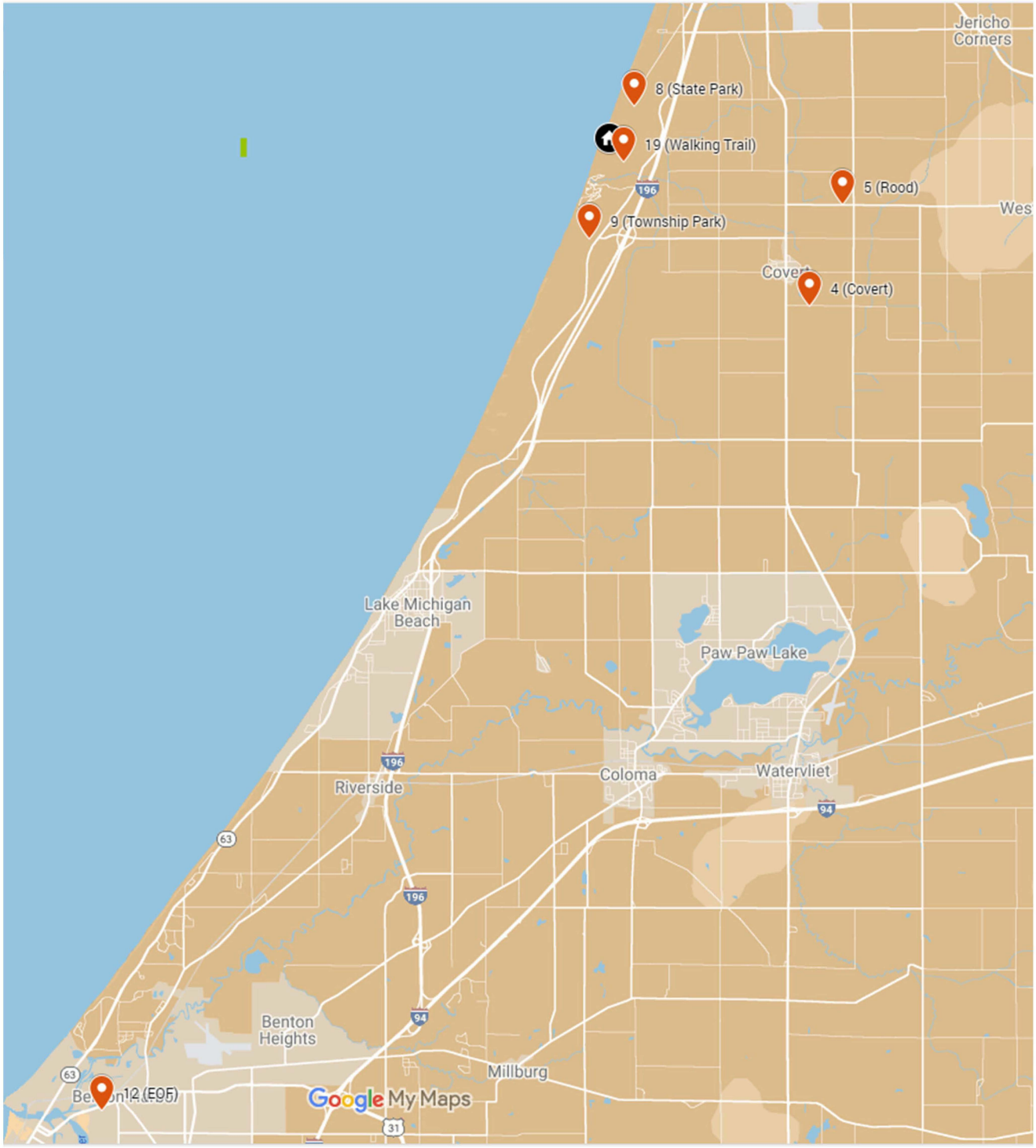

TABLE 1-10 REMP PROGRAM LOCATIONS, TLD

Location	Coordinates	Distance (miles)	Degrees	Sector
Stack	N 42 19 22.5 W 86 18 50.8			
1	N 42 19 20.5 W 86 18 36.1	0.213	100.36	E
Inner Ring				
13	N 42 19 47.2 W 86 18 34.1	0.530	26.56	NNE
8	N 42 19 46.8 W 86 18 24.0	0.602	39.19	NE
14	N 42 19 41.1 W 86 18 21.2	0.551	49.64	NE
15	N 42 19 41.7 W 86 17 58.1	0.834	63.76	ENE
16	N 42 19 28.0 W 86 17 54.6	0.804	82.45	E
17	N 42 19 10.5 W 86 18 13.9	0.572	113.74	ESE
18	N 42 19 4.2 W 86 18 28.9	0.469	138.49	SE
19	N 42 19 05 W 86 18 40	0.443	159.19	SSE
20	N 42 19 1.1 W 86 18 48.8	0.412	176.05	S
21	N 42 19 3.4 W 86 18 58.4	0.382	196.40	SSW

Table 1-10 REMP Program Locations, TLD (CONTINUED)				
Location	**Coordinates**	**Distance (miles)**	**Degrees**	**Sector**
Outer Ring				
7	N 42 22 40.8 W 86 17 0.4	4.115	22.35	NNE
6	N 42 22 30.6 W 86 14 15.9	5.314	47.18	NE
23	N 42 20 44.6 W 86 15 35.4	3.189	60.37	ENE
24	N 42 19 59.5 W 86 11 49.4	6.021	83.19	E
5-21	N 42 18 30.5 W 86 14 47.8	3.590	106.12	ESE
4-21	N 42 17 12.1 W 86 15 21.7	3.882	130.12	SE
3	N 42 14 38.0 W 86 16 59.9	5.684	163.92	SSE
2	N 42 14 33.4 W 86 19 16.4	5.560	183.75	S
9-21	N 42 18 4.6 W 86 19 12.0	1.525	191.38	SSW
Control TLDs				
12	N 42 06 50.4 W 86 27 42.1	16.33	207.67	SSW
11-21	N 42 16 52 W 85 45 13	28.72	95.25	E

TABLE 1-11 REMP PROGRAM LOCATIONS, AIR SAMPLE STATIONS

Location	Coordinates	Distance (miles)	Degrees	Sector
8 (State Park)	N 42 19 46.8 W 86 18 24.8	0.595	38.34	NE
9 (Township Park)	N 42 18 4.6 W 86 19 12.0	1.525	191.38	SSW
4 (Covert)	N 42 17 12.1 W 86 15 21.7	3.882	130.12	SE
5 (Rood)	N 42 18 30.5 W 86 14 47.8	3.590	106.12	ESE
12 (EOF)	N 42 06 50.4 W 86 27 42.1	16.33	207.67	SSW
19 (Walking Trail)	N 42 19 3.65 W 86 18 35.30	0.423	148.70	SSE

Control fish and water samples are normally obtained from the Consumers Energy Pump Storage Facility located in Ludington, MI or another location not influenced by Palisades plant discharges as indicated.

1.5 SIRW OR TEMPORARY LIQUID STORAGE TANK

CONTROL

1.5.1.1 The concentration of radioactive material (excluding tritium and noble gases) contained in the SIRW tank or any unprotected outside temporary tank* shall be limited such that the mixture radionuclides do not exceed 1,000 times the effluent concentration (EC) as listed in 10 CFR Part 20, Appendix B, Table 2, Column 2.

$$\frac{Concentration\ (1)}{ECL\ (1)} + \frac{Concentration\ (2)}{ECL\ (2)} \cdots + \frac{Concentration\ (i)}{ECL\ (i)} \leq 1000 \qquad \textbf{(1.0-8)}$$

Action

With the quantity of radioactive material in any of the above listed tanks exceeding the above concentration, immediately suspend all additions of radioactive material to the tank, within 48 hours reduce the tank contents to within the limit, and describe the events leading to this condition in the next Radiological Effluent Release Report.

Surveillance Requirement

The concentration of radioactive material contained in each of the above listed tanks shall be determined to be within the above limit by analyzing a representative sample of the tank's contents at least once per 7 days when radioactive materials are being added to the tank.

or

A calculational methodology performed prior to the material being transferred may be used to show compliance with the requirement of this section if a representative sample cannot be obtained at least once per seven days. A representative sample of the radioactive material to be added to the SIRW or Temporary Liquid Storage Tank shall be analyzed and a calculation performed to show compliance with the 1000 EC limit.

Bases

This requirement will provide reasonable assurance that in the event of an uncontrolled release of the tanks' contents, the resulting concentrations would be less than the limits of 10 CFR Part 20, Appendix B, Table 2, Column 2, at the nearest potable water supply and the nearest surface water supply in an Unrestricted Area. (The dilution between Palisades and the South Haven drinking water supply has been established as 1000.)

*Tanks included in this specification are those outdoor tanks that are not surrounded by liners, dikes, or walls capable of holding the tank contents and that do not have tank overflows and surrounding area drains connected to the liquid radwaste treatment system.

NOTE: The limit for the SIRW Tank may be exceeded for operational flexibility if the conditions of this section are met.

1.6 SURVEILLANCE REQUIREMENT TIME INTERVALS

CONTROL

1.6.1.1 Each Surveillance Requirement shall be performed within the specified surveillance interval with a maximum allowable extension not to exceed 25 percent of the specified surveillance interval.

Action

Failure to perform a Surveillance Requirement within the allowed surveillance interval shall constitute noncompliance with the operability requirements. The time limits of the action requirements are applicable at the time it is identified that a Surveillance Requirement has not been performed. The action requirements may be delayed for up to 24 hours to permit the completion of the surveillance when the allowed outage time limits of the action requirements are less than 24 hours. Surveillance Requirements do not have to be performed on inoperable equipment.

Surveillance Requirements

The applicable surveillance interval frequencies are specified in Table 1-2 and Table 1-5. The applicable sampling and/or analysis frequencies are specified in Table 1-2, Table 1-3, Table 1-5, Table 1-6 and Table 1-7. Extendable surveillance requirements are limited to Channel Checks, Source Checks, Channel Calibrations, Channel Functional Checks, and sampling frequencies.

Bases

The maximum allowable extension for a surveillance interval is consistent with the surveillance requirements specified in the Technical Specifications, Section 4.0. Until relocated in the ODCM, all of the effluent surveillances were subject to these same requirements.

The 25% extension may not be used to extend time intervals specified in ACTION requirements.

1.7 SEALED SOURCE CONTAMINATION

CONTROL

1.7.1.1 Each sealed source containing radioactive material either in excess of 100 microcuries of beta and/or gamma emitting material or 5 microcuries of alpha emitting material shall be free of greater than or equal to 0.005 microcuries of removable contamination.

This control is not applicable for sources which are exempt per 10CFR30, 10CFR31 and 10CFR32. This includes static elimination devices which contain, as a sealed source or sources, byproduct material consisting of a total of not more than 18.5 MBq (500 µCi) of polonium-210 per device.

Action

With a sealed source having removable contamination in excess of 0.005 microcuries, immediately withdraw the sealed source from use and either:

a. Decontaminate and repair the sealed source, or

b. Dispose of the sealed source in accordance with applicable regulations.

A report shall be prepared and submitted to the Commission on an annual basis if sealed source leakage tests reveal the presence of greater than or equal to 0.005 microcuries of removable contamination.

Surveillance Requirements

a. Each category of sealed sources as described in the requirement with a half-life greater than 30 days (excluding Hydrogen-3), and in any other form than gas, shall be tested for leakage and/or contamination at intervals not to exceed 6 months.

b. The test shall be performed by the licensee or by other persons specifically authorized by the Commission or an Agreement State. The test method shall have a detection sensitivity of at least 0.005 microcuries per test sample.

c. The test sample shall be taken from the sealed source or, in the case of permanently mounted sources, from the surfaces of the mounting device on which contamination would be expected to accumulate.

d. The periodic leak test does not apply to sealed sources that are stored and not being used. These sources shall be tested prior to use or transfer to another licensee, unless tested within the previous 6 months. Sealed sources which are continuously enclosed within a shielded mechanism (ie, sealed sources within radiation monitoring or boron measuring devices) are considered to be stored and need not be tested unless they are removed from the shielded mechanism.

e. Sealed sources transferred without a certificate indicating the last test date shall be tested prior to being placed in use.

Bases

The requirement, actions, and surveillance requirements are the same as contained in the Technical Specifications 6.21 prior to relocation to the ODCM and will provide assurance that sealed sources are tested to demonstrate that source integrity is being maintained.

2.0 REPORTING REQUIREMENTS

2.1 RADIOLOGICAL EFFLUENT RELEASE REPORT

The Radioactive Effluent Release Report (RERR) shall be submitted in accordance with 10 CFR 50.36a prior to May 1 of each year. The report shall include a summary of the quantities of liquid and gaseous effluents and solid waste released as outlined in Regulatory Guide 1.21, Rev 1, Measuring, Evaluating and Reporting Radioactivity in Solid Wastes and Releases of Radioactive Material in Liquid and Gaseous Effluents from Light Water Cooled Nuclear Power Plants, with data summarized on a quarterly basis following the format of Appendix B, thereof.

The following information shall also be included in the RERR:

- Assessment of the radiation doses due to the liquid and gaseous effluents released during the previous year
- Inoperable effluent radiation monitors that exceeded 30 continuous days; explain causes of inoperability and actions taken to prevent reoccurrence
- Evaluation to show conformance with 40 CFR 190, Environmental Radiation Protection Standards for Nuclear Power Operation
- Unplanned releases of radioactive materials in gaseous or liquid effluents to unrestricted areas on a quarterly basis
- Any changes to this procedure made during the reporting period

NOTE:	Based upon discussions with the Nuclear Energy Institute (NEI), the intent of NEI-0707 Objective 2.4 is to report a summary of all groundwater results, NOT all raw data results.

- A summary of all groundwater monitoring results taken in support of the Groundwater Protection Initiative, but are not part of the REMP

Solid radioactive waste data shall be reported as follows:

- Type of waste (example: spent resin, dry waste, irradiated components)

- Volume in cubic meters, include estimated error
- Curie quantity per type of waste, include estimated error
- Principal radionuclides in each category
- Disposition of waste shipments and irradiated fuel shipments (identify number of shipments, mode of transport and destination)

2.2 RADIOLOGICAL ENVIRONMENTAL OPERATING REPORTING REQUIREMENTS

2.2.1 Annual Radiological Environmental Monitoring Report

The Radiological Environmental Operating Report covering the operation of the unit during the previous calendar year shall be submitted prior to May 15 of each year. The report shall include summaries, interpretations, and analysis of trends of the results of the Radiological Environmental Monitoring Program for the reporting period. The material provided shall be consistent with the objectives outlined in: (1) the ODCM, and (2) Sections IV.B.2, IV.B.3, and IV.C of Appendix I to 10 CFR Part 50.

The Annual Radiological Environmental Operating Reports shall include summaries, interpretation and statistical evaluation of the results of the radiological environmental surveillance activities for the report period, including a comparison with preoperational studies, operational controls (as appropriate), and previous environmental surveillance reports and an assessment of the observed impacts of the Plant operation on the environment. The reports shall also include the results of land use census pursuant to Control 1.4.1.1 Surveillance Requirement c.

The Annual Radiological Environmental Operating Reports shall include summarized and tabulated results in the format of Table 2-1 of all radiological environmental samples taken during the report period. In the event that some results are not available for inclusion with the report, the report shall be submitted noting and explaining the reasons for the missing results. The missing data shall be submitted as soon as possible in a supplementary report.

The reports shall also include the following; a summary description of the radiological environmental monitoring program, including sampling methods for each sample type, a map of all sampling locations keyed to a table giving distances and directions from the reactor and the results of land use census required by Control 1.4.1.1 Surveillance Requirement c and results of the Interlaboratory Comparison Program required by Control 1.4.1.1 Surveillance Requirement e.

2.2.2 Non-routine Reports

A report shall be submitted to the NRC in the event that: 1) the Radiological Environmental Monitoring Programs are not substantially conducted as described in 1.4.1 or 2) an unusual or important event occurs from Plant operation that causes a significant environmental impact or affects a potential environmental impact. Reports shall be submitted within 30 days.

TABLE 2-1 ENVIRONMENTAL RADIOLOGICAL MONITORING PROGRAM SUMMARY

Name of Facility _____ Docket No _____

Location of Facility _____ Reporting Period _____
(County, State)

Medium or Pathway Sampled (Unit of Measure)	Type/Total Number of Analyses Performed	Lower Limit of Detection[a] (LLD)	All Indicator Locations Mean (f)[b] Range[b]	Name Distance & Direction	Mean (f)[b] Range[b]	Control Locations Mean(f)[b] Range[b]	Number of REPORTABLE OCCURRENCES
Air Particulates (pCi/m^3)	Gross ß 416	0.003	0.08 (200/312) (0.05-2.0)	Middletown 5 miles 340°	0.10 (5/52) (0.08-2.0)	0.08 (8/104)- (0.05-1.40)	1
	γ-Spec 32						
	Cs-137	0.003	0.05 (4/24) (0.03-0.13)	Smithville 2.5 miles 160°	0.08 (2/4) (0.03-0.13)	< LLD	4
	Ba-140	0.003	0.03 (2/24) (0.01-0.08)	Podunk 4 miles 270°	0.05 (2/4) (0.01-0.08)	0.02 (1/8)	1
	Sr-89 40	0.002	< LLD	--	--	< LLD	0
	Sr-90 40	0.0003	< LLD	--	--	< LLD	0
Fish pCi/kg (dry weight)	γ-Spec 8						
	Cs-137	80	< LLD	--	< LLD	90 (1/4)	0
	Cs-134	80	< LLD	--	< LLD	< LLD	0
	Co-60	80	120 (3/4) (90-200)	River Mile 35 Podunk River	See Column 4	< LLD	0

[a] Nominal Lower Limit of Detection (LLD) as defined in table notation c of Table 1-9.

[b] Mean and range based upon detectable measurements only. Fraction of detectable measurements at specific locations is indicated in parentheses (f).

NOTE: The example data are provided for illustrative purposes only.

3.0 MAJOR MODIFICATIONS TO RADIOACTIVE LIQUID AND WASTE GAS SYSTEMS

3.1 LICENSEE MODIFICATIONS

Licensee initiated major modifications to the radioactive liquid and gaseous waste systems.

1. Shall be reported to the NRC pursuant to 10 CFR Part 50.59. The discussion of each modification shall contain:

   a. A summary of the evaluation that led to the determination that the modification could be made in accordance with 10 CFR Part 50.59.

   b. A description of the equipment, components and processes involved, and the interfaces with other Plant systems.

   c. Documentation of the fact that the modification was reviewed and found acceptable by the OSRC.

2. Shall become effective upon review and acceptance by the General Manager Plant Operations.

3.2 DEFINITION OF MAJOR RADWASTE SYSTEM MODIFICATION

3.2.1 Purpose

The purpose of this definition is to assure that this requirement will be satisfied under clearly identifiable circumstances, and with the objective that current radwaste system capabilities are not jeopardized.

3.2.2 Definition

A major radwaste system modification is a modification which would remove (either by bypassing for greater than 7 days or physical removal) or replace with less efficient equipment, any components of the radwaste system:

a. Letdown filters or demineralizers.

b. Vacuum degassifier (not applicable when the reactor is in cold shutdown and depressurized).

c. Miscellaneous or clean waste evaporators.

d. The present waste gas compressor/decay tank system.

e. Fuel Pool filters/demineralizers.

f. Radwaste polishing demineralizers.

g. Radwaste Solidification system.

Improvements or additions to improve efficiency will not be considered major modifications unless a complete substitution of equipment or systems is made with equipment of unrelated design. Examples would be: 1) replacement of mechanical degassifier with steam, jet degassifier, 2) replacement of waste gas system with cryogenic system, 3) replacement of asphalt solidification with cement system, and 4) change from deep bead resins to Powdex, etc.

3.3 ONSITE GROUND WATER MONITORING

Palisades installed 5 ground water monitoring wells in 2007 and added an additional 9 wells in 2008. These wells were installed in response to NEI 07-07, Industry Ground Water Protection Initiative - Final Guidance Document. These wells are strategically placed within the Owner Controlled Area, both inside and outside the Protected Area to allow detection of radioactive contamination of ground water due to leaks or spills from plant systems. Palisades ground water monitoring wells are maintained by the ground water monitoring program.

4.0 GASEOUS EFFLUENTS

4.1 GASEOUS EFFLUENT CALCULATIONS

4.1.1 Dose Rate Limits

Control 1.1.2.1 requires that the dose rate due to radioactive materials released in gaseous effluents from the site to areas at and beyond the SITE BOUNDARY shall be limited to the following:

1. For noble gases: Less than or equal to 500 mrem/yr to the total body and less than or equal to 3000 mrem/yr to the skin.

2. For Iodine-131, Iodine-133 and for all radioactive materials in particulate form and tritium with half-lives greater than 8 days: Less than or equal to 1500 mrem/yr to any organ.

Control 1.1.1.1 requires gaseous effluent monitors to have alarm/trip setpoints to ensure that offsite concentrations, when averaged over 1 hour, will not be greater than control 1.1.2.1. This section of the ODCM describes the methodology that will be used to determine these setpoints.

The methodology for determining alarm/trip setpoints is divided into two major parts. The first consists of calculating an allowable concentration for the nuclide mixture to be released. The second consists of determining monitor response to this mixture in order to establish the physical settings on the monitors.

4.1.2 Dose Rate Calculations

Except where noted, Table 4-2 contains the numerical values for parameters used in the equations of this section.

4.1.2.1 Organ Dose Rate Due To Noble Gases

The dose rate to the total body dose due to noble gases is given by:

$$Total\ Body\ Dose\ Rate(mrem/year) = \overline{\chi/Q}_M \sum_i K_i \dot{Q}_\iota \quad \textbf{(4.0-1)}$$

The skin dose rate is given by:

$$Skin\ Dose\ Rate(mrem/year) = \overline{\chi/Q}_M \sum_i [L_i + 1.1M_i]\dot{Q}_\iota \quad \textbf{(4.0-2)}$$

WHERE: $\overline{\chi/Q}_M$ = The maximum or highest calculated annual average relative concentration for any area at or beyond the UNRESTRICTED AREA in sec/m^3. See Table 4-1.

$\dot{Q}_\iota$ = The release rate of radionuclide "i," in µCi/sec.

K_i = The total body dose factor due to gamma emissions for noble gas radionuclide "i", from Column 4, Table B-1 of Regulatory Guide 1.109, in mrem/year per µCi/m^3. (Note the values in Regulatory Guide 1.109 must be increased by a factor of 10^6 to match the units used in the NUREG 0133 equations.)

L_i = The skin dose factor due to beta emissions for noble gas radionuclide "i," from Column 2, Table B-1 of Regulatory Guide 1.109, in mrem/year per µCi/m^3. (Note the values in Regulatory Guide 1.109 must be increased by a factor of 10^6 to match the units used in this ODCM.)

1.1 = Conversion constant of 1.1 mrem/mrad.

M_i = The air dose factor due to gamma emissions for noble gas radionuclide "i," from Column 3, Table B-1 of Regulatory Guide 1.109, in mrad/year per µCi/m^3. The unit conversion constant of 1.1 mrem/mrad is used to convert air dose to skin dose. (Note the values in Regulatory Guide 1.109 must be increased by a factor of 10^6 to match the units used in this ODCM.)

4.1.2.2 Organ Dose Rate Due to Radioiodines, Tritium, C-14 and Particulates

Dose rate for Iodine-131, Iodine-133 and for all radioactive materials in particulate form and tritium (R-T-P) with half-lives greater than 8 days is given by:

$$R-T-P\ Dose\ Rate(mrem/year) = \overline{\chi/Q}_M \sum_i P_i \dot{Q}_\iota \qquad \textbf{(4.0-3)}$$

WHERE: $\overline{\chi/Q}_M$ = The maximum or highest calculated annual average relative concentration for any area at or beyond the UNRESTRICTED AREA in sec/m^3. See Table 4-1.

P_i = The dose conversion factor for radionuclide "i," in mrem/year per µCi/m^3 for the child-inhalation pathway (same as the $R_{ai(IN)j}$ of Table 7-7).

$\dot{Q}_\iota$ = The release rate of radionuclide "i," in µCi/sec.

The dose conversion factor Pi is for the child inhalation pathway and is given by:

$$P_i = K'\left(BR_{[C]}\right)DFA_{[C]ij} \qquad \textbf{(4.0-4)}$$

WHERE: K' = Unit conversion constant, 10^6 ρCi/µCi.

$BR_{[C]}$ = The breathing rate of the child age group, in m^3/year. The default value of 3700 m^3 year is taken from Table E-5 of Regulatory Guide 1.109.

$DFA_{[C]ij}$ = The inhalation dose factor for the child age group for radionuclide "i," and organ "j" in mrem/pCi from Table E-9 of Regulatory Guide 1.109.

The methodology of Equation (4.0-4) is identical to that of (4.0-11). As a result, the P_i dose factor values for the child-inhalation exposure pathway are taken from Table 7-7.

4.2 ALARM/TRIP SETPOINT METHODOLOGY

NOTE: If a batch release is made while a continuous release or another batch release is in progress, the sum of all values of R_k must be less than 10.0. The total EC-fraction (R_k) for each release point will be calculated by the relationship defined by Note 4 of Appendix B, 10 CFR 20:

$$R_k = X/Q \text{ x } F \text{ x } \sum_i \frac{C_i}{EC_i} \leq 10.0 \qquad \textbf{(4.0-5)}$$

WHERE:

X/Q = Most conservative sector site boundary dispersion (sec/m^3) (listed in site procedure CH 6.41, "Land Use Census")

C_i = Actual or measured concentration, at ambient temperature and pressure of nuclide i (μCi/cc)

EC_i = The EC of nuclide i from 10 CFR 20, Appendix B, Table 2.

$R_{(k)}$ = The total EC-fraction for release point k

F = Release flow rate (83,000 cfm = 39.2 m^3/sec) for stack monitor considerations; variable for other monitors

4.2.1 Monitor Response

Normal radioactivity releases consist mainly of well-decayed fission gases. Therefore, monitor response calibrations are performed to fission gas typical of normal releases (mainly Xe-133). Response of monitors used to define fission product release rates under accident conditions may vary from that of Xe-133, however. Monitor response for the two categories of monitor is determined as follows:

a. Normal Release (aged fission gases)

Total gas concentration (μCi/cc) at the monitor is calculated. The detector response to isotopic activities (cpm/μCi/cc) is applied to determine cpm expected. The setting for monitor alarms is established at some factor (b) greater than 1 but less than $1/R_k$ (Equation 4.0-5) times the measured concentration (c):

$$s = b \; x \; c \qquad \textbf{(4.0-6)}$$

b. Accident Releases

Monitors are preset to alarm at or before precalculated offsite dose rates would be achieved under hypothetical accident conditions. These setpoints are established in accordance with Emergency Plan requirements for defining Emergency Action Levels and associated actions. Emergency Implementing Procedures contain monitor-specific curves or calibration constants for conversion between cpm and μCi/cc (or R/hr and μCi/cc), depending on monitor type, for fission product mixtures as a function of mixture decay time.

When these monitors are utilized for other than accident conditions, either an appropriately decayed "accident" conversion curve may be used, or a decayed fission gas calibration factor may be applied. In these cases, setpoints are established as shown above.

Setpoints of accident monitors (if set to monitor normal releases) are reset to the accident alarm settings at the end of normal release. Setpoints of other release monitors are maintained at the level used at the latest release (well below the level which would allow 10 times EC to be exceeded at the site boundary), or are reset to approximately three times background in order to detect leakage or inadvertent releases of low level gases.

4.3 APPENDIX I DOSE CALCULATIONS

ODCM Controls 1.1.3 and 1.1.4 require doses to be calculated for (1) noble gases and (2) iodines, tritium, and particulates. The doses as defined in this section are based on 10 CFR Part 50 Appendix I limits of mrem per quarter and millirem per year. All dose pathways of major importance in the Palisades environs are considered. An alternate to the dose calculation methodology presented in this section, the NRC computer code LADTAP II and GASPAR II as implemented by NRC Dose may be used.

4.3.1 Unrestricted Area Noble Gas Air Dose

ODCM Control 1.1.3.1 restricts the noble gas air dose from each unit to the following:

a. During any calendar quarter: Less than or equal to 5 mrad for gamma radiation and less than or equal to 10 mrad for beta radiation.

b. During any calendar year: Less than or equal to 10 mrad for gamma radiation and less than or equal to 20 mrad for beta radiation.

4.3.1.1 The noble gas gamma air dose in the unrestricted is given by:

$$Gamma\ Dose(mrad) = 3.17 \times 10^{-8} \overline{\chi/Q}_M \sum_i M_i \widetilde{Q}_\iota \quad \textbf{(4.0-7)}$$

4.3.1.2 The noble gas beta air dose in the UNRESTRICTED AREA due to noble gases is given by:

$$Beta\ Dose(mrad) = 3.17 \times 10^{-8} \overline{\chi/Q}_M \sum_i N_i \widetilde{Q}_\iota \quad \textbf{(4.0-8)}$$

WHERE: 3.17×10^{-8} = Conversion factor - years/sec.

$\overline{\chi/Q}_M$ = The maximum or highest calculated annual average relative concentration for any area at or beyond the UNRESTRICTED AREA in sec/m^3. See Table 4-1.

$\widetilde{Q}_\iota$ = The total release of noble gas radionuclide "i," in µCi.

M_i = The air dose factor due to gamma emissions noble gas radionuclide "i," from Column 3, Table B-1 of Regulatory Guide 1.109, in mrad/year per µCi/m^3. (Note the values in Regulatory Guide 1.109 must be increased by a factor of 10^6 to match the units used in this ODCM.)

N_i = The air dose factor due to beta emissions for noble gas radionuclide "i," from Column 1, Table B-1 of Regulatory Guide 1.109, in mrad/year per µCi/m^3. (Note the values in Regulatory Guide 1.109 must be increased by a factor of 10^6 to match the units used in this ODCM.)

4.3.2 Radioiodine, Tritium and Particulate Organ Dose to a Member of the Public

The organ dose to MEMBER OF THE PUBLIC is given by:

$$CRDose_{apj} = 3.17 \times 10^{-8} W \sum_{i} R_{aipj} \widetilde{Q}_{\iota}$$

(4.0-9)

WHERE: $CRDose_{apj}$ = Is the CRITICAL RECEPTOR Dose for age group "a," exposure pathway "p" and organ "j" (mrem).

3.17×10^{-8} = Conversion factor in years/sec.

W = Atmospheric dispersion or deposition term from Table 4-1 and is used as follows:

$\overline{\chi/Q}_{CR}$ = Atmospheric dispersion value for immersion, inhalation, all tritium pathways and all C-14 pathways at the location of interest (typically the CRITICAL RECEPTOR) from Table 4-1 in sec/m^3, or

$\overline{D/Q}_{CR}$ = Atmospheric deposition value for ground plane and ingestion pathways at the location of interest from Table 4-1 in m^{-2}.

$R_{aipj}[W]$ = The site specific pathway dose factor for age group "a," radionuclide "i," pathway "p," and organ "j". These values are compiled in Table 7-5 through Table 7-19.

The $[W]$ notation specifies the appropriate dispersion ($\overline{\chi/Q}$) or deposition ($\overline{D/Q}$) parameter to be used with the pathway dose factor.

The units of $R_{aipj}[\chi/Q]$ are m^2 x mrem/year per µCi/sec for the ground plane and ingestion pathways with the exception of tritium and carbon-14.

The units of $R_{aipj}[\chi/Q]$ are mrem/year per µCi/m^3 for immersion, inhalation, and all tritium and carbon-14 pathways.

$\widetilde{Q}_{\iota}$ = The total release activity of radionuclide "i" in µCi.

4.3.2.1 Ground Plane Pathway Dose Factor

Ground Plane - Radioiodines and Particulates

$$R_{ai(GP)j}\left[\overline{D/Q}\right] = K'K"(SF)DFG_i\left[\frac{1-e^{-\lambda_i t_b}}{\lambda_i}\right] \quad \textbf{(4.0-10)}$$

WHERE:

$R_{ai(GP)j}\left[\overline{D/Q}\right]$ = Is the dose factor for age group "a," nuclide "i," pathway "GP" (ground plane) and organ "j" in m^2-mrem/yr per µCi/sec. See Table 7-5.

K' = Unit conversion factor: 10^6 pCi/µCi.

$K"$ = Unit conversion factor: 8760 hr/yr.

SF = Dimensionless factor to account for residence time and structure shielding from Table E-15 of Regulatory Guide 1.109.

DFG_i = Ground plane dose conversion factor for nuclide "i" from Table E-5 of Regulatory Guide 1.109 in mrem/hr per pCi/m^2.

Ground plane dose factors for radionuclides listed in Table 7-5 and not found in Regulatory Guide 1.109 are taken from NUREG/CR-4013.

With the exception of skin, all other organs are assumed to receive the same dose as the total body. All age groups are assumed to receive the same ground plane exposure dose.

λ_i = Decay constant for radionuclide "i" in sec^{-1}.

t_b = The exposure time based on ½ of the plant operating lifetime in seconds.

4.3.2.2 Inhalation Pathway Dose Factor

Inhalation - Radioiodines and Particulates

$$R_{ai(IN)j}\left[\overline{\chi/Q}\right] = K' BR_a DFA_{aij} \qquad \textbf{(4.0-11)}$$

WHERE:

$R_{ai(IN)j}\left[\overline{\chi/Q}\right]$ = Dose commitment factor for age group "a," nuclide "i," pathway "IN" (inhalation) and organ "j" in mrem/year per μCi/m^3. See Table 7-6 through Table 7-9.

K' = Unit conversion factor: 10^6 pCi/μCi.

BR_a = Inhalation rate for age group, "a" in m^3/yr.

DFA_{aij} = Inhalation dose conversion factor for age group "a," nuclide "i," and organ "j" in mrem/pCi. From Tables E-7 through E-10 of Regulatory Guide 1.109.

Inhalation dose factors for radionuclides listed in Table 7-6 through Table 7-9 and not found in Regulatory Guide 1.109 are taken from NUREG/CR-4013.

4.3.2.3 Vegetation Ingestion Pathway Dose Factors

Vegetation Ingestion - Radioiodines and Particulates

$$R_{ai(VG)j}\left[\overline{D/Q}\right] = K' \frac{(r)}{Y_V(\lambda_i + \lambda_W)} DFL_{aij} \times \left[U_a^L f_L e^{-\lambda_i t_L} + U_a^S f_G e^{-\lambda_i t_H}\right]$$

(4.0-12)

WHERE:

$R_{ai(VG)j}\left[\overline{D/Q}\right]$ = Dose commitment factor for age group "a," nuclide "i," pathway "VG" (vegetation ingestion) and organ "j" in m2 x mrem/year per µCi/sec. See Table 7-10 through Table 7-12.

K' = Unit conversion factor: 10^6 pCi/µCi.

(r) = Dimensionless retention fraction for direct deposition onto leafy vegetation.
= 0.2 for particulates
= 1.0 for radioiodines

Y_V = Agricultural productivity for garden vegetation in kg/m^2.

λ_i = Decay constant for radionuclide "i" in sec^{-1}.

λ_W = Decay constant for weathering effects in sec^{-1}.

DFL_{aij} = Ingestion dose conversion factor for age group "a," nuclide "i," and organ "j" in mrem/pCi. From Tables E-11 through E-14 of Regulatory Guide 1.109.

Ingestion dose factors for radionuclides listed in ODCM Table 7-10 through Table 7-12 and not found in Regulatory Guide 1.109 are taken from NUREG/CR-4013.

U_a^L = Consumption rate of fresh leafy vegetation for age group "a" in kg/yr.

f_L = Fraction of annual intake of fresh leafy vegetation grown locally.

t_L = Transport time from harvest of leafy vegetation to receptor in sec.

U_a^S = Consumption rate of non-leafy vegetation for age group "a" in kg/yr.

f_G = Fraction of annual intake of non-leafy (stored) vegetation grown locally.

t_H = Transport time from harvest of non-leafy (stored) vegetation to receptor in sec.

Vegetation Ingestion - Tritium

$$R_{a(H-3)(VG)j}[\chi/Q] = K'K'''(U_a^L f_L + U_a^S f_G)DFL_{a(H-3)j}[0.75(0.5/H)] \quad \textbf{(4.0-13)}$$

WHERE: $R_{a(H-3)(VG)j}[\chi/Q]$ = Dose commitment factor for age group "a," nuclide "H-3," pathway "VG" (vegetation ingestion) and organ "j" in mrem/year per μCi/m^3. See Table 7-10 through Table 7-12.

K' = Unit conversion factor: 106 pCi/μCi.

K''' = Unit conversion factor: 103 gm/kg.

U_a^L = Consumption rate of fresh leafy vegetation for age group "a" in kg/yr.

f_L = Fraction of annual intake of fresh leafy vegetation grown locally.

U_a^S = Consumption rate of non-leafy vegetation for age group "a" in kg/yr.

f_G = Fraction of annual intake of non-leafy vegetation grown locally.

$DFL_{a(H-3)j}$ = Ingestion dose conversion factor for age group "a," nuclide "H-3," and organ "j" in mrem/pCi. From Tables E-11 through E-14 of Regulatory Guide 1.109.

0.75 = Fraction of total vegetation that is water.

0.5 = Ratio of specific activity of vegetation water to atmospheric water.

H = Absolute atmospheric humidity in gm/m3.

Vegetation Ingestion - Carbon-14

$$R_{a(C-14)(VG)j}[\chi/Q] = K'K'''f_{CO2}\,p(U_a^L G_L f_L + U_a^S G_S f_G)DFL_{a(C-14)j}\left(\frac{1}{G_{Air}}\right) \quad \textbf{(4.0-14)}$$

WHERE: $R_{a(C-14)(VG)j}[\chi/Q]$ = Dose commitment factor for age group "a," nuclide "C-14," pathway "VG" (vegetation ingestion) and organ "j" in mrem/year per μCi/m^3. See Table 7-10 through Table 7-12.

K' = Unit conversion factor: 106 pCi/μCi.

K''' = Unit conversion factor: 103 gm/kg.

f_{CO2} = Fraction of carbon released as CO2.

p = Ratio of total release time to the annual time during which photosynthesis takes place.

U_a^L = Consumption rate of fresh leafy vegetation for age group "a" in kg/yr.

G_L = Fraction of leafy vegetation mass that is natural carbon.

f_L = Fraction of annual intake of fresh leafy vegetation grown locally.

U_a^S = Consumption rate of non-leafy vegetation for age group "a" in kg/yr.

G_S = Fraction of non-leafy vegetation mass that is natural carbon.

f_G = Fraction of annual intake of non-leafy vegetation grown locally.

$DFL_{a(C-14)j}$ = Ingestion dose conversion factor for age group "a," nuclide "C-14," and organ "j" in mrem/pCi. From Tables E-11 through E-14 of Regulatory Guide 1.109.

G_{Air} = Concentration of natural carbon in the atmosphere in gm-carbon/m^3-air.

4.3.2.4 Milk Ingestion Pathway Dose Factors

Milk Ingestion - Radioiodines and Particulates

$$R_{ai(MI)j}\left[\overline{D/Q}\right] = K' \frac{Q_F U_{a(MI)} F_{(MI)}(r)}{(\lambda_i + \lambda_W)} DFL_{aij} \left[\frac{f_P f_S}{Y_P} + \frac{(1 - f_P f_S) e^{-\lambda_i t_M}}{Y_S}\right] e^{-\lambda_i t_s} \quad \textbf{(4.0-15)}$$

WHERE:

$R_{ai(MI)j}\left[\overline{D/Q}\right]$ = Dose commitment factor for age group "a," nuclide "i," pathway "MI" (milk ingestion) and organ "j" in $m^2 \cdot$ mrem/year per µCi/sec. See Table 7-13 through Table 7-16.

K' = Unit conversion factor: 10^6 pCi/µCi.

Q_F = Feed consumption rate of milk producing animal in kg/da.

$U_{a(MI)}$ = Consumption rate of milk for age group "a" in liters/yr.

$F_{(MI)}$ = Stable element transfer coefficient from feed to milk in da/liter.

(r) = Dimensionless retention fraction for direct deposition onto leafy vegetation.
- = 0.2 for particulates
- = 1.0 for radioiodines

λ_i = Decay constant for radionuclide "i" in sec^{-1}

λ_W = Decay constant for weathering effects in sec^{-1}.

DFL_{aij} = Ingestion dose conversion factor for age group "a," nuclide "i," and organ "j" in mrem/pCi. From Tables E-11 through E-14 of Regulatory Guide 1.109.

Ingestion dose factors for radionuclides listed in Table 7-13 through Table 7-16 and not found in Regulatory Guide 1.109 are taken from NUREG/CR-4013.

f_P = Fraction of year that milk animal is on pasture.

f_S = Fraction of feed that is pasture grass while milk animal is on pasture.

Y_P = Agricultural productivity for pasture feed grass in kg/m^2.

Y_S = Agricultural productivity for stored feed in kg/m^2.

t_M = Transport time from consumption of pasture to milk to receptor in sec.

t_s = Transport time from harvest of stored feed to milk or meat animal consumption in sec.

Milk Ingestion - Tritium

$$R_{a(H-3)(MI)j}[\chi/Q] = K'K'''F_{MI}Q_F U_{a(MI)} DFL_{a(H-3)j}[0.75(0.5/H)] \quad \textbf{(4.0-16)}$$

WHERE: $R_{a(H-3)(MI)j}[\chi/Q]$ = Dose commitment factor for age group "a," nuclide "H-3," pathway "MI" (milk ingestion) and organ "j" in mrem/year per μCi/m^3. See Table 7-13 through Table 7-16.

K' = Unit conversion factor: 10^6 pCi/μCi.

K''' = Unit conversion factor: 10^3 gm/kg.

F_{MI} = Stable element transfer coefficient from feed to milk in da/liter.

Q_F = Feed consumption rate of milk producing animal in kg/da.

$U_{a(MI)}$ = Consumption rate of milk for age group "a" in liter/yr.

$DFL_{a(H-3)j}$ = Ingestion dose conversion factor for age group "a," nuclide "H-3," and organ "j," in mrem/pCi. From Tables E-11 through E-14 of Regulatory Guide 1.109.

0.75 = Fraction of total vegetation that is water.

0.5 = Ratio of specific activity of vegetation water to atmospheric water.

H = Absolute atmospheric humidity in gm/m^3.

Milk Ingestion - Carbon-14

$$R_{a(C-14)(MI)j}[\chi/Q] = K'K'''f_{CO2}\,p\,F_{MI}Q_F U_{a(MI)} DFL_{a(C-14)j}(G_{Milk}/G_{Air}) \quad \textbf{(4.0-17)}$$

WHERE: $R_{a(C-14)(MI)j}[\chi/Q]$ = Dose commitment factor for age group "a," nuclide "C-14," pathway "MI" (milk ingestion) and organ "j" in mrem/year per μCi/m^3. See Table 7-13 through Table 7-16.

K' = Unit conversion factor: 10^6 pCi/μCi.

K''' = Unit conversion factor: 10^3 gm/kg.

f_{CO2} = Fraction of carbon released as CO^2.

p = Ratio of total release time to the annual time during which photosynthesis takes place.

F_{MI} = Stable element transfer coefficient from feed to milk in da/liter.

Q_F = Feed consumption rate of milk producing animal in kg/da.

$U_{a(MI)}$ = Consumption rate of milk for age group "a" in liters/yr.

$DFL_{a(C-14)j}$ = Ingestion dose conversion factor for age group "a," nuclide "C-14," and organ "j" in mrem/pCi. From Tables E-11 through E-14 of Regulatory Guide 1.109.

G_{Milk} = Fraction of milk that is carbon.

G_{Air} = Concentration of natural carbon in the atmosphere in gm-carbon/m^3-air.

4.3.2.5 Meat Ingestion Pathway Dose Factor

Meat Ingestion - Radioiodines and Particulates

$$R_{ai(ME)j}\left[\overline{D/Q}\right] = K' \frac{Q_F U_{a(ME)} F_{ME}(r)}{(\lambda_i + \lambda_W)} DFL_{aij} \left[\frac{f_P f_S}{Y_P} + \frac{(1 - f_P f_S) e^{-\lambda_i t_S}}{Y_S}\right] e^{-\lambda_i t_P} \quad \textbf{(4.0-18)}$$

WHERE:

$R_{ai(ME)j}\left[\overline{D/Q}\right]$ = Dose commitment factor for age group "a," nuclide "i," pathway "ME" (meat ingestion) and organ "j" in m^2 x mrem/year per µCi/sec. See Table 7-17 through Table 7-19.

K' = Unit conversion factor in 10^6 pCi/µCi.

Q_F = Feed consumption rate of meat producing animal in kg/da.

$U_{a(ME)}$ = Consumption rate of meat for age group "a" in kg/yr.

F_{ME} = Stable element transfer coefficient for meat in da/kg.

(r) = Dimensionless retention fraction for direct deposition onto leafy vegetation.
= 0.2 for particulates
= 1.0 for radioiodines

λ_i = Decay constant for radionuclide "i" in sec^{-1}.

λ_W = Decay constant for weathering effects in sec^{-1}.

DFL_{aij} = Ingestion dose conversion factor for age group "a," nuclide "i," and organ "j" mrem/pCi. From Tables E-11 through E-14 of Regulatory Guide 1.109.

Ingestion dose factors for radionuclides listed in ODCM Table 7-17 through Table 7-19 and not found in Regulatory Guide 1.109 are taken from NUREG/CR-4013.

f_P = Fraction of year that meat animal is on pasture.

f_S = Fraction of feed that is pasture grass while meat animal is on pasture.

Y_P = Agricultural productivity for pasture feed grass in kg/m^2.

Y_S = Agricultural productivity for stored feed in kg/m^2.

t_P = Transport time from consumption of pasture to meat to receptor in sec.

t_S = Transport time from harvest of stored feed to meat animal consumption in sec.

Meat Ingestion - Tritium

$$R_{a(H-3)(ME)j}[\overline{\chi/Q}] = K'K'''F_{ME}Q_F U_{a(ME)} DFL_{a(H-3)j}[0.75(0.5/H)]$$

(4.0-19)

WHERE: $R_{a(H-3)(ME)j}[\overline{\chi/Q}]$ = Dose commitment factor for age group "a," nuclide "H-3," pathway "ME" (meat ingestion) and organ "j" in mrem/year per μCi/m^3. See Table 7-17 through Table 7-19.

K' = Unit conversion factor: 10^6 pCi/μCi.

K''' = Unit conversion factor: 10^3 gm/kg.

F_{ME} = Stable element transfer coefficient from feed to meat in da/kg.

Q_F = Feed consumption rate of meat producing animal in kg/da.

$U_{a(ME)}$ = Consumption rate of meat for age group "a" in kg/yr.

$DFL_{a(H-3)j}$ = Ingestion dose conversion factor for age group "a," nuclide "H-3," and organ "j" in mrem/pCi. From Tables E-11 through E-14 of Regulatory Guide 1.109.

0.75 = Fraction of total vegetation that is water.

0.5 = Ratio of specific activity of vegetation water to atmospheric water.

H = Absolute atmospheric humidity in gm/m^3.

Meat Ingestion - Carbon-14

$$R_{a(C-14)(ME)j}\left[\chi/Q\right] = K'K'''f_{CO2}\,p\,F_{ME}Q_F U_{a(ME)}DFL_{a(C-14)j}(G_{Meat}/G_{Air}) \quad \textbf{(4.0-20)}$$

WHERE: $R_{a(C-14)(ME)j}\left[\chi/Q\right]$ = Dose commitment factor for age group "a," nuclide "C-14," pathway "ME" (meat ingestion) and organ "j" in $m^2 \cdot$ mrem/year per µCi/sec. See Table 7-17 through Table 7-19.

K' = Unit conversion factor: 10^6 pCi/µCi.

K''' = Unit conversion factor: 10^3 gm/kg.

f_{CO2} = Fraction of carbon released as CO^2.

p = Ratio of total release time to the annual time during which photosynthesis takes place

F_{ME} = Stable element transfer coefficient from feed to meat in da/kg.

Q_F = Feed consumption rate of meat producing animal in kg/da.

$U_{a(ME)}$ = Consumption rate of meat for age group "a" in liters/yr.

$DFL_{a(C-14)j}$ = Ingestion dose conversion factor for age group "a," nuclide "C-14," and organ "j" in mrem/pCi. From Tables E-11 through E-14 of Regulatory Guide 1.109.

G_{Meat} = Fraction of meat that is carbon.

G_{Air} = Concentration of natural carbon in the atmosphere in gm-carbon/m^3-air.

TABLE 4-1 X/Q AND D/Q AT LOCATIONS OF INTEREST

Atmospheric Dispersion			
Location Type	**Direction * From Site**	**Distance * (miles)**	**X/Q (sec/m^3)**
Site Boundary (assumed resident)	SSE	0.48	2.37E-06
Garden	SSE	0.70	1.35E-06
Beef Cattle	ESE	2.04	2.28E-07
Goat	ESE	2.04	2.28E-07
Atmospheric Deposition			
Location Type	**Direction From Site**	**Distance (miles)**	**D/Q (1/m^2)**
Site Boundary (assumed resident)	SSE	0.48	1.88E-08
Garden	SSE	0.70	1.01E-08
Beef Cattle	ESE	2.04	1.34E-09
Goat	ESE	2.04	1.34E-09

TABLE 4-2 PARAMETERS USED IN GASEOUS EFFLUENT DOSE CALCULATIONS

Parameter	Description	Equation(s)	Reference
Atmospheric Dispersion and Deposition			
$\overline{\chi/Q}_M$ =	The maximum or highest calculated annual average relative concentration for any area at or beyond the UNRESTRICTED AREA in units of sec/m^3.	(4.0-1) (4.0-2) (4.0-3) (4.0-7) (4.0-8)	Site Specific. Values are listed in Table 4-1.
W =	Atmospheric dispersion or deposition term. See ODCM Section 1.1.4.1.	(4.0-9)	Site Specific. Values are listed in Table 4-1.
$\overline{\chi/Q}_{CR}$ =	The dispersion value in units of sec/m^3 at the location of the CRITICAL RECEPTOR.	(4.0-9) (6.0-1) (6.0-2)	Site Specific. Values are listed in Table 4-1.
$\overline{D/Q}_{CR}$ =	The deposition value in units of m^{-2} at the location of the CRITICAL RECEPTOR.	(4.0-9)	Site Specific. Values are listed in Table 4-1.
Noble Gas Dose Factors			
K_i =	The total body dose factor due to gamma emissions for noble gas radionuclide "i".	(4.0-1) (6.0-1)	From Column 4, Table B-1 of Regulatory Guide 1.109, in mrem/year per µCi/m^3.
L_i =	The skin dose factor due to beta emissions for noble gas radionuclide "i".	(4.0-2) (6.0-2)	From Column 2, Table B-1 of Regulatory Guide 1.109, in mrem/year per µCi/m^3.
M_i =	The air dose factor due to gamma emissions for noble gas radionuclide "i".	(4.0-2) (4.0-7) (6.0-2)	From Column 3, Table B-1 of Regulatory Guide 1.109, in mrad/year per µCi/m^3.
N_i =	The air dose factor due to beta emissions for noble gas radionuclide "i".	(4.0-8)	From Column 1, Table B-1 of Regulatory Guide 1.109, in mrad/year per µCi/m^3.

Parameter	Description	Equation(s)	Reference
Ground Plane, Inhalation and Ingestion Dose Factors			
DFG_i =	Ground dose factor in mrem/hr per µCi/m^2.	(4.0-10)	From Table E-6 of Regulatory Guide 1.109.
DFA_{aij} =	Inhalation dose factor for age group, "a," radionuclide "i," and organ "j" in mrem/pCi.	(4.0-11)	From Tables E-7 through E-10 of Regulatory Guide 1.109.
$DFA_{[C]ij}$ =	The inhalation dose factor for the child age group for radionuclide "i," in mrem/pCi.	(4.0-4)	From Table E-9 of Regulatory Guide 1.109.
DFL_{aij} =	Ingestion dose factor for age group, "a," radionuclide "i," and organ "j" in mrem/pCi.	(4.0-10) through (4.0-20)	From Tables E-11 through E-14 of Regulatory Guide 1.109.
Site Specific Dose Factors			
P_i =	The child inhalation dose conversion factor for radionuclide "i," in units of mrem/year per µCi/m^3.	(4.0-3)	From Table 7-7
R_{aipj} =	Site specific dose factor for age group "a," radionuclide "i," pathway "p" and organ "j".	(4.0-9) through (4.0-20)	From Table 7-6 through Table 7-19.
Usage Factors			
t_b =	The exposure time based on ½ of the plant operating lifetime (60 years), 9.46x10^8 seconds.	(4.0-10)	Site specific.
$BR_{[C]}$ =	The child inhalation rate: 3700 m^3 per year.	(4.0-4)	Value from Table E-5 of Regulatory Guide 1.109.
BR_a=	Inhalation rate for age group, "a" in m^3/yr.	(4.0-11)	From Table E-5 of Regulatory Guide 1.109.
U_a^L =	Consumption rate of fresh leafy vegetation for age group "a" in kg/yr.	(4.0-12) (4.0-13) (4.0-14)	Site Specific. Default values are from Table E-5 of Regulatory Guide 1.109.
U_a^S =	Consumption rate of non-leafy vegetation for age group "a" in kg/yr.	(4.0-12) (4.0-13) (4.0-14)	Site Specific. Default values are from Table E-5 of Regulatory Guide 1.109.

Parameter	Description	Equation(s)	Reference
$U_{a(MI)}$ =	Consumption rate of milk for age group "a" in l/yr.	(4.0-15) (4.0-16) (4.0-17)	Values are from Table E-5 of Regulatory Guide 1.109.
$U_{a(ME)}$ =	Consumption rate of meat for age group "a" in l/yr.	(4.0-18) (4.0-19) (4.0-20)	Values are from Table E-5 of Regulatory Guide 1.109.
Agricultural Parameters			
$F_{(MI)}$ =	Stable element transfer coefficient from feed to milk in da/l.	(4.0-15) (4.0-16) (4.0-17)	Values are from Tables E-1 and E-2 of Regulatory Guide 1.109 as appropriate.
$F_{(ME)}$ =	Stable element transfer coefficient from feed to meat in da/kg.	(4.0-18) (4.0-19) (4.0-20)	Values are from Tables E-1 and E-2 of Regulatory Guide 1.109 as appropriate.
f_G =	Fraction of annual intake of non leafy (stored) vegetation grown locally, 0.76 (default).	(4.0-12) (4.0-13) (4.0-14)	Site Specific. Default value is from Section 5.3.1.5 of NUREG 0133.
f_L =	Fraction of annual intake of fresh leafy vegetation grown locally, 1.0 (default).	(4.0-12) (4.0-13) (4.0-14)	Site Specific. Default value is from Section 5.3.1.5 of NUREG 0133.
f_P =	Fraction of year that milk or meat animal is on pasture, 1.0 (default).	(4.0-15) (4.0-18)	Site Specific. Default value is from Section 5.3.1.3 of NUREG 0133.
f_S =	Fraction of feed that is pasture grass while milk or meat animal is on pasture, 1.0 (default).	(4.0-15) (4.0-18)	Site Specific. Default value is from Section 5.3.1.3 of NUREG 0133.
(r) =	Dimensionless retention fraction for direct deposition onto leafy vegetation. 0.2 for particulates 1.0 for radioiodines	(4.0-12) (4.0-15) (4.0-18)	From Table E-15 of Regulatory Guide 1.109.
t_L =	Transport time from harvest of leafy vegetation to receptor (24 hours), 8.64×10^4 sec (default).	(4.0-12)	Site Specific. Default values are from Table E-15 of Regulatory Guide 1.109.

Parameter	Description	Equation(s)	Reference
t_H =	Transport time from harvest of non-leafy (stored) vegetation to receptor (60 days) $5x10^6$ sec (default).	(4.0-12)	Site Specific Default values are from Table E-15 of Regulatory Guide 1.109.
t_M =	Transport time from consumption of pasture to milk to receptor (2 days) $1.73x10^5$ sec (default).	(4.0-15)	Site Specific. Default values are from Table E-15 of Regulatory Guide 1.109.
t_P =	Transport time from consumption of pasture to meat to receptor (20 days) $1.73x10^6$ sec (default).	(4.0-18)	Site Specific. Default values are from Table E-15 of Regulatory Guide 1.109.
t_S =	Transport time from harvest of stored feed to milk or meat animal consumption (90 days) $7.78x10^6$ sec (default).	(4.0-15) (4.0-18)	Site Specific. Default values are from Table E-15 of Regulatory Guide 1.109.
Q_F =	Milk or meat animal consumption rate, 50 in kg/da (default).	(4.0-15) through (4.0-20)	Site Specific. Default values is from Table E-3 of Regulatory Guide 1.109.
Agricultural Parameters			
Y_V=	Agricultural productivity for garden vegetation, 2.0 kg-vegetation/m^2 (default).	(4.0-12)	Site Specific. Default value from Table E-15 of Regulatory Guide 1.109.
Y_P=	Agricultural vegetation productivity for pasture feed grass, 0.7 kg-vegetation/m^2 (default).	(4.0-15) (4.0-18)	Site Specific. Default value from Table E-15 of Regulatory Guide 1.109.
Y_S=	Agricultural vegetation productivity for stored feed, 2.0 kg-vegetation/m^2 (default).	(4.0-15) (4.0-18)	Site Specific. Default value from Table E-15 of Regulatory Guide 1.109.

Parameter	Description	Equation(s)	Reference
Tritium Parameters			
H =	Absolute atmospheric humidity, 8.84 in gm-H_2O/m^3.	(4.0-13) (4.0-16) (4.0-19)	Site Specific.
0.75 =	Fraction of total vegetation that is water.	(4.0-13) (4.0-16) (4.0-19)	Default value from Table E-15 of Regulatory Guide 1.109.
0.5 =	Ratio of specific activity of vegetation water to atmospheric water.	(4.0-13) (4.0-16) (4.0-19)	Default value from Table E-15 of Regulatory Guide 1.109.
Carbon-14 Parameters			
f_{CO2} =	Fraction of carbon released as CO^2, 0.20.	(4.0-14) (4.0-17) (4.0-20)	Site Specific. From EPRI Report 1023023, "Impact of Nuclear Power Plant Operations on Carbon-14 Generation, Chemical Forms, and Releases"
p =	Ratio of total release time to the annual time during which photosynthesis takes place, 1 (default).	(4.0-14) (4.0-17) (4.0-20)	Site Specific.
G_{AIR} =	Concentration of natural carbon in the atmosphere, 0.19 grams-carbon per m^3-air.	(4.0-14) (4.0-17) (4.0-20)	EPA value as of 2014.
G_L =	Leafy vegetation carbon fraction, 0.11 (default).	(4.0-14)	Default value from Appendix C.3 of Regulatory Guide 1.109.
G_S =	Stored vegetation carbon fraction, 0.11 (default).	(4.0-14)	Default value from Appendix C.3 of Regulatory Guide 1.109.
G_{Milk} =	Fraction of animal feed mass that is natural carbon, 0.11 (default).	(4.0-17)	Default value from Appendix C.3 of Regulatory Guide 1.109.
G_{Meat} =	Fraction of animal feed mass that is natural carbon, 0.11 (default).	(4.0-20)	Default value from Appendix C.3 of Regulatory Guide 1.109.

Parameter	Description	Equation(s)	Reference
Constants			
1.1 =	Constant to convert gamma air dose (mrad) to gamma skin dose (mrem).	(4.0-2) (6.0-2)	
3.17x10^{-8}	Conversion constant: seconds to years.	(4.0-7) (4.0-8) (4.0-9) (6.0-1) (6.0-2)	
K' =	Conversion constant: 10^6 pCi/µCi.	(4.0-4) (4.0-10) through (4.0-20)	
K" =	Conversion constant: 8760 hr/yr.	(4.0-10)	
K"' =	Conversion constant: 10^3 gm/kg.	(4.0-13) (4.0-14) (4.0-16) (4.0-17) (4.0-19) (4.0-20)	
Miscellaneous Parameters			
$\dot{Q}_i$ =	The release rate of radionuclide "i," in units of µCi/sec.	(4.0-1) (4.0-2) (4.0-3)	
$\widetilde{Q}_i$ =	The total release of radionuclide "i" in µCi.	(4.0-7) (4.0-8) (4.0-9) (6.0-1) (6.0-2)	
SF =	Shielding factor to account for residence and structure shielding, 0.7.	(4.0-10) (6.0-1) (6.0-2)	From Table E-15 of Regulatory Guide 1.109.
λ_i =	Decay constant for radionuclide "i" in sec^{-1}.	(4.0-10) (4.0-12) (4.0-15) (4.0-18)	
λ_W =	Decay constant account for removal of activity due to weathering effects (14 days), 5.73E-07 sec^{-1}.	(4.0-12) (4.0-15) (4.0-18)	From Table E-15 of Regulatory Guide 1.109.

4.4 WASTE GAS SYSTEM OPERATION

The waste gas system (WGS) described below shall be maintained and operated to keep releases ALARA.

4.4.1 System Description

A flow diagram for the WGS is given in Figure 4.0-1. The system consists of three waste-gas compressor packages, six gas decay tanks, and the associated piping, valves, and instrumentation. Gaseous wastes are received from the following: degassing of the reactor coolant and purging of the volume control tank prior to a cold shutdown and displacing of cover gases caused by liquid accumulation in the tanks connected to the vent header.

Design of the system precludes hydrogen explosion by means of ignition source elimination (diaphragm valves, low flow diaphragm compressors and system electrical grounding), and minimization of leakage outside the system. Explosive mixtures of hydrogen and oxygen have been demonstrated compatible with the system by operational experience.

4.4.2 Determination of Satisfactory Operation

Doses will be calculated for batch and continuous releases as described in Section 4.3. These calculations will be used to ensure that the WGS is operating as designed. Because the Plant was designed to collect and hold for decay a vast majority of the high-level gases generated within the primary system, and because the operating history of the Plant has demonstrated the system's consistent performance well below Appendix I limits, no additional operability requirements are specified.

4.5 RELEASE RATE FOR OFFSITE EC

10 CFR Part 20.1302 requires radioactive effluent releases to unrestricted areas be in concentrations less than the limits specified in Appendix B, Table 2 when averaged over a period not to exceed one year. (Note: there are no unrestricted areas anywhere within the site boundary as defined by Figure 5.0-1.) Concentrations at this level if inhaled or ingested continuously for one year will result in a dose of 50 mrem whole body except for submersion dose isotopes (noble gases) which will result in a dose of 100 mrem whole body.
10 CFR Part 50.36a requires that the release of radioactive materials be kept as low as reasonably achievable. However, the section further states that the licensee is permitted the flexibility of operation, to assure a dependable source of power even under unusual operating conditions, to release quantities of material higher than a small percentage of 10 CFR Part 20.1302 limits but still within those limits. Appendix I to 10 CFR Part 50 provides the numerical guidelines on limiting conditions for operations to meet the as low as reasonably achievable requirement.

Demonstration of compliance with the lower dose limits of Appendix I to 10 CFR Part 50 provides reasonable assurance that the limits of 10 CFR Part 20.1302 are not exceeded.

X/Q and D/Q values are evaluated periodically (every 3 to 5 years) considering 5 (or more) years of meteorological data. If the evaluation indicates the long-term, annual average χ/Q and D/Q are non-conservative by 10 percent or more, affected values are revised or the reason why such changes are not necessary is documented.

4.6 PARTICULATE AND IODINE SAMPLING

Particulate and iodine samples are obtained from the continuous sample stream pulled from the Plant stack. Samples typically are obtained to represent an integrated release from a gas batch (waste gas decay tank or Containment purge, for example), or a series of samples are obtained to follow the course of a release. In any event, sample intervals are weekly, at a minimum.

Because HEPA filters are present between most source inputs to the stack and the sample point, releases of particulates normally are significantly less than pre-release calculations indicate. This provides for conservatism in establishing setpoints and in estimation of pre-release dose calculations. However, for the sake of maintaining accurate release totals, monitor results (for gases) and sample results (for particulates and iodines) are utilized rather than the pre-release estimates, for cumulative records.

Gamma analytical results for particulate and halogen filters are combined for determination of total activity of particulates and halogens released. Sampling and analysis will be performed per Table 1-3 requirements.

4.7 NOBLE GAS SAMPLING

Noble gases will be sampled from Waste Gas Decay Tanks prior to release and the Containment prior to purging. Analysis of these samples will be used for accountability of noble gases. Off gas will be sampled at least weekly and used to calculate monthly noble gas releases. Non-routine releases will be quantified from the stack noble gas monitor (RE 2326) which has a LLD of 1E-06 µCi/cc. Sampling and analysis will be performed per Table 1-3 requirements.

4.8 TRITIUM SAMPLING

Tritium has a low dose consequence to the public because of low energy decay. The major contributors to tritium effluents are evaporation from the fuel pool and reactor cavity (when flooded). Because of the low dose impact, gaseous tritium sampling will not be required. Tritium effluents will be estimated using conservative evaporation rate calculations from the fuel pool and reactor cavity.

FIGURE 4.0-1 GASEOUS EFFLUENT FLOW PATHS

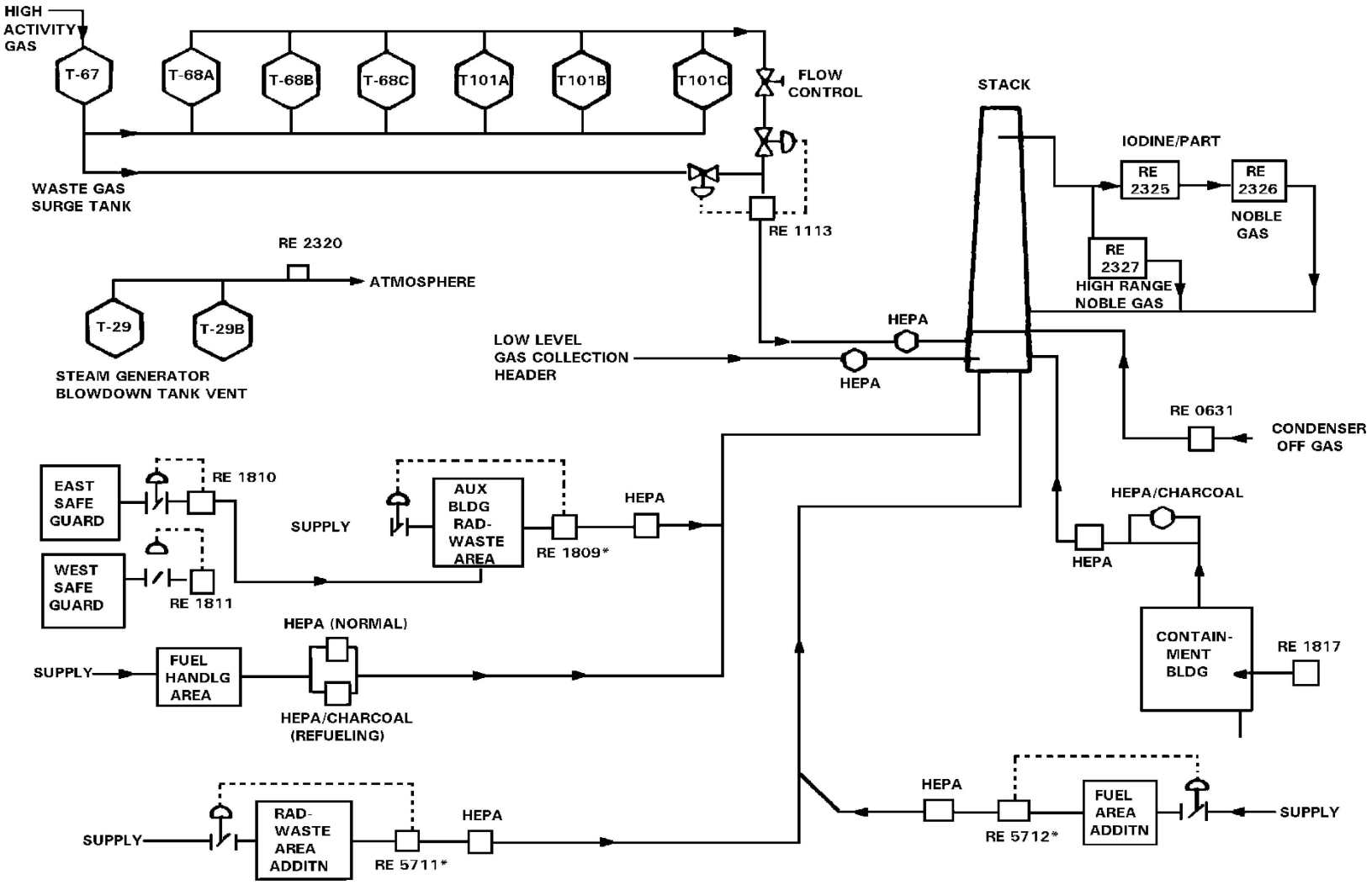

5.0 LIQUID EFFLUENTS

5.1 LIQUID EFFLUENT CALCULATIONS

5.1.1 Liquid Effluent Concentration Limits

Control 1.2.1.1 requires liquid effluent monitors to have alarm/trip setpoints to ensure that the instantaneous concentration at the site boundary does not exceed 10 times the concentration limits specified in 10 CFR Part 20, Appendix B, Table 2, Column 2. The liquid concentration limit must meet the restriction of equation (5.0-1) as required by Control 1.2.1.1. The Liquid Radwaste Effluent Line Monitor must provide alarm and automatic termination of a release prior to exceeding the concentration limits of Control 1.2.1.1. To meet this requirement, the alarm/trip setpoints for the appropriate liquid effluent monitors and flow measurement devices are set to ensure that equation (5.0-1) is satisfied at the discharge point into the environment.

$$\sum_i \frac{C_i}{ECL_i} \leq 10 \qquad \textbf{(5.0-1)}$$

WHERE: C_i = The concentration of radionuclide, "i" in µCi/ml.

ECL_i = Effluent Concentration Limit (ECL) for radionuclide, "i" in µCi/ml from 10 CFR Part 20, Appendix B, Table 2, Column 2.

The dilution to waste ratio required to meet the constraints of equation (5.0-1) for a specific radionuclide mix is defined as the Required Dilution Factor (RDF) and is given by:

$$RDF = \sum_i \frac{C_i}{10 \times ECL_i} \qquad \textbf{(5.0-2)}$$

WHERE: RDF = The Required Dilution Factor. This is also referred to as the Total ECL Fraction.

$\sum_i \frac{C_i}{10 \times ECL_i}$ = Defined as the Total ECL Fraction.

C_i = The effluent concentration of radionuclide, "i" in µCi/ml.

ECL_i = The 10 CFR Part 20 Effluent Concentration Limit (ECL) for radionuclide, "i" in µCi/ml.

The Actual Dilution Factor (ADF) is defined as the ratio of the dilution flow to the waste flow as shown in equation (5.0-3).

$$ADF = \frac{Dilution\ Flow\ (F)}{Waste\ Flow\ (f)} \quad \textbf{(5.0-3)}$$

To meet the requirements of equation (5.0-1) the actual dilution factor (ADF) must be greater than the required dilution factor (RDF) or:

$$\frac{Dilution\ Flow\ (F)}{Waste\ Flow\ (f)} > \sum_i \frac{C_i}{10 \times ECL_i} \quad \textbf{(5.0-4)}$$

The concentration limits of ODCM Section 5.1.1 can be met by establishing the following operational constraints.

- Minimum Dilution Flow
- Maximum Waste Flow
- Maximum Effluent Concentration

To ensure that monitor alarm takes place prior to exceeding the concentration limits an Administrative Safety Factor (ASF) is used to establish more conservative release parameters. It may be adjusted as desired provided the value does not exceed 0.9.

The concentration limits of ODCM Section 1.2.2 are site limits and therefore it is necessary to account for discharges from all liquid release points. A Release Allocation Fraction (RAF) is used to account for simultaneous discharges from the site. The values listed in Table 5-1, are typical and may be adjusted according to operational needs provided the sum of the RAFs for all release points from the site does not exceed 0.9.

Operational limits for these parameters are established using the following methodologies:

5.1.1.1 Minimum Dilution Flow Rate Limit

The Minimum acceptable operational dilution flow (F_{min}) is:

$$F_{min} = \frac{f \times RDF}{ASF \times RAF} = \frac{f}{ASF \times RAF} \times \sum_i \frac{C_i}{10 \times ECL_i}$$

(5.0-5)

WHERE: F_{min} = Minimum acceptable dilution flow from the unit in gpm.

f = The expected waste flow rate in gpm.

RDF = The required dilution factor as defined by equation (5.0-2).

ASF = An Administrative Safety Factor to ensure that alarm/trip occurs prior to exceeding the limits, defined as ≤ 0.9.

RAF = A Release Allocation Fraction to ensure that the concentration limits of Control 1.2.2.1 will be met during simultaneous discharges from the site. See Table 5-1.

5.1.1.2 Maximum Effluent Discharge Flow Rate Limit

The maximum allowable operational effluent flow rate (fmax) is:

$$f_{max} = \frac{F \times ASF \times RAF}{RDF} = \frac{F \times ASF \times RAF}{\sum_i C_i / 10 x ECL_i}$$

(5.0-6)

WHERE: f_{max} = Maximum allowable operational effluent flow rate in gpm.

F = Expected dilution from for the unit in gpm.

ASF = The Administrative Safety Factor defined as ≤ 0.9.

RAF = A Release Allocation Fraction to ensure that the concentration limits of Control 1.2.2.1 will be met during simultaneous discharges from the site. See Table 5-1.

5.1.1.3 Maximum Liquid Effluent Concentration

The maximum allowable effluent concentration is given by:

$$C_{max} = \sum_i C_i \frac{ADF}{RDF} \times ASF \times RAF \qquad \textbf{(5.0-7)}$$

WHERE:

C_{max} = Maximum allowable liquid effluent concentration in µCi/ml.

C_i = Concentration of radionuclide, "i" in uC/ml.

ADF = Actual Dilution Factor as defined by equation (5.0-3)

f = Waste flow (gpm).

RDF = The Required Dilution Factor as defined by equation (5.0-2).

ASF = The Administrative Safety Factor defined as $\leq$ 0.9.

RAF = A Release Allocation Fraction to ensure that the concentration limits of Control 1.2.2.1 will be met during simultaneous discharges from the site. See Table 5-1.

5.1.2 Liquid Rad Monitor Setpoint Determination

The liquid rad monitor setpoint methodology makes use of the Administrative Safety Factor and the Release Allocation Fraction to ensure liquid rad effluent alarm and/or trip occurs prior to exceeding the limits of ODCM Section 1.2.2 during periods of simultaneous releases.

The actual operational setpoint may be set more conservative than specified by equation (5.0-8) or (5.0-12), provided the restrictions of equation (5.0-1) are met.

5.1.2.1 Liquid Rad Monitor Setpoint Methodology

The liquid rad monitor setpoint is given by:

$$SP = \sum_{g} C_g \times \left[\frac{ADF}{RDF}\right] \times ASF \times RAF \times MR + Bkg \qquad \textbf{(5.0-8)}$$

WHERE:

SP = Liquid rad monitor setpoint in µCi/ml.

$\sum_g C_g$ = Total gamma emitter concentration in µCi/ml.

C_g = Concentration of gamma emitter "g" in µCi/ml.

ADF = Actual Dilution Factor as defined by equation (5.0-3)

RDF = The Required Dilution Factor as defined by equation (5.0-2).

ASF = The Administrative Safety Factor defined as $\leq$ 0.9 to ensure that alarm/trip occurs prior to exceeding the limits of Control 1.2.2.1. The factor may be adjusted downward as desired.

RAF = A Release Allocation Fraction to ensure that the concentration limits of Control 1.2.2.1 will be met during simultaneous discharges from the site. See Table 5-1.

MR = Monitor Response in cpm per uCi/ml

Bkg = Adjustment for rad monitor background.

TABLE 5-1 TYPICAL LIQUID RELEASE ALLOCATION FRACTIONS*

Monitor	Instrument Number	Monitor Function	Unit Release Allocation Fraction
Liquid Radwaste Discharge	RIA-1049	Alarm and Terminate	0.7
Waste Water Discharge	RIA-5211	Alarm and Terminate	0.1
Service Water Blowdown	RIA-0833	Alarm Only	0.1

* The sum of the Release Allocation Fractions for the site shall not exceed 0.9. The rad monitor Release Allocation Fractions may be adjusted based on operational requirements.

5.1.3 Adjustments To Setpoints

5.1.3.1 Contaminated Dilution Stream

Normally the dilution flow stream is expected to be uncontaminated. However, in the event that activity is present in the dilution flow stream the minimum acceptable dilution flow, F_{min}, may be adjusted as shown:

$$F'_{min} = F_{min} \times \left(1 - \sum_i \frac{C'_i}{ECL_i}\right) \quad \textbf{(5.0-9)}$$

WHERE:

F'_{min} = Minimum acceptable contaminated dilution flow from the unit in gpm.

F_{min} = Minimum acceptable dilution flow from the unit as defined by equation (5.0-5**)** in gpm.

C'_i = Concentration of radionuclide "i" in the dilution stream.

ECL_i = Effluent Concentration Limit (ECL) for radionuclide, "i" in µCi/ml from 10 CFR Part 20, Appendix B, Table 2, Column 2.

5.1.3.2 High Effluent Tritium Concentrations

For low gamma activity releases with relatively high tritium concentrations an alternate setpoint methodology may be applied.

A Tritium Correction Factor (TCF) is defined as:

$$TCF = \left[1 - \left(\frac{C^*_{H-3}/\left(10 \times ECL_{H-3}\right)}{0.9 \times F^*/f^*}\right)\right] \quad \textbf{(5.0-10)}$$

WHERE: TCF = The dimensionless Tritium Correction Factor.

C^*_{H-3} = An assumed conservative (maximum) concentration of Tritium (H-3) in the effluent stream in µCi/ml.

ECL_{H-3} = Effluent concentration limit for H-3 in µCi/ml.

F^* = An assumed conservative (minimum) dilution flow rate in gpm.

f^* = An assumed conservative (maximum) waste flow rate in gpm.

0.9 = Administrative factor to provide a conservative value for the Tritium Correction Factor.

Values for C^*_{H-3}, F^* and f^* should be chosen such that it is unnecessary to recalculate the Tritium Correction Factor for normal releases.

The Corrected Required Dilution Factor (RDF^*) is defined as:

$$RDF^* = \sum_{i \neq H-3} \frac{C_i}{10 \times ECL_i} \quad \textbf{(5.0-11)}$$

WHERE: RDF^* = The Corrected Required Tritium Correction Factor which excludes H-3.

$\sum_{i \neq H-3} \frac{C_i}{10 \times ECL_i}$ = The Total ECL Fraction excluding H-3.

ECL_i = Effluent concentration limit for radionuclide "i" in µCi/ml.

The corrected Set Point (SP*) is given by:

$$SP^* = \sum_g C_g \times \left[\frac{ADF}{RDF^*}\right] \times TCF \times ASF \times RAF \times MR + Bkg \qquad \textbf{(5.0-12)}$$

WHERE: C_g = Concentration of gamma emitter "g" in µCi/ml.

$\sum_g C_g$ = Total gamma emitter concentration in µCi/ml.

ADF = Actual Dilution Factor as defined in equation (5.0-3)

RDF^* = The Required Dilution Factor adjusted for the omission of H-3 as defined by equation (5.0-11).

TCF = The Tritium Correction Factor as defined by equation (5.0-10).

ASF = The Administrative Safety Factor defined as $\leq$ 0.9. The factor may be adjusted downward as desired.

RAF = A Release Allocation Fraction to ensure that the concentration limits of Control 1.2.2.1 will be met during simultaneous discharges from the site. See Table 5-1.

MR = Monitor Response in cpm per uCi/ml (or appropriate units)

Bkg = Adjustment for rad monitor background.

5.1.3.3 Setpoints during periods of no effluent discharge.

When no liquid discharges are taking place, the rad effluent monitor setpoint shall be set at a sufficient level above background to prevent spurious alarms due to fluctuation in the background.

5.2 APPENDIX I DOSE CALCULATIONS

5.2.1 RETS Requirement

Control 1.2.3.1 requires that the quantity of radionuclides released be limited such that the dose or dose commitment to an individual from radioactive materials in liquid effluents release to unrestricted areas from the reactor (see Figure 5.0-1) will not exceed:

a. During any calendar quarter, 1.5 mrem to the total body and 5 mrem to any organ, and

b. During any calendar year, 3 mrem to the total body and 10 mrem to any organ.

To ensure compliance, quantities of activity of each radionuclide released will be summed for each release and accumulated for each quarter as follows in Section 5.2.2.

5.2.2 Liquid Effluent Organ Dose to a Member of the Public

5.2.2.1 Critical Receptor Dose

The organ dose for the adult age group is given by:

$$D_\tau = F\Delta t \sum_i A_{i\tau} C_i$$

(5.0-13)

WHERE: D_τ = Dose to adult organ "τ" in mrem.

$A_{i\tau}$ = Is the site-specific ingestion dose factor for radionuclide "i" and organ "τ" in units of mrem/hr per μCi/ml. Site specific values are listed in Table 7-4.

Δt = Duration of release in hours.

C_i = Waste stream concentration of radionuclide "i" in μCi/ml.

F = The near field dilution average dilution factor as defined in equation (5.0-15).

The site specific ingestion dose factors, $A_{i\tau}$ are listed in Table 7-4 and are given by:

$$A_{i\tau} = K_o \left[\left(\frac{U_{Wa}}{D_W} + U_{Fa} BF_i\right)\right] DF_{ai\tau} \qquad \textbf{(5.0-14)}$$

WHERE: K_o = Unit conversion factor: 1.14×10^5 in pCi/μCi x year/hr.

U_{Wa} = The potable water consumption for the age adult group in liters/yr.

D_W = The far field dilution factor which describes the dilution from the near field area within one-quarter mile of the release point(s) to the potable water intake for water consumption.

U_{Fa} = The fish consumption for the adult age group in kg/yr.

BF_i = The bioaccumulation factor for fresh water fish for nuclide "i" in pCi/kg per pCi/l. From Table 7-2.

$DF_{ai\tau}$ = The ingestion dose factor for the adult age group, radionuclide "i" and organ "τ". In mrem per pCi from Regulatory Guide 1.109, Table E-11. Ingestion dose factors for radionuclides listed in Table 7-4 and not found in Regulatory Guide 1.109 are taken from NUREG/CR-4013.

The near field average dilution factor is given by:

$$F_k = \frac{(average\ undiluted\ liquid\ waste\ flow)}{(average\ flow\ from\ the\ discharge\ structure) \times Z} \qquad \textbf{(5.0-15)}$$

WHERE: Z = The factor that describes the mixing effect of the discharge structure into the near field.

TABLE 5-2 PARAMETERS USED IN LIQUID EFFLUENT DOSE CALCULATIONS

Parameter	Description	Equation(s)	Reference
D_W =	The far field dilution factor which describes the dilution from the near field area within one-quarter mile of the release point(s) to the potable water intake for water consumption. The value used is 66.7.	(5.0-14)	Based upon USFAR 11.2.3.1 and 11.2.5.
U_{Wa} =	The potable water consumption for the age adult group, 720 liters/yr.	(5.0-14)	Site Specific. Default value is from Table E-5 of Regulatory Guide 1.109.
U_{Fa} =	The fish consumption for the adult age group, 21 kg/yr.	(5.0-14)	Site Specific. Default value is from Table E-5 of Regulatory Guide 1.109.
Z =	The factor that describes the mixing effect of the discharge structure into the near field, 15.	(5.0-15)	Taken from UFSAR 11.2.5.

5.2.3 Release Analysis

Dose calculations shall be performed for each batch release, and weekly for continuous releases.

5.3 OPERABILITY OF LIQUID RADWASTE EQUIPMENT

The Palisades liquid radwaste system is designed to reduce the radioactive materials in liquid wastes prior to their discharge (through deep bed filtration and ion exchange) so that radioactivity in liquid effluent releases to unrestricted areas (see FIGURE 5.0-1) will not exceed the limits of Control 1.2.2.1.

5.4 RELEASE RATE FOR OFFSITE EC (50 MREM/YR)

10 CFR Part 20.1302 requires radioactive effluent releases to unrestricted areas be less than the limits specified in Appendix B, Table 2 when averaged over a period not to exceed one year. Concentrations at this Effluent Concentration (EC) level, if ingested for one year, will result in a dose of 50 millirem to the total body. In addition, 10 CFR Part 50.36a requires that the release of radioactive materials be kept as low as is reasonably achievable. Appendix I to 10 CFR Part 50 provides the numerical guidelines on limiting conditions for operations to meet the as low as is reasonably achievable requirement.

FIGURE 5.0-1 PALISADES SITE BOUNDARY

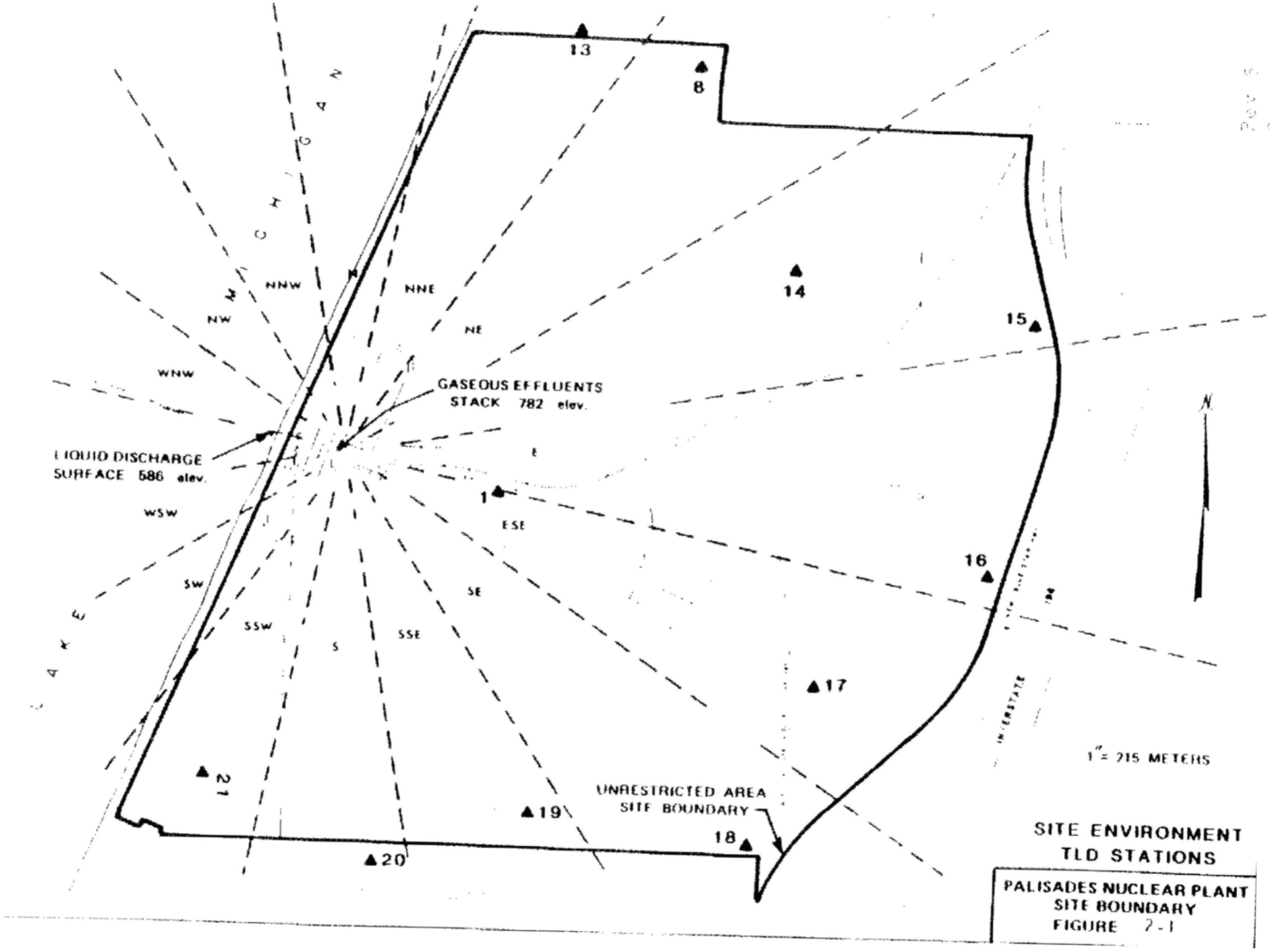

FIGURE 5.0-2 LIQUID EFFLUENT FLOW PATHS

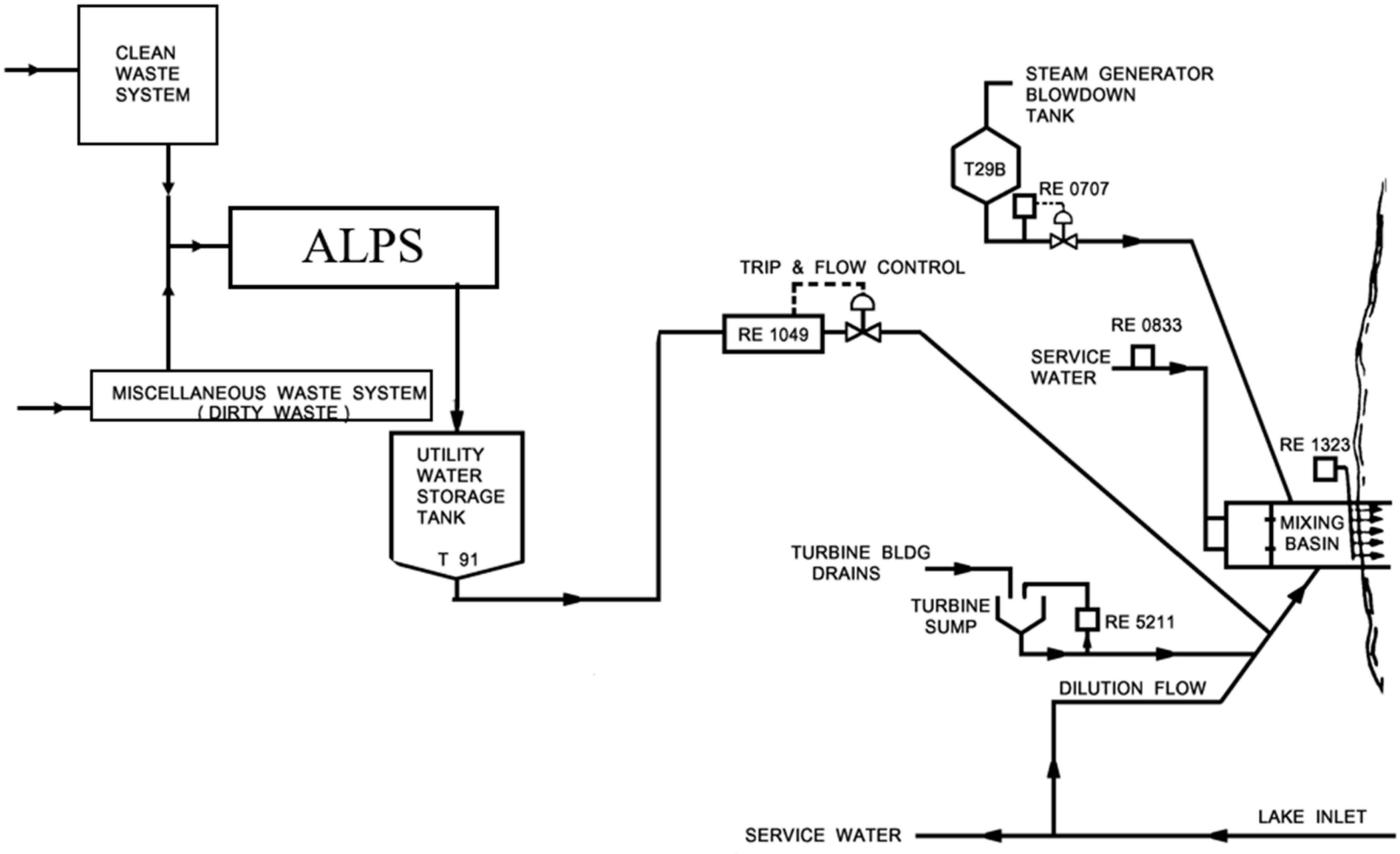

6.0 URANIUM FUEL CYCLE DOSE

SPECIFICATION

In accordance with Control 1.3.1.1, if either liquid or gaseous quarterly releases exceed the quantity which would cause offsite doses more than twice the limit of Controls 1.1.3.1, 1.1.4.1, or 1.2.3.1, then the cumulative dose contributions from combined release plus direct radiation sources (from the reactor unit and radwaste storage tanks) shall be calculated. The dose is to be determined for the member of the public protected to be the most highly exposed to these combined sources.

6.1 ASSUMPTIONS

1. The full-time resident determined to be maximally exposed individual (excluding infant) is assumed also to be a fisherman. This individual is assumed to drink water and ingest local fish at the rates specified in Table 5-2.

2. Amount of shore-line fishing (at accessible shoreline adjacent to site security fence) is conservatively assumed as 48 hours per quarter (average of approximately 1/2 hour per day each day of the quarter) for the second and third quarters of the year, 36 hours for the fourth quarter and 16 hours for the first quarter.

6.2 URANIUM FUEL CYCLE DOSE CALCULATIONS

Maximum doses to the total body and internal organs of an individual shall be determined by use of LADTAP II and GASPAR II computer codes, and doses to like organs and total body summed. Added to this sum will be a mean dose rate, calculated or measured for the shoreline due to Plant present curing the quarter in question, times the assumed fishing time.

Radiological Effluent Control 1.3.1.1 limits the dose to any MEMBER OF THE PUBLIC, due to releases of radioactivity and radiation, from uranium fuel cycle sources to less than or equal to 25 mrem to the total body or any organ (except the thyroid, which shall be limited to less than or equal to 75 mrem) over 12 consecutive months. The dose limits of this control differ from those of 1.2.3.1, 1.1.3.1, and 1.1.4.1 in that dose to an individual from all units and all pathways, including direct radiation must be considered.

It is highly unlikely that an individual receiving the highest dose via the liquid pathway will simultaneously be receiving the highest dose due to direct radiation, noble gases, and radioiodines, H-3, C-14, and particulates. Therefore, only the

doses resulting from direct radiation and radiological EFFLUENT RELEASES to the atmosphere need be addressed.

6.2.1 Direct Radiation Dose to a Member of the Public

6.2.1.1 The dose contribution to a MEMBER OF THE PUBLIC as a result of direct radiation shall be determined by direct field measurements (SITE BOUNDARY or AREA TLDs, micro R meter readings, etc.), calculation or shielding code or an appropriate combination thereof.

6.2.2 Organ Dose to a Member of the Public From Noble Gases

Calculation of noble gas organ dose to a MEMBER OF THE PUBLIC, is not required to demonstrate compliance with 10 CFR Part 50, App I. However the noble gas organ dose should be used to demonstrate compliance with the Total Fuel Cycle dose limits of Control 1.3.1.1.

Dose due to immersion in noble gases is an external dose pathway and therefore results in a total body dose due to gammas and a skin dose due to gamma and beta. Doses to all other organs are presumed to be equal to the total body dose. Organ dose and skin dose are assumed to be the same for all age groups.

6.2.2.1 Organ Dose to the Total Body to a Member of the Public Due to Immersion in Noble Gases

$$Total\ Body\ Dose(mrem) = 3.17 \times 10^{-8}(SF)\,\overline{\chi/Q}_{CR} \sum_i K_i \widetilde{Q}_i \qquad \textbf{(6.0-1)}$$

6.2.2.2 Organ Dose to the Skin to a Member of the Public Due to Immersion in Noble Gases

$$Skin(mrem) = 3.17 \times 10^{-8} \overline{\chi/Q}_{CR} \sum_i (L_i + (SF)1.1M_i)\widetilde{Q}_i \quad \textbf{(6.0-2)}$$

WHERE: $Total\ Body\ Dose$= The total body and organ dose for all age groups in mrem.

$Skin$ = The skin dose for all age groups in mrem.

3.17×10^{-8} = Conversion factor in years/sec.

$\overline{\chi/Q}_{CR}$ = Atmospheric dispersion value for immersion at the location of interest (typically the CRITICAL RECEPTOR) in sec/m^3. See Table 4-1.

SF = Dimensionless factor to account for residence and structure shielding from Table E-15 of Regulatory Guide 1.109.

K_i = The total body dose factor due to gamma emissions for noble gas radionuclide "i," from Table 7-3.

L_i = The skin dose factor due to beta emissions for noble gas radionuclide "i," from Table 7-3.

1.1 = Conversion constant of 1.1 mrem/mrad.

M_i = The air dose factor due to gamma emissions noble gas radionuclide "i," from Table 7-3.

$\widetilde{Q}_i$ = The total release of noble gas radionuclide "i" in µCi.

6.2.3 Organ Dose to a Member of the Public Due to Radioiodines, Tritium, and Particulates Released to the Atmosphere

6.2.3.1 The organ dose to a MEMBER OF THE PUBLIC due to Radioiodines, Tritium, Carbon-14, and Particulates released to the atmosphere shall be determined by the methodology of ODCM Section 4.3.2.

6.2.4 Total Uranium Fuel Cycle Dose

6.2.4.1 The dose due to the Total Uranium Fuel Cycle is determined by:

$$Dose_{UFC} = DI + DD + DNG + DRP \quad \textbf{(6.0-3)}$$

WHERE:

$Dose_{UFC}$ = The Total Uranium Fuel Cycle dose for the site (mrem).

DI = Direct radiation dose from the ISFSI as determined by ODCM Section 6.2.1 (mrem).

DD = Direct radiation dose from the site as determined by ODCM Section 6.2.1 (mrem).

DNG = The reactor unit organ dose (mrem) due to noble gases released to the atmosphere units calculated in accordance with ODCM Section 6.2.2.

The noble gas air dose as calculated in ODCM Section 4.3.1 may be used as a conservative approximation for noble gas organ dose.

DRP = The reactor unit organ dose (mrem) due to radioiodines, tritium, carbon-14, and particulates released to the atmosphere calculated in accordance with ODCM Section 4.3.2.

The Total Uranium Fuel Cycle dose should be assessed at that location in the UNRESTRICTED AREA where the combination of existing pathways and receptor age groups indicate the maximum potential exposure to an individual.

7.0 REFERENCES AND DATA

7.1 REFERENCE DOCUMENTS

1. CH 6.61, Revising the ODCM.

2. EPRI Report 1023023, "Impact of Nuclear Power Plant Operations on Carbon-14 Generation, Chemical Forms, and Releases" (December 2011)

3. ODCM Appendix B DOCKET 50-255 - LICENSE DPR-20 - PALISADES PLANT REQUEST TO RETAIN SOIL IN ACCORDANCE WITH 10 CFR 20.302 Revision 0 August 1, 1991

4. Slade, DH, (editor), "Meteorology and Atomic Energy," US Atomic Energy Commission, AEC TID-24190 (1968)

5. US NRC NUREG-0133, Boegli, TS, RR Bellamy, WL Britz, and RL Waterfield, "Preparation of Radiological Effluent Technical Specifications for Nuclear Power Plants" (October 1978)

6. US NRC NUREG-0472, "Standard Radiological Effluent Technical Specifications for Pressurized Water Reactors," Revision 3 (January 1983)

7. US NRC NUREG-1301, Offsite Dose Calculation Manual Guidance: Standard Radiological Effluent Controls for Pressurized Water Reactors (April 1991)

8. US NRC NUREG/CR-4013, LADTAP II - Technical Reference and User Guide, April 1986

9. US NRC NUREG/CR-4653, GASPAR II - Technical Reference and User Guide, March 1987

10. US NRC Regulatory Guide 1.21, "Measuring, Evaluating, and Reporting Radioactivity in Solid Wastes and Releases of Radioactive Materials in Liquid and Gaseous Effluents from Light-Water-Cooled Nuclear Power Plants," Revision 1 (June 1974)

11. US NRC Regulatory Guide 1.109, Calculation of Annual Doses to Man from Routine Releases of Reactor Effluents for the Purpose of Evaluating Compliance With 10 CFR Part 50, Appendix I, Revision 1, (March 1976)

12. US NRC Regulatory Guide 1.111, "Methods for Estimating Atmospheric Transport and Dispersion of Gaseous Effluents in Routine Releases from Light - Water - Cooled Reactors" (March 1976)

13. US NRC Regulatory Guide 1.109, "Calculation of Annual Doses to Man from Routine Releases of Reactor Effluents for the Purpose of Evaluating Compliance with 10 CFR Part 50, Appendix I," Revision 1 (October 1977)

7.2 TRANSFER AND BIOACCUMULATION FACTORS

TABLE 7-1 TRANSFER FACTORS

Element	F_m - Milk (COW) (DAYS/L)	F_m - MILK (GOAT) (DAYS/L)	F_f - MEAT (DAYS/KG)	Biv (VEG/SOIL)
H	1.00E-02	1.70E-01	1.20E-02	4.80E+00
C	1.20E-02	1.00E-01	3.10E-02	5.50E+00
Na	4.00E-02	4.00E-02	3.00E-02	5.20E-02
P	2.50E-02	2.50E-01	4.60E-02	1.10E+00
Cr	2.20E-03	2.20E-03	2.40E-03	2.50E-04
Mn	2.50E-04	2.50E-04	8.00E-04	2.90E-02
Fe	1.20E-03	1.30E-04	4.00E-02	6.60E-04
Co	1.00E-03	1.00E-03	1.30E-02	9.40E-03
Ni	6.70E-03	6.70E-03	5.30E-02	1.90E-02
Cu	1.40E-02	1.30E-02	8.00E-03	1.20E-01
Zn	3.90E-02	3.90E-02	3.00E-02	4.00E-01
Rb	3.00E-02	3.00E-02	3.10E-02	1.30E-01
Sr	8.00E-04	1.40E-02	6.00E-04	1.70E-02
Y	1.00E-05	1.00E-05	4.60E-03	2.60E-03
Zr	5.00E-06	5.00E-06	3.40E-02	1.70E-04
Nb	2.50E-03	2.50E-03	2.80E-01	9.40E-03
Mo	7.50E-03	7.50E-03	8.00E-03	1.20E-01
Tc	2.50E-02	2.50E-02	4.00E-01	2.50E-01
Ru	1.00E-06	1.00E-06	4.00E-01	5.00E-02
Rh	1.00E-02	1.00E-02	1.50E-03	1.30E+01
Ag	5.00E-02	5.00E-02	1.70E-02	1.50E-01
Te	1.00E-03	1.00E-03	7.70E-02	1.30E+00
I	6.00E-03	6.00E-02	2.90E-03	2.00E-02
Cs	1.20E-02	3.00E-01	4.00E-03	1.00E-02
Ba	4.00E-04	4.00E-04	3.20E-03	5.00E-03
La	5.00E-06	5.00E-06	2.00E-04	2.50E-03
Ce	1.00E-04	1.00E-04	1.20E-03	2.50E-03
Pr	5.00E-06	5.00E-06	4.70E-03	2.50E-03
Nd	5.00E-06	5.00E-06	3.30E-03	2.40E-03
W	5.00E-04	5.00E-04	1.30E-03	1.80E-02
Np	5.00E-06	5.00E-06	2.00E-04	2.50E-03

TABLE 7-2 FRESHWATER BIOACCUMULATION FACTORS

(pCi/kg per pCi/liter)

Element	Fresh Water * Fish	Fresh Water * Invertebrate
H	9.00E-01	9.00E-01
C	4.60E+03	9.10E+03
F	1.00E+01	1.00E+02
Na	1.00E+02	2.00E+02
P	1.00E+05	2.00E+04
Cr	2.00E+02	2.00E+03
Mn	4.00E+02	9.00E+04
Fe	1.00E+02	3.20E+03
Co	5.00E+01	2.00E+02
Ni	1.00E+02	1.00E+02
Cu	5.00E+01	4.00E+02
Zn	2.00E+03	1.00E+04
Br	4.20E+02	3.30E+02
Rb	2.00E+03	1.00E+03
Sr	3.00E+01	1.00E+02
Y	2.50E+01	1.00E+03
Zr	3.30E+00	6.70E+00
Nb	3.00E+04	1.00E+02
Mo	1.00E+01	1.00E+01
Tc	1.50E+01	5.00E+00
Ru	1.00E+01	3.00E+02
Rh	1.00E+01	3.00E+02
Sb	1.00E+00	1.00E+01
Te	4.00E+02	6.10E+03
I	1.50E+01	5.00E+00
Cs	2.00E+03	1.00E+03
Ba	4.00E+00	2.00E+02
La	2.50E+01	1.00E+03
Ce	1.00E+00	1.00E+03
Pr	2.50E+01	1.00E+03
Nd	2.50E+01	1.00E+03
W	1.20E+03	1.00E+01

* From Table A-1 of Regulatory Guide 1.109

7.3 DOSE FACTORS

TABLE 7-3 NOBLE GAS IMMERSION DOSE FACTORS

Nuclide	Gamma body Dose[1] (K_i)	Beta Skin Dose[1] (L_i)	Gamma Air Dose[2] (M_i)	Beta Air Dose[2] (N_i)
Kr-85m	1.17E3	1.46E3	1.23E3	1.97E3
Kr-85	1.61E1	1.34E3	1.72E1	1.95E3
Kr-87	5.92E3	9.73E3	6.17E3	1.03E4
Kr-88	1.47E4	2.37E3	1.52E4	2.93E3
Kr-89	1.66E4	1.01E4	1.73E4	1.06E4
Xe-131m	9.15E1	4.76E2	1.56E2	1.11E3
Xe-133m	2.51E2	9.94E2	3.27E2	1.48E3
Xe-133	2.94E2	3.06E2	3.53E2	1.05E3
Xe-135m	3.12E3	7.11E2	3.36E3	7.39E2
Xe-135	1.81E3	1.86E3	1.92E3	2.46E3
Xe-137	1.42E3	1.22E4	1.51E3	1.27E4
Xe-138	8.83E3	4.13E3	9.21E3	4.75E3
Ar-41	8.84E3	2.69E3	9.30E3	3.28E3

1. mrem/y per $\mu Ci/m^3$
2. mrad/y per $\mu Ci/m^3$

* Dose factors for exposure to a semi-infinite cloud of noble gases. Values were obtained from USNRC Regulatory Guide 1.109, Revision 1 (October 1977).

TABLE 7-4 ADULT - POTABLE WATER AND FISH INGESTION (A_{IT})

Age Group: Adult	Pathway: Potable Water and Fish Ingestion					Units: mrem/yr per µCi/ml	
Nuclide	**Bone**	**Liver**	**Thyroid**	**Kidney**	**Lung**	**Gi-LLi**	**TBody**
H-3	0.00E+00	3.57E-01	3.57E-01	3.57E-01	3.57E-01	3.57E-01	3.57E-01
C-14	3.13E+04	6.26E+03	6.26E+03	6.26E+03	6.26E+03	6.26E+03	6.26E+03
F-18	1.57E+01	0.00E+00	0.00E+00	0.00E+00	0.00E+00	4.66E-01	1.74E+00
P-32	4.62E+07	2.87E+06	0.00E+00	0.00E+00	0.00E+00	5.20E+06	1.79E+06
CR-51	0.00E+00	0.00E+00	7.63E-01	2.81E-01	1.69E+00	3.21E+02	1.28E+00
MN-54	0.00E+00	4.38E+03	0.00E+00	1.30E+03	0.00E+00	1.34E+04	8.36E+02
MN-56	0.00E+00	1.10E+02	0.00E+00	1.40E+02	0.00E+00	3.52E+03	1.96E+01
FE-55	6.62E+02	4.57E+02	0.00E+00	0.00E+00	2.55E+02	2.62E+02	1.07E+02
FE-59	1.04E+03	2.45E+03	0.00E+00	0.00E+00	6.86E+02	8.18E+03	9.41E+02
CO-57	0.00E+00	0.00E+00	0.00E+00	0.00E+00	0.00E+00	0.00E+00	0.00E+00
CO-58	0.00E+00	9.01E+01	0.00E+00	0.00E+00	0.00E+00	1.83E+03	2.02E+02
CO-60	0.00E+00	2.59E+02	0.00E+00	0.00E+00	0.00E+00	4.86E+03	5.71E+02
NI-63	3.13E+04	2.17E+03	0.00E+00	0.00E+00	0.00E+00	4.52E+02	1.05E+03
NI-65	1.27E+02	1.65E+01	0.00E+00	0.00E+00	0.00E+00	4.19E+02	7.53E+00
CU-64	0.00E+00	1.01E+01	0.00E+00	2.54E+01	0.00E+00	8.59E+02	4.73E+00
ZN-65	2.32E+04	7.38E+04	0.00E+00	4.93E+04	0.00E+00	4.65E+04	3.33E+04
ZN-69	4.93E+01	9.43E+01	0.00E+00	6.13E+01	0.00E+00	1.42E+01	6.56E+00
ZN-69M	8.14E+02	1.95E+03	0.00E+00	1.18E+03	0.00E+00	1.19E+05	1.79E+02
BR-82	0.00E+00	0.00E+00	0.00E+00	0.00E+00	0.00E+00	2.61E+03	2.28E+03
BR-83	0.00E+00	0.00E+00	0.00E+00	0.00E+00	0.00E+00	5.83E+01	4.05E+01
BR-84	0.00E+00	0.00E+00	0.00E+00	0.00E+00	0.00E+00	4.12E-04	5.25E+01
BR-85	0.00E+00	0.00E+00	0.00E+00	0.00E+00	0.00E+00	0.00E+00	2.15E+00
RB-86	0.00E+00	1.01E+05	0.00E+00	0.00E+00	0.00E+00	1.99E+04	4.71E+04
RB-88	0.00E+00	2.90E+02	0.00E+00	0.00E+00	0.00E+00	4.00E-09	1.54E+02
RB-89	0.00E+00	1.92E+02	0.00E+00	0.00E+00	0.00E+00	1.12E-11	1.35E+02
SR-89	2.25E+04	0.00E+00	0.00E+00	0.00E+00	0.00E+00	3.61E+03	6.46E+02
SR-90	5.54E+05	0.00E+00	0.00E+00	0.00E+00	0.00E+00	1.60E+04	1.36E+05
SR-91	4.14E+02	0.00E+00	0.00E+00	0.00E+00	0.00E+00	1.97E+03	1.67E+01
SR-92	1.57E+02	0.00E+00	0.00E+00	0.00E+00	0.00E+00	3.11E+03	6.80E+00
Y-90	5.88E-01	0.00E+00	0.00E+00	0.00E+00	0.00E+00	6.23E+03	1.58E-02
Y-91M	5.55E-03	0.00E+00	0.00E+00	0.00E+00	0.00E+00	1.63E-02	2.15E-04
Y-91	8.61E+00	0.00E+00	0.00E+00	0.00E+00	0.00E+00	4.74E+03	2.30E-01
Y-92	5.16E-02	0.00E+00	0.00E+00	0.00E+00	0.00E+00	9.04E+02	1.51E-03
Y-93	1.64E-01	0.00E+00	0.00E+00	0.00E+00	0.00E+00	5.19E+03	4.52E-03
ZR-95	2.78E-01	8.92E-02	0.00E+00	1.40E-01	0.00E+00	2.83E+02	6.04E-02
ZR-97	1.54E-02	3.10E-03	0.00E+00	4.68E-03	0.00E+00	9.61E+02	1.42E-03
NB-95	4.47E+02	2.49E+02	0.00E+00	2.46E+02	0.00E+00	1.51E+06	1.34E+02
NB-97	3.75E+00	9.48E-01	0.00E+00	1.11E+00	0.00E+00	3.50E+03	3.46E-01
MO-99	0.00E+00	1.09E+02	0.00E+00	2.46E+02	0.00E+00	2.52E+02	2.07E+01
TC-99M	9.18E-03	2.59E-02	0.00E+00	3.94E-01	1.27E-02	1.53E+01	3.30E-01
TC-101	9.44E-03	1.36E-02	0.00E+00	2.45E-01	6.95E-03	4.09E-14	1.33E-01

Age Group: Adult	Pathway: Potable Water and Fish Ingestion					Units: mrem/yr per µCi/ml	
Nuclide	**Bone**	**Liver**	**Thyroid**	**Kidney**	**Lung**	**Gi-LLi**	**TBody**
RU-103	4.66E+00	0.00E+00	0.00E+00	1.78E+01	0.00E+00	5.44E+02	2.01E+00
RU-105	3.88E-01	0.00E+00	0.00E+00	5.01E+00	0.00E+00	2.37E+02	1.53E-01
RU-106	6.93E+01	0.00E+00	0.00E+00	1.34E+02	0.00E+00	4.48E+03	8.77E+00
AG-110M	1.08E+00	1.00E+00	0.00E+00	1.97E+00	0.00E+00	4.08E+02	5.94E-01
SB-124	1.02E+01	1.93E-01	2.47E-02	0.00E+00	7.94E+00	2.90E+02	4.04E+00
SB-125	6.52E+00	7.28E-02	6.63E-03	0.00E+00	5.03E+00	7.17E+01	1.55E+00
SB-126	4.19E+00	8.52E-02	2.56E-02	0.00E+00	2.57E+00	3.42E+02	1.51E+00
SB-127	9.40E-01	2.06E-02	1.13E-02	0.00E+00	5.57E-01	2.15E+02	3.61E-01
TE-125M	2.57E+03	9.31E+02	7.73E+02	1.05E+04	0.00E+00	1.03E+04	3.44E+02
TE-127M	6.49E+03	2.32E+03	1.66E+03	2.64E+04	0.00E+00	2.18E+04	7.91E+02
TE-127	1.05E+02	3.79E+01	7.81E+01	4.30E+02	0.00E+00	8.32E+03	2.28E+01
TE-129M	1.10E+04	4.11E+03	3.79E+03	4.60E+04	0.00E+00	5.55E+04	1.75E+03
TE-129	3.01E+01	1.13E+01	2.31E+01	1.27E+02	0.00E+00	2.27E+01	7.34E+00
TE-131M	1.66E+03	8.11E+02	1.28E+03	8.22E+03	0.00E+00	8.05E+04	6.76E+02
TE-131	1.89E+01	7.89E+00	1.55E+01	8.27E+01	0.00E+00	2.68E+00	5.96E+00
TE-132	2.42E+03	1.56E+03	1.73E+03	1.51E+04	0.00E+00	7.39E+04	1.47E+03
I-130	2.81E+01	8.29E+01	7.02E+03	1.29E+02	0.00E+00	7.13E+01	3.27E+01
I-131	1.55E+02	2.21E+02	7.25E+04	3.79E+02	0.00E+00	5.83E+01	1.27E+02
I-132	7.54E+00	2.02E+01	7.06E+02	3.21E+01	0.00E+00	3.79E+00	7.06E+00
I-133	5.28E+01	9.18E+01	1.35E+04	1.60E+02	0.00E+00	8.25E+01	2.80E+01
I-134	3.94E+00	1.07E+01	1.85E+02	1.70E+01	0.00E+00	9.33E-03	3.83E+00
I-135	1.65E+01	4.31E+01	2.84E+03	6.91E+01	0.00E+00	4.87E+01	1.59E+01
CS-134	2.98E+05	7.09E+05	0.00E+00	2.29E+05	7.61E+04	1.24E+04	5.79E+05
CS-136	3.12E+04	1.23E+05	0.00E+00	6.85E+04	9.39E+03	1.40E+04	8.86E+04
CS-137	3.82E+05	5.22E+05	0.00E+00	1.77E+05	5.89E+04	1.01E+04	3.42E+05
CS-138	2.64E+02	5.22E+02	0.00E+00	3.84E+02	3.79E+01	2.23E-03	2.59E+02
BA-139	1.05E+00	7.48E-04	0.00E+00	6.99E-04	4.24E-04	1.86E+00	3.07E-02
BA-140	2.20E+02	2.76E-01	0.00E+00	9.38E-02	1.58E-01	4.52E+02	1.44E+01
BA-141	5.10E-01	3.85E-04	0.00E+00	3.58E-04	2.19E-04	2.40E-10	1.72E-02
BA-142	2.31E-01	2.37E-04	0.00E+00	2.00E-04	1.34E-04	3.25E-19	1.45E-02
LA-140	1.53E-01	7.70E-02	0.00E+00	0.00E+00	0.00E+00	5.65E+03	2.03E-02
LA-142	7.82E-03	3.56E-03	0.00E+00	0.00E+00	0.00E+00	2.60E+01	8.86E-04
CE-141	3.41E-02	2.31E-02	0.00E+00	1.07E-02	0.00E+00	8.81E+01	2.61E-03
CE-143	6.01E-03	4.44E+00	0.00E+00	1.96E-03	0.00E+00	1.66E+02	4.92E-04
CE-144	1.78E+00	7.43E-01	0.00E+00	4.41E-01	0.00E+00	6.01E+02	9.54E-02
PR-143	5.62E-01	2.25E-01	0.00E+00	1.30E-01	0.00E+00	2.46E+03	2.79E-02
PR-144	1.84E-03	7.64E-04	0.00E+00	4.31E-04	0.00E+00	2.65E-10	9.35E-05
ND-147	3.84E-01	4.44E-01	0.00E+00	2.60E-01	0.00E+00	2.13E+03	2.66E-02
W-187	2.96E+02	2.47E+02	0.00E+00	0.00E+00	0.00E+00	8.10E+04	8.65E+01
NP-239	3.00E-02	2.95E-03	0.00E+00	9.19E-03	0.00E+00	6.05E+02	1.62E-03

TABLE 7-5 GROUND PLANE EXPOSURE - ALL AGE GROUPS ($R_{AI(GP)J}$)

Age Group: All	Pathway: Ground Plane				Units: m^2 x mrem/yr per µCi/sec			
Nuclide	**Bone**	**Liver**	**Thyroid**	**Kidney**	**Lung**	**Gi-LLi**	**TBody**	**Skin**
H-3	0.00E+00	0.00E+00	0.00E+00	0.00E+00	0.00E+00	0.00E+00	0.00E+00	0.00E+00
C-14	0.00E+00	0.00E+00	0.00E+00	0.00E+00	0.00E+00	0.00E+00	0.00E+00	0.00E+00
NA-24	1.20E+07	1.20E+07	1.20E+07	1.20E+07	1.20E+07	1.20E+07	1.20E+07	1.39E+07
P-32	0.00E+00	0.00E+00	0.00E+00	0.00E+00	0.00E+00	0.00E+00	0.00E+00	0.00E+00
CR-51	4.65E+06	4.65E+06	4.65E+06	4.65E+06	4.65E+06	4.65E+06	4.65E+06	5.50E+06
MN-54	1.38E+09	1.38E+09	1.38E+09	1.38E+09	1.38E+09	1.38E+09	1.38E+09	1.62E+09
MN-56	8.99E+05	8.99E+05	8.99E+05	8.99E+05	8.99E+05	8.99E+05	8.99E+05	1.06E+06
FE-55	0.00E+00	0.00E+00	0.00E+00	0.00E+00	0.00E+00	0.00E+00	0.00E+00	0.00E+00
FE-59	2.73E+08	2.73E+08	2.73E+08	2.73E+08	2.73E+08	2.73E+08	2.73E+08	3.20E+08
CO-58	3.80E+08	3.80E+08	3.80E+08	3.80E+08	3.80E+08	3.80E+08	3.80E+08	4.45E+08
CO-60	2.15E+10	2.15E+10	2.15E+10	2.15E+10	2.15E+10	2.15E+10	2.15E+10	2.53E+10
NI-63	0.00E+00	0.00E+00	0.00E+00	0.00E+00	0.00E+00	0.00E+00	0.00E+00	0.00E+00
NI-65	2.97E+05	2.97E+05	2.97E+05	2.97E+05	2.97E+05	2.97E+05	2.97E+05	3.45E+05
CU-64	6.05E+05	6.05E+05	6.05E+05	6.05E+05	6.05E+05	6.05E+05	6.05E+05	6.86E+05
ZN-65	7.46E+08	7.46E+08	7.46E+08	7.46E+08	7.46E+08	7.46E+08	7.46E+08	8.57E+08
ZN-69	0.00E+00	0.00E+00	0.00E+00	0.00E+00	0.00E+00	0.00E+00	0.00E+00	0.00E+00
BR-83	4.88E+03	4.88E+03	4.88E+03	4.88E+03	4.88E+03	4.88E+03	4.88E+03	7.08E+03
BR-84	2.03E+05	2.03E+05	2.03E+05	2.03E+05	2.03E+05	2.03E+05	2.03E+05	2.36E+05
BR-85	0.00E+00	0.00E+00	0.00E+00	0.00E+00	0.00E+00	0.00E+00	0.00E+00	0.00E+00
RB-86	9.01E+06	9.01E+06	9.01E+06	9.01E+06	9.01E+06	9.01E+06	9.01E+06	1.03E+07
RB-88	3.32E+04	3.32E+04	3.32E+04	3.32E+04	3.32E+04	3.32E+04	3.32E+04	3.79E+04
RB-89	1.22E+05	1.22E+05	1.22E+05	1.22E+05	1.22E+05	1.22E+05	1.22E+05	1.46E+05
SR-89	2.16E+04	2.16E+04	2.16E+04	2.16E+04	2.16E+04	2.16E+04	2.16E+04	2.51E+04
SR-90	0.00E+00	0.00E+00	0.00E+00	0.00E+00	0.00E+00	0.00E+00	0.00E+00	0.00E+00
SR-91	2.14E+06	2.14E+06	2.14E+06	2.14E+06	2.14E+06	2.14E+06	2.14E+06	2.51E+06
SR-92	7.77E+05	7.77E+05	7.77E+05	7.77E+05	7.77E+05	7.77E+05	7.77E+05	8.64E+05
Y-90	4.50E+03	4.50E+03	4.50E+03	4.50E+03	4.50E+03	4.50E+03	4.50E+03	5.31E+03
Y-91M	1.00E+05	1.00E+05	1.00E+05	1.00E+05	1.00E+05	1.00E+05	1.00E+05	1.16E+05
Y-91	1.07E+06	1.07E+06	1.07E+06	1.07E+06	1.07E+06	1.07E+06	1.07E+06	1.21E+06
Y-92	1.81E+05	1.81E+05	1.81E+05	1.81E+05	1.81E+05	1.81E+05	1.81E+05	2.15E+05
Y-93	1.83E+05	1.83E+05	1.83E+05	1.83E+05	1.83E+05	1.83E+05	1.83E+05	2.50E+05
ZR-95	2.45E+08	2.45E+08	2.45E+08	2.45E+08	2.45E+08	2.45E+08	2.45E+08	2.85E+08
ZR-97	2.96E+06	2.96E+06	2.96E+06	2.96E+06	2.96E+06	2.96E+06	2.96E+06	3.44E+06
NB-95	1.37E+08	1.37E+08	1.37E+08	1.37E+08	1.37E+08	1.37E+08	1.37E+08	1.61E+08
MO-99	3.99E+06	3.99E+06	3.99E+06	3.99E+06	3.99E+06	3.99E+06	3.99E+06	4.62E+06
TC-99M	1.84E+05	1.84E+05	1.84E+05	1.84E+05	1.84E+05	1.84E+05	1.84E+05	2.11E+05
TC-101	2.03E+04	2.03E+04	2.03E+04	2.03E+04	2.03E+04	2.03E+04	2.03E+04	2.26E+04
RU-103	1.08E+08	1.08E+08	1.08E+08	1.08E+08	1.08E+08	1.08E+08	1.08E+08	1.26E+08
RU-105	6.36E+05	6.36E+05	6.36E+05	6.36E+05	6.36E+05	6.36E+05	6.36E+05	7.21E+05
RU-106	4.22E+08	4.22E+08	4.22E+08	4.22E+08	4.22E+08	4.22E+08	4.22E+08	5.06E+08
AG-110M	3.45E+09	3.45E+09	3.45E+09	3.45E+09	3.45E+09	3.45E+09	3.45E+09	4.02E+09

Age Group: All	Pathway: Ground Plane				Units: m^2 x mrem/yr per µCi/sec			
Nuclide	**Bone**	**Liver**	**Thyroid**	**Kidney**	**Lung**	**Gi-LLi**	**TBody**	**Skin**
TE-125M	1.56E+06	1.56E+06	1.56E+06	1.56E+06	1.56E+06	1.56E+06	1.56E+06	2.13E+06
TE-127M	9.16E+04	9.16E+04	9.16E+04	9.16E+04	9.16E+04	9.16E+04	9.16E+04	1.08E+05
TE-127	2.98E+03	2.98E+03	2.98E+03	2.98E+03	2.98E+03	2.98E+03	2.98E+03	3.27E+03
TE-129M	1.98E+07	1.98E+07	1.98E+07	1.98E+07	1.98E+07	1.98E+07	1.98E+07	2.31E+07
TE-129	2.62E+04	2.62E+04	2.62E+04	2.62E+04	2.62E+04	2.62E+04	2.62E+04	3.10E+04
TE-131M	8.02E+06	8.02E+06	8.02E+06	8.02E+06	8.02E+06	8.02E+06	8.02E+06	9.46E+06
TE-131	2.93E+04	2.93E+04	2.93E+04	2.93E+04	2.93E+04	2.93E+04	2.93E+04	3.46E+07
TE-132	4.24E+06	4.24E+06	4.24E+06	4.24E+06	4.24E+06	4.24E+06	4.24E+06	4.99E+06
I-130	5.50E+06	5.50E+06	5.50E+06	5.50E+06	5.50E+06	5.50E+06	5.50E+06	6.68E+06
I-131	1.72E+07	1.72E+07	1.72E+07	1.72E+07	1.72E+07	1.72E+07	1.72E+07	2.09E+07
I-132	1.25E+06	1.25E+06	1.25E+06	1.25E+06	1.25E+06	1.25E+06	1.25E+06	1.47E+06
I-133	2.45E+06	2.45E+06	2.45E+06	2.45E+06	2.45E+06	2.45E+06	2.45E+06	2.98E+06
I-134	4.46E+05	4.46E+05	4.46E+05	4.46E+05	4.46E+05	4.46E+05	4.46E+05	5.30E+05
I-135	2.52E+06	2.52E+06	2.52E+06	2.52E+06	2.52E+06	2.52E+06	2.52E+06	2.94E+06
CS-134	6.83E+09	6.83E+09	6.83E+09	6.83E+09	6.83E+09	6.83E+09	6.83E+09	7.97E+09
CS-136	1.50E+08	1.50E+08	1.50E+08	1.50E+08	1.50E+08	1.50E+08	1.50E+08	1.70E+08
CS-137	1.03E+10	1.03E+10	1.03E+10	1.03E+10	1.03E+10	1.03E+10	1.03E+10	1.20E+10
CS-138	3.60E+05	3.60E+05	3.60E+05	3.60E+05	3.60E+05	3.60E+05	3.60E+05	4.11E+05
BA-139	1.05E+05	1.05E+05	1.05E+05	1.05E+05	1.05E+05	1.05E+05	1.05E+05	1.18E+05
BA-140	2.05E+07	2.05E+07	2.05E+07	2.05E+07	2.05E+07	2.05E+07	2.05E+07	2.35E+07
BA-141	4.17E+04	4.17E+04	4.17E+04	4.17E+04	4.17E+04	4.17E+04	4.17E+04	4.75E+04
BA-142	4.49E+04	4.49E+04	4.49E+04	4.49E+04	4.49E+04	4.49E+04	4.49E+04	5.11E+04
LA-140	1.92E+07	1.92E+07	1.92E+07	1.92E+07	1.92E+07	1.92E+07	1.92E+07	2.18E+07
LA-142	7.36E+05	7.36E+05	7.36E+05	7.36E+05	7.36E+05	7.36E+05	7.36E+05	8.83E+05
CE-141	1.37E+07	1.37E+07	1.37E+07	1.37E+07	1.37E+07	1.37E+07	1.37E+07	1.54E+07
CE-143	2.32E+06	2.32E+06	2.32E+06	2.32E+06	2.32E+06	2.32E+06	2.32E+06	2.64E+06
CE-144	6.96E+07	6.96E+07	6.96E+07	6.96E+07	6.96E+07	6.96E+07	6.96E+07	8.05E+07
PR-143	0.00E+00	0.00E+00	0.00E+00	0.00E+00	0.00E+00	0.00E+00	0.00E+00	0.00E+00
PR-144	1.83E+03	1.83E+03	1.83E+03	1.83E+03	1.83E+03	1.83E+03	1.83E+03	2.11E+03
ND-147	8.48E+06	8.48E+06	8.48E+06	8.48E+06	8.48E+06	8.48E+06	8.48E+06	1.02E+07
W-187	2.36E+06	2.36E+06	2.36E+06	2.36E+06	2.36E+06	2.36E+06	2.36E+06	2.74E+06
NP-239	1.71E+06	1.71E+06	1.71E+06	1.71E+06	1.71E+06	1.71E+06	1.71E+06	1.98E+06

TABLE 7-6 INHALATION EXPOSURE - INFANT AGE GROUP ($R_{AI(IN)J}$)

Age Group: Infant	Pathway: Inhalation				Units: mrem/yr per µCi/m^3			
Nuclide	**Bone**	**Liver**	**Thyroid**	**Kidney**	**Lung**	**Gi-LLi**	**TBody**	**Skin**
H-3	0.00E+00	6.47E+02	6.47E+02	6.47E+02	6.47E+02	6.47E+02	6.47E+02	0.00E+00
C-14	2.65E+04	5.31E+03	5.31E+03	5.31E+03	5.31E+03	5.31E+03	5.31E+03	0.00E+00
NA-24	1.06E+04	1.06E+04	1.06E+04	1.06E+04	1.06E+04	1.06E+04	1.06E+04	0.00E+00
P-32	2.03E+06	1.12E+05	0.00E+00	0.00E+00	0.00E+00	1.61E+04	7.74E+04	0.00E+00
CR-51	0.00E+00	0.00E+00	5.75E+01	1.32E+01	1.28E+04	3.57E+02	8.95E+01	0.00E+00
MN-54	0.00E+00	2.53E+04	0.00E+00	4.98E+03	1.00E+06	7.06E+03	4.98E+03	0.00E+00
MN-56	0.00E+00	1.54E+00	0.00E+00	1.10E+00	1.25E+04	7.17E+04	2.21E-01	0.00E+00
FE-55	1.97E+04	1.17E+04	0.00E+00	0.00E+00	8.69E+04	1.09E+03	3.33E+03	0.00E+00
FE-59	1.36E+04	2.35E+04	0.00E+00	0.00E+00	1.02E+06	2.48E+04	9.48E+03	0.00E+00
CO-58	0.00E+00	1.22E+03	0.00E+00	0.00E+00	7.77E+05	1.11E+04	1.82E+03	0.00E+00
CO-60	0.00E+00	8.02E+03	0.00E+00	0.00E+00	4.51E+06	3.19E+04	1.18E+04	0.00E+00
NI-63	3.39E+05	2.04E+04	0.00E+00	0.00E+00	2.09E+05	2.42E+03	1.16E+04	0.00E+00
NI-65	2.39E+00	2.84E-01	0.00E+00	0.00E+00	8.12E+03	5.01E+04	1.23E-01	0.00E+00
CU-64	0.00E+00	1.88E+00	0.00E+00	3.98E+00	9.30E+03	1.50E+04	7.74E-01	0.00E+00
ZN-65	1.93E+04	6.26E+04	0.00E+00	3.25E+04	6.47E+05	5.14E+04	3.11E+04	0.00E+00
ZN-69	5.39E-02	9.67E-02	0.00E+00	4.02E-02	1.47E+03	1.32E+04	7.18E-03	0.00E+00
BR-83	0.00E+00	0.00E+00	0.00E+00	0.00E+00	0.00E+00	0.00E+00	3.81E+02	0.00E+00
BR-84	0.00E+00	0.00E+00	0.00E+00	0.00E+00	0.00E+00	0.00E+00	4.00E+02	0.00E+00
BR-85	0.00E+00	0.00E+00	0.00E+00	0.00E+00	0.00E+00	0.00E+00	2.04E+01	0.00E+00
RB-86	0.00E+00	1.90E+05	0.00E+00	0.00E+00	0.00E+00	3.04E+03	8.82E+04	0.00E+00
RB-88	0.00E+00	5.57E+02	0.00E+00	0.00E+00	0.00E+00	3.39E+02	2.87E+02	0.00E+00
RB-89	0.00E+00	3.21E+02	0.00E+00	0.00E+00	0.00E+00	6.82E+01	2.06E+02	0.00E+00
SR-89	3.98E+05	0.00E+00	0.00E+00	0.00E+00	2.03E+06	6.40E+04	1.14E+04	0.00E+00
SR-90	4.09E+07	0.00E+00	0.00E+00	0.00E+00	1.12E+07	1.31E+05	2.59E+06	0.00E+00
SR-91	9.56E+01	0.00E+00	0.00E+00	0.00E+00	5.26E+04	7.34E+04	3.46E+00	0.00E+00
SR-92	1.05E+01	0.00E+00	0.00E+00	0.00E+00	2.38E+04	1.40E+05	3.91E-01	0.00E+00
Y-90	3.29E+03	0.00E+00	0.00E+00	0.00E+00	2.69E+05	1.04E+05	8.82E+01	0.00E+00
Y-91M	4.07E-01	0.00E+00	0.00E+00	0.00E+00	2.79E+03	2.35E+03	1.39E-02	0.00E+00
Y-91	5.88E+05	0.00E+00	0.00E+00	0.00E+00	2.45E+06	7.03E+04	1.57E+04	0.00E+00
Y-92	1.64E+01	0.00E+00	0.00E+00	0.00E+00	2.45E+04	1.27E+05	4.61E-01	0.00E+00
Y-93	1.50E+02	0.00E+00	0.00E+00	0.00E+00	7.64E+04	1.67E+05	4.07E+00	0.00E+00
ZR-95	1.15E+05	2.79E+04	0.00E+00	3.11E+04	1.75E+06	2.17E+04	2.03E+04	0.00E+00
ZR-97	1.50E+02	2.56E+01	0.00E+00	2.59E+01	1.10E+05	1.40E+05	1.17E+01	0.00E+00
NB-95	1.57E+04	6.43E+03	0.00E+00	4.72E+03	4.79E+05	1.27E+04	3.78E+03	0.00E+00
MO-99	0.00E+00	1.65E+02	0.00E+00	2.65E+02	1.35E+05	4.87E+04	3.23E+01	0.00E+00
TC-99M	1.40E-03	2.88E-03	0.00E+00	3.11E-02	8.11E+02	2.03E+03	3.72E-02	0.00E+00
TC-101	6.51E-05	8.23E-05	0.00E+00	9.79E-04	5.84E+02	8.44E+02	8.12E-04	0.00E+00
RU-103	2.02E+03	0.00E+00	0.00E+00	4.24E+03	5.52E+05	1.61E+04	6.79E+02	0.00E+00
RU-105	1.22E+00	0.00E+00	0.00E+00	8.99E-01	1.57E+04	4.84E+04	4.10E-01	0.00E+00
RU-106	8.68E+04	0.00E+00	0.00E+00	1.07E+05	1.16E+07	1.64E+05	1.09E+04	0.00E+00
AG-110M	9.98E+03	7.22E+03	0.00E+00	1.09E+04	3.67E+06	3.30E+04	5.00E+03	0.00E+00

Age Group: Infant	Pathway: Inhalation				Units: mrem/yr per µCi/m^3			
Nuclide	**Bone**	**Liver**	**Thyroid**	**Kidney**	**Lung**	**Gi-LLi**	**TBody**	**Skin**
TE-125M	4.76E+03	1.99E+03	1.62E+03	0.00E+00	4.47E+05	1.29E+04	6.58E+02	0.00E+00
TE-127M	1.67E+04	6.90E+03	4.87E+03	3.75E+04	1.31E+06	2.73E+04	2.07E+03	0.00E+00
TE-127	2.23E+00	9.53E-01	1.85E+00	4.86E+00	1.03E+04	2.44E+04	4.89E-01	0.00E+00
TE-129M	1.41E+04	6.09E+03	5.47E+03	3.18E+04	1.68E+06	6.90E+04	2.23E+03	0.00E+00
TE-129	7.88E-02	3.47E-02	6.75E-02	1.75E-01	3.00E+03	2.63E+04	1.88E-02	0.00E+00
TE-131M	1.07E+02	5.50E+01	8.93E+01	2.65E+02	1.99E+05	1.19E+05	3.63E+01	0.00E+00
TE-131	1.74E-02	8.22E-03	1.58E-02	3.99E-02	2.06E+03	8.22E+03	5.00E-03	0.00E+00
TE-132	3.72E+02	2.37E+02	2.79E+02	1.03E+03	3.40E+05	4.41E+04	1.76E+02	0.00E+00
I-130	6.36E+03	1.39E+04	1.60E+06	1.53E+04	0.00E+00	1.99E+03	5.57E+03	0.00E+00
I-131	3.79E+04	4.44E+04	1.48E+07	5.18E+04	0.00E+00	1.06E+03	1.96E+04	0.00E+00
I-132	1.69E+03	3.54E+03	1.69E+05	3.95E+03	0.00E+00	1.90E+03	1.26E+03	0.00E+00
I-133	1.32E+04	1.92E+04	3.56E+06	2.24E+04	0.00E+00	2.16E+03	5.60E+03	0.00E+00
I-134	9.21E+02	1.88E+03	4.45E+04	2.09E+03	0.00E+00	1.29E+03	6.65E+02	0.00E+00
I-135	3.86E+03	7.60E+03	6.96E+05	8.47E+03	0.00E+00	1.83E+03	2.77E+03	0.00E+00
CS-134	3.96E+05	7.03E+05	0.00E+00	1.90E+05	7.97E+04	1.33E+03	7.45E+04	0.00E+00
CS-136	4.83E+04	1.35E+05	0.00E+00	5.64E+04	1.18E+04	1.43E+03	5.29E+04	0.00E+00
CS-137	5.49E+05	6.12E+05	0.00E+00	1.72E+05	7.13E+04	1.33E+03	4.55E+04	0.00E+00
CS-138	5.05E+02	7.81E+02	0.00E+00	4.10E+02	6.54E+01	8.76E+02	3.98E+02	0.00E+00
BA-139	1.48E+00	9.84E-04	0.00E+00	5.92E-04	5.95E+03	5.10E+04	4.30E-02	0.00E+00
BA-140	5.60E+04	5.60E+01	0.00E+00	1.34E+01	1.60E+06	3.84E+04	2.90E+03	0.00E+00
BA-141	1.57E-01	1.08E-04	0.00E+00	6.50E-05	2.97E+03	4.75E+03	4.97E-03	0.00E+00
BA-142	3.98E-02	3.30E-05	0.00E+00	1.90E-05	1.55E+03	6.93E+02	1.96E-03	0.00E+00
LA-140	5.05E+02	2.00E+02	0.00E+00	0.00E+00	1.68E+05	8.48E+04	5.15E+01	0.00E+00
LA-142	1.03E+00	3.77E-01	0.00E+00	0.00E+00	8.22E+03	5.95E+04	9.04E-02	0.00E+00
CE-141	2.77E+04	1.67E+04	0.00E+00	5.25E+03	5.17E+05	2.16E+04	1.99E+03	0.00E+00
CE-143	2.93E+02	1.93E+02	0.00E+00	5.64E+01	1.16E+05	4.97E+04	2.21E+01	0.00E+00
CE-144	3.19E+06	1.21E+06	0.00E+00	5.38E+05	9.84E+06	1.48E+05	1.76E+05	0.00E+00
PR-143	1.40E+04	5.24E+03	0.00E+00	1.97E+03	4.33E+05	3.72E+04	6.99E+02	0.00E+00
PR-144	4.79E-02	1.85E-02	0.00E+00	6.72E-03	1.61E+03	4.28E+03	2.41E-03	0.00E+00
ND-147	7.94E+03	8.13E+03	0.00E+00	3.15E+03	3.22E+05	3.12E+04	5.00E+02	0.00E+00
W-187	1.30E+01	9.02E+00	0.00E+00	0.00E+00	3.96E+04	3.56E+04	3.12E+00	0.00E+00
NP-239	3.71E+02	2.98E+02	0.00E+00	6.62E+01	5.95E+04	2.49E+04	1.88E+01	0.00E+00

TABLE 7-7 INHALATION EXPOSURE - CHILD AGE GROUP ($R_{AI(IN)J}$)

Age Group: Child	Pathway: Inhalation				Units: mrem/yr per µCi/m^3			
Nuclide	**Bone**	**Liver**	**Thyroid**	**Kidney**	**Lung**	**Gi-LLi**	**TBody**	**Skin**
H-3	0.00E+00	1.12E+03	1.12E+03	1.12E+03	1.12E+03	1.12E+03	1.12E+03	0.00E+00
C-14	3.59E+04	6.73E+03	6.73E+03	6.73E+03	6.73E+03	6.73E+03	6.73E+03	0.00E+00
NA-24	1.61E+04	1.61E+04	1.61E+04	1.61E+04	1.61E+04	1.61E+04	1.61E+04	0.00E+00
P-32	2.60E+06	1.14E+05	0.00E+00	0.00E+00	0.00E+00	4.22E+04	9.88E+04	0.00E+00
CR-51	0.00E+00	0.00E+00	8.55E+01	2.43E+01	1.70E+04	1.08E+03	1.54E+02	0.00E+00
MN-54	0.00E+00	4.29E+04	0.00E+00	1.00E+04	1.58E+06	2.29E+04	9.51E+03	0.00E+00
MN-56	0.00E+00	1.66E+00	0.00E+00	1.67E+00	1.31E+04	1.23E+05	3.12E-01	0.00E+00
FE-55	4.74E+04	2.52E+04	0.00E+00	0.00E+00	1.11E+05	2.87E+03	7.77E+03	0.00E+00
FE-59	2.07E+04	3.34E+04	0.00E+00	0.00E+00	1.27E+06	7.07E+04	1.67E+04	0.00E+00
CO-58	0.00E+00	1.77E+03	0.00E+00	0.00E+00	1.11E+06	3.44E+04	3.16E+03	0.00E+00
CO-60	0.00E+00	1.31E+04	0.00E+00	0.00E+00	7.07E+06	9.62E+04	2.26E+04	0.00E+00
NI-63	8.21E+05	4.63E+04	0.00E+00	0.00E+00	2.75E+05	6.33E+03	2.80E+04	0.00E+00
NI-65	2.99E+00	2.96E-01	0.00E+00	0.00E+00	8.18E+03	8.40E+04	1.64E-01	0.00E+00
CU-64	0.00E+00	1.99E+00	0.00E+00	6.03E+00	9.58E+03	3.67E+04	1.07E+00	0.00E+00
ZN-65	4.26E+04	1.13E+05	0.00E+00	7.14E+04	9.95E+05	1.63E+04	7.03E+04	0.00E+00
ZN-69	6.70E-02	9.66E-02	0.00E+00	5.85E-02	1.42E+03	1.02E+04	8.92E-03	0.00E+00
BR-83	0.00E+00	0.00E+00	0.00E+00	0.00E+00	0.00E+00	0.00E+00	4.74E+02	0.00E+00
BR-84	0.00E+00	0.00E+00	0.00E+00	0.00E+00	0.00E+00	0.00E+00	5.48E+02	0.00E+00
BR-85	0.00E+00	0.00E+00	0.00E+00	0.00E+00	0.00E+00	0.00E+00	2.53E+01	0.00E+00
RB-86	0.00E+00	1.98E+05	0.00E+00	0.00E+00	0.00E+00	7.99E+03	1.14E+05	0.00E+00
RB-88	0.00E+00	5.62E+02	0.00E+00	0.00E+00	0.00E+00	1.72E+01	3.66E+02	0.00E+00
RB-89	0.00E+00	3.45E+02	0.00E+00	0.00E+00	0.00E+00	1.89E+00	2.90E+02	0.00E+00
SR-89	5.99E+05	0.00E+00	0.00E+00	0.00E+00	2.16E+06	1.67E+05	1.72E+04	0.00E+00
SR-90	1.01E+08	0.00E+00	0.00E+00	0.00E+00	1.48E+07	3.43E+05	6.44E+06	0.00E+00
SR-91	1.21E+02	0.00E+00	0.00E+00	0.00E+00	5.33E+04	1.74E+05	4.59E+00	0.00E+00
SR-92	1.31E+01	0.00E+00	0.00E+00	0.00E+00	2.40E+04	2.42E+05	5.25E-01	0.00E+00
Y-90	4.11E+03	0.00E+00	0.00E+00	0.00E+00	2.62E+05	2.68E+05	1.11E+02	0.00E+00
Y-91M	5.07E-01	0.00E+00	0.00E+00	0.00E+00	2.81E+03	1.72E+03	1.84E-02	0.00E+00
Y-91	9.14E+05	0.00E+00	0.00E+00	0.00E+00	2.63E+06	1.84E+05	2.44E+04	0.00E+00
Y-92	2.04E+01	0.00E+00	0.00E+00	0.00E+00	2.39E+04	2.39E+05	5.81E-01	0.00E+00
Y-93	1.86E+02	0.00E+00	0.00E+00	0.00E+00	7.44E+04	3.89E+05	5.11E+00	0.00E+00
ZR-95	1.90E+05	4.18E+04	0.00E+00	5.96E+04	2.23E+06	6.11E+04	3.70E+04	0.00E+00
ZR-97	1.88E+02	2.72E+01	0.00E+00	3.89E+01	1.13E+05	3.51E+05	1.60E+01	0.00E+00
NB-95	2.35E+04	9.18E+03	0.00E+00	8.62E+03	6.14E+05	3.70E+04	6.55E+03	0.00E+00
MO-99	0.00E+00	1.72E+02	0.00E+00	3.92E+02	1.35E+05	1.27E+05	4.26E+01	0.00E+00
TC-99M	1.78E-03	3.48E-03	0.00E+00	5.07E-02	9.51E+02	4.81E+03	5.77E-02	0.00E+00
TC-101	8.10E-05	8.51E-05	0.00E+00	1.45E-03	5.85E+02	1.63E+01	1.08E-03	0.00E+00
RU-103	2.79E+03	0.00E+00	0.00E+00	7.03E+03	6.62E+05	4.48E+04	1.07E+03	0.00E+00
RU-105	1.53E+00	0.00E+00	0.00E+00	1.34E+00	1.59E+04	9.95E+04	5.55E-01	0.00E+00
RU-106	1.36E+05	0.00E+00	0.00E+00	1.84E+05	1.43E+07	4.29E+05	1.69E+04	0.00E+00
AG-110M	1.69E+04	1.14E+04	0.00E+00	2.12E+04	5.48E+06	1.00E+05	9.14E+03	0.00E+00

Age Group: Child	Pathway: Inhalation				Units: mrem/yr per µCi/m^3			
Nuclide	Bone	Liver	Thyroid	Kidney	Lung	Gi-LLi	TBody	Skin
TE-125M	6.73E+03	2.33E+03	1.92E+03	0.00E+00	4.77E+05	3.38E+04	9.14E+02	0.00E+00
TE-127M	2.49E+04	8.55E+03	6.07E+03	6.36E+04	1.48E+06	7.14E+04	3.02E+03	0.00E+00
TE-127	2.77E+00	9.51E-01	1.96E+00	7.07E+00	1.00E+04	5.62E+04	6.11E-01	0.00E+00
TE-129M	1.92E+04	6.85E+03	6.33E+03	5.03E+04	1.76E+06	1.82E+05	3.04E+03	0.00E+00
TE-129	9.77E-02	3.50E-02	7.14E-02	2.57E-01	2.93E+03	2.55E+04	2.38E-02	0.00E+00
TE-131M	1.34E+02	5.92E+01	9.77E+01	4.00E+02	2.06E+05	3.08E+05	5.07E+01	0.00E+00
TE-131	2.17E-02	8.44E-03	1.70E-02	5.88E-02	2.05E+03	1.33E+03	6.59E-03	0.00E+00
TE-132	4.81E+02	2.72E+02	3.17E+02	1.77E+03	3.77E+05	1.38E+05	2.63E+02	0.00E+00
I-130	8.18E+03	1.64E+04	1.85E+06	2.45E+04	0.00E+00	5.11E+03	8.44E+03	0.00E+00
I-131	4.81E+04	4.81E+04	1.62E+07	7.88E+04	0.00E+00	2.84E+03	2.73E+04	0.00E+00
I-132	2.12E+03	4.07E+03	1.94E+05	6.25E+03	0.00E+00	3.20E+03	1.88E+03	0.00E+00
I-133	1.66E+04	2.03E+04	3.85E+06	3.38E+04	0.00E+00	5.48E+03	7.70E+03	0.00E+00
I-134	1.17E+03	2.16E+03	5.07E+04	3.30E+03	0.00E+00	9.55E+02	9.95E+02	0.00E+00
I-135	4.92E+03	8.73E+03	7.92E+05	1.34E+04	0.00E+00	4.44E+03	4.14E+03	0.00E+00
CS-134	6.51E+05	1.01E+06	0.00E+00	3.30E+05	1.21E+05	3.85E+03	2.25E+05	0.00E+00
CS-136	6.51E+04	1.71E+05	0.00E+00	9.55E+04	1.45E+04	4.18E+03	1.16E+05	0.00E+00
CS-137	9.07E+05	8.25E+05	0.00E+00	2.82E+05	1.04E+05	3.62E+03	1.28E+05	0.00E+00
CS-138	6.33E+02	8.40E+02	0.00E+00	6.22E+02	6.81E+01	2.70E+02	5.55E+02	0.00E+00
BA-139	1.84E+00	9.84E-04	0.00E+00	8.62E-04	5.77E+03	5.77E+04	5.37E-02	0.00E+00
BA-140	7.40E+04	6.48E+01	0.00E+00	2.11E+01	1.74E+06	1.02E+05	4.33E+03	0.00E+00
BA-141	1.96E-01	1.09E-04	0.00E+00	9.47E-05	2.92E+03	2.75E+02	6.36E-03	0.00E+00
BA-142	5.00E-02	3.60E-05	0.00E+00	2.91E-05	1.64E+03	2.74E+00	2.79E-03	0.00E+00
LA-140	6.44E+02	2.25E+02	0.00E+00	0.00E+00	1.83E+05	2.26E+05	7.55E+01	0.00E+00
LA-142	1.30E+00	4.11E-01	0.00E+00	0.00E+00	8.70E+03	7.59E+04	1.29E-01	0.00E+00
CE-141	3.92E+04	1.95E+04	0.00E+00	8.55E+03	5.44E+05	5.66E+04	2.90E+03	0.00E+00
CE-143	3.66E+02	1.99E+02	0.00E+00	8.36E+01	1.15E+05	1.27E+05	2.87E+01	0.00E+00
CE-144	6.77E+06	2.12E+06	0.00E+00	1.17E+06	1.20E+07	3.89E+05	3.61E+05	0.00E+00
PR-143	1.85E+04	5.55E+03	0.00E+00	3.00E+03	4.33E+05	9.73E+04	9.14E+02	0.00E+00
PR-144	5.96E-02	1.85E-02	0.00E+00	9.77E-03	1.57E+03	1.97E+02	3.00E-03	0.00E+00
ND-147	1.08E+04	8.73E+03	0.00E+00	4.81E+03	3.28E+05	8.21E+04	6.81E+02	0.00E+00
W-187	1.63E+01	9.66E+00	0.00E+00	0.00E+00	4.11E+04	9.10E+04	4.33E+00	0.00E+00
NP-239	4.66E+02	3.01E+02	0.00E+00	9.73E+01	5.81E+04	6.40E+04	2.35E+01	0.00E+00

TABLE 7-8 INHALATION EXPOSURE - TEEN AGE GROUP ($R_{AI(IN)J}$)

Age Group: Teen	Pathway: Inhalation				Units: mrem/yr per µCi/m^3			
Nuclide	**Bone**	**Liver**	**Thyroid**	**Kidney**	**Lung**	**Gi-LLi**	**TBody**	**Skin**
H-3	0.00E+00	1.27E+03	1.27E+03	1.27E+03	1.27E+03	1.27E+03	1.27E+03	0.00E+00
C-14	2.60E+04	4.87E+03	4.87E+03	4.87E+03	4.87E+03	4.87E+03	4.87E+03	0.00E+00
NA-24	1.38E+04	1.38E+04	1.38E+04	1.38E+04	1.38E+04	1.38E+04	1.38E+04	0.00E+00
P-32	1.89E+06	1.10E+05	0.00E+00	0.00E+00	0.00E+00	9.28E+04	7.16E+04	0.00E+00
CR-51	0.00E+00	0.00E+00	7.50E+01	3.07E+01	2.10E+04	3.00E+03	1.35E+02	0.00E+00
MN-54	0.00E+00	5.11E+04	0.00E+00	1.27E+04	1.98E+06	6.68E+04	8.40E+03	0.00E+00
MN-56	0.00E+00	1.70E+00	0.00E+00	1.79E+00	1.52E+04	5.74E+04	2.52E-01	0.00E+00
FE-55	3.34E+04	2.38E+04	0.00E+00	0.00E+00	1.24E+05	6.39E+03	5.54E+03	0.00E+00
FE-59	1.59E+04	3.70E+04	0.00E+00	0.00E+00	1.53E+06	1.78E+05	1.43E+04	0.00E+00
CO-58	0.00E+00	2.07E+03	0.00E+00	0.00E+00	1.34E+06	9.52E+04	2.78E+03	0.00E+00
CO-60	0.00E+00	1.51E+04	0.00E+00	0.00E+00	8.72E+06	2.59E+05	1.98E+04	0.00E+00
NI-63	5.80E+05	4.34E+04	0.00E+00	0.00E+00	3.07E+05	1.42E+04	1.98E+04	0.00E+00
NI-65	2.18E+00	2.93E-01	0.00E+00	0.00E+00	9.36E+03	3.67E+04	1.27E-01	0.00E+00
CU-64	0.00E+00	2.03E+00	0.00E+00	6.41E+00	1.11E+04	6.14E+04	8.48E-01	0.00E+00
ZN-65	3.86E+04	1.34E+05	0.00E+00	8.64E+04	1.24E+06	4.66E+04	6.24E+04	0.00E+00
ZN-69	4.83E-02	9.20E-02	0.00E+00	6.02E-02	1.58E+03	2.85E+02	6.46E-03	0.00E+00
BR-83	0.00E+00	0.00E+00	0.00E+00	0.00E+00	0.00E+00	0.00E+00	3.44E+02	0.00E+00
BR-84	0.00E+00	0.00E+00	0.00E+00	0.00E+00	0.00E+00	0.00E+00	4.33E+02	0.00E+00
BR-85	0.00E+00	0.00E+00	0.00E+00	0.00E+00	0.00E+00	0.00E+00	1.83E+01	0.00E+00
RB-86	0.00E+00	1.90E+05	0.00E+00	0.00E+00	0.00E+00	1.77E+04	8.40E+04	0.00E+00
RB-88	0.00E+00	5.46E+02	0.00E+00	0.00E+00	0.00E+00	2.92E-05	2.72E+02	0.00E+00
RB-89	0.00E+00	3.52E+02	0.00E+00	0.00E+00	0.00E+00	3.38E-07	2.33E+02	0.00E+00
SR-89	4.34E+05	0.00E+00	0.00E+00	0.00E+00	2.42E+06	3.71E+05	1.25E+04	0.00E+00
SR-90	1.08E+08	0.00E+00	0.00E+00	0.00E+00	1.65E+07	7.65E+05	6.68E+06	0.00E+00
SR-91	8.80E+01	0.00E+00	0.00E+00	0.00E+00	6.07E+04	2.59E+05	3.51E+00	0.00E+00
SR-92	9.52E+00	0.00E+00	0.00E+00	0.00E+00	2.74E+04	1.19E+05	4.06E-01	0.00E+00
Y-90	2.98E+03	0.00E+00	0.00E+00	0.00E+00	2.93E+05	5.59E+05	8.00E+01	0.00E+00
Y-91M	3.70E-01	0.00E+00	0.00E+00	0.00E+00	3.20E+03	3.02E+01	1.42E-02	0.00E+00
Y-91	6.61E+05	0.00E+00	0.00E+00	0.00E+00	2.94E+06	4.09E+05	1.77E+04	0.00E+00
Y-92	1.47E+01	0.00E+00	0.00E+00	0.00E+00	2.68E+04	1.65E+05	4.29E-01	0.00E+00
Y-93	1.35E+02	0.00E+00	0.00E+00	0.00E+00	8.32E+04	5.79E+05	3.72E+00	0.00E+00
ZR-95	1.46E+05	4.58E+04	0.00E+00	6.74E+04	2.69E+06	1.49E+05	3.15E+04	0.00E+00
ZR-97	1.38E+02	2.72E+01	0.00E+00	4.12E+01	1.30E+05	6.30E+05	1.26E+01	0.00E+00
NB-95	1.86E+04	1.03E+04	0.00E+00	1.00E+04	7.51E+05	9.68E+04	5.66E+03	0.00E+00
MO-99	0.00E+00	1.69E+02	0.00E+00	4.11E+02	1.54E+05	2.69E+05	3.22E+01	0.00E+00
TC-99M	1.38E-03	3.86E-03	0.00E+00	5.76E-02	1.15E+03	6.13E+03	4.99E-02	0.00E+00
TC-101	5.92E-05	8.40E-05	0.00E+00	1.52E-03	6.67E+02	8.72E-07	8.24E-04	0.00E+00
RU-103	2.10E+03	0.00E+00	0.00E+00	7.43E+03	7.83E+05	1.09E+05	8.96E+02	0.00E+00
RU-105	1.12E+00	0.00E+00	0.00E+00	1.41E+00	1.82E+04	9.04E+04	4.34E-01	0.00E+00
RU-106	9.84E+04	0.00E+00	0.00E+00	1.90E+05	1.61E+07	9.60E+05	1.24E+04	0.00E+00
AG-110M	1.38E+04	1.31E+04	0.00E+00	2.50E+04	6.75E+06	2.73E+05	7.99E+03	0.00E+00

Age Group: Teen	Pathway: Inhalation				Units: mrem/yr per µCi/m^3			
Nuclide	**Bone**	**Liver**	**Thyroid**	**Kidney**	**Lung**	**Gi-LLi**	**TBody**	**Skin**
TE-125M	4.88E+03	2.24E+03	1.40E+03	0.00E+00	5.36E+05	7.50E+04	6.67E+02	0.00E+00
TE-127M	1.80E+04	8.16E+03	4.38E+03	6.54E+04	1.66E+06	1.59E+05	2.18E+03	0.00E+00
TE-127	2.01E+00	9.12E-01	1.42E+00	7.28E+00	1.12E+04	8.08E+04	4.42E-01	0.00E+00
TE-129M	1.39E+04	6.58E+03	4.58E+03	5.19E+04	1.98E+06	4.05E+05	2.25E+03	0.00E+00
TE-129	7.10E-02	3.38E-02	5.18E-02	2.66E-01	3.30E+03	1.62E+03	1.76E-02	0.00E+00
TE-131M	9.84E+01	6.01E+01	7.25E+01	4.39E+02	2.38E+05	6.21E+05	4.02E+01	0.00E+00
TE-131	1.58E-02	8.32E-03	1.24E-02	6.18E-02	2.34E+03	1.51E+01	5.04E-03	0.00E+00
TE-132	3.60E+02	2.90E+02	2.46E+02	1.95E+03	4.49E+05	4.63E+05	2.19E+02	0.00E+00
I-130	6.24E+03	1.79E+04	1.49E+06	2.75E+04	0.00E+00	9.12E+03	7.17E+03	0.00E+00
I-131	3.54E+04	4.91E+04	1.46E+07	8.40E+04	0.00E+00	6.49E+03	2.64E+04	0.00E+00
I-132	1.59E+03	4.38E+03	1.51E+05	6.92E+03	0.00E+00	1.27E+03	1.58E+03	0.00E+00
I-133	1.22E+04	2.05E+04	2.92E+06	3.59E+04	0.00E+00	1.03E+04	6.22E+03	0.00E+00
I-134	8.88E+02	2.32E+03	3.95E+04	3.66E+03	0.00E+00	2.04E+01	8.40E+02	0.00E+00
I-135	3.70E+03	9.44E+03	6.21E+05	1.49E+04	0.00E+00	6.95E+03	3.49E+03	0.00E+00
CS-134	5.02E+05	1.13E+06	0.00E+00	3.75E+05	1.46E+05	9.76E+03	5.49E+05	0.00E+00
CS-136	5.15E+04	1.94E+05	0.00E+00	1.10E+05	1.78E+04	1.09E+04	1.37E+05	0.00E+00
CS-137	6.70E+05	8.48E+05	0.00E+00	3.04E+05	1.21E+05	8.48E+03	3.11E+05	0.00E+00
CS-138	4.66E+02	8.56E+02	0.00E+00	6.62E+02	7.87E+01	2.70E-01	4.46E+02	0.00E+00
BA-139	1.34E+00	9.44E-04	0.00E+00	8.88E-04	6.46E+03	6.45E+03	3.90E-02	0.00E+00
BA-140	5.47E+04	6.70E+01	0.00E+00	2.28E+01	2.03E+06	2.29E+05	3.52E+03	0.00E+00
BA-141	1.42E-01	1.06E-04	0.00E+00	9.84E-05	3.29E+03	7.46E-04	4.74E-03	0.00E+00
BA-142	3.70E-02	3.70E-05	0.00E+00	3.14E-05	1.91E+03	4.79E-10	2.27E-03	0.00E+00
LA-140	4.79E+02	2.36E+02	0.00E+00	0.00E+00	2.14E+05	4.87E+05	6.26E+01	0.00E+00
LA-142	9.60E-01	4.25E-01	0.00E+00	0.00E+00	1.02E+04	1.20E+04	1.06E-01	0.00E+00
CE-141	2.84E+04	1.90E+04	0.00E+00	8.88E+03	6.14E+05	1.26E+05	2.17E+03	0.00E+00
CE-143	2.66E+02	1.94E+02	0.00E+00	8.64E+01	1.30E+05	2.55E+05	2.16E+01	0.00E+00
CE-144	4.89E+06	2.02E+06	0.00E+00	1.21E+06	1.34E+07	8.64E+05	2.62E+05	0.00E+00
PR-143	1.34E+04	5.31E+03	0.00E+00	3.09E+03	4.83E+05	2.14E+05	6.62E+02	0.00E+00
PR-144	4.30E-02	1.76E-02	0.00E+00	1.01E-02	1.75E+03	2.35E-04	2.18E-03	0.00E+00
ND-147	7.86E+03	8.56E+03	0.00E+00	5.02E+03	3.72E+05	1.82E+05	5.13E+02	0.00E+00
W-187	1.20E+01	9.76E+00	0.00E+00	0.00E+00	4.74E+04	1.77E+05	3.43E+00	0.00E+00
NP-239	3.38E+02	2.88E+02	0.00E+00	1.00E+02	6.49E+04	1.32E+05	1.77E+01	0.00E+00

TABLE 7-9 INHALATION EXPOSURE - ADULT AGE GROUP ($R_{AI(IN)J}$)

Age Group: Adult	Pathway: Inhalation				Units: mrem/yr per µCi/m^3			
Nuclide	**Bone**	**Liver**	**Thyroid**	**Kidney**	**Lung**	**Gi-LLi**	**TBody**	**Skin**
H-3	0.00E+00	1.26E+03	1.26E+03	1.26E+03	1.26E+03	1.26E+03	1.26E+03	0.00E+00
C-14	1.82E+04	3.41E+03	3.41E+03	3.41E+03	3.41E+03	3.41E+03	3.41E+03	0.00E+00
NA-24	1.02E+04	1.02E+04	1.02E+04	1.02E+04	1.02E+04	1.02E+04	1.02E+04	0.00E+00
P-32	1.32E+06	7.71E+04	0.00E+00	0.00E+00	0.00E+00	8.64E+04	5.01E+04	0.00E+00
CR-51	0.00E+00	0.00E+00	5.95E+01	2.28E+01	1.44E+04	3.32E+03	1.00E+02	0.00E+00
MN-54	0.00E+00	3.96E+04	0.00E+00	9.84E+03	1.40E+06	7.74E+04	6.30E+03	0.00E+00
MN-56	0.00E+00	1.24E+00	0.00E+00	1.30E+00	9.44E+03	2.02E+04	1.83E-01	0.00E+00
FE-55	2.46E+04	1.70E+04	0.00E+00	0.00E+00	7.21E+04	6.03E+03	3.94E+03	0.00E+00
FE-59	1.18E+04	2.78E+04	0.00E+00	0.00E+00	1.02E+06	1.88E+05	1.06E+04	0.00E+00
CO-58	0.00E+00	1.58E+03	0.00E+00	0.00E+00	9.28E+05	1.06E+05	2.07E+03	0.00E+00
CO-60	0.00E+00	1.15E+04	0.00E+00	0.00E+00	5.97E+06	2.85E+05	1.48E+04	0.00E+00
NI-63	4.32E+05	3.14E+04	0.00E+00	0.00E+00	1.78E+05	1.34E+04	1.45E+04	0.00E+00
NI-65	1.54E+00	2.10E-01	0.00E+00	0.00E+00	5.60E+03	1.23E+04	9.12E-02	0.00E+00
CU-64	0.00E+00	1.46E+00	0.00E+00	4.62E+00	6.78E+03	4.90E+04	6.15E-01	0.00E+00
ZN-65	3.24E+04	1.03E+05	0.00E+00	6.90E+04	8.64E+05	5.34E+04	4.66E+04	0.00E+00
ZN-69	3.38E-02	6.51E-02	0.00E+00	4.22E-02	9.20E+02	1.63E+01	4.52E-03	0.00E+00
BR-83	0.00E+00	0.00E+00	0.00E+00	0.00E+00	0.00E+00	2.32E+02	2.41E+02	0.00E+00
BR-84	0.00E+00	0.00E+00	0.00E+00	0.00E+00	0.00E+00	1.64E-03	3.13E+02	0.00E+00
BR-85	0.00E+00	0.00E+00	0.00E+00	0.00E+00	0.00E+00	0.00E+00	1.28E+01	0.00E+00
RB-86	0.00E+00	1.35E+05	0.00E+00	0.00E+00	0.00E+00	1.66E+04	5.90E+04	0.00E+00
RB-88	0.00E+00	3.87E+02	0.00E+00	0.00E+00	0.00E+00	3.34E-09	1.93E+02	0.00E+00
RB-89	0.00E+00	2.56E+02	0.00E+00	0.00E+00	0.00E+00	9.28E-12	1.70E+02	0.00E+00
SR-89	3.04E+05	0.00E+00	0.00E+00	0.00E+00	1.40E+06	3.50E+05	8.72E+03	0.00E+00
SR-90	9.92E+07	0.00E+00	0.00E+00	0.00E+00	9.60E+06	7.22E+05	6.10E+06	0.00E+00
SR-91	6.19E+01	0.00E+00	0.00E+00	0.00E+00	3.65E+04	1.91E+05	2.50E+00	0.00E+00
SR-92	6.74E+00	0.00E+00	0.00E+00	0.00E+00	1.65E+04	4.30E+04	2.91E-01	0.00E+00
Y-90	2.09E+03	0.00E+00	0.00E+00	0.00E+00	1.70E+05	5.06E+05	5.61E+01	0.00E+00
Y-91M	2.61E-01	0.00E+00	0.00E+00	0.00E+00	1.92E+03	1.33E+00	1.02E-02	0.00E+00
Y-91	4.62E+05	0.00E+00	0.00E+00	0.00E+00	1.70E+06	3.85E+05	1.24E+04	0.00E+00
Y-92	1.03E+01	0.00E+00	0.00E+00	0.00E+00	1.57E+04	7.35E+04	3.02E-01	0.00E+00
Y-93	9.44E+01	0.00E+00	0.00E+00	0.00E+00	4.85E+04	4.22E+05	2.61E+00	0.00E+00
ZR-95	1.07E+05	3.44E+04	0.00E+00	5.42E+04	1.77E+06	1.50E+05	2.33E+04	0.00E+00
ZR-97	9.68E+01	1.96E+01	0.00E+00	2.97E+01	7.87E+04	5.23E+05	9.04E+00	0.00E+00
NB-95	1.41E+04	7.82E+03	0.00E+00	7.74E+03	5.05E+05	1.04E+05	4.21E+03	0.00E+00
MO-99	0.00E+00	1.21E+02	0.00E+00	2.91E+02	9.12E+04	2.48E+05	2.30E+01	0.00E+00
TC-99M	1.03E-03	2.91E-03	0.00E+00	4.42E-02	7.64E+02	4.16E+03	3.70E-02	0.00E+00
TC-101	4.18E-05	6.02E-05	0.00E+00	1.08E-03	3.99E+02	1.09E-11	5.90E-04	0.00E+00
RU-103	1.53E+03	0.00E+00	0.00E+00	5.83E+03	5.05E+05	1.10E+05	6.58E+02	0.00E+00
RU-105	7.90E-01	0.00E+00	0.00E+00	1.02E+00	1.10E+04	4.82E+04	3.11E-01	0.00E+00
RU-106	6.91E+04	0.00E+00	0.00E+00	1.34E+05	9.36E+06	9.12E+05	8.72E+03	0.00E+00
AG-110M	1.08E+04	1.00E+04	0.00E+00	1.97E+04	4.63E+06	3.02E+05	5.94E+03	0.00E+00

Age Group: Adult	Pathway: Inhalation				Units: mrem/yr per µCi/m^3			
Nuclide	**Bone**	**Liver**	**Thyroid**	**Kidney**	**Lung**	**Gi-LLi**	**TBody**	**Skin**
TE-125M	3.42E+03	1.58E+03	1.05E+03	1.24E+04	3.14E+05	7.06E+04	4.67E+02	0.00E+00
TE-127M	1.26E+04	5.77E+03	3.29E+03	4.58E+04	9.60E+05	1.50E+05	1.57E+03	0.00E+00
TE-127	1.40E+00	6.42E-01	1.06E+00	5.10E+00	6.51E+03	5.74E+04	3.10E-01	0.00E+00
TE-129M	9.76E+03	4.67E+03	3.44E+03	3.66E+04	1.16E+06	3.83E+05	1.58E+03	0.00E+00
TE-129	4.98E-02	2.39E-02	3.90E-02	1.87E-01	1.94E+03	1.57E+02	1.24E-02	0.00E+00
TE-131M	6.99E+01	4.36E+01	5.50E+01	3.09E+02	1.46E+05	5.56E+05	2.90E+01	0.00E+00
TE-131	1.11E-02	5.95E-03	9.36E-03	4.37E-02	1.39E+03	1.84E+01	3.59E-03	0.00E+00
TE-132	2.60E+02	2.15E+02	1.90E+02	1.46E+03	2.88E+05	5.10E+05	1.62E+02	0.00E+00
I-130	4.58E+03	1.34E+04	1.14E+06	2.09E+04	0.00E+00	7.69E+03	5.28E+03	0.00E+00
I-131	2.52E+04	3.58E+04	1.19E+07	6.13E+04	0.00E+00	6.28E+03	2.05E+04	0.00E+00
I-132	1.16E+03	3.26E+03	1.14E+05	5.18E+03	0.00E+00	4.06E+02	1.16E+03	0.00E+00
I-133	8.64E+03	1.48E+04	2.15E+06	2.58E+04	0.00E+00	8.88E+03	4.52E+03	0.00E+00
I-134	6.44E+02	1.73E+03	2.98E+04	2.75E+03	0.00E+00	1.01E+00	6.15E+02	0.00E+00
I-135	2.68E+03	6.98E+03	4.48E+05	1.11E+04	0.00E+00	5.25E+03	2.57E+03	0.00E+00
CS-134	3.73E+05	8.48E+05	0.00E+00	2.87E+05	9.76E+04	1.04E+04	7.28E+05	0.00E+00
CS-136	3.90E+04	1.46E+05	0.00E+00	8.56E+04	1.20E+04	1.17E+04	1.10E+05	0.00E+00
CS-137	4.78E+05	6.21E+05	0.00E+00	2.22E+05	7.52E+04	8.40E+03	4.28E+05	0.00E+00
CS-138	3.31E+02	6.21E+02	0.00E+00	4.80E+02	4.86E+01	1.86E-03	3.24E+02	0.00E+00
BA-139	9.36E-01	6.66E-04	0.00E+00	6.22E-04	3.76E+03	8.96E+02	2.74E-02	0.00E+00
BA-140	3.90E+04	4.90E+01	0.00E+00	1.67E+01	1.27E+06	2.18E+05	2.57E+03	0.00E+00
BA-141	1.00E-01	7.53E-05	0.00E+00	7.00E-05	1.94E+03	1.16E-07	3.36E-03	0.00E+00
BA-142	2.63E-02	2.70E-05	0.00E+00	2.29E-05	1.19E+03	1.57E-16	1.66E-03	0.00E+00
LA-140	3.44E+02	1.74E+02	0.00E+00	0.00E+00	1.36E+05	4.58E+05	4.58E+01	0.00E+00
LA-142	6.83E-01	3.10E-01	0.00E+00	0.00E+00	6.33E+03	2.11E+03	7.72E-02	0.00E+00
CE-141	1.99E+04	1.35E+04	0.00E+00	6.26E+03	3.62E+05	1.20E+05	1.53E+03	0.00E+00
CE-143	1.86E+02	1.38E+02	0.00E+00	6.08E+01	7.98E+04	2.26E+05	1.53E+01	0.00E+00
CE-144	3.43E+06	1.43E+06	0.00E+00	8.48E+05	7.78E+06	8.16E+05	1.84E+05	0.00E+00
PR-143	9.36E+03	3.75E+03	0.00E+00	2.16E+03	2.81E+05	2.00E+05	4.64E+02	0.00E+00
PR-144	3.01E-02	1.25E-02	0.00E+00	7.05E-03	1.02E+03	2.15E-08	1.53E-03	0.00E+00
ND-147	5.27E+03	6.10E+03	0.00E+00	3.56E+03	2.21E+05	1.73E+05	3.65E+02	0.00E+00
W-187	8.48E+00	7.08E+00	0.00E+00	0.00E+00	2.90E+04	1.55E+05	2.48E+00	0.00E+00
NP-239	2.30E+02	2.03E+02	0.00E+00	7.00E+01	3.76E+04	1.19E+05	1.24E+01	0.00E+00

TABLE 7-10 VEGETATION INGESTION - CHILD AGE GROUP ($R_{AI(VG)J}$)

Age Group: Child	Pathway: Vegetation				Units: m^2 x mrem/yr per µCi/sec			
Nuclide	**Bone**	**Liver**	**Thyroid**	**Kidney**	**Lung**	**Gi-LLi**	**TBody**	**Skin**
H-3 *	0.00E+00	3.63E+03	3.63E+03	3.63E+03	3.63E+03	3.63E+03	3.63E+03	0.00E+00
C-14 *	7.65E+05	1.53E+05	1.53E+05	1.53E+05	1.53E+05	1.53E+05	1.53E+05	0.00E+00
NA-24	3.73E+05	3.73E+05	3.73E+05	3.73E+05	3.73E+05	3.73E+05	3.73E+05	0.00E+00
P-32	3.37E+09	1.58E+08	0.00E+00	0.00E+00	0.00E+00	9.32E+07	1.30E+08	0.00E+00
CR-51	0.00E+00	0.00E+00	6.48E+04	1.77E+04	1.18E+05	6.19E+06	1.17E+05	0.00E+00
MN-54	0.00E+00	6.65E+08	0.00E+00	1.86E+08	0.00E+00	5.58E+08	1.77E+08	0.00E+00
MN-56	0.00E+00	1.76E+01	0.00E+00	2.13E+01	0.00E+00	2.55E+03	3.98E+00	0.00E+00
FE-55	8.01E+08	4.25E+08	0.00E+00	0.00E+00	2.40E+08	7.87E+07	1.32E+08	0.00E+00
FE-59	3.97E+08	6.42E+08	0.00E+00	0.00E+00	1.86E+08	6.68E+08	3.20E+08	0.00E+00
CO-58	0.00E+00	6.45E+07	0.00E+00	0.00E+00	0.00E+00	3.76E+08	1.97E+08	0.00E+00
CO-60	0.00E+00	3.78E+08	0.00E+00	0.00E+00	0.00E+00	2.10E+09	1.12E+09	0.00E+00
NI-63	3.95E+10	2.11E+09	0.00E+00	0.00E+00	0.00E+00	1.42E+08	1.34E+09	0.00E+00
NI-65	1.02E+02	9.59E+00	0.00E+00	0.00E+00	0.00E+00	1.18E+03	5.60E+00	0.00E+00
CU-64	0.00E+00	1.09E+04	0.00E+00	2.62E+04	0.00E+00	5.10E+05	6.56E+03	0.00E+00
ZN-65	8.12E+08	2.16E+09	0.00E+00	1.36E+09	0.00E+00	3.80E+08	1.35E+09	0.00E+00
ZN-69	1.35E-05	1.95E-05	0.00E+00	1.18E-05	0.00E+00	1.23E-03	1.80E-06	0.00E+00
BR-83	0.00E+00	0.00E+00	0.00E+00	0.00E+00	0.00E+00	0.00E+00	5.23E+00	0.00E+00
BR-84	0.00E+00	0.00E+00	0.00E+00	0.00E+00	0.00E+00	0.00E+00	3.39E-11	0.00E+00
BR-85	0.00E+00	0.00E+00	0.00E+00	0.00E+00	0.00E+00	0.00E+00	0.00E+00	0.00E+00
RB-86	0.00E+00	4.53E+08	0.00E+00	0.00E+00	0.00E+00	2.92E+07	2.79E+08	0.00E+00
RB-88	0.00E+00	0.00E+00	0.00E+00	0.00E+00	0.00E+00	0.00E+00	0.00E+00	0.00E+00
RB-89	0.00E+00	0.00E+00	0.00E+00	0.00E+00	0.00E+00	0.00E+00	0.00E+00	0.00E+00
SR-89	3.59E+10	0.00E+00	0.00E+00	0.00E+00	0.00E+00	1.39E+09	1.02E+09	0.00E+00
SR-90	1.24E+12	0.00E+00	0.00E+00	0.00E+00	0.00E+00	1.67E+10	3.15E+11	0.00E+00
SR-91	5.17E+05	0.00E+00	0.00E+00	0.00E+00	0.00E+00	1.14E+06	1.95E+04	0.00E+00
SR-92	7.11E+02	0.00E+00	0.00E+00	0.00E+00	0.00E+00	1.35E+04	2.85E+01	0.00E+00
Y-90	2.31E+04	0.00E+00	0.00E+00	0.00E+00	0.00E+00	6.57E+07	6.18E+02	0.00E+00
Y-91M	7.69E-09	0.00E+00	0.00E+00	0.00E+00	0.00E+00	1.51E-05	2.80E-10	0.00E+00
Y-91	1.86E+07	0.00E+00	0.00E+00	0.00E+00	0.00E+00	2.48E+09	4.99E+05	0.00E+00
Y-92	1.58E+00	0.00E+00	0.00E+00	0.00E+00	0.00E+00	4.57E+04	4.52E-02	0.00E+00
Y-93	2.89E+02	0.00E+00	0.00E+00	0.00E+00	0.00E+00	4.31E+06	7.94E+00	0.00E+00
ZR-95	3.86E+06	8.49E+05	0.00E+00	1.22E+06	0.00E+00	8.86E+08	7.56E+05	0.00E+00
ZR-97	5.67E+02	8.19E+01	0.00E+00	1.18E+02	0.00E+00	1.24E+07	4.83E+01	0.00E+00
NB-95	4.12E+05	1.60E+05	0.00E+00	1.51E+05	0.00E+00	2.97E+08	1.15E+05	0.00E+00
MO-99	0.00E+00	7.69E+06	0.00E+00	1.64E+07	0.00E+00	6.36E+06	1.90E+06	0.00E+00
TC-99M	4.64E+00	9.10E+00	0.00E+00	1.32E+02	4.62E+00	5.18E+03	1.51E+02	0.00E+00
TC-101	0.00E+00	0.00E+00	0.00E+00	0.00E+00	0.00E+00	0.00E+00	0.00E+00	0.00E+00
RU-103	1.53E+07	0.00E+00	0.00E+00	3.86E+07	0.00E+00	3.96E+08	5.89E+06	0.00E+00
RU-105	8.97E+01	0.00E+00	0.00E+00	7.89E+02	0.00E+00	5.86E+04	3.25E+01	0.00E+00

* Units for H-3 and C-14 are: mrem/yr per uCi/m^3

Age Group: Child	Pathway: Vegetation				Units: m^2 x mrem/yr per µCi/sec			
Nuclide	**Bone**	**Liver**	**Thyroid**	**Kidney**	**Lung**	**Gi-LLi**	**TBody**	**Skin**
RU-106	7.45E+08	0.00E+00	0.00E+00	1.01E+09	0.00E+00	1.16E+10	9.30E+07	0.00E+00
AG-110M	3.21E+07	2.17E+07	0.00E+00	4.04E+07	0.00E+00	2.58E+09	1.74E+07	0.00E+00
TE-125M	3.51E+08	9.52E+07	9.85E+07	0.00E+00	0.00E+00	3.39E+08	4.68E+07	0.00E+00
TE-127M	1.32E+09	3.56E+08	3.16E+08	3.77E+09	0.00E+00	1.07E+09	1.57E+08	0.00E+00
TE-127	9.76E+03	2.63E+03	6.75E+03	2.78E+04	0.00E+00	3.81E+05	2.09E+03	0.00E+00
TE-129M	8.39E+08	2.34E+08	2.71E+08	2.46E+09	0.00E+00	1.02E+09	1.30E+08	0.00E+00
TE-129	1.23E-03	3.45E-04	8.81E-04	3.61E-03	0.00E+00	7.69E-02	2.93E-04	0.00E+00
TE-131M	1.54E+06	5.32E+05	1.09E+06	5.15E+06	0.00E+00	2.16E+07	5.66E+05	0.00E+00
TE-131	2.35E-15	7.17E-16	1.80E-15	7.12E-15	0.00E+00	1.24E-14	7.00E-16	0.00E+00
TE-132	7.00E+06	3.10E+06	4.51E+06	2.88E+07	0.00E+00	3.12E+07	3.74E+06	0.00E+00
I-130	6.10E+05	1.23E+06	1.36E+08	1.84E+06	0.00E+00	5.76E+05	6.35E+05	0.00E+00
I-131	1.43E+08	1.44E+08	4.75E+10	2.36E+08	0.00E+00	1.28E+07	8.16E+07	0.00E+00
I-132	8.93E+01	1.64E+02	7.61E+03	2.51E+02	0.00E+00	1.93E+02	7.54E+01	0.00E+00
I-133	3.52E+06	4.36E+06	8.09E+08	7.26E+06	0.00E+00	1.76E+06	1.65E+06	0.00E+00
I-134	1.37E-04	2.55E-04	5.86E-03	3.90E-04	0.00E+00	1.69E-04	1.17E-04	0.00E+00
I-135	6.13E+04	1.10E+05	9.77E+06	1.69E+05	0.00E+00	8.41E+04	5.22E+04	0.00E+00
CS-134	1.60E+10	2.63E+10	0.00E+00	8.15E+09	2.93E+09	1.42E+08	5.55E+09	0.00E+00
CS-136	8.17E+07	2.25E+08	0.00E+00	1.20E+08	1.78E+07	7.90E+06	1.45E+08	0.00E+00
CS-137	2.39E+10	2.29E+10	0.00E+00	7.46E+09	2.68E+09	1.43E+08	3.38E+09	0.00E+00
CS-138	6.10E-11	8.48E-11	0.00E+00	5.96E-11	6.42E-12	3.90E-11	5.37E-11	0.00E+00
BA-139	4.27E-02	2.28E-05	0.00E+00	1.99E-05	1.34E-05	2.47E+00	1.24E-03	0.00E+00
BA-140	2.77E+08	2.42E+05	0.00E+00	7.89E+04	1.44E+05	1.40E+08	1.61E+07	0.00E+00
BA-141	0.00E+00	0.00E+00	0.00E+00	0.00E+00	0.00E+00	0.00E+00	0.00E+00	0.00E+00
BA-142	0.00E+00	0.00E+00	0.00E+00	0.00E+00	0.00E+00	0.00E+00	0.00E+00	0.00E+00
LA-140	3.25E+03	1.13E+03	0.00E+00	0.00E+00	0.00E+00	3.16E+07	3.82E+02	0.00E+00
LA-142	2.21E-04	7.05E-05	0.00E+00	0.00E+00	0.00E+00	1.40E+01	2.21E-05	0.00E+00
CE-141	6.55E+05	3.27E+05	0.00E+00	1.43E+05	0.00E+00	4.07E+08	4.85E+04	0.00E+00
CE-143	1.72E+03	9.34E+05	0.00E+00	3.92E+02	0.00E+00	1.37E+07	1.35E+02	0.00E+00
CE-144	1.27E+08	3.98E+07	0.00E+00	2.21E+07	0.00E+00	1.04E+10	6.78E+06	0.00E+00
PR-143	1.46E+05	4.39E+04	0.00E+00	2.38E+04	0.00E+00	1.58E+08	7.25E+03	0.00E+00
PR-144	0.00E+00	0.00E+00	0.00E+00	0.00E+00	0.00E+00	0.00E+00	0.00E+00	0.00E+00
ND-147	7.26E+04	5.88E+04	0.00E+00	3.23E+04	0.00E+00	9.32E+07	4.56E+03	0.00E+00
W-187	6.45E+04	3.82E+04	0.00E+00	0.00E+00	0.00E+00	5.37E+06	1.71E+04	0.00E+00
NP-239	2.56E+03	1.84E+02	0.00E+00	5.32E+02	0.00E+00	1.36E+07	1.29E+02	0.00E+00

* Units for H-3 and C-14 are: mrem/yr per uCi/m^3

TABLE 7-11 VEGETATION INGESTION - TEEN AGE GROUP ($R_{AI(VG)J}$)

Age Group: Teen	Pathway: Vegetation				Units: m^2 x mrem/yr per µCi/sec			
Nuclide	**Bone**	**Liver**	**Thyroid**	**Kidney**	**Lung**	**Gi-LLi**	**TBody**	**Skin**
H-3 *	0.00E+00	2.34E+03	2.34E+03	2.34E+03	2.34E+03	2.34E+03	2.34E+03	2.34E+03
C-14 *	3.16E+05	6.32E+04	6.32E+04	6.32E+04	6.32E+04	6.32E+04	6.32E+04	0.00E+00
NA-24	2.39E+05	2.39E+05	2.39E+05	2.39E+05	2.39E+05	2.39E+05	2.39E+05	0.00E+00
P-32	1.61E+09	9.97E+07	0.00E+00	0.00E+00	0.00E+00	1.35E+08	6.24E+07	0.00E+00
CR-51	0.00E+00	0.00E+00	3.42E+04	1.35E+04	8.78E+04	1.03E+07	6.15E+04	0.00E+00
MN-54	0.00E+00	4.54E+08	0.00E+00	1.36E+08	0.00E+00	9.32E+08	9.01E+07	0.00E+00
MN-56	0.00E+00	1.35E+01	0.00E+00	1.70E+01	0.00E+00	8.87E+02	2.40E+00	0.00E+00
FE-55	3.26E+08	2.31E+08	0.00E+00	0.00E+00	1.47E+08	1.00E+08	5.39E+07	0.00E+00
FE-59	1.79E+08	4.18E+08	0.00E+00	0.00E+00	1.32E+08	9.88E+08	1.61E+08	0.00E+00
CO-58	0.00E+00	4.37E+07	0.00E+00	0.00E+00	0.00E+00	6.02E+08	1.01E+08	0.00E+00
CO-60	0.00E+00	2.49E+08	0.00E+00	0.00E+00	0.00E+00	3.24E+09	5.60E+08	0.00E+00
NI-63	1.61E+10	1.13E+09	0.00E+00	0.00E+00	0.00E+00	1.81E+08	5.45E+08	0.00E+00
NI-65	5.55E+01	7.10E+00	0.00E+00	0.00E+00	0.00E+00	3.85E+02	3.23E+00	0.00E+00
CU-64	0.00E+00	8.24E+03	0.00E+00	2.08E+04	0.00E+00	6.39E+05	3.87E+03	0.00E+00
ZN-65	4.24E+08	1.47E+09	0.00E+00	9.41E+08	0.00E+00	6.23E+08	6.86E+08	0.00E+00
ZN-69	7.32E-06	1.39E-05	0.00E+00	9.12E-06	0.00E+00	2.57E-05	9.76E-07	0.00E+00
BR-83	0.00E+00	0.00E+00	0.00E+00	0.00E+00	0.00E+00	0.00E+00	2.84E+00	0.00E+00
BR-84	0.00E+00	0.00E+00	0.00E+00	0.00E+00	0.00E+00	0.00E+00	2.00E-11	0.00E+00
BR-85	0.00E+00	0.00E+00	0.00E+00	0.00E+00	0.00E+00	0.00E+00	0.00E+00	0.00E+00
RB-86	0.00E+00	2.74E+08	0.00E+00	0.00E+00	0.00E+00	4.06E+07	1.29E+08	0.00E+00
RB-88	0.00E+00	0.00E+00	0.00E+00	0.00E+00	0.00E+00	0.00E+00	0.00E+00	0.00E+00
RB-89	0.00E+00	0.00E+00	0.00E+00	0.00E+00	0.00E+00	0.00E+00	0.00E+00	0.00E+00
SR-89	1.51E+10	0.00E+00	0.00E+00	0.00E+00	0.00E+00	1.80E+09	4.33E+08	0.00E+00
SR-90	7.51E+11	0.00E+00	0.00E+00	0.00E+00	0.00E+00	2.11E+10	1.85E+11	0.00E+00
SR-91	2.81E+05	0.00E+00	0.00E+00	0.00E+00	0.00E+00	1.27E+06	1.12E+04	0.00E+00
SR-92	3.88E+02	0.00E+00	0.00E+00	0.00E+00	0.00E+00	9.88E+03	1.65E+01	0.00E+00
Y-90	1.24E+04	0.00E+00	0.00E+00	0.00E+00	0.00E+00	1.03E+08	3.35E+02	0.00E+00
Y-91M	4.19E-09	0.00E+00	0.00E+00	0.00E+00	0.00E+00	1.98E-07	1.60E-10	0.00E+00
Y-91	7.84E+06	0.00E+00	0.00E+00	0.00E+00	0.00E+00	3.21E+09	2.10E+05	0.00E+00
Y-92	8.58E-01	0.00E+00	0.00E+00	0.00E+00	0.00E+00	2.36E+04	2.48E-02	0.00E+00
Y-93	1.57E+02	0.00E+00	0.00E+00	0.00E+00	0.00E+00	4.80E+06	4.30E+00	0.00E+00
ZR-95	1.72E+06	5.44E+05	0.00E+00	7.99E+05	0.00E+00	1.26E+09	3.74E+05	0.00E+00
ZR-97	3.10E+02	6.14E+01	0.00E+00	9.31E+01	0.00E+00	1.66E+07	2.83E+01	0.00E+00
NB-95	1.93E+05	1.07E+05	0.00E+00	1.04E+05	0.00E+00	4.58E+08	5.89E+04	0.00E+00
MO-99	0.00E+00	5.63E+06	0.00E+00	1.29E+07	0.00E+00	1.01E+07	1.07E+06	0.00E+00
TC-99M	2.70E+00	7.52E+00	0.00E+00	1.12E+02	4.17E+00	4.94E+03	9.75E+01	0.00E+00
TC-101	0.00E+00	0.00E+00	0.00E+00	0.00E+00	0.00E+00	0.00E+00	0.00E+00	0.00E+00
RU-103	6.81E+06	0.00E+00	0.00E+00	2.40E+07	0.00E+00	5.69E+08	2.91E+06	0.00E+00
RU-105	4.90E+01	0.00E+00	0.00E+00	6.18E+02	0.00E+00	3.95E+04	1.90E+01	0.00E+00
RU-106	3.09E+08	0.00E+00	0.00E+00	5.97E+08	0.00E+00	1.48E+10	3.90E+07	0.00E+00
AG-110M	1.52E+07	1.43E+07	0.00E+00	2.74E+07	0.00E+00	4.03E+09	8.73E+06	0.00E+00

* Units for H-3 and C-14 are: mrem/yr per uCi/m^3

Age Group: Teen	Pathway: Vegetation				Units: m^2 x mrem/yr per µCi/sec			
Nuclide	**Bone**	**Liver**	**Thyroid**	**Kidney**	**Lung**	**Gi-LLi**	**TBody**	**Skin**
TE-125M	1.48E+08	5.35E+07	4.15E+07	0.00E+00	0.00E+00	4.38E+08	1.98E+07	0.00E+00
TE-127M	5.51E+08	1.96E+08	1.31E+08	2.24E+09	0.00E+00	1.37E+09	6.56E+07	0.00E+00
TE-127	5.29E+03	1.87E+03	3.65E+03	2.14E+04	0.00E+00	4.08E+05	1.14E+03	0.00E+00
TE-129M	3.61E+08	1.34E+08	1.16E+08	1.51E+09	0.00E+00	1.36E+09	5.71E+07	0.00E+00
TE-129	6.67E-04	2.49E-04	4.76E-04	2.80E-03	0.00E+00	3.65E-03	1.62E-04	0.00E+00
TE-131M	8.42E+05	4.04E+05	6.07E+05	4.21E+06	0.00E+00	3.24E+07	3.37E+05	0.00E+00
TE-131	1.28E-15	5.27E-16	9.85E-16	5.59E-15	0.00E+00	1.05E-16	3.99E-16	0.00E+00
TE-132	3.91E+06	2.47E+06	2.61E+06	2.37E+07	0.00E+00	7.84E+07	2.33E+06	0.00E+00
I-130	3.47E+05	1.01E+06	8.20E+07	1.55E+06	0.00E+00	7.73E+05	4.01E+05	0.00E+00
I-131	7.68E+07	1.08E+08	3.14E+10	1.85E+08	0.00E+00	2.13E+07	5.78E+07	0.00E+00
I-132	5.03E+01	1.32E+02	4.43E+03	2.07E+02	0.00E+00	5.73E+01	4.72E+01	0.00E+00
I-133	1.93E+06	3.28E+06	4.58E+08	5.75E+06	0.00E+00	2.48E+06	1.00E+06	0.00E+00
I-134	7.73E-05	2.05E-04	3.41E-03	3.23E-04	0.00E+00	2.70E-06	7.36E-05	0.00E+00
I-135	3.45E+04	8.88E+04	5.72E+06	1.40E+05	0.00E+00	9.85E+04	3.29E+04	0.00E+00
CS-134	7.10E+09	1.67E+10	0.00E+00	5.31E+09	2.03E+09	2.08E+08	7.75E+09	0.00E+00
CS-136	4.34E+07	1.71E+08	0.00E+00	9.30E+07	1.47E+07	1.37E+07	1.15E+08	0.00E+00
CS-137	1.01E+10	1.35E+10	0.00E+00	4.59E+09	1.78E+09	1.92E+08	4.69E+09	0.00E+00
CS-138	3.35E-11	6.44E-11	0.00E+00	4.75E-11	5.53E-12	2.92E-14	3.22E-11	0.00E+00
BA-139	2.32E-02	1.63E-05	0.00E+00	1.54E-05	1.12E-05	2.07E-01	6.75E-04	0.00E+00
BA-140	1.38E+08	1.69E+05	0.00E+00	5.74E+04	1.14E+05	2.13E+08	8.90E+06	0.00E+00
BA-141	0.00E+00	0.00E+00	0.00E+00	0.00E+00	0.00E+00	0.00E+00	0.00E+00	0.00E+00
BA-142	0.00E+00	0.00E+00	0.00E+00	0.00E+00	0.00E+00	0.00E+00	0.00E+00	0.00E+00
LA-140	1.81E+03	8.88E+02	0.00E+00	0.00E+00	0.00E+00	5.10E+07	2.36E+02	0.00E+00
LA-142	1.22E-04	5.42E-05	0.00E+00	0.00E+00	0.00E+00	1.65E+00	1.35E-05	0.00E+00
CE-141	2.83E+05	1.89E+05	0.00E+00	8.88E+04	0.00E+00	5.40E+08	2.17E+04	0.00E+00
CE-143	9.36E+02	6.81E+05	0.00E+00	3.05E+02	0.00E+00	2.05E+07	7.61E+01	0.00E+00
CE-144	5.27E+07	2.18E+07	0.00E+00	1.30E+07	0.00E+00	1.33E+10	2.83E+06	0.00E+00
PR-143	7.03E+04	2.81E+04	0.00E+00	1.63E+04	0.00E+00	2.31E+08	3.50E+03	0.00E+00
PR-144	0.00E+00	0.00E+00	0.00E+00	0.00E+00	0.00E+00	0.00E+00	0.00E+00	0.00E+00
ND-147	3.67E+04	3.99E+04	0.00E+00	2.35E+04	0.00E+00	1.44E+08	2.39E+03	0.00E+00
W-187	3.55E+04	2.89E+04	0.00E+00	0.00E+00	0.00E+00	7.82E+06	1.01E+04	0.00E+00
NP-239	1.39E+03	1.31E+02	0.00E+00	4.11E+02	0.00E+00	2.10E+07	7.27E+01	0.00E+00

* Units for H-3 and C-14 are: mrem/yr per uCi/m^3

TABLE 7-12 VEGETATION INGESTION - ADULT AGE GROUP ($R_{AI(VG)J}$)

Age Group: Adult	Pathway: Vegetation				Units: m^2 x mrem/yr per µCi/sec			
Nuclide	**Bone**	**Liver**	**Thyroid**	**Kidney**	**Lung**	**Gi-LLi**	**TBody**	**Skin**
H-3 *	0.00E+00	2.05E+03	2.05E+03	2.05E+03	2.05E+03	2.05E+03	2.05E+03	0.00E+00
C-14 *	1.92E+05	3.84E+04	3.84E+04	3.84E+04	3.84E+04	3.84E+04	3.84E+04	0.00E+00
NA-24	2.69E+05	2.69E+05	2.69E+05	2.69E+05	2.69E+05	2.69E+05	2.69E+05	0.00E+00
P-32	1.40E+09	8.73E+07	0.00E+00	0.00E+00	0.00E+00	1.58E+08	5.43E+07	0.00E+00
CR-51	0.00E+00	0.00E+00	2.77E+04	1.02E+04	6.15E+04	1.17E+07	4.63E+04	0.00E+00
MN-54	0.00E+00	3.13E+08	0.00E+00	9.31E+07	0.00E+00	9.58E+08	5.97E+07	0.00E+00
MN-56	0.00E+00	1.49E+01	0.00E+00	1.90E+01	0.00E+00	4.77E+02	2.65E+00	0.00E+00
FE-55	2.10E+08	1.45E+08	0.00E+00	0.00E+00	8.08E+07	8.31E+07	3.38E+07	0.00E+00
FE-59	1.26E+08	2.96E+08	0.00E+00	0.00E+00	8.27E+07	9.86E+08	1.13E+08	0.00E+00
CO-58	0.00E+00	3.08E+07	0.00E+00	0.00E+00	0.00E+00	6.24E+08	6.90E+07	0.00E+00
CO-60	0.00E+00	1.67E+08	0.00E+00	0.00E+00	0.00E+00	3.14E+09	3.69E+08	0.00E+00
NI-63	1.04E+10	7.21E+08	0.00E+00	0.00E+00	0.00E+00	1.50E+08	3.49E+08	0.00E+00
NI-65	5.97E+01	7.75E+00	0.00E+00	0.00E+00	0.00E+00	1.97E+02	3.54E+00	0.00E+00
CU-64	0.00E+00	9.09E+03	0.00E+00	2.29E+04	0.00E+00	7.75E+05	4.27E+03	0.00E+00
ZN-65	3.17E+08	1.01E+09	0.00E+00	6.75E+08	0.00E+00	6.36E+08	4.56E+08	0.00E+00
ZN-69	7.82E-06	1.50E-05	0.00E+00	9.72E-06	0.00E+00	2.25E-06	1.04E-06	0.00E+00
BR-83	0.00E+00	0.00E+00	0.00E+00	0.00E+00	0.00E+00	4.36E+00	3.03E+00	0.00E+00
BR-84	0.00E+00	0.00E+00	0.00E+00	0.00E+00	0.00E+00	1.72E-16	2.20E-11	0.00E+00
BR-85	0.00E+00	0.00E+00	0.00E+00	0.00E+00	0.00E+00	0.00E+00	0.00E+00	0.00E+00
RB-86	0.00E+00	2.20E+08	0.00E+00	0.00E+00	0.00E+00	4.34E+07	1.02E+08	0.00E+00
RB-88	0.00E+00	0.00E+00	0.00E+00	0.00E+00	0.00E+00	0.00E+00	0.00E+00	0.00E+00
RB-89	0.00E+00	0.00E+00	0.00E+00	0.00E+00	0.00E+00	0.00E+00	0.00E+00	0.00E+00
SR-89	9.95E+09	0.00E+00	0.00E+00	0.00E+00	0.00E+00	1.60E+09	2.86E+08	0.00E+00
SR-90	6.05E+11	0.00E+00	0.00E+00	0.00E+00	0.00E+00	1.75E+10	1.48E+11	0.00E+00
SR-91	3.01E+05	0.00E+00	0.00E+00	0.00E+00	0.00E+00	1.43E+06	1.22E+04	0.00E+00
SR-92	4.17E+02	0.00E+00	0.00E+00	0.00E+00	0.00E+00	8.25E+03	1.80E+01	0.00E+00
Y-90	1.33E+04	0.00E+00	0.00E+00	0.00E+00	0.00E+00	1.41E+08	3.57E+02	0.00E+00
Y-91M	4.50E-09	0.00E+00	0.00E+00	0.00E+00	0.00E+00	1.32E-08	1.74E-10	0.00E+00
Y-91	5.11E+06	0.00E+00	0.00E+00	0.00E+00	0.00E+00	2.81E+09	1.37E+05	0.00E+00
Y-92	9.14E-01	0.00E+00	0.00E+00	0.00E+00	0.00E+00	1.60E+04	2.67E-02	0.00E+00
Y-93	1.67E+02	0.00E+00	0.00E+00	0.00E+00	0.00E+00	5.31E+06	4.62E+00	0.00E+00
ZR-95	1.18E+06	3.77E+05	0.00E+00	5.92E+05	0.00E+00	1.20E+09	2.55E+05	0.00E+00
ZR-97	3.35E+02	6.77E+01	0.00E+00	1.02E+02	0.00E+00	2.10E+07	3.09E+01	0.00E+00
NB-95	1.43E+05	7.95E+04	0.00E+00	7.85E+04	0.00E+00	4.82E+08	4.27E+04	0.00E+00
MO-99	0.00E+00	6.14E+06	0.00E+00	1.39E+07	0.00E+00	1.42E+07	1.17E+06	0.00E+00
TC-99M	3.06E+00	8.64E+00	0.00E+00	1.31E+02	4.23E+00	5.11E+03	1.10E+02	0.00E+00
TC-101	0.00E+00	0.00E+00	0.00E+00	0.00E+00	0.00E+00	0.00E+00	0.00E+00	0.00E+00
RU-103	4.77E+06	0.00E+00	0.00E+00	1.82E+07	0.00E+00	5.56E+08	2.05E+06	0.00E+00

* Units for H-3 and C-14 are: mrem/yr per uCi/m^3

Age Group: Adult	Pathway: Vegetation			Units: m^2 x mrem/yr per µCi/sec				
Nuclide	**Bone**	**Liver**	**Thyroid**	**Kidney**	**Lung**	**Gi-LLi**	**TBody**	**Skin**
RU-105	5.27E+01	0.00E+00	0.00E+00	6.81E+02	0.00E+00	3.23E+04	2.08E+01	0.00E+00
RU-106	1.93E+08	0.00E+00	0.00E+00	3.72E+08	0.00E+00	1.25E+10	2.44E+07	0.00E+00
AG-110M	1.05E+07	9.75E+06	0.00E+00	1.92E+07	0.00E+00	3.98E+09	5.79E+06	0.00E+00
TE-125M	9.67E+07	3.50E+07	2.91E+07	3.93E+08	0.00E+00	3.86E+08	1.30E+07	0.00E+00
TE-127M	3.49E+08	1.25E+08	8.92E+07	1.42E+09	0.00E+00	1.17E+09	4.25E+07	0.00E+00
TE-127	5.61E+03	2.01E+03	4.16E+03	2.28E+04	0.00E+00	4.43E+05	1.21E+03	0.00E+00
TE-129M	2.51E+08	9.36E+07	8.62E+07	1.05E+09	0.00E+00	1.26E+09	3.97E+07	0.00E+00
TE-129	7.12E-04	2.68E-04	5.47E-04	2.99E-03	0.00E+00	5.38E-04	1.74E-04	0.00E+00
TE-131M	9.09E+05	4.45E+05	7.04E+05	4.50E+06	0.00E+00	4.41E+07	3.71E+05	0.00E+00
TE-131	1.37E-15	5.74E-16	1.13E-15	6.02E-15	0.00E+00	1.95E-16	4.34E-16	0.00E+00
TE-132	4.30E+06	2.78E+06	3.07E+06	2.68E+07	0.00E+00	1.32E+08	2.61E+06	0.00E+00
I-130	3.89E+05	1.15E+06	9.72E+07	1.79E+06	0.00E+00	9.87E+05	4.52E+05	0.00E+00
I-131	8.07E+07	1.15E+08	3.78E+10	1.98E+08	0.00E+00	3.05E+07	6.61E+07	0.00E+00
I-132	5.58E+01	1.49E+02	5.22E+03	2.38E+02	0.00E+00	2.80E+01	5.22E+01	0.00E+00
I-133	2.08E+06	3.62E+06	5.32E+08	6.31E+06	0.00E+00	3.25E+06	1.10E+06	0.00E+00
I-134	8.55E-05	2.32E-04	4.02E-03	3.69E-04	0.00E+00	2.02E-07	8.31E-05	0.00E+00
I-135	3.82E+04	1.00E+05	6.60E+06	1.60E+05	0.00E+00	1.13E+05	3.69E+04	0.00E+00
CS-134	4.67E+09	1.11E+10	0.00E+00	3.59E+09	1.19E+09	1.94E+08	9.08E+09	0.00E+00
CS-136	4.24E+07	1.68E+08	0.00E+00	9.32E+07	1.28E+07	1.90E+07	1.21E+08	0.00E+00
CS-137	6.36E+09	8.70E+09	0.00E+00	2.95E+09	9.81E+08	1.68E+08	5.70E+09	0.00E+00
CS-138	3.63E-11	7.17E-11	0.00E+00	5.27E-11	5.21E-12	3.06E-16	3.55E-11	0.00E+00
BA-139	2.47E-02	1.76E-05	0.00E+00	1.64E-05	9.96E-06	4.37E-02	7.22E-04	0.00E+00
BA-140	1.28E+08	1.61E+05	0.00E+00	5.49E+04	9.24E+04	2.65E+08	8.42E+06	0.00E+00
BA-141	0.00E+00	0.00E+00	0.00E+00	0.00E+00	0.00E+00	0.00E+00	0.00E+00	0.00E+00
BA-142	0.00E+00	0.00E+00	0.00E+00	0.00E+00	0.00E+00	0.00E+00	0.00E+00	0.00E+00
LA-140	1.98E+03	9.97E+02	0.00E+00	0.00E+00	0.00E+00	7.32E+07	2.63E+02	0.00E+00
LA-142	1.33E-04	6.05E-05	0.00E+00	0.00E+00	0.00E+00	4.42E-01	1.51E-05	0.00E+00
CE-141	1.97E+05	1.33E+05	0.00E+00	6.18E+04	0.00E+00	5.09E+08	1.51E+04	0.00E+00
CE-143	1.00E+03	7.40E+05	0.00E+00	3.26E+02	0.00E+00	2.77E+07	8.19E+01	0.00E+00
CE-144	3.29E+07	1.38E+07	0.00E+00	8.16E+06	0.00E+00	1.11E+10	1.77E+06	0.00E+00
PR-143	6.28E+04	2.52E+04	0.00E+00	1.45E+04	0.00E+00	2.75E+08	3.11E+03	0.00E+00
PR-144	0.00E+00	0.00E+00	0.00E+00	0.00E+00	0.00E+00	0.00E+00	0.00E+00	0.00E+00
ND-147	3.37E+04	3.90E+04	0.00E+00	2.28E+04	0.00E+00	1.87E+08	2.33E+03	0.00E+00
W-187	3.81E+04	3.19E+04	0.00E+00	0.00E+00	0.00E+00	1.04E+07	1.11E+04	0.00E+00
NP-239	1.43E+03	1.40E+02	0.00E+00	4.38E+02	0.00E+00	2.88E+07	7.75E+01	0.00E+00

* Units for H-3 and C-14 are: mrem/yr per uCi/m^3

TABLE 7-13 MILK INGESTION - INFANT AGE GROUP ($R_{AI(MI)J}$)

Age Group: Infant	Pathway: Milk				Units: m^2 x mrem/yr per µCi/sec			
Nuclide	**Bone**	**Liver**	**Thyroid**	**Kidney**	**Lung**	**Gi-LLi**	**TBody**	**Skin**
H-3 *	0.00E+00	2.16E+03	2.16E+03	2.16E+03	2.16E+03	2.16E+03	2.16E+03	0.00E+00
C-14 *	9.06E+05	1.93E+05	1.93E+05	1.93E+05	1.93E+05	1.93E+05	1.93E+05	0.00E+00
NA-24	1.56E+07	1.56E+07	1.56E+07	1.56E+07	1.56E+07	1.56E+07	1.56E+07	0.00E+00
P-32	1.60E+11	9.43E+09	0.00E+00	0.00E+00	0.00E+00	2.17E+09	6.22E+09	0.00E+00
CR-51	0.00E+00	0.00E+00	1.05E+05	2.30E+04	2.05E+05	4.70E+06	1.61E+05	0.00E+00
MN-54	0.00E+00	3.90E+07	0.00E+00	8.64E+06	0.00E+00	1.43E+07	8.84E+06	0.00E+00
MN-56	0.00E+00	3.00E-02	0.00E+00	2.58E-02	0.00E+00	2.73E+00	5.17E-03	0.00E+00
FE-55	1.35E+08	8.73E+07	0.00E+00	0.00E+00	4.27E+07	1.11E+07	2.33E+07	0.00E+00
FE-59	2.24E+08	3.92E+08	0.00E+00	0.00E+00	1.16E+08	1.87E+08	1.54E+08	0.00E+00
CO-58	0.00E+00	2.43E+07	0.00E+00	0.00E+00	0.00E+00	6.05E+07	6.05E+07	0.00E+00
CO-60	0.00E+00	8.81E+07	0.00E+00	0.00E+00	0.00E+00	2.10E+08	2.08E+08	0.00E+00
NI-63	3.49E+10	2.16E+09	0.00E+00	0.00E+00	0.00E+00	1.07E+08	1.21E+09	0.00E+00
NI-65	3.56E+00	4.03E-01	0.00E+00	0.00E+00	0.00E+00	3.07E+01	1.83E-01	0.00E+00
CU-64	0.00E+00	1.84E+05	0.00E+00	3.12E+05	0.00E+00	3.78E+06	8.53E+04	0.00E+00
ZN-65	5.55E+09	1.90E+10	0.00E+00	9.23E+09	0.00E+00	1.61E+10	8.78E+09	0.00E+00
ZN-69	4.91E-11	8.85E-11	0.00E+00	3.68E-11	0.00E+00	7.21E-09	6.58E-12	0.00E+00
BR-83	0.00E+00	0.00E+00	0.00E+00	0.00E+00	0.00E+00	0.00E+00	9.60E-01	0.00E+00
BR-84	0.00E+00	0.00E+00	0.00E+00	0.00E+00	0.00E+00	0.00E+00	0.00E+00	0.00E+00
BR-85	0.00E+00	0.00E+00	0.00E+00	0.00E+00	0.00E+00	0.00E+00	0.00E+00	0.00E+00
RB-86	0.00E+00	2.23E+10	0.00E+00	0.00E+00	0.00E+00	5.70E+08	1.10E+10	0.00E+00
RB-88	0.00E+00	0.00E+00	0.00E+00	0.00E+00	0.00E+00	0.00E+00	0.00E+00	0.00E+00
RB-89	0.00E+00	0.00E+00	0.00E+00	0.00E+00	0.00E+00	0.00E+00	0.00E+00	0.00E+00
SR-89	1.26E+10	0.00E+00	0.00E+00	0.00E+00	0.00E+00	2.59E+08	3.61E+08	0.00E+00
SR-90	1.22E+11	0.00E+00	0.00E+00	0.00E+00	0.00E+00	1.52E+09	3.10E+10	0.00E+00
SR-91	2.71E+05	0.00E+00	0.00E+00	0.00E+00	0.00E+00	3.20E+05	9.80E+03	0.00E+00
SR-92	4.75E+00	0.00E+00	0.00E+00	0.00E+00	0.00E+00	5.12E+01	1.76E-01	0.00E+00
Y-90	6.83E+02	0.00E+00	0.00E+00	0.00E+00	0.00E+00	9.43E+05	1.83E+01	0.00E+00
Y-91M	5.34E-19	0.00E+00	0.00E+00	0.00E+00	0.00E+00	1.78E-15	1.82E-20	0.00E+00
Y-91	7.33E+04	0.00E+00	0.00E+00	0.00E+00	0.00E+00	5.25E+06	1.95E+03	0.00E+00
Y-92	5.64E-04	0.00E+00	0.00E+00	0.00E+00	0.00E+00	1.08E+01	1.58E-05	0.00E+00
Y-93	2.15E+00	0.00E+00	0.00E+00	0.00E+00	0.00E+00	1.70E+04	5.85E-02	0.00E+00
ZR-95	6.81E+03	1.66E+03	0.00E+00	1.79E+03	0.00E+00	8.26E+05	1.18E+03	0.00E+00
ZR-97	4.06E+00	6.97E-01	0.00E+00	7.03E-01	0.00E+00	4.45E+04	3.19E-01	0.00E+00
NB-95	5.94E+05	2.45E+05	0.00E+00	1.75E+05	0.00E+00	2.07E+08	1.41E+05	0.00E+00
MO-99	0.00E+00	2.08E+08	0.00E+00	3.10E+08	0.00E+00	6.84E+07	4.05E+07	0.00E+00
TC-99M	2.76E+01	5.68E+01	0.00E+00	6.12E+02	2.97E+01	1.65E+04	7.32E+02	0.00E+00
TC-101	0.00E+00	0.00E+00	0.00E+00	0.00E+00	0.00E+00	0.00E+00	0.00E+00	0.00E+00
RU-103	8.67E+03	0.00E+00	0.00E+00	1.80E+04	0.00E+00	1.05E+05	2.90E+03	0.00E+00
RU-105	8.07E-03	0.00E+00	0.00E+00	5.93E-02	0.00E+00	3.21E+00	2.72E-03	0.00E+00
RU-106	1.90E+05	0.00E+00	0.00E+00	2.25E+05	0.00E+00	1.44E+06	2.38E+04	0.00E+00
AG-110M	3.86E+08	2.82E+08	0.00E+00	4.03E+08	0.00E+00	1.46E+10	1.86E+08	0.00E+00

* Units for H-3 and C-14 are: mrem/yr per uCi/m^3

Age Group: Infant	Pathway: Milk				Units: m^2 x mrem/yr per µCi/sec			
Nuclide	**Bone**	**Liver**	**Thyroid**	**Kidney**	**Lung**	**Gi-LLi**	**TBody**	**Skin**
TE-125M	1.51E+08	5.04E+07	5.08E+07	0.00E+00	0.00E+00	7.19E+07	2.04E+07	0.00E+00
TE-127M	4.21E+08	1.40E+08	1.22E+08	1.04E+09	0.00E+00	1.70E+08	5.10E+07	0.00E+00
TE-127	6.33E+03	2.12E+03	5.16E+03	1.55E+04	0.00E+00	1.33E+05	1.36E+03	0.00E+00
TE-129M	5.57E+08	1.91E+08	2.14E+08	1.39E+09	0.00E+00	3.33E+08	8.58E+07	0.00E+00
TE-129	2.80E-09	9.66E-10	2.35E-09	6.98E-09	0.00E+00	2.24E-07	6.54E-10	0.00E+00
TE-131M	3.38E+06	1.36E+06	2.76E+06	9.36E+06	0.00E+00	2.29E+07	1.12E+06	0.00E+00
TE-131	0.00E+00	0.00E+00	0.00E+00	0.00E+00	0.00E+00	0.00E+00	0.00E+00	0.00E+00
TE-132	2.11E+07	1.05E+07	1.54E+07	6.54E+07	0.00E+00	3.87E+07	9.76E+06	0.00E+00
I-130	3.54E+06	7.79E+06	8.74E+08	8.56E+06	0.00E+00	1.67E+06	3.13E+06	0.00E+00
I-131	2.72E+09	3.20E+09	1.05E+12	3.74E+09	0.00E+00	1.14E+08	1.41E+09	0.00E+00
I-132	1.46E+00	2.96E+00	1.39E+02	3.30E+00	0.00E+00	2.40E+00	1.05E+00	0.00E+00
I-133	3.64E+07	5.30E+07	9.64E+09	6.23E+07	0.00E+00	8.97E+06	1.55E+07	0.00E+00
I-134	1.72E-11	3.53E-11	8.22E-10	3.94E-11	0.00E+00	3.64E-11	1.25E-11	0.00E+00
I-135	1.11E+05	2.21E+05	1.98E+07	2.47E+05	0.00E+00	8.01E+04	8.07E+04	0.00E+00
CS-134	3.65E+10	6.80E+10	0.00E+00	1.75E+10	7.18E+09	1.85E+08	6.87E+09	0.00E+00
CS-136	1.97E+09	5.80E+09	0.00E+00	2.31E+09	4.72E+08	8.80E+07	2.16E+09	0.00E+00
CS-137	5.15E+10	6.02E+10	0.00E+00	1.62E+10	6.55E+09	1.88E+08	4.27E+09	0.00E+00
CS-138	0.00E+00	0.00E+00	0.00E+00	0.00E+00	0.00E+00	0.00E+00	0.00E+00	0.00E+00
BA-139	3.68E-07	2.44E-10	0.00E+00	1.47E-10	1.48E-10	2.33E-05	1.07E-08	0.00E+00
BA-140	2.41E+08	2.41E+05	0.00E+00	5.72E+04	1.48E+05	5.92E+07	1.24E+07	0.00E+00
BA-141	0.00E+00	0.00E+00	0.00E+00	0.00E+00	0.00E+00	0.00E+00	0.00E+00	0.00E+00
BA-142	0.00E+00	0.00E+00	0.00E+00	0.00E+00	0.00E+00	0.00E+00	0.00E+00	0.00E+00
LA-140	4.07E+01	1.60E+01	0.00E+00	0.00E+00	0.00E+00	1.88E+05	4.13E+00	0.00E+00
LA-142	8.59E-11	3.16E-11	0.00E+00	0.00E+00	0.00E+00	5.36E-06	7.55E-12	0.00E+00
CE-141	4.34E+04	2.64E+04	0.00E+00	8.15E+03	0.00E+00	1.37E+07	3.11E+03	0.00E+00
CE-143	4.01E+02	2.66E+05	0.00E+00	7.74E+01	0.00E+00	1.55E+06	3.03E+01	0.00E+00
CE-144	2.33E+06	9.52E+05	0.00E+00	3.85E+05	0.00E+00	1.33E+08	1.30E+05	0.00E+00
PR-143	1.49E+03	5.56E+02	0.00E+00	2.07E+02	0.00E+00	7.85E+05	7.38E+01	0.00E+00
PR-144	0.00E+00	0.00E+00	0.00E+00	0.00E+00	0.00E+00	0.00E+00	0.00E+00	0.00E+00
ND-147	8.88E+02	9.12E+02	0.00E+00	3.52E+02	0.00E+00	5.78E+05	5.59E+01	0.00E+00
W-187	6.14E+04	4.27E+04	0.00E+00	0.00E+00	0.00E+00	2.51E+06	1.48E+04	0.00E+00
NP-239	3.66E+01	3.27E+00	0.00E+00	6.53E+00	0.00E+00	9.46E+04	1.85E+00	0.00E+00

* Units for H-3 and C-14 are: mrem/yr per uCi/m^3

TABLE 7-14 MILK INGESTION - CHILD AGE GROUP ($R_{Ai(Mi)J}$)

Age Group: Child	Pathway: Milk				Units: m^2 x mrem/yr per µCi/sec			
Nuclide	**Bone**	**Liver**	**Thyroid**	**Kidney**	**Lung**	**Gi-LLi**	**TBody**	**Skin**
H-3 *	0.00E+00	1.42E+03	1.42E+03	1.42E+03	1.42E+03	1.42E+03	1.42E+03	0.00E+00
C-14 *	4.62E+05	9.25E+04	9.25E+04	9.25E+04	9.25E+04	9.25E+04	9.25E+04	0.00E+00
NA-24	8.96E+06	8.96E+06	8.96E+06	8.96E+06	8.96E+06	8.96E+06	8.96E+06	0.00E+00
P-32	7.78E+10	3.64E+09	0.00E+00	0.00E+00	0.00E+00	2.15E+09	3.00E+09	0.00E+00
CR-51	0.00E+00	0.00E+00	5.65E+04	1.54E+04	1.03E+05	5.40E+06	1.02E+05	0.00E+00
MN-54	0.00E+00	2.10E+07	0.00E+00	5.88E+06	0.00E+00	1.76E+07	5.59E+06	0.00E+00
MN-56	0.00E+00	1.23E-02	0.00E+00	1.48E-02	0.00E+00	1.78E+00	2.77E-03	0.00E+00
FE-55	1.12E+08	5.93E+07	0.00E+00	0.00E+00	3.35E+07	1.10E+07	1.84E+07	0.00E+00
FE-59	1.20E+08	1.94E+08	0.00E+00	0.00E+00	5.64E+07	2.02E+08	9.69E+07	0.00E+00
CO-58	0.00E+00	1.21E+07	0.00E+00	0.00E+00	0.00E+00	7.08E+07	3.71E+07	0.00E+00
CO-60	0.00E+00	4.32E+07	0.00E+00	0.00E+00	0.00E+00	2.39E+08	1.27E+08	0.00E+00
NI-63	2.96E+10	1.59E+09	0.00E+00	0.00E+00	0.00E+00	1.07E+08	1.01E+09	0.00E+00
NI-65	1.68E+00	1.58E-01	0.00E+00	0.00E+00	0.00E+00	1.94E+01	9.25E-02	0.00E+00
CU-64	0.00E+00	7.41E+04	0.00E+00	1.79E+05	0.00E+00	3.48E+06	4.48E+04	0.00E+00
ZN-65	4.13E+09	1.10E+10	0.00E+00	6.94E+09	0.00E+00	1.93E+09	6.85E+09	0.00E+00
ZN-69	2.31E-11	3.33E-11	0.00E+00	2.02E-11	0.00E+00	2.10E-09	3.08E-12	0.00E+00
BR-83	0.00E+00	0.00E+00	0.00E+00	0.00E+00	0.00E+00	0.00E+00	4.52E-01	0.00E+00
BR-84	0.00E+00	0.00E+00	0.00E+00	0.00E+00	0.00E+00	0.00E+00	0.00E+00	0.00E+00
BR-85	0.00E+00	0.00E+00	0.00E+00	0.00E+00	0.00E+00	0.00E+00	0.00E+00	0.00E+00
RB-86	0.00E+00	8.78E+09	0.00E+00	0.00E+00	0.00E+00	5.65E+08	5.40E+09	0.00E+00
RB-88	0.00E+00	0.00E+00	0.00E+00	0.00E+00	0.00E+00	0.00E+00	0.00E+00	0.00E+00
RB-89	0.00E+00	0.00E+00	0.00E+00	0.00E+00	0.00E+00	0.00E+00	0.00E+00	0.00E+00
SR-89	6.62E+09	0.00E+00	0.00E+00	0.00E+00	0.00E+00	2.56E+08	1.89E+08	0.00E+00
SR-90	1.12E+11	0.00E+00	0.00E+00	0.00E+00	0.00E+00	1.51E+09	2.83E+10	0.00E+00
SR-91	1.30E+05	0.00E+00	0.00E+00	0.00E+00	0.00E+00	2.87E+05	4.90E+03	0.00E+00
SR-92	2.23E+00	0.00E+00	0.00E+00	0.00E+00	0.00E+00	4.23E+01	8.96E-02	0.00E+00
Y-90	3.23E+02	0.00E+00	0.00E+00	0.00E+00	0.00E+00	9.19E+05	8.64E+00	0.00E+00
Y-91M	2.52E-19	0.00E+00	0.00E+00	0.00E+00	0.00E+00	4.93E-16	0.00E+00	0.00E+00
Y-91	3.90E+04	0.00E+00	0.00E+00	0.00E+00	0.00E+00	5.20E+06	1.04E+03	0.00E+00
Y-92	2.65E-04	0.00E+00	0.00E+00	0.00E+00	0.00E+00	7.66E+00	7.59E-06	0.00E+00
Y-93	1.01E+00	0.00E+00	0.00E+00	0.00E+00	0.00E+00	1.50E+04	2.77E-02	0.00E+00
ZR-95	3.83E+03	8.43E+02	0.00E+00	1.21E+03	0.00E+00	8.79E+05	7.50E+02	0.00E+00
ZR-97	1.92E+00	2.77E-01	0.00E+00	3.98E-01	0.00E+00	4.20E+04	1.64E-01	0.00E+00
NB-95	3.18E+05	1.24E+05	0.00E+00	1.16E+05	0.00E+00	2.29E+08	8.85E+04	0.00E+00
MO-99	0.00E+00	8.13E+07	0.00E+00	1.74E+08	0.00E+00	6.72E+07	2.01E+07	0.00E+00
TC-99M	1.33E+01	2.60E+01	0.00E+00	3.78E+02	1.32E+01	1.48E+04	4.31E+02	0.00E+00
TC-101	0.00E+00	0.00E+00	0.00E+00	0.00E+00	0.00E+00	0.00E+00	0.00E+00	0.00E+00
RU-103	4.28E+03	0.00E+00	0.00E+00	1.08E+04	0.00E+00	1.11E+05	1.65E+03	0.00E+00
RU-105	3.83E-03	0.00E+00	0.00E+00	3.36E-02	0.00E+00	2.50E+00	1.39E-03	0.00E+00
RU-106	9.24E+04	0.00E+00	0.00E+00	1.25E+05	0.00E+00	1.44E+06	1.15E+04	0.00E+00
AG-110M	2.09E+08	1.41E+08	0.00E+00	2.63E+08	0.00E+00	1.68E+10	1.13E+08	0.00E+00

* Units for H-3 and C-14 are: mrem/yr per uCi/m^3

Age Group: Child	Pathway: Milk				Units: m^2 x mrem/yr per µCi/sec			
Nuclide	Bone	Liver	Thyroid	Kidney	Lung	Gi-LLi	TBody	Skin
TE-125M	7.38E+07	2.00E+07	2.07E+07	0.00E+00	0.00E+00	7.12E+07	9.84E+06	0.00E+00
TE-127M	2.08E+08	5.60E+07	4.97E+07	5.93E+08	0.00E+00	1.68E+08	2.47E+07	0.00E+00
TE-127	2.98E+03	8.04E+02	2.06E+03	8.49E+03	0.00E+00	1.17E+05	6.40E+02	0.00E+00
TE-129M	2.71E+08	7.58E+07	8.75E+07	7.97E+08	0.00E+00	3.31E+08	4.21E+07	0.00E+00
TE-129	1.32E-09	3.69E-10	9.43E-10	3.87E-09	0.00E+00	8.23E-08	3.14E-10	0.00E+00
TE-131M	1.60E+06	5.54E+05	1.14E+06	5.36E+06	0.00E+00	2.25E+07	5.89E+05	0.00E+00
TE-131	0.00E+00	0.00E+00	0.00E+00	0.00E+00	0.00E+00	0.00E+00	0.00E+00	0.00E+00
TE-132	1.03E+07	4.54E+06	6.61E+06	4.22E+07	0.00E+00	4.57E+07	5.49E+06	0.00E+00
I-130	1.72E+06	3.48E+06	3.84E+08	5.21E+06	0.00E+00	1.63E+06	1.79E+06	0.00E+00
I-131	1.30E+09	1.31E+09	4.33E+11	2.15E+09	0.00E+00	1.17E+08	7.45E+08	0.00E+00
I-132	7.02E-01	1.29E+00	5.99E+01	1.98E+00	0.00E+00	1.52E+00	5.94E-01	0.00E+00
I-133	1.72E+07	2.13E+07	3.96E+09	3.55E+07	0.00E+00	8.59E+06	8.06E+06	0.00E+00
I-134	8.30E-12	1.54E-11	3.55E-10	2.36E-11	0.00E+00	1.02E-11	7.09E-12	0.00E+00
I-135	5.35E+04	9.63E+04	8.53E+06	1.48E+05	0.00E+00	7.34E+04	4.56E+04	0.00E+00
CS-134	2.26E+10	3.71E+10	0.00E+00	1.15E+10	4.13E+09	2.00E+08	7.84E+09	0.00E+00
CS-136	1.01E+09	2.77E+09	0.00E+00	1.48E+09	2.20E+08	9.75E+07	1.80E+09	0.00E+00
CS-137	3.22E+10	3.09E+10	0.00E+00	1.01E+10	3.62E+09	1.93E+08	4.55E+09	0.00E+00
CS-138	0.00E+00	0.00E+00	0.00E+00	0.00E+00	0.00E+00	0.00E+00	0.00E+00	0.00E+00
BA-139	1.73E-07	9.24E-11	0.00E+00	8.07E-11	5.43E-11	9.99E-06	5.02E-09	0.00E+00
BA-140	1.17E+08	1.03E+05	0.00E+00	3.34E+04	6.12E+04	5.94E+07	6.84E+06	0.00E+00
BA-141	0.00E+00	0.00E+00	0.00E+00	0.00E+00	0.00E+00	0.00E+00	0.00E+00	0.00E+00
BA-142	0.00E+00	0.00E+00	0.00E+00	0.00E+00	0.00E+00	0.00E+00	0.00E+00	0.00E+00
LA-140	1.95E+01	6.81E+00	0.00E+00	0.00E+00	0.00E+00	1.90E+05	2.29E+00	0.00E+00
LA-142	4.09E-11	1.30E-11	0.00E+00	0.00E+00	0.00E+00	2.59E-06	4.09E-12	0.00E+00
CE-141	2.19E+04	1.09E+04	0.00E+00	4.78E+03	0.00E+00	1.36E+07	1.62E+03	0.00E+00
CE-143	1.89E+02	1.03E+05	0.00E+00	4.30E+01	0.00E+00	1.50E+06	1.49E+01	0.00E+00
CE-144	1.62E+06	5.09E+05	0.00E+00	2.82E+05	0.00E+00	1.33E+08	8.66E+04	0.00E+00
PR-143	7.19E+02	2.16E+02	0.00E+00	1.17E+02	0.00E+00	7.76E+05	3.57E+01	0.00E+00
PR-144	0.00E+00	0.00E+00	0.00E+00	0.00E+00	0.00E+00	0.00E+00	0.00E+00	0.00E+00
ND-147	4.48E+02	3.63E+02	0.00E+00	1.99E+02	0.00E+00	5.75E+05	2.81E+01	0.00E+00
W-187	2.92E+04	1.73E+04	0.00E+00	0.00E+00	0.00E+00	2.43E+06	7.75E+03	0.00E+00
NP-239	1.73E+01	1.24E+00	0.00E+00	3.59E+00	0.00E+00	9.20E+04	8.74E-01	0.00E+00

* Units for H-3 and C-14 are: mrem/yr per uCi/m^3

TABLE 7-15 MILK INGESTION - TEEN AGE GROUP ($R_{Ai(Mi)J}$)

Age Group: Teen	Pathway: Milk				Units: m^2 x mrem/yr per µCi/sec			
Nuclide	**Bone**	**Liver**	**Thyroid**	**Kidney**	**Lung**	**Gi-LLi**	**TBody**	**Skin**
H-3 *	0.00E+00	8.99E+02	8.99E+02	8.99E+02	8.99E+02	8.99E+02	8.99E+02	0.00E+00
C-14 *	1.88E+05	3.76E+04	3.76E+04	3.76E+04	3.76E+04	3.76E+04	3.76E+04	1.88E+05
NA-24	4.30E+06	4.30E+06	4.30E+06	4.30E+06	4.30E+06	4.30E+06	4.30E+06	0.00E+00
P-32	3.16E+10	1.96E+09	0.00E+00	0.00E+00	0.00E+00	2.65E+09	1.22E+09	0.00E+00
CR-51	0.00E+00	0.00E+00	2.77E+04	1.09E+04	7.12E+04	8.38E+06	4.99E+04	0.00E+00
MN-54	0.00E+00	1.40E+07	0.00E+00	4.18E+06	0.00E+00	2.87E+07	2.78E+06	0.00E+00
MN-56	0.00E+00	7.03E-03	0.00E+00	8.89E-03	0.00E+00	4.63E-01	1.25E-03	0.00E+00
FE-55	4.45E+07	3.16E+07	0.00E+00	0.00E+00	2.00E+07	1.37E+07	7.36E+06	0.00E+00
FE-59	5.18E+07	1.21E+08	0.00E+00	0.00E+00	3.81E+07	2.86E+08	4.67E+07	0.00E+00
CO-58	0.00E+00	7.94E+06	0.00E+00	0.00E+00	0.00E+00	1.09E+08	1.83E+07	0.00E+00
CO-60	0.00E+00	2.78E+07	0.00E+00	0.00E+00	0.00E+00	3.62E+08	6.26E+07	0.00E+00
NI-63	1.18E+10	8.35E+08	0.00E+00	0.00E+00	0.00E+00	1.33E+08	4.01E+08	0.00E+00
NI-65	6.88E-01	8.79E-02	0.00E+00	0.00E+00	0.00E+00	4.77E+00	4.01E-02	0.00E+00
CU-64	0.00E+00	4.22E+04	0.00E+00	1.07E+05	0.00E+00	3.27E+06	1.98E+04	0.00E+00
ZN-65	2.11E+09	7.31E+09	0.00E+00	4.68E+09	0.00E+00	3.10E+09	3.41E+09	0.00E+00
ZN-69	9.38E-12	1.79E-11	0.00E+00	1.17E-11	0.00E+00	3.29E-11	1.25E-12	0.00E+00
BR-83	0.00E+00	0.00E+00	0.00E+00	0.00E+00	0.00E+00	0.00E+00	1.84E-01	0.00E+00
BR-84	0.00E+00	0.00E+00	0.00E+00	0.00E+00	0.00E+00	0.00E+00	0.00E+00	0.00E+00
BR-85	0.00E+00	0.00E+00	0.00E+00	0.00E+00	0.00E+00	0.00E+00	0.00E+00	0.00E+00
RB-86	0.00E+00	4.73E+09	0.00E+00	0.00E+00	0.00E+00	7.01E+08	2.22E+09	0.00E+00
RB-88	0.00E+00	0.00E+00	0.00E+00	0.00E+00	0.00E+00	0.00E+00	0.00E+00	0.00E+00
RB-89	0.00E+00	0.00E+00	0.00E+00	0.00E+00	0.00E+00	0.00E+00	0.00E+00	0.00E+00
SR-89	2.67E+09	0.00E+00	0.00E+00	0.00E+00	0.00E+00	3.18E+08	7.66E+07	0.00E+00
SR-90	6.61E+10	0.00E+00	0.00E+00	0.00E+00	0.00E+00	1.86E+09	1.63E+10	0.00E+00
SR-91	5.30E+04	0.00E+00	0.00E+00	0.00E+00	0.00E+00	2.40E+05	2.11E+03	0.00E+00
SR-92	9.15E-01	0.00E+00	0.00E+00	0.00E+00	0.00E+00	2.33E+01	3.90E-02	0.00E+00
Y-90	1.30E+02	0.00E+00	0.00E+00	0.00E+00	0.00E+00	1.08E+06	3.51E+00	0.00E+00
Y-91M	1.03E-19	0.00E+00	0.00E+00	0.00E+00	0.00E+00	4.87E-18	0.00E+00	0.00E+00
Y-91	1.58E+04	0.00E+00	0.00E+00	0.00E+00	0.00E+00	6.48E+06	4.24E+02	0.00E+00
Y-92	1.08E-04	0.00E+00	0.00E+00	0.00E+00	0.00E+00	2.97E+00	3.13E-06	0.00E+00
Y-93	4.10E-01	0.00E+00	0.00E+00	0.00E+00	0.00E+00	1.25E+04	1.12E-02	0.00E+00
ZR-95	1.65E+03	5.21E+02	0.00E+00	7.65E+02	0.00E+00	1.20E+06	3.58E+02	0.00E+00
ZR-97	7.89E-01	1.56E-01	0.00E+00	2.37E-01	0.00E+00	4.23E+04	7.19E-02	0.00E+00
NB-95	1.41E+05	7.82E+04	0.00E+00	7.58E+04	0.00E+00	3.34E+08	4.30E+04	0.00E+00
MO-99	0.00E+00	4.47E+07	0.00E+00	1.02E+08	0.00E+00	8.00E+07	8.52E+06	0.00E+00
TC-99M	5.78E+00	1.61E+01	0.00E+00	2.40E+02	8.94E+00	1.06E+04	2.09E+02	0.00E+00
TC-101	0.00E+00	0.00E+00	0.00E+00	0.00E+00	0.00E+00	0.00E+00	0.00E+00	0.00E+00
RU-103	1.81E+03	0.00E+00	0.00E+00	6.38E+03	0.00E+00	1.51E+05	7.74E+02	0.00E+00
RU-105	1.57E-03	0.00E+00	0.00E+00	1.98E-02	0.00E+00	1.27E+00	6.08E-04	0.00E+00

* Units for H-3 and C-14 are: mrem/yr per uCi/m^3

Age Group: Teen	Pathway: Milk				Units: m^2 x mrem/yr per µCi/sec			
Nuclide	Bone	Liver	Thyroid	Kidney	Lung	Gi-LLi	TBody	Skin
RU-106	3.75E+04	0.00E+00	0.00E+00	7.24E+04	0.00E+00	1.80E+06	4.73E+03	0.00E+00
AG-110M	9.63E+07	9.11E+07	0.00E+00	1.74E+08	0.00E+00	2.56E+10	5.54E+07	0.00E+00
TE-125M	3.01E+07	1.08E+07	8.40E+06	0.00E+00	0.00E+00	8.87E+07	4.02E+06	0.00E+00
TE-127M	8.44E+07	2.99E+07	2.01E+07	3.42E+08	0.00E+00	2.10E+08	1.00E+07	0.00E+00
TE-127	1.21E+03	4.30E+02	8.37E+02	4.91E+03	0.00E+00	9.37E+04	2.61E+02	0.00E+00
TE-129M	1.10E+08	4.09E+07	3.55E+07	4.61E+08	0.00E+00	4.13E+08	1.74E+07	0.00E+00
TE-129	5.36E-10	2.00E-10	3.83E-10	2.25E-09	0.00E+00	2.93E-09	1.30E-10	0.00E+00
TE-131M	6.57E+05	3.15E+05	4.74E+05	3.29E+06	0.00E+00	2.53E+07	2.63E+05	0.00E+00
TE-131	0.00E+00	0.00E+00	0.00E+00	0.00E+00	0.00E+00	0.00E+00	0.00E+00	0.00E+00
TE-132	4.30E+06	2.72E+06	2.87E+06	2.61E+07	0.00E+00	8.62E+07	2.56E+06	0.00E+00
I-130	7.37E+05	2.13E+06	1.74E+08	3.28E+06	0.00E+00	1.64E+06	8.51E+05	0.00E+00
I-131	5.37E+08	7.52E+08	2.19E+11	1.29E+09	0.00E+00	1.49E+08	4.04E+08	0.00E+00
I-132	2.97E-01	7.77E-01	2.62E+01	1.22E+00	0.00E+00	3.38E-01	2.79E-01	0.00E+00
I-133	7.09E+06	1.20E+07	1.68E+09	2.11E+07	0.00E+00	9.11E+06	3.67E+06	0.00E+00
I-134	3.51E-12	9.29E-12	1.55E-10	1.46E-11	0.00E+00	1.22E-13	3.34E-12	0.00E+00
I-135	2.26E+04	5.82E+04	3.74E+06	9.19E+04	0.00E+00	6.45E+04	2.16E+04	0.00E+00
CS-134	9.81E+09	2.31E+10	0.00E+00	7.34E+09	2.80E+09	2.87E+08	1.07E+10	0.00E+00
CS-136	4.47E+08	1.76E+09	0.00E+00	9.58E+08	1.51E+08	1.42E+08	1.18E+09	0.00E+00
CS-137	1.34E+10	1.78E+10	0.00E+00	6.06E+09	2.35E+09	2.53E+08	6.20E+09	0.00E+00
CS-138	0.00E+00	0.00E+00	0.00E+00	0.00E+00	0.00E+00	0.00E+00	0.00E+00	0.00E+00
BA-139	7.04E-08	4.95E-11	0.00E+00	4.67E-11	3.41E-11	6.28E-07	2.05E-09	0.00E+00
BA-140	4.85E+07	5.95E+04	0.00E+00	2.02E+04	4.00E+04	7.49E+07	3.13E+06	0.00E+00
BA-141	0.00E+00	0.00E+00	0.00E+00	0.00E+00	0.00E+00	0.00E+00	0.00E+00	0.00E+00
BA-142	0.00E+00	0.00E+00	0.00E+00	0.00E+00	0.00E+00	0.00E+00	0.00E+00	0.00E+00
LA-140	8.13E+00	4.00E+00	0.00E+00	0.00E+00	0.00E+00	2.29E+05	1.06E+00	0.00E+00
LA-142	1.69E-11	7.53E-12	0.00E+00	0.00E+00	0.00E+00	2.29E-07	1.87E-12	0.00E+00
CE-141	8.88E+03	5.93E+03	0.00E+00	2.79E+03	0.00E+00	1.70E+07	6.81E+02	0.00E+00
CE-143	7.71E+01	5.61E+04	0.00E+00	2.52E+01	0.00E+00	1.69E+06	6.27E+00	0.00E+00
CE-144	6.58E+05	2.72E+05	0.00E+00	1.63E+05	0.00E+00	1.66E+08	3.54E+04	0.00E+00
PR-143	2.91E+02	1.16E+02	0.00E+00	6.74E+01	0.00E+00	9.56E+05	1.45E+01	0.00E+00
PR-144	0.00E+00	0.00E+00	0.00E+00	0.00E+00	0.00E+00	0.00E+00	0.00E+00	0.00E+00
ND-147	1.83E+02	1.98E+02	0.00E+00	1.17E+02	0.00E+00	7.16E+05	1.19E+01	0.00E+00
W-187	1.20E+04	9.81E+03	0.00E+00	0.00E+00	0.00E+00	2.65E+06	3.44E+03	0.00E+00
NP-239	7.03E+00	6.63E-01	0.00E+00	2.08E+00	0.00E+00	1.07E+05	3.68E-01	0.00E+00

* Units for H-3 and C-14 are: mrem/yr per uCi/m^3

TABLE 7-16 MILK INGESTION - ADULT AGE GROUP ($R_{AI(MI)J}$)

Age Group: Adult	Pathway: Milk				Units: m^2 x mrem/yr per µCi/sec			
Nuclide	**Bone**	**Liver**	**Thyroid**	**Kidney**	**Lung**	**Gi-LLi**	**TBody**	**Skin**
H-3 *	0.00E+00	6.90E+02	6.90E+02	6.90E+02	6.90E+02	6.90E+02	6.90E+02	0.00E+00
C-14 *	1.02E+05	2.04E+04	2.04E+04	2.04E+04	2.04E+04	2.04E+04	2.04E+04	0.00E+00
NA-24	2.47E+06	2.47E+06	2.47E+06	2.47E+06	2.47E+06	2.47E+06	2.47E+06	0.00E+00
P-32	1.71E+10	1.06E+09	0.00E+00	0.00E+00	0.00E+00	1.92E+09	6.61E+08	0.00E+00
CR-51	0.00E+00	0.00E+00	1.71E+04	6.29E+03	3.79E+04	7.18E+06	2.86E+04	0.00E+00
MN-54	0.00E+00	8.41E+06	0.00E+00	2.50E+06	0.00E+00	2.58E+07	1.61E+06	0.00E+00
MN-56	0.00E+00	3.96E-03	0.00E+00	5.03E-03	0.00E+00	1.26E-01	7.03E-04	0.00E+00
FE-55	2.51E+07	1.74E+07	0.00E+00	0.00E+00	9.68E+06	9.95E+06	4.05E+06	0.00E+00
FE-59	2.97E+07	6.98E+07	0.00E+00	0.00E+00	1.95E+07	2.33E+08	2.67E+07	0.00E+00
CO-58	0.00E+00	4.72E+06	0.00E+00	0.00E+00	0.00E+00	9.56E+07	1.06E+07	0.00E+00
CO-60	0.00E+00	1.64E+07	0.00E+00	0.00E+00	0.00E+00	3.08E+08	3.62E+07	0.00E+00
NI-63	6.73E+09	4.66E+08	0.00E+00	0.00E+00	0.00E+00	9.73E+07	2.26E+08	0.00E+00
NI-65	3.76E-01	4.88E-02	0.00E+00	0.00E+00	0.00E+00	1.24E+00	2.23E-02	0.00E+00
CU-64	0.00E+00	2.37E+04	0.00E+00	5.97E+04	0.00E+00	2.02E+06	1.11E+04	0.00E+00
ZN-65	1.37E+09	4.36E+09	0.00E+00	2.92E+09	0.00E+00	2.75E+09	1.97E+09	0.00E+00
ZN-69	5.09E-12	9.74E-12	0.00E+00	6.33E-12	0.00E+00	1.46E-12	6.78E-13	0.00E+00
BR-83	0.00E+00	0.00E+00	0.00E+00	0.00E+00	0.00E+00	1.44E-01	9.99E-02	0.00E+00
BR-84	0.00E+00	0.00E+00	0.00E+00	0.00E+00	0.00E+00	0.00E+00	0.00E+00	0.00E+00
BR-85	0.00E+00	0.00E+00	0.00E+00	0.00E+00	0.00E+00	0.00E+00	0.00E+00	0.00E+00
RB-86	0.00E+00	2.60E+09	0.00E+00	0.00E+00	0.00E+00	5.12E+08	1.21E+09	0.00E+00
RB-88	0.00E+00	0.00E+00	0.00E+00	0.00E+00	0.00E+00	0.00E+00	0.00E+00	0.00E+00
RB-89	0.00E+00	0.00E+00	0.00E+00	0.00E+00	0.00E+00	0.00E+00	0.00E+00	0.00E+00
SR-89	1.45E+09	0.00E+00	0.00E+00	0.00E+00	0.00E+00	2.33E+08	4.16E+07	0.00E+00
SR-90	4.68E+10	0.00E+00	0.00E+00	0.00E+00	0.00E+00	1.35E+09	1.15E+10	0.00E+00
SR-91	2.88E+04	0.00E+00	0.00E+00	0.00E+00	0.00E+00	1.37E+05	1.16E+03	0.00E+00
SR-92	5.00E-01	0.00E+00	0.00E+00	0.00E+00	0.00E+00	9.90E+00	2.16E-02	0.00E+00
Y-90	7.10E+01	0.00E+00	0.00E+00	0.00E+00	0.00E+00	7.53E+05	1.90E+00	0.00E+00
Y-91M	5.63E-20	0.00E+00	0.00E+00	0.00E+00	0.00E+00	1.65E-19	0.00E+00	0.00E+00
Y-91	8.59E+03	0.00E+00	0.00E+00	0.00E+00	0.00E+00	4.73E+06	2.30E+02	0.00E+00
Y-92	5.85E-05	0.00E+00	0.00E+00	0.00E+00	0.00E+00	1.02E+00	1.71E-06	0.00E+00
Y-93	2.22E-01	0.00E+00	0.00E+00	0.00E+00	0.00E+00	7.05E+03	6.14E-03	0.00E+00
ZR-95	9.44E+02	3.03E+02	0.00E+00	4.75E+02	0.00E+00	9.59E+05	2.05E+02	0.00E+00
ZR-97	4.33E-01	8.74E-02	0.00E+00	1.32E-01	0.00E+00	2.71E+04	4.00E-02	0.00E+00
NB-95	8.27E+04	4.60E+04	0.00E+00	4.54E+04	0.00E+00	2.79E+08	2.47E+04	0.00E+00
MO-99	0.00E+00	2.47E+07	0.00E+00	5.60E+07	0.00E+00	5.74E+07	4.71E+06	0.00E+00
TC-99M	3.33E+00	9.41E+00	0.00E+00	1.43E+02	4.61E+00	5.57E+03	1.20E+02	0.00E+00
TC-101	0.00E+00	0.00E+00	0.00E+00	0.00E+00	0.00E+00	0.00E+00	0.00E+00	0.00E+00
RU-103	1.02E+03	0.00E+00	0.00E+00	3.88E+03	0.00E+00	1.19E+05	4.39E+02	0.00E+00
RU-105	8.58E-04	0.00E+00	0.00E+00	1.11E-02	0.00E+00	5.25E-01	3.39E-04	0.00E+00

* Units for H-3 and C-14 are: mrem/yr per uCi/m^3

Age Group: Adult	Pathway: Milk				Units: m^2 x mrem/yr per µCi/sec			
Nuclide	Bone	Liver	Thyroid	Kidney	Lung	Gi-LLi	TBody	Skin
RU-106	2.04E+04	0.00E+00	0.00E+00	3.94E+04	0.00E+00	1.32E+06	2.58E+03	0.00E+00
AG-110M	5.82E+07	5.39E+07	0.00E+00	1.06E+08	0.00E+00	2.20E+10	3.20E+07	0.00E+00
TE-125M	1.63E+07	5.91E+06	4.90E+06	6.63E+07	0.00E+00	6.51E+07	2.18E+06	0.00E+00
TE-127M	4.58E+07	1.64E+07	1.17E+07	1.86E+08	0.00E+00	1.54E+08	5.58E+06	0.00E+00
TE-127	6.55E+02	2.35E+02	4.85E+02	2.67E+03	0.00E+00	5.16E+04	1.42E+02	0.00E+00
TE-129M	6.02E+07	2.25E+07	2.07E+07	2.51E+08	0.00E+00	3.03E+08	9.52E+06	0.00E+00
TE-129	2.91E-10	1.09E-10	2.23E-10	1.22E-09	0.00E+00	2.20E-10	7.09E-11	0.00E+00
TE-131M	3.61E+05	1.77E+05	2.80E+05	1.79E+06	0.00E+00	1.75E+07	1.47E+05	0.00E+00
TE-131	0.00E+00	0.00E+00	0.00E+00	0.00E+00	0.00E+00	0.00E+00	0.00E+00	0.00E+00
TE-132	2.41E+06	1.56E+06	1.72E+06	1.50E+07	0.00E+00	7.36E+07	1.46E+06	0.00E+00
I-130	4.19E+05	1.24E+06	1.05E+08	1.93E+06	0.00E+00	1.06E+06	4.88E+05	0.00E+00
I-131	2.96E+08	4.23E+08	1.39E+11	7.26E+08	0.00E+00	1.12E+08	2.43E+08	0.00E+00
I-132	1.67E-01	4.48E-01	1.57E+01	7.13E-01	0.00E+00	8.41E-02	1.57E-01	0.00E+00
I-133	3.88E+06	6.76E+06	9.93E+08	1.18E+07	0.00E+00	6.07E+06	2.06E+06	0.00E+00
I-134	1.97E-12	5.36E-12	9.29E-11	8.52E-12	0.00E+00	4.67E-15	1.92E-12	0.00E+00
I-135	1.27E+04	3.33E+04	2.20E+06	5.34E+04	0.00E+00	3.76E+04	1.23E+04	0.00E+00
CS-134	5.65E+09	1.34E+10	0.00E+00	4.35E+09	1.44E+09	2.35E+08	1.10E+10	0.00E+00
CS-136	2.63E+08	1.04E+09	0.00E+00	5.77E+08	7.91E+07	1.18E+08	7.46E+08	0.00E+00
CS-137	7.38E+09	1.01E+10	0.00E+00	3.43E+09	1.14E+09	1.95E+08	6.61E+09	0.00E+00
CS-138	0.00E+00	0.00E+00	0.00E+00	0.00E+00	0.00E+00	0.00E+00	0.00E+00	0.00E+00
BA-139	3.81E-08	2.71E-11	0.00E+00	2.54E-11	1.54E-11	6.75E-08	1.12E-09	0.00E+00
BA-140	2.69E+07	3.38E+04	0.00E+00	1.15E+04	1.93E+04	5.54E+07	1.76E+06	0.00E+00
BA-141	0.00E+00	0.00E+00	0.00E+00	0.00E+00	0.00E+00	0.00E+00	0.00E+00	0.00E+00
BA-142	0.00E+00	0.00E+00	0.00E+00	0.00E+00	0.00E+00	0.00E+00	0.00E+00	0.00E+00
LA-140	4.53E+00	2.28E+00	0.00E+00	0.00E+00	0.00E+00	1.68E+05	6.03E-01	0.00E+00
LA-142	9.39E-12	4.27E-12	0.00E+00	0.00E+00	0.00E+00	3.12E-08	1.06E-12	0.00E+00
CE-141	4.84E+03	3.28E+03	0.00E+00	1.52E+03	0.00E+00	1.25E+07	3.72E+02	0.00E+00
CE-143	4.19E+01	3.10E+04	0.00E+00	1.37E+01	0.00E+00	1.16E+06	3.43E+00	0.00E+00
CE-144	3.58E+05	1.50E+05	0.00E+00	8.87E+04	0.00E+00	1.21E+08	1.92E+04	0.00E+00
PR-143	1.58E+02	6.34E+01	0.00E+00	3.66E+01	0.00E+00	6.93E+05	7.84E+00	0.00E+00
PR-144	0.00E+00	0.00E+00	0.00E+00	0.00E+00	0.00E+00	0.00E+00	0.00E+00	0.00E+00
ND-147	9.48E+01	1.10E+02	0.00E+00	6.41E+01	0.00E+00	5.26E+05	6.56E+00	0.00E+00
W-187	6.58E+03	5.50E+03	0.00E+00	0.00E+00	0.00E+00	1.80E+06	1.92E+03	0.00E+00
NP-239	3.69E+00	3.62E-01	0.00E+00	1.13E+00	0.00E+00	7.43E+04	2.00E-01	0.00E+00

* Units for H-3 and C-14 are: mrem/yr per uCi/m^3

TABLE 7-17 MEAT INGESTION - CHILD AGE GROUP ($R_{AI(ME)J}$)

Age Group: Child	Pathway: Meat				Units: m^2 x mrem/yr per µCi/sec			
Nuclide	**Bone**	**Liver**	**Thyroid**	**Kidney**	**Lung**	**Gi-LLi**	**TBody**	**Skin**
H-3 *	0.00E+00	2.12E+02	2.12E+02	2.12E+02	2.12E+02	2.12E+02	2.12E+02	0.00E+00
C-14 *	5.74E+04	1.15E+04	1.15E+04	1.15E+04	1.15E+04	1.15E+04	1.15E+04	0.00E+00
NA-24	1.89E-03	1.89E-03	1.89E-03	1.89E-03	1.89E-03	1.89E-03	1.89E-03	0.00E+00
P-32	7.43E+09	3.48E+08	0.00E+00	0.00E+00	0.00E+00	2.05E+08	2.87E+08	0.00E+00
CR-51	0.00E+00	0.00E+00	4.88E+03	1.33E+03	8.90E+03	4.66E+05	8.78E+03	0.00E+00
MN-54	0.00E+00	8.01E+06	0.00E+00	2.25E+06	0.00E+00	6.72E+06	2.13E+06	0.00E+00
MN-56	0.00E+00	0.00E+00	0.00E+00	0.00E+00	0.00E+00	0.00E+00	0.00E+00	0.00E+00
FE-55	4.57E+08	2.42E+08	0.00E+00	0.00E+00	1.37E+08	4.49E+07	7.51E+07	0.00E+00
FE-59	3.76E+08	6.09E+08	0.00E+00	0.00E+00	1.76E+08	6.34E+08	3.03E+08	0.00E+00
CO-58	0.00E+00	1.64E+07	0.00E+00	0.00E+00	0.00E+00	9.59E+07	5.03E+07	0.00E+00
CO-60	0.00E+00	6.93E+07	0.00E+00	0.00E+00	0.00E+00	3.84E+08	2.04E+08	0.00E+00
NI-63	2.91E+10	1.56E+09	0.00E+00	0.00E+00	0.00E+00	1.05E+08	9.91E+08	0.00E+00
NI-65	0.00E+00	0.00E+00	0.00E+00	0.00E+00	0.00E+00	0.00E+00	0.00E+00	0.00E+00
CU-64	0.00E+00	2.85E-07	0.00E+00	6.89E-07	0.00E+00	1.34E-05	1.72E-07	0.00E+00
ZN-65	3.75E+08	1.00E+09	0.00E+00	6.30E+08	0.00E+00	1.76E+08	6.22E+08	0.00E+00
ZN-69	0.00E+00	0.00E+00	0.00E+00	0.00E+00	0.00E+00	0.00E+00	0.00E+00	0.00E+00
BR-83	0.00E+00	0.00E+00	0.00E+00	0.00E+00	0.00E+00	0.00E+00	0.00E+00	0.00E+00
BR-84	0.00E+00	0.00E+00	0.00E+00	0.00E+00	0.00E+00	0.00E+00	0.00E+00	0.00E+00
BR-85	0.00E+00	0.00E+00	0.00E+00	0.00E+00	0.00E+00	0.00E+00	0.00E+00	0.00E+00
RB-86	0.00E+00	5.79E+08	0.00E+00	0.00E+00	0.00E+00	3.72E+07	3.56E+08	0.00E+00
RB-88	0.00E+00	0.00E+00	0.00E+00	0.00E+00	0.00E+00	0.00E+00	0.00E+00	0.00E+00
RB-89	0.00E+00	0.00E+00	0.00E+00	0.00E+00	0.00E+00	0.00E+00	0.00E+00	0.00E+00
SR-89	4.81E+08	0.00E+00	0.00E+00	0.00E+00	0.00E+00	1.86E+07	1.38E+07	0.00E+00
SR-90	1.04E+10	0.00E+00	0.00E+00	0.00E+00	0.00E+00	1.40E+08	2.64E+09	0.00E+00
SR-91	2.36E-10	0.00E+00	0.00E+00	0.00E+00	0.00E+00	5.20E-10	8.89E-12	0.00E+00
SR-92	0.00E+00	0.00E+00	0.00E+00	0.00E+00	0.00E+00	0.00E+00	0.00E+00	0.00E+00
Y-90	1.74E+02	0.00E+00	0.00E+00	0.00E+00	0.00E+00	4.95E+05	4.65E+00	0.00E+00
Y-91M	0.00E+00	0.00E+00	0.00E+00	0.00E+00	0.00E+00	0.00E+00	0.00E+00	0.00E+00
Y-91	1.80E+06	0.00E+00	0.00E+00	0.00E+00	0.00E+00	2.40E+08	4.82E+04	0.00E+00
Y-92	0.00E+00	0.00E+00	0.00E+00	0.00E+00	0.00E+00	0.00E+00	0.00E+00	0.00E+00
Y-93	7.24E-12	0.00E+00	0.00E+00	0.00E+00	0.00E+00	1.08E-07	1.99E-13	0.00E+00
ZR-95	2.67E+06	5.86E+05	0.00E+00	8.39E+05	0.00E+00	6.11E+08	5.22E+05	0.00E+00
ZR-97	3.24E-05	4.68E-06	0.00E+00	6.72E-06	0.00E+00	7.09E-01	2.76E-06	0.00E+00
NB-95	3.11E+06	1.21E+06	0.00E+00	1.14E+06	0.00E+00	2.24E+09	8.64E+05	0.00E+00
MO-99	0.00E+00	1.15E+05	0.00E+00	2.45E+05	0.00E+00	9.50E+04	2.84E+04	0.00E+00
TC-99M	0.00E+00	1.26E-20	0.00E+00	1.83E-19	0.00E+00	7.16E-18	2.09E-19	0.00E+00
TC-101	0.00E+00	0.00E+00	0.00E+00	0.00E+00	0.00E+00	0.00E+00	0.00E+00	0.00E+00
RU-103	1.55E+08	0.00E+00	0.00E+00	3.90E+08	0.00E+00	4.01E+09	5.96E+07	0.00E+00
RU-105	0.00E+00	0.00E+00	0.00E+00	0.00E+00	0.00E+00	0.00E+00	0.00E+00	0.00E+00

* Units for H-3 and C-14 are: mrem/yr per uCi/m^3

Age Group: Child	Pathway: Meat				Units: m^2 x mrem/yr per µCi/sec			
Nuclide	Bone	Liver	Thyroid	Kidney	Lung	Gi-LLi	TBody	Skin
RU-106	4.44E+09	0.00E+00	0.00E+00	5.99E+09	0.00E+00	6.90E+10	5.54E+08	0.00E+00
AG-110M	8.39E+06	5.67E+06	0.00E+00	1.06E+07	0.00E+00	6.74E+08	4.53E+06	0.00E+00
TE-125M	5.70E+08	1.54E+08	1.60E+08	0.00E+00	0.00E+00	5.50E+08	7.60E+07	0.00E+00
TE-127M	1.78E+09	4.78E+08	4.24E+08	5.06E+09	0.00E+00	1.44E+09	2.11E+08	0.00E+00
TE-127	3.48E-10	9.39E-11	2.41E-10	9.91E-10	0.00E+00	1.36E-08	7.47E-11	0.00E+00
TE-129M	1.79E+09	5.00E+08	5.77E+08	5.26E+09	0.00E+00	2.18E+09	2.78E+08	0.00E+00
TE-129	0.00E+00	0.00E+00	0.00E+00	0.00E+00	0.00E+00	0.00E+00	0.00E+00	0.00E+00
TE-131M	7.06E+02	2.44E+02	5.02E+02	2.36E+03	0.00E+00	9.91E+03	2.60E+02	0.00E+00
TE-131	0.00E+00	0.00E+00	0.00E+00	0.00E+00	0.00E+00	0.00E+00	0.00E+00	0.00E+00
TE-132	2.14E+06	9.47E+05	1.38E+06	8.79E+06	0.00E+00	9.54E+06	1.14E+06	0.00E+00
I-130	3.01E-06	6.08E-06	6.70E-04	9.09E-06	0.00E+00	2.84E-06	3.13E-06	0.00E+00
I-131	1.66E+07	1.67E+07	5.51E+09	2.74E+07	0.00E+00	1.48E+06	9.47E+06	0.00E+00
I-132	0.00E+00	0.00E+00	0.00E+00	0.00E+00	0.00E+00	0.00E+00	0.00E+00	0.00E+00
I-133	5.85E-01	7.24E-01	1.34E+02	1.21E+00	0.00E+00	2.92E-01	2.74E-01	0.00E+00
I-134	0.00E+00	0.00E+00	0.00E+00	0.00E+00	0.00E+00	0.00E+00	0.00E+00	0.00E+00
I-135	6.09E-17	1.10E-16	9.71E-15	1.68E-16	0.00E+00	8.36E-17	5.19E-17	0.00E+00
CS-134	9.22E+08	1.51E+09	0.00E+00	4.69E+08	1.68E+08	8.16E+06	3.19E+08	0.00E+00
CS-136	1.61E+07	4.44E+07	0.00E+00	2.36E+07	3.52E+06	1.56E+06	2.87E+07	0.00E+00
CS-137	1.33E+09	1.28E+09	0.00E+00	4.16E+08	1.50E+08	7.99E+06	1.88E+08	0.00E+00
CS-138	0.00E+00	0.00E+00	0.00E+00	0.00E+00	0.00E+00	0.00E+00	0.00E+00	0.00E+00
BA-139	0.00E+00	0.00E+00	0.00E+00	0.00E+00	0.00E+00	0.00E+00	0.00E+00	0.00E+00
BA-140	4.39E+07	3.85E+04	0.00E+00	1.25E+04	2.29E+04	2.23E+07	2.56E+06	0.00E+00
BA-141	0.00E+00	0.00E+00	0.00E+00	0.00E+00	0.00E+00	0.00E+00	0.00E+00	0.00E+00
BA-142	0.00E+00	0.00E+00	0.00E+00	0.00E+00	0.00E+00	0.00E+00	0.00E+00	0.00E+00
LA-140	5.72E-02	2.00E-02	0.00E+00	0.00E+00	0.00E+00	5.57E+02	6.74E-03	0.00E+00
LA-142	0.00E+00	0.00E+00	0.00E+00	0.00E+00	0.00E+00	0.00E+00	0.00E+00	0.00E+00
CE-141	2.22E+04	1.11E+04	0.00E+00	4.86E+03	0.00E+00	1.38E+07	1.64E+03	0.00E+00
CE-143	3.36E-02	1.82E+01	0.00E+00	7.64E-03	0.00E+00	2.67E+02	2.64E-03	0.00E+00
CE-144	2.32E+06	7.26E+05	0.00E+00	4.02E+05	0.00E+00	1.89E+08	1.24E+05	0.00E+00
PR-143	3.36E+04	1.01E+04	0.00E+00	5.46E+03	0.00E+00	3.62E+07	1.67E+03	0.00E+00
PR-144	0.00E+00	0.00E+00	0.00E+00	0.00E+00	0.00E+00	0.00E+00	0.00E+00	0.00E+00
ND-147	1.19E+04	9.66E+03	0.00E+00	5.30E+03	0.00E+00	1.53E+07	7.48E+02	0.00E+00
W-187	3.45E-02	2.04E-02	0.00E+00	0.00E+00	0.00E+00	2.87E+00	9.16E-03	0.00E+00
NP-239	4.35E-01	3.12E-02	0.00E+00	9.03E-02	0.00E+00	2.31E+03	2.19E-02	0.00E+00

* Units for H-3 and C-14 are: mrem/yr per uCi/m^3

TABLE 7-18 MEAT INGESTION - TEEN AGE GROUP ($R_{AI(ME)J}$)

Age Group: Teen	Pathway: Meat				Units: m^2 x mrem/yr per µCi/sec			
Nuclide	**Bone**	**Liver**	**Thyroid**	**Kidney**	**Lung**	**Gi-LLi**	**TBody**	**Skin**
H-3 *	0.00E+00	1.75E+02	1.75E+02	1.75E+02	1.75E+02	1.75E+02	1.75E+02	0.00E+00
C-14 *	3.06E+04	6.11E+03	6.11E+03	6.11E+03	6.11E+03	6.11E+03	6.11E+03	0.00E+00
NA-24	1.19E-03	1.19E-03	1.19E-03	1.19E-03	1.19E-03	1.19E-03	1.19E-03	0.00E+00
P-32	3.94E+09	2.44E+08	0.00E+00	0.00E+00	0.00E+00	3.31E+08	1.53E+08	0.00E+00
CR-51	0.00E+00	0.00E+00	3.13E+03	1.23E+03	8.04E+03	9.47E+05	5.63E+03	0.00E+00
MN-54	0.00E+00	7.00E+06	0.00E+00	2.09E+06	0.00E+00	1.44E+07	1.39E+06	0.00E+00
MN-56	0.00E+00	0.00E+00	0.00E+00	0.00E+00	0.00E+00	0.00E+00	0.00E+00	0.00E+00
FE-55	2.38E+08	1.69E+08	0.00E+00	0.00E+00	1.07E+08	7.31E+07	3.94E+07	0.00E+00
FE-59	2.12E+08	4.95E+08	0.00E+00	0.00E+00	1.56E+08	1.17E+09	1.91E+08	0.00E+00
CO-58	0.00E+00	1.41E+07	0.00E+00	0.00E+00	0.00E+00	1.94E+08	3.24E+07	0.00E+00
CO-60	0.00E+00	5.83E+07	0.00E+00	0.00E+00	0.00E+00	7.60E+08	1.31E+08	0.00E+00
NI-63	1.52E+10	1.07E+09	0.00E+00	0.00E+00	0.00E+00	1.71E+08	5.15E+08	0.00E+00
NI-65	0.00E+00	0.00E+00	0.00E+00	0.00E+00	0.00E+00	0.00E+00	0.00E+00	0.00E+00
CU-64	0.00E+00	2.12E-07	0.00E+00	5.37E-07	0.00E+00	1.65E-05	9.98E-08	0.00E+00
ZN-65	2.50E+08	8.69E+08	0.00E+00	5.56E+08	0.00E+00	3.68E+08	4.05E+08	0.00E+00
ZN-69	0.00E+00	0.00E+00	0.00E+00	0.00E+00	0.00E+00	0.00E+00	0.00E+00	0.00E+00
BR-83	0.00E+00	0.00E+00	0.00E+00	0.00E+00	0.00E+00	0.00E+00	0.00E+00	0.00E+00
BR-84	0.00E+00	0.00E+00	0.00E+00	0.00E+00	0.00E+00	0.00E+00	0.00E+00	0.00E+00
BR-85	0.00E+00	0.00E+00	0.00E+00	0.00E+00	0.00E+00	0.00E+00	0.00E+00	0.00E+00
RB-86	0.00E+00	4.08E+08	0.00E+00	0.00E+00	0.00E+00	6.04E+07	1.92E+08	0.00E+00
RB-88	0.00E+00	0.00E+00	0.00E+00	0.00E+00	0.00E+00	0.00E+00	0.00E+00	0.00E+00
RB-89	0.00E+00	0.00E+00	0.00E+00	0.00E+00	0.00E+00	0.00E+00	0.00E+00	0.00E+00
SR-89	2.54E+08	0.00E+00	0.00E+00	0.00E+00	0.00E+00	3.03E+07	7.29E+06	0.00E+00
SR-90	8.05E+09	0.00E+00	0.00E+00	0.00E+00	0.00E+00	2.26E+08	1.99E+09	0.00E+00
SR-91	1.26E-10	0.00E+00	0.00E+00	0.00E+00	0.00E+00	5.70E-10	4.99E-12	0.00E+00
SR-92	0.00E+00	0.00E+00	0.00E+00	0.00E+00	0.00E+00	0.00E+00	0.00E+00	0.00E+00
Y-90	9.18E+01	0.00E+00	0.00E+00	0.00E+00	0.00E+00	7.57E+05	2.47E+00	0.00E+00
Y-91M	0.00E+00	0.00E+00	0.00E+00	0.00E+00	0.00E+00	0.00E+00	0.00E+00	0.00E+00
Y-91	9.54E+05	0.00E+00	0.00E+00	0.00E+00	0.00E+00	3.91E+08	2.56E+04	0.00E+00
Y-92	0.00E+00	0.00E+00	0.00E+00	0.00E+00	0.00E+00	0.00E+00	0.00E+00	0.00E+00
Y-93	3.86E-12	0.00E+00	0.00E+00	0.00E+00	0.00E+00	1.18E-07	1.06E-13	0.00E+00
ZR-95	1.50E+06	4.74E+05	0.00E+00	6.96E+05	0.00E+00	1.09E+09	3.26E+05	0.00E+00
ZR-97	1.74E-05	3.44E-06	0.00E+00	5.22E-06	0.00E+00	9.32E-01	1.59E-06	0.00E+00
NB-95	1.80E+06	9.98E+05	0.00E+00	9.68E+05	0.00E+00	4.27E+09	5.49E+05	0.00E+00
MO-99	0.00E+00	8.25E+04	0.00E+00	1.89E+05	0.00E+00	1.48E+05	1.57E+04	0.00E+00
TC-99M	0.00E+00	1.02E-20	0.00E+00	1.52E-19	0.00E+00	6.70E-18	1.32E-19	0.00E+00
TC-101	0.00E+00	0.00E+00	0.00E+00	0.00E+00	0.00E+00	0.00E+00	0.00E+00	0.00E+00
RU-103	8.57E+07	0.00E+00	0.00E+00	3.02E+08	0.00E+00	7.16E+09	3.66E+07	0.00E+00
RU-105	0.00E+00	0.00E+00	0.00E+00	0.00E+00	0.00E+00	0.00E+00	0.00E+00	0.00E+00

* Units for H-3 and C-14 are: mrem/yr per uCi/m^3

Age Group: Teen	Pathway: Meat				Units: m^2 x mrem/yr per µCi/sec			
Nuclide	Bone	Liver	Thyroid	Kidney	Lung	Gi-LLi	TBody	Skin
RU-106	2.36E+09	0.00E+00	0.00E+00	4.55E+09	0.00E+00	1.13E+11	2.97E+08	0.00E+00
AG-110M	5.06E+06	4.79E+06	0.00E+00	9.13E+06	0.00E+00	1.35E+09	2.91E+06	0.00E+00
TE-125M	3.03E+08	1.09E+08	8.48E+07	0.00E+00	0.00E+00	8.95E+08	4.06E+07	0.00E+00
TE-127M	9.42E+08	3.34E+08	2.24E+08	3.82E+09	0.00E+00	2.35E+09	1.12E+08	0.00E+00
TE-127	1.85E-10	6.56E-11	1.28E-10	7.50E-10	0.00E+00	1.43E-08	3.99E-11	0.00E+00
TE-129M	9.50E+08	3.52E+08	3.06E+08	3.97E+09	0.00E+00	3.57E+09	1.50E+08	0.00E+00
TE-129	0.00E+00	0.00E+00	0.00E+00	0.00E+00	0.00E+00	0.00E+00	0.00E+00	0.00E+00
TE-131M	3.79E+02	1.82E+02	2.74E+02	1.90E+03	0.00E+00	1.46E+04	1.52E+02	0.00E+00
TE-131	0.00E+00	0.00E+00	0.00E+00	0.00E+00	0.00E+00	0.00E+00	0.00E+00	0.00E+00
TE-132	1.17E+06	7.42E+05	7.83E+05	7.12E+06	0.00E+00	2.35E+07	6.99E+05	0.00E+00
I-130	1.68E-06	4.87E-06	3.97E-04	7.50E-06	0.00E+00	3.74E-06	1.94E-06	0.00E+00
I-131	8.94E+06	1.25E+07	3.65E+09	2.15E+07	0.00E+00	2.47E+06	6.72E+06	0.00E+00
I-132	0.00E+00	0.00E+00	0.00E+00	0.00E+00	0.00E+00	0.00E+00	0.00E+00	0.00E+00
I-133	3.15E-01	5.34E-01	7.46E+01	9.37E-01	0.00E+00	4.04E-01	1.63E-01	0.00E+00
I-134	0.00E+00	0.00E+00	0.00E+00	0.00E+00	0.00E+00	0.00E+00	0.00E+00	0.00E+00
I-135	3.37E-17	8.67E-17	5.57E-15	1.37E-16	0.00E+00	9.60E-17	3.21E-17	0.00E+00
CS-134	5.23E+08	1.23E+09	0.00E+00	3.91E+08	1.49E+08	1.53E+07	5.71E+08	0.00E+00
CS-136	9.35E+06	3.68E+07	0.00E+00	2.00E+07	3.16E+06	2.96E+06	2.47E+07	0.00E+00
CS-137	7.24E+08	9.63E+08	0.00E+00	3.28E+08	1.27E+08	1.37E+07	3.36E+08	0.00E+00
CS-138	0.00E+00	0.00E+00	0.00E+00	0.00E+00	0.00E+00	0.00E+00	0.00E+00	0.00E+00
BA-139	0.00E+00	0.00E+00	0.00E+00	0.00E+00	0.00E+00	0.00E+00	0.00E+00	0.00E+00
BA-140	2.38E+07	2.92E+04	0.00E+00	9.89E+03	1.96E+04	3.67E+07	1.53E+06	0.00E+00
BA-141	0.00E+00	0.00E+00	0.00E+00	0.00E+00	0.00E+00	0.00E+00	0.00E+00	0.00E+00
BA-142	0.00E+00	0.00E+00	0.00E+00	0.00E+00	0.00E+00	0.00E+00	0.00E+00	0.00E+00
LA-140	3.12E-02	1.53E-02	0.00E+00	0.00E+00	0.00E+00	8.81E+02	4.08E-03	0.00E+00
LA-142	0.00E+00	0.00E+00	0.00E+00	0.00E+00	0.00E+00	0.00E+00	0.00E+00	0.00E+00
CE-141	1.18E+04	7.87E+03	0.00E+00	3.71E+03	0.00E+00	2.25E+07	9.05E+02	0.00E+00
CE-143	1.79E-02	1.30E+01	0.00E+00	5.84E-03	0.00E+00	3.92E+02	1.45E-03	0.00E+00
CE-144	1.23E+06	5.08E+05	0.00E+00	3.04E+05	0.00E+00	3.09E+08	6.60E+04	0.00E+00
PR-143	1.77E+04	7.08E+03	0.00E+00	4.12E+03	0.00E+00	5.83E+07	8.83E+02	0.00E+00
PR-144	0.00E+00	0.00E+00	0.00E+00	0.00E+00	0.00E+00	0.00E+00	0.00E+00	0.00E+00
ND-147	6.36E+03	6.91E+03	0.00E+00	4.06E+03	0.00E+00	2.49E+07	4.14E+02	0.00E+00
W-187	1.86E-02	1.52E-02	0.00E+00	0.00E+00	0.00E+00	4.10E+00	5.31E-03	0.00E+00
NP-239	2.31E-01	2.18E-02	0.00E+00	6.84E-02	0.00E+00	3.50E+03	1.21E-02	0.00E+00

* Units for H-3 and C-14 are: mrem/yr per uCi/m^3

TABLE 7-19 MEAT INGESTION - ADULT AGE GROUP ($R_{AI(ME)J}$)

Age Group: Adult	Pathway: Meat				Units: m^2 x mrem/yr per µCi/sec			
Nuclide	**Bone**	**Liver**	**Thyroid**	**Kidney**	**Lung**	**Gi-LLi**	**TBody**	**Skin**
H-3 *	0.00E+00	2.94E+02	2.94E+02	2.94E+02	2.94E+02	2.94E+02	2.94E+02	0.00E+00
C-14 *	3.62E+04	7.23E+03	7.23E+03	7.23E+03	7.23E+03	7.23E+03	7.23E+03	0.00E+00
NA-24	1.49E-03	1.49E-03	1.49E-03	1.49E-03	1.49E-03	1.49E-03	1.49E-03	0.00E+00
P-32	4.67E+09	2.90E+08	0.00E+00	0.00E+00	0.00E+00	5.25E+08	1.80E+08	0.00E+00
CR-51	0.00E+00	0.00E+00	4.21E+03	1.55E+03	9.35E+03	1.77E+06	7.04E+03	0.00E+00
MN-54	0.00E+00	9.18E+06	0.00E+00	2.73E+06	0.00E+00	2.81E+07	1.75E+06	0.00E+00
MN-56	0.00E+00	0.00E+00	0.00E+00	0.00E+00	0.00E+00	0.00E+00	0.00E+00	0.00E+00
FE-55	2.93E+08	2.03E+08	0.00E+00	0.00E+00	1.13E+08	1.16E+08	4.72E+07	0.00E+00
FE-59	2.65E+08	6.24E+08	0.00E+00	0.00E+00	1.74E+08	2.08E+09	2.39E+08	0.00E+00
CO-58	0.00E+00	1.83E+07	0.00E+00	0.00E+00	0.00E+00	3.70E+08	4.09E+07	0.00E+00
CO-60	0.00E+00	7.52E+07	0.00E+00	0.00E+00	0.00E+00	1.41E+09	1.66E+08	0.00E+00
NI-63	1.89E+10	1.31E+09	0.00E+00	0.00E+00	0.00E+00	2.73E+08	6.33E+08	0.00E+00
NI-65	0.00E+00	0.00E+00	0.00E+00	0.00E+00	0.00E+00	0.00E+00	0.00E+00	0.00E+00
CU-64	0.00E+00	2.60E-07	0.00E+00	6.56E-07	0.00E+00	2.22E-05	1.22E-07	0.00E+00
ZN-65	3.56E+08	1.13E+09	0.00E+00	7.57E+08	0.00E+00	7.13E+08	5.12E+08	0.00E+00
ZN-69	0.00E+00	0.00E+00	0.00E+00	0.00E+00	0.00E+00	0.00E+00	0.00E+00	0.00E+00
BR-83	0.00E+00	0.00E+00	0.00E+00	0.00E+00	0.00E+00	0.00E+00	0.00E+00	0.00E+00
BR-84	0.00E+00	0.00E+00	0.00E+00	0.00E+00	0.00E+00	0.00E+00	0.00E+00	0.00E+00
BR-85	0.00E+00	0.00E+00	0.00E+00	0.00E+00	0.00E+00	0.00E+00	0.00E+00	0.00E+00
RB-86	0.00E+00	4.89E+08	0.00E+00	0.00E+00	0.00E+00	9.64E+07	2.28E+08	0.00E+00
RB-88	0.00E+00	0.00E+00	0.00E+00	0.00E+00	0.00E+00	0.00E+00	0.00E+00	0.00E+00
RB-89	0.00E+00	0.00E+00	0.00E+00	0.00E+00	0.00E+00	0.00E+00	0.00E+00	0.00E+00
SR-89	3.01E+08	0.00E+00	0.00E+00	0.00E+00	0.00E+00	4.83E+07	8.65E+06	0.00E+00
SR-90	1.24E+10	0.00E+00	0.00E+00	0.00E+00	0.00E+00	3.59E+08	3.05E+09	0.00E+00
SR-91	1.49E-10	0.00E+00	0.00E+00	0.00E+00	0.00E+00	7.11E-10	6.03E-12	0.00E+00
SR-92	0.00E+00	0.00E+00	0.00E+00	0.00E+00	0.00E+00	0.00E+00	0.00E+00	0.00E+00
Y-90	1.09E+02	0.00E+00	0.00E+00	0.00E+00	0.00E+00	1.16E+06	2.93E+00	0.00E+00
Y-91M	0.00E+00	0.00E+00	0.00E+00	0.00E+00	0.00E+00	0.00E+00	0.00E+00	0.00E+00
Y-91	1.13E+06	0.00E+00	0.00E+00	0.00E+00	0.00E+00	6.24E+08	3.03E+04	0.00E+00
Y-92	0.00E+00	0.00E+00	0.00E+00	0.00E+00	0.00E+00	0.00E+00	0.00E+00	0.00E+00
Y-93	4.57E-12	0.00E+00	0.00E+00	0.00E+00	0.00E+00	1.45E-07	1.26E-13	0.00E+00
ZR-95	1.87E+06	6.01E+05	0.00E+00	9.44E+05	0.00E+00	1.91E+09	4.07E+05	0.00E+00
ZR-97	2.09E-05	4.21E-06	0.00E+00	6.36E-06	0.00E+00	1.30E+00	1.93E-06	0.00E+00
NB-95	2.30E+06	1.28E+06	0.00E+00	1.27E+06	0.00E+00	7.78E+09	6.89E+05	0.00E+00
MO-99	0.00E+00	9.98E+04	0.00E+00	2.26E+05	0.00E+00	2.31E+05	1.90E+04	0.00E+00
TC-99M	0.00E+00	1.30E-20	0.00E+00	1.98E-19	0.00E+00	7.70E-18	1.66E-19	0.00E+00
TC-101	0.00E+00	0.00E+00	0.00E+00	0.00E+00	0.00E+00	0.00E+00	0.00E+00	0.00E+00
RU-103	1.05E+08	0.00E+00	0.00E+00	4.01E+08	0.00E+00	1.23E+10	4.53E+07	0.00E+00
RU-105	0.00E+00	0.00E+00	0.00E+00	0.00E+00	0.00E+00	0.00E+00	0.00E+00	0.00E+00

* Units for H-3 and C-14 are: mrem/yr per uCi/m^3

Age Group: Adult	Pathway: Meat				Units: m^2 x mrem/yr per µCi/sec			
Nuclide	Bone	Liver	Thyroid	Kidney	Lung	Gi-LLi	TBody	Skin
RU-106	2.80E+09	0.00E+00	0.00E+00	5.40E+09	0.00E+00	1.81E+11	3.54E+08	0.00E+00
AG-110M	6.68E+06	6.18E+06	0.00E+00	1.22E+07	0.00E+00	2.52E+09	3.67E+06	0.00E+00
TE-125M	3.59E+08	1.30E+08	1.08E+08	1.46E+09	0.00E+00	1.43E+09	4.81E+07	0.00E+00
TE-127M	1.12E+09	3.99E+08	2.85E+08	4.53E+09	0.00E+00	3.74E+09	1.36E+08	0.00E+00
TE-127	2.18E-10	7.84E-11	1.62E-10	8.89E-10	0.00E+00	1.72E-08	4.72E-11	0.00E+00
TE-129M	1.13E+09	4.23E+08	3.89E+08	4.73E+09	0.00E+00	5.71E+09	1.79E+08	0.00E+00
TE-129	0.00E+00	0.00E+00	0.00E+00	0.00E+00	0.00E+00	0.00E+00	0.00E+00	0.00E+00
TE-131M	4.55E+02	2.23E+02	3.53E+02	2.25E+03	0.00E+00	2.21E+04	1.86E+02	0.00E+00
TE-131	0.00E+00	0.00E+00	0.00E+00	0.00E+00	0.00E+00	0.00E+00	0.00E+00	0.00E+00
TE-132	1.43E+06	9.27E+05	1.02E+06	8.93E+06	0.00E+00	4.38E+07	8.70E+05	0.00E+00
I-130	2.09E-06	6.17E-06	5.23E-04	9.62E-06	0.00E+00	5.31E-06	2.43E-06	0.00E+00
I-131	1.08E+07	1.54E+07	5.04E+09	2.64E+07	0.00E+00	4.06E+06	8.82E+06	0.00E+00
I-132	0.00E+00	0.00E+00	0.00E+00	0.00E+00	0.00E+00	0.00E+00	0.00E+00	0.00E+00
I-133	3.77E-01	6.55E-01	9.63E+01	1.14E+00	0.00E+00	5.89E-01	2.00E-01	0.00E+00
I-134	0.00E+00	0.00E+00	0.00E+00	0.00E+00	0.00E+00	0.00E+00	0.00E+00	0.00E+00
I-135	4.14E-17	1.08E-16	7.15E-15	1.74E-16	0.00E+00	1.22E-16	4.00E-17	0.00E+00
CS-134	6.58E+08	1.56E+09	0.00E+00	5.06E+08	1.68E+08	2.74E+07	1.28E+09	0.00E+00
CS-136	1.20E+07	4.73E+07	0.00E+00	2.63E+07	3.61E+06	5.38E+06	3.41E+07	0.00E+00
CS-137	8.72E+08	1.19E+09	0.00E+00	4.05E+08	1.35E+08	2.31E+07	7.81E+08	0.00E+00
CS-138	0.00E+00	0.00E+00	0.00E+00	0.00E+00	0.00E+00	0.00E+00	0.00E+00	0.00E+00
BA-139	0.00E+00	0.00E+00	0.00E+00	0.00E+00	0.00E+00	0.00E+00	0.00E+00	0.00E+00
BA-140	2.88E+07	3.62E+04	0.00E+00	1.23E+04	2.07E+04	5.93E+07	1.89E+06	0.00E+00
BA-141	0.00E+00	0.00E+00	0.00E+00	0.00E+00	0.00E+00	0.00E+00	0.00E+00	0.00E+00
BA-142	0.00E+00	0.00E+00	0.00E+00	0.00E+00	0.00E+00	0.00E+00	0.00E+00	0.00E+00
LA-140	3.80E-02	1.91E-02	0.00E+00	0.00E+00	0.00E+00	1.40E+03	5.06E-03	0.00E+00
LA-142	0.00E+00	0.00E+00	0.00E+00	0.00E+00	0.00E+00	0.00E+00	0.00E+00	0.00E+00
CE-141	1.40E+04	9.50E+03	0.00E+00	4.41E+03	0.00E+00	3.63E+07	1.08E+03	0.00E+00
CE-143	2.13E-02	1.57E+01	0.00E+00	6.92E-03	0.00E+00	5.88E+02	1.74E-03	0.00E+00
CE-144	1.46E+06	6.09E+05	0.00E+00	3.61E+05	0.00E+00	4.93E+08	7.83E+04	0.00E+00
PR-143	2.11E+04	8.45E+03	0.00E+00	4.88E+03	0.00E+00	9.23E+07	1.04E+03	0.00E+00
PR-144	0.00E+00	0.00E+00	0.00E+00	0.00E+00	0.00E+00	0.00E+00	0.00E+00	0.00E+00
ND-147	7.22E+03	8.34E+03	0.00E+00	4.88E+03	0.00E+00	4.00E+07	4.99E+02	0.00E+00
W-187	2.22E-02	1.86E-02	0.00E+00	0.00E+00	0.00E+00	6.08E+00	6.49E-03	0.00E+00
NP-239	2.64E-01	2.60E-02	0.00E+00	8.11E-02	0.00E+00	5.33E+03	1.43E-02	0.00E+00

* Units for H-3 and C-14 are: mrem/yr per uCi/m^3

7.4 METEOROLOGICAL DATA

TABLE 7-20 PALISADES 10 YEAR X/Q - D/Q DATA

USNRC COMPUTER CODE - XOQDOQ, VERSION 2.0 RUN DATE: 17AUG22								
***** PALISADES XOQDOQ82 ***** USING 01/01/2012 - 12/31/2021 MET DATA *****								
GROUND LEVEL RELEASE - TOP OF CONTAINMENT BUILDING								
SPECIFIC POINTS OF INTEREST								
RELEASE ID	**TYPE OF LOCATION**	**DIRECTION FROM SITE**	**DISTANCE (MILES)**	**(METERS)**	**X/Q (SEC/CUB.METER) NO DECAY UNDEPLETED**	**X/Q (SEC/CUB.METER) 2.260 DAY DECAY UNDEPLETED**	**X/Q (SEC/CUB.METER) 8.000 DAY DECAY DEPLETED**	**D/Q (PER SQ.METER)**
A	SITE BOUNDARY	NNE	0.50	805	1.87E-06	1.87E-06	1.71E-06	7.99E-09
A	SITE BOUNDARY	NE	0.65	1046	1.41E-06	1.41E-06	1.27E-06	9.62E-09
A	SITE BOUNDARY	ENE	0.87	1400	6.53E-07	6.51E-07	5.76E-07	4.56E-09
A	SITE BOUNDARY	E	0.82	1320	8.07E-07	8.04E-07	7.15E-07	5.68E-09
A	SITE BOUNDARY	ESE	0.76	1223	1.00E-06	9.96E-07	8.89E-07	7.29E-09
A	SITE BOUNDARY	SE	0.63	1014	1.58E-06	1.57E-06	1.42E-06	1.23E-08
A	SITE BOUNDARY	SSE	0.48	772	2.37E-06	2.36E-06	2.16E-06	1.88E-08
A	SITE BOUNDARY	S	0.42	676	2.08E-06	2.08E-06	1.92E-06	1.08E-08
A	SITE BOUNDARY	SSW	0.48	772	1.29E-06	1.29E-06	1.18E-06	5.71E-09
A	RESIDENCE	NNE	1.67	2688	3.11E-07	3.08E-07	2.61E-07	1.04E-09
A	RESIDENCE	NE	1.14	1835	6.08E-07	6.05E-07	5.27E-07	3.71E-09
A	RESIDENCE	ENE	1.19	1915	4.11E-07	4.09E-07	3.55E-07	2.67E-09
A	RESIDENCE	E	1.62	2607	2.93E-07	2.90E-07	2.46E-07	1.77E-09
A	RESIDENCE	ESE	1.35	2173	4.22E-07	4.19E-07	3.60E-07	2.73E-09
A	RESIDENCE	SE	0.87	1400	9.61E-07	9.57E-07	8.48E-07	7.14E-09
A	RESIDENCE	SSE	0.80	1287	1.08E-06	1.08E-06	9.61E-07	8.11E-09
A	RESIDENCE	S	0.51	821	1.56E-06	1.56E-06	1.42E-06	7.91E-09
A	RESIDENCE	SSW	0.48	772	1.29E-06	1.29E-06	1.18E-06	5.71E-09
A	GARDEN	NNE	2.52	4056	1.76E-07	1.74E-07	1.42E-07	5.08E-10
A	GARDEN	NE	2.76	4442	1.67E-07	1.64E-07	1.33E-07	7.97E-10
A	GARDEN	ENE	2.11	3396	1.77E-07	1.75E-07	1.45E-07	9.90E-10
A	GARDEN	E	2.46	3959	1.58E-07	1.56E-07	1.28E-07	8.52E-10
A	GARDEN	ESE	1.66	2672	3.09E-07	3.07E-07	2.60E-07	1.91E-09
A	GARDEN	SE	2.20	3541	2.41E-07	2.38E-07	1.97E-07	1.44E-09
A	GARDEN	SSE	0.70	1127	1.33E-06	1.32E-06	1.19E-06	1.01E-08
A	GARDEN	S	3.51	5649	9.46E-08	9.28E-08	7.34E-08	2.89E-10
A	BEEF CATTLE	ENE	2.29	3685	1.57E-07	1.55E-07	1.28E-07	8.58E-10
A	BEEF CATTLE	E	3.51	5649	9.36E-08	9.20E-08	7.26E-08	4.54E-10
A	BEEF CATTLE	ESE	2.04	3283	2.28E-07	2.26E-07	1.88E-07	1.34E-09
A	BEEF CATTLE	SE	3.88	6244	1.05E-07	1.03E-07	8.02E-08	5.28E-10
A	GOAT	E	3.46	5568	9.56E-08	9.40E-08	7.43E-08	4.66E-10
A	GOAT	ESE	2.04	3283	2.28E-07	2.26E-07	1.88E-07	1.34E-09
A	GOAT	SE	3.88	6244	1.05E-07	1.03E-07	8.02E-08	5.28E-10