441311

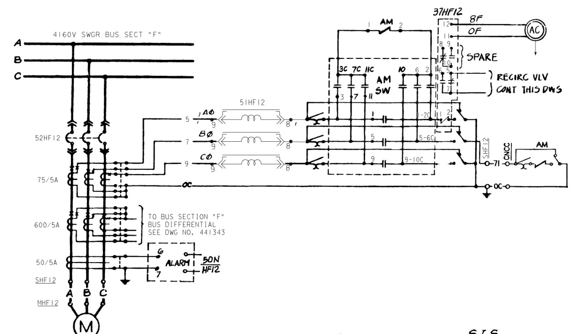

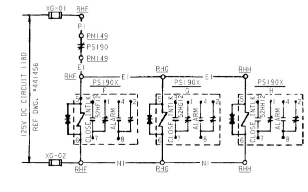

AUXILIARY RELAYS FOR COMPONENT COOLING WATER PRESSURE SWITCH PS190
SIMILAR FOR PS191 EXCEPT AS SHOWN IN TABLE

COMPONENT CLG. WTR. LOW PRESS			AUX. REL	125V DC SUPPLY		CIRCUIT	ALARM
DEVICE	LOC.	CONTACT INTLK	F G, H	CKT NO.	LOC.	NO.	CKT. NO.
PS190	PM149	-#-	PS190X	118D	RHF	10190PS01	AP2701DF
PS191	PM149	-#-	PS191X	216D	RHG	10191PS01	AP2702DG

CIRCUITS LISTED IN DWG #102759

CONTACTS	POSITION	A	INT	B	INT	C
1-‖-1-2C-‖-2	1		X	X	X	X
3-‖-3C	2	X	X			
	3	X	X			
5-‖-5-6C-‖-6	5	X	X		X	X
7-‖-7C	6		X	X	X	
	7		X	X	X	
9-‖-9-10C-‖-10	9	X	X	X	X	
	10				X	X
11-‖-11C	11				X	X

AMMETER SWITCH $\frac{AM}{SW}$
USED AT LOCATION SHF12, SHG12, SHH12

CONTACTS	TRIP	AFTER TRIP	AFTER CLOSE	CLOSE	REMARKS
1 -‖- 1C				X	THIS DWG
2C -‖- 2	X				THIS DWG
3 -‖- 3C	X			X	SPARE
4C -‖- 4				X	SPARE
5 -‖- 5C		X	X		SPARE
5C -|					
7 -‖- 7C			X	X	SPARE
7C -|					

CONTROL SWITCH $\frac{52HF12}{CS}$, $\frac{52HG12}{CS}$, $\frac{52HH12}{CS}$
USED AT LOCATION SHF12, SHG12, SHH12
SPRING RETURN TO NEUTRAL

CONTACTS		AUTO	MANUAL	REMARKS
-‖-	A		X	ALARM REF. 22
-‖-	B	X		THIS DWG
-‖-	C		X	SPARE
-‖-	D	X		SPARE
-‖-	E		X	SPARE
-‖-	F		X	SPARE
-‖-	G		X	SPARE
-‖-	H		X	SPARE

MODE SELECTOR SWITCH 43HF12, 43HG12, 43HH12
USED AT LOCATION HØ1
NON SPRING RETURN

CONTACTS		STOP	NEUT	START	REMARKS
-‖-	A	X			THIS DWG.
-‖-	B			X	THIS DWG.
-‖-	C		X	X	THIS DWG.
-‖-	D	X	X		THIS DWG.
-‖-	E		X	X	THIS DWG
-‖-	F			X	SPARE

CONTROL SWITCH $\frac{52HF12}{CS}$, $\frac{52HG12}{CS}$, $\frac{52HH12}{CS}$
USED AT LOCATION CNCC HØ1
SPRING RETURN TO NEUTRAL

CONTACTS		MAN	AUTO	REMARKS
-‖-	A	X		This Dwg
-‖-	B	X		This Dwg.
-‖-	C		X	This Dwg
-‖-	D		X	Intlk Alarm

TRANSFER SWITCH 43HF12, 43HG12, 43HH12
USED AT LOCATION CNCC
No SPRING RETURN

CONTACTS		STOP	AUTO	ON	REMARKS
-‖-	A		X		This Dwg
-‖-	B			X	This Dwg

CONTROL SWITCH $\frac{42\text{-}2F\text{-}44}{CS}$ $\frac{42\text{-}2G\text{-}41}{CS}$, $\frac{42\text{-}2H\text{-}36}{CS}$
USED AT LOCATION LPF44 LPG41 LPH36
SPRING RETURN TO AUTO FROM STOP
CUTLER HAMMER CAT. NO. 10250T1332 8M36

TABLE OF DEVICES

DEVICE NO.	FUNCTION	RATING	MFR.	TYPE	CAT/DWG NO.	REMARKS
1HF12, G12, H12	SAFETY INJECTION SIGNAL RELAY	120V AC	AGASTAT	ETR	ETR1413A	T.D.O. 15-3 SEC.
1HF12A, G12A, H12A	AUTO TRANSFER RELAY	120V AC	AGASTAT	ETR	ETR1413A	T.D.O. 15-3 SEC.
2-2F-44, 2G41, 2H36	LUBE OIL PUMP RUNNING TIMING REL	120V AC	AGASTAT	7000	7022AF	T.D 1=10 MIN. OPENING
2FS 67, 68	LOW FLOW RECIRC TIMING REL	120V AC	AGASTAT	7000	7014PD	T.D.C. 10-100 SEC.
2HH12	SAFETY INJECTION SIGNAL TIMING REL	120V AC	AGASTAT	ETR	ETR1413D	T.D. 2-60 SEC.
2HF12, G12	SAFETY INJECTION SIGNAL TIMING REL	120V AC	AGASTAT	ETR	ETR1413B	T.D. 0.55-15 SEC.
2HF12A, G12A, H12A	AUTO TRANSFER TIMING RELAY	120V AC	AGASTAT	ETR	ETR1413B	T.D. 0.55-15 SEC.
2FS66	LOW FLOW RECIRC. TIMING REL	125V DC	AGASTAT	ETR	ETR14D3D	T.D. 2-60 SEC.
3HF1, G1, H1	DIESEL AUTO TRANSFER INTERLOCK REL	-	-	-	(4)(5)(8)	
27DCHF12, G12, H12	DC CONTROL UNDERVOLTAGE REL	125V DC	GE CO.	HGA		TRIPS ON BUS UNDERVOLTAGE AND TRANSFER TO DIESEL
27XHFT, HGT, HHT	4KV BUS UV TRIP AUXILIARY REL.	-	-	-	(4)(5)(8)	
42-2F-44, 2G-41, 2H-36	480V MOTOR STARTER					
49-2F-44, 2G-41, 2H-36	480V MOTOR STARTER OVERLOAD REL					
27DC1HF12, G12, H12	DC CONTROL UNDERVOLTAGE RELAY	125V DC	AGASTAT	EGPD		
50NHF12, HG12, HH12	GROUND OVERCURRENT SENSOR	-	-	-	(2)	ALARM ONLY
51HF12, HG12, HH12	OVERCURRENT RELAY	-	-	-	(2)	
51XHF12, HG12, HH12	OVERCURRENT AUXILIARY RELAY	24V DC	GE CO.	HFA		
62HF12, G12, H12	BKR CLOSING SPRING TIME DELAY RELAY	125V DC	AGASTAT	ETR		
52HF12, HG12, HH12	CIRCUIT BREAKER	-	-	-	(2)	REC. NO. 6009838
52HF12 G12 H12 CI CI CI	CIRCUIT BKR. CELL INTERLOCK	-	-	-		PART OF SWITCHGEAR
52-2F-44, 2H-36	480V AIR CIRCUIT BREAKER	-	-	-	(9)(11)	REC. NO. 663336
52-2G-41	480V AIR CIRCUIT BREAKER	600V	CUTLER HAMMER	HFD	(10)	
52XHF12, HG12, HH12	CIRCUIT BREAKER CLOSE AUX REL	125V DC	GE CO.	HFA		
43HF12 G12 H12 TS TS TS	CONTROL TRANSFER SWITCH	125V DC	ELECTRO SWITCH	24	24907B-2	
PS244, 245, 246	LUBE OIL LOW PRESURE SWITCH					CONTACT OPENS ON LUBE OIL LOW PRESSURE
37HF12, G12, H12	AC CURRENT/VOLTAGE ALARM MODULE	120V AC	ROCHESTER	1200L		CONTACT CLOSES ON DECREASING PUMP MOTOR CURRENT
PS322, 324, 326	LUBE OIL LOW PRESSURE SWITCH					CONTACT CLOSES @ 5 PSI OPENS @ 9 PSI
PS321, 323, 325	LUBE OIL LOW PRESSURE SWITCH					CONTACT CLOSES @ 4 PSI, OPENS @ 7 PSI ALARM CONTACT IN SERIES WITH BKR. CONTACT
PS190, 191	COMPONENT CLG WTR. PRESS SW.	-	-	-	(13)	CONTACT CLOSES ON LOW HEADER PRESSURE
K610, K617	SAFETY INJECTION AUX RELAY	-	-	-	(18)(19)(21)	TRAIN A
K610, K617	SAFETY INJECTION AUX RELAY	-	-	-	(21)	TRAIN B
PS190X F G H PS191X F G H	COMPONENT CLG WTR LOW PRESS. AUXILIARY RELAY	125V DC	WE CO.	SG	1342925	ALARM PS190X & PS191X CONTACTS IN PARALLEL & IN SERIES WITH 43H/AUTO & 52H/a CONTACTS
SV387, 388, 389 FVC606, 607, 608	SOLENOID VALVE RECIRCULATION FLOW CONT VALVE VALVE CONTROL	125V DC	-	-	(13)	
FL	RECIRC VV ALARM INTERUPTOR	120V AC	ZENITH	B1		

SIS — AUTO TRANSFER

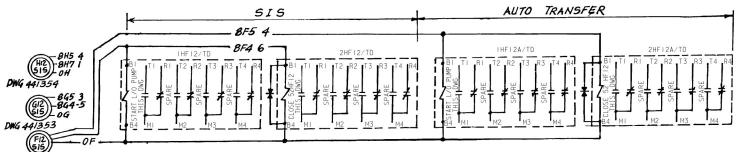

AUX & TIME DELAY RELAYS

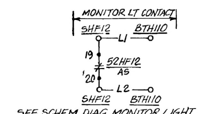

SEE SCHEM DIAG MONITOR LIGHT BOX C, DWG 441454

DECK	CONTACTS	CONT RM	INTER	HSD PNL	REMARKS
1	1 11-‖-‖-13	X			THIS DWG
	2 12-‖-‖-14			X	THIS DWG
	3 15-‖-‖-17	X			THIS DWG
	4 16-‖-‖-18			X	THIS DWG
2	5 21-‖-‖-23	X			THIS DWG
	6 22-‖-‖-24			X	THIS DWG
	7 25-‖-‖-27	X			THIS DWG
	8 26-‖-‖-28			X	THIS DWG
3	9 31-‖-‖-33	X			THIS DWG
	10 32-‖-‖-34			X	TH'S DWG
	11 35-‖-‖-37	X			THIS DWG
	12 36-‖-‖-38			X	THIS DWG
4	13 41-‖-‖-43	X			THIS DWG
	14 42-‖-‖-44			X	THIS DWG
	15 45-‖-‖-47	X			THIS DWG
	16 46-‖-‖-48			X	SPARE
5	17 51-‖-‖-53	X			SPARE
	18 52-‖-‖-54			X	THIS DWG
	19 55-‖-‖-57	X			THIS DWG
	20 56-‖-‖-58			X	SPARE
6	21 61-‖-‖-63	X			SPARE
	22 62-‖-‖-64			X	ALARM, REF 22
	23 65-‖-‖-67	X			THIS DWG
	24 66-‖-‖-68			X	THIS DWG
7	25 71-‖-‖-73	X			THIS DWG
	26 72-‖-‖-74			X	THIS DWG
	27 75-‖-‖-77	X			THIS DWG
	28 76-‖-‖-78			X	THIS DWG

TRANSFER SWITCH $\frac{43HF12}{TS}$, $\frac{43HG12}{TS}$, $\frac{43HH12}{TS}$
LOC SHF12, SHG12, SHH12

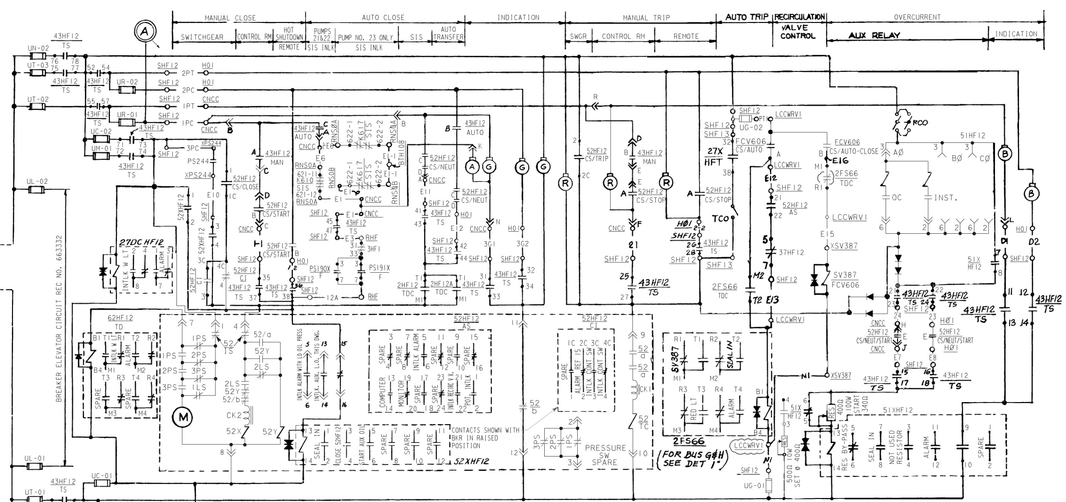

125V DC CONTROL SCHEMATIC

COMPONENT COOLING WATER PUMP Nº21, CIRCUIT Nº F12H00

COMPONENT COOLING WATER PUMP NO.22 & 23 SIMILAR EXCEPT AS SHOWN IN TABLE BELOW

✱ - SEE TABLE

MOTOR	MOTOR LOC	CKT BKR NO	CIRCUIT NO.	BUS SECTION	DC CIRCUIT NO	BUS UNDERVOLTAGE RELAY	BUS UNDERVOLTAGE LOC	BUS UNDERVOLTAGE CONTACT TRIP	LUBE OIL PRESS SW DEVICE	LUBE OIL PRESS SW LOCATION	LUBE OIL PRESS SW CONTACT INTLK	AUTO TRANSFER BLOCKING RELAY	AUTO TRANSFER BLOCKING LOC	AUTO TRANSFER BLOCKING CONTACT INTLK	COMP CLG WTR LOW PRESS RELAY	COMP CLG WTR LOW PRESS LOC	COMP CLG WTR LOW PRESS CONTACT INTLK	ALARM CIRCUIT NOS OVERCURRENT	GROUND OVERCURRENT	TRANSFER OF CONTROL	DC CONTROL UNDERVOLT	LOW OIL PRESSURE BKR. CLOSED
Nº21	MHF12	52HF12	F12H00	F	113D	27X HFT	SHF13	32-‖-38	PS244	XPS244	-‖-	3HF1	RHF	31-#-33	PS190X/F PS191X/F	RHF	3-‖-7	A12700DF	A12703DF	AY5070DF	AV4407DF	AY2702DF
Nº22	MHG12	52HG12	G12H00	G	213D	27X HGT	SHG13	16-‖-14	PS245	XPS245	-‖-	3HG1	RHG	31-#-33	PS190X/G PS191X/G	RHG	3-‖-7	A12700DG	A12704DG	AY5074DG	AV4307DG	AY2703DG
Nº23	MHH12	52HH12	H12H00	H	314D	27X HHT	SHH13	32-‖-38	PS246	XPS246	-‖-	3HH1	RHH	31-#-33	PS190X/H PS191X/H	RHH	3-‖-7	A12700DH	A12705DH	AY5012DH	AV4207DH	AY2704DH

MOTOR	ALARM CIRCUIT NOS AUTO PP START ON LOW PRESS	RECIRC VALVE OPEN	RECIRCULATION VALVE CONTROL TEMP CONT AC CKT #	FCV Nº	SV Nº	SV LOC	VOLT/CURRENT ALARM MOD DEV Nº	LOC	SAFE GUARD OUTPUT TERM. BOX LOC.	SAFETY INJECTION AUX RELAYS DEVICE	LOC	CONTACT INTLK	DEVICE	LOC	CONTACT INTLK	COMPUTER CKT NOS RUNNING	RECIRC. VALVE CONTROL LOC	TIMING RELAY	FUSE SIZE
Nº21	AY2710DF	AF2712DF	629Y00	606	387	XSV387	37HF12	SHF12	—	K610/SIS	RNS0A	621-11 621-12	—	—	—	CY2855DF	LCCWRV1	2FS66	30A
Nº22	AY2711DG	AF2713DG	629Y01	607	388	XSV388	37HG12	SHG12	—	K610/SIS	RNS0B	621-11 621-12	—	—	—	CY2856DG	LCCWRV2	2FS67	35A
Nº23	AY2712DH	AF2714DH	629Y02	608	389	XSV389	37HH12	SHH12	BTH108	K617/SIS	RNS0A	622-1 622-2	K617/SIS	RNS0B	622-1 622-2	CY2857DH	LCCWRV3	2FS68	35A

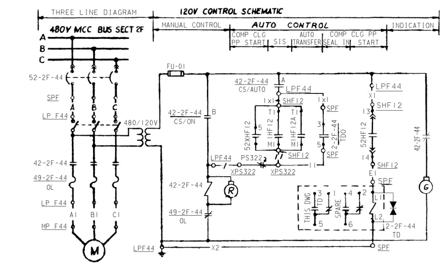

THREE LINE DIAGRAM — 120V CONTROL SCHEMATIC

COMPONENT COOLING PP Nº21 AUX LUBE OIL PP Nº21 CKT Nº F44P00

COMP. CLG PP NO's 22 & 23 AUX LUBE OIL PP NO's 22 & 23 SIMILAR EXCEPT AS SHOWN IN TABLE

MOTOR	MOTOR LOC	CKT BKR Nº	CIRCUIT Nº	BUS SECT	LO LOW PRESSURE DEVICE	LOC	CONTACT INTLK	ALARM CIRCUIT Nºs		
NO. 21	MPF44	52-2F-44	F44P00	2F	PS322	XPS 322	-#-			
NO. 22	MPG41	52-2G-41	G41P00	2G	PS324	XPS 324	-#-			
NO. 23	MPH36	52-2H-36	H36P00	2H	PS326	XPS 326	-#-			

REFERENCES

1	DESCRIPTION OF ELEC SCHEM DIAG, SYMBOLS & CKT DESIGNATIONS	DWG NO. 050003
2	SINGLE LINE METER & RELAY 4160V SYSTEM SH 2 (BUS F)	DWG NO. 441229
3	SCHEMATIC DIAGRAM POTENTIAL & SYNCHRONIZING 4160V SYS SH 2	DWG NO. 441340
4	SCHEMATIC DIAGRAM 4160V BUS F AUTOMATIC TRANSFER	DWG NO. 441352
5	SCHEMATIC DIAGRAM 4160V BUS G AUTOMATIC TRANSFER	DWG NO. 441353
6	SCHEMATIC DIAGRAM 4160V BUS DIFFERENTIAL SH 2	DWG NO. 441343
7	SINGLE LINE METER & RELAY 125/250V DC SYSTEM	DWG NO. 441240
8	SCHEMATIC DIAGRAM 4160V BUS H AUTOMATIC TRANSFER	DWG NO. 441354
9	SINGLE LINE METER & RELAY 480V SYSTEM BUS SECT 2F	DWG NO. 441237
10	SINGLE LINE METER & RELAY 480V SYSTEM BUS SECT 2G	DWG NO. 441238
11	SINGLE LINE METER & RELAY 480V SYSTEM BUS SECT 2H	DWG NO. 441239
12	EQUIPMENT LOCATION NO's	DWG NO. 103013
13	PIPING SCHEMATIC COMPONENT COOLING SYSTEM	DWG NO. 108014
14	LOGIC DIAGRAM COMPONENT COOLING WATER PUMP	DWG NO. 102792
15	SCHEMATIC DIAGRAM MAIN ANNUNCIATOR SH 1, 16, 17, 18	DWG NO. 500771, 500786, 500787, 500788
17	CIRCUIT SCHEDULE, INSTR, LTG & MISC	DWG NO. 102759
18	SINGLE LINE METER & RELAY 4160V SYSTEM SH3 (BUS G & H)	DWG NO. 441230
19	Ⓦ FUNCTION DIAGRAM	REC NO. 663195
20	Ⓦ SOLID STATE PROTECTION SYSTEM	REC NO. 663231
21	SCHEM DIAG SSPS OUTPUT RELAYS TRAIN A & B	DWG NO. 503089, 503093
22	SCHEM DIAG MAIN ANNUNCIATOR, SH 22	DWG NO. 441280
23	P.D.S. CONTROL CIRCUITS SCHEMATIC DIAGRAM	REC DWG 6009838-69

EQUIPMENT LOCATION NUMBERS

- PM149 - MECH PANEL NO. 149 COMP. CLG. HEAT EXCHANGER
- BTH110 - TERMINAL BOX NO. H110
- RNS0A - RACK NUCLEAR SAFEGUARD OUTPUT TRAIN A
- CNCC - CONTROL BOARD COMPONENT COOLING
- H01 - HOT SHUT DOWN REMOTE CONT. PANEL 1
- XPS244 - INSTRUMENT NO. PS244, LOCAL MOUNTED
- MHF12 - COMPONENT COOLING WATER PUMP NO. 21
- RHF - ENGINEERING SAFEGUARDS RELAY BOARD BUS F
- SHF12 - SWITCHGEAR 4 KV BUS F CUBICLE 12
- LPF44 - LOCAL STARTER COMPONENT COOLING LUBE OIL PUMP NO. 21
- SPF - 480V MOTOR CONTROL CENTER BUS SECT 2F
- LCCWRV1 - LOCAL CONTROL STA. CCW PP21 RECIRC VV

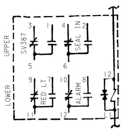

DETAIL '1'
2FS67 & 2FS68

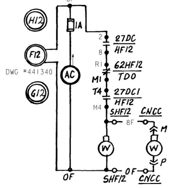

POTENTIAL INTERLOCK

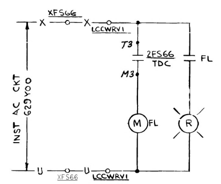

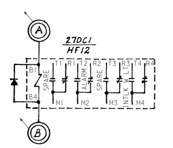

CONTACT		CLOSE	AUTO	OPEN	REMARKS
-‖-	A		X		THIS DWG
-‖-	B	X	X		THIS DWG

CONTROL SWITCH $\frac{FCV606}{CS}$, $\frac{FCV607}{CS}$, $\frac{FCV608}{CS}$
USED AT LOC LCCWRV1, LCCWRV2, LCCWRV3
SPRING RETURN FROM CLOSE TO AUTO
CUTLER-HAMMER CAT 10250T 1433 M36

NUCLEAR SAFETY RELATED

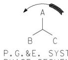

P.G.&E. SYSTEM PHASE SEQUENCE A-C-B

KEY DWG. SECTION 4

UNIT 2

DATE	05-09-2016	REVISION DESCRIPTION
D.D.	ZNS4	REVISED PER DFT-7*3679
R.E.	FxC2	
I.V.	N/A	
P.E.	N/A	

REGISTERED PROFESSIONAL ENGINEER — NOT REQUIRED PER CF3.ID5 — STATE OF CALIFORNIA

ELECTRICAL
SCHEMATIC DIAGRAM
COMPONENT COOLING WATER PUMPS

DIABLO CANYON POWER PLANT
PACIFIC GAS AND ELECTRIC COMPANY
SAN FRANCISCO, CALIFORNIA

DWG SCALE:			
BILL OF MATL:			
SUPSDS:			
SUPSD BY:			
DRAWING	SHEET	PAGE	REV
441311	1	0	28

DRAWING NUMBER 441311

RASTER=441311.dgn
DGN=441311.dgn
CAD User:ZNS4 Date:05-09-2016

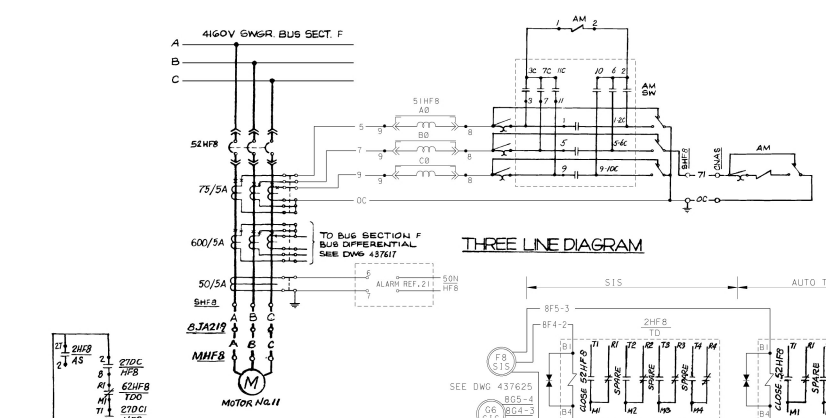

THREE LINE DIAGRAM

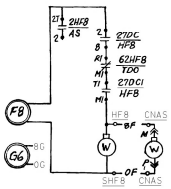

POTENTIAL INTERLOCK

CONTACTS	POSITION A	INT B	INT C	REMARKS
1-2C 1	X	X	X	THIS DWG
2	X	X		
3-3C 3	X	X		SPARE
4-5C 4	X	X		SPARE
5-4C 5	X	X	X	SPARE
6		X	X	
7-7C 7		X	X	
8-9C 8	X	X	X	SPARE
9			X	
10-11C 10			X	
11			X	

AMMETER SWITCH AM SW
USED AT LOCATION SHF8, SHG6

CONTACTS	POSITION MAN	AUTO	REMARKS
A	X		THIS DWG
B		X	THIS DWG
C	X		THIS DWG
D		X	ALARM

TRANSFER SWITCH 43HF8 43HG6
USED AT LOCATION CNAS
NO SPRING RETURN

CONTACTS	POSITION TRIP	AFTER TRIP CLOSE	CLOSE	REMARKS
1 1C			X	THIS DWG
2C 2	X			THIS DWG
3 3C	X		X	SPARE
4C 4			X	SPARE
5 5C		X		SPARE
5C				
7 7C			X	SPARE
7C				

CONTROL SWITCH 52HF8 52HG6 C3
USED AT LOCATION SHF8 SHG6
SPRING RETURN TO NEUTRAL

CONTACTS	POSITION STOP	NEUT	START	REMARKS
A	X			THIS DWG
B			X	THIS DWG
C		X	X	THIS DWG
D	X	X		THIS DWG
E			X	THIS DWG
F			X	SPARE

CONTROL SWITCH 52HF8 52HG6 C3
USED AT LOCATION CNAS, H01
SPRING RETURN TO NEUTRAL

CONTACTS	POSITION AUTO	MANUAL	REMARKS
A		X	SPARE
B	X		THIS DWG
C		X	SPARE
D			
E			
F			
G			
H			

MODE SELECTOR SWITCH 43HF8,43HG6
USED AT LOCATION H01
NON SPRING RETURN

DEVICE No.	FUNCTION	RATING	MFR.	TYPE	CAT/DWG.No.	REMARKS
2HF8, 2HG6	SAFETY INJECTION SIGNAL TIMING REL.	120V AC	AGASTAT	ETR	ETR1413B	TIME DELAY 0.55-15 SEC.
2HF8A, 2HG6A	AUTO-TRANSFER TIMING RELAY	120V AC	AGASTAT	ETR	ETR1413D	TIME DELAY 2-60. SEC.
3HF1, 3HG1	DIESEL AUTO TRANSFER INTERLOCK REL.	——	——	——	(4) (5)	
27X HF1, HG1	4KV BUS UV TRIP AUXILIARY RELAY	——	——	——	(4) (5)	TRIPS ON LIV & TRANS. TO DIESEL
27Z HF82, HG82	4KV BUS START DIESEL UV AUX RELAY	——	——	——	(4) (5)	
27DC HF8, HG6	CONTROL BUS DC. UV RELAY	125V DC	GE Co.	HGA		
27DC1 HF8, HG6	CONTROL BUS D.C. UV RELAY	125VDC	AGASTAT	EGPD		ALARM ONLY
62HF8, HG6	BREAKER CLOSING SPRING TIME DELAY RLY	125VDC	AGASTAT	ETR	ETR1403C	TD-1-30 SEC.
50NHF8, HG6	GROUND OVERCURRENT SENSOR	——	——	——	(2)	ALARM ONLY
5HF8, HG6	OVERCURRENT RELAY	——	——	——	(2)	
51XHF8, HG6	OVERCURRENT AUX. RELAY	24V DC	GE Co.	HFA		
52HF8, HG6	AIR CIRCUIT BREAKER	——	——	——	(2)	REC. Nº 663332
52HF8 TC, 52HG6 TC	AIR CIRCUIT BKR. CELL INTERLOCK	——	——	——	——	PART OF SWITCHGEAR
43HF8/TS	CONTROL TRANSFER SWITCH	125V DC	ELECTER SWITCH	24	249078-2	
43HG6/TS						
PS185A, PS186A	AUX. SALTWATER LOW PRESSURE					
DI		400V			IN5616	S/C 94-6789
K617	SAFETY INJECTION INT'LK. BLK. REL.	——	——	——	(4)(15)(17)	

DESK	CONTACTS	CONT RM	INTER	HSD PNL	REMARKS
1	1T1-H-I13	X			THIS DWG
	2T2-H-I14			X	
	3T5-H-I17	X			
	4T6-H-I18			X	
2	5T21-H-I23	X			
	6T22-H-I24			X	
	7T25-H-I27	X			
	8T26-H-I28			X	
3	9T31-H-I33	X			
	10T32-H-I34			X	
	11T35-H-I37	X			
	12T36-H-I38			X	
4	1T41-H-I43	X			
	2T42-H-I44			X	THIS DWG
	3T45-H-I47	X			THIS DWG
	4T46-H-I48			X	SPARE
5	1T51-H-I53	X			SPARE
	2T52-H-I54			X	THIS DWG
	3T55-H-I57	X			THIS DWG
	4T56-H-I58			X	SPARE
6	2T16-H-I63	X			SPARE
	2T262-H-I64			X	ALM. REF. 18
	2T65-H-I67	X			THIS DWG
	2T466-H-I68			X	
7	2T571-H-I73	X			
	2T672-H-I74			X	
	2T75-H-I77	X			
	2T876-H-I78			X	

TRANSFER SWITCH: LOC: SHF8, SHG6 — 43HF8, TS — 43HG6, TS

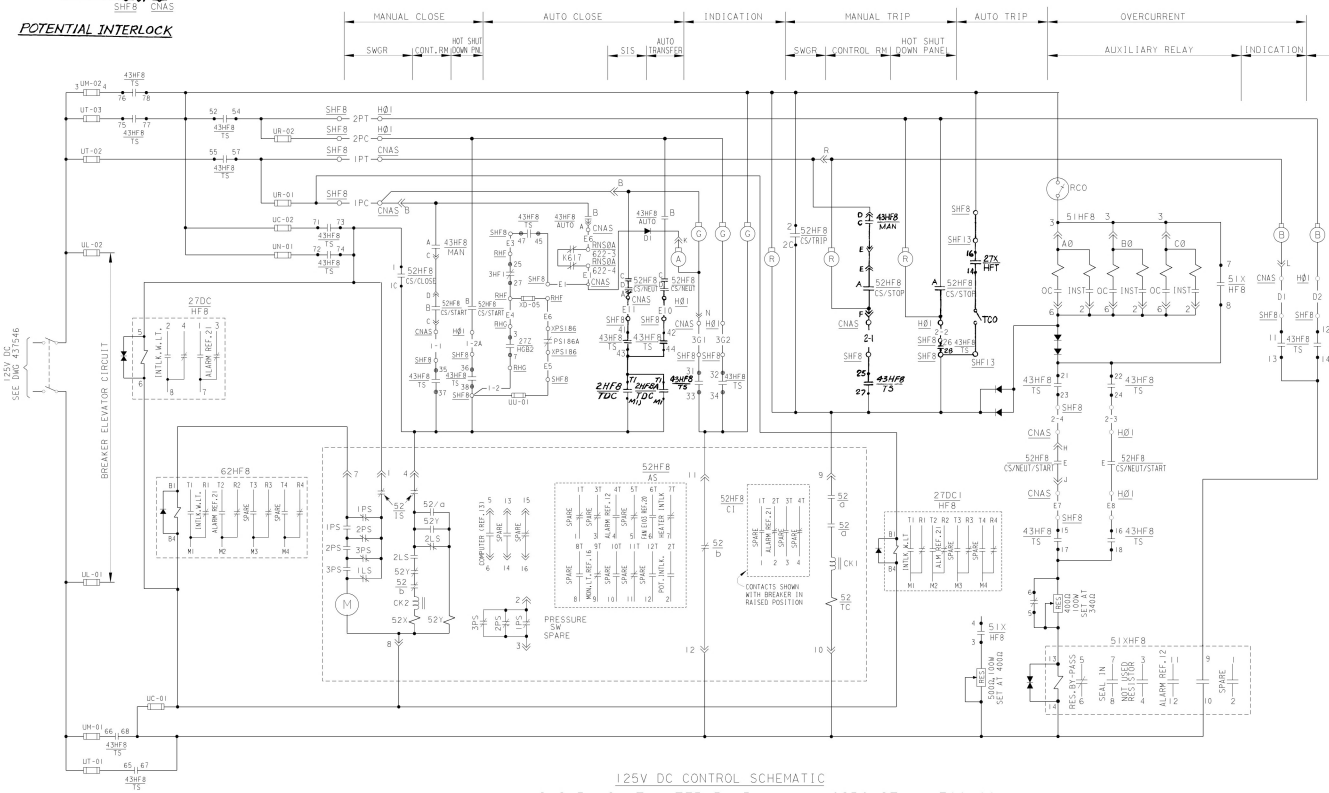

120 VAC SPACE HEATER FOR MOT. No. 11 - CKT. No. PJ8110
SIMILAR FOR MOT. NO. 12 EXCEPT USE HTR. LOC. MHG6 & CKT. NO. PJ8116

EQUIPMENT LOCATION NUMBERS

CNAS	CONTROL BOARD AUXILIARY SALTWATER (SECT. IVB1)
H01	HOT SHUT DOWN REMOTE CONTROL PANEL 1
MHF8	AUXILIARY SALT WATER PUMP No. 11
RHF	ENGINEER SAFEGUARDS RELAY BOARD BUS F
SHF8	SWITCHGEAR 4KV BUS F CUBICLE 8
RNS0B	NUCLEAR SAFEGUARD OUTPUT RACK - TRAIN B
XPS186	INSTRUMENT No. PS186 LOCAL MOUNTED
BTH110	TERMINAL BOX AREA H No. 110
PJ18-1	POWER PANEL INTAKE STRUCTURE

REFERENCES

	DWG.
1. DESCRIPTION OF ELECTRICAL DIAGRAM, SYMBOLS & CKT. DESIGNATIONS.	050003
2. SINGLE LINE METER & RELAY 4160V SYSTEM SH. 2 (BUS F, G, H).	437533
3. SCHEMATIC DIAGRAM POTENTIAL & SYNCHRONIZING 4160V SYSTEM.	437614
4. SCHEMATIC DIAGRAM 4160V BUS F AUTOMATIC TRANSFER.	437625
5. SCHEMATIC DIAGRAM 4160V BUS G AUTOMATIC TRANSFER	437626
6. SCHEMATIC DIAGRAM 4160V BUS DIFFERENTIAL SH. 2.	437617
7. SINGLE LINE METER & RELAY 125V DC SYSTEM.	437546
8. SCHEMATIC DIAGRAM 4160V BUS H AUTOMATIC TRANSFER.	437627
9. EQUIPMENT LOCATION NO.S.	101900
10. PIPING SCHEMATIC SALT WATER SYSTEM.	102017
11. LOGIC DIAGRAM AUXILIARY SALT WATER PUMPS.	19406
12. SCHEMATIC DIAGRAM MAIN ANNUNCIATOR SH. 1	501121
13. DIAGRAM OF CONNECTIONS PPC COMPUTER TERMINALS (PC1C)	437865
14. (M) FUNCTION DIAGRAM.	663195
15. (W) SOLID STATE PROTECTION SYSTEM.	663231
16. SCHEMATIC DIAGRAM MONITOR LIGHT BOX C.	437698
17. SCHEMATIC DIAGRAM SSPS OUTPUT RELAYS, TRAIN A, TRAIN B.	501869, 503088
18. SCHEMATIC DIAGRAM MAIN ANNUNCIATOR.	437700
19. P.D.S CONTROL CIRCUITS SCHEMATIC DIAGRAM	REC. DWG. NO. 6009838-69
20. SCHEMATIC DIAGRAM VENTILATION FAN MOTORS	437637
21. SCHEMATIC DIAGRAM MAIN ANNUNCIATOR	501138 (BUS F) 501137 (BUS G)

125V DC CONTROL SCHEMATIC

AUXILIARY SALT WATER PUMP No. 11, CIRCUIT No. F08H00

AUXILIARY SALT WATER PUMP NO. 12 SIMILAR EXCEPT AS SHOWN IN TABLE BELOW

MOTOR	MOTOR LOC.	CKT BKR. No.	CIRCUIT No.	BUS SECTION	DC CIRCUIT No.	BUS UNDERVOLTAGE RELAY	LOC.	CONTACT TRIP	AUTO TRANSFER BLOCKING RELAY	LOC.	CONTACT INTERLOCK	AUX. SALT WATER LOW PRESS. DEVICE	LOC.	CONTACT INTERLOCK	LOSS OF BUS VOLTAGE RELAY	LOC	CONTACT INTERLOCK	ALARM CIRCUIT NOS. OVERCURRENT	GROUND OVERCURRENT	TRANSFER OF CONTROL	CONTROL BUS DC UV	AUTO-START	COMPUTER CKT. No. RUNNING	SIS BLOCKING DEVICE	LOC.	CONTACT INTLK.	TIME DELAY RELAY RELAY	LOC.	CONTACT
No. 11	MHF8	52HF8	F08H00	F	113D	27XHF1	SHF13	16-H-14	3HF1	RHF	25-H-27	PS186A	XPS186	—H—	272HG82	RHG	3-H-7	A12400DF	A12409DF	AY5070DF	AV4407DF	AY2439DF	CY2853DF	K617	RNS0A	622-2 622-4	2HF8, 2HF8A	SHF8	T1-H-M1, T1-H-M1
No. 12	MHG6	52HG6	G06H00	G	213D	27XHG1	SHG13	22-H-28	3HG1	RHG	25-H-27	PS185A	XPS185	—H—	272HF82	RHF	3-H-7	A12400DG	A12410DG	AY5071DG	AV4307DG	AY2440DG	CY2854DG	K617	RNS0B	622-2 622-4	2HG6, 2HG6A	SHG6	1-H-5, 1-H-5

MOTOR	EIH FAN START-BKR CONTACT 480V BKR	SPLICING BOX
NO. 11	E103 52-1F-39	BJA219
NO. 12	E101 52-1G-60	BJA216

NUCLEAR SAFETY RELATED

P.G.&E. SYSTEM PHASE SEQUENCE A-C-B

KEY DWG. SECTION 4

UNIT 1

DATE		REVISION DESCRIPTION
05-07-2015		REVISED PER DON-2-M-431
D.D.	MNRU	
R.E.	FXC2	
I.V.	FAZ1	
P.E.	N/A	

ELECTRICAL
SCHEMATIC DIAGRAM
AUXILIARY SALT WATER PUMP

DIABLO CANYON POWER PLANT
PACIFIC GAS AND ELECTRIC COMPANY
SAN FRANCISCO, CALIFORNIA

DWG SCALE:	
BILL OF MATL:	
SUPSDS:	
SUPSD BY:	

DRAWING	SHEET	PAGE	REV
437594	1	0	33

U2-441287

RASTER-437594.dgn
DGN-437594.dgn
CAD User:MNRU Date:05-07-2015

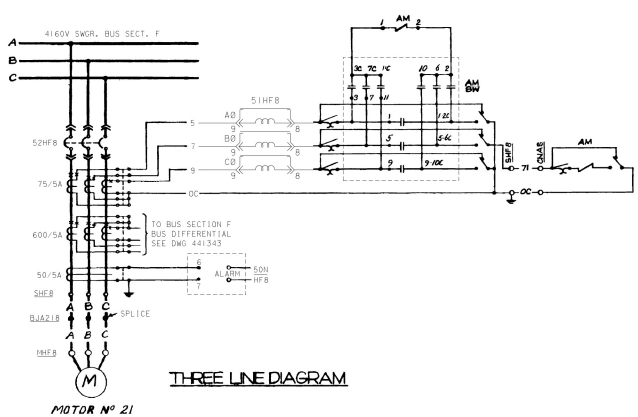

THREE LINE DIAGRAM

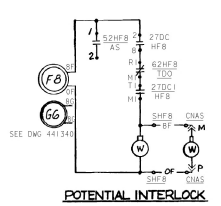

POTENTIAL INTERLOCK

CONTACTS	POSITIONS A	INT	B	INT	C
1			X	X	X
2	X	X			
3	X	X			
4				X	X
5			X	X	
6			X	X	
7			X	X	
8	X	X	X		
9				X	X
10				X	X
11				X	X

AMMETER SWITCH AM SW

USED AT LOCATION SHF8, SHG8

CONTACTS	POSITIONS MAN	AUTO	REMARKS
A	X		This Dwg
B		X	This Dwg
C	X		This Dwg.
D		X	ALARM

TRANSFER SWITCH 43HFB, 43HG6

USED AT LOCATION CNAS

NO SPRING RETURN

CONTACTS	POSITIONS TRIP	AFTER TRIP	CLOSE	REMARKS
1			X	THIS DWG
2	X			THIS DWG
3	X		X	SPARE
4			X	SPARE
5		X		SPARE
6				
7			X	SPARE
8				

CONTROL SWITCH 52HFB, 52HGB

USED AT LOCATION SHF8, SHG8

SPRING RETURN TO NEUTRAL

CONTACTS	POSITIONS STOP	NEUT	START	REMARKS
A	X			THIS DWG
B		X		THIS DWG
C		X	X	THIS DWG
D	X	X		THIS DWG
E		X	X	THIS DWG
F			X	SPARE

CONTROL SWITCH 52HFB, 52HGB

USED AT LOCATION CNAS, H01

SPRING RETURN TO NEUTRAL

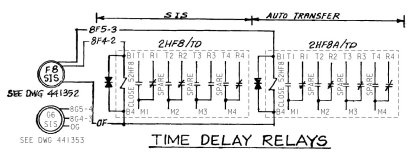

TIME DELAY RELAYS

CONTACTS	POSITIONS AUTO	MANUAL	REMARKS
A		X	ALARM REF 18
B	X		THIS DWG
C		X	SPARE
D	X		SPARE
E		X	SPARE
F		X	SPARE
G		X	SPARE
H		X	SPARE

MODE SELECTOR SWITCH 43HFB, 43HG6

USED AT LOCATION H01

NON SPRING RETURN

TABLE OF DEVICES

DEVICE NO	FUNCTION	RATING	MFR	TYPE	CAT/DWG NO	REMARKS
2HGG	SAFETY INJECTION SIGNAL TIMING REL	120V AC	AGASTAT	ETR	ETR1413B	TIME DELAY 0.55-15 SEC
2HGGA	AUTO-TRANSFER TIMING RELAY	120V AC	AGASTAT	ETR	ETR1413D	TIME DELAY 2-60 SEC
2HFB	SAFETY INJECTION SIGNAL TIMING REL	120V AC	AGASTAT	ETR	ETR1413B	TIME DELAY 0.55-15 SEC
2HFBA	AUTO-TRANSFER TIMING RELAY	120V AC	AGASTAT	ETR	ETR1413D	TIME DELAY 2-60 SEC
SHF1, SHG1	DIESEL AUTO TRANSFER INTERLOCK REL	——	——	——	(4) (5)	
27X HFT, HGT	4KV BUS UV TRIP AUXILIARY RELAY	——	——	——	(4) (5)	TRIPS ON UV & TRANS. TO DIESEL
27Z HFB2, HG2	4KV BUS START DIESEL UV AUX RELAY	——	——	——	(4) (5)	
27DC HFB, HG6	CONTROL BUS DC UNDERVOLTAGE REL	125V DC	GE Co	HGA		
27DC1 HFB, HG6	CONTROL BUS DC UNDERVOLTAGE REL	125V DC	AGASTAT	EGPD	EGPD	
62HFB, HG6	BKR CLOSING SPRING TIME DELAY REL	125V DC	AGASTAT	ETR	ETR1413C	
50NHFB, HG6	GROUND OVERCURRENT SENSR	——	——	——	(2)(8)	ALARM ONLY
51HFB, HG6	OVERCURRENT RELAY				(2)(8)	
51XHFB, HG6	OVERCURRENT AUX RELAY	24V DC	GE Co.	HFA		
52HFB, HG6	CIRCUIT BREAKER	——	——	——	(2)(8)	REC NO. 6009838
52HFB, 52HGB C1, C14	CIRCUIT BKR CELL INTERLOCK	——	——	——	——	PART OF SWITCHGEAR
43HFB/TS	CONTROL TRANSFER SWITCH	125V DC	ELECTRO SWITCH	24	2490782	
43HG6/TS	↓ ↓ ↓	↓	↓	↓	↓	
PS185A, PS186A	AUX SALTWATER LOW PRESSURE					
D1		400V	——	——	IN5616	S/C 94-6789
KG17	SAFETY INJECTION INTLK BLK REL	——	——	——	(15)(16)(17)	

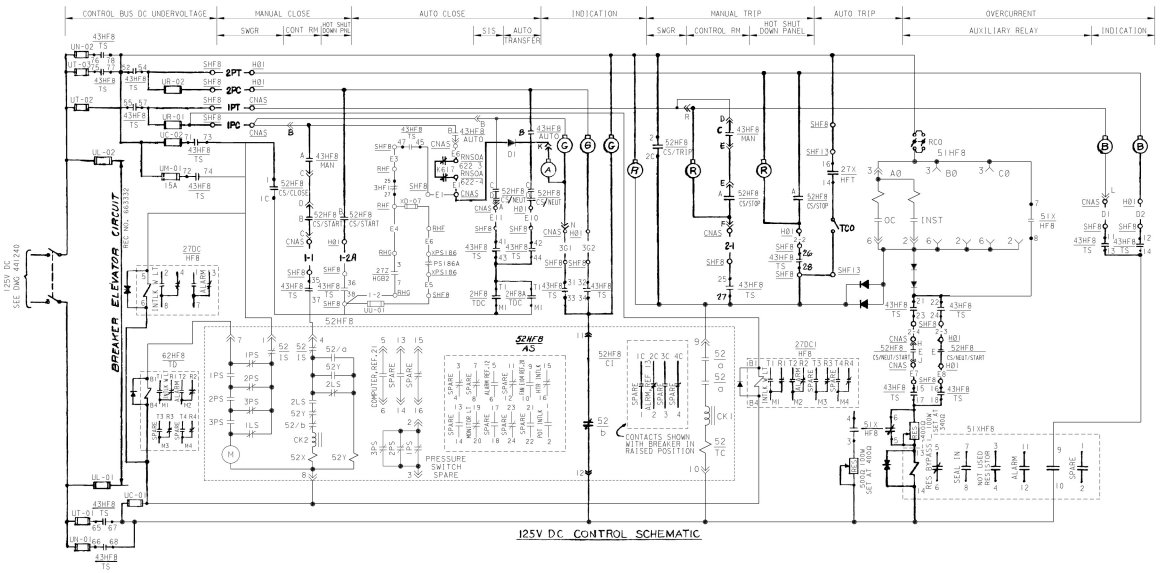

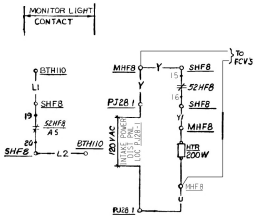

120 VAC SPACE HEATER FOR MTR Nº 21 - CKT Nº PJ28103

SIMILAR FOR MTR Nº 22 EXCEPT USE MTR LOC. HHG6 & CKT Nº PJ28101

DECK	CONTACTS	CONT RM	INTER	HSD PNL	REMARKS
1	1-13	X			THIS DWG
	2-14			X	THIS DWG
	3-15	X			THIS DWG
	4-16			X	THIS DWG
2	5-21	X			THIS DWG
	6-22			X	THIS DWG
	7-23	X			THIS DWG
	8-24			X	THIS DWG
	9-31	X			THIS DWG
3	10-32			X	THIS DWG
	11-33	X			THIS DWG
	12-34			X	THIS DWG
	13-41	X			THIS DWG
4	14-42			X	THIS DWG
	15-43	X			THIS DWG
	16-44			X	SPARE
	17-51	X			SPARE
5	18-52			X	THIS DWG
	19-53	X			THIS DWG
	20-54			X	SPARE
	21-61	X			SPARE
6	22-62			X	ALARM, REF. 18
	23-63	X			THIS DWG
	24-64			X	THIS DWG
	25-71	X			THIS DWG
7	26-72			X	THIS DWG
	27-73	X			THIS DWG
	28-74			X	THIS DWG

TRANSFER SWITCH 43HFB TS, 43HG6 TS

LOC SHF8, SHG6

EQUIPMENT LOCATION NUMBERS

CNAS	CONTROL BOARD AUXILIARY SALT WATER
H01	HOT SHUT DOWN REMOTE CONTROL PANEL 1
MHFB	AUXILIARY SALT WATER PUMP Nº 21
RHF	ENGINEER SAFEGUARDS RELAY BOARD BUS F
SHF8	SWITCHGEAR 4KV BUS F CUBICLE 8
RNS0B	NUCLEAR SAFEGUARD OUTPUT RACK-TRAIN B
XPS186	INSTRUMENT NO. PS186 LOCAL MOUNTED
PJ28 1	POWER PANEL INTAKE STRUCTURE
BTH110	TERMINAL BOX AREA H Nº 110

REFERENCES

1 DESCRIPTION OF ELEC SCHEM DIAG SYMBOLS & CKT DESIGNATIONS	DWG. NO. 030003
2 SINGLE LINE METER & RELAY 4160V SYSTEM SH 2 (BUS F)	DWG. NO. 441229
3 SCHEMATIC DIAGRAM POTENTIAL & SYNCHRONIZING 4160V SYS	DWG. NO. 441340
4 SCHEMATIC DIAGRAM 4160V BUS F AUTOMATIC TRANSFER	DWG. NO. 441352
5 SCHEMATIC DIAGRAM 4160V BUS G AUTOMATIC TRANSFER	DWG. NO. 441353
6 SCHEMATIC DIAGRAM 4160V BUS DIFFERENTIAL SH 2	DWG. NO. 441343
7 SINGLE LINE METER & RELAY 125 V DC SYSTEM	DWG. NO. 441240
8 SINGLE LINE METER & RELAY 125V DC SYSTEM SH 3 (BUS G & H)	DWG. NO. 441230
9 EQUIPMENT LOCATION Nº	DWG. NO. 067998
10 PIPING SCHEMATIC SALT WATER SYSTEM	DWG. NO. 108017
11 LOGIC DIAGRAM AUXILIARY SALT WATER PUMPS	DWG. NO. 102790
12 SCHEMATIC DIAGRAM MAIN ANNUNCIATOR SH 1	DWG. NO. 106277
13 SCHEMATIC DIAGRAM MAIN ANNUNCIATOR SH 17, 18	DWG No 502789, 502788
14 SCHEMATIC DIAGRAM MONITOR LIGHT BOX C	DWG. NO. 441454
15 (K) FUNCTION DIAGRAM	REC Nº 663105
16 (V) SOLID STATE PROTECTION SYSTEM	REC Nº 663231
17 SCHEM DIAG 96PS OUTPUT RELAYS, TRAIN A, TRAIN B	DWGS 503089, 503093
18. SCHEM DIAG MAIN ANNUNCIATOR, SH. 22 . DWG NO 441280	
19. P.D.S. CONTROL CIRCUITS SCHEMATIC DIAGRAM	REC DWG NO. 6009838-69
20. SCHEMATIC DIAGRAM VENTILATION FAN MOTORS	DWG. NO. 441224
21. DIAGRAM OF CONN. PPC COMPUTER TERMINALS (PCIC)	DWG. NO. 441535

AUXILIARY SALT WATER PUMP Nº 21, CIRCUIT Nº F08H00

TYPICAL SCHEMATIC DIAGRAM FOR AUXILIARY SALT WATER PUMP NO. 21 & 22 EXCEPT AS SHOWN IN TABLE BELOW

MOTOR	MOTOR LOC	CKT BKR Nº	CIRCUIT Nº	SPLICE AT	BUS SECTION	DC CKT NO	BUS UNDERVOLTAGE RELAY	LOC	CONTACT TRIP	AUTO TRANSFER BLOCKING RELAY	LOC	CONTACT INTERLOCK	AUX SALT WATER LOW PRESS DEVICE	LOC	CONTACT INTERLOCK	LOSS OF BUS VOLTAGE FUSE 1.0A	RELAY	LOC	CONTACT INTERLOCK	SIS BLOCKING RELAY	LOC	CONTACT INTLK	EXH FAN START BKR CONT FAN NO.	480V BKR
Nº 21	MHFB	52HFB	F08H00	BJA21B	F	113D	27XHFT	SHF13	16-H-14	3HF1	RHF	83-H-27	PS185A	XPS185	—|—	10-07	27DHFB2	RNS	5-H-7	K617	RNS8A	E104	52-2F-39
Nº 22	MHG6	52HG6	G06H00	BJA22B	G	213D	27XHGT	SHG13	22-H-28	3HG1	RHG	83-H-27	PS185A	XPS185	—|—	10-14	27DHFB2	SHF	5-H-7	K617	RNS8B	E102	52-2G-60

ALARM CIRCUIT Nº						COMPUTER CKT Nº	TIME RELAY 52 S		AUTO TRANSFER	
OVERCURRENT	GROUND OVERCURRENT	TRANSFER OF CONTROL	CONTROL BUS DC UV	AUTO START	RUNNING		RELAY	CONTACT	RELAY	CONTACT
A12400DF	A12405DF	AY5090DF	AV4407DF	AY2439DF	CY2853 DF	2HFB	T1-H-M1		2HFBA	T1-H-M1
A12400DG	A12405DG	AY5091DG	AW3097DG	AY2440DG	CY2854 DG	2HGG	1-H-5		2HGGA	1-H-5

NUCLEAR SAFETY RELATED

KEY DWG. SECTION 4

UNIT 2

P.G.&E. SYSTEM PHASE SEQUENCE A-C-B

DATE		REVISION DESCRIPTION
03-17-2015		REVISED PER DON-24337
D.D.	MNRU	
R.E.	RXG2	
I.V.	FXC2	
P.E.	N/A	

ELECTRICAL
SCHEMATIC DIAGRAM
AUXILIARY SALTWATER PUMPS

DIABLO CANYON POWER PLANT
PACIFIC GAS AND ELECTRIC COMPANY
SAN FRANCISCO, CALIFORNIA

DWG SCALE=	
BILL OF MAT'L=	
SUPSDS=	
SUPSD BY=	

DRAWING	SHEET	PAGE	REV
441287	1	0	28

UI-437594

RASTER=441287si.dgn
DGN=441287si.dgn
CAD User=RNMU Date=03-17-2015

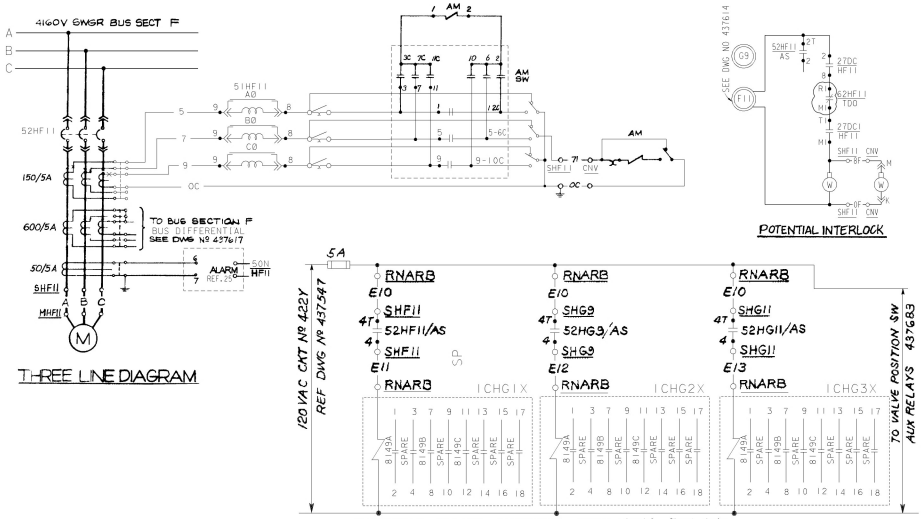

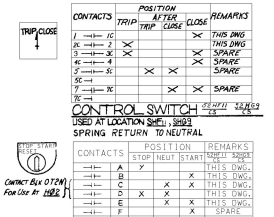

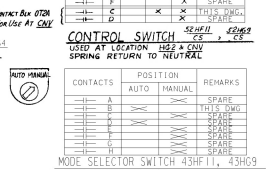

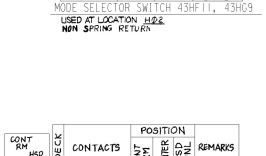

TABLE OF DEVICES

DEVICE Nº	FUNCTION	RATING	MFR	TYPE	CAT/DWG Nº	REMARKS
1HF11, 1HG9	SAFETY INJECTION SIGNAL RELAY	120V AC	AGASTAT	ETR	ETR1413A	
1HF11A, 1HG9A		"	"	"	"	
2-1F-60, 2-1G-64	LUBE OIL PP RUNNING TIMING REL	120V AC	AGASTAT	7000	7022AF	
2HF11, 2HG9	SAFETY INJECTION SIGNAL TIMING REL	120V AC	AGASTAT	ETR	ETR1413B	
2HF11A, 2HG9A	AUTO TRANSFER TIMING RELAY	120V AC	AGASTAT	ETR	ETR1413D	
27DC/HF11 27DC/HG9, 27DCI-HF11, -HG9	DC CONTROL UNDERVOLTAGE REL	125V DC	GE CO	HGA		
	DC CONTROL UNDERVOLTAGE REL	125VDC	AGASTAT	EGPD		ALARM ONLY
27XHF1, 27XHG1	4KV BUS UV TRIP AUXILIARY RELAY	——	——	——	(4) (5)	TRIPS ON UV & TRANSFER TO DIESEL
42-1F-60, 42-1G-64, 49-1F-60, 49-1G-64	480V AC MOTOR STARTER					
	480V AC OVERLOAD RELAY					
50NHF11, HG9	GROUND OVERCURRENT SENSOR	——	——	——	(2)	ALARM ONLY
51HF11, HG9	OVERCURRENT RELAY	——	——	——	(2)	
51HF11, HG9	OVERCURREN" AUXILIARY RELAY	24V DC	GE Co	HFA		
43HG1A	CONTROL TRANSFER RELAY	125V DC	"	"		
52XHF11, HG9	AIR CIRCUIT BREAKER	——	——	——		
52-1F-60, 52-1G-64	AIR CIRCUIT BREAKER	——	——	——	(13) (14)	
52XHF11 * 52HG9	AIR CIRCUIT BREAKER CLOSE AUX REL	125V DC	GE CO	HFA		
43HF11/TS, 43HG9/TS	CONTROL TRANSFER SWITCH	125V DC	ELECTRO SWITCH	24	249078-2	
52HG11/AS	AIR CIRCUIT BREAKER AUX SW	——	——	——	(8) (11)	
1CHG1X, 2X, 3X	CHARGING PUMPS RUNNING AUX RELAY	120VAC	——	——		
62HF11, HG9	BKR CLOSING SPRING TIME DELAY RLY	125V DC	AGASTAT	ETR	ETR1403C	TDI-30 SEC.
PS293, 294	LUBE OIL PRESSURE SWITCH	——	——	——		CONTROL CLOSES ON LOW L.O. PRESS.
PS295, 296	LUBE OIL PRESSURE SWITCH	——	——	——	9	CONTROL OPEN ON LOW L.O. PRESS.
PS297, 298	LUBE OIL PRESSURE SWITCH	——	——	——	(9)(17)	LOW ALARM INTLK WITH BREAKER "a" CONTACT

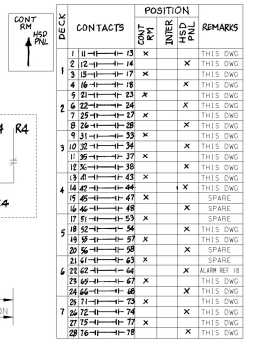

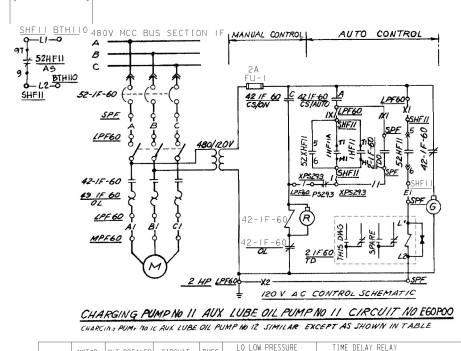

CHARGING PUMP Nº 11 AUX LUBE OIL PUMP NO 11 CIRCUIT NO E60P00

CHARGING PUMP NO 12 AUX LUBE OIL PUMP NO 12 SIMILAR EXCEPT AS SHOWN IN TABLE

MOTOR	MOTOR LOC	CKT. BREAKER NO.	CIRCUIT NO	BUSS SECT	LO LOW PRESSURE DEVICE	LOC	CONTACT INTLK	TIME DELAY RELAY RELAY	LOC	CONTACT
NO. 11	MPF60	52-1F-60	F50P00	1F	PS293	XPS293	—#—	1HF11A, 1HF11	SHF11	T 1-11-M1 T1-11-M1
NO. 12	MPG64	52-1G-64	G64P00	1G	PS294	XPS294	—#—	2HG9A, 2HG9	SHG9	9 11-11, 9 -11-11

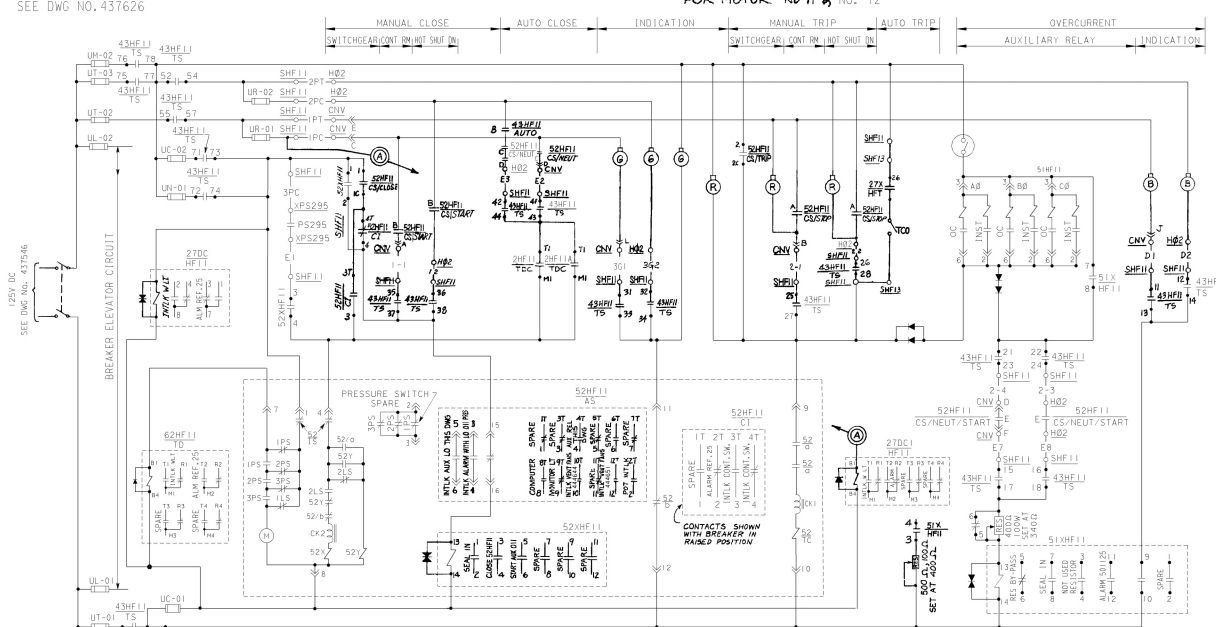

CHARGING PUMP Nº 11, CIRCUIT Nº F11H00

CHARGING PUMP Nº 12 SIMILAR EXCEPT AS SHOWN IN TABLE

TIME DELAY RELAY			MOTOR	MOTOR LOC.	CKT. BKR No.	CIRCUIT No.	BUS SECT	DC CIRCUIT No.	BUS UNDERVOLTAGE			LUBE OIL PRESSURE SW.			CONTROL TRANSF.		COMPUTER CKT.	ALARM CIRCUIT NO.S					
RELAY	LOC	CONTACT							RELAY	LOC	CONTACT TRIP	DEVICE	LOC	CONTACT INTLK	SWITCH	RELAY	BREAKER CLOSED	LOW OIL PRESS BKR CLOSED	OVERCURRENT	GROUND OVERCURRENT	TRANSFER OF CONTROL	DC CONTROL UNDERVOLT
2HF11, 2HF11A	SHF11	T1-11-M1,T1-11-M1	No. 11	MHF11	52HF11	F11H00	F	113D	27XHF1	SHF13	26-11-24	PS295	XPS295	BKR-11-CL	45HF11	——	CY0100DF	AY0106DF	A10101DF	A101040F	AY5070DF	AV4407DF
2HG9, 2HG9A	SHG9	1-11-5, 1-11-5	No. 12	MHG9	52HG9	G09H00	G	213D	27XHG1	SHG13	36-11-34	PS296	XPS296	BKR-11-CL	43HG9	——	CY0101DG	AY0107DG	A10102DG	A101050G	AY5071DG	AV4307DG

KEY DWG. SECTION 4

NUCLEAR SAFETY RELATED

P.G.&E. SYSTEM PHASE SEQUENCE A-C-B

REFERENCES

DWG. NO.

1. DESCRIPTION OF ELEC. SCHEM. DIAG. SYMBOLS & CKT. DESSIGNATIONS. 050003
2. SINGLE LINE METER & RELAY 4160V SYSTEM SH. 2 (BUS F,G,H). 437533
3. SCHEMATIC DIAGRAM POTENTIAL & SYNCHRONIZING 4160V SYSTEM. 437614
4. SCHEMATIC DIAGRAM 4160V BUS F AUTOMATIC TRANSFER. 437625
5. SCHEMATIC DIAGRAM 4160V BUS G AUTOMATIC TRANSFER. 437626
6.
7. SCHEMATIC DIAGRAM 4160V BUS DIFFERENTIAL SH. 2. 437617
8. SINGLE LINE METER & RELAY DIAGRAM 125V DC SYSTEM 437546
9. PIPING SCHEMATICS CHEMICAL & VOLUME CONTROL SYSTEM. 102008
10. LOGIC DIAGRAM CENTRIFUGAL CHARGING PUMP. 19405
11. SCHEMATIC DIAGRAM CHARGING PUMP NO. 13. 4008756
12. EQUIPMENT LOCATION NUMBERS. 101900
13. SINGLE LINE METER & RELAY DIAGRAM 480V SYSTEM BUS SECTION 1F. 437916
14. SINGLE LINE METER & RELAY DIAGRAM 480V SYSTEM BUS SECTION 1G. 437542
15. 4KV SWITCHGEAR RECORD. 663332
16. 4KV SWITCHGEAR SPEC. OR 4R. 8805
17. SCHEMATIC DIAGRAM MAIN ANNUNCIATOR. 501125
18. SCHEMATIC DIAGRAM MAIN ANNUNCIATOR. 437700
19. SCHEMATIC DIAGRAM CVCS SOLENOID VALVES SH. 2. 437683
20. SCHEMATIC DIAGRAM MONITOR LIGHT BOX C. 437698
21. SINGLE LINE METER & RELAY DIAGRAM INSTRUMENT AC SYSTEM. 437547
22. SCHEMATIC DIAGRAM RESIDUAL HEAT REMOVAL MOV. 438592
23. DELETED
24. P.D.S. CONTROL CIRCUITS SCHEMATIC DIAGRAM ..... REC.DWG.NO. 6009838-69
25. SCHEMATIC DIAGRAM MAIN ANNUNCIATOR ..... 501138(BUS F),501137(BUS G)
26. SCHEMATIC DIAGRAM AUX & FUEL HANDLING BLDG VENTILATION SYS (POV1)..... 444644
27. SCHEMATIC DIAGRAM AUX & FUEL HANDLING BLDG VENTILATION SYS (POV2)..... 444651

EQUIPMENT LOCATION NUMBERS

CNV — CONTROL BOARD CHEM. & VOLUME CONT. SYS. (SECT. 1VB2).
H02 — HOT SHOT DOWN REMOTE CONTROL PANEL 2.
MHF11 — REACTOR CHARGING PUMP NO. 11.
SHF11 — SWITCHGEAR 4KV BUS F CUBICLE 11.
XPS293—INSTR. PS 293 (LOCAL MOUNTED).
SPF — 480V MOTOR CONTROL CENTER BUS 1F.
LPF60—LOCAL STARTER CHARGING PP NO. 11 AUX. L.O. PP NO. 11.
RNARB — RACK NUCLEAR AUXILIARY RELAY CUBICLE B.
BTH110 TERMINAL BOX AREA H NO. 110.
RHF — ENG SAFEGD. RELAY BOARD BUS F.

DATE	REVISION DESCRIPTION
12-27-2011	REVISED PER DFT-7-1411

UNIT 1

ELECTRICAL
SCHEMATIC DIAGRAM
CHARGING PUMPS NO. 11 & 12

DIABLO CANYON POWER PLANT
PACIFIC GAS AND ELECTRIC COMPANY
SAN FRANCISCO, CALIFORNIA

D.O.	JBMS
R.E.	FKC2
I.V.	
P.E.	R2M5

DWG SCALE:
BILL OF MATL:
SUPSDS1
SUPSD. BY:

DRAWING	SHEET	PAGE	REV
437595	1	0	33

U2-441312

RASTER-437595.dgn
DGN-437595.dgn
CAD User-28MK Dated 12-27-2011

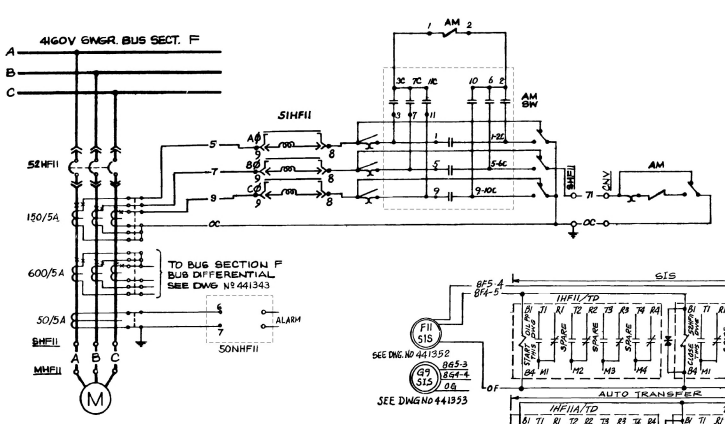

THREE LINE DIAGRAM

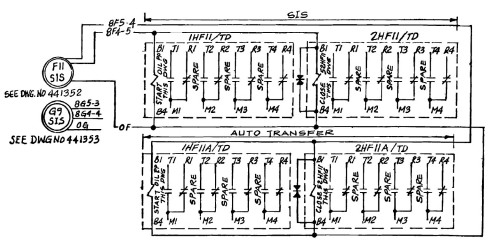

AUX & TIME DELAY RELAYS

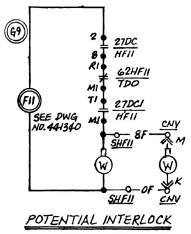

POTENTIAL INTERLOCK

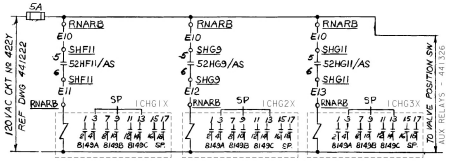

CHARGING PUMPS RUNNING AUXILIARY RELAYS
CONTACT INTERLOCKS FOR LETDOWN ORIFICE STOP VALVES DWG. № 441321

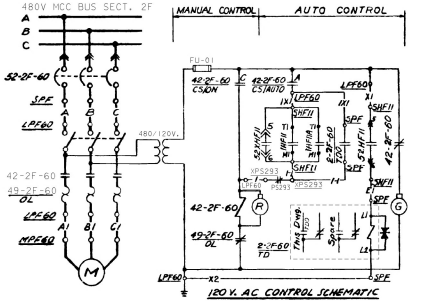

CHARGING PUMP № 21 AUX. LUBE OIL PUMP № 21 CIRCUIT № F60P00
CHARGING PUMP № 22 AUX. LUBE OIL PUMP № 22 SIMILAR EXCEPT AS SHOWN IN TABLE

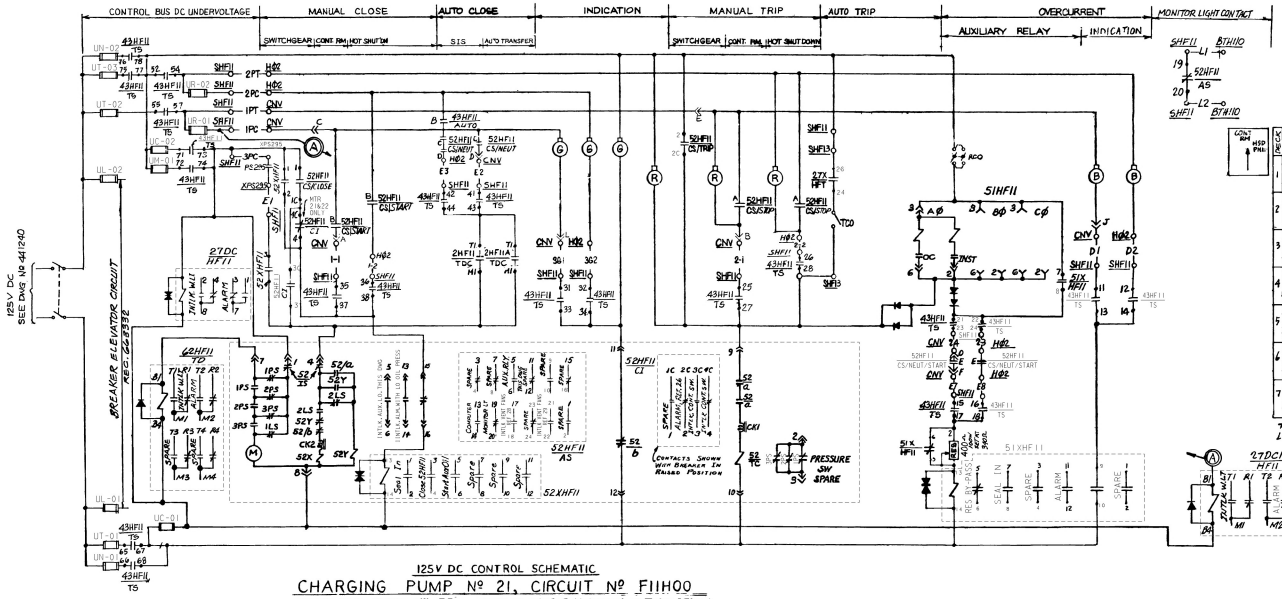

125V DC CONTROL SCHEMATIC
CHARGING PUMP № 21, CIRCUIT № F11H00
CHARGING PUMP № 22 SIMILAR EXCEPT AS SHOWN IN TABLE BELOW

MOTOR	MOTOR LOC.	CIRCUIT BKR №	CIRCUIT №	BUS SECTION	D.C. CKT №	BUS UNDERVOLTAGE RELAY	BUS UNDERVOLTAGE LOC.	BUS UNDERVOLTAGE CONTACT TRIP	LUBE OIL PRESSURE SW DEVICE	LUBE OIL PRESSURE SW LOC.	LUBE OIL PRESSURE SW CONTACT INTLK	ALARM CIRCUIT NO. LOW OIL PRESS BKR CLOSED	ALARM CIRCUIT NO. OVERCURRENT	ALARM CIRCUIT NO. GROUND OVERCURRENT	ALARM CIRCUIT NO. TRANSFER OF CONTROL	ALARM CIRCUIT NO. DC CONT. BUS UNDERVOLTAGE	COMPUTER CKT No BREAKER CLOSED	TIME RELAY DELAYS SIS RELAY	TIME RELAY DELAYS SIS CONTACT	TIME RELAY DELAYS AUTO TRANSFER RELAY	TIME RELAY DELAYS AUTO TRANSFER CONTACT
№ 21	MHF11	52HF11	F11H00	F	1130	27XHF1	SHF13	26—II—2	PS295	XPS295	BKR 52a CL	AY0106DF	A10101DF	A10104DF	AY5070DF	AV4407DF	CY0100DF	2HF11	TI—II—MI	2HF11A	TI—II—MI
№ 22	MHG9	52HG9	G09H00	G	2130	27XHGT	SHF13	36—II—3	PS296	XPS296	BKR 52a CL	AY0107DG	A10102DG	A10105DG	AY5071DG	AV4307DG	CY0101DG	2HG9	1—II—5	2HG9A	1—II—5

CONTACTS	POSITION TRIP	POSITION AFTER TRIP	POSITION AFTER CLOSE	POSITION CLOSE	REMARKS
1 — 1C				X	Trip Dwg.
2C — 2	X				This Dwg
9 — 3C	X			X	Spare
4C — 4				X	Spare
5 — 5C		X	X		Spare
5C —					
7 — 7C			X	X	Spare
7C —					

CONTROL SWITCH 52HF11 CS, 52HG9 CS
SPRING RETURN TO NEUTRAL

CONTACTS	POSITION STOP	POSITION NEUT	POSITION START	REMARKS
A	X			THIS DWG
B			X	THIS DWG
C		X	X	THIS DWG
D	X	X		THIS DWG
E		X	X	THIS DWG
F			X	SPARE
C		X	X	THIS DWG
D			X	SPARE

CONTACT BLK. OTB'D FOR USE AT HG2
CONTACT BLK. OTB'D FOR USE AT CNV
CONTROL SWITCH 52HF11, 52HG9 CS
USED AT LOCATION HG2 & CNV SPRING RETURN TO NEUTRAL

CONTACTS	POSITION STOP	POSITION AUTO	POSITION ON	REMARKS
A		X		THIS DWG.
B	X			SPARE
C			X	THIS DWG
D		X	X	SPARE

CONTROL SWITCH 42-2F-60 CS, 42-2G-64 CS
USED AT LOCATION LPF60, LPG64
SPRING RETURN TO AUTO FROM STOP

CONTACTS	POSITION AUTO	POSITION MANUAL	REMARKS
A		X	ALARM REF 23
B	X		THIS DWG
C	X		SPARE
D		X	SPARE

MODE SELECTOR SWITCH 43HF11, 43HG9
USED AT LOCATION HG2
NON SPRING RETURN

AMMETER SWITCH AM SW
USED AT LOCATION SHF11, SHG9

TABLE OF DEVICES

DEVICE NO	FUNCTION	RATING	MFR.	TYPE	CAT/DWG№	REMARKS
1HF11, 1HG9	SAFETY INJECTION SIGNAL RELAY	120V AC	AGASTAT	ETR	ETR1413A	T.D. 0.15-3 SECONDS
1HF11A, 1HG9A	AUTO TRANSFER RELAY	120V AC	AGASTAT	ETR	ETR1413A	T.D. 0.15-3 SECONDS
2HF11	SAFETY INJECTION SIGNAL TIMING REL.	120V AC	AGASTAT	ETR	ETR1413B	T.D. 0.55-15 SECONDS
2HF11A	AUTO TRANSFER TIMING REL.	120V AC	AGASTAT	ETR	ETR1413D	T.D. 2-60 SECONDS
2HG9	SAFETY INJECTION SIGNAL TIMING REL.	120V AC	AGASTAT	ETR	ETR1413B	T.D. 0.55-15 SECONDS
2HG9A	AUTO TRANSFER TIMING RELAY	120V AC	AGASTAT	ETR	ETR1413D	T.D. 2-60 SECONDS
27DC1HF11, HG9	DC CONTROL UNDERVOLTAGE REL.	125V DC	AGASTAT	EGPD		
27XHF1, HG9	DC CONTROL UNDERVOLTAGE REL.	125V DC	G.E.Co.	HGA		
2SF60-33G-64	LUBE OIL PP RUNNING TIMING REL.	120V AC	AGASTAT	7000	7022AF	
2THF1, HG9	480V RUN-UP TRIP AUXILIARY RELAY	—	—	—	(4) (5)	TRIPS ON UV & TRANSFER TO DIESEL
43HF11, 43HG9	CONTROL TRANSFER SWITCH	125V DC	ELECTRO SWITCH	—	24	2490778-2
42-2F-60, 42-2G-64	480V MOTOR STARTER	—	—	—	1(3)(14)	
49-2F-60, 49-2G-64	480V MOTOR OVERLOAD RELAY	—	—	—	—	PART OF MOTOR STARTER
50NHF11, HG9	GROUND OVERCURRENT SENSOR	—	—	—	(2)(7)	ALARM ONLY
51HF11, HG9	OVERCURRENT RELAY	—	—	—	(2)(7)	
51XHF11, HG9	OVERCURRENT AUXILIARY RELAY	24V DC	GECo	HFA		
52HF11, HG9, HG11	CIRCUIT BREAKER	—	—	—	78)(2)(7)	
52HF11 CS	4.16V CKT BKR. CELL INTLK	—	—	—		
52-2F-60 A	480V AIR CIRCUIT BREAKER				(13)	
52-2G-64	480V AIR CIRCUIT BREAKER	600V	CUTLER HAMMER	HFD	1141	
52XHF11, HG9	CIRCUIT BREAKER CLOSE AUX REL	125V DC	GECo	HFA		
62HF11, HG9	BKR CLOSING SPRING TIME DELAY REL	125V DC	AGASTAT	ETR		
ICHG1X, 2X, 3X	CHARGING PUMPS RUN AUX RELAY	120VAC	WE Corp	AR	AR 880AR	
PS 293, 294	LUBE OIL PRESSURE SWITCH					CONTACT CLOSES ON LOW LO PRES
PS 295, 296	LUBE OIL PRESSURE SWITCH					CONTACT OPENS ON LOW LUBE OIL PRESSURE
PS 297, 298	LUBE OIL PRESSURE SWITCH					LOW ALARM, INTLK WITH BREAKER "a" CONTACT.

EQUIPMENT LOCATION NUMBERS

CNV — CONTROL BOARD CHEM. VOLUME CONTROL SYSTEM
HG2 — HOT SHUT DOWN REMOTE CONTROL PANEL 2
MHF11 — REACTOR CHARGING PUMP NO. 21
1HF11 — INITIATING 4 KV BUS F CUBICLE 11
XPS293 — INSTR PS (LOCAL MOUNTED)
SPF — 480V MOTOR CONTROL CENTER BUS 2F
LPF60 — LOCAL STARTED CHARGING PP NO.21 AUX. L.O. PP No.21
RACK: NUCLEAR AUXILIARY RELAY CUB. B
RNARB —
BTH110 TERMINAL BOX AREA H NO. 110

REFERENCES

1.	DESCRIPTION OF ELEC. SCHEM. DIAG., SYMBOLS & CKT. DESIGNATIONS	050003
2.	SINGLE LINE METER & RELAY 4160V. SYSTEM SH. 2 (BUS F)	441223
3.	SCHEMATIC DIAGRAM CONTROL TYPE CHEMICAL & VOL. SYSTEM	441340
4.	SCHEMATIC DIAGRAM 4160 V. BUS F AUTOMATIC TRANSFER	441352
5.	SCHEMATIC DIAGRAM 4160V. BUS G AUTOMATIC TRANSFER	441353
6.	SCHEMATIC DIAGRAM 4160V. BUS DIFFERENTIAL SH 2	441343
7.	SINGLE LINE METER & RELAY 4160V SYSTEM SH 3 (BUS G & H)	441230
8.	SINGLE LINE METER & RELAY DIAG. 125V DC SYSTEM	441240
9.	PIPING SCHEMATIC CHEMICAL & VOLUME CONTROL SYSTEM	108008
10.	LOGIC DIAGRAM CENTRIFUGAL CHARGING PUMPS	102789
11.	LOGIC DIAGRAM CENTRIFUGAL CHARGING PUMP 2-3	102788
12.	EQUIPMENT LOCATION NUMBERS	103013
13.	SINGLE LINE METER & RELAY 480V BUS SECT 2F	441237
14.	SINGLE LINE METER & RELAY 480V BUS SECT 2G	441238
15.	4 KV SWITCHGEAR RECORD	663332
16.	4 KV SWITCHGEAR SPEC. OR 4R	8805
17.	SCHEMATIC DIAGRAM MAIN ANNUNCIATOR SH 1	500777
18.	SCHEMATIC DIAGRAM CHARGING PUMP NO 23	4008751
19.	SCHEMATIC DIAG CVCS SOLENOID VALVES SH2	441321
20.	SCHEMATIC DIAG. RESIDUAL HEAT REMOVAL MOV	441310
21.	SCHEMATIC DIAG MONITOR LIGHT BOX C	441414
22.	SINGLE LINE METER & RELAY DIAG. INST AC	441222
23.	SCHEMATIC DIAGRAM MAIN ANNUNCIATOR	441280
24.	SCHEMATIC DIAGRAM MAIN ANNUNCIATOR	500775
25.	DELETED	
26.	SCHEM DIAG. MAIN ANNUNCIATOR	500786,788
27.	P.G.&E. CONTROL CIRCUITS SCHEM. DIAGRAM REC.	500763B-69
28.	SCHEMATIC DIAG AUX & FUEL HANDLING BLDGS VENTILATION SYS (POV1)	454671
29.	SCHEMATIC DIAG AUX & FUEL HANDLING BLDGS VENTILATION SYS (POV2)	454678

NUCLEAR SAFETY RELATED

P.G.&E. SYSTEM PHASE SEQUENCE A-C-B

KEY DWG. SECTION 4

UNIT 2

DATE	REVISION DESCRIPTION
10-28-2014	REVISED PER DON-2-41261

D.D.	ZNS4
R.E.	KJD3
I.V.	N/A
P.E.	N/A

ELECTRICAL
SCHEMATIC DIAGRAM
CHARGING PUMPS No 21 & 22

PACIFIC GAS AND ELECTRIC COMPANY
SAN FRANCISCO, CALIFORNIA

DWG SCALE=
BILL OF MATL=
SUPSDS=
SUPSD BY=

DRAWING	SHEET	PAGE	REV
441312	1	0	28

RASTER-441312.dgn
DGN-441312.dgn
CAD User: ZNS4 Date: 10-28-2014

TABLE OF DEVICES

MANUF DEV NO	PG&E DEV NO	FUNCTION	RATING	MFG	TYPE	CAT DWG NO	REMARKS
	3MUX4 3MUX5	MAKEUP SYS AUX RELAYS	120VAC	W.E.	AR	AR880AR	
	LCI120X	VCT LEVEL CONTROLLER AUX RLY				663193-259	
	SV110A	SOLENOID VALVE FCV-110A	125VDC	ASCO		REF 11	
	SV111A	SOLENOID VALVE FCV-111A	125VDC	ASCO		REF 12	
	SV110B SV111B	SOLENOID VALVES					
	FCV110A	FLOW CONTROL VALVE FCV-110A	125VDC	CCI		REF 11	
	FCV111A	FLOW CONTROL VALVE FCV-111A	125VDC	CCI		REF 12	
	FCV110B FCV111B	FLOW CONTROL VALVE					
	POS----	VALVE POSITION SWITCHES					
	YM-110B	BORIC ACID BATCH INTEGRATOR TONE GENERATOR	24VDC	RTK	DB5		
	YM-111B	PRIMARY WATER BATCH INTEGRATOR TONE GENERATOR	24VDC	RTK	DB5		
	YQ-110	BORIC ACID BATCH INTEGRATOR 120VAC/24VDC PWR SUPPLY	120VAC	SOLA	SDN	SDN-2.5-24-100	
	YQ-100	120VAC LINE FILTER	120VAC	CONTROL CONCEPTS		6012372-55	
	RMCS S3/C0	FCV111A CONTROL SW IN AUTO DI INTO RMCS PLC SLOT 3 /CHANNEL 0		ALLEN BRADLEY		REF 10	
	RMCS S3/C1	FCV111B CONTROL SW IN AUTO DI INTO RMCS PLC SLOT 3 /CHANNEL 1		ALLEN BRADLEY		REF 10	
	RMCS S3/C2	FCV110A CONTROL SW IN AUTO DI INTO RMCS PLC SLOT 3 /CHANNEL 2		ALLEN BRADLEY		REF 10	
	RMCS S3/C3	FCV110B CONTROL SW IN AUTO DI INTO RMCS PLC SLOT 3 /CHANNEL 3		ALLEN BRADLEY		REF 10	
	RMCS S3/C4	VCT LOW LEVEL 14%-24% DI INTO RMCS PLC SLOT 3 /CHANNEL 4		ALLEN BRADLEY		REF 10	
	RMCS S4/C0	INTERLOCKS FOR BATP 11 & 12 13MUX51 DO FROM RMCS PLC SLOT 4 /CHANNEL 0		ALLEN BRADLEY		REF 10	
	RMCS S4/C1	START PRI WTR PP 11 & 12 13MUX41 DO FROM RMCS PLC SLOT 4 /CHANNEL 1		ALLEN BRADLEY		REF 10	
	RMCS S5/C0	PULSE OUTPUT FOR CHIME YM110B & PPC DO FROM RMCS PLC SLOT 5 /CHANNEL 0		ALLEN BRADLEY		REF 10	
	RMCS S5/C1	PULSE OUTPUT FOR CHIME YM111B & PPC DO FROM RMCS PLC SLOT 5 /CHANNEL 1		ALLEN BRADLEY		REF 10	
	RMCS S6/C0	ENERGIZE SV111B DO FROM RMCS PLC SLOT 6 /CHANNEL 0		ALLEN BRADLEY		REF 10	
	RMCS S6/C1	ENERGIZE SV110B DO FROM RMCS PLC SLOT 6 /CHANNEL 1		ALLEN BRADLEY		REF 10	
	27FMI100	FCV110A VLV CONTROLLER LIV RLY	24VDC	OMRON		REF 11	
	27FMI110	FCV111A VLV CONTROLLER LIV RLY	24VDC	OMRON		REF 12	

REACTOR COOLANT MAKE-UP SYSTEM CONTROL CIRCUIT

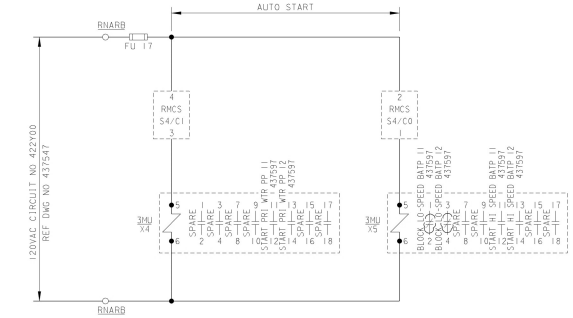

REACTOR COOLANT MAKE-UP SYSTEM VALVES

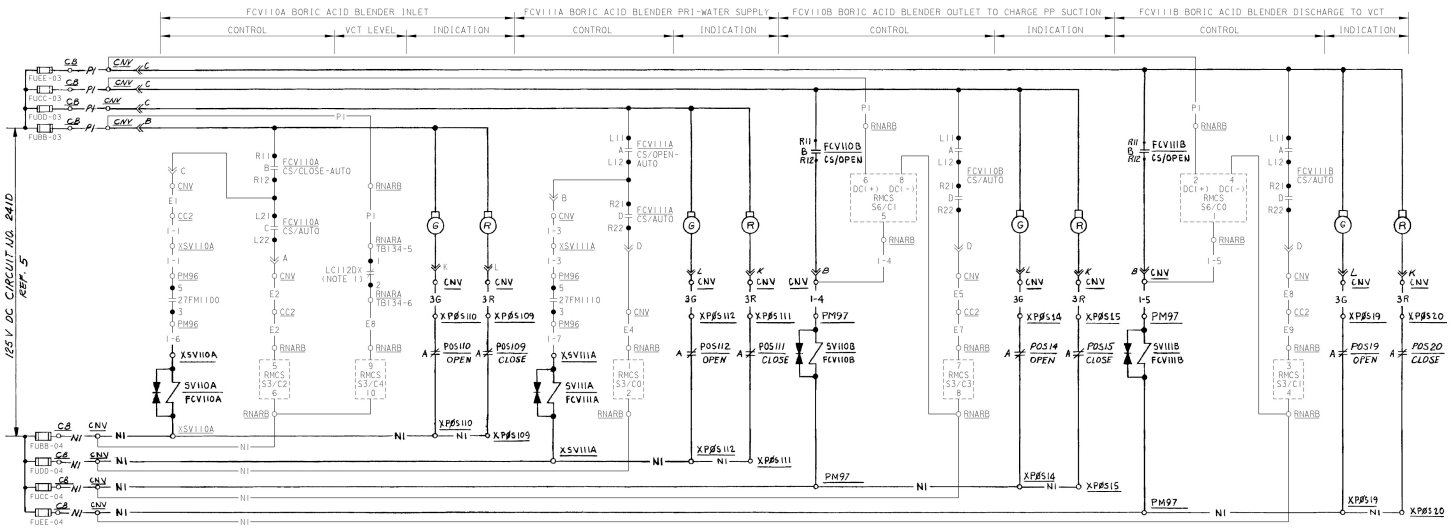

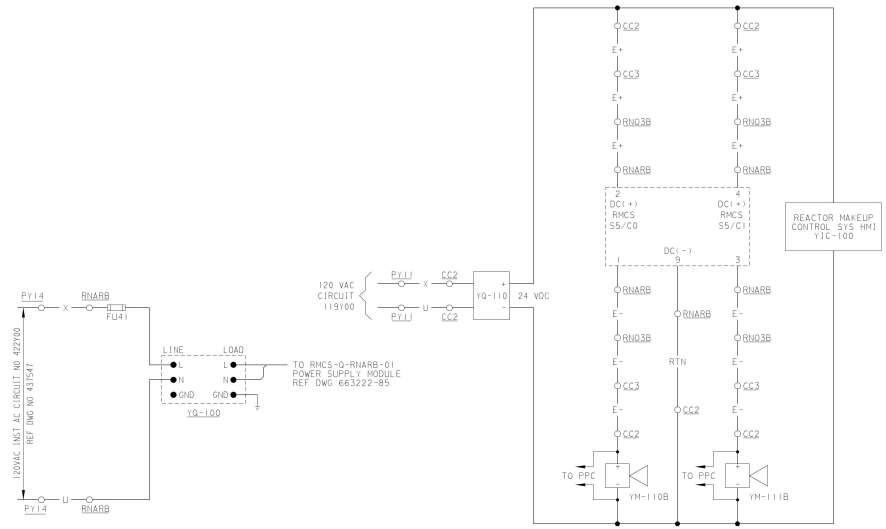

FUNCTION ABBREVIATIONS:

PLC-PROGRAMMABLE LOGIC CONTROLLER
DI-DIGITAL INPUT
DO-DIGITAL OUTPUT
RMCS-REACTOR MAKEUP CONTROL SYSTEM
BATP-BORIC ACID TRANSFER PUMP

NOTE:

1. BORIC ACID BATCH INTEGRATOR CONTACT CLOSED BELOW PRESET QUANTITY.

EQUIPMENT LOCATION NUMBERS

CC2	CONTROL CONSOLE - DEMINERALIZER & MAKE-UP WATER
CNV	CONTROL BOARD — CHEMICAL & VOLUME CONTROL
RNARA	RACK NUCLEAR - AUXILIARY RELAY CUBICLE A
RNB1B	RACK NUCLEAR CONTROL SET 1 CUBICLE B
XSV110A	INSTRUMENT SV110A (LOCAL MOUNTED)
RNARB	NUCLEAR RACK, AUXILLIARY RELAY CUBICLE B
PM96	MECHANICAL PANEL 96

REFERENCE DRAWINGS

1. DESCRIPTION OF ELECT. SCHEMATIC DIAG. SYMBOLS & CKT. DESIGNATIONS - DWG.# 050003
2. EQUIPMENT LOCATION NUMBERS — DWG.# 101900
3. PIPING SCHEMATIC - CHEMICAL & VOLUME CONTROL SYSTEM — DWG.# 102008
4. INSTRUMENT SCHEMATIC - MULTIVARIABLE INSTRUMENT SYSTEMS — DWG.# 103036
5. SINGLE LINE METER & RELAY - 125 V.D.C. — DWG.# 448075
6. SCHEMATIC DIAGRAM - CHEMICAL & VOLUME CONTROL SYSTEM - SHEET 2 — DWG.# 437597
7. SINGLE LINE METER & RELAY DIAG. - INSTR. A.C. SYSTEM — DWG.# 437549
8. @ ELEMENTARY DIAGRAMS — REC.# 663193
9. MAIN ANNUNCIATOR SCHEMATIC — DWG.# 501127
10. MAKEUP BATCH INTEGRATOR FUNCTIONAL REQUIREMENTS — DWG.# 663195-28
11. CCI VENDOR MANUAL FOR FCV-110A — DWG.# 6012372-61
12. CCI VENDOR MANUAL FOR FCV-111A — DWG.# 6012372-62

120VAC LINE FILTER
FOR RMCS-RNARB PLC
CKT NO. 422Y00

BORIC ACID AND DEMIN WATER BATCH INTEGRATOR
TONE GENERATOR CIRCUIT

KEY DWG. SECTION 4

VALVE NO's: FCV110A, FCV110B, FCV111A, FCV111B

UNIT 1

P.G.&E. SYSTEM PHASE SEQUENCE A-C-B

DATE		REVISION DESCRIPTION	ELECTRICAL SCHEMATIC REACTOR COOLANT MAKE-UP CONTROL	DWG SCALE=
03-05-2014		REVISED PER DFT-7*2503		BILL OF MATL=
D.D.	LCB1			SUPSDS=
R.E.	RXG2			SUPSD BY=
I.V.	FAZ1		DIABLO CANYON POWER PLANT PACIFIC GAS AND ELECTRIC COMPANY SAN FRANCISCO, CALIFORNIA	DRAWING 437596 SHEET 1 PAGE 0 REV 15
P.E.	N/A			

RASTER-437596.dgn
DGN-437596.dgn
CAD User:LCB1 Date:03-05-2014

TABLE OF DEVICES

MANUF DEV NO	PG&E DEV NO	FUNCTION	RATING	MFG	TYPE	CAT DWG NO	REMARKS
	3MUX4 3MUX5	MAKEUP SYS AUX RELAYS	120VAC	W.E.	AR	AR880AR	
	LCI120X	VCT LEVEL CONTROLLER AUX RLY				663193-259	
	SV110A	SOLENOID VALVE FCV-110A	125VDC	ASCO		REF 11	
	SV111A	SOLENOID VALVE FCV-111A	125VDC	ASCO		REF 12	
	SV110B SV111B	SOLENOID VALVES					
	FCV110A	FLOW CONTROL VALVE FCV-110A	125VDC	CCI		REF 11	
	FCV111A	FLOW CONTROL VALVE FCV-111A	125VDC	CCI		REF 12	
	FCV110B FCV111B	FLOW CONTROL VALVE					
	POS----	VALVE POSITION SWITCHES					
	YM-110B	BORIC ACID BATCH INTEGRATOR TONE GENERATOR	24VDC	RTK	DB5		
	YM-111B	PRIMARY WATER BATCH INTEGRATOR TONE GENERATOR	24VDC	RTK	DB5		
	YQ-110	BORIC ACID BATCH INTEGRATOR 120VAC/24VDC PWR SUPPLY	120VAC	SOLA	SDN	SDN-2.5-24-100	
	YQ-100	120VAC LINE FILTER	120VAC	CONTROL CONCEPTS		6012372-55	
	RMCS S3/C0	FCV111A CONTROL SW IN AUTO DI INTO RMCS PLC SLOT 3 /CHANNEL 0		ALLEN BRADLEY		REF 10	
	RMCS S3/C1	FCV111B CONTROL SW IN AUTO DI INTO RMCS PLC SLOT 3 /CHANNEL 1		ALLEN BRADLEY		REF 10	
	RMCS S3/C2	FCV110A CONTROL SW IN AUTO DI INTO RMCS PLC SLOT 3 /CHANNEL 2		ALLEN BRADLEY		REF 10	
	RMCS S3/C3	FCV110B CONTROL SW IN AUTO DI INTO RMCS PLC SLOT 3 /CHANNEL 3		ALLEN BRADLEY		REF 10	
	RMCS S3/C4	VCT LOW LEVEL 14%-24% DI INTO RMCS PLC SLOT 3 /CHANNEL 4		ALLEN BRADLEY		REF 10	
	RMCS S4/C0	INTERLOCKS FOR BATP 11 & 12 13MUX51 DO FROM RMCS PLC SLOT 4 /CHANNEL 0		ALLEN BRADLEY		REF 10	
	RMCS S4/C1	START PRI WTR PP 11 & 12 13MUX41 DO FROM RMCS PLC SLOT 4 /CHANNEL 1		ALLEN BRADLEY		REF 10	
	RMCS S5/C0	PULSE OUTPUT FOR CHIME YM110B & PPC DO FROM RMCS PLC SLOT 5 /CHANNEL 0		ALLEN BRADLEY		REF 10	
	RMCS S5/C1	PULSE OUTPUT FOR CHIME YM111B & PPC DO FROM RMCS PLC SLOT 5 /CHANNEL 1		ALLEN BRADLEY		REF 10	
	RMCS S6/C0	ENERGIZE SV111B DO FROM RMCS PLC SLOT 6 /CHANNEL 0		ALLEN BRADLEY		REF 10	
	RMCS S6/C1	ENERGIZE SV110B DO FROM RMCS PLC SLOT 6 /CHANNEL 1		ALLEN BRADLEY		REF 10	
	27FMI100	FCV110A VLV CONTROLLER LIV RLY	24VDC	OMRON		REF 11	
	27FMI110	FCV111A VLV CONTROLLER LIV RLY	24VDC	OMRON		REF 12	

REACTOR COOLANT MAKE-UP SYSTEM CONTROL CIRCUIT

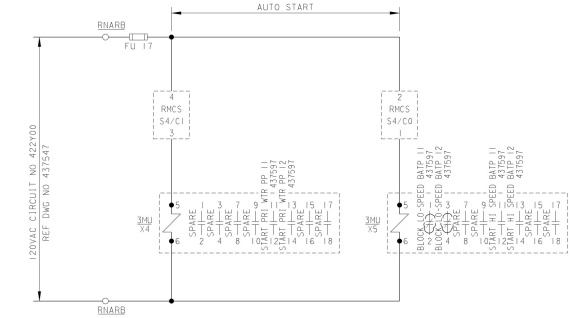

REACTOR COOLANT MAKE-UP SYSTEM VALVES

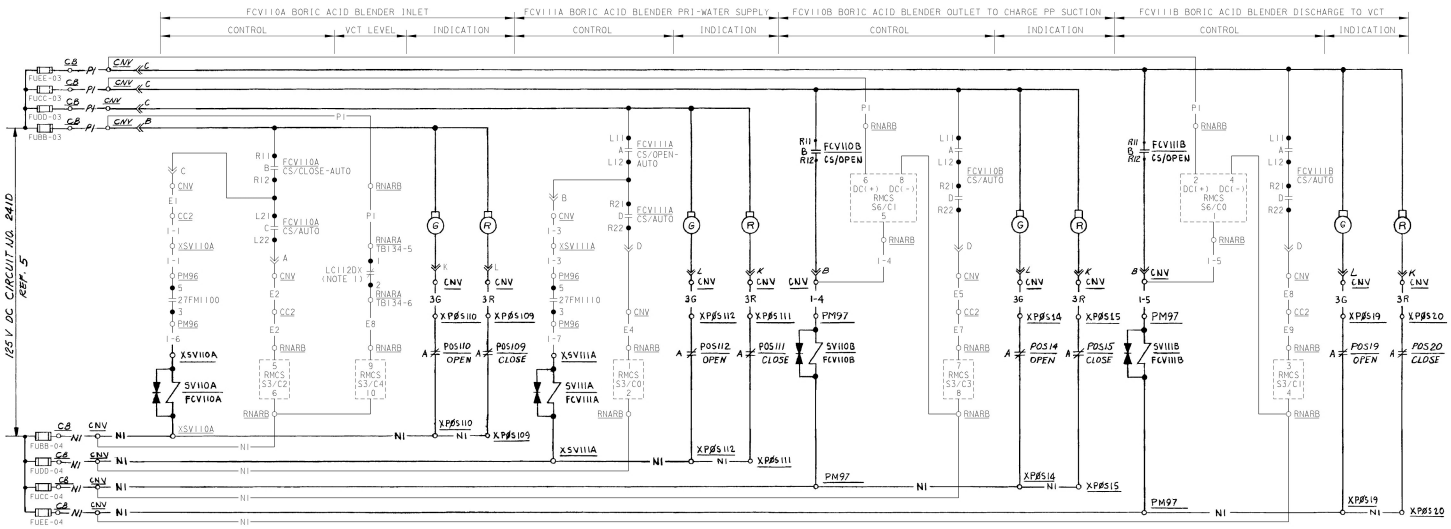

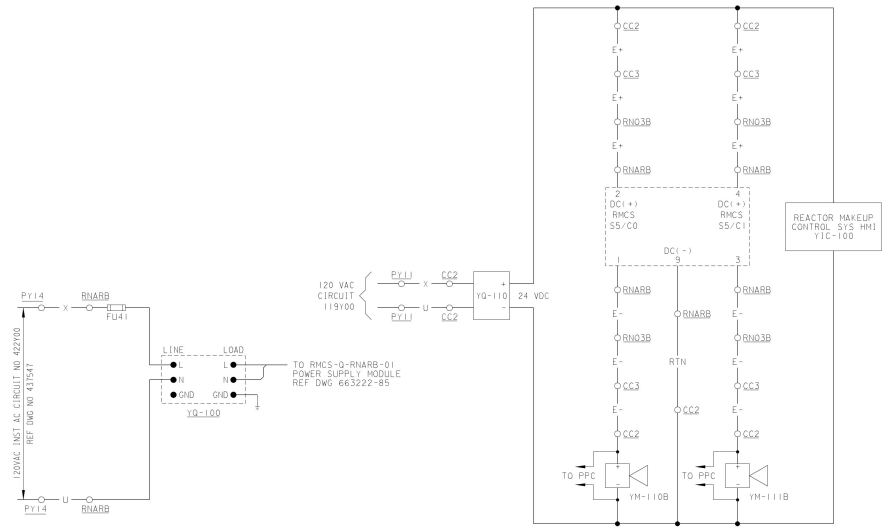

FUNCTION ABBREVIATIONS:

PLC-PROGRAMMABLE LOGIC CONTROLLER
DI-DIGITAL INPUT
DO-DIGITAL OUTPUT
RMCS-REACTOR MAKEUP CONTROL SYSTEM
BATP-BORIC ACID TRANSFER PUMP

NOTE:

1. BORIC ACID BATCH INTEGRATOR CONTACT CLOSED BELOW PRESET QUANTITY.

EQUIPMENT LOCATION NUMBERS

CC2	CONTROL CONSOLE - DEMINERALIZER & MAKE-UP WATER
CNV	CONTROL BOARD — CHEMICAL & VOLUME CONTROL
RNARA	RACK NUCLEAR - AUXILIARY RELAY CUBICLE A
RNB1B	RACK NUCLEAR CONTROL SET 1 CUBICLE B
XSV110A	INSTRUMENT SV110A (LOCAL MOUNTED)
RNARB	NUCLEAR RACK, AUXILLIARY RELAY CUBICLE B
PM96	MECHANICAL PANEL 96

REFERENCE DRAWINGS

1. DESCRIPTION OF ELECT. SCHEMATIC DIAG. SYMBOLS & CKT. DESIGNATIONS - DWG.# 050003
2. EQUIPMENT LOCATION NUMBERS — DWG.# 101900
3. PIPING SCHEMATIC - CHEMICAL & VOLUME CONTROL SYSTEM — DWG.# 102008
4. INSTRUMENT SCHEMATIC - MULTIVARIABLE INSTRUMENT SYSTEMS — DWG.# 103036
5. SINGLE LINE METER & RELAY - 125 V.D.C. — DWG.# 448075
6. SCHEMATIC DIAGRAM - CHEMICAL & VOLUME CONTROL SYSTEM - SHEET 2 — DWG.# 437597
7. SINGLE LINE METER & RELAY DIAG. - INSTR. A.C. SYSTEM — DWG.# 437549
8. @ ELEMENTARY DIAGRAMS — REC.# 663193
9. MAIN ANNUNCIATOR SCHEMATIC — DWG.# 501127
10. MAKEUP BATCH INTEGRATOR FUNCTIONAL REQUIREMENTS — DWG.# 663195-28
11. CCI VENDOR MANUAL FOR FCV-110A — DWG.# 6012372-61
12. CCI VENDOR MANUAL FOR FCV-111A — DWG.# 6012372-62

120VAC LINE FILTER
FOR RMCS-RNARB PLC
CKT NO. 422Y00

BORIC ACID AND DEMIN WATER BATCH INTEGRATOR
TONE GENERATOR CIRCUIT

KEY DWG. SECTION 4

VALVE NO's: FCV110A, FCV110B, FCV111A, FCV111B

UNIT 1

P.G.&E. SYSTEM PHASE SEQUENCE A-C-B

DATE		REVISION DESCRIPTION	ELECTRICAL SCHEMATIC REACTOR COOLANT MAKE-UP CONTROL	DWG SCALE=
03-05-2014		REVISED PER DFT-7*2503		BILL OF MATL=
D.D.	LCB1			SUPSDS=
R.E.	RXG2			SUPSD BY=
I.V.	FAZ1		DIABLO CANYON POWER PLANT PACIFIC GAS AND ELECTRIC COMPANY SAN FRANCISCO, CALIFORNIA	DRAWING 437596 SHEET 1 PAGE 0 REV 15
P.E.	N/A			

RASTER-437596.dgn
DGN-437596.dgn
CAD User:LCB1 Date:03-05-2014

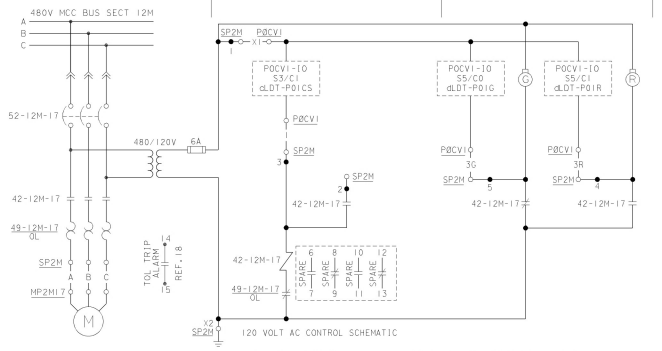

LAUNDRY DISTILLATE PUMP NO. 01 CIRCUIT NO 2MI7P00

LAUNDRY DISTILLATE PUMP NO. 02 SIMILAR EXCEPT AS SHOWN IN TABLE

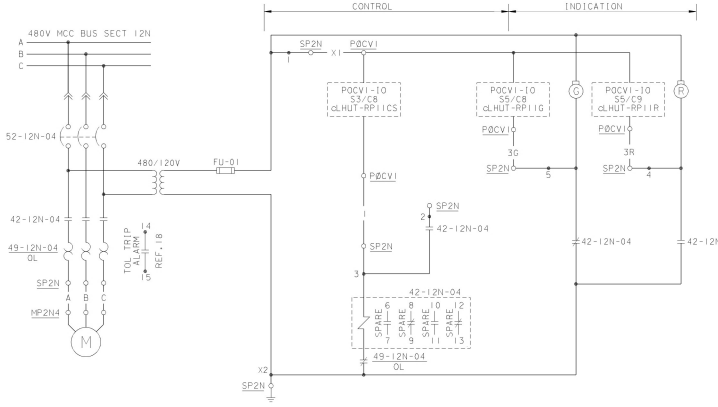

HOLD-UP TANK RECIRC PUMP No. 11 CIRCUIT No. 2N04P00

DESCRIPTION	MOTOR No.	MOTOR LOC	CKT BKR No.	CIRCUIT No.	BUS SECT	LOCATION OF CONTROL	DIGITAL OUTPUTS SLOT/CHASSIS	DIGITAL OUTPUTS TAG NAME	DIGITAL INPUTS SLOT/CHASSIS	DIGITAL INPUTS TAG NAME	DIGITAL INPUTS SLOT/CHASSIS	DIGITAL INPUTS TAG NAME	ALARM CIRCUIT No's OVERCURRENT
LAUNDRY DISTILLATE PUMPS	01	MP2M17	52-12M-17	2MI7P00	12M	PØCVI	S3/C1	cLDT-P01CS	S5/C0	cLDT-P01G	S5/C1	cLDT-P01R	A12976D
	02	MP2N15	52-12N-15	2NI5P00	12N	PØCVI	S3/C2	cLDT-P02CS	S5/C2	cLDT-P02G	S5/C3	cLDT-P02R	A12977D

TABLE OF DEVICES

DEVICE No.	FUNCTION	RATING	MFR.	TYPE	CAT./DWG. No.	REMARKS
42-1M-05, -16-59	480 V. MOTOR STARTER	—	CUTLER HAMMER	—	(01)(5)	
42-12M-17		—	CUTLER HAMMER	—	(3)	
42-12N-4, -15						
42-12M-10						
49-1M-05, -16-59	480V. MOTOR STARTER OVERLOAD RELAY	—	CUTLER HAMMER	—	—	PART OF MOTOR STARTER
49-12M-17		—	CUTLER HAMMER	—	—	PART OF MOTOR STARTER
49-12N-4, -15						
49-12M-10						
49X-1M-05 49X-16-59	480V. MOTOR STARTER OVERLOAD AUX. RELAY	—	CUTLER HAMMER	—	—	ALARM ONLY
52-1M-05, -16-59	480 V. AIR CIRCUIT BREAKER	—	CUTLER HAMMER	—	(4) (5)	
52-12M-16-17		—	—	—	(3)	
52-12N-4, -15						
POCVI-10	AUX CONTROL BD PLC				(19)	MOUNTED IN PØCVI

CONTACTS	POSITIONS STOP	NEUT.	START	REMARKS
A		X	X	THIS DWG.
B			X	THIS DWG

CONTROL SWITCH 42-12M-10 CS

USED AT LOCATION LP2M10
SPRING RETURN TO NEUTRAL
CUTLER HAMMER CAT. NO 10250T CAM #3 T10RTG AS APPL.

CONTACTS	POSITIONS OFF	ON	REMARKS
A	X		SPARE
B		X	THIS DWG

CONTROL SWITCH 42-1M-05 CS , 42-1G-59 CS

USED AT LOCATION CB
NO SPRING RETURN

EQUIPMENT LOCATION NUMBERS

CB	CONTROL BOARD COND. & F.W.
CTI	CONTROL BOARD TURBINE
LP2M10	LOCAL STARTER BATCHING TANK AGITATOR
PØCVI	CONTROL PANEL CHEMICAL VOLUME UNIT Nº1 AUX. BLDG. CONT. BD.
SP2M	480V MOTOR CONTROL CENTER BUS 12M
PM31	MECH. PANEL Nº 31, AUX FW PUMP

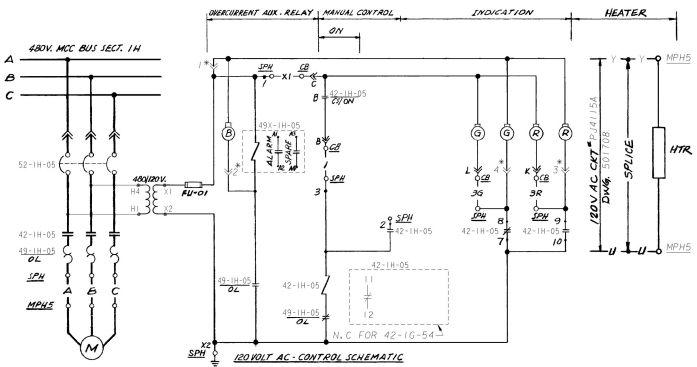

MU WTR XFER PP 0-1 CIRCUIT No. H05P00

MAKE UP WATER TRANSFER PP 02 SIMILAR EXCEPT AS SHOWN IN TABLE.

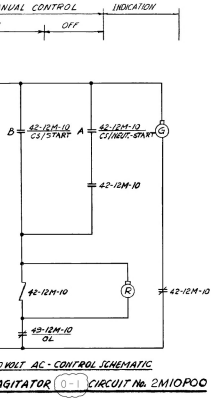

BATCHING TANK AGITATOR (0-1) CIRCUIT No. 2M10P00

MOTOR NE	MOTOR LOC.	CKT BKR. No.	CIRCUIT No.	BUS SECT.	LOCATION OF CONTROL	ALARM CIRCUIT Nº OVERCURRENT	ALARM CIRCUIT Nº LOW SUMP, TANK LEVEL	MOTOR SPACE HTR BREAKER	MOTOR SPACE HTR CIRCUIT No.	MOTOR SPACE HTR REF. DWG.
01	MPH5	52-1H-05	H05P00	1H	CB	A14208DH	—	52-PJ14-1-15	PJ4115A (Y,U1	501108
02	MPH5-59	52-1G-59	G59P00	1G	CB	A14308DG	—	52-PJ14-1-29	PJ4129A (Z,U1	455060

ALARM CIRCUIT NUMBERS OR INPUT NUMBERS				
LEVEL	TANK DESIGNATIONS BORIC ACID No. 11 LC102		No. 12 LC106	
LOW	A	L0107D	A	L0110D
HIGH	B		B	
LOW-LOW	C	AL0109D	C	AL0112D

REFERENCES

1.	DESCRIPTION OF ELEC. SCHEMATIC DIAG., SYMBOLS & CKT. DESIGNATIONS.	DWG. No.	050003
2.	EQUIPMENT LOCATION NUMBERS.	DWG. No.	101900
3.	SINGLE LINE METER & RELAY DIAG. 480 V. SYSTEM BUS SECT. 12M & 12N.	DWG. No.	437539
4.	SINGLE LINE METER & RELAY DIAG. 480 V. SYSTEM BUS SECT. 1G.	DWG. No.	437542
5.	SINGLE LINE METER & RELAY DIAG. 480 V. SYSTEM BUS SECT. 1H.	DWG. No.	437543
6.	PIPING & SCHEMATIC CHEMICAL & VOLUME CONTROL SYSTEM.	DWG. No.	102008
7.	PIPING SCHEMATIC MAKE-UP WATER SYSTEM.	DWG. No.	102016
8.	DELETED		
9.	INSTRUMENT SCHEMATIC PRESSURE INSTRUMENT SYSTEMS	DWG. No.	102034
10	SINGLE LINE METER & RELAY 125VDC SYSTEM SH 2	DWG. No	445075
11	SCHEMATIC DIAG. MAIN ANNUNCIATOR SH 1	DWG No.	501121
12.	DELETED		
13	INSTRUMENT SCHEMATIC ANALYSIS INSTRUMENT SYSTEMS	DWG. No.	102031
14.	SCHEMATIC DIAGRAM WASTE TREATMENT SYSTEM	DWG. No	437678
15	SCHEMATIC DIAGRAM UNIT 2 CVCS	DWG No.	441922
16.	DELETED		
17	SCHEMATIC DIAG. CHEMICAL & VOLUME CONTROL SYSTEM SHEET 2	DWG No.	437599
18.	SCHEMATIC DIAGRAM MAIN ANNUNCIATOR	DWG No.	501140
19.	AUXILIARY CONTROL BOARD SYSTEM FUNCTIONAL REQUIREMENTS SPEC.	DWG No.	663195-33

P.G.&E. SYSTEM PHASE SEQUENCE A-C-B

NUCLEAR SAFETY RELATED

KEY DWG. SECTION 4

UNIT 1

DATE	
01-23-2012	
D.D.	AJFJ
R.E.	FXC2
I.V.	
P.E.	R2M5

REVISION DESCRIPTION: REVISED PER ODN-2-4691

ELECTRICAL
SCHEMATIC DIAGRAM
C.V.C.S. AND MAKE-UP WATER PUMPS

DIABLO CANYON POWER PLANT
PACIFIC GAS AND ELECTRIC COMPANY
SAN FRANCISCO, CALIFORNIA

DWG SCALE:	
BILL OF MATL:	
SUPSDS:	
SUPSD BY:	

DRAWING	SHEET	PAGE	REV
437598	1	0	23

RASTER=437598.dgn
ODN=437598.dgn
OLD User=AJFJ Dated=01-23-2012

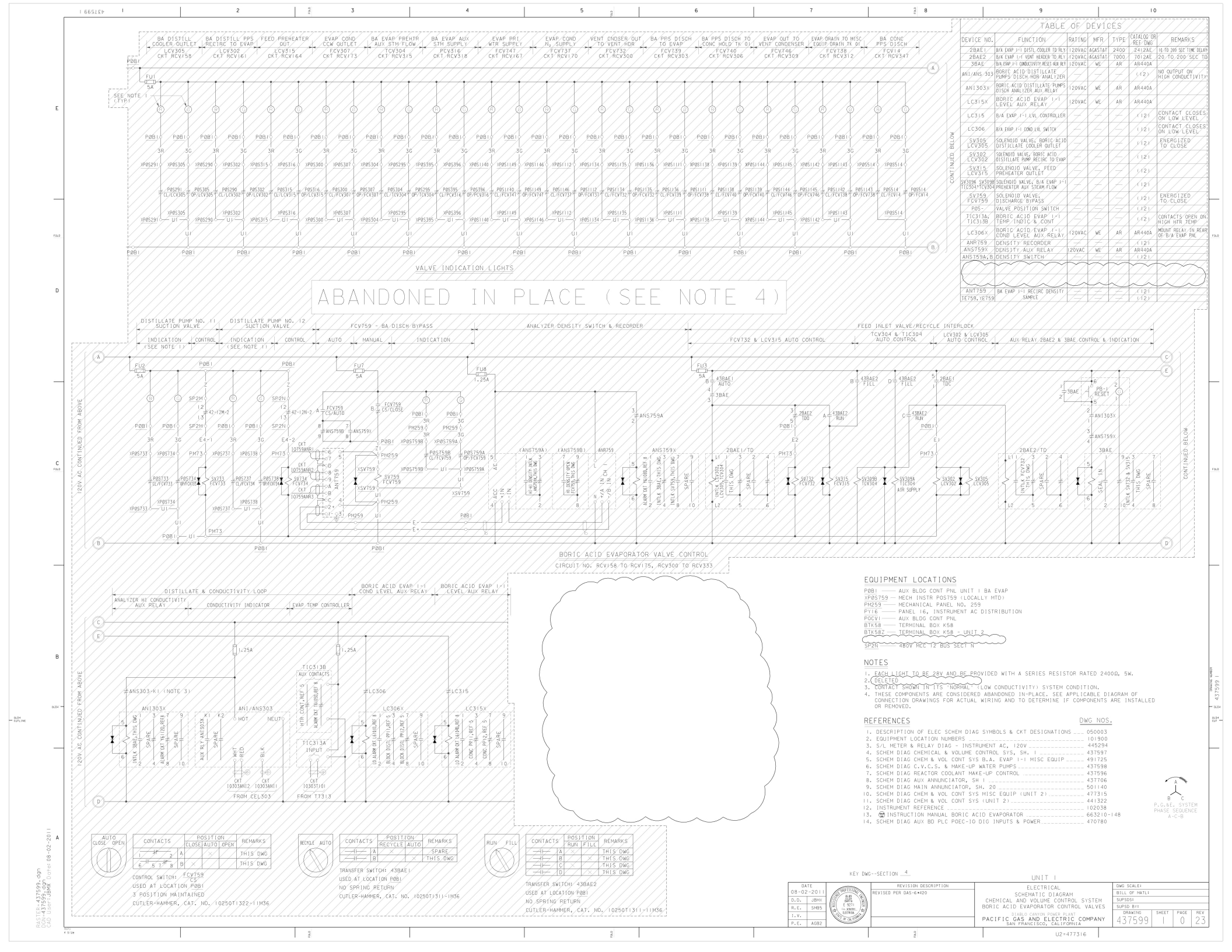
TABLE OF DEVICES
DEVICE NO. | FUNCTION | RATING | MFR. | TYPE | CATALOG OR REF. DWG | REMARKS
2BAE1 | B/A EVAP I-1 DISTL COOLER TD RLY | 120VAC | AGASTAT | 2400 | 241ZAE | 10 TO 200 SEC TIME DELAY
2BAE2 | B/A EVAP I-1 VENT HEADER TD RLY | 120VAC | AGASTAT | 7000 | 701ZAE | 20 TO 200 SEC TD
3BAE | B/A EVAP I-1 CONDUCTIVITY RESET RLY | 120VAC | WE | AR | AR440A |
ANI/ANS 303 | BORIC ACID DISTILLATE PUMPS DISCH HDR ANALYZER | — | — | — | (12) | NO OUTPUT ON HIGH CONDUCTIVITY
ANI303X | BORIC ACID DISTILLATE PUMPS DISCH ANALYZER AUX RELAY | 120VAC | WE | AR | AR440A |
LC315X | BORIC ACID EVAP I-1 LEVEL AUX RELAY | 120VAC | WE | AR | AR440A |
LC315 | B/A EVAP I-1 LVL CONTROLLER | — | — | — | (12) | CONTACT CLOSES ON LOW LEVEL
LC306 | B/A EVAP I-1 COND LVL SWITCH | — | — | — | (12) | CONTACT CLOSES ON LOW LEVEL
SV305 LCV305 | SOLENOID VALVE, BORIC ACID DISTILLATE COOLER OUTLET | — | — | — | (12) | ENERGIZED TO CLOSE
SV302 LCV302 | SOLENOID VALVE, BORIC ACID DISTILLATE PUMP RECIRC TO EVAP | — | — | — | (12) |
SV315 LCV315 | SOLENOID VALVE, FEED PREHEATER OUTLET | — | — | — | (12) |
SV3094 SV309B TIC304 TCV304 | SOLENOID VALVE, B/A EVAP I-1 PREHEATER AUX STEAM FLOW | — | — | — | (12) |
SV759 FCV759 | SOLENOID VALVE DISCHARGE BYPASS | — | — | — | (12) | ENERGIZED TO CLOSE
POS- | VALVE POSITION SWITCH | — | — | — | (12) |
TIC313A, TIC313B | BORIC ACID EVAP I-1 TEMP INDIC & CONT | — | — | — | (12) | CONTACTS OPEN ON HIGH HTR TEMP
LC306X | BORIC ACID EVAP I-1 COND LEVEL AUX RELAY | 120VAC | WE | AR | AR440A | MOUNT RELAY IN REAR OF B/A EVAP PNL
ANR759 | DENSITY RECORDER | — | — | — | (12) |
ANS759X | DENSITY AUX RELAY | 120VAC | WE | AR | AR440A |
ANS759A,B | DENSITY SWITCH | — | — | — | (12) |
ANT759 TE759, YE759 | BA EVAP I-1 RECIRC DENSITY SAMPLE | — | — | — | (12) (12) |
CONTINUED BELOW
VALVE INDICATION LIGHTS
ABANDONED IN PLACE (SEE NOTE 4)
DISTILLATE PUMP NO. 11 SUCTION VALVE
DISTILLATE PUMP NO. 12 SUCTION VALVE
FCV759 - BA DISCH BYPASS
ANALYZER DENSITY SWITCH & RECORDER
FEED INLET VALVE/RECYCLE INTERLOCK
INDICATION (SEE NOTE 1)
CONTROL
INDICATION (SEE NOTE 1)
CONTROL
AUTO
MANUAL
INDICATION
FCV732 & LCV315 AUTO CONTROL
TCV304 & TIC304 AUTO CONTROL
LCV302 & LCV305 AUTO CONTROL
AUX RELAY 2BAE2 & 3BAE CONTROL & INDICATION
120V AC CONTINUED FROM ABOVE
CONTINUED BELOW
BORIC ACID EVAPORATOR VALVE CONTROL
CIRCUIT NO. RCV158 TO RCV175, RCV300 TO RCV333
DISTILLATE & CONDUCTIVITY LOOP
ANALYZER HI CONDUCTIVITY AUX RELAY
CONDUCTIVITY INDICATOR
EVAP TEMP CONTROLLER
BORIC ACID EVAP I-1 COND LEVEL AUX RELAY
BORIC ACID EVAP I-1 LEVEL AUX RELAY
1.25A
ANS303-K1 (NOTE 3)
ANI303X
ANI/ANS303
HOT
NEUT
TIC313B AUX CONTACTS
TIC313A INPUT
LC306
LC306X
LC315
LC315X
FROM CEL303
FROM TT313
EQUIPMENT LOCATIONS
P0B1 — AUX BLDG CONT PNL UNIT 1 BA EVAP
XP0S759 — MECH INSTR P0S759 (LOCALLY MTD)
PM259 — MECHANICAL PANEL NO. 259
FY16 — PANEL 16, INSTRUMENT AC DISTRIBUTION
POCV1 — AUX BLDG CONT PNL
BTK58 — TERMINAL BOX K58
BTK58Z — TERMINAL BOX K58 - UNIT 2
SP2N — 480V MCC 12 BUS SECT N
NOTES
1. EACH LIGHT TO BE 28V AND BE PROVIDED WITH A SERIES RESISTOR RATED 2400Ω, 5W.
2. (DELETED)
3. CONTACT SHOWN IN ITS "NORMAL" (LOW CONDUCTIVITY) SYSTEM CONDITION.
4. THESE COMPONENTS ARE CONSIDERED ABANDONED IN-PLACE. SEE APPLICABLE DIAGRAM OF CONNECTION DRAWINGS FOR ACTUAL WIRING AND TO DETERMINE IF COMPONENTS ARE INSTALLED OR REMOVED.
REFERENCES
DWG NOS.
1. DESCRIPTION OF ELEC SCHEM DIAG SYMBOLS & CKT DESIGNATIONS 050003
2. EQUIPMENT LOCATION NUMBERS 101900
3. S/L METER & RELAY DIAG - INSTRUMENT AC, 120V 445294
4. SCHEM DIAG CHEMICAL & VOLUME CONTROL SYS, SH. 1 437597
5. SCHEM DIAG CHEM & VOL CONT SYS B.A. EVAP I-1 MISC EQUIP 491725
6. SCHEM DIAG C.V.C.S. & MAKE-UP WATER PUMPS 437598
7. SCHEM DIAG REACTOR COOLANT MAKE-UP CONTROL 437596
8. SCHEM DIAG AUX ANNUNCIATOR, SH 1 437706
9. SCHEM DIAG MAIN ANNUNCIATOR, SH. 20 501140
10. SCHEM DIAG CHEM & VOL CONT SYS MISC EQUIP (UNIT 2) 477315
11. SCHEM DIAG CHEM & VOL CONT SYS (UNIT 2) 441322
12. INSTRUMENT REFERENCE 102038
13. INSTRUCTION MANUAL BORIC ACID EVAPORATOR 663210-148
14. SCHEM DIAG AUX BD PLC POEC-10 DIG INPUTS & POWER 470780
P.G.&E. SYSTEM PHASE SEQUENCE A-C-B
AUTO CLOSE OPEN
CONTACTS | POSITION CLOSE | AUTO | OPEN | REMARKS
A | THIS DWG
B | THIS DWG
CONTROL SWITCH: FCV759 CS
USED AT LOCATION P0B1
3 POSITION MAINTAINED
CUTLER-HAMMER, CAT. NO. 10250T1322-11M36
RECYCLE AUTO
CONTACTS | POSITION RECYCLE | AUTO | REMARKS
A | SPARE
B | THIS DWG
TRANSFER SWITCH: 43BAE1
USED AT LOCATION P0B1
NO SPRING RETURN
CUTLER-HAMMER, CAT. NO. 10250T1311-11M36
RUN FILL
CONTACTS | POSITION RUN | FILL | REMARKS
A | THIS DWG
B | THIS DWG
C | THIS DWG
D | THIS DWG
TRANSFER SWITCH: 43BAE2
USED AT LOCATION P0B1
NO SPRING RETURN
CUTLER-HAMMER, CAT. NO. 10250T1311-11M36
KEY DWG--SECTION 4
UNIT 1
DATE 08-02-2011
D.D. JBMX
R.E. SMB5
I.V.
P.E. A002
REVISION DESCRIPTION
REVISED PER DAS-6-4420
ELECTRICAL
SCHEMATIC DIAGRAM
CHEMICAL AND VOLUME CONTROL SYSTEM
BORIC ACID EVAPORATOR CONTROL VALVES
DIABLO CANYON POWER PLANT
PACIFIC GAS AND ELECTRIC COMPANY
SAN FRANCISCO, CALIFORNIA
DWG SCALE:
BILL OF MATL:
SUPSDS1
SUPSD BY:
DRAWING 437599
SHEET 1
PAGE 0
REV 23
U2=477316
RASTER-437599.dgn
DGN-437599.dgn
CAD User:JBMX Date: 08-02-2011
437599 1

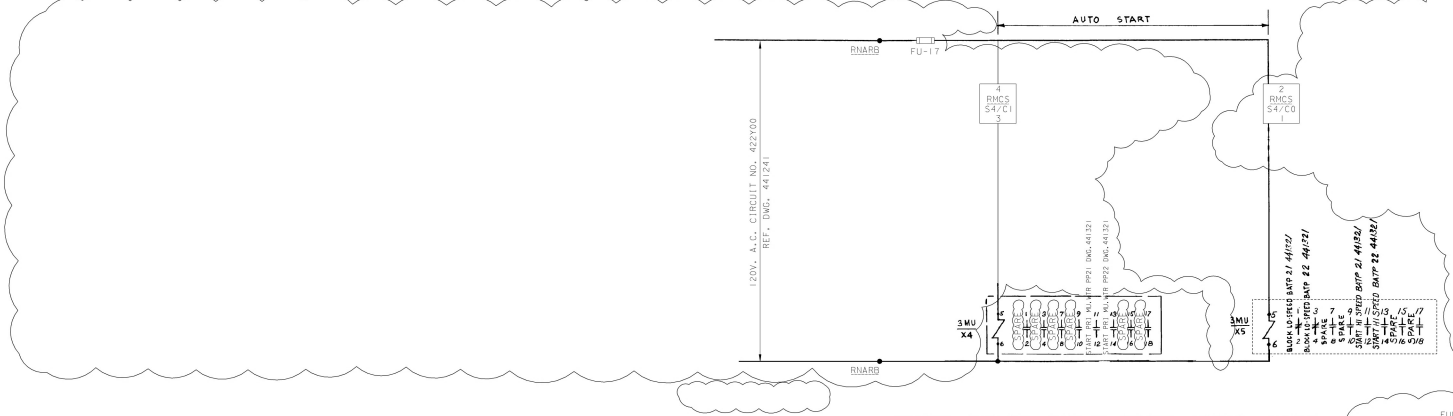

REACTOR COOLANT MAKE-UP SYSTEM CONTROL CIRCUIT

TABLE OF DEVICES

MANUF DEV NO	PG&E DEV NO	FUNCTION	RATING	MFG	TYPE	CAT DWG NO	REMARKS
	3MU/X4 3MU/X5	MAKEUP SYS AUX RELAYS	120VAC	W.E.	AR	ARB80AR	
	LCI120X	VCT LEVEL CONTROLLER AUX RLY				663193-259	
	SV1110A	SOLENOID VALVE FCV-110A	125VDC	ASCO		REF 11	
	SV1111A	SOLENOID VALVE FCV-111A	125VDC	ASCO		REF 12	
	SV1110B SV1111B	SOLENOID VALVES					
	FCV1110A	FLOW CONTROL VALVE FCV-110A	125VDC	CCI		REF 11	
	FCV1111A	FLOW CONTROL VALVE FCV-111A	125VDC	CCI		REF 12	
	FCV1110B FCV1111B	FLOW CONTROL VALVE					
	POS--	VELVE POSITION SWITCHES					
	YM-110B	BORIC ACID BATCH INTEGRATOR TONE GENERATOR	24VDC	RTK	085		
	YM-111B	PRIMARY WTR BATCH INTEGRATOR TONE GENERATOR	24VDC	RTK	085		
	YG-110	BORIC ACID BATCH INTEGRATOR 120V AC/24VDC PWR SUPPLY	120VAC	SOLA	SDN	SDN-25-24-100	
	YM2100	120V AC LINE FILTER	120VAC	CONTROL CONCEPTS		6012372-55	
	RMCS S3/C0	FCV111A CONTROL SW IN AUTO DI INTO RMCS PLC SLOT-3/CHANNEL 0		ALLEN BRADLEY		REF 10	
	RMCS S3/C1	FCV111B CONTROL SW IN AUTO DI INTO RMCS PLC SLOT-3/CHANNEL 1		ALLEN BRADLEY		REF 10	
	RMCS S3/C2	FCV110A CONTROL SW IN AUTO DI INTO RMCS PLC SLOT-3/CHANNEL 2		ALLEN BRADLEY		REF 10	
	RMCS S3/C3	FCV110B CONTROL SW IN AUTO DI INTO RMCS PLC SLOT 3/CHANNEL 3		ALLEN BRADLEY		REF 10	
	RMCS S3/C4	VCT LOW LEVEL 14%-24% DI INTO RMCS PLC SLOT 3/CHANNEL 4		ALLEN BRADLEY		REF 10	
	RMCS S4/C0	INTERLOCKS FOR BATP 21 & 22 (3MU/X1) DO FROM RMCS SLOT 4/CHANNEL 0		ALLEN BRADLEY		REF 10	
	RMCS S4/C1	INTERLOCKS FOR PP 21 & 22 (3MU/X1) DO FROM RMCS SLOT 4/CHANNEL 1		ALLEN BRADLEY		REF 10	
	RMCS S5/C0	PULSE OUTPUT FOR CHIME IM1108 & PPC DO FROM RMCS PLC SLOT 5/CHANNEL 0		ALLEN BRADLEY		REF 10	
	RMCS S5/C1	PULSE OUTPUT FOR CHIME IM1118 & PPC DO FROM RMCS PLC SLOT 5/CHANNEL 1		ALLEN BRADLEY		REF 10	
	RMCS S6/C0	ENERGIZED SV1118 DO FROM RMCS PLC SLOT 6/CHANNEL 0		ALLEN BRADLEY		REF 10	
	RMCS S6/C1	ENERGIZED SV1108 DO FROM RMCS PLC SLOT 6/CHANNEL 1		ALLEN BRADLEY		REF 10	
	27FM1100	FCV110A VLV CONTROLLER UV RLY	24VDC	OMRON		REF 11	
	27FM1110	FCV111A VLV CONTROLLER UV RLY	24VDC	OMRON		REF 12	

FUNCTIONAL ABBREVIATION:
PLC-PROGRAMMABLE LOGIC CONTROLLER
DI-DIGITAL INPUT
DO-DIGITAL OUTPUT
RMCS-REACTOR MAKEUP CONTROL SYSTEM
BATP-BORIC ACID TRANSFER PUMP

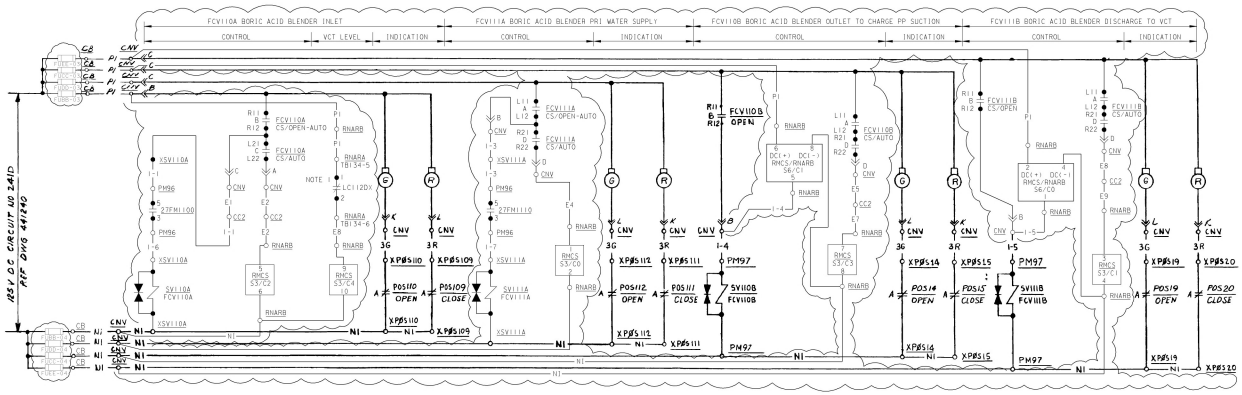

REACTOR COOLANT MAKE-UP SYSTEM VALVES

CONTROL SWITCH FCV110B CS

CONTACTS	POSITIONS CLOSE	AUTO	OPEN	REMARKS
L11/L12 A		X	X	THIS DWG.
R11/R12 B			X	THIS DWG.
L21/L22 C	X			SPARE
R21/R22 D	X		X	THIS DWG.

USED AT LOCATION CNV
NO SPRING RETURN.

CONTROL SWITCH FCV110A CS

CONTACTS	POSITIONS CLOSE	AUTO	OPEN	REMARKS
L11/L12 A	X			SPARE
R11/R12 B	X	X		THIS DWG.
L21/L22 C		X	X	THIS DWG.
R21/R22 D			X	SPARE

USED AT LOCATION CNV
NO SPRING RETURN

CONTROL SWITCH FCV111A CS

CONTACTS	POSITIONS CLOSE	AUTO	OPEN	REMARKS
L11/L12 A		X	X	THIS DWG.
R11/R12 B			X	SPARE
L21/L22 C	X			SPARE
R21/R22 D	X		X	THIS DWG.

USED AT LOCATION CNV
NO SPRING RETURN

NOTE:
1. BORIC ACID BATCH INTEGRATOR CONTACT CLOSED BELOW PRESET QUANTITY.

EQUIPMENT LOCATION NUMBERS

CC2	CONTROL CONSOLE - DEMINERALIZER & MAKE-UP WATER
CNV	CONTROL BOARD - CHEMICAL & VOLUME CONTROL
RNARA	RACK NUCLEAR - AUXILIARY RELAY CUBICLE A
RNB1B	RACK NUCLEAR CONTROL SET 1 CUBICLE B
XSV110A	INSTRUMENT SV110A (LOCAL MOUNTED)
RNARS	NUCLEAR RACK, AUXILIARY RELAY CUBICLE B
PM96	MECHANICAL PANEL 96

REFERENCE DRAWINGS

1. DESCRIPTION OF ELECT. SCHEMATIC DIAG. SYMBOLS & CKT. DESIGNATIONS - DWG.# 050003
2. EQUIPMENT LOCATION NUMBERS - DWG.# 103013
3. PIPING SCHEMATIC - CHEMICAL & VOLUME CONTROL SYSTEM - DWG.# 108008
4. INSTRUMENT SCHEMATIC - MULTIVARIABLE INSTRUMENT SYSTEMS - DWG.# 108036
5. SINGLE LINE METER & RELAY - 125 VDC - DWG.# 441240
6. SCHEMATIC DIAGRAM - CHEMICAL & VOLUME CONTROL SYSTEM - SHEET 2 - DWG.# 441321
7. SINGLE LINE METER & RELAY DIAG. - INSTR. A.C. SYSTEM - DWG.# 441241
8. (DELETED)
9. CONTROL CONSOLE - SECTION CC2 - DWG. *152588
10. MAKEUP BATCH INTEGRATOR FUNCTIONAL REQUIREMENTS - DWG. *663195-28
11. CCI VENDOR MANUAL FOR FCV-110A - DWG. *6012372-61
12. CCI VENDOR MANUAL FOR FCV-111A - DWG. *6012372-62
13. MAIN ANNUNCIATOR SCHEMATIC - DWG. *500777
14. VENDOR DWG INTERNAL DIAGRAM - DWG. *663222-127,-171,-175,-176,-177

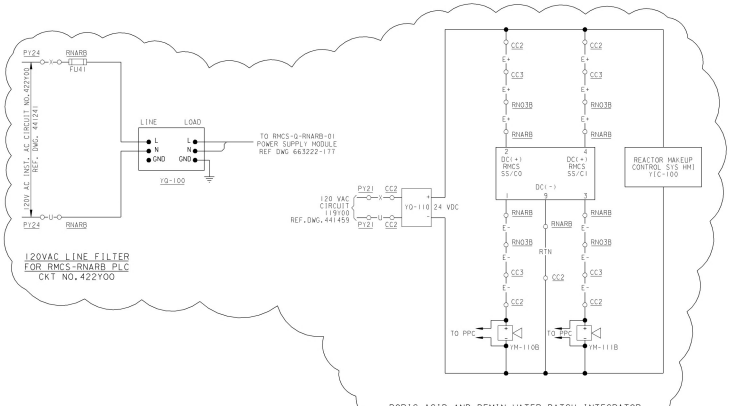

CONTACT	POSITION CLOSE	OPEN & INTERM	REMARKS ALL OTHERS	POS15	POS20	POS109
A		X	RED LT.	RED LT.		RED LT.
B	X		SPARE	SPARE		SPARE
C		X	SPARE			
D	X		SPARE	SPARE		

VALVE CLOSE POSITION SWITCH

COMPUTER Y01030 Y01040

CONTACT	POSITION CLOSE & INTERM	OPEN	REMARKS ALL OTHERS	POS110
A	X		GREEN LT.	GREEN LT.
B		X	SPARE	SPARE
C	X		SPARE	
D		X	SPARE	

VALVE OPEN POSITION SWITCH

VALVE NOS.: FCV110A, FCV110B, FCV111A, FCV111B

P.G.&E. SYSTEM PHASE SEQUENCE A-C-B

KEY DWG. SECTION 4

UNIT 2

DATE	REVISION DESCRIPTION
04-15-2008	REVISED PER DC2-SE-50779-01 AND FCT-32610

D.O.	ADM1
R.E.	FXC2
I.V.	
P.E.	PMB7

ELECTRICAL
SCHEMATIC DIAGRAM
REACTOR COOLANT MAKE-UP CONTROL

DIABLO CANYON POWER PLANT
PACIFIC GAS AND ELECTRIC COMPANY
SAN FRANCISCO, CALIFORNIA

DWG SCALE=
BILL OF MATL=
SUPSDS=
SUPSD BY=

DRAWING	SHEET	PAGE	REV
441320	1	0	11

RASTER: 441320.dgn
DGN=441320.dgn
CAD User: ADM1 Date: 04-15-2008

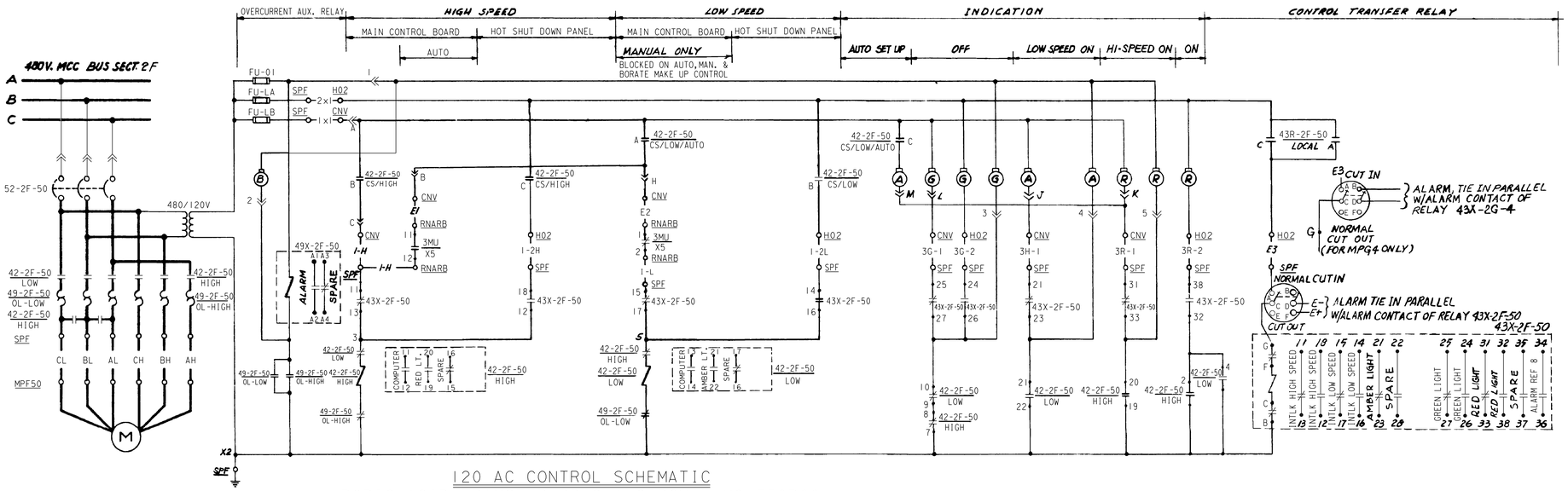

120 AC CONTROL SCHEMATIC
BORIC ACID TRANSFER PP 2-1 CIRCUIT NO F50P00

BORIC ACID TRANSFER PP 2-2 SIMILAR EXCEPT AS SHOWN IN TABLE

MOTOR Nº	MOTOR LOC	CKT. BKR. No.	CIRCUIT NO.	BUS SECTION	BORATE OR AUTO MAKE-UP DEVICE	LOC.	CONTACT HIGH	CONTACT LOW	ALARM CIRCUIT Nº: OVERCURRENT	ALARM CIRCUIT Nº: TRANSFER OF CONTROL	COMPUTER CKT RUNNING	FUSES SECONDARY (CONT. CKT.)
21	MPF50	52-2F-50	F50P00	2F	3MU-X5	RNARB	1	2	AI4408DF	AY5065DF	CY0105DF	SPF-LA-05, SPF-LB-05
22	MPG4	52-2G-4	G04P00	2G	3MU-X5	RNARB	3	4	AI4308DG	AY5066DG	CY0106DG	SPG-LA-03, SPG-LB-03

OFF AUTO ON

CONTACTS	OFF	AUTO	ON	REMARKS
A		X	X	THIS DWG
B	X	X		THIS DWG
C	X			SPACE
D			X	THIS DWG
E	X			SPARE
F	X	X		SPARE

CONTROL SWITCH 42-2F-38 CS, 42-2G-52 CS

USED AT LOCATION CNV
NO SPRING RETURN

CONTROL ROOM / LOCAL

CONTACTS	CONTROL ROOM	LOCAL	REMARKS
A		X	THIS DWG
B	X		SPARE
C		X	THIS DWG.
D	X		SPARE

TRANSFER SWITCH 43R-2F-50, 43R-2G-4

USED AT LOCATION H02
NO SPRING RETURN

LOW/AUTO OFF HIGH

CONTACTS	LOW/AUTO	OFF	HIGH	REMARKS
A	X			THIS DWG
B			X	THIS DWG
C	X			THIS DWG
D			X	SPARE

CONTROL SWITCH 42-2F-50 CS, 42-2G-4 CS

USED AT LOCATION CNV
NO SPRING RETURN

LOW OFF HIGH

CONTACTS	LOW	OFF	HIGH	REMARKS
A	X	X		SPARE
B	X			THIS DWG
C			X	THIS DWG
D		X	X	SPARE

CONTROL SWITCH 42-2F-50 CS, 42-2G-4 CS

USED AT LOCATION H02,
NO SPRING RETURN

TABLE OF DEVICES

DEVICE No.	FUNCTION	RATING	MFR.	TYPE	CAT./DWG. NO.	REMARKS
3MU-X4	AUTO MAKE UP AUX. RELAY	—	—	—	(5)	
3MU-X5	BORATE OR AUTO MAKE UP AUX. RELAY	—	—	—	(5)	
42-2F-50 42-2G-04	480 VOLT MOTOR STARTER	—	C-H	W	(3)(4)	2 SPEED
42-2F-38 42-2G-52	480 VOLT MOTOR STARTER	—	C-H	W	(3)(4)	
49-2F-50 49-2G-04	480 VOLT MOTOR STARTER-OVERLOAD RELAY	—	C-H	—	—	PART OF MOTOR STARTER
49-2F-38 49-2G-52	480 VOLT MOTOR STARTER-OVERLOAD RELAY	—	C-H	—	—	PART OF MOTOR STARTER
49X-2F-50 49X-2G-04	480 VOLT MOTOR STARTER-OVERLOAD AUX. RELAY	—	C-H	—	—	PART OF MOTOR STARTER
49X-2F-38 49X-2G-52	480 VOLT MOTOR STARTER-OVERLOAD AUX. RELAY	—	C-H	—	—	PART OF MOTOR STARTER
52-2F-50 52-2G-04 52-2F-38 52-2G-52	480 VOLT AIR CIRCUIT BREAKER	—	C-H	—	(3)(4)	
43X-2F-50, 43X-2G-04	CONTROL TRANSFER RELAY	120K AC	ELECTRO SW CORP	SERIES 24 LOR	7803F	HAND RESET
LS 472	SEALED PRI WTR STG TK II LOW LEVEL	—	—	—		CONTACT OPEN ON LOW LEVEL
LS 472X	SEALED PWST II LOW LEVEL AUX REL	125V DC	GE CO.	IC2820	IC2820-A100BB3K	

NOTES

1. DELETED
2. DELETED
3. DELETED

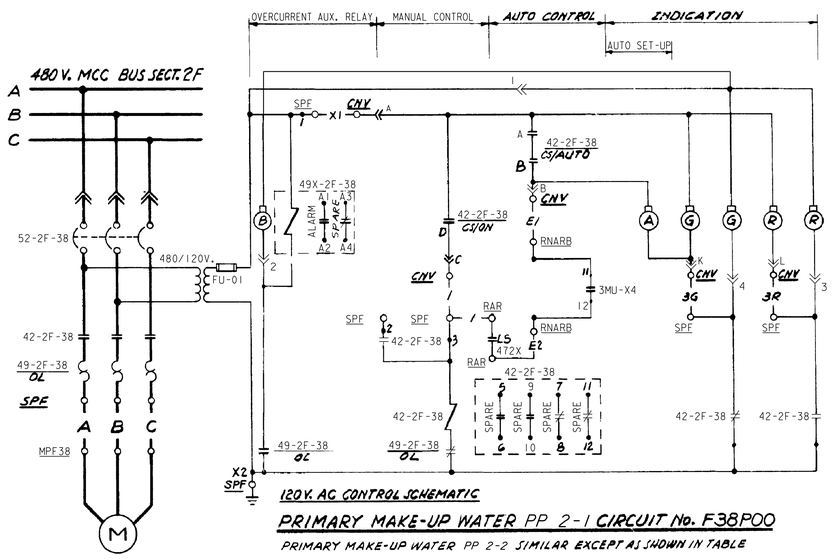

120 V. AC CONTROL SCHEMATIC

PRIMARY MAKE-UP WATER PP 2-1 CIRCUIT No. F38P00

PRIMARY MAKE-UP WATER PP 2-2 SIMILAR EXCEPT AS SHOWN IN TABLE

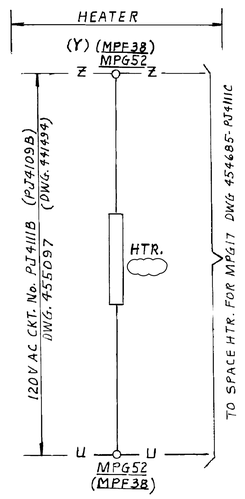

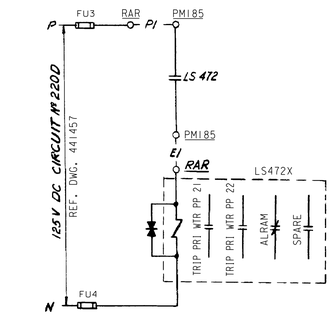

SEALED PRIMARY WTR STG. TANK 21
LOW LEVEL AUX RELAY CIRCUIT Nº 10472LS01

CIRCUIT LISTED ON 102759

MOTOR No.	CKT. BKR. No.	CIRCUIT NO.	BUS SECTION	AUTO MAKE-UP DEVICE	LOCATION	CONTACT INTLK.	PRIMARY WATER STORAGE TK. LEVEL DEVICE	LOCATION	CONTACT INTLK.	ALARM CIRCUIT Nºs OVER-CURRENT	HI-LO LEVEL SEALED PRI WTR TK	HEATER CIRCUIT NO.	MOTOR LOC
21	52-2F-38	F38P00	2F	3MU-X4	RNARB	11—12	LS 472X	RAR	—|	AI4408DF	AL2720D	PJ4109B	MPF38
22	52-2G-52	G52P00	2G	3MU-X4	RNARB	13—14	LS 472X	RAR	—|	AI4308DG		PJ4111B	MPG52

EQUIPMENT LOCATION NUMBERS

CNV	CONTROL BOARD CHEMICAL AND VOLUME CONTROL SYSTEM
H02	HOT SHUT DOWN REMOTE CONTROL PANEL 2
MPF50	BORIC ACID TRANSFER PUMP NO.21.
SPF	480V MOTOR CONT. CENTER. BUS 2F
PMI85	MECH. PANEL Nº 185 COND STORAGE TANK
RAR	AUXILIARY RELAY RACK
RNARB	RACK NU AUXILIARY RELAY CUB. B

REFERENCES

1.	DESCRIPTION OF ELEC. SCHEMATIC DIAGRAMS, SYMBOLS AND CIRCUIT DESIGNATIONS.	DWG.#	050003
2.	EQUIPMENT LOCATION NUMBERS.	DWG.#	103013
3.	SINGLE LINE METER & RELAY DIAGRAM, 480V. SYSTEM BUS SECT. 2G.	DWG.#	441238
4.	SINGLE LINE METER & RELAY DIAGRAM, 480V. SYSTEM BUS SECT. 2F.	DWG.#	441237
5.	SCHEMATIC DIAGRAM-REACTOR COOLANT MAKE-UP CONTROL.	DWG.#	441320
6.	PIPING SCHEMATIC-CHEMICAL & VOLUME CONTROL SYSTEM.	DWG.#	108008
7.	PIPING SCHEMATIC-MAKE-UP WATER SYSTEM.	DWG.#	108016
8.	SCHEMATIC DIAGRAM MAIN ANNUNCIATOR	DWG#	441280
10.	SINGLE LINE METER & RELAY DIAG. 125 VOLT DC SYSTEM	DWG#	441240
11.	SCHEMATIC DIAGRAM AUX. F.W.P. TURB. MOTOR OPERATED VALVE	DWG#	455097
12.	DIAGRAM AND PANEL SCHEDULE LIGHTING DISTRIBUTION	DWG#	441494

A
B C
P.G.&E. SYSTEM PHASE SEQUENCE A-C-B

NUCLEAR SAFETY RELATED

KEY DWG. SECTION 4

UNIT 2

DATE	
08-17-2023	
D.D.	FAZ1
R.E.	FXC2
I.V.	N/A
P.E.	N/A

REGISTERED PROFESSIONAL ENGINEER — NOT REGISTERED PER 6731(b) — STATE OF CALIFORNIA

REVISION DESCRIPTION
Revised Per DFT-7*5956

ELECTRICAL
SCHEMATIC DIAGRAM
CHEMICAL AND VOLUME CONTROL SYSTEM

DIABLO CANYON POWER PLANT
PACIFIC GAS AND ELECTRIC COMPANY
SAN FRANCISCO, CALIFORNIA

DWG SCALE:	
BILL OF MATL:	
SUPSDS:	
SUPSD BY:	

DRAWING	SHEET	PAGE	REV
441321	1	0	17

DRAWING NUMBER 441321

RASTER=441321-1-0.dgn
DGN 441321-1-0.dgn
CAD User=FAZ1 Date=08-17-2023

4 SIZE

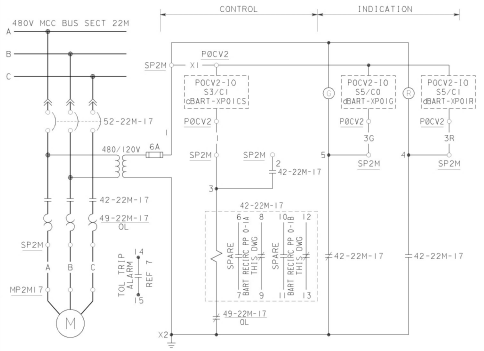

BORIC ACID RESERVE TANK 0-1 TRANSFER PUMP CIRCUIT NO. 2MI7P00

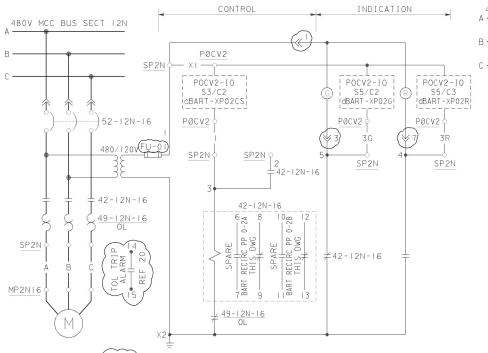

BART 0-2 TRANSFER PUMP CIRCUIT NO. 2N16P00

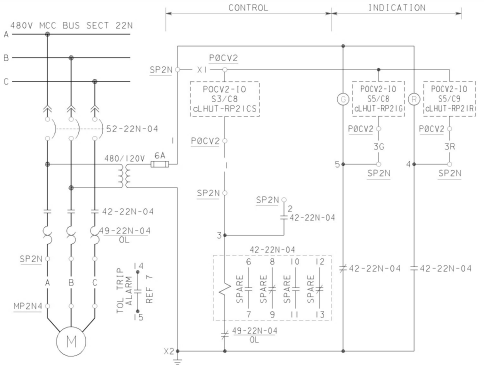

HOLD-UP TANK RECIRCULATING PUMP 21 CIRCUIT NO. 2N04P00

TABLE OF DEVICES

DEVICE NUMBER	FUNCTION	RATING	MFR	TYPE	CATALOG OR (REF DWG)	REMARKS
42-12N-16	480V MOTOR STARTER		CUTLER-HAMMER		(17)	
42-12N-28	480V MOTOR STARTER				(17)	
42-12N-29	480V MOTOR STARTER				(17)	
42-22M-17	480V MOTOR STARTER				(3)	
42-22N-04	480V MOTOR STARTER				(3)	
42-22N-21	480V MOTOR STARTER				(3)	
42-22N-22	480V MOTOR STARTER				(3)	
49-12N-16	480V MOT START OVERLOAD RLY					PART OF MOTOR STARTER
49-12N-28	480V MOT START OVERLOAD RLY					
49-12N-29	480V MOT START OVERLOAD RLY					
49-22M-17	480V MOT START OVERLOAD RLY					
49-22N-04	480V MOT START OVERLOAD RLY					
49-22N-21	480V MOT START OVERLOAD RLY					
49-22N-22	480V MOT START OVERLOAD RLY					
52-12N-16	480V AIR CIRCUIT BREAKER				(17)	
52-12N-28	480V AIR CIRCUIT BREAKER				(17)	
52-12N-29	480V AIR CIRCUIT BREAKER				(17)	
52-22M-17	480V AIR CIRCUIT BREAKER				(3)	
52-22N-04	480V AIR CIRCUIT BREAKER				(3)	
52-22N-21	480V AIR CIRCUIT BREAKER				(3)	
52-22N-22	480V AIR CIRCUIT BREAKER				(3)	
ANS122A	CNDS & STG TK DISTILLATE SUPPLY CONDUCTIVITY ANALYZER SWITCH				(16)	OPENS ON HIGH CONDUCTIVITY
ANS122B						HIGH CONDUCTIVITY ALARM
SV724	WATER STG TKS DISTL SUP VALVE SOLENOID				(15, 16)	
P0S724	VALVE POSITION SWITCH				(16)	
P0CV2-10	AUX CONTROL BD PLC				(19)	MOUNTED IN P0CV2

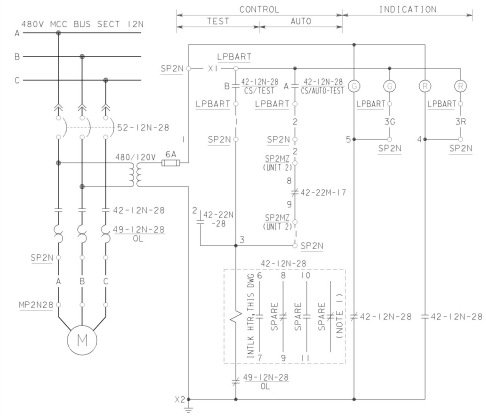

BORIC ACID RESERVE TANK 0-1 RECIRCULATION PUMP 0-1A CIRCUIT NO. 2N28P00Y

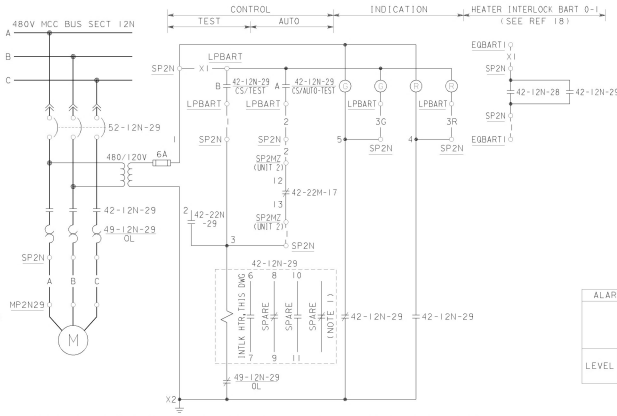

BORIC ACID RESERVE TANK 0-1 RECIRCULATION PUMP 0-1B CIRCUIT NO. 2N29P00Y

ALARM CIRCUIT OR INPUT NUMBERS						
		TANK DESIGNATIONS				
		BORIC ACID TANK				
		NO. 21 LC102A,B,C		NO. 22 LC106A,B,C		
LEVEL	LOW	B	LO107D	B	LO110D	
	HIGH	A		A		
	LOW-LOW	C	AL0109D	C	AL0112D	

AUTO
CNDS STG TK
TRANS STG TK

CONTACTS		POSITIONS: CNDS STG TK	AUTO	TRANS STG TK	REMARKS
	A	X			THIS DWG
	B	X	X		THIS DWG

CONTROL SWITCH: FCV724 CS
SPRING RETURN FROM "CNDS STG TK" TO "AUTO"
USED AT LOC CTI

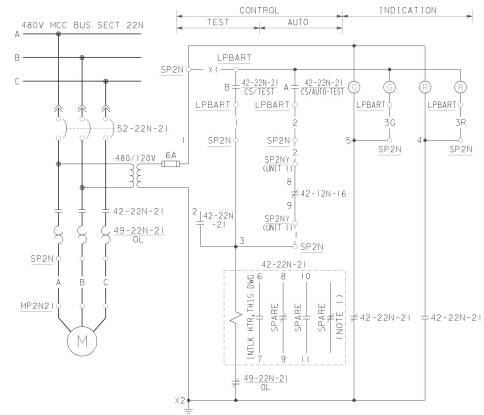

BORIC ACID RESERVE TANK 0-2 RECIRCULATION PUMP 0-2A CIRCUIT NO. 2N21P00

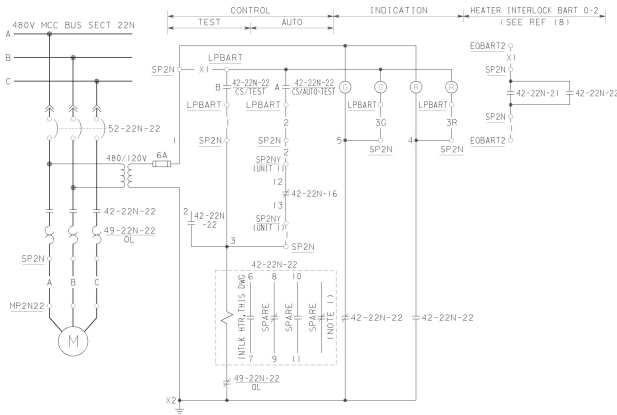

BORIC ACID RESERVE TANK 0-2 RECIRCULATION PUMP 0-2B CIRCUIT NO. 2N22P00

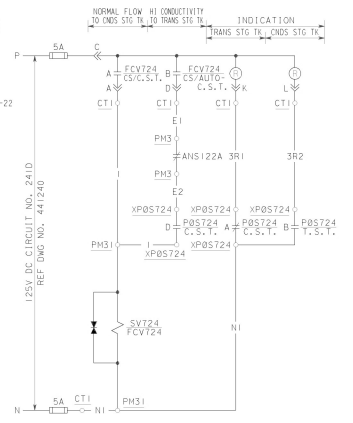

FCV724 WATER STORAGE TANKS DISTILLATE SUPPLY CIRCUIT NO. I0724SV01

AUTO
STOP TEST

CONTACTS		POSITIONS: STOP	AUTO	TEST	REMARKS
	A		X	X	THIS DWG
	B			X	THIS DWG

CONTROL SWITCH: 42-12N-28, 42-12N-29, CS CS
42-22N-21, 42-22N-22 CS CS

SPRING RETURN TO AUTO FROM TEST
CUTLER-HAMMER CAT. NO. 10250T1353-1M36
USED AT LOC LPBART (DWG. 499770)

CONTACTS		POSITIONS: TRANS TK & INT	CNDS STG TK	REMARKS
	A	X		RED LT. T.S.T.
	B		X	SPARE
	C	X		SPARE
	D		X	SEAL-IN

P0S724 CONDENSATE STORAGE TANK

CONTACTS		POSITIONS: TRANS STG TK	CNDS TK & INT	REMARKS
	A	X		SPARE
	B		X	RED LT, C.S.T.
	C	X		SPARE
	D		X	SPARE

P0S724 TRANSFER STORAGE TANK

EQUIPMENT LOCATIONS:

CTI - CONTROL BOARD TURBINE SECTION 2VB3
LPBART - BORIC ACID RESERVE TANK LOCAL CONTROL STATION
P0CV2 - AUX BLDG CONTROL PANEL CVCS (UNIT 2)
SP2N - 480V MOTOR CONTROL CENTER BUS 12N OR 22N

NOTES:

1. DISCONNECT INTERNAL WIRES FROM TERMINAL POINTS 12 & 13.

REFERENCES:

	DWG NO.
1. DESCRIPTION OF ELEC SCHEMATIC DIAG, SYMBOLS & CKT DESIGNATIONS	050003
2. EQUIPMENT LOCATION NUMBERS	103013
3. SINGLE LINE METER & RELAY DIAG - 480V SYS BUS SECT 22M & 22N, UNIT 2	441233
4. PIPING SCHEMATIC - CHEMICAL & VOLUME CONTROL SYSTEM, UNIT 2	108008
5. DELETED	
6. SCHEMATIC DIAG - MAIN ANNUNCIATOR, UNIT 1	501140
7. SCHEMATIC DIAG - MAIN ANNUNCIATOR, UNIT 2	500790
8. INSTRUMENT SCHEMATIC - PRESSURE INSTRUMENT SYSTEMS, UNIT 2	108034
9. SCHEMATIC DIAG - CHEMICAL & VOLUME CONTROL SYSTEM, SH. 1, UNIT 2	441320
10. SCHEMATIC DIAG - CHEMICAL & VOLUME CONTROL SYSTEM, SH. 2, UNIT 2	441321
11. SCHEMATIC DIAG - CHEMICAL & VOLUME CONTROL SYSTEM, UNIT 2	477315
12. SCHEMATIC DIAG - CHEMICAL & VOLUME CONTROL SYSTEM, UNIT 1	437599
13. DIAG OF CONN - AUX BLDG CONTROL BOARD CVCS PANELS	448611
14. SCHEMATIC DIAG - CVCS AND MAKE-UP WATER PUMPS, UNIT 1	437598
15. PIPING SCHEMATIC - MAKE-UP WATER SYSTEMS, UNIT 2	108016
16. INSTRUMENT SCHEMATIC - ANALYSIS INSTRUMENT SYSTEM, UNIT 2	108031
17. SINGLE LINE METER & RELAY DIAG - 480V SYS BUS SECT 12M & 12N, UNIT 1	437539
18. MINI TEMP/POWER CONTROL PANEL EQBART1 & 2	663221-40
19. AUXILIARY CONTROL BOARD SYSTEM FUNCTIONAL REQUIREMENTS SPEC	663195-33
20. SCHEMATIC DIAGRAM MAIN ANNUNCIATOR	501140

KEY DWG. SECTION 4

P.G.&E. SYSTEM PHASE SEQUENCE A-C-B

UNIT 1 & 2

DATE		REVISION DESCRIPTION
01-23-2012		REVISED PER ODH-2*698 & DFC-3*1500
D.D.	AJFJ	
R.E.	FXC2	
I.V.		
P.E.	R2M5	

ELECTRICAL
SCHEMATIC DIAGRAM
CHEMICAL & VOLUME
CONTROL SYSTEM

DIABLO CANYON POWER PLANT
PACIFIC GAS AND ELECTRIC COMPANY
SAN FRANCISCO, CALIFORNIA

DWG SCALE:	
BILL OF MATL:	
SUPSDS:	
SUPSD BY:	

DRAWING	SHEET	PAGE	REV
441322	1	0	12

RASTER=441322.dgn
DDN=441322.dgn
ACAD User=AJFJ Dated=01-23-2012

477316 1

TABLE OF DEVICES

DEVICE NO.	FUNCTION	RATING	MFR	TYPE	CATALOG OR REF DWG	REMARKS
2BAE1	B/A EVAP DISTL COOLER TO RLY	120VAC	AGASTAT	7000	7012AE	SET AT 65 SEC
2BAE2	B/A EVAP VENT HEADER TO RLY	120VAC	AGASTAT	7000	7012AE	SET AT 120 SEC
3BAE	B/A EVAP CONDUCTIVITY RESET AUX RLY	120VAC	WE	AR	AR440A	
ANI/ANS 303	BORIC ACID DISTILLATE PUMPS DISCH HDR ANALYZER	—	—	—	(14)	NO OUTPUT ON HIGH CONDUCTIVITY
ANI303X	BORIC ACID DISTILLATE PUMPS DISCH ANALYZER AUX RELAY	120VAC	WE	AR	AR440A	MOUNT RELAY IN REAR OF B/A EVAP PNL
LC315X	BORIC ACID EVAP LEVEL AUX RELAY	120VAC	WE	AR	AR440A	MOUNT RELAY IN REAR OF B/A EVAP PNL
LC315	B/A EVAP LVL CONTROLLER	—	—	—	(14)	CONTACT CLOSES ON LOW LEVEL
LC306	B/A EVAP COND LVL CONTROLLER	—	—	—	(2),(14)	CONTACT CLOSES ON LOW LEVEL
SV305 LCV305	SOLENOID VALVE, BORIC ACID DISTILLATE COOLER OUTLET	—	—	—	(2),(14)	
SV302 LCV302	SOLENOID VALVE, BORIC ACID DISTILLATE PUMP RECIRC TO EVAP	—	—	—	(2),(14)	
SV315 LCV315	SOLENOID VALVE, FEED PREHEATER OUTLET	—	—	—	(2),(14)	
SV309A SV309B TIC304 *TCV304	SOLENOID VALVE, B/A EVAP PREHEATER AUX STEAM FLOW	—	—	—	(4),(14)	
SV759 FCV759	SOLENOID VALVE, DISCHARGE BYPASS	—	—	—	(14)	
POS	VALVE POSITION SWITCH	—	—	—		
TJC313A, TIC313B	BORIC ACID EVAP TEMP INDIC & CONT	—	RIS	SC306W ET215V	(4)	CONTACTS OPEN ON HIGH HTR TEMP
LC306X	BORIC ACID EVAP COND LEVEL AUX RELAY	120VAC	WE	AR	AR440AR	MOUNT RELAY IN REAR OF B/A EVAP PNL
ANR759	DENSITY RECORDER	—	—	—	(14)	
ANS759X	DENSITY RELAY	120VAC	WE	AR	AR440AR	
ANS759A,B	DENSITY SWITCH	—	—	—	(14)	
ANT759	B& EVAP 2-1 RECIRC DENSITY SAMPLE	—	—	—	(14)	
TE759,YE759	B& EVAP 2-1 RECIRC DENSITY SAMPLE	—	—	—	(14)	

ABANDONED IN PLACE (SEE NOTE 3)

EQUIPMENT LOCATIONS

P0B2 —— UNIT 2 BORIC ACID EVAPORATOR CONTROL PANEL (AUX BLDG CONT BD)
XP0S291 — INSTRUMENT P0S291 (LOCALLY MOUNTED)
PM73 —— MECHANICAL PANEL NO. 73
PY26 —— PANEL 26, INSTRUMENT AC DISTRIBUTION

NOTES

1. EACH LIGHT TO BE 28V AND TO BE PROVIDED WITH A SERIES RESISTOR RATED 2400Ω, 5W.
2. LCV305 AND FCV759 ARE ENERGIZED TO CLOSE.
3. ALL COMPONENTS SHOWN ON THIS DRAWING ARE CONSIDERED ABANDONED IN-PLACE. SEE APPLICABLE DIAGRAM OF CONNECTION DRAWINGS FOR ACTUAL WIRING AND TO DETERMINE IF COMPONENTS ARE INSTALLED OR REMOVED.

REFERENCES

	DWG NO.
1. INSTRUMENT SCHEMATIC FLOW INSTRUMENT SYSTEMS	108032
2. INSTRUMENT SCHEMATIC LEVEL INSTRUMENT SYSTEMS	108033
3. INSTRUMENT SCHEMATIC PRESSURE INSTRUMENT SYSTEMS	108034
4. INSTRUMENT SCHEMATIC TEMPERATURE INSTRUMENT SYSTEMS	108035
5. INSTRUMENT SCHEMATIC MULTIVARIABLE INSTRUMENT SYSTEMS	108036
6. PIPING SCHEMATIC AUXILIARY STEAM SYSTEMS	108006
7. PIPING SCHEMATIC CHEMICAL & VOLUME CONTROL SYSTEMS	108008
8. DESCRIPTION OF ELEC SCHEM DIAGRAM SYMBOLS & CKT DESIGNATIONS	050003
9. EQUIPMENT LOCATION NUMBERS	103013
10. S/L METER & RELAY DIAGRAM, INSTRUMENT AC, 120V	445394
11. SCHEMATIC DIAG AUX ANNUNCIATOR, SH 4	437709
12. SCHEM DIAG CHEM & VOL CONTROL SYSTEM B.A. EVAP 2-1 MISC EQUIPT	477315
13. SCHEM DIAG CHEM & VOL CONTROL SYSTEM CONTROL VALVES	458761
14. INSTRUMENT REFERENCE	102038

BORIC ACID EVAPORATOR VALVE CONTROL
CIRCUIT NO. RCV158 TO RCV175
RCV300 TO RCV320, RCV347, RCV348
RCV463 TO RCV466
CKT SCHEDULE DWG NO. 102770

RECYCLE AUTO — ESCUTCHEON

CONTACTS	POSITION RECYCLE	POSITION AUTO	REMARKS
A		×	SPARE
B	×		THIS DWG

TRANSFER SWITCH: 43BAE1
LOCATION P0B2
NO SPRING RETURN
CUTLER-HAMMER, CAT #10250T1311-1M36

AUTO CLOSE OPEN — ESCUTCHEON

CONTACTS	POSITION CLOSE	POSITION AUTO	POSITION OPEN	REMARKS
A		×		THIS DWG
B	×			THIS DWG

CONTROL SWITCH: FCV759 CS
LOCATION P0B2
NO SPRING RETURN
CUTLER-HAMMER, CAT #10250T1322-1M36

RUN FILL — ESCUTCHEON

CONTACTS	POSITION RUN	POSITION FILL	REMARKS
A	×		THIS DWG
B		×	THIS DWG
C	×		THIS DWG
D		×	THIS DWG

TRANSFER SWITCH: 43BAE2
LOCATION P0B2
NO SPRING RETURN
CUTLER-HAMMER, CAT #10250T1311-1M36

VALVE CLOSE POSITION SWITCH

CONTACTS	POSITION CLOSE	POSITION OPEN & INTERMEDIATE	REMARKS
A	×		THIS DWG
B		×	SPARE
C		×	SPARE
D		×	SPARE

VALVE OPEN POSITION SWITCH

CONTACTS	POSITION CLOSE & INTERMEDIATE	POSITION OPEN	REMARKS
A		×	THIS DWG
B	×		SPARE
C	×		SPARE
D	×		SPARE

P.G.&E. SYSTEM PHASE SEQUENCE A-C-B

KEY DWG. SECTION 4

UNIT 2

DATE	REVISION DESCRIPTION
03-28-2011	REVISED PER DDN-2*562

D.D.	AJFJ
R.E.	SMB5
I.V.	
P.E.	R2H5

ELECTRICAL
SCHEMATIC DIAGRAM
CHEMICAL VOLUME & CONTROL SYSTEM
BORIC ACID EVAP CONTROL VALVES

PACIFIC GAS AND ELECTRIC COMPANY
SAN FRANCISCO, CALIFORNIA

DRAWING NUMBER 477316 | SHEET 1 | PAGE 0 | REV 6

DWG SCALE:
BILL OF MATL:
SUPSDS:
SUPSD BY:

RASTER:477316.DGN
DGN:477316.DGN
CAD USER:AJFJ Date: 03-28-2011

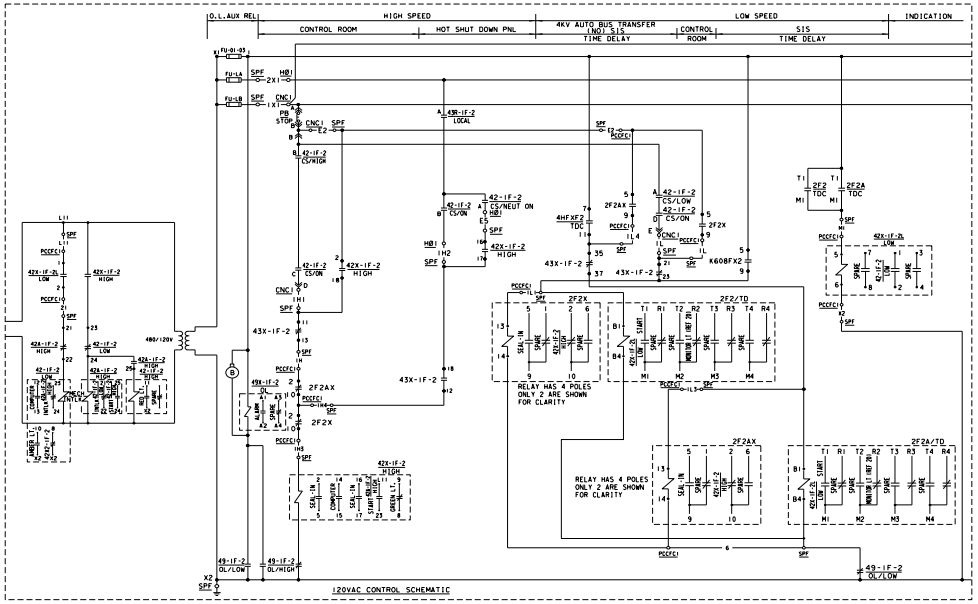

DETAIL-A

CONTAINMENT FAN COOLER No. 11 CIRCUIT No. F02P00

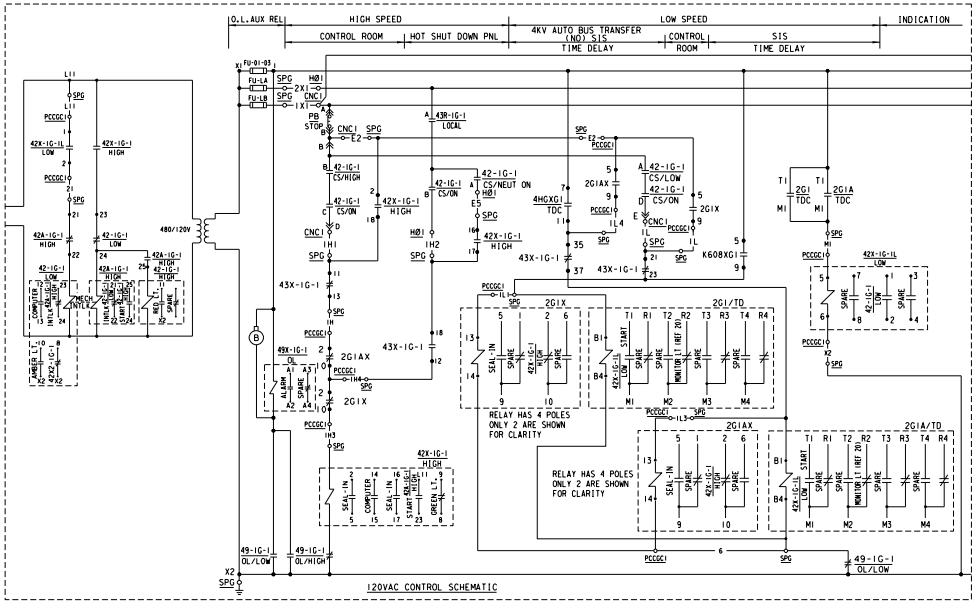

DETAIL-B

CONTAINMENT FAN COOLER No. 13 CIRCUIT No. G01P00

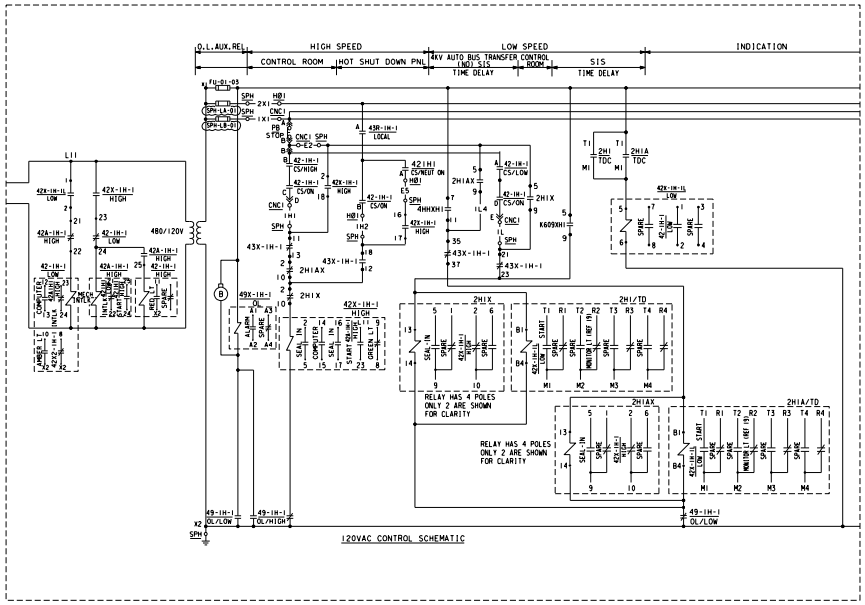

DETAIL-C

CONTAINMENT FAN COOLER No. 14 CIRCUIT No. H01P00

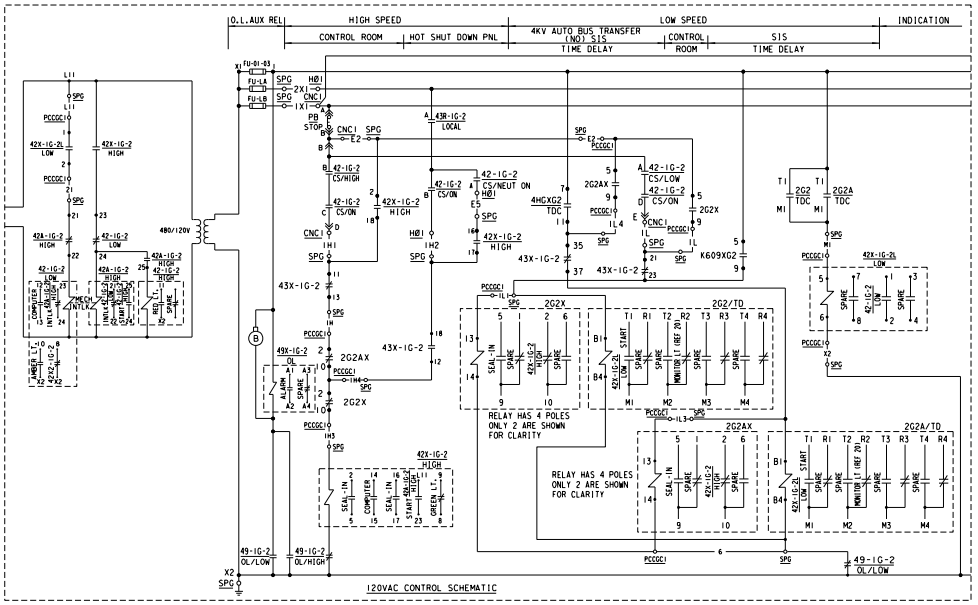

DETAIL-D

CONTAINMENT FAN COOLER No. 15 CIRCUIT No. G02P00

KEY DWG. SECTION 4

UNIT 1

DATE	
01-06-2021	
D.D.	MNRU
R.E.	RXG2
I.V.	N/A
P.E.	N/A

REVISION DESCRIPTION
Revised Per DFT-7#5326

ELECTRICAL
SCHEMATIC DIAGRAM
CONTAINMENT FAN COOLERS

DIABLO CANYON POWER PLANT
PACIFIC GAS AND ELECTRIC COMPANY
SAN FRANCISCO, CALIFORNIA

DWG SCALE:	
BILL OF MATL:	
SUPSDS:	
SUPSD BY:	

DRAWING	SHEET	PAGE	REV
437600	2	0	4

DFT-7#5326

DRAWING NUMBER 437600 2

RASTER=437600-2-0.dgn
DGN=437600-2-0.dgn
CAD User=MNRU Date=01-06-2021

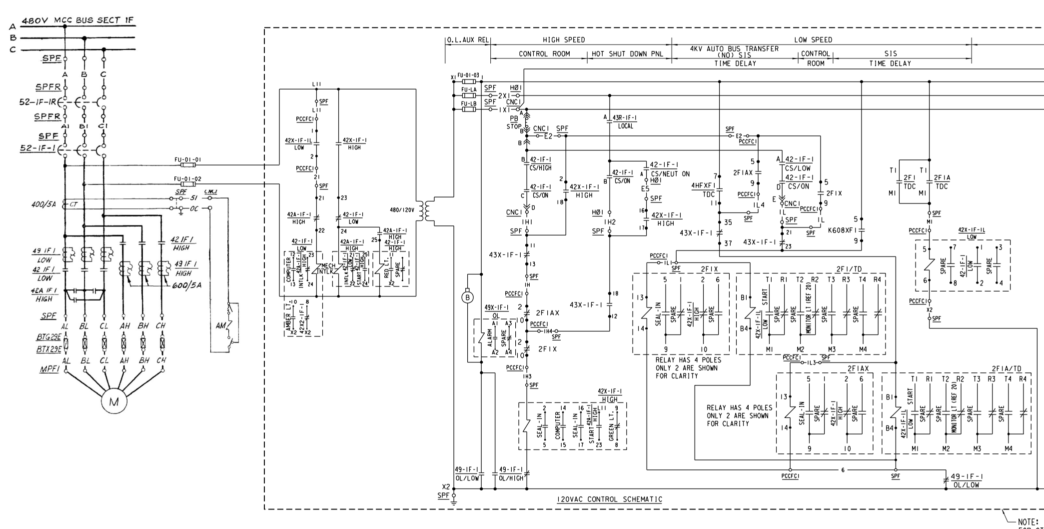

NOTE:
FOR OTHER CFCU'S SEE APPLICABLE
DETAILS ON 437600-2 AS SHOWN IN TABLE

CONTAINMENT FAN COOLER No. 12 CIRCUIT No. F01P00

CONTAINMENT FAN COOLERS No's 11, 13, 14 & 15 SIMILAR EXCEPT AS SHOWN IN TABLE

FAN CLR No.	MOTOR LOC.	CIRCUIT BKR. No. PRIMARY	CIRCUIT BKR. No. BACK-UP	CKT. No.	BUS SECT.	PENN No.	SIS AUX RELAY	CONDENSATE DRAIN SYSTEM VALVE No.	SV No.	SV LOC.	SW CONTACT FOR SV	CONTACT DEVICE FOR IND. HI-HI *	HIGH *	VLV POS	125V DC CKT. No.	CKT. No.	PENN No.	ERFDS	ALARM CIRCUIT No.s OVER-CURRENT	TRANSFER OF CONT	VIBRATION HIGH MOTOR & FAN	DRIP PAN DRAIN LEVEL HIGH	DRIP PAN DRAIN LEVEL LOW	COMPUTER CKT. No. BREAKER CLOSED		CNT ISOL PH.A (NOT USED) MOTOR OC BYPASS DEVICE	CONTACT	C.O. SW POSITION CONTROL TRANSFER RELAY CUT-OUT SW	FUSES PRIMARY (CONT. CKT.)	FUSES SECONDARY (CONT. CKT.)	DETAIL	DRAWING
12	MPF1	52-1F-1	52-1F-1R	F01P00	1F	29E	K609XF1	LCV125	125	XSV125	43CDV (C)	LS73R	LS72R	43CDV (I)	241D	10125SV01	2E	MUX01-24-3	AI0413DF	AY5065DF	AY0408D	AY2501D	AY2502D	CY1001DF				NORMAL CUT-OUT	FU-01-01, FU-01-02	FU-01-03, FU-LA, FU-LB	-	THIS DWG
11	MPF2	52-1F-2	52-1F-2R	F02P00	1F	32E	K608XF2	LCV120	120	XSV120	43CDV (B)	LS71	LS70	43CDV (H)		10120SV01		MUX01-24-2	AI0412DF		AY0407D			CY1000DF				NORMAL CUT-IN	FU-02-01, FU-02-02	FU-02-03, FU-LA, FU-LB	A	437600-2
13	MPG1	52-1G-1	52-1G-1R	G01P00	1G	9E	K608XG1	LCV126	126	XSV126	43CDV (D)	LS75R	LS74R	43CDV (J)		10126SV01		MUX02-20-4	AI0414DG	AY5066DG	AY0409D			CY1002DG				NORMAL CUT-IN	FU-01-01, FU-01-02	FU-01-03, FU-LA, FU-LB	B	437600-2
14	MPH1	52-1H-1	52-1H-1R	H01P00	1H	3E	K609XH1	LCV129	129	XSV129	43CDV (E)	LS77R	LS76	43CDV (K)		10129SV01		MUX03-11-1	AI0415DH	AY5067DH	AY0410D			CY1003DH				NORMAL CUT-IN	FU-01-01, FU-01-02	FU-01-03, SPH-LA-01, SPH-LB-01	C	437600-2
15	MPG2	52-1G-2	52-1G-2R	G02P00	1G	15E	K609XG2	LCV130	130	XSV130	43CDV (F)	LS79R	LS78R	43CDV (L)	↓	10130SV01	↓	MUX02-25-3	AI0416DG		AY0411D	↓	↓	CY1004DG				NORMAL CUT-OUT	FU-02-01, FU-02-02	FU-02-03, FU-LA, FU-LB	D	437600-2

*LEVEL SWITCH LOC. PM124

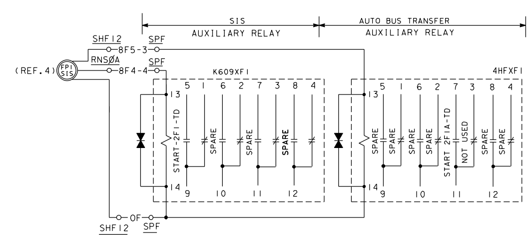

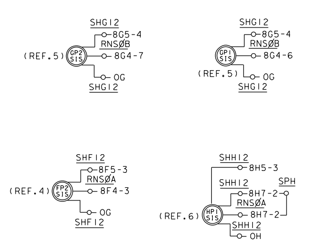

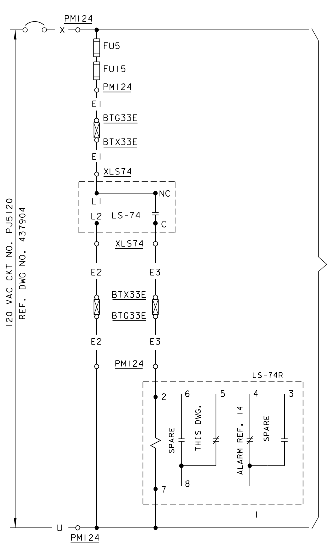

CONDENSATE DRAIN SYSTEM LEVEL MONITORING

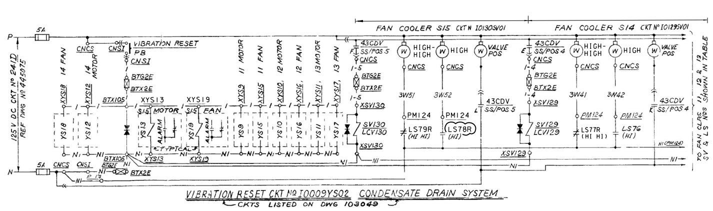

VIBRATION RESET CKT Nº I0009YS02 CONDENSATE DRAIN SYSTEM
CKTS LISTED ON DWG 103049

TABLE OF DEVICES

DEVICE Nº	FUNCTION	RATING	MFR	TYPE	CAT/DWG Nº	REMARKS
AM	AMMETER	5A	WE CORP		644B637A19	SCALE 0-400A
CT	CURRENT TRANSFORMER	400/5A	WE CORP	ECI	237A970G06	
4HFXF1, 4HFXF2, 4HGXG1 4HGXG2, 4HHXH1	AUTO BUS TRANSFER SIGNAL AUX RLY	120V AC	P & B	KHU	KHU17A16-120	
42A-1F-1 HIGH, 1F-2 HIGH, 1G-1 HIGH, 1G-2 HIGH, -1H-1 HIGH	MOTOR AUX STARTER (HI SPEED)	480VAC	WE CORP	—	—	
42-1F-1 HIGH, -1F-2 HIGH, -1G-1 HIGH, 1G-2 HIGH, -1H-1 HIGH	MOTOR STARTER (HIGH SPEED)	480VAC	WE CORP	—	—	PART OF MOTOR STARTER
42-1F-1 LOW, 1F-2 LOW, -1G-1 LOW, 1G-2 LOW, -1H-1 LOW	MOTOR STARTER (LOW SPEED)	480VAC	" "	—	—	
42X-1F-1 HIGH, 1F-2 HIGH, 1G-1 HIGH, 1G-2 HIGH, 1H-1 HIGH	MOTOR STARTER AUXILIARY RELAY	120VAC	" "	—	—	
42X2-1F-1 LOW, 1F-2 LOW, 1G-1 LOW, 1G-2 LOW, 1H-1 LOW	LOW SPEED START AUX RELAY	120VAC	WE CORP	AR420A	766A024G01	
49-1F-1 HIGH, 1F-2 HIGH, 1G-1 HIGH, 1G-2 HIGH, 1H-1 HIGH	MOTOR OVERLOAD (HIGH SPEED)	—	WE CORP	—	—	PART OF MOTOR STARTER
49-1F-1 LOW, 1F-2 LOW, 1G-1 LOW, 1G-2 LOW, -1H-1 LOW	MOTOR OVERLOAD (LOW SPEED)	—		—	—	
K608XF2, K608XG1, K609XF1, K609XH1, K609XG2	SAFETY INJECTION SIGNAL AUX. RELAY	120V AC	WE CORP			
49X-1F-1, 1F-2, 1G-1, 1G-2, 1H-1	MOTOR OVERLOAD AUX RELAY	120VAC	WE CORP	—	—	PART OF MOTOR STARTER
52-1F-1, 1F-2, 1G-1, -1G-2, -1H-1	AIR CIRCUIT BREAKER	—	WE CORP	—	(3)(7)(8)	PART OF MOTOR STARTER
52-1F-1R, 2R 52-1G-1R, 2R 52-1H-1R	480V AIR CIRCUIT BREAKER		WE CORP		(3)(7)(8)	BACK-UP BREAKER
FCV	CONTROL DRIVE FLOW				(10)	
SV	SOLENOID VALVE				9)(10)	
LS72R, LS73R, LS74R, LS75R, LS77R, LS78R, LS79R	LEVEL ALARM RELAY	120V	PB	KRP	KRP11AG	NORM. ENERGIZED
LS	LEVEL SWITCH				(11)	
43X-1F-1, 1F-2, 1G-1, 1G-2, 1H-1	CONTROL TRANSFER RELAY	120V AC	ELECTRO SWITCH	SERIES 24LOR	7803F	HAND RESET
YS9, YS10, YS11, YS12, YS13	MOTOR VIBRATION SWITCH	125V DC	ROBERTSHAW	366	366A	ELECT. & HAND RESET CONTACTS TO BE CONNECTED IN PARALLEL PER ALARM CKTS.
YS15, YS16, YS17, YS18, YS19	FAN " "					
2F2X, 2F2AX 2F1X, 2F1AX 2G1X, 2G1AX 2H1X, 2H1AX 2G2X, 2G2AX	SAFETY INJ SIGNAL AUTO XFR AUX RELAY	120V AC	P&B	KHU	KHU17A16-120	CFCU 11, 12, 13, 14 & 15
42X-1F-2L, 42X-1F-1L 42X-1G-1L, 42X-1H-1L 42X-1G-2L	LOW SPEED START AUXILIARY RELAY	120V AC	C-H	A200	A200MOCACDEJ4 OR A201KOCA W/ (4) J11 OR J20 AUX. CONTACT SETS INSTALLED	CFCU 11, 12, 13, 14 & 15
2F1, 2F2, 2G1, 2G2, 2H1	SAFETY INJ SIGNAL TIMING RELAY	120V AC	AGASTAT	ETR	ETR-1413D-004	CFCU 11, 12, 13, 14, 15
2F2A, 2F1A, 2G1A 2H1A, 2G2A	AUTO TRANSFER TIMING RELAY	120V AC	AGASTAT	ETR	ETR-1413D-004	CFCU 11, 12, 13, 14 & 15

CONTACTS		POSITIONS OFF	NEUT.	ON	REMARKS
⊣⊢	A		X	X	THIS DWG
⊣⊢	B			X	THIS DWG

CONTROL SWITCH - 42 IF 1/CS, 42 IF 2/CS, 42 IG 1/CS, 42 IG 2/CS, 42 IH 1/CS
USED AT LOCATION HØ1
SPRING RETURN TO NEUTRAL

CONTACTS		POSITIONS CONTROL ROOM	LOCAL	REMARKS
⊣⊢	A		X	THIS DWG
⊣⊢	B	X		SPARE
⊣⊢	C		X	THIS DWG
⊣⊢	D	X		SPARE

TRANSFER SWITCH 43R IF 1, IF 2, IG 1, -IG 2, -IH-1
USED AT LOCATION HØ1
NO SPRING RETURN

CONTACTS		LOW RELEASED	LOW DEPRESSED	HIGH RELEASED	HIGH DEPRESSED	REMARKS
⊣⊢	A	X	X			THIS DWG
⊣⊢	B			X	X	THIS DWG
⊣⊢	C				X	THIS DWG
⊣⊢	D		X			THIS DWG

SELECT O PUSH OPERATOR
CONTROL SWITCH 421F1/CS 421F2/CS 421G1/CS 421G2/CS 421H1/CS
USED AT LOCATION CNC1

CONTACTS		OFF	1	2	3	4	5	REMARKS
⊣⊢	A	X						SPARE
⊣⊢	B		X					FAN COOLER 11 (THIS DWG)
⊣⊢	C			X				FAN COOLER 12 (THIS DWG)
⊣⊢	D				X			FAN COOLER 13 (THIS DWG)
⊣⊢	E					X		FAN COOLER 14 (THIS DWG)
⊣⊢	F						X	FAN COOLER 15 (THIS DWG)
⊣⊢	G	X						SPARE
⊣⊢	H		X					FAN COOLER 11 (THIS DWG)
⊣⊢	I			X				FAN COOLER 12 (THIS DWG)
⊣⊢	J				X			FAN COOLER 13 (THIS DWG)
⊣⊢	K					X		FAN COOLER 14 (THIS DWG)
⊣⊢	L						X	FAN COOLER 15 (THIS DWG)

NO SPRING RETURN

SELECTOR SWITCH 43CDV
USED AT LOCATION CNCS
(REF 21)

NOTES:

1. ROBERTSHAW VIBRASWITCH MODEL 366-A-7 PER NMOD/RPE ORDER 60045749.

EQUIPMENT LOCATION NUMBERS:

CNC1 — CONTROL BOARD CONTAINMENT VENTILATION (SECT. IVB1)
HØ1 — HOT SHUT DOWN REMOTE CONTROL PANEL 1.
MPF1 — CONTAINMENT FAN COOLER 12.
SHF12 — 4KV SWITCHGEAR BUS F CUBICLE 12
SPF — 480V MOTOR CONTROL CENTER BUS SECTION IF.
BTG2E — TERMINAL BOX G2E
CNCS — CONTROL BOARD CONTAINMENT SPRAY (SECT IVB1)
XSV130 — INSTRUMENT NO. SV130 LOCAL MOUNTED.
SPFR — 480V MCC BUS SECTION IF, BACK-UP O.C.

REFERENCES: DWGS:

1. DESCRIPTION OF ELECTRICAL SCHEMATIC DIAGRAM SYMBOLS & CIRCUIT DESIGNATION. ---- 050003
2. EQUIPMENT LOCATION NO.S. ---- 101900
3. SINGLE LINE METER & RELAY 480V BUS SECTION IF. ---- 437916
4. SCHEMATIC DIAGRAM 4KV BUS F AUTOMATIC TRANSFER. ---- 437625
5. SCHEMATIC DIAGRAM 4KV BUS G AUTOMATIC TRANSFER. ---- 437626
6. SCHEMATIC DIAGRAM 4KV BUS H AUTOMATIC TRANSFER. ---- 437627
7. SINGLE LINE METER & RELAY 480V BUS SECTION IG. ---- 437542
8. SINGLE LINE METER & RELAY 480V BUS SECTION IH. ---- 437543
9. PIPING SCHEMATIC VENTILATION & AIR CONDITION SYSTEMS. ---- 102023
11. INSTRUMENT SCHEMATIC LEVEL INSTRUMENT SYSTEM. ---- 102033
12. SINGLE LINE METER & RELAY 125V DC SYSTEM. ---- 437546, 445075, 445076
13. CONTAINTMENT FAN COOLERS ---- REC. NO. 663079
14. SCHEMATIC DIAGRAM MAIN ANNUNCIATOR SH. 1. ---- 501121
16. SCHEMATIC DIAGRAM MONITOR LIGHT PANEL C. ---- 437698
17. LOGIC DIAGRAM. ---- 19407
18. SCHEMATIC DIAGRAM SIS MOV'S. ---- 437606
19. SCHEMATIC DIAGRAM MONITOR LIGHT AUX. RELAY. ---- 445287
20. BLOCK DIAGRAM EMERGENCY RESPONSE FACILITY DATA SYSTEM. ---- 445278
21. BILL OF MATERIAL VERTICAL BDS ---- 101941

P.G.&E. SYSTEM PHASE SEQUENCE A-C-B

NUCLEAR SAFETY RELATED

UNIT 1

KEY DWG. SECTION 4

DATE	08-30-2022	REVISION DESCRIPTION
D.D.	MNRU	Revised Per DFT-7*5658
R.E.	RXG2	
I.V.	N/A	
P.E.	N/A	

REGISTERED PROFESSIONAL ENGINEER — NOT REQUIRED PER CF3.ID5 — STATE OF CALIFORNIA

ELECTRICAL
SCHEMATIC DIAGRAM
CONTAINMENT FAN COOLERS

DIABLO CANYON POWER PLANT
PACIFIC GAS AND ELECTRIC COMPANY
SAN FRANCISCO, CALIFORNIA

DWG SCALE:
BILL OF MATL:
SUPSDS:
SUPSD BY:

DRAWING	SHEET	PAGE	REV
437600	1	0	46

U2-441313

RASTER=437600-1-0.dgn
DGN=437600-1-0.dgn
CAD User:MNRU Date:08-30-2022

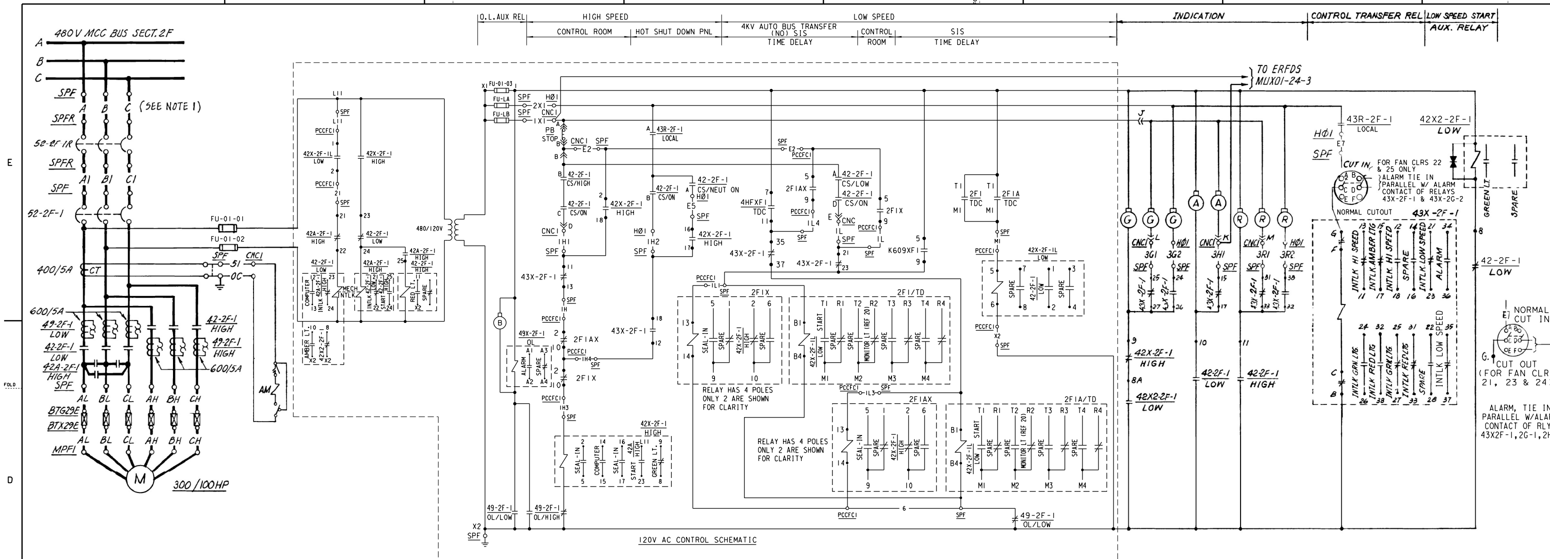

NOTE: FOR OTHER CFCU'S SEE APPLICABLE DETAILS ON 441313-2 AS SHOWN IN TABLE.

CONTAINMENT FAN COOLER Nº 22 CIRCUIT Nº F01P00

CONTAINMENT FAN COOLERS Nºs 21, 23, 24, & 25 SIMILAR EXCEPT AS SHOWN IN TABLE

FAN CLR No.	MOTOR LOC.	CIRCUIT BKR. No. PRIMARY	CIRCUIT BKR. No. BACK-UP	CKT. No.	BUS SECT.	PENN No.	SIS AUX RELAY	CONDENSATE DRAIN SYSTEM VALVE No.	SV No.	SV LOC.	SW. CONTACT FOR SV	CONTACT DEVICE FOR IND. HIGH-HIGH	HIGH	VLV POS	125V DC CKT. No.	CKT. No.	PENN No.	ERFDS	ALARM CIRCUIT No.s OVER-CURRENT	TRANSFER OF CONT	VIBRATION HIGH MOTOR & FAN	DRIP PAN DRAIN LEVEL HIGH-HIGH	HIGH	COMPUTER CKT. No. BREAKER CLOSED			C.O. SW POSITION CONTROL TRANSFER RELAY CUT-OUT SW	FUSES PRIMARY (CONT. CKT.)	FUSES SECONDARY (CONT. CKT.)	DETAIL	DRAWING
22	MPF1	52-2F-1	52-2F-1R	F01P00	2F	29E	K609XF1	LCV125	125	XSV125	43CDV (C)	LS73R	LS72	43CDV (I	241D	10125SV01	2E	MUX01-24-3	AI0413DF	AY5065DF	AY0408D	AY2501D	AY2502D	CY1001DF			NORMAL CUT-OUT	FU-01-01, FU-01-02	FU-01-03, FU-LA, FU-LB	-	THIS DWG
21	MPF2	52-2F-2	52-2F-2R	F02P00	2F	32E	K608XF2	LCV120	120	XSV120	43CDV (B)	LS71R	LS70R	43CDV (H		10120SV01		MUX01-24-2	AI0412DF	AY5065DF	AY0407D			CY1000DF			NORMAL CUT-IN	FU-02-01, FU-02-02	FU-02-03, FU-LA, FU-LB	A	441313-2
23	MPG1	52-2G-1	52-2G-1R	G01P00	2G	9E	K608XG1	LCV126	126	XSV126	43CDV (D)	LS75	LS74	43CDV (J		10126SV01		MUX02-20-4	AI0414DG	AY5066DG	AY0409D			CY1002DG			NORMAL CUT-IN	FU-01-01, FU-01-02	FU-01-03, SPG-LA-01, SPG-LB-01	B	441313-2
24	MPH1	52-2H-1	52-2H-1R	H01P00	2H	3E	K609XH1	LCV129	129	XSV129	43CDV (E)	LS77R	LS76	43CDV (K		10129SV01		MUX03-11-1	AI0415DH	AY5067DH	AY0410D			CY1003DH			NORMAL CUT-IN	FU-01-01, FU-01-02	FU-01-03, FU-LA, FU-LB	C	441313-2
25	MPG2	52-2G-2	52-2G-2R	G02P00	2G	15E	K609XG2	LCV130	130	XSV130	43CDV (F)	LS79R	LS78R	43CDV (L	↓	10130SV01	↓	MUX02-25-3	AI0416DG	AY5066DG	AY0411D	↓	↓	CY1004DG			NORMAL CUT-OUT	FU-02-01, FU-02-02	FU-02-03, SPG-LA-02, SPG-LB-02	D	441313-2

TABLE OF DEVICES

DEVICE NO.	FUNCTION	RATING	MFR.	TYPE	CAT/DWG. NO.	REMARKS
AM	AMMETER	5A	WE CORP		644B637A19	SCALE 0-400A
CT	CURRENT TRANSFORMER	400/5A	WE CORP	ECI	237A970G06	
LS70R, LS71R, LS78R, LS73R, LS79R	LEVEL ALARM RELAY			P&B		NORMALLY ENERGIZED
4HFXF1, 4HFXF2, 4HGXG1, 4HGXG2, 4HHXH1	AUTO BUS TRANSFER SIGNAL AUX RLY	120V AC	P&B	KHU	KHU17A16-120	
42A-2F-1, 2F-2, 2G-1, 2G-2, 2H-1 (HIGH HIGH HIGH HIGH HIGH)	MOTOR AUX. STARTER (HI-SPEED)	480V AC	WE CORP	—	—	PART OF MOTOR STARTER
42-2F-1, 2F-2, 2G-1, 2G-2, 2H-1 (HIGH HIGH HIGH HIGH HIGH)	MOTOR STARTER (HIGH SPEED)	480V AC	WE CORP	—	—	
42-2F-1, 2F-2, 2G-1, 2G-2, 2H-1 (LOW LOW LOW LOW LOW)	MOTOR STARTER (LOW SPEED)	480V AC	" "	—	—	
42X-2F-1, 2F-2, 2G-1, 2G-2, 2H-1 (HIGH HIGH HIGH HIGH HIGH)	MOTOR STARTER AUXILIARY RELAY	120V AC	" "	—	—	
42X2-2F-1, 2F-2, 2G-1, 2G-2, 2H-1 (LOW LOW LOW LOW LOW)	LOW SPEED START AUX RELAY	120VAC	W.E. CORP.	AR420A	766AD24GD1	
49-2F-1, 2F-2, 2G-1, 2G-2, 2H-1 (HIGH HIGH HIGH HIGH HIGH)	MOTOR OVERLOAD (HIGH SPEED)	—	WE CORP	—	—	PART OF MOTOR STARTER
49-2F-1, 2F-2, 2G-1, 2G-2, 2H-1 (LOW LOW LOW LOW LOW)	MOTOR OVERLOAD (LOW SPEED)	—	" "	—	—	
49X-2F-1, -2F-2, -2G-1, -2G-2, -2H-1	MOTOR OVERLOAD AUX. RELAY	120 VAC	W.E. CORP	—	—	PART OF MOTOR STARTER
52-2F-1, -2F-2, -2G-1, -2G-2, -2H-1	AIR CIRCUIT BREAKER	—	WE CORP	—	(3)(7)(8)	PART OF MOTOR STARTER
52-2F-1R, -2R, -2G-1R, -2R, -2H-1R	AIR CIRCUIT BREAKER	—	" "	—	"	BACK-UP BREAKER
FCV	CONTROL DRIVE, FLOW				(10)	
SV	SOLENOID VALVE				(9)(10)	
LS	LEVEL SWITCH				(11)	
43X-2F-1, 2F-2, 2G-1, 2G-2, 2H-1	CONTROL TRANSFER RELAY	120V AC	ELECTRO SWITCH	SERIES 24LOR	7803F	HAND RESET
YS9, YS10, YS11, YS12, YS13	MOTOR VIBRATION SWITCH	125V DC	ROBERT-SHAW	366	366A	ELECT. & HAND RESET. CONTACTS TO BE CONNECTED IN PARALLEL PER ALARM CKT
YS15, YS16, YS17, YS18, YS19	FAN " "					
K608XF2, K609XF1, K608XG1, K609XG2, K609XH1	SAFETY INJ SIGNAL AUX RELAY	120V AC	W.E. CORP			
2F2X, 2F2AX, 2F1X, 2F1AX, 2G1X, 2G1AX, 2H1X, 2H1AX, 2G2X, 2G2AX	SAFETY INJ SIGNAL AUTO XFR AUX RELAY	120V AC	P&B	KHU	KHU17A16-120	CFCU 21, 22, 23, 24 & 25
42X-2F-2L, 42X-2F-1L, 42X-2G-1L, 42X-2H-1L, 42X-2G-2L	LOW SPEED START AUXILIARY RELAY	120V AC	C-H	A200	A200MOCACDEJ4 OR A201KOCA W/ (4) J11 OR J20 AUX. COTACT SETS INSTALLED	CFCU 21, 22, 23, 24 & 25
2F2, 2F1, 2H1, 2G1, 2G2	SAFETY INJ SIGNAL TIMING RELAY	120V AC	AGASTAT	ETR	ETR-1413D-004	CFCU 21, 22, 23, 24 & 25
2F2A, 2F1A, 2G1A, 2H1A, 2G2A	AUTO TRANSFER TIMING RELAY	120V AC	AGASTAT	ETR	ETR-1413D-004	CFCU 21, 22, 23, 24 & 25

CONTACTS		POSITIONS CONTROL ROOM	LOCAL	REMARKS
⊣⊢	A		X	THIS DWG
⊣⊢	B	X		SPARE
⊣⊢	C		X	THIS DWG.
⊣⊢	D	X		SPARE

TRANSFER SWITCH 43R-2F-1, 2F-2, -2G-1, -2G-2, 2H-1
USED AT LOCATION HØ1
NO SPRING RETURN

SELECT-O-PUSH OPERATOR

CONTACTS		POSITIONS LOW RELEASED	LOW DEPRESSED	HIGH RELEASED	HIGH DEPRESSED	REMARKS
⊣⊢	A	X	X			THIS DWG
⊣⊢	B			X	X	THIS DWG
⊣⊢	C				X	THIS DWG
⊣⊢	D		X			THIS DWG

CONTROL SWITCH 42-2F-1/CS, 42-2F-2/CS, 42-2G-1/CS, 42-2G-2/CS, 42-2H-1/CS
USED AT LOCATION CNC1

CONTACTS		POSITIONS OFF	NEUT	ON	REMARKS
⊣⊢	A		X	X	THIS DWG
⊣⊢	B			X	THIS DWG

CONTROL SWITCH 42-2F-1/CS, 42-2F-2/CS, 42-2G-1/CS, 42-2G-2/CS, 42-2H-1/CS
USED AT LOCATION HØ1
SPRING RETURN TO NEUTRAL

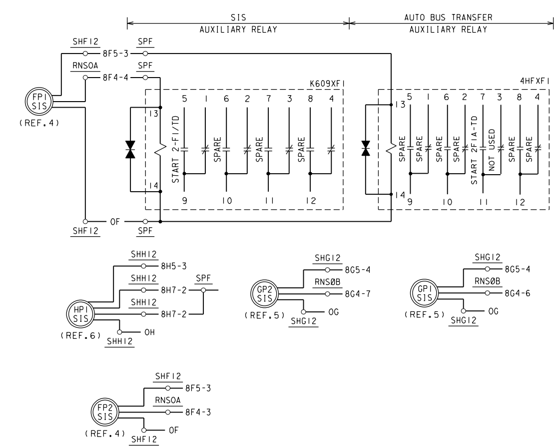

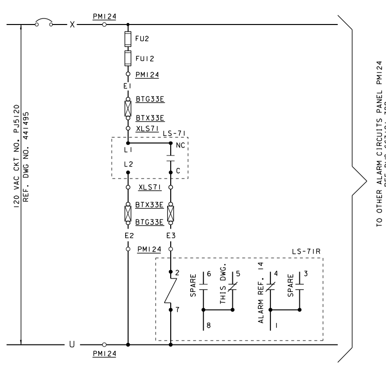

CONDENSATE DRAIN SYSTEM LEVEL MONITORING LEVEL SWITCH & ALARM RELAY CONFIGURATION ONLY.

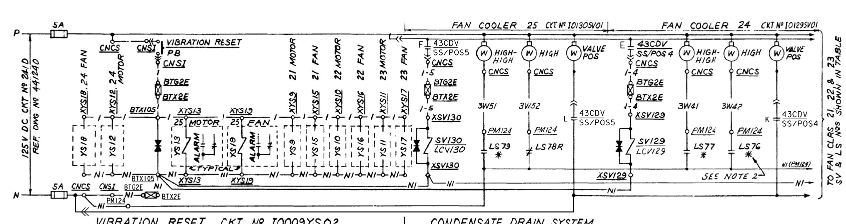

VIBRATION RESET CKT Nº I0009YS02 | CONDENSATE DRAIN SYSTEM

CKTS LISTED ON DWG 102759

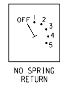

NO SPRING RETURN

CONTACTS		POSITIONS OFF	1	2	3	4	5	REMARKS
⊣⊢	A	X						SPARE
⊣⊢	B		X					FAN COOLER 21 (THIS DWG)
⊣⊢	C			X				FAN COOLER 22 (THIS DWG)
⊣⊢	D				X			FAN COOLER 23 (THIS DWG)
⊣⊢	E					X		FAN COOLER 24 (THIS DWG)
⊣⊢	F						X	FAN COOLER 25 (THIS DWG)
⊣⊢	G	X						SPARE
⊣⊢	H		X					FAN COOLER 21 (THIS DWG)
⊣⊢	I			X				FAN COOLER 22 (THIS DWG)
⊣⊢	J				X			FAN COOLER 23 (THIS DWG)
⊣⊢	K					X		FAN COOLER 24 (THIS DWG)
⊣⊢	L						X	FAN COOLER 25 (THIS DWG)

SELECTOR SWITCH 43CDV
USED AT LOCATION CNCS
(REF 21)

REFERENCES

1. DESCRIPTION OF ELEC. SCHEM. DIAG. SYMBOLS & CKT. DESIGNATIONS. — DWG. NO. 050003
2. EQUIPMENT LOCATION NOS. — DWG. NO. 103013
3. SINGLE LINE METER & RELAY 480V BUS SECTION 2F — DWG. NO. 441237
4. SCHEMATIC DIAGRAM 4KV BUS F AUTOMATIC TRANSFER — DWG. NO. 441352
5. SCHEMATIC DIAGRAM 4KV BUS G AUTOMATIC TRANSFER — DWG. NO. 441353
6. SCHEMATIC DIAGRAM 4KV BUS H AUTOMATIC TRANSFER — DWG. NO. 441354
7. SINGLE LINE METER & RELAY 480V BUS SECTION 2G — DWG. Nº 441238
8. SINGLE LINE METER & RELAY 480V BUS SECTION 2H — DWG. Nº 441239
9. PIPING SCHEMATIC VENTILATION & AIR CONDITION SYSTEMS — DWG. Nº 108023
11. INSTRUMENT SCHEMATIC LEVEL INSTRUMENT SYSTEM — DWG. Nº 108033
12. SINGLE LINE METER & RELAY 125/250 V DC SYSTEM — DWG. Nº 441240
13. CONTAINMENT FAN COOLERS — REC. Nº 663079
14. SCHEMATIC DIAG MAIN ANNUNCIATOR SH. 1 — DWG. NO. 500771
15. ~~SCHEMATIC DIAG COMPUTER P250~~ — ~~DWG. NO.~~
16. SCHEMATIC DIAG. MONITOR LIGHT PANEL C — DWG. NO. 441454
17. LOGIC DIAGRAM — DWG. NO. 19407
18. SCHEMATIC DIAGRAM SIS MOV'S — DWG. NO. 441318
19. BLOCK DIAGRAM, ERFDS, TECH. SUPPORT CENTER & CONTROL ROOM — DWG. NO. 445297
20. SCHEMATIC DIAGRAM MONITOR LIGHT AUX. RELAYS — DWG NO. 445381
21. BILL OF MATERIALS - VERTICAL BOARDS — DWG. No. 107941

EQUIPMENT LOCATION NUMBERS

- CNC1 — CONTROL BOARD CONTAINMENT VENTILATION
- HØ1 — HOT SHUT DOWN REMOTE CONTROL PANEL 1
- MPF1 — CONTAINMENT FAN COOLER 22
- SHF12 — 4KV SWITCHGEAR BUS F CUBICLE 12
- SPF — 480V MOTOR CONTROL CENTER BUS SECTION 2F
- BTG2E — TERMINAL BOX 2E AREA G
- CNCS — CONTROL BOARD CONTAINMENT SPRAY
- XSV130 — INSTRUMENT Nº SV130 LOCAL MOUNTED
- SPFR — 480V MOTOR CONTROL CENTER BUS SECTION 2FR, BACK UP OVERCURRENT PROTECTION

NOTE:

1. BUS SECTION 2F & 2FR, 2H & 2HR SHALL BE CONNECTED TOGETHER BY BUS LINK. BUS SECTION 2G & 2GR SHALL BE CONNECTED WITH CABLES.
2. * CONTACT SHOWN IN NORMAL DRAIN LEVEL CONDITIONS.

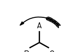

P.G.&E. SYSTEM PHASE SEQUENCE A-C-B

NUCLEAR SAFETY RELATED

KEY DWG. SECTION 4

UNIT 2

DATE 12-02-2020		REVISION DESCRIPTION	ELECTRICAL SCHEMATIC DIAGRAM CONTAINMENT FAN COOLERS	DWG SCALE:
D.D.	FAZ1	Revised Per DFT-7*5327		BILL OF MATL:
R.E.	RXG2			SUPSDS:
I.V.	N/A		DIABLO CANYON POWER PLANT	SUPSD BY:
P.E.	N/A		PACIFIC GAS AND ELECTRIC COMPANY SAN FRANCISCO, CALIFORNIA	DRAWING 441313 / SHEET 1 / PAGE 0 / REV 38

REGISTERED PROFESSIONAL ENGINEER — NOT REQUIRED PER CF3.ID5 — STATE OF CALIFORNIA

RASTER=441313-1-0.dgn
DGN=441313-1-0.dgn
CAD User:FAZ1 Date:12-02-2020

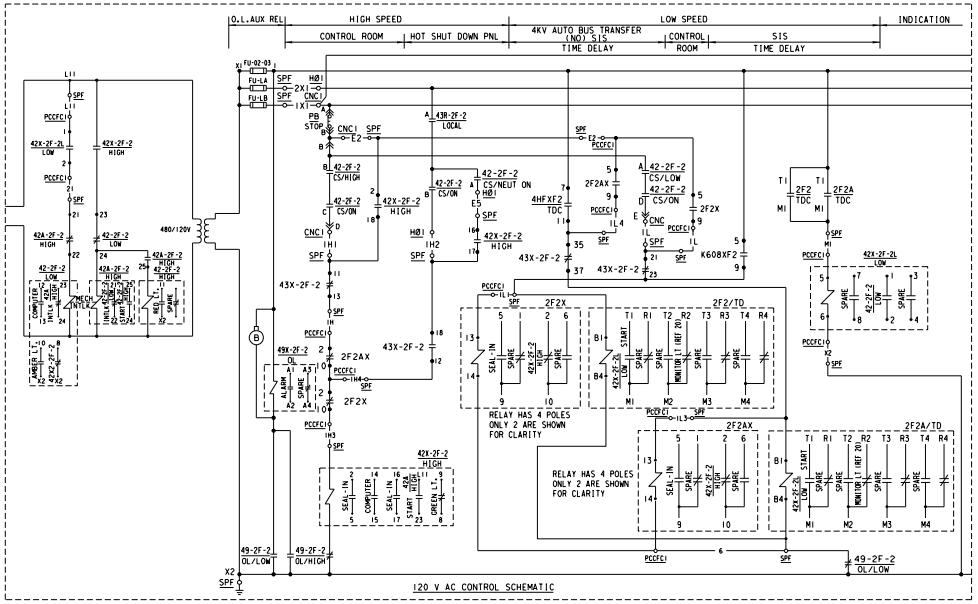

DETAIL A

CONTAINMENT FAN COOLER No. 21 CIRCUIT No. F02P00

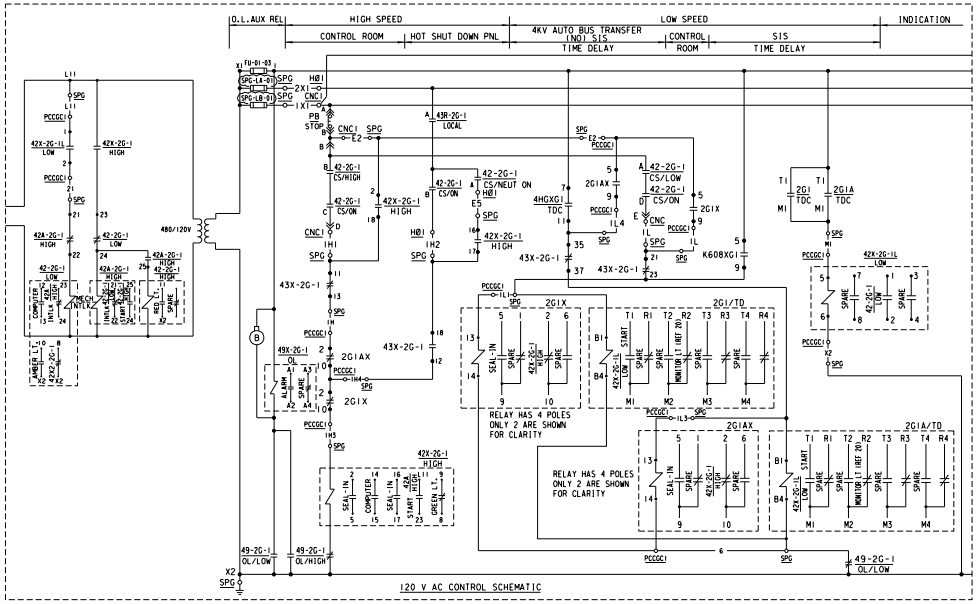

DETAIL B

CONTAINMENT FAN COOLER No. 23 CIRCUIT No. G01P00

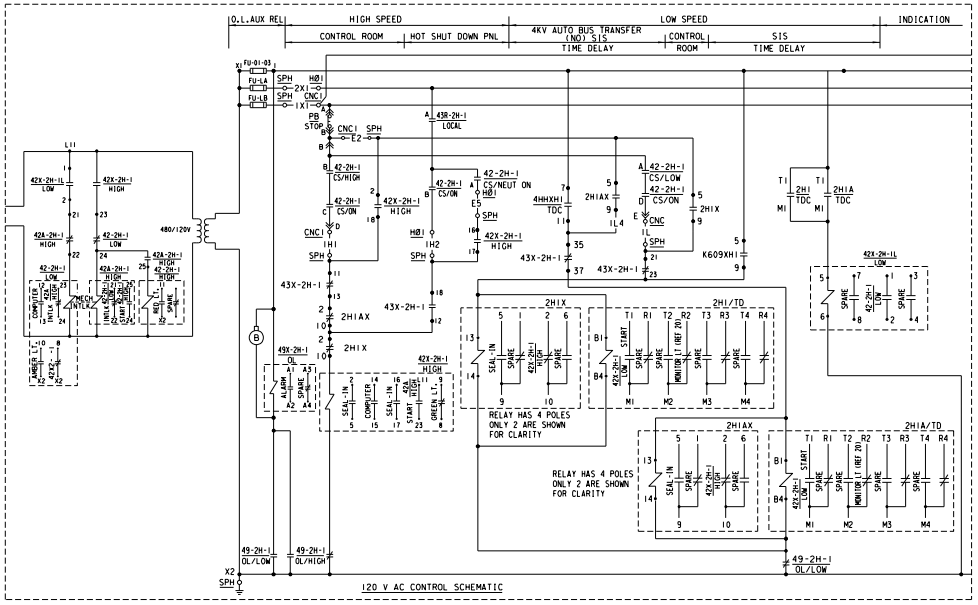

DETAIL C

CONTAINMENT FAN COOLER No. 24 CIRCUIT No. H01P00

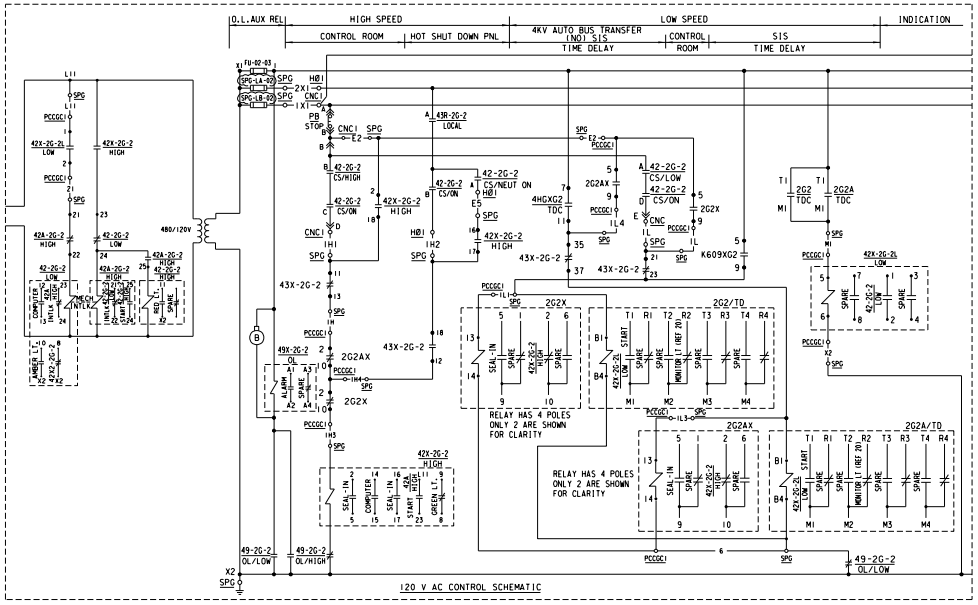

DETAIL D

CONTAINMENT FAN COOLER No. 25 CIRCUIT No. G02P00

-FOR TABLE OF DEVICES AND TABLE OF DIFFERENCES, SEE SHEET 1-

P.G.&E. SYSTEM PHASE SEQUENCE A-C-B

KEY DWG. SECTION 4

UNIT 2

DATE		REVISION DESCRIPTION
12-02-2020		Revised Per DFT-7*5327
D.D.	FAZI	
R.E.	RXG2	
I.V.	N/A	
P.E.	N/A	

ELECTRICAL
SCHEMATIC DIGRAM
CONTAINMENT FAN COOLERS
NO. 21, 23, 24, & 25

DIABLO CANYON POWER PLANT
PACIFIC GAS AND ELECTRIC COMPANY
SAN FRANCISCO, CALIFORNIA

DWG SCALE:	
BILL OF MATL:	
SUPSDS:	
SUPSD BY:	

DRAWING	SHEET	PAGE	REV
441313	2	0	7

DRAWING NUMBER 441313 2

RASTER=441313-2-0.dgn
DGN=441313-2-0.dgn
CAD User=FAZI Date=12-02-2020

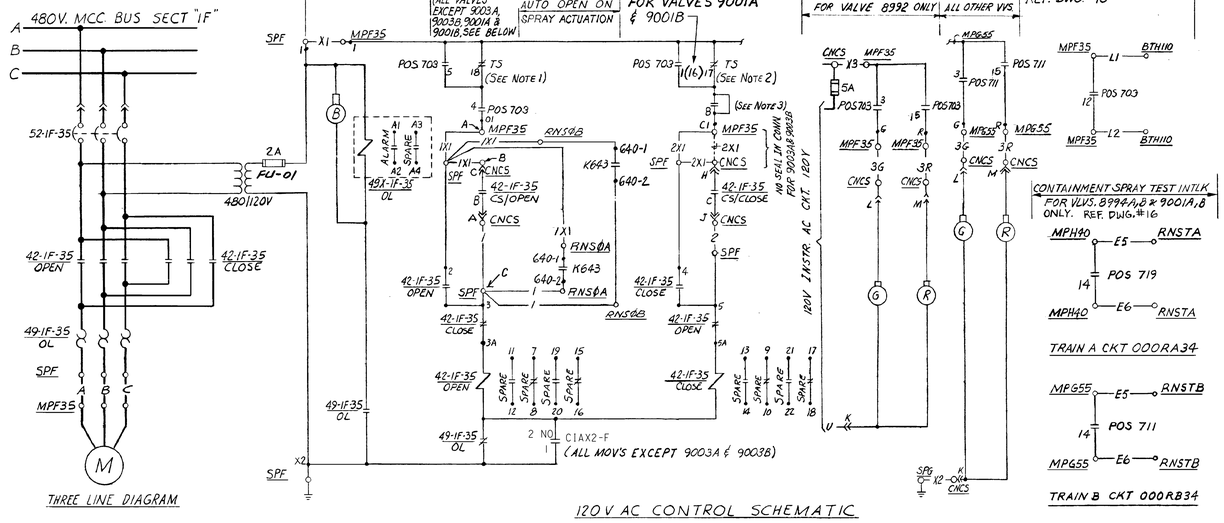

120V AC CONTROL SCHEMATIC

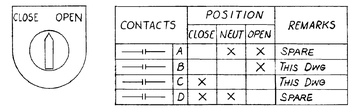

CONTACTS		POSITION CLOSE	POSITION NEUT	POSITION OPEN	REMARKS
	A		X	X	SPARE
	B			X	THIS DWG
	C	X			THIS DWG
	D	X	X		SPARE

42-1F-35 / CS , 42-1G-21 / CS , 42-1G-48* / CS

CONTROL SWITCH – 42-1G-55 / CS , 42-1H-6* / CS , 42-1H-11 / CS , 42-1H-90 / CS

USED AT LOCATION CNCS
SPRING RETURN TO NEUTRAL

* 42-1G-48/CS & 42-1H-6/CS TO BE MAINTAINED CONTACT & NAMEPLATES TO READ "CLOSE-STOP-OPEN".

CONTACTS		VALVE POSITION FULL OPEN	VALVE POSITION FULL CLOSED	FUNCTION CONTACTS 1 TO 8	FUNCTION CONTACTS 9 TO 16
1	9			1 SEE TABLE	9 SPARE
2	10			2 SPARE	10 SPARE
3	11			3 GREEN LIGHT	11 SPARE
4	12			4 OPEN LIMIT	12 SEE TABLE
5	13			5 BYPASS INTLK.	13 SEE TABLE
6	14			6 SPARE	14 SEE TABLE
7	15			7 SPARE	15 RED LIGHT
8	16			8 SEE NOTES 3	16 SEE TABLE

TYPICAL VALVE POSITION SWITCH CONTACT DEVELOPMENT
ACTUAL SETPOINTS ARE IN PIMS

TABLE OF DEVICES

DEVICE NO.	FUNCTION	RATING	TYPE	MFR.	CAT/DWG#	REMARKS
42-1F-35 42-1G-21,-48,-55 42-1H-6,-11,-40	480V AC MOTOR STARTER REVERSIBLE, SIZE 1	—	—	—	REF DWG #1,2,3	
49-1F-35 49-1G-21,-48,-55 49-1H-6,-11,-40	MOTOR OVERLOAD RELAY	—	WE CORP	—	—	PART OF MOTOR STARTER
49X-1F-35 49X-1G-21,-48,-55 49X-1H-6,-11,-40	MOTOR OVERLOAD AUX. RELAY	—	WE CORP	—	—	PART OF MOTOR STARTER
52-1F-35 52-1G-21,-48,-55 52-1H-6,-11,-40	480V AC AIR CIRCUIT BREAKER	—	—	—	REF DWG #1,2,3	
CIAX-F,H CIAX2-G	CNT ISOL PH.A AUX RELAY MOTOR OC BYPASS	—	—	—	(15)	CLOSES ON PH A ISOL & SIS ACTUATION
FCV-	FLOW CONTROL VALVE	—	—	—	—	SEE TABLE FOR VALVE NO'S
POS-	FCV POSITION SWITCH	—	—	—	—	SEE TABLE FOR SW NO'S
K643,K644	SPRAY ACTUATION AUX. RELAY	—	—	—	(10)(11)	
2K617	K617/SIS AUX. TIMING RELAY	—	—	—	(11)	
TS	TORQUE SWITCH	—	—	—	—	
POS674X,669X	VALVE POSITION SW AUX. RELAY	—	—	—	8	

8992 SPRAY ADDITIVE TANK OUTLET CIRCUIT No F35P00

CONTAINMENT SPRAY SYSTEM MOV's SIMILAR EXCEPT AS SHOWN IN TABLE

VALVE NO.	DESCRIPTION	CIRCUIT BKR.NO.	CIRCUIT NO.	BUS SECT	NORMAL POSITION	ENGINEER SAFETY VITAL FUNCTION	VALVE POSITION SWITCH-(POS) POS NO.	MONITOR LIGHT CONTACT	INTERLOCK CONT.	INTERLOCK VALVE NO.	INTERLOCK REF	STEM MTD POS NO.	STEM MTD CONT.	STEM MTD VALVE NO.	STEM MTD REF	CLOSE BYPASS INTLK CONTACT	CNT.ISOL.PH A MOTOR OC BYPASS DEVICE	CNT.ISOL.PH A MOTOR OC BYPASS CONTACT	ALARM CKT.NO. OVER CURRENT	MOTOR LOC. NO.	CONTAINMENT SPRAY SIGNAL DEVICE	CONTAINMENT SPRAY SIGNAL LOCATION	CONTAINMENT SPRAY SIGNAL CONTACT	SSPS TEST INTLK (SEE NOTE 8) TRAIN A CONTACT	SSPS TEST INTLK (SEE NOTE 8) TRAIN A CKT NO.	SSPS TEST INTLK (SEE NOTE 8) TRAIN B CONTACT	SSPS TEST INTLK (SEE NOTE 8) TRAIN B CKT NO.
8992	SPRAY ADDITIVE TANK OUTLET	52-1F-35	F35P00	1F	OPEN	P	703	12				——				1	CIAX2-F	1–H–2 NO	A14408DF	MPF 35	K643	RNSØA	TB640 1–H–2	—	—	—	—
8994A	SPRAY ADD.TK.OUT.ISOL.LINE 1	52-1G-55	G55P00	1G	CLOSED	P	711	12				——				1	CIAX2-G	1–H–2 NO	A14308DG	MPG 55	K644	RNSØB	TB641 1–H–2	—	—	14	000RB34
8994B	SPRAY ADD.TK. OUT.ISOL. LINE 2	52-1H-40	H40P00	1H	CLOSED	P	719	12				——				1	CIAX-H	9–H–10 NO	A14208DH	MPH 40	K644	RNSØA	TB641 1–H–2	14	000RA34	—	—
9003A	RHR PPS TO SPRAY RING HDRS.1&3	52-1G-48	G48P00	1G	CLOSED	——	727	16	13	8700A	B	——				1	——	——	A14308DG	MPG 48	—	—	————	—	—	—	—
9003B	RHR PPS TO SPRAY RING HDRS.2&4	52-1H-6	H06P00	1H	CLOSED	——	732	16	13	8700B	B	——				1	——	——	A14208DH	MPH 6	—	—	————	—	—	—	—
9001A	SPRAY PP11 DISCH ISOL VALVE	52-1G-21	G21P00	1G	CLOSED	P	741	12				——				16	CIAX2-G	3–H–4 NO	A14308DG	MPG 21	K644&2K617	RNSØB	TB641 3–H–4	—	—	14	000RB35
9001B	SPRAY PP12 DISCH ISOL VALVE	52-1H-11	H11P00	1H	CLOSED	P	757	12				——				16	CIAX-H	11–H–12 NO	A14308DH	MPH 11	K644&2K617	RNSØA	TB641 3–H–4	14	000RA35	—	—

⚠ THE BREAKER FOR THIS VALVE IS OPEN DURING NORMAL PLANT OPERATION AND CLOSED ONLY DURING RECIRCULATION PHASE OR FOR TESTING. U/V ALARM NOT REQUIRED.

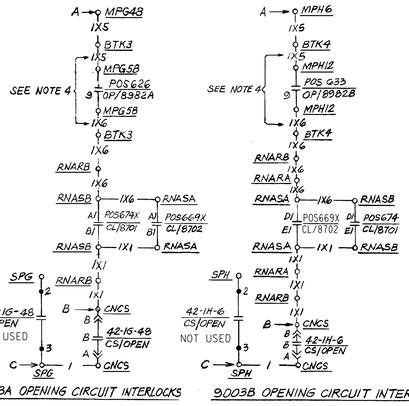

9003A OPENING CIRCUIT INTERLOCKS

9003B OPENING CIRCUIT INTERLOCKS

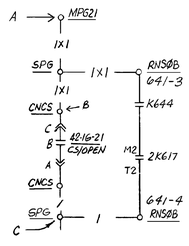

9001A OPENING CIRCUIT INTERLOCKS
9001B SIMILAR EXCEPT AS SHOWN IN TABLE ABOVE

ABANDONED IN PLACE

CONTACTS		POSITION CLOSE	POSITION OPEN & INTERM	REMARKS
	A		X	SPARE
	B	X		INTLK SEE TABLE
	C		X	SPARE
	D	X		SPARE

VALVE CLOSE POS. SW. (BOX 2)
STEM MTD. ON 9003A & 9003B, NOTE 5

LEGEND:

▲ MOV'S PROVIDED WITH FIELD INSTALLED "QUICKTEST" CABLE ASSEMBLIES. SEE APPLICABLE DIAGRAM OF CONNECTIONS.

EQUIPMENT LOCATION NUMBERS

SPF - 480V MOTOR CONTROL CENTER, BUS SECTION 1F
MPF35 - MOTOR OPERATED VALVE 8992
CNCS - CONTROL BOARD, CONTAINMENT SPRAY
RNSØA - RACK NUCLEAR SAFEGUARD, OUTPUT TRAIN A
RNARB - RACK NUCLEAR AUXILIARY RELAY CUB. B
BTK4 - TERMINAL BOX AREA K NO. 4
RNSTA - RACK NUCLEAR SAFEGUARD TEST TRAIN A

NOTES

1- SWITCH OPENS ON MECHANICAL TORQUE DURING OPENING CYCLE (18).
2- SWITCH OPENS ON MECHANICAL TORQUE DURING CLOSING CYCLE OR FULLY CLOSED VALVE (17).
3- FIELD TO INSTALL JUMPER FOR TORQUE SEATING
4- FOR VALVE 9003A-WIRE NO'S 1X5 & 1X6-FROM MPG58 TO BTK3 (VALVE 8982A POSITION SWITCH) ARE LISTED IN CKT NO.G58P07. SIMILAR FOR VALVE 9003B EXCEPT FROM MPH12 TO BTK4 (VALVE 8982B POSITION SWITCH) AND LISTED IN CKT. NO. H12P07.
5- STEM MOUNTED POSITION SW. ADDED BY WESTINGHOUSE PER Ⓦ 501B180 SH.166 & 167, REC.#663193-166,167.
6-
7-
8- PERMISSIVE INTLKS FOR SSPS SLAVE RELAY K64S TESTING. VALVES MUST BE CLOSED FOR SSPS TEST. SEE REF 17.

REFERENCE DRAWINGS

		DWG #
1.	SINGLE LINE METER & RELAY DIAGRAM, 480 V SYSTEM BUS SECT "1F"	437916
2.	"1G"	437542
3.	"1H"	437543
4.	DESCRIPTION OF ELECT SCHEMATIC DIAG.S, SYMBOLS, & CKT DESIGNATIONS	050003
5.	EQUIPMENT LOCATION NUMBER LIST	101900
6.	PIPING SCHEMATIC CONTAINMENT SPRAY SYSTEM	102012
7.	INSTRUMENT SCHEMATIC FLOW INSTRUMENT SYSTEMS	102032
8.	SCHEMATIC DIAG. RESIDUAL HEAT REMOVAL FLOW CONTROL VALVES	437592
9.	- SAFETY INJECTION SYSTEM MOTOR OPERATED VALVES	437605
10.	Ⓦ FUNCTION DIAGRAMS	Rec. # 663195
11.	SCHEM DIAG, SSPS OUTPUT RELAYS, TRAIN A, TRAIN B	DWGS 501869, 503088
12.	SCHEMATIC DIAG. MAIN ANNUNCIATOR SH. 1G)17 -	DWG. 501136,7
13.	MONITOR LIGHT BOX A, D	- DWG. 437694,9
14.	4KV AUTO XFR BUS G & H -	DWG. 437626, 437627
15.	SCHEMATIC DIAG SIS MOV'S	DWG. 437606
16.	SOLID STATE PROTECTION SYS. SFGD. TEST MANUAL. REC. VALVE NOs 8992, 8994A, 8994B, 9001A, 9001B, 9003A, 9033B	
17.	SCHEMATIC DIAG. SAFEGUARD TEST CAB TERM. BLK TRAIN "A"	DWG. 498045
18.	SCHEMATIC DIAG. SAFEGUARD TEST CAB. TERM. BLK TRAIN "B"	DWG. 498099

NUCLEAR SAFETY RELATED

P.G.&E. SYSTEM PHASE SEQUENCE A-C-B

KEY DWG. SECTION 4

UNIT 1

DATE		REVISION DESCRIPTION
01-02-2024		Revised Per DFT-7 #6082
D.D.	FAZ1	
R.E.	FXC2	
I.V.	N/A	
P.E.	N/A	

REGISTERED PROFESSIONAL ENGINEER — NOT REQUIRED PER GP 3.1.05 — STATE OF CALIFORNIA

ELECTRICAL
SCHEMATIC DIAGRAM
CONTAINMENT SPRAY SYSTEM
MOTOR OPERATED VALVES

DIABLO CANYON POWER PLANT
PACIFIC GAS AND ELECTRIC COMPANY
SAN FRANCISCO, CALIFORNIA

DWG SCALE:	
BILL OF MATL:	
SUPSDS:	
SUPSD BY:	

DRAWING	SHEET	PAGE	REV
437604	1	0	24

DRAWING NUMBER 437604 1

RASTER=437604-1-0.dgn
DGN=437604-1-0.dgn
CAD User:FAZ1 DATE: 01-02-2024

SIZE 4 Size

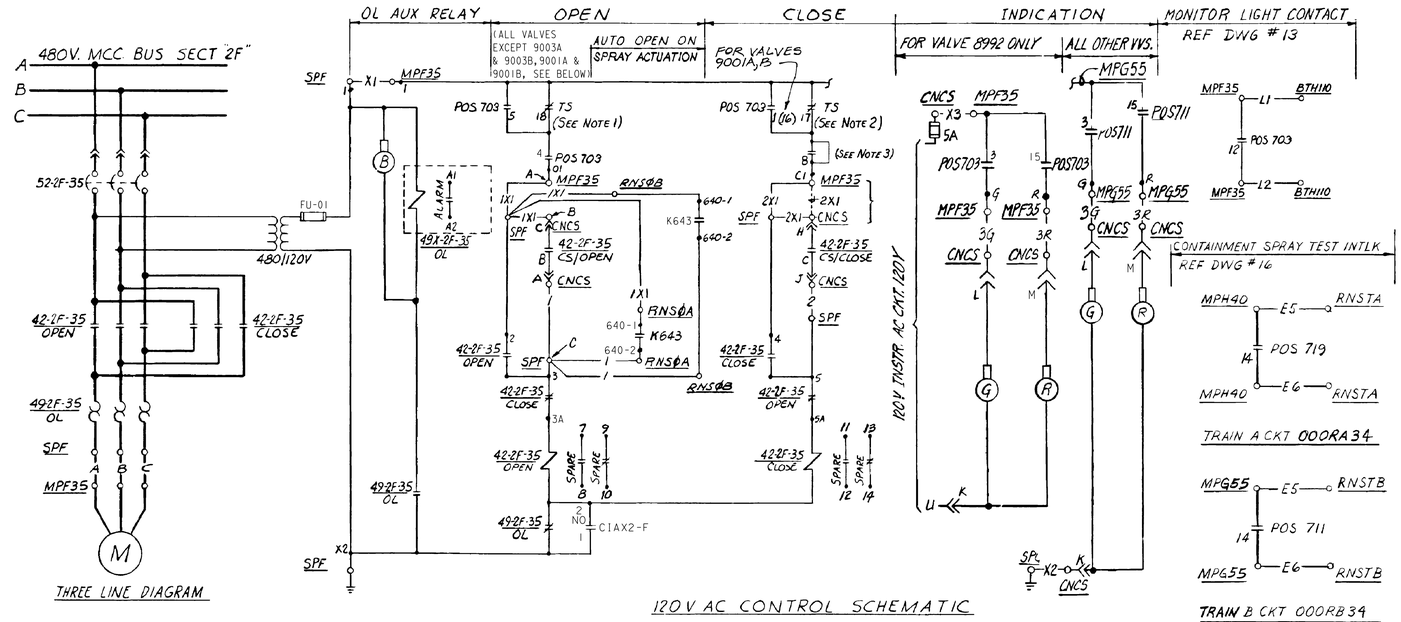

8992 SPRAY ADDITIVE TANK OUTLET CIRCUIT NO F35P00

CONTAINMENT SPRAY SYSTEM MOV's SIMILAR EXCEPT AS SHOWN IN TABLE

VALVE NO.	DESCRIPTION	CIRCUIT BKR. No	CIRCUIT No.	BUS SECT	NORMAL POSITION	ENGINEER SAFETY FUNCTION	VALVE POSITION SWITCH-CPOS) POS NO.	MONITOR LIGHT CONTACT	INTERLOCK CLOSE BYPASS INTLK	INTERLOCK CONT	INTERLOCK STEMMTD VALVE NO.	INTERLOCK STEMMTD REF	CONT. ISOL. PH A POS. NO.	CONT. ISOL. PH A VALVE NO.	CONT. ISOL. PH A REF.
⚠▲ 8992	SPRAY ADDITIVE TANK OUTLET	52-2F-35	F35P00	2F	OPEN	P	703	12	1				—		
8994A	SPRAY ADD TK. OUT ISOL LINE 1	52-2G-55	G55P00	2G	CLOSED	P	711	12	1				—		
8994B	" " " 2	52-2H-40	H40P00	2H	CLOSED	P	719	12	1				—		
9003A	RHR Pps To SPRAY RING HDRS. 1&3	52-2G-48	G48P00	2G	CLOSED	———	727	16	1	13	8700A	B			
9003B	" " " 2&4	52-2H-6	H06P00	2H	CLOSED	———	732	16	1	13	8700B	B			
9001A	SPRAY PP 2I DISCH ISOL VALVE	52-2G-21	G21P00	2G	CLOSED	P	741	12	16				—		
9001B	" " 22	52-2H-11	H11P00	2H	CLOSED	P	757	12	16				—		

CNT. ISOL. PH A MOTOR OC BYPASS DEVICE	CONTACT	ALARM CKT NO. OVERCURR. UNDERVOLT	MOTOR LOC. NO.	CONTAINMENT SPRAY SIGNAL DEVICE	LOCATION	CONTACT	SSPS TEST INTLK (SEE NOTE #8) TRAIN A CONTACT	TRAIN A CKT NO.	TRAIN B CONTACT	TRAIN B CKT NO.
CIAX2-F	1 — 3 NO	A14408DF	MPF35	K643 / 2K617	RNSØA / RNSØB	TB640 / TB641	—	—	—	—
CIAX2-G	1 — 2 NO	A14308DG	MPG55	K644	RNSØB	TB641 1-H-2	—	—	14	000RB34
CIAX-H	9 — 10 NO	A14208DH	MPH40	K644	RNSØA	TB641 1-H-2	14	000RA34	—	—
— —	— —	A14308DG	MPG48	—	—	—	—	—	—	—
— —	— —	A14208DH	MPH6	—	—	—	—	—	—	—
CIAX2-G	3 — 4 NO	A14308DG	MPG21	K644 & 2K617	RNSØB	TB641 3-H-4	—	—	14	000RB35
CIAX-H	11 — 12 NO	A14208DH	MPH11	K644 & 2K617	RNSØA	TB641 3-H-4	14	000RA35	—	—

⚠▲ THE BREAKER FOR THIS VALVE IS OPEN DURING NORMAL PLANT OPERATION & CLOSED ONLY DURING RECIRCULATION PHASE OR FOR TESTING. U/V ALARM NOT REQUIRED.

TABLE OF DEVICES

DEVICE NO	FUNCTION	RATING	TYPE	MFR	CAT/DWG.#	REMARKS
42-2F-35 42-2G-21,-48,-55 42-2H-6,-11,-40	480V AC MOTOR STARTER REVERSIBLE, SIZE 1	—	—	—	REF DWG #1, 2, 3	
49-2F-35 49-2G-21,-48,-55 49-2H-6,-11,-40	MOTOR OVERLOAD RELAY	—	WE CORP	—	—	PART OF MOTOR STARTER
49X-2F-35 49X-2G-21,-48,-55 49X-2H-6,-11,-40	MOTOR OVERLOAD AUX RELAY	—	WE CORP	—	—	PART OF MOTOR STARTER
52-2F-35 52-2G-21,-48,-55 52-2H-6,-11,-40	480V AC AIR CIRCUIT BREAKER	—	—	—	REF DWG #1, 2, 3	
CIAX 2-G	CONTAINMENT ISOL. PHASE A AUX REL	—	—	—	(15)	CLOSED ON PHASE A ISOL. & SIS ACTUATION
CIAX-F, H	CONTAINMENT ISOL. PHASE A AUX REY	—	—	—	(15)	CLOSED ON PHASE A ISOL. & SIS ACTUATION
FCV-	FLOW CONTROL VALVE	—	—	—	—	SEE TABLE FOR VALVE NO'S
POS-	FCV POSITION SWITCH	—	—	—	—	SEE TABLE FOR SW. NO'S
K643, K644	SPRAY ACTUATION AUX. RELAY	—	—	—	(10)(11)(17)	
2KG17	KG17/SIS AUX TIMING RELAY	—	—	—	(10)(11)(17)	
TS	TORQUE SWITCH	—	—	—	—	
POS674X, G69X	VALVE POSITION SW AUX RELAY	—	—	—	(8)	

EQUIPMENT LOCATION NUMBERS

SPF - 480V MOTOR CONTROL CENTER, BUS SECTION "2F"
MPF35 - MOTOR OPERATED VALVE 8992
CNCS - CONTROL BOARD, CONTAINMENT SPRAY
RNSØA - RACK NUCLEAR SAFEGUARD, OUTPUT TRAIN A
RNARB - RACK NUCLEAR AUXILIARY RELAY CUB. B
BTK4 - TERMINAL BOX AREA K Nº 4
RNSTA - RACK NUCLEAR SAFEGUARD TEST TRAIN A.

NOTES

1. SWITCH OPENS ON MECHANICAL TORQUE DURING OPENING CYCLE (18).
2. SWITCH OPENS ON MECHANICAL TORQUE DURING CLOSING CYCLE OR FULLY CLOSED VALVE (17).
3. FIELD TO INSTALL JUMPER IF TORQUE SEATING IS REQUIRED.
4. FOR VALVE 9003A - WIRE NO's 1X5 & 1X6 - FROM MPG5B TO BTK3 (VALVE 8982A POSITION SWITCH) ARE LISTED IN CKT NO.G58P07. SIMILAR FOR VALVE 9003B EXCEPT FROM MPH12 TO BTK4 (VALVE 8982B POSITION SWITCH) AND LISTED IN CKT. NO. H12P07.
5. STEM MOUNTED POSITION SW ADDED BY WESTINGHOUSE PER Ⓦ 5013180 SH 166 & 167, REC.# 663193-166,167

8. PERMISSIVE INTLKS FOR SSPS SLAVE RELAY K645 TESTING. VALVES MUST BE CLOSED FOR SSPS TEST. SEE REF #18.
9. "▲" INDICATES MOV'S PROVIDED WITH FIELD INSTALLED "QUICKTEST" CABLE ASSEMBLIES. SEE APPLICABLE DIAGRAM OF CONNECTIONS.

CONTACTS		POSITION CLOSE	POSITION NEUT	POSITION OPEN	REMARKS
— —	A		X	X	SPARE
— —	B			X	THIS DWG
— —	C	X			THIS DWG
— —	D	X	X		SPARE

42-2F-35 CS, 42-2G-21 CS, 42-2G-48* CS

CONTROL SWITCH - 42-2G-55 CS, 42-2H-6* CS, 42-2H-11 CS, 42-2H-40 CS

USED AT LOCATION CNCS
SPRING RETURN TO NEUTRAL
* 42-2G-48/CS & 42-2H-6/CS TO BE MAINTAINED CONTACT & NAMEPLATES TO READ "CLOSE-STOP-OPEN".

CONTACTS		VALVE POSITION FULL OPEN						FULL CLOSED	FUNCTION CONTACTS 1 TO 8	FUNCTION CONTACTS 9 TO 16
— —	1	9	■						1 SEE TABLE	9 SPARE
— —	2	10	■						2 SPARE	10 SPARE
— —	3	11						■	3 GREEN LIGHT	11 SPARE
— —	4	12						■	4 OPEN LIMIT	12 SEE TABLE
— —	5	13						■	5 BYPASS INTLK	13 SEE TABLE
— —	6	14						■	6 SPARE	14 SEE TABLE
— —	7	15	■	■	■	■	■	■	7 SPARE	15 RED LIGHT
— —	8	16	■	■	■	■	■	■	8 CLOSE LIMIT	16 SEE TABLE

TYPICAL VALVE POSITION SWITCH CONTACT DEVELOPMENT
ACTUAL SETPOINTS ARE IN PIMS

REFERENCE DRAWINGS

		DWG #
1	SINGLE LINE METER & RELAY DIAGRAM, 480 V SYSTEM BUS SECT "2F"	441237
2	" " " "2G"	441238
3	" " " "2H"	441239
4	DESCRIPTION OF ELECT SCHEMATIC DIAG.S, SYMBOLS, & CKT DESIGNATIONS	050003
5	EQUIPMENT LOCATION NUMBER LIST	103013
6	PIPING SCHEMATIC CONTAINMENT SPRAY SYSTEM	108012
7	INSTRUMENT SCHEMATIC FLOW INSTRUMENT SYSTEMS	108032
8	SCHEMATIC DIAG - RESIDUAL HEAT REMOVAL FLOW CONTROL VALVES	441310
9	" " " - SAFETY INJECTION SYSTEM MOTOR OPERATED VALVES	441317
10	SCHEMATIC DIAG - SOLID STATE PROTECTION SYSTEM OUTPUT RELAYS	501869
11	LOGIC DIAG - 4160 V BUS SECTION "H" AUTO TRANSFER & SECT. "G"	441337, 441297
12	SCHEMATIC DIAG. MAIN ANNUNCIATOR SH. 16, 17	DWG # 500786, 7
13	" " MONITOR LIGHT BOX A, D	DWG # 441452, 5
14	Ⓜ ELEM. WIRING DIAG. Ⓦ 5018180.	
15	SCHEM. DIAGR. SAFETY INJECT. SYSTEM M.O.V.	DWG. # 441318
16	SOLID STATE PROTECTION SYS. SFGD TEST MANUAL	DWG # 663231-77
17	SCHEM. DIAG. SSPS. OUTPUT RELAYS. TRAIN A, TRAIN B	503089, 503093
18	" " " - SAFEGAURDS TEST CAB. CONTAINMENT SPRAY	498083, 498111

VALVE Nºs B992, B994A, B994B, 9001A, 9001B
9003A, 9003B

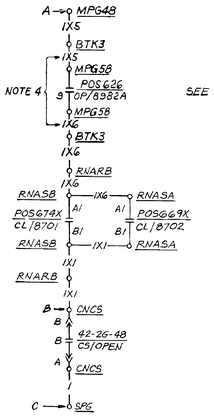

9003A OPENING CIRCUIT INTERLOCKS

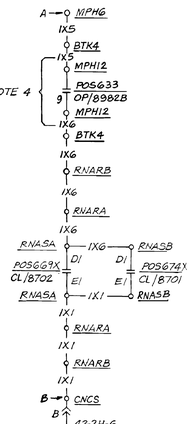

9003B OPENING CIRCUIT INTERLOCKS

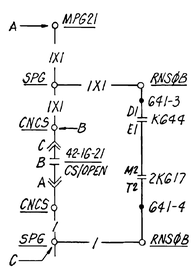

9001A OPENING CIRCUIT INTERLOCKS
9001B SIMILAR EXCEPT AS SHOWN IN TABLE ABOVE

ABANDONED IN PLACE

CONTACTS		POSITION CLOSE	POSITION OPEN/INTERM.	REMARKS
	A		X	SPARE
	B	X		INTLK SEE TABLE
	C		X	SPARE
	D	X		SPARE

VALVE CLOSE POS. SW.
STEM MTD. ON 9003A & 9003B, NOTE 5

NUCLEAR SAFETY RELATED

P.G.&E. SYSTEM PHASE SEQUENCE A-C-B

KEY DWG. SECTION 4

DATE	01-02-2024
D.D.	FAZ1
R.E.	FXC2
I.V.	N/A
P.E.	N/A

REVISION DESCRIPTION: Revised Per DFT-7*6082

UNIT 2

ELECTRICAL
SCHEMATIC DIAGRAM
CONTAINMENT SPRAY SYSTEM
MOTOR OPERATED VALVES

DIABLO CANYON POWER PLANT
PACIFIC GAS AND ELECTRIC COMPANY
SAN FRANCISCO, CALIFORNIA

DWG SCALE:	
BILL OF MATL:	
SUPSDS:	
SUPSD BY:	

DRAWING	SHEET	PAGE	REV
441308	1	0	19

RASTER=441308-1-0.dgn
DGN=441308-1-0.dgn
CAD User=FAZ1 DGTE=01-02-2024

DRAWING NUMBER 441308 1

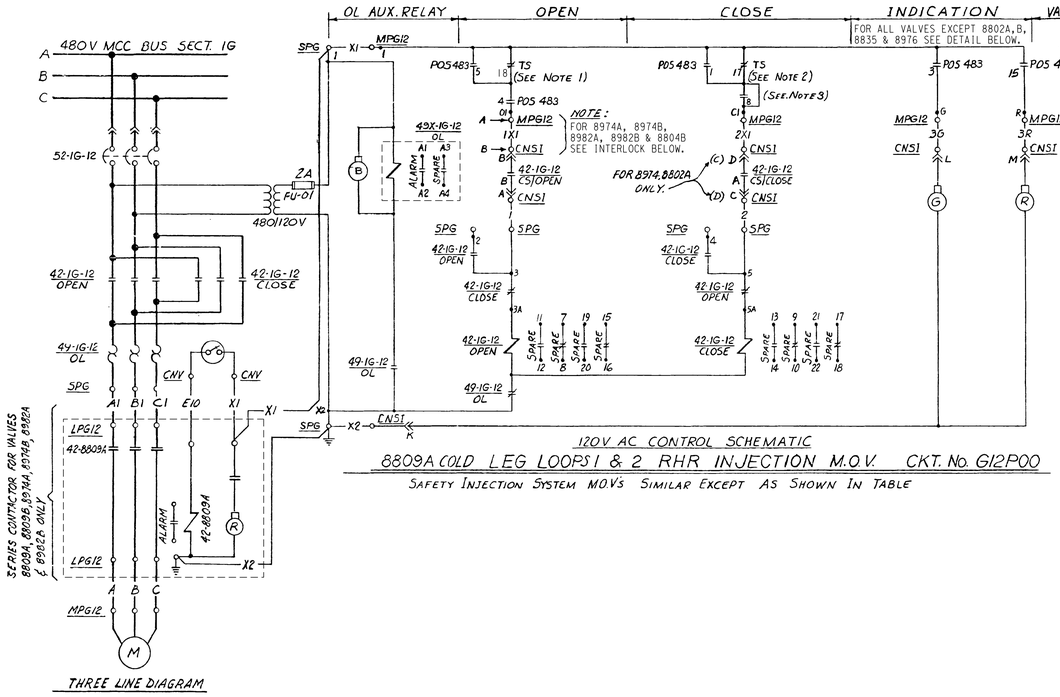

120V AC CONTROL SCHEMATIC

8809A COLD LEG LOOPS 1 & 2 RHR INJECTION M.O.V. CKT. No. G12P00

SAFETY INJECTION SYSTEM MOV's SIMILAR EXCEPT AS SHOWN IN TABLE

THREE LINE DIAGRAM

CONTROL SWITCH -

USED AT LOCATIONS CNR, CNS1 & CNV
MAINTAINED POSITION

CONTACTS		POSITION CLOSE	POSITION STOP	POSITION OPEN	REMARKS
	A	X			THIS DWG
	B			X	THIS DWG

42-1F-1B CS, 42-1F-32 CS, 42-1F-48 CS, 42-1F-49 CS, 42-1G-12 CS, 42-1G-24 CS, 42-1G-42 CS, 42-1H-20 CS, 42-1H-26 CS, 42-1H-26 CS, 42-1H-29 CS, 42-1H-31 CS, 42-1H-32 CS, 42-1H-44 CS, 42-1H-45 CS,

TYPICAL VALVE POSITION SWITCH CONTACT DEVELOPMENT

CONTACTS		VALVE POSITION FULL OPEN	VALVE POSITION FULL CLOSED	FUNCTION CONTACTS 1-8	FUNCTION CONTACTS 9-16
	1 9			1 SEE TABLE	9 SEE TABLE
	2 10			2 SPARE	10 SEE TABLE
	3 11			3 GREEN LIGHT	11 ALARM - VALVE 8976 - ONLY
	4 12			4 OPEN LIMIT	12 SEE TABLE
	5 13			5 BYPASS INTLK	13 SEE TABLE
	6 14			6 SEE TABLE	14 SEE TABLE
	7 15			7 SPARE	15 RED LIGHT
	8 16			8 CLOSE LIMIT (SEE NOTE 3)	16 SEE TABLE

P05469, P05470, P05483, P05490, P05521, P05619, P05626, P05633, P05470, P05471, P05612, P05613, P05616, P05617, P05618, P05620, P05621
ACTUAL SETPOINTS ARE IN PIMS

TABLE OF DEVICES

DEVICE No	FUNCTION	RATING	MFR	TYPE	CAT/DWG#	REMARKS
2A/8976	VALVE ALARM RECYCLE TIMER	120V AC	INDUSTRIAL TIMER CO.	J5406	663193-89	SUPPLIED BY (W)
42-1F-18, -32, -48, -49, -63 42-1G-12, -24, -45, -58 42-1H-12, -20, -25, -26, -29, -31, -32, -44, -45, -71	480V AC MOTOR STARTER REVERSIBLE	—	—	—	REF DWG #1, 2, 3	
42-8809A, B, 8974A, B, 8982A, B	480V AC CONTACTOR		C-H			
49-1F-18, -32, -48, -49, -63 49-1G-12, -24, -45, -58 49-1H-12, -20, -25, -26, -29, -31, -32, -44, -45, -71	MOTOR OVERLOAD RELAY	—	WE CORP	—	——	PART OF MOTOR STARTER
49X-1F-18, -32, -48, -49, -63 49X-1G-12, -24, -45, -58 49X-1H-12, -20, -25, -26, -29, -31, -32, -44, -45, -71	MOTOR OVERLOAD AUX. RELAY	—	WE CORP.	—	——	PART OF MOTOR STARTER
52-1F-18, -32, -48, -49, -63 52-1G-12, -24, -45, -58 52-1H-12, -20, -25, -26, -29, -31, -32, -44, -45, -71	480V AC AIR CIRCUIT BKR.	—	—	—	REF DWG #1, 2, 3	
8809A, etc.	FLOW CONTROL VALVE					SEE TABLE FOR VALVE NO'S
POS-	FCV POSITION SWITCH					SEE TABLE FOR SW. NOS
TS	TORQUE SWITCH	——	——	——	——	
P05619X/CL-8804B	VALVE POSITION SW. AUX. RELAY	115 VAC	P&B	MDR	MDR-134-1	33BCX/1-8804B
P05682X, 674X, P05669X	" " " " "	—	—	—	8	

EQUIPMENT LOCATION NUMBERS

- 5PG - 480V MOTOR CONTROL CENTER BUS SECTION 1G
- MPG12 MOTOR OPERATED VALVE 8809A
- CNS1 - CONTROL BOARD, SAFETY INJECTION & ACCUMULATOR DISCHARGE
- CNR - CONTROL BOARD, RESIDUAL HEAT
- LPG12 - LOCAL CONTACTOR, INTLK VV8809A
- CNV CONTROL BOARD, CHEM & VOLUME CONTROL SYSTEM
- CNCS CONTROL BOARD, CONTAINMENT SPRAY
- RNARB RACK NUCLEAR AUXILIARY RELAY CUBICLE B
- BTH110 TERMINAL BOX Nº 110 AREA H

LEGEND

▲ MOV'S PROVIDED WITH FIELD INSTALLED "QUICKTEST" CABLE ASSEMBLIES. SEE APPLICABLE DIAGRAM OF CONNECTIONS.

VALVE NO.	DESCRIPTION	CIRCUIT BKR NO	CIRCUIT NO.	BUS SECT	NORMAL POSITION	ENGINEER SAFETY VITAL FUNCTION	VALVE POSITION SWITCH - POS NO.	MONITOR LIGHT	CLOSE BYPASS INTLK	INTERLOCK CONTACTS CONT	VALVE No.	REF	CONT	VALVE No.	REF	LOCATION OF CONTROL	MOTOR LOCATION NO.	ALARM CKT. NO. OVER-CURRENT	VALVE NOT FULLY OPEN	BLOCK RWST LEVEL TRIP OF RHR PP ON RECIRC. VALVE POS.	CONT.	INTLK.	REF.
▲ 8809B	SI PP'S RECIRC MOV 1	52-1H-44	H44P00	1H	OPEN	——	469	12	1				13	8804B	THIS	14	CNV	8	CNV	MPH44	A14208DH				
▲ 8974A	" " " 2	52-1F-32	F32P00	1F	OPEN	——	476	12	1				13	8804B	THIS	14	8804A	8	CNV	MPF32	A14408DF				
▲ 8809A	COLD LEG LOOPS 1&2 RHR INJ	52-1G-12	G12P00	1G	OPEN	——	483	12	1										CNS1	MPG12	A14308DG				
▲ 8809B	" " 3&4	52-1H-45	H45P00	1H	OPEN	——	490	12	1										CNS1	MPH45	A14208DH				
⚠ ▲ 8976	SIS PPS REFUEL WATER SUPPLY	52-1H-20	H20P00	1H	OPEN	——	521	12	1							11 (STEM 522)	ALARM	THIS	CNV	MPH20	A14208DH	AF0600DH			
▲ 8804B	RHR HT EXCH 2 TO SIS PPS	52-1H-25	H25P00	1H	CLOSED	——	619	16	1	14	AUX. REL.	THIS	13	8974B	THIS				CNR	MPH25	A14208DH				
SEE NOTE 4 ▲ 8982A	CONTAINMENT SUMP RECIRC LINE 1	52-1G-58	G58P00	1G	CLOSED	——	626	16	1	9	9003A	9	10	B804A	B	13	8700A	B	CNR	MPG58	A14308DG	626	14	RHRPP11	14
▲ 8982B	" " 2	52-1H-12	H12P00	1H	CLOSED	——	633	16	1	9	9003B	9	10	B804B	THIS	13	8700B	B	CNR	MPH12	A14208DH	633	14	RHRPP12	14
▲ 8807A	RHR PP DISCH TO S.I PPS	52-1F-18	F18P00	1F	CLOSED	——	470	16	1										CNR	MPF18	A14408DF				
▲ 8807B	" " " Alt	52-1H-32	H32P00	1H	CLOSED	——	471	16	1										CNR	MPH32	A14208DH				
⚠ 8802A	SI PP 11 DISCHARGE HOT LEG LOOP	52-1F-48	F48P00	1F	CLOSED	——	612	16	1										CNSJ	MPF48	A14408DF				
⚠ 8802B	SI PP 12	52-1H-26	H26P00	1H	CLOSED	——	613	16	1										CNSJ	MPH26	A14208DH				
⚠ 8821A	SI PP 11 COLD LEG LOOP	52-1F-49	F49P00	1F	OPEN	——	616	12	16										CNSJ	MPF49	A14408DF				
8821B	SI PP 12 " " "	52-1H-31	H31P00	1H	OPEN	——	617	12	16										CNSJ	MPH31	A14208DH				
8835	SI PUMPS DISCHARGE COLD LEG	52-1G-24	G24P00	1G	OPEN	——	618	12	1										CNSJ	MPG24	A14308DG				
8923A	SI PUMP 11 SUCTION RHST	52-1F-63	F63P00	1F	OPEN	——	620	12	1										CNSJ	MPF63	A14408DF				
8923B	SI PUMP 12 SUCTION RHST	52-1H-71	H71P00	1H	OPEN	——	621	12	1										CNSJ	MPH71	A14208DH				
8716A	RHX 11 TO RC LOOP 1&2 HOT LEG	52-1G-45	G45P00	1G	OPEN	——	614	——	16										CNSJ	MPG45	A14308DG				
8716B	RHX 12 TO RC LOOP 1&2 HOT LEG	52-1H-29	H29P00	1H	OPEN	——	615	——	9										CNSJ	MPH29	A14208DH				

⚠ THE BREAKERS FOR THESE VALVES ARE OPEN DURING NORMAL PLANT--OPERATION & CLOSED ONLY DURING RECIRCULATION PHASE OR FOR TESTING.

CONTACTS		VALVE POSITION FULL OPEN	VALVE POSITION FULL CLOSED	FUNCTION POS615	FUNCTION POS614
	1			SPARE	SPARE
	2			SPARE	SPARE
	3			GREEN LIGHT	GREEN LIGHT
	4			OPEN LIMIT	OPEN LIMIT
	5			BYPASS INTLK	BYPASS INTLK
	6			SPARE	SPARE
	7			SPARE	SPARE
	8			CLOSE LIMIT (NOTE 3)	CLOSE LIMIT (NOTE 3)
	9			BYPASS INTLK	SPARE
	10			SPARE	SPARE
	11			SPARE	SPARE
	12			SPARE	SPARE
	13			SPARE	SPARE
	14			SPARE	SPARE
	15			RED LIGHT	RED LIGHT
	16			SPARE	BYPASS INTLK

TYPICAL VALVE POSITION SWITCH CONTACT DEVELOPMENT
POS614, POS615
ACTUAL SETPOINTS ARE IN PIMS

NOTES

1. SWITCH OPENS ON MECHANICAL TORQUE DURING OPENING CYCLE (18)
2. SWITCH OPENS ON MECHANICAL TORQUE DURING CLOSING CYCLE OR FULLY CLOSED VALVE (17).
3. FIELD TO INSTALL JUMPER FOR TORQUE SEATING
4. CIRCUITS GOING TO VALVE Nº 8982A, MPG58 & 8982B, MPH12 RUN THROUGH TERMINAL BOXES BTK3 & BTK4 RESPECTIVELY. OPENING CIRCUIT INTERLOCKS FOR THE FOLLOWING VALVES: 9003A & 9003B, DWG 437604 - USE WIRE NOS. IX5 & IX6 LISTED IN COL Nº'S G58P07 & H12P07. 8700A & 8700B, DWG 437592 - " " " IX7 & IX8 " " " " " 8804A, " " " " " IX3 & IX4 " " " " G58P07
5. W.E. CORP. TO SUPPLY STEM TRAVEL POS. SW., LOGIC CONTACT & RECYCLE TIMER.

CLOSE OPEN

CONTACTS		POSITION CLOSE	POSITION OPEN	REMARKS
	A	X		THIS DWG
	B		X	THIS DWG

42-1F-63 CS, 42-1H-71 CS, 42-1G-58 CS, 42-1H-12 CS
CONTROL SWITCH
USED AT LOCATION CNS1 & CNR
MAINTAINED POSITION

VALVE NO.	SERIES CONTACTOR DEVICE NO.	LOC. FOR SERIES CONTACTOR	LOC. OF TOGGLE SWITCH	ALARM CKT. NO.
8809A	42-8809A	LPG12	CNV	AY0901DG
8809B	42-8809B	LPH45	CNV	AY0902DH2
8974A	42-8974A	LPF32	CNV	AY0900DF
8974B	42-8974B	LPH44	CNV	AY0902DH1
8982A	42-8982A	LPG58	CNV	AY0901DG1
8982B	42-8982B	LPH12	CNV	AY0902DH

NOTE: TOGGLE SWITCHES FOR SERIES CONTACTORS ARE C/H 8836K9 (EMM RAY 27H REV 1)

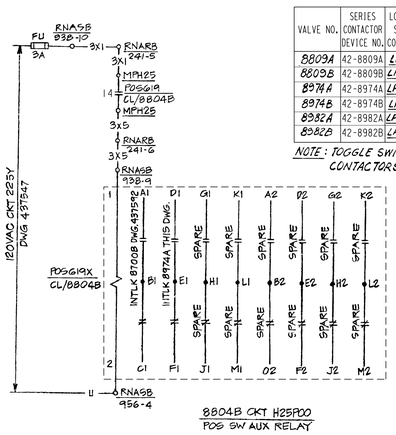

8804B CKT H25P00
POS SW AUX RELAY

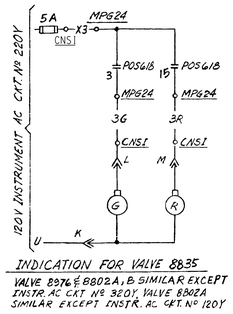

INDICATION FOR VALVE 8835

VALVE 8976 & 8802A, B SIMILAR EXCEPT ENSTR. AC CKT. Nº 320Y. VALVE 8982A SIMILAR EXCEPT ENSTR. AC CKT. Nº 120Y

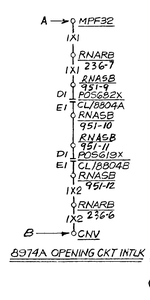

8974A OPENING CKT INTLK

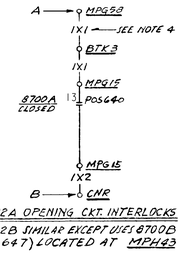

8982A OPENING CKT. INTERLOCKS
8982B SIMILAR EXCEPT USES 8700B (POS 647) LOCATED AT MPH43

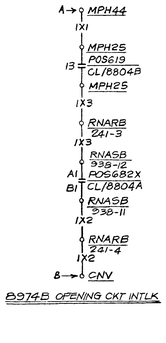

8974B OPENING CKT INTLK

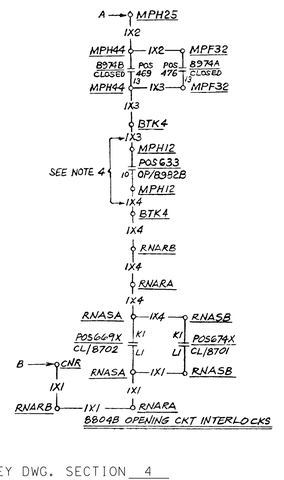

8804B OPENING CKT INTERLOCKS

VALVE Nos. 8716A, 8716B, 8802A, 8802B, 8804B, 8807A, 8807B, 8809A, 8809B, 8821A, 8821B, 8835, 8933A, 8923B, 8974A, 8974B, 8976, 8982A, 8982B.

NUCLEAR SAFETY RELATED

REFERENCE DRAWINGS

	DWG. #
1 - SINGLE LINE METER & RELAY DIAGRAM, 480V SYSTEM BUS SECT '1F'	437916
2 - " " " " " " '1G'	437542
3 - " " " " " " '1H'	437543
4 - DESCRIPTION OF ELECT. SCHEMATIC DIAG., SYMBOLS & CKT. DESIGNATIONS	050003
5 - EQUIPMENT LOCATION NUMBER LIST	101900
6 - PIPING SCHEMATIC SAFETY INJECTION SYSTEM	102009
7 - INSTRUMENT SCHEMATIC FLOW INSTRUMENT SYSTEMS	102032
8 - SCHEMATIC DIAGRAM RESIDUAL HEAT REMOVAL FLOW CONTROL VALVES	437592
9 - CONTAINMENT SPRAY SYSTEM MOTOR OPERATED VALVES	437604
10. SAFETY INJECTION SYSTEM " " "	437606
11. MONITOR LIGHT BOX A	437596
12. MAIN ANNUNCIATOR Sheet 16, 17	501367
13. (W) ELEMENTARY WIRING DIAG. 501B180	REC # 663193
14. SCHEMATIC DIAGRAM RESIDUAL HEAT REMOVAL PUMPS	DWG. 437591
15. SCHEMATIC DIAGRAM MAIN ANNUNCIATOR	DWG. 501123

DRAWING NUMBER 437605 1

P.G.&E. SYSTEM PHASE SEQUENCE A-C-B

KEY DWG. SECTION 4

DATE	
12-07-2023	
D.D.	FAZI
R.E.	FXC2
I.V.	N/A
P.E.	N/A

REGISTERED PROFESSIONAL ENGINEER — NOT REQUIRED PER 6731.1(b) — STATE OF CALIFORNIA

REVISION DESCRIPTION
Revised Per DFT-7*6079

UNIT 1

ELECTRICAL
SCHEMATIC DIAGRAM
SAFETY INJECTION SYSTEM
MOTOR OPERATED VALVES

DIABLO CANYON POWER PLANT
PACIFIC GAS AND ELECTRIC COMPANY
SAN FRANCISCO, CALIFORNIA

DWG SCALE:	
BILL OF MATL:	
SUPSDS:	
SUPSD BY:	

DRAWING	SHEET	PAGE	REV
437605	1	0	23

RASTER=437605-1-0.dgn
DGN=437605-1-0.dgn
CAD User:FAZI Date: 12-07-2023

SIZE 4 Size

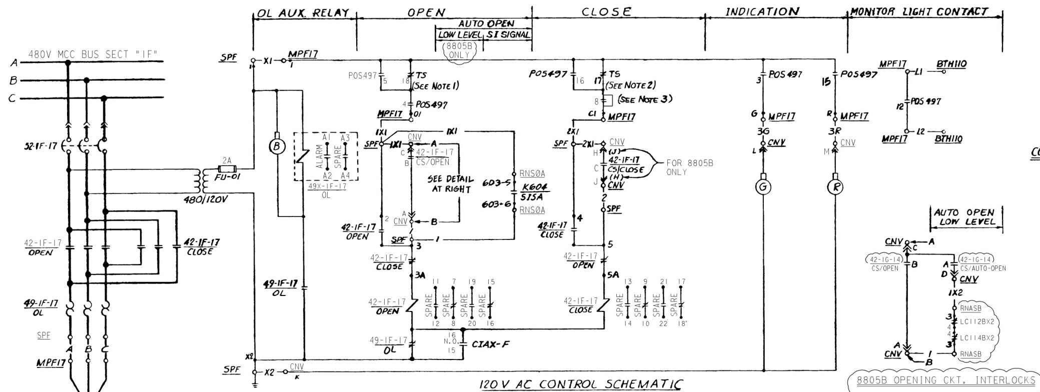

THREE LINE DIAGRAM

120 V AC CONTROL SCHEMATIC

8803A CHARGING INJECTION SUPPLY LINE 1 CKT No F17P00

SAFETY INJECTION SYSTEM M.O.V'S SIMILAR EXCEPT AS SHOWN IN TABLE

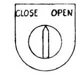

CONTACTS		POSITION CLOSE	NEUT	OPEN	REMARKS	REMARKS CS ON NOTES 1 & 2 BELOW
—‖—	A		X	X	SPARE	THIS DWG
—‖—	B			X	THIS DWG	THIS DWG
—‖—	C	X			THIS DWG	THIS DWG
—‖—	D	X	X		SPARE	SPARE

CONTROL SWITCH - 42-1F-16/CS, 42-1F-17/CS, 42-1F-46/CS, 42-1G-5/CS, 42-1G-7/CS, 42-1G-13/CS, 42-1G-14/CS, 42-1G-27/CS, 42-1H-14/CS

USED AT LOCATION CNAC, CNV
SPRING RETURN TO NEUTRAL

NOTES: 1. FOR SWITCH 42-1G-14 CENTER POSITION OF SWITCH TO READ "AUTO" NAMEPLATE TO READ "CLOSE-AUTO-OPEN"
2. FOR SWITCH 42-1F-46, 42-1G-5, 42-1G-7 & 42-1H-14 OPERATOR SPRING RETURN TO AUTO FROM OPEN, MAINTAINED AT CLOSE POSITION; NAMEPLATE TO READ "CLOSE-AUTO-OPEN"

AUTO OPEN LOW LEVEL

8805B OPENING CKT. INTERLOCKS

CONTACTS			VALVE POSITION FULL OPEN … FULL CLOSED	FUNCTION CONTACTS 1 TO 8		FUNCTION CONTACTS 9 TO 16	
—‖—	1	9		1	CLOSE TS BYPASS	9	SEE TABLE
—‖—	2	10		2	SPARE	10	SEE TABLE
—‖—	3	11		3	GREEN LIGHT	11	ALARM
—‖—	4	12		4	OPEN LIMIT	12	MONITOR LT.
—‖—	5	13		5	BYPASS INTLK	13	SPARE
—‖—	6	14		6	SPARE	14	SPARE
—‖—	7	15		7	SPARE	15	RED LT.
—‖—	8	16		8	CLOSE LIMIT (SEE NOTE 3)	16	SPARE

VALVE POSITION SWITCH CONTACT DEVELOPMENT
FOR VALVES 8805B & 8808A/B/C/D

ACTUAL SETPOINTS ARE IN PIMS

TABLE OF DEVICES

DEVICE No.	FUNCTION	RATING	MFR.	TYPE	CAT/DWG#	REMARKS
2A/8808A, B, C, D	VALVE ALARM RECYCLE TIMER	120VAC	INDUSTRIAL TIMER CO.	J5406	663193-8, 9	SUPPLIED BY W.E. CORP.
42-1F-16, -17, -46, 42-1G-5, -7, -13, -14, -27, 42-1H-14	480V AC MOTOR STARTER REVERSIBLE, SIZE 1	—	—	—	REF DWG #1, 2, 3	
52-1F-46R, 52-1G-5R, 7R, 52-1H-14R	480V AC AIR CKT BKR	—	W.E. CORP	—	(1), (2), (3)	BACK-UP BREAKERS
49-1F-16, -17, -46, 49-1G-5, -7, -13, -14, -27, 49-1H-14	MOTOR OVERLOAD RELAY	—	WE CORP	—	—	PART OF MOTOR STARTER
49X-1F-16, -17, -46, 49X-1G-5, -7, -13, -14, -27, 49X-1H-14	MOTOR OVERLOAD AUX RELAY	—	WE CORP	—	—	PART OF MOTOR STARTER
K630	SI. UNBLOCK PRESS AUX RLY	—	—	—	(10)(18)	
K1708	" " " " "	—	—	—	(11)(19)	
P11AX, P11BX	" " " " "	120VAC	WE CORP	AR	AR440AR	
52-1F-16, -17, -46, 52-1G-5, -7, -13, -14, -27, 52-1H-14	480V AC AIR CIRCUIT BKR	—	—	—	REF DWG #1, 2, 3	
CIAX-F, -H, CIAX2-F, CIAX1-G; CIAX2-G	CNT ISOL PH A AUX. RELAY MOTOR OC BY PASS	125V DC	P & B	MDR	5076-1	CONTACTS TO CLOSE ON PH A ISOL & SIS ACTUATION
8803A, etc.	FLOW CONTROL VALVE	—	—	—	(7)	SEE TABLE FOR VALVE NO'S
POS-	FCV POSITION SWITCH	—	—	—	(7)	SEE TABLE FOR SW NO'S
LC112BX2, 114BX2	VOL CONT. TK LOW LEVEL AUX REL	—	—	—	(11)	CONTACTS CLOSE ON VOL. CONT. TANK LOW-LOW LOW LEVEL
K603 SISA K604, K615	SAFETY INJECTION AUX. RELAY	—	—	—	(9)(10)(18)	
K613, K614	CNT. ISO PH A AUX. RELAY	—	—	—	(9)(10)(18)	
TS	TORQUE SWITCH	—	—	—	—	

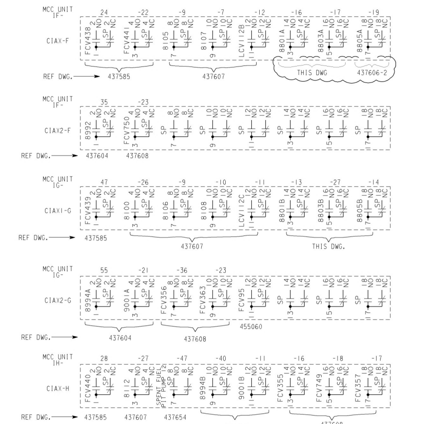

VALVE No	DESCRIPTION	CIRCUIT BKR. No.	CIRCUIT No	BUS SECT	NORMAL POSITION	ENGINEER SAFETY VITAL FUNCTION	POS NO.	MONITOR LIGHT CONTACT	INTERLOCK CONTACTS CONT.	VALVE No	REF.	CONT.	VALVE No	REF.	CLOSE TS BYPASS CONTACT	CNT. ISOL. PH A MOTOR OC BYPASS DEVICE	CONTACT	VOL. CONT. TK. LOW LEV. DEVICE	LOC	CONTACTS INTLK	ALARM CKT NO OVER CURRENT		MOTOR LOC. NO	SIS SIGNAL DEVICE	LOCATION	CONTACT
▲ 8803A	CHARGING INJECTION SUPPLY LINE 1	52-1F-17	F17P00	1F	CLOSED	S	497	12	—	—	—	—	—	—	16	CIAX-F	15 —‖— 16 NO	—	—		A14408DF		MPF17	K604	RNS0A	TB603 5—‖—6
8803B	↓ 2	52-1G-27	G27P00	1G	CLOSED	S	505	12	—	—	—	—	—	—	16	CIAX1-G	15 —‖— 16 NO	—	—	—	A14308DG		MPG27	K604	RNS0B	TB603 5—‖—6
8801A	COLD LOOP CHARGING INJECTION LINE 1	52-1F-16	F16P00	1F	CLOSED	S	513	12	—	—	—	—	—	—	16	CIAX-F	13 —‖— 14 NO	—	—		A14408DF		MPF16	K603	RNS0A	TB602 5—‖—6
8801B	↓ 2	52-1G-13	G13P00	1G	CLOSED	S	528	12	—	—	—	—	—	—	16	CIAX1-G	13 —‖— 14 NO	—	—	—	A14308DG		MPG13	K603	RNS0B	TB602 5—‖—6
8805B	CHARG. PP REFUEL WTR SUPPLY 2	52-1G-14	G14P00	1G	CLOSED	S	572	12	9	LCV112B	8	10	LCV112C	8	1	CIAX1-G	17 —‖— 18 NO	LC112BX2-114BX2	RNASB	3—‖—4	A14308DG		MPG14	K615	RNS0B	TB605 7—‖—8

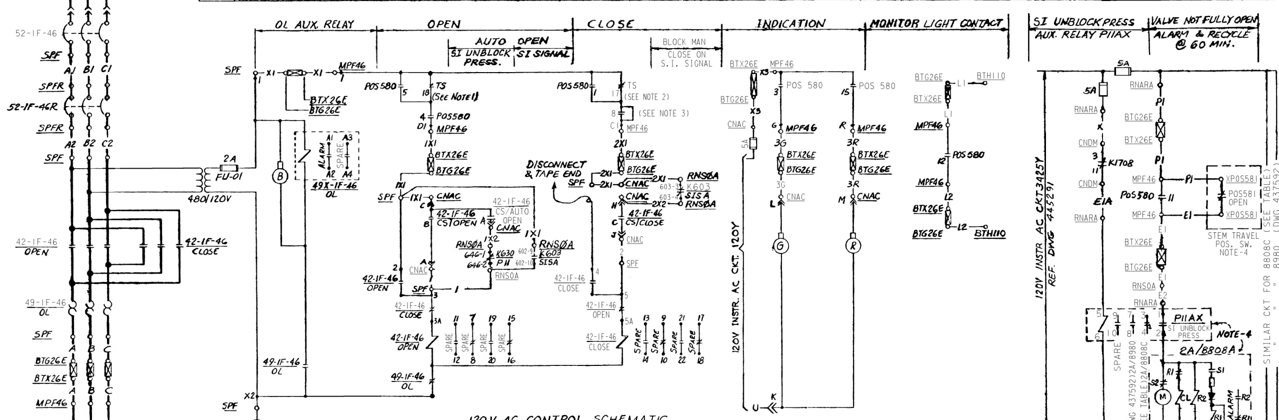

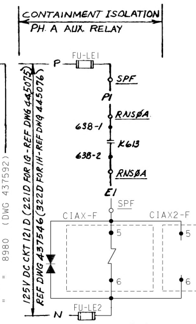

120V AC CONTROL SCHEMATIC

8808 A ACCUMULATOR II INJECTION COLD LOOP 1 CKT No F46P00

SAFETY INJECTION SYSTEM M.O.V'S SIMILAR EXCEPT AS SHOWN IN TABLE

MOTOR OVERCURRENT BYPASS
MCC IF AUX RELAY CKT F00P02
SIMILAR FOR MCC 1G & 1H EXCEPT AS SHOWN IN TABLE & IN ( )

MCC	CKT No	AUX RELAY	INPUT CONTACT	FUSES	
1F	F00P02	CIAX-F CIAX2-F	638-1 —K613‖— 2 RNS0A	FU-LE1	FU-LE2
1G	G00P02	CIAX1-G CIAX2-G	638-1 —K613‖— 2 RNS0B	FU-LC1	FU-LC2
1H	H00P02	CIAX-H	639-1 —K614‖— 2 RNS0A	FU-LC1	FU-LC2

	VALVE NO.	DESCRIPTION	CIRCUIT BKR NO. PRIMARY	BACK-UP	CIRCUIT No	BUS SECT	NORMAL POSITION	ENGINEER SAFETY VITAL FUNCTION	VALVE POSITION SWITCH (POS) POS No.	MONITOR LIGHT CONTACT	VALVE NOT FULLY OPEN ALARM CONT.	STEM TRAVEL POS NO.
▲	8808A	ACCUM II INJECT COLD LOOP 1	52-1F-46	52-1F-46R	F46P00	1F	OPEN	S	580	12	11	581
▲	8808B	12 ↓ 2	52-1G-7	52-1G-7R	G07P00	1G	OPEN	S	588	12	11	589
▲	8808C	13 ↓ 3	52-1H-14	52-1H-14R	H14P00	1H	OPEN	S	596	12	11	597
▲	8808D	↓ 14 ↓ 4	52-1G-5	52-1G-5R	G05P00	1G	OPEN	S	604	12	11	605

ALARM CKT. NO OVER CURRENT	VALVE NOT FULLY OPEN	PENETR NO	MOTOR LOC. No.	SIS SIGNAL DEVICE	LOCATION	AUTO OPEN CONT INTLK	BLOCK CLOSE CONT. INTLK	SI UNBLOCK PRESS LOGIC AUTO OPEN INTLK. DEVICE	LOC	CONTACT	VALVE NOT FULLY OPEN ALARM RECYCLE TIMER DEVICE	LOC	120VAC	INDICATING LIGHTS 120V AC CKT.
A144D8DF	AF0900DF	26E	MPF46	K603	RNS0A	TB602-9 —‖— 10	603-3 —‖— 603-4	K630	RNS0A	646-1 —‖— 646-2	2A/8808A	RNARA	3A25Y	120Y
A14308DG	AF0901DG	19E	MPG7	K603	RNS0B	TB602-9 —‖— 10	603-3 —‖— 603-4	K630	RNS0B	646-1 —‖— 646-2	2A/8808B	RNARB	422Y	220Y
A14208DH	AF0902DH	12E	MPH14	K604	RNS0A	TB604-1 —‖— 2	604-7 —‖— 604-8	K630	RNS0A	647-1 —‖— 647-2	2A/8808C	RNARA	3A25Y	320Y
A14308DG	AF0903DG	19E	MPG5	K604	RNS0B	TB603-7 —‖— 8	604-7 —‖— 604-8	K630	RNS0B	647-1 —‖— 647-2	2A/8808D	RNARB	422Y	220Y

ROTOR	CONTACTS		VALVE POSITION FULL OPEN … A … B … FULL CLOSE	FUNCTION
1	—‖—	1		SPARE
	—‖—	2		SPARE
	—‖—	3		GREEN LIGHT
	—‖—	4		OPEN LIMIT
2	—‖—	5		OPEN TS 18 BYPASS INTLK
	—‖—	6		SPARE
	—‖—	7		SPARE
	—‖—	8		CLOSE LIMIT
3	—‖—	9		SPARE
	—‖—	10		SPARE
	—‖—	11		SPARE
	—‖—	12		MONITOR LIGHT
4	—‖—	13		SPARE
	—‖—	14		SPARE
	—‖—	15		RED LIGHT
	—‖—	16		CLOSE TS BYPASS

VALVE POSITION SWITCH CONTACT DEVELOPMENT
FOR VALVES 8801A/B & 8803A/B

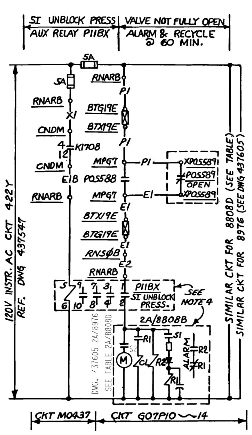

REFERENCE DRAWINGS
1. SINGLE LINE METER & RELAY DIAGRAM 480V SYSTEM BUS SECT. "IF" ____ 437916
2. ↓ "IG" ____ 437542
3. ↓ "IH" ____ 437543
4. DESCRIPTION OF ELEC. SCHEMATIC DIAG'S. SYMBOLS & CKT. DESIGNATIONS ____ 050003
5. EQUIPMENT LOCATION NUMBER LIST ____ 067997
6. PIPING SCHEMATIC { CHEMICAL & VOLUME CONTROL SYSTEM ____ 102008; SAFETY INJECTION SYSTEM ____ 102009
7. INSTRUMENT SCHEMATIC { FLOW INSTRUMENT ____ 102032; LEVEL INSTRUMENT ____ 102033
8. SCHEMATIC DIAGRAM VOLUME CONTROL SYSTEM MOTOR OPERATED VALVES ____ 437607
9. Ⓦ FUNCTION DIAGRAM ____ REC#663195
10. Ⓦ SOLID STATE PROTECTION SYSTEM ____ 663231
11. Ⓦ ELEMENTARY WIRING DIAGRAM 501B180 ____ 663193
12. SCHEMATIC DIAGRAM MAIN ANNUNCIATOR 5H16,17 ____ 501136,7
13. MONITOR LT. BOX 'C' ____ 437698
14. RHR FLOW CONTROL VALVES ____ 437592
15. SI MOTOR OPERATOR VALVES ____ 437605
16. CONTAINMENT FAN COOLERS ____ 437600
17. SINGLE LINE METER & RELAY DIAGRAM 120V INSTRUMENT AC ---- 437547, 445291
18. SCHEM. DIAG SSPS OUTPUT RELAYS, TRAIN A, TRAIN B __ DWGS. 501869, 503088
19. SOLID STATE PROTECTION SYS INTERCONN DIAG --- 663231-44
20. SHEMATIC DIAG. FUEL TRANSFER SYSTEM ____ 437654
21. FUSE LIST ____ 066144
22. SCHEMATIC DIAGRAM SAFETY INJECTION SYSTEM MOTOR OPERATED VALVES ____ 437606-2

EQUIPMENT LOCATION NUMBERS
MPF17 - MOTOR OPERATED V/V 8803,1
CNAC - CONTROL BOARD, ACCUM. SVC.
BTG26E - TERMINAL BOX, AREA G; No 26E
RNS0A - RACK NUC. SAFEGD OUTPUT TRAIN A.
RNARA - RACK NUCLEAR AUX. RELAY CUBICLE A
BTH110 - TERMINAL BOX AREA H No 110
SPF - 480V MOTOR CONT. CENTER BUS SECT. IF
SPFR - 480V MOTOR CONT CENTER BUS SECT IF, BACK-UP OC

NOTES:
1.- SWITCH OPENS ON MECHANICAL TORQUE DURING OPENING CYCLE (18)
2- SWITCH OPENS ON MECHANICAL TORQUE DURING CLOSING CYCLE (17)
3- FIELD TO INSTALL JUMPER FOR TORQUE SEATING FOR ALL VALVES.
4- W.E. CORP. TO SUPPLY STEM TRAVEL POS. SW. LOGIC CONTACT AND RECYCLE TIMER

LEGEND:
▲ MOV'S PROVIDED WITH FIELD INSTALLED "QUICKTEST" CABLE ASSEMBLIES. SEE APPLICABLE DIAGRAM OF CONNECTIONS.

NUCLEAR SAFETY RELATED
VALVES NOS. 8801A, 8801B, 8803A, 8803B, 8805B, 8808A, 8808B, 8808C, 8808D
UNIT 1

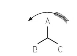

P.G.&E. SYSTEM PHASE SEQUENCE A-C-B

KEY DWG. SECTION 4

DATE	07-10-2017
D.D.	ZNS4
R.E.	RxG2
I.V.	N/A
P.E.	N/A

REGISTERED PROFESSIONAL ENGINEER – NOT REQUIRED PER CF3.ID5 – STATE OF CALIFORNIA

REVISION DESCRIPTION: REVISED PER DDN-2*1216

ELECTRICAL
SCHEMATIC DIAGRAM
SAFETY INJECTION SYSTEM
MOTOR OPERATED VALVES
DIABLO CANYON POWER PLANT
PACIFIC GAS AND ELECTRIC COMPANY
SAN FRANCISCO, CALIFORNIA

DWG SCALE:			
BILL OF MATL:			
SUPSDS:			
SUPSD BY:			
DRAWING	SHEET	PAGE	REV
437606	1	0	30

RASTER=437606s1p0.dgn
DGN=437606s1p0.dgn
CAD User:ZNS4 Date:07-10-2017
4NPG 4 Size

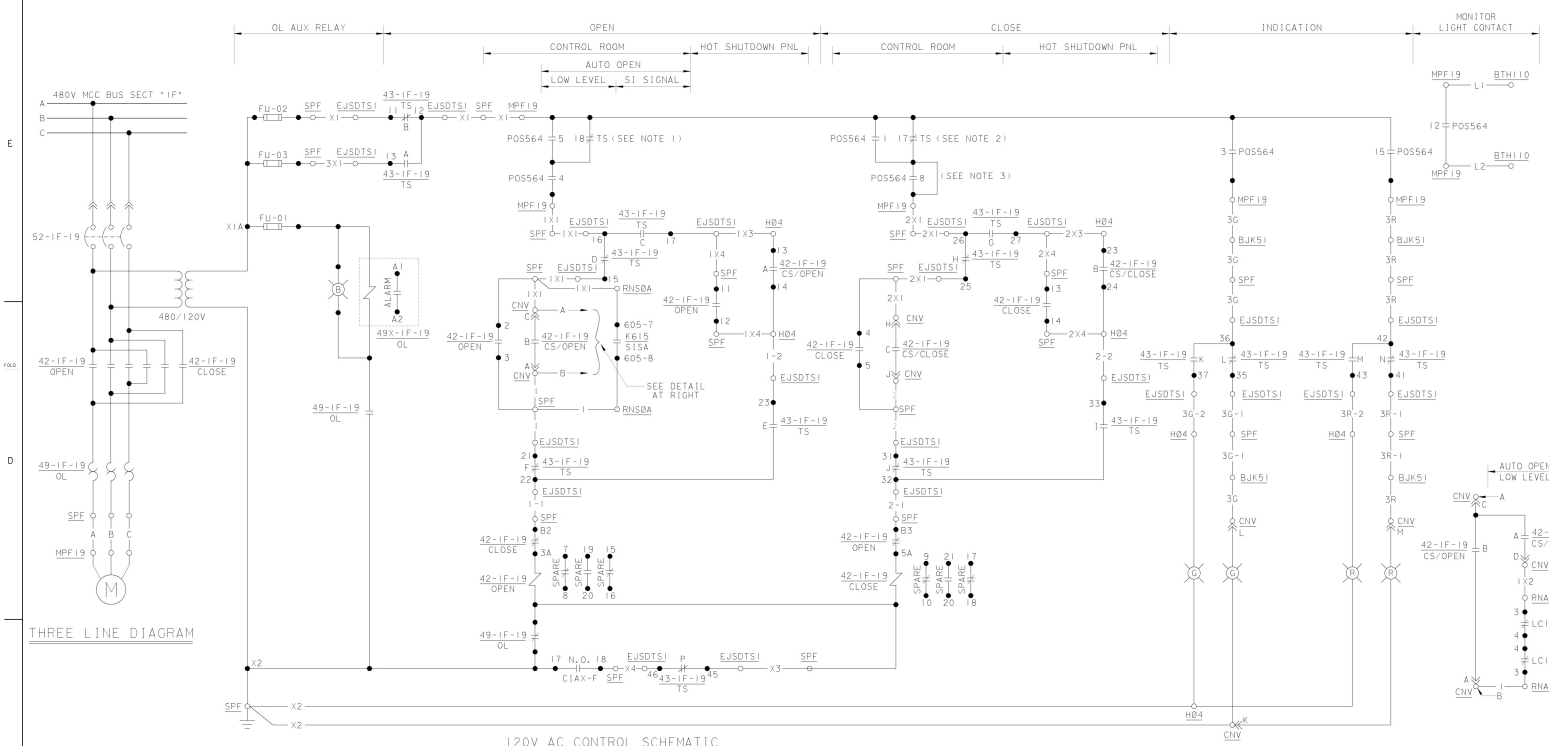

8805A CHARG. PP REFUEL WTR SUPPLY I CKT NO F19P00

VALVE NO	DESCRIPTION	CIRCUIT BKR NO	CIRCUIT NO	BUS SECT	NORMAL POSITION	ENGINEER SAFETY VITAL FUNCTION	VALVE POSITION SWITCH-(POS)								CLOSE TS BYPASS CONTACT	CNT. ISOL. PH A		VOL. CONT. TK. LOW LEV.		ALARM CKT NO		MOTOR LOC. NO	SIS SIGNAL		
							POS NO	MONITOR LIGHT CONTACT	INTERLOCK CONTACTS							MOTOR OC. BYPASS		DEVICE	LOC.	CONTACTS					
									CONT.	VALVE NO.	REF	CONT.	VALVE NO.	REF		DEVICE	CONTACT			INTLK	OVER CURRENT	TRANSFER OF CONT		DEVICE	LOCATION	CONTACT
▲	8805A	CHARG. PP REFUEL WTR SUPPLY I	52-IF-19	F19P00	IF	CLOSED	S	564	I2	9	LCVII2B	2	I0	LCVII2C	2	I	CIAX-F	I7 — I8 NO	LCII2BX1-II4BX1	RNASA	3 — 4	A14408DF	AY5065DF	MPF19	K615	RNS0A	TB605 7 — 8

CONTACTS	VALVE POSITION		FUNCTION CONTACTS 1 TO 8	FUNCTION CONTACTS 9 TO 16
	FULL OPEN	FULL CLOSED		
1 9			1 CLOSE TS BYPASS	9 SEE TABLE
2 10			2 SPARE	10 SEE TABLE
3 11			3 GREEN LIGHT	11 ALARM
4 12			4 OPEN LIMIT	12 MONITOR LT
5 13			5 BYPASS INTLK	13 SPARE
6 14			6 SPARE	14 SPARE
7 15			7 SPARE	15 RED LT
8 16			8 CLOSE LIMIT (SEE NOTE 3)	16 SPARE

VALVE POSITION CONTACT DEVELOPMENT

CONTACTS	POSITION CLOSE	POSITION AUTO	POSITION OPEN	REMARKS
A		X	X	SPARE
B			X	THIS DWG
C	X			THIS DWG
D	X	X		SPARE

CONTROL SWITCH 42-IF-19 CS

USED AT LOCATION CNV
SPRING RETURN TO AUTO

CONTACTS	POSITION CLOSE	POSITION NEUT	POSITION OPEN	REMARKS
13 — 14	A		X	THIS DWG
23 — 24	B	X		THIS DWG

CONTROL SWITCH 42-IF-19 CS

USED AT LOCATION H04
SPRING RETURN TO NEUTRAL

8805A OPENING CKT. INTERLOCKS

CONTACTS		POSITION CONT RM	POSITION HSDP	REMARKS
12 — 13	A		X	THIS DWG
11	B	X		THIS DWG
16 — 17	C		X	THIS DWG
15	D	X		THIS DWG
22 — 23	E		X	THIS DWG
21	F	X		THIS DWG
26 — 27	G		X	THIS DWG
25	H	X		THIS DWG
32 — 33	I		X	THIS DWG
31	J	X		THIS DWG
36 — 37	K		X	THIS DWG
35	L	X		THIS DWG
42 — 43	M		X	THIS DWG
41	N	X		THIS DWG
46 — 47	O		X	SPARE
45	P	X		THIS DWG
52 — 53	Q		X	ALARM, 437700
51	R	X		SPARE
56 — 57	S		X	SPARE
55	T	X		SPARE

TRANSFER SWITCH 43-IF-19 TS

USED AT LOCATION EJSDTS1
NO SPRING RETURN

EQUIPMENT LOCATION NUMBERS

SPF - 480V MOTOR CONT. CENTER BUS SECT. IF
CNV - CONTROL BOARD IVB2
RNS0A - RACK NUC. SAFEGD OUTPUT TRAIN A
RNASA - AUX RAC NUC. SAFEGD CUB A
MPF19 - 8805A CHARGE PP REFUEL WATER SUPPLY I
H04 - HOT SHUTDOWN PANEL EXTENSION BOARD
EJSDTS1 - BUS F MCC TRANSFER SWITCH PANEL
BJK51 - SPLICE BOX

LEGEND:

▲ MOV'S PROVIDED WITH FIELD INSTALLED "QUICKTEST" CABLE ASSEMBLIES. SEE APPLICABLE DIAGRAM OF CONNECTIONS.

NOTES:

1. SWITCH OPENS ON MECHANICAL TORQUE DURING OPENING CYCLE (18).
2. SWITCH OPENS ON MECHANICAL TORQUE DURING CLOSING CYCLE (17).
3. FIELD TO INSTALL JUMPER FOR TORQUE SEATING FOR ALL VALVES.
4. TRANSFER SWITCH CONTACTS SHOWN IN CONTROL ROOM POSITION.

REFERENCES:

1. SINGLE LINE METER & RELAY DIAGRAM 480V SYSTEM BUS SECT. "IF"	437916
2. SCHEMATIC DIAGRAM VOLUME CONTROL SYSTEM MOTOR OPERATOR VALVES	437607-1
3. SCHEMATIC DIAGRAM SI SYSTEM MOV. VALVES	437606-1
4. INSTRUMENT SCHEMATIC LEVEL INSTRUMENT	102033
5. ELEMENTARY WIRING DIAGRAM AUXILIARY RELAYS	663193-259
6. FUSE LIST	066144
7. DIAGRAM OF CONNECTIONS TRANSFER SWITCH PANEL 480 BUS IF	480218
8. DIAGRAM OF CONNECTIONS HOT SHUTDOWN PANEL EXTENSION BOARDS	437511
9. BILL OF MATERIALS - MAIN CONTROL ROOM VERTICAL BOARD & CONTROL CONSOLES	101941-493
10. WESTINGHOUSE FUNCTION DIAGRAMS	663195
11. WESTINGHOUSE SOLID STATE PROTECTION SYSTEM	663231
12. SSPS OUTPUT RELAYS, TRAIN A & B	501864 & 503088

NUCLEAR SAFETY RELATED

P.G.&E. SYSTEM PHASE SEQUENCE A-C-B

KEY DWG. SECTION 4

UNIT 1

DATE	
07-10-2017	
D.D.	ZNS4
R.E.	RXG2
I.V.	N/A
P.E.	N/A

REVISION DESCRIPTION
INITIAL ISSUE PER ODN-2*1216
DFC-3*2579 & DFC-2*2643

ELECTRICAL
SCHEMATIC DIAGRAM
SAFETY INJECTION SYSTEM
MOTOR OPERATED VALVES

DIABLO CANYON POWER PLANT
PACIFIC GAS AND ELECTRIC COMPANY
SAN FRANCISCO, CALIFORNIA

DWG SCALE:	
BILL OF MATL:	
SUPSDS:	
SUPSD BY:	

DRAWING	SHEET	PAGE	REV
437606	2	0	1

TABLE OF DEVICES						
DEVICE NO	FUNCTION	RATING	MFR	TYPE	CAT/DWG*	REMARKS
42-IF-19	480V AC MOTOR STARTER REVERSIBLE, SIZE 1	——	——	——	(1)	
49-IF-19	MOTOR OVERLOAD RELAY	——	WE CORP	——	——	PART OF MOTOR STARTER
49X-IF-19	MOTOR OVERLOAD AUX RELAY	——	WE CORP	——	——	PART OF MOTOR STARTER
43-IF-19 TS	TRANSFER SWITCH	15A 240V	ELECTRO SWITCH	——	24205B	
52-IF-19	480V AC AIR CIRCUIT BKR	——	——	——	(1)	
POS564	VALVE POSITION SWITCH	——	——	——	(4)	
LCII2BX1, LCII4BX1	VOL CONT. TK LOW LEVEL AUX REL	——	——	——	(5)	
42-IF-19 CS	CONTROL SWITCH	600V	CUTLER HAMMER	——	10250T1343 W/10250T2	USED AT LOCATION H04
42-IF-19 CS	CONTROL SWITCH	——	WE CORP	——	(9)	USED AT LOCATION CNV
K615/SISA	SAFETY INJECTION AUX RELAY	——	——	——	101(1)(2)	
CIAX-F	CNT ISOL PH.A AUX RELAY MOTOR OC BYPASS	125VDC	P+B	MDR	——	CLOSES ON PH.A ISOL & SIS ACTIVATION
TS	TORQUE SWITCH	——	——	——	——	

RASTER-437606s2p0.dgn
ODN-437606s200.dgn
CAD User:ZNS4 Date: 07-10-2017

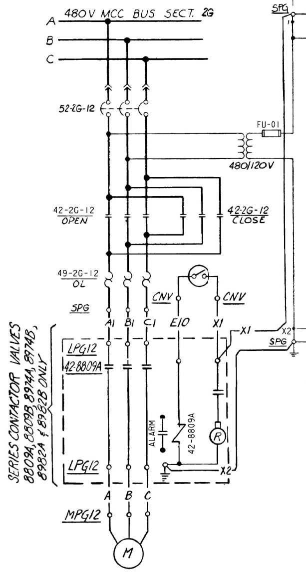

THREE LINE DIAGRAM

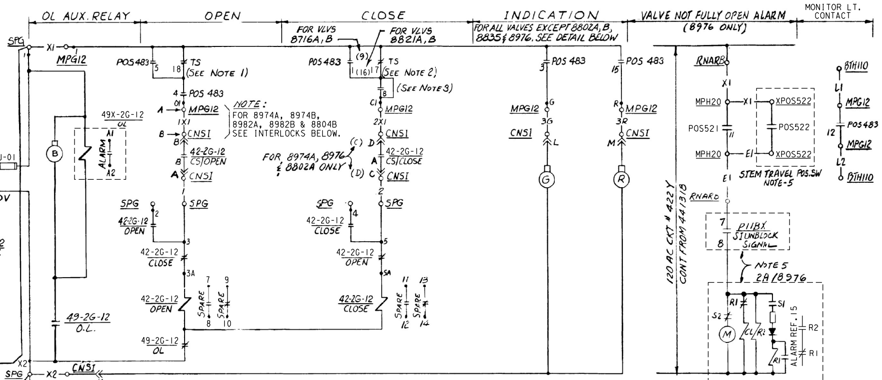

120V AC CONTROL SCHEMATIC

8809A COLD LEG LOOPS 1 & 2 RHR INJECTION M.O.V. CKT. No. G12P00

SAFETY INJECTION SYSTEM MOV'S SIMILAR EXCEPT AS SHOWN IN TABLE

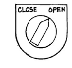

CONTACTS		POSITION CLOSE	POSITION OPEN	REMARKS
⊣⊢	A	X		THIS DWG
⊣⊢	B		X	THIS DWG

CONTROL SWITCH 42-2F-63/CS, 42-2H-71/CS

USED AT LOCATION CNSI
NO SPRING RETURN

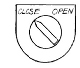

CONTACTS		POSITION CLOSE	POSITION OPEN	REMARKS
⊣⊢	A	X		THIS DWG
⊣⊢	B		X	THIS DWG

42-2G-58/CS, 42-2H-12/CS

CONTROL SWITCH

USED AT LOCATION CNR
NO SPRING RETURN

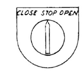

CONTACTS		POSITION CLOSE	POSITION STOP	POSITION OPEN	REMARKS
⊣⊢	A	X			THIS DWG
⊣⊢	B			X	THIS DWG

CONTROL SWITCH - 42-2F-18/CS, 42-2F-32/CS, 42-2F-48/CS, 42-2F-49/CS, 42-2G-12/CS, 42-2G-24/CS, 42-2G-45/CS, 42-2H-20/CS, 42-2H-25/CS, 42-2H-26/CS, 42-2H-29/CS, 42-2H-31/CS, 42-2H-32/CS, 42-2H-44/CS, 42-2H-45/CS,

USED AT LOCATIONS CNR, CNSI & CNV
NO SPRING RETURN

TABLE OF DEVICES

DEVICE No	FUNCTION	RATING	MFR	TYPE	CAT/DWG#	REMARKS
2A/8976	VALVE ALARM RECYCLE TIMER	120VAC	INDUSTRIAL TIMER CO.	J5406	(13)	SUPPLIED BY (W)
42-2F-18, -32, -48, -49, -63 42-2G-12, -24, -45, -58 42-2H-12, -20, -25, -26, -29, -31, -32, -44, -45, -71	480V AC MOTOR STARTER REVERSIBLE	—	—	—	REF DWG #1, 2, 3	
49-2F-18, -32, -48, -49, -63 49-2G-12, -24, -45, -58 49-2H-12, -20, -25, -26, -29, -31, -32, -44, -45, -71	MOTOR OVERLOAD RELAY	—	WE CORP	—	——	PART OF MOTOR STARTER
49X-2F-18, -32, -48, -49, -63 49X-2G-12, -24, -45, -58 49X-2H-12, -20, -25, -26, -29, -31, -32, -44, -45, -71	MOTOR OVERLOAD AUX. RELAY	—	WE CORP.	—	——	PART OF MOTOR STARTER
52-2F-18, -32, -48, -49, -63 52-2G-12, -24, -45, -58 52-2H-12, -20, -25, -26, -29, -31, -32, -44, -45, -71	480V AC AIR CIRCUIT BKR.	—	—	—	REF DWG #1, 2, 3	
8809A, etc.	FLOW CONTROL VALVE					SEE TABLE FOR VALVE NO'S
POS-	FCV POSITION SWITCH					SEE TABLE FOR SW. NO'S
TS	TORQUE SWITCH	—	—	—	——	
POS 619X/ CL-8804B	VALVE POSITION SW AUX RELAY	115VAC	P&B	MDR	MDR-134-1	
POS 682X, 674X, 669X	" " " " "	—	—	—	8	

CONTACTS			VALVE POSITION (FULL OPEN — FULL CLOSED)	FUNCTION CONTACTS 1-8		FUNCTION CONTACTS 9-16	
⊣⊢	1	9		1	SEE TABLE	9	SEE TABLE
⊣⊢	2	10		2	SPARE	10	SEE TABLE
⊣⊢	3	11		3	GREEN LIGHT	11	ALARM-VALVE B976-ONLY
⊣⊢	4	12		4	OPEN LIMIT	12	SEE TABLE
⊣⊢	5	13		5	BYPASS INTLK	13	SEE TABLE
⊣⊢	6	14		6	SEE TABLE	14	(SEE TABLE)
⊣⊢	7	15		7	SPARE	15	RED LIGHT
⊣⊢	8	16		8	CLOSED LIMIT	16	SEE TABLE

TYPICAL VALVE POSITION SWITCH CONTACT DEVELOPMENT'

ACTUAL SETPOINTS ARE IN PIMS

POS469, POS476, POS483, POS490, POS521, POS619, POS626, POS633, POS470, POS471, POS612, POS613, POS616, POS617, POS618, POS620, POS621

VALVE No	SERIES CONTACTOR DEVICE No	LOC. FOR SERIES CONTACTOR	LOC. OF TOGGLE SWITCH	ALARM CK. No
8809A	42-8809A	LPG12	CNV	AY0901DG
8809B	42-8809B	LPH45	CNV	AY0902DH2
8974A	42-8974A	LPF32	CNV	AY0900DF
8974B	42-8974B	LPH44	CNV	AY0902DH1
8982A	42-8982A	LPG58	CNV	AY0901DG1
8982B	42-8982B	LPH12	CNV	AY0902DH

NOTE: TOGGLE SWITCHES FOR SERIES CONTACTORS ARE C/H 8836K9 (4R10554)

EQUIPMENT LOCATION NUMBERS

SPG - 480V MOTOR CONTROL CENTER BUS SECTION 2G
MPG12 MOTOR OPERATED VALVE 8809A
CNSI - CONTROL BOARD, SAFETY INJECTION & ACCUMULATOR DISCHARGE
CNR - CONTROL BOARD, RESIDUAL HEAT
LPG12 - LOCAL CONTRACTOR INTLK VV 8809A
CNV CONTROL BOARD, CHEM & VOLUME CONTROL SYSTEM
CNCS CONTROL BOARD, CONTAINMENT SPRAY
RNARB RACK NUCLEAR AUXILIARY RELAY CUBICLE B
BTH 110 TERMINAL BOX No 110 AREA H

VALVE No.	DESCRIPTION	CIRCUIT BKR No	CIRCUIT No.	BUS SECT	NORMAL POSITION	ENGINEER SAFETY VITAL FUNCTION	POS NO.	MON. LT.	CLOSE BYPASS INTLK	CONT	VALVE No	REF	CONT	VALVE No	REF	CONT	VALVE No	REF	CONT	VALVE No	REF	LOCATION OF CONTROL	MOTOR HP	MOTOR LOCATION No	ALARM CKT NO. OVERCURR/ UNDERVOLT.	ALARM CKT NO. VALVE NOT FULLY OPEN	BLOCK INTLK LEVEL TRIP OF RHR PP ON RECIRC VALVE POS	CONTACT	INTLK	REF
▲ 8974B	SI PP'S RECIRC MOV 1	52-2H-44	H44P00	2H	OPEN	——	469	12	1							13	8804B	THIS	14	8804A	8	CNV	1.6	MPH44	AI4208DH					
8974A	↓ 2	52-2F-32	F32P00	2F	OPEN	——	476	12	1							13	8804B	THIS	14	8804A	8	CNV	1.6	MPF32	AI4408DF					
8809A	COLD LEG LOOPS 1 & 2 RHR INJ	52-2G-12	G12P00	2G	OPEN	——	483	12	1													CNSI	21	MPG12	AI4308DG					
▲ 8809B	↓ 3 & 4	52-2H-45	H45P00	2H	OPEN	——	490	12	1													CNSI	21	MPH45	AI4208DH					
▲⚠ 8976	SIS PPS REFUEL. WATER SUPPLY	52-2H-20	H20P00	2H	OPEN	——	521	12	1										11 / 522 STEM	ALARM	THIS	CNV	1.09	MPH20	AI4208DH	AF0600DH				
▲ 8804B	RHR HT EXCH22 TO SIS PP'S	52-2H-25	H25P00	2H	CLOSED	——	619	16	1	14	AUX. REL.	THIS				13	8974B	THIS				CNR	3.2	MPH25	AI4208DH					
8982A (SEE NOTE 4)	CONTAINMENT SUMP RECIRC. LINE 1	52-2G-58	G58P00	2G	CLOSED	——	626	16	1	9	9003A	9	10	8804A	8	13	8700A	8				CNR	5.3	MPG58	AI4308DG		626	14	RHR PP21	14
8982B (SEE NOTE 4)	↓ 2	52-2H-12	H12P00	2H	CLOSED	——	633	16	1	9	9003B	9	10	8804B	THIS	13	8700B	8				CNR	5.3	MPH12	AI4208DH		633	14	RHR PP22	14
8807A	RHR PP DISCH TO SI PP'S	52-2F-18	F18P00	2F	CLOSED	——	470	16	1													CNR	.66	MPF18	AI4408DF					
8807B	↓ ALT.	52-2H-32	H32P00	2H	CLOSED	——	471	16	1													CNR	.66	MPH32	AI4208DH					
▲⚠ 8802A	SI PP 21 DISCHARGE HOT LEG LOOP	52-2F-48	F48P00	2F	CLOSED	——	612	16	1													CNSI	3.8	MPF48	AI4408DF					
⚠ 8802B	SI PP 22	52-2H-26	H26P00	2H	CLOSED	——	613	16	1													CNSI	3.8	MPH26	AI4208DH					
▲ 8821A	SI PP 21 COLD LEG LOOP	52-2F-49	F49P00	2F	OPEN	——	616	12	16													CNSI	3.8	MPF49	AI4408DF					
8821B	SI PP 22	52-2H-31	H31P00	2H	OPEN	——	617	12	16													CNSI	3.8	MPH31	AI4208DH					
▲⚠ 8835	SI PUMPS DISCHARGE COLD LEG	52-2G-24	G24P00	2G	OPEN	——	618	12	1													CNSI	3.8	MPG24	AI4308DG					
▲ 8923A	SI PUMP 21 SUCTION RWST	52-2F-63	F63P00	2F	OPEN	——	620	12	1													CNSI	1.4	MPF63	AI4408DF					
8923B	SI PUMP 22 SUCTION RWST	52-2H-71	H71P00	2H	OPEN	——	621	12	1													CNSI	1.4	MPH71	AI4208DH					
8716A	RHX 21 TO RC LOOP 1&2 HOT LEG	52-2G-45	G45P00	2G	OPEN	——	614	—	9													CNSI	3.2	MPG45	AI4308DG					
8716B	RHX 22 TO RC LOOP 1&2 HOT LEG	52-2H-29	H29P00	2H	OPEN	——	615	—	9													CNSI	3.2	MPH29	AI4208DH					

⚠ THE BREAKERS FOR THESE VALVES ARE OPEN DURING NORMAL PLANT OPERATION & CLOSED ONLY DURING RECIRCULATION PHASE OR FOR TESTING. U/V ALARM NOT REQUIRED.

NOTES

1- SWITCH OPENS ON MECHANICAL TORQUE DURING OPENING CYCLE (18)
2.- SWITCH OPENS ON MECHANICAL TORQUE DURING CLOSING CYCLE OR FULLY CLOSED VALVE (17).
3.- FIELD TO INSTALL JUMPER IF TORQUE SEATING IS REQUIRED.
4. CIRCUITS GOING TO VALVE Nos 8982A, MPG58 & 8982B, MPH12 RUN THROUGH TERMINAL BOXES BTK3 & BTK4 RESPECTIVELY. OPENING CIRCUIT INTERLOCKS FOR THE FOLLOWING VALVES: 9003A & 9003B, DWG 441308 - USE WIRE Nos 1X5 & 1X6 LISTED IN CKT Nos G58P07 & H12P07. 8700A & 8700B, DWG 441310 - " " " 1X7 & 1X8 " " " " " " 8804A, " " " " " 1X3 & 1X4 " " " " G58P07.
5. W.E. CORP TO SUPPLY STEM TRAVEL POS. SWITCH, LOGIC CONTACT & RECYCLE TIMER.
6. "▲" INDICATES MOV'S PROVIDED WITH FIELD INSTALLED "QUICKTEST" CABLE ASSEMBLIES.

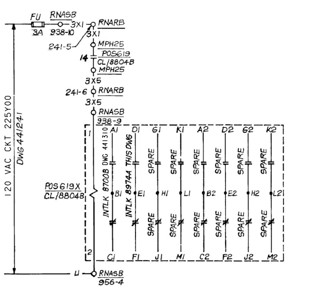

8804B CKT H25P00

POS SW AUX RLY

CONTACTS		VALVE POSITION (FULL OPEN — FULL CLOSED)	FUNCTION
⊣⊢	1		SPARE
⊣⊢	2		SPARE
⊣⊢	3		GREEN LIGHT
⊣⊢	4		OPEN LIMIT
⊣⊢	5		BYPASS INTLK
⊣⊢	6		SPARE
⊣⊢	7		SPARE
⊣⊢	8		CLOSE LIMIT
⊣⊢	9		BYPASS INTLK
⊣⊢	10		SPARE
⊣⊢	11		SPARE
⊣⊢	12		SPARE
⊣⊢	13		SPARE
⊣⊢	14		SPARE
⊣⊢	15		RED LIGHT
⊣⊢	16		SPARE

TYPICAL VALVE POSITION SWITCH CONTACT DEVELOPMENT

POS614, POS615

ACTUAL SETPOINTS ARE IN PIMS

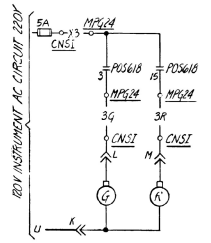

INDICATION FOR VALVE 8835

VALVE 8976 & 8802B SIMILAR EXCEPT INSTR AC CKT No 320Y. VALVE 8802A SIMILAR EXCEPT INSTR AC.CKT No 120Y

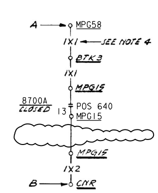

8982A OPENING CKT. INTERLOCKS

8982B SIMILAR EXCEPT USES 8700B POS 647 LOCATED AT MPH43

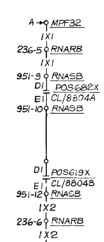

8974A CKT F32P00
(OPENING CKT INTLK)

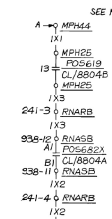

8974B CKT H44P00
(OPENING CKT INTLK)

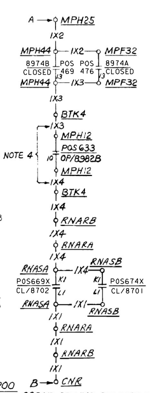

8804B OPENING CKT INTERLOCKS

REFERENCE DRAWINGS

		DWG. #
1-	SINGLE LINE METER & RELAY DIAGRAM, 480V SYSTEM BUS SECT "2F"	441237
2-	↓ "2G"	441238
3-	↓ "2H"	441239
4-	DESCRIPTION OF ELECT. SCHEMATIC DIAG., SYMBOLS & CKT. DESIGNATIONS	050003
5-	EQUIPMENT LOCATION NUMBER LIST	103013
6-	PIPING SCHEMATIC SAFETY INJECTION SYSTEM	108009
7-	INSTRUMENT SCHEMATIC FLOW INSTRUMENT SYSTEMS	108032
8.	SCHEMATIC DIAGRAM RESIDUAL HEAT REMOVAL FLOW CONTROL VALVES	441310
9	↓ CONTAINMENT SPRAY SYSTEM MOTOR OPERATED VALVES	441308
10.	↓ SAFETY INJECTION SYSTEM " " "	441318
11.	↓ MONITOR LIGHT BOX A	441452
12.	↓ MAIN ANNUNCIATOR SHEET 16, 17	500786,7
13.	(W) ELEMENTARY WIRING DIAG. 5018180 REC	663193
14.	SCHEMATIC DIAGRAM RESIDUAL HEAT REMOVAL PUMPS	441309
15.	SCHEMATIC DIAGRAM MAIN ANNUNCIATOR	500773

VALVE Nos. 8716A, 8716B, 8802A, 8802B, 8804B, 8807A, 8807B, 8809A, 8809B, 8821A, 8821B, 8835, 8923A, 8923B, 8974A, 8974B, 8976, 8982A, 8982B.

NUCLEAR SAFETY RELATED

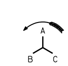

P.G.&E. SYSTEM PHASE SEQUENCE A-C-B

KEY DWG. SECTION 4

UNIT 2

DATE	03-13-2018	REVISION DESCRIPTION	ELECTRICAL SCHEMATIC DIAGRAM SAFETY INJECTION SYSTEM MOTOR OPERATED VALVES	DWG SCALE:
D.D.	ZNS4	Revised Per DDN-2*1823	DIABLO CANYON POWER PLANT	BILL OF MATL:
R.E.	FXC2		PACIFIC GAS AND ELECTRIC COMPANY	SUPSDS:
I.V.	N/A		SAN FRANCISCO, CALIFORNIA	SUPSD BY:
P.E.	N/A			DRAWING 441317 / SHEET 1 / PAGE 0 / REV 20

REGISTERED PROFESSIONAL ENGINEER - NOT REQUIRED PER CF3.ID5 - STATE OF CALIFORNIA

DRAWING NUMBER 441317 1

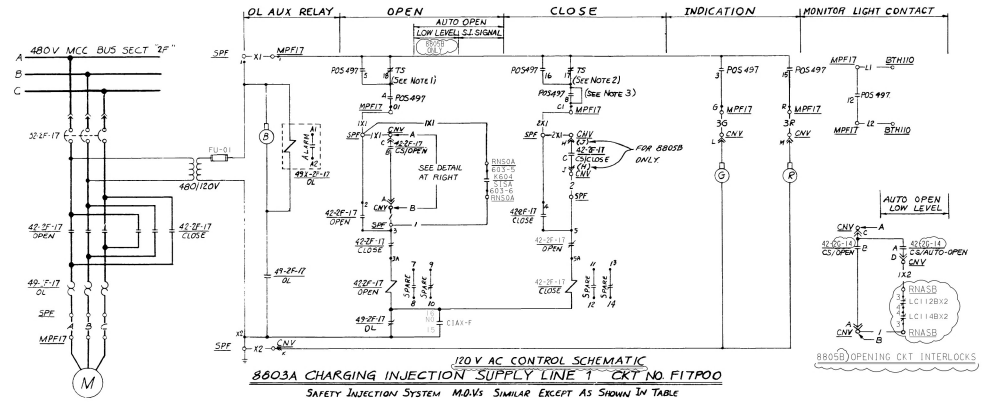

CONTACTS	POSITION			REMARKS	REMARKS (SEE NOTES 1 & 2 BELOW)
		CLOSE	NEUT	OPEN	
A		X	X	SPARE	THIS DWG
B			X	THIS DWG	THIS DWG
C	X			THIS DWG	THIS DWG
D	X	X		SPARE	SPARE

42-2F-16, 42-1F-17 CS, 42-1C-46 CS, 42-16-5 CS,
42-2G-7, 42-2G-13, 42-2G-14, 42-2G-27, 42-2H-14 CS

CONTROL SWITCH - 42-2G-7, 42-2G-13, 42-2G-14, 42-2G-27, 42-2H-14 CS

USED AT LOCATION CNAC, CNV
SPRING RETURN TO NEUTRAL

NOTES:
1. FOR SWITCH 42-2F-46A 42-2D-5, 42-2G-7 & 42-2H-14 OPERATOR SPRING RETURN TO AUTO FROM OPEN MAINTAINED AT CLOSE POSITION; NAMEPLATE TO READ "CLOSE-AUTO-OPEN"
2. FOR SWITCH 42-2F-46A 42-2D-5 NAMEPLATE TO READ "AUTO" FOR SWITCH 42-16-4 CENTER POSITION OF SWITCH TO READ "AUTO"

CONTACTS	VALVE POSITION FULL OPEN	VALVE POSITION FULL CLOSED	FUNCTION CONTACTS 1 TO 8	FUNCTION CONTACTS 9 TO 16
1	9		1 SEE TABLE	9 SEE TABLE
2	10		2 SPARE	10 SEE TABLE
3	11		3 GREEN LIGHT	11 ALARM
4	12		4 OPEN LIMIT	12 MONITOR LT
5	13		5 BYPASS INTLK	13 SPARE
6	14		6 SPARE	14 SPARE
7	15		7 SPARE	15 RED LIGHT
8	16		8 CLOSE LIMIT	16 SEE TABLE

TYPICAL VALVE POSITION SWITCH CONTACT DEVELOPMENT
ACTUAL SETPOINTS ARE IN PIMS

TABLE OF DEVICES

DEVICE NO.	FUNCTION	RATING	MFR	TYPE	CAT/DWG*	REMARKS
2A/B803A,B,C,D	VALVE ALARM RECYCLE TIMER	120VAC	AGASTAT CORP.	ETR	7540G	6651*3-8,9 SUPPLIED BY (W)
42-2F-16, -17, -46 / 42-2G-5, -7, -13, -14, -27 / 42-2H-14	480V AC MOTOR STARTER REVERSIBLE, SIZE 1	—	—	—	—	REF DWG *1, 2, 3
49-2F-16, -17, -46 / 49-2G-5, -7, -13, -14, -27 / 49-2H-14	MOTOR OVERLOAD RELAY	—	WE CORP	—	—	PART OF MOTOR STARTER
49X-2F-16, -17, -46 / 49X-2G-5, -7, -13, -14, -27 / 49X-2H-14	MOTOR OVERLOAD AUX RELAY	—	WE CORP	—	—	PART OF MOTOR STARTER
K630	SI UNBLOCK PRESS AUX RLY	—	—	—	(10)(17)	
K1708	" " " "	120VAC	WE CORP	AR	AR440AR	
P11AX, P11BX	" " " "	120VAC	WE CORP	AR	AR440AR	
52-2F-16, -17, -46 / 52-2G-5, -7, -13, -14, -27, -28, -29 / 52-2H-14, -14R	480V AC AIR CIRCUIT BKR	—	—	—	REF DWG *1, 2, 3	
C1AX-F, H / C1AX2-F / C1AX1-G, C1AX2-G	CNT. ISOL PH.A AUX RELAY MOTOR OC BY PASS	125VDC	P+B	MDR	5076-1	CONTACTS TO CLOSE ON PH A ISOL & SI ACTUATION
8803A, etc.	FLOW CONTROL VALVE	—	—	—	7	SEE TABLE FOR VALVE NO
POS	FCV POSITION SWITCH	—	—	—	7	SEE TABLE FOR SW NOS
LC1128X2, LC1148X2	VOL CONT TK LOW LEVEL AUX. REL	—	—	—	(11)	CONTACT CLOSE ON VOL. CONT. TANK LOW-LOW LOW LEVEL
K603, K604, K615	SAFETY INJECTION AUX. RELAY	—	—	—	(9)(10)(17)	
K613	4 A150L / 3 I. SLAVE RELAY	—	—	—	(9)(10)(17)	
TS	TORQUE SWITCH	—	—	—	—	

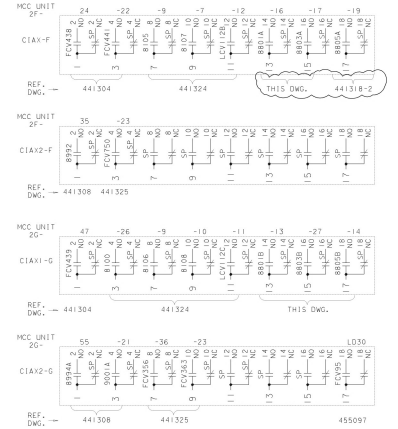

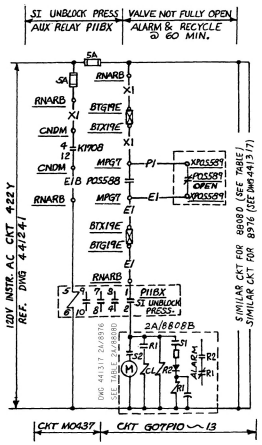

VALVE NO	DESCRIPTION	CIRCUIT BKR NO.	CIRCUIT No	BUS SECT	NORMAL POSITION	ENGINEER SAFETY VITAL FUNCTION	VALVE POSITION SWITCH-(POS) POS NO.	MONITOR LIGHT CONTACT	INTERLOCK CONTACTS CONT	VALVE No.	REF.	CONT	VALVE No.	REF.	CLOSE BYPASS INTLK	CNT. ISOL PH A MOTOR OC BYPASS DEVICE	CONTACT	VOL. CONT. TK. LOW-LEV. DEVICE	LOC	ALARM CKT. NO (CONTACT) INTLK	OVERCURR. UNDERVOLT	MOTOR LOC. NO	SIS SIGNAL DEVICE	LOCATION	CONTACT
▲ 8803A	CHARGING INJECTION SUPPLY LINE 1	52-2F-17	F1TP00	2F	CLOSED	S	497	12	—	—	—	—	—	—	16	C1AX-F	15	—	—	—	A1440BDF	MPF17	K604	RNSB-A	TB603 5—6
8803B	↓ ↓ ↓ ↓ 2	52-2G-27	G2TP00	2G	CLOSED	S	505	12	—	—	—	—	—	—	16	C1AX1-G	15	—	—	—	A1430DDG	MPG27	K604	RNSB-B	TB603 5—6
8801A	Gld Loop Charging Injection Line 1	52-2F-16	F1GP00	2F	CLOSED	S	513	12	—	—	—	—	—	—	16	C1AX-F	13	—	—	—	A1440BDF	MPF16	K603	RNSB-A	TB602 5—6
8801B	↓ ↓ ↓ ↓ 2	52-2G-13	G1GP00	2G	CLOSED	S	528	12	—	—	—	—	—	—	16	C1AX1-G	13	—	—	—	A1430DDG	MPG13	K603	RNSB-B	TB602 5—6
8805B	CHARG. FP REFUEL. WTR SUPPLY 2	52-2G-14	G4P00	2G	CLOSED	S	512	12	9	LCV112B	8	10	LCV112C	8	1	C1AX1-G	17	LCV112B / LCV148B	RNASB	3 / 4	A1430DDG	MPG14	K615	RNSB-B	TB605 7—8

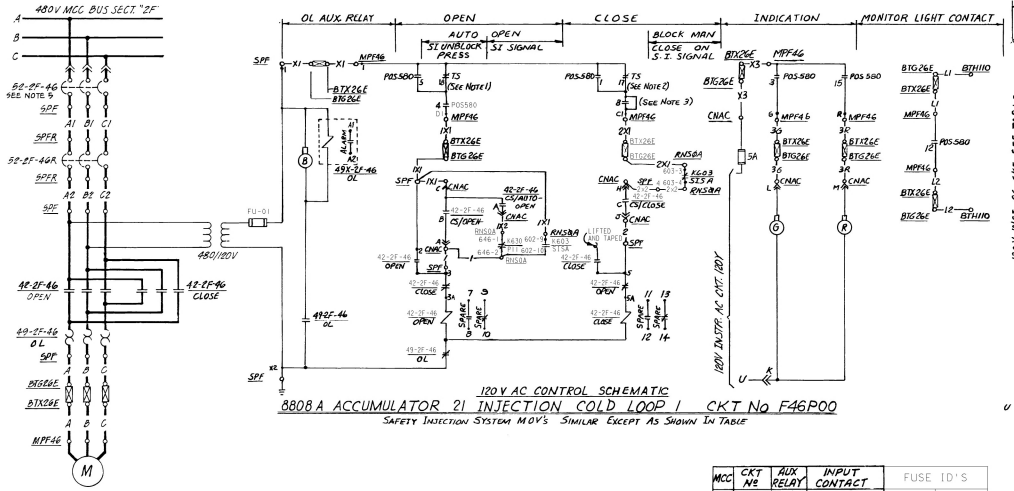

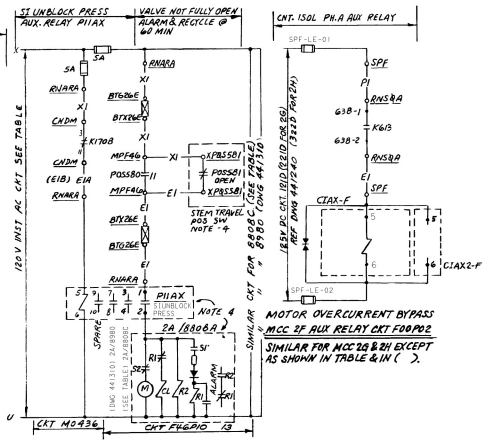

MCC	CKT No	AUX RELAY	INPUT CONTACT		FUSE ID'S	
2F	F00P02	C1AX-F, C1AX2-F	638-1	K613 1—2	SPF-LE-01	SPF-LE-02
2G	G00P02	C1AX1-G, C1AX2-G	638-1	K613 1—2	SPG-LD-01	SPG-LO-02
2H	H00P02	C1AX-H	639-1	K614 1—2	SPH-LC-01	SPH-LC-02

EQUIPMENT LOCATION NUMBERS
CNAC - CONTROL BOARD, ACCUM SVC
BTG26E - TERMINAL BOX, AREA G NO 26E
RNSB-A - RACK NUCLEAR SAFEGUARDS ACTUATION A
RNARA - RACK NUCLEAR AUX. RELAYS A
BTH110 - TERMINAL BOX AREA H, NO 110
SPF - 480V MOTOR CONT. CENTER BUS SECT. 2F
MPF17 - MOTOR OPERATED VALVE 8803A
SPFR - 480V MOTOR CONT. CENTER BUS SECT. 2FR BACK UP OVERCURRENT PROTECTION

NOTES

1. SWITCH OPENS ON MECHANICAL OVER TORQUE DURING OPENING CYCLE (18)
2. SWITCH OPENS ON MECHANICAL OVER TORQUE DURING CLOSING CYCLE OR FULLY CLOSED VALVE (17)
3. FIELD TO INSTALL JUMPER IF TORQUE SEATING IS REQUIRED.
4. W.E. CORP TO SUPPLY STEM TRAVEL POS SW, LOGIC CONTACT AND RECYCLE TIMER
5. OPEN DURING NORMAL OPERATION'S UNDER VOLTAGE ALARM NOT REQUIRED PER ECO-E158
7. ▲ - INDICATES MOV'S PROVIDED WITH FIELD INSTALLED "QUICKTEST" CABLE ASSEMBLIES.

REFERENCES

1. SINGLE LINE METER & RELAY DIAGRAM 480 V SYSTEM BUS SECT "2F" DWG # 441237
2. " "3" " 441238
3. " "2H" " 441239
4. DESCRIPTION OF ELECT SCHEMATIC DIAG'S SYMBOLS & CKT. DESIGNATIONS — 050003
5. EQUIPMENT LOCATION NUMBER LIST — 067998
6. PIPING SCHEMATIC (CHEMICAL & VOLUME CONTROL SYSTEM (SAFETY INJECTION SYSTEM) — 101006, 101009
7. INSTRUMENT SCHEMATIC (FLOW) INSTRUMENT SYSTEMS — 101033
8. SCHEMATIC DIAGRAM VOLUME CONTROL SYSTEM MOTOR OPERATED VALVES — 441324
9. (W) FUNCTION DIAGRAMS — REC # 663195
10. (W) SOLID STATE PROTECTION SYSTEM — REC # 663231
11. (W) ELEMENTARY WIRING DIAG 50181BO
12. SCHEMATIC DIAG MAIN ANNUNCIATOR SH. 16, 17 — DWG # 441454
13. SCHEMATIC DIAG MONITOR LT. BOX — REC. #663193
14. " " " RHR FLOW CONT VALVES DWG # 441310
15. " " " " MOTOR OPER VALVES " 441317
16. " " " CONTAINMENT FAN COOLERS " 441313
17. S/D SSPS OUTPUT RELAYS, TRAIN A & B — 5D3083, 5D3093
18. SSPS INTERCONNECTION DIAG — 663231-44
19. S/D FUEL TRANSFER SYS — DWG # 441334
20. FUSE LIST — 066145
21. SCHEMATIC DIAGRAM SAFETY INJECTION SYSTEM MOV'S — 441318-2

VALVE NOS 8801A, 8801B, 8803A, 8803B, 8805B, 8808A, 8808B, 8808C, 8808D

VALVE NO.	DESCRIPTION	CIRCUIT BKR. NO. PRIMARY	CIRCUIT BKR. NO. BACK UP	CIRCUIT No	BUS SECT	NORMAL POSITION	ENGINEER SAFETY VITAL FUNCTION	VALVE POSITION SWITCH (POS) POS No.	MONITOR LIGHT CONTACT	VALVE NO. FULLY OPEN	STEM TRAVEL POS SW	ALARM CKT. No OVERCURR	ALARM CKT. No VALVE NOT FULLY OPEN	PENETR NO	MOTOR LOC. No.	SIS SIGNAL DEVICE	SIS SIGNAL LOCATION	SI UNBLOCK PRESS LOGIC AUTO OPEN INTLK	SI UNBLOCK PRESS LOGIC BLOCK CLOSE CONT. INTLK	VALVE NOT FULLY OPEN ALARM RECYCLE TIMER AUTO OPEN INTLK DEVICE	VALVE NOT FULLY OPEN ALARM RECYCLE TIMER AUTO OPEN INTLK LOC	VALVE NOT FULLY OPEN ALARM RECYCLE TIMER AUTO OPEN INTLK CONTACT	INDICATING LIGHTS 120V AC CKT.
8808A	ACCUM 2I INJECT COLD LOOP 1	52-2F-46	52-2F-46A	F46P00	2F	OPEN	S	580	12	11	581	A1440BDF	AF0900DF	26E	MPG46	K603	RNSB-A	TB602-9 —||— 10	—||—	K630	RNSB-A	—|/|—	2A/8808A	RNARA	3A25Y	120Y
SEE NOTE 3 8808B		22		8	52-2G-7	52-2G-7R	G07P00	2G	OPEN	S	588	12	11	589	A1430BDG	AF0910DG	19E	MPG7	K603	RNSB-B	TB602-9 —||— 10	—||—	K630	RNSB-B	—|/|—	2A/8808B	RNARA	422Y	220Y
8808C		23		5	52-2H-14	52-2H-14R	H14P00	2H	OPEN	S	596	12	11	597	A1420BDH	AF0902DH	12E	MPH14	K604	RNSB-A	TB604-1 —||— 2	—||—	K630	RNSB-A	—|/|—	2A/8808C	RNARA	3A25Y	120Y
8808D		24		4	52-2G-5	52-2G-5R	G05P00	2G	OPEN	S	604	12	11	605	A1430BDG	AF0903DG	19E	MPG5	K604	RNSB-B	TB603-7 —||— 8	—||—	K630	RNSB-B	—|/|—	2A/8808D	RNARA	422Y	220Y

KEY DWG. SECTION 4

DATE	REVISION DESCRIPTION
06-15-2016	REVISED PER DDN-2+368

D.D.	PNWB
R.E.	FAZI
I.V.	N/A
P.E.	N/A

NUCLEAR SAFETY RELATED
UNIT 2

ELECTRICAL
SCHEMATIC DIAGRAM
SAFETY INJECTION SYSTEM
MOTOR OPERATED VALVES

DIABLO CANYON POWER PLANT
PACIFIC GAS AND ELECTRIC COMPANY
SAN FRANCISCO, CALIFORNIA

DWG SCALE=
BILL OF MATL=
SUPSDS=
SUPSD BY=

DRAWING	SHEET	PAGE	REV
441318	1	0	26

P.G.&E. SYSTEM PHASE SEQUENCE A-B-C

RASTER: 441318.dgn
DGN: 441318.dgn
CAD User: PNWB Date: 06-15-2016

DRAWING NUMBER 441318 1

TABLE OF DEVICES

DEVICE NO	FUNCTION	RATING	MFR	TYPE	CAT/DWG*	REMARKS
42-2F-19	480V AC MOTOR STARTER REVERSIBLE, SIZE 1	——	——	——	(1)	
49-2F-19	MOTOR OVERLOAD RELAY	——	WE CORP	——	——	PART OF MOTOR STARTER
49X-2F-19	MOTOR OVERLOAD AUX RELAY	——	WE CORP	——	——	PART OF MOTOR STARTER
43-2F-19 TS	TRANSFER SWITCH	15A 240V	ELECTRO SWITCH	——	24205B	
52-2F-19	480V AC AIR CIRCUIT BKR	——	——	——	(1)	
POS564	VALVE POSITION SWITCH	——	——	——	(4)	
LC112BX1, LC114BX1	VOL CONT. TK LOW LEVEL AUX REL	——	——	——	(9)	CONTACTS CLOSE ON VOL. CONT. TANK LOW-LOW LOW LEVEL
42-2F-19 CS	CONTROL SWITCH	600V	CUTLER HAMMER	——	10250T1343 W/10250T2	USED AT LOCATION H04
42-2F-19 CS	CONTROL SWITCH	——	WE CORP	——	(8)	USED AT LOCATION CNV
K615/S15A	SAFETY INJECTION AUX RELAY	——	——	——	(10)(11)(12)	
CIAX-F	CNT ISOL PH. A AUX RELAY MOTOR OC BYPASS	125VDC	P+B	MDR	——	CLOSES ON PH. A ISOL & SIS ACTIVATION

AUTO CLOSE OPEN

CONTACTS		POSITION CLOSE	AUTO	OPEN	REMARKS
—a—	A		X	X	SPARE
—a—	B			X	THIS DWG
—a—	C	X			THIS DWG
—a—	D	X	X		SPARE

CONTROL SWITCH 42-2F-19 CS

USED AT LOCATION CNV
SPRING RETURN TO NEUTRAL

CLOSE OPEN

CONTACTS		POSITION CLOSE	NEUT	OPEN	REMARKS
13—14	A			X	THIS DWG
23—24	B	X			THIS DWG

CONTROL SWITCH 42-2F-19 CS

USED AT LOCATION H04
SPRING RETURN TO NEUTRAL

8805A OPENING CKT. INTERLOCKS

CONT RM HSDP

	CONTACTS		POSITION CONT RM	HSDP	REMARKS
12	13	A		X	THIS DWG
	11	B	X		THIS DWG
16	17	C		X	THIS DWG
	15	D	X		THIS DWG
22	23	E		X	THIS DWG
	21	F	X		THIS DWG
26	27	G		X	THIS DWG
	25	H	X		THIS DWG
32	33	I		X	THIS DWG
	31	J	X		THIS DWG
36	37	K		X	THIS DWG
	35	L	X		THIS DWG
42	43	M		X	THIS DWG
	41	N	X		THIS DWG
46	47	O		X	SPARE
	45	P	X		THIS DWG
52	53	Q		X	ALARM, 441285
	51	R	X		SPARE
56	57	S		X	SPARE
	55	T	X		SPARE

TRANSFER SWITCH 43-2F-19 TS

USED AT LOCATION EJSDTS1
NO SPRING RETURN

VALVE POSITION CONTACT DEVELOPMENT

CONTACTS	VALVE POSITION FULL OPEN	FULL CLOSED	FUNCTION CONTACTS 1 TO 8	FUNCTION CONTACTS 9 TO 16
1 9	●		1 CLOSE IS BYPASS	9 SEE TABLE
2 10	●		2 SPARE	10 SEE TABLE
3 11		●	3 GREEN LIGHT	11 ALARM
4 12		●	4 OPEN LIMIT	12 MONITOR LT
5 13		●	5 BYPASS INTLK	13 SPARE
6 14		●	6 SPARE	14 SPARE
7 15	●		7 SPARE	15 RED LT
8 16	●		8 CLOSE LIMIT (SEE NOTE 3)	16 SPARE

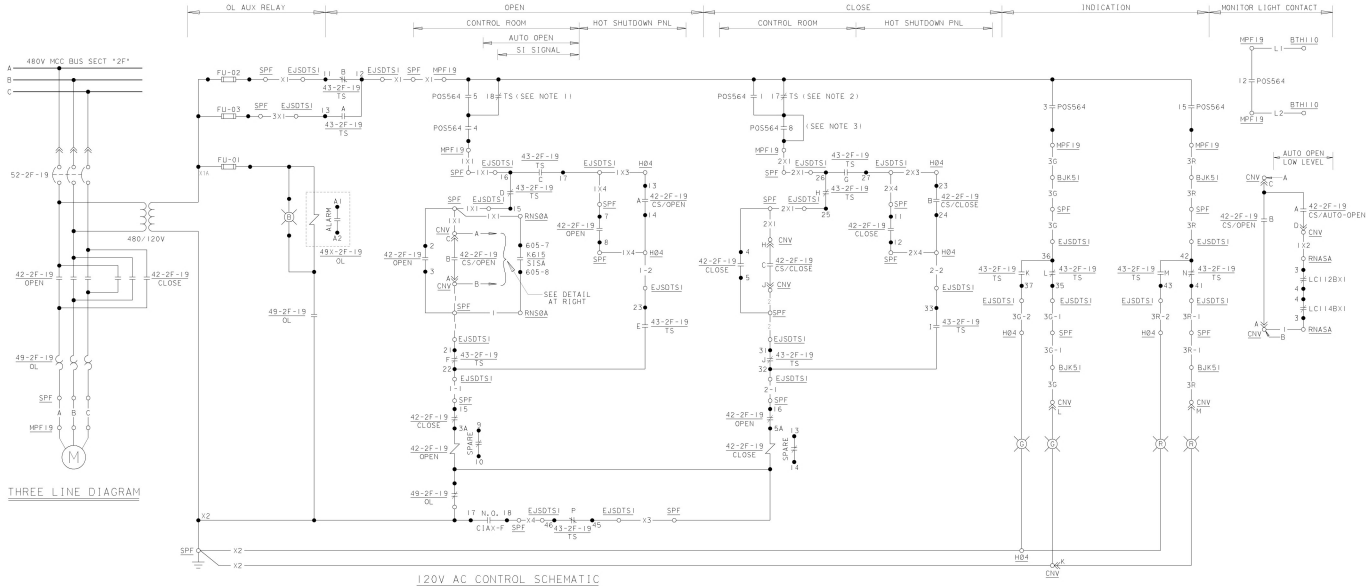

THREE LINE DIAGRAM

120V AC CONTROL SCHEMATIC

8805A CHARG. PP REFUEL WTR SUPPLY 1 CKT NO F19P00

	VALVE NO	DESCRIPTION	CIRCUIT BKR NO	CIRCUIT NO	BUS SECT	NORMAL POSITION	ENGINEER SAFETY VITAL FUNCTION	VALVE POSITION SWITCH-(POS) POS NO	MONITOR LIGHT CONTACT	INTERLOCK CONTACTS CONT.	VALVE NO.	REF	CONT.	VALVE NO.	REF	CLOSE TS BYPASS CONTACT	CNT. ISOL. PH A MOTOR OC. BYPASS DEVICE	CONTACT	VOL. CONT. TK. LOW LEV. DEVICE	LOC.	CONTACTS INTLK	ALARM CKT NO OVER CURRENT	TRANSFER OF CONT	MOTOR LOC. NO	SIS SIGNAL DEVICE	LOCATION	CONTACT
▲	8805A	CHARG. PP REFUEL WTR SUPPLY 1	52-2F-19	F19P00	2F	CLOSED	S	564	12	9	LCV112B	2	10	LCV112C	2	1	CIAX-F	17—||—18	LC112BX1-114BX1	RNA5A	3—||—4	A14408DF	AY5065DF	MPF19	K615	RNS0A	TB605 7—||—8

EQUIPMENT LOCATION NUMBERS

SPF - 480V MOTOR CONT. CENTER BUS SECT. 2F
CNV - CONTROL BOARD 2VB2
RNS0A - RACK NUC. SAFEGD OUTPUT TRAIN A
RNA5A - AUX RAC NUC. SAFEGD CUB A
MPF19 - 8805A CHARGE PP REFUEL WATER SUPPLY 1
HB04 - HOT SHUTDOWN PANEL EXTENSION BOARD
EJSDTS1 - BUS F MCC TRANSFER SWITCH PANEL

LEGEND:

▲ MOV'S PROVIDED WITH FIELD INSTALLED "QUICKTEST" CABLE ASSEMBLIES. SEE APPLICABLE DIAGRAM OF CONNECTIONS.

NOTES:

1. SWITCH OPENS ON MECHANICAL TORQUE DURING OPENING CYCLE (18).
2. SWITCH OPENS ON MECHANICAL TORQUE DURING CLOSING CYCLE (17).
3. FIELD TO INSTALL JUMPER FOR TORQUE SEATING FOR ALL VALVES.
4. SCHEDULED CIRCUITS TO THE VALVE OPERATOR (MPF19) ARE ACTUALLY ROUTED TO BJK64A. UNSCHEDULED CABLE RUNS FROM BJK64A TO MPF19.
5. TRANSFER SWITCH CONTACTS SHOWN IN CONTROL ROOM POSITION.

REFERENCES:

1. SINGLE LINE METER & RELAY DIAGRAM 480V SYSTEM BUS SECT. "2F" 441237
2. SCHEMATIC DIAGRAM VOLUME CONTROL SYSTEM MOTOR OPERATOR VALVES 441324
3. SCHEMATIC DIAGRAM SI SYSTEM MOV. VALVES 441318-1
4. INSTRUMENT SCHEMATIC LEVEL INSTRUMENT SYSTEMS 108033
5. FUSE LIST 066145
6. DIAGRAM OF CONNECTIONS TRANSFER SWITCH PANEL 480 BUS 2F 393441
7. DIAGRAM OF CONNECTIONS HOT SHUTDOWN PANEL EXTENSION BOARDS 393446
8. BILL OF MATERIALS MAIN CONTROL ROOM CONSOLES & VERTICAL BOARDS 107941-301
9. DIAGRAM OF CONNECTIONS AUX ENGR SAFETY FEATURES RACK A 451800
10. WESTINGHOUSE FUNCTION DIAGRAMS 663195
11. WESTINGHOUSE SOLID STATE PROTECTION SYSTEM 663231
12. SSPS OUTPUT RELAYS, TRAIN A & B ..... 503089 & 503093

P.G.&E. SYSTEM PHASE SEQUENCE A-C-B

NUCLEAR SAFETY RELATED

KEY DWG. SECTION 4

UNIT 2

DATE	
06-15-2016	
D.D.	PNWB
R.E.	FAZI
I.V.	N/A
P.E.	N/A

REVISION DESCRIPTION
INITIAL ISSUE PER ODN-2*1368
DFC-3*2396, 3*2481

ELECTRICAL
SCHEMATIC DIAGRAM
SAFETY INJECTION SYSTEM
MOTOR OPERATED VALVES

DIABLO CANYON POWER PLANT
PACIFIC GAS AND ELECTRIC COMPANY
SAN FRANCISCO, CALIFORNIA

DWG SCALE:	
BILL OF MATL:	
SUPSDS:	
SUPSD BY:	

DRAWING	SHEET	PAGE	REV
441318	2	0	1

DRAWING NUMBER 441318 2

RASTER=441318s2.dgn
ODN=441318s2.odn
CAD User=PNWB Date=06-15-2016

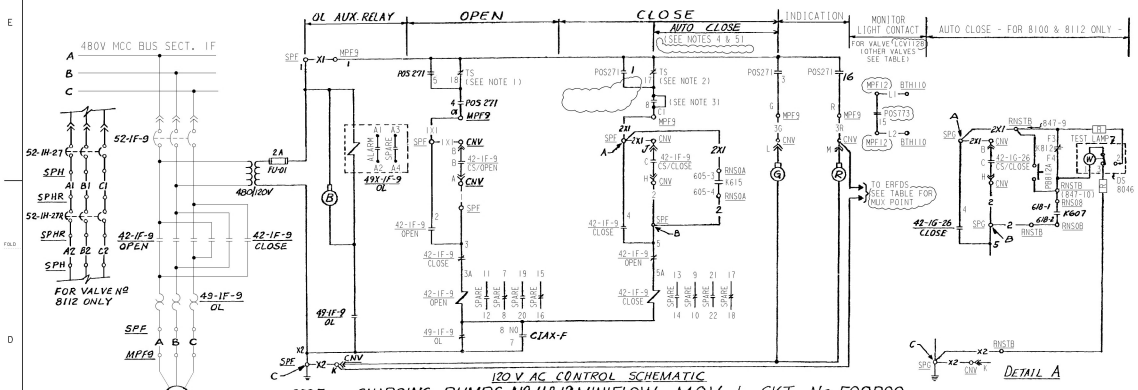

THREE LINE DIAGRAM

▲8105 CHARGING PUMPS Nº 1 & 2 MINIFLOW M.O.V. 1 CKT. No. F09P00

CHEMICAL & VOLUME CONTROL SYSTEM MOVs SIMILAR EXCEPT AS SHOWN IN TABLE

CONTACTS	POSITION CLOSE	POSITION NEUT	POSITION OPEN	REMARKS	REMARKS FOR 42-1F-12, 42-1G-11 CS CS
A		X	X	SPARE	SPARE
B			X	THIS DWG	THIS DWG
C	X			THIS DWG	THIS DWG
D	X	X		SPARE	THIS DWG

42-1F-9 CS, 42-1F-12 CS, 42-1G-9 CS, 42-1G-11 CS, 42-1G-26 CS, 42-1G-57 CS, 42-1H-27 CS

CONTROL SWITCH-

USED AT LOCATION CNV, H02

SPRING RETURN TO NEUTRAL

NOTE- FOR SWITCH 42-1F-12, 42-1G-11 CENTER POSITION OF SWITCH TO READ "AUTO" NAMEPLATE TO READ CLOSE - AUTO-OPEN

CONTACTS	VALVE POSITION FULL OPEN	VALVE POSITION FULL CLOSED	FUNCTION CONTACTS 1-8	FUNCTION CONTACTS 9-16
1	9		BYPASS INTLK.	SPARE
2	10		SPARE	SPARE
3	11		GREEN LIGHT	SPARE
4	12		OPEN LIMIT	SPARE
5	13		BYPASS INTLK.	SPARE
6	14		SPARE	SPARE
7	15		SPARE	MONITOR LIGHT (RED LT FOR POS285)
8	16		NOTE 3	RED LIGHT (SPARE FOR POS285)

TYPICAL VALVE POSITION SWITCH CONTACT DEVELOPMENT

POS 271, POS278, POS773, POS781, POS850, POS1129*, POS286

ACTUAL SETPOINTS ARE IN PIMS

* FOR POS1129 SEE NOTE 6

TABLE OF DEVICES

DEVICE No.	FUNCTION	RATING	MFR	TYPE	CAT/DWG	REMARKS
42-1F-9, -12, 42-1H-27 49-1G-9, -11, -26, -57	480V AC MOTOR STARTER REVERSIBLE, SIZE U				REF DWG #1, 2, 7	
49-1F-9, -12, 49-1H-27 49-1G-9, -11, -26, -57	MOTOR OVERLOAD RELAY	—	WE CORP	—	—	PART OF MOTOR STARTER
49X-1F-9, -12, 49X-1H-27 49X-1G-9, -11, -26, -57	MOTOR OVERLOAD AUXILIARY RELAY	—	WE CORP	—	—	PART OF MOTOR STARTER
52-1F-9, -12, 52-1H-27 52-1G-9, -11,	480V AC AIR CIRCUIT BREAKER	—	—		REF DWG #1, 2, 7	
52-1H-27R	480V AIR CIRCUIT BREAKER		WE CORP		(7)	BACK-UP BREAKER
49X-1G-57	CONTROL TRANSFER RELAY	120V AC	ELECTRO SERVICE SW. CORP.	SERIES 30 LOR	7803 F	HAND RESET
CIAX-F, H CIAX1-G	CNT ISOL PH A AUX RELAY MOTOR OC BYPASS	—	—	—	(8)	CLOSES ON PH A ISOL & SIS ACTUATION
LCV	LEVEL CONTROL VALVE	—	—	—	—	SEE TABLE FOR VALVE NO.'S
POS	VALVE POSITION SWITCH	—	—	—	—	SEE TABLE FOR SW. NO.'S
LC112BX, 1H8X	VOL. CONT. TK. LOW LEVEL AUX. RELAY	—	—	—	(9)	CONTACT CLOSES ON VCT LOW-LOW LEVEL
K812	SAFEGUARD TEST RELAY	—	—	—	(10)	CONTACTS OPEN DURING TEST
TS	TORQUE SWITCH	—	—	—	—	
K615	SAFETY INJECTION AUX. RELAY	—	—	—	(9)(10)(13)	
K607	CONTAINMENT ISOLATION PHASE A AUX. REL	—	—	—	(9)(10)(16)	

EQUIPMENT LOCATION NUMBERS

- SPF - 480V MOTOR CONT. CENTER, BUS SECTION 1F
- MPF9 - MOTOR OPERATED VALVE 8105
- CNV - CONTROL BOARD, CHEMICAL & VOLUME CONTROL
- H02 - HOT SHUTDOWN CONTROL PANEL 2 (CHARGING)
- RNS0A - RACK NUCLEAR SAFEGUARD, OUTPUT TRAIN A
- BTH110 - TERMINAL BOX AREA H Nº 110
- RNARA - RACK NO. AUX. RELAY CUB. A-
- SPHR - 480V MCC BUS SECTION 1H, BACK-UP O.C.

LEGEND

▲ MOV'S PROVIDED WITH FIELD INSTALLED "QUICKTEST" CABLE ASSEMBLIES. SEE APPLICABLE DIAGRAM OF CONNECTIONS.

VALVE NO	DESCRIPTION	CIRCUIT BKR. NO. PRIMARY	CIRCUIT BKR. NO. BACK UP	CIRCUIT NO.	BUS SECT	NORMAL POSITION	ENGR. SAFTY VITAL FUNCT.	VALVE POSITION SWITCH (POS) POS NO.	MONITOR LIGHT CONTACT	RED LIGHT CONTACT	SSPS TEST PUSHBUTTON PB SW*	TERM BLK	TRAIN R	PBSW*	TERM BLK	TRAIN A	CNT. ISOL PH A MOTOR OC BYPASS DEVICE	CONTACT	VOL. CONT. TK. LOW LEVEL DEVICE	LOC	ALARM CKT. NO.'S CONTACTS INTLK.	OVER CURRENT	MOTOR LOC	SAFEGUARD SIGNAL (SEE NOTES 7 & 8) DEVICE	LOC	CONTACT	PENN NO.	SAFEGUARD TEST RELAY DEVICE	LOC	CONTACT	TEST LAMP DS	ERFDS
8105	CHARGING PPS 1 & 2 MINIFLOW MOV	1 52-1F-9	—	F09P00	1F	OPEN	—	271	—	16	—	—	—	—	—	—	CIAX-F	7-H	—	—	—	—	MPF9				—	—	—	—	—	—	—
8106		2 52-1G-9	—	G09P00	1G	OPEN	—	278	—	16	—	—	—	—	—	—	CIAX-G	7-H	—	—	—	—	MPG9				—	—	—	—	—	—	—
LCV112B	VOLUME CONT. TK. OUTLET MOV	1 52-1F-12	—	F12P00	1F	OPEN	S	779	15	16	—	—	—	—	—	—	CIAX-F	11-H	LC112BX1 LC114BX1	RNA5A	2(NC) 2(NO)	A14408DF	MPF12	K615	RNS0A	TB605 11-11-12	—	—	—	—	—	—	—
LCV112C		2 52-1G-11	—	G11P00	1G	OPEN	S	781	15	16	—	—	—	—	—	—	CIAX1-G	11-H	LC112BX2 LC114BX2	RNA5B	2(NC) 2(NO)	A14308DG	MPG11	K615	RNS0B	TB605 11-11-12	—	—	—	—	—	—	—
8100	RC PPS SEAL WATER RET. TOAL VV	1 52-1G-26	—	G26P00	1G	OPEN	T	260	15	16	P8812A	A4-9, 10	RNS1B	—	—	—	CIAX1-G	3-H	—	—	—	A14308DG	MPG26	K607	RNS0B	TB618 11-1-2	—	—	K812	RNS1B	J3-XF-2	8046	MUX02-20-1
8112		2 52-1H-27	52-1H-27R	H27P00	1H	OPEN	T	1129	16	15	—	—	—	P8812A	A8-9, 10	RNS1A	CIAX-H	3-H	—	—	—	A14208DH	MPH27	K607	RNS0A	TB618 11-1-2	12E	—	K812	RNS1A	J3-XF-1	8047	MUX03-10-1

NOTES:

1. SWITCH OPENS ON MECHANICAL TORQUE DURING OPENING CYCLE (1B)
2. SWITCH OPENS ON MECHANICAL TORQUE DURING CLOSING CYCLE OR FULLY CLOSED VALVE (1T)
3. FIELD TO INSTALL JUMPER FOR TORQUE SEATING
4. FOR VLVS. 8105 & 8106, AUTO CLOSE SAFEGUARD SIGNAL IS NOT IN USE: WIRES ARE LIFTED & TAPED AT SPF, RNS0A & SPG, RNS0B.
5. VLVS 8100 & 8112 (SEE DETAIL "A"); VLVS LCV112B, 112C (SEE DETAIL "B")
6. FOR POS 1129 CONTACT 15 IS FOR RED LIGHT AND CONTACT 16 IS FOR MONITOR LIGHT.

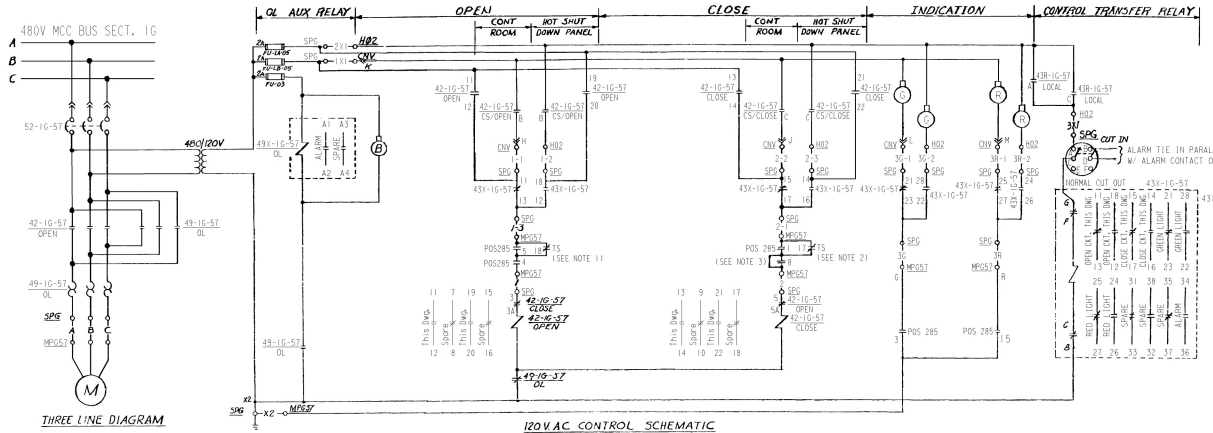

THREE LINE DIAGRAM

▲8104 BORIC ACID BYPASS TO CHARGING PUMPS MOV CIRCUIT No. G57P00

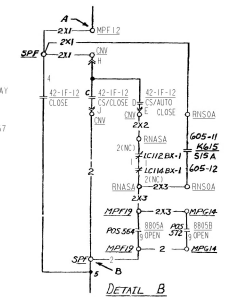

LCV112B CLOSING CIRCUIT

LCV112C SIMILAR AS SHOWN IN TABLE

REFERENCE DRAWINGS

	DWG #
1. SINGLE LINE METER & RELAY DIAGRAM, 480V SYSTEM, BUS SECTION 1F & 1G	437916
2.	437542
3. DESCRIPTION OF ELECT SCHEMATIC DIAG'S, SYMBOLS & CKT. DESIGNATIONS	050003
4. EQUIPMENT LOCATION NUMBER LIST	067997
5. PIPING SCHEMATIC CHEMICAL & VOLUME CONTROL SYSTEM	102008
6. INSTRUMENT SCHEMATIC FLOW INSTRUMENT SYSTEM	102032
7. SINGLE LINE METER & RELAY DIAGRAM, 480V, SYSTEM, BUS SECTION 1H	437543
8. SCHEMATIC DIAGRAM SAFETY INJECTION SYSTEM MOV'S	437606
9. (W) FUNCTION DIAGRAMS & ELEMENTARY WIRING DIAGRAMS	REC. # 663195
10. (W) SOLID STATE PROTECTION SYSTEM	REC. # 663231
11. SCHEMATIC DIAGRAM MONITOR LIGHT BOX - B, C	DWG. # 437637, 8
12. SCHEMATIC DIAGRAM MAIN ANNUNCIATOR	50112
13. SCHEMATIC DIAGRAM, SSPS OUTPUT RLYS, TR. A, TR. B	50186, 9, 503088
14. BLOCK DIAGRAM ERFDS TECH SUPPORT SYSTEM	446278
15. INSTR. SCHEMATIC LEVEL INSTR. SYSTEM	102033
16. SCHEMATIC DIAGRAM 8107 & 8108 NORM. CHARG. TO REGEN HX STOP MOV 1 & 2	437607-2

ALARM CIRCUIT NO'S OVER CURRENT	ALARM CIRCUIT NO'S TRANSFER OF CONT.
A14308DG	AY506600

CONTACTS	POSITION CONT. ROOM	POSITION LOCAL	REMARKS
A		X	THIS DWG
B	X		SPARE
C		X	THIS DWG
D	X		SPARE

TRANSFER SWITCH 43R-1G-57

USED AT LOCATION H02

NO SPRING RETURN

VALVE No.	INTERLOCK (POS) 8805A	8805B
LCV112B	564-9	572-9
LCV112C	564-10	572-10

FOR CONTACT DEV SEE REF. 8

NUCLEAR SAFETY RELATED

P.G.&E. SYSTEM PHASE SEQUENCE A-B-C

KEY DWG. SECTION 4

UNIT 1

DATE	REVISION DESCRIPTION
07-10-2017	REVISED PER DON-2*1216

D.D.	ZNS4
R.E.	RXG2
I.V.	N/A
P.E.	N/A

ELECTRICAL
SCHEMATIC DIAGRAM
CHEMICAL AND VOLUME CONTROL SYSTEM
MOTOR OPERATED VALVES

DIABLO CANYON POWER PLANT
PACIFIC GAS AND ELECTRIC COMPANY
SAN FRANCISCO, CALIFORNIA

DWG SCALE:
BILL OF MATL:
SUPSDS:
SUPSD BY:

DRAWING	SHEET	PAGE	REV
437607	1	0	24

RASTER=437607sip0.dgn
DGN=437607sip0.dgn
CAD USER=ZNS4 LOTS= 07-10-2017

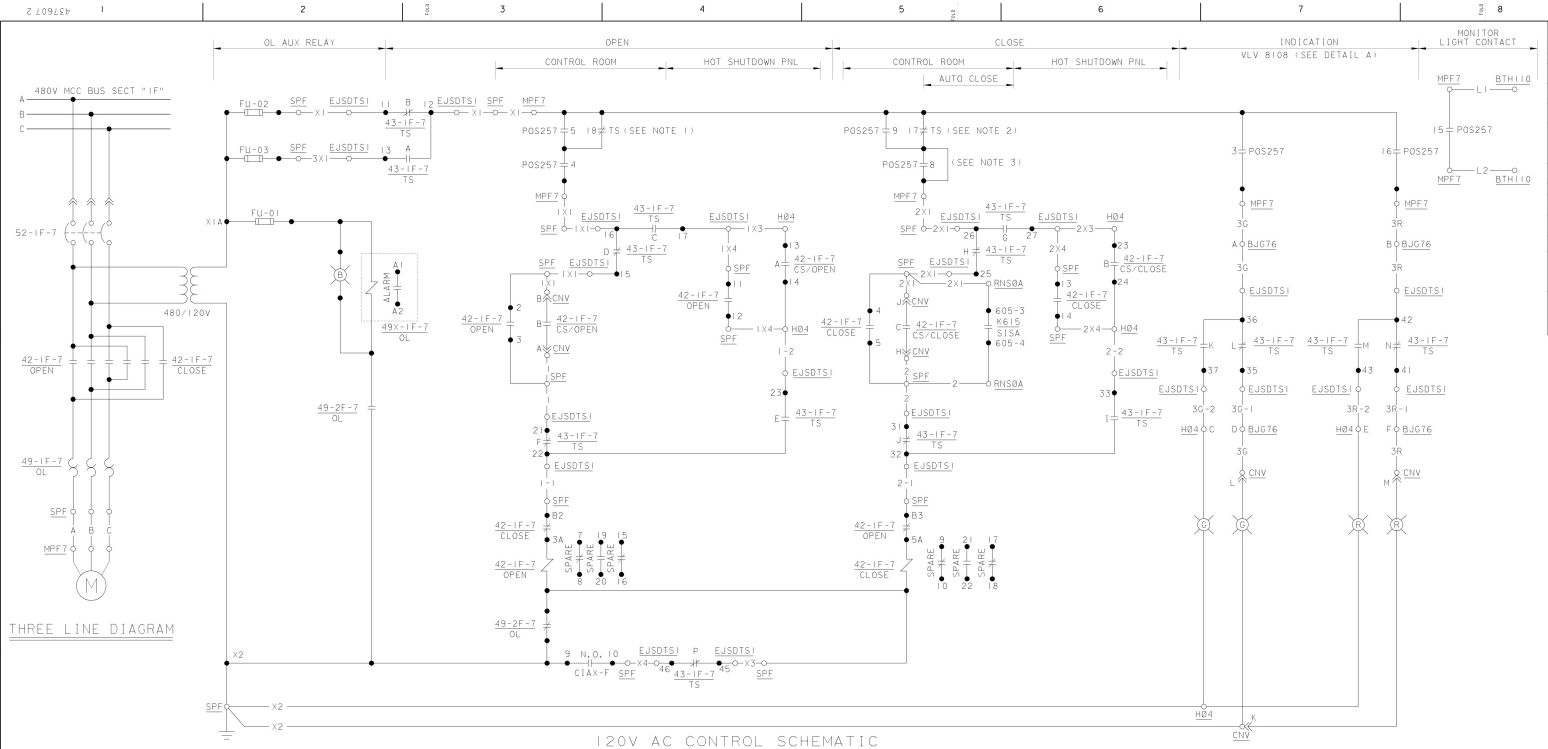

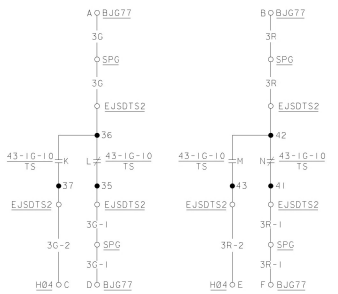

8107 NORM. CHARG. TO REGEN HX STOP MOV 1 CKT NO. F07P00

CHEMICAL & VOLUME CONTROL SYSTEM MOVs SIMILAR EXCEPT AS SHOWN IN TABLE

	VALVE NO	DESCRIPTION	CIRCUIT BKR.NO. PRIMARY	CIRCUIT NO	BUS SECT	NORMAL POSITION	ENGINEER SAFETY VITAL FUNCTION	VALVE POSITION SWITCH(POSI POS NO	MONITOR LIGHT CONTACT	RED LIGHT CONTACT	CNT. ISOL. PH A MOTOR OC. BYPASS DEVICE	CONTACT	ALARM CKT NO OVER CURRENT	TRANSFER OF CONT	MOTOR LOC. NO	SAFEGUARD SIGNAL DEVICE	LOCATION	CONTACT	SPLICE BOX	TRANSFER SWITCH LOC.
▲	8107	NORM. CHARG. TO REGEN HX STOP MOV 1	52-1F-7	F07P00	1F	OPEN	S	257	15	16	CIAX-F	9—||—10 NO	A1440BDF	AY5065DF	MPF7	K615	RNS0A	TB605 3—|—4	BJG76	EJSDTS1
▲	8108	NORM. CHARG. TO REGEN HX STOP MOV 2	52-1G-10	G10P00	1G	OPEN	S	264	15	16	CIAXI-G	9—||—10 NO	A1430BDG	AY5066DG	MPG10	K615	RNS0B	TB605 3—|—4	BJG77	EJSDTS2

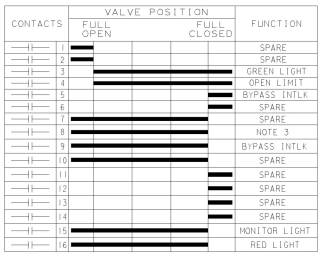

TYPICAL VALVE POSITION SWITCH CONTACT DEVELOPMENT

CONTACTS	POSITION CLOSE	NEUT	OPEN	REMARKS
A		X	X	SPARE
B			X	THIS DWG
C	X			THIS DWG
D	X	X		SPARE

CONTROL SWITCH 42-1F-7 CS, 42-1G-10 CS

USED AT LOCATION CNV
SPRING RETURN TO NEUTRAL

CONTACTS	POSITION CLOSE	NEUT	OPEN	REMARKS
13—14 A			X	THIS DWG
23—24 B	X			THIS DWG

CONTROL SWITCH 42-1F-7 CS, 42-1G-10 CS

USED AT LOCATION H04
SPRING RETURN TO NEUTRAL

CONTACTS	POSITION CONT RM	HSDP	REMARKS
12—13 A		X	THIS DWG
11 B	X		THIS DWG
16—17 C		X	THIS DWG
15 D	X		THIS DWG
22—23 E		X	THIS DWG
21 F	X		THIS DWG
26—27 G		X	THIS DWG
25 H	X		THIS DWG
32—33 I		X	THIS DWG
31 J	X		THIS DWG
36—37 K		X	THIS DWG
35 L	X		THIS DWG
42—43 M		X	THIS DWG
41 N	X		THIS DWG
46—47 O		X	SPARE
45 P	X		THIS DWG
52—53 Q		X	ALARM 437700
51 R	X		SPARE
56—57 S		X	SPARE
55 T	X		SPARE

TRANSFER SWITCH 43-1F-7 TS, 43-1G-10 TS

USED AT LOCATION EJSDTS1, EJSDTS2
NO SPRING RETURN

EQUIPMENT LOCATION NUMBERS

SPF - 480V MOTOR CONT. CENTER BUS SECT. 1F
CNV - CONTROL BOARD 1VB2
RNS0A - RACK NUC. SAFEGD OUTPUT TRAIN A
MPF7 - NORMAL CHG TO REGENERATION HEAT EXCHANGER STOP MOV1
H04 - HOT SHUTDOWN PANEL EXTENSION BOARD
EJSDTS1 - BUS F MCC TRANSFER SWITCH PANEL
EJSDTS2 - BUS G MCC TRANSFER SWITCH PANEL
BJG76 - SPLICE LOCATION JUNCTION BOX 76
BJG77 - SPLICE LOCATION JUNCTION BOX 77
RNS0B - RACK NUC. SAFEGD OUTPUT TRAIN B
MPG10 - 8108 COLD LEG LOOP CHG VV 2

LEGEND

▲ MOV'S PROVIDED WITH FIELD INSTALLED "QUICKTEST" CABLE ASSEMBLIES. SEE APPLICABLE DIAGRAM OF CONNECTIONS

NOTES:

1. SWITCH OPENS ON MECHANICAL TORQUE DURING OPENING CYCLE (18)
2. SWITCH OPENS ON MECHANICAL TORQUE DURING CLOSING CYCLE OR FULLY CLOSED VALVE (17)
3. FIELD TO INSTALL JUMPER FOR TORQUE SEATING.
4. TRANSFER SWITCH CONTACTS SHOWN IN CONTROL ROOM POSITION.

REFERENCES:

1. SINGLE LINE METER & RELAY DIAGRAM, 480V SYSTEM BUS SECTION "1F" 437916
2. SINGLE LINE METER & RELAY DIAGRAM, 480V SYSTEM BUS SECTION "1G" 437542
3. DESCRIPTION OF ELECT SCHEMATIC DIAG'S SYMBOLS & CKT. DESIGNATIONS 050003
4. EQUIPMENT LOCATION NUMBER LIST 067997
5. PIPING SCHEMATIC CHEMICAL & VOLUME CONTROL SYSTEM 102008
6. INSTRUMENT SCHEMATIC FLOW INSTRUMENT SYSTEM 102032
7. INSTRUMENT SCHEMATIC LEVEL INSTRUMENT SYSTEM 102033
8. SCHEMATIC DIAGRAM SAFETY INJECTION SYSTEM MOV's 437606
9. SCHEMATIC DIAGRAM CHEMICAL AND VOLUME CONTROL SYSTEM MOV 437607-1
10. SCHEMATIC DIAGRAM, SSPS OUTPUT RLYS, TR.A, TR.B 501869,503088
11. FUSE LIST 066144
12. DIAGRAM OF CONNECTIONS TRANSFER SWITCH PANEL 480 BUS 1F 480218
13. DIAGRAM OF CONNECTIONS TRANSFER SWITCH PANEL 480 BUS 1G 480219
14. DIAGRAM OF CONNECTIONS HOT SHUTDOWN PANEL EXTENSION BOARDS 437511
15. BILL OF MATERIALS MAIN CONTROL ROOM VERTICAL BOARD & CONTROL CONSOLES 101441-500

NUCLEAR SAFETY RELATED

P.G.&E. SYSTEM PHASE SEQUENCE A-C-B

KEY DWG. SECTION 4

UNIT 1

DATE	
07-10-2017	
D.D.	ZNS4
R.E.	RXG2
I.V.	N/A
P.E.	N/A

REVISION DESCRIPTION
INITIAL ISSUE PER ODN-2*1216 DFC-3*2643

ELECTRICAL
SCHEMATIC DIAGRAM
CHEMICAL AND VOLUME CONTROL SYSTEM
MOTOR OPERATED VALVES

DIABLO CANYON POWER PLANT
PACIFIC GAS AND ELECTRIC COMPANY
SAN FRANCISCO, CALIFORNIA

DWG SCALE:	
BILL OF MATL:	
SUPSDS:	
SUPSD BY:	

DRAWING	SHEET	PAGE	REV
437607	2	0	1

DRAWING NUMBER 437607 2

RASTER-437607s2p0.dgn
ODN-437607s2p00.dgn
CAD User:ZNS4 Date: 07-10-2017

TABLE OF DEVICES

DEVICE No	FUNCTION	RATING	MFR	TYPE	CAT/DWG	REMARKS
42-2F-9,-12, 42-2H-27, 42-2G-9,-11, -26,-57	480V AC MOTOR STARTER REVERSIBLE, SIZE 1	—	—	—	REF DWG *1,2,7	
49-2F-9,-12, 49-2H-27, 49-2G-9,-11, -26,-57	MOTOR OVERLOAD RELAY	—	WE CORP	—	—	PART OF MOTOR STARTER
49X-2F-9,-12, 49X-2H-27, 49X-2G-9,-11, -26,-57	MOTOR OVERLOAD AUXILIARY RELAY	—	WE CORP	—	—	PART OF MOTOR STARTER
52-2F-9,-12, 52-2H-7, 52-2G-9,-11, -26,-57	480V AC AIR CIRCUIT BREAKER	—	—	—	REF DWG *1,2,7	
52-2H-27R	480V A.C. AIR CIRCUIT BREAKER	—	—	—	REF DWG *7	BACK-UP OVERCURRENT PROTECTION
43X-2G-57	CONTROL TRANSFER RELAY	120V A	ELECTRO SW CORP	SERIES 24 LOR	7803F	HAND RESET
CIAX-F,H	CNT ISOL PH A AUX RELAY		—	—	(8)	CLOSED ON PH A ISOL & SIS ACTUATION
CIAX1-G	MOTOR OC BYPASS		—	—		
LCV	LEVEL CONTROL VALVE	—	—	—	—	SEE TABLE FOR VALVE NO'S
POS	VALVE POSITION SWITCH	—	—	—	—	SEE TABLE FOR SW. NOS
LC/12BX, 114BX	VOL CONT TK LOW LEVEL AUX. RELAY	—	—	—	(9)	CONTACT CLOSES ON VCT LOW-LOW-LOW LEVEL
	SAFEGUARD TEST RELAY	—	—	—	(10)	
TS K615/515A	TORQUE SWITCH SAFETY INJECTION AUX. RELAY	—	—	—	—— (9)(10)(15)	
K607	CONTAINMENT ISOL PHASE A AUX RLY	—	—	—	(9)(10)(15)	

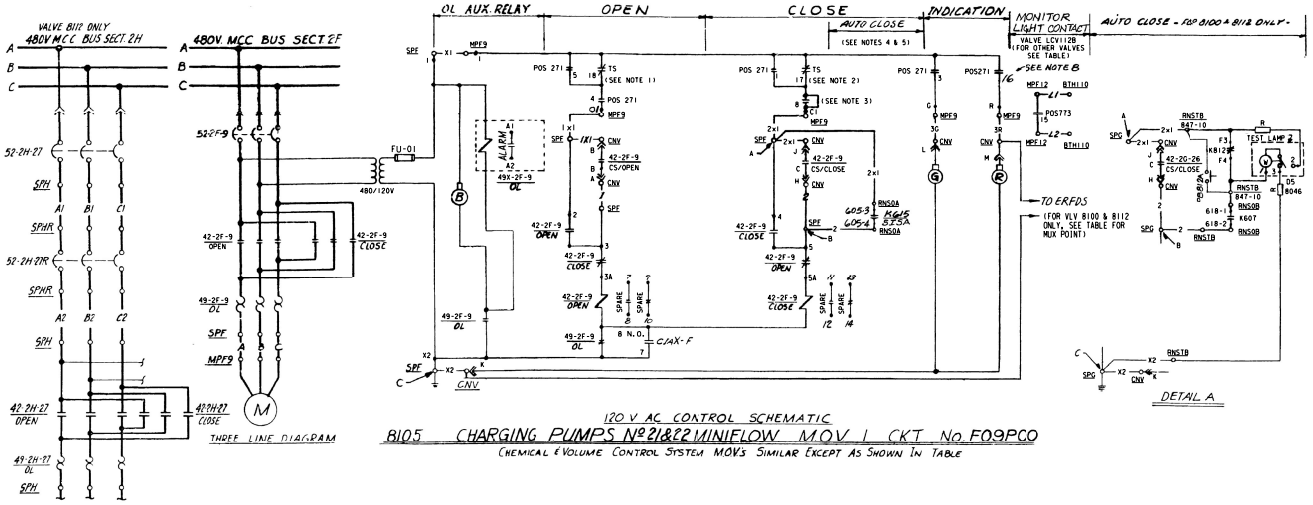

120 V AC CONTROL SCHEMATIC

8105 CHARGING PUMPS Nº2I&2 MINIFLOW MOV I CKT No. F09PC0

CHEMICAL & VOLUME CONTROL SYSTEM MOVS SIMILAR EXCEPT AS SHOWN IN TABLE

VALVE NO	DESCRIPTION	CIRCUIT BKR NO PRIMARY	BACK-UP	CIRCUIT No	BUS SECT	NORMAL POSITION	ENGINEER SAFETY VITAL FUNCTION	VLV POS SW POS NO.	MONITOR LIGHT CONTACT	SSPS TEST PB SW #	TERM NO.	LOC.	ERFDS NO.	CNT ISOL PH A MOTOR OC BYPASS DEVICE	CONTACT	VOL CONT TK LOW LEVEL DEVICE	LOC	LOW LEVEL CONTACTS INTLK	ALARM CKT NO'S OVER CURRENT	MOTOR LOC	SAFEGUARD SIGNAL (SEE NOTE 6) DEVICE	LOC.	CONTACT	PENN NO.	SAFEGUARD TEST RELAY RELAY	TEST LAMP DS	LOCATION	CONTACT
▲ 8105	CHARGING PPS 2I & 2E MINIFLOW MOV I	52-2F-9	—	F09P00	2F	OPEN	—	271	—	—	—	—	—	CIAX-F	1-3 NO	—	—	—	A14408DF	MPF9								
▲ 8106	↓ ↓ ↓ ↓ ↓ 2	52-2G-9	—	G09P00	2G	OPEN	—	278	—	—	—	—	—	CIAX1-G	1-3 NO	—	—	—	A14308DG	MPG9								
LCV112B	VOLUME CONT TK OUTLET MOV I	52-2F-12	—	F12P00	2F	OPEN	5	773	15	—	—	—	—	CIAX-F	11-13 NO	LC/12BX	RNASA	LC/114BX	A14408DF	MPF12	KG15	RNS0A	TB605 11-14-12					
LCV112C	↓ ↓ ↓ ↓ ↓ 2	52-2E-11	—	G11P00	2G	OPEN	5	781	15	—	—	—	—	CIAX1-G	11-13 NO	LC/114BX	RNASB	LC/114BX	A14308DG	MPG11	KG15	RNS0B	TB605 11-14-12					
▲ 8100	RC PPS SEAL WATER RET ISOL VV I	52-1B-16	—	G18P00	2G	OPEN	T	260	15	PB8124	847-5,10	RNS1B	MUX02-20-1	C1AX1-G	3-1 NO	—	—	—	A14308DG	MPG26	K607	RNS0B	TB606 14-2			K812	8047	RNS1B	F3-4-F4
8112	↓ ↓ ↓ ↓ ↓ 2	52-2H-27	52-2H-27R	H27P00	2H	OPEN	T	1129	15	PB8124	848-5,10	RNS1A	MUX03-10-1	C1AX-H	3-1 NO	—	—	—	A14208DH	MPH27	K607	RNS0A	TB606 14-2	12E		K812	8047	RNS1A	J3-4-J4

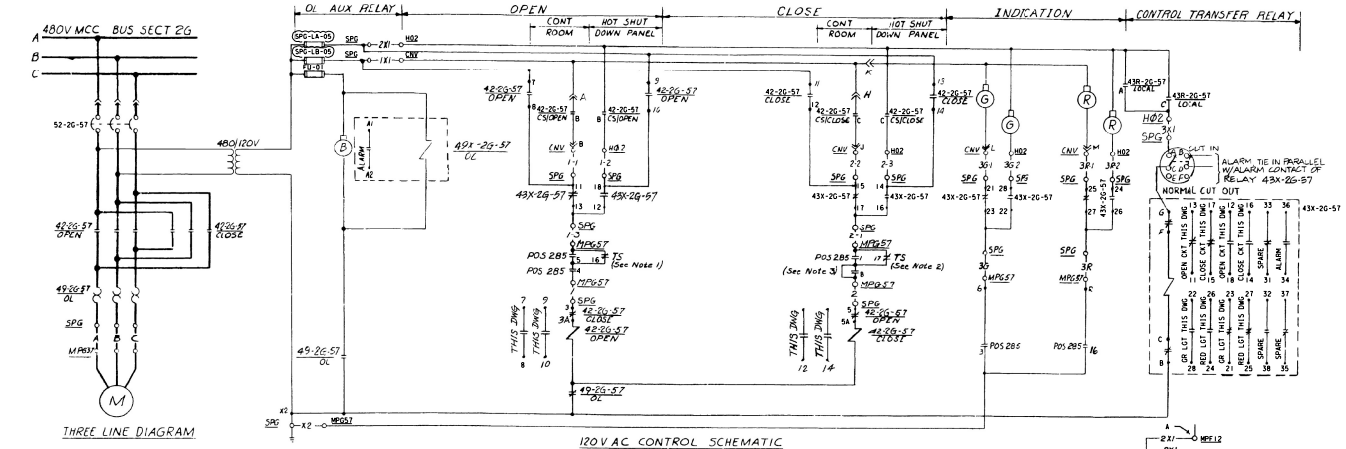

▲8104 BORIC ACID BYPASS TO CHARGING PUMPS MOV CIRCUIT No G57P00

ALARM CIRCUIT NO'S OVER CURRENT	TRANSFER OF CONT
A14308DG	AY5066DG

VALVE No.	INTERLOCK (POS)	BB05A	BB05B
LCV112B	564-9	577-9	
LCV112C	564-10	577-10	

FOR CONTACT DEV. SEE REF. 8

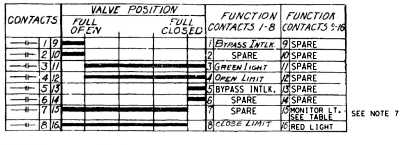

TYPICAL VALVE POSITION SWITCH CONTACT DEVELOPMENT

ACTUAL SETPOINTS ARE IN PIMS

POS 271, POS 278, POS 773, POS 781, POS 250, POS 1129

CONTACTS	POSITION CONT ROOM	POSITION LOCAL	REMARKS
A		X	THIS DWG
B	X		SPARE
C		X	THIS DWG
D	X		SPARE

TRANSFER SWITCH 43A-2G-57

USED AT LOCATION HØ2

NO SPRING RETURN

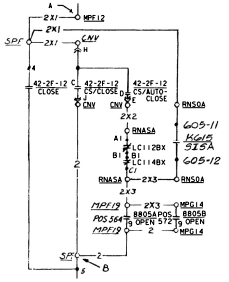

LCV112B CLOSING CIRCUIT

LCV112C SIMILAR AS SHOWN IN TABLE

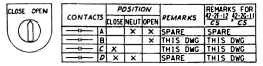

CONTACTS	POSITION CLOSE	POSITION NEUT	POSITION OPEN	REMARKS	REMARKS FOR 42-2F-9, 42-2G-9 CS	REMARKS FOR 42-2F-12, 42-2G-9 CS
A		X	X	SPARE	SPARE	SPARE
B			X	THIS DWG	THIS DWG	THIS DWG
C	X			THIS DWG	THIS DWG	THIS DWG
D	X	X		SPARE	SPARE	THIS DWG

CONTROL SWITCH - 42-2F-9, 42-2F-12, 42-2G-9 CS CS CS; 42-2F-11, 42-2G-26, 42-2G-57, 42-2H-27 CS CS

USED AT LOCATION CNV, HØ2

SPRING RETURN TO NEUTRAL.

NOTE - FOR SWITCH 42-2F-12, 42-2G-11 CENTER POSITION OF SWITCH TO READ "AUTO" NAMEPLATE TO READ: CLOSE-AUTO-OPEN

EQUIPMENT LOCATION NUMBERS

SPE - 480V MOTOR CONT CENTER, BUS SECTION 2F

MPF9 - MOTOR OPERATED VALVE 8105

CNV - CONTROL BOARD CHEMICAL & VOLUME CONTROL

HØ2 - HOT SHUTDOWN CONTROL PANEL 2, (CHARGING)

RNS0A - RACK NUCLEAR SAFEGUARD, OUTPUT TRAIN A

BTH110 - TERMINAL BOX AREA H NO 110

RNARA RACK NU. AUX. RELAY CUB. A.

SPHR - 480V MOTOR CONT. CENTER BUS SECTION 2HR, BACKUP OVERCURRENT PROTECTION

NOTES

1. SWITCH OPENS ON MECHANICAL TORQUE DURING OPENING CYCLE
2. SWITCH OPENS ON MECHANICAL TORQUE DURING CLOSING CYCLE OR FULLY CLOSED VALVE(?)
3. FIELD TO INSTALL JUMPER IF TORQUE SEATING IS REQUIRED
4. FOR VLVS 8105 & 8106 AUTOCLOSE SAFEGUARD SIGNAL IS NOT IN USE, WIRES ARE LIFTED & TAPED AT SPE, SPG, RNS0A & RNS0B.
5. VLVS. 8100 & 8112, SEE DETAIL "A". VLVS LCV112B-112C (SEE DETAIL "B")
6. ▲ INDICATES MOV'S PROVIDED WITH FIELD INSTALLED "QUICKTEST" CABLE ASSEMBLIES. SEE APPLICABLE ☐ OF CONNECTIONS.
7. FOR VALVES 8104, 8105, 8106, CONTACT "16" IS SPARE.

REFERENCES.

1. SINGLE LINE METER & RELAY DIAGRAM, 480V SYSTEM, BUS SECTION "2F"	DWG # 441237
2. — " — " — "

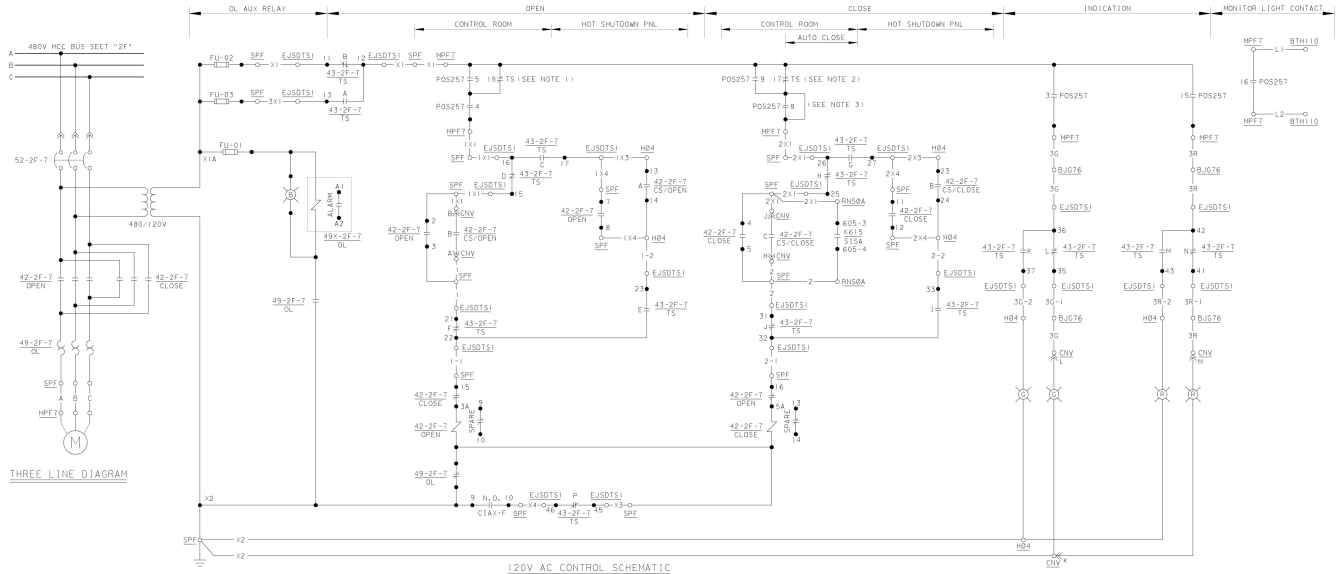

THREE LINE DIAGRAM

120V AC CONTROL SCHEMATIC

TABLE OF DEVICES

DEVICE NO	FUNCTION	RATING	MFR	TYPE	CAT/DWG*	REMARKS
42-2F-7 42-2G-10	480V AC MOTOR STARTER REVERSIBLE, SIZE 1	——	——	——	(1)(2)	
49-2F-7 49-2G-10	MOTOR OVERLOAD RELAY	——	WE CORP	——	——	PART OF MOTOR STARTER
49X-2F-7 49X-2G-10	MOTOR OVERLOAD AUX RELAY	——	WE CORP	——	——	PART OF MOTOR STARTER
43-2F-7 TS 43-2G-10 TS	TRANSFER SWITCH	15A 240V	ELECTRO SWITCH	——	24205B	
52-2F-7 52-2G-10	480V AC AIR CIRCUIT BKR	——	——	——	(1)(2)	
POS	VALVE POSITION SWITCH	——	——	——	——	SEE TABLE FOR SW NO
CIAX-F, CIAX1-G	CNT ISOL PH A AUX RELAY MOTOR OC BYPASS	——	——	——	(8)	CLOSES ON PH A ISOL & SIS ACTUATION
K615 SISA	SAFETY INJECTION AUX RELAY	——	——	——	(11)	
TS	TORQUE SWITCH	——	——	——	——	
42-2F-7 CS 42-2G-10 CS	CONTROL SWITCH	600V	CUTLER HAMMER		10250T1343 W/10250T2	USED AT LOCATION H04
42-2F-7 CS 42-2G-10 CS	CONTROL SWITCH		WE CORP		(16)	USED AT LOCATION CNV

8107 NORM. CHARG. TO REGEN HX STOP MOV 1 CKT NO. F07P00

CHEMICAL & VOLUME CONTROL SYSTEM MOVs SIMILAR EXCEPT AS SHOWN IN TABLE

	VALVE NO	DESCRIPTION	CIRCUIT BKR. NO PRIMARY	CIRCUIT NO	BUS SECT	NORMAL POSITION	ENGINEER SAFETY VITAL FUNCTION	VALVE POSITION SWITCH-(POS) POS NO	VALVE POSITION SWITCH-(POS) MONITOR LIGHT CONTACT	CNT. ISOL. PH A MOTOR OC. BYPASS DEVICE	CNT. ISOL. PH A MOTOR OC. BYPASS CONTACT	ALARM CKT NO OVER CURRENT	ALARM CKT NO TRANSFER OF CONT	MOTOR LOC. NO	SAFEGUARD SIGNAL DEVICE	SAFEGUARD SIGNAL LOCATION	SAFEGUARD SIGNAL CONTACT	SPLICE BOX	TRANSFER SWITCH LOC.
▲	8107	NORM. CHARG. TO REGEN HX STOP MOV 1	52-2F-7	F07P00	2F	OPEN	S	257	16	CIAX-F	9—||—10 NO	AI4408DF	AY5065DF	MPF7	K615	RNS0A	TB605 3—|—4	BJG76	EJSDTS1
▲	8108	NORM. CHARG. TO REGEN HX STOP MOV 2	52-2G-10	G10P00	2G	OPEN	S	264	15	CIAX1-G	9—||—10 NO	AI4308DG	AY5066DG	MPG10	K615	RNS0B	TB605 3—|—4	BJG77	EJSDTS2

CLOSE OPEN

CONTACTS		POSITION CLOSE	NEUT	OPEN	REMARKS
—|—|—	A		X	X	SPARE
—|—|—	B			X	THIS DWG
—|—|—	C	X			THIS DWG
—|—|—	D	X	X		SPARE

CONTROL SWITCH 42-2F-7, 42-2G-10 CS

USED AT LOCATION CNV
SPRING RETURN TO NEUTRAL

CLOSE OPEN

CONTACTS		POSITION CLOSE	NEUT	OPEN	REMARKS
13—|—|—14	A			X	THIS DWG
23—|—|—24	B	X			THIS DWG

CONTROL SWITCH 42-2F-7, 42-2G-10 CS

USED AT LOCATION H04
SPRING RETURN TO NEUTRAL

VALVE *8107 POSITION SWITCH CONTACT DEVELOPMENT

CONTACTS		VALVE POSITION FULL OPEN	FULL CLOSED	FUNCTION
—|—|—	1			SPARE
—|—|—	2			SPARE
—|—|—	3			GREEN LIGHT
—|—|—	4			OPEN LIMIT
—|—|—	5			BYPASS INTLK
—|—|—	6			SPARE
—|—|—	7			SPARE
—|—|—	8			NOTE 3
—|—|—	9			BYPASS INTLK
—|—|—	10			SPARE
—|—|—	11			SPARE
—|—|—	12			SPARE
—|—|—	13			SPARE
—|—|—	14			SPARE
—|—|—	15			RED LIGHT
—|—|—	16			MONITOR LIGHT

VALVE *8108 POSITION SWITCH CONTACT DEVELOPMENT

CONTACTS		VALVE POSITION FULL OPEN	FULL CLOSED	FUNCTION
—|—|—	1			SPARE
—|—|—	2			SPARE
—|—|—	3			GREEN LIGHT
—|—|—	4			OPEN LIMIT
—|—|—	5			BYPASS INTLK
—|—|—	6			SPARE
—|—|—	7			SPARE
—|—|—	8			NOTE 3
—|—|—	9			BYPASS INTLK
—|—|—	10			SPARE
—|—|—	11			SPARE
—|—|—	12			SPARE
—|—|—	13			SPARE
—|—|—	14			SPARE
—|—|—	15			MONITOR LIGHT
—|—|—	16			RED LIGHT

CONT RM HSDP

CONTACTS		POSITION CONT RM	HSDP	REMARKS
12—|—13	A		X	THIS DWG
—|—11	B	X		THIS DWG
16—|—17	C		X	THIS DWG
—|—15	D	X		THIS DWG
22—|—23	E		X	THIS DWG
—|—21	F	X		THIS DWG
26—|—27	G		X	THIS DWG
—|—25	H	X		THIS DWG
32—|—33	I		X	THIS DWG
—|—31	J	X		THIS DWG
36—|—37	K		X	THIS DWG
—|—35	L	X		THIS DWG
42—|—43	M		X	THIS DWG
—|—41	N	X		THIS DWG
46—|—47	O		X	SPARE
—|—45	P	X		THIS DWG
52—|—53	Q		X	ALARM, 441288
—|—51	R	X		SPARE
56—|—57	S		X	SPARE
—|—55	T	X		SPARE

TRANSFER SWITCH 43-2F-7, 43-2G-10 TS

USED AT LOCATION EJSDTS1, EJSDTS2
NO SPRING RETURN

EQUIPMENT LOCATION NUMBERS

SPF - 480V MOTOR CONT. CENTER BUS SECT. 2F
CNV - CONTROL BOARD 2VB2
RNS0A - RACK NUC. SAFEGD OUTPUT TRAIN A
MPF7 - NORMAL CHG TO REGENERATOR HEAT EXCHANGE STOP MOV1
H04 - HOT SHUTDOWN PANEL EXTENSION BOARD
EJSDTS1 - BUS F MCC TRANSFER SWITCH PANEL
EJSDTS2 - BUS G MCC TRANSFER SWITCH PANEL
BJG76 - SPLICE LOCATION JUNCTION BOX 76
BJG77 - SPLICE LOCATION JUNCTION BOX 77
RNS0B - RACK NUC. SAFEGD OUTPUT TRAIN B
MPG10 - 8108 COLD LEG LOOP CHG VV 2

LEGEND

▲ MOV'S PROVIDED WITH FIELD INSTALLED "QUICKTEST" CABLE ASSEMBLIES. SEE APPLICABLE DIAGRAM OF CONNECTIONS

NOTES

1. SWITCH OPENS ON MECHANICAL TORQUE DURING OPENING CYCLE (1B)
2. SWITCH OPENS ON MECHANICAL TORQUE DURING CLOSING CYCLE OR FULLY CLOSED VALVE (1T)
3. FIELD TO INSTALL JUMPER IF TORQUE SEATING IS REQUIRED.
4. TRANSFER SWITCH CONTACTS SHOWN IN CONTROL ROOM POSITION.

REFERENCES:

1. SINGLE LINE METER & RELAY DIAGRAM, 480V SYSTEM BUS SECTION "2F" 441237
2. SINGLE LINE METER & RELAY DIAGRAM, 480V SYSTEM BUS SECTION "2G" 441238
3. DESCRIPTION OF ELECT SCHEMATIC DIAG'S SYMBOLS & CKT. DESIGNATIONS 050003
4. EQUIPMENT LOCATION NUMBER LIST 067998
5. PIPING SCHEMATIC CHEMICAL & VOLUME CONTROL SYSTEM 108008
6. INSTRUMENT SCHEMATIC FLOW INSTRUMENT SYSTEM 108032
7. INSTRUMENT SCHEMATIC LEVEL INSTRUMENT SYSTEM 108033
8. SCHEMATIC DIAGRAM SAFETY INJECTION SYSTEM MOV's SH.2 441318
9. SCHEMATIC DIAGRAM CHEMICAL AND VOLUME CONTROL SYSTEM MOV 441324
10. SCHEMATIC DIAGRAM, SSPS OUTPUT RLYS, TR.A, TR.B ..... 503089, -093
11. SOLID STATE PROTECTION SYSTEM 663231
12. FUSE LIST 066145
13. DIAGRAM OF CONNECTIONS TRANSFER SWITCH PANEL 480 BUS 2F 393441
14. DIAGRAM OF CONNECTIONS TRANSFER SWITCH PANEL 480 BUS 2G 393442
15. DIAGRAM OF CONNECTIONS HOT SHUTDOWN PANEL EXTENSION BOARDS 393446
16. BILL OF MATERIALS MAIN CONTROL ROOM CONSOLES & VERTICAL BOARDS 107941-301

NUCLEAR SAFETY RELATED

KEY DWG. SECTION 4

P.G.&E. SYSTEM PHASE SEQUENCE A-C-B

UNIT 2

DATE	
06-16-2016	
D.D.	PNWB
R.E.	FAZI
I.V.	N/A
P.E.	N/A

REVISION DESCRIPTION
INITIAL ISSUE PER ODN-2*1368 DFC-3*2396, 3*2481

ELECTRICAL
SCHEMATIC DIAGRAM
CVCS
MOTOR OPERATED VALVES

DIABLO CANYON POWER PLANT
PACIFIC GAS AND ELECTRIC COMPANY
SAN FRANCISCO, CALIFORNIA

DWG SCALE:	
BILL OF MATL:	
SUPSDS:	
SUPSD BY:	

DRAWING	SHEET	PAGE	REV
441324	2	0	1

DRAWING NUMBER 441324 2

RASTER=441324s2.dgn
DGN=441324s2.dgn
CAD User=PNWB Date=06-16-2016

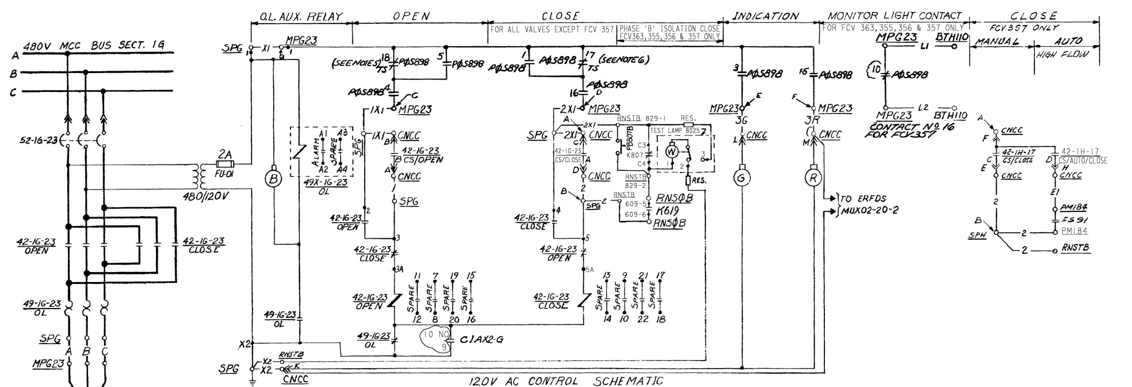

THREE LINE DIAGRAM

FCV363 RCP OIL COOLER CCW RETURN - ISOLATION VALVE Nº 2 CKT. No. G23P00

COMPONENT COOLING SYSTEM M.O.V.S. SIMILAR EXCEPT AS SHOWN IN TABLE. FOR VALVE FCV357 SEE ALSO DETAIL A.

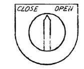

CONTACTS	POSITION CLOSE	NEUT.	OPEN	REMARKS
A	X			This Dwg.
B			X	This Dwg.

CONTROL SWITCH 42-1F-23/CS, 42-1G-23/CS, 42-1G-36/CS, 42-1H-16/CS, 42-1H-18/CS

USED AT LOCATION CNCC OPERATOR OT2V6
SPRING RETURN TO NEUTRAL

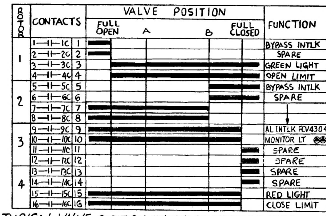

TYPICAL VALVE POSITION SWITCH CONTACT DEVELOPMENT

FCV363, FCV355, FCV356, FCV430, FCV431

▲ SEE NOTE 3, ▲▲ SEE NOTE 1

TABLE OF DEVICES

DEVICE No	FUNCTION	RATING	MFR.	TYPE	CAT/DWG.#	REMARKS
42-1G-23,-28,-36; 42-1H-16,-17,-18; 42-1F-11,-23	480V AC MOTOR STARTER REVERSIBLE, SIZE I	—	—	—	REF. DWG. #1,2,3	
52-1F-23R; 52-1H-18R	480V AIR CIRCUIT BREAKER		WE		(1) (3)	BACK-UP BREAKER
49-1G-23,-28,-36; 49-1H-16,-17,-18; 49-1F-11,-23	MOTOR OVERLOAD RELAY	—	W.E CORP.	—	—	PART OF MOTOR STARTER
49X-1G-23,-28,-36; 49X-1H-16,-17,-18; 49X-1F-11,-23	MOTOR OVERLOAD AUX. RELAY	—	WE CORP.	—	—	PART OF MOTOR STARTER
CIAX-F, H; CIAX2-G	CNT ISOL. PH A AUX. RELAY MOTOR OC BYPASS.				(16)	CLOSES ON PH A ISOL & SIS ACTUATION
52-1G-23,-28,-36; 52-1H-16,-17,-18; 52-1F-11,-23	480V AC AIR CIRCUIT BKR.	—	—	—	REF. DWG. #1,2,3	
K619	CONTAINMENT ISOL. PHASE B AUX REL	—	—	—	(8) (9)(17)	
K807	SAFEGUARD TEST RELAY	—	—	—	(9)	CONTACT OPEN DURING TEST
FCV-	FLOW CONTROL VALVE					SEE TABLE FOR VALVE NO'S
POS-	FCV POSITION SWITCH					SEE TABLE FOR SW. NO'S
TS	TORQUE SWITCH	—	—	—	—	—
FS 91; FS 92A,B	RCP BARRIER CCW RET. FL. SW.				(14),(7)	CONTACT TO CLOSE ON HI-FLOW; CONTACT TO CLOSE ON LOW-FLOW

VALVE NO.	DESCRIPTION	CKT BKR NO	CKT NO.	BUS SECT	NORMAL POSITION	ENGINEER SAFETY VITAL FUNCTION	VALVE POS. SW. (POS)	SSPS TEST PUSHBUTTON PB SW#	TERM BLK	TRAIN A	PB SW#	TERM BLK	TRAIN B	CNT. ISOL PH. A MOTOR OC BYPASS DEVICE	CONTACT	ALARM CKT. No. RCP BARRIER LOW FLOW (FS92)	OVER-CURRENT	HX OUTLET TEMP. ALARM	LOCATION OF CONTROL	MOTOR LOCATION	ISOLATION SIGNAL PHASE B DEVICE	LOC.	CONTACT	ERFDS
FCV363	RCP OIL CLR CCW RET ISOL. VLV 2	52-1G-23	G23P00	1G	OPEN	P	898	—	—	—	PB807B	829-1,2	RNSTB	CIAX2-G	9 ⊣⊢ 10 NO	—	AI4308DG	—	CNCC	MPG23	K619	RNSØB	TB609 5 & 6	MUX02-20-2
▲ FCV355	CCW SUPPLY HEADER "C"	52-1H-16	H16P00	1H	OPEN	P	895	PB807A	817-9,10	RNSTA	—	—	—	CIAX-H	13 ⊣⊢ 14 NO	—	AI4208DH	—	CNCC	MPH16	K619	RNSØA	TB609 1 & 2	MUX03-10-4
FCV356	RCP CCW SUPPLY HEADER	52-1G-36	G36P00	1G	OPEN	P	896	PB807B	816-9,10	RNSTA	—	—	—	CIAX2-G	7 ⊣⊢ 8 NO	—	AI4308DG	—	CNCC	MPG36	K619	RNSØA	TB609 3 & 4	MUX02-20-3
▲ FCV430	CCW HX11 OUTLET HEADER A	52-1F-11	F11P00	1F	—	—	903	—	—	—	—	—	—	—	—	—	AI4408DF	AT2200DF	CNCC	MPF11	—	—	—	—
▲ FCV431	CCW HX12 OUTLET HEADER B	52-1G-28	G28P00	1G	—	—	905	—	—	—	—	—	—	—	—	—	AI4308DG	AT2201DG	CNCC	MPG28	—	—	—	—
▲ FCV357	RCP THERM BARRIER CCW RET ISOL VLV 2	52-1H-17	H17P00	1H	OPEN	P	899	—	—	—	PB807A	831-1,2	RNSTB	CIAX-H	17 ⊣⊢ 18 NO	AF0431D	AI4208DH	—	CNCC	MPH17	K619	RNSØB	TB609 7 & 8	MUX03-10-3
														—	—									—

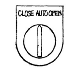

CONTACTS	POSITION CLOSE	AUTO	OPEN	REMARKS
A		X	X	SPARE
B			X	This Dwg.
C	X			This Dwg.
D	X	X		This Dwg.

CONTROL SWITCH 42-1H-17/CS

USED AT LOCATION CNCC OPERATOR OT2V6
SPRING RETURN TO AUTO

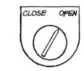

CONTACTS	POSITION CLOSE	OPEN	REMARKS
A	X		THIS DWG
B		X	THIS DWG

CONTROL SWITCH 42-1F-11/CS, 42-1G-28/CS

USED AT LOCATION CNCC
NO SPRING RETURN

LEGEND:

▲ MOV'S PROVIDED WITH FIELD INSTALLED "QUICKTEST" CABLE ASSEMBLIES. SEE APPLICABLE DIAGRAM OF CONNECTIONS.

EQUIPMENT LOCATION NUMBERS

SPG - 480V MOTOR CONTROL CENTER BUS SECTION 1G
MPG23 - MOTOR OPERATED VALVE FCV363
CNCC - CONTROL BOARD, COMPONENT COOLING
BTG12E - TERMINAL BOX, AREA G, No. 12E
BTH110 - TERMINAL BOX, AREA H Nº 110
RNSØB - RACK NU. SAFEGD. OUTPUT TRAIN B
RNSTB - RACK NU. SAFEGD. TEST TRAIN B
SPHR - 480V MCC BUS SECTION 1H, BACK-UP O.C.

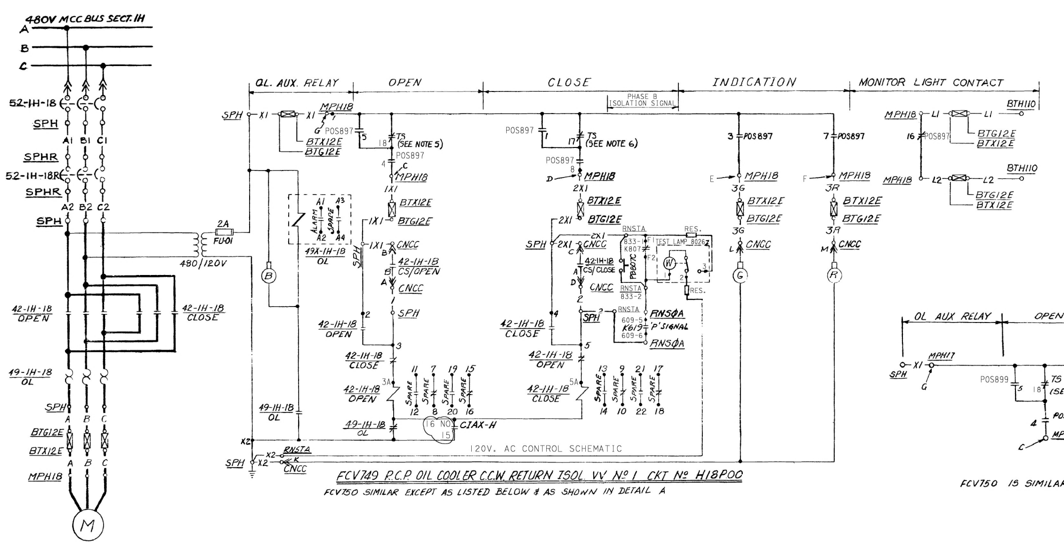

THREE LINE DIAGRAM

FCV749 R.C.P. OIL COOLER C.C.W. RETURN ISOL. VV Nº 1 CKT Nº H18P00

FCV750 SIMILAR EXCEPT AS LISTED BELOW & AS SHOWN IN DETAIL A

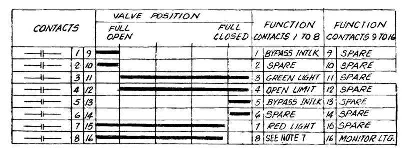

FCV749, FCV357 & FCV750 W POSITION SWITCH CONTACT DEVELOPMENT.

ACTUAL SETPOINTS ARE IN PIMS

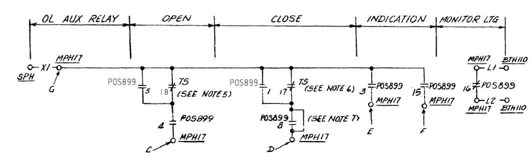

DETAIL A

FCV750 IS SIMILAR EXCEPT LOC. CODE IS MPF23 & POS SW Nº IS POS1073

NOTES:

1. MONITOR LIGHT APPLIES FOR FCV363, FCV355, FCV356 ONLY.

3. POS CONTACT INTERLOCK WITH TEMP. SW. TS181A & B FOR FCV 430. AND TS182A & B FOR FCV 431. THERE SHOULD BE NO ALARM WHEN FCV IS CLOSED. SEE REFERENCE 13.

5. SWITCH OPENS ON MECHANICAL TORQUE DURING OPENING CYCLE (18)
6. SWITCH OPENS ON MECHANICAL TORQUE DURING CLOSING CYCLE OR FULLY CLOSED VALVE (17)
7. FIELD TO INSTALL JUMPER FOR TORQUE SEATING. (FOR FCV357 AND FCV750 ONLY, FCV 749 NOT APPLICABLE

REFERENCE DRAWINGS

1- SINGLE LINE METER & RELAY DIAGRAM, 480V SYSTEM BUS SECT "1F" — DWG. 437916
2- "1G" — 437542
3- "1H" — 437543
4- DESCRIPTION OF ELECT. SCHEMATIC DIAG., SYMBOLS & CKT. DESIGNATIONS — 050003
5- EQUIPMENT LOCATION NUMBER LIST — 101900
6- PIPING SCHEMATIC COMPONENT COOLING WATER SYSTEM — 102014
7- INSTRUMENT SCHEMATIC FLOW INSTRUMENT SYSTEMS — 102032
8- Ⓦ FUNCTION DIAGRAM — REC. 663195
9- Ⓦ SOLID STATE PROTECTION SYSTEM — REC. 663231
10- WIRING DIAGRAM ROTORK SYNCROSET FCV749 — REC. 663314-59
11- LIMITORQUE WIRING DIAG, FCV363, 355, 356, 430 & 431 — REC. 686385/01
13- Instrument Schematic Temp. Instrument System — DWG. 102035
14- SCHEMATIC DIAGRAM MAIN ANNUNCIATOR SHEET 1 — DWG. 501121
15- SCHEMATIC DIAGRAM MONITOR LIGHT BOX D — DWG. 437699
16- SCHEMATIC DIAGRAM SIS MOV'S — DWG 437606
17. SCHEM DIAG SSPS OUTPUT RELAYS, TRAIN A, TRAIN B — DWGS. 501869, 503088 Ⓦ

VALVE NO.	DESCRIPTION	CKT BKR NO. PRIMARY	BACK UP	CIRCUIT NO.	BUS SECT	NORMAL POS.	ENGR. SAFETY VITAL FUNCTION	VALVE POSITION SWITCH (POS) POS NO.	RED LT. CONTACT	SSPS TEST PUSHBUTTON PB SW#	TERMBLK	TRAIN A	CNT. ISOL PH A MOTOR OC BYPASS DEVICE	CONTACT	PENETR. NO.	MOTOR LOC. NO.	CONTAINMENT PHASE 'B' ISOLATION DEVICE	LOCATION	CONTACT	ALARM CKT. NO. OVERCURRENT	
FCV749	R.C.P. OIL COOLER CCW. RETURN ISOL. Vv 1	52-1H-18	52-1H-18R	H18P00	1H	OPEN	P	897	7	PB807C	833-1,2	RNSTA	CIAX-H	15 ⊣⊢ 16 NO	12E	MPH18	K619	RNSØA	TB609 5 & 6	AI4208DH	
▲ FCV750	R.C.P. THERM. BARRIER CCW RET. ISOL. Vv. 1	52-1F-23	52-1F-23R	F23P00	1F	OPEN	P	1073	15	PB807D	831-1,2	RNSTA	CIAX2-F	3 ⊣⊢ 4 NO	26E	MPF23	K619	RNSØA	TB609 7 & 8	AI4408DF	

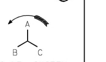

P.G.&E. SYSTEM PHASE SEQUENCE A-C-B

REGISTERED PROFESSIONAL ENGINEER KEITH B. BUSH E 15507 Exp. 6/30/01 ELECTRICAL STATE OF CALIFORNIA

NUCLEAR SAFETY RELATED

VALVE NO's: FCV355, FCV356, FCV357, FCV363, FCV430, FCV431, FCV749 & FCV750

KEY DWG. SECTION 4

UNIT 1

DATE	3/3/99	DESCRIPTION	COORDINATION	
DWN.	ARM4	Revised per AR A0463245 & FCT 023234	NUCL.	-
R.E.	RXG2		MECH.	-
INDEP. VERIFIER	KBB2	D	ELEC.	-
P.E.	KBB2		CIVIL	-
			PIPING	-
			I&C	-
		REVISION INFORMATION		

ELECTRICAL
SCHEMATIC DIAGRAM
COMPONENT COOLING SYSTEM
MOTOR OPERATED VALVES

DIABLO CANYON POWER PLANT
PACIFIC GAS AND ELECTRIC COMPANY
SAN FRANCISCO, CALIFORNIA

DWG SCALE	
BILL OF MATL	
SUPSDS	
SUPSD BY	
SHEET NO.	1 OF

437608 REV 20

U2-441325

DRAWING NUMBER 437608

CAD User: ARM4 Date: 12-31-1998
DGN=437608.DGN
RASTER=437608.TIF

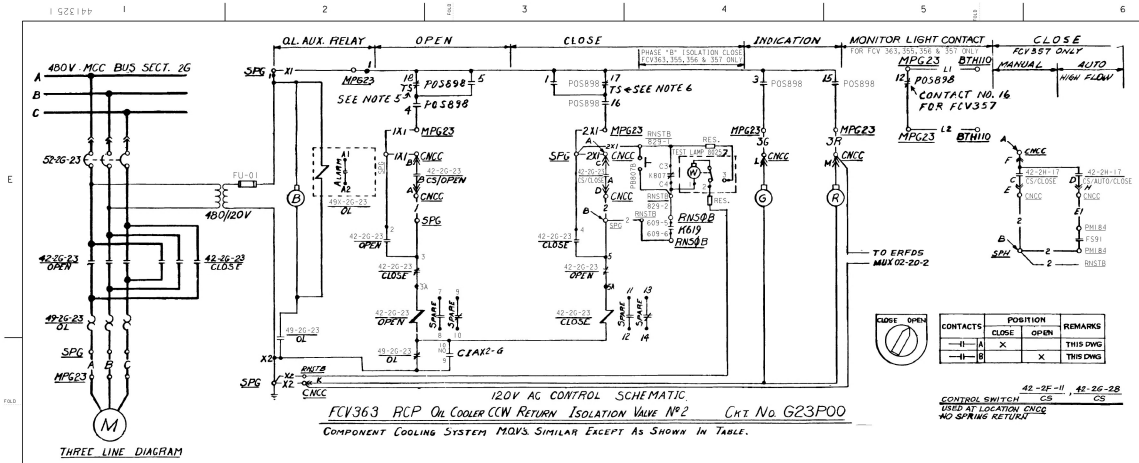

CONTACTS	POSITION CLOSE	POSITION OPEN	REMARKS
A	X		THIS DWG
B		X	THIS DWG

CONTROL SWITCH 42-2F-11, 42-26-28 CS CS
USED AT LOCATION CNCC NO SPRING RETURN

CONTACTS	POSITION CLOSE	POSITION NEUT.	POSITION OPEN	REMARKS
A	X			THIS DWG.
B			X	THIS DWG.

CONTROL SWITCH 42-2F-23, 42-26-23, CS CS; 42-26-36 CS, 42-2H-16 CS, 42-2H-18 CS
USED LOCATION CNCC OPERATOR OT2V6
SPRING RETURN TO NEUTRAL

CONTACTS	VALVE POSITION FULL OPEN	VALVE POSITION FULL CLOSED	FUNCTION	REMARKS
24–25	BU/LS	X	X	Good Torque & Limit Switch
26–27	CT/LS	X	X	Close Torque + Limit Switch
15–16	OAS1	X		SPARE
6–7	CAS1	X	X	SPARE
17–18	OAS2	X	X	Green Light
8–9	CAS2	X	X	Red Light
10–11	IAS1	X	X	Spare
12–13	IAS2	X	X	Spare
21–22	IAS3	X	X	Spare
23–24	IAS4	X	X	Monitor Light
28–29	IAS8	X	X	SPARE
30–31	IAS6	X	X	Spare

TYPICAL VALVE POSITION SWITCH CONTACT DEVELOPMENT FOR FCV356 & FCV363

VALVE No	DESCRIPTION	CIRCUIT BKR. Nº	CIRCUIT No.	BUS SECT.	NORMAL POSITION	ENGINEER SAFETY VITAL FUNCTION	VLV POS SW (RDS) POS No.	ERFDS	CNT. ISOL. PH A MOTOR OC BYPASS DEVICE	CONTACT	ALARM CKT. NO. NON BARRIER NON FUSED	OVER-CURRENT	HI AMBIENT TEMP. ALARM	LOCATION OF CONTROL	MOTOR LOCATION	ISOLATION SIGNAL PHASE B DEVICE	LOC.	CONTACT	SSPS TEST PUSHBUTTON PUSH BUTTON SWITCH	TERM. BLOCK	TRAIN A LOC	TRAIN B LOC.
FCV363	RCP Oil Clr CCW Ret. Isol. Vlv 2	52-2G-23	G23P00	2G	OPEN	P	698	MUX02-20-2	C1AX2-G	9 / 10	—	A1430801	—	CNCC	MPG23	K619	RNSQB	TB609 5, 6	PB BOTA	B17-9,10	RNSTA	—
▲ FCV355	CCW Supply Header 'C'	52-2H-16	H16P00	2H	OPEN	P	895	MUX03-10-4	C1AX-H	13 / 14	—	A1420801	—	CNCC	MPH16	K619	RNSQA	TB609 1, 2	PB BOTB	B16-9,10	RNSTA	—
FCV356	RCP CCW Supply Header	52-2G-36	G36P00	2G	OPEN	P	896	MUX02-20-3	C1AX2-G	7 / 8	—	A1430802	—	CNCC	MPG36	K619	RNSQA	TB609 3, 4	PB BOTB	B29-1,2	—	RNSTB
▲ FCV430	CCW HX2I OUTLET HEADER A	52-2F-11	F11P00	2F	—	—	903	—	—	—	—	A1440802	A1220D0F	CNCC	MPE11	—	—	—	PB BOTA	B31-1,2	—	RNSTB
▲ FCV431	CCW HX2E OUTLET HEADER B	52-2G-28	G28P00	2G	—	—	905	—	—	—	—	A1430803	A1220D0E	CNCC	MPG28	—	—	—				
▲ FCV357	RCP THERM BARRIER CCW RET. ISOL. VLV. 2	52-2H-17	H17P00	2H	OPEN	P	899	MUX03-10-3	C1AX-H	17 / 18	AF0431D	A1420801	—	CNCC	MPH17	K619	RNSQB	TB609 11, 12				

TABLE OF DEVICES

DEVICE No	FUNCTION	RATING	MFR.	TYPE	CAT/DWG.#	REMARKS
42-2G-23, -28, -36, 42-2H-16, -17, -18 42-2F-11, -23	480V AC MOTOR STARTER REVERSIBLE, SIZE 1	—	—	—	Per. Dwg. #1, 2, 3	
49-2G-23, -28, -36, 49-2H-16, -17, -18 49-2F-11, -23	Motor Overload Relay	—	W.E. CORP.	—	—	PART OF MOTOR STARTER
49X-2G-23, -28, -36, 49X-2H-16, -17, -18 49X-2F-11, -23	Motor Overload Aux. Relay	—	W.E. CORP.	—	—	PART OF MOTOR STARTER
C1AX-F,H C1AX2-G	CONTAINMENT ISOL PH A AUX RELAY	—	—	—	(16)	CLOSED ON PHASE A ISOL. & CIS ACTUATION
52-2G-23, -28, -36, 52-2H-16, -17, -18R 52-2F-11, -23, -23R	480V AC Air Circuit Bkr.	—	—	—	Per. Dwg. #1, 2, 3	
K619	Containment Isol. Phase B Aux Rel	—	—	—	(8)(9)(18)	
K807	Safeguard. Test Relay	—	—	—	(9)	Contact Open During Test
FCV-	Flow Control Valve					See Table For Valve No's
POS-	FCV Position Switch					See Table For Sw. No's
TS	Torque Switch	—	—	—		
FS 91 FS 92	RCP Barrier CCW Ret. Fl. Sw.				(7)(19)	CONTACT TO CLOSE ON HI-FLOW CONTACT TO CLOSE ON LOW-FLOW

CONTACTS	POSITION CLOSE	POSITION AUTO	POSITION OPEN	REMARKS
A		X	X	SPARE
B			X	THIS DWG.
C	X			THIS DWG.
D	X	X		THIS DWG.

CONTROL SWITCH 42-2H-17 CS
USED AT LOCATION CNCC OPERATOR OT2V6
SPRING RETURN TO AUTO

CONTACTS	VALVE POSITION FULL OPEN	VALVE POSITION FULL CLOSE	FUNCTION CONTACTS 1 TO 8	FUNCTION CONTACTS 9 TO 16
1	9		1 BYPASS INTLK	9 SPARE
2	10		2 SPARE	10 SPARE
3	11		3 GREEN LIGHT	11 SPARE
4	12		4 OPEN LIMIT	12 SPARE
5	13		5 BYPASS INTLK	13 SPARE
6	14		6 SPARE	14 SPARE
7	15		7 SPARE	15 RED LIGHT
8	16		8 CLOSE LIMIT SEE NOTE 7	16 MONITOR LIGHT

FCV749 VV POSITION SWITCH CONTACT DEVELOPMENT
ACTUAL SETPOINTS ARE IN SAP

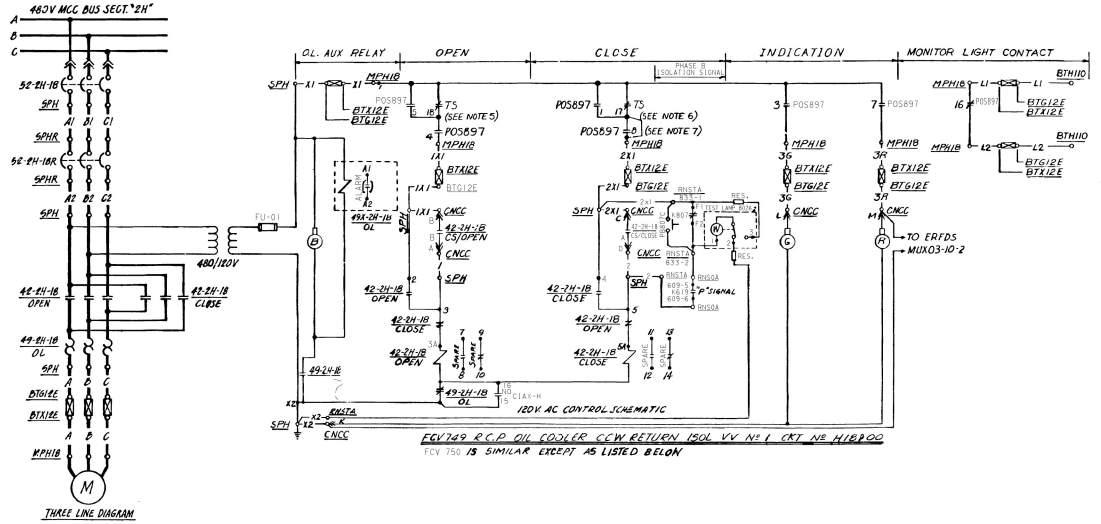

CONTACTS	VALVE POSITION FULL OPEN	VALVE POSITION FULL CLOSED	FUNCTION CONTACTS 1 TO 8	FUNCTION CONTACTS 9 TO 16
1	9		1 BYPASS INTLK	9 SPARE
2	10		2 SPARE	10 SPARE
3	11		3 GREEN LIGHT	11 SPARE
4	12		4 OPEN LIMIT	12 SPARE
5	13		5 BYPASS INTLK	13 SPARE
6	14		6 SPARE	14 SPARE
7	15		7 SPARE	15 RED LIGHT
8	16		8 CLOSE LIMIT SEE NOTE 7	16 MONITOR LIGHT

FCV357 & FCV750 VV POSITION SWITCH CONTACT DEVELOPMENT
ACTUAL SETPOINTS ARE IN SAP

ROTOR	CONTACTS	VALVE POSITION FULL OPEN	VALVE POSITION FULL CLOSED	FUNCTION
1	1–1C 1			BYPASS INTLK
	2–2C 2			SPARE
	3–3C 3			GREEN LIGHT
	4–4C 4			OPEN LIMIT
2	5–5C 5			BYPASS INTLK
	6–6C 6			SPARE
	7–7C 7			SPARE
	8–8C 8			SPARE
3	9–9C 9			RL INTLK FCV430, 431 △
	10–10C 10			SPARE
	11–11C 11			SPARE
	12–12C 12			MONITOR LIGHT ▲▲
4	13–13C 13			SPARE
	14–14C 14			SPARE
	15–15C 15			RED LIGHT
	16–16C 16			CLOSE LIMIT

TYPICAL VALVE POSITION SWITCH CONTACT DEVELOPMENT
FCV355, FCV356, FCV430, FCV431, FCV363
▲▲ SEE NOTE 1
△ SEE NOTE 3
ACTUAL SETPOINTS ARE IN PIMS

EQUIPMENT LOCATION NUMBERS

SPG - 480V Motor Control Center Bus Section "2G"
MPG23 - Motor Operated Valve FCV363
CNCC - Control Board, Component Cooling
BTG12E - Terminal Box, Area G, No. 12E
BTH110 - Terminal Box Area H No 110
RNSQB - Rack No. 5A Safeg. Output Train B
RNSTB - Rack No. 5A Safeg. Test Train B
SPHR - 480V Motor Control Center Bus Section 2HR, Back-up Overcurrent Protection

NOTES:

1. Monitor light applies for FCV355, FCV356 & FCV363 only.
3. POS. Contact Interlock With Computer Output Contact Y2208C for FCV430 And Y2..C for FCV431. There Should Be no Alarm When FCV is Closed. See Reference 13.
5. Switch opens on mechanical torque during opening cycle (18)
6. Switch opens on mechanical torque during closing cycle or fully closed valve (17).
7. Field to install jumper if torque seating is required.
8. ▲ MOV's provided with field installed "Quicktest" cable assemblies.

VALVE NO.	DESCRIPTION	CKT. BKR. NO. PRIMARY	CKT. BKR. NO. BACK UP	CIRCUIT No.	BUS SECT.	NORMAL POSITION	ENGINEER SAFETY VITAL FUNCTION	VALVE POSITION SW (RDS) POS. No.	VALVE POSITION SW (RDS) RED. LIGHT CONTACT	CNT. ISOL. PH A MOTOR OC BYPASS DEVICE	CONTACT	PENETR. NO.	MOTOR LOC. No.	CONTAINMENT PHASE B ISOLATION DEVICE	LOCATION	ALM CKT No. OVERCURRENT	ERFDS	SSPS TEST PUSHBUTTON PUSH BUTTON SWITCH	TERM BLOCK	TRAIN A LOC.
FCV749	R.C.P. OIL COOLER CCW RETURN ISOL. VLV.	52-2H-18	52-2H-18R	H18P00	2H	OPEN	P	897	7	C1AX-H	15 / 16	12E	MPH18	K619	RNSQA	TB609 7, 8	A1420801	MUX03-10-2	PB BOTC	B33-1,2	RNSTA
▲ FCV750	R.C.P. THERM. BARRIER CCW RET. ISOL. VLV.	52-2F-23	52-2F-23R	F23P00	2F	OPEN	P	1073	15	C1AX2-F	5 / 6	26E	MPE23	K619	RNSQA	TB609 9, 10	A1440801	MUX01-24-1	PB BOTD	B31-1,2	RNSTA

SSPS TEST PUSHBUTTON

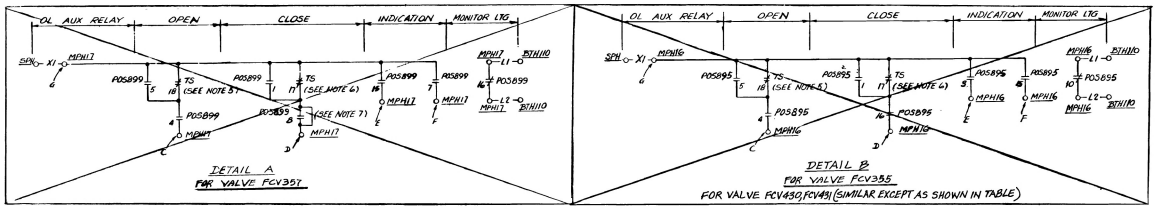

REFERENCE DRAWINGS

	DWG.
1- Single Line Meter & Relay Diagram, 480V System Bus Sect "2F"	441237
2- "2G"	441238
3- "2H"	441239
4- Description Of Elect. Schematic Diag., Symbols & Ckt Designations	050003
5- Equipment Location Number List	103013
6- Piping Schematic Component Cooling Water System	108014
7- Instrument Schematic Flow Instrument Systems	108032
8- Ⓜ Function Diagram	REC. 663195
9- Ⓢ Solid State Protection System	663231
10-	
11- LIMITORQUE WIRING DIAGRAM FCV749	663312-43
12- " WIRING DIAGRAM FCV430, FCV431 FCV355, FCV356, FCV363	680385-101
13- Instrument Schematic Temp. Instrument System	DWG. 108033
14- Schematic Diagram Main Annunciator Sheet 1	000771
15- Schematic Diagram Monitor Light Box D	441495
16- Schematic Diagram Safety Injection Sys. MOV Sh 2	441318
17- Block Diag ERFDS Tech Support Center and Control Room	445277
18- Schem. Diag. SSPS Output Relays, Train A, Train B	503089, 93

NUCLEAR SAFETY RELATED

VALVE NO's: FCV355, FCV356, FCV357, FCV363, FCV430, FCV431, FCV749 & FCV750

P.G.&E. SYSTEM PHASE SEQUENCE A-C-B

KEY DWG. SECTION 4

UNIT 2

DATE	REVISION DESCRIPTION
06-15-2015	REVISED PER DFT-7+5134

D.D. MNRU
R.E. RxG2
I.V. FAZI
P.E. N/A

ELECTRICAL
SCHEMATIC DIAGRAM
COMPONENT COOLING SYSTEM
MOTOR OPERATED VALVES

DIABLO CANYON POWER PLANT
PACIFIC GAS AND ELECTRIC COMPANY
SAN FRANCISCO, CALIFORNIA

DWG SCALE:
BILL OF MATL:
SUPSDS:
SUPSD BY:

DRAWING	SHEET	PAGE	REV
441325	1	0	19

RASTER: 441325.dgn
DGN: 441325.dgn
CAD User: RNMU Dated: 06-15-2015

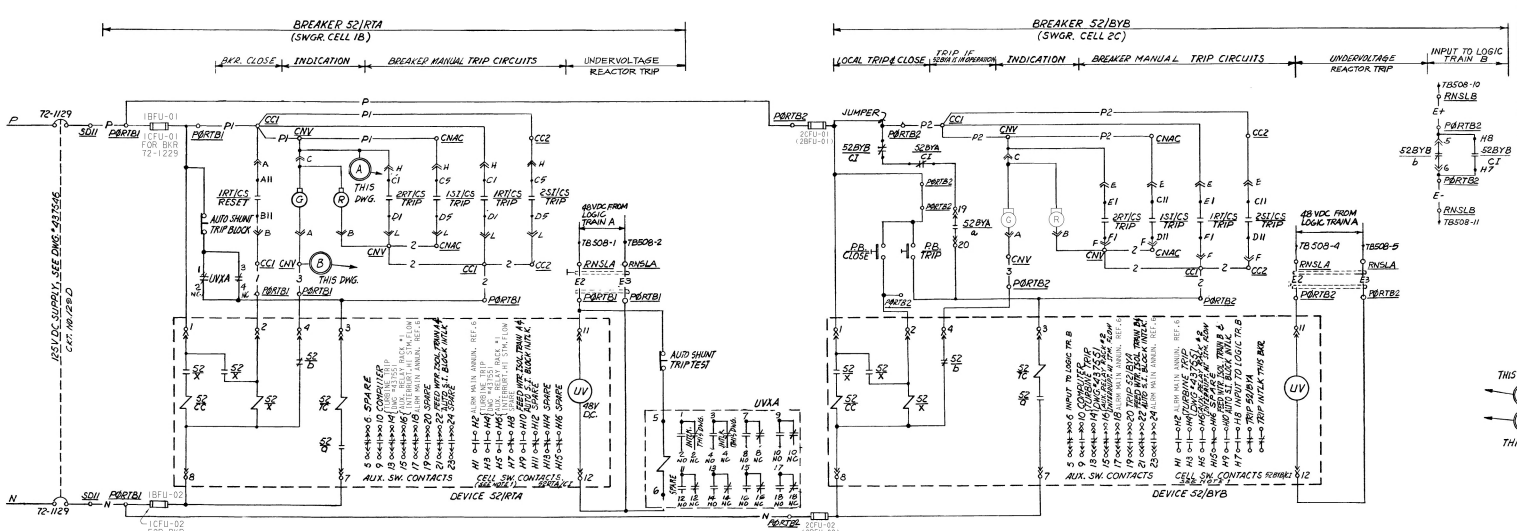

DESCRIPTION						
DEVICE NO.	FUNCTION	RATING	MFR.	TYPE	CAT./DWG. NO.	REMARKS
52/RTA	Reactor Trip Breaker "A"		W.E. Co		(11)	
52/RTB	Reactor Trip Breaker "B"				(11)	
52/BYA	Reactor Bypass Breaker "A"				(11)	
52/BYB	Reactor Bypass Breaker "B"				(11)	
RTXA, RTXB	Reactor Trip Brkr. Aux. Relay	120 V AC	POTTER-BRUMFIELD	MDR	MDR 134-1	
UVXA, UVXB	UV SHUNT TRIP RELAY	48V DC	POTTER-BRUMFIELD	MDR	MDR5134	
	AUTO SHUNT TRIP TEST		GRAYHILL	SERIES 7	7-36A	
	AUTO SHUNT TRIP BLOCK		GRAYHILL	SERIES 7	7-36A	

NOTES

1. Cell Switch Contacts Shown With Breaker In Operating Position.
2. G12-G11 And H11-H12 Are Jumpered In Module Contacts From 1RT/CS And 2RT/CS Are Connected In Series And Fed Into Train B Logic Input.
3. H6-H5 And G6-G5 Are Jumpered To Module Contacts From 1RT/CS And 2RT/CS Are Connected In Series And Fed Into Train A Logic Input.

CONTACTS	POSITION NEUT.	POSITION ACTUATE	REMARKS
A11 o—1—o B11		X	ANNUNCIATOR
A12o—1—oB12	X		SPARE
A1 o—1—o B1		X	LOGIC TRAIN A
A5 o—1—o B5		X	LOGIC TRAIN B
A6 o—1—o B6	X		SPARE
A7 o—1—o B7		X	TRIP 52/BYA
C11 o—1—o D11		X	TRIP 52/BYB
C12o—1—oD12	X		SPARE
C1 o—1—o D1		X	TRIP 52/RTB
C5 o—1—o D5		X	TRIP 52/RTA
C6 o—1—o D6	X		SPARE
C7 o—1—o D7		X	COMPUTER

CONTROL SWITCH - SAFETY INJECTION 1SI/CS, 2SI/CS

USED AT LOCATION CNAC, CC2
SPRING RETURN TO NEUTRAL
W.E. Corp. Type W-2, 2 Position, Style No. 50SA6254-D1

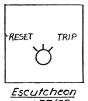

CONTACTS	POSITIONS CLOSE	NEUT.	TRIP	REMARKS 1RT	2RT
A11 o—1—o B11	X			CLOSE 52/RTA	SPARE
A12o—1—oB12		X		SPARE	
A1 o—1—o B1			X	ANNUNCIATOR	
A5 o—1—o B5	X			CLOSE 52/RTB	SPARE
A6 o—1—o B6		X		SPARE	
A7 o—1—o B7			X	COMPUTER	
C11 o—1—o D11	X			SPARE	
C12o—1—oD12		X		SPARE	
C1 o—1—o D1			X	TRIP 52/RTA	
C5 o—1—o D5	X			SPARE	
C6 o—1—o D6		X		SPARE	
C7 o—1—o D7			X	TRIP 52/RTB	
E11 o—1—o F11	X			SPARE	
E12o—1—o F12		X		SPARE	
E1 o—1—o F1			X	TRIP 52/BYB	
E5 o—1—o F5	X			SPARE	
E6 o—1—o F6		X		SPARE	
E7 o—1—o F7			X	TRIP 52/BYA	
G11o—1—oH11	X	X		SEE NOTE 2	
G12o—1—oH12		X	X		
G1 o—1—o H1			X	X	SPARE
G5 o—1—o H5	X			SEE NOTE 3	
G6 o—1—o H6		X	X		
G7 o—1—o H7			X	X	SPARE

CONTROL SWITCH - REACTOR TRIP 1RT/CS, 2RT/CS

USED AT LOCATION CC1 & CNV
SPRING RETURN TO NEUTRAL
W.E. CORP. TYPE W-2 3 POSITION STYLE No. 781A344G01

REACTOR TRIP BREAKER 52/RTA, CIRCUIT NO. 129D
TYPICAL SCHEMATIC DIAGRAM FOR REACTOR TRIP BREAKER 52/RTA & 52/RTB, EXCEPT AS SHOWN IN TABLE BELOW.

BREAKER NO.	SWGR. CELL NO.	125 V DC CIRCUIT NO.	BREAKER LOCATION	LOGIC TRAIN LOC.	UV SHUNT TRIP RELAY	ERFDS	ALARM OUT NO. MAIN ANNUN. REACTOR TRIP	ALARM OUT NO. AUX ANNUN. REACTOR TRIP
52/RTA	1B	129D	P0RTB1	RNSLA	UVXA	MUX01-25-2	AY0700D	AY6111D
52/RTB	1C	229D	P0RTB1	RNSLB	UVXB	MUX02-25-2		

REACTOR TRIP BYPASS BREAKER 52/BYB, CIRCUIT NO. 129D
TYPICAL SCHEMATIC DIAGRAM FOR REACTOR TRIP BYPASS BREAKER 52/BYB & 52/BYA, EXCEPT AS SHOWN IN TABLE BELOW

BREAKER NO.	SWGR. CELL NO.	125 V DC CIRCUIT NO.	BREAKER LOCATION	LOGIC TRAIN LOC.	CONTACT (T9 043180-20)	CONTACT	INPUT TO LOGIC TR
52/BYB	2C	129D	P0RTB2	RNSLA	TRIP 52/BYA	TRIP 52/BYA	RNSLB
52/BYA	2B	229D	P0RTB2	RNSLB	TRIP 52/BYB	TRIP 52/BYB	RNSLA

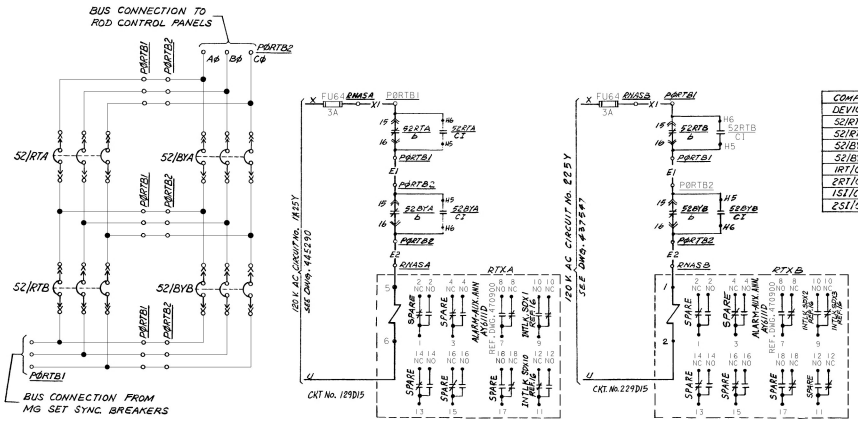

COMPUTER CIRCUIT NO's		
DEVICE	CONTACT	CIRCUIT No.
52/RTA	9 o—1—o10	CY0006DF
52/RTB	9 o—1—o10	CY0007DG
52/BYA	9 o—1—o10	CY0026DG
52/BYB	9 o—1—o10	CY0027DF
1RT/CS	A7 o—1—oB7	CY0004D
2RT/CS	A7 o—1—oB7	CY0005DG
1SI/CS	C7 o—1—oD7	CY0921D
2SI/CS	C7 o—1—oD7	CY0922DF

ANNUNCIATOR		
DEVICE	CONTACT	CIRCUIT No.
1RT/CS	A1 o—1—oB1	AY0745DF
2RT/CS	A1 o—1—oB1	
1SI/CS	A11 o—1—oB11	AY0705DF
2SI/CS	A11 o—1—oB11	
52/BYA	2 o—oo1 Hoo2 o	AY0751D
52/BYB	2 o—oo1 Hoo2 o	

DESCRIPTION: AY0745DF — MANUAL REACTOR TRIP; AY0705DF — MANUAL SAFETY INJECTION; AY0751D — REACTOR TRIP BY PASS BREAKER CLOSED

EQUIPMENT LOCATION NUMBERS

SDII	SWGR DC 125V BUS # II
P0RTB1	CONTROL PNL REACTOR TRIP BREAKERS
P0RTB2	CONTROL PNL REACTOR TRIP BYPASS BKRS.
CC1	CONTROL CON. REACTOR CONTROL
CC2	CONTROL CON. DEMIN. & MAKE-UP WATER
CNV	CONTROL BOARD CHEM. VOLUME CONTROL SYS. (SECT. IV B2.)
CNAC	CONTROL BOARD ACCUMULATOR SERVICE (SECT. IV B1.)
RNSLA	RACK NU SAFEGUARD LOGIC A
RNASA	RACK NU AUX. SAFEGUARD CAB. A

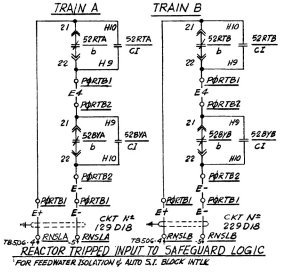

REFERENCE DWGS.

1. Description Of Electric Schematic Diag's Symbols & Circuit Designations	Dwg. No. 050003
2. Equipment Location Number List	Dwg. No. 101900
3. Single Line Meter & Relay Diagram, 125 V DC System Sh. 1	Dwg. No. 437546
4. Schematic Diagram, Turbine Control	Dwg. No. 437551
5. SCHEMATIC DIAGRAM AUX BD PLC'S P0B1-101 & 102 DIGITAL INPUTS & POWER	Dwg. NO. 470900
6. Schematic Diagram, Main Annunciator, Sh. 5	Dwg. No. 501125
7. Single Line Meter & Relay Diagram Instr. A.C. System	Dwg. No. 437547, 445290
8. Schematic Diagram Control Rod Drive M-G Set Sh. 2	Dwg. No. 437634
9. (W) Reactor Trip Switchgear	Rec. No. 663197
10. (W) Functional Logic Diagrams	Rec. No. 495842
11. (W) Solid State Protection System	Rec. No. 663231
12. Schematic Diagram Control Rod Drive M-G Set Sh. 1	Dwg. No. 437603
13. (W) Elementary Wiring Diagram	Rec. No. 663193
14. BLOCK DIAGRAM-EMERG. RESPONSE FACILITY DATA SYSTEM	DWG NO. 445278
16. Schematic Diagram Steam Dump System	Dwg. No. 437649
17. LVME SWGR REACTOR TRIP SWGR (INTERNAL WIRING	Dwg. No. 663197-33

NUCLEAR SAFETY RELATED

P.G.&E. SYSTEM PHASE SEQUENCE A-B-C

KEY DWG. SECTION 4

UNIT 1

DATE	
05-16-2017	
D.D.	ZNS4
R.E.	RXG2
I.V.	N/A
P.E.	N/A

REVISION DESCRIPTION: REVISED PER DFT-T#4151

ELECTRICAL SCHEMATIC DIAGRAM REACTOR TRIP BREAKERS

DIABLO CANYON POWER PLANT
PACIFIC GAS AND ELECTRIC COMPANY
SAN FRANCISCO, CALIFORNIA

DWG SCALE:	
BILL OF MAT'L:	
SUPSDS:	
SUPSD BY:	

DRAWING	SHEET	PAGE	REV
437610	1	0	23

RASTER-eru1233i.dgn
DGN-eru1233i.dgn
CAD USER: ZNS4 Date: 05-16-2017

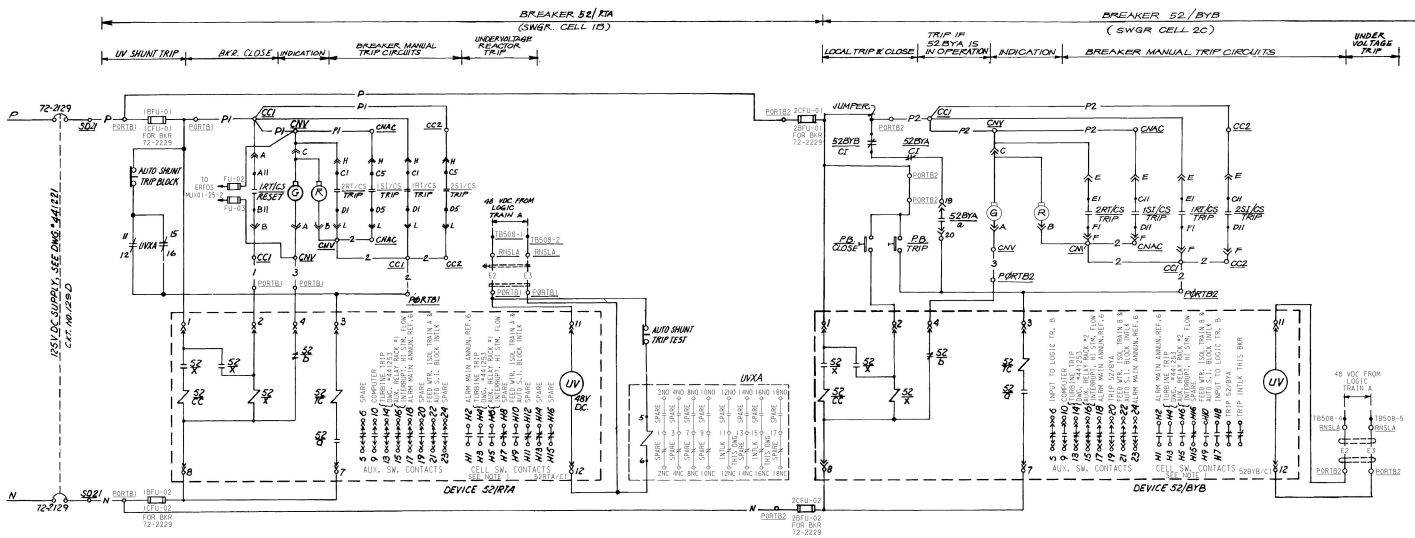

DESCRIPTION						
DEVICE No.	FUNCTION	RATING	MFR	TYPE	CAT.	DWG. NO.	REMARKS
52/RTA	Reactor Trip Breaker "A"		W.E. Co			(11)	
52/RTB	Reactor Trip Breaker "B"					(11)	
52/BYA	Reactor Bypass Breaker "A"					(11)	
52/BYB	Reactor Bypass Breaker "B"					(11)	
RTXA, RTXB	Reactor Trip Bkr. Aux. Relay	120 V AC	POTTER-BRUMFIELD	MDR	MDR 134-1		
UVXA, UVXB	UV SHUNT TRIP RELAY	48 V DC	POTTER-BRUMFIELD	MDR	MDR 9134		
	AUTO SHUNT TRIP TEST		GRAYHILL	SERIES 7	7-10A		
	AUTO SHUNT TRIP BLOCK		GRAYHILL	SERIES 7	7-26A		

CONTACTS	POSITIONS RSE	INT	NOR	INT	TRIP	REMARKS IRT	2RT
A11 o—o B11	X					CLOSE 52/RTA	SPARE
A12o—o B12			X			SPARE	
A1 o—o B1					X	ANNUNCIATOR	
A5 o—o B5	X					CLOSE 52/RTB	SPARE
A6 o—o B6			X			SPARE	
A7 o—o B7					X	COMPUTER	
C11 o—o D11	X					SPARE	
C12o—o D12			X			SPARE	
C1 o—o D1					X	TRIP 52/RTA	
C5 o—o D5	X					SPARE	
C6 o—o D6			X			SPARE	
C7 o—o D7					X	TRIP 52/RTB	
E11 o—o F11	X					SPARE	
E12o—o F12			X			SPARE	
E1 o—o F1					X	TRIP 52/BYB	
E5 o—o F5	X					SPARE	
E6 o—o F6			X			SPARE	
E7 o—o F7					X	TRIP 52/BYA	
G11o—o H11	X	X				SEE NOTE 2	
G12o—o H12			X	X			
G1 o—o H1					X	X	SPARE
G5 o—o H5	X	X				SEE NOTE 3	
G6 o—o H6			X	X			
G7o—o H7					X	X	SPARE

REACTOR TRIP BREAKER 52/RTA, CIRCUIT NO. 129D

TYPICAL SCHEMATIC DIAGRAM FOR REACTOR TRIP BREAKER 52/RTA & 52/RTB, EXCEPT AS SHOWN IN TABLE BELOW.

BREAKER NO.	SWGR. CELL NO.	125 V DC CIRCUIT NO.	BREAKER LOCATION	LOGIC TRAIN LOCATION	UV SHUNT TRIP RELAY	AUXILIARY RELAY	ALARM CKT. NO. AUX. ANNUN.	ALARM CKT. NO. MAIN ANNUN.	ERFDS NO.
							REACTOR TRIP	REACTOR TRIP	
52/RTA	1B	129D	PORTB1	RNS1A	UVXA	RTXA	AY0611D	AY0700D	MUX01425-2
52/RTB	1C	229D	PORTB1	RNS1B	UVXB	RTXC			MUX00825-2

REACTOR TRIP BYPASS BREAKER 52/BYB, CIRCUIT NO. 129D

TYPICAL SCHEMATIC DIAGRAM FOR REACTOR TRIP BYPASS BREAKER 52/BYB & 52/BYA, EXCEPT AS SHOWN IN TABLE BELOW

BREAKER NO.	SWGR CELL NO.	125V DC CIRCUIT NO.	BREAKER LOCATION	LOGIC TRAIN LOC.	CONTACT 19 o—o 20	CONTACT —H—	INPUT TO LOGIC TR
52/BYB	2C	129D	PORTB2	RNS1A	TRIP 52/BYA	TRIP 52/BYA	RNS1B
52/BYA	2B	229D	PORTB2	RNS1B	TRIP 52/BYB	TRIP 52/BYB	RNS1A

Escutcheon

CONTACTS.	POSITION NEUT.	ACTUATE	REMARKS
A11 o—o B11		X	ANNUNCIATOR
A12o—o B12	X		SPARE
A1 o—o B1		X	LOGIC TRAIN A
A5 o—o B5		X	LOGIC TRAIN B
A6 o—o B6	X		SPARE
A7 o—o B7		X	TRIP 52/BYA
C11 o—o D11		X	TRIP 52/BYB
C12 o—o D12	X		SPARE
C1 o—o D1		X	TRIP 52/RTB
C5 o—o D5		X	TRIP 52/RTA
C6 o—o D6	X		SPARE
C7 o—o D7		X	COMPUTER

CONTROL SWITCH-SAFETY INJECTION 133/CS, 233/CS

USED AT LOCATION: CNAC, CC2
SPRING RETURN TO NEUTRAL
W.E. Corp. Type W-2, 2 Position, Style No. 505A625G-01

CONTROL SWITCH REACTOR TRIP 1RT/CS, 2RT/CS

USED AT LOCATION CC1 & CNV
SPRING RETURN TO NEUTRAL
W.E. CORP. TYPE W-2 3 POSITION

EQUIPMENT LOCATION NUMBERS

SD21	SWGR. DC 125 V BUS 21
PORTB1	CONT. PNL. REACTOR TRIP BREAKERS
PORTB2	CONT. PNL. REACTOR TRIP BYPASS BKRS.
CC2	CONT. CON. DEMIN. & MAKE-UP WATER
CC1	CONT. CON. REACTOR CONTROL
CNV	CONT. BOARD CHEM. VOL. CONT. SYSTEM
CNAC	CONT. BOARD ACCUMULATOR SERVICE
RNS1A	RACK N1 SAFEGUARD LOGIC A
RNASA	RACK N1 AUX. SAFEGUARD CAB. A

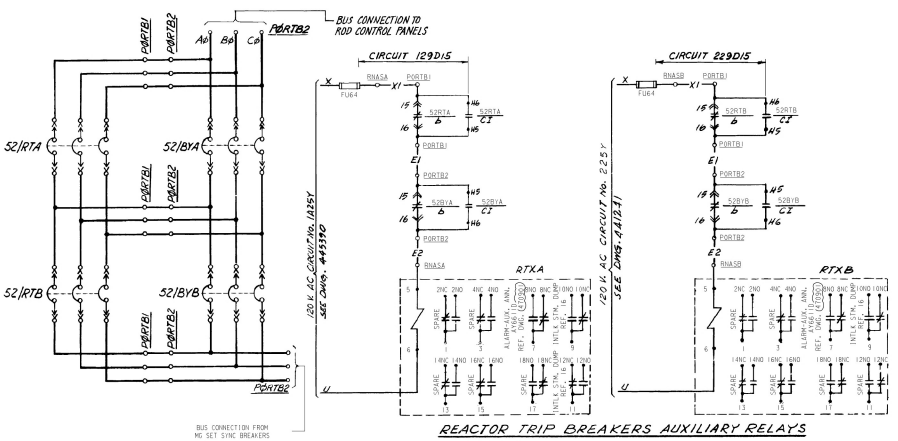

REACTOR TRIP BREAKERS AUXILIARY RELAYS

ANNUNCIATOR			
DEVICE	CONTACT	CIRCUIT NO.	DESCRIPTION
1RT/CS	A1 o—o B1	AY0745DF	MANUAL REACTOR TRIP
2RT/CS	A1 o—o B1		
1SI/CS	A1 o—o B1	AY0705DF	MANUAL SAFETY INJECTION
2SI/CS	A1 o—o B1		
52/BYA	21 o—o H10	AY0751D	REACTOR TRIP BY PASS BREAKER CLOSED
52/BYB	21 o—o H10		

COMPUTER CIRCUIT No's		
DEVICE	CONTACT	CIRCUIT No.
52/RTA	9 o—o 10	CY0006DF
52/RTB	9 o—o 10	CY0007DF
52/BYA	9 o—o 10	CY0026DD
52/BYB	9 o—o 10	CY0027DD
1RT/CS	A7 o—o B7	CY0004DD
2RT/CS	A7 o—o B7	CY0005DD
1SI/CS	C7 o—o D7	CY0921D
2SI/CS	C7 o—o D7	CY0920D

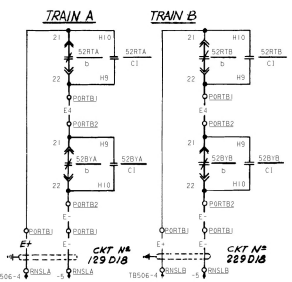

REACTOR TRIPPED INPUT TO SAFEGUARD LOGIC

& FOR FEEDWATER ISOLAT AUTO S.I. BLOCK INTLK.

NOTES

1. CELL SWITCH CONTACTS SHOWN WITH BREAKER IN OPERATING POSITION.
2. G12-G11 AND H11-H12 ARE JUMPERED IN MODULE. CONTACTS FROM IRT/CS AND 2RT/CS ARE CONNECTED IN SERIES AND FED INTO TRAIN B LOGIC INPUT.
3. H6-H5 AND G6-G5 ARE JUMPERED IN MODULE. CONTACTS FROM IRT/CS AND 2RT/CS ARE CONNECTED IN SERIES AND FED INTO TRAIN 'A' LOGIC INPUT.
4. FOR FUSE RATING AND TYPE, SEE FUSE LIST DWG. 066145.

REFERENCE DRAWINGS

1.	Description Of Electric Schematic Diag's Symbols & Circuit Designations	060003
2.	Equipment Location Number List	103 C/S
3.	Single Line Meter & Relay Diagram, 125 Volt DC System	441240
4.	Schematic Diagram, Turbine Control	441253
5.	SCHEMATIC DIAGRAM AUX BD PLC POB2-10 DIGITAL INPUTS & POWER	470901
6.	Schematic Diagram, Main Annunciator, Sh 5	500775
7.	Single Line Meter & Relay Diagram Instn A.C. System	441241 & 445390
8.	Schematic Diagram Control Rod Drive M-G Set Sh 2	441488
9.	(W) Reactor Trip Switchgear	663197
10.	(W) Functional Logic Diagrams	663195
11.	(W) Solid State Protection System	663231
12.	Schematic Diagram Control Rod Drive M-G Set Sh 1	441487
13.	(W) Elementary Wiring Diagram	663193
14.	SEISMIC TRIP SCHEMATIC DIAGRAM	693512 SH. 6
15.	BLOCK DIAG. - ERFDS TECH SUPPORT CENTER AND CONTROL ROOM	445297
16.	SCHEMATIC DIAGRAM STEAM DUMP SYSTEM	441503

NUCLEAR SAFETY RELATED

KEY DWG. SECTION 4

UNIT 2

DATE	REVISION DESCRIPTION
08-29-2011	REVISED PER DAS-6*426-0

D.D.	MNRU
R.E.	SMB5
I.V.	
P.E.	R2H5

ELECTRICAL
SCHEMATIC DIAGRAM
REACTOR TRIP BREAKER

DIABLO CANYON POWER PLANT
PACIFIC GAS AND ELECTRIC COMPANY
SAN FRANCISCO, CALIFORNIA

DWG SCALE:	
BILL OF MATL:	
SUPSDS1	
SUPSD BY:	
DRAWING	441489
SHEET	1
PAGE	0
REV	17

P.G.&E. SYSTEM PHASE SEQUENCE A-C-B

RASTER-441489.dgn
CON: 441489.dgn
OLD User: MNRU Dated 08-29-2011

437630

480 Volt AC Control Schematic

480V MCC Bus Section 1F

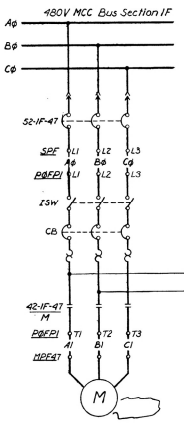

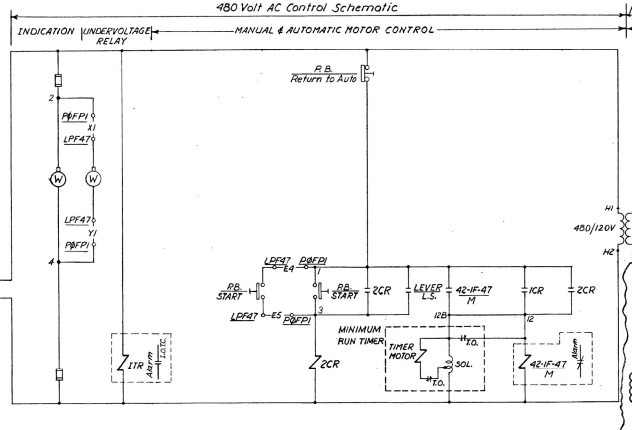

120 Volt AC Control Schematic

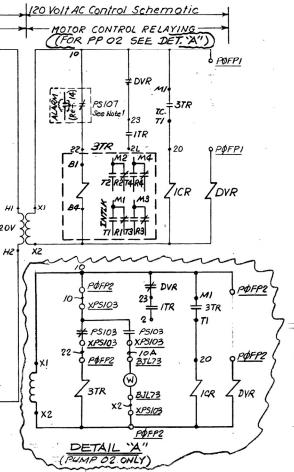

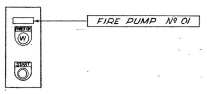

ARRANGEMENT OF LOCAL CONTROL STATION

FOR FIRE PUMP N° 01 LOC. LPF47
SIMILAR FOR FIRE PUMP N° 02 EXCEPT LOC. LPH3

CONTACTS		POSITION CLOSE	POSITION NEUT.	POSITION OPEN	REMARKS
CS-1	A	X			SPARE
CS-2	B			X	THIS DWG.
CS-3	C		X	X	THIS DWG.
CS-4	D	X	X		SPARE

CONTROL SWITCH

FCV 633 CS (UNIT 1) FCV633 CS (UNIT 2)

USED AT LOCATION CB . (IV83 & 2V83)
SPRING RETURN TO NEUTRAL FROM OPEN.
Ⓦ 07226 with OT2M & OT2N Contact Blocks

CONTACT	POSITION CLOSE	POSITION OPEN	REMARKS
A		X	RED LIGHT
B	X		SPARE
C		X	MONITOR LT.
D	X		SPARE

VALVE CLOSE POSITION SWITCH

POS 1311 (UNIT 1); POS 1311 (UNIT 2)

CONTACT	POSITION RESET & LATCHING	POSITION OPEN	REMARKS
A	X		GREEN LT.
B		X	SPARE
C	X		SPARE
D		X	SEAL IN

VALVE OPEN POSITION SWITCH

POS 1310 (UNIT 1), POS 1310 (UNIT 2)

TABLE OF DEVICES

DEVICE NO.	FUNCTION	RATING	MFR.	TYPE	CAT/DWG/MO	REMARKS
42-1F-47	480V MOTOR STARTER	—	—	—	(3)	
42-1H-3		—	—	—	(4)	
52-1F-47		—	—	—	(3)	
52-1H-3	480V AIR CIRCUIT BKR.	—	—	—	(4)	
3TR	FIRE PP STARTING TIME DELAY RELAY	120VAC	AGASTAT	ETR	ETR4163A003 / ETR4163B003	SETTING 0.15 SEC. / SETTING 5.0 SEC.
FCV633	FLOW CONTROL VALVE 633	—	—	—	—	
POS-	FCV- POSITION SWITCH	—	—	—	—	
PS103, 107	MKE FP DISCH. HDR. PRESS. SW (PR)	125V AC	ASCO	SE8316A91 / SE8316A81	(7) (9)	CONTACT CLOSED ON LOW HEADER PRESS.
K613	CONTM. ISOL. PHASE A AUX. RELAY.	—	—	—	(10) (11)	

EQUIPMENT LOCATION NUMBERS

- SPF 480V Motor Control Center, Bus Section 1F
- P0FP1 Fire Pump Control Panel 01
- MPF47 Fire Pump 01
- LPF47 Local Control Station for Fire Pump N° 01
- CB Control Board, Capacitorate & Feedwater
- RNS0B Rack NLI. Safeguard Output Train B
- XP0S1310 Instrument P0S1310 (local mounted)
- BTH110 Terminal Box Area H No. 110

Notes:

1. Set PS 103 & PS 107 at same setting to provide starting, PMP 2 has 5 sec. delay timer on start. Changed pressure switch and relocated outside panel. White indicating light for surveillance testing is pump CB only (XPS103)
2. Device: ICR, 2CR, 3TR, DVR & Timer are part of Fire Pump Controller, See PG.&E. Rec. *663349-1

REFERENCE DRAWINGS:

	UNIT 2	UNIT 1
1. Description of elec. schem. diagram Symbols & Ckt. designations.	DWG # —	050003
2. Equipment location numbers — — — — — — — — — —	103013,	121900
3. 5/1 Meter & Relay diagram, 480 V System Bus Sect. 1F — — —	—	437916
4. " " " 1H. — — —	—	437643
5. Piping Schematic, Fire Protection & Misc. Service System. —	108018	102018
6. Single line meter & relay - 125 V. DC System — — — — — — —	441240	445075
7. Fire Pump Controller — — — — — — — — — — — — — — —	REC # —	663349
8. Schematic Diagram - 4KV Diesel Generators & Assoc CB's - Sh 2 - DWG:	# —	437644
9. INSTRUMENT SCHEMATIC-PRESS. INSTRUMENTS SYSTEM 411		102036
10. Ⓔ Function Diagrams	REC # —	663195
11. Ⓔ Solid State Protection System	—	664231
12. SCHEMATIC DIAGRAM MONITOR LIGHT BOX B	DWG # 441463,	437697
13. BLOCK DIAG - ERFDS TECH SUPPORT CTR & CONTROL ROOM	445241	449218
14. SCHEMATIC DIAGRAM MAIN ANNUNCIATOR	DWG # (502091)	

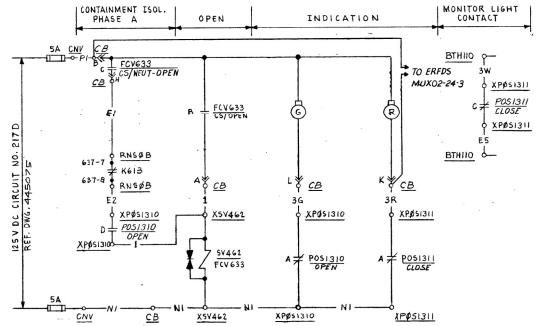

UNIT 1 FCV633 CONTAINMENT FIRE WATER ISOLATION VALVE CKT. NO. 10462SV01

CIRCUITS LISTED ON DWG. 103049

UNIT 2 FCV633 SIMILAR EXCEPT AS SHOWN IN TABLE

UNIT NO.	VALVE NO.	LOCATION OF CONTROL	REFERENCE DRAWINGS NOS. SLMR 125VDC	CIRCUIT SCHED.	SO. MON. LTS.	ERFDS
1	FCV633	CB (1VB3)	445075	103049	437697	MUX 02-24-3
2	FCV633	CB (2VB3)	441840	108759	441463	MUX 02-24-3

NUCLEAR SAFETY RELATED

VALVE NO. FCV633 (UNIT 1) SCAN TO IIC
FCV633 (UNIT 2) REVISED PER REV. 10
UNITS 1 & 2

PG&E SYSTEM PHASE SEQUENCE A-C-B

COAST VALLEYS DIVISION

REVISION	5	6	7	8	9	10
ELEC. ENGR.						
SUPVY. ENGR.						

COORDINATED APPROVAL — CONSTRUCTION

	GROUP	CHG.	ENG.	CHG.	ENG.	CHG.	ENG.
	ARCH	NOT APPLICABLE					
	CIVIL	NOT APPLICABLE					
	ELEC.						
	MECH						

CHANGES APPROVED BY SYSTEMS ENGINEER

NO	DATE	DESCRIPTION	GM	BY	CH	APRD.
10	8-10-93	DEL. LOAD RATING (PAT-15R29) — CR [illegible]				
		ADD DET. "A" FOR FIRE PMP 02 ONLY				
		REV. FP 01, REF'S & CHG REF #'S				
		ON PEP 16 (DCO-5 E-37324				
9	4-16-93	REVISED CH. 3TR RELAY W/ " AND (1)				
		REVISED ETR RELAY DCO 42-1E-0363, 20)				

TABLE OF CHANGES

NO	DATE	DESCRIPTION	GM	BY	CH	APRD.
7	4-26-71	CHGD. CONT. POSITION ON RELAY 2TR & 42-1F-47, 42-1B-3, FP 1 & 2 (DCO-EE-37379		MM	CW	SLE
1	1-27-71	Released for Construction	4-26-71	RS	CW	SLE

TABLE OF CHANGES

APPROVED BY: GM 167027, SUPV. R. Herring, DSGN. J. Ellingson, DR. J. Ellingson, CH. T. Tschirki, D.V. [illegible], DATE 1-27-71, SCALE None

SCHEMATIC DIAGRAM
FIRE PUMPS
DIABLO CANYON
DEPARTMENT OF ENGINEERING
PACIFIC GAS AND ELECTRIC COMPANY
SAN FRANCISCO, CALIFORNIA

BILL OF MATERIAL | DRAWING LIST | SUPERSEDES | SUPERSEDED BY | SHEET NO. SHEETS | DRAWING NUMBER CHANGE

437630 10

Cds. Checked 1-27-71 MM

KEY DWG - SECTION 12 — 105 MM NEG. 92 — 35 MM NEG. 10

PRINTED ON DIEPO NO. 1000 A CLEARPRINT PAPER-CUT E-36

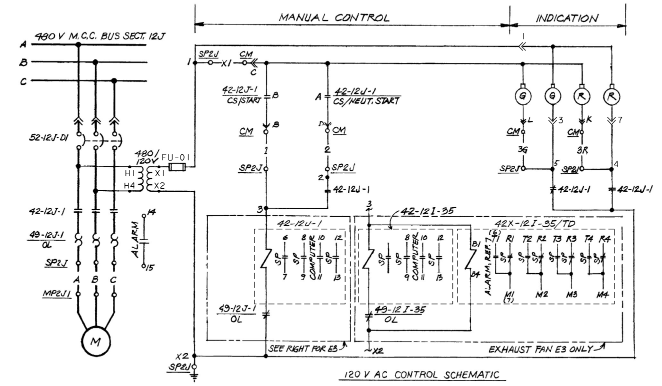

120 V AC CONTROL SCHEMATIC

CONTAINMENT PURGE SUPPLY FAN S3 CIRCUIT Nº 2J01P00

CONTAINMENT PURGE EXHAUST FAN E3 SIMILAR EXCEPT AS SHOWN IN TABLE

DESCRIPTION	MOTOR LOC.	MOTOR	CIRCUIT BREAKER	BUS. SECT.	CIRCUIT Nº	ALARM CKT. Nº OVER-CURRENT		COMPUTER CKT. No. RUNNING	CONTMT. PURGE SYSTEM ALARM CIRCUIT	DEVICE	CONTACT	REF.
CONTMT. PURGE SUPPLY FAN S3	MP2J1		52-12J-01	12J	2J01P00	A12974D		CY1044D	—	—	—	—
CONTMT. PURGE EXHAUST FAN E3	MP2I35		52-12I-35	12I	2I35P00	A12975D		CY1045D	AF5149D	42X-12I-35	T1-M1	7

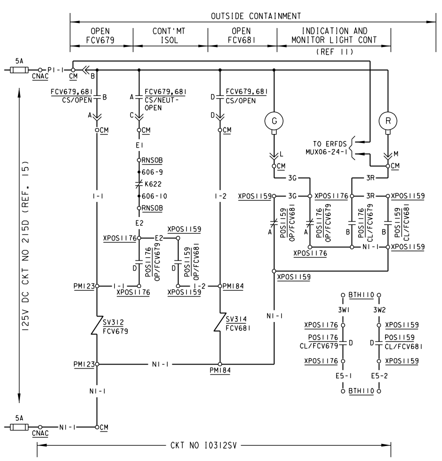

AIR SAMPLE VALVES FCV679 & FCV681

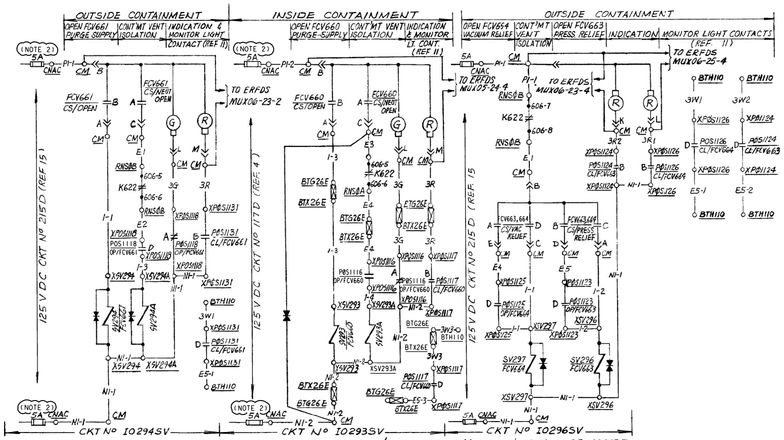

CONTAINMENT PURGE SUPPLY VALVES FCV661 & FCV660

FOR PURGE EXHAUST VALVES RCV12, RCV11 AND AIR SAMPLE VALVE FCV678 AND VACUUM PRESSURE RELIEF VALVE FCV 662 ARE SIMILAR SEE TABLE

FOR FCV662 & FCV678 SEE ALSO DETAIL 'A'

VACUUM & PRESSURE RELIEF VALVES FCV663 & FCV664

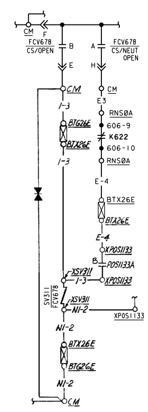

DETAIL "A" (FOR FCV678 & FCV662)

STOP START

CONTACTS		POSITIONS STOP	NEUT.	START	REMARKS
⊣⊢	A		X	X	THIS DWG.
⊣⊢	B			X	THIS DWG.

CONTROL SWITCH 42-12J-1 / CS , 42-12I-35 / CS

USED AT LOCATION CM

SPRING RETURN TO NEUT. FROM START

VACUUM RELIEF / OFF / PRESSURE RELIEF

SELECT O-PUSH OPERATOR

CONTACTS		VACUUM RELIEF REL.	VACUUM RELIEF DEP.	OFF REL.	OFF DEP.	PRESSURE RELIEF REL.	PRESSURE RELIEF DEP.	REMARKS
⊣⊢	A	X	X					THIS DWG.
⊣⊢	B					X	X	THIS DWG.
⊣⊢	C						X	THIS DWG
⊣⊢	D		X					THIS DWG.

CONTROL SWITCH FCV 663, 664 / CS

USED AT LOCATION CM

CLOSE , OPEN

SPRING RETURN TO NEUTRAL FROM OPEN

USED AT LOC. CM

CONTACTS		POSITIONS CLOSE	NEUT.	OPEN	FCV 662 678	FCV 679 681
⊣⊢	A		X	X	SPARE	THIS DWG
⊣⊢	B			X	SPARE	THIS DWG
⊣⊢	C		X	X	SPARE	SPARE
⊣⊢	D			X	SPARE	THIS DWG
⊣⊢	E		X	X	THIS DWG	SPARE
⊣⊢	F			X	THIS DWG	SPARE
⊣⊢	G		X	X	SPARE	SPARE
⊣⊢	H			X	SPARE	SPARE

CONTROL SWITCH FCV679, 681 / CS , FCV662 / CS , FCV678 / CS

TABLE OF DEVICES

DEVICE Nº	FUNCTION	RATING	MFR	TYPE	CAT/REF. Nº	REMARKS
42X-12I-35/TD	TIME DELAY RELAY (2-60 SEC.)	120VAC	AGASTAT		ETR-14130003	SET AT 10 SEC.
42-12J-1, 12I-35	480V AC MOTOR STARTER	—	—	—	(3)	
49-12J-1, 12I-35	MOTOR OVERLOAD RELAY	—	—	—	—	PART OF MOTOR STARTER
52-12I-35	480V AC CIRCUIT BREAKER	—	CH	—	(3)	
52-12J-01, 52-12I-02, -08	480V AC AIR CIRCUIT BREAKER	—	—	—	(3)	
52-12I-08R	480V AC AIR CIRCUIT BREAKER		WE		3	BACK-UP BREAKER
FCV...	FLOW CONTROL VALVE	—	—	—	(5) (6)	
K613	CONTMT ISOLATION PH. A AUX. REL.	—	—	—	(9) (10)(16)	
K622	CONTMT. VENT. ISOL. AUX. REL.	—	—	—	(9) (10)(16)	
POS....	VALVE POSITION SWITCH	—	—	—		SEE TABLE FOR Nºs
RCV..	RADIATION CONTROL VALVE	—	—	—		
SV-311	SOLENOID VALVE	125VDC	ASCO		NPL8321ASE	REC. NO. 697758
SV293, 293A, 294, 294A, 295, 296, 297, 312, 314, 469, 469A, 470, 470A	SOLENOID VALVE	—	—	—		

CLOSE OPEN

SPRING RETURN TO NEUT. FROM OPEN

CONTACTS		POSITIONS CLOSE	NEUT	OPEN	REMARKS
⊣⊢	A		X	X	THIS DWG
⊣⊢	B			X	THIS DWG
⊣⊢	C		X	X	SPARE
⊣⊢	D			X	SPARE

CONTROL SWITCH FCV660 / CS , FCV661 / CS , RCV11 / CS , RCV12 / CS

USED AT LOC. CM

CONTACTS		POSITIONS CLOSE INTERM	OPEN	REMARKS POS1106, 1110	REMARKS POS1133
	A	X		GREEN LT.	GREEN LT.
	B		X	SPARE	SPARE
	C	X		SPARE	SPARE
	D		X	SPARE	SPARE
	E	X		SPARE	
	F		X	SPARE	

VALVE OPEN POSITION SWITCH POS1106, POS1110, & POS1133

EQUIPMENT LOCATION NUMBERS

SP2J	480 V M.C.C. BUS SECT. 12J
MP2J1	CONTAINMENT PURGE SUPPLY FAN S3
CM	CONTROL BOARD 1VB4 AUX EQ & DSL
RNSØB	RACK NUCLEAR SAFEGUARD OUTPUT TRAIN B
BTH110	TERMINAL BOX AREA H Nº 110
PM123	MECHANICAL PANEL Nº 123 BLOWDOWN TANK
BTG26E	TERMINAL BOX Nº G26E
XSV294	INSTRUMENT No. SV294 LOCAL MOUNTED
XPØS1118	INSTRUMENT No. POS 1118 LOCAL MOUNTED
CNAC	CONTROL BD. 1VB1 SAFEGUARDS
PHTBD	HEAT TRACING DISTR. PNL. No. BD
LHT450	LCS HT. TRACE CONT. 450, 450A
EHT450	INTERIM SAMP HEAT TRACE 450

NOTES:

1. THE SEAL-IN FOR VALVE FCV 678 IS NOW A POSITION SWITCH CONTACT WHICH IS CLOSED WHEN THE VALVE IS IN THE OPEN OR INTERMEDIATE POSITION. PREVIOUSLY THE SEAL-IN WAS ONLY CLOSED WHEN THE VALVE WAS IN THE OPEN POSITION.
2. FUSES REMOVED DURING MODES 1, 2, 3 AND 4 (PER TS 3.6.3) TO DE-ENERGIZE FCV-660, FCV-661, RCV-11 AND RCV-12 VALVE OPERATORS.

ERFDS	DESCRIPTION		OUTSIDE CONTAINMENT (G) VALVE Nº	SOLENOID VLV Nº	SOLENOID VLV LOC	D C CKT Nº	VLV POS SW OPEN	VLV POS SW CLOSE	CIRCUIT Nº	CONT'MT VENT ISOL DEVICE	LOC.	CONTACT	CONT'MT ISOL PH A DEVICE	LOC	CONTACT	INSIDE CONTAINMENT (F) VALVE NO.	SOLENOID VLV NO.	SOLENOID VLV LOC	D C CKT NO.	VLV POS SW OPEN	VLV POS SW CLOSE	CIRCUIT NO.	CONT'MT VENT ISOL DEVICE	LOC	CONTACT	CONT'MT ISOL PH A DEVICE	LOC	CONTACT	ERFDS
MUX06-23-2	CONT'MT PURGE	SUPPLY	FCV661	294 294A	XSV294 XSV294A	215D	1118	1131	I0294SV	K622	RNSØB	606-5 606-6	—	—	—	FCV660	293△ 293A	XSV293 XSV293A	117D	1116	1117	I0293SV	K622	RNSØA	606-5 606-6	—	—	—	MUX05-24-4
MUX06-23-3	CONT'MT PURGE	EXHAUST	RCV12	470 470A	XSV470 XSV470A	215D	1191	1192	I0470SV	K622	RNSØB	606-11 606-12	—	—	—	RCV11	469△ 469A	XSV469 XSV469A	117D	1188	1189	I0469SV	K622	RNSØA	606-11 606-12	—	—	—	MUX05-25-1
MUX06-24-1	CONTMT. AIR SAMPLE	SUPPLY	FCV679	312	PM123	215D	1176		I0312SV	K622	RNSØB	606-9 606-10	—	—	—	FCV678	311	XSV311	117D	1133*	1133A	I0311SV	K622	RNSØA	606-9 606-10	—	—	—	MUX05-25-3
		RETURN	FCV681	314	PM184		1159																						
—	VACUUM PRESSURE RELIEF		FCV663	296	XSV296	215D	1123	1124	I0296SV	K622	RNSØB	606-7 606-8	—	—	—	FCV662	295	XSV295	117D	1121	1132	I0295SV	K622	RNSØA	606-7 606-8	—	—	—	MUX05-25-2
			FCV664	297	XSV297		1125	1126																					

SEE NOTE 2 (MUX05-24-4, MUX05-25-1)

SEE DET. "A" (MUX05-25-3, MUX05-25-2)

△ TRANSIENT SUPPRESSOR NOT USED   * SEE NOTE 1

REFERENCES

1. DESCRIPTION OF ELECT SCHEMATIC DIAG'S., SYMBOLS & CKT. DESIGNATIONS - DWG Nº 050003
2. EQUIPMENT LOCATION NUMBER LIST 101900
3. SINGLE LINE METER & RELAY DIAG., 480V BUS SECT. 12D, E, I & J 437538
4. SINGLE LINE METER & RELAY DIAG., 125 V DC SYSTEM, SH. 1 437546
5. PIPING SCHEMATIC VENTILATION & AIR CONDITIONING SYSTEMS 102023
6. INSTRUMENT SCHEMATIC FLOW INSTRUMENT SYSTEMS 102032
7. SCHEMATIC DIAGRAM MAIN ANNUNCIATOR 501135
8. VENTILATION CONTROLS AREA "F" & "G" 59336
9. Ⓦ FUNCTION DIAGRAMS REC. Nº 663195
10. Ⓦ SOLID STATE PROTECTION SYSTEM REC. Nº 663231
11. SCHEMATIC DIAGRAM MONITOR LIGHT BOX B DWG. Nº 437697
12. SCHEMATIC DIAG. AUX. & FUEL HANDLING BLDG VENT. SYS. (POV1) DWG. Nº 444646
13. " " " " " " " " (POV2) DWG. Nº 444653
14. BLOCK DIAG.-ERFDS TECH. SUPPORT CENTER & CONTROL ROOM DWG. Nº 445273
15. SINGLE LINE METER & RELAY DIAGRAM, 125 V DC SYSTEM, SH. 2 DWG. Nº 445075
16. SCHEM DIAG, SSPS OUTPUT RELAYS, TRAIN A, TRAIN B DWGS. 501869, 503088
17. DELETED

CONTACTS		POSITIONS CLOSE & INTERM	OPEN	REMARKS POS -1159 & 1176	REMARKS POS1128 REF 12
	A	X		GREEN LT.	SPARE
	B		X	SPARE	SPARE
	C	X		SPARE	VENT. INPUT
	D		X	SEAL IN	VENT INPUT
	E	X			SPARE
	F		X		SPARE

VALVE OPEN POSITION SWITCH

POS1128, POS1159, POS1176

CONTACTS		POSITIONS CLOSE	OPEN & INTERM	REMARKS	REMARKS POS1133A
⊣⊢	A	X		SPARE	SPARE
⊣⊢	B		X	RED LT	SEAL-IN
⊣⊢	C	X		SPARE	SPARE
⊣⊢	D		X	MONITOR LT	MON. LT.

VALVE CLOSE POSITION SWITCH

POS1117, POS1124, POS1126, POS1131, POS1132, POS1133A, POS1189, POS1192

OFF ON

CONTACT	POSITION OFF	ON	REMARK
⊸⊣⊢⊸		X	THIS DWG.

CONTROL SWITCH: ISEHT / CS

USED ON LOCATION: LHT450

NO SPRING RETURN

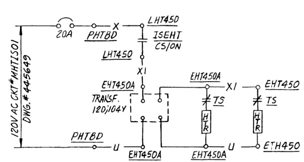

INTERIM SAMPLE SYSTEM HEAT TRACE CKT. # MHT1S01

(REC. DWG # 663353-691)

VALVE NOS: FCV654, FCV655, FCV656, FCV657, FCV660, FCV661, FCV662, FCV663, FCV664, FCV678, FCV679, FCV681, RCV11 & RCV12

CONTACTS		POSITIONS CLOSE	OPEN & INTERM	REMARKS POS1159, 1176	REMARKS POS1133
	A	X		SPARE	SPARE
	B		X	RED LT.	RED LT.
	C	X		SPARE	SPARE
	D		X	MONITOR LT	SPARE

VALVE CLOSE POSITION SWITCH

POS1133, POS1159, POS1176

CONTACTS		POSITION CLOSE	OPEN & INTERM	REMARKS 1116, 1118, 1188, 1191	REMARKS 1121, 1123, 1125
⊣⊢	A	X		GREEN LT.	SPARE
⊣⊢	B		X	SPARE	SPARE
⊣⊢	C	X		SPARE	SPARE
⊣⊢	D		X	SEAL IN	SEAL IN

VALVE OPEN POSITION SWITCH POS1116, POS1118, POS1188, POS1191, POS1121, POS1123, POS1125

CONTACTS		POSITION CLOSE	OPEN & INTERM	REMARKS POS1130 REF 13
	A	X		SPARE
	B		X	SPARE
	C	X		VENT INPUT
	D		X	VENT INPUT
	E	X		SPARE
	F		X	SPARE

VALVE CLOSE POSITION SWITCH POS1130

NUCLEAR SAFETY RELATED

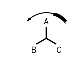

P.G.&E. SYSTEM PHASE SEQUENCE A-C-B

KEY DWG. SECTION 9

UNIT 1

DATE 04-16-2018		REVISION DESCRIPTION	
D.D.	FAZ1	Revised Per DDN-2*1722	
R.E.	FXC2		
I.V.	N/A		
P.E.	N/A		

REGISTERED PROFESSIONAL ENGINEER — NOT REQUIRED PER CF3.ID5 — STATE OF CALIFORNIA

ELECTRICAL
SCHEMATIC DIAGRAM
CONTAINMENT PURGE SYSTEM

DIABLO CANYON POWER PLANT
PACIFIC GAS AND ELECTRIC COMPANY
SAN FRANCISCO, CALIFORNIA

DWG SCALE:			
BILL OF MATL:			
SUPSDS:			
SUPSD BY:			
DRAWING	SHEET	PAGE	REV
437631	1	0	29

U2-441490

RASTER=437631-1-0.dgn
DGN=437631-1-0.dgn
CAD User:FAZ1 Date: 04-16-2018

DRAWING NUMBER 437631 1

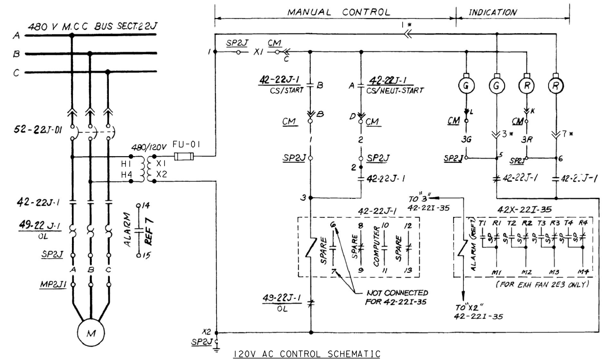

120V AC CONTROL SCHEMATIC

SUPPLY FAN 2S3 CONTAINMENT STRUCT PURGE CIRCUIT NO 2J01P00
CONTAINMENT PURGE EXHAUST FAN E3 SIMILAR EXCEPT AS SHOWN IN TABLE

DESCRIPTION	MOTOR LOC.		CIRCUIT BREAKER	BUS SECT	CIRCUIT NO	ALARM CKT. NO OVER-CURRENT		COMPUTER CKT. NO RUNNING	CONT'MT PURGE LOW FLOW ALARM ALM CKT.	DEVICE	CONTACT	REF
SUPPLY FAN 2S3 CONTAINMENT STRUCT PURGE	MP2J1		52-22J-01	22J	2J01P00	AI2975D	—	CY1044D	—	—	—	–
CONT'MT. PURGE EXHAUST FAN 2E3	MP2I35		52-22I-35	22I	2I35P00	AI2974D		CY1045D	AF5149D	42X-22I-35	TI-MI	7

*THE QUICK DISCONNECT INDICATION LIGHT WIRING IS FOR 52-22J-01 ONLY.

STOP START

CONTACTS		POSITIONS STOP	NEUT	START	REMARKS
⊣⊢	A		X	X	THIS DWG.
⊣⊢	B			X	THIS DWG.

CONTROL SWITCH 42-22J-1 / CS , 42-22I-35 / CS
USED AT LOCATION CM
SPRING RETURN TO NEUT. FROM START

OFF VACUUM RELIEF PRESSURE RELIEF
SELECT O-PUSH OPERATOR

CONTACTS		VACUUM RELIEF REL.	DEP.	OFF REL.	DEP.	PRESSURE RELIEF REL.	DEP.	REMARKS
⊣⊢	A	X	X					THIS DWG.
⊣⊢	B					X	X	THIS DWG.
⊣⊢	C						X	THIS DWG
⊣⊢	D		X					THIS DWG.

CONTROL SWITCH FCV663,664 / CS
USED AT LOC. CM

CLOSE OPEN
SPRING RETURN TO NEUTRAL FROM OPEN
USED AT LOC. CM

CONTACTS		POSITIONS CLOSE	NEUT.	OPEN	FCV 655, 657	FCV 662	FCV 654, 656
⊣⊢	A		X	X	SPARE	SPARE	THIS DWG.
⊣⊢	B			X	SPARE	SPARE	THIS DWG.
⊣⊢	C		X	X	SPARE	SPARE	SPARE
⊣⊢	D			X	SPARE	SPARE	THIS DWG.
⊣⊢	E		X	X	THIS DWG	THIS DWG	SPARE
⊣⊢	F			X	THIS DWG	THIS DWG	SPARE
⊣⊢	G		X	X	SPARE	SPARE	SPARE
⊣⊢	H			X	THIS DWG	SPARE	SPARE

CONTROL SWITCH FCV655,657 / CS , FCV662 / CS , FCV654,656 / CS

TABLE OF DEVICES

DEVICE NO	FUNCTION	RATING	MFR	TYPE	CAT./REF. NO	REMARKS
42X-22I-35	CONTMT. PURGE EXHAUST FAN TIME DELAY RELAY	120 VAC	AGASTAT		TR-14I3D	SET AT 60 SEC.
42 22J-1,22I-35	480V AC MOTOR STARTER	—	—	—	(3)	
49-22J-1,22I-35	MOTOR OVERLOAD RELAY	—	—	—	—	PART OF MOTOR STARTER
52-22J-01, 22I-35, 52-22I-02,08	480V AC AIR CIRCUIT BREAKER	—	—	—	(3)	
52-22I-08R	480V AC AIR CIRCUIT BKR.-BACK-UP	—	WE	—	(3)	
FCV...	FLOW CONTROL VALVE	—	—	—	(5) (6)	
K613	CONTMT ISOLATION PH A AUX. REL.	—	—	—	(9) (10)(15)	
K622	CONTMT. VENT. ISOL AUX REL.	—	—	—	(9) (10)(15)	
POS....	VALVE POSITION SWITCH	—	—	—		SEE TABLE FOR NOS
RCV..	RADIATION CONTROL VALVE	—	—	—		
SV287, 288, 289, 290, 293, 294, 295, 296, 297, 311, 312, 314, 469, 470, 293A, 294A, 469A, 470A	SOLENOID VALVE	—	—	—		

CLOSE OPEN
SPRING RETURN TO NEUT FROM OPEN

CONTACTS		POSITIONS CLOSE	NEUT	OPEN	FCV678 FCV660, 661 RCV11, 12	FCV679, 681
⊣⊢	A		X	X	THIS DWG	THIS DWG
⊣⊢	B			X	THIS DWG	THIS DWG
⊣⊢	C		X	X	SPARE	SPARE
⊣⊢	D			X	SPARE	THIS DWG

CONTROL SWITCH FCV660 / CS , FCV661 / CS , RCV11 / CS , RCV12 / CS
FCV679,681 / CS , FCV678 / CS USED AT LOC. CM

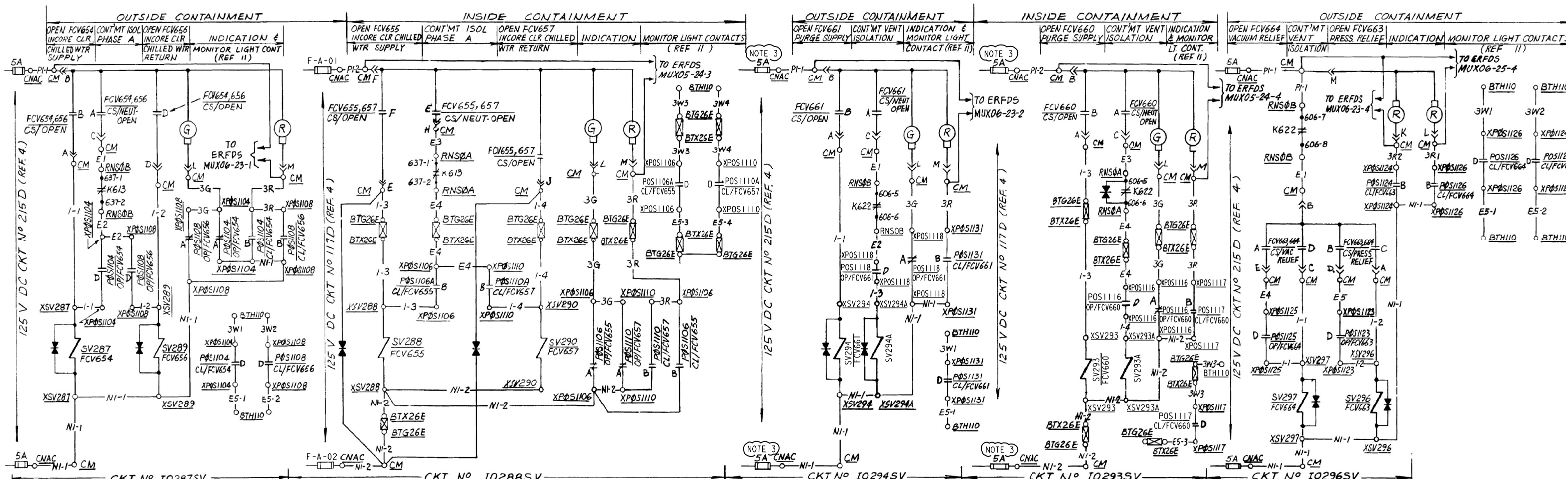

INCORE COOLER CHILLED WATER SUPPLY & RETURN VALVES FCV654, FCV656, FCV655 & FCV657 (SEE NOTE 2)
FOR CONTAINMENT AIR SAMPLE VALVES FCV679 & FCV681 ARE SIMILAR SEE TABLE

CONTAINMENT PURGE SUPPLY VALVES FCV661 & FCV660
FOR PURGE EXHAUST VALVES RCV12, RCV11 AND AIR SAMPLE VALVE FCV678 AND VACUUM PRESSURE RELIEF VALVE FCV 662 ARE SIMILAR SEE TABLE

VACUUM & PRESSURE RELIEF VALVES FCV663 & FCV664

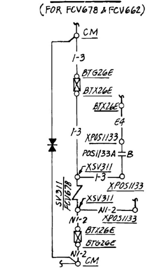

DETAIL "A"
(FOR FCV678 & FCV662)

EQUIPMENT LOCATION NUMBERS

SP2J	480 V M.C.C BUS SECT. 22J
MP2J1	CONTAINMENT PURGE SUPPLY FAN 2S3
CM	CONTROL BOARD 2VB4 AUX. EQ & DSL
RNSØB	RACK NUCLEAR SAFEGUARD OUTPUT TRAIN B
BTH110	TERMINAL BOX AREA H No 110
PM123	MECHANICAL PANEL No 123 BLOWDOWN TANK
BTG26E	TERMINAL BOX No G26E
XSV294	INSTRUMENT No. SV294 LOCAL MOUNTED
XPØS1118	INSTRUMENT No. POS 1118 LOCAL MOUNTED
CNAC	CONTROL BD. 2VB1 SAFEGUARDS

REFERENCES

1. DESCRIPTION OF ELECT. SCHEMATIC DIAG'S., SYMBOLS & CKT. DESIGNATIONS _____ 050003
2. EQUIPMENT LOCATION NUMBER LIST _____ 103013
3. SINGLE LINE METER & RELAY DIAG., 480V BUS SECT. 22D, E, I & J _____ 441232
4. SINGLE LINE METER & RELAY DIAG., 125/250V DC SYSTEM _____ 441240
5. PIPING SCHEMATIC VENTILATION & AIR CONDITIONING SYSTEMS _____ 108023
6. INSTRUMENT SCHEMATIC FLOW INSTRUMENT SYSTEMS _____ 108032
7. SCHEMATIC DIAG. MAIN ANNUNCIATOR SH. 1, 15 _____ 500771, 85
8. VENTILATION CONTROLS AREA "F" & "G" _____ 501395
9. Ⓦ FUNCTION DIAGRAMS _____ 663195
10. Ⓦ SOLID STATE PROTECTION SYSTEM _____ 663231
11. SCHEMATIC DIAGRAM MONITOR LIGHT BOX B _____ 441453
12. SCHEMATIC DIAG. AUX. & FUEL HANDLING BLDG. VENT. SYS. (POV1) _____ 454673
13. " " " " " " " " (POV2) _____ 454680
14. BLOCK DIAG.-ERFDS TECH. SUPPORT CTR. & CONT. RM. _____ 445297
15. SCHEM. DIAG SSPS OUTPUT RELAYS, TRAIN A, TRAIN B _____ 503089, 503093

CONTACTS		POSITIONS CLOSE & INTERM	OPEN	REMARKS POS1104, 1108	REMARKS POS1159, 1176	REMARKS POS1128 REF 12	REMARKS POS1106, 1110	REMARKS POS 1133
⊬	A	X		GREEN LT.	GREEN LT.	SPARE	GREEN LT.	GREEN LT.
⊣⊢	B		X	SPARE	SPARE	SPARE	SPARE	SPARE
⊬	C	X		SPARE	SPARE	VENT. INPUT	SPARE	SPARE
⊣⊢	D		X	SEAL IN	SEAL IN	VENT. INPUT	SPARE	SPARE
⊬	E	X		SPARE		SPARE	SPARE	
⊣⊢	F		X	SPARE		SPARE	SPARE	

VALVE OPEN POSITION SWITCH POS1104, POS1106, POS1128, POS1108, POS1110, POS1133, POS1159, POS1176

CONTACTS		POSITION CLOSE	OPEN & INTERM	REMARKS POS1130 REF 13
⊬	A	X		SPARE
⊣⊢	B		X	SPARE
⊬	C	X		VENT INPUT
⊣⊢	D		X	VENT INPUT
⊬	E	X		SPARE
⊣⊢	F		X	SPARE

VALVE CLOSE POSITION SWITCH POS1130

CONTACTS		POSITIONS CLOSE & INTERM	OPEN	REMARKS 1116, 1118, 1188, 1191	REMARKS 1121, 1123, 1125
⊣⊢	A	X		GREEN LT.	SPARE
⊣⊢	B		X	SPARE	SPARE
⊣⊢	C	X		SPARE	SPARE
⊣⊢	D		X	SEAL IN	SEAL IN

VALVE OPEN POSITION SWITCH
POS1116, POS1118, POS1188, POS1191, POS1121, POS1123, POS1125

CONTACTS		POSITIONS CLOSE	OPEN & INTERM.	REMARKS POS1104, 1108, 1159, 1176	REMARKS POS1106, 1110, 1133
⊬	A	X		SPARE	SPARE
⊣⊢	B		X	RED LT.	RED LT.
⊬	C	X		SPARE	SPARE
⊣⊢	D		X	MONITOR LT	SPARE

VALVE CLOSE POSITION SWITCH POS1104, POS1106
POS1108, POS1110, POS1133, POS1159, POS1176

CONTACTS		POSITIONS CLOSE	OPEN & INTERM	REMARKS	REMARKS POS1106A, 1110A, 1133A
⊣⊢	A	X		SPARE	SPARE
⊣⊢	B		X	RED LT.	SEAL-IN
⊣⊢	C	X		SPARE	SPARE
⊣⊢	D		X	MONITOR LT.	MON LT.

VALVE CLOSE POSITION SWITCH POS1117, POS1131, POS1106A, POS1189, POS1192, POS1132, POS1124, POS1126, POS1110A, POS1133A

ERFDS	DESCRIPTION		OUTSIDE CONTAINMENT (G) VALVE No	SOLENOID VLV No	SOLENOID VLV LOC	D C CKT No	VLV POS SW OPEN	VLV POS SW CLOSE	CIRCUIT No	CONT'MT VENT ISOL DEVICE	LOC	CONTACT	CONT'MT ISOL PH A DEVICE	LOC	CONTACT	INSIDE CONTAINMENT (F) VALVE No	SOLENOID VLV No	SOLENOID VLV LOC	D C CKT No	VLV POS SW OPEN	VLV POS SW CLOSE	CIRCUIT No	CONT'MT VENT ISOL DEVICE	LOC	CONTACT	CONT'MT ISOL PH A DEVICE	LOC	CONTACT	ERFDS
MUX06-23-1	INCORE COOLER CHILLED WATER (SEE NOTE 2)	SUPPLY	FCV654	287	XSV287	215D	1104		I0287SV	—	—	—	K613	RNSØB	637-1 637-2	FCV655	288	XSV288	117D	1106*1106A		I0288SV	—	—	—	K613	RNSØA	637-1 637-2	MUX05-24-3
		RETURN	FCV656	289	XSV289		1108									FCV657	290	XSV290		1110*1110A									
MUX06-23-2	CONT'MT PURGE	SUPPLY	FCV661	294 294A	XSV294 XSV294A	215D	1118	1131	I0294SV	K622	RNSØB	606-5 606-6	—	—	—	FCV660	293 293A	XSV293 XSV293A	117D	1116	1117	I0293SV	K622	RNSØA	606-5 606-6	—	—	—	MUX05-24-4
MUX06-23-3	CONT'MT PURGE	EXHAUST	RCV12	470 470A	XSV470 XSV470A	215D	1191	1192	I0470SV	K622	RNSØB	606-11 606-12	—	—	—	RCV11	469 469A	XSV469 XSV469A	117D	1188	1189	I0469SV	K622	RNSØA	606-11 606-12	—	—	—	MUX05-25-1
MUX06-24-1	CONTMT AIR SAMPLE	SUPPLY	FCV679	312⊕	PM123	215D	1176		I0312SV	K622	RNSØB	606-9 606-10	—	—	—	FCV678	311	XSV311	117D	1133*1133A		I0311SV	K622	RNSØA	606-9 606-10	—	—	—	MUX05-25-3
		RETURN	FCV681	314⊕	PM184		1153																						
—	VACUUM PRESSURE RELIEF		FCV663	296	XSV296	215D	1123	1124	I0296SV	K622	RNSØB	606-7 606-8	—	—	—	FCV662	295	XSV295	117D	1121	1132	I0295SV	K622	RNSØA	606-7 606-8	—	—	—	MUX05-25-2
			FCV664	297	XSV297		1125	1126																					

⊕ CONTACT PROTECTOR DIODES NOT USED

* SEE NOTE 1
SEE NOTE 3
SEE DETAIL "A"

NOTE.
1. THE SEAL-IN FOR VALVES FCV655, FCV657 AND FCV678 IS NOW A POSITION SWITCH CONTACT WHICH IS CLOSED WHEN THE VALVE IS IN THE OPEN OR INTERMEDIATE POSITION. PREVIOUSLY THE SEAL-IN WAS ONLY CLOSED WHEN THE VALVE WAS IN THE OPEN POSITION.
2. INCORE INSTRUMENT ROOM WATER CHILLER 2CH-4 AND SUPPLY FAN 2S-16 ARE DISABLED AND ABANDONED IN PLACE. ASSOCIATED COMPONENTS AND POWER/CONTROL FIELD CABLES AFFECTED BY THE SAID TWO EQUIPMENT ARE DISCONNECTED ON BOTH END AND SPARED. ALL OTHER COMPONENTS (FCVS), PIPING AND CABLES ASSOCIATED WITH THE INCORE INSTRUMENT ROOM CHILLER REMAIN FUNCTIONAL.
3. FUSES REMOVED DURING MODES 1, 2, 3 AND 4 (PER TS 3.6.3) TO DE-ENERGIZE FCV-660, FCV-661, RCV-11 AND RCV-12 VALVE OPERATORS.

NUCLEAR SAFETY RELATED

P.G.&E. SYSTEM PHASE SEQUENCE A-C-B

KEY DWG. SECTION 9

UNIT 2

DATE	04-16-2018
D.D.	FAZ1
R.E.	FXC2
I.V.	N/A
P.E.	N/A

REGISTERED PROFESSIONAL ENGINEER — NOT REQUIRED PER CF3.ID5 — STATE OF CALIFORNIA

REVISION DESCRIPTION: Revised Per DDN-2*1722

ELECTRICAL
SCHEMATIC DIAGRAM
CONTAINMENT PURGE SYSTEM

DIABLO CANYON POWER PLANT
PACIFIC GAS AND ELECTRIC COMPANY
SAN FRANCISCO, CALIFORNIA

DWG SCALE:			
BILL OF MATL:			
SUPSDS:			
SUPSD BY:			
DRAWING	SHEET	PAGE	REV
441490	1	0	19

UI-437631

DRAWING NUMBER 441490 1

RASTER=441490-1-0.dgn
DGN=441490-1-0.dgn
CAD User:FAZ1 Date:04-16-2018

4NPG 4 Size

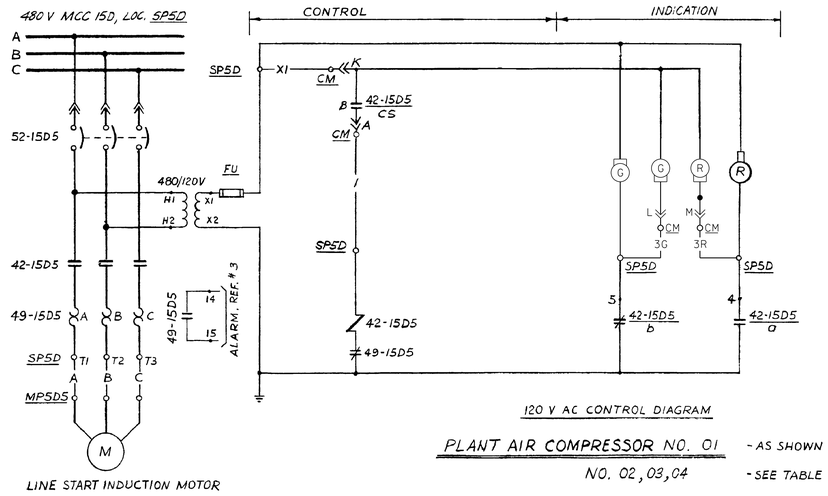

120 V AC CONTROL DIAGRAM

LINE START INDUCTION MOTOR

PLANT AIR COMPRESSOR NO. 01 - AS SHOWN

NO. 02, 03, 04 - SEE TABLE NO. 1

TABLE NO. 1

COMPRESSOR NO.	C.K.T.	480 V MCC	480 V BUS SECT.	BREAKER	STARTER	EQUIP LOCATIONS MCC	EQUIP LOCATIONS MOTOR
01	5D05P	15	D	52-15D5	42-15D5	SP5D	MP5D5
02	5E05P	15	E	52-15E5	42-15E5	SP5E	MP5E5
03	5D05P	25	D	52-25D5	42-25D5	SP5D	MP5D5
04	5E05P	25	E	52-25E5	42-25E5	SP5E	MP5E5

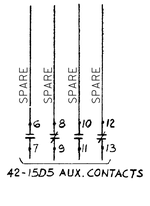

CONTACTS	VALVE POSITION FULLY OPEN	VALVE POSITION FULLY CLOSED	FUNCTION
1			SEAL-IN
2			SPARE
3			MONITOR LT.
4			SPARE
5			SPARE
6			GREEN LT.
7			SPARE
8			RED LIGHT

VALVE POSITION SWITCH POS1035

FCV 584

DEVICE TABLE

DEVICE	FUNCTION	RATING	MFR.	MODEL	CAT. OR DWG. REF	REMARKS
K05-1	AIR COMP 0-5 AUTOMATIC OPERATION AUX CONTACT IN EXPANSION MODULE 102-1	-	-	-	663002-60	SUPPLIED BY MFR.
K05-1	AIR COMP 0-6 AUTOMATIC OPERATION AUX CONTACT IN EXPANSION MODULE 102-1	-	-	-	663002-60	SUPPLIED BY MFR.
27AD	AIR DRYER POWER FAILURE RELAY					BY MFR
K613	CONTMT ISOLATION PHASE A AUX. RELAY				7,12,13	
▲ 42-15D5	AIR COMPR MOTOR STARTER	480 VAC			3	SIZE 4, 3-POS SWITCH USED AS 2-POS SWITCH
AR6, AR8	DRYER 0-1 TROUBLE ALARM RELAY				17	
▲ 49-15D5	AIR COMPR. MOTOR THERMAL O/L REL.					
▲ 52-15D5	AC CIRCUIT BREAKER	480 VAC			3	
52-15E31		480 VAC			3	
52-15D-29						
EP5D29	PLANT AIR DRYER 0-2 LOCAL SAFETY DISCONNECT					
ANS1009	MOISTURE ANALYSER				8	
TIS99	AIR HEADER TEMP INDICATING SWITCH					ALARM
POS1035	CONTAINMENT INSTRUMENT AIR SHUT-OFF VALVE POSITION SWITCH					
P5129	AIR COMPR LOW PRESS. AL. SWITCH					ALARM
SV176	SERVICE AIR SHUT-OFF VALVE	125 VDC				ENERGIZE TO OPEN PCV114
SV185	CONTAINMENT INSTR. AIR SHUTOFF VALVE	125 VDC				ENERGIZE TO OPEN FCV5B4

▲ = TYPICAL, SEE TABLE NO. 1 & 2

MAINTAINED POSITIONS

CONTACTS		POSITION DISABLE	POSITION ENABLE	REMARKS
L11 — L12	A			SPARE
R11 — R12	B		X	
L21 — L22	C			SPARE
R21 — R22	D		X	

(W) 07ZA CAM. 2 CONTROL SWITCH 42-15D5 CS

42-15E5 CS, 42-25D5 CS, 42-25E5 CS

USED AT LOC. CM & CME (SEE TABLE)

MAINTAINED POSITIONS

CONTACTS		POSITION OFF	POSITION ON	FUNCTION
	A		X	BYPASS CONTROL
	B	X		SPARE
	C		X	INDICATION
	D		X	SPARE

SERVICE AIR BLOCK BYPASS

DEVICE; 43-SABB/SS

LOC. PM150

SPRING RETURN TO NEUTRAL

(W) 07ZA, CAM. # 6

CONTACTS		POSITION CLOSE	POSITION NEUT	POSITION OPEN	REMARKS
L1 — L12	A		X	X	THIS DWG
R1 — R12	B			X	THIS DWG
L2 — L22	C	X			SP
R2 — R22	D	X	X		SP

CONTROL SWITCH

FCV5A4

CS

USED AT LOC. CM (1VB4, 2VB4)

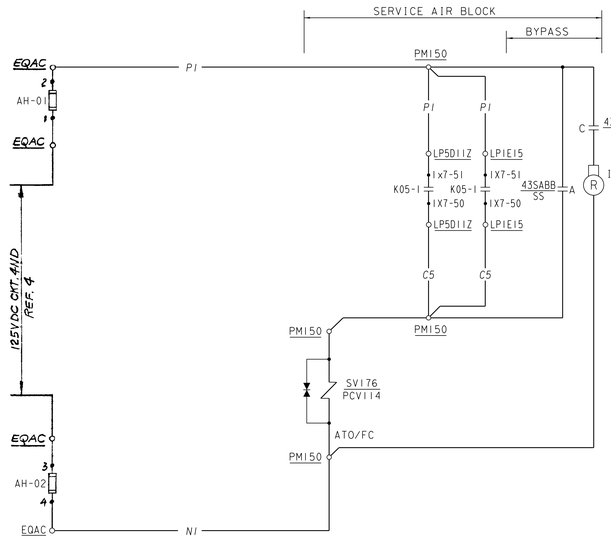

AUTOMATIC STANDBY START CKT. 5D05P

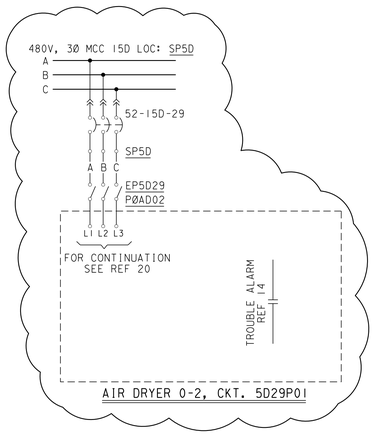

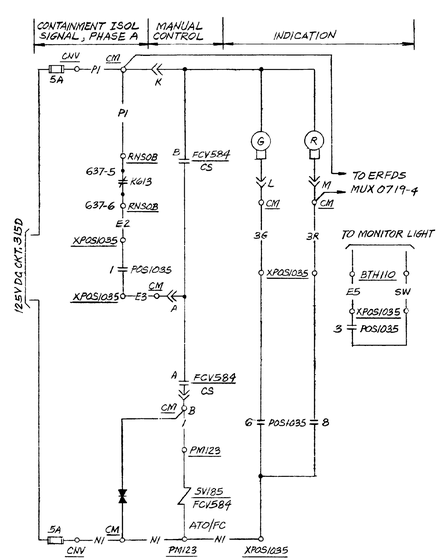

UNIT 1 INSTRUMENT AIR TO CONTAINMENT ISOLATION VALVE CKT. NO. 101855V

UNIT 2 FCV584 SIMILAR EXCEPT AS SHOWN IN TABLE

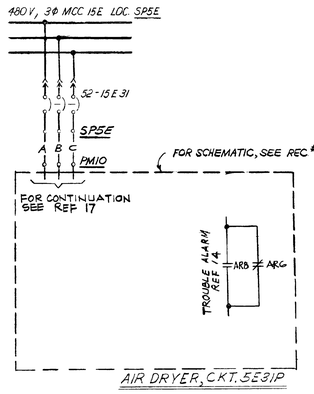

EQUIPMENT LOCATIONS

CM - CONTROL BOARD, MISC.
PM10 - MECH. PNL. NO. 10 AIR DRYER
PM150 MECH. PNL. NO. 150 AIR COMP.
SP5D - 480V MCC 15 BUS D
MP5D5 - PLANT AIR COMPRESSOR 01 MOTOR
EQAC - EQUIPMENT CABINET, AIR COMPRESSORS
CT1 - CONTROL BOARD TURBINE
POS1035 = XPOS1035 CONTAINMENT INSTRUMENT AIR VALVE
PM123 - MECH. PNL. NO. 123 BLOWDOWN SAMPLES
CNV - CONTROL BD, CHEMICAL & VOLUME CONTROL SYSTEM
BTH110 - TERMINAL BOX H 110
RNS0B - RACK NUCLEAR, SAFEGUARD OUTPUT TRAIN B
LP5D11Z - PLANT AIR COMPRESSOR 0-5
LP1E15 - PLANT AIR COMPRESSOR 0-6
PØAD02 - AIR DRYER 0-2

INSTR. AIR TO CONT'MT. ISOLATION VALVES FCV584

UNIT	VALVE NO.	LOCATION OF CONTROL	CKT. NO.	REFERENCE DRAWING NO's SLMR125VDC	REFERENCE DRAWING NO's SD MON LT.	REFERENCE DRAWING NO's CKT. SCHD.	ERFDS	SOLENOID VALVE NO.	SOLENOID VALVE LOC	POS SW # CLOSE	POS SW # OPEN	125VDC CKT	CONTMT ISOL PH A DEVICE	CONTMT ISOL PH A LOC.	CONTMT ISOL PH A CONTACT
1	FCV584	CM(1VB4)	101855V	445076	437697	103049	MUX07-19-4	SV185	PM123	1035	315D	K613	RNS0B		637-5 — K613 — 637-6
2	FCV584	CM(2VB4)	101855V	441240	441453	102759	MUX07-19-4	SV185	PM123	1035	315D	K613	RNS0B		637-5 — K613 — 637-6

AIR COMPRESSOR ALARMS-TABLE NO.2

		GENERAL SHUTDOWN	GENERAL WARNING	AIR PRESS LOW	AIR HDR HI-TEMP	AIR MOISTURE CONTENT HIGH
COMPR. 01	DEVICE	GSDR-1	GWR-1			
	CKT. NO.	AY2503D1	AY2504D1	*DEVICE PS129	*DEVICE TIS199	DEVICE ANS1009
COMPR. 02	DEVICE	GSDR-2	GWR-2			
	CKT. NO.	AY2503D2	AY2504D2			
COMPR. 03	DEVICE	GSDR-3	GWR-3	CIRCUIT AY5095D2	CIRCUIT AY5095D4	CIRCUIT AY5095D2
	CKT. NO.	AY2503D3	AY2504D3			
COMPR. 04	DEVICE	GSDR-4	GWR-4			
	CKT. NO.	AY2503D4	AY2504D4			

(* COMMON TO ALL AIR COMPR.)

REFERENCES

	UNIT 1	UNIT 2
1. DESCRIPTION OF ELEC. SCHEM. DIAG. SYMBOLS & CKT DESIGNATION	DWG. NO. 050003	——
2. LIST OF EQUIPMENT LOCATIONS CODE	↓ 101900, 103013	↓
3. SINGLE LINE METER & RELAY DIAG. 480V SYS BUS SECT 15D&15E (25D&25E)	437544; 441236	
4. ↓ ↓ ↓ ↓ 125V DC SYSTEM	DWG NO. 437546; 441240	↓ ↓
5. DIAG. & PANEL SCHEDULE LIGHTING DISTRIBUTION	437900, 441492	
6. SCHEMATIC DIAGRAM, MAIN ANNUNCIATOR	501121; 500771	
7. (W) SOLID STATE PROTECTION SYSTEM	REC. NO. 663231,	——
8. INSTRUMENT REFERENCE	DWG. NO. 102038; 108038	
9. SCHEM. DIAG. MONITOR LIGHT BOX B	DWG. NO. 437697; 441453	
~~10. SINGLE LINE METER & RELAY DIAG. 480 BUS SECT 1E (2E) DWG. 437916 (441237)~~		
11. BLOCK DIAG.-ERFDS TECH. SUPPORT CTR. & CONTROL ROOM	DWG. 445278 (445287)	
12. SCHEM. DIAG. SSPS OUTPUT RELAYS, TRAIN B	DWG. 503088	
13. SCHEM. DIAG. SSPS OUTPUT RELAYS, TRAIN B U#2	DWG. 503093	
14. SCHEM. DIAG. PLANT AIR COMPRESSOR ANNUNCIATOR	DWG. NO. 479402	
15. SCHEM. DIAG. OF CONNECTIONS PLANT AIR COMPRESSOR 0-6	DWG. NO. 479355	
16. ↓ ↓ ↓ ↓ ↓ ↓ 0-5	DWG. NO. 479354	
17 WIRING DIAG. - AIR DRYER 0-1	DWG. NO. 663003-28	
18. PLANT AIR COMPRESSOR 0-5 MFR DRAWINGS	DWG 663002-60	
19. PLANT AIR COMPRESSOR 0-6 MFR DRAWINGS	DWG 663002-60	
20. WIRING DIAGRAM-AIR DRYER 0-2	DWG 663003-51	

P.G.&E. SYSTEM PHASE SEQUENCE A-C-B

KEY DWG. SECTION 10

UNIT 1 & 2

DATE	
08-05-2024	
D.D.	MNRU
R.E.	FAZI
I.V.	N/A
P.E.	N/A

NOT REQUIRED PER B&P 5536

REVISION DESCRIPTION: Revised Per DDN-2*1962

ELECTRICAL
SCHEMATIC DIAGRAM
PLANT AIR COMPRESSORS

DIABLO CANYON POWER PLANT
PACIFIC GAS AND ELECTRIC COMPANY
SAN FRANCISCO, CALIFORNIA

DWG SCALE:	
BILL OF MATL:	
SUPSDS:	
SUPSD BY:	
DRAWING	437632
SHEET	1
PAGE	0
REV	25

DRAWING NUMBER 437632

RASTER=437632-1-0.dgn
DGN=437632-1-0.dgn
CAD User=MNRU Date: 08-05-2024

UNITS: 4 Size

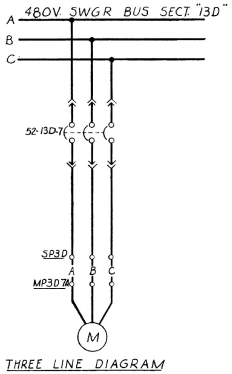

THREE LINE DIAGRAM

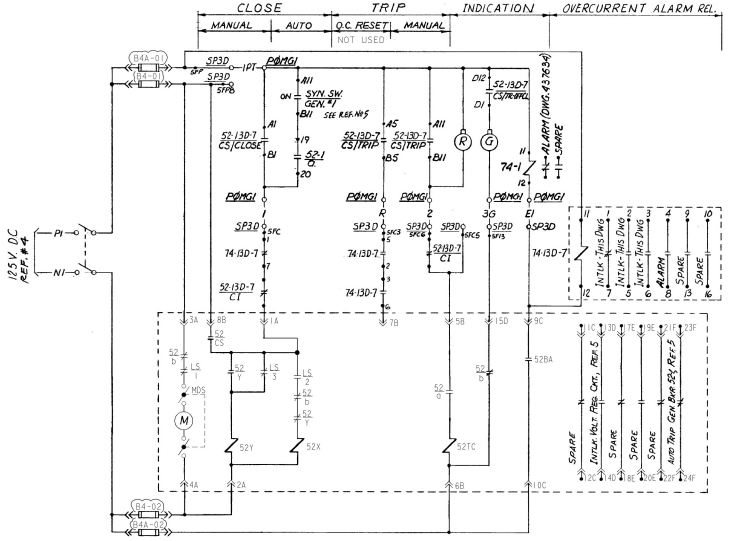

125 V DC CONTROL SCHEMATIC

CONTROL ROD DRIVE MOTOR-GENERATOR SET No.11 CKT. No. 3D07P00

CONTROL ROD DRIVE M-G SET NO.12 SIMILAR EXCEPT AS SHOWN IN TABLE

MOTOR		CIRCUIT BKR. No	CIRCUIT NO.	BUS SECT.	125 V. DC CKT. No.	LOC. OF CONTROL	AUTO CLOSE INTERLOCKS						ALARM CKT. NO
							SYNCHRONIZING SW.			GENERATOR BREAKER			OVER-CURRENT
Nº	LOC.						Nº	LOC.	CONTACT	Nº	LOC.	CONTACT	
11	MP3D7A	52-13D-7	3D07P00	13D	339D	PØMG1	GEN. #1	PØMG1	A11-11-B11	52-1	PØMG1	19-11-20	A12378D
12	MP3E3A	52-13E-3	3E03P00	13E	237D	PØMG2	GEN. #2	PØMG2	A11-11-B11	52-2	PØMG2	19-11-20	A12973D

TABLE OF DEVICES

DEVICE No.	FUNCTION	RATING	MFR.	TYPE	CAT/DWG.*	REMARKS
52-1	GENERATOR Nº 11 BREAKER				(5)	
52-13D-7; 13E-3	480V. A.C. AIR CIRCUIT BREAKER	——	——	——	(1)	663338
52-13D-7, 52-13E-3 CT CT	AIR CIRCUIT BREAKER CELL INTERLOCK	——	——	——	PART OF SWGR	CONTACTS SHOWN WITH BKR. IN OPERATE POSITION
74-13D-7, 13E-7	BKR. OVERCURRENT AUX. RELAY	——	——	——	——	PART OF SWITCHGEAR
74-1, 74-2	BKR. OVERCURRENT ALARM RELAY	——	——	——	——	PART OF CONTROL PNL.

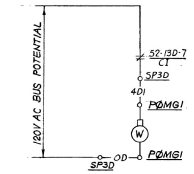

POTENTIAL INTERLOCK

TYPICAL FOR CONTROL ROD DRIVE MOTOR-GENERATOR SET Nos 11 & 12

CONTACTS	CONTACT NO.	POSITIONS				REMARKS
		PULL TO TRIP	TRIP	OFF	CLOSE	
o—||—o	A11 - B11	X	X			THIS DWG.
o—||—o	A12 - B12			X		SP
o—||—o	A1 - B1				X	THIS DWG
o—||—o	A5 - B5	X	X			THIS DWG
o—||—o	A6 - B6			X		SP
o—||—o	A7 - B7				X	SP
o—||—o	C10 - C1	X				SP
o—||—o	D10 - D1		X	X	X	THIS DWG.
o—||—o	C6 - C7	X				SP
o—||—o	D6 - D7		X	X	X	SP
o—||—o	E10 - E1	X				SP
o—||—o	F10 - F1		X	X	X	SP
o—||—o	E6 - E7	X				SP
o—||—o	F6 - F7		X	X	X	SP

Control Sw: 52-13D-7 , 52-13E-3
CS CS

Used at location PØMG1, PØMG2

SPRING RETURN TO OFF FROM CLOSE & TRIP.

EQUIPMENT LOCATION NUMBERS

5P3D - 480V SWITCHGEAR LOAD CENTER 13 BUS SECT D
MP3D7A - CONTROL ROD DRIVE M-G SET NO 11
PØMG1 - Control Panel - MG Set #11

REFERENCE DRAWINGS

1.	SINGLE LINE METER & RELAY DIAGRAM, 480V. SYS. BUS SECT. 13D-E-1-J	Dwg.* 437540
2.	DESCRIPTION OF ELECT. SCHEMATIC DIAG'S, SYMBOLS & CKT. DESIGNATIONS	050003
3.	EQUIPMENT LOCATION NUMBER LIST	101900
4.	SINGLE LINE METER & RELAY DIAGRAM, 125 V. DC. SYSTEM	445076
5.	SCHEMATIC DIAGRAM CONTROL ROD DRIVE MOTOR GENERATOR SET, SH. 2	437634
6.	SINGLE LINE METER & RELAY DIAGRAM 125 V DC SYSTEM	445075

P.G.&E. SYSTEM PHASE SEQUENCE A-C-B

REGISTERED PROFESSIONAL ENGINEER — RAYMOND B. WILSON — E 15507 — ELECTRICAL — STATE OF CALIFORNIA

KEY DWG. SECTION 4

UNIT 1

DATE	DESCRIPTION	COORDINATION
DWN.	Revised per FCT 027082	NUCL.
R.E.		MECH.
INDEP. VERIFIER		ELEC.
P.E.		CIVIL
		PIPING
		I&C

REVISION INFORMATION

ELECTRICAL
SCHEMATIC DIAGRAM
CONTROL ROD DRIVE MOTOR GENERATOR SET

DIABLO CANYON POWER PLANT
PACIFIC GAS AND ELECTRIC COMPANY
SAN FRANCISCO, CALIFORNIA

DWG. SCALE
BILL OF MATL
SUPSDS
SUPSD BY
SHEET NO. 1 OF

437603 REV 7

CAD User: rsgl Date: 1-07-2003
DGN: 0001237.DGN
Z:\Electronic\2237.TIF

437603

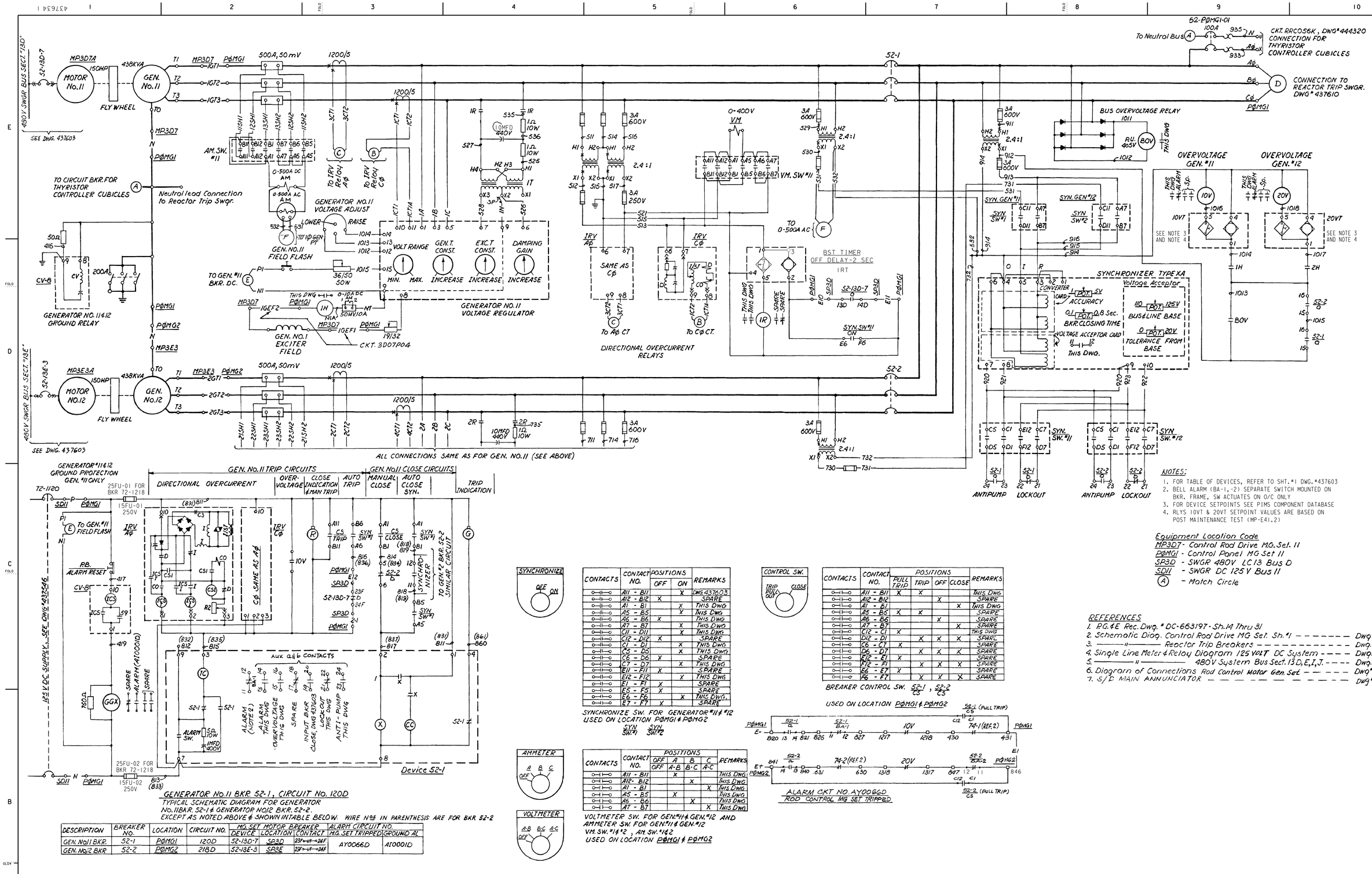

GENERATOR No.11 BKR. 52-1, CIRCUIT No. 120D

TYPICAL SCHEMATIC DIAGRAM FOR GENERATOR No.11 BKR. 52-1 & GENERATOR NO.12 BKR. 52-2. EXCEPT AS NOTED ABOVE & SHOWN INTABLE BELOW. WIRE Nos IN PARENTHESIS ARE FOR BKR 52-2

DESCRIPTION	BREAKER NO.	LOCATION	CIRCUIT NO.	MG. SET MOTOR BREAKER DEVICE	MG. SET MOTOR BREAKER LOCATION	MG. SET MOTOR BREAKER CONTACT	ALARM CIRCUIT NO. MG. SET TRIPPED	ALARM CIRCUIT NO. GROUND AL
GEN. No.11 BKR.	52-1	P0MG1	120D	52-13D-7	SP3D	23F→41→24F	A10006D	A10001D
GEN. No.12 BKR	52-2	P0MG2	218D	52-13E-3	SP3E	23F→41→24F		

SYNCHRONIZE

CONTACTS	CONTACT NO.	POSITIONS OFF	POSITIONS ON	REMARKS
	A11 - B11		X	DWG 437603
	A12 - B12	X		SPARE
	A1 - B1		X	THIS DWG
	A5 - B5		X	THIS DWG.
	A6 - B6	X		THIS DWG.
	A7 - B7		X	THIS DWG.
	C11 - D11		X	THIS DWG.
	C12 - D12	X		SPARE
	C1 - D1		X	THIS DWG.
	C5 - D5		X	THIS DWG.
	C6 - D6	X		SPARE
	C7 - D7		X	THIS DWG.
	E11 - F11	X		SPARE
	E12 - F12		X	THIS DWG
	E1 - F1	X		SPARE
	E5 - F5	X		SPARE
	E6 - F6		X	THIS DWG.
	E7 - F7	X		SPARE

SYNCHRONIZE SW. FOR GENERATOR*11 & *12 USED ON LOCATION P0MG1 & P0MG2

SYN SW.*1 SYN SW.*2

CONTROL SW.

TRIP PULL OUT CLOSE

CONTACTS	CONTACT NO.	POSITIONS PULL TRIP	POSITIONS TRIP	POSITIONS OFF	POSITIONS CLOSE	REMARKS
	A11 - B11	X	X			THIS DWG.
	A12 - B12			X		SPARE
	A1 - B1				X	THIS DWG.
	A5 - B5	X	X			SPARE
	A6 - B6			X		SPARE
	A7 - B7				X	SPARE
	C12 - C1	X				THIS DWG
	D12 - D1		X	X	X	SPARE
	C6 - C7	X				SPARE
	D6 - D7		X	X	X	SPARE
	E12 - E1	X				SPARE
	F12 - F1		X	X	X	SPARE
	E6 - E7	X				SPARE
	F6 - F7		X	X	X	SPARE

BREAKER CONTROL SW. 52-1 / C5 , 52-2 / C5

USED ON LOCATION P0MG1 & P0MG2

ALARM CKT NO. A10066D ROD CONTROL MG SET TRIPPED

AMMETER

A B C OFF

CONTACTS	CONTACT NO.	POSITIONS OFF	A A-B	B B-C	C A-C	REMARKS
	A11 - B11		X			THIS DWG.
	A12 - B12			X		THIS DWG
	A1 - B1				X	THIS DWG.
	A5 - B5		X			THIS DWG.
	A6 - B6			X		THIS DWG
	A7 - B7				X	THIS DWG

VOLTMETER SW. FOR GEN.*11 & GEN.*12 AND AMMETER SW. FOR GEN.*11 & GEN.*12
VM. SW.*1 & *2 , AM. SW.*1 & 2
USED ON LOCATION P0MG1 & P0MG2

VOLTMETER

A-B B-C A-C OFF

NOTES:

1. FOR TABLE OF DEVICES, REFER TO SHT.*1 DWG.*437603
2. BELL ALARM (BA-1, -2) SEPARATE SWITCH MOUNTED ON BKR. FRAME, SW ACTUATES ON O/C ONLY
3. FOR DEVICE SETPOINTS SEE PIMS COMPONENT DATABASE
4. RLYS 10VT & 20VT SETPOINT VALUES ARE BASED ON POST MAINTENANCE TEST (MP-E41.2)

Equipment Location Code
MP3D7 - Control Rod Drive MG. Set. 11
P0MG1 - Control Panel MG Set 11
SP3D - SWGR 480V LC13 Bus D
SD11 - SWGR DC 125 V Bus 11
(A) - Match Circle

REFERENCES

1. P.G.&E. Rec. Dwg. * DC-663197-Sh.19 Thru 31
2. Schematic Diag. Control Rod Drive MG Set. Sh.*1 ——— Dwg.*437603
3. ——— " ——— Reactor Trip Breakers ——— Dwg.*437610
4. Single Line Meter & Relay Diagram 125 VOLT DC System ——— Dwg.*437546
5. ——— " ——— 480V System Bus Sect. 13D, E, J. ——— Dwg.*437540
6. Diagram of Connections Rod control Motor Gen. Set ——— Dwg.* 444320
7. S/D MAIN ANNUNCIATOR ——— Dwg.* 501123

P.G.&E. SYSTEM PHASE SEQUENCE A-C-B

KEY DWG. SECTION 4

UNIT 1

DATE	
01-02-2024	
D.D.	FAZ1
R.E.	FXC2
I.V.	N/A
P.E.	N/A

REGISTERED PROFESSIONAL ENGINEER — NOT REQUIRED PER GO 95.105 — STATE OF CALIFORNIA

REVISION DESCRIPTION
Revised Per DFT-7*6092

ELECTRICAL
SCHEMATIC DIAGRAM
CONTROL ROD DRIVE MOTOR GENERATOR SET

DIABLO CANYON POWER PLANT
PACIFIC GAS AND ELECTRIC COMPANY
SAN FRANCISCO, CALIFORNIA

DWG SCALE:	
BILL OF MATL:	
SUPSDS:	
SUPSD BY:	

DRAWING	SHEET	PAGE	REV
437634	1	0	15

U2-441488

RASTER=437634-1-0.dgn
DGN=437634-1-0.dgn
CAD User:FAZ1 Date: 01-02-2024

DRAWING NUMBER 437634 1

4 Size

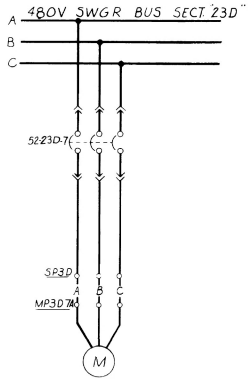

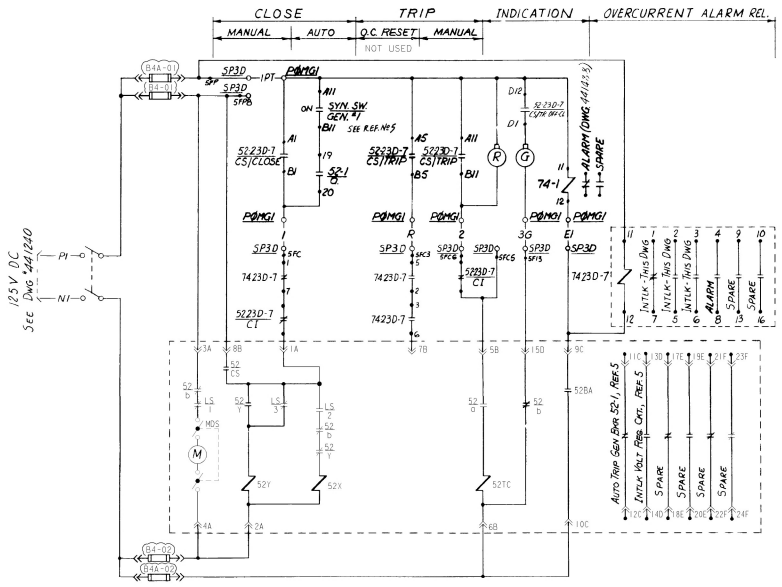

125 V DC CONTROL SCHEMATIC

CONTROL ROD DRIVE MOTOR-GENERATOR SET No.21 CKT. No. 3D07P00

CONTROL ROD DRIVE M-G SET No.22 SIMILAR EXCEPT AS SHOWN IN TABLE

MOTOR		CIRCUIT BKR No	CIRCUIT No.	BUS SECT	125V DC CKT No	LOC. OF CONTROL	AUTO CLOSE INTERLOCKS					ALARM CKT. NO
							SYNCHRONIZING SW.			GENERATOR BREAKER		
NO	LOC						NO	LOC.	CONTACT	NO	LOC.	CONTACT	OVER-CURRENT
21	MP3D7A	52-23D-7	3D07P00	23D	339D	PØMG1	GEN. #1	PØMG1	A11-11-B11	52-1	PØMG1	19-11-20	A12978D
22	MP3E3A	52-23E-3	3E03P00	23E	237D	PØMG2	GEN. #2	PØMG2	A11-11-B11	52-2	PØMG2	19-11-20	A12979D

TABLE OF DEVICES

DEVICE No	FUNCTION	RATING	MFR	TYPE	CAT/DWG #	REMARKS
52-1	GENERATOR NO 11 BREAKER				(5)	
52-23D-7, 23E-3	480V A.C. AIR CIRCUIT BREAKER				(1)	663338
52-23D-7, 52-23E-3 CT CT	AIR CIRCUIT BREAKER CELL INTERLOCK				PART OF SWGR	CONTACTS SHOWN WITH BKR. IN OPERATE POSITION
74-23D-7, 23E-7	BKR OVERCURRENT AUX. RELAY					PART OF SWITCHGEAR
74-1, 74-2	BKR. OVERCURRENT ALARM RELAY					PART OF CONTROL PNL

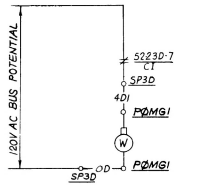

POTENTIAL INTERLOCK

TYPICAL FOR CONTROL ROD DRIVE MOTOR-GENERATOR SET NOS 21 & 22

CONTACTS	CONTACT NO.	POSITIONS				REMARKS
		PULL TRIP	TRIP	OFF	CLOSE	
o-||-o	A11 - B11	X	X			THIS DWG
o-||-o	A12 - B12			X		SP
o-||-o	A1 - D1				X	THIS DWG
o-||-o	A5 - B5	X	X			THIS DWG
o-||-o	A6 - B6			X		SP
o-||-o	A7 - B7				X	SP
o-||-o	C12 - C1	X				SP
o-||-o	D12 - D1		X	X	X	THIS DWG
o-||-o	C6 - C7	X				SP
o-||-o	D6 - D7		X	X	X	SP
o-||-o	E12 - E1	X				SP
o-||-o	F12 - F1		X	X	X	SP
o-||-o	E6 - E7	X				SP
o-||-o	F6 - F7		X	X	X	SP

Control Sw: 52-23D-7 CS , 52-23E-3 CS

Used at location PØMG1, PØMG2

SPRING RETURN TO OFF FROM CLOSE & TRIP.

EQUIPMENT LOCATION NUMBERS

SP3D - 480V SWITCHGEAR LOAD CENTER 23 BUS SECT D
MP3D7A - CONTROL ROD DRIVE M-G SET NO 21
PØMG1 - Control Panel - MG Set #21

REFERENCE DRAWINGS

1. SINGLE LINE METER & RELAY DIAGRAM, 480V SYS. BUS SECT 23D-E-1-3 DWG # 441234
2. DESCRIPTION OF ELECT. SCHEMATIC DIAG'S, SYMBOLS & CKT DESIGNATIONS 050003
3. EQUIPMENT LOCATION NUMBER LIST 103013
4. SINGLE LINE METER & RELAY DIAGRAM, 250/125 V. DC. SYSTEM 441249
5. SCHEMATIC DIAGRAM CONTROL ROD DRIVE MOTOR GENERATOR SET, SH. 2 441488

P.G.&E. SYSTEM PHASE SEQUENCE A-C-B

REGISTERED PROFESSIONAL ENGINEER KEVIN B. BROWN E 15507 ELECTRICAL STATE OF CALIFORNIA

KEY DWG. SECTION 4

UNIT 2

DATE	DESCRIPTION	COORDINATION
2/3/03		
DWN. RKO2	Revised per FCT 027082	NUCL. -
R.E. HPS2		MECH. -
INDEP. VERIFIER -		ELEC. -
		CIVIL -
		PIPING -
P.E. KBB2		I&C -

REVISION INFORMATION

ELECTRICAL
SCHEMATIC DIAGRAM
CONTROL ROD DRIVE MOTOR GENERATOR SET

DIABLO CANYON POWER PLANT
PACIFIC GAS AND ELECTRIC COMPANY
SAN FRANCISCO, CALIFORNIA

DWG SCALE	
BILL OF MATL	
SUPSDS	
SUPSD BY	
SHEET NO. 1 OF	

441487 REV 5

DRAWING NUMBER 441487

CAD IDENTIFIED: DATED: 1-17-2003
DGN:(E) BRKDS1.DGN
MASTER:(E) BRKDS1.TIF

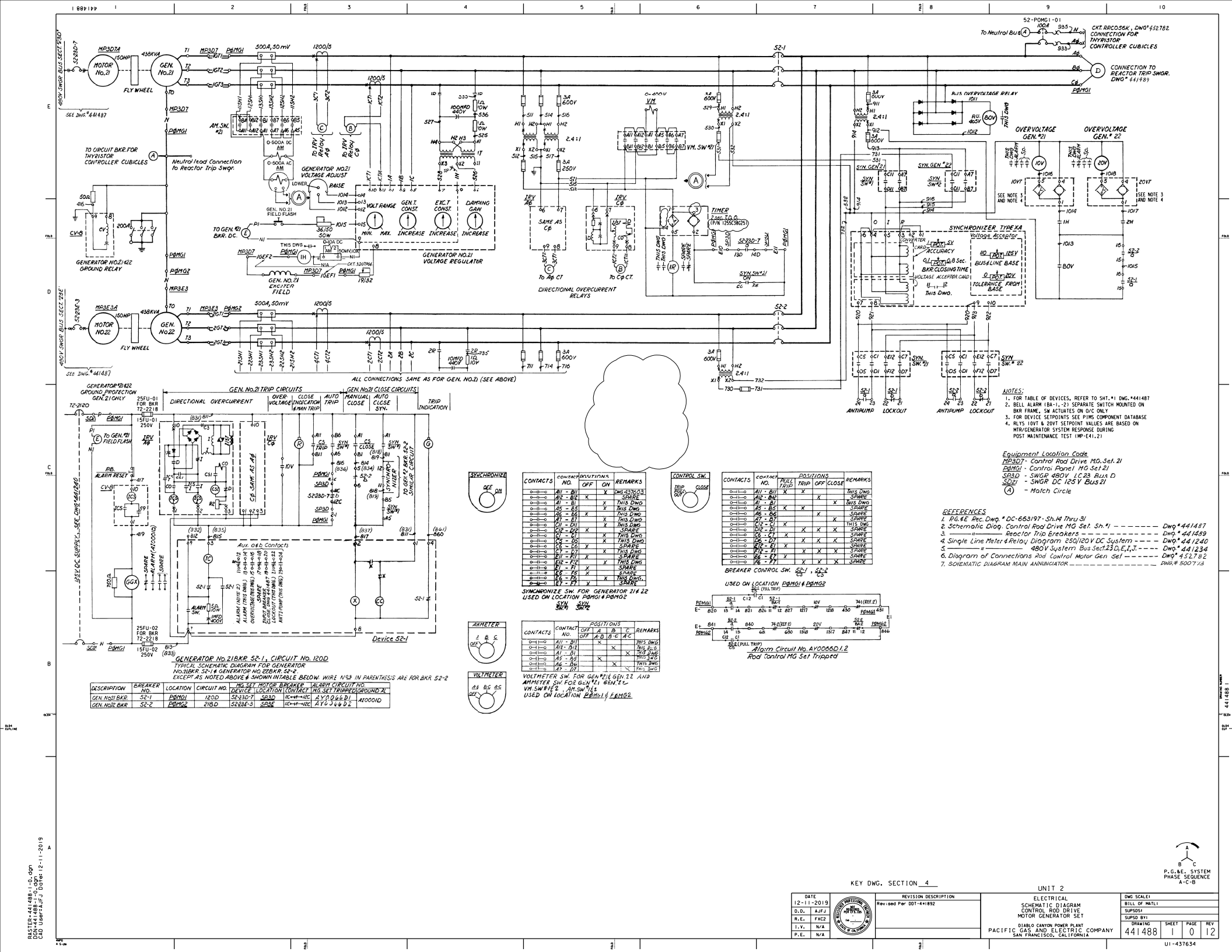

NOTES:
1. FOR TABLE OF DEVICES, REFER TO SHT.#1 DWG.#441487
2. BELL ALARM (BA-1,-2) SEPARATE SWITCH MOUNTED ON BKR FRAME, SW ACTUATES ON O/C ONLY
3. FOR DEVICE SETPOINTS SEE PIMS COMPONENT DATABASE
4. RLYS 10VT & 20VT SETPOINT VALUES ARE BASED ON MTR/GENERATOR SYSTEM RESPONSE DURING POST MAINTENANCE TEST (MP-E41.2)

Equipment Location Code
MP3D7 - Control Rod Drive MG Set 21
P@MG1 - Control Panel MG Set 21
SP3D - SWGR 480V LC 23 Bus D
SD21 - SWGR DC 125V Bus 21
(A) - Match Circle

REFERENCES
1. P.G.&E. Rec. Dwg. # DC-663197-Sh.14 Thru 31 — Dwg.# 441487
2. Schematic Diag. Control Rod Drive MG Set Sh.#1 — Dwg.# 441489
3. " Reactor Trip Breakers — Dwg.# 441240
4. Single Line Meter & Relay Diagram 250/120V DC System — Dwg.# 441234
5. " 480V System Bus Sect. 23 D, E, J — Dwg.# 452782
6. Diagram of Connections Rod Control Motor Gen Set — Dwg.# 500713
7. SCHEMATIC DIAGRAM MAIN ANNUNCIATOR — DWG.# 500713

GENERATOR No.21 BKR 52-1, CIRCUIT No. 120D
TYPICAL SCHEMATIC DIAGRAM FOR GENERATOR NO.21 BKR. 52-1 & GENERATOR NO.22 BKR. 52-2. EXCEPT AS NOTED ABOVE & SHOWN IN TABLE BELOW. WIRE NO3 IN PARENTHESIS ARE FOR BKR 52-2

DESCRIPTION	BREAKER NO.	LOCATION	CIRCUIT NO.	MG SET MOTOR BREAKER DEVICE	MG SET MOTOR BREAKER LOCATION	MG SET MOTOR BREAKER CONTACT	ALARM CIRCUIT NO. MG SET TRIPPED	ALARM CIRCUIT NO. GROUND X
GEN. No21 BKR.	52-1	P@MG1	120D	52-23D-7	SP3D	11C-4F-12C	AY0066D1	#1000ID
GEN. No22 BKR.	52-2	P@MG2	216D	52-23E-3	SP3E	11C-4F-12C	AY0066D2	

SYNCHRONIZE SW. FOR GENERATOR 21 & 22 USED ON LOCATION P@MG1 & P@MG2

CONTACTS	CONTACT NO.	POSITIONS OFF	POSITIONS ON	REMARKS
o-o	A11 - B11	X		DWG 427603 SPARE
o-o	A12 - B12	X		
o-o	A1 - B1		X	THIS DWG.
o-o	A5 - B5		X	THIS DWG.
o-o	A6 - B6	X		THIS DWG.
o-o	A7 - B7		X	THIS DWG.
o-o	C11 - D11		X	THIS DWG.
o-o	C12 - D12	X		SPARE
o-o	C1 - C1		X	THIS DWG.
o-o	C5 - D5		X	THIS DWG.
o-o	C5 - C6	X		SPARE
o-o	C7 - D7		X	THIS DWG.
o-o	E11 - F11	X		SPARE
o-o	E12 - F12		X	THIS DWG.
o-o	E1 - F1	X		SPARE
o-o	E5 - F5	X		SPARE
o-o	E5 - F5		X	THIS DWG.
o-o	E7 - F7	X		SPARE

VOLTMETER SW. FOR GEN #21 & GEN 22 AND AMMETER SW. FOR GEN #21 GEN #22
VM. SW #1 & 2, AM. SW #1 & 2
USED ON LOCATION P@MG1 & P@MG2

CONTACTS	CONTACT NO.	POSITIONS OFF	A	B	C	REMARKS
o-o	A11 - B11		X			THIS DWG
o-o	A12 - B12			X		THIS D.W.G.
o-o	A1 - B1				X	THIS DWG
o-o	A5 - B5		X			THIS D.W.G.
o-o	A6 - B6			X		THIS DWG
o-o	A7 - B7				X	THIS DWG

BREAKER CONTROL SW. 52-1, 52-2 CS

CONTACTS	CONTACT NO.	PULL TRIP	TRIP	OFF	CLOSE	REMARKS
o-o	A11 - B11	X				THIS DWG
o-o	A12 - B12		X			SPARE
o-o	A1 - B1			X		THIS DWG
o-o	A5 - B5	X				SPARE
o-o	A6 - B6		X			SPARE
o-o	A7 - B7			X		SPARE
o-o	C12 - C1	X				THIS DWG
o-o	D12 - D1		X	X	X	SPARE
o-o	C6 - C1	X				SPARE
o-o	D6 - D7		X	X	X	SPARE
o-o	E12 - E1	X				SPARE
o-o	F12 - F1		X	X	X	SPARE
o-o	E6 - E7	X				SPARE
o-o	F6 - F7		X	X	X	SPARE

USED ON LOCATION P@MG1 & P@MG2

Alarm Circuit No. AY0066D1,2
Rod Control MG Set Tripped

P.G.&E. SYSTEM PHASE SEQUENCE A-C-B

KEY DWG. SECTION 4

UNIT 2

DATE		REVISION DESCRIPTION
12-11-2019		Revised Per DDT-4#1892
D.D.	AJFJ	
R.E.	FXC2	
I.V.	N/A	
P.E.	N/A	

ELECTRICAL
SCHEMATIC DIAGRAM
CONTROL ROD DRIVE
MOTOR GENERATOR SET

DIABLO CANYON POWER PLANT
PACIFIC GAS AND ELECTRIC COMPANY
SAN FRANCISCO, CALIFORNIA

DWG SCALE:
BILL OF MAT'L:
SUPSDS:
SUPSD BY:

DRAWING	SHEET	PAGE	REV
441488	1	0	12

U1-437634

RASTER=441488-1-0.dgn
DGN=441488-1-0.dgn
CAD User=AJFJ Date=12-11-2019

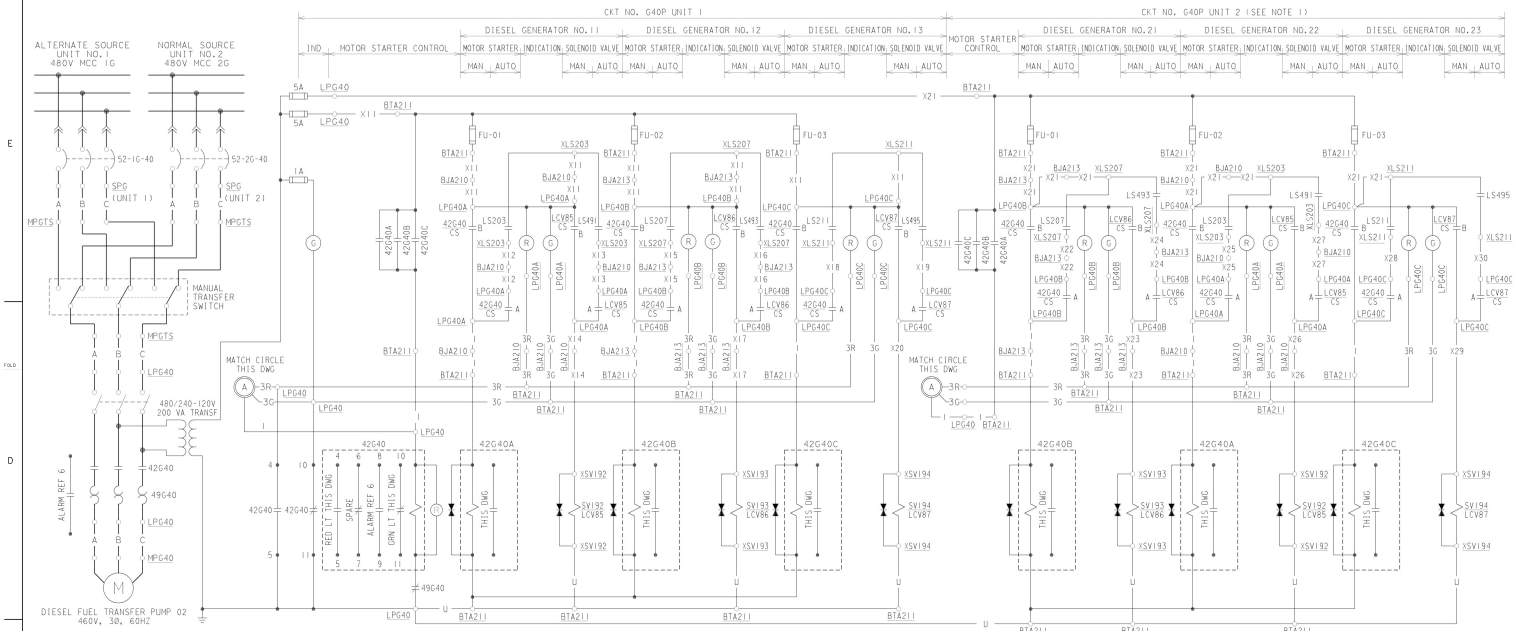

DIESEL FUEL TRANSFER PUMP NO.02 CONTROL CKT NO.G40P (HEADER B)

ALARM CKT TABLE

		DEVICE NO.	CKT
DIESEL FUEL TRANSFER	PP01 OC	49H65	A14209D
	PP01 RUN	42H65	AY4219D
	PP02 OC	49G40	A14309D
	PP02 RUN	42G40	AY4319D
DIESEL OIL STORAGE	TANK 01 HL OR LOW LEVEL	LS458	AL4202D
	TANK 02 HL OR LOW LEVEL	LS457	AL4302D
		LS460	
		LS459	

AUTO CLOSE OPEN

CONTACTS	POSITION CLOSE	POSITION AUTO	POSITION OPEN	REMARKS	CONTROL SW	LOCATION	QUANTITY UNIT 1	QUANTITY UNIT 2
A			×	THIS DWG	LCV88/CS	LPH65A	1	1
B			×	THIS DWG	LCV89/CS	LPH65B	1	1
C		×		SPARE	LCV90/CS	LPH65C	1	1
D		×		SPARE	LCV85/CS	LPG40A	1	1
					LCV86/CS	LPG40B	1	1
					LCV87/CS	LPG40C	1	1

MAINTAINED CONTACTS (WESTINGHOUSE CAT*0T2S2 (PER 4R8928B)

AUTO OFF ON — SEE NOTE 3

CONTACTS	POSITION OFF	POSITION AUTO	POSITION ON	REMARKS	CONTROL SW	LOCATION	QUANTITY UNIT 1	QUANTITY UNIT 2
A		×		THIS DWG	42H65 CS	LPH65A	1	1
B		×		THIS DWG		LPH65B	1	1
C		×		SPARE		LPH65C	1	1
D		×		SPARE	42G40 CS	LPG40A	1	1
						LPG40B	1	1
						LPG40C	1	1

MAINTAINED CONTACTS (WESTINGHOUSE CAT*0T2S2 (PER 4R8928B)

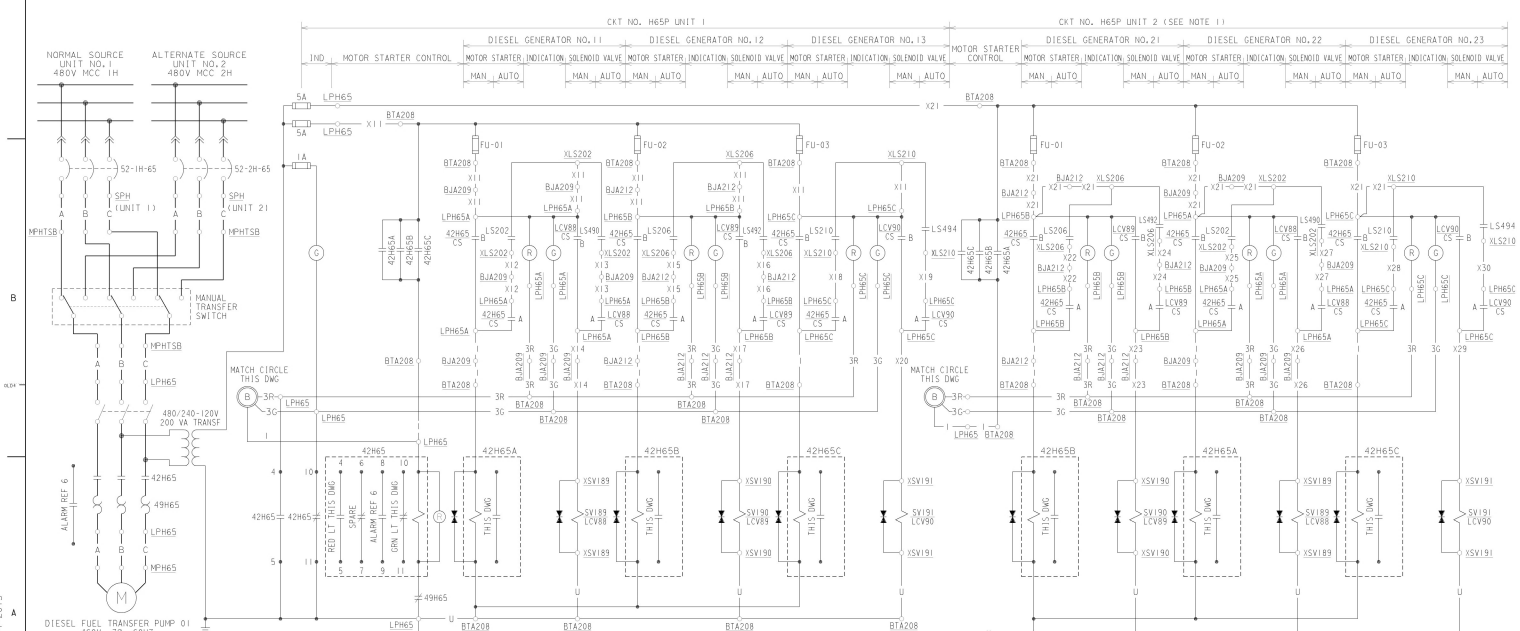

DIESEL FUEL TRANSFER PUMP NO.01 CONTROL CKT NO.H65P (HEADER A)

NOTES

1. THIS CIRCUIT IS COVERED BY DWG NO. 102754.
2. THE SAT SETTING FOR THE HEADER "A" LEVEL SWITCHES WILL BE SLIGHTLY DIFFERENT THAN THOSE FOR HEADER "B" WHICH PREVENTS STARTING BOTH PUMPS AT THE SAME TIME.
3. PUMP CONTROL SWITCHES AT ALL FIVE DIESEL GENERATORS MUST BE IN OFF POSITION TO PREVENT PUMP FROM STARTING.

TABLE OF DEVICES

DEVICE NO.	FUNCTION	RATING	MFR	TYPE	CATALOG OR REF DWG	REMARKS
42G40	STARTER COMBINATION MOTOR	600V				
49G40	OVERLOAD STARTER DIESEL FUEL TRANSFER PUMP 02	NEMA SIZE 0			2	
42H65	STARTER COMBINATION MOTOR	600V				
49H65	OVERLOAD STARTER DIESEL FUEL TRANSFER PUMP 01	NEMA SIZE 0			3	
52-1G-40	480V MCC 1 BUS G AIR CKT BKR (UNIT 1)				2	
42G40A,B,C	MOTOR STARTER AUX RELAY	120VAC	C-H	R	D40RR1DA	
52-1H-65	480V MCC 1 BUS H AIR CKT BKR (UNIT 1)				3	
42H65A,B,C	MOTOR STARTER AUX RELAY	120VAC	C-H	R	D40RR1DA	
LS202	LEVEL SW FOR DSL FUEL TK1-1 (HDR A)		MAGNETROL	XA15-1H3A-DNQ	8	STARTS PUMP 01 OPENS LCV88
LS490						
LS203	LEVEL SW FOR DSL FUEL TK1-1 (HDR B)		MAGNETROL	XA15-1H3A-DNQ	8	STARTS PUMP 02 OPENS LCV85
LS491						
LS206	LEVEL SW FOR DSL FUEL TK1-2 (HDR A)		MAGNETROL	XA15-1H3A-DNQ	8	STARTS PUMP 01 OPENS LCV89
LS492						
LS207	LEVEL SW FOR DSL FUEL TK1-2 (HDR B)		MAGNETROL	XA15-1H3A-DNQ	8	STARTS PUMP 02 OPENS LCV86
LS493						
LS210	LEVEL SW FOR DSL FUEL TK1-3 (HDR A)		MAGNETROL	XA15-1H3A-DNQ	8	STARTS PUMP 01 OPENS LCV90
LS494						
LS211	LEVEL SW FOR DSL FUEL TK1-3 (HDR B)		MAGNETROL	XA15-1H3A-DNQ	8	STARTS PUMP 02 OPENS LCV87
LS495						
LS457	DIESEL FUEL OIL STORAGE TK 01 LOW LEVEL				8	
LS458	DIESEL FUEL OIL STORAGE TK 01 HI LEVEL				8	
LS459	DIESEL FUEL OIL STORAGE TK 02 LOW LEVEL				8	
LS460	DIESEL FUEL OIL STORAGE TK 02 HI LEVEL				8	
SV189	SOLENOID VALVE FOR DSL FUEL OIL TK 1-1	120VAC			8	
SV190	SOLENOID VALVE FOR DSL FUEL OIL TK 1-2	120VAC			8	
SV191	SOLENOID VALVE FOR DSL FUEL OIL TK 1-3	120VAC			8	
SV192	SOLENOID VALVE FOR DSL FUEL OIL TK 1-1	120VAC			8	
SV193	SOLENOID VALVE FOR DSL FUEL OIL TK 1-2	120VAC			8	
SV194	SOLENOID VALVE FOR DSL FUEL OIL TK 1-3	120VAC			8	
52-2G-40	480V MCC 1 BUS G AIR CKT BKR (UNIT 2)				4	
52-2H-65	480V MCC 1 BUS H AIR CKT BKR (UNIT 2)				5	
LS202	LEVEL SW FOR DSL FUEL TK2-2 (HDR A)		MAGNETROL	XA15-1H3A-DNQ	8	STARTS PUMP 01 OPENS LCV88
LS490						
LS203	LEVEL SW FOR DSL FUEL TK2-2 (HDR B)		MAGNETROL	XA15-1H3A-DNQ	8	STARTS PUMP 02 OPENS LCV85
LS491						
LS206	LEVEL SW FOR DSL FUEL TK2-1 (HDR A)		MAGNETROL	XA15-1H3A-DNQ	8	STARTS PUMP 01 OPENS LCV89
LS492						
LS207	LEVEL SW FOR DSL FUEL TK2-1 (HDR B)		MAGNETROL	XA15-1H3A-DNQ	8	STARTS PUMP 02 OPENS LCV86
LS493						
LS210	LEVEL SW FOR DSL FUEL TK2-3 (HDR A)		MAGNETROL	XA15-1H3A-DNQ	8	STARTS PUMP 01 OPENS LCV87
LS494						
LS211	LEVEL SW FOR DSL FUEL TK2-3 (HDR B)		MAGNETROL	XA15-1H3A-DNQ	8	STARTS PUMP 02 OPENS LCV90
LS495						
SV189	SOLENOID VALVE FOR DSL FUEL OIL TK 2-2	120VAC			8	
SV190	SOLENOID VALVE FOR DSL FUEL OIL TK 2-1	120VAC			8	
SV192	SOLENOID VALVE FOR DSL FUEL OIL TK 2-2	120VAC			8	
SV193	SOLENOID VALVE FOR DSL FUEL OIL TK 2-1	120VAC			8	
LS260	LEVEL SWITCH FOR DIESEL FUEL PUMPS				8	
LS261	LEVEL SWITCH				8	
PS595	PRESSURE SWITCH				8	
PS597	PRESSURE SWITCH				8	
2DF01	TIMING RELAY	—	AGASTAT	—	TR1413D	
2DF02	TIMING RELAY	—	AGASTAT	—	TR1413D	

SEE NOTE 2

SEE NOTE 2

DEVICES INSTALLED WITH UNIT 2

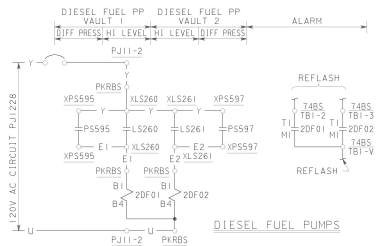

EQUIPMENT LOCATIONS

SPG - 480V MOTOR CONTROL CENTER 1 BUS G
MPGTS - DIESEL FUEL OIL PUMP 02 TRANSFER SWITCH
MPHTSB - DIESEL FUEL OIL PUMP 01 TRANSFER SWITCH
LPG40 - LOCAL STARTER DIESEL FUEL TRANSFER PUMP 02
MPG40 - DIESEL FUEL TRANSFER PUMP 02
LPG40A - LOCAL CONTROL STA FUEL XFER PP 02 AT DSL 11
LPH65 - LOCAL STARTER DIESEL FUEL TRANSFER PUMP 01
XLS202 - LS202 DIESEL FUEL OIL DAY TANK 1-1
XSV189 - SV189 DIESEL FUEL OIL DAY TANK 1-1
BJA209 - JUNCTION BOX A209
BTA208 - TERMINAL BOX A208
PJ11-2 - 120/208V POWER PANEL 11-2
PKRBS - BUILDING SUMP LOCAL ANNUNCIATOR
XLS260 - LS260 DIESEL FUEL PUMP LEVEL SWITCH
XPS595 - PS595 DIESEL FUEL PUMP PRESSURE SWITCH

REFERENCES

	DWG NO.
1. DESCRIPTION OF ELEC SCHEM DIAG SYMBOLS & EQUIP LOC NOS.	050003
2. S/L METER & RELAY DIAG - 480V SYS BUS SECTION 1G	437542
3. S/L METER & RELAY DIAG - 480V SYS BUS SECTION 1H	437543
4. S/L METER & RELAY DIAG - 480V SYS BUS SECTION 2G	441238
5. S/L METER & RELAY DIAG - 480V SYS BUS SECTION 2H	441239
6. SCHEM DIAG - MAIN ANNUNCIATOR, SHS. 15 & 16	(U1) 50115,36
	(U2) 500785,86
7. PIPING SCHEM - DIESEL ENGINE-GENERATOR SYS	(U1) 102021
	(U2) 108021
8. INSTRUMENT REFERENCE	(U1 & U2) 102038
9. CIRCUIT SCHED - 480V BUS SECTIONS F,G & H (UNIT 2)	102754
10. INSTRUMENT SCHEM - LEVEL INSTRUMENT SYS	(U1) 102033
	(U2) 108033

P.G.&E. SYSTEM PHASE SEQUENCE A-C-B

KEY DWG. SECTION 10

NUCLEAR SAFETY RELATED

UNIT 1 & 2

DATE	
08-24-2015	
D.D.	PNWB
R.E.	RXG2
I.V.	FXC2
P.E.	N/A

REVISION DESCRIPTION: REVISED PER DDN-2#1399

ELECTRICAL SCHEMATIC DIAGRAM DIESEL FUEL TRANSFER PUMPS

DIABLO CANYON POWER PLANT
PACIFIC GAS AND ELECTRIC COMPANY
SAN FRANCISCO, CALIFORNIA

DWG SCALE:	
BILL OF MATL:	
SUPSDS:	
SUPSD BY:	

DRAWING	SHEET	PAGE	REV
437657	1	0	23

DRAWING NUMBER 437657 1

RASTER-437657s1.dgn
DGN-437657s1.dgn
CAD USER:PNWB Dated:08-24-2015

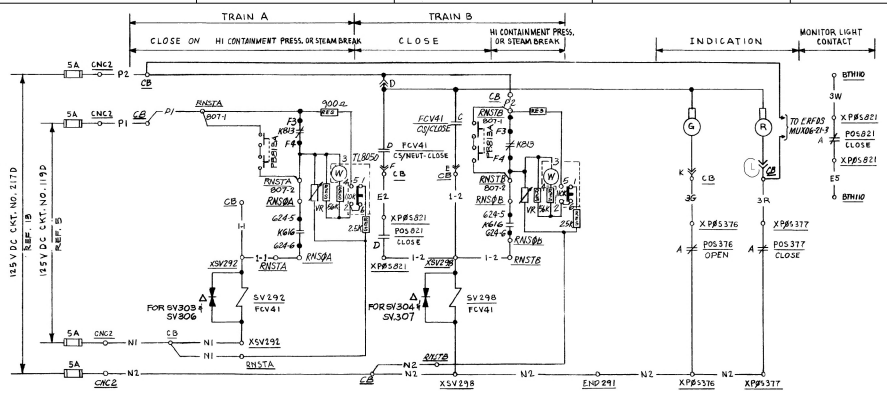

FCV 41 MAIN STEAM No.1 ISOL. VALVE – CIRCUIT NO. I0292SV01 & I0298SV01

OTHER MAIN STEAM VALVES SIMILAR AS SHOWN IN TABLE BELOW — CIRCUITS LISTED ON DWG. 103072, LOGIC CIRCUITS ON DWG. 103069, 66, 67, 68, SEE NOTE 2

CONTACTS	POSITIONS CLOSE	NEUT	OPEN	REMARKS
A	X			SPARE
B	X	X		SPARE
C	X			THIS DWG
D	X	X		THIS DWG

CONTROL SWITCH FCV41, FCV42, FCV43, FCV44 (CS, CS, CS, CS)

USED AT LOCATION CB.
SPRING RETURN TO NEUTRAL FROM OPEN.

POS NOS.	CONTACTS		POSITIONS CLOSE	INTERM. & OPEN	REMARKS
377	—	A		X	RED LIGHT
379	—	B	X		SPARE
381	—	C		X	SPARE
383	—	D	X		SPARE
821	—	A		X	MONITOR LIGHT
822	—	B	X		ALARM
823	—	C		X	SPARE
825	—	D	X		SEAL-IN

VALVE CLOSE POSITION SWITCHES
POS 377/POS 821, POS 379/POS 822
POS 381/POS 823, POS 383/POS 825
LOC. XPOS377, XPOS821, XPOS379, XPOS822
XPOS381, XPOS823, XPOS383, XPOS825

CONTACTS		POSITIONS INTERM. & CLOSE	OPEN	REMARKS
—	A	X		GREEN LIGHT
—	B		X	SPARE
—	C	X		SPARE
—	D		X	SPARE

VALVE OPEN POSITION SWITCH
POS 376, POS 378, POS 380, POS 382
LOC. XPOS376, XPOS378, XPOS380, XPOS382

TABLE OF DEVICES

DEVICE NO.	FUNCTION	RATING	MFR.	TYPE	CAT/DWG NO.	REMARKS
K616 K623	HI CONTAINMENT PRESS OR STEAM BREAK AUX. RELAYS	—	—	—	(7) (8) (11)	ESF "M" SIGNAL
SV 292, 298 300 301, 303, 304 306 307, 188 187, 186 182	SOLENOID VALVES					
FCV___	FLOW CONTROL VALVE					SEE TABLE FOR VALVE NOS.
POS	VALVE POSITION SWITCH					SEE TABLE FOR SWITCH NOS.
KBI3, KBI4	SAFEGUARD TEST RELAY	—	—	—	(8)	CONTACTS OPEN DURING TEST
TS3056, 3058, 3059, 3060	SAFEGUARD TEST LIGHT	—	—	—	(8)	PUSH TO TEST

VALVE NO.	DESCRIPTION	D.C. CIRCUITS	VALVE LOC. NO.	CIRCUIT NO.	SOL. VLV. TRAIN A NO.	SOL. VLV. TRAIN A LOC.	SOL. VLV. TRAIN B NO.	SOL. VLV. TRAIN B LOC.	SPLICE LOCATION	STEAM STOP VLV. TRAIN A DEVICE	LOC.	CONTACT	STEAM STOP VLV. TRAIN B DEVICE	LOC.	CONTACT	VALVE POSITION SWITCHES CLOSE POS.	CLOSE LOC.	OPEN POS.	OPEN LOC.	ALARM ORIG. MAIN STEAM ISOL. VALVE	ERFDS	SSPS TEST PUSHBUTTON PB SW#	TERMBLK	TRAIN A	PB SW#	TERMBLK	TRAIN B
FCV41	MAIN STEAM 1 ISOL. VLV.	1190/2170	XFCV41	102925V01 102985V01	292	X6V292	298	X6V298	END291	K616	RNSØA	624-5 624-6	K616	RNSØB	624-5 624-6	377	XPBS377	376	XPBS376	AY04447	MUX06-21-3	PB813A	807-1,2	RNSTA	PB813A	807-1,2	RNSTB
FCV42	2	1190/2170	XFCV42	103005V01 103015V01	300	X6V300	301	X6V301	END299	K616		624-9 624-10	K616		624-9 624-10	379	XPBS379	378	XPBS378		MUX06-21-4	PB813B	809-1,2		PB813B	809-1,2	
FCV43	3	1190/315D	XFCV43	105039V01 105045V01 △	303	X6V303 △	304	X6V304 △	END329	K623		625-9 625-10	K623		625-9 625-10	381	XPBS381	380	XPBS380		MUX07-18-3	PB814A	807-5,6		PB814A	807-5,6	
FCV44	↓	1190/315D	XFCV44	103066V01 103079V01	306	X6V306 △	307	X6V307 △	END226	K623		626-1 626-2	K623		626-1 626-2	383	XPBS383	382	XPBS382		MUX07-18-4	PB814B	809-5,6		PB814B	809-5,6	

△ TRANSIENT SUPPRESSOR REMOVED.

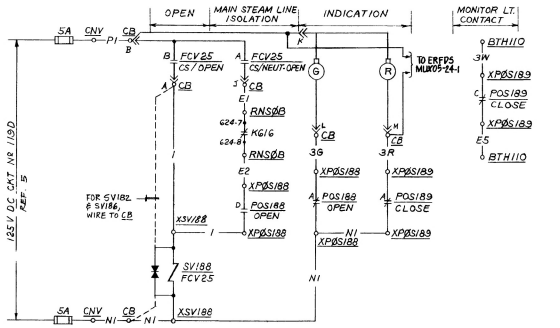

FCV25 STEAM GEN. 1-1 MAIN ISOL. BYPASS VALVE CKT NO. I0188SV01

OTHER MAIN ISOLATION BYPASS VALVES SIMILAR EXCEPT AS SHOWN ON TABLE

VALVE NO	DESCRIPTION	DC CKT NO	CIRCUIT NO	SOLENOID VALVE NO	SOLENOID VALVE LOC.	VALVE POS CLOSE	VALVE POS OPEN	MAIN STEAM LINE ISOL. DEVICE	LOC.	CONTACT	TRANSIENT SUPPRESSOR LOC.	ERFDS
FCV25	SG1-1 MAIN ISOL BYPASS	1190	I0188SV01	188	XSV188	189	188	K616	RNSØB	624-7 624-8	XSV188	MUX05-24-1
FCV26	SG1-2 MAIN ISOL BYPASS	2170	I0187SV01	187	XSV187	187	186	K616	RNSØB	624-7 624-8	XSV187	MUX06-22-2
FCV23	SG1-3 MAIN ISOL BYPASS	2170	I0186SV01	186	XSV186	185	184	K623	RNSØB	625-7 625-8	CB	MUX06-22-1
FCV22	SG1-4 MAIN ISOL BYPASS	3150	I0182SV01	182	XSV182	183	182	K623	RNSØB	625-7 625-8	CB	MUX07-17-1

CLOSE OPEN

CONTACTS		POSITIONS CLOSE	NEUT	OPEN	REMARKS
A			X	X	THIS DWG.
B				X	THIS DWG.
C	X				SPARE
D	X	X			SPARE

CONTROL SWITCH FCV25, FCV24, FCV23, FCV22 (CS, CS, CS, CS)

USED AT LOCATION CB
SPRING RETURN TO NEUTRAL

CONTACT	TERMINATION POINT	POSITIONS CLOSE & INTERM.	OPEN	REMARKS
A	A—B	X		GREEN LT.
B	C—D		X	SPARE
C	E—F	X		SPARE
D	G—H		X	SEAL IN

VALVE OPEN POSITION SWITCH
POS. 188, POS. 186, POS. 184, POS. 182

CONTACT	TERMINATION POINT	POSITIONS CLOSE	OPEN & INTERM.	REMARKS
A	A—B		X	RED LT.
B	C—D	X		SPARE
C	E—F		X	MONITOR LT.
D	G—H	X		SPARE

VALVE CLOSE POSITION SWITCH
POS. 189, POS. 187, POS. 185, POS. 183

NOTES

2. MAIN STEAM ISOLATION VALVES ARE ATO/FAIL CLOSED; SOLENOID VALVES ARE ENERGIZED TO VENT, CLOSING ISOLATION VALVES.

EQUIPMENT LOCATION NUMBERS

CB – – – – CONTROL BOARD CONDENSATE & FEEDWATER (Ⓦ 1VB3)
RNSØA – – NUCLEAR SAFEGUARD OUTPUT RACK "A"
XFCV41 – – FLOW CONTROL VALVE FCV41 (AIR OPERATED)

RNSTA – – NUCLEAR SAFEGUARD TEST RACK TRAIN A
CNC2 – – – CONTROL BOARD REACTOR COOLANT
CNV – – – CONTROL BOARD CHEMICAL & VOLUME CONTROL
BTH110 – – – TERMINAL BOX AREA H NO 110

REFERENCE DRAWINGS

1. DESCRIPTION OF ELECT. SCHEMATIC DIAGRAM SYMBOLS AND CIRCUIT DESIGNATIONS — DWG. 050003
2. EQUIPMENT LOCATION NUMBERS — DWG. 101900
3. PIPING SCHEMATIC — TURBINE STEAM SUPPLY SYS. — DWG. 102004
4. INSTRUMENT SCHEMATIC — FLOW INSTRUMENT SYS. — DWG 102032
5. SINGLE LINE METER & RELAY DIAG. 125V DC SYSTEM — DWG. 437546
6. MAIN STEAM VALVE — REC. 663049
7. Ⓦ FUNCTION DIAGRAMS — REC. 663195
8. Ⓦ SOLID STATE PROTECTION SYSTEM SH 1 TO 11 — REC. 663281-62
9. SCHEMATIC DIAGRAM MAIN ANNUNCIATOR SHEET 3 — DWG. 501128
10. SCHEMATIC DIAGRAM MONITOR LIGHT BOX D — DWG. 437699
11. SCHEM DIAG SSPS OUTPUT RELAYS, TR A, TR B — DWGS 501869, 503088
12. BLK DIAG., ERFDS AND TECH. SUPPORT CENTER — DWG. 445278
13. SINGLE LINE METER & RELAY DIAG. 125V DC SYSTEM — DWG. 445075
14. SINGLE LINE METER & RELAY DIAG 125V DC SYSTEM DWG. 445076

P.G.&E. SYSTEM PHASE SEQUENCE A-C-B

NUCLEAR SAFETY RELATED

VALVE NO's. FCV 22, 23, 24, 25
FCV 41, 42, 43, 44

KEY DWG. SECTION 5

UNIT 1

DATE	DESCRIPTION	COORDINATION
5/17/02		
DWN. RKOS	Revised per FCT 026561	NUCL. -
R.E. KJD3		MECH. -
INDEP. VERIFIER -		ELEC. -
P.E. KBB2		CIVIL -
		PIPING -
		I&C -

REVISION INFORMATION

ELECTRICAL
SCHEMATIC DIAGRAM
MAIN STEAM ISOLATION VALVES

DIABLO CANYON POWER PLANT
PACIFIC GAS AND ELECTRIC COMPANY
SAN FRANCISCO, CALIFORNIA

DWG SCALE
BILL OF MATL
SUPSDS
SUPSD BY
SHEET NO. 1 OF

437679 REV 16

U2-441296

CAD Users Log: Date: 5-15-2002
DGN: 437679.DGN
FILE: 437679-15.TIF

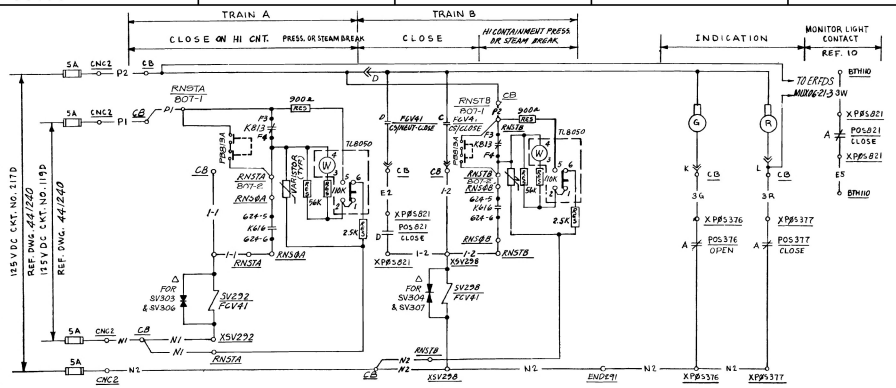

FCV 41 MAIN STEAM No 1 ISOL. VALVE – CIRCUIT NO. I0292SV01 & I0298SV01

OTHER MAIN STEAM VALVES SIMILAR AS SHOWN IN TABLE BELOW - CIRCUITS LISTED ON DWG. 102770, LOGIC CIRCUITS ON DWG. 102762, 63, 64, 65
SEE NOTE 2

VALVE NO.	DESCRIPTION	D.C. CIRCUIT	VALVE LOC. No.	CIRCUIT NO.	SOL VLV. TRAIN A NO.	SOL VLV. TRAIN A LOC	SOL. VLV. TRAIN B NO.	SOL. VLV. TRAIN B LOC.	SPLICE LOC.	STEAM STOP VLV. TRAIN A DEVICE	STEAM STOP VLV. TRAIN A LOC	STEAM STOP VLV. TRAIN A CONTACT	STEAM STOP VLV. TRAIN B DEVICE	STEAM STOP VLV. TRAIN B LOC.	STEAM STOP VLV. TRAIN B CONTACT	VALVE POSITION SWITCHES CLOSE POS	CLOSE LOC.	OPEN POS	OPEN LOC	ERFDS	ALARM CKT NO. MAIN STM ISOLV.	PUSHBUTTON SWITCHES SW. NO.	TERM BLK.	TRAIN A LOC	TRAIN B LOC
FCV41	MAIN STEAM 1 ISOL. V.	119D/217D	XFCV41	I0292SV01 I0298SV01	292	X5V292	298	X5V298	END291	KG16	RNSØA		KG16	RNSØB		377	XPØS377	376	XPØS376	MUX06-21-3	AY0464D	PB813A	807-1,2	RNSTA	RNSTB
FCV42	2	119D/217D	XFCV42	I0300SV01 I0301SV01	300	X5V300	301	X5V301	END299	KG16			KG16			379	XPØS379	378	XPØS378	MUX06-21-4		PB813B	809-1,2	RNSTA	RNSTB
FCV43	3	119D/315D	XFCV43	I0303SV01 I0304SV01	303 △	X5V303	304 △	X5V304	END329	K623			K623			381	XPØS381	380	XPØS380	MUX07-18-3		PB814A	807-5,6	RNSTA	RNSTB
FCV44	4	119D/315D	XFCV44	I0304SV01 I0307SV01	306 △	X5V306	307 △	X5V307	END226	K623			K623			383	XPØS383	382	XPØS382	MUX07-18-4		PB814B	809-5,6	RNSTA	RNSTB

△ TRANSIENT SURGE SUPPRESSOR REMOVED

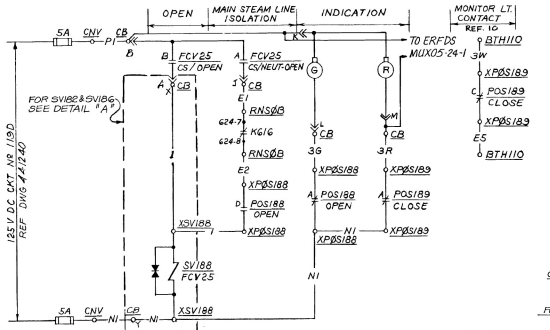

FCV25 STEAM GEN 2-1 MAIN ISOL BYPASS VALVE CKT Nº I0188SV01

OTHER MAIN ISOLATION BYPASS VALVES SIMILAR EXCEPT AS SHOWN ON TABLE.

VALVE Nº	DESCRIPTION	DC CKT Nº	CIRCUIT Nº	SOLENOID VALVE Nº	SOLENOID VALVE LOC.	VALVE POS CLOSE	VALVE POS OPEN	MAIN STEAM LINE ISOL. DEVICE	MAIN STEAM LINE ISOL. LOC.	MAIN STEAM LINE ISOL. CONTACT	ERFDS
FCV25	SG2-1 MAIN ISOL BYPASS	119D	I0188SV01	188	XSV188	189	188	KG16	RNSØA	624-7 624-8	MUX05-24-1
FCV24	SG2-2 MAIN ISOL BYPASS	217D	I0187SV01	187	XSV187	187	186	KG16	RNSØB	624-7 624-8	MUX06-22-2
FCV23	SG2-3 MAIN ISOL BYPASS	217D	I0186SV01	186	XSV186	185	184	K623	RNSØA	625-11 625-12	MUX06-22-1
FCV22	SG2-4 MAIN ISOL BYPASS	315D	I0182SV01	182	XSV182	183	182	K623	RNSØB	625-11 625-12	MUX07-19-1

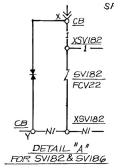

CONTACTS	POSITIONS CLOSE	NEUT	OPEN	REMARKS
A		X	X	THIS DWG.
B			X	THIS DWG.
C	X			SPARE
D	X	X		SPARE

CONTROL SWITCH FCV25, FCV24, FCV23, FCV22 (CS, CS, CS, CS)

USED AT LOCATION CB
SPRING RETURN TO NEUTRAL

CONTACTS	POSITIONS CLOSE	INTERM & OPEN	REMARKS
A	X		GREEN LT.
B		X	SPARE
C	X		SPARE
D		X	SEAL IN

VALVE OPEN POSITION SWITCH
POS188, POS186, POS184, POS182

CONTACTS	POSITIONS CLOSE	INTERM & OPEN	REMARKS
A		X	RED LT.
B	X		SPARE
C		X	MONITOR LT.
D	X		SPARE

VALVE CLOSE POSITION SWITCH
POS189, POS187, POS185, POS183

CONTACTS	POSITIONS CLOSE	NEUT	OPEN	REMARKS
A		X	X	THIS DWG.
B			X	THIS DWG.
C	X			SPARE
D	X	X		SPARE

CONTROL SWITCH FCV25, FCV24, FCV23, FCV22 (CS, CS, CS, CS)

USED AT LOCATION CB
SPRING RETURN TO NEUTRAL

CONTACTS	POSITIONS CLOSE	INTERM & OPEN	REMARKS
A	X		GREEN LIGHT
B		X	SPARE
C	X		SPARE
D		X	SPARE

VALVE OPEN POSITION SWITCH : POS376, POS378, POS380, POS382

LOC. XPØS376, XPØS378, XPØS380, XPØS382

CONTACTS	POSITIONS CLOSE	INTERM & OPEN	REMARKS
A		X	RED LIGHT
B	X		SPARE
C		X	SPARE
D	X		SPARE

VALVE CLOSE POSITION SWITCH

POS 377, POS 379, POS 381, POS 383

LOC. XPØS377, XPØS379, YPØS 381, XPØS 383

CONTACTS	POSITIONS CLOSE	INTERM & OPEN	REMARKS
A		X	MONITOR LIGHT
B	X		ALARM REF. 9
C		X	SPARE
D	X		SEAL IN

SEE NOTE 3

VALVE CLOSE POSITION SWITCH

POS 821, POS 822, POS 823, POS 825

LOC. XPØS 821, XPØS 824, XPØS 823, XPØS 825

TABLE OF DEVICES

DEVICE NO.	FUNCTION	RATING	MFR.	TYPE	CAT/DWG.NO.	REMARKS
KG16 K623	HI CONTAINMENT PRESS OR STEAM BREAK AUX. RELAYS	—	—	—	(7) (8) (12)	ESF "M" SIGNAL
SV 292, 298 300 301 303, 304 306 307, 188 187, 186 182	SOLENOID VALVES					
FCV ___	FLOW CONTROL VALVE					SEE TABLE FOR VALVE NOS.
PØS	VALVE POSITION SWITCH					SEE TABLE FOR SWITCH NOS.
KØ13, KØ14	SAFEGUARD TEST RELAY	—	—	—	(8)	CONTACTS OPEN DURING TEST
PL9(R), PL9(G) PL54, PL55	SAFEGUARD TEST LIGHT	—	—	—	(8)	PUSH TO TEST

NOTES

2. MAIN STEAM ISOLATION VALVES ARE ATO/FAIL CLOSED; SOLENOID VALVES ARE ENERGIZED TO VENT; CLOSING ISOLATION VALVES (ATO = AIR TO OPEN)
3. TO BE REVISED WHEN SWITCHES ARE REPLACED

EQUIPMENT LOCATION NUMBERS

CB – – – – CONTROL BOARD CONDENSATE & FEEDWATER (W) 2VB3)
RNSØA – – NUCLEAR SAFEGUARD OUTPUT RACK "A"
XFCV41 – – FLOW CONTROL VALVE FCV41 (AIR OPERATED)

RNSTA – – NUCLEAR SAFEGUARD TEST RACK TRAIN A
CNC2 – – – – CONTROL BOARD REACTOR COOLANT
CNV – – – – CONTROL BOARD CHEMICAL & VOLUME CONTROL
BTH110 – – – TERMINAL BOX AREA H Nº 110

REFERENCE DRAWINGS

1. DESCRIPTION OF ELECT. SCHEMATIC DIAGRAM SYMBOLS AND CIRCUIT DESIGNATIONS – – – – – – – – – DWG. 050003
2. EQUIPMENT LOCATION NUMBERS – – – – – – – – – DWG. 103013
3. PIPING SCHEMATIC – TURBINE STEAM SUPPLY SYS. – DWG. 108004
4. INSTRUMENT SCHEMATIC – FLOW INSTRUMENT SYS. – DWG. 108032
5. SINGLE LINE METER & RELAY DIAG. 125V DC SYSTEM – – – – – DWG. 441240
6. MAIN STEAM VALVE – – – – – – – – – – – – – – REC. 663049
7. (W) FUNCTION DIAGRAMS – – – – – – – – – – – – REC. 663195
8. (W) SOLID STATE PROTECTION SYSTEM – – – – – – REC. 663231
9. SCHEMATIC DIAGRAM MAIN ANNUNCIATOR SHEET 8 – – – – DWG. 500778
10. SCHEMATIC DIAGRAM MONITOR LIGHT BOX D – – – – DWG. 441455
11. BLOCK DIAG. - ERFDS AND TECH. SUPPORT CENTER – – – DWG 445297
12. SCHEM. DIAG. SSPS OUTPUT RELAYS, TRAIN A, TRAIN B – DWGS 503089, 503093

P.G.&E. SYSTEM PHASE SEQUENCE A-C-B

NUCLEAR SAFETY RELATED
VALVE NOS: FCV 25, 24, 23, 22, 41, 42, 43, 44

KEY DWG. SECTION 5

UNIT 2

DATE	DESCRIPTION	COORDINATION
10/26/98		
DWN. FAZI	Revised per FCT 023281	NUCL. –
R.E. RXG2		MECH. –
INDEP. VERIFIER –		ELEC. –
P.E. KBB2		CIVIL –
		PIPING –
		I&C –

REVISION INFORMATION

ELECTRICAL
SCHEMATIC DIAGRAM
MAIN STEAM ISOLATION VALVES

DIABLO CANYON POWER PLANT
PACIFIC GAS AND ELECTRIC COMPANY
SAN FRANCISCO, CALIFORNIA

DWG SCALE
BILL OF MATL
SUPSDS
SUPSD BY
SHEET NO. 1 OF

DRAWING NUMBER 441296 REV 11

CAD Userfile: Dated: 10-21-1998
DGN: 441296.DGN
RASTER: 441296.TIF

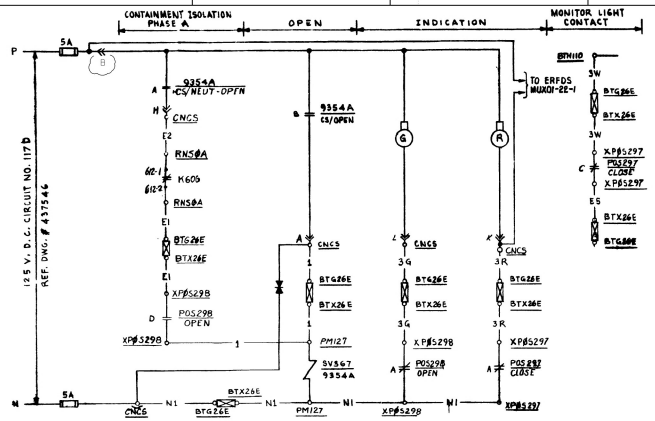

9354A PRESSURIZER STEAM SAMPLE ISOL. VALVE CIRCUIT NO. RSS043

OTHER SAMPLE SYSTEM VALVES SIMILAR EXCEPT AS SHOWN IN TABLE. CONTROL SWITCH FOR THESE VALVES — DETAIL B. CIRCUITS LISTED ON DRAWING 103072.

VALVE NO.	DESCRIPTION	D.C. CKT. NO.	VALVE LOC. NO.	SOLENOID VALVE NO.	SOL. VALVE LOC. NO.	ENG. SFGD FUNCTION	VALVE POSITION SW. (POS) CLOSED	VALVE POSITION SW. (POS) OPEN	PENN NO.	CIRCUIT NO.	LOC. OF CONTROL	CONTAINMENT ISOL. PHASE A DEVICE	CONTAINMENT ISOL. PHASE A LOC.	CONTAC	NORMAL POSITION	ERFDS MULTIPLEXER
9354A	PRZR. STM. SAMPLE ISOL. IN CNT.	117D	X9354A	367 △	PM127	T	297	298	Z6E	RSS043	CNCS	K606	RNS0A	K612-1 K612-2	OPEN	MUXOI-22-1
9355A	PRZR. LIQ. SAMPLE ISOL. IN CNT.	117D	X9355A	370 △	PM127		303	1044	Z6E	RSS049		K606	RNS0A	K612-5 K612-6	OPEN	MUXOI-22-2
9356A	RCS SAMPLE ISOL. IN CNT.	117D	X9356A	374 △	PM127		1075	1046	Z6E	RSS055		K606	RNS0A	K612-7 K612-8	OPEN	MUXOI-22-3
9357A	ACCUM. SAMPLE ISOL IN CNT.	117D	X9357A	380 △	PM127		1087	1048	Z6E	RSS061		K606	RNS0A	K611-1 K612-3	OPEN	MUXOI-22-4
9354B	PRZR. STM. SAMPLE ISOL. OUT CNT.	215D	X9354B	325	PM184		1312	1068	——	RSS008		K606	RNS0B	K611-3 K612-1	OPEN	MUXO2-23-3
9356B	RCS SAMPLE ISOL. OUT CNT.	215D	X9356B	327 □	PM184		1314	1088	——	RSS029		K606	RNS0B	K612-5 K612-6	OPEN	MUXO2-24-1
9357B	ACCUM. SAMPLE ISOL OUT CNT.	215D	X9357B	328	PM184		1319	1318	——	RSS036		K606	RNS0B	K612-7 K612-8	OPEN	MUXO2-24-2

△ TRANSIENT SUPPRESSOR FOR 4V WIRED AT CNCS ALL OTHERS AT SV LOCATION.
□ TRANSIENT SUPPRESSOR NOT REQUIRED FOR SV327

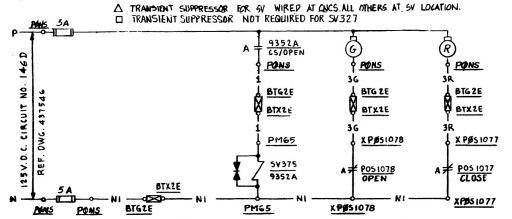

9352A ACCUMULATOR 1 SAMPLE VALVE CIRCUIT NO. RSS079

9352B,C,D ARE SAME, SEE TABLE BELOW
CONTROL SWITCH FOR THESE VALVES — DETAIL A
CIRCUITS LISTED ON DRAWING 103072

VALVE NO	DESCRIPTION	D.C. CKT. NO.	VALVE LOC. NO.	SOL. VALVE NO.	SOL. VALVE LOC. NO.	V.V. POS. SW. (POS) CLOSED	V.V. POS. SW. (POS) OPEN	PENN. NO.	CIRCUIT NO.	CONTROL LOC. NO.
9350A	PRZR. STM. SPACE IN CNT.	146D	X9350A	365	PM125	293	294	2E	RSS067	PONS
9350B	PRZR. LIQ SPACE IN CNT.	146D	X9350B	366	PM125	299	296	2E	RSS070	PONS
9351A	RCS HOT LEG LOOP 1	146D	X9351A	371 ⊕	PM138	1069	1041	2E	RSS073	PONS
9351B	RCS HOT LEG LOOP 4	146D	X9351B	372 ⊕	PM138	1071	1043	2E	RSS076	PONS
9352A	ACCUM. 1 SAMPLE	146D	X9352A	375	PMG5	1077	1078	2E	RSS079	PONS
9352B	2	146D	X9352B	376	PMG7	1079	1080	2E	RSS082	PONS
9352C	3	146D	X9352C	377	PMG8	1081	1082	2E	RSS085	PONS
9352D	4	146D	X9352D	378	PM171	1083	1084	2E	RSS088	PONS
9353A	RHR LOOPS 1 & 2	146D	X9353A	381 ⊕	XSV381	1089	1090	——	RSS091	PONS
9353B	RHR LOOPS 3 & 4	146D	X9353B	382 ⊕	XSV382	1091	328	——	RSS094	PONS

⊕ TRANSIENT SUPPRESSORS NOT USED ACROSS SOLENOID COIL

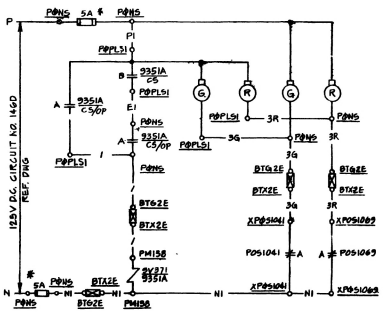

9351A RCS HOT LEG LOOP 1, CKT. NO. RSS073

9351B, 9350 A&D, 9353 A&B ARE SAME, SEE TABLE BELOW.
#6A FOR VV.# 9353A & B ONLY

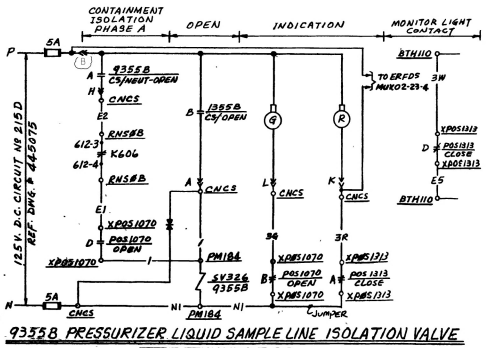

9355B PRESSURIZER LIQUID SAMPLE LINE ISOLATION VALVE CKT NO RSS022

CONTACT	POSITIONS CLOSE	POSITIONS OPEN	REMARKS
A		X	THIS DWG.
B	X		SPARE

CONTROL SWITCH 9352A C/S — DETAIL A

USED AT LOCATION PONS
NO SPRING RETURN.

CONTACT	POSITIONS CLOSE	NEUT.	OPEN	REMARKS
A		X	X	THIS DWG.
B			X	THIS DWG.

CONTROL SWITCH 9354A C/S — DETAIL B

USED AT LOCATION CNCS.
SPRING RETURN TO NEUTRAL FROM OPEN.

CONTACT	POSITIONS CLOSE	RMT.	OPEN	REMARKS
A			X	THIS DWG.
B		X		THIS DWG.

CONTROL SWITCH 9350A C/S, 9350B C/S, 9351A C/S, 9351B C/S, 9353A C/S, 9353B C/S

USED AT LOCATION PDPL51 (NO SPRING RETURN) SEE NOTE 1

CONTACT	POSITIONS CLOSE	POSITIONS OPEN	REMARKS
A		X	RED LT.
B	X		SPARE
C	X		MONITOR LT
D		X	SPARE

VALVE CLOSE POSITION SWITCH

CONTACT	POSITION CLOSE	POSITION OPEN	REMARKS
A	X		GREEN LT.
B		X	SPARE
C	X		SPARE
D		X	SEAL-IN

VALVE OPEN POSITION SWITCH

CONTACTS	POSITIONS CLOSED & INTERM.	POSITIONS OPEN	REMARKS
A—B		X	SPARE
C—D	X		GREEN LT.
E—F	X		SPARE
G—H	D	X	SEAL-IN

VALVE OPEN POSITION SWITCH NO. POS1070
FOR PRESSURIZER LIQUID SAMPLE ISOL. VALVE 9355B, NAMCO EA180 WITH RECEPTACLE CW CONFIGURATION

CONTACTS	POSITIONS OPEN & INTERM.	POSITIONS CLOSE	REMARKS
A—B	X		RED LT.
C—D		X	SPARE
E—F		X	SPARE
G—H	X		MONITOR LT.

VALVE CLOSE POSITION SWITCH NO. POS1313
FOR PRESSURIZER LIQUID SAMPLE ISOL. VALVE 9355B, NAMCO EA180 WITH RECEPTACLE CCW CONFIGURATION.

TABLE OF DEVICES

DEVICE NO.	FUNCTION	RATING	MFR.	TYPE	CAT / DWG. NO.	REMARKS
SV367, 370, 374, 380, 365, 368, 371, 372, 375, 326, 327, 328, 375, 376, 377, 378, 381, 382	SOLENOID VALVE	——	——	——		
935__	FLOW CONTROL VALVE	——	——	——		SEE TABLE FOR VALVE NOS
POS___	VALVE POSITION SWITCHES	——	——	——		SEE TABLE FOR SWITCH NOS
K606	CONTAINMENT ISOLATION PHASE A AUX. RELAY	——	——	——	(6) (7) (10)	

EQUIPMENT LOCATION NUMBERS

CNCS — CONTROL BOARD CONTAINMENT SPRAY
RNS0A — NUCLEAR SAFEGUARD OUTPUT RACK A
X9354A — AIR OPERATED VALVE 9354A
XSV381 — INSTRUMENT SV381 (LOCAL MOUNTED)
BTG26E — TERMINAL BOX \ AREA G NO.26E
PM127 — MECH. PANE' №127 SAMPLE ISOL. VVS.
BTH110 — TERMINAL BOX AREA H №110
PONS — CONTROL PANEL NUCLEAR SAMPLE
PDPL51 — POST LOCA SAMPLING PANEL

REFERENCE DRAWINGS

1. EQUIPMENT LOCATION NUMBERS — DWG. # 101900
2. DESCRIPTION OF ELECT. SCHEMATIC DIAG. SYMBOLS AND CIRCUIT DESIGNATIONS — DWG. # 050003
3. PIPING SCHEMATIC — NUCLEAR STEAM SUPPLY SAMPLING SYSTEM — DWG. # 102011
4. INSTRUMENT SCHEMATIC — FLOW INSTRUMENT SYSTEMS — DWG. # 102032
5. SINGLE LINE METER & RELAY DIAG. — 125 V.D.C. SYSTEM — DWG. # 437546
6. (W) FUNCTION DIAGRAMS — REC. # 663195
7. (W) SOLID STATE PROTECTION SYSTEM — REC. # 663234
8. SCHEMATIC DIAG. MONITOR LIGHT BOX B — DWG # 437697
9. BLOCK DIAG. ERFDS TECH. SUPPORT CENTER & CONTROL ROOM DWG # 445278
10. SCHEM DIAG SSPS OUTPUT RELAYS, TRAIN A, TRAIN B — DWGS 501869, 503088

NOTES

1. CONTROL SWITCH AT PDPL51 HAS PRIORITY TO OVERRIDE THE CONTROL SWITCH AT PONS

VALVE NO'S.: 9350A, 9350B, 9351A, 9351B, 9352A, 9352B, 9352C, 9352D, 9353A, 9353B, 9356A, 9356B, 9355A, 9355B, 9356A, 9356B, 9357A, 9357B

NUCLEAR SAFETY RELATED

KEY DWG. SECTION 4

UNIT 1

DATE	DESCRIPTION	COORDINATION
12/20/01	Revised per FCT 026108	NUCL.
DWN. PMK2		MECH.
R.E. SMB5		ELEC.
INDEP. VERIFIER		CIVIL
P.E. KBB2		PIPING
		I&C

REVISION INFORMATION

ELECTRICAL
SCHEMATIC DIAGRAM
SAMPLING SYSTEM SOLENOID VALVES

STONE & WEBSTER ENGINEERING CORP.
PACIFIC GAS AND ELECTRIC COMPANY
SAN FRANCISCO, CALIFORNIA

DWG SCALE
BILL OF MATL
SUPSDS
SUPSD BY
SHEET NO. 1 OF

437680 REV. 14

REGISTERED PROFESSIONAL ENGINEER — KEVIN B. BROWN — E 15507 — ELECTRICAL — STATE OF CALIFORNIA

UI-441329

CAD User: PMK2 Date: 12-11-2001
DGN: 437680.DGN
FILE: 437680-R1.TIF

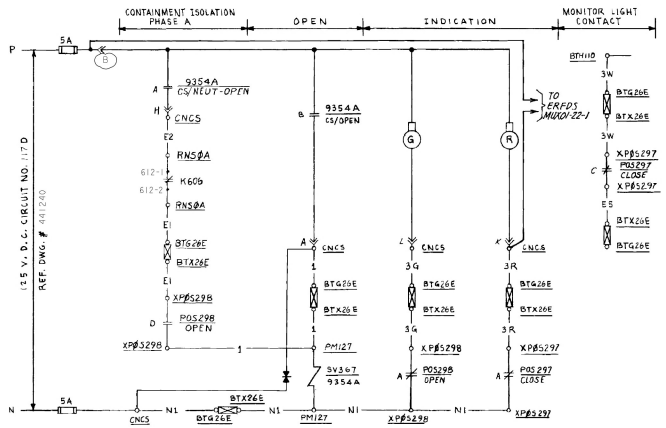

CONTACT		POSITIONS CLOSE	POSITIONS OPEN	REMARKS
	A		X	THIS DWG.
	B	X		SPARE

CONTROL SWITCH 9352A C/S — DETAIL A

USED AT LOCATION PØNS
NO SPRING RETURN.

CONTACT		POSITION CLOSE	POSITION OPEN	REMARKS
	A		X	RED LIGHT
	B	X		SPARE
	C		X	MONITOR LT
	D	X		SPARE

VALVE CLOSE POSITION SWITCH

CONTACT		POSITIONS CLOSE	POSITIONS NEUT.	POSITIONS OPEN	REMARKS
	A		X	X	THIS DWG.
	B			X	THIS DWG.

CONTROL SWITCH 9354A C/S — DETAIL B

USED AT LOCATION CNCS.
SPRING RETURN TO NEUTRAL FROM OPEN.

CONTACT	POSITION CLOSE	POSITION OPEN	REMARKS
A	X		GREEN LT.
B		X	SPARE
C	X		SPARE
D		X	SEAL IN

VALVE OPEN POSITION SWITCH

CONTACT		POSITIONS CLOSE	POSITIONS RMT.	POSITIONS OPEN	REMARKS
	A			X	THIS DWG.
	B		X		THIS DWG.

CONTROL SWITCH 9350A C/S, 9350B C/S, 9351A C/S, 9351B C/S, 9353A C/S, 9353B C/S

USED AT LOCATION PØPLSI (NO SPRING RETURN) SEE NOTE 1

TABLE OF DEVICES

DEVICE NO.	FUNCTION	RATING	MFR.	TYPE	CAT / DWG. NO.	REMARKS
SV367, 370, 374, 380, 369, 368, 371, 372, 325, 326, 327, 328, 375, 376, 377, 378, 381, 382	SOLENOID VALVE					
935__	FLOW CONTROL VALVE	—	—	—		SEE TABLE FOR VALVE NO.
POS___	VALVE POSITION SWITCHES	—	—	—		SEE TABLE FOR SWITCH NO.
K606	CONTAINMENT ISOLATION PHASE A AUX. RELAY	—	—	—	16/(7) (10)	

9354A PRESSURIZER STEAM SAMPLE ISOL. VALVE CIRCUIT NO. RSS043

OTHER SAMPLE SYSTEM VALVES SIMILAR EXCEPT AS SHOWN IN TABLE. CONTROL SWITCH FOR THESE VALVES — DETAIL B. CIRCUITS LISTED ON DRAWING 103072.

VALVE NO.	DESCRIPTION	D.C. CKT. NO.	VALVE LOC. NO.	SOLENOID VALVE NO.	SOL. VALVE LOC. NO.	ENG. SFGD FUNCTION	VALVE POSITION SW. (POS) CLOSED	VALVE POSITION SW. (POS) OPEN	PENN NO.	CIRCUIT NO.	LOC. OF CONTROL	CONTAINMENT ISOL. PHASE A DEVICE	CONTAINMENT ISOL. PHASE A LOC.	CONTAINMENT ISOL. PHASE A CONTACT	NORMAL POSITION	ERFDS NO.
9354A	PRZR. STM. SAMPLE ISOL. IN CNT.	117D	X9354A	367	PM127	T	297	298	26E	RSS043	CNCS	K606	RNSØA	612-3 / 612-4	OPEN	MUXOI-22-1
9355A	PRZR. LIQ. SAMPLE ISOL. IN CNT.	117D	X9355A	370	PM127		303	1044	26E	RSS049		K606	RNSØA	612-3 / 612-4	OPEN	MUXOI-22-2
9356A	RCS SAMPLE ISOL. IN CNT.	117D	X9356A	374	PM127		1075	1046	26E	RSS055		K606	RNSØA	612-3 / 612-4	OPEN	MUXOI-22-3
9357A	ACCUM. SAMPLE ISOL. IN CNT.	117D	X9357A	380	PM127		1087	1048	26E	RSS061		K606	RNSØA	612-3 / 612-4	OPEN	MUXOI-22-4
9354B	PRZR. STM. SAMPLE ISOL. OUT CNT.	215D	X9354B	325	PM184		1312	1068	——	RSS008		K606	RNSØB	612-3 / 612-4	OPEN	MUXO2-23-3
9355B	PRZR. LIQ. SAMPLE ISOL. OUT CNT.	215D	X9355B	326 △	PM184		1313	1070	——	RSS022		K606	RNSØB	612-3 / 612-4	OPEN	MUXO2-23-4
9356B	RCS SAMPLE ISOL. OUT CNT.	215D	X9356B	327 □	PM184		1314	1088	——	RSS029		K606	RNSØB	612-3 / 612-4	OPEN	MUXO2-24-1
9357B	ACCUM. SAMPLE ISOL. OUT CNT.	215D	X9357B	328 △	PM184		1319	1318	——	RSS036		K606	RNSØB	612-3 / 612-4	OPEN	MUXO2-24-2

EQUIPMENT LOCATION NUMBERS

CNCS — CONTROL BOARD CONTAINMENT SPRAY
RNSØA — NUCLEAR SAFEGUARD OUTPUT RACK A
X9354A — AIR OPERATED VALVE 9354A
X5V381 — INSTRUMENT 5V381 (LOCAL MOUNTED)
BTG26E — TERMINAL BOX, AREA G NO.26E
PM127 — MECH. PANEL №127, SAMPLE ISOL. VVS.
BTH110 — TERMINAL BOX AREA H №110
PØNS — CONTROL PANEL NUCLEAR SAMPLE
PØPLSI — PRST LOCA SAMPLING PANEL

REFERENCE DRAWINGS

1. EQUIPMENT LOCATION NUMBERS — DWG. # 103013
2. DESCRIPTION OF ELECT. SCHEMATIC DIAG., SYMBOLS AND CIRCUIT DESIGNATIONS — DWG.# 050003
3. PIPING SCHEMATIC — NUCLEAR STEAM SUPPLY SAMPLING SYSTEM — DWG.# 108011
4. INSTRUMENT SCHEMATIC — FLOW INSTRUMENT SYSTEMS — DWG.# 108032
5. SINGLE LINE METER & RELAY DIAG. — 125 V.D.C. SYSTEM — DWG.# 441240
6. Ⓚ FUNCTION DIAGRAMS — REC.# 663195
7. Ⓚ SOLID STATE PROTECTION SYSTEM — REC.# 662231
8. SCHEMATIC DIAG. MONITOR LIGHT BOX B — DWG # 441453
9. BLOCK DIAG.-ERFDS TECH. SUPPORT CTR. & CONT. RM. — DWG.# 441257
10. SCHEM. DIAG. SSPS OUTPUT RELAYS, TRAIN A, TRAIN B, — DWGS. 503089, 503093

NOTE

1. CONTROL SWITCH AT PØPLSI HAS PRIORITY TO OVERRIDE THE CONTROL SWITCH AT PØNS

△- CONTACT PROTECTOR DIODE WIRED AT PM184
□- CONTACT PROTECTOR DIODE NOT USED ACROSS SOLENOID COIL.

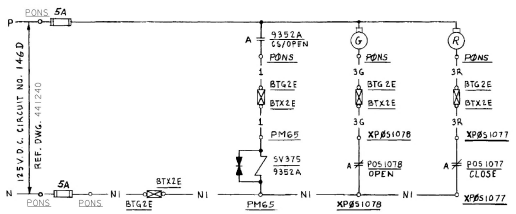

9352A ACCUMULATOR 1 SAMPLE VALVE CIRCUIT NO. RSS079

9352B, 9352C, 9352D ARE SIMILAR EXCEPT AS SHOWN IN TABLE BELOW.
CONTROL SWITCH FOR THESE VALVES — DETAIL A
CIRCUITS LISTED ON DRAWING 103072

VALVE NO.	DESCRIPTION	D.C CKT. NO.	VALVE LOC. NO.	SOL. VALVE NO.	SOL. VALVE LOC. NO.	VLV. POS. SW. (POS) CLOSED	VLV. POS. SW. (POS) OPEN	PENN. NO.	CIRCUIT NO.	CONTROL LOC. NO.
9350A	PRZR. STM. SPACE IN CNT.	146D	X9350A	365	PM125	293	294	2E	RSS067	PØNS
9350B	PRZR. LIQ. SPACE IN CNT.	146D	X9350B	368	PM125	299	296	2E	RSS070	PØNS
9351A	RCS HOT LEG LOOP 1	146D	X9351A	371 □	PM138	1069	1041	2E	RSS073	PØNS
9351B	RCS HOT LEG LOOP 4	146D	X9351B	372 □	PM138	1071	1043	2E	RSS076	PØNS
9352A	ACCUM. 1 SAMPLE	146D	X9352A	375	PM65	1077	1078	2E	RSS079	PØNS
9352B	2	146D	X9352B	376	PM67	1079	1080	2E	RSS082	PØNS
9352C	3	146D	X9352C	377	PM68	1081	1082	2E	RSS085	PØNS
9352D	4	146D	X9352D	378	PM71	1083	1084	2E	RSS088	PØNS
9353A	RHR LOOPS 1 & 2	146D	X9353A	381 □	X5V381	1089	1090	——	RSS091	PØNS
9353B	RHR LOOPS 3 & 4	146D	X9353B	382 □	X5V382	1091	328	——	RSS094	PØNS

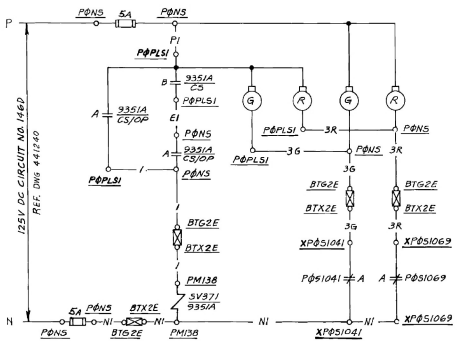

9351A RCS HOT LEG LOOP 1, CKT. NO. RSS073

9351B, 9350A & B, 9353A & B ARE SIMILAR EXCEPT AS SHOWN IN TABLE AT LEFT
(EXCEPT 6A FUSES FOR 9353A & B)

VALVE NO'S.: 9350A, 9350B, 9351A, 9351B, 9352A, 9352B, 9352C, 9352D, 9353A, 9353B, 9354A, 9354B, 9355A, 9355B, 9356A, 9356B, 9357A, 9357B

NUCLEAR SAFETY RELATED

KEY DWG. SECTION 4

UNIT 2

DATE	DESCRIPTION	COORDINATION
5/23/01	Revised per FCT 025730	NUCL.
DWN. AOM		MECH.
R.E. FXC3		ELEC.
INDEP. VERIFIER		CIVIL
P.E. KBB3		PIPING
		I&C

REVISION INFORMATION

ELECTRICAL
SCHEMATIC DIAGRAM
SAMPLING SYSTEM SOLENOID VALVES

DIABLO CANYON POWER PLANT
PACIFIC GAS AND ELECTRIC COMPANY
SAN FRANCISCO, CALIFORNIA

DWG SCALE
BILL OF MATL
SUPSDS
SUPSD BY
SHEET NO. 1 OF

441329 REV 8

P, G&E, SYSTEM PHASE SEQUENCE A-C-B

REGISTERED PROFESSIONAL ENGINEER — KEITH B. SLOCUM — E 15507 — ELECTRICAL — STATE OF CALIFORNIA

CAD User: ADM, Date: 5-23-2001
DGN: 441329.DGN
Z:\STDS\441329.TIF

441329

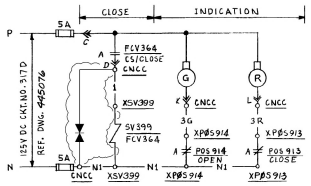

FCV364 RHR HX 12 CCW OUTLET CKT Nº RCC25

OTHER VALVE SIMILAR AS SHOWN BELOW IN TABLE.

VALVE NO.	DESCRIPTION	D.C. CKT. NO.	CKT. NO.	VALVE LOC. NO.	SOL. VALVE NO.	SOL. VALVE LOC. NO.	VLV. POS. SW. CLOSED	VLV. POS. SW. OPEN
FCV364	RHR HX 12 CCW OUTLET	317D	RCC25	XFCV364	399	XSV399	913	914
FCV365	RHR HX 11 CCW OUTLET	215D	RCC28	XFCV365	379	XSV379	907	908

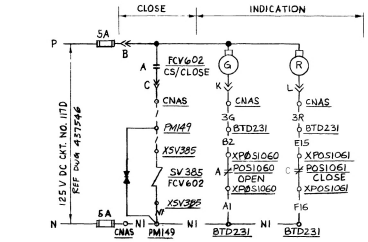

FCV602 AUX SALT WTR PP 11 TO CCW HX 11 CKT Nº RCC51

FCV603 SIMILAR AS SHOWN BELOW IN TABLE

VALVE NO	DESCRIPTION	D.C. CKT. NO.	CKT. NO.	VALVE LOC. NO.	SOL. VALVE NO.	SOL. VALVE LOC NO	VLV. POS. SW CLOSED	VLV. POS. SW OPEN	BOX, LOC., NO	ALARM CKT NO. HI-LO PRESS
FCV602	AUX. SALT WTR. PP11 TO CCW HX 11	117D	RCC51	XFCV602	385	XSV385	1061	1060	BTD231	AP2400DF
FCV603	AUX. SALT WTR. PP11 TO CCW HX 12	215D	RCC60	XFCV603	386	XSV386	1065	1064	BTD232	AP2424DG

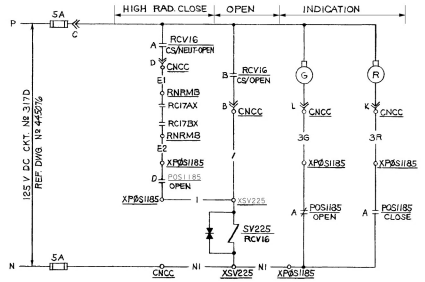

RCV16 CCW SURGE TANK VENT CKT. Nº RCC67

CONTACTS		POSITIONS CLOSE	POSITIONS OPEN & INTERM	REMARKS
	A		X	THIS DWG
	B	X		SPARE

RCV16 CLOSE POSITION SW. 1185

CONTACTS		POSITIONS CLOSE & INTERM	POSITIONS OPEN	REMARKS
	A	X		THIS DWG
	B		X	SPARE
	C	X		SPARE
	D		X	THIS DWG

RC/16 OPEN POSITION SW 1185

CONTACTS		POSITIONS CLOSE	POSITIONS NEUT.	POSITIONS OPEN	REMARKS
	B	X			THIS DWG.
	A	X	X		THIS DWG.

CONTROL SWITCH FCV360 CS, FCV366 CS

USED AT LOCATION CNCC
SPRING RETURN TO NEUTRAL FROM CLOSE

CONTACTS		POSITIONS CLOSE	POSITIONS NEUT.	POSITIONS OPEN	REMARKS
	A		X	X	THIS DWG.
	B			X	THIS DWG.

CONTROL SWITCH FCV361 CS, RCV16 CS

USED AT LOCATION CNCC
SPRING RETURN TO NEUTRAL FROM OPEN

CONTACTS		POSITIONS CLOSE	POSITIONS OPEN	REMARKS
	A	X		THIS DWG
	B		X	SPARE

CONTROL SWITCH FCV364 CS, FCV365 CS, FCV602 CS, FCV603 CS

USED AT LOCATION CNCC & CNAS
NO SPRING RETURN

TABLE OF DEVICES

DEVICE NO.	FUNCTION	RATING	MFR.	TYPE	CAT./DWG.NO.	REMARKS
K606	CONTAINMENT ISOL. PHASE A AUX. REL				(16)	
K604	SAFETY INJECTION AUX REL				(16)	
FCV___	FLOW CONTROL VALVE					SEE TABLE FOR VALVE NO.
POS___	VALVE POSITION SWITCHES					SEE TABLE FOR SWITCH NO.
SV379, 397, 398, 399, 400, 385, 386	SOLENOID VALVES					
RCI7AX, I7BX	CCW HI-RAD CONT. AUX. RELAY	—	—	—	(15)	CONTACTS TO OPEN ON HI-RAD
RCV16	RADIATION CONTROL VALVE	—	—	—	LOT 17)	

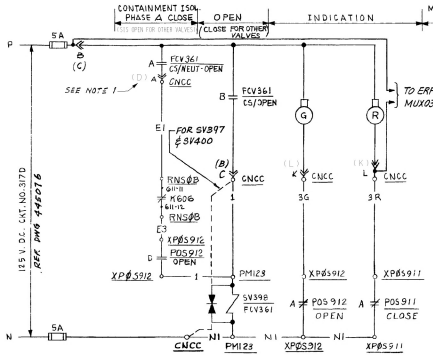

CONTACT	POSITION CLOSE	POSITION OPEN/INTERM	REMARKS 303, 313	911	1065 1063	907, 913
A		X	RED LT.	RED LT.	SPARE	RED LT.
B	X		SPARE	SPARE	SPARE	SPARE
C		X	SPARE	MONITOR LT.	RED LT.	SPARE
D	X		SEAL IN	SPARE	SPARE	SPARE

VALVE CLOSE POSITION SWITCH

CONTACT	POSITION CLOSE/INTERM	POSITION OPEN	REMARKS 303, 316	912	1065, 1064	907, 914
A	X		GREEN LT.	GREEN LT.	GREEN LT.	GREEN LT.
B		X	SPARE	SPARE	ALARM INTLK.	SPARE
C	X		MONITOR LT.	SPARE	SPARE	SPARE
D		X	SPARE	SEAL IN	SPARE	ALARM

VALVE OPEN POSITION SWITCH

FCV 361 CCW FROM EXCESS LETDOWN HEAT EXCHANGER- ISOL. VALVE-CKT. NO. RCC08

OTHER VALVES SIMILAR EXCEPT AS SHOWN IN TABLE AND IN CONTROL & POSITION SW. DEVELOPMENTS

VALVE NO.	DESCRIPTION	D.C. CKT. NO.	CIRCUIT NO.	VALVE LOC. NO.	SOL. VLV. NO.	SOL. VLV. LOC. NO	NORMAL POS.	VALVE POSITION SW CLOSE	VALVE POSITION SW OPEN	SAFEGUARD POSITION	ENG. SFG FUNCTION	LOC. OF CONTROL	SAFETY INJECTION SIG. DEVICE	SAFETY INJECTION SIG. LOC.	SAFETY INJECTION SIG. CONTACT	CONTAINMENT ISOL. PHASE A DEVICE	CONTAINMENT ISOL. PHASE A LOC.	CONTAINMENT ISOL. PHASE A CONTACT	ERFDS
FCV360	CCW FROM CONT. FAN CLRS 11, 12 & 15- MAX FLOW VALVE	117D	RCC01	XFCV360	397	XSV397	CLOSED	909	910	OPEN	S	CNCC	K604	RNSØA	1 K604	——	——	——	——
FCV366	CCW FROM CONT. FAN CLRS 13 & 14- MAX FLOW VALVE	215D	RCC18	XFCV366	400	XSV400	CLOSED	915	916	OPEN	S	CNCC	K604	RNSØB	1 K604	——	——	——	——
FCV361	CCW FROM EXCESS LTDN HX TSOL V	317D	RCC08	XFCV361	398	PM123	CLOSED	911	912	CLOSED	T	CNCC	——	——	——	K606	RNSØB	1 K606	MUX03-12-3

EQUIPMENT LOCATION NUMBERS

CNCC — — — — CONTROL BOARD COMPONENT COOLING (X) IVB1
RNSØB — — — RACK NUCLEAR SAFEGUARD OUTPUT B
BTHIIO — — — — TERMINAL BOX AREA H Nº 110
XFCV364 — — — FLOW CONTROL VALVE 364
XSV225 — — — INSTRUMENT SV225 (LOCAL MOUNTED)
PM123 — — — — MECHANICAL PANEL NO. 123 BLOWDOWN TANK
RNRMB — — — — RACK NUCLEAR RADIATION MONITORING CUB. B

REFERENCE DRAWINGS

1. EQUIPMENT LOCATION NUMBERS. — — — — — — — DWG.NO. 101900
2. DESCRIPTION OF ELECTRICAL SCHEMATIC DIAG. SYMBOLS AND CIRCUIT DESIGNATIONS— — — — — — — DWG. NO. 050003
3. PIPING SCHEMATIC — COMPONENT COOLING SYSTEM — — DWG.NO. 102014
4. INSTRUMENT SCHEMATIC — FLOW INSTRUMENT SYSTEM — DWG.NO. 102032
5. SINGLE LINE METER & RELAY — 125 V D.C. SYSTEM — — — DWG. Nº 437546
6. CIRCUIT SCHEDULE -NUCLEAR CONTROL — — — — — — — DWG. NO. 103072
7. INSTRUMENT SCHEMATIC RADIATION INSTRUMENT SYSTEM — DWG. NO. 102081
8. INSTRUMENT SCHEMATIC TEMPERATURE INSTRUMENT SYSTEM DWG NO. 102035
9. SCHEMATIC DIAGRAM MAIN ANNUNCIATOR SHEET Nº 1 — — DWG. NO. 501121
10. (M) FUNCTION DIAGRAMS — REC. NO. 663195
11. (M) SOLID STATE PROTECTION SYSTEM — REC. NO. 663231
12. SCHEMATIC DIAGRAM MONITOR LIGHT BOX B, C — DWG. NO. 437697, 8
13. SINGLE LINE METER & RELAY - 125V. D.C. SYSTEM — DWG. NO. 445075, 6
14. BLOCK DIAG - EMERG. RESPONSE FACILITY DATA SYS. — DWG. NO. 445278
15. FUNCTIONAL BLOCK DIAG., RADIATION MON. RE17A & B — REC. NO. 663227-37
16. SCHEM. DIAG SSPS OUTPUT RELAYS, TRAIN A, TRAIN B — — DWGS 501869, 503088

NOTES

1. PIN NO'S SHOWN IN () ARE FOR FCV361 ONLY.

VALVE NO'S.: FCV360, FCV361, FCV364, FCV365, FCV366, FCV602, FCV603, RCV16

P, G, &E, SYSTEM PHASE SEQUENCE A-C-B

NUCLEAR SAFETY RELATED

KEY DWG. SECTION 4

UNIT 1

		DESCRIPTION	COORDINATION
DATE	2/17/04		NUCL. -
DWN.	AJLS	Revised per FCT 027709	MECH. -
R.E.	SMBS		ELEC. -
INDEP. VERIFIER	-		CIVIL -
P.E.	RDMS		PIPING -
			I&C -

REVISION INFORMATION

ELECTRICAL
SCHEMATIC DIAGRAM
COMPONENT COOLING WATER SOLENOID VALVES

DIABLO CANYON POWER PLANT
PACIFIC GAS AND ELECTRIC COMPANY
SAN FRANCISCO, CALIFORNIA

DWG SCALE
BILL OF MATL
SUPSDS
SUPSD BY
SHEET NO. 1 OF

437681 REV 19

REGISTERED PROFESSIONAL ENGINEER — RODERICK D. MARTIN — E-16911 — Exp. 06/30/05 — ELECTRICAL — STATE OF CALIFORNIA

DRAWING NUMBER 437681

CAD User: AJLS Date: 2-17-2004
DGN: 437681.DGN
XREFs: 445076 & 317F

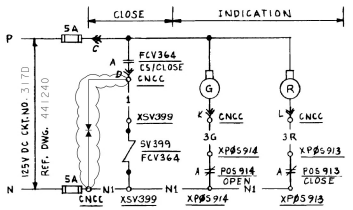

FCV364 RHR HX 22 CCW OUTLET CKT RCC25

OTHER VALVES SIMILAR AS SHOWN BELOW IN TABLE.

VALVE NO.	DESCRIPTION	D.C. CKT. NO.	CKT. NO.	VALVE LOC. NO.	SOL. VALVE NO.	SOL. VALVE LOC. NO.	VLV. POS. SW. CLOSED	VLV. POS. SW. OPEN
FCV364	RHR HX 22 CCW OUTLET	317D	RCC25	XFCV364	399	XSV399	913	914
FCV365	RHR HX 21 CCW OUTLET	215D	RCC28	XFCV365	379	XSV379	907	908

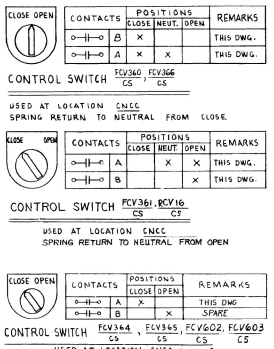

TABLE OF DEVICES

DEVICE NO.	FUNCTION	RATING	MFR.	TYPE	CAT./DWG.NO.	REMARKS
K606	CONTAINMENT ISOL. PHASE A AUX. REL				(14)	
K604	SAFETY INJECTION AUX REL				(14)	
FCV___	FLOW CONTROL VALVE					SEE TABLE FOR VALVE NO.
POS___	VALVE POSITION SWITCHES					SEE TABLE FOR SWITCH NO.
SV379, 225, 397, 398 399, 400 385, 386	SOLENOID VALVES					
RCI7AX, 17BX	CCW HI-RAD CONT. AUX. RELAY	—	—	—	—	CONTACTS TO OPEN ON HI RAD
RCV16	RADIATION CONTROL VALVE	—	—	—	(3) (7)	

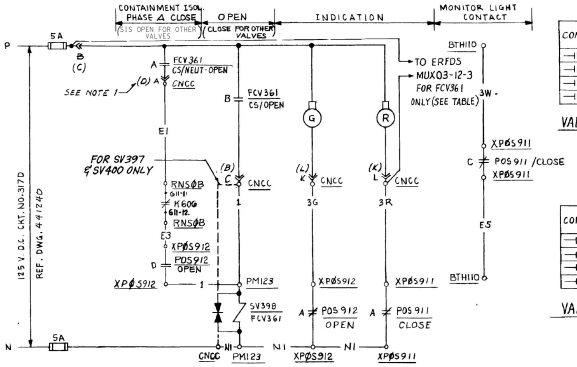

CONTACT	POSITION CLOSE	POSITION OPEN & INTERM.	REMARKS 308,913	911	1061, 1065	907,913
A		X	RED LT	RED LT	RED LT	RED LT
B	X		SPARE	SPARE	SPARE	SPARE
C		X	SPARE	CONTACTOR LT	SPARE	SPARE
D	X		SEAL IN	SPARE	SPARE	SPARE

VALVE CLOSE POSITION SWITCH

CONTACT	POSITION CLOSED INTERM	POSITION OPEN	REMARKS 910, 916	912	1060, 1064	908, 914
A	X		GREEN LT.	GREEN LT.	GREEN LT.	GREEN LT.
B		X	SPARE	SPARE	ALARM SEE. 9	SPARE
C	X		MONITOR LT	SPARE	SPARE	SPARE
D		X	SPARE	SEAL IN	SPARE	ALARM SEE. 15

VALVE OPEN POSITION SWITCH

FCV361 CCW FROM EXCESS LETDOWN HEAT EXCHANGER - ISOL. VALVE - CKT. Nº RCC08

OTHER VALVES SIMILAR EXCEPT AS SHOWN IN TABLE AND IN CONTROL & POSITION SW. DEVELOPMENTS

VALVE NO.	DESCRIPTION	D.C. CKT. NO.	CIRCUIT NO.	VALVE LOC. NO.	SOL. VLV. NO.	SOL. VLV. LOC. NO.	NORMAL POS.	VLV POS SW. CLOSE	VLV POS SW. OPEN	ERFDS	SAFEGUARD POSITION	ENG. SFGD FUNCTION	LOC. OF CONTROL	SAFETY INJECTION SIG. DEVICE	SAFETY INJECTION SIG. LOC.	SAFETY INJECTION SIG. CONTACT	CONTAINMENT ISOL. PHASE A DEVICE	CONTAINMENT ISOL. PHASE A LOC.	CONTAINMENT ISOL. PHASE A CONTACT	ALARM CKT Nº HI LO PRESS
FCV360	CCW FROM CONT. FAN CLRS. 21/22/23 - MAX. FLOW VALVE	117D	RCC01	XFCV360	397	XSV397	CLOSED	905	910	—	OPEN	S	CNCC	K604	RNSBA	83-21 / 83-12	—	—	—	—
FCV366	CCW FROM CONT. FAN CLRS. 21 FOR MAX. FLOW VALVE	215D	RCC18	XFCV366	400	XSV400	CLOSED	905	906	—	OPEN	S	CNCC	K604	RNSBB	83-21 / 83-12	—	—	—	—
FCV361	CCW FROM EXCESS LTDN HX ISOL VV	317D	RCC08	XFCV361	398	PM123	CLOSED	911	912	MUX03-12-3	CLOSED	T	CNCC	—	—	—	K606	RNSBB	BTH110	—

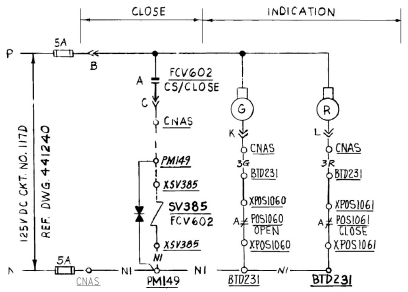

FCV602 AUX SALT WTR PP21 TO CCW HX 21 CKT Nº RCC51

FCV603 SIMILAR AS SHOWN BELOW IN TABLE

VALVE NO	DESCRIPTION	L.C. CKT. NO	CKT. NO	VALVE LOC.Nº	SOL.VALVE Nº	SOL.VLV. LOC.Nº	SOL. VALVE LOC. NO.	VLV. POS. SW. CLOSED	VLV. POS. SW. OPEN	TERM. BOX	ALARM CKT No
FCV602	AUX. SALT WTR PP21 TO CCW HX 21	117 D	RCC 51	XFC602	385	XSV385	PM149	1061	1060	BTD 231	AP2400DF
FCV603	AUX. SALT WTR. PP22 TO CCW HX 22	215D	RCC 60	XFC603	386	XSV386	PM149	1065	1064	BTD 232	AP2424DG

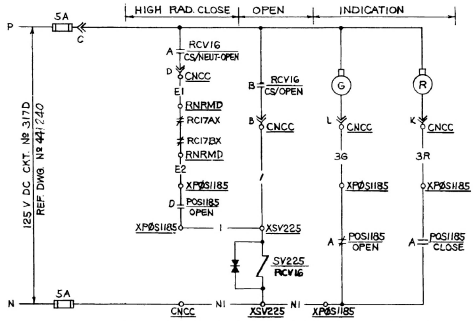

RCV16 CCW SURGE TANK VENT CKT. Nº RCC67

CONTACTS	POSITIONS CLOSE	POSITIONS OPEN & INTERM.	REMARKS
A		X	THIS DWG
B	X		SPARE

RCV16 CLOSE POSITION SW. 1185

CONTACTS	POSITIONS CLOSE & INTERM.	POSITIONS OPEN	REMARKS
A	X		THIS DWG.
B		X	SPARE
C	X		SPARE
D		X	THIS DWG.

RCV16 OPEN POSITION SW 1185

NOTES

1. PIN NO'S SHOWN IN ( ) ARE FOR FCV 361 ONLY.

EQUIPMENT LOCATION NUMBERS

CNCC — — — CONTROL BOARD COMPONENT COOLING (W) VB1)
RNSBB — — — RACK NUCLEAR SAFEGUARD OUTPUT B
BTH110 — — — TERMINAL BOX AREA H Nº 110
XFCV 364 — — FLOW CONTROL VALVE 364
XSV 225 — — INSTRUMENT SV 225 (LOCAL MOUNTED)
PM123 — — — MECHANICAL PANEL Nº123 BLOWDOWN TANK
RNRM — — — — RACK NUCLEAR RADIATION MONITORING CUB.

REFERENCE DRAWINGS

1. EQUIPMENT LOCATION NUMBERS. — — — — — — — DWG.NO. 103013
2. DESCRIPTION OF ELECTRICAL SCHEMATIC DIAG. SYMBOLS AND CIRCUIT DESIGNATIONS — — — — — — — DWG. NO. 050003
3. PIPING SCHEMATIC — COMPONENT COOLING SYSTEM — — DWG.NO. 108074
4. INSTRUMENT SCHEMATIC — FLOW INSTRUMENT SYSTEM — DWG.NO. 108032
5. SINGLE LINE METER & RELAY — 125 V.D.C. SYSTEM — — — DWG. NO. 441240
6. CIRCUIT SCHEDULE - NUCLEAR CONTROL — — — — — — — DWG. NO. 103072
7. INSTRUMENT SCHEMATIC RADIATION INSTRUMENT SYSTEM — DWG. NO. 108331
8. SCHEMATIC DIAGRAM MONITOR LIGHT BOX B,C DWG NO. 441453,4
9. SCHEMATIC DIAGRAM MAIN ANNUNCIATOR SHEET Nº1 — — DWG. NO. 500771
10. (W) FUNCTION DIAGRAMS — — — — — — — — — — REC. No. 663195
11. (W) SOLID STATE PROTECTION SYSTEM — — — — — REC. NO. 663231
12. INSTR. SCHEMATIC TEMP. INST SYSTEM — — — — — — DWG Nº 108035
13. BLOCK DIAG ERFDS TECH SUPPORT CENTER & CONTROL RM. — DWG. No. 445297
14. SCHEM. DIAG. SSPS OUTPUT RELAYS, TRAIN A, TRAIN B — — DWGS: 503089, 503093
15. SCHEM. DAG. MAIN ANNUNCIATOR — — — — — — DWG. NO. 500772, 500775
16. INSTRUMENT SCHEMATIC PRESSURE INSTRUMENT — — — DWG. NO. 108034
17. PIPING SCHEMATIC SALTWATER SYSTEM — — — — — — DWG. NO. 108017

VALVE NO'S.: FCV360, FCV361, FCV364, FCV365, FCV366, FCV602, FCV603, RCV16

P.G.&E. SYSTEM PHASE SEQUENCE A-C-B

NUCLEAR SAFETY RELATED

KEY DWG. SECTION 4

UNIT 2

DATE	DESCRIPTION	COORDINATION
3/10/83	Revised per FCT 027296	NUCL.
DWN. MBF		MECH.
R.E. FXC3		ELEC.
INDEP. VERIFIER		CIVIL
P.E. KBB3		PIPING
		I&C

REVISION INFORMATION

ELECTRICAL
SCHEMATIC DIAGRAM
COMPONENT COOLING WATER SOLENOID VALVES

DIABLO CANYON POWER PLANT
PACIFIC GAS AND ELECTRIC COMPANY
SAN FRANCISCO, CALIFORNIA

DWG SCALE
BILL OF MATL
SUPSDS
SUPSD BY
SHEET NO. 1 OF

441330 REV 15

REGISTERED PROFESSIONAL ENGINEER — KEITH B. BLOOM — E 15507 — ELECTRICAL — STATE OF CALIFORNIA

CAD User: MBF Date: 3-06-2003
DGN: 441330.DGN
XREFS: 441315.TIF

GRAPHIC ADMIN 441330

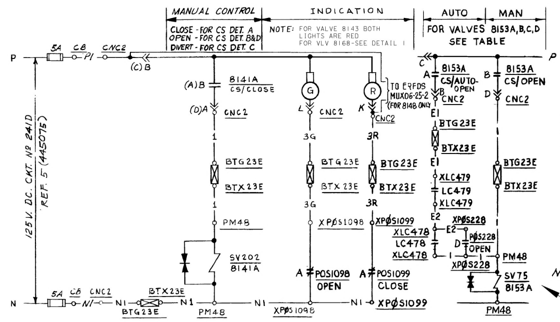

8141A RCP 1 SEAL LEAKAGE OUTLET CIRCUIT NO. RCV049

OTHER CVCS SOLENOID SIMILAR AS SHOWN BELOW

VALVE No.	DESCRIPTION	D.C. CIRCUIT No	VALVE LOC. No.	SOLENOID VALVE No.	SOL. VALVE LOC. No.	VALVE POS. SW. CLOSE	VALVE POS. SW. OPEN	LOC. OF CONTROL	PENN. No.	CIRCUIT No.	CONTROL SWITCH DETAIL
8141A	RCP 1 SEAL LEAKAGE OUTLET	241D	X8141A	202	PM48	1099	1098	CNC2	23E	RCV049	A
8141B	RCP 2 SEAL LEAKAGE OUTLET	↓	X8141B	203	PM125	1101	1100	↓	23E	RCV052	A
8141C	RCP 3 SEAL LEAKAGE OUTLET		X8141C	204	PM46	1103	1102		11E	RCV055	A
8141D	RCP 4 SEAL LEAKAGE OUTLET		X8141D	72	PM162	223	222		11E	RCV058	A
8142	RCP'S H_2O SEAL BYPASS		X8142	205	PM90	225	224	CNV	11E	RCV061	B
8147	CHRG TO LOOP 3 COLD LEG ALT.	241D	X8147	201	PM46	1097	1096	CNV	11E	RCV034	A
8153A	RCP 1 WTR. SEAL STAND PIPE H_2O SUP.	↓	X8153A	75	PM48	229	228	CNC2	23E	RCV022	E
8153B	RCP 2 WTR. SEAL STAND PIPE H_2O SUP.		X8153B	76	PM125	231	230	↓	23E	RCV025	E
8153C	RCP 3 WTR. SEAL STAND PIPE H_2O SUP.		X8153C	77	PM46	233	232		11E	RCV028	E
8153D	RCP 4 WTR. SEAL STAND PIPE H_2O SUP.		X8153D	78	PM162	235	234		11E	RCV031	E
8167	EXCESS LETDOWN HT XCHANGE IN		X8167	206	PM84	227	226		11E	RCV046	B
8166	EXCESS LETDOWN HT XCHANGER IN		X8166	210	PM84	1308	1309		11E	RCV206	B
8143	EXCESS LETDOWN HT. XCHANGER OUT		X8143	83	PM138	RCDT 1119	VCT 1122		11E	RCV224	C
8168	MIXED BED AND CATION DEMIN. OUTLET	↓	X8168	84	XSV84	DEMIN 248	VCT 249	CNV	——	RCV010	C
8148	RCS PRESSURIZER AUXILIARY SPRAY BYPASS	217D *	X8148	737 △	PM138	256	255	CNV	19E	RCV135	B

* 125V DC CIRCUIT NO. 217D ON MAIN CONT. BD 1VB2 FUSE PNLS, REF. DWG. 437895
△ TRANSIENT SUPPRESSOR NOT NEEDED

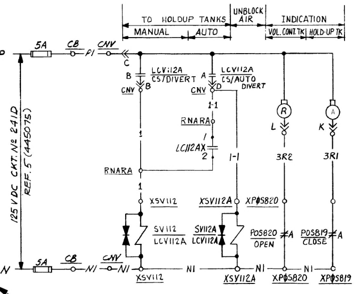

LCV112A VCT INLET VALVE - CIRCUIT - NO. RCV139

Close Pos. SW. #819 - Flow to Vol. Cont. Tk
OPEN POS. SW. #820 - FLOW TO HOLD UP TK

VALVE №	AUTO OPEN ON LOW LEVEL DEV. №	LOC.	CONT.	AUTO CLOSE ON HI LEVEL DEV. №	LOC.	CONT.
8153A	LC478	XLC478	─┤├─	LC479	XLC479	─┤├─
8153B	LC480	XLC480	─┤├─	LC481	XLC481	─┤├─
8153C	LC482	XLC482	─┤├─	LC483	XLC483	─┤├─
8153D	LC484	XLC484	─┤├─	LC485	XLC485	─┤├─

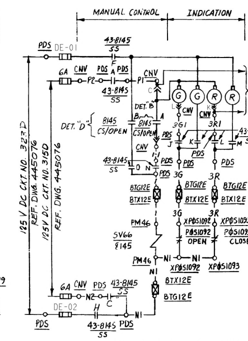

8145 CHARGE TO PRESS. AUX. SPRAY-CKT#RCV121

CONTACTS	POSITIONS CLOSE	POSITIONS OPEN	REMARKS
─┤├─ A	X		SPARE
─┤├─ B		X	THIS DWG

DETAIL D

CONTROL SWITCH 8145/CS
USED AT LOCATION PDS
NO SPRING RETURN.
CUTLER-HAMMER CAT. № 10250T1311-1M36

CONTACTS	POSITIONS CLOSE	POSITIONS OPEN	REMARKS DET. B,C	REMARKS DETAIL A
L11-L12 A		X	THIS DWG	SPARE
R11-R12 B	X		SPARE	THIS DWG

DETAILS A, B, & C

CONTROL SWITCH 8142/CS, 8141A/CS
USED AT LOCATION CNV, CNC2
NO SPRING RETURN.
DETAIL C SIMILAR TO DET. B EXCEPT NAMEPLATE TO READ "NORMAL - DIVERT"

CONTACTS	POSITIONS CLOSE	POSITIONS AUTO	POSITIONS OPEN	REMARKS
L11-L12 A		X	X	THIS DWG
R11-R12 B			X	THIS DWG

DETAIL E

CONTROL SWITCH 8153A/CS, 8153B/CS, 8153C/CS, 8153D/CS
USED AT LOCATION CNC2
NO SPRING RETURN.

CONTACTS	POSITIONS VCTk	POSITIONS AUTO	POSITIONS DIVERT	REMARKS
─┤├─ A		X	X	THIS DWG.
─┤├─ B			X	THIS DWG.

CONTROL SWITCH LCV112A/CS
USED AT LOCATION CNV
NO SPRING RETURN.

CONTACTS	POSITIONS CLOSE	POSITIONS AUTO	POSITIONS OPEN	REMARKS
─┤├─ A	X			SPARE
─┤├─ B			X	THIS DWG
─┤├─ C		X	X	THIS DWG.
─┤├─ D	X	X		SPARE

CONTROL SWITCH LCV460/CS, LCV459/CS
USED AT LOCATION CNV
SPRING RETURN TO AUTO FROM OPEN

CONTACTS	POSITIONS CLOSE	POSITIONS OPEN & INTERM	REMARKS	POS1161, 292, 807, 1030, 809, 811, 1401, 1402	CONTACTS FOR LCV459 (POS1321)
─┤├─ A		X	RED LT	PLC INPUT	1
─┤├─ B	X		SPARE	SPARE	2
─┤├─ C		X	SPARE	N/A (NOTE 1)	4
─┤├─ D	X		SPARE	N/A (NOTE 1)	3

VALVE CLOSE POSITION SWITCHES
See Note 1

TABLE OF DEVICES

DEVICE NO.	FUNCTION	RATING	MFR.	TYPE	CAT./DWG. NO.	REMARKS
POEC-IO	AUX CONTROL BD PLC		A/B		(14)	
POCVI-IO	AUX CONTROL BD PLC		A/B		(14)	
33bcx 8149A,B,C	VALVE POSITION SWITCH AUX. REL.	—	—	—	(REF. 9)	COIL OF RELAY IS ENERGIZED WHEN VALVE IS CLOSED
SV 8101, 66, 72, 75, 76, 77, 78, 83, 84, 200, 201, 202, 203, 204, 205, 206, 210, 228, 229, 230, 231, 232, 233, 1401, 1402, 112A, 112, 454, 473, 149, 737	SOLENOID VALVES					
LCV___	LEVEL CONTROL VALVE	—	—	—		SEE TABLE FOR VALVE NO'S
POS___	VALVE POSITION SWITCH	—	—	—		SEE TABLE FOR SWITCH NO'S
LC112AX	VCT HiHi LEVEL AUX REL.	—	—	—	(10)	CONTACT CLOSES ON HIGH VCT LEVEL TO DIVERT WATER TO LIQUID HOLD-UP TANK (HUT)
33aox LCV459, 33aox LCV460	VALVE POSITION SWITCH AUX. REL.	120VAC	WE	AR	AR880AR	
TIC149	LETDOWN TEMP IND. CONTROLLER	—	—	—	7	CONT INTLK OPENS ON INCR. TEMP. ALARM CONT. CLOSES ON INCR. TEMP.
81__ & FCV__	FLOW CONTROL VALVE	—	—	—		SEE TABLE FOR VALVE NO'S
TCV___	TEMP. CONTROL VALVE	—	—	—		
LC459CX-1 LC460CX-1	PRESSURIZER LEVEL CONT. AUX. REL.	24VDC	SPRECHER & SCHUH	CS7E	663193-258	CONTACT OPENS ON PRESSZR LOW LEVEL
LC478, 480 482, 484	RCP STAND PIPE LO LEV. CONT.	—	—	—	(4)	CONTACT CLOSES ON LOW LEVEL
LC479, 481 483, 485	RCP STAND PIPE HI LEV. CONT.	—	—	—	(4)	CONTACT OPENS ON HIGH LEVEL
8146/CS	CONTROL SWITCH	600V	CUTLER HAMMER		10250T1311 W/10250T1	USED AT LOCATION H04
8146/CS	CONTROL SWITCH	15A 240V	WE CORP		(16)	USED AT LOCATION CNV
43-8146/TS	TRANSFER SWITCH	15A 240V	ELECTRO SWITCH		24205B	

EQUIPMENT LOCATION NUMBERS:

- CNV ------------- CONTROL BOARD, CHEMICAL & VOLUME CONTROL SYSTEM (1VB2)
- CNC2 ------------ CONTROL BOARD, REACTOR COOLANT (1VB2)
- POCVI ----------- CONTROL PANEL UNIT 1, CHEMICAL VOLUME (AUX. BLDG. CONT. BD.)
- POEC ------------ CONTROL PANEL, EVAPORATOR, COMMON (AUX. BLDG. CONT. BD.)
- RNS0B ----------- NUCLEAR SAFEGUARD OUTPUT RACK B
- X8141A ---------- AIR OPERATED VALVE 8141A
- PM72 ------------ MECHANICAL PANEL NO. 72, LETDOWN ORIFICE
- XP0S820 --------- INSTRUMENT POS820 (LOCAL MOUNTED)
- RNARA ----------- RACK, NUCLEAR, AUXILIARY RELAY, CUBICLE A
- RNARB ----------- RACK, NUCLEAR, AUXILIARY RELAY, CUBICLE B
- BTG23E ---------- TERMINAL BOX G23E
- CB -------------- CONTROL BOARD, COND. & F.W. (1VB3)
- PDS ------------- DEDICATED SHUTDOWN PANEL
- EJSDBP1 --------- INVERTER ROOM 1-2 TRANSFER SWITCH PANEL
- H04 ------------- HOT SHUTDOWN PANEL EXTENSION BOARD
- BJG257 ---------- SPLICE BOX
- BJH276 ---------- SPLICE BOX

REFERENCE DRAWINGS:

1. DESCRIPTION OF ELECT. SCHEMATIC DIAG. SYMBOLS & CKT. DESIGNATION — DWG. 050003
2. EQUIPMENT LOCATION NUMBERS — DWG. 067997
3. PIPING SCHEMATIC — CHEMICAL & VOLUME CONTROL SYSTEM FLOW DIAG. — DWG. 102008
4. INSTRUMENT SCHEMATIC — FLOW INSTRUMENT SYSTEM — DWG. 102032
5. SINGLE LINE METER & RELAY DIAGRAM — 125 V DC SYSTEM — DWG. 437546, 445075 & 76
6. CIRCUIT SCHEDULE - NUCLEAR CONTROL — DWG. 067997
7. INSTRUMENT SCHEMATIC - TEMPERATURE INSTRUMENT SYSTEMS — DWG. 102035
8. INSTRUMENT SCHEMATIC - LEVEL INSTRUMENT SYSTEMS — DWG. 102033
9. SCHEMATIC DIAGRAM - CHEMICAL & VOLUME CONTROL SYSTEM SH. 2 — DWG. 437683
10. *WESTINGHOUSE ELEMENTARY WIRING DIAGRAM DWG 501B180 — D.C. REC. № 663193*
11. *SCHEMATIC DIAGRAM MAIN ANNUNCIATOR SH. 5* — DWG. 501125
12. SINGLE LINE DIAGRAM - MAIN CONTROL BOARD 1VB1 & 1VB2 - FUSE PANELS — DWG. 437895
13. SINGLE LINE DIAGRAM - MAIN CONTROL BOARD 1VB3 - FUSE PANELS — DWG 437979
14. AUX CONTROL BD SYS FUNCTIONAL REQUIREMENTS SPEC — REC No 663195-33
15. BLOCK DIAG. ERFDS TECH. SUPPORT CENTER & CONTROL ROOM — DWG. 445278
16. BILL OF MATERIALS - MAIN CONTROL ROOM VERTICAL BOARD & CONTROL CONSOLES — DWG. 101941-497

NOTES:

1. FCV'S 5, 6, 7, 8, 9, 10, 1401 & 1402 POS. SW's HAVE CONTACTS A & B ONLY, WITH ONE SIDE COMMON (SPDT).
2. TRANSFER SWITCH CONTACTS SHOWN IN CONTROL ROOM POSITION.

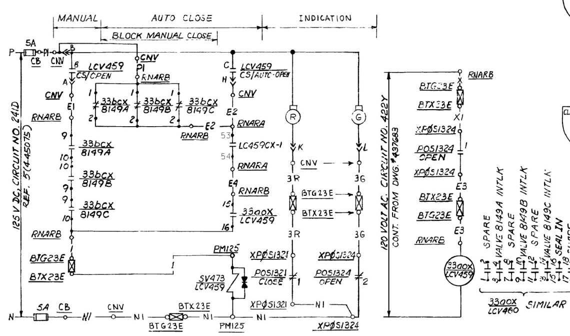

LCV459 REGENERATIVE HEAT EXCHANGER LETDOWN INLET - CKT. NO. RCV125

LCV460 REGENERATIVE HEAT EXCHANGER LETDOWN INLET SIMILAR EXCEPT AS SHOWN IN TABLE

VALVE NO.	DESCRIPTION	CKT. NO.	DC CKT. NO.	VALVE LOC. NO.	SOL. VLV. NO.	SOL. VLV. LOC. NO.	LOC. OF CONTROL	LEVEL CONTROL DEVICE	LEVEL CONTROL LOC.	LEVEL CONTROL CONTACT	VALVE POS. SW. CLOSE	VALVE POS. SW. OPEN	VLV. POS. AUX REL DEVICE	VLV. POS. AUX REL LOC.
LCV459	REGEN. H.X. LETDN. INLET	RCV125	241D	XLCV459	473	PM125	CNV	LC459CX-1	RNARA	53─┤├─54	1321	1324	33aox	RNARB
LCV460	REGEN. H.X. LETDN. INLET	RCV130	241D	XLCV460	454	PM125	CNV	LC460CX-1	RNARA	53─┤├─54	1322	1325	33aox	RNARB

VALVE №	OPEN CKT INTLK LETDN STOP VALVES CLOSED	OPEN CKT INTLK 3-CONT. IN SERIES	BLOCK MANUAL CLOSE LETDN STOP VALVES OPEN	BLOCK MANUAL CLOSE 3-CONT. IN PARALLEL
LCV459	33bcx/8149A, B&C	9 ─┤├─ 10	33bcx/8149A, B&C	1 ─┤/├─ 2
LCV460	↓	11 ─┤├─ 12	↓	3 ─┤/├─ 4

CONTACTS	POSITIONS CLOSE & INTERM	POSITIONS OPEN	REMARKS	REMARKS	REMARKS POS224	POS1161, 292, 807, 1030, 809, 811, 1401, 1402	POS228, 230, 232, 234	CONTACTS FOR LCV459 (POS1324)
─┤├─ A	X		GREEN LIGHT	RED LIGHT LCV112A&TCV149	GREEN LIGHT	PLC INPUT	GREEN LT	2
─┤├─ B		X	SPARE	AUX RLY LCV459, 460	ALARM INTERL AN DWG 501727	SPARE	SPARE	1
─┤├─ C	X		SPARE	SEAL-IN TCV149	SPARE	N/A (NOTE 1)	SPARE	3
─┤├─ D		X	SPARE		SPARE	N/A (NOTE 1)	SEAL-IN	4

VALVE OPEN POSITION SWITCHES
See Note 1

CONTACTS		POSITION CONT RM	POSITION LOCAL	REMARK
12 ─┤├─ 11	A	X		CONT VLV 8145
12 ─┤├─ 13	B		X	SPARE
16 ─┤├─ 15	C	X		CONT VLV 8145
16 ─┤├─ 17	D		X	SPARE
22 ─┤├─ 21	E	X		SPARE
22 ─┤├─ 23	F		X	CONT VLV 8145
26 ─┤├─ 25	G	X		SPARE
26 ─┤├─ 27	H		X	CONT VLV 8145
32 ─┤├─ 31	J	X		GREEN LT
32 ─┤├─ 33	K		X	GREEN LT
36 ─┤├─ 35	L	X		RED LT
36 ─┤├─ 37	M		X	RED LT
42 ─┤├─ 41	N	X		CONT VLV 8145
42 ─┤├─ 43	O		X	CONT VLV 8145
46 ─┤├─ 45	P	X		SPARE
46 ─┤├─ 47	R		X	↓

CONT RM / LOCAL

SELECTOR SW. 43-8145/SS
USED AT LOC. PDS
NO SPRING RETURN

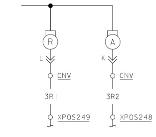

DETAIL I
(FOR VALVE 8168 ONLY)

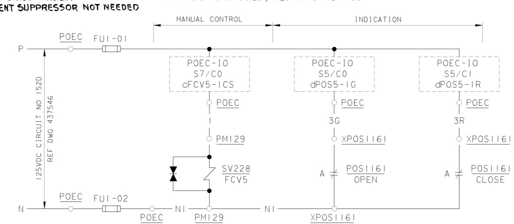

FCV5 LIQUID HOLD-UP TANK 1-1 INLET CIRCUIT RCV013

OTHER CVCS SOLENOIDS SIMILAR AS SHOWN BELOW

VALVE NO	DESCRIPTION	FUSE ID	SOLENOID VALVE NO	SOL VALVE LOC NO	VALVE POS SW	CIRCUIT NO	DIGITAL CHASSIS	DIGITAL OUTPUTS SLOT/CHASSIS	DIGITAL OUTPUTS TAG NAME	DIGITAL INPUTS SLOT/CHASSIS	DIGITAL INPUTS TAG NAME	DIGITAL INPUTS SLOT/CHASSIS	DIGITAL INPUTS TAG NAME
FCV5	LIQ HOLD-UP TK 1-1 INLET	POEC-FU1-01 & 02	SV228	PM129	1161	RCV013	POEC-IO	S7/C0	cFCV5-1CS	S5/C0	dPOS5-1G	S5/C1	dPOS5-1R
FCV6	LIQ HOLD-UP TK 1-2 INLET	POEC-FU2-01 & 02	SV229	PM129	292	RCV016	POEC-IO	S7/C1	cFCV6-1CS	S5/C2	dPOS6-1G	S5/C3	dPOS6-1R
FCV7	LIQ HOLD-UP TK 0-1 OUTLET	POEC-FU6-01 & 02	SV233	PM130	807	RCV019	POEC-IO	S7/C7	cFCV7-1CS	S5/C14	dPOS7-1G	S5/C15	dPOS7-1R
FCV8	LIQ HOLD-UP TK 0-1 INLET	POEC-FU3-01 & 02	SV230	PM129	1030	RCV043	POEC-IO	S7/C2	cFCV8CS	S5/C4	dPOS8G	S5/C5	dPOS8R
FCV9	LIQ HOLD-UP TK 1-1 OUTLET	POEC-FU4-01 & 02	SV231	PM130	809	RCV064	POEC-IO	S7/C5	cFCV9-1CS	S5/C10	dPOS9-1G	S5/C11	dPOS9-1R
FCV10	LIQ HOLD-UP TK 1-2 OUTLET	POEC-FU5-01 & 02	SV232	PM130	811	RCV067	POEC-IO	S7/C6	cFCV10-1CS	S5/C12	dPOS10-1G	S5/C13	dPOS10-1R
FCV1401	LAUNDRY/DISTILLATE TK 0-1 INLET	POCVI-FU2-01 & 02	SV1401	XSV1401	1401	RCV220	POCVI-IO	S3/C3	cFCV1401CS	S6/C0	dPOS1401G	S6/C1	dPOS1401R
FCV1402	LAUNDRY/DISTILLATE TK 0-2 INLET	POCVI-FU3-01 & 02	SV1402	XSV1402	1402	RCV070	POCVI-IO	S3/C4	cFCV1402CS	S6/C2	dPOS1402G	S6/C3	dPOS1402R

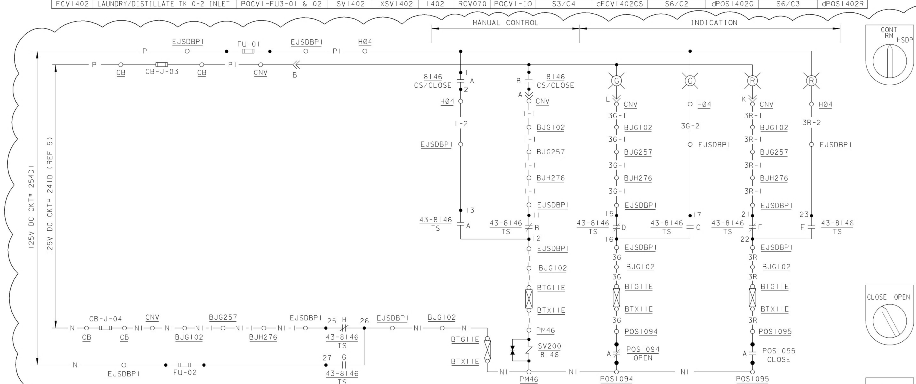

CONTACTS		POSITION CONT RM	POSITION HSDP	REMARKS
12 ─┤├─ 13	A		X	THIS DWG
12 ─┤├─ 11	B	X		THIS DWG
16 ─┤├─ 17	C		X	THIS DWG
16 ─┤├─ 15	D	X		THIS DWG
22 ─┤├─ 23	E		X	THIS DWG
22 ─┤├─ 21	F	X		THIS DWG
26 ─┤├─ 27	G		X	THIS DWG
26 ─┤├─ 25	H	X		THIS DWG
32 ─┤├─ 33	I		X	ALARM, 437700
32 ─┤├─ 31	J	X		SPARE
36 ─┤├─ 37	K		X	SPARE
36 ─┤├─ 35	L	X		SPARE
42 ─┤├─ 43	M		X	SPARE
42 ─┤├─ 41	N	X		SPARE
46 ─┤├─ 47	O		X	SPARE
46 ─┤├─ 45	P	X		SPARE
52 ─┤├─ 53	Q		X	SPARE
52 ─┤├─ 51	R	X		SPARE
56 ─┤├─ 57	S		X	SPARE
56 ─┤├─ 55	T	X		SPARE

TRANSFER SWITCH 43-8146/TS
USED AT LOCATION EJSDBP1

CONTACTS	POSITION CLOSE	POSITION OPEN	REMARKS
L11─┤├─L12 A		X	SPARE
R11─┤├─R12 B	X		THIS DWG

CONTROL SWITCH 8146/CS
USED AT LOCATION CNV
NO SPRING RETURN

CONTACTS	POSITION CLOSE	POSITION OPEN	REMARKS
1 ─┤├─ 2 A	X		THIS DWG
3 ─┤├─ 4 B		X	SPARE

CONTROL SWITCH 8146/CS
USED AT LOCATION H04
NO SPRING RETURN

8146 CHRG TO LOOP 4 COLD LEG NORMAL CIRCUIT NO. RCV037

VALVE NO	DESCRIPTION	D.C. CKT NO.	VALVE LOC. NO.	SOLENOID VALVE NO.	SOL. VALVE LOC. NO.	VALVE POS. SW. CLOSE	VALVE POS. SW. OPEN	LOC. OF CONTROL	PENN. NO.	CIRCUIT NO.
8146	CHRG TO LOOP 4 COLD LEG NORMAL	241D/254D1	X8146	200	PM46	1095	1094	CNV H04	11E	RCV037

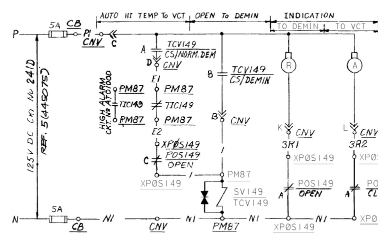

TCV149 - LETDOWN TEMP. DIVERSION VLV. - CKT. NO. RCV260

CONTACTS	POSITIONS V.C.Tk.	POSITIONS NORM	POSITIONS DEMIN	REMARKS
L11-L12 A		X	X	THIS DWG.
R11-R12 B			X	THIS DWG.

CONTROL SWITCH TCV149/CS
USED AT LOCATION CNV
SPRING RETURN TO NORM FROM DEMIN

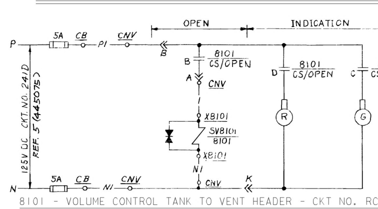

8101 - VOLUME CONTROL TANK TO VENT HEADER - CKT NO. RCV210

VALVE NO	DESCRIPTION	D.C. CIRCUIT NO.	VALVE LOC. NO.	SOLENOID VALVE NO.	SOL VALVE LOC. NO.	LOC. OF CONTROL	CIRCUIT NO.
8101	VCT TO VENT HDR.	241D	X8101	SV8101	X8101	CNV	RCV210

KEY DWG. SECTION 4

CONTACTS	POSITIONS CLOSE	POSITIONS OPEN	REMARKS
─┤├─ A	X		SPARE
─┤├─ B		X	SOL. VLV.
─┤├─ C	X		GREEN LT.
─┤├─ D		X	RED LT.

CONTROL SWITCH 8101/CS
USED AT LOCATION CNV
NO SPRING RETURN

VALVE NO'S: 8101, 8141A, 8141B, 8141C, 8141D, 8142, 8143, 8145, 8146, 8147, 8148, 8153A, 8153B, 8153C 8153D, 8166, 8167, 8168, FCV1401, FCV1402, FCV5 THRU FCV10, LCV112A, LCV459, LCV460, TCV149

P.G.&E. SYSTEM PHASE SEQUENCE A-C-B

NUCLEAR SAFETY RELATED

UNIT 1

DATE 07-10-2017		REVISION DESCRIPTION
D.D.	ZNS4	REVISED PER DDN-2*1216 DFC-3*2643
R.E.	RxG2	
I.V.	N/A	
P.E.	N/A	

REGISTERED PROFESSIONAL ENGINEER — NOT REQUIRED PER CF3.ID5 — STATE OF CALIFORNIA

ELECTRICAL SCHEMATIC DIAGRAM
CHEMICAL & VOLUME CONTROL SYSTEM
SOLENOID VALVES

DIABLO CANYON POWER PLANT
PACIFIC GAS AND ELECTRIC COMPANY
SAN FRANCISCO, CALIFORNIA

DWG SCALE:
BILL OF MATL:
SUPSDS:
SUPSD BY:

DRAWING	SHEET	PAGE	REV
437682	1	0	25

U2-441326

RASTER=437682.dgn DGN=437682.dgn CAD User: ZNS4 Date: 07-10-2017
RASTER=437682.TIF

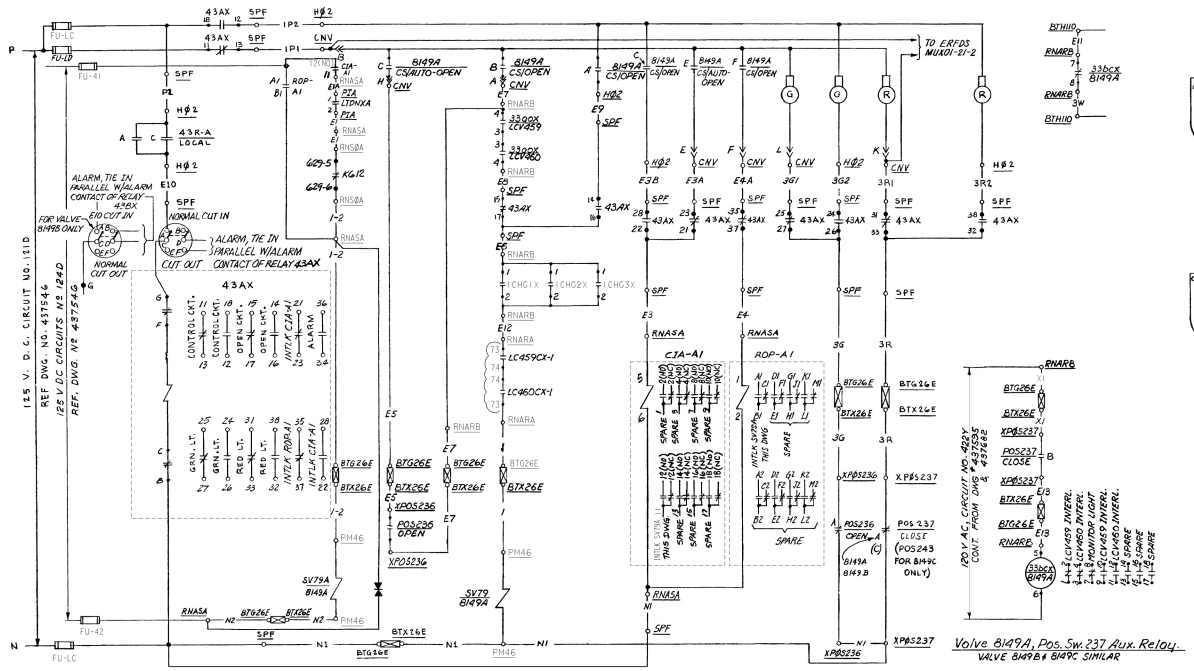
CONTROL TRANSFER RELAY
CONTAINMENT ISOLATION PHASE A
CONTROL ROOM OPEN
HOT SHUT-DOWN PNL. OPEN
AUX. SAFEGUARDS AUX RELAYS
INDICATION
MONITOR LT. CONTACT
PRZR LEVEL CONT.
125 V. D.C. CIRCUIT NO. 121D
REF DWG. NO. 437546
125 V DC CIRCUITS NO 124D
REF. DWG NO 437546
ALARM, TIE IN PARALLEL W/ALARM CONTACT OF RELAY 43AX
E10 CUT IN
NORMAL CUT IN
NORMAL CUT OUT
ALARM, TIE IN PARALLEL W/ALARM CUT OUT CONTACT OF RELAY 43AX
FOR VALVE 8149B ONLY
43AX
CONTROL CKT.
OPEN CKT.
INITIAL CIA/A1
ALARM
GRN. LT.
RED LT.
INITIAL ROP/A1
INITIAL CIA/A1
CIA-A1
ROP-A1
SPARE
SPARE
SPARE

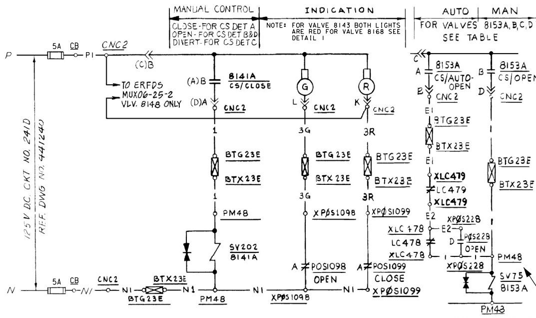

8141A RCP 1 SEAL LEAKAGE OUTLET CIRCUIT NO. RCV049

OTHER CVCS SOLENOID VALVES SIMILAR AS SHOWN BELOW

VALVE No.	DESCRIPTION	D.C. CIRCUIT No.	VALVE LOC. No.	SOLENOID VALVE No.	SOL. VALVE LOC. No.	VALVE POS. SW. CLOSE	VALVE POS. SW. OPEN	LOC. OF CONTROL	PENN. No.	CIRCUIT No.	CONTROL SWITCH DETAIL
8141A	RCP 1 SEAL LEAKAGE OUTLET	241D	X8141A	202	PM48	1099	1098	CNC2	23E	RCV049	A
8141B	RCP 2 SEAL LEAKAGE OUTLET		X8141B	203	PM125	1101	1100		23E	RCV052	A
8141C	RCP 3 SEAL LEAKAGE OUTLET		X8141C	204	PM46	1103	1102		11E	RCV055	A
8141D	RCP 4 SEAL LEAKAGE OUTLET		X8141D	72	PM162	223	222		11E	RCV058	A
8142	RCP'S H_2O SEAL BYPASS		X8142	205	PM90	225	224	CNV	11E	RCV061	B
8147	CHRG TO LOOP 3 COLD LEG ALT.		X8147	201	PM46	1097	1096	CNV	11E	RCV034	A
8153A	RCP 1 WTR. SEAL STAND PIPE H_2O SUP.		X8153A	75	PM48	229	228	CNC2	23E	RCV022	E
8153B	RCP 2 WTR. SEAL STAND PIPE H_2O SUP.		X8153B	76	PM125	231	230		23E	RCV025	E
8153C	RCP 3 WTR. SEAL STAND PIPE H_2O SUP.		X8153C	77	PM46	233	232		11E	RCV028	E
8153D	RCP 4 WTR. SEAL STAND PIPE H_2O SUP.		X8153D	78	PM162	235	234		11E	RCV031	E
8167	EXCESS LETDOWN HT XCHANGER IN		X8167	206	PM84	227	226		11E	RCV046	B
8166	EXCESS LETDOWN HT XCHANGER IN		X8166	210	PM84	1308	1309		11E	RCV206	B
8143	EXCESS LETDOWN HT. XCHANGER OUT		X8143	83	PM138	RCDT 1119	VCT 1122		11E	RCV224	C
8168	MIXED BED AND CATION DEMIN. OUTLET		X8168	84	XSV84	DEMIN 248	VCT 249	CNV	—	RCV010	C
8148	RCS PRESSURIZER AUXILIARY SPRAY BY-PASS	217D *	X8148	737 △	PM138	256	255	CNV	19E	RCV135	B

* 125V DC CIRCUIT NO. 217D ON MAIN CONT. BD. 2VB2 FUSE PNLS. REF. DWG. 441240
△ TRANSIENT SUPPRESSOR FOR SV WIRED AT CNV

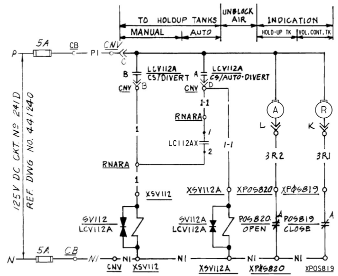

LCV112A VCT INLET VALVE-CIRCUIT NO. RCV139

Close Pos. SW. #819 - Flow to Vol. Cont. Tk
OPEN POS. SW. #820 - FlOW TO HOLD UP TK

VALVE Nº	AUTO OPEN ON LOW LEVEL DEV Nº	LOC.	CONT	AUTO CLOSE ON HI-LEVEL DEV. Nº	LOC.	CONT.
8153A	LC478	XLC478	⫲	LC479	XLC479	⫲
8153B	LC480	XLC480	⫲	LC481	XLC481	⫲
8153C	LC482	XLC482	⫲	LC483	XLC483	⫲
8153D	LC484	XLC484	⫲	LC485	XLC485	⫲

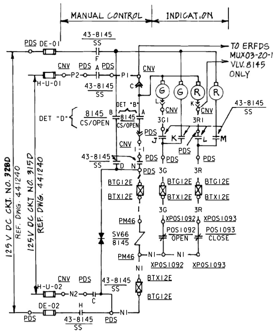

8145 CHARGE TO PRESS.
AUX. SPRAY-CKT # RCV121

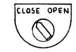

CONTACTS		POSITIONS CLOSE	POSITIONS OPEN	REMARKS
⊣⊢	A	X		SPARE
⊣⊢	B		X	THIS DWG

DETAIL D

CONTROL SWITCH 8145/CS
USED AT LOCATION PDS
NO SPRING RETURN.
CUTLER-HAMMER CAT. Nº 10250T1311-1M36

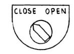

CONTACTS		POSITIONS CLOSE	POSITIONS OPEN	REMARKS DET. B, C	REMARKS DETAIL A
L11 L12	A		X	THIS DWG	SPARE
R11 R12	B	X		SPARE	THIS DWG

DETAILS A, B, & C

CONTROL SWITCH 8142/CS, 8141A/CS
USED AT LOCATION CNV, CNC2
NO SPRING RETURN.
DETAIL C SIMILAR TO DET B EXCEPT NAMEPLATE TO READ "NORMAL DIVERT"

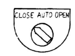

CONTACTS		POSITIONS CLOSE	POSITIONS AUTO	POSITIONS OPEN	REMARKS
L11 L12	A		X	X	THIS DWG
R11 R12	B			X	THIS DWG

DETAIL E

CONTROL SWITCH 8153A/CS, 8153B/CS, 8153C/CS, 8153D/CS
USED AT LOCATION CNC2
NO SPRING RETURN.

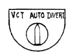

CONTACTS		POSITIONS VCT	POSITIONS AUTO	POSITIONS DIVERT	REMARKS
⊣⊢	A		X	X	THIS DWG.
⊣⊢	B			X	THIS DWG.

CONTROL SWITCH LCV112A/CS
USED AT LOCATION CNV.
NO SPRING RETURN.

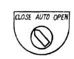

CONTACTS		POSITIONS CLOSE	POSITIONS AUTO	POSITIONS OPEN	REMARKS
⊣⊢	A	X			SPARE
⊣⊢	B			X	THIS DWG
⊣⊢	C		X	X	THIS DWG
⊣⊢	D			X	SPARE

CONTROL SWITCH LCV460/CS, LCV459/CS
USED AT LOCATION CNV
SPRING RETURN TO AUTO FROM OPEN

CONTACTS		POSITIONS CLOSE	POSITIONS OPEN & INTERM	REMARKS	POS1161, 292, 807, 809, 811, 813, 815
⊣⊢	A		X	RED LT	PLC INPUT
⊣⊢	B	X		SPARE	SPARE
⊣⊢	C		X	SPARE	N/A (NOTE 1)
⊣⊢	D	X		SPARE	N/A (NOTE 1)

VALVE CLOSE POSITION SWITCHES
See Note 1

CONTACTS		POSITIONS CLOSE & INTERM	POSITIONS OPEN	REMARKS		POS224	POS1161, 292, 807, 809, 811, 813, 815	POS228, 230, 232, 234
⊣⊢	A	X		GREEN LIGHT	RED LIGHT LCV112A&TCV149	GREEN LIGHT	PLC INPUT	GREEN LT
⊣⊢	B		X	SPARE	AUX RLY LCV459, 460	ALARM INTLK DWG 500771	SPARE	SPARE
⊣⊢	C	X		SPARE	SEAL-IN FCV 149	SPARE	N/A (NOTE 1)	SPARE
⊣⊢	D		X	SPARE		SPARE	N/A (NOTE 1)	SEAL-IN

VALVE OPEN POSITION SWITCHES
See Note 1

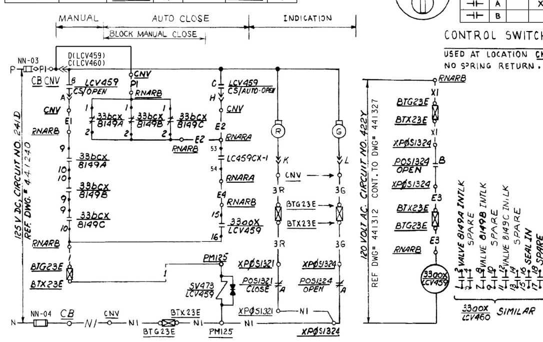

LCV459 REGENERATIVE HEAT EXCHANGER LETDOWN INLET - CKT. NO. RCV125
LCV460 REGENERATIVE HEAT EXCHANGER LETDOWN INLET SIMILAR EXCEPT AS SHOWN IN TABLE

VALVE NO.	DESCRIPTION	CKT. NO.	DC CKT NO.	VALVE LOC. NO.	SOL. VLV. NO.	SOL. VLV. LOC. NO.	LOC. OF CONTROL	LEVEL CONTROL DEVICE	LEVEL CONTROL LOC.	LEVEL CONTROL CONTACT	VALVE POS. SW. CLOSE	VALVE POS. SW. OPEN	VLV. POS. AUX. REL DEVICE	VLV. POS. AUX. REL LOC.
LCV459	REGEN. H.X. LETDN. INLET	RCV125	241D	XLCV459	473	PM125	CNV	LC459CX-1	RNARA	53⊣⊢54	1321	1324	33oox	RNARB
LCV460	REGEN. H.X. LETDN. INLET	RCV130	241D	XLCV460	454	PM125	CNV	LC460CX-1	RNARA	53⊣⊢54	1322	1325	33oox	RNARB

VALVE Nº	OPEN CKT INTLK: LETDN STOP VALVES CLOSED	OPEN CKT INTLK: 3-CONT. IN SERIES	BLOCK MANUAL CLOSE: LETDN STOP VALVES OPEN	BLOCK MANUAL CLOSE: 3-CONT. IN PARALLEL
LCV459	33bcx/8149A, B & C	9⊣⊢10	33bcx/8149A, B & C	1 ⫲ 2
LCV460	↓	11⊣⊢12	↓	3 ⫲ 4

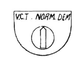

CONTACTS		POSITIONS V.C.T.	POSITIONS NORM.	POSITIONS DEMIN	REMARKS
L11 L12	A	X			Spare
R11 R12	B			X	This Dwg.
L21 L22	C		X	X	This Dwg.
R21 R22	D	X	X		Spare

CONTROL SWITCH TCV149/CS
USED AT LOCATION CNV
SPRING RETURN TO NORM FROM DEMIN.

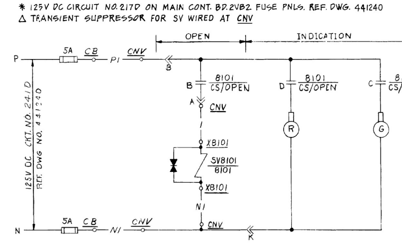

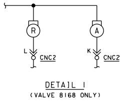

DETAIL I
(VALVE 8168 ONLY)

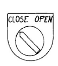

CONTACTS		POSITIONS CLOSE	POSITIONS OPEN	REMARKS
⊣⊢	A	X		SPARE
⊣⊢	B		X	SOL. VLV.
⊣⊢	C	X		GREEN LT.
⊣⊢	D		X	RED LT.

CONTROL SWITCH 8101/CS
USED AT LOCATION CNV
NO SPRING RETURN

8101 - VOLUME CONTROL TANK TO VENT HEADER - CKT. NO. RCV210

VALVE NO.	DESCRIPTION	D.C. CIRCUIT NO.	VALVE LOC. NO.	SOLENOID VALVE NO	SOL. VALVE LOC. NO.	LOC. OF CONTROL	CIRCUIT NO.
8101	V.C.T. TO VENT HDR.	241D	X8101	SV8101	X8101	CNV	RCV210

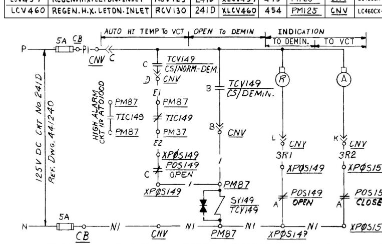

TCV149 - LETDOWN TEMP. DIVERSION VLV. - CKT. NO. RCV260

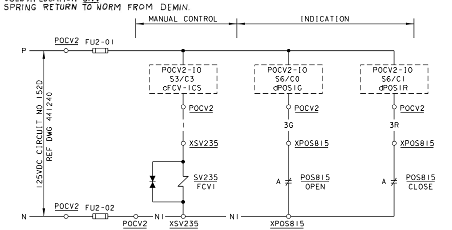

FCV1 BART TANK 0-1 INLET CIRCUIT RCV220
OTHER CVCS SOLENOIDS SIMILAR AS SHOWN BELOW

VALVE NO	DESCRIPTION	FUSE ID	SOLENOID VALVE NO	SV LOC NO	VALVE POS SW	CIRCUIT NO	DIGITAL CHASSIS	DIGITAL OUTPUTS SLOT/CHASSIS	DIGITAL OUTPUTS TAG NAME	DIGITAL INPUTS SLOT/CHASSIS	TAG NAME	SLOT/CHASSIS	TAG NAME
FCV1	BART TK 0-1 INLET	POCV2-FU2-01 & 02	SV235	XSV235	815	RCV220	POCV2-10	S3/C3	cFCV-1CS	S6/C0	dPOS1G	S6/C1	dPOS1R
FCV2	BART TK 0-2 INLET	POCV2-FU3-01 & 02	SV234	XSV234	813	RCV070	POCV2-10	S3/C4	cFCV-2CS	S6/C2	dPOS2G	S6/C3	dPOS2R
FCV5	LIQ HOLD-UP TK 2-2 INLET	POEC-FU7-01 & 02	SV228	PM129	1161	RCV013	POEC-10	S7/C3	cFCV5-2CS	S5/C6	dPOS5-2G	S5/C7	dPOS5-2R
FCV6	LIQ HOLD-UP TK 2-1 INLET	POEC-FU8-01 & 02	SV229	PM129	292	RCV016	POEC-10	S7/C4	cFCV6-2CS	S5/C8	dPOS6-2G	S5/C9	dPOS6-2R
FCV7	LIQ HOLD-UP TK 0-1 OUTLET	POEC-FU10-01 & 02	SV233	PM130	807	RCV019	POEC-10	S7/C8	cFCV7-2CS	S4/C4	dPOS7-2G	S4/C5	dPOS7-2R
FCV9	LIQ HOLD-UP TK 2-2 OUTLET	POEC-FU11-01 & 02	SV231	PM130	809	RCV064	POEC-10	S7/C9	cFCV9-2CS	S4/C6	dPOS9-2G	S4/C7	dPOS9-2R
FCV10	LIQ HOLD-UP TK 2-1 OUTLET	POEC-FU12-01 & 02	SV232	PM130	811	RCV067	POEC-10	S7/C10	cFCV10-2CS	S4/C8	dPOS10-2G	S4/C9	dPOS10-2R

NOTE
1. *FCV'S 1,2,5,6,7,8,9 & 10 POS. SW'S HAVE CONTACTS A&B ONLY WITH ONE SIDE COMMON (SPDT)*
2. FOR FUSE RATING AND TYPE SEE FUSE LIST DWG. 066145.

TABLE OF DEVICES

DEVICE NO.	FUNCTION	RATING	MFR.	TYPE	CAT./DWG. NO	REMARKS
POEC-10	AUX CONTROL BD PLC		A/B	(15)		
POCV2-10	AUX CONTROL BD PLC		A/B	(15)		
33DCX 8149A, B, C	VALVE POSITION SWITCH AUX REL	—	—	—	(REF. 9)	COIL OF RELAY IS ENERGIZED WHEN VALVE IS CLOSED
SV 8101, 66, 72, 75, 76, 77, 78, 83, 84, 201, 202, 203, 204, 205, 206, 210, 228, 229, 737, 231, 232, 233, 234, 235, 112A, 112, 454, 473, 149	SOLENOID VALVES					
LCV_ _ _	LEVEL CONTROL VALVE	—	—	—		SEE TABLE FOR VALVE NOS
POS_ _ _	VALVE POSITION SWITCH	—	—	—		SEE TABLE FOR SWITCH NO'S
LC112AX	VCT HIHI LEVEL AUX REL	—	—	—	(10)	CONTACT CLOSES ON HIGH VCT LEVEL TO DIVERT WATER TO LIQUID HOLD-UP TANK (HUT)
33aox 33aox LCV459 LCV460	VALVE POSITION SWITCH AUX. REL.	120VAC	WE	AR	AR880AR	
TIC149	LETDOWN TEMP IND CONTROLLER	—	—	—		CONT. INTLK OPENS ON INCR TEMP ALARM CONT. CLOSES ON INCR TEMP
81_ _ & FCV_ _	FLOW CONTROL VALVE	—	—	—		SEE TABLE FOR VALVE NOS
TCV_ _ _	TEMP. CONTROL VALVE	—	—	—		
LC459CX-1, LC460CX-1	PRESSURIZER LEVEL CONT. AUX. REL.	24VDC	SPRECHER & SCHUH	CS7E	663193-258 PAGE 2	CONTACT OPENS ON PRESSZR LOW LEVEL
LC478, 480, 482, 484	RCP STANDPIPE LO LEV CONT.	—	—	—	(4)	CONTACT CLOSES ON LOW LEVEL
LC479, 481, 483, 485	RCP STANDPIPE HI LEV CONT	—	—	—	(4)	CONTACT OPENS ON HIGH LEVEL

EQUIPMENT LOCATION NUMBERS

CNV ----- CONTROL BOARD, CHEMICAL & VOLUME CONTROL SYSTEM (SECT. 2VB2)
CNC2 ---- CONTROL BOARD, REACTOR COOLANT (SECT. 2VB2)
PØCV2 ---- CONTROL PANEL UNIT 2, CHEMICAL VOLUME (AUX. BLDG CONT. BD.)
PØEC ---- CONTROL PANEL, EVAPORATOR, COMMON (AUX. BLDG. CONT. BD.)
RNSØB ---- NUCLEAR SAFEGUARD OUTPUT RACK B
X8141A ---- AIR OPERATED VALVE 8141A
PM72 ---- MECHANICAL PANEL No. 72, LETDOWN ORIFICE
XPØS820 ---- INSTRUMENT POS820 (LOCAL MOUNTED)
RNARA ---- RACK, NUCLEAR, AUXILIARY RELAY, CUBICLE A
RNARB ---- RACK, NUCLEAR, AUXILIARY RELAY, CUBICLE B
BTG23E --- TERMINAL BOX G23E
CB ----- CONTROL BOARD COND. & F.W. (2VB3)
PDS -----DEDICATED SHUTDOWN PANEL

REFERENCE DRAWINGS

1. DESCRIPTION OF ELECT SCHEMATIC DIAG. SYMBOLS & CKT. DESIGNATION - DWG. 050003
2. EQUIPMENT LOCATION NUMBERS - DWG. 067998
3. PIPING SCHEMATIC — CHEMICAL & VOLUME CONTROL SYSTEM FLOW DIAG. - DWG. 108008
4. INSTRUMENT SCHEMATIC — FLOW INSTRUMENT SYSTEM - DWG. 108032
5. SINGLE LINE METER & RELAY DIAGRAM - 125 V DC SYSTEM - DWG. 441240
6. CIRCUIT SCHEDULE - NUCLEAR CONTROL - DWG. 067998
7. INSTRUMENT SCHEMATIC - TEMPERATURE INSTRUMENT SYSTEMS - DWG. 108035
8. INSTRUMENT SCHEMATIC - LEVEL INSTRUMENT SYSTEMS - DWG. 108033
9. SCHEMATIC DIAGRAM - CHEMICAL & VOLUME CONTROL SYSTEM SH. 2 - DWG. 441321
10. *WESTINGHOUSE ELEMENTARY WIRING DIAGRAM DWG 501B180 — D.C. REC. Nº 663193*
11. SCHEMATIC DIAGRAM MAIN ANNUNCIATOR SH. 5 DWG. 500775
12. *SINGLE LINE DIAGRAM MAIN CONTROL BOARD 2VB1 & 2VB2 FUSE PANELS* DWG 451805
13. *SINGLE LINE DIAGRAM MAIN CONTROL BOARD 2VB3 FUSE PANEL* DWG. 451806
14. *BLOCK DIAG. - ERFDS TECH. SUPPORT CTR. & CONT. RM* DWG. 445297
15. AUX CONTROL BD SYS FUNCTIONAL REQUIREMENTS SPEC 663195-33
16. SCHEMATIC DIAGRAM CVCS SOLENIOD VALVES 441326 SHT 2

CONTACTS			POSITION CONT. RM	POSITION LOCAL	REMARK
12	11	A	X		CONT. VLV. 8145
	13	B		X	SPARE
16	15	C	X		CONT. VLV. 8145
	17	D		X	SPARE
22	21	E	X		SPARE
	23	F		X	CONT. VLV. 8145
26	25	G	X		SPARE
	27	H		X	CONT. VLV. 8145
32	31	J	X		GREEN LT.
	33	K		X	GREEN LT.
36	35	L	X		RED LT.
	37	M		X	RED LT.
42	41	N	X		CONT. VLV. 8145
	43	O		X	CONT. VLV. 8145
46	45	P	X		SPARE
	47	R		X	SPARE

SELECTOR SW. 43-8145/SS
USED AT LOC. PDS
NO SPRING RETURN

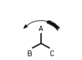

P.G.&E. SYSTEM PHASE SEQUENCE A-C-B

VALVE NO'S: 8101, 8141A, 8141B, 8141C, 8141D, 8142, 8143, 8145, 8147, 8148, 8153A, 8153B, 8153C, 8153D, 8166, 8167, 8168, FCV1, FCV2, FCV5, FCV6, FCV9, FCV7, FCV10, LCV112A, LCV459, LVC460, TCV149.

KEY DWG. SECTION 4

UNIT 2

DATE	06-19-2018	REVISION DESCRIPTION
D.D.	IAZ1	Revised Per DFT-7#4553
R.E.	RXG2	
I.V.	N/A	
P.E.	N/A	

REGISTERED PROFESSIONAL ENGINEER — NOT REQUIRED PER CF3.ID5 — STATE OF CALIFORNIA

ELECTRICAL
SCHEMATIC DIAGRAM
C.V.C.S. SOLENIOD VALVES

DIABLO CANYON POWER PLANT
PACIFIC GAS AND ELECTRIC COMPANY
SAN FRANCISCO, CALIFORNIA

DWG SCALE:
BILL OF MATL:
SUPSDS:
SUPSD BY:

DRAWING	SHEET	PAGE	REV
441326	1	0	24

UI=437682

RASTER=441326-1-0.dgn
DGN=441326-1-0.dgn
CAD User: IAZ1 Date: 06-19-2018

SNPG 5 Size

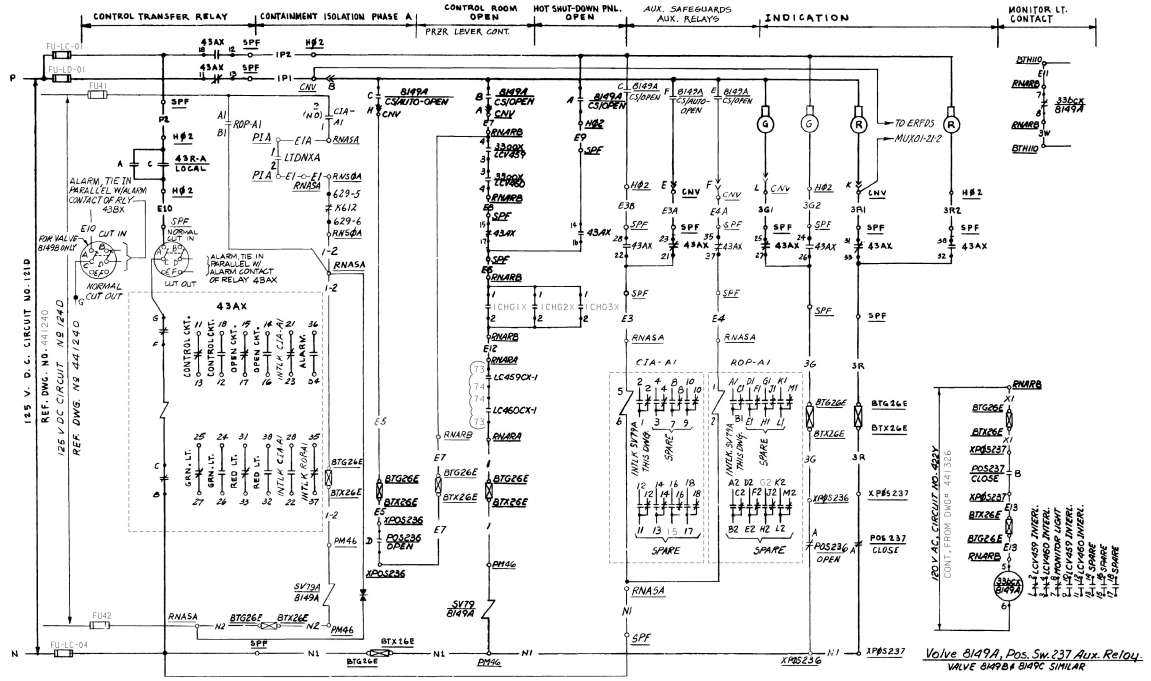

8149A LETDOWN ORIFICE STOP VALVE A CKT. RCV075 & RCV334

OTHER STOP VALVES SIMILAR AS SHOWN BELOW. CIRCUITS LISTED ON DWG 102770

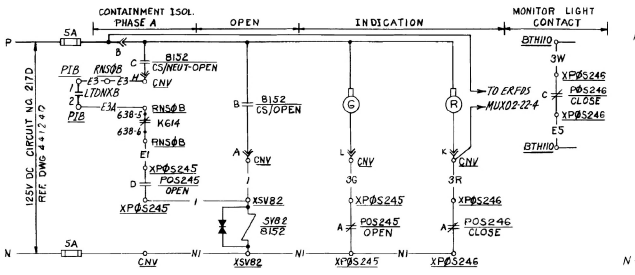

8152 - LETDOWN HEAT EXCHANGER X-TIE - CKT RCV001

ENGR. SAFETY FUNCTION - T

CIRCUITS LISTED ON DWG 102770

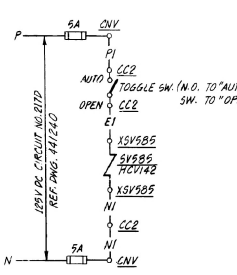

SV585-HCV142(CHARG.PP) BACK UP AIR

CKT. #RCV002

CONTROL SWITCH 8149A CS, 8149B CS, 8149C CS

USED AT LOCATION CNV
SPRING RETURN TO AUTO FROM OPEN

CONTACTS		POSITIONS CLOSE	AUTO	OPEN	REMARKS
	A	X			SPARE
	B			X	THIS DWG.
	C		X	X	THIS DWG
	D	X	X		SPARE
	E			X	THIS DWG
	F		X	X	THIS DWG

CONTROL SWITCH 8149A CS, 8149B CS, 8149C CS

USED AT LOCATION HØ2
NO SPRING RETURN.

CONTACTS		POSITIONS CLOSE	OPEN	REMARKS
	A		X	THIS DWG.
	B	X		SPARE
	C		X	THIS DWG
	D	X		SPARE

TRANSFER SWITCH 43R-A, 43R-B, 43R-C

USED AT LOCATION HØ2.
NO SPRING RETURN.

CONTACTS		POSITIONS CONTROL ROOM	LOCAL	REMARKS
	A		X	THIS DWG.
	B	X		SPARE
	C		X	THIS DWG
	D	X		SPARE

CONTROL SWITCH 8152 CS

USED AT LOCATION CNV
SPRING RETURN TO NEUTRAL FROM OPEN

CONTACTS		POSITIONS CLOSE	NEUT	OPEN	REMARKS
	A	X			SPARE
	B			X	THIS DWG
	C		X	X	THIS DWG.
	D	X	X		SPARE

VALVE CLOSE POSITION SWITCH

CONTACT		POSITION CLOSE	OPEN (INTERM)	REMARKS
	A		X	RED LIGHT
	B	X		AUX RELAY
	C		X	SPARE
	D	X		SPARE

VALVE OPEN POSITION SWITCH

CONTACT		POSITION CLOSE (INTERM)	OPEN	REMARKS
	A	X		GREEN LIGHT
	B		X	SPARE
	C	X		SPARE
	D		X	SEAL IN

TABLE OF DEVICES

DEVICE NO.	FUNCTION	RATING	MFR.	TYPE	CAT-/ DWG. NO.	REMARKS
43AX, BX, CX	CONTROL TRANSFER RELAY	125 VDC	ELEC-TRO SW. CORP.	MIKES 24-LOR	7803 F	RELAYS TO BE HAND RESET
K612, K614	CONTMT ISOL PH A AUX RELAY					(8) (10) (15)
33bcx 8149A,B,C	VALVE POSITION SW AUX RELAY	120 VAC	WE Corp.	AR	AR 880AR	
ICHG1X ICHG2X ICHG3X	4KV CIRCUIT BREAKERS AUX. RELAY	—	—	—	(5)	BREAKER AUX. CONTAMS CLOSED WHEN CHARGING PUMP IS RUNNING
81___	FLOW CONTROL VALVE	—	—	—		SEE TABLE FOR VALVE NO.
POS___	FCV POSITION SWITCH	—	—	—		SEE TABLE FOR SW. NO.
SV79, 80, 81, 82, 585	SOLENOID VALVES	—	—	—		
33aox	VALVE POSITION SWITCH AUX REL	—	—	—	(8)	CONTACT CLOSES WHEN LC459 & 460 ARE OPEN
LC459, 460						
LC459CX-1 LC460CX-1	PRESSURIZER LEVEL CONT AUX REL	24VDC	SPRECHER & SCHUH	CS7E	663193-25B PG.2	CONTACT OPENS ON LOW LEVEL SIGNAL
LC459CX-2 LC460CX-2	PRESSURIZER LEVEL CONT AUX RELAY	24VDC	SPRECHER & SCHUH	CS7E	663193-25B PG.2	CONTACT OPENS ON LOW LEVEL SIGNAL
CIA-A1,2,3	AUX SFGD AUX RELAY	125VDC	—	MDR	MDR3078-1	
ROP-A1,2,3			—	MDR	MDR198-B	
LTDNXA LTDNXB	LETDOWN HEAT EXCHANGE COMPONENT AUX RELAY	—	—	—	(16)	

EQUIPMENT LOCATION

SPF — — — 480V MCC 2 BUS #F
RNSØA — — NUCLEAR SAFEGUARD OUTPUT A
PM72 — — — MECHANICAL PANEL No. 72 LETDOWN ORIFICE
X8149A — — FLOW CONTROL VALVE No. 8149A
RNARA — — RACK NU AUX. RELAY CUB. A
BTHII0 — — — TERMINAL BOX AREA H NO 110
RNASA — — — RACK NU AUX. SAFEGUARDS CUB A
CNV — — — CONTROL BOARD, CHEMICAL & VOLUME CONTROL SYSTEM.
HØ2 — — — HOT SHUTDOWN REMOTE CONTROL PANEL NO. 2
PIA — — — INSTRUMENT PANEL "A"
PIB — — — INSTRUMENT PANEL "B"

REFERENCE DRAWINGS

1. DESCRIPTION OF ELECTRICAL SCHEMATIC DIAGRAM SYMBOLS & CIRCUIT DESIGNATION — DWG. 050003
2. EQUIPMENT LOCATION NUMBERS — DWG. 103013
3. PIPING SCHEMATIC — CHEMICAL & VOLUME CONTROL SYSTEM FLOW DIAGRAM — DWG. 108008
4. INSTRUMENT SCHEMATIC — FLOW INSTRUMENT SYSTEM — DWG. 108032
5. SCHEMATIC DIAGRAM CHARGING PUMPS — DWG. 441312
6. SINGLE LINE METER AND RELAY DIAG. 125 V. D.C. SYSTEM — DWG. 441240
7. SCHEMATIC DIAGRAM MAIN ANNUNCIATOR SH. 1 — DWG. 503771
8. SCHEMATIC DIAGRAM - CHEMICAL & VOLUME CONTROL SYSTEM SH1 — DWG. 441326
9. (W) FUNCTION DIAGRAMS — REC. 663195
10. (W) SOLID STATE PROTECTION SYSTEM — REC. 663251
11. (W) ELEMENTARY WIRING DIAGRAM DWG 501B180 — REC. 663193
12. SCHEMATIC DIAGRAM MONITOR LIGHT BOX B — DWG 441453
13. (W) ENGR CHANGE NOTICE, ECN # PEG 10618 — ECO # M-311 (E-77)
14. BLOCK DIAG.-ERFDS TECH. SUPPORT CTR. & CONT. RM. — DWG. 445297
15. SCHEM. DIAG. SSPS OUTPUT RELAYS, TRAIN A, TRAIN B — DWGS. 503089, 503093
16. SCHEM. DIAG. PIPE BREAK ISOLATION SYSTEM — DWG. 441199

FUSE ID'S

VALVE NO.	DESCRIPTION	PNL SPF	PNL RNASA	LTDN ISOLATION DEVICE	LOC.	CONTACT	D.C. CKT. NO.	VALVE LOC. NO.	SOLENOID VALVE NO.	SOLENOID VALVE LOC. NO.	ENGINEERED VITAL SAFETY FUNCTION	VALVE POS SW CLOSE	OPEN	PENN NØ	CIRCUIT NØ	CONTROL TRANSFER RELAY DEVICE	LOC	AUX SAFEGUARDS RELAY DEVICE NØS	LOC.	CONTAINMENT ISOLATION PHASE A DEVICE	LOC.	CONTACT	CHARGING PUMP RUNNING INTERLOCK CONTACTS BKR. 52 HF11 DEVICE	CONTACT	BKR. 52 HG9 DEVICE	CONTACT	BKR. 52 HG11 DEVICE	CONTACT	LOW LEVEL PRESSURIZER INTERLOCK DEVICE	CONTACTS	DEVICE	CONTACTS	LCV459 INTERLOCK DEVICE	CONTACT	LCV460 INTERLOCK DEVICE	CONTACT	ALARM CIRCUIT NO. TRANSFER OF CONTROL	C.O. SW. POSITION CONTROL TRANSFER RELAY CUTOUT SW.	ERFDS NO.
8149A	LETDOWN ORIFICE STOP VALVE A	FU-LC-01,04	FU-LD-01 FU41,42	LTDNXA	P1A	1-2	121D	X8149A	79	79A	PM46	T	237	236	26E	RCV075 RCV334	43 AX	SPF	CIA-A1	ROP-A1	RNASA	K612	RNSØA	629-5-#-629-6	ICHG1X	1—1—2	ICHG2X	1—1—2	ICHG3X	1—1—2	LC459CX-1	1—1—2	LC460CX-1	1—1—2	33aox LCV459	3—1—4	33aox LCV460	3—1—4	AYSO65 DF	NORMAL CUT IN	MUX01-21-2
8149B	B	FU-LC-02,05	FU-LD-02 FU43,44	LTDNXA	P1A	3-4	121D	X8149B	80	80A	PM46	T	240	239	26E	RCV090 RCV340	43BX	SPF	CIA-A2	ROP-A2	RNASA	K612	RNSØA	629-7-#-629-8	ICHG1X	7—1—8	ICHG2X	7—1—8	ICHG3X	7—1—8	LC459CX-2	7—1—8	LC460CX-2	7—1—8	33aox LCV459	9—1—10	33aox LCV460	9—1—10	AYSO65 DF	NORMAL CUT OUT	MUX01-21-3
8149C	C	FU-LC-03,06	FU-LD-03 FU45,46	LTDNXA	P1A	7-8	121D	X8149C	81	81A	PM46	T	243	241	26E	RCV106 RCV345	43CX	SPF	CIA-A3	ROP-A3	RNASA	K612	RNSØA	629-9-#-629-10	ICHG1X	11—1—12	ICHG2X	11—1—12	ICHG3X	11—1—12	LC459CX-2	11—1—12	LC460CX-2	11—1—12	33aox LCV459	13—1—14	33aox LCV460	13—1—14	AYSO65 DF	NORMAL CUT IN	MUX01-21-4

VALVE NOS 8149A, 8149B, 8149C, 8152

NUCLEAR SAFETY RELATED

P.G.&E. SYSTEM PHASE SEQUENCE A-C-B

KEY DWG. SECTION 4

UNIT 2

DATE	REVISION DESCRIPTION
04-05-2013	REVISED PER DFC-3-1870

D.D.	MNRU
R.E.	RxG2
I.V.	FxC2
P.E.	N/A

ELECTRICAL SCHEMATIC DIAGRAM SOLENOID VALVES CHEMICAL & VOLUME CONTROL SYSTEM

DIABLO CANYON POWER PLANT
PACIFIC GAS AND ELECTRIC COMPANY
SAN FRANCISCO, CALIFORNIA

DWG SCALE:
BILL OF MATL:
SUPSDS1
SUPSD BY:

DRAWING	SHEET	PAGE	REV
441327	1	0	14

REGISTERED PROFESSIONAL ENGINEER — NOT REQUIRED — STATE OF CALIFORNIA

ROSTER: 441327.dgn
DGN: 441327.dgn
CAD User: MNRU Date: 04-05-2013

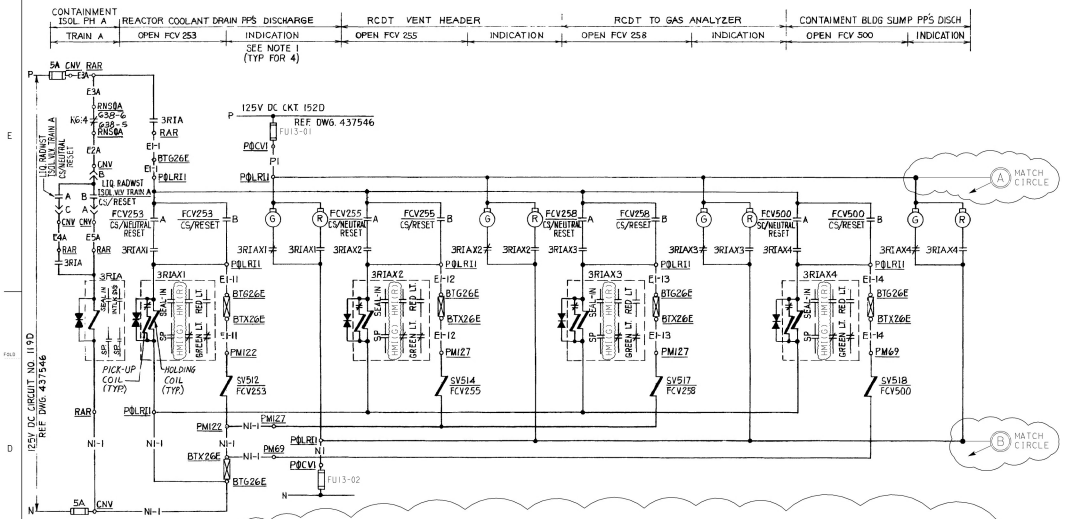

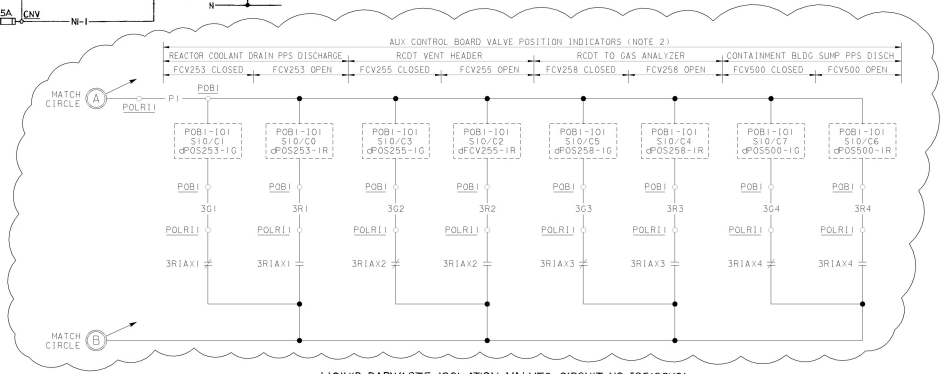

LIQUID RADWASTE ISOLATION VALVES-CIRCUIT NO. I0512SV01
CIRCUITS LISTED ON DWG. 103072

CONTACTS		POSITION CLOSE	POSITION NEUT. RESET	POSITION RESET	REMARKS	REMARKS
	A		X	X	THIS DWG	THIS DWG
	B			X	THIS DWG	THIS DWG.
	C	X	X	X	SPARE	—
	D			X	SPARE	—

CLOSE RESET
SPRING RETURN TO NEUTRAL
CONT. SWITCH
LIQUID RADWASTE ISOLATION VALVE TRAIN A, CS
LIQUID RADWASTE ISOLATION VALVE TRAIN B, CS
FCV253 CS, FCV254 CS, FCV255 CS, FCV256 CS, FCV257 CS, FCV258 CS, FCV260 CS, FCV500 CS, FCV501 CS
USED AT LOCATIONS CNV, P@LRI1, P@LRI2

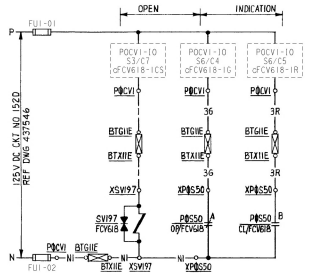

FCV618 RCDT DRAIN-CIRCUIT NO. I0197SV01
CIRCUITS LISTED ON DWG. 103072

CONTACTS		VALVE POSITION CLOSE	VALVE POSITION OPEN	REMARKS FCV253,254,255,256,257,501 & 260	REMARKS 258 & 500	REMARKS FCV618
	A	X		(GREEN LT) LAND (WHITE)	SPARE	(WHITE)
	B		X	SPARE		SPARE
	C	X		SPARE		
	D		X	SPARE		SPARE

VALVE OPEN POSITION SWITCH

CONTACTS		VALVE POSITION CLOSE	VALVE POSITION OPEN	REMARKS FCV254,256,257,501 & 260	REMARKS FCV253, 255, 258 & 500	REMARKS FCV618
	A	X		SPARE	SPARE	SPARE
	B		X	(GREEN LT) LAND (WHITE)	SPARE	(WHITE)
	C	X		SPARE	SPARE	SPARE
	D		X	MONITOR LT	SPARE	

VALVE CLOSE POSITION SWITCH

Δ - SWITCHES FCV 253, 258 & 500 ABANDON IN PLACE. SWITCH FOR FCV 255 REMOVED.

TABLE OF DEVICES

DEVICE NO.	FUNCTION	RATING	MFR.	TYPE	CAT./DWG. NO.	REMARKS
K613 K613	CONTAINMENT ISOLATION PHASE A AUX. RELAY	—	—	—	(7)(8)(13)	
SV512 513, 514, 515, 517, 518, 519, 532, 533, 197	SOLENOID VALVES	125VDC	—	—		
R3	GAS ANALYZER AUX CONT RELAY	—	—	—	(10)	SAMPLE POINT NO 3
R3X	GAS ANALYZER AUX. RLY		C-H	M	D26MRD62A1	
FCV___	FLOW CONTROL VALVE	—	—	—		SEE DWG FOR NOS
POCVI-101	AUX CONTROL BD PLC		A/B		(14)	MOUNTED IN POCVI
POCVI-10	AUX CONTROL BD PLC		A/B		(14)	MOUNTED IN POCVI
POS___	VALVE POSITION SWITCH	—	—	—		SEE DWG FOR NOS
3RIA, 3RIB	RADWASTE ISOL. RESET AUX REL. 125V DC		GE	IC2850	IC2850A100BBL	
3RIAX1, -4			C-H	M	D26MRD62A1	
3RIBX1, -5						
5-3RIA1, 516, 530, 5A, 531	VALVE CONTROL AUXILIARY RELAY				D26MRD120N	48 PF 760

CONTACTS		POSITIONS CLOSE	POSITIONS OPEN & INTERM.	REMARKS
	A	X		SPARE
	B		X	SPARE
	C	X		SPARE
	D		X	MONITOR LT (REF. 9)

VALVE CLOSE POSITION SWITCH
POS1187A, POS1193A, POS1202A & POS1205A

EQUIPMENT LOCATION NUMBERS

CNV	CONTROL BOARD CHEMICAL & VOLUME CONTROL
P@CVI	CONTROL PANEL UNIT 1 CHEMICAL VOLUME (AUX. BLDG. CONT. BD.)
RNS@A	RACK NUCLEAR SAFEGUARD OUTPUT A
XP@S1190	INSTRUMENT POS1190 (LOCAL MOUNTED)
XSV197	INSTRUMENT SV197 (LOCAL MOUNTED).
BTG26E	TERMINAL BOX G 26E
PM184	MECHANICAL PANEL NO. 184 REACTOR COOLANT DRAIN
BTH11O	TERMINAL BOX AREA H NO 11O
P@G1	CONTROL PANEL UNIT 1 GAS ANALYZER
RAR	AUXILIARY RELAY RACK
P@LRI1	LIQUID RADWASTE ISOLATION VALVE CONTROL PANEL NO. 1
P@LRI2	" " " " " " " " 2

REFERENCE DRAWINGS

1. DESCRIPTION OF ELECT. SCHEMATIC DIAG. & CKT. DESIGNATIONS — DWG. # 050003
2. EQUIPMENT LOCATION NUMBERS — DWG. # 101900
3. PIPING SCHEMATIC — LIQUID RADWASTE SYSTEM — DWG. # 103019
4. INSTRUMENT SCHEMATIC - FLOW INSTRUMENT SYSTEM — DWG. # 102037
5. SINGLE LINE METER & RELAY — 125 V DC SYSTEM — DWG. # 437546, 445075
6. CIRCUIT SCHEDULE NUCLEAR CONTROL — DWG. # 103072
7. (W) FUNCTION DIAGRAMS — REC. # 663195
8. (W) SOLID STATE PROTECTION SYSTEM — REC. # 663231
9. SCHEMATIC DIAGRAM MONITOR LIGHT AUX RELAYS — DWG # 445287
10. SCHEMATIC DIAGRAM GAS ANALYZER — DWG # 437647
11. ARRGT & DIAG. OF CONN, LIQUID RADWASTE ISOL. VLV CONT. PNL 1 - DWG # 447542
12. " " " " " " " " " " 2 - DWG # 447543
13. SCHEM DIAG. SSPS OUTPUT RELAYS, TRAIN A, TRAIN B — DWG# 501869, 503088
14. AUX CONTROL BD SYS FUNCTIONAL REQUIREMENTS SPEC — DWG. 663195-33

NOTE:
1. LIGHT INDICATES CONTROL STATUS RATHER THAN VALVE POSITION.
2. HMI INDICATION INDICATES CONTROL STATUS RATHER THAN VALVE POSITION.

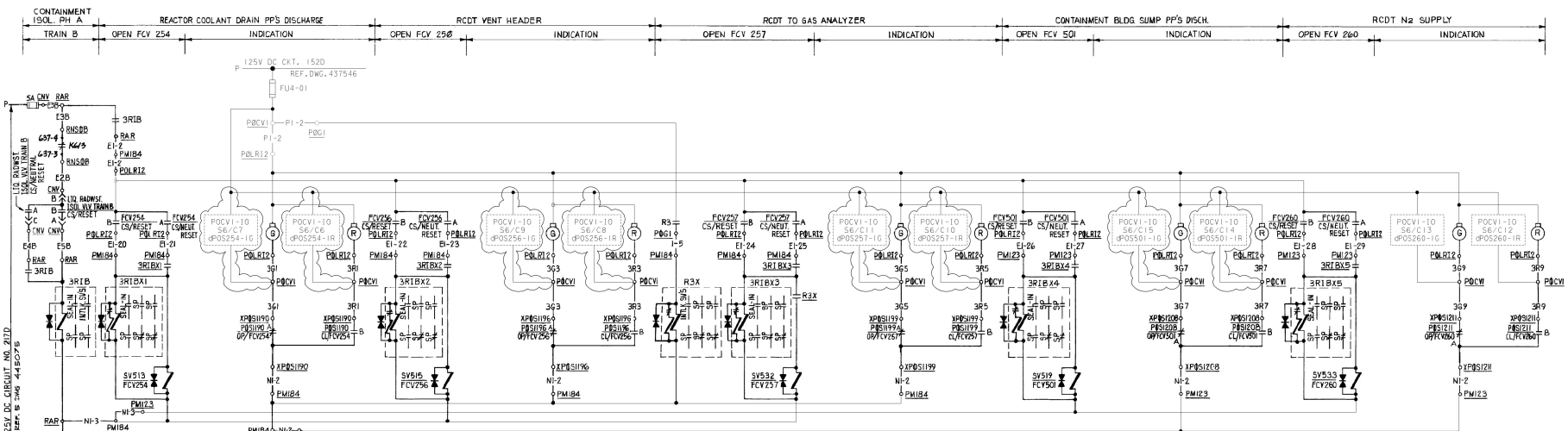

LIQUID RADWASTE ISOLATION VALVES-CIRCUIT NO. I0513SV01
CIRCUITS LISTED ON DWG. 103072

VALVE NO'S.: FCV253, 254, 255, 256, 257, 258, 260, 500, 501, 618.

NUCLEAR SAFETY RELATED

P.G.&E. SYSTEM PHASE SEQUENCE A-C-B

KEY DWG. SECTION 4

UNIT 1

DATE	REVISION DESCRIPTION
08-29-2011	REVISED PER DAS-6*426-0

D.D.	MNRU
R.E.	SMB5
I.V.	
P.E.	R2M5

ELECTRICAL
SCHEMATIC DIAGRAM
LIQUID RADWASTE SOLENOID VALVES

DIABLO CANYON POWER PLANT
PACIFIC GAS AND ELECTRIC COMPANY
SAN FRANCISCO, CALIFORNIA

DWG SCALE#	
BILL OF MAT'L#	
SUPSDS#	
SUPSD BY#	
DRAWING	437684
SHEET	1
PAGE	0
REV	16

U2-441319

RASTER-437684.dgn
DGN-437684.dgn
DGN USER: MNRU Date: 08-29-2011

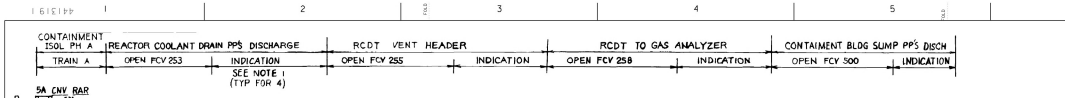

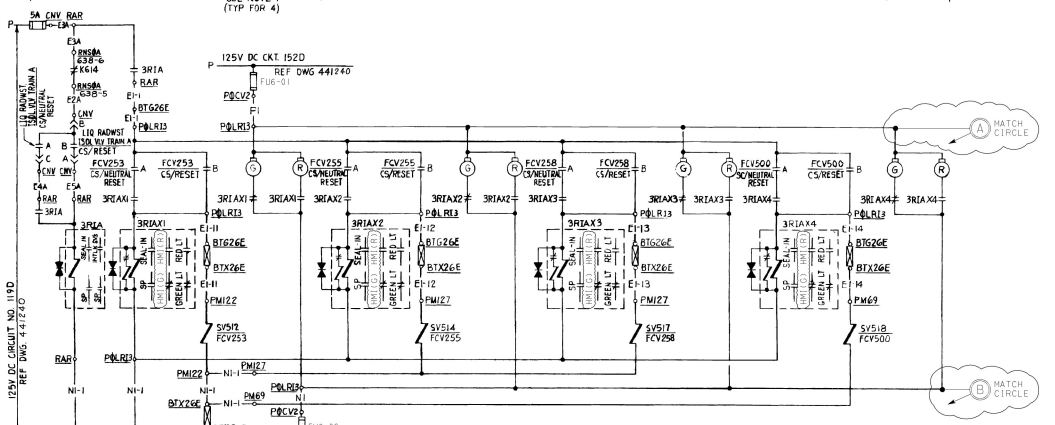

LIQUID RADWASTE ISOLATION VALVES-CIRCUIT NO 10512SV01

CIRCUITS LISTED ON DWG 102770

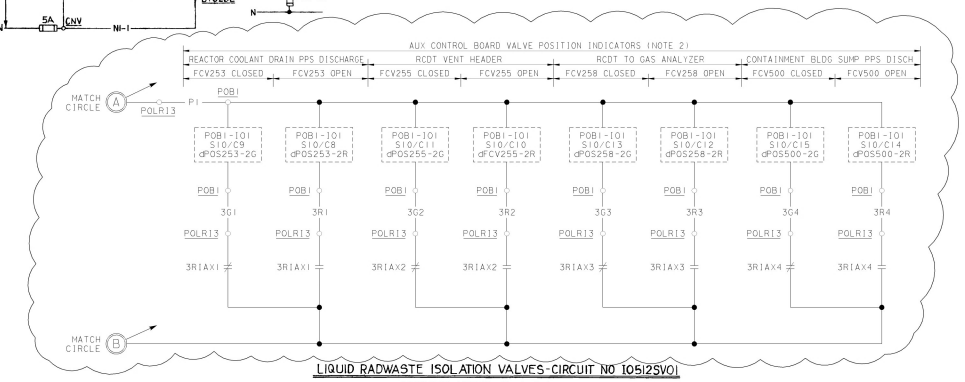

CONTACTS	VALVE POSITION CLOSE	VALVE POSITION OPEN	REMARKS FCV253,254,256,257,260 & 501	REMARKS FCV255,258 & 500	REMARKS FCV618
A	X		OPEN LT. (GREEN LT.)	SPARE	HMI (G)
B		X	SPARE		SPARE
C	X		SPARE		
D		X	SEAL-IN		SPARE

VALVE OPEN POSITION SWITCH

CONTACTS	VALVE POSITION CLOSE	VALVE POSITION OPEN	REMARKS FCV253,254,256,257,260 & 501	REMARKS FCV255,258,500 & 504	REMARKS FCV618
A	X		SPARE	SPARE	
B		X	SPARE (RED LT. AND HMI (R))	SPARE	HMI (R)
C	X		SPARE	SPARE	SPARE
D		X	MONITOR LT.	SPARE	

VALVE CLOSE POSITION SWITCH

Δ SWITCHES FOR FCV253 & 500 ABANDONED IN PLACE SWITCHES FOR FCV255 & 258 REMOVED

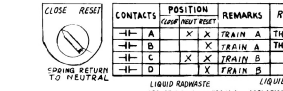

CONTACTS		POSITION CLOSE	POSITION NEUT RESET	REMARKS	REMARKS
	A		X	X	TRAIN A	THIS DWG.
	B			X	TRAIN A	THIS DWG.
	C	X	X		TRAIN B	—
	D			X	TRAIN B	—

CONTROL SWITCH - LIQUID RADWASTE ISOLATION VALVE TRAIN A CS / LIQUID RADWASTE ISOLATION VALVE TRAIN B CS

FCV253 CS, FCV254 CS, FCV255 CS, FCV256 CS, FCV257 CS, FCV258 CS, FCV260 CS, FCV500 CS, FCV501 CS

USED AT LOCATIONS CNV, P0LR13, P0LR14

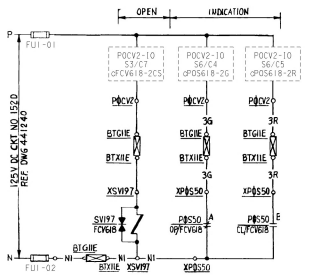

FCV618 RCDT DRAIN-CIRCUIT NO 10197SV01

CIRCUITS LISTED ON DWG 102770

CONTACTS		POSITIONS CLOSE	POSITIONS OPEN	REMARKS FCV253,256,257,260,501 & 256,500
	A	X		SPARE
	B		X	SPARE
	C	X		SPARE
	D		X	MONITOR LT. (REF. 3)

VALVE CLOSE POSITION SWITCH P0S1187A, P0S1193A, P0S1202A, P0S1205A

TABLE OF DEVICES

DEVICE NO.	FUNCTION	RATING	MFR.	TYPE	CAT./DWG. NO.	REMARKS
K613	CONTAINMENT ISOLATION PHASE A AUX. RELAY	—	—	—	(12)	
SV512 513,514, 515,517, 518,519, 532,533, 197	SOLENOID VALVES	—	—	—		
R3	GAS ANALYZER. AUX CONT. RELAY	—	—	—	(10)	SAMPLE POINT NO. 3
R3X	↓ ↓ ↓ RELAY	125V DC	C-H	M	D26MR04EA1	
FCV___	FLOW CONTROL VALVE	—	—	—		SEE DWG FOR NOS
P0BI-101	AUX CONTROL BD PLC		A/B		(13)	MOUNTED IN P0BI
P0CV2-10	AUX CONTROL BD PLC		A/B		(13)	MOUNTED IN P0CV2
P0S___	VALVE POSITION SWITCH	—	—	—		SEE DWG FOR NOS
3R1A, 3R1B	RADWASTE 110L. RESET AUX. RELAY	125V DC	G.E.	JC2820	K7880-40AB6EN	
3R1AX1, +4	↓ ↓ ↓ ↓ ↓ ↓	↓	C-H	M	D26MR04EA1	
3R1BX1, +5	↓ ↓ ↓ ↓ ↓ ↓	↓	C-H	M	↓	
3505B, 515 532,5/8 538	VALVE CONTROL AUXILIARY RLY	125V DC	C-H	M	D26MR06A1	4RBB762

EQUIPMENT LOCATION NUMBERS

CNV	CONTROL BOARD CHEMICAL & VOLUME CONTROL
P@CV2	CONTROL PANEL UNIT 2 CHEMICAL VOLUME (AUX. BLDG. CONT. 80.)
RN5@A	RACK NUCLEAR SAFEGUARD OUTPUT A
XP@S1190	INSTRUMENT P0S 1190 (LOCAL MOUNTED)
XSV197	INSTRUMENT SV197 (LOCAL MOUNTED).
BTG26E	TERMINAL BOX G 26E
PM184	MECHANICAL PANEL NO. 184 REACTOR COOLANT DRAIN
BTH110	TERMINAL BOX AREA H NO 110
P@G2	CONTROL PANEL GAS ANALYZER UNIT 2
RAR	AUXILIARY RELAY RACK
P@LR13	LIQUID RADWASTE ISOLATION VALVE CONTROL PANEL NO.3
P@LR14	" " "

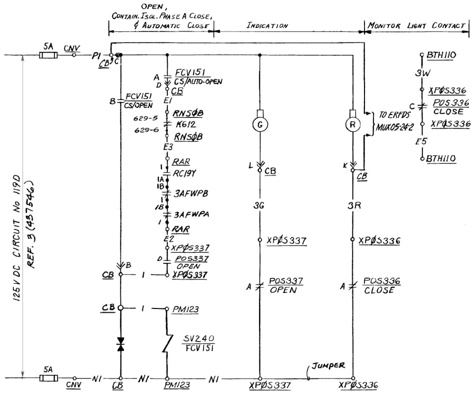

FCV151 STEAM GEN. 1-1 BLOWDOWN TANK INLET - CKT. I0240SV01

OTHER VALVES SIMILAR AS SHOWN BELOW

VALVE NO.	ERFDS	DESCRIPTION	D.C. CKT. NO.	CKT NO.	VALVE LOC.	SOL. VLV. NO.	SOL. VLV. LOC.	VLV. POS. SW. CLOSE	VLV. POS. SW. OPEN	CONTAIN. ISOL. PHASE A DEVICE	LOC.	CONTACT	HIGH RADIATION DEVICE	LOC.	CONT.	AUX FWP START DEVICE	LOC	CONT.	ESF VITAL FUNCTION
FCV151	MUX05-24-2	STEAM GEN. 1-1 BLOWDN. TK. INLET	119D	I0240SV01	XFCV151	240	PM123	336	337	K612	RNSØB	629-5 629-6	RC19Y	RAR	1-1A	3AFWPB 3AFWPA	RAR	1B-1 1B-1	T
FCV154	MUX01-23-2	1-2	119D	I0239SV01	XFCV154	239	PM123	334	335	K612	RNSØB	629-7 629-8	RC19Y	RAR	2-2A	3AFWPB 3AFWPA	RAR	2B-2 2B-2	T
FCV157	MUX07-19-2	1-3	315D	I0238SV01	XFCV157	238	PM123	332	333	K612	RNSØB	629-9 629-10	RC19Y	RAR	3-3A	3AFWPA 3AFWPB	RAR	3B-3 3B-3	T
FCV160	MUX07-19-3	1-4	315D	I0237SV01	XFCV160	237	PM123	330	331	K612	RNSØB	629-11 629-12	RC19Y	RAR	4-4A	3AFWPA 3AFWPB	RAR	4B-4 4B-4	T

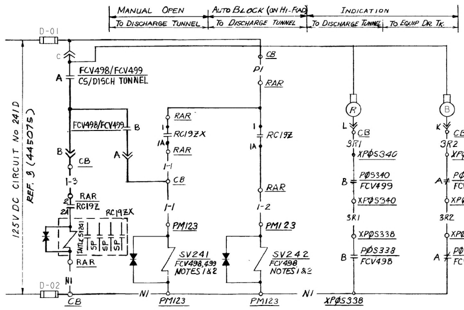

FCV 498, 499 BLOWDOWN TANK OUTLET VALVES - CKT. I0241SV01

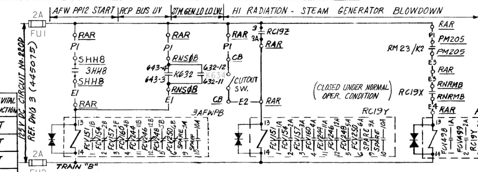

AUXILIARY RELAYS - CKTS H08H14, I0019RM3, I0019RM4, RSGB01B

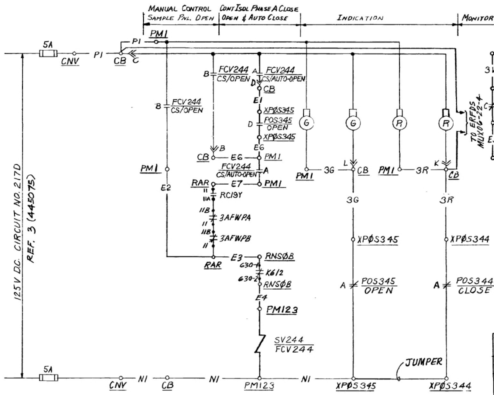

FCV244 STEAM GEN. 1-4 BLOWDOWN SAMPLE - CKT. I0244SV01

OTHER VALVES SIMILAR EXCEPT AS SHOWN BELOW

VALVE NO	ERFDS	DESCRIPTION	D C CKT NO.	CKT. NO.	VALVE LOC.	SOL. VLV. NO.	SOL. VLV. LOC.	VLV. POS. SW. CLOSE	VLV. POS. SW. OPEN	CONTAIN. ISOL. PHASE A DEVICE	LOC	CONTACT	HIGH RADIATION DEVICE	LOC.	CONT.	AUX. FWP START DEVICE	LOC.	CONT.	ESF VITAL FUNCTION
FCV244	MUX06-22-4	STM. GEN 1-4 BLOWDN. SAMPLE	217D	I0244SV01	XFCV244	244	PM123	344	345	K612	RNSØB	630-1 630-2	RC19Y	RAR	11-11A	3AFWPA 3AFWPB	RAR	11B-11 11B-11	T
FCV246	MUX06-22-3	1-3	217D	I0246SV01	XFCV246	246	PM123	348	349	K612	RNSØB	630-3 630-4	RC19Y	RAR	12-12A	3AFWPA 3AFWPB	RAR	12B-12 12B-12	T
FCV248	MUX01-23-3	1-2	119D	I0248SV01	XFCV248	248	PM123	352	353	K612	RNSØB	630-5 630-6	RC19Y	RAR	5-5A	3AFWPB 3AFWPA	RAR	5B-5 5B-5	T
FCV250	MUX01-23-1	1-1	119D	I0250SV01	XFCV250	250	PM123	356	357	K612	RNSØB	630-7 630-8	RC19Y	RAR	6-6A	3AFWPB 3AFWPA	RAR	6B-6 6B-6	T

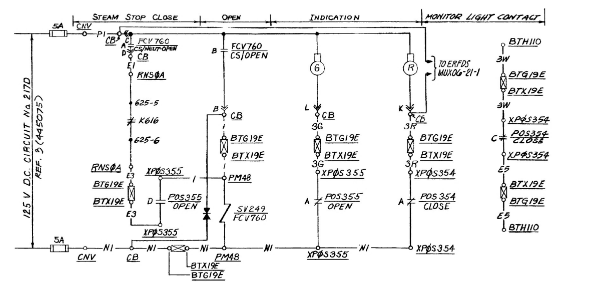

FCV760 - STEAM GEN. 1-1 BLOWDOWN ISOL. VLV. - CKT. I0249SV01

OTHER VALVES SIMILAR EXCEPT AS SHOWN BELOW

VALVE NO.	ERFDS	DESCRIPTION	D.C. CKT. NO.	CKT. NO.	VALVE LOC.	SOL. VLV. NO.	SOL. VLV. LOC.	PEN. NO.	VLV. POS SW CLOSE	VLV. POS SW OPEN	STEAM STOP DEVICE	LOC.	CONTACT	ALARM CKT. Nº BLOWDN VLV ISOL.	ESF VITAL FUNCTION
FCV760	MUX06-21-1	STM. GEN. 1-1 BLOWDN. ISOL.	217D	I0249SV01	XFCV760	249	PM48	19E	354	355	K616	RNSØA	625-5 625-6	AY0460D	M
FCV761	MUX06-21-2	1-2	217D	I0247SV01	XFCV761	247	PM125	19E	200	199	K616	RNSØA	625-7 625-8		M
FCV762	MUX07-18-1	1-3	315D	I0245SV01	XFCV762	245	PM46	12E	196	197	K623	RNSØA	626-9 626-10		M
FCV763	MUX07-18-2	1-4	315D	I0243SV01	XFCV763	243	PM162	12E	192	193	K623	RNSØA	626-11 626-12		M

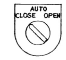

CONTACT		POSITION CLOSE	AUTO	OPEN	REMARKS
⊣⊢	A		X	X	THIS DWG
⊣⊢	B			X	THIS DWG

CONTROL SWITCH FCV151/CS, FCV154/CS, FCV157/CS, FCV160/CS, FCV244/CS, FCV246/CS, FCV248/CS, FCV250/CS

USED AT LOCATION CB
SPRING RETURN TO AUTO FROM OPEN

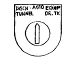

CONTACT		POSITION DISCH TUNNEL	AUTO	EQUIP OR TK	REMARKS
⊣⊢	A	X			THIS DWG
⊣⊢	B	X	X		THIS DWG

CONTROL SWITCH FCV498/FCV499 CS

USED AT LOCATION CB
SPRING RETURN TO AUTO
FROM LEFT, MAINTAINED AT RIGHT

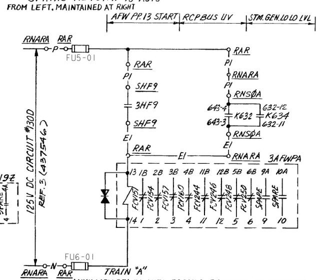

AUXILIARY RELAY-CKTS F09H14, RCV097, -82, RSGB01A

CONTACT		POSITION CLOSE	OPEN & INTERM	REMARKS	REMARKS FOR POS 192, 196, 200 & 354
⊣⊢	A		X	RED LIGHT	RED LIGHT
⊣⊢	B	X		SPARE	ALARM
⊣⊢	C		X	MONITOR LT.	MONITOR LT.
⊣⊢	D	X		SPARE	SPARE

VALVE CLOSE POSITION SWITCH

TYPICAL

CONTACT		POSITION CLOSE & INTERM	OPEN	REMARKS
⊣⊢	A	X		GREEN LIGHT
⊣⊢	B		X	SPARE
⊣⊢	C	X		SPARE
⊣⊢	D		X	SEAL-IN

VALVE OPEN POSITION SWITCH

TYPICAL

CONTACT		POSITION CLOSE	OPEN	REMARKS FCV498	REMARKS FCV499	POSITION CLOSE	OPEN		CONTACT
⊣/⊢	A	X		BLUE LIGHT EQUIP DR TK	SPARE		X	A	⊣/⊢
⊣⊢	B		X	SPARE	RED LIGHT DISCH TUNNEL	X		B	⊣⊢
⊣/⊢	A	X		SPARE	BLUE LIGHT EQUIP DR TK		X	A	⊣/⊢
⊣⊢	B		X	RED LIGHT DISCH TUNNEL	SPARE	X		B	⊣⊢

FCV498,499 POSITION SWITCH
POS338, POS340

TABLE OF DEVICES

DEVICE No	FUNCTION	RATING	MFR.	TYPE	CAT/DWG#	REMARKS
3AFWPB	AFW PP START AUX. REL. TRAIN "B"	125VDC	GE Co	IC2820	IC2820-A100BB3CB	CONVERT REQ NO CONTACTS to NC
K612	CONTAINMENT ISOL PHASE A AUX REL	—	—	—	(11),(12) (16)	
K616, K623	STEAM STOP AUXILIARY RELAY	—	—	—	(11),(12) (16)	
RC19Y, RC19Z	STM. GEN. BLOWDOWN HI RAD. AUX. REL	125V DC	GE Co	IC2820	IC2820-A100BB3CH	
SV237 THRU SV242, SV244 THRU SV246, SV248, SV250	SOLENOID VALVE	125VDC	ASCO		HT8321A5	REC. NO. 663190
SV247	SOLENOID VALVE	125VDC	ASCO		NPL8321ASE	REC. NO. 697758
RC19Z, RC19ZX	STM. GEN. BLOWDOWN HI RAD AUX RLY	125VDC	G.E. CO.	IC2820	IC2820A100BB3L	
3AFWPA	AFW PP START AUX. REL. TRAIN "A"	125VDC	GE. CO.	DS2820	DS2820-A100BB3CB	
3HH8, 3HF9	AUX FEEDWTR PP AUTO START RELAY	—	—	—	(6)	
POS441/OP FCV 95	FCV 95 OPEN POSITION SWITCH	—	—	—	(7)	
FCV---	FLOW CONTROL VALVES					SEE TABLE FOR VALVE NOS
POS---	FCV POSITION SWITCH					SEE TABLE FOR SWITCH NOS
RM23/K2	STM. GEN. BLOWDOWN HI RAD. RLY	—	—	—	(15)	Contact Cl. Under Normal Oper. Cond.
RC 19X	STM GEN BLOWDOWN HI RAD AUX. REL	—	—	—	(10)	Contact Cl. Under Normal Oper Cond.
K632	RCP BUS UV AUX. RLY	—	—	—	(11),(12)(16)	
K634	STM. GEN. LO LO LVL AUX. RLY.	—	—	—	(11)(12)(16)	
SV249, SV243	SOLENOID VALVE	125VDC	ASCO		NPL8321ASE	REC. NO. 663190-13

NOTES:

1. WHEN SV241 IS ENERGIZED, FCV499 (BLOWDN TK TO EQUIP. DRAIN TK) CLOSES WHILE FCV498 (BLOWDN. TK TO DISCHARGE TUNNEL) OPENS IF THERE IS NO HIGH RADIATION PRESENT.
2. HIGH RADIATION SIGNAL DEENERGIZES SV241 & SV242 WHICH WILL AUTOMATICALLY CLOSE FCV498 AND OPEN FCV499.

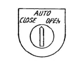

CONTACT		POSITION CLOSE	AUTO	OPEN	REMARKS
⊣⊢	A		X	X	THIS DWG.
⊣⊢	B			X	THIS DWG.

CONTROL SWITCH FCV244/CS, FCV246/CS, FCV248/CS, FCV250/CS

USED AT LOCATION PM1
SPRING RETURN TO AUTO

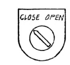

CONTACT		POSITION CLOSE	NEUT.	OPEN	REMARKS
⊣⊢	A		X	X	THIS DWG.
⊣⊢	B			X	THIS DWG.

CONTROL SWITCH FCV760/CS, FCV761/CS, FCV762/CS, FCV763/CS

USED AT LOCATION CB
SPRING RETURN TO NEUTRAL FROM OPEN

CONTACTOR		POSITION CLOSE	OPEN & INTERIM	REMARKS
A⊣⊢B	A	X		SPARE
C⊣⊢D	B		X	RED LIGHT
E⊣⊢F	C		X	MONITOR LT
G⊣⊢H	D	X		SPARE

XPOS352
VALVE CLOSE POSITION SW. FOR FCV248

CONTACTOR		POSITION CLOSE & INTERIM	OPEN	REMARKS
A⊣⊢B	A		X	SPARE
C⊣⊢D	B	X		GREEN LT
E⊣⊢F	C	X		SPARE
G⊣⊢H	D		X	SEAL IN

XPOS353
VALVE OPEN POSITION SW FOR FCV248

EQUIPMENT LOCATION NUMBERS

- CNV - CONTROL BOARD - CHEMICAL & VOLUME CONTROL SYSTEM
- CB - CONTROL BOARD - CONDENSATE
- RAR - RACK AUXILIARY RELAY (BY PG&E
- RNSØA - RACK NUCLEAR SAFEGUARD OUTPUT A
- BTH110 - TERMINAL BOX H110
- PM123 - MECHANICAL PANEL Nº123 BLOWDOWN TANK
- PM1 - MECHANICAL PANEL Nº1 Sample
- XPOS336 - INSTRUMENT POS336 (LOCAL MOUNTED)
- SHH8 - SWGR 4KV BUS H CUB. 8
- MPG49 - FCV95 - AUX FWP TURB 11 STEAM SUPPLY
- RNRMB - RACK NUCLEAR RADIATION MONITOR CUB. B

REFERENCE DRAWINGS

1. DESCRIPTION OF ELECT. SCHEMATIC DIAG. SYMBOLS & CKT. DESIGNATIONS — DWG. No. 050003
2. EQUIPMENT LOCATION NUMBER LIST — " " 101900
3. SINGLE LINE METER & RELAY - 125V D.C. SYSTEM — DWG. Nº 445075, 445076, 437546
4. PIPING SCHEMATIC - TURBINE STEAM SUPPLY SYSTEM — DWG Nº 102004
5. INSTRUMENT SCHEMATIC - RADIATION INSTRUMENT SYSTEM — 102937
6. SCHEMATIC DIAGRAM - AUX FEEDWATER PUMPS — 437583
7. SCHEMATIC DIAGRAM - AUX FEEDWATER PUMP TURBINE CONTROL — 437584
8. INSTRUMENT SCHEMATIC - FLOW INSTRUMENT SYSTEMS — 102032
9. CIRCUIT SCHEDULE - NUCLEAR CONTROL — 103072
10. RADIATION MONITORING SYSTEM — REC Nº 663227
11. Ⓦ FUNCTION DIAGRAMS — REC. No. 663193
12. Ⓦ SOLID STATE PROTECTION SYSTEM — REC. No. 663231
13. SCHEMATIC DIAGRAM MONITOR LIGHT BOX B, D — DWG. No. 437697,9
14. SCHEMATIC DIAGRAM MAIN ANNUNCIATOR SH. 1 DWG Nº 501121
15. OPR. INSTRUCTIONS FOR MOD. 255 FLUID MON. SYS. - 678622-40
16. SCHEM DIAG, SSPS OUTPUT RLYS, TR. A TR B DWGS 501869, 503088
17. BLOCK DIAG., ERFDS TECH SUPPORT CENTER — 445287

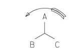

P.G.&E. SYSTEM PHASE SEQUENCE A-C-B

NUCLEAR SAFETY RELATED

KEY DWG. SECTION 4

UNIT 1

DATE 06-03-2010		REVISION DESCRIPTION	
D.D.	MNRU	REVISED PER DFT-7*795-0	
R.E.	FxC2		
I.V.			
P.E.	AGB2		

REGISTERED PROFESSIONAL ENGINEER ALAN GLEN BARTA E 9271 Exp. 9/30/2011 ELECTRICAL STATE OF CALIFORNIA

ELECTRICAL
SCHEMATIC DIAGRAM
STEAM GENERATOR BLOW DOWN
SOLENOID VALVES
DIABLO CANYON POWER PLANT
PACIFIC GAS AND ELECTRIC COMPANY
SAN FRANCISCO, CALIFORNIA

DWG SCALE:
BILL OF MATL:
SUPSDS:
SUPSD BY:

DRAWING	SHEET	PAGE	REV
437685	1	0	20

U2-441461

DRAWING NUMBER 437685 1

RASTER=437685.dgn
DGN=437685.dgn
CAD User: MNRU Date: 06-03-2010

4 Size

441461

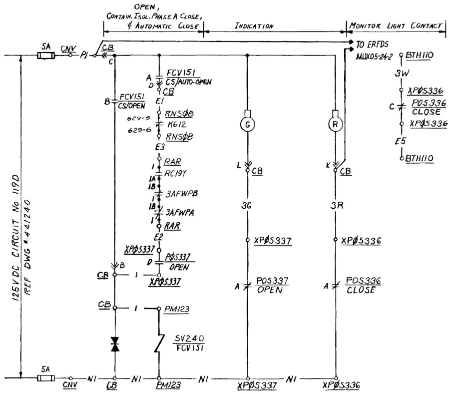

FCV151 STEAM GEN. 2-1 BLOWDOWN TANK INLET - CKT. I0240SV01

OTHER VALVES SIMILAR AS SHOWN BELOW

ERFDS	VALVE NO.	DESCRIPTION	D.C. CKT. NO	CKT NO.	VALVE LOC.	SOL. VLV. NO.	SOL. VLV. LOC.	VLV. POS SW. CLOSE	VLV. POS SW. OPEN	CONTAIN. ISOL. PHASE A DEVICE	LOC.	CONTACT	HIGH RADIATION DEVICE	LOC.	CONT.	AUXILIARY FWP START DEVICE	LOC	CONT.	DEVICE	LOC.	CONT.	ESF VITAL FUNCTION
MUX05-24-2	FCV151	STM. GEN. 2-1 BLOWDN. TK. IN.	119D	I0240SV01	XFCV151	240	PM123	336	337	K612	RNSØB	629-5 ⊬ 629-6	RC19Y	RAR	1 ⊣⊢ 1A	3AFWPB	RAR	1 ⊬ 1B	3AFWPA	RAR	1 ⊬ 1B	T
MUX01-23-2	FCV154	2-2	119D	I0239SV01	XFCV154	239	PM123	334	335	K612	RNSØB	629-7 ⊬ 629-8	RC19Y	RAR	2 ⊣⊢ 2A	3AFWPB	RAR	2 ⊬ 2B	3AFWPA	RAR	2 ⊬ 2B	T
MUX07-19-2	FCV157	2-3	315D	I0238SV01	XFCV157	238	PM123	332	333	K612	RNSØB	629-9 ⊬ 629-10	RC19Y	RAR	3 ⊣⊢ 3A	3AFWPA	RAR	3 ⊬ 3B	3AFWPB	RAR	3 ⊬ 3B	T
MUX07-19-3	FCV160	2-4	315D	I0237SV01	XFCV160	237	PM123	330	331	K612	RNSØB	629-11 ⊬ 629-12	RC19Y	RAR	4 ⊣⊢ 4B	3AFWPA	RAR	4 ⊬ 4B	3AFWPB	RAR	4 ⊬ 4B	T

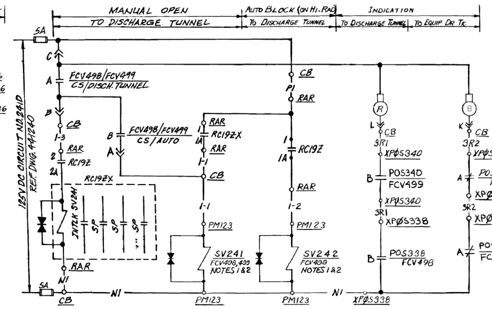

FCV 498, 499 BLOWDOWN TANK OUTLET VALVES - CKT. I0241SV01

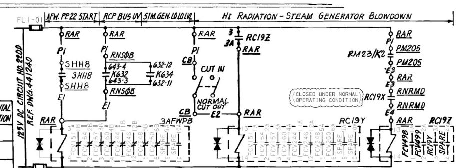

AUXILIARY RELAYS - CKTS. H08H14, I0019RM3, I0019RM4, RSGB01B

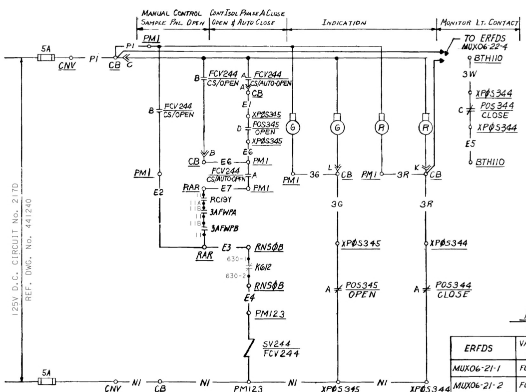

FCV244 STEAM GEN. 2-4 BLOWDOWN SAMPLE - CKT. I0244SV01

OTHER VALVES SIMILAR EXCEPT AS SHOWN BELOW

ERFDS	VALVE NO	DESCRIPTION	D.C. CKT. NO	CKT. NO.	VALVE LOC.	SOL. VLV. NO.	SOL. VLV. LOC.	VLV. POS. SW. CLOSE	VLV. POS. SW. OPEN	CONTAIN. ISOL. PHASE A DEVICE	LOC	CONTACT	HIGH RADIATION DEVICE	LOC.	CONT.	AUX. FWP. START DEVICE	LOC.	CONT.	DEVICE	LOC	CONT	ESF VITAL FUNCTION
MUX06-22-4	FCV244	STM GEN. 2-4 BLOWDN. SAMPLE	217D	I0244SV01	XFCV244	244	PM123	344	345	K612	RNSØB	630-1 ⊬ 630-2	RC19Y	RAR	11 ⊣⊢ 11A	3AFWPA	RAR	11 ⊬ 11B	3AFWPB	RAR	11 ⊬ 11B	T
MUX06-22-3	FCV246	2-3	217D	I0246SV01	XFCV246	246	PM123	348	349	K612	RNSØB	630-3 ⊬ 630-4	RC19Y	RAR	12 ⊣⊢ 12A	3AFWPA	RAR	12 ⊬ 12B	3AFWPB	RAR	12 ⊬ 12B	T
MUX01-23-3	FCV248	2-2	119D	I0248SV01	XFCV248	248	PM123	352	353	K612	RNSØB	630-5 ⊬ 630-6	RC19Y	RAR	5 ⊣⊢ 5A	3AFWPB	RAR	5 ⊬ 5B	3AFWPA	RAR	5 ⊬ 5B	T
MUX01-23-1	FCV250	2-1	119D	I0250SV01	XFCV250	250	PM123	356	357	K612	RNSØB	630-7 ⊬ 630-8	RC19Y	RAR	6 ⊣⊢ 6A	3AFWPB	RAR	6 ⊬ 6B	3AFWPA	RAR	6 ⊬ 6B	T

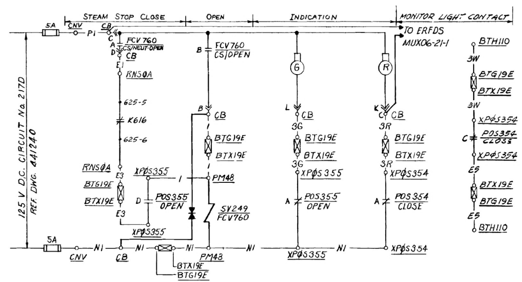

FCV760 - STEAM GEN. 2-1 BLOWDOWN ISOL. VLV. - CKT. I0249SV01

OTHER VALVES SIMILAR EXCEPT AS SHOWN BELOW

ERFDS	VALVE No	DESCRIPTION	D.C. CKT. NO	CKT. NO.	VALVE LOC.	SOL. VLV. NO.	SOL. VLV. LOC.	PEN. NO.	VLV. POS SW CLOSE	VLV. POS SW OPEN	STEAM STOP DEVICE	LOC	CONTACT	ALARM CKT. NO. BLOWDN VV. ISOL	ESF VITAL FUNCTION
MUX06-21-1	FCV760	STM. GEN. 2-1 BLOWDN. ISOL.	217D	I0249SV01	XFCV760	249	PM48	19E	354	355	K616	RNSØA	625-5 ⊬ 625-6	AY0460D	M
MUX06-21-2	FCV761	2-2	217D	I0247SV01	XFCV761	247	PM125	19E	200	199	K616	RNSØA	625-7 ⊬ 625-8		M
MUX07-18-1	FCV762	2-3	315D	I0245SV01	XFCV762	245	PM46	12E	196	197	K623	RNSØA	626-9 ⊬ 626-10		M
MUX07-18-2	FCV763	2-4	315D	I0243SV01	XFCV763	243	PM162	12E	192	193	K623	RNSØA	626-11 ⊬ 626-12		M

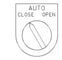

CONTACT		POSITION CLOSE	AUTO	OPEN	REMARKS
⊣⊢	A		X	X	THIS DWG
⊣⊢	B			X	THIS DWG

CONTROL SWITCH FCV151/CS, FCV154/CS, FCV157/CS, FCV160/CS, FCV244/CS, FCV246/CS, FCV248/CS, FCV250/CS

USED AT LOCATION CB
SPRING RETURN TO AUTO FROM OPEN

CONTACT		POSITION DISCH TUNNEL	AUTO	EQUIP DR. TK.	REMARKS
⊣⊢	A	X			THIS DWG
⊣⊢	B	X	X		THIS DWG

CONTROL SWITCH FCV498/FCV499 CS

USED AT LOCATION CB
SPRING RETURN TO AUTO
FROM LEFT, MAINTAINED AT RIGHT

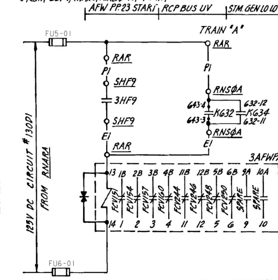

AUXILIARY RELAY - CKTS. F09H14, RSGB01A

CONTACT		POSITION CLOSE	OPEN & INTERM	REMARKS	REMARKS FOR POS 192, 196, 200, & 354
⊣⊢	A		X	RED LIGHT	RED LIGHT
⊣⊢	B	X		SPARE	ALARM
⊣⊢	C		X	MONITOR LT.	MONITOR LT.
⊣⊢	D	X		SPARE	SPARE

VALVE CLOSE POSITION SWITCH

TYPICAL

CONTACT		POSITION CLOSE & INTERM	OPEN	REMARKS
⊣⊢	A	X		GREEN LIGHT
⊣⊢	B		X	SPARE
⊣⊢	C	X		SPARE
⊣⊢	D		X	SEAL-IN

VALVE OPEN POSITION SWITCH

TYPICAL

CONTACT		POSITION CLOSE	OPEN	REMARKS FCV498	REMARKS FCV499	POSITION CLOSE	OPEN		CONTACT
⊬	A	X		BLUE LIGHT EQUIP DR. TK	SPARE		X	A	⊬
⊣⊢	B		X	SPARE	RED LIGHT DISCH. TUNNEL	X		B	⊣⊢
⊬	A	X		SPARE	BLUE LIGHT EQUIP DR. TK		X	A	⊬
⊣⊢	B		X	RED LIGHT DISCH. TUNNEL	SPARE	X		B	⊣⊢

FCV498, 499 POSITION SWITCH

POS338, POS340

TABLE OF DEVICES

DEVICE No	FUNCTION	RATING	MFR.	TYPE	CAT/DWG*	REMARKS
3AFWPB	AUX. FEEDWATER P.P. START AUX. REL.	125VDC	GE Co	IC2820	IC2820-A100BB3CB	CONVERT REQ NO CONTACTS TO NC
K612	CONTAINMENT ISOL. PHASE A AUX. REL.	—	—	—	(11) (12)(17)	
K616, K623	STEAM STOP AUXILIARY RELAY	—	—	—	(11) (12)(17)	
RC19Y	STM. GEN. BLOWDOWN HI. RAD. AUX. REL	125V DC	GE Co	IC2820	IC2820-A100BB3CH	
SV237, 238, 239, 240, 241, 242, 243, 244, 245, 246, 247, 248, 250	SOLENOID VALVE					
3HH8, 3HF9	AUX FEEDWTR PP. AUTO START RELAY	—	—	—	(6)	
FCV---	FLOW CONTROL VALVES					SEE TABLE FOR VALVE No.'s
POS---	FCV POSITION SWITCH					SEE TABLE FOR SWITCH No.
RC19X	STM GEN. BLOWDOWN HI RAD. AUX. REL	—	—	—	(10)	CONTACT CL UNDER NORMAL OPER COND
RM23/K2	↓ RELAY				(15)	↓
RC19Z, RC19ZX	↓ AUX REL.	125VDC	G.E. Co	IC2820	IC2820-A100BB3L	
3AFWPA	AUX FEEDWATER PP. START AUX. RLY.	125V DC	G.E. CO.	DS2820	DS2820A100BB3CB	CONVERT REQ NO CONTACTS TO NC
K632	RCP BUS U/V AUXILIARY RELAY	—	—	—	(17) (12)	
K634	STEAM GEN LO LO LVL AUX "	—	—	—	(12)(17)	
SV-249	SOLENOID VALVE	125V DC	ASCO		NPL832/A5E	REC. NO. 663190-13

NOTES:

1. WHEN SV241 IS ENERGIZED, FCV499 (BLOWDN. TK. TO EQUIP. DRAIN TK) CLOSES WHILE FCV498 (BLOWDN. TK. TO DISCHARGE TUNNEL) OPENS IF THERE IS NO HIGH RADIATION PRESENT.
2. HIGH RADIATION SIGNAL DE-ENERGIZES SV241 & SV242 WHICH WILL AUTOMATICALLY CLOSE FCV498 EVEN IF SV.241 IS HELD ENERGIZED.

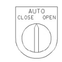

CONTACT		POSITION CLOSE	AUTO	OPEN	REMARKS
⊣⊢	A		X	X	THIS DWG
⊣⊢	B			X	THIS DWG

CONTROL SWITCH FCV244/CS, FCV246/CS, FCV248/CS, FCV250/CS

USED AT LOCATION: PM1
SPRING RETURN TO AUTO

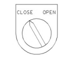

CONTACT		POSITION CLOSE	NEUT	OPEN	REMARKS
⊣⊢	A		X	X	THIS DWG
⊣⊢	B			X	THIS DWG

CONTROL SWITCH FCV760/CS, FCV761/CS, FCV762/CS, FCV763/CS

EQUIPMENT LOCATION NUMBERS

- CNV - CONTROL BOARD - CHEMICAL & VOLUME CONTROL SYSTEM
- CB - CONTROL BOARD - CONDENSATE & FEEDWATER (Ⓦ2VB3)
- RAR - RACK AUXILIARY RELAY (BY PG&E)
- RNSØA - RACK NUCLEAR SAFEGUARD OUTPUT A
- BTH110 - TERMINAL BOX H110
- PM123 - MECHANICAL PANEL No 123 BLOWDOWN TANK
- PM1 - MECHANICAL PANEL No 1 SAMPLE
- XPØS336 - INSTRUMENT POS336 (LOCAL MOUNTED)
- SHH8 - SWGR 4KV BUS H CUB 8
- MD30 - FCV95 - AUX FWP TURB 21 STEAM SUPPLY
- RNRMD - RACK NUCLEAR RADIATION MONITOR CUB D

REFERENCE DRAWINGS:

1. DESCRIPTION OF ELECT. SCHEMATIC DIAG. SYMBOLS & CKT DESIGNATIONS ____ DWG. No. 050003
2. EQUIPMENT LOCATION NUMBER LIST ____ 103013
3. SINGLE LINE METER & RELAY - 125V D.C. SYSTEM ____ 441240
4. PIPING SCHEMATIC - TURBINE STEAM SUPPLY SYSTEM ____ 108004
5. INSTRUMENT SCHEMATIC - RADIATION INSTRUMENT SYSTEM ____ 102931
6. SCHEMATIC DIAGRAM - AUX. FEEDWATER PUMPS ____ 441302
7. SCHEMATIC DIAGRAM - AUX. FEEDWATER PUMP TURBINE CONTROL ____ 455097
8. INSTRUMENT SCHEMATIC - FLOW INSTRUMENT SYSTEMS ____ 108032
9. CIRCUIT SCHEDULE - NUCLEAR CONTROL ____ 102770
10. RADIATION MONITORING SYSTEM ____ REC. No. 663227
11. ⓌFUNCTION DIAGRAMS ____ 663195
12. ⓌSOLID STATE PROTECTION SYSTEM ____ 663231
13. SCHEMATIC DIAGRAM MONITOR LIGHT BOX B, D ____ DWG. No. 441453, 55
14. SCHEMATIC DIAGRAM MAIN AUNNUNCIATOR SH. I ____ DWG. No. 500771
15. OPERATING INSTRUCTIONS FOR MODEL 255 FLUID MON. SYS. ____ REC. No. 678622-40
16. BLOCK DIAG. - ERFDS TECH. SUPPORT CTR & CONT. RM ____ DWG. No. 445297
17. SCHEM. DIAG. SSPS OUTPUT RELAYS, TRAIN A, TRAIN B ____ DWG. No. 503089, 503093

P.G.&E. SYSTEM PHASE SEQUENCE A-C-B

NUCLEAR SAFETY RELATED

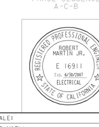

KEY DWG. SECTION 4

UNIT 2

DATE	REVISION DESCRIPTION
05-03-2006	REVISED PER FCT-031313
D.D. MIBF	
R.E. UMEI	
I.V.	
P.E. R2M5	

ELECTRICAL
SCHEMATIC DIAGRAM
STEAM GENERATOR BLOWDOWN
SOLENOID VALVES

DIABLO CANYON POWER PLANT
PACIFIC GAS AND ELECTRIC COMPANY
SAN FRANCISCO, CALIFORNIA

DWG SCALE:
BILL OF MATL:
SUPSDS:
SUPSD BY:

DRAWING	SHEET	PAGE	REV
441461	1	0	14

UI-437685

RASTER=441461.dgn
DGN=441461.dgn
CAD User:MIBF Date:05-03-2006

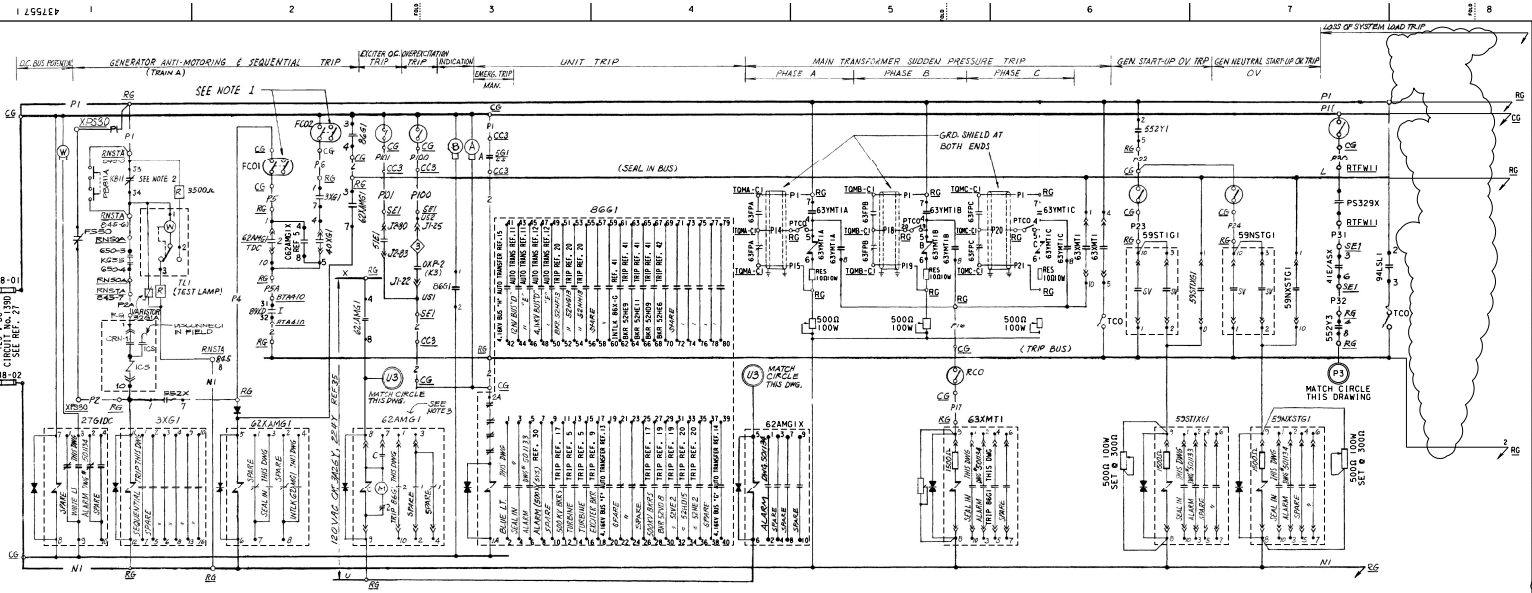

DEVICES	FUNCTION	RATING	OC SEAL	TYPE	CAT./REF. DWG. No.	REMARKS
3XG1	SEQUENTIAL TRIP AUX. RELAY	125V DC	W	MG-6	2898360A20	
27G1DC	GEN. CONT. DC BUS UNDERVOLTAGE RELAY	125V DC	W	SG	2938254A20	
32G1A	GEN. REVERSE POWER RELAY	——	——	——	2	
40G1	GEN. LOSS OF FIELD RELAY	——	——	——	2	FOR COIL SEE REF. 24
40XG1	GEN. LOSS OF FIELD AUX. RELAY	125V DC	W	AR	606B028A09	DOUBLE UNIT SEE NOTE 4
40YG1						
59ST1G1	GEN. START-UP OVERVOLTAGE RELAY	——	——	——	2	FOR COIL SEE REF. 24
59ST1XG1	GEN. START-UP OVERVOLTAGE AUX. RELAY	125V DC	W	AR	606B017A09	SEE NOTE 4
59NST1G1	GEN. NEUT. START-UP OVERVOLTAGE RELAY	——	——	——	2	FOR COIL SEE REF. 24
59NXST1G1	GEN. NEUT. START-UP OVERVOLTAGE AUX. RELAY	125V DC	W	AR	606B017A09	SEE NOTE 4
62AMG1	GEN. ANTI-MOTORING TIMER RELAY	115V AC	W	TK	1876014	2 SEC TO 50 MIN ADJUST
62XAMG1	GEN. ANTI-MOTORING TIMER AUX. RELAY	125V DC	W	SG	1342925	
51E1	EXCITER OVERCURRENT RELAY		W		663293	
63FPA,B,C	MAIN TRANSFORMER SUDDEN PRESSURE DEVICE	——	——	——	2	
63YMT1A, 1B,1C	MAIN TRANSFORMER SUDDEN PRESSURE DEVICE AUX. RELAY	0.2/2.0A	GE	HAA	12HAA15A4F	
63XMT1	MAIN TRANSFORMER SUDDEN PRESSURE DEVICE AUX. RELAY	125V DC	W	AR	606B017A09	SEE NOTE 4
86G1	UNIT TRIP LOCKOUT RELAY	125V DC	W	——	——	HAND RESET
87G1	GEN. DIFFERENTIAL RELAY	——	——	——	2	FOR COIL SEE REF. 24
87XG1	GEN. DIFFERENTIAL AUX. RELAY	125V DC	W	AR	606B017A09	SEE NOTE 4
87YG1	GEN. DIFFERENTIAL AUX. RELAY	0.2/2.0A	GE	HAA	12HAA15A4F	
87U1	UNIT OVERALL DIFFERENTIAL RELAY	——	——	——	2	FOR COIL SEE REF. 24
87XU1	UNIT OVERALL DIFFERENTIAL AUX. RELAY	125V DC	W	AR	606B017A09	SEE NOTE 4
552X	500KV P.C.B. AUX. RELAY	——	——	——	4	CONTACT CLOSED WHEN 500KV BKR CLOSED
552Y1	500KV P.C.B. AUX. RELAY	——	——	——	4	CONTACT CLOSED WHEN BOTH 500KV BKRS OPEN
511BFX1 -532	500KV HVCB BREAKER FAILURE AUX. RELAY	125V DC	——	MVAJ21	4098841	
511BFX1 -632	500KV HVCB BREAKER FAILURE AUX. RELAY	125V DC	——	MVAJ21	4098841	
587-1A	500KV TIE LINE DIFF. RELAY SET A	——	——	——	2 & 24	UNIT 1 T-COM ROOM
594L-1D	DIR. OC & GN DIR. OC TRIP RELAY	——	——	——	17	500KV SWITCHYARD
K635	SEQUENTIAL TRIP AUX. RELAY	——	——	——	31 & 32	CONTACT IS CLOSED WHEN TURBINE STOP VALVES ARE CLOSED OR AUTO STOP OIL LO-PRESS
43UI/RCO	RELAY CUTOUT SWITCH	——	——	——	24	
594G1	500KV BKR FAILURE TIMER/ LINE CHANNEL "A" TRIP RELAY	125V DC	W	AR	606B017A09	SEE NOTE 4
89XD	25KV ISO-PHASE DISCONN. SW. AUX. SW.	——	——	——	25	
62AMG1X	HI PRESS. ANTI-MTR AUX. RELAY	120V AC	W	AR	AR440AR	
OXP2/K3	OVEREXCITATION TRIP RELAY		W		663293-36	
PS30	HI PRESS. ANTI-MTR PROTECTION	——	——	——	DWG 060836	CLOSE ON DECR. DIFF. PSID
41E/ASX	FIELD BREAKER AUX. RELAY	——	——	——	9	
94LSL1	LOSS OF SYSTEM LOAD RELAY	125V DC	W	AR		SEE NOTE 6
552Y3	500KV AIR CKT BKR AUX. RELAY	——	——	——	4	CONTACT CLOSED WHEN BOTH 500KV BKRS OPEN
PS329X	MAIN TURBINE AUTO STOP PRESS. AUX. RELAY	——	——	——	5	CONTACT CLOSED @ 45 PSIG DECREASING
594L-1A	500 KV LINE SET A TRIP RELAY				43	500KV SWITCHYARD
594L-1B	500 KV LINE SET B TRIP RELAY				43	500KV SWITCHYARD
C62AMG1X	UNIT TRIP TIMER BYPASS AUX RLY				5	

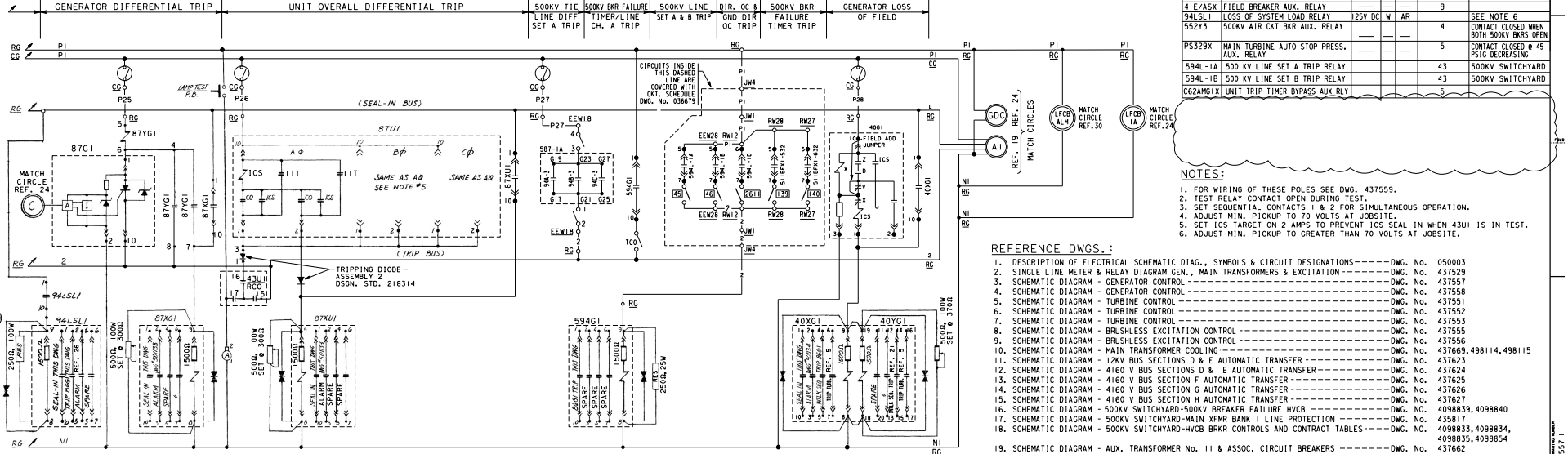

NOTES:

1. FOR WIRING OF THESE POLES SEE DWG. 437559.
2. TEST RELAY CONTACT OPEN DURING TEST.
3. SET SEQUENTIAL CONTACTS 1 & 2 FOR SIMULTANEOUS OPERATION.
4. ADJUST MIN. PICKUP TO 70 VOLTS AT JOBSITE.
5. SET ICS TARGET ON 2 AMPS TO PREVENT ICS SEAL IN WHEN 43UI IS IN TEST.
6. ADJUST MIN. PICKUP TO GREATER THAN 70 VOLTS AT JOBSITE.

REFERENCE DWGS.:

1. DESCRIPTION OF ELECTRICAL SCHEMATIC DIAG., SYMBOLS & CIRCUIT DESIGNATIONS ------ DWG. No. 050003
2. SINGLE LINE METER & RELAY DIAGRAM GEN., MAIN TRANSFORMERS & EXCITATION ------ DWG. No. 437529
3. SCHEMATIC DIAGRAM - GENERATOR CONTROL ------ DWG. No. 437557
4. SCHEMATIC DIAGRAM - GENERATOR CONTROL ------ DWG. No. 437558
5. SCHEMATIC DIAGRAM - TURBINE CONTROL ------ DWG. No. 437551
6. SCHEMATIC DIAGRAM - TURBINE CONTROL ------ DWG. No. 437552
7. SCHEMATIC DIAGRAM - TURBINE CONTROL ------ DWG. No. 437553
8. SCHEMATIC DIAGRAM - BRUSHLESS EXCITATION CONTROL ------ DWG. No. 437555
9. SCHEMATIC DIAGRAM - BRUSHLESS EXCITATION CONTROL ------ DWG. No. 437556
10. SCHEMATIC DIAGRAM - MAIN TRANSFORMER COOLING ------ DWG. No. 437669, 498114, 498115
11. SCHEMATIC DIAGRAM - 12KV BUS SECTIONS D & E AUTOMATIC TRANSFER ------ DWG. No. 437623
12. SCHEMATIC DIAGRAM - 4160 V BUS SECTIONS D & E AUTOMATIC TRANSFER ------ DWG. No. 437624
13. SCHEMATIC DIAGRAM - 4160 V BUS SECTION F AUTOMATIC TRANSFER ------ DWG. No. 437625
14. SCHEMATIC DIAGRAM - 4160 V BUS SECTION G AUTOMATIC TRANSFER ------ DWG. No. 437626
15. SCHEMATIC DIAGRAM - 4160 V BUS SECTION H AUTOMATIC TRANSFER ------ DWG. No. 437627
16. SCHEMATIC DIAGRAM - 500KV SWITCHYARD-500KV BREAKER FAILURE HVCB ------ DWG. NO. 4098839, 4098840
17. SCHEMATIC DIAGRAM - 500KV SWITCHYARD-MAIN XFMR BANK 1 LINE PROTECTION ------ DWG. No. 435817
18. SCHEMATIC DIAGRAM - 500KV SWITCHYARD-HVCB BRKR CONTROLS AND CONTRACT TABLES ------ DWG. NO. 4098833, 4098834, 4098835, 4098854
19. SCHEMATIC DIAGRAM - AUX. TRANSFORMER No. 11 & ASSOC. CIRCUIT BREAKERS ------ DWG. No. 437662
20. SCHEMATIC DIAGRAM - AUX. TRANSFORMER No. 12 & ASSOC. CIRCUIT BREAKERS ------ DWG. No. 437664
21. SCHEMATIC DIAGRAM - GENERATOR CONTROL ------ DWG. No. 437559
22. SCHEMATIC DIAGRAM - SEAL OIL, STATOR COOLING & HYDROGEN CONTROL SYSTEM ------ DWG. No. 437571
23. SCHEMATIC DIAGRAM - SEAL OIL, STATOR COOLING & HYDROGEN CONTROL SYSTEM ------ DWG. No. 437572
24. SCHEMATIC DIAGRAM - GENERATOR & MAIN TRANSFORMER ------ DWG. No. 437548
25. SCHEMATIC DIAGRAM - 25KV ISO-PHASE BUS MOTOR OPERATED DISCONNECT SWITCH ------ DWG. No. 437582
26. SCHEMATIC DIAGRAM - MAIN ANNUNCIATOR ------ DWG. No. 501133, 34, 40 & 41
27. SINGLE LINE METER & RELAY DIAGRAM 125V DC SYSTEM ------ DWG. No. 437546
28. FUNCTIONAL DIAGRAM - REACTOR/TURBINE/GENERATOR PROTECTION ------ DWG. No. 500825
29. LIST OF EQUIPMENT LOCATION CODES ------ DWG. No. 101900
30. SCHEMATIC DIAGRAM - 500KV SWITCHYARD SHEET No. 16 (ANN ALARMS) ------ DWG. No. 442752
31. SCHEMATIC DIAGRAM - SSPS OUTPUT RELAYS, TRAIN A, TRAIN B ------ DWG. No. 501869, 503088
32. FUNCTIONAL DIAGRAM - MFR. DWGS ------ REC. No. 663195
33. SCHEMATIC DIAGRAM - DEH INPUTS AND OUTPUTS ------ DWG. No. 437854, 437855
34. SCHEMATIC DIAGRAM - TURBINE GENERATOR INSTRUMENTATION ------ DWG. No. 437577
35. SINGLE LINE METER & RELAY DIAGRAM 120V INSTR. AC SYSTEM ------ DWG. No. 445291
36. SCHEMATIC DIAGRAM - TURBINE LUBE OIL PUMPS ------ DWG. No. 437564
37. PIPING SCHEMATIC - TURBINE & GENERATOR ASSOCIATED SYSTEMS ------ DWG. No. 102022
38. SCHEMATIC DIAGRAM - BRUSHLESS EXCITATION CONTROL ------ DWG. No. 437581
39. SCHEMATIC DIAGRAM - ISO-PHASE BUS COOLER ------ DWG. No. 437576
40. WIRING DIAGRAM - TURBINE ELECTRICAL SYSTEM ------ DWG. No. 663286
41. SCHEMATIC DIAGRAM - CNDS & CNDS BOOSTER PUMPS ------ DWG. No. 437566
42. SCHEMATIC DIAGRAM - HEATER 2 DRAIN TANK PUMP No. 11 ------ DWG. No. 437570
43. SCHEMATIC DIAGRAM - 500KV SWITCHYARD (500KV LINE PROTECTION DC CIRCUITS) ------ DWG. No. 4022488

NORMAL / EMER. TRIP	CONTACTS	POSITION EMER. TRIP	POSITION NORM.	REMARKS
	A	X		UNIT TRIP (THIS DWG)
	B	X		UNIT TRIP REF. 4
	C	X		ALARM DWG# 501133
	D	X		SPARE
	E	X		SPARE
	F	X		SPARE

UNIT TRIP CONTROL SWITCH 5G1/CS
WITH RED OVAL HANDLE, SPRING RETURN TO NORMAL, USED AT LOC. CC3

EQUIPMENT LOCATIONS:

XPS30	GEN. ANTI-MOTORING PRESS. SW., LOCALLY MOUNTED
BTA4II	TERM. BOX A4II FOR DEVICE 89XE
EW532	500KV PCB SW532 OPERATING MECH. CAB.
SEI	EXCITATION SWGR CUB. No. 1
CC3	GENERATOR CONTROL CONSOLE
RVHD	STATION ELECTRICAL RELAY BOARD
CG	CONTROL BOARD MAIN GENERATOR
RG	GENERATOR RELAY BOARD
JWI	TERMINAL BOX No. 1 500KV SWYD
RWI1	500KV RELAY BOARD No. 11 500KV SWYD
TQMA	MAIN TRANSFORMER 1A CONTROL CABINET
CWI1	500KV CONTROL BOARD No. 11 500KV SWYD
RNSOA	RACK NUCLEAR SAFEGUARD OUTPUT A
RNSTA	RACK NUCLEAR SAFEGUARD TEST A
RTFW1I	FWP1I SPEED CONTROL PANEL

TABLE OF ALARMS

	DC BUS POTENTIAL	GEN. ANTI-MOTORING TIMER	UNIT TRIP	MAIN TRANSF. SUDDEN PRESSURE TRIP	GEN. START-UP OV. TRIP	GEN. NEUTRAL START-UP OV. TRIP	GEN. DIFF. TRIP	UNIT OVERALL DIFF. TRIP	500KV LINE DIFF. TRIP	GEN. LOSS OF FIELD	GEN. EMERG TRIP	ALARMS 500KV SYSTEM UNIT TRIP	ALARMS 500KV SYSTEM LOSS OF SYS. LOAD
DEVICE	27G1DC	62AMG1	86G1	63XMT1	59ST1XG1	59NXSTG1	87XG1	87XU1	587X	40XG1	5G1/CS	86G1 | 86G1	94LSL1
CKT. No.	AV2807D	AY2828D	AY2821D	AP2804D	AV2801D	AV2803D	AD2803D	AD2802D	AD2804D	AY2832D	AY2820D	REF. 26 & 30	AY2860D

KEY DWG. SECTION 5

DATE	
04-07-2022	
D.D.	MNRU
R.E.	RXG2
I.V.	N/A
P.E.	N/A

REVISION DESCRIPTION
Revised Per DDN-2#1966

UNIT 1

ELECTRICAL SCHEMATIC DIAGRAM GENERATOR CONTROL

DIABLO CANYON POWER PLANT
PACIFIC GAS AND ELECTRIC COMPANY
SAN FRANCISCO, CALIFORNIA

DWG SCALE:	
BILL OF MATL:	
SUPSDS:	
SUPSD BY:	

DRAWING	SHEET	PAGE	REV
437557	1	0	41

U2-441245

RASTER=437557-1-0.dgn
DDN=437557-1-0.dgn
CAD User:MNRU Date:04-07-2022

DRAWING NUMBER 437557 I

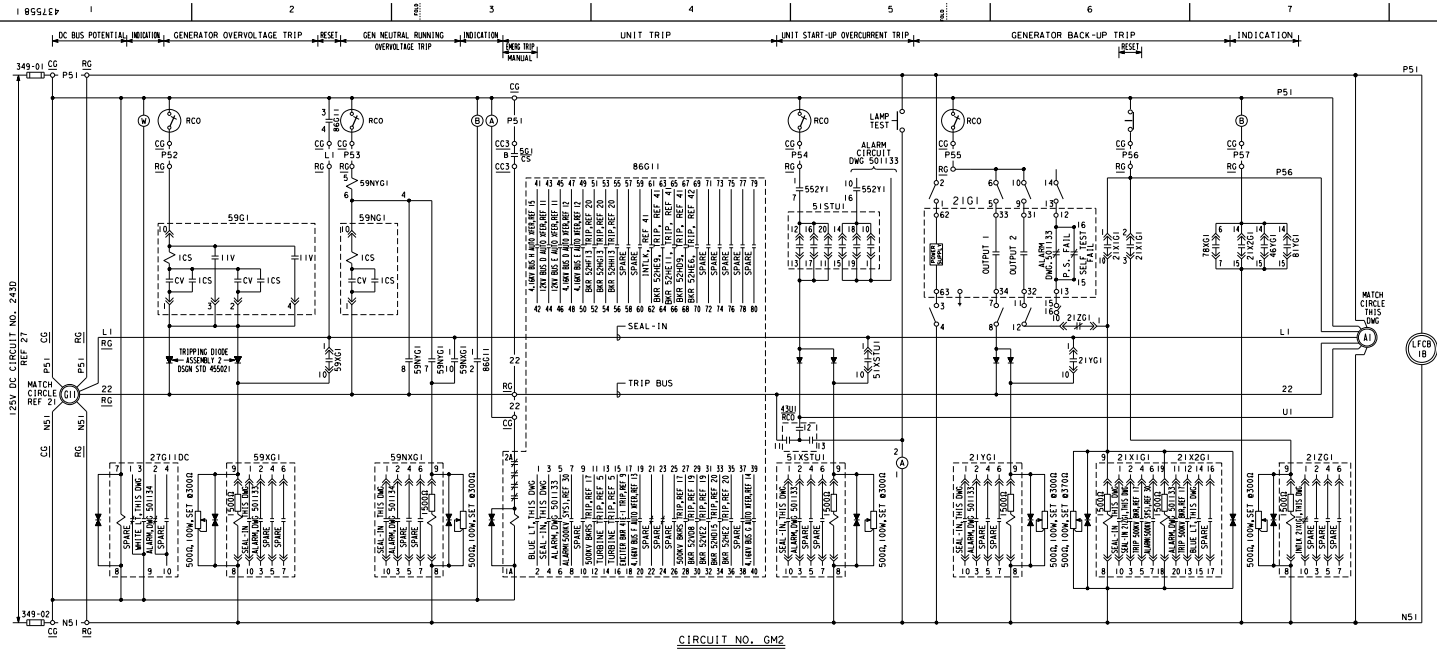

TABLE OF DEVICES

DEVICE NO.	FUNCTION	RATING	MFR	TYPE	CATALOG OR REF DWG	REMARKS
21G1	GENERATOR BACK-UP RELAY				2	FOR COIL SEE REF 24
21X1G1,21X2G1	GENERATOR BACK-UP AUX RELAY	125V DC	WESTINGHOUSE	AR	606B028A09	DOUBLE UNIT SEE NOTE 4
21YG1	GENERATOR BACK-UP AUX RELAY	125V DC	WESTINGHOUSE	AR	606B017A09	SEE NOTE 4
21ZG1	GENERATOR BACK-UP AUX RELAY	125V DC	WESTINGHOUSE	AR	606B017A15	SEE NOTE 4
78G1	GENERATOR OUT OF STEP RELAY				2	
78XG1, 78YG1	GENERATOR OUT OF STEP AUX RELAY	125V DC	WESTINGHOUSE	AR	606B017A09	SEE NOTE 4
27G1 1DC	GENERATOR DC CONT BUS UNDERVOLTAGE RLY	125V DC	WESTINGHOUSE	SG	293B254A20	
27G1	GENERATOR UNDERVOLTAGE RELAY				2	FOR COIL SEE REF 24
27XG1	GENERATOR UNDERVOLTAGE AUX RELAY	125V DC	WESTINGHOUSE	MG-6	289B360A20	
27YG1	GENERATOR UNDERVOLTAGE AUX RELAY	125V DC	WESTINGHOUSE	MG-6	289B360A20	
41E/ASX	GENERATOR EXCITER FIELD BREAKER AUX RLY				9	CONTACT IS CLOSED WHEN FIELD BKR IS CLOSED
43UI1/RCO	RELAY CUTOUT SWITCH				24	
46G1	GENERATOR NEGATIVE SEQUENCE RELAY				2	FOR COIL SEE REF 24
46XG1	GENERATOR NEGATIVE SEQUENCE AUX RELAY	125V DC	WESTINGHOUSE	AR	606B028A09	DOUBLE UNIT SEE NOTE 4
46YG1	GENERATOR NEGATIVE SEQUENCE AUX RELAY					
51STUI	UNIT START-UP OVERCURRENT RELAY				2	FOR COIL SEE REF 24
51XSTUI	UNIT START-UP OVERCURRENT AUX RELAY	125V DC	WESTINGHOUSE	AR	606B017A09	SEE NOTE 4
59G1	GENERATOR OVERVOLTAGE RELAY				2	FOR COIL SEE REF 24
59XG1	GENERATOR OVERVOLTAGE AUX RELAY	125V DC	WESTINGHOUSE	AR	606B017A09	SEE NOTE 4
59NG1	GENERATOR NEUTRAL OVERVOLTAGE RELAY				2	FOR COIL SEE REF 24
59NXG1	GENERATOR NEUTRAL OVERVOLTAGE AUX RELAY	125V DC	WESTINGHOUSE	AR	606B017A09	SEE NOTE 4
59NYG1	GENERATOR NEUTRAL OVERVOLTAGE AUX RELAY	0.272A	GEN ELEC	HAA	12HAA15A4F	
69XIP	ISOPHASE BUS COOLING PERMISSIVE RELAY	125V DC	WESTINGHOUSE	SG	1342925	
69XMT1	MAIN TRANSFORMER COOLING PERMISSIVE RLY	125V DC	WESTINGHOUSE	MG-6	289B360A20	
69YMT1	MAIN TRANSFORMER COOLING PERMISSIVE RLY	125V DC	WESTINGHOUSE	SG	1342925	
81G1	GENERATOR UNDERFREQUENCY RELAY		BASLER		BE1-810/U-1SEE1JA8NOF	FOR COIL SEE REF 24
81XG1	GENERATOR UNDERFREQUENCY AUX RELAY	125V DC	WESTINGHOUSE	AR	606B028A09	DOUBLE UNIT SEE NOTE 4
81YG1	GENERATOR UNDERFREQUENCY AUX RELAY					
86G1 1	UNIT TRIP LOCKOUT RELAY	125V DC	WESTINGHOUSE	WL		HAND RESET
87UH1	UNIT OVERALL DIFFERENTIAL (HARMONIC) RLY				2	FOR COIL SEE REF 24
87XUH1	UNIT OVERALL DIFFERENTIAL (HARMONIC) AUX RLY	125V DC	WESTINGHOUSE	AR	606B017A09	SEE NOTE 4
89XE	25KV MOTOR OPERATED DISCONNECT SW AUX SW				25	CONTACT IS CLOSED WHEN DISC SW IS CLOSED
552X	500KV PCB AUXILIARY RELAY	125V DC	WESTINGHOUSE	MG-6	289B360A20	
552Y1, 2, 3	500KV PCB AUXILIARY RELAY	125V DC	WESTINGHOUSE	MG-6	289B360A20	
552-532	500KV POWER CKT BREAKER AUX SWITCH				18	
552-632	500KV POWER CKT BREAKER AUX SWITCH				18	
51IBFX2-532	500KV HVCB BREAKER FAILURE AUX. RELAY	125V DC	—	MVAJ21	409884I	
51IBFX2-632	500KV HVCB BREAKER FAILURE AUX. RELAY	125V DC	—	MVAJ21	409884I	
594G1 1	500KV BKR FAILURE TIMER/LINE CHANNEL "A" TRIP RELAY	125V DC	WESTINGHOUSE	AR	606B017A09	SEE NOTE 4
594L-1D	DIR OC & GND DIR OC TRIP RELAY				17	500KV SWITCHYARD
587-1B	500KV TIE LINE DIFF. RELAY SET B				2 & 24	U1 T-COM ROOM
594L-1A	500KV LINE SET A TRIP RELAY				43	500KV SWITCHYARD
594L-1B	500KV LINE SET B TRIP RELAY				43	500KV SWITCHYARD

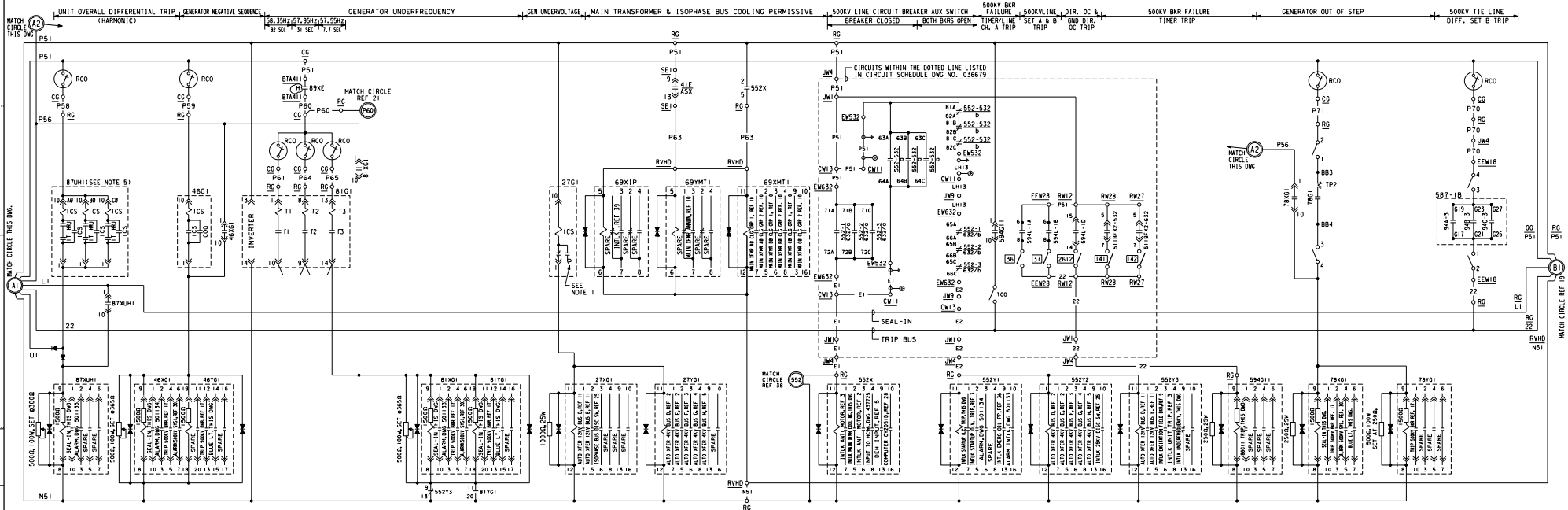

ALARM CIRCUIT TABLE

	DC BUS POTENTIAL	GEN O.V. TRIP	GEN NEUTRAL RUNNING O.V. TRIP	UNIT TRIP	UNIT START-UP		GENERATOR BACK-UP		UNIT OVERALL DIFFERENTIAL TRIP (HARMONIC)	GENERATOR NEGATIVE SEQUENCE	GENERATOR UNDER-FREQUENCY	500KV PCB TRIP
					OVERCURRENT	O.C. TRIP		TRIP				
DEVICE	27G1 1DC	59XG1	59NXG1	86G1 1	51STUI	51XSTUI	21X2G1	21YG1	87XUH1	46XG1	81XG1	552Y1
CKT NO.	AV2808D	AV2805D	AV2804D	AV2821D	A12801D	A12802D	AY2825D	AY2826D	AD2801D	AY2827D	AY2824D	AY2843D

UNIT TRIP		UNIT BACK-UP		GENERATOR UNDERFREQUENCY		GENERATOR NEGATIVE SEQUENCE	
86G1	86G1 1	21X1G1	21X2G1	81XG1	81YG1	46XG1	46YG1
SEE REF 30		SEE REF 30		SEE REF 30		SEE REF 30	

NOTES

1. DISCONNECT ICS CONTACT IN FIELD.
2. DELETED
4. ADJUST MINIMUM PICK-UP TO 70 VOLTS AT JOBSITE.
5. SET ICS TARGET ON 2 AMPS TO PREVENT ICS SEAL-IN WHEN 43UI IS IN TEST.

REFERENCE DRAWINGS & EQUIPMENT LOCATIONS

SEE DRAWING NO. 437557

LEGEND

SHIELDED CABLE GROUNDED

SHIELDED CABLE UNGROUNDED

KEY DWG. SECTION 5

UNIT 1

DATE	
10-20-2020	
D.D.	AJFJ
R.E.	RXG2
I.V.	N/A
P.E.	N/A

REVISION DESCRIPTION: Revised Per DDT-4+2027

ELECTRICAL SCHEMATIC DIAGRAM GENERATOR CONTROL

DIABLO CANYON POWER PLANT
PACIFIC GAS AND ELECTRIC COMPANY
SAN FRANCISCO, CALIFORNIA

DWG SCALE:	
BILL OF MATL:	
SUPSDS:	
SUPSD BY:	

DRAWING	SHEET	PAGE	REV
437558	1	0	38

U2-441246

RASTER=437558-1-0.dgn
DGN=437558-1-0.dgn
USER=AJFJ Dated 10-20-2020
DGN=437558.DGN

DRAWING NUMBER 437558 1

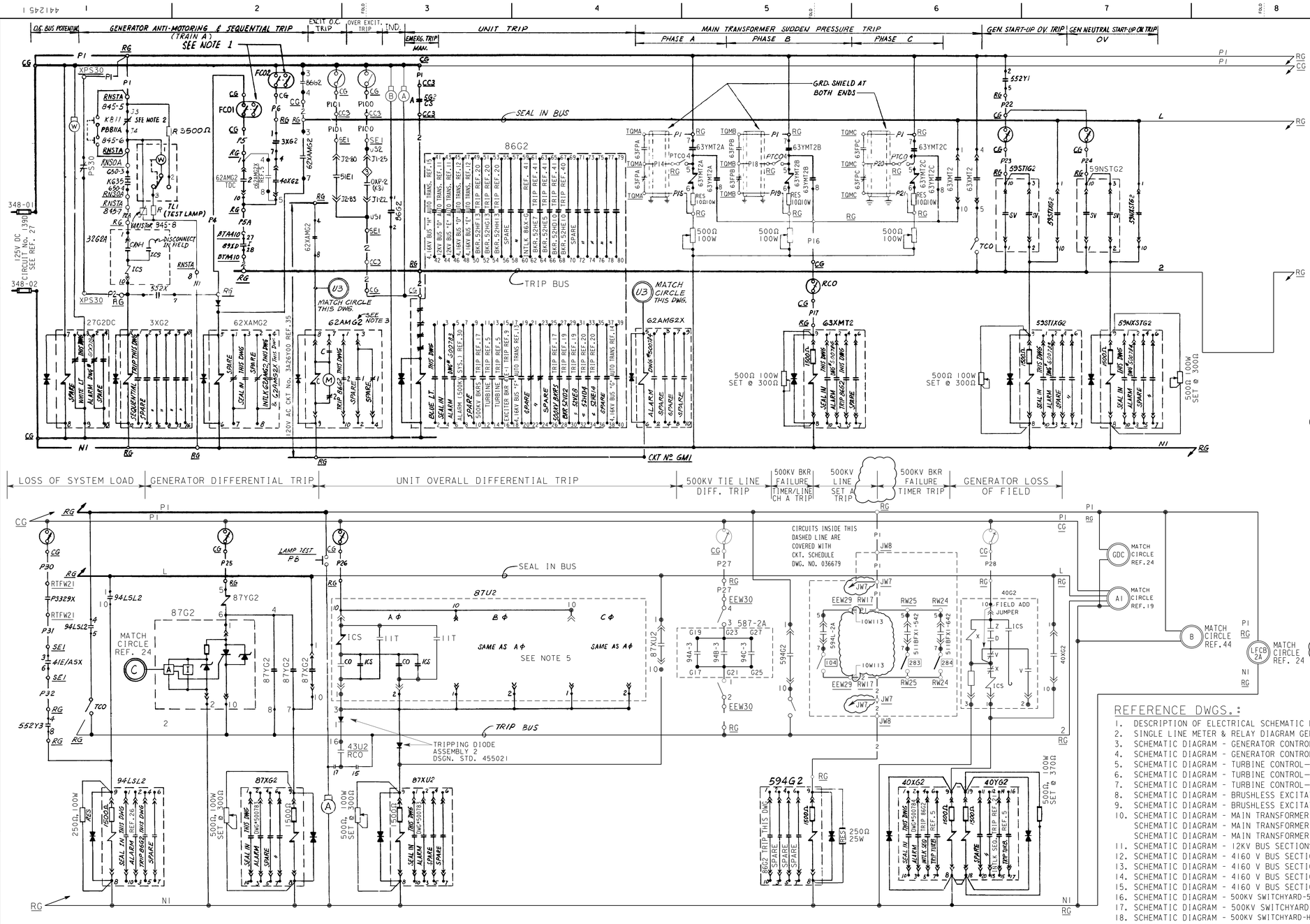

DEVICES	FUNCTION	RATING	MFR	TYPE	CAT./REF. DWG. No.	REMARKS
3XG2	SEQUENTIAL TRIP AUX. RELAY	125V DC	W	MG-6	289B360A20	
27G2DC	GEN. CONT. DC BUS UNDERVOLTAGE RELAY	125V DC	W	SG	293B254A20	
32G2A	GEN. REVERSE POWER RELAY	——	——	——	2	PHASE A
40G2	GEN. LOSS OF FIELD RELAY	——	——	——	2	FOR COIL SEE REF. 24
40XG2 40YG2	GEN. LOSS OF FIELD AUX. RELAY	125V DC	W	AR	606B028A09	DOUBLE UNIT SEE NOTE 4
59STIG2	GEN. START-UP OVERVOLTAGE RELAY	——	——	——	2	FOR COIL SEE REF. 24
59STIXG2	GEN. START-UP OVERVOLTAGE AUX. RELAY	125V DC	W	AR	606B017A09	SEE NOTE 4
59NSTG2	GEN. NEUT. START-UP OVERVOLTAGE RELAY	——	——	——	2	FOR COIL SEE REF. 24
59NXSTG2	GEN. NEUT. START-UP OVERVOLTAGE AUX. RELAY	125V DC	W	AR	606B017A09	SEE NOTE 4
62AMG2	GEN. ANTI-MOTORING TIMER RELAY	115V AC	W	TK	1876014	2 SEC TO 50 MIN ADJUST
62XAMG2	GEN. ANTI-MOTORING TIMER AUX. RELAY	125V DC	W	SG	1342925	
5IIE1	EXCITER OVERCURRENT RELAY		W		663298	
63FPA B,C	MAIN TRANSFORMER SUDDEN PRESSURE DEVICE	——	——	——	42	
63YMT2A, 2B,2C	MAIN TRANSFORMER SUDDEN PRESSURE DEVICE AUX. RELAY	0.2/2.0A	GE	HAA	12HAA15A4F	
63XMT2	MAIN TRANSFORMER SUDDEN PRESSURE DEVICE AUX. RELAY	125V DC	W	AR	606B017A09	SEE NOTE 4
86G2	UNIT TRIP LOCKOUT RELAY	125V DC	W	WL		HAND RESET
87G2	GEN. DIFFERENTIAL RELAY	——	——	——	2	FOR COIL SEE REF. 24
87XG2	GEN. DIFFERENTIAL AUX. RELAY	125V DC	W	AR	606B017A09	SEE NOTE 4
87YG2	GEN. DIFFERENTIAL AUX. RELAY	0.2/2.0A	GE	HAA	12HAA15A4F	
87U2	UNIT OVERALL DIFFERENTIAL RELAY	——	——	——	2	FOR COIL SEE REF. 24
87XU2	UNIT OVERALL DIFFERENTIAL AUX. RELAY	125V DC	W	AR	606B017A09	SEE NOTE 4
552X	500KV P.C.B. AUX. RELAY				4	CONTACT CLOSED WHEN 500KV BKR CLOSED
552YI	500KV P.C.B. AUX. RELAY	——	——	——	4	CONTACT CLOSED WHEN BOTH 500KV BKRS OPEN
5IIBFXI -542	500KV HVCB 542 BREAKER FAILURE AUX. RELAY	125V DC	——	MVAJ2I	4101942	
5IIBFXI -642	500KV HVCB 642 BREAKER FAILURE AUX. RELAY	125V DC	——	MVAJ2I	4101943	
587-2A	500KV LINE DIFF. RELAY SET A	——	——	——	24	
5IIBU-2B	UNIT 2 XFMR 2 500KV TIE-LINE BACKUP SET B RELAY (SWYD)	125V DC	SEL	451	17	
594L-2D	DIR. OC & GN DIR. OC RELAY	——	——	——	17	
K635	SEQUENTIAL TRIP AUX. RELAY	——	——	——	31,32,39	CONTACT IS CLOSED WHEN TURBINE STOP VALVES ARE CLOSED OR ON AUTO STOP LO-PRESS
43U2/RCO	RELAY CUTOUT SWITCH	——	——	——	24	
594G2	500KV BKR FAILURE TIMER/LINE CHANNEL "A" TRIP RELAY	125V DC	W	AR	606B017A09	SEE NOTE 4
89XD	25KV ISO-PHASE DISCONN. SW. AUX. SW.	——	——	——	25	
62AMG2X	HI PRESS. ANTI-MTR AUX. RELAY	120V AC	W	AR	AR440AR	
OXP-2/K3	OVEREXCITATION TRIP RELAY		W		663298	
PS30	HI PRESS. ANTI-MTR PROTECTION	——	——	——	DWG 061236 DWG 108004	CLOSE ON DECR. DIFF. PSID
41E/ASX	FIELD BREAKER AUX. RELAY	——	——	——	9	
94LSL2	LOSS OF SYSTEM LOAD RELAY	125V DC	W	AR		SEE NOTE 6
552Y3	500KV AIR CKT BKR AUX. RELAY	——	——	——	4	CONTACT CLOSED WHEN BOTH 500KV BKRS OPEN
PS329X	MAIN TURBINE AUTO STOP OIL PRESS. AUX. RELAY	——	——	——	5	CONTACT CLOSED @ 45 PSIG DECREASING
594L-2A	500KV LINE SET A TRIP RELAY	——	——	——	43	
587L-2B	UNIT 2 XFMR 2 500KV TIE-LINE CURRENT DIFF SET B RELAY (SWYD)	125V DC	SEL	4IIL	45	

TABLE OF ALARMS

	DC BUS POTENTIAL	GEN. ANTI-MOTORING	UNIT TRIP	MAIN TRANSF. SUDDEN PRESSURE TRIP	GEN. START-UP OV. TRIP	GEN. NEUTRAL START-UP OV. TRIP	GEN. DIFF. TRIP	UNIT OVERALL DIFF. TRIP	500KV LINE DIFF. TRIP	GEN. LOSS OF FIELD	GEN. EMERG TRIP	LOSS OF SYS. LOAD
DEVICE	27G2DC	62AMG2X	86G2	63XMT2	59STIXG2	59NXSTG2	87XG2	87XU2	587X	40XG2	5G2/CS	94LSL2
CKT. No.	AV2807D	AY2828D	AY2821D	AP2804D	AV2801D	AV2803D	AD2803D	AD2802D	AD2804D	AY2832D	AY2820D	AY2822D

NORMAL / EMER. TRIP

CONTACTS		POSITION EMER. TRIP	POSITION NORM.	REMARKS
o-|-o	A	X		UNIT TRIP (THIS DWG)
o-|-o	B	X		UNIT TRIP REF. 4
o-|-o	C	X		ALARM DWG= 500783
o-|-o	D	X		SPARE
o-|-o	E	X		SPARE
o-|-o	F	X		SPARE

UNIT TRIP CONTROL SWITCH 5G2/CS
WITH RED OVAL HANDLE, SPRING RETURN TO NORMAL, USED AT LOC. CC3

ALARMS 500KV SYSTEM

UNIT TRIP	
86G2	86G2I
REF. 26 & 30	

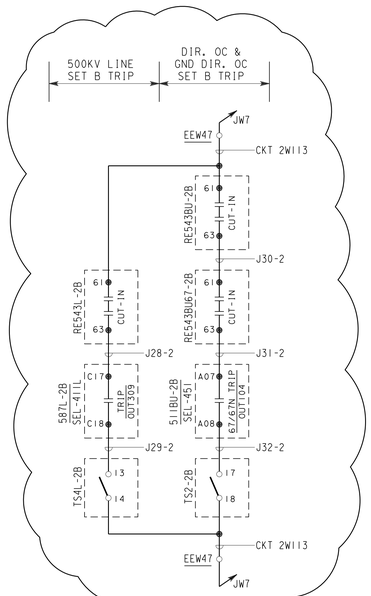

NOTES:

1. FOR WIRING OF THESE POLES SEE DWG. 441247.
2. TEST RELAY CONTACT OPEN DURING TEST.
3. SET SEQUENTIAL CONTACTS 1 & 2 FOR SIMULTANEOUS OPERATION.
4. ADJUST MIN. PICKUP TO 70 VOLTS AT JOBSITE.
5. SET ICS TARGET ON 2 AMPS TO PREVENT ICS SEAL IN WHEN 43U2 IS IN TEST.
6. ADJUST MIN. PICKUP TO 70 VOLTS OR GREATER AT JOBSITE.

EQUIPMENT LOCATIONS:

XPS30	GEN. ANTI-MOTORING PRESS. SW., LOCALLY MOUNTED
SEI	EXCITATION SWITCHGEAR CUBICLE No. 1
CC3	GENERATOR CONTROL CONSOLE
CG	CONTROL BOARD MAIN GENERATOR
RG	GENERATOR RELAY BOARD
JW7	TERMINAL BOX No. 7 500KV SWYD
RWI6	500KV RELAY BOARD No. 16 500KV SWYD
TQMA	MAIN TRANSFORMER 2A CONTROL CABINET
RNSOA	RACK NUCLEAR SAFEGUARD OUTPUT A
RNSTA	RACK NUCLEAR SAFEGUARD TEST A

REFERENCE DWGS.:

1. DESCRIPTION OF ELECTRICAL SCHEMATIC DIAG., SYMBOLS & CIRCUIT DESIGNATIONS-- DWG. No. 050003
2. SINGLE LINE METER & RELAY DIAGRAM GEN., MAIN TRANSFORMERS & EXCITATION--- DWG. No. 441226
3. SCHEMATIC DIAGRAM - GENERATOR CONTROL---------- DWG. No. 441245
4. SCHEMATIC DIAGRAM - GENERATOR CONTROL---------- DWG. No. 441246
5. SCHEMATIC DIAGRAM - TURBINE CONTROL---------- DWG. No. 441253
6. SCHEMATIC DIAGRAM - TURBINE CONTROL---------- DWG. No. 441254
7. SCHEMATIC DIAGRAM - TURBINE CONTROL---------- DWG. No. 441255
8. SCHEMATIC DIAGRAM - BRUSHLESS EXCITATION CONTROL---------- DWG. No. 441248
9. SCHEMATIC DIAGRAM - BRUSHLESS EXCITATION CONTROL---------- DWG. No. 441249
10. SCHEMATIC DIAGRAM - MAIN TRANSFORMER COOLING PHASE "A"---------- DWG. No. 4018482 & 4018483
    SCHEMATIC DIAGRAM - MAIN TRANSFORMER COOLING PHASE "B"---------- DWG. No. 4018484 & 4018485
    SCHEMATIC DIAGRAM - MAIN TRANSFORMER COOLING PHASE "C"---------- DWG. No. 4018486 & 4018487
11. SCHEMATIC DIAGRAM - 12KV BUS SECTIONS D & E AUTOMATIC TRANSFER ---------- DWG. No. 441350
12. SCHEMATIC DIAGRAM - 4160 V BUS SECTIONS D & E AUTOMATIC TRANSFER ---------- DWG. No. 441351
13. SCHEMATIC DIAGRAM - 4160 V BUS SECTION F AUTOMATIC TRANSFER ---------- DWG. No. 441352
14. SCHEMATIC DIAGRAM - 4160 V BUS SECTION G AUTOMATIC TRANSFER ---------- DWG. No. 441353
15. SCHEMATIC DIAGRAM - 4160 V BUS SECTION H AUTOMATIC TRANSFER ---------- DWG. No. 441354
16. SCHEMATIC DIAGRAM - 500KV SWITCHYARD-500KV BREAKER FAILURE HVCB ---------- DWG. No. 4101942,4101943,4101944
17. SCHEMATIC DIAGRAM - 500KV SWITCHYARD SHEET No. 32---------- DWG. No. 443548
18. SCHEMATIC DIAGRAM - 500KV SWITCHYARD-HVCB BRKR CONTROLS AND CONTRACT TABLES--- DWG. No. 4098858,4098834,4098835,4098854
19. SCHEMATIC DIAGRAM - AUX. TRANSFORMER No. 21 & ASSOC. CIRCUIT BREAKERS ---- DWG. No. 441347
20. SCHEMATIC DIAGRAM - AUX. TRANSFORMER No. 22 & ASSOC. CIRCUIT BREAKERS ---- DWG. No. 441349
21. SCHEMATIC DIAGRAM - GENERATOR CONTROL---------- DWG. No. 441247
22. SCHEMATIC DIAGRAM - SEAL OIL, STATOR COOLING & HYDROGEN CONTROL SYSTEM --- DWG. No. 441250
23. SCHEMATIC DIAGRAM - SEAL OIL, STATOR COOLING & HYDROGEN CONTROL SYSTEM --- DWG. No. 441251
24. SCHEMATIC DIAGRAM - GENERATOR & MAIN TRANSFORMER ---------- DWG. No. 441244
25. SCHEMATIC DIAGRAM - 25KV ISO-PHASE BUS MOTOR OPERATED DISCONNECT SWITCH--- DWG. No. 441267
26. SCHEMATIC DIAGRAM - MAIN ANNUNCIATOR ---------- DWG. No. 500783,84,90
27. SINGLE LINE METER & RELAY DIAGRAM 125V DC SYSTEM ---------- DWG. No. 441240
28. SCHEMATIC DIAGRAM - 500KV SWYD - UNIT 2 XFMR 2 500KV TIE-LINE BACKUP SET B RELAY ---------- DWG. No. 4199496-4199498
29. LIST OF EQUIPMENT LOCATION CODES---------- DWG. No. 103013
30. SCHEMATIC DIAGRAM - 500KV SWITCHYARD SHEET No. 37 (ANN ALARMS)---------- DWG. No. 443552
31. SOLID STATE PROTECTION SYSTEM - MFR DWGS---------- REC. No. 66323I
32. FUNCTIONAL DIAGRAM - MFR. DWGS ---------- REC. No. 663195
33. SCHEMATIC DIAGRAM - DEH INPUTS AND OUTPUTS ---------- DWG. No. 452665,441517,441518,441209
34. SCHEMATIC DIAGRAM - TURBINE GENERATOR INSTRUMENTATION---------- DWG. No. 441261
35. SINGLE LINE METER & RELAY DIAGRAM 120V INSTR. AC SYSTEM ---------- DWG. No. 445291
36. SCHEMATIC DIAGRAM - TURBINE LUBE OIL PUMPS ---------- DWG. No. 441260
37. SCHEMATIC DIAGRAM - BRUSHLESS EXCITATION CONTROL---------- DWG. No. 441256
38. SCHEMATIC DIAGRAM - ISO-PHASE BUS COOLER ---------- DWG. No. 441268
39. SCHEMATIC DIAGRAM - SSPS OUTPUT RELAYS, TRAIN A, TRAIN B ---------- DWG. No. 503089,503093
40. SCHEMATIC DIAGRAM - HEATER 2 DRAIN TANK PUMP No. 21 ---------- DWG. No. 441276
41. SCHEMATIC DIAGRAM - CNDS & CNDS BOOSTER PUMPS ---------- DWG. No. 441274
42. SCHEMATIC WIRING DIAGRAM - MFR DWG.---------- DWG. No. 663356-43
43. SCHEMATIC DIAGRAM - 500KV SWITCHYARD ---------- DWG. No. 4022489
44. SCHEMATIC DIAGRAM - 500KV SWITCHYARD UNIT 2 500/25KV TR BK NO.2 500KV LINE ANNUNCIATION AND RECORDING ANNUNCIATOR INPUTS ---------- DWG. No. 443552
45. SCHEMATIC DIAGRAM - 500KV SWYD - UNIT 2 XFMR 2 500KV TIE-LINE CURRENT DIF SET B RELAY ---------- DWG. No. 4199493-4199495
46. SCHEMATIC DIAGRAM - DCPP GENERATOR AND MAIN TRANSFORMER ---------- DWG. No. 4022489
47. CONTACT DEV - 500KV SWYD - UNIT 2 XFMR 2 500KV TIE-LINE CURRENT DIFF SET B RELAY ---------- DWG. No. 4199500
48. SCHEMATIC DIAGRAM - 500KV SWYD - UNIT 2 XFMR 2 500KV TIE-LINE BACKUP SET B RELAY ---------- DWG. No. 4199496-4199498

P.G.&E. SYSTEM PHASE SEQUENCE A-C-B

KEY DWG. SECTION 5

UNIT 2

DATE	
05-21-2024	
D.D.	MNRU
R.E.	FAZI
I.V.	N/A
P.E.	N/A

REVISION DESCRIPTION: Revised Per DFT-7*6135

ELECTRICAL SCHEMATIC DIAGRAM GENERATOR CONTROL

DIABLO CANYON POWER PLANT
PACIFIC GAS AND ELECTRIC COMPANY
SAN FRANCISCO, CALIFORNIA

DWG SCALE:	
BILL OF MATL:	
SUPSDS:	
SUPSD BY:	

DRAWING	SHEET	PAGE	REV
441245	1	0	31

UI-437557

DRAWING NUMBER 441245 1

RASTER=441245-1-0.dgn
DGN=441245-1-0.dgn
CAD User:MNRU DGTE: 05-21-2024

441246 1

1	2	3	4	5	6	7	8	9	10

DC BUS POTENTIAL INDICATION | GENERATOR OVERVOLTAGE TRIP | RESET | GEN NEUTRAL RUNNING OVERVOLTAGE TRIP | INDICATION | EMERG TRIP MANUAL | UNIT TRIP | UNIT START-UP OVERCURRENT TRIP | GENERATOR BACK-UP TRIP | RESET | INDICATION

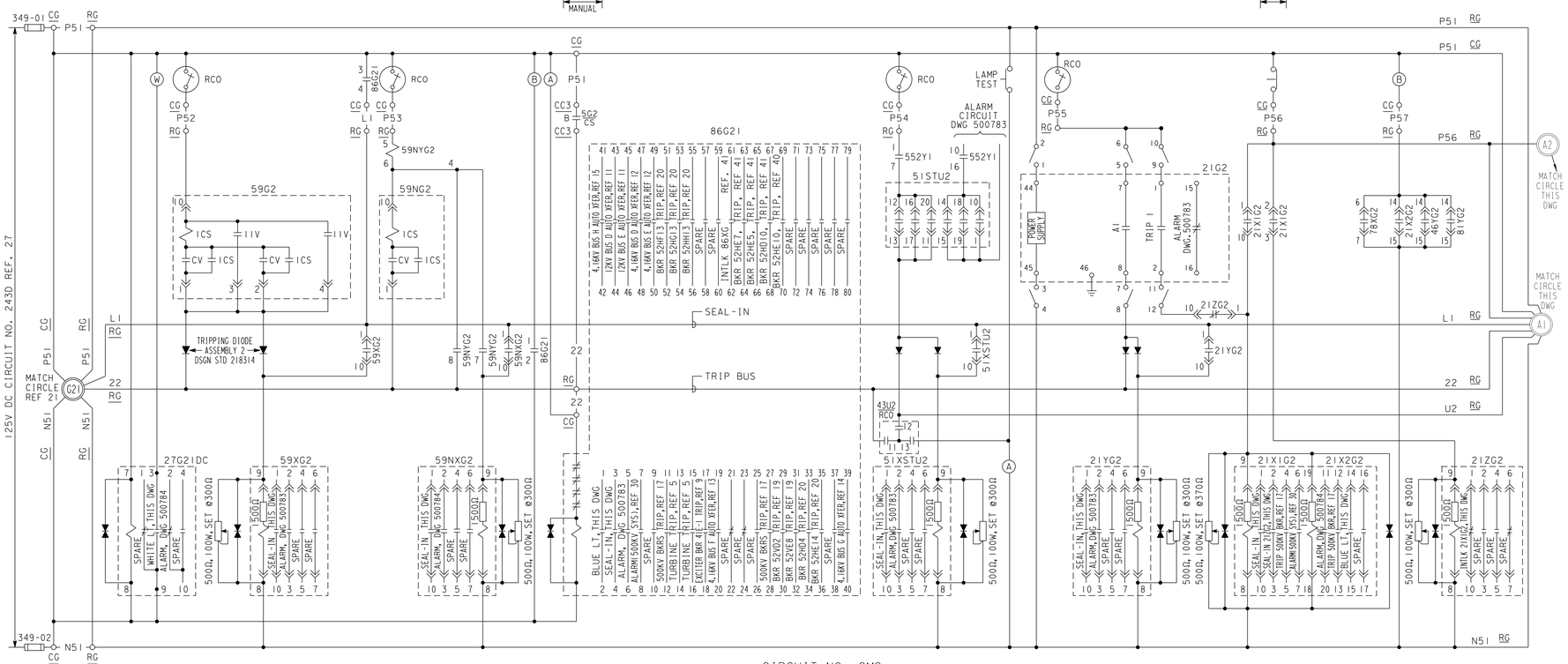

TABLE OF DEVICES

DEVICE NO.	FUNCTION	RATING	MFR	TYPE	CATALOG OR REF DWG	REMARKS
21G2	GENERATOR BACK-UP RELAY				2	FOR COIL SEE REF 24
21X1G2,21X2G2	GENERATOR BACK-UP AUX RELAY	125V DC	WESTINGHOUSE	AR	606B028A09	DOUBLE UNIT SEE NOTE 4
21YG2	GENERATOR BACK-UP AUX RELAY	125V DC	WESTINGHOUSE	AR	606B017A09	SEE NOTE 4
21ZG2	GENERATOR BACK-UP AUX RELAY	125V DC	WESTINGHOUSE	AR	606B017A15	SEE NOTE 4
78G2	GENERATOR OUT OF STEP RELAY				2	FOR COIL SEE REF 24
78XG2,78YG2	GENERATOR OUT OF STEP AUX RELAY	125V DC	WESTINGHOUSE	AR	606B017A09	SEE NOTE 4
27G2IDC	GENERATOR DC CONT BUS UNDERVOLTAGE RLY	125V DC	WESTINGHOUSE	SG	293B254A20	
27G2	GENERATOR UNDERVOLTAGE RELAY				2	FOR COIL SEE REF 24
27XG2	GENERATOR UNDERVOLTAGE AUX RELAY	125V DC	WESTINGHOUSE	MG-6	289B360A20	
27YG2	GENERATOR UNDERVOLTAGE AUX RELAY	125V DC	WESTINGHOUSE	MG-6	289B360A20	
41E/ASX	GENERATOR EXCITER FIELD BREAKER AUX RLY				9	CONTACT IS CLOSED WHEN FIELD BKR IS CLOSED
43U2/RCO	RELAY CUTOUT SWITCH				24	
46G2	GENERATOR NEGATIVE SEQUENCE RELAY				2	FOR COIL SEE REF 24
46XG2	GENERATOR NEGATIVE SEQUENCE AUX RELAY	125V DC	WESTINGHOUSE	AR	606B028A09	DOUBLE UNIT SEE NOTE 4
46YG2	GENERATOR NEGATIVE SEQUENCE AUX RELAY					
5ISTU2	UNIT START-UP OVERCURRENT RELAY				2	FOR COIL SEE REF 24
5IXSTU2	UNIT START-UP OVERCURRENT AUX RELAY	125V DC	WESTINGHOUSE	AR	606B017A09	SEE NOTE 4
59G2	GENERATOR OVERVOLTAGE RELAY				2	FOR COIL SEE REF 24
59XG2	GENERATOR OVERVOLTAGE AUX RELAY	125V DC	WESTINGHOUSE	AR	606B017A09	SEE NOTE 4
59NG2	GENERATOR NEUTRAL OVERVOLTAGE RELAY				2	FOR COIL SEE REF 24
59NXG2	GENERATOR NEUTRAL OVERVOLTAGE AUX RELAY	125V DC	WESTINGHOUSE	AR	606B017A09	SEE NOTE 4
59NYG2	GENERATOR NEUTRAL OVERVOLTAGE AUX RELAY	0.2/2A	GEN ELEC	HAA	12HAA15A4F	
69XIP	ISOPHASE BUS COOLING PERMISSIVE RELAY	125V DC	WESTINGHOUSE	SG	1342925	
69XMT2	MAIN TRANSFORMER COOLING PERMISSIVE RLY	125V DC	WESTINGHOUSE	MG-6	289B360A20	
81G2	GENERATOR UNDERFREQUENCY RELAY		BASLER		BEI-810/U-T3EEIJA8N0F	FOR COIL SEE REF 24
81XG2	GENERATOR UNDERFREQUENCY AUX RELAY	125V DC	WESTINGHOUSE	AR	606B028A09	DOUBLE UNIT SEE NOTE 4
81YG2	GENERATOR UNDERFREQUENCY AUX RELAY					
86G2I	UNIT TRIP LOCKOUT RELAY	125V DC	WESTINGHOUSE	WL		HAND RESET
87UH2	UNIT OVERALL DIFFERENTIAL (HARMONIC) RLY				2	FOR COIL SEE REF 24
87XUH2	UNIT OVERALL DIFFERENTIAL (HARMONIC) AUX RLY	125V DC	WESTINGHOUSE	AR	606B017A09	SEE NOTE 4
89XE	25KV MOTOR OPERATED DISCONNECT SW AUX SW				25	CONTACT IS CLOSED WHEN DISC SW IS CLOSED
552X	500KV PCB AUXILIARY RELAY	125V DC	WESTINGHOUSE	MG-6	289B360A20	
552Y1,2,3	500KV PCB AUXILIARY RELAY	125V DC	WESTINGHOUSE	MG-6	289B360A20	
552-542	500KV POWER CKT BREAKER AUX SWITCH				18	
552-642	500KV POWER CKT BREAKER AUX SWITCH				18	
5IIBFX2-542	500KV HVCB 542 BREAKER FAILURE AUX. RELAY	125V DC	—	MVAJ21	4101942	
5IIBFX2-642	500KV HVCB 642 BREAKER FAILURE AUX. RELAY	125V DC	—	MVAJ21	4101943	
594G2I	500KV BKR FAILURE TIMER/LINE CHANNEL "A" TRIP RELAY	125V DC	WESTINGHOUSE	AR	606B017A09	SEE NOTE 4
5IIBU-2B	UNIT 2 XFMR 2 TIE-LINE BACKUP SET B RELAY (SWYD)	125V DC	SEL	451	17	
587-2B	UNIT 2 XFMR 2 TIE-LINE CURRENT DIFF SET B RELAY (DCPP)	125V DC	SEL	411L	46 & 47	
594-2A	500KV LINE SET "A" TRIP RELAY				43	
587L-2B	UNIT 2 XFMR 2 TIE-LINE CURRENT DIFF SET B RELAY (SWYD)	125V DC	SEL	411L	45	

UNIT OVERALL DIFFERENTIAL TRIP (HARMONIC) | GENERATOR NEGATIVE SEQUENCE | GENERATOR UNDERFREQUENCY (58.35Hz 92 SEC, 57.95Hz 31 SEC, 57.55Hz 7.7 SEC) | GEN UNDERVOLTAGE | MAIN TRANSFORMER & ISOPHASE BUS COOLING PERMISSIVE | 500KV LINE CIRCUIT BREAKER AUX SWITCH BREAKER CLOSED, BOTH BKRS OPEN | 500KV BKR FAIL TIMER/LINE CH.A TRIP | 500KV LINE SET A TRIP | 500KV BKR FAILURE TIMER TRIP | 500KV LINE SET B TRIP | DIR. OC & GND DIR. OC SET B TRIP | 500 KV TIE LINE DIFF TRIP SET B | GENERATOR OUT OF STEP

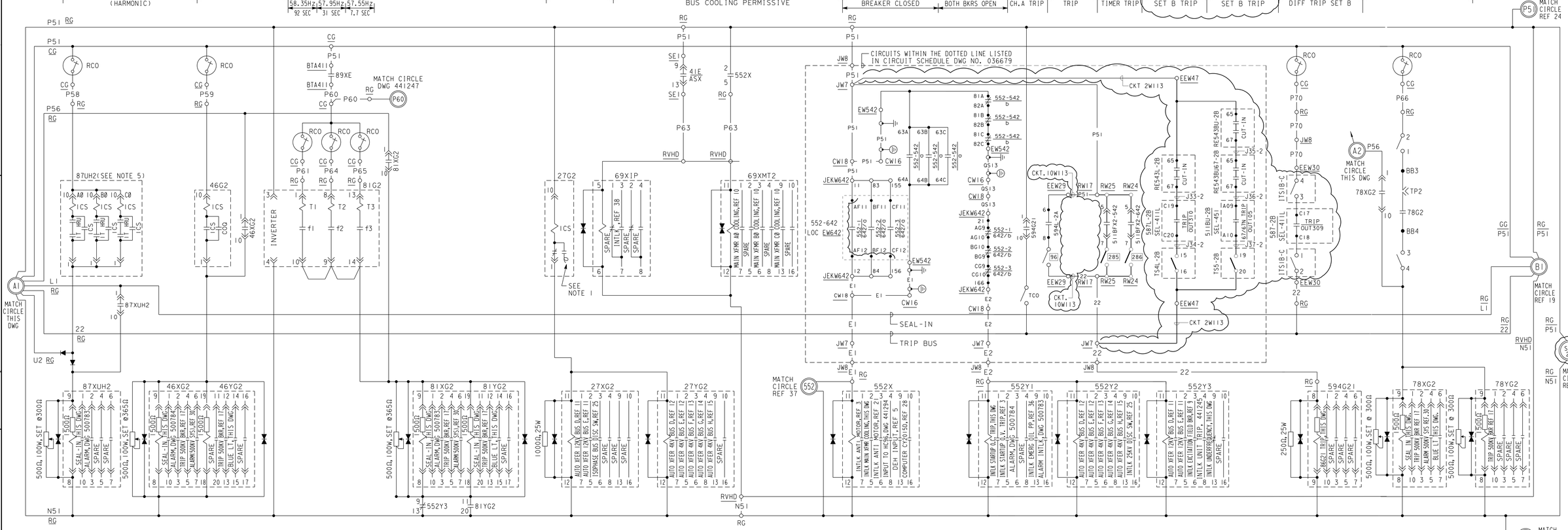

ALARM CIRCUIT TABLE

	DC BUS POTENTIAL	GEN O.V. TRIP	GEN NEUTRAL RUNNING O.V. TRIP	UNIT TRIP	UNIT START-UP		GENERATOR BACK-UP		UNIT OVERALL DIFFERENTIAL TRIP (HARMONIC)	GENERATOR NEGATIVE SEQUENCE	GENERATOR UNDER-FREQUENCY	500KV PCB TRIP
					OVERCURRENT	O.C. TRIP		TRIP				
DEVICE	27G2IDC	59XG2	59NXG2	86G2I	5ISTU2	5IXSTU2	21X2G2	21YG2	87XUH2	46XG2	81XG2	552YI
CKT NO.	AV2808D	AV2805D	AV2804D	AY2821D	AI2801D	AI2802D	AY2825D	AY2826D	AD2801D	AY2827D	AY2824D	AY2843D

ALARMS 500KV SYSTEM

UNIT TRIP		UNIT BACK-UP		GENERATOR UNDERFREQUENCY		GENERATOR NEGATIVE SEQUENCE	
86G2	86G2I	21X1G2	21X2G2	81XG2	81YG2	46XG2	46YG2
SEE REF 30		SEE REF 30		SEE REF 30		SEE REF 30	

NOTES

1. DISCONNECT ICS CONTACT IN FIELD.
2. DELETED
3. DELETED
4. ADJUST MINIMUM PICK-UP TO 70 VOLTS AT JOBSITE.
5. SET ICS TARGET ON 2 AMPS TO PREVENT ICS SEAL-IN WHEN 43U2 IS IN TEST.

REFERENCES

SEE DRAWING NO. 441245

EQUIPMENT LOCATIONS:

CG	CONTROL BOARD MAIN GENERATOR
RG	GENERATOR RELAY BOARD
RVHD	STATION ELECTRIC RELAY BOARD D
JW7	TERMINAL BOX No. 7 500KV SWYD
CW16	500KV CONTROL BOARD No. 16 500KV SWYD.
EW542	500KV PCB SW542 OPERATING MECH. CONTROL CAB.
RW16	500KV RELAY BOARD No. 16 500KV SWYD.
CC3	GENERATOR CONTROL CONSOLE
SEI	EXCITATION SWGR CUBICLE 1
ETA41I	TERM BOX A41I FOR DEVICE 89XE

P.G.&E. SYSTEM PHASE SEQUENCE A-C-B

KEY DWG. SECTION 5

UNIT 2

DATE	
05-21-2024	
D.D.	MNRU
R.E.	FAZI
I.V.	N/A
P.E.	N/A

REGISTERED PROFESSIONAL ENGINEER — ROBERT F. AZIZI — No. E 12575 — STATE OF CALIFORNIA

REVISION DESCRIPTION
Revised Per DFT-7 #6135

ELECTRICAL
SCHEMATIC DIAGRAM
GENERATOR CONTROL

DIABLO CANYON POWER PLANT
PACIFIC GAS AND ELECTRIC COMPANY
SAN FRANCISCO, CALIFORNIA

DWG SCALE:	
BILL OF MATL:	
SUPSDS:	
SUPSD BY:	

DRAWING	SHEET	PAGE	REV
441246	1	0	24

DRAWING NUMBER 441246 1

UI-437558

RASTER=441246-1-0.dgn
DGN 441246-1-0.dgn
CAD User:MNRU Date: 05-21-2024

ANSI 4 Size

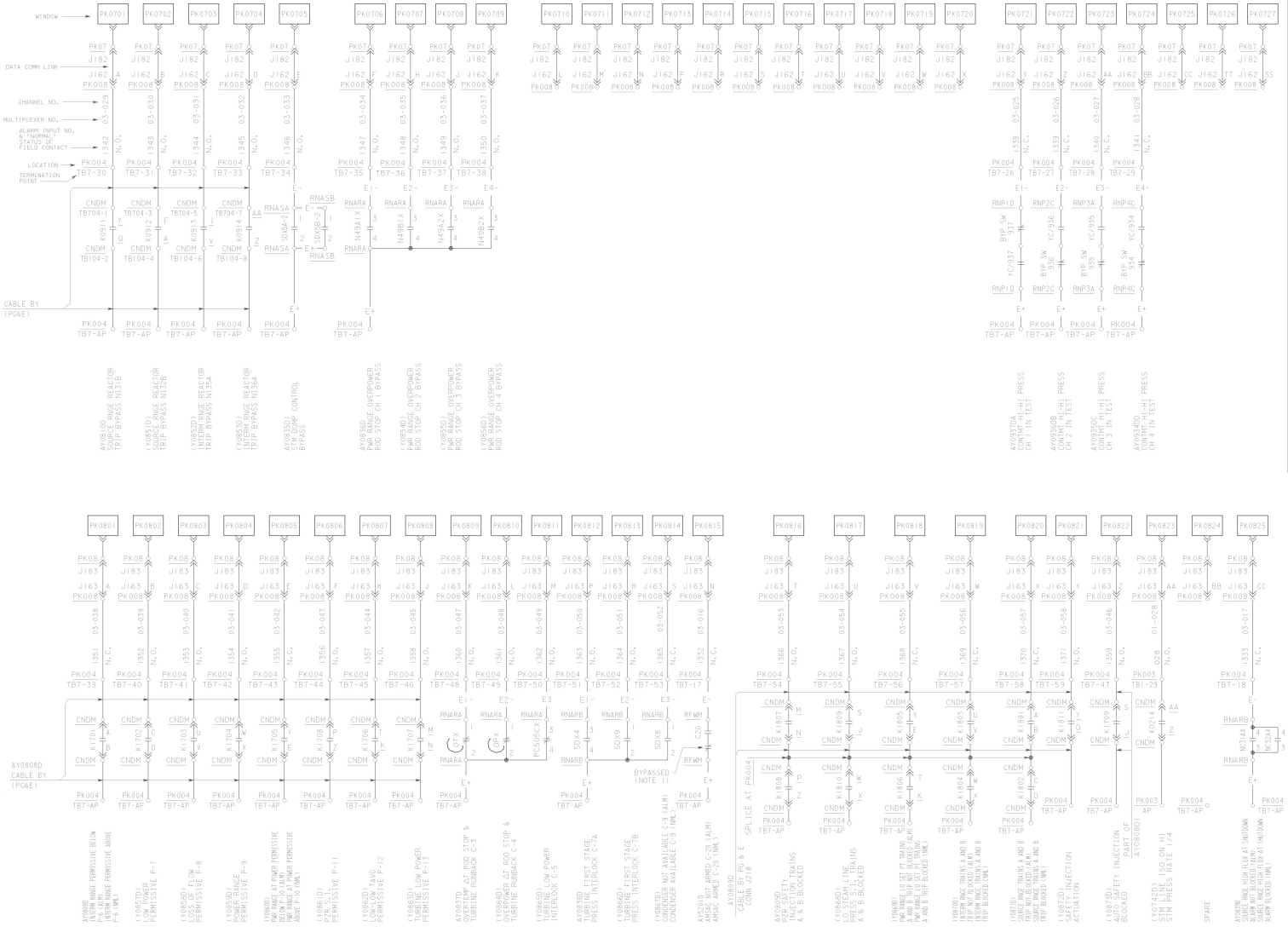

TABLE OF DEVICES

DEVICE NUMBER	FUNCTION	CATALOG NO. OR REF DWG	REMARKS
SDX4	TURB 1ST STAGE PRESS INTLK C-7A AUX RELAY	REF 8 SH 109	
SDX9	TURB 1ST STAGE PRESS INTLK C-7B AUX RELAY	REF 8 SH 109	
SDX8	CONDENSER INTERLOCK AUX RELAY	REF 8 SH 109	
SDX5A,B	STEAM DUMP CONTROL BYPASS AUX RELAY	REF 8 SH 110	
N49A1X	PWR RANGE OVERPWR ROD STOP AUX RELAY	REF 8 SH 249	
N49B1X	PWR RANGE OVERPWR ROD STOP AUX RELAY	REF 8 SH 249	
N49A2X	PWR RANGE OVERPWR ROD STOP AUX RELAY	REF 8 SH 249	
N49B2X	PWR RANGE OVERPWR ROD STOP AUX RELAY	REF 8 SH 249	
OPX	OVERPWR ΔT ROD STOP TURB RUNBACK AUX RELAY	REF 8 SH 250	
OTX	OVERTEMP ΔT ROD STOP TURB RUNBACK AUX RELAY	REF 8 SH 250	
PC505CX	TURBINE LOW PWR INTERLOCK AUX RELAY	REF 8 SH 259	
K0214	CONT BOARD DEMULTIPLEXER OUTPUT RELAY	663251 SH 30	
K0911	SOURCE RANGE REACTOR TRIP AUX RELAY	REF 5 SH 37	
K0912	SOURCE RANGE REACTOR TRIP AUX RELAY	REF 5 SH 37	
K0913	INTERM RANGE REACTOR TRIP AUX RELAY	REF 5 SH 37	
K0914	INTERM RANGE REACTOR TRIP AUX RELAY	REF 5 SH 37	
K1701	INTERM RANGE PERMISSIVE P-6 AUX RELAY	REF 5 SH 44	
K1702	LOW POWER PERMISSIVE P-7 AUX RELAY	REF 5 SH 44	
K1703	LOSS OF FLOW PERMISSIVE P-8 AUX RELAY	REF 5 SH 44	
K1704	PWR RANGE PERMISSIVE P-9	REF 5 SH 44	
K1705	PWR RANGE AT PWR PERMISSIVE P-10 AUX RELAY	REF 5 SH 44	
K1706	LOW-LOW TAVG PERMISSIVE P-12 AUX RELAY	REF 5 SH 44	
K1707	TURBINE LOW PWR PERMISSIVE P-13 AUX RELAY	REF 5 SH 44	
K1708	PZR S.I. PERMISSIVE P-11 AUX RELAY	REF 5 SH 44	
K1709	AUTO S.I. BLOCKED AUX RELAY	REF 5 SH 44	
K1801,02	SOURCE RANGE TRAINS A&B TRIP BLOCKED AUX RLY	REF 5 SH 44	
K1803,04	INTERM RANGE TRAINS A&B TRIP BLOCKED AUX RLY	REF 5 SH 44	
K1805,06	PWR RANGE LO SET PT TRAINS A&B TRIP BLOCKED AUX RLY	REF 5 SH 44	
K1807,08	PZR ISOLATION TRAINS A&B BLOCKED AUX RELAY	REF 5 SH 44	
K1809,10	STM LINE S.I. TRAINS A&B BLOCKED AUX RLY	REF 5 SH 44	
K1811	S.I. ACTUATION AUX RELAY	REF 5 SH 44	
(NC51AX, NC52AX)	SOURCE RANGE HI FLUX AT SHUTDOWN BLOCKED AUX RELAY	458862	
YC/934,935 YC/936,937	CONTMT HI-HI PRESS CONVERTER OUTPUT	REF 10	CONTACTS CLOSED UNDER NORMAL OPERATION. CONTACTS OPEN TO ALARM
C20	AMSAC ARMED	6008434-3	
BYP SW 934	EAGLE 21 BYPASS SW	10981-7 6010908-279	
BYP SW 935	EAGLE 21 BYPASS SW	10981-6 6010908-220	
BYP SW 936	EAGLE 21 BYPASS SW	10981-5 6010908-176	
BYP SW 937	EAGLE 21 BYPASS SW	10981-4 6010908-120	

NOTES

1. BYPASSED CONTACT IS CLOSED WHEN THE SYSTEM IS NOT MANUALLY BYPASSED.
2. ALL DEVICE CONTACTS ARE OPEN UNDER NORMAL OPERATING CONDITIONS AND CLOSE TO ALARM UNLESS OTHERWISE NOTED.

EQUIPMENT LOCATIONS

CNDM	CONTROL BOARD DEMULTIPLEXER
RNARA	RACK NUCLEAR AUX RELAY CUBICLE A
RNARB	RACK NUCLEAR AUX RELAY CUBICLE B
PK004	MAIN ANNUNCIATOR CABINET #4
PK06	MAIN ANNUNCIATOR WINDOW BYPASS LIGHTS GROUP #6
PK07	MAIN ANNUNCIATOR WINDOW PERMISSIVE LIGHTS GROUP #7

REFERENCES

DWG NO.

1. SCHEMATIC DIAGRAM STEAM DUMP SYSTEM ____ 437649
2. DIAGRAM OF CONNECTIONS, MAIN ANNUNCIATOR ____ 447807
3. DIAG OF CONNECTIONS NUCLEAR AUX RELAY RACK A ____ 445639
4. DIAG OF CONNECTIONS NUCLEAR AUX RELAY RACK B ____ 445640
5. SOLID STATE PROTECTION SYS INTERCONNECTION DIAG (W) ___ REC 663231
6. AUXILIARY RELAY RACKS (W) ____ REC 663222
7. MAIN ANNUNCIATOR SYSTEM (RONAN) ____ REC (LATER)
8. ELEMENTARY WIRING DIAGRAM (W) ____ REC 663193
9. DIAGRAM OF CONNECTION MAIN ANNUN PWR SUPPLIES & SUMMARY OF SP CABLES ____ 445609
10. (W) INSTRUCTION BOOK, CONT & PROT INSTR SYS VOL 1 ___ REC 663230-82
11. SCHEMATIC DIAGRAM CONTAINMENT EVACUATION ALARM SYSTEM ___ 458862
12. ARRANGEMENT MAIN ANNUNCIATOR WINDOWS ____ 500808

REGISTERED PROFESSIONAL ENGINEER — ROBERT MARTIN JR. — E 16911 — Exp. 6/30/2001 — ELECTRICAL — STATE OF CALIFORNIA

KEY DWG. SECTION 8

UNIT 1

DATE	REVISION DESCRIPTION
08-01-2006	REVISED PER FCT-031624

D.D.	AJL2
R.E.	UME1
I.V.	
P.E.	R2M5

ELECTRICAL
SCHEMATIC DIAGRAM
PERMISSIVE & BYPASS LIGHTS

DIABLO CANYON POWER PLANT
PACIFIC GAS AND ELECTRIC COMPANY
SAN FRANCISCO, CALIFORNIA

DWG SCALE#
BILL OF MAT'L#
SUPSDS#
SUPSD BY#
DRAWING 437701 | SHEET 1 | PAGE 0 | REV 11

U2-441369

RASTER:437701.dgn
DGN:437701.dgn
CAD Size:A4L2 Date:08-01-2006

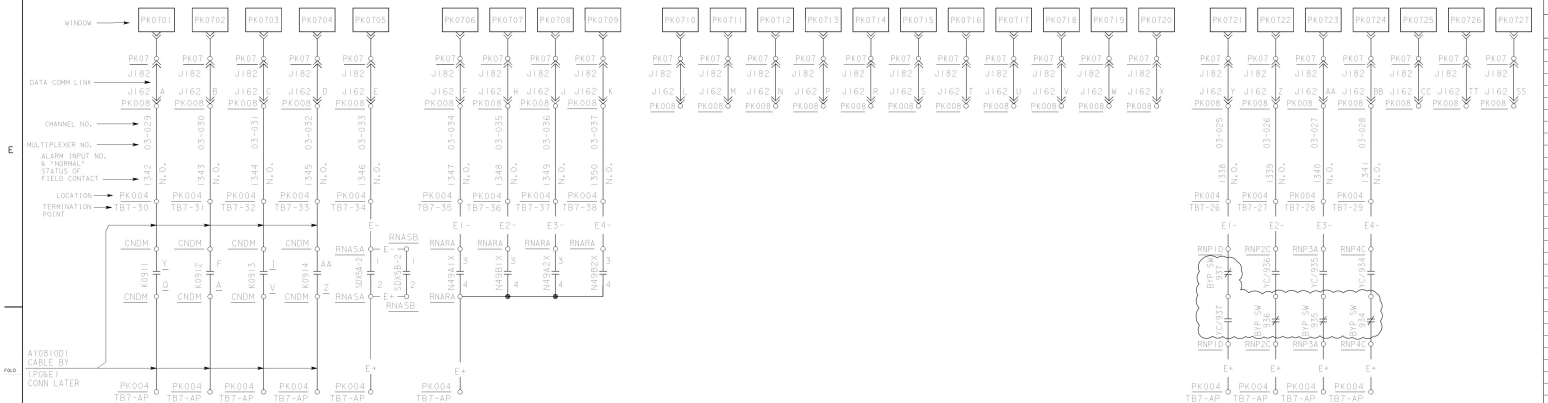

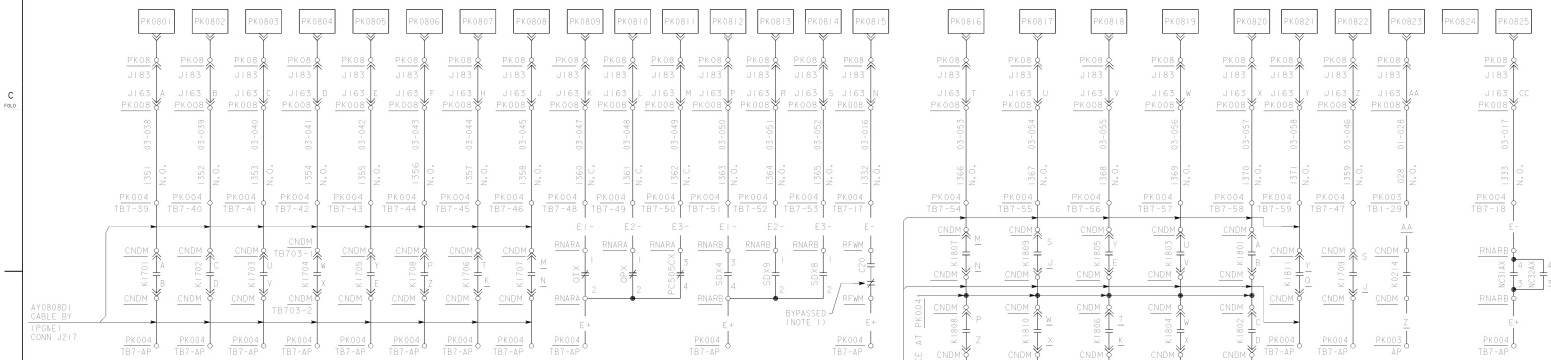

TABLE OF DEVICES

DEVICE NUMBER	FUNCTION	CATALOG NO. OR REF DWG	REMARKS
SDX4	TURB 1ST STAGE PRESS INTLK C-7A AUX RELAY	REF 8 SH 109	
SDX9	TURB 1ST STAGE PRESS INTLK C-7B	REF 8 SH 109	
SDX8	CONDENSER INTERLOCK AUX RELAY	REF 8 SH 109	
SDX5A-2,B-2	STEAM DUMP CONTROL BYPASS AUX RELAY	REF 8 SH 110	
N49A1X	PWR RANGE OVERPWR ROD STOP AUX RELAY	REF 8 SH 249	
N49B1X	PWR RANGE OVERPWR ROD STOP AUX RELAY	REF 8 SH 249	
N49A2X	PWR RANGE OVERPWR ROD STOP AUX RELAY	REF 8 SH 249	
N49B2X	PWR RANGE OVERPWR ROD STOP AUX RELAY	REF 8 SH 249	
OPX	OVERPWR ΔT ROD STOP TURB RUNBACK AUX RELAY	REF 8 SH 250	
OTX	OVERTEMP ROD STOP TURB RUNBACK AUX RELAY	REF 8 SH 250	
PC505CX	TURBINE LOW PWR INTERLOCK AUX RELAY	REF 8 SH 259	
K0911	SOURCE RANGE REACTOR TRIP AUX RELAY	REF 5 SH 37	
K0912	SOURCE RANGE REACTOR TRIP AUX RELAY	REF 5 SH 37	
K0913	INTERM RANGE REACTOR TRIP AUX RELAY	REF 5 SH 37	
K0914	INTERM RANGE REACTOR TRIP AUX RELAY	REF 5 SH 37	
K1701	INTERM RANGE PERMISSIVE P-6 AUX RELAY	REF 5 SH 44	
K1702	LOW POWER PERMISSIVE P-7 AUX RELAY	REF 5 SH 44	
K1703	LOSS OF FLOW PERMISSIVE P-8 AUX RELAY	REF 5 SH 44	
K1704	PWR RANGE PERMISSIVE P-9	REF 5 SH 44	
K1705	PWR RANGE AT PWR PERMISSIVE P-10 AUX RELAY	REF 5 SH 44	
K1706	LOW-LOW TAVG PERMISSIVE P-12 AUX RELAY	REF 5 SH 44	
K1707	TURBINE LOW PWR PERMISSIVE P-13 AUX RELAY	REF 5 SH 44	
K1708	PZR S.I. PERMISSIVE P-11 AUX RELAY	REF 5 SH 44	
K1709	AUTO S.I. BLOCKED AUX RELAY	REF 5 SH 44	
K1801,02	SOURCE RANGE TRAINS A&B TRIP BLOCKED AUX RLY	REF 5 SH 44	
K1803,04	INTERME RANGE TRAINS A&B TRIP BLOCKED AUX RLY	REF 5 SH 44	
K1805,06	PWR RANGE LO SET PT TRAINS A&B TRIP BLOCKED AUX RLY	REF 5 SH 44	
K1807,08	PZR ISOLATION TRAINS A&B BLOCKED AUX RLY	REF 5 SH 44	
K1809,10	STM LINE S.I. TRAINS A&B BLOCKED AUX RLY	REF 5 SH 44	
K1811	S.I. ACTUATION AUX RELAY	REF 5 SH 44	
NC31AX NC32AX	SOURCE RANGE HI FLUX AT SHUTDOWN BLOCKED AUX RELAY	REF 11	
YC/934, 935, 936, 937	CONTMT HI-HI PRESS CONVERTER OUTPUT	REF 13	CONTACTS CLOSED UNDER NORMAL OPERATION. CONTACTS OPEN TO ALARM.
C20	AMSAC ARMED/BYPASSED	REF 12	
BYP SW 934	EAGLE 21 BYPASS SW	6010909 SH 279	
BYP SW 935	EAGLE 21 BYPASS SW	6010909 SH 220	
BYP SW 936	EAGLE 21 BYPASS SW	6010909 SH 176	
BYP SW 937	EAGLE 21 BYPASS SW	6010909 SH 120	

NOTE

1. BYPASSED CONTACT IS CLOSED WHEN THE SYSTEM IS NOT MANUALLY BYPASSED.

EQUIPMENT LOCATIONS

CNDM	CONTRO BOARD DEMULTIPLEXER
RNARA	RACK NUCLEAR AUX RELAY CUBICLE A
RNARB	RACK NUCLEAR AUX RELAY CUBICLE B
PK004	MAIN ANNUNCIATOR CAABINET #4
PK07	MAIN ANNUNCIATOR WINDOW BYPASS LIGHTS GROUP #7
PK08	MAIN ANNUNCIATOR WINDOW PERMISSIVE LIGHTS GROUP #8

REFERENCES

	DWG NO.
1. SCHEMATIC DIAGRAM STEAM DUMP SYSTEM	441503
2. DIAG OF CONN PERMISSIVE & BYPASS LIGHTS	441414
3. DIAG OF CONN NUCLEAR AUX RELAY RACK A	452784
4. DIAG OF CONN NUCLEAR AUX RELAY RACK B	452785
5. SOLID STATE PROTECTION SYS (INTERCONNECTION DIAG. W)	REC. 663231
6. AUXILIARY RELAY RACKS (W)	REC. 663222
7. MAIN ANNUNCIATOR SYSTEM (RONAN)	
8. ELEMENTARY WIRING DIAGRAM (W)	REC. 663193
9. DIAGRAM OF CONN MAIN ANNUN PWR SUPPLIES & SUMMARY OF SP CABLES	452662
10. (W) INSTRUCTION BOOK, CONT & PROT INSTR SYS VOL I	REC. 663230-82
11. SCHEM DIAG FIRE, SITE EMERG & CNT EVAC ALARM SYS	437879
12. ATWS MITIGATION SYS ACTUATION CIRCUITRY (AMSAC)	6008434
13. EAGLE 21 PRECESS PROTECTION SYS	6010909

KEY DWG. SECTION 8

UNIT 2

DATE	DESCRIPTION	COORDINATION
2/21/03		NUCL. -
DWN. RKGS	Revised per AR A0541575 and ET-26807	MECH. -
R.E. RHSJ		ELEC. -
INDEP. VERIFIER LALS		CIVIL -
P.E. LALS		PIPING -
		I&C -

REVISION INFORMATION

ELECTRICAL
SCHEMATIC DIAGRAM
PERMISSIVE & BYPASS LIGHTS

DIABLO CANYON POWER PLANT
PACIFIC GAS AND ELECTRIC COMPANY
SAN FRANCISCO, CALIFORNIA

DWG SCALE:
BILL OF MATL
SUPSDS
SUPSD BY
SHEET NO. 1 OF

441369 REV 7

U1 - 437701

REGISTERED PROFESSIONAL ENGINEER LAWRENCE A. CONKLIN E 10315 Exp. 6/30/05 ELECTRICAL STATE OF CALIFORNIA

CAD User: rxg2 Date: 10-08-2002
DGN: s41369.DGN

TABLE OF INPUTS

PROTECTION SYSTEM BISTABLE

FUNCTION	CHANNELS				LOGIC FORM	ACTUATION FUNCTION	REMARKS
LO TAVG	I	II	III	IV	2/4	INTERLOCK	
LO LO TAVG	I	II	III	IV	2/4	INTERLOCK	
STM. GEN. LO LO WTR. LEVEL LOOP 1		II	III	IV	2/3	REACTOR TRIP	
STM. GEN. LO LO WTR. LEVEL LOOP 2	I		III	IV	2/3	REACTOR TRIP	
STM. GEN. LO LO WTR. LEVEL LOOP 3	I		III	IV	2/3	REACTOR TRIP	
STM. GEN. LO LO WTR. LEVEL LOOP 4		II	III	IV	2/3	REACTOR TRIP	
STM. GEN. HI HI LEVEL GENERATOR 1		II	III	IV	2/3	FEEDWTR. TRIP	
STM. GEN. HI HI LEVEL GENERATOR 2	I		III	IV	2/3	FEEDWTR. TRIP	
STM. GEN. HI HI LEVEL GENERATOR 3	I		III	IV	2/3	FEEDWTR. TRIP	
STM. GEN. HI HI LEVEL GENERATOR 4		II	III	IV	2/3	FEEDWTR. TRIP	
PRESSURIZER PRESSURE	I	II	III		2/3	INTERLOCK	PERMISSIVE P11
PRESSURIZER LOW LOW PRESSURE	I	II	III	IV	2/4	SIS	
PRESSURIZER LOW PRESSURE	I	II	III	IV	2/4	REACTOR TRIP	
PRESSURIZER HI PRESSURE	I	II	III	IV	2/4	REACTOR TRIP	
PRESSURIZER HI WATER LEVEL	I	II	III		2/3	REACTOR TRIP	
HI STEAM PRESSURE RATE LOOP 1	I	II		IV	2/3	STMLINE ISOL	BELOW P-11
HI STEAM PRESSURE RATE LOOP 2	I	II	III		2/3	STMLINE ISOL	BELOW P-11
HI STEAM PRESSURE RATE LOOP 3	I	II	III		2/3	STMLINE ISOL	BELOW P-11
HI STEAM PRESSURE RATE LOOP 4	I	II		IV	2/3	STMLINE ISOL	BELOW P-11
LO STEAM PRESSURE RATE LOOP 1	I	II		IV	2/3	SIS & STML ISO	ABOVE P-11
LO STEAM PRESSURE RATE LOOP 2	I	II	III		2/3	SIS & STML ISO	ABOVE P-11
LO STEAM PRESSURE RATE LOOP 3	I	II	III		2/3	SIS & STML ISO	ABOVE P-11
LO STEAM PRESSURE RATE LOOP 4	I	II		IV	2/3	SIS & STML ISO	ABOVE P-11
REACTOR COOLANT LOOP 1 LOW FLOW	I	II	III		2/3	REACTOR TRIP	
REACTOR COOLANT LOOP 2 LOW FLOW	I	II	III		2/3	REACTOR TRIP	
REACTOR COOLANT LOOP 3 LOW FLOW	I	II	III		2/3	REACTOR TRIP	
REACTOR COOLANT LOOP 4 LOW FLOW	I	II	III		2/3	REACTOR TRIP	
HI CONTAINMENT PRESSURE		II	III	IV	2/3	SIS	
HI HI CONTAINMENT PRESSURE	I	II	III	IV	2/4	PH B ISOL/SPRAY	
TURBINE IMPULSE PRESSURE	I	II			1/2	INTERLOCK	PERMISSIVE P13
OVER TEMPERATURE △T	I	II	III	IV	2/4	REACTOR TRIP	
OVER POWER △T	I	II	III	IV	2/4	REACTOR TRIP	

NIS INPUTS BISTABLE

FUNCTION	CHANNELS				LOGIC FORM	ACTUATION FUNCTION	REMARKS
SOURCE RANGE HI LEVEL TRIP	I	II			1/2	REACTOR TRIP	
SOURCE RANGE TRIP BYPASS	I	II			1/2	INTERLOCK	
INTERMEDIATE RANGE HI LEVEL TRIP	I	II			1/2	REACTOR TRIP	
INTERMEDIATE RANGE TRIP BYPASS	I	II			1/2	INTERLOCK	
POWER RANGE LOW RANGE TRIP	I	II	III	IV	2/4	REACTOR TRIP	
POWER RANGE HI RANGE TRIP	I	II	III	IV	2/4	REACTOR TRIP	
POWER RANGE RATE TRIP	I	II	III	IV	2/4	REACTOR TRIP	2/4 OF ANY COMBINATION OF POS & NEG RATE TRIP NOT FROM THE SAME CHANNEL
INTERMEDIATE RANGE PERMISSIVE P6	I	II			1/2	INTERLOCK	
POWER RANGE PERMISSIVE P8	I	II	III	IV	2/4	INTERLOCK	
POWER RANGE PERMISSIVE P10	I	II	III	IV	2/4	INTERLOCK	
POWER RANGE PERMISSIVE P9	I	II	III	IV	2/4	INTERLOCK	

DIRECT INPUTS CONTACTS (UNSHLD. TWISTED PAIR)

FUNCTION	CHANNELS				LOGIC FORM	ACTUATION FUNCTION	REMARKS
TURBINE LOW AUTO STOP OIL PRESSURE	I	II	III		2/3	REACTOR TRIP	
TURBINE STEAM STOP VALVE CLOSED	I	II	III	IV	4/4	REACTOR TRIP	
REACTOR COOLANT PUMP BUS UNDERVOLTAGE	I	II	III	IV	1/2	REACTOR TRIP	ON BOTH BUSSES
REACTOR COOLANT PUMP BUS UNDERFREQUENCY	I	II	III		2/3	TRIP RCPS (REACTOR TRIP)	ON EITHER BUS
REACTOR COOLANT PUMP BREAKER TRIP	I	II	III	IV	2/4	REACTOR TRIP	
SEISMIC TRIP	I	II	III		2/3	REACTOR TRIP	

LOGIC INPUTS MANUAL

FUNCTION	CHANNELS	LOGIC FORM	ACTUATION FUNCTION	REMARKS
REACTOR TRIP ACTUATION	——	1/2	REACTOR TRIP	
SAFETY INJECTION ACTUATION	——	1/2	SIS	
CONTAINMENT PHASE A ISOLATION	——	1/2	CNT. PH A ISOL	
CONTAINMENT SPRAY & PHASE B ISOLATION	——	2/2	CNT. SPRAY	

RESETS

FUNCTION	CHANNELS	LOGIC FORM	ACTUATION FUNCTION	REMARKS
NIS BLOCKS	——	1/1	——	
SAFETY INJECTION	——	1/1	——	
SAFETY INJECTION BLOCK	——	1/1	——	
CONTAINMENT PHASE A ISOL	——	1/1	——	
CONTAINMENT PHASE B ISOL	——	1/1	——	
CONTAINMENT VENTILATION ISOL	——	1/1	——	
CONTAINMENT SPRAY	——	1/1	——	
FEEDWATER ISOLATION	——	1/1	——	

NIS BLOCKS ACTUATION

FUNCTION	CHANNELS	LOGIC FORM	ACTUATION FUNCTION	REMARKS
SOURCE RANGE	——	1/1	——	
INTERMEDIATE RANGE	——	1/1	——	
POWER RANGE	——	1/1	——	

LOGIC INPUTS AUTO

FUNCTION	CHANNELS	LOGIC FORM	ACTUATION FUNCTION	REMARKS
CNT. RADIOACTIVITY DETECTOR	——	1/2	CNT. VENT ISOL	
REACTOR TRIP BYPASS BKR. AUX. SWITCH	——	1/1		BLOCKS TESTING IF BKR CLOSED

TABLE OF OUTPUTS

SOLID STATE PROTECTION SYSTEM — CONTACTS

FUNCTION	BUS	CONT PWR AC	CONT PWR DC	LOGIC TRAIN	E.S.F. ACTUATION SIGNAL	TYPE OF OUTPUTS (FIG.)	REMARKS
DIESEL GENERATOR NO. 22	H		23/22	A & B	SIS	4	TWO SEPARATE STARTING CKTS
DIESEL GENERATOR NO. 21	G		22/21	B	SIS	1/1	TWO SEPARATE STARTING CKTS
DIESEL GENERATOR NO. 23	F		21/23	A	SIS	1/1	TWO SEPARATE STARTING CKTS SEE NOTE 17, DWG 445650
4KV BUS F AUTO TRANSFER	F		21	A	SIS	1	
4KV BUS G AUTO TRANSFER	G		22	B	SIS	1	
4KV BUS H AUTO TRANSFER	H		23	A & B	SIS	3	
REACTOR COOLANT PUMP NO. 21	E			A & B	UNDERFREQ	3	
REACTOR COOLANT PUMP NO. 22	D			A & B	UNDERFREQ	3	
REACTOR COOLANT PUMP NO. 23	E			A & B	UNDERFREQ	3	
REACTOR COOLANT PUMP NO. 24	D			A & B	UNDERFREQ	3	
AUX FEEDWATER PUMP NO. 21 (FCV 95)	G		22	A & B	SEE RMKS.	4	START BY AMSAC, SGL, 12KV UV
AUX FEEDWATER PUMP NO. 22	H		23	B	SEE RMKS.	1	START BY SIS OR AMSAC
AUX FEEDWATER PUMP NO. 23	F		21	A	SEE RMKS.	1	START BY SIS OR AMSAC
AUX SALT WATER PUMP NO. 21	F		21	A	SIS	1	
AUX SALT WATER PUMP NO. 22	G		22	B	SIS	1	
COMPONENT COOLING WTR PUMP NO. 21	F		21	A	SIS	1	
COMPONENT COOLING WTR PUMP NO. 22	G		22	B	SIS	1	
COMPONENT COOLING WTR PUMP NO. 23	H		23	A & B	SIS	4	
CONTAINMENT SPRAY PUMP NO. 21	G		22	B	CNT. SPRAY & SIS	1	
CONTAINMENT SPRAY PUMP NO. 22	H		23	A	CNT. SPRAY & SIS	1	
SAFETY INJECTION PUMP NO. 21	F		21	A	SIS	1	
SAFETY INJECTION PUMP NO. 22	H		23	B	SIS	1	
RESIDUAL HEAT REMOVAL PUMP NO. 21	G		22	B	SIS	1	
RESIDUAL HEAT REMOVAL PUMP NO. 22	H		23	A	SIS	1	
CHARGING PUMP NO. 21	F		21	A	SIS	1	
CHARGING PUMP NO. 22	G		22	B	SIS	1	
CHARGING PUMP NO. 23 (RECIPROCATING)	G		22	——	——	——	NO SAFEGUARD SIGNAL
CONTAINMENT FAN COOLER 21	F	2F		A	SIS	1	
CONTAINMENT FAN COOLER 22	F	2F		A	SIS	1	
CONTAINMENT FAN COOLER 23	G	2G		B	SIS	1	
CONTAINMENT FAN COOLER 24	H	2H		A & B	SIS	4	
CONTAINMENT FAN COOLER 25	G	2G		B	SIS	1	
UNIT TRIP 86G1			21	A	TURB TRIP	4	
UNIT TRIP 86G11			22	B	TURB TRIP	4	
E.S.F. VENTILATION SYSTEM NO. 1	F		21	A	SIS	1	
E.S.F. VENTILATION SYSTEM NO. 2	H		23	B	SIS	1	
TURBINE TRIP (20/ET) (20/OPC-1)				B	SEE RMKS.	1/1	TRIP BY STM GEN HI HI LEV, SIS OR AMSAC
TURBINE TRIP (20 AST-1)				A	SEE RMKS.	1	TRIP BY STM GEN HI HI LEV, SIS OR AMSAC
FCV 25 MAIN STM ISOL BP SG 21	F		21	B	STM LINE ISOL	2	
FCV 24 MAIN STM ISOL BP SG 22	G		22	B	STM LINE ISOL	2	
FCV 23 MAIN STM ISOL BP SG 23	G		22	B	STM LINE ISOL	2	
FCV 22 MAIN STM ISOL BP SG 24	H		23	B	STM LINE ISOL	2	
FCV 41 MAIN STM ISOL VV SG 21	F/G		21/22	A & B	STM LINE ISOL	4	TWO SOLENOID VVS ENERGIZE TO TRIP
FCV 42 MAIN STM ISOL VV SG 22	F/G		21/22	A & B	STM LINE ISOL	4	TWO SOLENOID VVS ENERGIZE TO TRIP
FCV 43 MAIN STM ISOL VV SG 23	F/H		21/23	A & B	STM LINE ISOL	4	TWO SOLENOID VVS ENERGIZE TO TRIP
FCV 44 MAIN STM ISOL VV SG 24	F/H		21/23	A & B	STM LINE ISOL	4	TWO SOLENOID VVS ENERGIZE TO TRIP
FCV 438 SG 21 FW IN ISOL VV	F	2F		A	SEE RMKS.	1	TRIP BY SG HI HI LEVEL OR SIS
FCV 439 SG 22 FW IN ISOL VV	G	2G		A	SEE RMKS.	1	TRIP BY SG HI HI LEVEL OR SIS
FCV 440 SG 23 FW IN ISOL VV	H	2H		A	SEE RMKS.	1	TRIP BY SG HI HI LEVEL OR SIS
FCV 441 SG 24 FW IN ISOL VV	F	2F		A	SEE RMKS.	1	TRIP BY SG HI HI LEVEL OR SIS
MAIN FEEDWATER PUMP NO. 21	E		22	B	SEE RMKS.	1	TRIP BY SG HI HI LEVEL OR SIS
MAIN FEEDWATER PUMP NO. 22	D		21	B	SEE RMKS.	1	TRIP BY SG HI HI LEVEL OR SIS
FCV 510 SG 21 MAIN FW SUPPLY	F/G		21/22	A & B	FW ISOL	5	TWO SOLENOID VVS DEENERGIZE TO TRIP
FCV 520 SG 22 MAIN FW SUPPLY	F/G		21/22	A & B	FW ISOL	5	TWO SOLENOID VVS DEENERGIZE TO TRIP
FCV 530 SG 23 MAIN FW SUPPLY	F/G		21/22	A & B	FW ISOL	5	TWO SOLENOID VVS DEENERGIZE TO TRIP
FCV 540 SG 24 MAIN FW SUPPLY	F/G		21/22	A & B	FW ISOL	5	TWO SOLENOID VVS DEENERGIZE TO TRIP
REACTOR PRESS HTR GROUP NO. 22	G		22	B	SIS	1	TRIP ON SIS
REACTOR PRESS HTR GROUP NO. 23	H		23	A	SIS	1	TRIP ON SIS
CHEMICAL & VOLUME CONT SYS VALVES							
8100 RCP SEAL WTR RET HDR VV 1	G	2G		B	PH A ISOL	1	REDUNDANT VVS IN SERIES
8112 RCP SEAL WTR RET HDR VV 2(IN CNT)	H	2H		A	PH A ISOL	1	CLOSE ON PH A ISOL
8107 COLD LEG LOOP CHG VALVE 1	F	2F		A	SIS	1	REDUNDANT VVS IN SERIES
8108 COLD LEG LOOP CHG VALVE 2	G	2G		B	SIS	1	CLOSE ON SIS
8149A LETDOWN ORIFICE 21 OUT (IN CNT)	F		21	A	PH A ISOL	2	VALVES 8149A,B&C ARE IN
8149B LETDOWN ORIFICE 22 OUT (IN CNT)	F		21	A	PH A ISOL	2	PARALLEL AND REDUNDANT
8149C LETDOWN ORIFICE 23 OUT (IN CNT)	F		21	A	PH A ISOL	2	VALVE 8152 IN SERIES CLOSE
8152 LETDOWN HTXCHG CROSS-TIE	G		22	B	PH A ISOL	2	ON PH A ISOL
LCV112B VCT OUTLET CHG PP SUCTION MOV	F	2F		A	SIS	1	REDUNDANT VVS IN SERIES
LCV112C VCT OUTLET CHG PP SUCTION MOV	G	2G		B	SIS	1	CLOSE ON SIS
LIQUID RADWASTE SYSTEM VALVES							
FVC 500 CNT BLDG SUMP DISCH (IN CNT)	F		21	A	PH A ISOL	2	REDUNDANT VVS IN SERIES
FVC 501 CNT BLDG SUMP DISCH	G		22	B	PH A ISOL	2	CLOSE ON PH A ISOL
FCV 260 RC DRN TK N2 SUPPLY	G		22	B	PH A ISOL	2	
FCV 255 RC DRN TK VENT HDR (IN CNT)	F		21	A	PH A ISOL	2	REDUNDANT VVS IN SERIES
FCV 256 RC DRN TK VENT HDR	G		22	B	PH A ISOL	2	CLOSE ON PH A ISOL
FCV 257 RC DRN TK GAS ANAL	G		22	B	PH A ISOL	2	REDUNDANT VVS IN SERIES
FCV 258 RC DRN TK GAS ANAL (IN CNT)	F		21	A	PH A ISOL	2	CLOSE ON PH A ISOL
FCV 253 RC DRN TK PPS DISCH (IN CNT)	F		21	A	PH A ISOL	2	REDUNDANT VVS IN SERIES
FCV 254 RC DRN TK PPS DISCH	G		22	B	PH A ISOL	2	CLOSE ON PH A ISOL
STEAM DUMP SYSTEM	F/G			A & B	LO LO TAVG	4	
STEAM DUMP SYSTEM	F/G			A & B	TURBINE TRIP	4	

SOLID STATE PROTECTION SYSTEM — CONTACTS

FUNCTION	BUS	CONT PWR AC	CONT PWR DC	LOGIC TRAIN	E.S.F. ACTUATION SIGNAL	TYPE OF OUTPUTS (FIG.)	REMARKS
SAFETY INJECTION SYSTEM VALVES							
8801A CHARGING INJ OUTLET VV 1	F	2F		A	SIS	1	REDUNDANT VVS IN PARALLEL
8801B CHARGING INJ OUTLET VV 2	G	2G		B	SIS	1	OPEN ON SIS
8803A CHARGING INJ SUPPLY VV 1	F	2F		A	SIS	1	REDUNDANT VVS IN PARALLEL
8803B CHARGING INJ SUPPLY VV 2	G	2G		B	SIS	1	OPEN ON SIS
8805A CHG PP REFUEL WTR SUPPLY VV 1	F	2F		A	SIS	1	REDUNDANT VVS IN PARALLEL
8805B CHG PP REFUEL WTR SUPPLY VV 2	G	2G		B	SIS	1	OPEN ON SIS
8808A ACCUM 21 INJ COLD LEG	F	2F		A	SIS	1	P11 SIS UNBLOCK PRESS
8808B ACCUM 22 INJ COLD LEG	G	2G		B	SIS	1	P11 BLOCKS OPENING UNTIL
8808C ACCUM 23 INJ COLD LEG	H	2H		A	SIS	1	SYS IS PRESSURIZED SIS
8808D ACCUM 24 INJ COLD LEG	G	2G		B	SIS	1	ALSO BLOCKS CLOSING
8870A CHARGING INJ OUT TO BA TK	F		21	A	SIS	2	REDUNDANT VVS IN SERIES
8870B CHARGING INJ OUT TO BA TK	G		22	B	SIS	2	CLOSE ON SIS
8880 ACCUM N2 SUPPLY HDR	H		23	B	PH A ISOL	2	
8871 ACCUMULATOR TEST (IN CNT)	H		23	A	PH A ISOL	2	
8961 ACCUMULATOR TEST	G		22	B	PH A ISOL	2	
8911 BORIC ACID SUPPLY TO BIT	F		21	A	SIS	2	
FCV 584 CNT INSTRUMENT AIR SUPPLY	H		23	B	PH A ISOL	2	
FCV 633 CNT FIRE WATER ISOL	G		22	B	PH A ISOL	2	
8883 SAFETY INJECTION PUMP TEST LINE	G		22	B	PH A ISOL	2	
CONTAINMENT SPRAY SYSTEM VALVES							
8992 SPRAY ADDITIVE TANK OUTLET	F	2F		A & B	CNT SPRAY	3	
9001A SPRAY PP NO 21 DISCH ISOL VALVE	G	2G		B	CNT SPRAY & SIS	1	
9001B SPRAY PP NO 22 DISCH ISOL VALVE	H	2H		A	CNT SPRAY & SIS	1	
8994A SPRAY ADDITIVE TK OUT ISOL LN 1	G	2G		B	CNT SPRAY	1	REDUNDANT VVS IN PARALLEL
8994B SPRAY ADDITIVE TK OUT ISOL LN 2	H	2H		A	CNT SPRAY	1	OPEN ON CNT SPRAY
NUCLEAR STM SUPPLY SAMPLE SYS VVS							
9354A PRESSURIZER STM SAMPLE (IN CNT)	F		21	A	PH A ISOL	2	REDUNDANT VVS IN SERIES
9354B PRESSURIZER STM SAMPLE	G		22	B	PH A ISOL	2	CLOSE ON PH A ISOL
9355A PRESSURIZER LIQUID SAMPLE (IN CNT)	F		21	A	PH A ISOL	2	CLOSE ON PH A ISOL
9355B PRESSURIZER LIQUID SAMPLE	G		22	B	PH A ISOL	2	CLOSE ON PH A ISOL
9356A HOT LEG SAMPLE (IN CNT)	F		21	A	PH A ISOL	2	CLOSE ON PH A ISOL
9356B HOT LEG SAMPLE	G		22	B	PH A ISOL	2	CLOSE ON PH A ISOL
9357A ACCUMULATOR SAMPLE (IN CNT)	F		21	A	PH A ISOL	2	CLOSE ON PH A ISOL
9357B ACCUMULATOR SAMPLE	G		22	B	PH A ISOL	2	CLOSE ON PH A ISOL
COMPONENT COOLING WATER SYS VALVES							
FCV 355 CCW SUPPLY HEADER C	H	2H		A	PH B ISOL	1	
FCV 360 CNT FAN CLRS 1,2 & 5 CCW RET	F		21	A	SIS	2	
FCV 366 CNT FAN CLRS 3 & 4 CCW RET	G		22	B	SIS	2	
FCV 356 RCP CCW SUPPLY HEADER	G	2G		A	PH B ISOL	1	
FCV 363 RCP OIL COOLER CCW RET	G	2G		B	PH B ISOL	1	REDUNDANT VVS IN SERIES
FCV 749 RCP OIL COOLER CCW RET (IN CNT)	H	2H		A	PH B ISOL	1	CLOSE ON PH B ISOL
FCV 357 RCP BARRIER CCW RET	H	2H		B	PH B ISOL	1	REDUNDANT VVS IN SERIES
FCV 750 RCP BARRIER CCW RET (IN CNT)	F	2F		A	PH B ISOL	1	CLOSE ON PH B ISOL
FCV 361 EXCESS LETDOWN HEAT XCHNGR	H		23	B	PH A ISOL	2	
STM GEN BLOWDOWN SYS ISOL VALVES							
FCV 763 STEAM GEN 24 BD SAMPLE (IN CNT)	H		23	A	STM LINE ISOL	2	
FCV 160 STEAM GEN 24 BD TK INLET	H		23	B	PH A ISOL	2	
FCV 244 STEAM GEN 24 BD SAMPLE	G		22	B	PH A ISOL	2	
FCV 762 STEAM GEN 23 BD SAMPLE (IN CNT)	H		23	A	STM LINE ISOL	2	
FCV 157 STEAM GEN 23 BD TK INLET	H		23	B	PH A ISOL	2	
FCV 246 STEAM GEN 23 BD SAMPLE	G		22	B	PH A ISOL	2	
FCV 761 STEAM GEN 22 BD SAMPLE (IN CNT)	G		22	A	STM LINE ISOL	2	
FCV 154 STEAM GEN 22 BD TK INLET	F		21	B	PH A ISOL	2	
FCV 248 STEAM GEN 22 BD SAMPLE	F		21	B	PH A ISOL	2	
FCV 760 STEAM GEN 21 BD SAMPLE (IN CNT)	G		22	A	STM LINE ISOL	2	
FCV 151 STEAM GEN 21 BD TK INLET	F		21	B	PH A ISOL	2	
FCV 250 STEAM GEN 21 BD SAMPLE	F		21	B	PH A ISOL	2	
REACTOR COOLANT SYSTEM VALVES							
8034A PRSZR RLF TK GAS ANAL (IN CNT)	F		21	A	PH A ISOL	2	REDUNDANT VVS IN SERIES
8034B PRSZR RLF TK GAS ANAL	G		22	B	PH A ISOL	2	CLOSE ON PH A ISOL
8029 PRSZR RLF TK PRI WATER	G		22	B	PH A ISOL	2	
8045 PRSZR RLF TK N2 SUPPLY	G		22	B	PH A ISOL	2	
VENTILATION SYSTEM ISOL VALVES							
FCV 654 CHILLED WTR SUPPLY TO CNT	G		22	B	PH A ISOL	2	
FCV 656 WTR CHILLER PP SUCTION	G		22	B	PH A ISOL	2	
FCV 660 CNT PURGE SUPPLY (IN CNT)	F		21	A	CNT VENT ISOL	2	REDUNDANT VVS IN SERIES
FCV 661 CNT PURGE SUPPLY	G		22	B	CNT VENT ISOL	2	CLOSE ON CNT VENT ISOL
FCV 662 VACUUM PRESS RELIEF (IN CNT)	F		21	A	CNT VENT ISOL	2	REDUNDANT VVS IN SERIES
FCV 663 PRESSURE RELIEF	G		22	B	CNT VENT ISOL	2	CLOSE ON CNT VENT ISOL
FCV 664 VACUUM PRESS RELIEF	G		22	B	CNT VENT ISOL	2	
FCV 678 CNT AIR SAMPLE (IN CNT)	F		21	A	CNT VENT ISOL	2	
RCV 11 CNT PURGE EXHAUST (IN CNT)	F		21	A	CNT VENT ISOL	2	REDUNDANT VVS IN SERIES
RCV 12 CNT PURGE EXHAUST	G		22	B	CNT VENT ISOL	2	CLOSE ON CNT VENT ISOL
FCV 679 CNT AIR SAMPLE	G		22	B	CNT VENT ISOL	2	
FCV 681 CNT AIR SAMPLE	G		22	B	CNT VENT ISOL	2	
CONTROL ROOM ISOLATION (CRVP)	F/G/H		21/22/23	A & B	PH A ISOL	1	
FCV 655 CHILLED WTR SUPPLY TO CNT	F		21	A	PH A ISOL	2	
FCV 657 WATER CHILLER PP SUCTION	F		21	A	PH A ISOL	2	

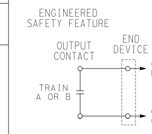

FIGURE 1

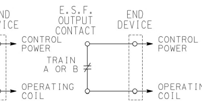

FIGURE 2

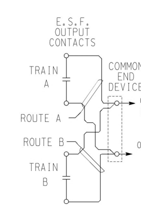

FIGURE 3

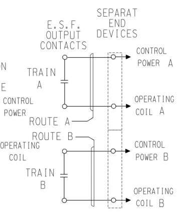

FIGURE 4

NOTE:
FIGURE 3 IS FOR SINGLE FUNCTION, OR OUT OF THREE FUNCTIONS ON UNDERGROUND SYSTEM ONLY. FIGURE 4 IS PREFERRED AND IS REQUIRED ON GROUNDED SYSTEMS.

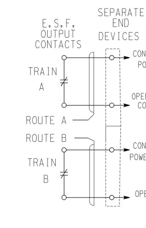

FIGURE 5

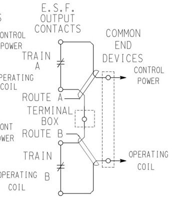

FIGURE 6

SEE NOTE 12 DWG # 445650

REFERENCES — DWG NO.

1. SEPARATION & COLOR CODE FOR INSTR. & CONTROL ENGINEERED SAFETY FEATURES SH 1 ______________ 445650
2. FOR COMPLETE LIST OF OUTPUTS, SEE SCHEM DIAG SSPS OUTPUT RELAYS-DWG #503089 & 503093.
3. AMSAC SYSTEM __________________________ 6008434

NUCLEAR SAFETY RELATED

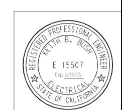

KEY DWG--SECTION 3

UNIT 2

DATE 11/14/01		DESCRIPTION	COORDINATION	
DWN.	FXC2	Revised per FCT 025951	NUCL.	-
R.E.	KJD3		MECH.	-
INDEP. VERIFIER	-		ELEC.	-
			CIVIL	-
			PIPING	-
P.E.	KBB2		I&C	-
		REVISION INFORMATION		

ELECTRICAL
SEPARATION AND COLOR CODE
INSTRUMENTATION AND CONTROL
ENGINEERED SAFETY FEATURES

DIABLO CANYON POWER PLANT
PACIFIC GAS AND ELECTRIC COMPANY
SAN FRANCISCO, CALIFORNIA

DWG SCALE
BILL OF MATL
SUPSDS
SUPSD BY
SHEET NO. 1 OF

442561 REV 7

DRAWING NUMBER 442561

CAD User:FXC2 Date:11-01-2001
DGN=442561.DGN

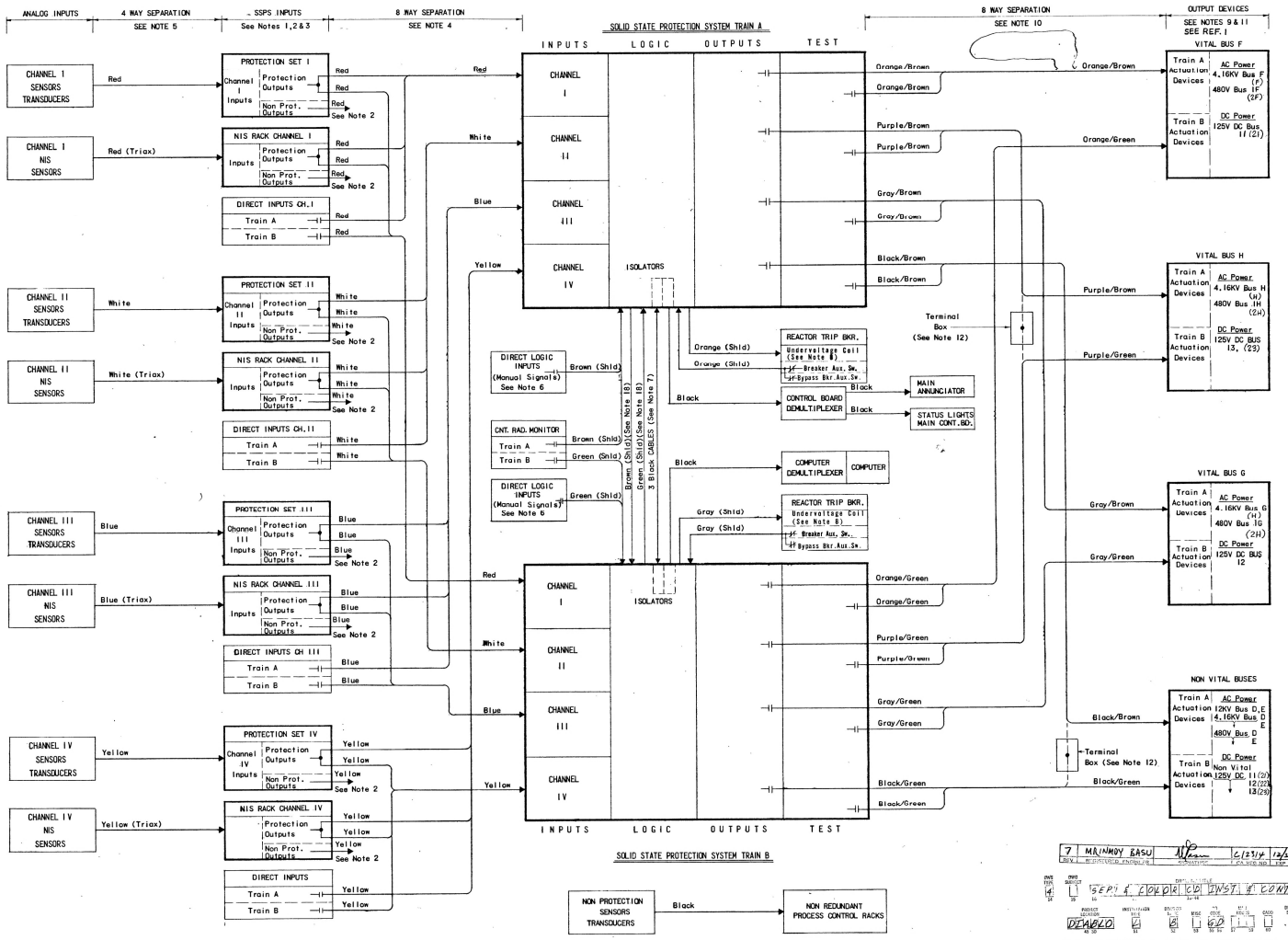

NOTES

1. For listing of Inputs & Outputs See Table on SHEET NO.2.
2. Non Protective Analogs to process control, or bistable outputs to aux. relay racks and annunciator from protection sets & NIS racks are isolated with isolators. These signals are not needed for Eng. Saf. features actuation but provide required indication and alarms.
3. The bistable and direct contact inputs normally maintain the input signal in an energized (Untripped) condition. Deenergizing or loss of this input signal will create a trip signal to the logic train. See table for logic form which actuates a safeguard output.
4. The input wires for the same channel to Trains A & B from protection outputs may share the same raceway system. Similar for the direct inputs for the same channel except for the reactor coolant pump breaker tripped signal for Train B input. This signal will run in a separate raceway system.
5. The analog inputs to the protection sets are routed in a separate raceway system from the protection set outputs. Each channel has its own system.
6. The direct logic inputs are the manual trip actuation, reset and block signals from the main control board.
7. The synchronizing cables have solid state isolators located in each train.
8. Reactor trip signal - each train maintains two undervoltage coils, one each in two ACB's, in an energized condition. A reactor trip signal will deenergize the undervoltage coils tripping the reactor trip breakers.
9. The outputs from Train A mainly operate functions associated with Bus F and Train B with Bus G. Bus H is shared between the two trains. The train association for Bus H depends on the bus association of the redundant device. That is, if the redundant device is on Bus G, than Train A will be used for Bus H. Similar if the redundant device is on Bus F, than Train B will be used for Bus H. Some functions on Bus H receive signals from both Trains A & B. See table on SHEET. 2.
10. Separate routes are maintained from each Train & each Bus Section for a total of eight paths. Output wires from Train A do not run with output wires from Train B of similar color. Second Color is marker color.
11. All isolation valves inside the containment are operated from Train A signals and the redundant isolation valve outside the containment from Train B
12. If a series connection between two normally closed output contacts is used a terminal box is used between the two trains to maintain train separation.
13. Reactor protection wire color designations

Input	Control & Instr. Wire Colors	Instr. AC Wire Colors
Channel I	Red	Orange
" II	White	Gray
" III	Blue	Purple
" IV	Yellow	Black (Vital)
Train A	brown	-
Train B	Green	-

14. Vital bus wire colors

AC Bus	DC Bus	Wire Colors
F	11(21)	Orange
G	12(22)	Gray
H	13(23)	Purple

15. Output circuits from each train for mutually redundant electrical power buses (F,G,& H) have separate relay contacts but are not necessarily on separate relays. However, mutually redundant devices are actuated independently by separate trains.
16. Outputs from the test cabinet are for the Engineered Safety Features which can not be fully actuated during normal plant operation. The E.S.F. signal and the continuity test circuit for these devices are combined as an output from the test cabinet, for circuits of the same vitality. Continuity test will verify operation of the output relay and also check continuity of the actuator circuit. Only one SSPS train and only one actuation relay can be tested at a time. Functions tested simultaneously are performed by one relay but with separate contacts. For Complete testing procedure see PG&E Co.Rec.No.663231 sh.76.
18. Interlock circuit to block simultaneous testing of both trains. Circuits run in separate conduits

REFERENCES

1. Separation & Color Code for Instr.& Control Engineered Safety Features Sh.2 — Dwg.445651
2. W.E.Corp. Solid State Protection System — Rec.No.663231
3. W.F.Corp. Function Diagrams — Rec.No.663195
4. BLOCK DIAGRAM SEPARATION OF CIRCUITS AUX. RELAY RACKS. — Rec. No. 445652
5. Block Diagram Separation of Circuits Safeguards Vent. System — Rec.No.445653

7 MAINMDY BASU — C/27/74 — 12/1/74

SEP'I & COORDINATED DWST. # CONT. #1

DIABLO

RM INDEXED REV. 7

NUCLEAR SAFETY RELATED

UNIT 1 & 2

COORDINATED APPROVAL FOR CONSTRUCTION NOT REQUIRED

MECH.	ELEC.	CIVIL	ARCH.
GROUP	DES. Chg. No.	ENG. Chg. No.	DES. Chg. No.	ENG. Chg. No.	DES. Chg. No.	ENG. Chg. No.	DES. Chg. No.	ENG. Chg. No.	DES. Chg. No.	ENG. Chg. No.	DES. Chg. No.	ENG. Chg. No.	DES. Chg. No.	ENG. Chg. No.	DES. Chg. No.	ENG. Chg. No.	DES. Chg. No.	ENG. Chg. No.	DES. Chg. No.	ENG. Chg. No.	DES. Chg. No.	ENG. Chg. No.	DES. Chg. No.	ENG. Chg. No.

TABLE OF CHANGES

NO.	DATE	DESCRIPTION	GM/SPEC	BY	CH	RESP.ENG.	SUPV.ENG.
7	5-10-74	DEL NOTE IT (DC2-EE-44405)	—	MS			
		DEL. SSPS UNIT 2 (PCI-1502)					
6	4-25-74	DELETED NO. OF ACTUATION DEV. 167027	VAL				
		& ADD. REF. 1 NOTE (DCI-EE-33454)					
5	10-29-73	ADDED "LOGIC CLASS" STAMP (2)	167027	MC	MG	EWE	

TABLE OF CHANGES

NO.	DATE	DESCRIPTION	GM/SPEC	BY	CH	RESP.ENG.	SUPV.ENG.
4	8-10-73	CHGD. NOTE #12, ADD CNT. RAD. MONITOR, INPUTS & BYPASS REF. SW(S)	167027				
3	3-14-74	ADDED NOTE 18 & TEST WIT. SET TIMING	167027				
2	1-7-74	ADDED MARKER COLOR FOR OUTPUT	167027				
1	8-30-73	APPROVED FOR CONSTRUCTION	167027				
0	2-27-73	ISSUED for Information	167027				

TABLE OF CHANGES

NO.	DATE	DESCRIPTION	GM/SPEC	BY	CH	RESP.ENG.	SUPV.ENG.

APPROVED BY	GM 167027
SUPV.S. BESTERS	
DRGN. I. ZEITER	
DR. T. F.	
CH. J. LYNCH	
D.E. RICH	
DATE 2-22-73	
SCALES NONE	

SEPARATION & COLOR CODE
INSTRUMENTATION & CONTROL
ENGINEERED SAFETY FEATURES

DIABLO CANYON
DEPARTMENT OF ENGINEERING
PACIFIC GAS AND ELECTRIC COMPANY
SAN FRANCISCO, CALIFORNIA

COAST VALVES DIVISION

BILL OF MATERIAL	
DRAWING LIST	
SUPERSEDES	
SUPERSEDED BY	
SHEET NO. 1 OF 2 SHEETS	
445650	CHANGE 7

35 M/M Negs. 7

Scan 1 in 7

445651

TABLE OF INPUTS

PROTECTION SYSTEM BISTABLE

FUNCTION	CHANNELS I	CHANNELS II	CHANNELS III	CHANNELS IV	LOGIC FORM	ACTUATION FUNCTION	REMARKS
LO TAVG	I	II	III	IV	2/4	INTERLOCK	
LO LO TAVG	I	II	III	IV	2/4	INTERLOCK	
STM. GEN. LO LO WTR. LEVEL LOOP 1		II	III	IV	2/3	REACTOR TRIP	
STM. GEN. LO LO WTR. LEVEL LOOP 2	I		III	IV	2/3	REACTOR TRIP	
STM. GEN. LO LO WTR. LEVEL LOOP 3	I		III	IV	2/3	REACTOR TRIP	
STM. GEN. LO LO WTR. LEVEL LOOP 4		II	III	IV	2/3	REACTOR TRIP	
STM. GEN. HI HI LEVEL GENERATOR 1		II	III	IV	2/3	FEEDWTR. TRIP	
STM. GEN. HI HI LEVEL GENERATOR 2	I		III	IV	2/3	FEEDWTR. TRIP	
STM. GEN. HI HI LEVEL GENERATOR 3	I		III	IV	2/3	FEEDWTR. TRIP	
STM. GEN. HI HI LEVEL GENERATOR 4		II	III	IV	2/3	FEEDWTR. TRIP	
PRESSURIZER PRESSURE	I	II	III		2/3	INTERLOCK	PERMISSIVE P11
PRESSURIZER LOW LOW PRESSURE	I	II	III	IV	2/4	SIS	
PRESSURIZER LOW PRESSURE	I	II	III	IV	2/4	REACTOR TRIP	
PRESSURIZER HI PRESSURE	I	II	III	IV	2/4	REACTOR TRIP	
PRESSURIZER HI WATER LEVEL	I	II	III		2/3	REACTOR TRIP	
HI STEAM PRESSURE RATE LOOP 1	I	II		IV	2/3	STM.LINE ISOL.	BELOW P-11
HI STEAM PRESSURE RATE LOOP 2	I	II	III		2/3	STM.LINE ISOL.	BELOW P-11
HI STEAM PRESSURE RATE LOOP 3	I	II	III		2/3	STM.LINE ISOL.	BELOW P-11
HI STEAM PRESSURE RATE LOOP 4	I	II		IV	2/3	STM.LINE ISOL.	BELOW P-11
LO STEAM LINE PRESSURE LOOP 1	I	II		IV	2/3	SIS & STML ISO	BELOW P-11
LO STEAM LINE PRESSURE LOOP 2	I	II	III		2/3	SIS & STML ISO	BELOW P-11
LO STEAM LINE PRESSURE LOOP 3	I	II	III		2/3	SIS & STML ISO	BELOW P-11
LO STEAM LINE PRESSURE LOOP 4	I	II		IV	2/3	SIS & STML ISO	BELOW P-11
REACTOR COOLANT LOOP 1 LOW FLOW	I	II	III		2/3	REACTOR TRIP	
REACTOR COOLANT LOOP 2 LOW FLOW	I	II	III		2/3	REACTOR TRIP	
REACTOR COOLANT LOOP 3 LOW FLOW	I	II	III		2/3	REACTOR TRIP	
REACTOR COOLANT LOOP 4 LOW FLOW	I	II	III		2/3	REACTOR TRIP	
HI CONTAINMENT PRESSURE		II	III	IV	2/3	SIS	
HI HI CONTAINMENT PRESSURE	I	II	III	IV	2/4	PH B ISOL/SPRAY	PERMISSIVE P13
TURBINE IMPULSE PRESSURE	I	II			1/2	INTERLOCK	
OVER TEMPERATURE △T	I	II	III	IV	2/4	REACTOR TRIP	
OVER POWER △T	I	II	III	IV	2/4	REACTOR TRIP	

NIS INPUTS BISTABLE

FUNCTION	CHANNELS I	CHANNELS II	CHANNELS III	CHANNELS IV	LOGIC FORM	ACTUATION FUNCTION	REMARKS
SOURCE RANGE HI LEVEL TRIP	I	II			1/2	REACTOR TRIP	
SOURCE RANGE TRIP BYPASS	I	II			1/2	INTERLOCK	
INTERMEDIATE RANGE HI LEVEL TRIP	I	II			1/2	REACTOR TRIP	
INTERMEDIATE RANGE TRIP BYPASS	I	II			1/2	INTERLOCK	
POWER RANGE LOW RANGE TRIP	I	II	III	IV	2/4	REACTOR TRIP	
POWER RANGE HI RANGE TRIP	I	II	III	IV	2/4	REACTOR TRIP	
POWER RANGE RATE TRIP	I	II	III	IV	2/4	REACTOR TRIP	2/4 OF ANY COMBINATION OF POS & NEG RATE TRIP NOT FROM THE SAME CHANNEL
INTERMEDIATE RANGE PERMISSIVE P6	I	II			1/2	INTERLOCK	
POWER RANGE PERMISSIVE P8	I	II	III	IV	2/4	INTERLOCK	
POWER RANGE PERMISSIVE P10	I	II	III	IV	2/4	INTERLOCK	
POWER RANGE PERMISSIVE P9	I	II	III	IV	2/4	INTERLOCK	

DIRECT INPUTS CONTACTS (UNSHLD. TWISTED PAIR)

FUNCTION	CHANNELS I	CHANNELS II	CHANNELS III	CHANNELS IV	LOGIC FORM	ACTUATION FUNCTION	REMARKS
TURBINE LOW AUTO STOP OIL PRESSURE	I	II	III		2/3	REACTOR TRIP	
TURBINE STEAM STOP VALVE CLOSED	I	II	III	IV	4/4	REACTOR TRIP	
REACTOR COOLANT PUMP BUS UNDERVOLTAGE	I	II	III	IV	1/2	REACTOR TRIP	ON BOTH BUSSES
REACTOR COOLANT PUMP BUS UNDERFREQUENCY	I	II	III		2/3	TRIP RCPS REACTOR TRIP	ON EITHER BUS
REACTOR COOLANT PUMP BREAKER TRIP		II	III	IV	2/4	REACTOR TRIP	
SEISMIC TRIP	I	II	III		2/3	REACTOR TRIP	

LOGIC INPUTS MANUAL

FUNCTION	CHANNELS	LOGIC FORM	ACTUATION FUNCTION	REMARKS
REACTOR TRIP ACTUATION	—	1/2	REACTOR TRIP	
SAFETY INJECTION ACTUATION	—	1/2	SIS	
CONTAINMENT PHASE A ISOLATION	—	1/2	CNT. PH A ISOL	
CONTAINMENT SPRAY & PHASE B ISOLATION	—	2/2	CNT. SPRAY	

RESETS

FUNCTION	CHANNELS	LOGIC FORM	ACTUATION FUNCTION	REMARKS
NIS BLOCKS	—	1/1	—	
SAFETY INJECTION	—	1/1	—	
SAFETY INJECTION BLOCK	—	1/1	—	
CONTAINMENT PHASE A ISOL	—	1/1	—	
CONTAINMENT PHASE B ISOL	—	1/1	—	
CONTAINMENT VENTILATION ISOL	—	1/1	—	
CONTAINMENT SPRAY	—	1/1	—	
FEEDWATER ISOLATION	—	1/1	—	

NIS BLOCKS ACTUATION

FUNCTION	CHANNELS	LOGIC FORM	ACTUATION FUNCTION	REMARKS
SOURCE RANGE	—	1/1	—	
INTERMEDIATE RANGE	—	1/1	—	
POWER RANGE	—	1/1	—	

LOGIC INPUTS AUTO

FUNCTION	CHANNELS	LOGIC FORM	ACTUATION FUNCTION	REMARKS
CNT. RADIOACTIVITY DETECTOR	—	1/2	CNT. VENT ISOL	
REACTOR TRIP BYPASS BKR. AUX. SWITCH	—	1/1		BLOCKS TESTING IF BKR CLOSED

TABLE OF OUTPUTS

SOLID STATE PROTECTION SYSTEM — CONTACTS

FUNCTION	BUS	CONT PWR AC	CONT PWR DC	LOGIC TRAIN	E.S.F. ACTUATION SIGNAL	TYPE OF OUTPUTS (FIG.)	REMARKS
DIESEL GENERATOR NO. 11	H		13/12	A & B	SIS	4	TWO SEPARATE STARTING CKTS
DIESEL GENERATOR NO. 12	G		12/11	B	SIS	1/1	TWO SEPARATE STARTING CKTS
DIESEL GENERATOR NO. 13	F		11/13	A	SIS	1/1	TWO SEPARATE STARTING CKTS
4KV BUS F AUTO TRANSFER	F		11	A	SIS	1	
4KV BUS G AUTO TRANSFER	G		12	B	SIS	1	
4KV BUS H AUTO TRANSFER	H		13	A & B	SIS	3	
REACTOR COOLANT PUMP NO. 11	E			A & B	UNDERFREQ	3	
REACTOR COOLANT PUMP NO. 12	D			A & B	UNDERFREQ	3	
REACTOR COOLANT PUMP NO. 13	E			A & B	UNDERFREQ	3	
REACTOR COOLANT PUMP NO. 14	D			A & B	UNDERFREQ	3	
AUX FEEDWATER PUMP NO. 11 (FCV 95)	G		12	A & B	SEE RMKS.	4	START BY AMSAC, SGL, 12KV UV
AUX FEEDWATER PUMP NO. 12	H		13	B	SEE RMKS.	1	START BY SIS OR AMSAC
AUX FEEDWATER PUMP NO. 13	F		11	A	SEE RMKS.	1	START BY SIS OR AMSAC
AUX SALT WATER PUMP NO. 11	F		11	A	SIS	1	
AUX SALT WATER PUMP NO. 12	G		12	B	SIS	1	
COMPONENT COOLING WTR PUMP NO. 11	F		11	A	SIS	1	
COMPONENT COOLING WTR PUMP NO. 12	G		12	B	SIS	1	
COMPONENT COOLING WTR PUMP NO. 13	H		13	A & B	SIS	4	
CONTAINMENT SPRAY PUMP NO. 11	G		12	B	CNT. SPRAY & SIS	1	
CONTAINMENT SPRAY PUMP NO. 12	H		13	A	CNT. SPRAY & SIS	1	
SAFETY INJECTION PUMP NO. 11	F		11	A	SIS	1	
SAFETY INJECTION PUMP NO. 12	H		13	B	SIS	1	
RESIDUAL HEAT REMOVAL PUMP NO. 11	G		12	B	SIS	1	
RESIDUAL HEAT REMOVAL PUMP NO. 12	H		13	A	SIS	1	
CHARGING PUMP NO. 11	F		11	A	SIS	1	
CHARGING PUMP NO. 12	G		12	B	SIS	1	
CHARGING PUMP NO. 13 (RECIPROCATING)	G		12	—	—	—	NO SAFEGUARD SIGNAL
CONTAINMENT FAN COOLER 11	F	1F		A	SIS	1	
CONTAINMENT FAN COOLER 12	F	1F		A	SIS	1	
CONTAINMENT FAN COOLER 13	G	1G		B	SIS	1	
CONTAINMENT FAN COOLER 14	H	1H		A & B	SIS	4	
CONTAINMENT FAN COOLER 15	G	1G		B	SIS	1	
UNIT TRIP 86GI			11	A	TURB TRIP	4	
UNIT TRIP 86GII			12	B	TURB TRIP	4	
E.S.F. VENTILATION SYSTEM NO. 1	F		11	A	SIS	1	
E.S.F. VENTILATION SYSTEM NO. 2	H		13	B	SIS	1	
TURBINE TRIP (20/ET) (20/OPC-1)				B	SEE RMKS.	1/1	TRIP BY STM GEN HI HI LEV, SIS OR AMSAC
TURBINE TRIP (20 AST-1)				A	SEE RMKS.	1	TRIP BY STM GEN HI HI LEV, SIS OR AMSAC
FCV 25 MAIN STM ISOL BP SG 11	F		11	B	STM LINE ISOL	2	
FCV 24 MAIN STM ISOL BP SG 12	G		12	B	STM LINE ISOL	2	
FCV 23 MAIN STM ISOL BP SG 13	G		12	B	STM LINE ISOL	2	
FCV 22 MAIN STM ISOL BP SG 14	H		13	B	STM LINE ISOL	2	
FCV 41 MAIN STM ISOL VV SG 11	F/G		11/12	A & B	STM LINE ISOL	4	TWO SOLENOID VVS ENERGIZE TO TRIP
FCV 42 MAIN STM ISOL VV SG 12	F/G		11/12	A & B	STM LINE ISOL	4	TWO SOLENOID VVS ENERGIZE TO TRIP
FCV 43 MAIN STM ISOL VV SG 13	F/H		11/13	A & B	STM LINE ISOL	4	TWO SOLENOID VVS ENERGIZE TO TRIP
FCV 44 MAIN STM ISOL VV SG 14	F/H		11/13	A & B	STM LINE ISOL	4	TWO SOLENOID VVS ENERGIZE TO TRIP
FCV 438 SG 11 FW IN ISOL VV	F	1F		A	SEE RMKS.	1	TRIP BY SG HI HI LEVEL OR SIS
FCV 439 SG 12 FW IN ISOL VV	G	1G		A	SEE RMKS.	1	TRIP BY SG HI HI LEVEL OR SIS
FCV 440 SG 13 FW IN ISOL VV	H	1H		A	SEE RMKS.	1	TRIP BY SG HI HI LEVEL OR SIS
FCV 441 SG 14 FW IN ISOL VV	F	1F		A	SEE RMKS.	1	TRIP BY SG HI HI LEVEL OR SIS
MAIN FEEDWATER PUMP NO. 11	E		12	B	SEE RMKS.	1	TRIP BY SG HI HI LEVEL OR SIS
MAIN FEEDWATER PUMP NO. 12	D		11	B	SEE RMKS.	1	TRIP BY SG HI HI LEVEL OR SIS
FCV 510 SG 11 MAIN FW SUPPLY	F/G		11/12	A & B	FW ISOL	5	TWO SOLENOID VVS DEENERGIZE TO TRIP
FCV 520 SG 12 MAIN FW SUPPLY	F/G		11/12	A & B	FW ISOL	5	TWO SOLENOID VVS DEENERGIZE TO TRIP
FCV 530 SG 13 MAIN FW SUPPLY	F/G		11/12	A & B	FW ISOL	5	TWO SOLENOID VVS DEENERGIZE TO TRIP
FCV 540 SG 14 MAIN FW SUPPLY	F/G		11/12	A & B	FW ISOL	5	TWO SOLENOID VVS DEENERGIZE TO TRIP
REACTOR PRESS HTR GROUP NO. 12	G		12	B	SIS	1	TRIP ON SIS
REACTOR PRESS HTR GROUP NO. 13	H		13	A	SIS	1	TRIP ON SIS
CHEMICAL & VOLUME CONT SYS VALVES							
8100 RCP SEAL WTR RET HDR VV 1	G	1G		B	PH A ISOL	1	REDUNDANT VVS IN SERIES
8112 RCP SEAL WTR RET HDR VV 2(IN CNT)	H	1H		A	PH A ISOL	1	CLOSE ON PH A ISOL
8107 COLD LEG LOOP CHG VALVE 1	F	1F		A	SIS	1	REDUNDANT VVS IN SERIES
8108 COLD LEG LOOP CHG VALVE 2	G	1G		B	SIS	1	CLOSE ON SIS
8149A LETDOWN ORIFICE 11 OUT (IN CNT)	F		11	A	PH A ISOL	2	VALVES 8149A,B&C ARE IN
8149B LETDOWN ORIFICE 12 OUT (IN CNT)	F		11	A	PH A ISOL	2	PARALLEL AND REDUNDANT
8149C LETDOWN ORIFICE 13 OUT (IN CNT)	F		11	A	PH A ISOL	2	VALVE 8152 IN SERIES CLOSE
8152 LETDOWN HTXCHG CROSS-TIE	G		12	B	PH A ISOL	2	ON PH A ISOL
LCV112B VCT OUTLET CHG PP SUCTION MOV	F	1F		A	SIS	1	REDUNDANT VVS IN SERIES
LCV112C VCT OUTLET CHG PP SUCTION MOV	G	1G		B	SIS	1	CLOSE ON SIS
LIQUID RADWASTE SYSTEM VALVES							
FVC 500 CNT BLDG SUMP DISCH (IN CNT)	F		11	A	PH A ISOL	2	REDUNDANT VVS IN SERIES
FVC 501 CNT BLDG SUMP DISCH	G		12	B	PH A ISOL	2	CLOSE ON PH A ISOL
FCV 260 RC DRN TK N2 SUPPLY	G		12	B	PH A ISOL	2	
FCV 255 RC DRN TK VENT HDR (IN CNT)	F		11	A	PH A ISOL	2	REDUNDANT VVS IN SERIES
FCV 256 RC DRN TK VENT HDR	G		12	B	PH A ISOL	2	CLOSE ON PH A ISOL
FCV 257 RC DRN TK GAS ANAL	G		12	B	PH A ISOL	2	REDUNDANT VVS IN SERIES
FCV 258 RC DRN TK GAS ANAL (IN CNT)	F		11	A	PH A ISOL	2	CLOSE ON PH A ISOL
FCV 253 RC DRN TK PPS DISCH (IN CNT)	F		11	A	PH A ISOL	2	REDUNDANT VVS IN SERIES
FCV 254 RC DRN TK PPS DISCH	G		12	B	PH A ISOL	2	CLOSE ON PH A ISOL
STEAM DUMP SYSTEM	F/G			A & B	LO LO TAVG	4	
STEAM DUMP SYSTEM	F/G			A & B	TURBINE TRIP	4	

SOLID STATE PROTECTION SYSTEM — CONTACTS

FUNCTION	BUS	CONT PWR AC	CONT PWR DC	LOGIC TRAIN	E.S.F. ACTUATION SIGNAL	TYPE OF OUTPUTS (FIG.)	REMARKS
SAFETY INJECTION SYSTEM VALVES							
8801A CHARGING INJECTION	F	1F		A	SIS	1	REDUNDANT VVS IN PARALLEL
8801B CHARGING INJECTION	G	1G		B	SIS	1	OPEN ON SIS
8803A CHARGING INJECTION	F	1F		A	SIS	1	REDUNDANT VVS IN PARALLEL
8803B CHARGING INJECTION	G	1G		B	SIS	1	OPEN ON SIS
8805A CHG PP REFUEL WTR SUPPLY VV 1	F	1F		A	SIS	1	REDUNDANT VVS IN PARALLEL
8805B CHG PP REFUEL WTR SUPPLY VV 2	G	1G		B	SIS	1	OPEN ON SIS
8808A ACCUM 11 INJ COLD LEG	F	1F		A	SIS	1	P11 SIS UNBLOCK PRESS
8808B ACCUM 12 INJ COLD LEG	G	1G		B	SIS	1	P11 BLOCKS OPENING UNTIL
8808C ACCUM 13 INJ COLD LEG	H	1H		A	SIS	1	SYS IS PRESSURIZED SIS
8808D ACCUM 14 INJ COLD LEG	G	1G		B	SIS	1	ALSO BLOCKS CLOSING
8880 ACCUM N2 SUPPLY HDR	H		13	B	PH A ISOL	2	
8871 ACCUMULATOR TEST (IN CNT)	H		13	A	PH A ISOL	2	
8961 ACCUMULATOR TEST	G		12	B	PH A ISOL	2	
FCV 584 CNT INSTRUMENT AIR SUPPLY	H		13	B	PH A ISOL	2	
FCV 633 CNT FIRE WATER ISOL	G		12	B	PH A ISOL	2	
8883 SAFETY INJECTION PUMP TEST LINE	G		12	B	PH A ISOL	2	
CONTAINMENT SPRAY SYSTEM VALVES							
8992 SPRAY ADDITIVE TANK OUTLET	F	1F		A & B	CNT SPRAY	3	
9001A SPRAY PP NO 11 DISCH ISOL VALVE	G	1G		B	CNT SPRAY & SIS	1	
9001B SPRAY PP NO 12 DISCH ISOL VALVE	H	1H		A	CNT SPRAY & SIS	1	
8994A SPRAY ADDITIVE TK OUT ISOL LN 1	G	1G		B	CNT SPRAY	1	REDUNDANT VVS IN PARALLEL
8994B SPRAY ADDITIVE TK OUT ISOL LN 2	H	1H		A	CNT SPRAY	1	OPEN ON CNT SPRAY
NUCLEAR STM SUPPLY SAMPLE SYS VVS							
9354A PRESSURIZER STM SAMPLE (IN CNT)	F		11	A	PH A ISOL	2	REDUNDANT VVS IN SERIES
9354B PRESSURIZER STM SAMPLE	G		12	B	PH A ISOL	2	CLOSE ON PH A ISOL
9355A PRESSURIZER LIQUID SAMPLE (IN CNT)	F		11	A	PH A ISOL	2	CLOSE ON PH A ISOL
9355B PRESSURIZER LIQUID SAMPLE	G		12	B	PH A ISOL	2	CLOSE ON PH A ISOL
9356A HOT LEG SAMPLE (IN CNT)	F		11	A	PH A ISOL	2	CLOSE ON PH A ISOL
9356B HOT LEG SAMPLE	G		12	B	PH A ISOL	2	CLOSE ON PH A ISOL
9357A ACCUMULATOR SAMPLE (IN CNT)	F		11	A	PH A ISOL	2	CLOSE ON PH A ISOL
9357B ACCUMULATOR SAMPLE	G		12	B	PH A ISOL	2	CLOSE ON PH A ISOL
COMPONENT COOLING WATER SYS VALVES							
FCV 355 CCW SUPPLY HEADER C	H	1H		A	PH B ISOL	1	
FCV 360 CNT FAN CLRS 1,2 & 5 CCW RET	F		11	A	SIS	2	
FCV 366 CNT FAN CLRS 3 & 4 CCW RET	G		12	B	SIS	2	
FCV 356 RCP CCW SUPPLY HEADER	G	1G		A	PH B ISOL	1	
FCV 363 RCP OIL COOLER CCW RET	G	1G		B	PH B ISOL	1	REDUNDANT VVS IN SERIES
FCV 749 RCP OIL COOLER CCW RET (IN CNT)	H	1H		A	PH B ISOL	1	CLOSE ON PH B ISOL
FCV 357 RCP BARRIER CCW RET	H	1H		B	PH B ISOL	1	REDUNDANT VVS IN SERIES
FCV 750 RCP BARRIER CCW RET (IN CNT)	F	1F		A	PH B ISOL	1	CLOSE ON PH B ISOL
FCV 361 EXCESS LETDOWN HEAT XCHNGR	H		13	B	PH A ISOL	2	
STM GEN BLOWDOWN SYS ISOL VALVES							
FCV 763 STEAM GEN 14 BD SAMPLE (IN CNT)	H		13	A	STM LINE ISOL	2	
FCV 160 STEAM GEN 14 BD TK INLET	H		13	B	PH A ISOL	2	
FCV 244 STEAM GEN 14 BD SAMPLE	G		12	B	PH A ISOL	2	
FCV 762 STEAM GEN 13 BD SAMPLE (IN CNT)	H		13	A	STM LINE ISOL	2	
FCV 157 STEAM GEN 13 BD TK INLET	H		13	B	PH A ISOL	2	
FCV 246 STEAM GEN 13 BD SAMPLE	G		12	B	PH A ISOL	2	
FCV 761 STEAM GEN 12 BD SAMPLE (IN CNT)	G		12	A	STM LINE ISOL	2	
FCV 154 STEAM GEN 12 BD TK INLET	F		11	B	PH A ISOL	2	
FCV 248 STEAM GEN 12 BD SAMPLE	F		11	B	PH A ISOL	2	
FCV 760 STEAM GEN 11 BD SAMPLE (IN CNT)	G		12	A	STM LINE ISOL	2	
FCV 151 STEAM GEN 11 BD TK INLET	F		11	B	PH A ISOL	2	
FCV 250 STEAM GEN 11 BD SAMPLE	F		11	B	PH A ISOL	2	
REACTOR COOLANT SYSTEM VALVES							
8034A PRSZR RLF TK GAS ANAL (IN CNT)	F		11	A	PH A ISOL	2	REDUNDANT VVS IN SERIES
8034B PRSZR RLF TK GAS ANAL	G		12	B	PH A ISOL	2	CLOSE ON PH A ISOL
8029 PRSZR RLF TK PRI WATER	G		12	B	PH A ISOL	2	
8045 PRSZR RLF TK N2 SUPPLY	G		12	B	PH A ISOL	2	
VENTILATION SYSTEM ISOL VALVES							
FCV 654 CHILLED WTR SUPPLY TO CNT	G		12	B	PH A ISOL	2	
FCV 656 WTR CHILLER PP SUCTION	G		12	B	PH A ISOL	2	
FCV 660 CNT PURGE SUPPLY (IN CNT)	F		11	A	CNT VENT ISOL	2	REDUNDANT VVS IN SERIES
FCV 661 CNT PURGE SUPPLY	G		12	B	CNT VENT ISOL	2	CLOSE ON CNT VENT ISOL
FCV 662 VACUUM PRESS RELIEF (IN CNT)	F		11	A	CNT VENT ISOL	2	REDUNDANT VVS IN SERIES
FCV 663 PRESSURE RELIEF	G		12	B	CNT VENT ISOL	2	CLOSE ON CNT VENT ISOL
FCV 664 VACUUM PRESS RELIEF	G		12	B	CNT VENT ISOL	2	
FCV 678 CNT AIR SAMPLE (IN CNT)	F		11	A	CNT VENT ISOL	2	
RCV 11 CNT PURGE EXHAUST (IN CNT)	F		11	A	CNT VENT ISOL	2	REDUNDANT VVS IN SERIES
RCV 12 CNT PURGE EXHAUST	G		12	B	CNT VENT ISOL	2	CLOSE ON CNT VENT ISOL
FCV 679 CNT AIR SAMPLE	G		12	B	CNT VENT ISOL	2	
FCV 681 CNT AIR SAMPLE	G		12	B	CNT VENT ISOL	2	
CONTROL ROOM ISOLATION (CRVP)	F/G/H		11/12/13	A & B	PH A ISOL	1	
FCV 655 CHILLED WTR SUPPLY TO CNT	F		11	A	PH A ISOL	2	
FCV 657 WATER CHILLER PP SUCTION	F		11	A	PH A ISOL	2	

ENGINEERED SAFETY FEATURE

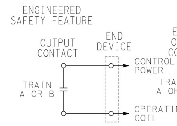

FIGURE 1

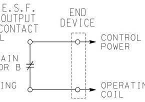

FIGURE 2

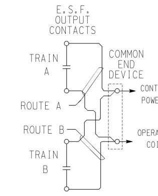

FIGURE 3

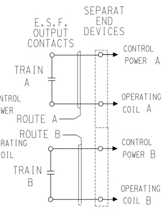

FIGURE 4

NOTE: FIGURE 3 IS FOR SINGLE FUNCTION, OR FOR TWO OUT OF THREE FUNCTIONS ON UNGROUNDED SYSTEM ONLY
FIGURE 4 IS PREFERRED AND IS REQUIRED ON GROUNDED SYSTEMS.

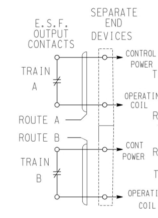

FIGURE 5

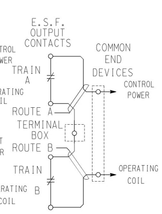

FIGURE 6

SEE NOTE 12 DWG # 445650

REFERENCES — DWG NO.

1. SEPARATION & COLOR CODE FOR INSTR. & CONTROL ENGINEERED SAFETY FEATURES SH 1 ______ 445650
2. FOR COMPLETE LIST OF OUTPUTS, SEE SCHEM DIAG SSPS OUTPUT RELAYS-DWG #501869 & 503088.
3. AMSAC SYSTEM ______ 6008434

NUCLEAR SAFETY RELATED

REGISTERED PROFESSIONAL ENGINEER KEITH B. BUSH E 15507 Exp. 6/30/05 ELECTRICAL STATE OF CALIFORNIA

KEY DWG--SECTION 3

UNIT 1

DATE 11/14/01		DESCRIPTION	COORDINATION	
DWN.	FXC2	Revised per FCT 025950	NUCL.	-
R.E.	KJD3		MECH.	-
INDEP. VERIFIER	-		ELEC.	-
			CIVIL	-
			PIPING	-
P.E.	KBB2		I&C	-
		REVISION INFORMATION		

ELECTRICAL
SEPARATION AND COLOR CODE
INSTRUMENTATION AND CONTROL
ENGINEERED SAFETY FEATURES

DIABLO CANYON POWER PLANT
PACIFIC GAS AND ELECTRIC COMPANY
SAN FRANCISCO, CALIFORNIA

DWG SCALE
BILL OF MATL
SUPSDS
SUPSD BY
SHEET NO. 1 OF

445651 REV 10

DRAWING NUMBER 445651

U2=442561

CAD User:FXC2 Date:11-01-2001
DGN=445651.DGN

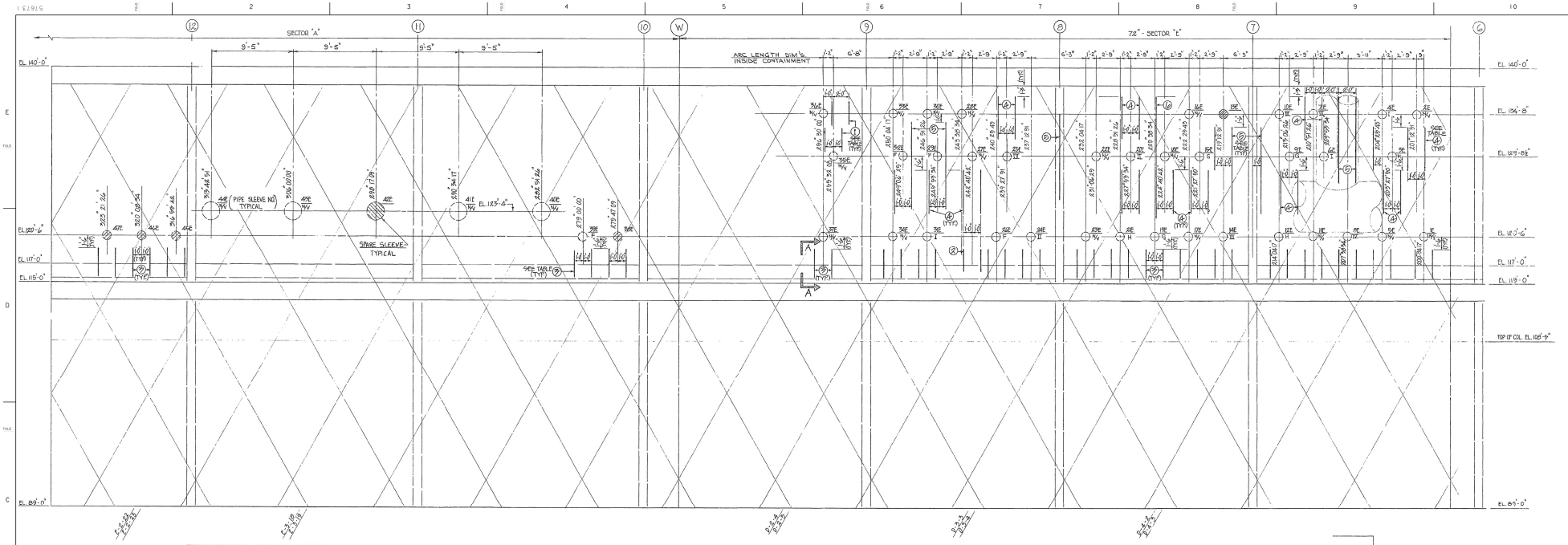

DEVELOPED ELEVATION — LOOKING FROM OUTSIDE

N.T.S.

PIPE SLEEVE NO.	PENETRATION NO.	G.E. SERIAL NO.	REMARKS	
1E	1E	6343300	L.V. POWER	PRESS. HTRS.
2E	2E	6343385	PROCESS INSTR.	SOL. VALVES
3E	3E	6343306	L.V. POWER	FAN COOLER 14
4E	4E	3336 *	NUCLEAR INSTR.	
5E	5E	6343298	L.V. POWER	L.C. 13J
6E	6E	6343313	NUCLEAR INSTR.	
7E	10E	6343310	NUCLEAR INSTR.	
8E	8E	6343290	PROCESS INSTR.	
9E	9E	6343307	L.V. POWER	FAN COOLER 13
10E	35E	6343317	NUCLEAR INSTR.	
11E	11E	6343303	L.V. POWER	
12E	12E	6343315	L.V. POWER	
13E	13E	6343312	SPARE	
14E	14E	6343302	PROCESS INSTR.	REACT. PROT.
15E	13E	6343308	L.V. POWER	FAN COOLER 15
16E	16E	6343293	PROCESS INSTR.	
17E	17E	6343299	L.V. POWER	L.C. 13 I
18E	18E	6343305	ROD POWER	
19E	19E	6343316	L.V. POWER	
20E	36E	6343318	NUCLEAR INSTR.	
21E	21E		VITAL INSTR.	
22E	22E	3335 *	NUCLEAR INSTR.	INCORE
23E	23E	6343304	L.V. POWER	
24E	24E	6343296	PROCESS INSTR.	REACT. PROT.
25E	34E	6343316	NUCLEAR INSTR.	
26E	26E	6343297	L.V. POWER	
27E	27E	6343309	ROD POWER	
28E	20E	3333 *	NUCLEAR INSTR.	INCORE TEMP.
29E	29E	6343310	L.V. POWER	FAN COOLER 12
30E	22E	6343292	ROD POWER	
31E	31E	6343296	PROCESS INSTR.	REACT. PROT.
32E	32E	6343311	L.V. POWER	FAN COOLER 11
33E	33E	6343287	PROCESS INSTR.	
34E	30E	6343301	L.V. POWER	PRESS. HTRS.
35E	7E	6343191	PROCESS INSTR.	INCORE
36E	28E	6343295	PROCESS INSTR.	INCORE
37E	37E	6343301	L.V. POWER	PRESS. HTRS.
38E			SPARE	
39E	39E		VITAL INSTR.	
40E	40E	6343302	H.V. POWER	ACP 13
41E	41E	6343303	H.V. POWER	ACP 11
42E	42E	6343304	ELECTRICAL PENETRATION TO BE STORED IN WAREHOUSE	
43E	43E	(1813×)	H.V. POWER	ACP 14
44E	42E	6343304	H.V. POWER	ACP 12
45E	58		MINI - EQUIPMENT HATCH	
46E			SPARE	
47E	60		MINI - EQUIPMENT HATCH	

* - CONAX BUFFALO CORP. PENETRATION

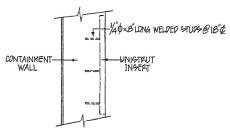

SECTION 'A-A'

UNISTRUT INSERTS TABLE			
ITEM NO.	LENGTH	CAT. NO.	STUDS REQ'D
①	2'-8"	P3257	2
②	3'-0"	P3257A	2
③	3'-4"	P3258	3
④	5'-0"	P3260	4
⑤	10'-0"	P3268	7
⑥	14'-0"	P3267	9

NOTE: PROVIDE INSERTS W/1/2Ø×.5 LONG WELDED STUDS

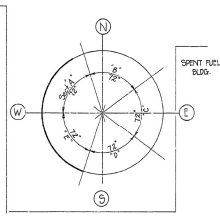

PLAN

NOTES

1. ALL ELECTRICAL PENETRATION SLEEVES TO BE 12" (42 TOTAL) EXCEPT (9) 24" PENETRATIONS
2. FOR ELECTRICAL PENETRATION SLEEVE DETAILS, SEE MECHANICAL PIPE NO. 500196

REFFERENCE DRAWINGS

CYLINDER REINFORCING LOWER HALF OUTER CURTAIN - SECTOR 'A' CONTAINMENT STRUCTURE --- 438814
Do Do - SECTOR 'E' Do --- 438818
Do INNER CURTAIN - SECTOR 'A' CONTAINMENT STRUCTURE --- 438284
Do Do - SECTOR 'E' Do --- 438288
DETAILS OF CONTAINMENT ELECTRICAL PENETRATION PIPE SLEEVE --- 500196
CONTAINMENT PIPING PENETRATIONS - LIST OF MECHANICAL & ELECTRICAL PENETRATIONS --- 500196

DATE	REVISION DESCRIPTION
10-23-2009	REVISED PER DDN-2×305-0
D.D. ADM1	
R.E. FXC2	
I.V.	
P.E. AGB2	

UNIT 1

ELECTRICAL
ARRANGEMENT AND DETAILS
CONTAINMENT ELECTRICAL
PENETRATION PIPE SLEEVES

DIABLO CANYON POWER PLANT
PACIFIC GAS AND ELECTRIC COMPANY
SAN FRANCISCO, CALIFORNIA

DWG SCALE:
BILL OF MATL:
SUPSDS1
SUPSD BY:

DRAWING	SHEET	PAGE	REV
57673	1	0	15

RASTER-57673.dgn
DDN-57673-0.dgn
CAD User-ADM1 (Last Mod 10-23-2009)

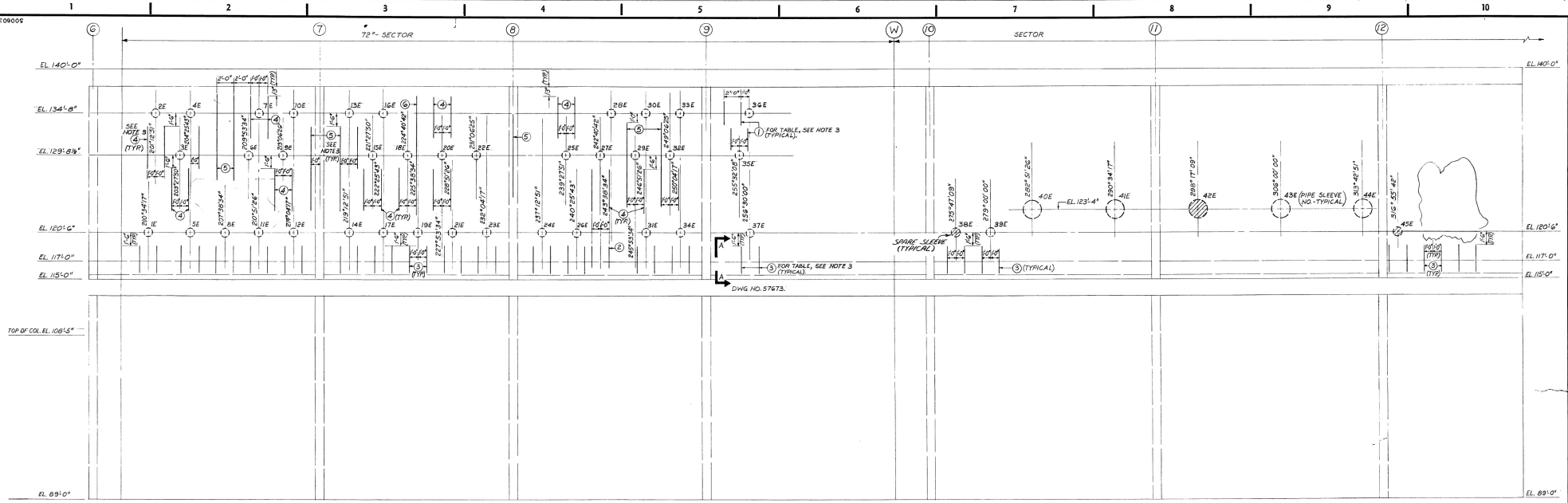

DEVELOPED ELEVATION — LOOKING FROM OUTSIDE

N.T.S.

PIPE SLEEVE NO.	PENETRATION NO.	G.E. SERIAL NO.	REMARKS	
1E	1E	6,552,934	L.V. POWER	PRESS. HTRS.
2E	2E	6,552,936	PROCESS INSTR.	SOL. VALVES
3E	3E	6,552,911	L.V. POWER	FAN COOLER
4E	4E	6,552,937	NUCLEAR INSTR.	
5E	5E	6,552,917	L.V. POWER	L.C.
6E	6E	3331 ✱	NUCLEAR INSTR.	
7E	7E	6,552,938	NUCLEAR INSTR.	
8E	8E	6,552,928	PROCESS INSTR.	
9E	9E	6,552,912	L.V. POWER	FAN COOLER
10E	10E	3332 ✱ 3	NUCLEAR INSTR.	
11E	11E	6,552,919	L.V. POWER	
12E	12E	6,343,407	L.V. POWER	
13E	13E	6,552,927	ROD POSITION	
14E	14E	6,552,930	PROCESS INSTR.	REACT. PROT.
15E	15E	6,552,913	L.V. POWER	FAN COOLER
16E	16E	6,552,931	PROCESS INSTR.	
17E	17E	6,552,918	L.V. POWER	L.C.
18E	18E	6,552,921	ROD POWER	
19E	19E	6,343,408	L.V. POWER	
20E	20E	3334 ✱	NUCLEAR INSTR.	
21E	21E		SEE NOTE 4.	
22E	22E	6,552,922	ROD POWER	
23E	23E	6,552,920	L.V. POWER	
24E	24E	6,552,932	PROCESS INSTR.	REACT. PROT.
25E	25E	3336 ✱	NUCLEAR INSTR.	
26E	26E	6,343,409	L.V. POWER	
27E	27E	6,552,923	ROD POWER	
28E	28E	6,552,939	NUCLEAR INSTR.	INCORE TEMP.
29E	29E	6,552,915	L.V. POWER	FAN COOLER
30E	30E	6,552,940	NUCLEAR INSTR.	INCORE
31E	31E	6,552,924	PROCESS INSTR.	REACT. PROT.
32E	32E	6,552,916	L.V. POWER	FAN COOLER
33E	33E	6,552,935	PROCESS INSTR.	
34E	34E	6,552,925	L.V. POWER	PRESS. HTRS.
35E	35E	6,552,929	PROCESS INSTR.	INCORE
36E	36E	6,552,933	PROCESS INSTR.	INCORE

PIPE SLEEVE NO.	PENETRATION NO.	G.E. SERIAL NO.	REMARKS	
37E	37E	6,552,926	L.V. POWER	PRESS. HTRS.
38E			SPARE	
39E	39E		SEE NOTE 4.	
40E	40E	6,343,368	H.V. POWER	RCP
41E	41E	6,584,184	H.V. POWER	RCP
42E			SPARE PENETR. ORDERED IN UNIT 1 TO BE USED FOR UNIT #1 OR #2	
43E	43E	6,584,184	H.V. POWER	RCP
44E	44E	6,343,366	H.V. POWER	RCP
45E			SPARE	

✱ - CONAX BUFFALO CORP. PENETRATION

NOTES:
1. ALL ELECTRICAL PENETRATION SLEEVES TO BE 12"(40 TOTAL) EXCEPT (5) 24" PENETRATIONS.
2. FOR ELECTRICAL PENETRATION SLEEVE DETAILS, SEE MECHANICAL DWG. NO.
3. FOR SECTION "A-A" AND UNISTRUT INSERTS TABLE, SEE UNIT NO1 ELECTRICAL DWG. NO. 57673.
4. FOR PENETRATION SIZE & SEE ASSEMBLY DETAILS SEE MEC. DWG. 600133P & CIVIL DWG. 061333 SHTS. 13, 14, 15

REFERENCE DRAWINGS:
CYLINDER WALL REINFORCING CONTAINMENT STRUCTURE - DWG. 443241.
CYLINDER WALL REINFORCING DETAILS CONTAINMENT STRUCTURE - DWG. 443242.
DETAILS OF CONTAINMENT ELECTRICAL PENETRATION PIPE SLEEVE - DWG. 501020.
CONTAINMENT PIPING PENETRATIONS - LIST OF MECHANICAL & ELECTRICAL PENETRATIONS - DWG. 501035.

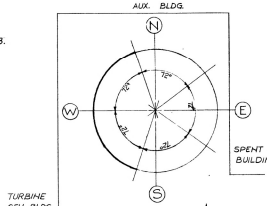

PLAN

UNIT 2 BEARINGS SHOWN ARE MEASURED COUNTER-CLOCKWISE FROM CALLED SOUTH

KEY DWG - SECTION 14

RM INDEXED REV. 6

ARRG. & P.S.I. CNT. PENET. SLEEVE 2 DIABLO

NOT REQ'D 1-27-82 JRC

COORDINATED APPROVAL FOR CONSTRUCTION

TABLE OF CHANGES

NO.	DATE	DESCRIPTION	GM/SPEC	BY	CH	RESP. ENG.	SUPV. ENG.
6	6-30-82	ADDED SERIAL NOS. FOR PENET. SLEEVE (DC2-EE-48025)	—	GR			
		DELINEATED SLEEVE (DC 25H-SLEEVE)					
5	12-16-81	ADD GE SERIAL NO. FOR PENET. SLEEVE # 255 (DC2-EE-44606 R1).	—	JRC			

NO.	DATE	DESCRIPTION	GM/SPEC	BY	CH	RESP. ENG.	SUPV. ENG.
4	11-17-81	ADDED INFO. FOR PEN. SIZE & SEE ASSEMBLY DETAILS (DWG. NOTE 4) (DC2-EE-20683 R2, R1)					
3	9-16-81	REVISED GE SERIAL NOS AS CIRCLED (F)	169972	MC			
2	5-11-81	REMOVED HOLD ON PENETRANT ENGINEERING	169972	V.H.			
		SERIAL NO. 6,343,407 RING 6,573,407 (1)					
1	12-13-79	ADDED NOTE COLL. SPEC. 8807, 8831.	169972	V.K.			

NO.	DATE	DESCRIPTION	GM/SPEC	BY	CH	RESP. ENG.	SUPV. ENG.

TABLE OF CHANGES

APPROVED BY	
GM	169972
SUPV'S. INITIAL	
DESIGN E. ISSUE	
CH'S. NOTIFICATION	
CH. DES.	
DATE	11-8-77
SCALES	1"=1 FT.

UNIT 2

ARRANGEMENT AND DETAILS CONTAINMENT ELECTRICAL PENETRATION PIPE SLEEVES

DIABLO CANYON
DEPARTMENT OF ENGINEERING
PACIFIC GAS AND ELECTRIC COMPANY
SAN FRANCISCO, CALIFORNIA

BILL OF MATERIAL	
DRAWING LIST	
SUPERSEDES	
SUPERSEDED BY	
SHEET NO.	SHEETS
DRAWING NUMBER	500603
CONTROL	

T.A. Bellenworth No. 1986 — REGISTERED PROFESSIONAL ENGINEER — STATE OF CALIFORNIA

COAST VALLEYS

SCAN 1 OF 1

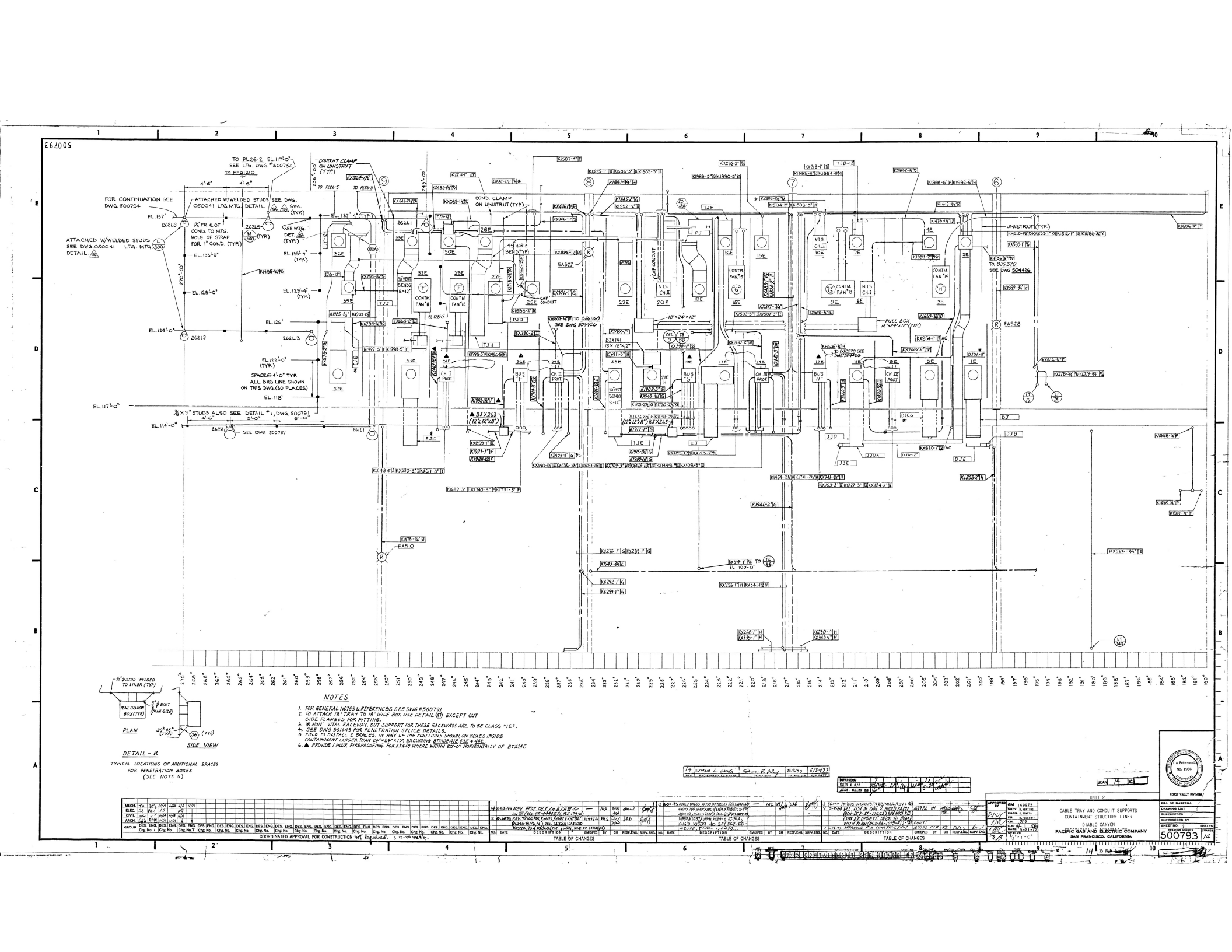
500793
TO PL26-2 EL 117'-0" SEE LTG. DWG. # 500752
TO EFD1210
CONDUIT CLAMP ON UNISTRUT (TYP.)
COND. CLAMP ON UNISTRUT (TYP.)
FOR CONTINUATION SEE DWG. 500794
ATTACHED W/WELDED STUDS SEE DWG. 050041 LTG. MTG. DETAIL
ATTACHED W/WELDED STUDS SEE DWG. 050041 LTG. MTG. DETAIL
1/4" PR. Ø OF COND. TO MTG. HOLE OF STRAP FOR 1" COND. (TYP.)
SEE MTG. DET. (TYP.)
EL. 137'
EL. 135'-0"
EL. 133'-4" (TYP.)
EL. 129'-0"
EL. 126'
EL. 125'-0"
EL. 122'-0" (TYP.)
EL. 118'
EL. 117'-0"
EL. 114'-0"
SPACE @ 4'-0" TYP. ALL BRG. LINE SHOWN ON THIS DWG. (30 PLACES)
3/8" X 3" STUDS ALSO SEE DETAIL "1", DWG. 500791
SEE DWG. 500751
UNISTRUT (TYP.)
PULL BOX 18"x24"x12" (TYP.)
CAP CONDUIT
AS HORIZ. BEND (TYP.)
90° VERT. BENDS R=12"
18"x24"x12"
BUS F
BUS G
BUS H
CH I PROT
CH II PROT
CH III PROT
CONTM FAN 11
CONTM FAN 12
CONTM FAN 13
CONTM FAN 14
NIS CH II
NIS CH III
NIS CH I
SEE DWG. 504426
SEE DWG. 504427
SEE DWG. 504429
SEE DWG. 504430
SEE DWG. 504431
SEE DWG. 504432
SEE DWG. 504433
SEE DWG. 504434
SEE DWG. 504435
SEE DWG. 504436
SEE DWG. 504437
SEE DWG. 504438
SEE DWG. 504439
SEE DWG. 504440
SEE DWG. 504441
SEE DWG.

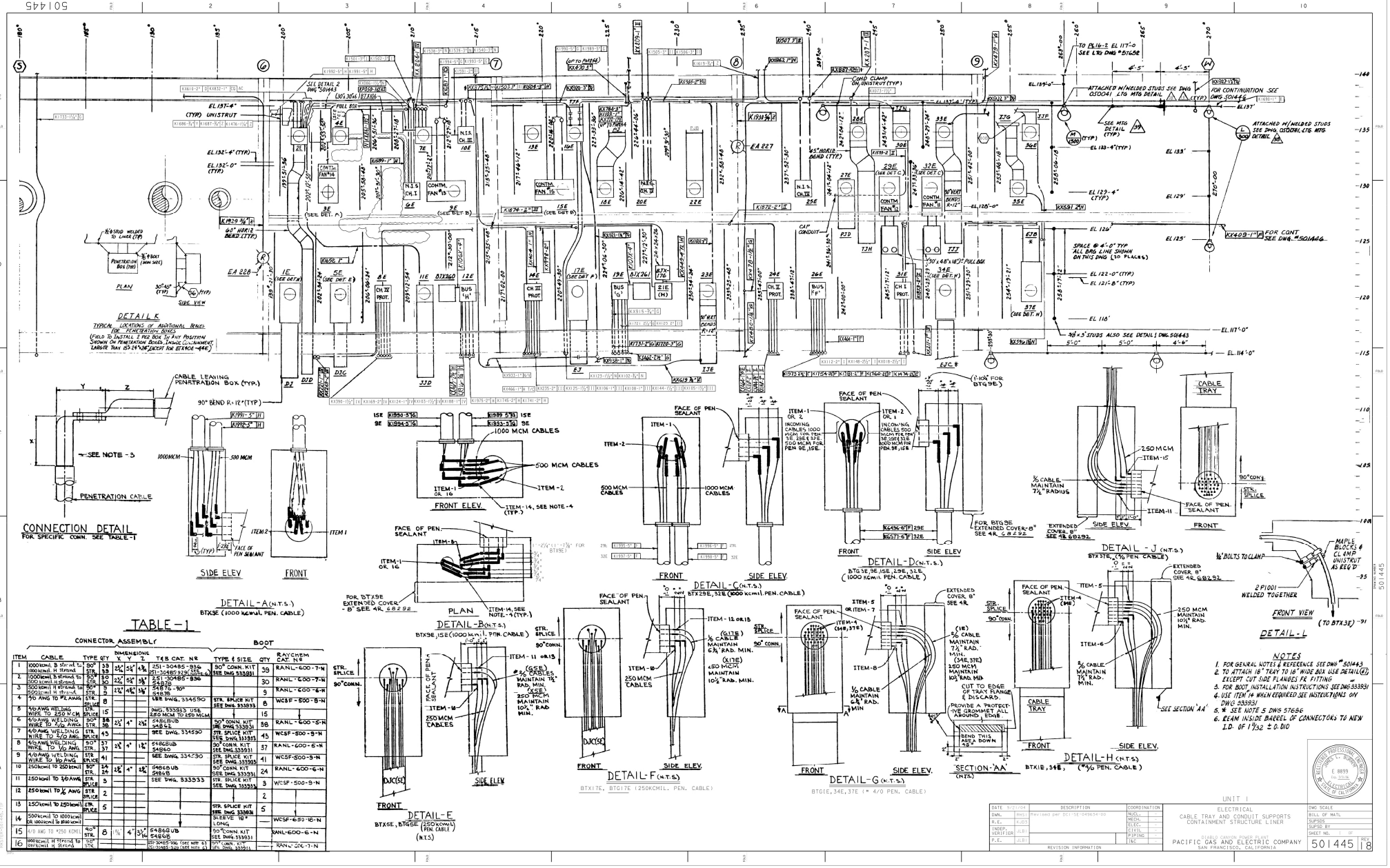

TABLE-1

ITEM	CABLE	CONNECTOR ASSEMBLY TYPE	QTY	DIMENSIONS X	Y	Z	T&B CAT. NO.	BOOT TYPE & SIZE	QTY	RAYCHEM CAT. NO.
1	1000kcmil, 3 str. w/ #6 1000 kcmil, 19 strand	90° STR.	38 39	2¼	5¼	4⅜	251-30485-836 251-30485928 (SEE NOTE 6)	90° CONN. KIT SEE DWG 333931	39	RANL-600-7-N
2	1000kcmil, 3 strand to 500 kcmil, 19 strand	90° STR.	30 30	2¾	5¼	3⅝	251-30485-836 54816		30	RANL-600-7-N
3	500 kcmil, 19 strand to 500kcmil, 19 strand	90° STR.	9 9	2¾	4⅜	3⅝	54876-90° 54878		9	RANL-600-6-N
4	3/0 AWG TO #2 AWG	STR. SPLICE	8				SEE DWG. 334590	STR. SPLICE KIT SEE DWG. 333933	8	WCSF-500-8-N
5	3/0 AWG WELDING WIRE TO 250 M CM	STR. SPLICE	15				DWG. 333933 USE 250 MCM TO 250 MCM		15	
6	4/0 AWG WELDING WIRE TO 5/0 AWG	90° STR.	38 38	2½	4"	2¾	54868UB 54842	90° CONN. KIT SEE DWG 333931	38	RANL-600-5-N
7	4/0 AWG WELDING WIRE TO 3/0 AWG	STR. SPLICE	45				SEE DWG. 334590	STR. SPLICE KIT SEE DWG. 333933	45	WCSF-500-9-N
8	4/0 AWG WELDING WIRE TO 1/0 AWG	90° STR.	37 37	2½	4"	1⅝	54868UB 54860	90° CONN. KIT SEE DWG. 333931	37	RANL-600-6-N
9	4/0 AWG WELDING WIRE TO 1/0 AWG	STR. SPLICE	41				SEE DWG. 334290	STR. SPLICE KIT SEE DWG. 333933	41	WCSF-500-9-N
10	250 kcmil TO 250 kcmil	90° STR.	24 24	2⅝	4"	2⅝	54868UB 54865	90° CONN. KIT SEE DWG. 333931	24	RANL-600-6-N
11	250 kcmil TO 3/0 AWG	STR. SPLICE	3				SEE DWG. 333933	STR. SPLICE KIT SEE DWG. 333933	3	WCSF-500-8-N
12	250 kcmil TO 1/0 AWG	STR. SPLICE	2					STR. SPLICE KIT SEE DWG. 333931	2	
13	250 kcmil TO 250 kcmil	STR. SPLICE	5					STR. SPLICE KIT SEE DWG. 333931	5	
14	500 kcmil TO 1000 kcmil OR 1000 kcmil TO #140 kcmil	STR. SPLICE						SLEEVE 18" LONG		WCSF-650-18-N
15	4/0 AWG TO #250 KCMIL	90° STR.	8	1⅝	4"	3½	54868UB 54868	90° CONN. KIT SEE DWG. 333931		RANL-600-6-N
16	1000 kcmil, 19 strand to 1000 kcmil, 19 strand	90° STR.					251-30485-936 (SEE NOTE 6) 251-30485-836 (SEE NOTE 6)	90° CONN. KIT SEE DWG. 333931		RANL-600-7-N

NOTES

1. FOR GENERAL NOTES & REFERENCE SEE DWG # 501443
2. TO ATTACH 18" TRAY TO 18" WIDE BOX USE DETAIL #2, EXCEPT CUT SIDE FLANGES FR FITTING
3. FOR BOOT INSTALLATION INSTRUCTIONS SEE DWG 333931
4. USE ITEM 14 WHEN REQUIRED SEE INSTRUCTIONS ON DWG 333931
5. # SEE NOTE 5 DWG 57686
6. REAM INSIDE BARREL OF CONNECTORS TO NEW I.D. OF 1 1/32 ± 0.010

UNIT 1
ELECTRICAL
CABLE TRAY AND CONDUIT SUPPORTS
CONTAINMENT STRUCTURE LINER

DIABLO CANYON POWER PLANT
PACIFIC GAS AND ELECTRIC COMPANY
SAN FRANCISCO, CALIFORNIA

DATE	DESCRIPTION	COORDINATION
9/21/04	Revised per DCI-SE-049634-00	NUCL.
		MECH.
		ELEC.
		CIVIL
		PIPING
		I&C

DRAWN: DWG
DESIGN: DWG
CHECKED: DWG
APPROVED: DWG
REVISION INFORMATION

DWG SCALE
BILL OF MATL
SUPSDS
SUPSD BY
SHEET NO.

DRAWING NUMBER 501445 REV. 8

437547 1

TABLE OF DEVICES

DEVICE (1Y12)	DEVICE (1Y14)	DESCRIPTION	CATALOG/TYPE	CONTACT	REMARKS
X12	X12	UPS COMMON ALARM		LATCH	COMMON ALARMS FOR X7, X13, X18, X19, X20, X203 & X404
X7	X7	OUT OF SYNC/COMMON ALARM		NON-LATCH	CONTACT CLOSES TO ENERGIZE X12
X13	X13	UPS FAN FAILURE/COMMON ALARM		LATCH	CONTACT CLOSES TO ENERGIZE X12
X18	X18	UPS OVER TEMP/COMMON ALARM		LATCH	CONTACT CLOSES TO ENERGIZE X12
X19	X19	REG XFMR OVER TEMP/COM ALM		LATCH	CONTACT CLOSES TO ENERGIZE X12
X20	X20	REG XFMR FAN FAILURE/COM ALM		LATCH	CONTACT CLOSES TO ENERGIZE X12
X203	X203	LOSS OF BYPASS SOURCE/COM ALM		NON-LATCH	CONTACT CLOSES TO ENERGIZE X12
X404	X404	AC INPUT/RECTIFIER FAIL/COM ALM		NON-LATCH	CONTACT CLOSES TO ENERGIZE X12
X4	X4	DC INPUT UNDERVOLTAGE RELAY		NON-LATCH	CONTACT CLOSES TO ENERGIZE X9
X6	X6	INVERTER OUTPUT UNDERVOLTAGE RELAY		NON-LATCH	CONTACT CLOSES TO ENERGIZE X10
X9	X9	LOSS OF BATTERY SOURCE ALARM		LATCH	N.C. - CONTACT OPENS TO ALARM
X10	X10	INVERTER FAILURE ALARM		LATCH	N.C. - CONTACT OPENS TO ALARM
X15	X15	LOSS OF AC OUTPUT VOLTAGE ALARM		LATCH	N.C. - CONTACT IN SERIES WITH X204
X16	X16	STATIC SW TRANSFERRED ALARM		LATCH	N.C. - CONTACT IN SERIES WITH X17
X17	X17	MAN BYP SW IN BYPASS POS ALARM		NON-LATCH	N.O. - CONTACT IN SERIES WITH X16
X204	X204	AC OUTPUT UNDERVOLTAGE RELAY		NON-LATCH	N.O. - CONTACT IN SERIES WITH X15
27PY12		PY12 UNDERVOLTAGE ALARM	P&B - TYPE CSJ MODEL 38-70010	NON-LATCH	N.C. - CONTACT CLOSES TO ALARM
	27PY14	PY14 UNDERVOLTAGE ALARM	P&B - TYPE CSJ MODEL 38-70010	NON-LATCH	N.C. - CONTACT CLOSES TO ALARM

TABLE OF DEVICES

DEVICE	DEVICE	DESCRIPTION	CATALOG/TYPE	CONTACT	REMARKS
XDCR1	XDCR1	DC INPUT CURRENT TRANSDUCER	RIS: 0 - 50mV DC		
XDCR2	XDCR2	DC INPUT VOLTAGE TRANSDUCER	RIS: 0 - 150VDC		
XDCR3	XDCR3	AC OUTPUT CURRENT TRANSDUCER	RIS: 0 - 5 AAC		
XDCR4	XDCR4	AC OUTPUT VOLTAGE TRANSDUCER	RIS: 0 - 130VAC		
72-12B1	72-14B1	DC INPUT BREAKER	G.E. TYPE TJK, 350A		
52-12B2	52-14B2	AC OUTPUT BREAKER	G.E. TYPE THED124100, 100A		
52-12B3	52-14B3	AC OUTPUT BREAKER	G.E. TYPE THED124100, 100A		
52-12B4	52-14B4	BYPASS SOURCE DISC SWITCH	G.E. TYPE TQD, 225A		
52-12B401	52-14B401	AC INPUT BREAKER	G.E. TYPE THED, (90A)		
52-12B801	52-14B801	REG XFMR OUTPUT BREAKER	C.H. TYPE HJD, 250A		
29-12S801	29-14S801	REG XFMR TRANSFER SWITCH	600VAC, 75A, 3PDT		BREAK-BEFORE-MAKE SWITCH
F2	F2	INVERTER FUSE	250VAC, 600A		SEE DWG 066144
F204	F204	STATIC SWITCH FUSE	250VAC, 600A		SEE DWG 066144
F407	F407	RECTIFIER FUSE	250VAC, 400A		SEE DWG 066144
F408	F408	RECTIFIER FUSE	250VAC, 400A		SEE DWG 066144
F409	F409	RECTIFIER FUSE	250VAC, 400A		SEE DWG 066144

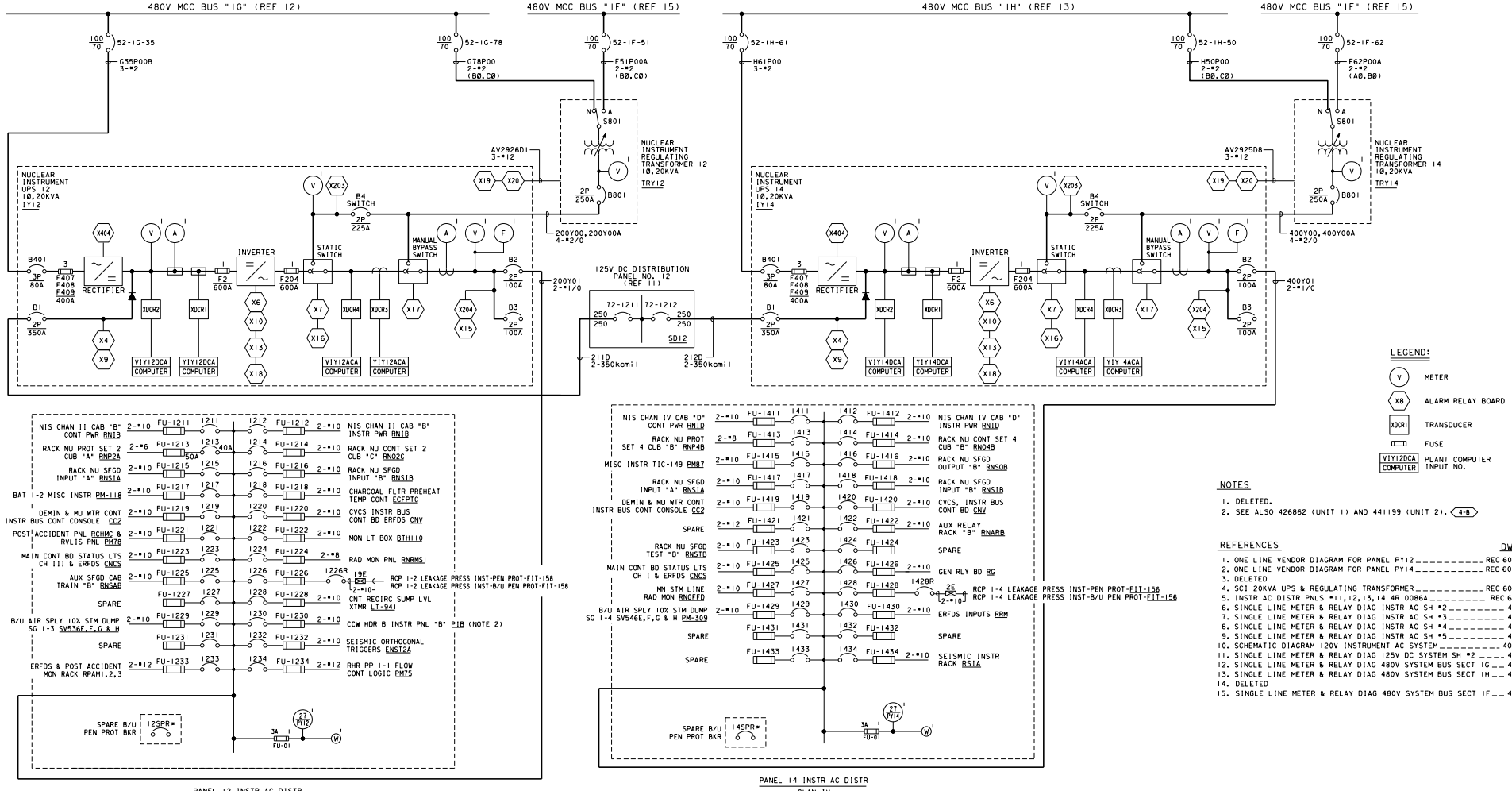

PANEL 12 INSTR AC DISTR
CHAN II
PY12

10, 2 WIRE, 120V
(ALL BKRS ARE 20A, 1P EXCEPT AS SHOWN.
ALL FUSES ARE 30A EXCEPT AS SHOWN.)
*NOTE: 12SPR IS A SPARE BKR FOR FUTURE PENETRATION REDUNDANCY, IT IS NOT CONNECTED ELECTRICALLY TO THE PANEL BUS.

PANEL 14 INSTR AC DISTR
CHAN IV
PY14

10, 2 WIRE, 120V
(ALL BKRS ARE 20A, 1P EXCEPT AS SHOWN.
ALL FUSES ARE 30A EXCEPT AS SHOWN.)
*NOTE: 14SPR IS A SPARE BKR FOR FUTURE PENETRATION REDUNDANCY, IT IS NOT CONNECTED ELECTRICALLY TO THE PANEL BUS.

LEGEND:
- V — METER
- X8 — ALARM RELAY BOARD
- XDCR1 — TRANSDUCER
- FUSE
- V1Y12DCA COMPUTER — PLANT COMPUTER INPUT NO.

NOTES
1. DELETED.
2. SEE ALSO 426862 (UNIT 1) AND 441199 (UNIT 2). 4-B

REFERENCES

	DWG NO.
1. ONE LINE VENDOR DIAGRAM FOR PANEL PY12	REC 6021760-117
2. ONE LINE VENDOR DIAGRAM FOR PANEL PY14	REC 6021760-135
3. DELETED	
4. SCI 20KVA UPS & REGULATING TRANSFORMER	REC 6013738
5. INSTR AC DISTR PNLS #11,12,13,14 4R 0086A	REC 663341
6. SINGLE LINE METER & RELAY DIAG INSTR AC SH #2	437549
7. SINGLE LINE METER & RELAY DIAG INSTR AC SH #3	445290
8. SINGLE LINE METER & RELAY DIAG INSTR AC SH #4	445291
9. SINGLE LINE METER & RELAY DIAG INSTR AC SH #5	445294
10. SCHEMATIC DIAGRAM 120V INSTRUMENT AC SYSTEM	4010036
11. SINGLE LINE METER & RELAY DIAG 125V DC SYSTEM SH #2	445075
12. SINGLE LINE METER & RELAY DIAG 480V SYSTEM BUS SECT 1G	437542
13. SINGLE LINE METER & RELAY DIAG 480V SYSTEM BUS SECT 1H	437543
14. DELETED	
15. SINGLE LINE METER & RELAY DIAG 480V SYSTEM BUS SECT 1F	437916

NUCLEAR SAFETY RELATED

KEY DWG. SECTION 1C

UNIT 1

DATE	
04-18-2019	
D.D.	IAZI
R.E.	RXG2
I.V.	N/A
P.E.	N/A

REVISION DESCRIPTION: Revised Per DFT-744789

ELECTRICAL
SINGLE LINE METER AND RELAY DIAGRAM
120V INSTRUMENT AC SYSTEM

DIABLO CANYON POWER PLANT
PACIFIC GAS AND ELECTRIC COMPANY
SAN FRANCISCO, CALIFORNIA

DWG SCALE:
BILL OF MATL:
SUPSDS:
SUPSD BY:

DRAWING	SHEET	PAGE	REV
437547	1	0	49

DRAWING NUMBER 437547 1

RASTER=437547-1-0.dgn
DGN=437547-1-0.dgn
CAD User:IAZI Date:04-18-2019

TABLE OF DEVICES

DEVICE (1Y22)	DEVICE (1Y24)	DESCRIPTION	CATALOG/TYPE	CONTACT	REMARKS
X12	X12	UPS COMMON ALARM		LATCH	COMMON ALARMS FOR X7, X13, X18, X19, X20, X203 & X404
X7	X7	OUT OF SYNC/COMMON ALARM		NON-LATCH	CONTACT CLOSES TO ENERGIZE X12
X13	X13	UPS FAN FAILURE/COMMON ALARM		LATCH	CONTACT CLOSES TO ENERGIZE X12
X18	X18	UPS OVER TEMP/COMMON ALARM		LATCH	CONTACT CLOSES TO ENERGIZE X12
X19	X19	REG XFMR OVER TEMP/COM ALM		LATCH	CONTACT CLOSES TO ENERGIZE X12
X20	X20	REG XFMR FAN FAILURE/COM ALM		LATCH	CONTACT CLOSES TO ENERGIZE X12
X203	X203	LOSS OF BYPASS SOURCE/COM ALM		NON-LATCH	CONTACT CLOSES TO ENERGIZE X12
X404	X404	AC INPUT/RECTIFIER FAIL/COM ALM		NON-LATCH	CONTACT CLOSES TO ENERGIZE X12
X4	X4	DC INPUT UNDERVOLTAGE RELAY		NON-LATCH	CONTACT CLOSES TO ENERGIZE X9
X6	X6	INVERTER OUTPUT UNDERVOLTAGE RELAY		NON-LATCH	CONTACT CLOSES TO ENERGIZE X10
X9	X9	LOSS OF BATTERY SOURCE ALARM		LATCH	N.C. - CONTACT OPENS TO ALARM
X10	X10	INVERTER FAILURE ALARM		LATCH	N.C. - CONTACT OPENS TO ALARM
X15	X15	LOSS OF AC OUTPUT VOLTAGE ALARM		LATCH	N.C. - CONTACT IN SERIES WITH X204
X16	X16	STATIC SW TRANSFERRED ALARM		LATCH	N.C. - CONTACT IN SERIES WITH X17
X17	X17	MAN BYP SW IN BYPASS POS ALARM		NON-LATCH	N.O. - CONTACT IN SERIES WITH X16
X204	X204	AC OUTPUT UNDERVOLTAGE RELAY		NON-LATCH	N.O. - CONTACT IN SERIES WITH X15
27-PY22		PY22 UNDERVOLTAGE ALARM	P&B - TYPE CSJ MODEL 38-70010	NON-LATCH	N.C. - CONTACT CLOSES TO ALARM
	27-PY24	PY24 UNDERVOLTAGE ALARM	P&B - TYPE CSJ MODEL 38-70010	NON-LATCH	N.C. - CONTACT CLOSES TO ALARM

TABLE OF DEVICES

DEVICE	DEVICE	DESCRIPTION	CATALOG/TYPE	CONTACT	REMARKS
XDCR1	XDCR1	DC INPUT CURRENT TRANSDUCER	RIS: 0 - 50mV DC		
XDCR2	XDCR2	DC INPUT VOLTAGE TRANSDUCER	RIS: 0 - 150VDC		
XDCR3	XDCR3	AC OUTPUT CURRENT TRANSDUCER	RIS: 0 - 5 AAC		
XDCR4	XDCR4	AC OUTPUT VOLTAGE TRANSDUCER	RIS: 0 - 130VAC		
72-22B1	72-24B1	DC INPUT BREAKER	G.E. TYPE TJK, 350A		
52-22B2	52-24B2	AC OUTPUT BREAKER	G.E. TYPE THED124100, 100A		
52-22B3	52-24B3	AC OUTPUT BREAKER	G.E. TYPE THED124100, 100A		
52-22B4	52-24B4	BYPASS SOURCE DISC SWITCH	G.E. TYPE TQD, 225A		
52-22B401	52-24B401	AC INPUT BREAKER	G.E. TYPE THED, 190A		
52-22B801	52-24B801	REG XFMR OUTPUT BREAKER	C.H. TYPE HJD, 250A		
52-22S801	52-24S801	REG XFMR TRANSFER SWITCH	600VAC, 75A, 3PDT		BREAK-BEFORE-MAKE SWITCH
F2	F2	INVERTER FUSE	250VAC, 600A		SEE DWG 066144
F204	F204	STATIC SWITCH FUSE	250VAC, 600A		SEE DWG 066144
F407	F407	RECTIFIER FUSE	250VAC, 400A		SEE DWG 066144
F408	F408	RECTIFIER FUSE	250VAC, 400A		SEE DWG 066144
F409	F409	RECTIFIER FUSE	250VAC, 400A		SEE DWG 066144

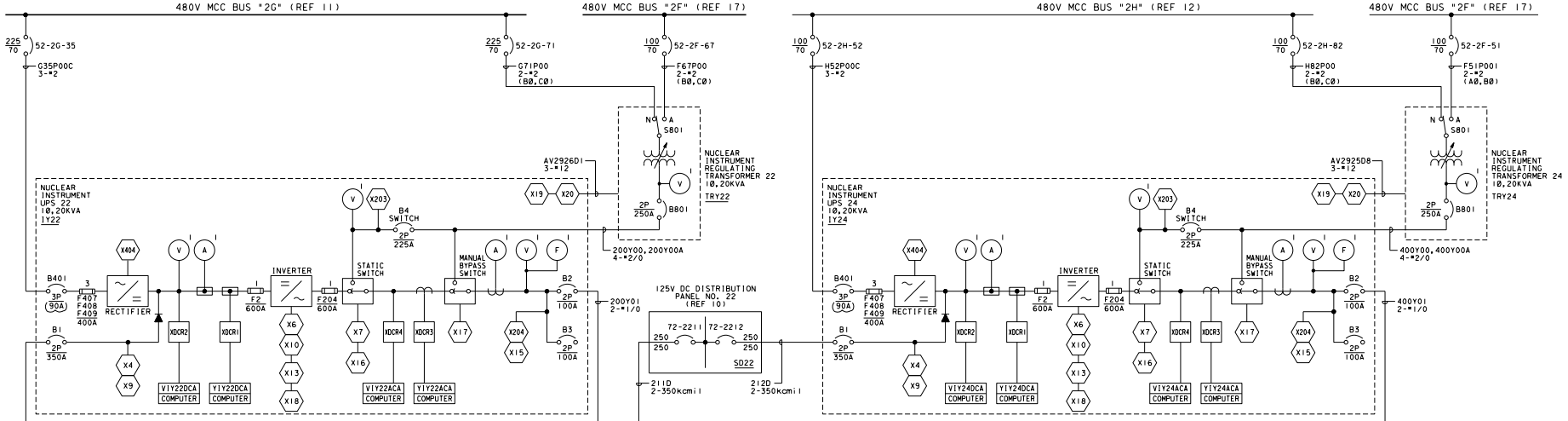

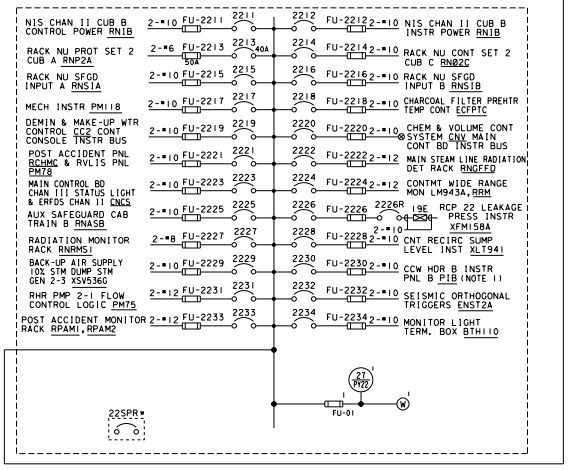

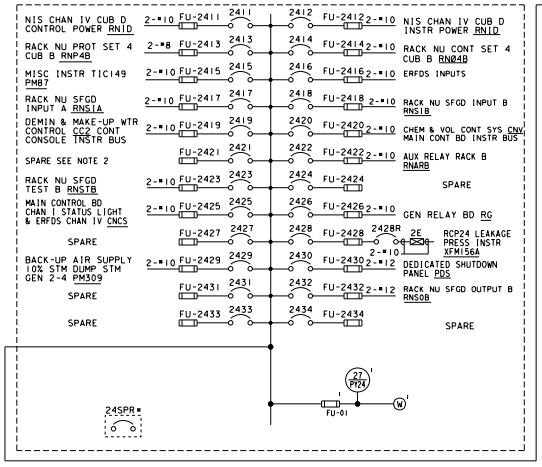

PANEL 22 INSTR AC DISTR
CHAN II
PY22
10, 2WIRE, 120V
(ALL BKRS ARE 20A, IP EXCEPT AS SHOWN)
ALL FUSES ARE 30A EXCEPT AS SHOWN.)
*NOTE: 22SPR IS A SPARE BKR FOR FUTURE PENETRATION REDUNDANCY, IT IS NOT CONNECTED ELECTRICALLY TO THE PANEL BUS.

PANEL 24 INSTR AC DISTR
CHAN IV
PY24
10, 2WIRE, 120V
(ALL BKRS ARE 20A, IP EXCEPT AS SHOWN)
ALL FUSES ARE 30A EXCEPT AS SHOWN.)
*NOTE: 24SPR IS A SPARE BKR FOR FUTURE PENETRATION REDUNDANCY, IT IS NOT CONNECTED ELECTRICALLY TO THE PANEL BUS.

LEGEND

- V — METER
- X8 — ALARM RELAY BOARD
- XDCR1 — TRANSDUCER
- FUSE
- VIY22DCA COMPUTER — PLANT COMPUTER INPUT NO.

NOTES

⊗ BACK-UP OVERCURRENT PROTECTION FOR FUSES FOR LOAD INSIDE CONTAINMENT (REF DWG 451805)

1. SEE ALSO 441199 (UNIT 2) AND 426862 (UNIT 1). (4-8)
2. 52-PY242 IS DEDICATED FOR UNIT 2 SAFETY PARAMETER SYSTEM COMPUTER 21 AND 22 AT RSPSC21 (SEE 441459 CIR 421Y00A).

REFERENCES

	DWG NO.
1. -DELETED-	
2. -DELETED-	
3. -DELETED-	
4. SCI 20KVA UPS & REGULATING TRANSFORMER	6013738
5. INSTR AC DISTR PNLS *11,12,13,14 4R 0086A	663341
6. SINGLE LINE METER & RELAY DIAG INSTR AC SH *2	441242
7. SINGLE LINE METER & RELAY DIAG INSTR AC SH *3	445390
8. SINGLE LINE METER & RELAY DIAG INSTR AC SH *4	445391
9. SINGLE LINE METER & RELAY DIAG INSTR AC	445394
10. SINGLE LINE METER & RELAY DIAG 125V DC SYSTEM	441240
11. SINGLE LINE METER & RELAY DIAG 480V SYSTEM BUS SECT 2G	441238
12. SINGLE LINE METER & RELAY DIAG 480V SYSTEM BUS SECT 2H	441239
13. SCHEMATIC DIAGRAM 120V INSTRUMENT AC SYSTEM	4010037
14. -DELETED-	
15. LIST OF ELECTRICAL DEVICES	050011
16. FED FROM LIST	021768
17. SINGLE LINE METER & RELAY DIAG 480V SYSTEM BUS SECT 2F	441237
18. ONE LINE VENDOR DIAGRAM FOR PANEL PY22	6021760-217
19. ONE LINE VENDOR DIAGRAM FOR PANEL PY24	6021760-235

NUCLEAR SAFETY RELATED

KEY DWG. SECTION 1C

UNIT 2

DATE	
04-16-2018	
D.D.	IAZI
R.E.	FXC2
I.V.	N/A
P.E.	N/A

REVISION DESCRIPTION: Revised Per DFT-7*4485

ELECTRICAL
SINGLE LINE METER AND RELAY DIAGRAM 120V INSTRUMENT AC SYSTEM

DIABLO CANYON POWER PLANT
PACIFIC GAS AND ELECTRIC COMPANY
SAN FRANCISCO, CALIFORNIA

DWG SCALE:	
BILL OF MAT'L:	
SUPSDS:	
SUPSD BY:	

DRAWING	SHEET	PAGE	REV
441241	1	0	45

DRAWING NUMBER 441241

RASTER=441241-1-0.dgn
DGN=441241-1-0.dgn
CAD User:IAZI Date:04-16-2018

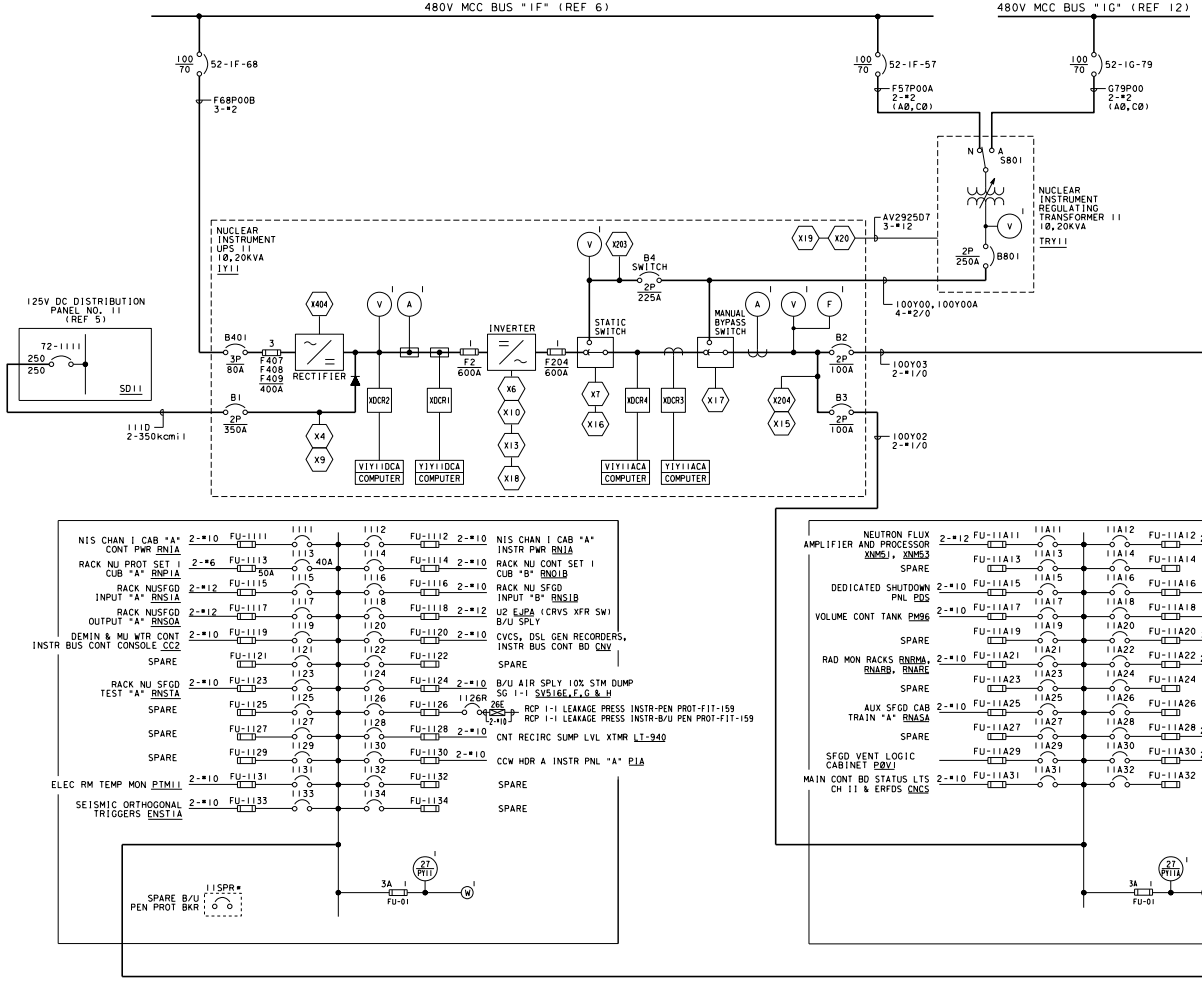

PANEL 11 INSTR AC DISTR

CHAN I
PY11

10, 2 WIRE, 120V

(ALL BKR'S ARE 20A, 1P EXCEPT AS SHOWN.)
ALL FUSES ARE 30A EXCEPT AS SHOWN.)
*NOTE: 11SPR IS A SPARE BKR FOR FUTURE PENETRATION REDUNDANCY, IT IS NOT CONNECTED ELECTRICALLY TO THE PANEL BUS.

PANEL 11A INSTR AC DISTR

CHAN I
PY11A

10, 2 WIRE, 120V
(ALL BKR'S ARE 20A, 1P EXCEPT AS SHOWN)
(ALL FUSES ARE 30A, EXCEPT AS SHOWN)

TABLE OF DEVICES

DEVICE	DESCRIPTION	CATALOG/TYPE	CONTACT	REMARKS
X12	UPS COMMON ALARM		LATCH	COMMON ALARMS FOR X7, X13, X18, X19, X20, X203 & X404
X7	OUT OF SYNC/COMMON ALARM		NON-LATCH	CONTACT CLOSES TO ENERGIZE X12
X13	UPS FAN FAILURE/COMMON ALARM		LATCH	CONTACT CLOSES TO ENERGIZE X12
X18	UPS OVER TEMP/COMMON ALARM		LATCH	CONTACT CLOSES TO ENERGIZE X12
X19	REG XFMR OVER TEMP/COM ALM		LATCH	CONTACT CLOSES TO ENERGIZE X12
X20	REG XFMR FAN FAILURE/COM ALM		LATCH	CONTACT CLOSES TO ENERGIZE X12
X203	LOSS OF BYPASS SOURCE/COM ALM		NON-LATCH	CONTACT CLOSES TO ENERGIZE X12
X404	AC INPUT/RECTIFIER FAIL/COM ALM		NON-LATCH	CONTACT CLOSES TO ENERGIZE X12
X4	DC INPUT UNDERVOLTAGE RELAY		NON-LATCH	CONTACT CLOSES TO ENERGIZE X9
X6	INVERTER OUTPUT UNDERVOLTAGE RELAY		NON-LATCH	CONTACT CLOSES TO ENERGIZE X10
X9	LOSS OF BATTERY SOURCE ALARM		LATCH	N.C. - CONTACT OPENS TO ALARM
X10	INVERTER FAILURE ALARM		LATCH	N.C. - CONTACT OPENS TO ALARM
X15	LOSS OF AC OUTPUT VOLTAGE ALARM		LATCH	N.C. - CONTACT IN SERIES WITH X204
X16	STATIC SW TRANSFERRED ALARM		LATCH	N.C. - CONTACT IN SERIES WITH X17
X17	MAN BYP SW IN BYPASS POS ALARM		NON-LATCH	N.O. - CONTACT IN SERIES WITH X16
X204	AC OUTPUT UNDERVOLTAGE RELAY		NON-LATCH	N.O. - CONTACT IN SERIES WITH X15
27PY11	PY11 UNDERVOLTAGE ALARM	P&B - TYPE CSJ MODEL 38-70010	NON-LATCH	N.C. - CONTACT CLOSES TO ALARM
27PY11A	PY11A UNDERVOLTAGE ALARM	P&B - TYPE CSJ MODEL 38-70010	NON-LATCH	N.C. - CONTACT CLOSES TO ALARM
XDCR1	DC INPUT CURRENT TRANSDUCER	RIS: 0 - 50mV DC		
XDCR2	DC INPUT VOLTAGE TRANSDUCER	RIS: 0 - 150VDC		
XDCR3	AC OUTPUT CURRENT TRANSDUCER	RIS: 0 - 5 AAC		
XDCR4	AC OUTPUT VOLTAGE TRANSDUCER	RIS: 0 - 130VAC		
72-1181	DC INPUT BREAKER	G.E. TYPE TJK, 350A		
52-11B2	AC OUTPUT BREAKER	G.E. TYPE THED124100, 100A		
52-11B3	AC OUTPUT BREAKER	G.E. TYPE THED124100, 100A		
52-11B4	BYPASS SOURCE DISC SWITCH	G.E. TYPE TQD, 225A		
52-11B401	AC INPUT BREAKER	G.E. TYPE THED,(90A)		
52-11B801	REG XFMR OUTPUT BREAKER	C.H. TYPE HJD, 250A		
29-11S801	REG XFMR TRANSFER SWITCH	600VAC, 75A, 3PDT		BREAK-BEFORE-MAKE SWITCH
F2	INVERTER FUSE	250VAC, 600A		SEE DWG 066144
F204	STATIC SWITCH FUSE	250VAC, 600A		SEE DWG 066144
F407	RECTIFIER FUSE	250VAC, 400A		SEE DWG 066144
F408	RECTIFIER FUSE	250VAC, 400A		SEE DWG 066144
F409	RECTIFIER FUSE	250VAC, 400A		SEE DWG 066144

LEGEND:

- (V) METER
- (X8) ALARM RELAY BOARD
- XDCR1 TRANSDUCER
- FUSE
- 1Y11DCA COMPUTER — PLANT COMPUTER INPUT NO.

NOTE:

1. DELETED.
2. THIS CIRCUIT BREAKER/FUSE ISOLATES CLASS 1E PANEL PY11A FROM A CLASS 11 LOAD. FOR FUSE SIZE & TYPE SEE REF.13.

REFERENCES

	DWG NO.
1. SINGLE LINE METER & RELAY DIAG INSTR AC SH #1	437547
2. SINGLE LINE METER & RELAY DIAG INSTR AC SH #2	437549
3. SINGLE LINE METER & RELAY DIAG INSTR AC SH #4	445291
4. SINGLE LINE METER & RELAY DIAG INSTR AC SH #5	445294
5. SINGLE LINE METER & RELAY DIAG 125V DC SYSTEM	437546
6. SINGLE LINE METER & RELAY DIAG 480V SYSTEM BUS SECT 1F	437916
7. SCHEMATIC DIAG-120V INSTR AC SYSTEM	4010036
8. SCI 20KVA UPS & REGULATING TRANSFORMER	REC 6013738
9. INSTR AC DISTR PNLS	REC 663341
10. ONE LINE VENDOR DIAGRAM FOR PANEL PY11	REC 6021760-105
11. LIST OF ELECTRICAL DEVICES	050024
12. SINGLE LINE METER & RELAY DIAG 480V SYSTEM BUS SECT 1G	437542
13. FUSE LIST	066144
14. ONE LINE VENDOR DIAGRAM FOR PANEL PY11A	REC 6021760-111

NUCLEAR SAFETY RELATED

KEY DWG. SECTION 1C

UNIT 1

DATE	
04-18-2019	
D.D.	IAZ1
R.E.	RXG2
I.V.	N/A
P.E.	N/A

REVISION DESCRIPTION: Revised Per DFT-744789

ELECTRICAL
SINGLE LINE METER AND RELAY DIAGRAM
120V INSTRUMENT AC SYSTEM

DIABLO CANYON POWER PLANT
PACIFIC GAS AND ELECTRIC COMPANY
SAN FRANCISCO, CALIFORNIA

DWG SCALE:	
BILL OF MAT'L:	
SUPSDS:	
SUPSD BY:	

DRAWING	SHEET	PAGE	REV
445290	1	0	19

U2-445390

RASTER=445290-1-0.dgn
DGN=445290-1-0.dgn
CAD User=IAZ1 Date=04-18-2019

480V MCC BUS "1H" (REF 6)

480V MCC BUS "1G" (REF 12)

100/70 52-1H-77 — H77P00B 3-#2

100/70 52-1H-56 — H56P00A 2-#2 (B0,C0) — TMOD PER 60163588

100/70 52-1G-37 — G37P00A 2-#2 (A0,B0)

N A S801

NUCLEAR INSTRUMENT REGULATING TRANSFORMER 13 10,20KVA TRY13

V — 2P 250A B801

AV2927D1 3-#12

300Y00, 300Y00A 4-#2/0

NUCLEAR INSTRUMENT UPS 13 10,20KVA 1Y13

X19 X20

V X203 — B4 SWITCH — 2P 225A

125V DC DISTRIBUTION PANEL NO. 13 (REF 5)

72-1311 250 250 — SD13

311D 2-350kcmil

B401 3P 80A — 3 F407 F408 F409 400A — RECTIFIER

X404 V A

B1 2P 350A

X4 X9

XDCR2 — V1Y13DCA COMPUTER

XDCR1 — Y1Y13DCA COMPUTER

F2 600A

INVERTER

X6 X10 X13 X18

F204 600A

STATIC SWITCH

X7 X16

XDCR4 — V1Y13ACA COMPUTER

XDCR3 — Y1Y13ACA COMPUTER

MANUAL BYPASS SWITCH

A V F

X17

X204 X15

B2 2P 100A — 300Y01 2-#1/0

B3 2P 100A — 300Y02 2-#1/0

NIS CHAN III CAB "C" CONT PWR RN1C	2-#10	FU-1311	1311	1312	FU-1312	2-#10	NIS CHAN III CAB"C" INSTR PWR RN1C
RACK NU PROT SET 3 CUB "A" RNP3A	2-#8	FU-1313	1313	1314	FU-1314	2-#10	RACK NU CONT SET 3 CUB "B" RNO3B
BAT 1-1 MISC INSTR PM-117	2-#10	FU-1315	1315	1316	FU-1316		SPARE
RACK NU SFGD INPUT "A" RNS1A	2-#10	FU-1317	1317	1318	FU-1318	2-#10	RACK NU SFGD INPUT "B" RNS1B
DEMIN & MU WTR CONT INSTR BUS CONT CONSOLE CC2	2-#10	FU-1319	1319	1320	FU-1320	2-#10	CVCS, INSTR BUS CONT BD CNV
SPARE		FU-1321	1321	1322	FU-1322	2-#10	STM GEN 10% ATM INST HIC516 & HIC526 H01
RHR PP 1-2 FLOW CONT LOGIC PM75A	2-#12	FU-1323	1323	1324	FU-1324		SPARE
AUX FW11,12 INSTR HIC 70,71, H01	2-#10	FU-1325	1325	1326	FU-1326	1326R 12E 2-#10	RCP 1-3 LEAKAGE PRESS INST-PEN PROT-FIT-157 RCP 1-3 LEAKAGE PRESS INST-B/U PEN PROT-FIT-157
RWST LVL AUX RLYS P1C	2-#10	FU-1327	1327	1328	FU-1328	2-#10	B/U AIR SPLY 10% STM DUMP SG 1-2 SV526E,F,G & H PM307
SFGD VENT LOGIC CABINET P0V2	2-#12	FU-1329	1329	1330	FU-1330	2-#10	SEISMIC INSTR RACK RS1
SEISMIC ORTHOGONAL TRIGGERS ENST3A	2-#10	FU-1331	1331	1332	FU-1332	2-#12	TRANS SW EJPBZ FOR CONT RM VENT ISOL AUX RLYS & PZR SAFETY RV MONITOR POM1 (DWG 433130)
ERFDS & POST ACCIDENT MON RACK RPAM1,2,4	2-#12	FU-1333	1333	1334	FU-1334	2-#12	POST ACCIDENT PNLS RCHMC & POPLS2 AND RVLIS PNL PM79

SPARE B/U PEN PROT BKR 13SPR*

27 PY13 — 3A — FU-01 — W

PANEL 13 INSTR AC DISTR

CHAN III PY13

10, 2 WIRE, 120V

(ALL BKRS ARE 20A, IP EXCEPT AS SHOWN. ALL FUSES ARE 30A EXCEPT AS SHOWN.)

*NOTE: 13SPR IS A SPARE BKR FOR FUTURE PENETRATION REDUNDANCY. IT IS NOT CONNECTED ELECTRICALLY TO THE PANEL BUS.

MON LT BOX BTH110X	2-#10	FU-13A11	13A11	13A12	FU-13A12	2-#12	NEUTRON FLUX AMPLIFIER AND PROCESSOR XNM52, XNM54
MAIN CONT BD STATUS LTS CH IV & ERFDS CNCS	2-#10	FU-13A13	13A13	13A14	FU-13A14		SPARE
RAD MON PNL RNRMS2	2-#8	FU-13A15	13A15	13A16	FU-13A16		SPARE
SPARE		FU-13A17	13A17	13A18	FU-13A18		SPARE
SPARE		FU-13A19	13A19	13A20	FU-13A20		SPARE
RAD MON RACKS RNRMA, RNARB, RNARE	2-#10	FU-13A21	13A21	13A22	FU-13A22	2-#10	FIRE ALARM CONT PNL POFA, POFB, POFD
SPARE		FU-13A23	13A23	13A24	FU-13A24	1-#10	
AUX RELAY RACK "A" RNARA	2-#10	FU-13A25	13A25	13A26	FU-13A26	2-#10	GEN RLY BD RG
SPARE		FU-13A27	13A27	13A28	FU-13A28	2-#12	TRANS SW EJPB FOR CONT RM VENT ISOL AUX RLYS & PZR SAFETY RV MONITOR POM2 (U-2 B/U SPLY-DWG 433130)
SPARE		FU-13A29	13A29	13A30	FU-13A30		SPARE (SEE NOTE 2)
SPARE		FU-13A31	13A31	13A32	FU-13A32		SPARE

27 PY13A — 3A — FU-01 — W

PANEL 13A INSTR AC DISTR

CHAN III PY13A

10, 2 WIRE, 120V

(ALL BKR'S ARE 20A, IP EXCEPT AS SHOWN)

ALL FUSES ARE 30A, EXCEPT AS SHOWN)

TABLE OF DEVICES

DEVICE	DESCRIPTION	CATALOG/TYPE	CONTACT	REMARKS
X12	UPS COMMON ALARM		LATCH	COMMON ALARMS FOR X7, X13, X18, X19, X20, X203 & X404
X7	OUT OF SYNC/COMMON ALARM		NON-LATCH	CONTACT CLOSES TO ENERGIZE X12
X13	UPS FAN FAILURE/COMMON ALARM		LATCH	CONTACT CLOSES TO ENERGIZE X12
X18	UPS OVER TEMP/COMMON ALARM		LATCH	CONTACT CLOSES TO ENERGIZE X12
X19	REG XFMR OVER TEMP/COM ALM		LATCH	CONTACT CLOSES TO ENERGIZE X12
X20	REG XFMR FAN FAILURE/COM ALM		LATCH	CONTACT CLOSES TO ENERGIZE X12
X203	LOSS OF BYPASS SOURCE/COM ALM		NON-LATCH	CONTACT CLOSES TO ENERGIZE X12
X404	AC INPUT/RECTIFIER FAIL/COM ALM		NON-LATCH	CONTACT CLOSES TO ENERGIZE X12
X4	DC INPUT UNDERVOLTAGE RELAY		NON-LATCH	CONTACT CLOSES TO ENERGIZE X9
X6	INVERTER OUTPUT UNDERVOLTAGE RELAY		NON-LATCH	CONTACT CLOSES TO ENERGIZE X10
X9	LOSS OF BATTERY SOURCE ALARM		LATCH	N.C. - CONTACT OPENS TO ALARM
X10	INVERTER FAILURE ALARM		LATCH	N.C. - CONTACT OPENS TO ALARM
X15	LOSS OF AC OUTPUT VOLTAGE ALARM		LATCH	N.C. - CONTACT IN SERIES WITH X204
X16	STATIC SW TRANSFERRED ALARM		LATCH	N.C. - CONTACT IN SERIES WITH X17
X17	MAN BYP SW IN BYPASS POS ALARM		NON-LATCH	N.O. - CONTACT IN SERIES WITH X16
X204	AC OUTPUT UNDERVOLTAGE RELAY		NON-LATCH	N.O. - CONTACT IN SERIES WITH X15
27PY13	PY13 UNDERVOLTAGE ALARM	P&B - TYPE CSJ MODEL 38-70010	NON-LATCH	N.C. - CONTACT CLOSES TO ALARM
27PY13A	PY13A UNDERVOLTAGE ALARM	P&B - TYPE CSJ MODEL 38-70010	NON-LATCH	N.C. - CONTACT CLOSES TO ALARM
XDCR1	DC INPUT CURRENT TRANSDUCER	RIS: 0 - 50mV DC		
XDCR2	DC INPUT VOLTAGE TRANSDUCER	RIS: 0 - 150VDC		
XDCR3	AC OUTPUT CURRENT TRANSDUCER	RIS: 0 - 5 AAC		
XDCR4	AC OUTPUT VOLTAGE TRANSDUCER	RIS: 0 - 130VAC		
72-13B1	DC INPUT BREAKER	G.E. TYPE TJK, 350A		
52-13B2	AC OUTPUT BREAKER	G.E. TYPE THED124100, 100A		
52-13B3	AC OUTPUT BREAKER	G.E. TYPE THED124100, 100A		
52-13B4	BYPASS SOURCE DISC SWITCH	G.E. TYPE TQD, 225A		
52-13B401	AC INPUT BREAKER	G.E. TYPE THED, 90A		
52-13B801	REG XFMR OUTPUT BREAKER	C.H. TYPE HJD, 250A		
29-13S801	REG XFMR TRANSFER SWITCH	600VAC, 75A, 3PDT		BREAK-BEFORE-MAKE SWITCH
F2	INVERTER FUSE	250VAC, 600A		SEE DWG 066144
F204	STATIC SWITCH FUSE	250VAC, 600A		SEE DWG 066144
F407	RECTIFIER FUSE	250VAC, 400A		SEE DWG 066144
F408	RECTIFIER FUSE	250VAC, 400A		SEE DWG 066144
F409	RECTIFIER FUSE	250VAC, 400A		SEE DWG 066144

LEGEND

- V — METER
- X8 — ALARM RELAY BOARD
- XDCR1 — TRANSDUCER
- FUSE
- V1Y13DCA COMPUTER — PLANT COMPUTER INPUT NO.

NOTE:

1. DELETED
2. 52-PY13A30 IS DEDICATED FOR UNIT 1 SAFETY PARAMETER SYS COMPUTERS 11 & 12 (SEE 445292, CIRCUIT 3A30Y00).

REFERENCES

	DWG NO.
1. SINGLE LINE METER & RELAY DIAG INSTR AC SH #1	437547
2. SINGLE LINE METER & RELAY DIAG INSTR AC SH #2	437549
3. SINGLE LINE METER & RELAY DIAG INSTR AC SH #3	445290
4. SINGLE LINE METER & RELAY DIAG INSTR AC SH #5	445294
5. SINGLE LINE METER & RELAY DIAG 125V DC SYSTEM	445076
6. SINGLE LINE METER & RELAY DIAG 480V SYSTEM BUS SECT 1H	437543
7. SCHEMATIC DIAG-120V INSTR AC SYSTEM	4010036
8. SCI 20KVA UPS & REGULATING TRANSFORMER	6013738
9. INSTR AC DISTR PNLS	663341
10. ONE LINE VENDOR DIAGRAM FOR PANEL PY13	6021760-123
11. LIST OF ELECTRICAL DEVICES	050024
12. SINGLE LINE METER & RELAY DIAG 480V SYSTEM BUS SECT 1G	437542
13. ONE LINE VENDOR DIAGRAM FOR PANEL PY13A	6021760-129

KEY DWG. SECTION 1C

UNIT 1

DATE	
04-22-2024	
D.D.	ZNS4
R.E.	FXC2
I.V.	N/A
P.E.	N/A

REGISTERED PROFESSIONAL ENGINEER — STATE OF CALIFORNIA — NOT REQUIRED PER B.P. 5.105

REVISION DESCRIPTION
Revised Per DDT-4*2472

ELECTRICAL
SINGLE LINE METER AND RELAY DIAGRAM
120V INSTRUMENT AC SYSTEM

DIABLO CANYON POWER PLANT
PACIFIC GAS AND ELECTRIC COMPANY
SAN FRANCISCO, CALIFORNIA

DWG SCALE:			
BILL OF MATL:			
SUPSDS:			
SUPSD BY:			
DRAWING 445291	SHEET 1	PAGE 0	REV 29

DRAWING NUMBER 445291

RASTER=445291-1-0.dgn
DGN=445291-1-0.dgn
CAD User:ZNS4 Date: 04-22-2024

APD 4 Size

TABLE OF DEVICES

DEVICE	DESCRIPTION	CATALOG/TYPE	CONTACT	REMARKS
X12	UPS COMMON ALARM		LATCH	COMMON ALARMS FOR X7, X13, X18, X19, X20, X203 & X404
X7	OUT OF SYNC/COMMON ALARM		NON-LATCH	CONTACT CLOSES TO ENERGIZE X12
X13	UPS FAN FAILURE/COMMON ALARM		LATCH	CONTACT CLOSES TO ENERGIZE X12
X18	UPS OVER TEMP/COMMON ALARM		LATCH	CONTACT CLOSES TO ENERGIZE X12
X19	REG XFMR OVER TEMP/COM ALM		LATCH	CONTACT CLOSES TO ENERGIZE X12
X20	REG XFMR FAN FAILURE/COM ALM		LATCH	CONTACT CLOSES TO ENERGIZE X12
X203	LOSS OF BYPASS SOURCE/COM ALM		NON-LATCH	CONTACT CLOSES TO ENERGIZE X12
X404	AC INPUT/RECTIFIER FAIL/COM ALM		NON-LATCH	CONTACT CLOSES TO ENERGIZE X12
X4	DC INPUT UNDERVOLTAGE RELAY		NON-LATCH	CONTACT CLOSES TO ENERGIZE X9
X6	INVERTER OUTPUT UNDERVOLTAGE RELAY		NON-LATCH	CONTACT CLOSES TO ENERGIZE X10
X9	LOSS OF BATTERY SOURCE ALARM		LATCH	N.C. - CONTACT OPENS TO ALARM
X10	INVERTER FAILURE ALARM		LATCH	N.C. - CONTACT OPENS TO ALARM
X15	LOSS OF AC OUTPUT VOLTAGE ALARM		LATCH	N.C. - CONTACT IN SERIES WITH X204
X16	STATIC SW TRANSFERRED ALARM		LATCH	N.C. - CONTACT IN SERIES WITH X17
X17	MAN BYP SW IN BYPASS POS ALARM		NON-LATCH	N.O. - CONTACT IN SERIES WITH X16
X204	AC OUTPUT UNDERVOLTAGE RELAY		NON-LATCH	N.O. - CONTACT IN SERIES WITH X15
27-PY2I	PY2I UNDERVOLTAGE ALARM	P&B - TYPE CSJ MODEL 38-70010	NON-LATCH	N.C. - CONTACT CLOSES TO ALARM
27-PY2IA	PY2IA UNDERVOLTAGE ALARM	P&B - TYPE CSJ MODEL 38-70010	NON-LATCH	N.C. - CONTACT CLOSES TO ALARM
XDCR1	DC INPUT CURRENT TRANSDUCER	RIS: 0 - 50mV DC		
XDCR2	DC INPUT VOLTAGE TRANSDUCER	RIS: 0 - 150VDC		
XDCR3	AC OUTPUT CURRENT TRANSDUCER	RIS: 0 - 5 AAC		
XDCR4	AC OUTPUT VOLTAGE TRANSDUCER	RIS: 0 - 130VAC		
72-2181	DC INPUT BREAKER	G.E. TYPE TJK, 350A		
52-2182	AC OUTPUT BREAKER	G.E. TYPE THED124100, 100A		
52-2183	AC OUTPUT BREAKER	G.E. TYPE THED124100, 100A		
52-2184	BYPASS SOURCE DISC SWITCH	G.E. TYPE TQD, 225A		
52-2184A	AC INPUT BREAKER	G.E. TYPE THED, 90A		
52-2188A	REG XFMR OUTPUT BREAKER	C.H. TYPE HJD, 250A		
52-2158A	REG XFMR TRANSFER SWITCH	600VAC, 75A, 3PDT		BREAK-BEFORE-MAKE SWITCH
F2	INVERTER FUSE	250VAC, 600A		SEE DWG 066144
F204	STATIC SWITCH FUSE	250VAC, 600A		SEE DWG 066144
F407	RECTIFIER FUSE	250VAC, 400A		SEE DWG 066144
F408	RECTIFIER FUSE	250VAC, 400A		SEE DWG 066144
F409	RECTIFIER FUSE	250VAC, 400A		SEE DWG 066144

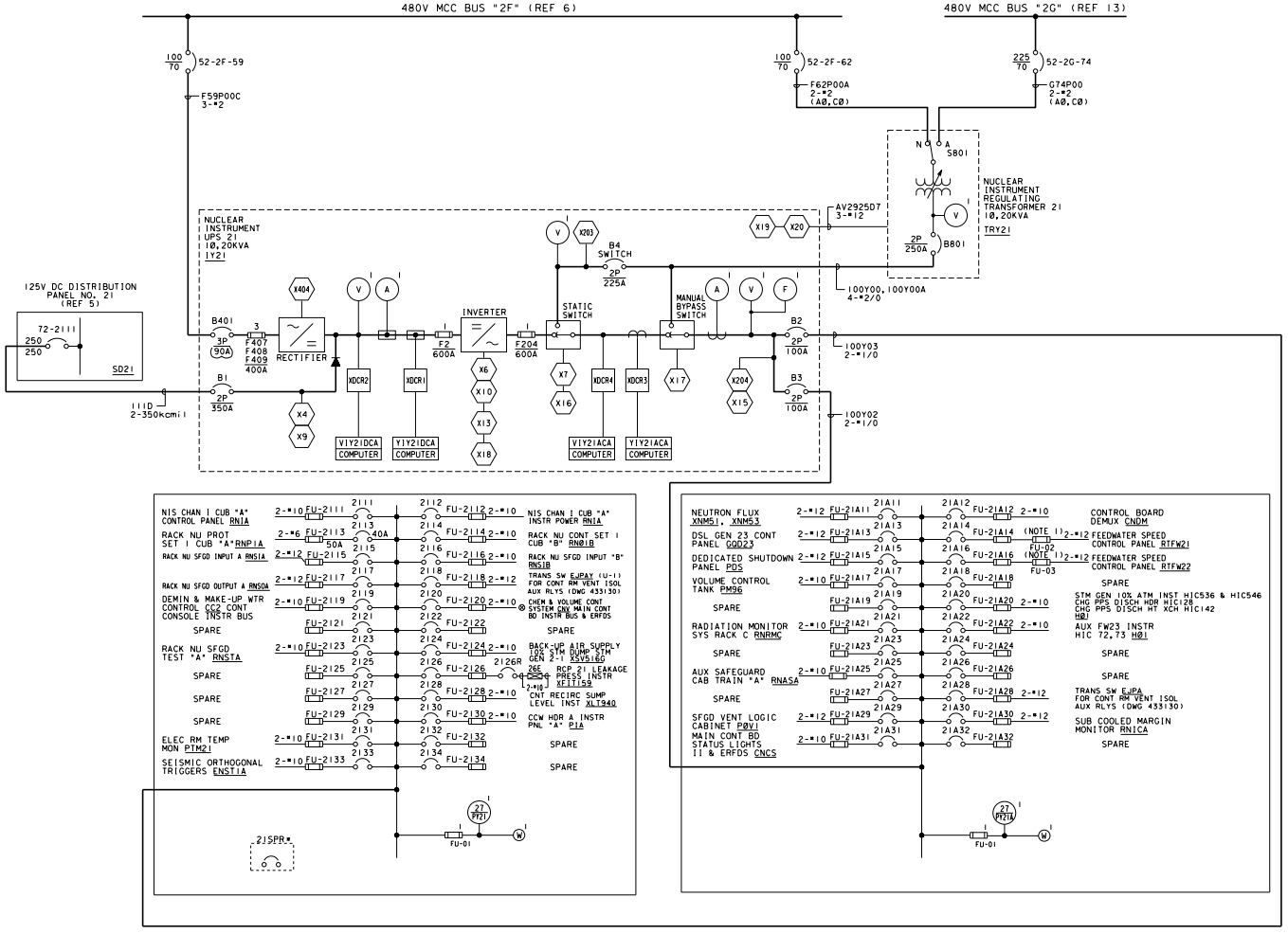

PANEL 2I INSTR AC DISTR
CHAN I
PY2I
10, 2 WIRE, 120V
(ALL BKR'S ARE 20A, IP EXCEPT AS SHOWN)
ALL FUSES ARE 30A EXCEPT AS SHOWN.)

*NOTE: 2ISPR IS A SPARE BKR FOR FUTURE PENETRATION REDUNDANCY, IT IS NOT CONNECTED ELECTRICALLY TO THE PANEL BUS.

PANEL 2IA INSTR AC DISTR
CHAN I
PY2IA
10, 2 WIRE, 120V
(ALL BKR'S ARE 20A, IP EXCEPT AS SHOWN.
ALL FUSES ARE 30A EXCEPT AS SHOWN.)

LEGEND:

- V — METER
- X8 — ALARM RELAY BOARD
- XDCR1 — TRANSDUCER
- FUSE
- V1Y2IDCA COMPUTER — PLANT COMPUTER INPUT NO.

NOTES:

⊗ BACK-UP OVERCURRENT PROTECTION FOR FUSES FOR LOAD INSIDE CONTAINMENT (REF DWG 451805)

1. THIS CIRCUIT BREAKER/FUSE ISOLATES CLASS 1E PANEL PY2IA FROM A CLASS II LOAD.
2. DELETED

REFERENCES:

	DWG NO.
1. SINGLE LINE METER & RELAY DIAG INSTR AC SH #1	441241
2. SINGLE LINE METER & RELAY DIAG INSTR AC SH #2	441242
3. SINGLE LINE METER & RELAY DIAG INSTR AC SH #4	445391
4. SINGLE LINE METER & RELAY DIAG INSTR AC SH #5	445394
5. SINGLE LINE METER & RELAY DIAG 125V DC SYSTEM	441240
6. SINGLE LINE METER & RELAY DIAG 480V SYSTEM BUS SECT 2F	441237
7. **SCHEMATIC DIAG-120V INSTR AC SYSTEM**	4010037
8. SCI 20KVA UPS & REGULATING TRANSFORMER	6013738
9. **INSTR AC DISTR PNLS**	663341
10. ONE LINE VENDOR DIAGRAM FOR PANEL PY2I	6021760-205
11. ONE LINE VENDOR DIAGRAM FOR PANEL PY2IA	6021760-211
12. DELETED	
13. SINGLE LINE METER & RELAY DIAG 480V SYS BUS 2G	441238

NUCLEAR SAFETY RELATED

KEY DWG. SECTION 1C

UNIT 2

DATE	
04-16-2018	
D.D.	1AZ1
R.E.	FXC2
I.V.	N/A
P.E.	N/A

REVISION DESCRIPTION: Revised Per DFT-7*4485

ELECTRICAL
SINGLE LINE METER AND RELAY DIAGRAM
120V INSTRUMENT AC SYSTEM

DIABLO CANYON POWER PLANT
PACIFIC GAS AND ELECTRIC COMPANY
SAN FRANCISCO, CALIFORNIA

DWG SCALE:	NONE
BILL OF MAT'L:	
SUPSDS:	
SUPSD BY:	

DRAWING	SHEET	PAGE	REV
445390	1	0	25

DRAWING NUMBER 445390 1

RASTER=445390-1-0.dgn
DGN=445390-1-0.dgn
CAD User=1AZ1 Date=04-16-2018

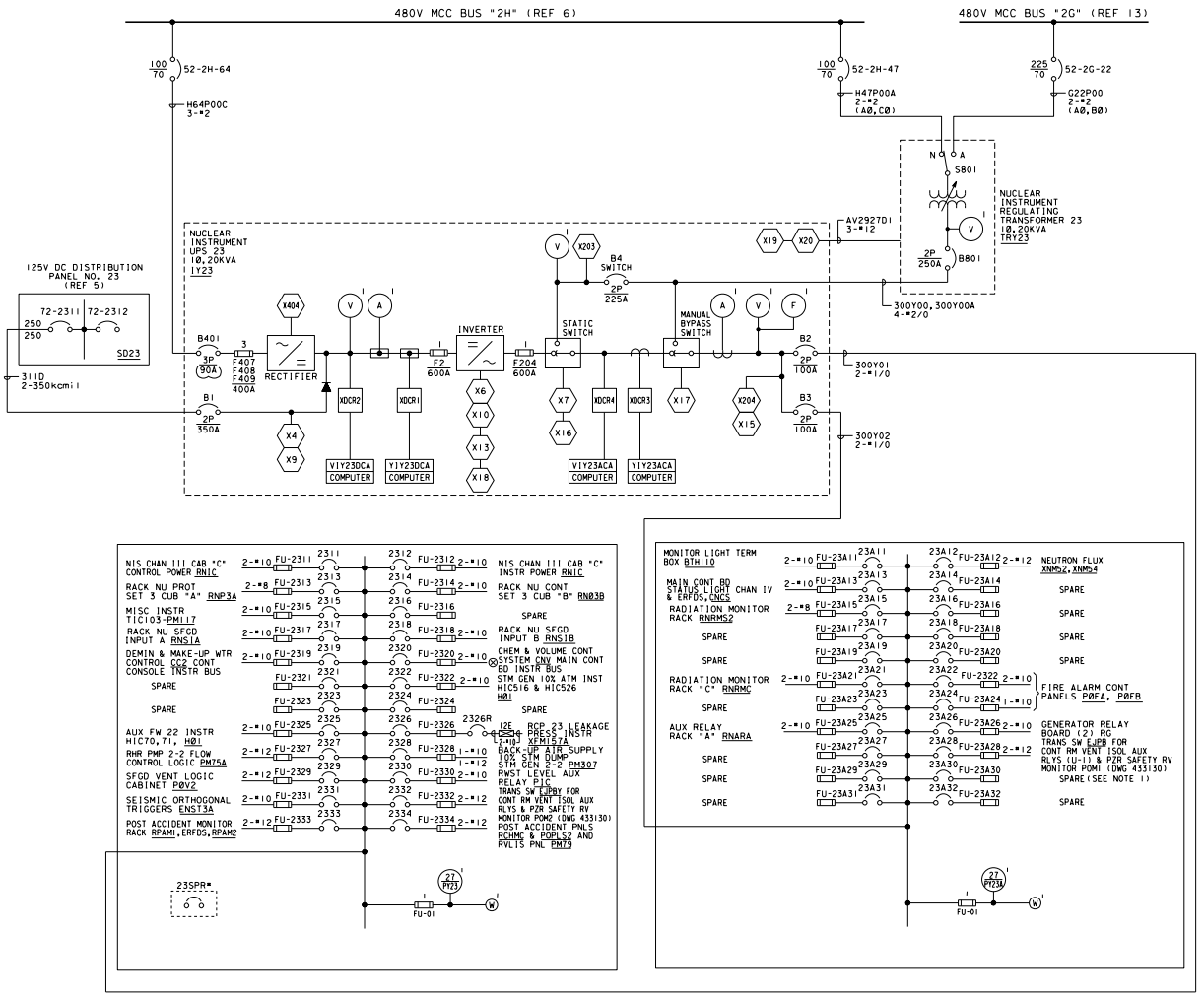

PANEL 23 INSTR AC DISTR
CHAN III
PY23
10, 2 WIRE, 120V
(ALL BKR'S ARE 20A, 1P EXCEPT AS SHOWN)
ALL FUSES ARE 30A EXCEPT AS SHOWN.)

*NOTE: 23SPR IS A SPARE BKR FOR FUTURE PENETRATION REDUNDANCY. IT IS NOT CONNECTED ELECTRICALLY TO THE PANEL BUS.

PANEL 23A INSTR AC DISTR
CHAN III
PY23A
10, 2 WIRE, 120V
(ALL BKR'S ARE 20A, 1P EXCEPT AS SHOWN
ALL FUSES ARE 30A EXCEPT AS SHOWN.)

TABLE OF DEVICES

DEVICE	DESCRIPTION	CATALOG/TYPE	CONTACT	REMARKS
XI2	UPS COMMON ALARM		LATCH	COMMON ALARMS FOR X7, XI3, XI8, XI9, X20, X203 & X404
X7	OUT OF SYNC/COMMON ALARM		NON-LATCH	CONTACT CLOSES TO ENERGIZE XI2
XI3	UPS FAN FAILURE/COMMON ALARM		LATCH	CONTACT CLOSES TO ENERGIZE XI2
XI8	UPS OVER TEMP/COMMON ALARM		LATCH	CONTACT CLOSES TO ENERGIZE XI2
XI9	REG XFMR OVER TEMP/COM ALM		LATCH	CONTACT CLOSES TO ENERGIZE XI2
X20	REG XFMR FAN FAILURE/COM ALM		LATCH	CONTACT CLOSES TO ENERGIZE XI2
X203	LOSS OF BYPASS SOURCE/COM ALM		NON-LATCH	CONTACT CLOSES TO ENERGIZE XI2
X404	AC INPUT/RECTIFIER FAIL/COM ALM		NON-LATCH	CONTACT CLOSES TO ENERGIZE XI2
X4	DC INPUT UNDERVOLTAGE RELAY		NON-LATCH	CONTACT CLOSES TO ENERGIZE X9
X6	INVERTER OUTPUT UNDERVOLTAGE RELAY		NON-LATCH	CONTACT CLOSES TO ENERGIZE X10
X9	LOSS OF BATTERY SOURCE ALARM		LATCH	N.C. - CONTACT OPENS TO ALARM
X10	INVERTER FAILURE ALARM		LATCH	N.C. - CONTACT OPENS TO ALARM
X15	LOSS OF AC OUTPUT VOLTAGE ALARM		LATCH	N.C. - CONTACT IN SERIES WITH X204
X16	STATIC SW TRANSFERRED ALARM		LATCH	N.C. - CONTACT IN SERIES WITH XI7
XI7	MAN BYP SW IN BYPASS POS ALARM		NON-LATCH	N.O. - CONTACT IN SERIES WITH XI6
X204	AC OUTPUT UNDERVOLTAGE RELAY		NON-LATCH	N.O. - CONTACT IN SERIES WITH XI5
27-PY23	PY23 UNDERVOLTAGE ALARM	P&B - TYPE CSJ MODEL 38-70010	NON-LATCH	N.C. - CONTACT CLOSES TO ALARM
27-PY23A	PY23A UNDERVOLTAGE ALARM	P&B - TYPE CSJ MODEL 38-70010	NON-LATCH	N.C. - CONTACT CLOSES TO ALARM
XDCRI	DC INPUT CURRENT TRANSDUCER	RIS: 0 - 50mV DC		
XDCR2	DC INPUT VOLTAGE TRANSDUCER	RIS: 0 - 150VDC		
XDCR3	AC OUTPUT CURRENT TRANSDUCER	RIS: 0 - 5 AAC		
XDCR4	AC OUTPUT VOLTAGE TRANSDUCER	RIS: 0 - 130VAC		
72-23BI	DC INPUT BREAKER	G.E. TYPE TJK, 350A		
52-23B2	AC OUTPUT BREAKER	G.E. TYPE THED124100, 100A		
52-23B3	AC OUTPUT BREAKER	G.E. TYPE THED124100, 100A		
52-23B4	BYPASS SOURCE DISC SWITCH	G.E. TYPE TQD, 225A		
52-23B401	AC INPUT BREAKER	G.E. TYPE THED,(90A)		
52-23B801	REG XFMR OUTPUT BREAKER	C.H. TYPE HJD, 250A		
52-23S01	REG XFMR TRANSFER SWITCH	600VAC, 75A, 3PDT		BREAK-BEFORE-MAKE SWITCH
F2	INVERTER FUSE	250VAC, 600A		SEE DWG 066144
F204	STATIC SWITCH FUSE	250VAC, 600A		SEE DWG 066144
F407	RECTIFIER FUSE	250VAC, 400A		SEE DWG 066144
F408	RECTIFIER FUSE	250VAC, 400A		SEE DWG 066144
F409	RECTIFIER FUSE	250VAC, 400A		SEE DWG 066144

LEGEND

- V — METER
- X8 — ALARM RELAY BOARD
- XDCRI — TRANSDUCER
- FUSE
- V1Y23DCA COMPUTER — PLANT COMPUTER INPUT NO.

NOTES

⊗ BACK-UP OVERCURRENT PROTECTION FOR FUSES FOR LOAD INSIDE CONTAINMENT, REF DWG 451805

1. 52-PY23A30 IS DEDICATED FOR UNIT 2 SAFETY PARAMETER SYS COMPUTERS 21 & 22 AT RSPSC2) (SEE 445392 C1R 3A30Y00).

REFERENCES

	DWG NO.
1. SINGLE LINE METER & RELAY DIAG INSTR AC SH *1	441241
2. SINGLE LINE METER & RELAY DIAG INSTR AC SH *2	441242
3. SINGLE LINE METER & RELAY DIAG INSTR AC SH *3	445390
4. SINGLE LINE METER & RELAY DIAG INSTR AC SH *5	445394
5. SINGLE LINE METER & RELAY DIAG 125V DC SYSTEM	441240
6. SINGLE LINE METER & RELAY DIAG 480V SYSTEM BUS SECT 2H	441239
7. SCHEMATIC DIAG-120V INSTR AC SYSTEM	4010037
8. SCI 20KVA UPS & REGULATING TRANSFORMER	6013738
9. INSTR AC DISTR PNLS	663341
10. DELETED	
11. LIST OF ELECTRICAL DEVICES	050011
12. FED FROM LIST	021768
13. SINGLE LINE METER & RELAY DIAG 480V SYS BUS 2G	441238
14. ONE LINE VENDOR DIAGRAM FOR PANEL PY23	6021760-223
15. ONE LINE VENDOR DIAGRAM FOR PANEL PY23A	6021760-229

NUCLEAR SAFETY RELATED

KEY DWG. SECTION IC

UNIT 2

DATE	
04-16-2018	
D.D.	IAZI
R.E.	FXC2
I.V.	N/A
P.E.	N/A

REVISION DESCRIPTION: Revised Per DFT-7*4485

ELECTRICAL
SINGLE LINE METER AND RELAY DIAGRAM
120V INSTRUMENT AC SYSTEM

DIABLO CANYON POWER PLANT
PACIFIC GAS AND ELECTRIC COMPANY
SAN FRANCISCO, CALIFORNIA

DWG SCALE:	
BILL OF MAT'L:	
SUPSDS:	
SUPSD BY:	

DRAWING	SHEET	PAGE	REV
445391	1	0	31

DRAWING NUMBER 445391

RASTER=445391-1-0.dgn
DGN=445391-1-0.dgn
CAD User:IAZI Date=04-16-2018

UI=445291

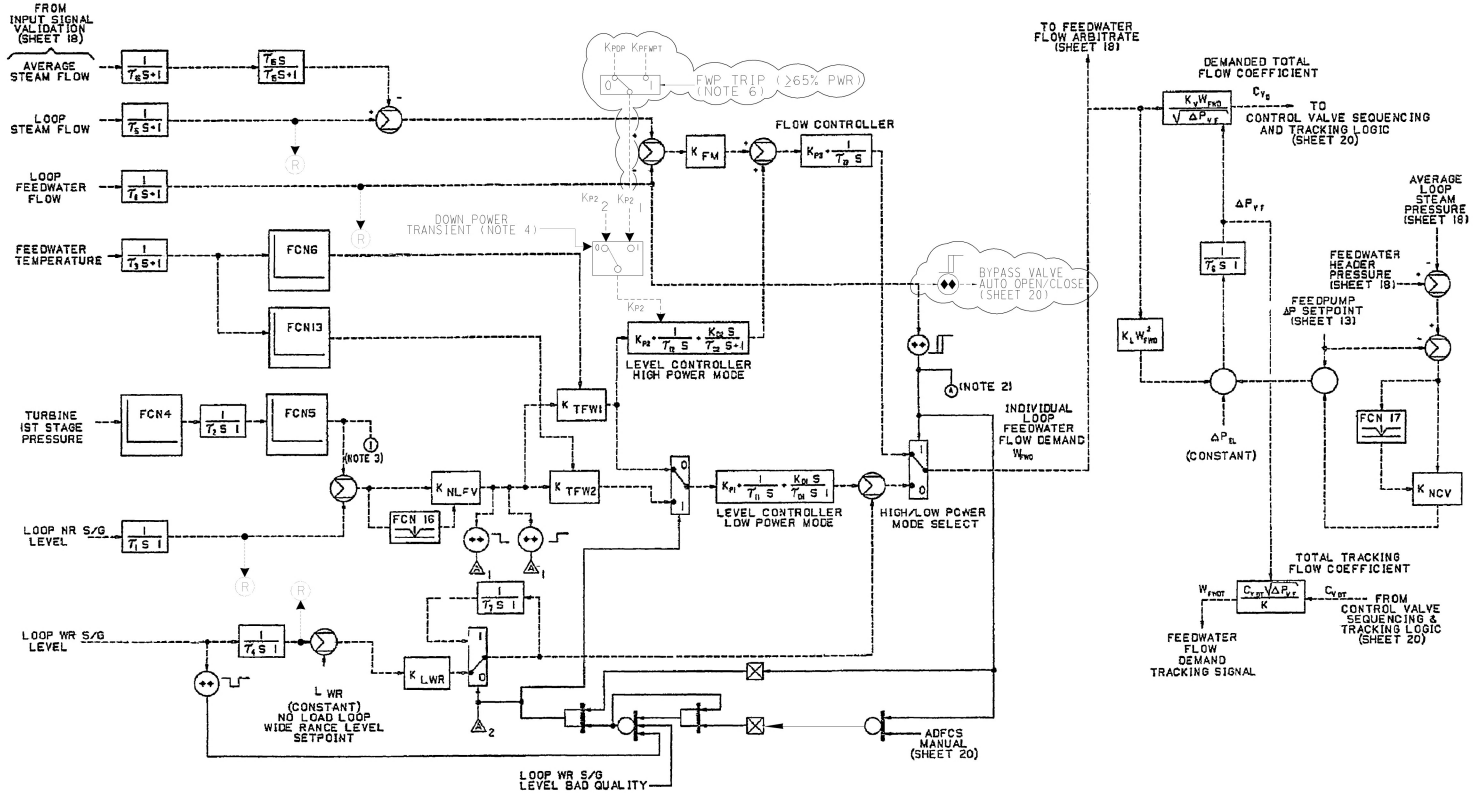

NOTES :

1. ONE LOOP SHOWN. TYPICAL FOR ALL LOOPS.
2. HIGH POWER MODE INDICATION IS PROVIDED FOR EACH LOOP.
   LOW POWER MODE INDICATION IS PROVIDED FOR EACH LOOP.
3. BOARD INDICATION IS FROM ADFWCS OUTPUT. ALL OTHER RECORDER VALUES AND INDICATIONS ON THIS DRAWING ARE PROVIDED ON THE DFWCS HMI.
4. DOWN POWER TRANSIENT IS TRUE FOR LOSS OF CWP, LOSS OF FWP, OVER POWER/OVER TEMP DELTA T RUNBACK, STATOR COOLANT RUNBACK, OR STEAM PRESSURE INCREASING QUICKLY (I.E. RAPID LOAD DECREASE). RESETS FOLLOWING A TIME DELAY AFTER STEAM PRESSURE RATE OF CHANGE HAS DECREASED BELOW THE THRESHOLD VALUE.
5. REFER TO THE DFWCS FUNCTIONAL REQUIREMENTS DOCUMENT DRAWING 663195-27 FOR LOGIC DESCRIPTION.
6. RESET SIGNAL SAME AS DESCRIBED IN NOTE 4.

REFERENCES

	WE DWG	PG&E DWG
1. FUNCTIONAL LOGIC DIAGRAM INDEX AND SYMBOLS	5653074-1	495841
2. FUNCTIONAL LOGIC DIAGRAM REACTOR TRIP SIGNALS	5653074-2	495842
3. FUNCTIONAL LOGIC DIAGRAM NUCLEAR INSTR AND MANUAL TRIP SIGNALS	5653074-3	495843
4. FUNCTIONAL LOGIC DIAGRAM NUCLEAR INSTR PERMISSIVES AND BLOCKS	5653074-4	495844
5. FUNCTIONAL LOGIC DIAGRAM PRIMARY COOLANT SYSTEM TRIP SIGNALS	5653074-5	495845
6. FUNCTIONAL LOGIC DIAGRAM PRESSURIZER TRIP SIGNALS	5653074-6	495846
7. FUNCTIONAL LOGIC DIAGRAM STEAM GENERATOR TRIP SIGNALS	5653074-7	495847
8. FUNCTIONAL LOGIC DIAGRAM SAFEGUARDS ACTUATION SIGNALS	5653074-8	495848
9. FUNCTIONAL LOGIC DIAGRAM ROD CONTROLS AND ROD BLOCKS	5653074-9	495849
10. FUNCTIONAL LOGIC DIAGRAM STEAM DUMP CONTROL	5653074-10	495850
11. FUNCTIONAL LOGIC DIAGRAM PRESSURIZER PRESSURE AND LEVEL CONTROL	5653074-11	495851
12. FUNCTIONAL LOGIC DIAGRAM PRESSURIZER HEATER CONTROL	5653074-12	495852
13. FUNCTIONAL LOGIC DIAGRAM FEEDWATER CONTROL AND ISOLATION	5653074-13	495853
14. FUNCTIONAL LOGIC DIAGRAM FEEDWATER CONTROL AND ISOLATION	5653074-14	495854
15. FUNCTIONAL LOGIC DIAGRAM AUXILIARY FEEDWATER PUMPS STARTUP	5653074-15	495855
16. FUNCTIONAL LOGIC DIAGRAM TURBINE TRIPS, RUNBACKS & SIGNALS	5653074-16	495856
17. FUNCTIONAL LOGIC DIAGRAM AMSAC SIGNALS	5653074-17	495857
18. FUNCTIONAL LOGIC DIAGRAM SEISMIC TRIP	8759D77	495858
19. FUNCTIONAL LOGIC DIAGRAM DIGITAL FW CONT SYS INPUT SIGNAL VALIDATION	5653074-18	495859
20. FUNCTIONAL LOGIC DIAGRAM DIGITAL FW CONT SYS FW FLOW CONTROLLER & C_v DEMAND	5653074-19	495860
21. FUNCTIONAL LOGIC DIAGRAM DIGITAL FW CONT SYS CONT VCV SEQ & TRACKING LOGIC	5653074-20	495861
22. FUNCTIONAL LOGIC DIAGRAM DIGITAL FW CONT SYS SIGNAL SELECTOR LOGIC	5653074-21	495862
23. DRAWING INDEX SOLID STATE PROTECTION SYS INTERCONNECTION & SCHEM. DIAGRAM	108D442-1	458826

KEY DWG. SECTION 3

UNIT 1

DATE		REVISION DESCRIPTION
04-07-2009		REVISED PER DFC-3457
D.D.	AJFJ	
R.E.	KJD3	
I.V.		
P.E.	AGB2	

I & C

FUNCTIONAL LOGIC
DIAGRAM DIGITAL FEEDWATER CONTROL
SYSTEM FW FLOW CONTROLLER & Cv DEMAND

DIABLO CANYON POWER PLANT
PACIFIC GAS AND ELECTRIC COMPANY
SAN FRANCISCO, CALIFORNIA

DWG SCALE:	
BILL OF MATL:	
SUPSDS:	
SUPSD BY:	

DRAWING	SHEET	PAGE	REV
495860	1	0	2

RASTER=495860.dgn
DGN=495860.dgn
OLD User=AJFJ Dated 04-07-2009

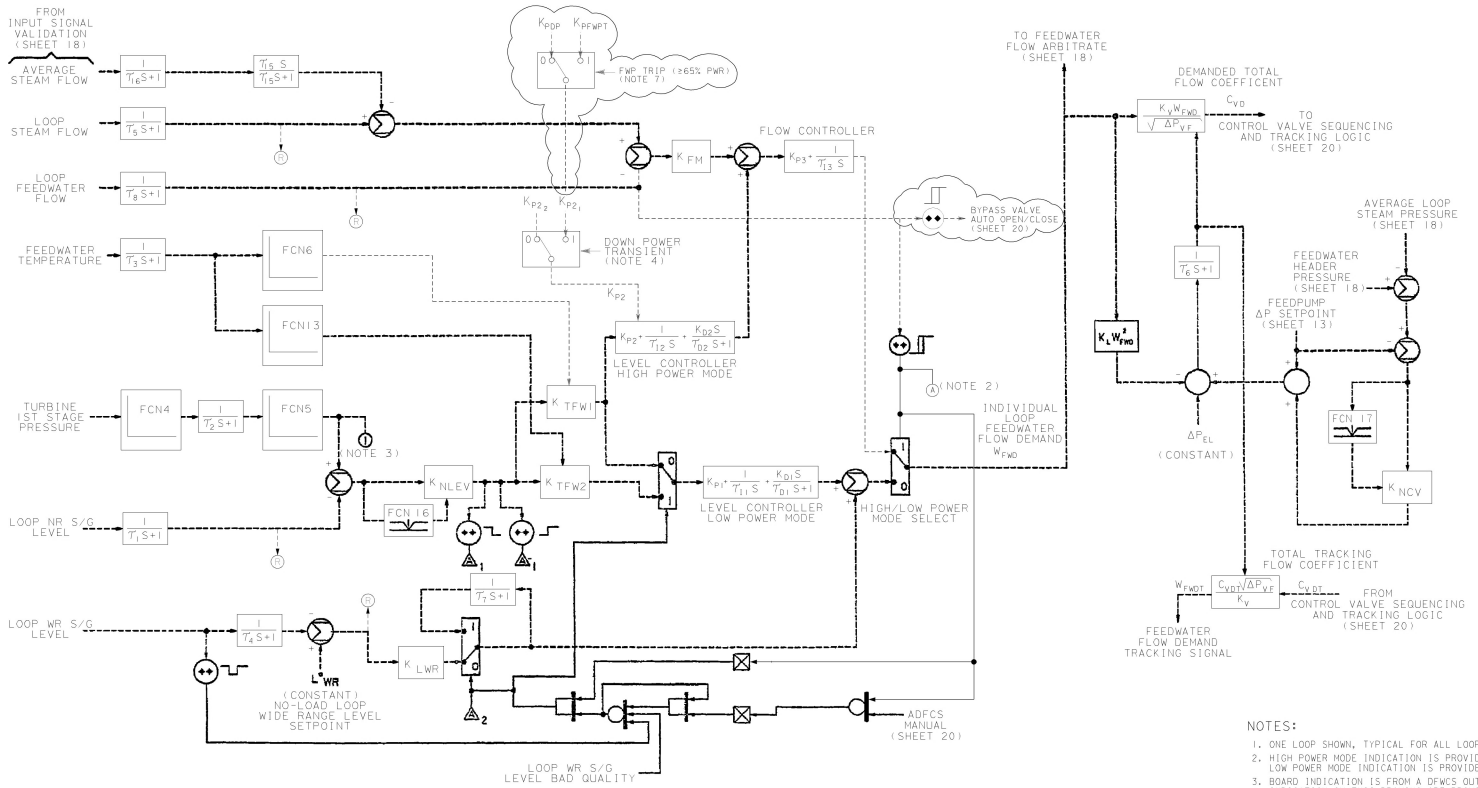

NOTES:

1. ONE LOOP SHOWN, TYPICAL FOR ALL LOOPS.
2. HIGH POWER MODE INDICATION IS PROVIDED FOR EACH LOOP. LOW POWER MODE INDICATION IS PROVIDED FOR EACH LOOP.
3. BOARD INDICATION IS FROM A DFWCS OUTPUT. ALL OTHER RECORDER VALUES AND INDICATION ON THIS DRAWING ARE PROVIDED ON THE DFWCS HMI.
4. DOWN POWR TRANSIENT IS TRUE FOR LOSS OF CWP, LOSS OF FWP, OVER POWER/OVER TEMP DELTA T RUNBACK, STATOR COOLING RUNBACK, OR STEAM PRESSURE INCREASING QUICKLY (I.E. RAPID LOAD DECREASE). RESETS FOLLOWING A TIME DELAY AFTER STEAM PRESSURE RATE OF CHANGE HAS DECREASED BELOW THE THRESHOLD VALUE.
5. REFER TO THE DFWCS FUNCTIONAL REQUIREMENT DOCUMENT DRAWING 663195-27 FOR LOGIC DESCRIPTION.
6. SHEET NUMBERS REFER TO THE REFERENCE NUMBERS BELOW.
7. RESET SIGNAL SAME AS DESCRIBED IN NOTE 4.

REFERENCES (NOTE 6)

		WE DWG	PG&E DWG
1.	FUNCTIONAL LOGIC DIAGRAM INDEX AND SYMBOLS	5653D74-1	495871
2.	FUNCTIONAL LOGIC DIAGRAM REACTOR TRIP SIGNALS	5653D74-2	495872
3.	FUNCTIONAL LOGIC DIAGRAM NUCLEAR INSTR AND MANUAL TRIP SIGNALS	5653D74-3	495873
4.	FUNCTIONAL LOGIC DIAGRAM NUCLEAR INSTR PERMISSIVES AND BLOCKS	5653D74-4	495874
5.	FUNCTIONAL LOGIC DIAGRAM PRIMARY COOLANT SYSTEM TRIP SIGNALS	5653D74-5	495875
6.	FUNCTIONAL LOGIC DIAGRAM PRESSURIZER TRIP SIGNALS	5653D74-6	495876
7.	FUNCTIONAL LOGIC DIAGRAM STEAM GENERATOR TRIP SIGNALS	5653D74-7	495877
8.	FUNCTIONAL LOGIC DIAGRAM SAFEGUARDS ACTUATION SIGNALS	5653D74-8	495878
9.	FUNCTIONAL LOGIC DIAGRAM ROD CONTROLS AND ROD BLOCKS	5653D74-9	495879
10.	FUNCTIONAL LOGIC DIAGRAM STEAM DUMP CONTROL	5653D74-10	495880
11.	FUNCTIONAL LOGIC DIAGRAM PRESSURIZER PRESSURE AND LEVEL CONTROL	5653D74-11	495881
12.	FUNCTIONAL LOGIC DIAGRAM PRESSURIZER HEATER CONTROL	5653D74-12	495882
13.	FUNCTIONAL LOGIC DIAGRAM FEEDWATER CONTROL AND ISOLATION	5653D74-13	495883
14.	FUNCTIONAL LOGIC DIAGRAM FEEDWATER CONTROL AND ISOLATION	5653D74-14	495884
15.	FUNCTIONAL LOGIC DIAGRAM AUXILIARY FEEDWATER PUMPS STARTUP	5653D74-15	495885
16.	FUNCTIONAL LOGIC DIAGRAM TURBINE TRIPS, RUNBACKS & SIGNALS	5653D74-16	495886
17.	FUNCTIONAL LOGIC DIAGRAM AMSAC SIGNALS	5653D74-17	495887
18.	FUNCTIONAL LOGIC DIAGRAM SEISMIC TRIP	8759D77	495888
19.	FUNCTIONAL LOGIC DIAGRAM DIGITAL FW CONT SYS INPUT SIGNAL VALIDATION	5653D74-18	495889
20.	FUNCTIONAL LOGIC DIAGRAM DIGITAL FW CONT SYS FW FLOW CONTROLLER & C_V DEMAND	5653D74-19	495890
21.	FUNCTIONAL LOGIC DIAGRAM DIGITAL FW CONT SYS CONT VCV SEQ & TRACKING LOGIC	5653D74-20	495891
22.	FUNCTIONAL LOGIC DIAGRAM DIGITAL FW CONT SYS SIGNAL SELECTOR LOGIC	5653D74-21	495892
23.	DRAWING INDEX SOLID STATE PROTECTION SYS INTERCONNECTION & SCHEM. DIAGRAM	108D442-1	458862

KEY DWG. SECTION 3

UNIT 2

DATE		REVISION DESCRIPTION
04-09-2008		REVISED PER FCT-33317
D.D.	FAZI	
R.E.	FXC2	
I.V.		
P.E.	AGB2	

ELECTRICAL
FUNCTIONAL LOGIC DIAGRAM
DIGITAL FEEDWATER CONTROL SYSTEM
FW FLOW CONTROLLER & C_V DEMAND

DIABLO CANYON POWER PLANT
PACIFIC GAS AND ELECTRIC COMPANY
SAN FRANCISCO, CALIFORNIA

DWG SCALE:	
BILL OF MATL:	
SUPSDS:	
SUPSD BY:	

DRAWING	SHEET	PAGE	REV
495890	1	0	2

RASTER=495890.dgn
DDN=495890.dgn
OLD User=FAZI Date=04-09-2008

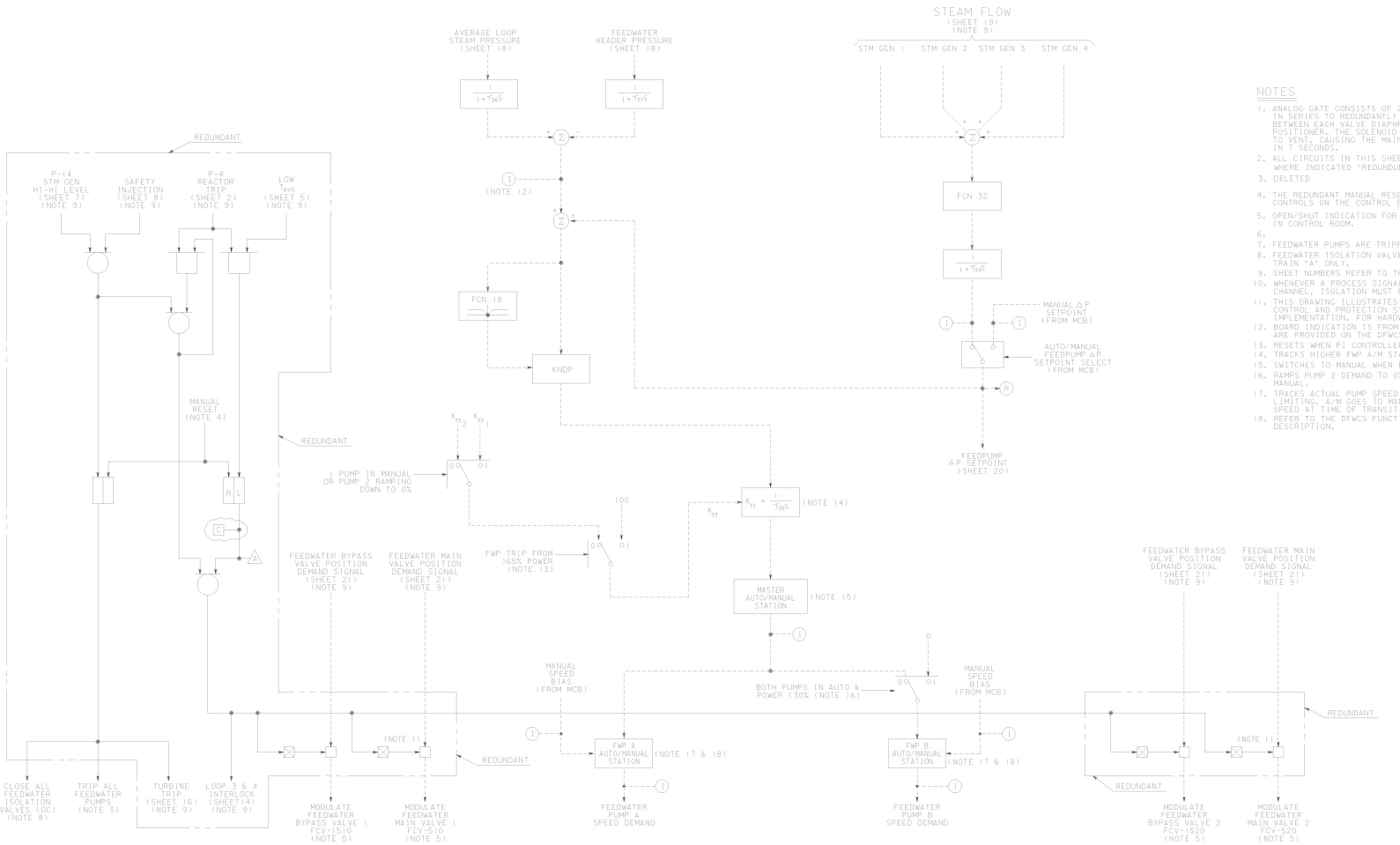

NOTES

1. ANALOG GATE CONSISTS OF 2 SOLENOID VENT VALVES IN SERIES TO REDUNDANTLY INTERLOCK THE AIR LINE BETWEEN EACH VALVE DIAPHRAM AND ITS ASSOCIATED POSITIONER. THE SOLENOID VALVES ARE DE-ENERGIZED TO VENT, CAUSING THE MAIN FEEDWATER VALVE TO CLOSE IN 7 SECONDS.
2. ALL CIRCUITS IN THIS SHEET ARE NOT REDUNDANT EXCEPT WHERE INDICATED "REDUNDNT".
3. DELETED
4. THE REDUNDANT MANUAL RESET CONSISTS OF TWO MOMENTARY CONTROLS ON THE CONTROL BOARD, ONE OF EACH TRAIN.
5. OPEN/SHUT INDICATION FOR EACH FEEDWATER CONTROL VALVE IN CONTROL ROOM.
6.
7. FEEDWATER PUMPS ARE TRIPPED BY TRAIN "B" ONLY.
8. FEEDWATER ISOLATION VALVES ARE CLOSED BY TRAIN "A" ONLY.
9. SHEET NUMBERS REFER TO THE REFERENCE NUMBERS BELOW.
10. WHENEVER A PROCESS SIGNAL IS USED FOR CONTROL AND IS DERIVED FROM A PROTECTION CHANNEL, ISOLATION MUST BE PROVIDED.
11. THIS DRAWING ILLUSTRATES THE FUNCTIONAL REQUIREMENTS OF THE REACTOR CONTROL AND PROTECTION SYSTEM. THIS DRAWING DOES NOT REPRESENT ACTUAL HARDWARE IMPLEMENTATION. FOR HARDWARE IMPLEMENTATION, REFER TO THE APPLICABLE SCHEMATIC.
12. BOARD INDICATION IS FROM A DFWCS OUTPUT. ALL OTHER INDICATIONS ON THIS DRAWING ARE PROVIDED ON THE DFWCS HMI.
13. RESETS WHEN PI CONTROLLER OUTPUT REACHES 100%. ALSO SETS PUMP BIASES TO 0.
14. TRACKS HIGHER FWP A/M STATION DEMAND WHEN BOTH PUMPS ARE IN MANUAL.
15. SWITCHES TO MANUAL WHEN BOTH FWP A/M STATIONS ARE IN MANUAL.
16. RAMPS PUMP 2 DEMAND TO 0%. ONCE PUMP 2 IS AT 0%, SWITCHES ITS A/M STATION TO MANUAL.
17. TRACKS ACTUAL PUMP SPEED WHEN WOODWARD FPSCS IS IN LOCAL MANUAL OR PRESSURE LIMITING. A/M GOES TO MANUAL WHEN IT COMES OUT OF TRACK MODE WITH DEMAND = ACTUAL SPEED AT TIME OF TRANSITION.
18. REFER TO THE DFWCS FUNCTIONAL REQUIREMENTS DOCUMENT DRAWING 663195-27 FOR LOGIC DESCRIPTION.

REFERENCES (NOTE 9)

	WE DWG	PG&E DWG
1. FUNCTIONAL LOGIC DIAGRAM INDEX AND SYMBOLS	5653074-1	495841
2. FUNCTIONAL LOGIC DIAGRAM REACTOR TRIP SIGNALS	5653074-2	495842
3. FUNCTIONAL LOGIC DIAGRAM NUCLEAR INSTR AND MANUAL TRIP SIGNALS	5653074-3	495843
4. FUNCTIONAL LOGIC DIAGRAM NUCLEAR INSTR PERMISSIVES AND BLOCKS	5653074-4	495844
5. FUNCTIONAL LOGIC DIAGRAM PRIMARY COOLANT SYSTEM TRIP SIGNALS	5653074-5	495845
6. FUNCTIONAL LOGIC DIAGRAM PRESSURIZER TRIP SIGNALS	5653074-6	495846
7. FUNCTIONAL LOGIC DIAGRAM STEAM GENERATOR TRIP SIGNALS	5653074-7	495847
8. FUNCTIONAL LOGIC DIAGRAM SAFEGUARDS ACTUATION SIGNALS	5653074-8	495848
9. FUNCTIONAL LOGIC DIAGRAM ROD CONTROLS AND ROD BLOCKS	5653074-9	495849
10. FUNCTIONAL LOGIC DIAGRAM STEAM DUMP CONTROL	5653074-10	495850
11. FUNCTIONAL LOGIC DIAGRAM PRESSURIZER PRESSURE AND LEVEL CONTROL	5653074-11	495851
12. FUNCTIONAL LOGIC DIAGRAM PRESSURIZER HEATER CONTROL	5653074-12	495852
13. FUNCTIONAL LOGIC DIAGRAM FEEDWATER CONTROL AND ISOLATION	5653074-13	495853
14. FUNCTIONAL LOGIC DIAGRAM FEEDWATER CONTROL AND ISOLATION	5653074-14	495854
15. FUNCTIONAL LOGIC DIAGRAM AUXILIARY FEEDWATER PUMPS STARTUP	5653074-15	495855
16. FUNCTIONAL LOGIC DIAGRAM TURBINE TRIPS, RUNBACKS & SIGNALS	5653074-16	495856
17. FUNCTIONAL LOGIC DIAGRAM AMSAC SIGNALS	5653074-17	495857
18. FUNCTIONAL LOGIC DIAGRAM SEISMIC TRIP	8759077	495858
19. FUNCTIONAL LOGIC DIAGRAM DIGITAL FW CONT SYS INPUT SIGNAL VALIDATION	5653074-18	495859
20. FUNCTIONAL LOGIC DIAGRAM DIGITAL FW CONT SYS FW FLOW CONTROLLER & C_V DEMAND	5653074-19	495860
21. FUNCTIONAL LOGIC DIAGRAM DIGITAL FW CONT SYS CONT VCV SEQ & TRACKING LOGIC	5653074-20	495861
22. FUNCTIONAL LOGIC DIAGRAM DIGITAL FW CONT SYS SIGNAL SELECTOR LOGIC	5653074-21	495862
23. DRAWING INDEX SOLID STATE PROTECTION SYS INTERCONNECTION & SCHEM. DIAGRAM	108D442-1	458826

NUCLEAR SAFETY RELATED

KEY DWG. SECTION 3

UNIT 1

DATE		REVISION DESCRIPTION
05-04-2009		REVISED PER DFC-3-244-1
O.D.	RxG2	
R.E.	FxC2	
I.V.		
P.E.	LAL3	

I & C
FUNCTIONAL LOGIC DIAGRAM
FEEDWATER CONTROL & ISOLATION

DIABLO CANYON POWER PLANT
PACIFIC GAS AND ELECTRIC COMPANY
SAN FRANCISCO, CALIFORNIA

DWG SCALE=			
BILL OF MATL=			
SUPSDS 663195-13			
SUPSD BY=			
DRAWING	SHEET	PAGE	REV
495853	1	0	5

U2 - 495853

RASTER=495853.dgn
CAD User=RxG2 Dated 05-04-2009

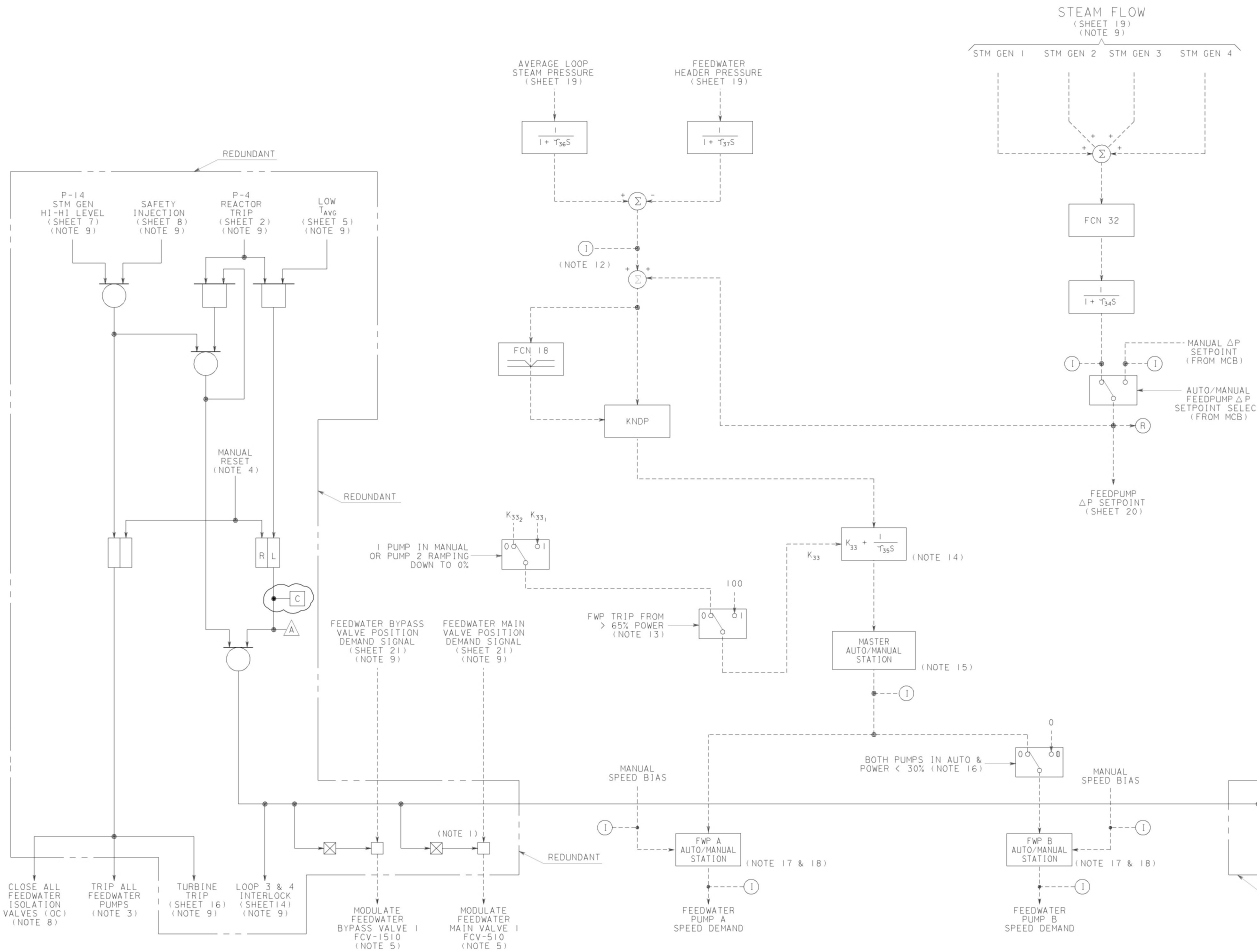

NOTES

1. ANALOG GATE CONSISTS OF 2 SOLENOID VENT VALVES IN SERIES TO REDUNDANTLY INTERLOCK THE AIR LINE BETWEEN EACH VALVE DIAPHRAM AND ITS ASSOCIATED POSITIONER. THE SOLENOID VALVES ARE DE-ENERGIZED TO VENT, CAUSING THE MAIN FEEDWATER VALVE TO CLOSE IN 7 SECONDS.
2. ALL CIRCUITS IN THIS SHEET ARE NOT REDUNDANT EXCEPT WERE INDICATED "REDUNDUNT".
3. DELETED
4. THE REDUNDANT MANUAL RESET CONSISTS OF TWO MOMENTARY CONTROLS ON THE CONTROL BOARD, ONE OF EACH TRAIN.
5. OPEN/SHUT INDICATION FOR EACH FEEDWATER CONTROL VALVE IN CONTROL ROOM.
6.
7. FEEDWATER PUMPS ARE TRIPPED BY TRAIN "B" ONLY.
8. FEEDWATER ISOLATION VALVES ARE CLOSED BY TRAIN "A" ONLY.
9. SHEET NUMBERS REFER TO THE REFERENCE NUMBERS BELOW.
10. WHENEVER A PROCESS SIGNAL IS USED FOR CONTROL AND IS DERIVED FROM A PROTECTION CHANNEL, ISOLATION MUST BE PROVIDED.
11. THIS DRAWING ILLUSTRATES THE FUNCTIONAL REQUIREMENTS OF THE REACTOR CONTROL AND PROTECTION SYSTEM. THIS DRAWING DOES NOT REPRESENT ACTUAL HARDWARE IMPLEMENTATION. FOR HARDWARE IMPLEMENTATION, REFER TO THE APPLICABLE SCHEMATIC.
12. BOARD INDICATION IS FROM A DFWCS OUTPUT. ALL OTHER INDICATIONS ON THIS DRAWING ARE PROVIDED ON THE DFWCS HMI.
13. RESETS WHEN PI CONTROLLER OUTPUT REACHES 100%. ALSO SETS PUMP BIASES TO 0.
14. TRACKS HIGHER FWP A/M STATION DEMAND WHEN BOTH PUMPS ARE IN MANUAL.
15. SWITCHES TO MANUAL WHEN BOTH FWP A/M STATIONS ARE IN MANUAL.
16. RAMPS PUMP 2 DEMAND TO 0%. ONCE PUMP 2 IS AT 0%, SWITCHES ITS A/M STATION TO MANUAL.
17. TRACKS ACTUAL PUMP SPEED WHEN WOODWARD FPSCS IS IN LOCAL MANUAL OR PRESSURE LIMITING. A/M GOES TO MANUAL WHEN IT COMES OUT OF TRACK MODE WITH DEMAND = ACTUAL SPEED AT TIME OF TRANSITION.
18. REFER TO THE DFWCS FUNCTIONAL REQUIREMENTS DOCUMENT DRAWING 663195-27 FOR LOGIC DESCRIPTION.

REFERENCES (NOTE 9)

	WE DWG	PG&E DWG
1. FUNCTIONAL LOGIC DIAGRAM INDEX AND SYMBOLS	5653D74-1	495871
2. FUNCTIONAL LOGIC DIAGRAM REACTOR TRIP SIGNALS	5653D74-2	495872
3. FUNCTIONAL LOGIC DIAGRAM NUCLEAR INSTR AND MANUAL TRIP SIGNALS	5653D74-3	495873
4. FUNCTIONAL LOGIC DIAGRAM NUCLEAR INSTR PERMISSIVES AND BLOCKS	5653D74-4	495874
5. FUNCTIONAL LOGIC DIAGRAM PRIMARY COOLANT SYSTEM TRIP SIGNALS	5653D74-5	495875
6. FUNCTIONAL LOGIC DIAGRAM PRESSURIZER TRIP SIGNALS	5653D74-6	495876
7. FUNCTIONAL LOGIC DIAGRAM STEAM GENERATOR TRIP SIGNALS	5653D74-7	495877
8. FUNCTIONAL LOGIC DIAGRAM SAFEGUARDS ACTUATION SIGNALS	5653D74-8	495878
9. FUNCTIONAL LOGIC DIAGRAM ROD CONTROLS AND ROD BLOCKS	5653D74-9	495879
10. FUNCTIONAL LOGIC DIAGRAM STEAM DUMP CONTROL	5653D74-10	495880
11. FUNCTIONAL LOGIC DIAGRAM PRESSURIZER PRESSURE AND LEVEL CONTROL	5653D74-11	495881
12. FUNCTIONAL LOGIC DIAGRAM PRESSURIZER HEATER CONTROL	5653D74-12	495882
13. FUNCTIONAL LOGIC DIAGRAM FEEDWATER CONTROL AND ISOLATION	5653D74-13	495883
14. FUNCTIONAL LOGIC DIAGRAM FEEDWATER CONTROL AND ISOLATION	5653D74-14	495884
15. FUNCTIONAL LOGIC DIAGRAM AUXILIARY FEEDWATER PUMPS STARTUP	5653D74-15	495885
16. FUNCTIONAL LOGIC DIAGRAM TURBINE TRIPS, RUNBACKS & SIGNALS	5653D74-16	495886
17. FUNCTIONAL LOGIC DIAGRAM AMSAC SIGNALS	5653D74-17	495887
18. FUNCTIONAL LOGIC DIAGRAM SEISMIC TRIP	8759D77	495888
19. FUNCTIONAL LOGIC DIAGRAM DIGITAL FW CONT SYS INPUT SIGNAL VALIDATION	5653D74-18	495889
20. FUNCTIONAL LOGIC DIAGRAM DIGITAL FW CONT SYS FW FLOW CONTROLLER & C_V DEMAND	5653D74-19	495890
21. FUNCTIONAL LOGIC DIAGRAM DIGITAL FW CONT SYS CONT VCV SEQ & TRACKING LOGIC	5653D74-20	495891
22. FUNCTIONAL LOGIC DIAGRAM DIGITAL FW CONT SYS SIGNAL SELECTOR LOGIC	5653D74-21	495892
23. DRAWING INDEX SOLID STATE PROTECTION SYS INTERCONNECTION & SCHEM. DIAGRAM	108D442-1	458826

NUCLEAR SAFETY RELATED

KEY DWG. SECTION 3

UNIT 2

DATE		REVISION DESCRIPTION
09-14-2009		REVISED PER ODN-2★117
D.D.	RXG2	
R.E.	FXC2	
I.V.		
P.E.	LAL3	

I & C
FUNCTIONAL LOGIC DIAGRAM
FEEDWATER CONTROL & ISOLATION

DIABLO CANYON POWER PLANT
PACIFIC GAS AND ELECTRIC COMPANY
SAN FRANCISCO, CALIFORNIA

DWG SCALE:			
BILL OF MATL:			
SUPSDS: 663195-13			
SUPSD BY:			
DRAWING	SHEET	PAGE	REV
495883	1	0	5

UI - 495853

RASTER=495883.DGN
ODN=495883.DGN
OLD User=RXG2 Date=09-14-2009

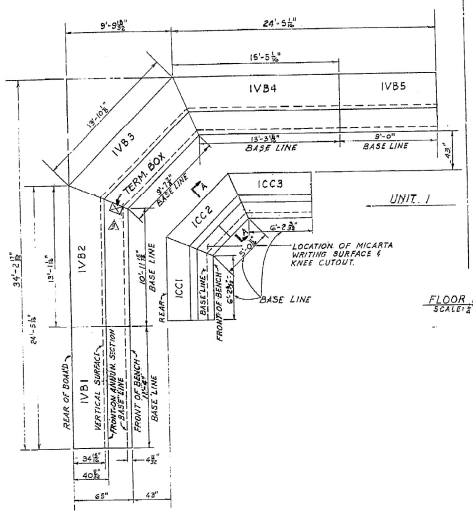

UNIT 1 UNIT 2

FLOOR PLAN
SCALE: ¼"=1'-0"

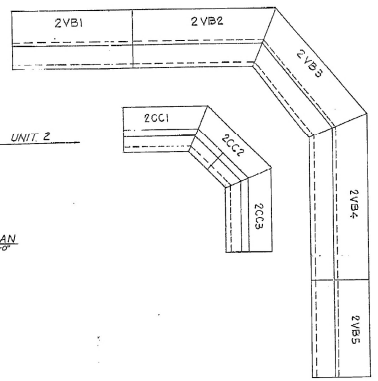

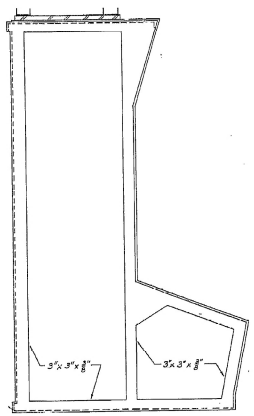

(VERTICAL BOARD)
END VIEW OF PANEL FRAMING WHEN PANELS BUTT TOGETHER.

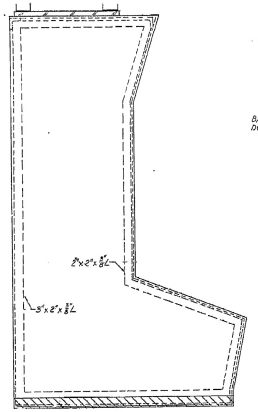

(VERTICAL BOARD)
END VIEW OF PANEL AT END OF PANEL LINE UP.

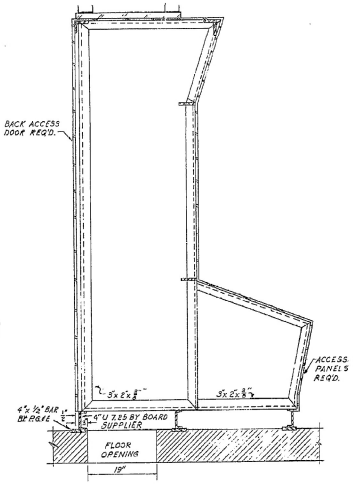

SECTION C-C
Scale: 1"=1'-0"

*VIEW OF PANEL STIFFENERS AS REQ'D. BY FRONT VIEWS.

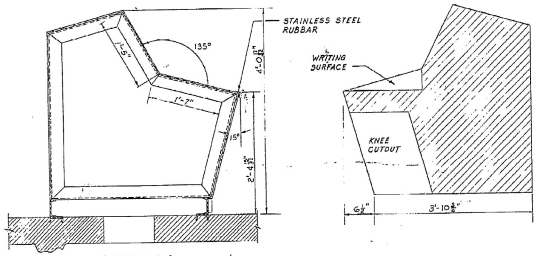

SECTION A-A
SCALE: 1"=1'-0"

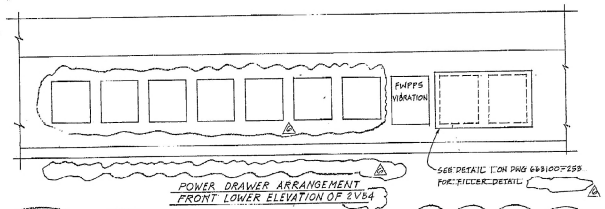

POWER DRAWER ARRANGEMENT
FRONT LOWER ELEVATION OF 2VB4

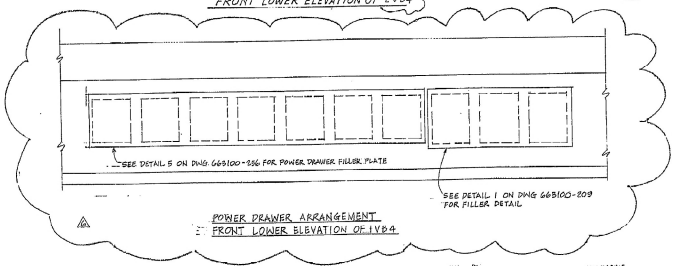

POWER DRAWER ARRANGEMENT
FRONT LOWER ELEVATION OF 1VB4

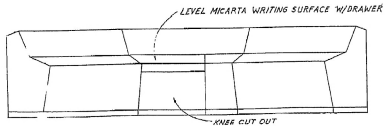

CONSOLE-FRONT VIEW
N.T.S.

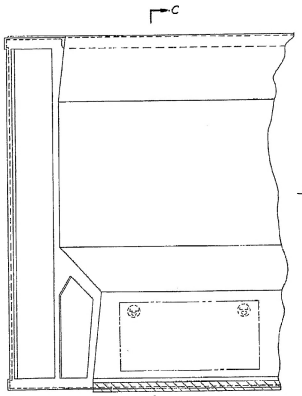

(VERTICAL BOARD)
FRONT VIEW

REFERENCES

MAIN CONTROL ROOM:	DRAWING NO. UNIT 1	UNIT 2
1. CONTROL CONSOLE BOARD CC1,2&3 ARRANGEMENT	504480	504500
2. VERTICAL BOARD VB-1 ARRANGEMENT	504481	504501
3. VB-2	504482	504502
4. VB-3	504483	504503
5. VB-4	504484	504504
6. VB-5	504485	504505
7. STRUCTURAL DETAILS	G-23106 (SHT 202-211) (SHT 220-228)	

THIS DWG. WAS ORIGINALLY DRAWN BY MFR. GEE DWG. 1136499
UNDER: P.G. & E. REC. 663100 SH. 668
CHANGES SUBSEQUENT TO DATE OF ANY CHANGE NO. ARE BY P.G.&E. CO.

USE THIS DRAWING WITH RECORD NO. DE-663100-668 WHICH WERE ONLY APPROVED FOR CONSTRUCTION. UP TO SITE RECEIVING DATE (2-5-79) CHANGES AFTER THIS DATE ARE TO BE DONE IN FIELD.

2	DAVID C. TATOSIAN		10-31-81
DRW	DESCRIPTION / ENGINEER	SIGNATURE	DATE

KEY DWG.-SECTION 13 RM INDEXED RE: 6

UNIT 1 & 2

MAIN CONTROL ROOM CONTROL CONSOLE & VERTICAL BOARD CC-1 - 3 - VB 1 TO 5 LOCATION & MISCELLANEOUS STRUCTURAL DETAILS

DIABLO CANYON
DEPARTMENT OF ENGINEERING
PACIFIC GAS AND ELECTRIC COMPANY
SAN FRANCISCO, CALIFORNIA

APPROVED BY	GM 12/30/81
DES. ENG.	SUPV. Y. SOO LEE
DESIGN L. SALVESANG	
CH. WILLY WONG	
CK. DWG.	DATE 1-29-82
DRAWN	DATE 2-11-79
SCALE	AS NOTED

MEL OF MATERIAL	10194T
DRAWING MAY	
SUPERSEDES	663100-668
SUPERSEDED BY	
SHEET NO.	1 OF 1 SHEETS
DRAWING NO.	504479
CHANGE	6

TABLE OF CHANGES

NO.	DATE	DESCRIPTION	DRAWN	CH	RESP. ENG.	SUPV. ENG.
6	1-29-82	REVISED POWER DRAWER ARRANGEMENT 1VB4 & 2VB4	C. L.	CH	RESP. ENG.	SUPV. ENG.
5	10-29-81	ADDED FILLER PLATE PER DCI-ES-81068 & ECT-10857	M. Chan	C. L.	RW	DLT
4		DWGS. PER DCI-ES-81068 & DCE-ES-81068				
3		SCHALOW (WIRE) PER YCT 8454				
2	1-07-81	REVISED WITH APPROVAL STAMPED		CH	RW	
1	10-24-80	ISSUED FOR CONSTRUCTION				

NO.	DATE	DESCRIPTION	DRAWN	CH	RESP. ENG.	SUPV. ENG.
1	10-24-80	ISSUED FOR CONSTRUCTION				

NO.	DATE	DESCRIPTION	DRAWN	CH	RESP. ENG.	SUPV. ENG.
6	1-29-82	REDRAWN, ADDED PWR. DRAWER ARRGT. FRONT LOWER ELEV. OF VB4	DLT	CH	RW	

| GROUP | DES. ENG. | DES. ENG. | DES. ENG.